GROUNDWATER MONITORING WELL EW 1

SITE NAME: AREA 2 SWMU	LOCATION: SAUGET, IL		
CLIENT: SOLUTIA	SURFACE ELEVATION: –		
GEOLOGIST: M HADDOCK	NORTHING: –	EASTING: –	
DRILLER: J Workman	STATIC WATER LEVEL: –	COMPLETION DATE: JUNE 2003	
DRILLING COMPANY: Layne	DRILLING METHODS: CABLE TOOL		

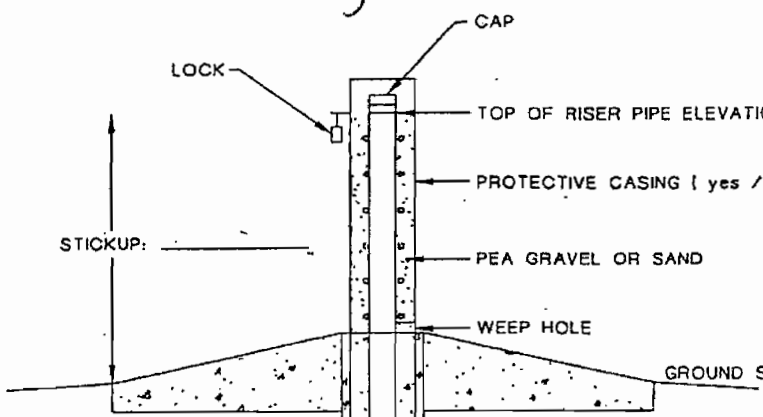

CONCRETE SEAL DEPTH: 6 FT. BGS.

DIAMETER OF RISER PIPE (in.): 12

DIAMETER OF BOREHOLE (in.): 12

TYPE AND AMOUNT OF ANNULAR SEAL: N/A

TOP OF SEAL DEPTH: N/A FT. BGS.

TYPE OF BENTONITE SEAL: N/A

TOP OF SAND PACK DEPTH: N/A FT. BGS.

CENTRALIZER (yes / no) - TYPE: N/A

TOP OF SCREEN DEPTH: 53 FT. BGS.

TYPE OF SCREEN: Johnson Stainless Steel wirewound

SCREEN SLOT SIZE (in.): 0.040

SIZE OF SAND PACK: Natural Formation

AMOUNT OF SAND: N/A

BOTTOM OF SCREEN DEPTH: 131.0 FT. BGS.

BOTTOM OF WELL DEPTH: 136.2 FT. BGS.

BOTTOM OF FILTER PACK: N/A FT. BGS.

TYPE AND AMOUNT OF BACKFILL: N/A

136.2 TOTAL DEPTH OF BOREHOLE

NOTE. DEPTHS MEASURED FROM GROUND SURFACE

GROUNDWATER MONITORING WELL EW-2

SITE NAME: SOLUTIA SITE R		LOCATION: Sauget, IL	
CLIENT: SOLUTIA		SURFACE ELEVATION:	
GEOLOGIST: M HADDOCK	NORTHING: —		EASTING: —
DRILLER: J WORKMAN	STATIC WATER LEVEL: —		COMPLETION DATE: 11-12-02
DRILLING COMPANY: LAYNE		DRILLING METHODS: CABLE TOOL	

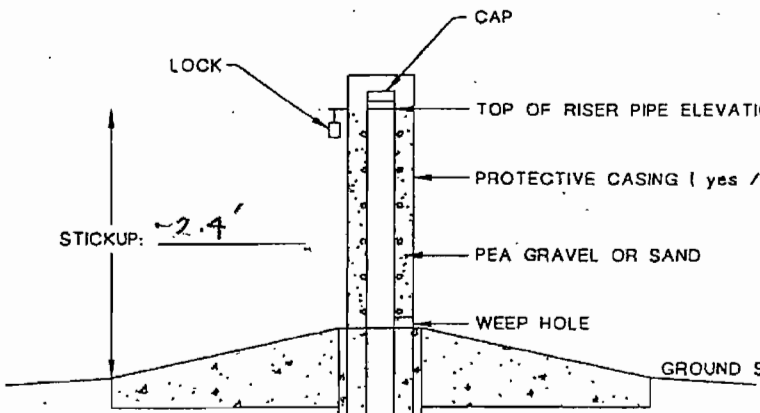

CONCRETE SEAL DEPTH 6 FT. BGS.

DIAMETER OF RISER PIPE (in.) 10

DIAMETER OF BOREHOLE (in.) 11

TYPE AND AMOUNT OF ANNULAR SEAL 2 BAGS BENTONITE CHIPS (50 lb. bags)
FROM 1.5 - 8.0 FT BGS IN ANNULUS

CASING

#1	20.20'	(ss)
#2	21.05'	(ss)
#3	21.05'	(ss)
#4	21.05'	(ss)
#5	20.25'	(steel)
#6	14.10'	(steel)

SCREEN

sump + 20'	25.55	(sump 5.1)
15'	15.25	
10'	10.30	
gasketed 20'	20.65	
	71.75	

TOP OF SEAL DEPTH N/A FT. BGS.

TYPE OF BENTONITE SEAL N/A

TOP OF SAND PACK DEPTH N/A NATURAL FORMATION FT. BGS.

CENTRALIZER (yes / no) - TYPE N/A

TOP OF SCREEN DEPTH 38.25 FT. BGS.
(casing @ ~41.5 FT BGS)

TYPE OF SCREEN 10" WIRE WRAP STAINLESS STEEL

SCREEN SLOT SIZE (in.) 0.040

SIZE OF SAND PACK NATURAL FORMATION

AMOUNT OF SAND —

BOTTOM OF SCREEN DEPTH 104.9 FT. BGS.

BOTTOM OF WELL DEPTH 110.0 FT. BGS.

BOTTOM OF FILTER PACK N/A NATURAL FORMATION FT. BGS.

TYPE AND AMOUNT OF BACKFILL N/A NATURAL FORMATION

110.0 TOTAL DEPTH OF BOREHOLE

NOTE: DEPTHS MEASURED FROM GROUND SURFACE

GROUNDWATER MONITORING WELL EW3

SITE NAME: AREA 2 SITE R		LOCATION: SAUGET, ILL	
CLIENT: SOLUTIA		SURFACE ELEVATION: —	
GEOLOGIST: M HADDOCK	NORTHING: —		EASTING: —
DRILLER: E. SKOUBY	STATIC WATER LEVEL: —		COMPLETION DATE: JUNE 2003
DRILLING COMPANY: LAYNE		DRILLING METHODS: CABLE TOOL	

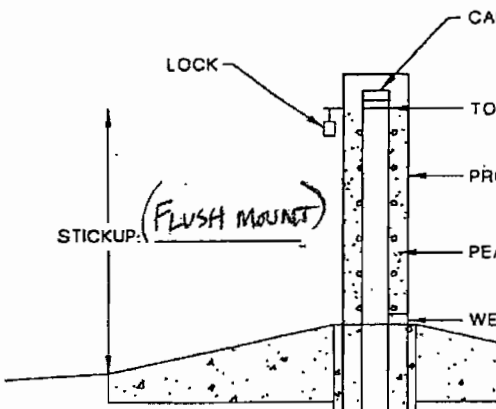

TOP OF RISER PIPE ELEVATION: —

PROTECTIVE CASING (yes / no): —

PEA GRAVEL OR SAND

WEEP HOLE

GROUND SURFACE ELEVATION: —

CONCRETE SEAL DEPTH: 6 FT. BGS.

DIAMETER OF RISER PIPE (in.): 12" ID

DIAMETER OF BOREHOLE (in.): 12.8"

TYPE AND AMOUNT OF ANNULAR SEAL: N/A

TOP OF SEAL DEPTH: N/A FT. BGS.

TYPE OF BENTONITE SEAL: N/A

TOP OF SAND PACK DEPTH: N/A FT. BGS.

CENTRALIZER (yes / no) - TYPE: N/A

TOP OF SCREEN DEPTH: 56.5 FT. BGS.

TYPE OF SCREEN: Johnson wire wrap

SCREEN SLOT SIZE (in.): 0.040

SIZE OF SAND PACK: N/A Natural Formation

AMOUNT OF SAND: N/A

BOTTOM OF SCREEN DEPTH: 126.0 FT. BGS.

BOTTOM OF WELL DEPTH: 131.3 FT. BGS.

BOTTOM OF FILTER PACK: N/A FT. BGS.

TYPE AND AMOUNT OF BACKFILL: N/A

131.3 TOTAL DEPTH OF BOREHOLE

NOTE: DEPTHS MEASURED FROM GROUND SURFACE

GROUNDWATER MONITORING WELL P15

SITE NAME: SITE 2		LOCATION: S & Road – N Piezo pair
CLIENT: SOLUTIA		SURFACE ELEVATION: –
GEOLOGIST: JAC	NORTHING: –	EASTING: –
DRILLER: J CRANE	STATIC WATER LEVEL: –	COMPLETION DATE: 6-27-03
DRILLING COMPANY: Roberts		DRILLING METHODS: 6.5" Mud Rotary

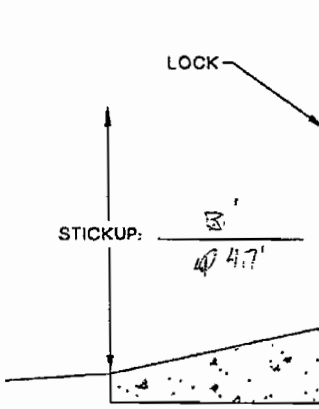

TOP OF RISER PIPE ELEVATION: –

PROTECTIVE CASING (yes / no): concrete ring

PEA GRAVEL OR SAND

WEEP HOLE

GROUND SURFACE ELEVATION: –

CONCRETE SEAL DEPTH: – FT. BGS.

DIAMETER OF RISER PIPE (in.): 2

DIAMETER OF BOREHOLE (in.): ~6.5"

TYPE AND AMOUNT OF ANNULAR SEAL: bentonite / portland cement

TOP OF SEAL DEPTH: 40 FT. BGS.

TYPE OF BENTONITE SEAL: 3 bags bentonite chips

TOP OF SAND PACK DEPTH: 52 FT. BGS.

CENTRALIZER (yes / ~~no~~) - TYPE: –

TOP OF SCREEN DEPTH: 55 FT. BGS.

TYPE OF SCREEN: 10 Slot SS

SCREEN SLOT SIZE (in.): 0.010

SIZE OF SAND PACK: –

AMOUNT OF SAND: 30 x 50 # bags

TOC ~125

BOTTOM OF SCREEN DEPTH: ~130 FT. BGS.

BOTTOM OF WELL DEPTH: 130 FT. BGS.

BOTTOM OF FILTER PACK: 130 FT. BGS.

TYPE AND AMOUNT OF BACKFILL: –

130 TOTAL DEPTH OF BOREHOLE

NOTE: DEPTHS MEASURED FROM GROUND SURFACE

GROUNDWATER MONITORING WELL PW

SITE NAME: Site R	LOCATION: South of Concrete Wall/In Road	
CLIENT: Solutia	SURFACE ELEVATION: –	
GEOLOGIST: JAP	NORTHING: –	EASTING: –
DRILLER: J CRANR	STATIC WATER LEVEL: –	COMPLETION DATE: 7-9-03
DRILLING COMPANY: Roberts	DRILLING METHODS: 6.5" Mud Rotary	

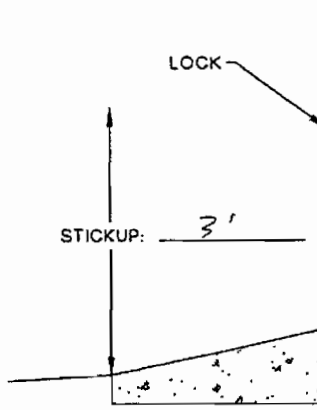

TOP OF RISER PIPE ELEVATION –

PROTECTIVE CASING (yes / no) concrete ring

PEA GRAVEL OR SAND

WEEP HOLE

GROUND SURFACE ELEVATION –

CONCRETE SEAL DEPTH – FT. BGS.

DIAMETER OF RISER PIPE (in.) 2.0"

DIAMETER OF BOREHOLE (in.) 4.0"

TYPE AND AMOUNT OF ANNULAR SEAL Bentonite/Cement Grout

TOP OF SEAL DEPTH 44.0 FT. BGS.

TYPE OF BENTONITE SEAL medium chip

TOP OF SAND PACK DEPTH 54.0 FT. BGS.

CENTRALIZER (yes / (no)) - TYPE No

TOP OF SCREEN DEPTH 57.00 FT. BGS.

TYPE OF SCREEN SS Slot

SCREEN SLOT SIZE (in.) .010

SIZE OF SAND PACK

AMOUNT OF SAND 24 x 50 lbs Bags

BOTTOM OF SCREEN DEPTH 132.0 FT. BGS.

BOTTOM OF WELL DEPTH 132.0 FT. BGS.

BOTTOM OF FILTER PACK 132.0 FT. BGS.

TYPE AND AMOUNT OF BACKFILL 132.0

TOTAL DEPTH OF BOREHOLE 132

NOTE: DEPTHS MEASURED FROM GROUND SURFACE

GROUNDWATER MONITORING WELL P2W

SITE NAME: SITE R GMCS	LOCATION: P2-West	
CLIENT: SOUTIA	SURFACE ELEVATION: —	
GEOLOGIST: MARE	NORTHING: —	EASTING: —
DRILLER: J CRANK	STATIC WATER LEVEL: —	COMPLETION DATE: 6-16-03
DRILLING COMPANY: Roberts	DRILLING METHODS: 6 3/4" Mud Rotary	

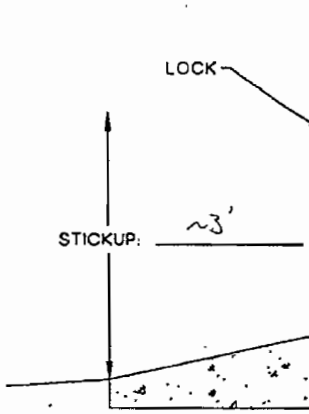

TOP OF RISER PIPE ELEVATION —

PROTECTIVE CASING (yes / no) concrete ring

PEA GRAVEL OR SAND

WEEP HOLE

GROUND SURFACE ELEVATION —

CONCRETE SEAL DEPTH — FT. BGS.

DIAMETER OF RISER PIPE (in.) 2"

DIAMETER OF BOREHOLE (in.) ~7"

TYPE AND AMOUNT OF ANNULAR SEAL bentonite / cement grout

TOP OF SEAL DEPTH ~45 FT. BGS.

TYPE OF BENTONITE SEAL CH; PS

TOP OF SAND PACK DEPTH ~49 FT. BGS.

CENTRALIZER (yes / (no)) - TYPE —

TOP OF SCREEN DEPTH ~ 52' FT. BGS.

TYPE OF SCREEN 10 Slot SS

SCREEN SLOT SIZE (in.) 0.010

SIZE OF SAND PACK —

AMOUNT OF SAND 26 x 50# bags

BOTTOM OF SCREEN DEPTH ~127 FT. BGS.

BOTTOM OF WELL DEPTH ~ 127 FT. BGS.

BOTTOM OF FILTER PACK 127 FT. BGS.

TYPE AND AMOUNT OF BACKFILL —

127 TOTAL DEPTH OF BOREHOLE

NOTE: DEPTHS MEASURED FROM GROUND SURFACE

GROUNDWATER MONITORING WELL P2E

SITE NAME: Site D GMCS		LOCATION: P2-East
CLIENT: Solutia		SURFACE ELEVATION: —
GEOLOGIST: MRF	NORTHING: —	EASTING: —
DRILLER: J Crank	STATIC WATER LEVEL: —	COMPLETION DATE: 6-18-03
DRILLING COMPANY: REDI		DRILLING METHODS: 6 3/4" Mud Rotary

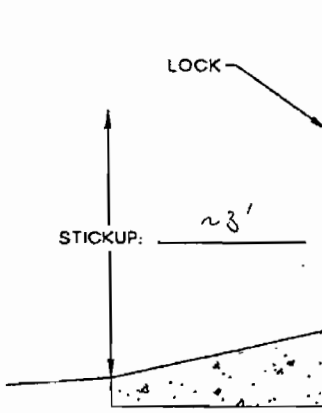

TOP OF RISER PIPE ELEVATION —

PROTECTIVE CASING (yes / (no)) Concrete ring

PEA GRAVEL OR SAND

WEEP HOLE

GROUND SURFACE ELEVATION —

CONCRETE SEAL DEPTH NA FT. BGS.

DIAMETER OF RISER PIPE (in.) 2

DIAMETER OF BOREHOLE (in.) ~7"

TYPE AND AMOUNT OF ANNULAR SEAL bentonite / cement grout

TOP OF SEAL DEPTH ~46 FT. BGS.

TYPE OF BENTONITE SEAL CHIPS

TOP OF SAND PACK DEPTH ~51 FT. BGS.

CENTRALIZER (yes / (no)) - TYPE —

TOP OF SCREEN DEPTH ~54 FT. BGS.

TYPE OF SCREEN 10 Slot SS

SCREEN SLOT SIZE (in.) 0.010

SIZE OF SAND PACK —

AMOUNT OF SAND 32 50 # bags

BOTTOM OF SCREEN DEPTH ~79 FT. BGS.

BOTTOM OF WELL DEPTH 129 FT. BGS.

BOTTOM OF FILTER PACK 129 FT. BGS.

TYPE AND AMOUNT OF BACKFILL —

TOTAL DEPTH OF BOREHOLE 129

NOTE: DEPTHS MEASURED FROM GROUND SURFACE

GROUNDWATER MONITORING WELL P3W

SITE NAME: SITE R		LOCATION: —
CLIENT: SCOTIA		SURFACE ELEVATION: —
GEOLOGIST: J CLARK	NORTHING: —	EASTING: —
DRILLER: J CRANK	STATIC WATER LEVEL: —	COMPLETION DATE: 7-2-03
DRILLING COMPANY: Roberts		DRILLING METHODS: 5 7/8" Mud Rotary

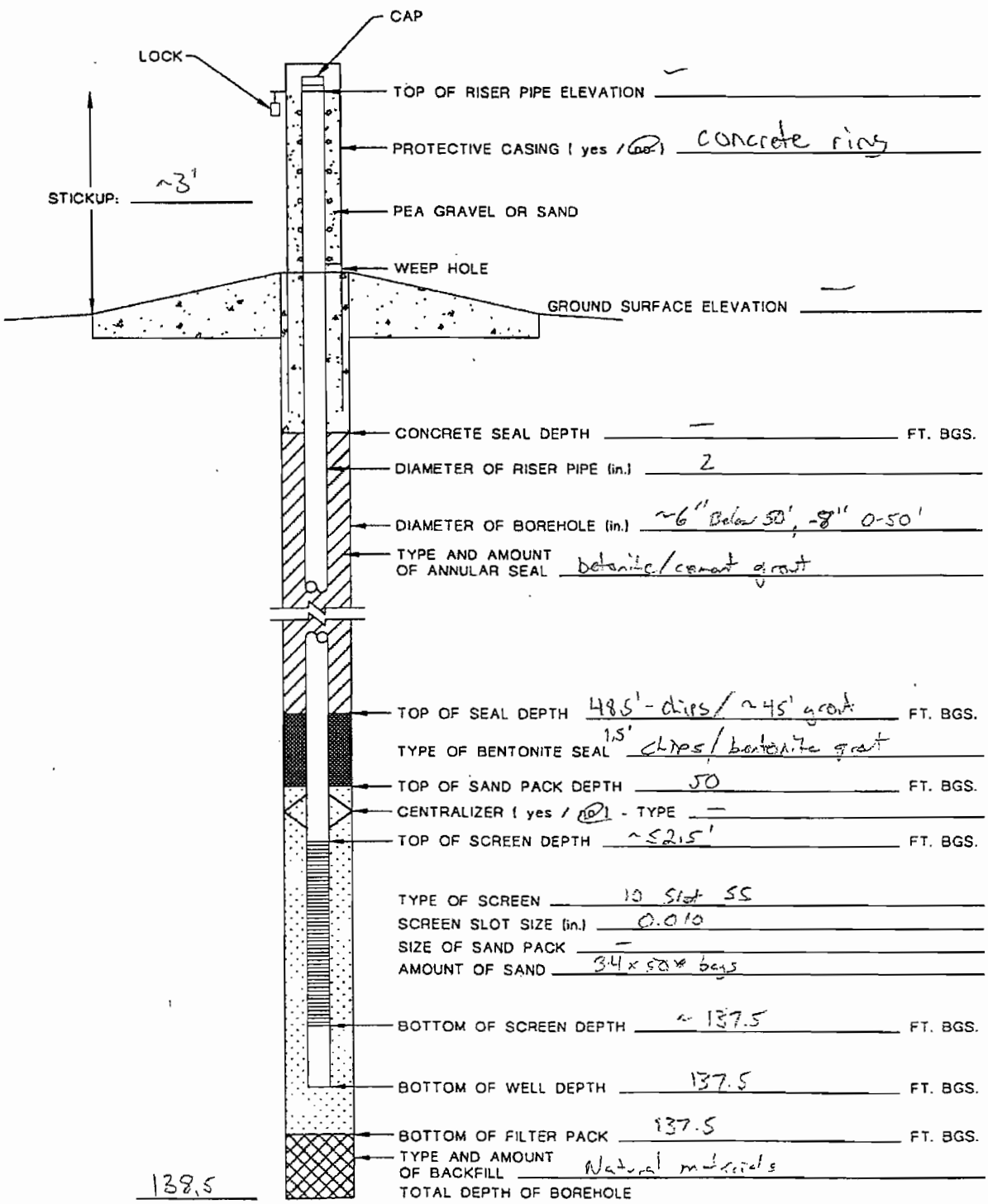

NOTE: DEPTHS MEASURED FROM GROUND SURFACE

GROUNDWATER MONITORING WELL P3E

SITE NAME: Site R	LOCATION: —	
CLIENT: Solutia	SURFACE ELEVATION: —	
GEOLOGIST: J Perez	NORTHING: —	EASTING: —
DRILLER: J Crank	STATIC WATER LEVEL: —	COMPLETION DATE: 7-8-03
DRILLING COMPANY: REDI	DRILLING METHODS: 5 7/8" Mud Rotary	

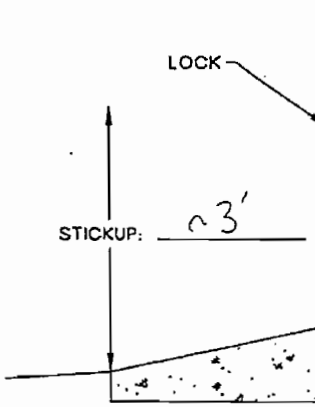

TOP OF RISER PIPE ELEVATION —

PROTECTIVE CASING (yes / (no)) concrete ring

PEA GRAVEL OR SAND NONE

WEEP HOLE

GROUND SURFACE ELEVATION —

CONCRETE SEAL DEPTH — FT. BGS.

DIAMETER OF RISER PIPE (in.) 2 in

DIAMETER OF BOREHOLE (in.) ~6" Below 50', 5" 0-50'

TYPE AND AMOUNT OF ANNULAR SEAL bentonite/cement grout

TOP OF SEAL DEPTH 41.0' FT. BGS.

TYPE OF BENTONITE SEAL chips

TOP OF SAND PACK DEPTH 51.0 FT. BGS.

CENTRALIZER (yes / (no)) - TYPE No

TOP OF SCREEN DEPTH ~54 FT. BGS.

TYPE OF SCREEN 10 slot SS

SCREEN SLOT SIZE (in.) 0.010

SIZE OF SAND PACK —

AMOUNT OF SAND 24 x 50 lbs

BOTTOM OF SCREEN DEPTH ~139 FT. BGS.

BOTTOM OF WELL DEPTH 139' FT. BGS.

BOTTOM OF FILTER PACK 139.0 FT. BGS.

TYPE AND AMOUNT OF BACKFILL Native material

139.0' TOTAL DEPTH OF BOREHOLE

NOTE: DEPTHS MEASURED FROM GROUND SURFACE

GROUNDWATER MONITORING WELL PHW

SITE NAME: Solutia Site R		LOCATION: S end & Stbl
CLIENT: Solutia		SURFACE ELEVATION: —
GEOLOGIST: MRF	NORTHING: —	EASTING: —
DRILLER: J Crank	STATIC WATER LEVEL: —	COMPLETION DATE:
DRILLING COMPANY: REDI		DRILLING METHODS: 6 3/4" Mud Rotary

TOP OF RISER PIPE ELEVATION —

PROTECTIVE CASING (yes / no) —

PEA GRAVEL OR SAND

WEEP HOLE

GROUND SURFACE ELEVATION —

CONCRETE SEAL DEPTH NA FT. BGS.

DIAMETER OF RISER PIPE (in.) 2"

DIAMETER OF BOREHOLE (in.) ~7"

TYPE AND AMOUNT OF ANNULAR SEAL bentonite / cement grout

TOP OF SEAL DEPTH ~45 FT. BGS.

TYPE OF BENTONITE SEAL chips

TOP OF SAND PACK DEPTH ~50' FT. BGS.

CENTRALIZER (yes / no) - TYPE —

TOP OF SCREEN DEPTH ~52.5 FT. BGS.

80' screen

TYPE OF SCREEN 10 Slot SS

SCREEN SLOT SIZE (in.) 0.010

SIZE OF SAND PACK —

AMOUNT OF SAND ~76 x 50# bags

BOTTOM OF SCREEN DEPTH ~132.5 FT. BGS.

BOTTOM OF WELL DEPTH ~132.5 FT. BGS.

BOTTOM OF FILTER PACK ~132.5 FT. BGS.

TYPE AND AMOUNT OF BACKFILL —

TOTAL DEPTH OF BOREHOLE

NOTE: DEPTHS MEASURED FROM GROUND SURFACE

GROUNDWATER MONITORING WELL P4E

SITE NAME: Solutia Site R		LOCATION: S end
CLIENT: Solutia		SURFACE ELEVATION: —
GEOLOGIST: MRF	NORTHING: —	EASTING: —
DRILLER: J Crank	STATIC WATER LEVEL: —	COMPLETION DATE:
DRILLING COMPANY: Roberts		DRILLING METHODS: 6 3/4" Mud Rotary

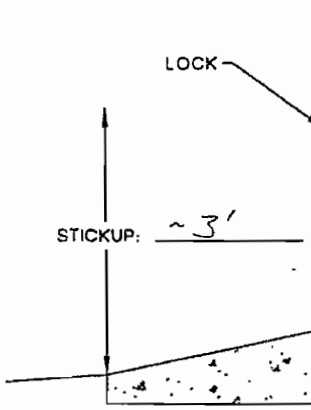

TOP OF RISER PIPE ELEVATION —

PROTECTIVE CASING (yes / (no))

PEA GRAVEL OR SAND

WEEP HOLE

GROUND SURFACE ELEVATION —

CONCRETE SEAL DEPTH NA FT. BGS.

DIAMETER OF RISER PIPE (in.) 2'

DIAMETER OF BOREHOLE (in.) ~7"

TYPE AND AMOUNT OF ANNULAR SEAL bentonite / cement grout

TOP OF SEAL DEPTH ~45 FT. BGS.

TYPE OF BENTONITE SEAL chips

TOP OF SAND PACK DEPTH ~50 FT. BGS.

CENTRALIZER (yes / (no)) - TYPE —

TOP OF SCREEN DEPTH ~52.5 FT. BGS.

TYPE OF SCREEN 10 slot SS

SCREEN SLOT SIZE (in.) 0.010

SIZE OF SAND PACK —

AMOUNT OF SAND ~26 x 50 # bags

BOTTOM OF SCREEN DEPTH ~132.5 FT. BGS.

BOTTOM OF WELL DEPTH ~132.5 FT. BGS.

BOTTOM OF FILTER PACK ~132.5 FT. BGS.

TYPE AND AMOUNT OF BACKFILL —

~1325 TOTAL DEPTH OF BOREHOLE

NOTE: DEPTHS MEASURED FROM GROUND SURFACE

LOG OF BORING
PZ-5D

Completion Date: 5/24/05
Casing Elevation:
Ground Elevation:

Depth in feet	Inches Driven	Inches Recovered	PID (ppm)	Sampler Graphic	Symbol	USCS	DESCRIPTION	NOTES
						CONCRETE	CONCRETE	
						FILL	Base coarse (FILL) Firm, dry, brown, low plastic silty CLAY (FILL) with trace sub rounded fine gravel	
5						FILL	Becomes moist	
10						FILL	With coal particles	
15						ML	With fine sand lens No coal Loose, moist, gray SILT (ML)	
						SW	Loose, moist, gray, fine grained, well graded SAND (SW) Becomes very fine grained	
						ML	Loose, moist, gray SILT (ML)	
						SW	Dense, moist, gray, very fine grained, well graded SAND (SW) Becomes fine grained	
20						ML	Loose, moist, gray, finely laminated SILT (ML)	
						SW	Moist, gray, fine grained, well graded SAND (SW)	
						CL	Soft, moist, gray silty CLAY (CL)	

Completion Depth: 140.50 Ft.
Project No.: 21561391.00000
Project Name: Site R O&M
Drilling Contractor: Prosonic
Drilling method: Rotosonic
Logged by: R. Exceen

URS

Water Depth: _____ ft., After _____ hrs.
Water Depth: _____ ft., After _____ hrs.
▼ Water level at time of drilling
▽ Water level after drilling
Splitspoon Sampler
Roto Sonic-3" Core Barrel

ATD - At time of drilling

Unified Soil Classification based on field visual observations.

URS (ENVIRON) LOG SITE R O&M 21561391.GPJ URSSTLEV.GDT 8/8/05

LOG OF BORING
PZ-5D

Completion Date: 5/24/05
Casing Elevation:
Ground Elevation:

Depth in feet	Inches Driven	Inches Recovered	PID (ppm)	Sampler Graphic	Symbol	USCS	DESCRIPTION	NOTES
						ML	Loose, moist, gray, finely laminated SILT (ML)	
								With iron oxide staining
							Dense, moist, gray, well graded SAND (SW)	
30							With trace medium grained sand	
							Becomes wet	
35								
						SW		
40							Dense, wet, fine grained, well graded SAND (SW) with trace medium grained SAND)	
45								

Completion Depth: 140.50 Ft.
Project No.: 21561391.00000
Project Name: Site R O&M
Drilling Contractor: Prosonic
Drilling method: Rotosonic
Logged by: R. Exceen

URS

Water Depth: _____ ft., After _____ hrs.
Water Depth: _____ ft., After _____ hrs.
▼ Water level at time of drilling
▽ Water level after drilling
Splitspoon Sampler
Roto Sonic-3" Core Barrel

ATD - At time of drilling

Unified Soil Classification based on field visual observations.

URS (ENVIRON) LOG SITE R O&M 21561391.GPJ URSSTLEV.GDT 9/8/05

LOG OF BORING
PZ-5D

Completion Date: 5/24/05
Casing Elevation:
Ground Elevation:

Depth in feet	Inches Driven	Inches Recovered	PID (ppm)	Sampler Graphic	Symbol	USCS	DESCRIPTION	NOTES
						SW	Dense, wet, medium to coarse grained SAND (SW) with little fine grained sand, trace fine to medium gravel, and occasional coal	
							Dense, wet, fine grained, poorly graded SAND (SP)	
							0.4' layer medium to coarse sand with trace gravel	
55							0.4' layer medium to coarse sand with trace gravel	
							Becomes fine to medium grained with trace coarse sand	
							Becomes medium grained with little fine grained sand and trace coarse gravel	
60							Dense, wet, medium to coarse grained, poorly graded SAND (SP) with trace gravel	
							Becomes fine to medium grained	
						SP	Becomes fine grained with wood fragments	
							Becomes medium to coarse grained with trace fine to coarse grained	
65							Becomes fine grained	
70								

Completion Depth: 140.50 Ft.
Project No.: 21561391.00000
Project Name: Site R O&M
Drilling Contractor: Prosonic
Drilling method: Rotosonic
Logged by: R. Exceen

URS

Water Depth: _____ ft., After _____ hrs.
Water Depth: _____ ft., After _____ hrs.
▼ Water level at time of drilling
▽ Water level after drilling
Splitspoon Sampler
Roto Sonic-3" Core Barrel

ATD - At time of drilling

Unified Soil Classification based on field visual observations.

URS (ENVIRON) LOG SITE R O&M 21561391.GPJ URSSTLEV.GDT 6/8/05

LOG OF BORING
PZ-5D

Completion Date: 5/24/05
Casing Elevation:
Ground Elevation:

Depth in feet	Inches Driven	Inches Recovered	PID (ppm)	Sampler Graphic	Symbol	USCS	DESCRIPTION	NOTES
							0.2' layer medium to coarse sand and some fine to coarse gravel	
							Becomes medium to coarse sand with little gravel	
80								
85						SP		
90								
95								

Completion Depth: 140.50 Ft.
Project No.: 21561391.00000
Project Name: Site R O&M
Drilling Contractor: Prosonic
Drilling method: Rotosonic
Logged by: R. Exceen

URS

Water Depth: _____ ft., After _____ hrs.
Water Depth: _____ ft., After _____ hrs.
▼ Water level at time of drilling
▽ Water level after drilling
Splitspoon Sampler
Roto Sonic-3" Core Barrel

ATD - At time of drilling

Unified Soil Classification based on field visual observations.

URS (ENVIRON) LOG SITE R O&M 21561391.GPJ URSSTLEV.GDT 8/8/05

LOG OF BORING
PZ-5D

Completion Date: 5/24/05
Casing Elevation:
Ground Elevation:

Depth in feet	Inches Driven	Inches Recovered	PID (ppm)	Sampler Graphic	Symbol	USCS	DESCRIPTION	NOTES
105							Becomes fine to medium grained with trace fine gravel	
110						SP	Becomes medium to coarse grained with few fine to coarse gravel	
115							With little fine to coarse gravel	
120								

Completion Depth: 140.50 Ft.
Project No.: 21561391.00000
Project Name: Site R O&M
Drilling Contractor: Prosonic
Drilling method: Rotosonic
Logged by: R. Exceen

URS

Water Depth: _____ ft., After _____ hrs.
Water Depth: _____ ft., After _____ hrs.
▼ Water level at time of drilling
▽ Water level after drilling
Splitspoon Sampler
Roto Sonic-3" Core Barrel

ATD - At time of drilling

Unified Soil Classification based on field visual observations.

URS (ENVIRON) LOG SITE R O&M 21561391.GPJ URSSTLEV.GDT 8/8/05

LOG OF BORING
PZ-5D

Completion Date: 5/24/05
Casing Elevation:
Ground Elevation:

Depth in feet	Inches Driven	Inches Recovered	PID (ppm)	Sampler Graphic	Symbol	USCS	DESCRIPTION	NOTES
130						SP	Becomes coarse grained with some fine to coarse gravel	
135							Becomes medium to coarse grained with trace fine to coarse gravel	
							With few fine gravel	
140						GP	Dense, wet, multi-colored, fine to coarse grained, poorly graded GRAVEL (GP)	
145								

Completion Depth: 140.50 Ft.
Project No.: 21561391.00000
Project Name: Site R O&M
Drilling Contractor: Prosonic
Drilling method: Rotosonic
Logged by: R. Exceen

URS

Water Depth: _____ ft., After _____ hrs.
Water Depth: _____ ft., After _____ hrs.
▼ Water level at time of drilling
▽ Water level after drilling
Splitspoon Sampler
Roto Sonic-3" Core Barrel

ATD - At time of drilling

Unified Soil Classification based on field visual observations.

URS (ENVIRON) LOG SITE R O&M 21561391.GPJ URSSTLEV.GDT 8/8/05

LOG OF BORING
PZ-5U

Completion Date: 5/23/05
Casing Elevation:
Ground Elevation:

Depth In feet	Inches Driven	Inches Recovered	PID (ppm)	Sampler Graphic	Symbol	USCS	DESCRIPTION	NOTES
							Coarse grained GRAVEL (FILL)	
							Loose, dark brown SILT (FILL) with gravel and nodules of coal byproduct	
5						FILL		
							Becoming brown	
10							Firm, moist, greenish gray silty CLAY (FILL) with nodules of coal byproduct	With hydrocarbon staining
							Becoming very moist	
						CL	Firm, moist, dark gray silty CLAY (CL)	
15						SW	Loose, dry, gray, fine grained, well graded SAND (SW)	
						ML	Loose, dry, greenish gray SILT (ML)	With iron oxide staining
						SW	Loose, moist, dark gray, well graded SAND (SW)	With sewer odor
20						CL	Firm, moist, dark grayish green silty CLAY (CL)	
						SW	Gray to greenish gray, very fine grained, well graded SAND (SW)	

Completion Depth: 141.00 Ft.
Project No.: 21561391.00000
Project Name: Site R O&M
Drilling Contractor: Prosonic
Drilling method: Rotosonic
Logged by: R. Exceen

URS

Water Depth: _____ ft., After _____ hrs.
Water Depth: _____ ft., After _____ hrs.
▼ Water level at time of drilling
▽ Water level after drilling
Splitspoon Sampler
Roto Sonic-3" Core Barrel

ATD - At time of drilling

Unified Soil Classification based on field visual observations.

URS (ENVIRON) LOG SITE R O&M 21561391.GPJ URSSTLEV.GDT 8/8/05

LOG OF BORING
PZ-5U

Completion Date: 5/23/05
Casing Elevation:
Ground Elevation:

Depth in feet	Inches Driven	Inches Recovered	PID (ppm)	Sampler Graphic	Symbol	USCS	DESCRIPTION	NOTES
30							Dense, dry, light gray, fine grained, well graded SAND (SW)	
35							Becomes wet and gray	
						SW		
40							Dense, wet, greenish gray, fine grained, well graded SAND (SW)	
45							Becomes dark gray With trace medium grained sand With trace fine to coarse gravel	

Completion Depth: 141.00 Ft.
Project No.: 21561391.00000
Project Name: Site R O&M
Drilling Contractor: Prosonic
Drilling method: Rotosonic
Logged by: R. Exceen

URS

Water Depth: _____ ft., After _____ hrs.
Water Depth: _____ ft., After _____ hrs.
▼ Water level at time of drilling
▽ Water level after drilling
▮ Splitspoon Sampler
▯ Roto Sonic-3" Core Barrel
ATD - At time of drilling

Unified Soil Classification based on field visual observations.

URS (ENVIRON) LOG SITE R O&M 21561391.GPJ URSSTLEV.GDT 8/8/05

LOG OF BORING
PZ-5U

Completion Date: 5/23/05
Casing Elevation:
Ground Elevation:

Depth In feet	Inches Driven	Inches Recovered	PID (ppm)	Sampler Graphic	Symbol	USCS	DESCRIPTION	NOTES
							Dense, wet, dark gray, medium grained, well graded SAND (SW) with some fine grained sand and trace fine to coarse gravel	
							With thin coal layer at 52'	
55							Dense, wet, dark gray, fine to medium grained, well graded SAND (SW) with trace fine to coarse gravel	
60						SW		
							With little coarse grained sand	
65								
							Dense, wet, gray, fine to medium grained, well graded SAND (SW) with trace coarse grained sand	
70								
							Becomes fine grained with tracve medium grained sand and gravel with occasional wood fragments	

Completion Depth: 141.00 Ft.
Project No.: 21561391.00000
Project Name: Site R O&M
Drilling Contractor: Prosonic
Drilling method: Rotosonic
Logged by: R. Exceen

URS

Water Depth: _____ ft., After _____ hrs.
Water Depth: _____ ft., After _____ hrs.
▼ Water level at time of drilling
▽ Water level after drilling
Splitspoon Sampler
Roto Sonic-3" Core Barrel

ATD - At time of drilling

Unified Soil Classification based on field visual observations.

URS (ENVIRON) LOG SITE R O&M 21561391.GPJ URSSTLEV.GDT 8/8/05

LOG OF BORING
PZ-5U

Completion Date: 5/23/05
Casing Elevation:
Ground Elevation:

Depth In feet	Inches Driven	Inches Recovered	PID (ppm)	Sampler Graphic	Symbol	USCS	DESCRIPTION	NOTES
						SW	With no wood fragments	
80							Dense, wet, gray, medium to coarse grained, poorly graded SAND (SP) with little fine grained sand and trace fine to coarse gravel	
							Becomes fine grained with some medium grained sand and trace fine to coarse gravel	
85								
90						SP	Becomes coarse grained with dome medium grained sand and few fine to coarse gravel	
95							Becomes fine grained with some medium to coarse grained sand	

Completion Depth: 141.00 Ft.
Project No.: 21561391.00000
Project Name: Site R O&M
Drilling Contractor: Prosonic
Drilling method: Rotosonic
Logged by: R. Exceen

URS

Water Depth: ____ ft., After ____ hrs.
Water Depth: ____ ft., After ____ hrs.
▼ Water level at time of drilling
▽ Water level after drilling
Splitspoon Sampler
Roto Sonic-3" Core Barrel

ATD - At time of drilling

Unified Soil Classification based on field visual observations.

URS (ENVIRON) LOG SITE R O&M 21561391.GPJ URSSTLEV.GDT 8/8/05

LOG OF BORING
PZ-5U

Completion Date: 5/23/05
Casing Elevation:
Ground Elevation:

Depth In feet	Inches Driven	Inches Recovered	PID (ppm)	Sampler Graphic	Symbol	USCS	DESCRIPTION	NOTES
105							Dense, wet, gray, medium to coarse grained, poorly graded SAND (SP) with little fine to coarse gravel	
110						SP		
115							With trace fine to coarse gravel	
120								

Completion Depth: 141.00 Ft.
Project No.: 21561391.00000
Project Name: Site R O&M
Drilling Contractor: Prosonic
Drilling method: Rotosonic
Logged by: R. Exceen

URS

Water Depth: _____ ft., After _____ hrs.
Water Depth: _____ ft., After _____ hrs.
▼ Water level at time of drilling
▽ Water level after drilling
Splitspoon Sampler
Roto Sonic-3" Core Barrel

ATD - At time of drilling

Unified Soil Classification based on field visual observations.

URS (ENVIRON) LOG SITE R O&M 21561391.GPJ URSSTLEV.GDT 8/8/05

LOG OF BORING
PZ-5U

Completion Date: 5/23/05
Casing Elevation:
Ground Elevation:

Depth In feet	Inches Driven	Inches Recovered	PID (ppm)	Sampler Graphic	Symbol	USCS	DESCRIPTION	NOTES
130							With some fine to coarse gravel	
						SP	With few fine to coarse gravel	
135								
140								
145								

Completion Depth: 141.00 Ft.
Project No.: 21561391.00000
Project Name: Site R O&M
Drilling Contractor: Prosonic
Drilling method: Rotosonic
Logged by: R. Exceen

Water Depth: ____ ft., After ____ hrs.
Water Depth: ____ ft., After ____ hrs.
▼ Water level at time of drilling
▽ Water level after drilling
Splitspoon Sampler
Roto Sonic-3" Core Barrel

ATD - At time of drilling

Unified Soil Classification based on field visual observations.

URS

URS (ENVIRON) LOG SITE R O&M 21561391.GPJ URSSTLEV.GDT 8/8/05

LOG OF BORING
PZ-6D

Completion Date: 5/20/05
Casing Elevation:
Ground Elevation:

Depth In feet	Inches Driven	Inches Recovered	PID (ppm)	Sampler Graphic	Symbol	USCS	DESCRIPTION	NOTES
							Dense, dry, brownish gray, fine to medium grained, poorly graded sandy GRAVEL (FILL)	
			2.0				Loose to medium dense, blackish brown sandy CINDERS (FILL) with wood, rock fragments, and gravel	
5			48.8			FILL	Medium stiff, moist, brown, low plastic sandy CLAY (FILL) with wood, plastic, and metal debris	
10			156					With product sheen and odor
			91.3			CL	Medium stiff, moist, brown, low plastic silty CLAY (CL) with trace fine gravel	With product sheen and odor
15			45.8			MLS	Medium dense, moist to wet, brown to greenish brown, blocky sandy SILT (MLS) with silty sand and little clay	With product and staining
20			25.8					
			25.6			CL	Medium stiff, moist, brown, medium plastic CLAY (CL)	
			32.4			MLS	Medium stiff, moist, brown, mottled sandy SILT (MLS)	

Completion Depth: 142.00 Ft.
Project No.: 21561391.00000
Project Name: Site R O&M
Drilling Contractor: Prosonic
Drilling method: Rotosonic
Logged by: M. Miller

Water Depth: 36 ft., After _____ hrs.
Water Depth: _____ ft., After _____ hrs.
▼ Water level at time of drilling
▽ Water level after drilling
Splitspoon Sampler
Roto Sonic-3" Core Barrel

ATD - At time of drilling

Unified Soil Classification based on field visual observations.

URS

URS (ENVIRON) LOG SITE R O&M 21561391.GPJ URSSTLEV.GDT 8/8/05

LOG OF BORING
PZ-6D

Completion Date: 5/20/05
Casing Elevation:
Ground Elevation:

Depth in feet	Inches Driven	Inches Recovered	PID (ppm)	Sampler Graphic	Symbol	USCS	DESCRIPTION	NOTES
						MLS		
							Medium dense, moist to wet, brown, fine to medium grained, poorly graded SAND (SP)	With green staining and product odor (26-36)
			28.6					
30			23.5					
			36.2					
35						SP	Becomes wet	▼
			24.8					
40			40.3					
			15.3					
45							Medium dense, wet, brownish gray to grayish brown, medium grained, well graded SAND (SW) with trace fine sand	
						SW		

Completion Depth: 142.00 Ft.
Project No.: 21561391.00000
Project Name: Site R O&M
Drilling Contractor: Prosonic
Drilling method: Rotosonic
Logged by: M. Miller

URS

Water Depth: 36 ft., After _____ hrs.
Water Depth: _____ ft., After _____ hrs.
▼ Water level at time of drilling
▽ Water level after drilling
Splitspoon Sampler
Roto Sonic-3" Core Barrel

ATD - At time of drilling

Unified Soil Classification based on field visual observations.

URS (ENVIRON) LOG SITE R O&M 21561391.GPJ URSSTLEV.GDT 8/8/05

LOG OF BORING
PZ-6D

Completion Date: 5/20/05
Casing Elevation:
Ground Elevation:

Depth In feet	Inches Driven	Inches Recovered	PID (ppm)	Sampler Graphic	Symbol	USCS	DESCRIPTION	NOTES
			1.5					
			0.3			SW		
55								
							Medium dense, wet, grayish brown, medium to coarse grained, poorly graded SAND (SP) with trace fine to medium gravel	
60								
65						SP		
70								

Completion Depth: 142.00 Ft.
Project No.: 21561391.00000
Project Name: Site R O&M
Drilling Contractor: Prosonic
Drilling method: Rotosonic
Logged by: M. Miller

Water Depth: 36 ft., After _____ hrs.
Water Depth: _____ ft., After _____ hrs.
▼ Water level at time of drilling
▽ Water level after drilling
Splitspoon Sampler
Roto Sonic-3" Core Barrel

ATD - At time of drilling

Unified Soil Classification based on field visual observations.

URS

URS (ENVIRON) LOG SITE R O&M 21561391.GPJ URSSTLEV.GOT 8/8/05

LOG OF BORING
PZ-6D

Completion Date: 5/20/05
Casing Elevation:
Ground Elevation:

Depth in feet	Inches Driven	Inches Recovered	PID (ppm)	Sampler Graphic	Symbol	USCS	DESCRIPTION	NOTES
							Becomes gray with little fine to medium gravel	
80								
85						SP	Becomes dark gray with trace cobbles and rock fragments	
90								
95								No recovery from 96-116'. A. Marshall states that interval drilled like previous interval.

Completion Depth: 142.00 Ft.
Project No.: 21561391.00000
Project Name: Site R O&M
Drilling Contractor: Prosonic
Drilling method: Rotosonic
Logged by: M. Miller

URS

Water Depth: 36 ft., After ____ hrs.
Water Depth: ____ ft., After ____ hrs.
▼ Water level at time of drilling
▽ Water level after drilling
Splitspoon Sampler
Roto Sonic-3" Core Barrel

ATD - At time of drilling

Unified Soil Classification based on field visual observations.

URS (ENVIRON) LOG SITE R O&M 21561391.GPJ URSSTLEV.GDT 8/8/05

LOG OF BORING
PZ-6D

Completion Date: 5/20/05
Casing Elevation:
Ground Elevation:

Depth In feet	Inches Driven	Inches Recovered	PID (ppm)	Sampler Graphic	Symbol	USCS	DESCRIPTION	NOTES
105						SP		
110								
115								
							Dense, wet, brownish gray, coarse grained, subangular, well graded Sand (SW) with some fine to coarse gravel and trace cobbles	
120						SW		

Completion Depth: 142.00 Ft.
Project No.: 21561391.00000
Project Name: Site R O&M
Drilling Contractor: Prosonic
Drilling method: Rotosonic
Logged by: M. Miller

Water Depth: 36 ft., After ____ hrs.
Water Depth: ____ ft., After ____ hrs.
▼ Water level at time of drilling
▽ Water level after drilling
Splitspoon Sampler
Roto Sonic-3" Core Barrel

ATD - At time of drilling

Unified Soil Classification based on field visual observations.

URS

URS (ENVIRON) LOG SITE R O&M 21561391.GPJ URSSTLEV.GDT 8/8/05

LOG OF BORING
PZ-6D

Completion Date: 5/20/05
Casing Elevation:
Ground Elevation:

Depth In feet	Inches Driven	Inches Recovered	PID (ppm)	Sampler Graphic	Symbol	USCS	DESCRIPTION	NOTES
130						SW		
135						COAL	COAL: wet, black	
							Dense, wet, grayish brown, fine to coarse grained, well graded SAND (SW) with trace fine gravel Coarsening downward	
140						SW	With fine to medium gravel	
								Bedrock refusal at 142'
145								

Completion Depth: 142.00 Ft.
Project No.: 21561391.00000
Project Name: Site R O&M
Drilling Contractor: Prosonic
Drilling method: Rotosonic
Logged by: M. Miller

URS

Water Depth: 36 ft., After ____ hrs.
Water Depth: ____ ft., After ____ hrs.
▼ Water level at time of drilling
▽ Water level after drilling
Splitspoon Sampler
Roto Sonic-3" Core Barrel

ATD - At time of drilling

Unified Soil Classification based on field visual observations.

URS (ENVIRON) LOG SITE R O&M 21561391.GPJ URSSTLEV.GDT 8/8/05

LOG OF BORING
PZ-6U

Completion Date: 5/19/05
Casing Elevation:
Ground Elevation:

Depth In feet	Inches Driven	Inches Recovered	PID (ppm)	Sampler Graphic	Symbol	USCS	DESCRIPTION	NOTES
							Crushed stone GRAVEL (FILL)	
							Medium dense, dry, reddish brown, fine grained, poorly graded clayey SAND (FILL) with gravel Medium dense to loose, dry, black sandy CINDERS (FILL)	
5							Medium dense to loose, moist, black to blackish brown FILL (FILL) with wood, clayey sand, paper, metal, and plastic debris, and trace brick fragments	
						FILL		
10			18.7					
			7.9				Soft, moist to dry, grayish brown, lensed sandy SILT (FILL) with little wood	Strong odor present
15							Loose, moist to dry, grayish brown, fine to medium grained, poorly graded SAND (SP)	Only about 15' of recovery The rest was in following run
						SP		
20			0.0					

Completion Depth: 141.50 Ft.
Project No.: 21561391.00000
Project Name: Site R O&M
Drilling Contractor: Prosonic
Drilling method: Rotosonic
Logged by: M. Miller

Water Depth: _____ ft., After _____ hrs.
Water Depth: _____ ft., After _____ hrs.
▼ Water level at time of drilling
▽ Water level after drilling
Splitspoon Sampler
Roto Sonic-3" Core Barrel

ATD - At time of drilling

Unified Soil Classification based on field visual observations.

URS

URS (ENVIRON) LOG SITE R O&M 21561391.GPJ URSSTLEV.GDT 8/8/05

LOG OF BORING
PZ-6U

Completion Date: 5/19/05
Casing Elevation:
Ground Elevation:

Depth In feet	Inches Driven	Inches Recovered	PID (ppm)	Sampler Graphic	Symbol	USCS	DESCRIPTION	NOTES
30			7.9			SP	Becomes wet	
35			3.2					
40						SW	Medium dense, wet, blackish gray, fine grained, well graded SAND (SW)	Staining and odor present
45								

Completion Depth: 141.50 Ft.
Project No.: 21561391.00000
Project Name: Site R O&M
Drilling Contractor: Prosonic
Drilling method: Rotosonic
Logged by: M. Miller

URS

Water Depth: _____ ft., After _____ hrs.
Water Depth: _____ ft., After _____ hrs.
▼ Water level at time of drilling
▽ Water level after drilling
Splitspoon Sampler
Roto Sonic-3" Core Barrel

ATD - At time of drilling

Unified Soil Classification based on field visual observations.

URS (ENVIRON) LOG SITE R O&M 21561391.GPJ URSSTLEV.GDT 8/8/05

LOG OF BORING
PZ-6U

Completion Date: 5/19/05
Casing Elevation:
Ground Elevation:

Depth In feet	Inches Driven	Inches Recovered	PID (ppm)	Sampler Graphic	Symbol	USCS	DESCRIPTION	NOTES
55						SP	Medium dense, wet, blackish gray to black, medium to coarse grained, poorly graded SAND (SP) with little fine gravel	
60						SC	Medium dense, wet, gray, fine grained, poorly graded clayey SAND (SC) with trace organics	
65						SP	Medium dense, wet, brownish gray, medium to coarse grained, poorly graded SAND (SP)	
70								

Completion Depth: 141.50 Ft.
Project No.: 21561391.00000
Project Name: Site R O&M
Drilling Contractor: Prosonic
Drilling method: Rotosonic
Logged by: M. Miller

URS

Water Depth: _____ ft., After _____ hrs.
Water Depth: _____ ft., After _____ hrs.
▼ Water level at time of drilling
▽ Water level after drilling
Splitspoon Sampler
Roto Sonic-3" Core Barrel

ATD - At time of drilling

Unified Soil Classification based on field visual observations.

URS (ENVIRON) LOG SITE R O&M 21561391.GPJ URSSTLEV.GDT 8/8/05

LOG OF BORING
PZ-6U

Completion Date: 5/19/05
Casing Elevation:
Ground Elevation:

Depth in feet	Inches Driven	Inches Recovered	PID (ppm)	Sampler Graphic	Symbol	USCS	DESCRIPTION	NOTES
80						SP		
85								
						SW	Medium dense, wet, brownish gray, medium grained, well graded SAND (SW) with trace cobbles	
90								
95						SWG	Medium dense, wet, grayish brown, coarse grained, well graded Gravelly Sand (SWG) with some rock fragments	

Completion Depth: 141.50 Ft.
Project No.: 21561391.00000
Project Name: Site R O&M
Drilling Contractor: Prosonic
Drilling method: Rotosonic
Logged by: M. Miller

URS

Water Depth: _____ ft., After _____ hrs.
Water Depth: _____ ft., After _____ hrs.
▼ Water level at time of drilling
▽ Water level after drilling
Splitspoon Sampler
Roto Sonic-3" Core Barrel

ATD - At time of drilling

Unified Soil Classification based on field visual observations.

URS (ENVIRON) LOG SITE R O&M 21561391.GPJ URSSTLEV.GDT 8/9/05

LOG OF BORING
PZ-6U

Completion Date: 5/19/05
Casing Elevation:
Ground Elevation:

Depth In feet	Inches Driven	Inches Recovered	PID (ppm)	Sampler Graphic	Symbol	USCS	DESCRIPTION	NOTES
105								
110						SWG		
115								1720 Stop boring for night (05/19/05) 0735 Resume drilling (05/20/05)
120								

Completion Depth: 141.50 Ft.
Project No.: 21561391.00000
Project Name: Site R O&M
Drilling Contractor: Prosonic
Drilling method: Rotosonic
Logged by: M. Miller

URS

Water Depth: _____ ft., After _____ hrs.
Water Depth: _____ ft., After _____ hrs.
▼ Water level at time of drilling
▽ Water level after drilling
Splitspoon Sampler
Roto Sonic-3" Core Barrel
ATD - At time of drilling

Unified Soil Classification based on field visual observations.

URS (ENVIRON) LOG SITE R O&M 21561391.GPJ URSSTLEV.GDT 8/8/05

LOG OF BORING
PZ-6U

Completion Date: 5/19/05
Casing Elevation:
Ground Elevation:

Depth in feet	Inches Driven	Inches Recovered	PID (ppm)	Sampler Graphic	Symbol	USCS	DESCRIPTION	NOTES
130								
135						CL	Stiff CLAY (CL) (not recovered).	No recovery from 136-141.5 A. Marshall (driller) stated that the run drilled like stiff clay.
140								
145								

Completion Depth: 141.50 Ft.
Project No.: 21561391.00000
Project Name: Site R O&M
Drilling Contractor: Prosonic
Drilling method: Rotosonic
Logged by: M. Miller

URS

Water Depth: _____ ft., After _____ hrs.
Water Depth: _____ ft., After _____ hrs.
▼ Water level at time of drilling
▽ Water level after drilling
Splitspoon Sampler
Roto Sonic-3" Core Barrel

ATD - At time of drilling

Unified Soil Classification based on field visual observations.

URS (ENVIRON) LOG SITE R O&M 21561391.GPJ URSSTLEV.GDT 8/8/05

LOG OF BORING
PZ-7D

Completion Date: 5/25/05
Casing Elevation:
Ground Elevation:

Depth In feet	Inches Driven	Inches Recovered	PID (ppm)	Sampler Graphic	Symbol	USCS	DESCRIPTION	NOTES
							Moist, silty CLAY (FILL) with some cinders and high organic content	Drainage ditch filled in with 2.5' of gravel fill prior to drilling. Gravel will be removed after completion of drilling. Log starts at original ground surface.
5	18	8				FILL	Firm, moist, light gray to tan SILT (FILL) with paper material and cinders	
10	18	6					Firm, very moist, dark gray, SILT (FILL) with wood fragments and gravel	
							Becomes wet	
15	18	14					Medium dense, dry, gray, fine grained, well graded SAND (SW)	
20	18					SW	Becomes dense	
							Becomes moist	

Completion Depth: 136.00 Ft.
Project No.: 21561391.00000
Project Name: Site R O&M
Drilling Contractor: Layne
Drilling method: HSA / Mud Rotary
Logged by: R. Exceen / Golder

URS

Water Depth: _____ ft., After _____ hrs.
Water Depth: _____ ft., After _____ hrs.
▼ Water level at time of drilling
▽ Water level after drilling
Splitspoon Sampler
Roto Sonic-3" Core Barrel

ATD - At time of drilling

Unified Soil Classification based on field visual observations.

URS (ENVIRON) LOG SITE R O&M 21561391.GPJ URSSTLEV.GDT 8/8/05

LOG OF BORING
PZ-7D

Completion Date: 5/25/05
Casing Elevation:
Ground Elevation:

Depth In feet	Inches Driven	Inches Recovered	PID (ppm)	Sampler Graphic	Symbol	USCS	DESCRIPTION	NOTES
	18	18						
30	18	18						
							With trace medium grained sand	Set HSA @ 34.5 ft Setup for mud rotary
35	18	18					Becomes wet	
								Wit hydrocarbon odor and sheen
40	18	8						
45	18	8						
							Dense, wet, olive gray with multi-colored grains, fine to medium grained, well graded SAND (SW) with	Low recovery, possibly due to cobbles

Completion Depth: 136.00 Ft.
Project No.: 21561391.00000
Project Name: Site R O&M
Drilling Contractor: Layne
Drilling method: HSA / Mud Rotary
Logged by: R. Exceen / Golder

Water Depth: ____ ft., After ____ hrs.
Water Depth: ____ ft., After ____ hrs.
▼ Water level at time of drilling
▽ Water level after drilling
Splitspoon Sampler
Roto Sonic-3" Core Barrel

ATD - At time of drilling

Unified Soil Classification based on field visual observations.

URS

URS (ENVIRON) LOG SITE R O&M 21561391.GPJ URSSTLEV.GDT 8/8/05

LOG OF BORING
PZ-7D

Completion Date: 5/25/05
Casing Elevation:
Ground Elevation:

Depth In feet	Inches Driven	Inches Recovered	PID (ppm)	Sampler Graphic	Symbol	USCS	DESCRIPTION	NOTES
	18	6					trace coarse sand and fine gravel	impeding the splitspoon sampler. Broken cobble fragments in sample.
55	18	6						
60	18	8						
65	18						Dense, wet, olive gray with multi-colored grains, medium to coarse grained, well graded SAND (SW) with trace to little fine sand and trace fine gravel	
70	18	15					Dense, wet, black and olive gray with multi-colored grains, fine to coarse grained, well graded SAND (SW) with trace fine to coarse gravel and organics	
							Dense, wet, olive gray with multi-colored grains, fine to medium grained, well graded SAND (SW) with	

Completion Depth: 136.00 Ft.
Project No.: 21561391.08000
Project Name: Site R O&M
Drilling Contractor: Layne
Drilling method: HSA / Mud Rotary
Logged by: R. Exceen / Golder

Water Depth: _____ ft., After _____ hrs.
Water Depth: _____ ft., After _____ hrs.
▼ Water level at time of drilling
▽ Water level after drilling
Splitspoon Sampler
Roto Sonic-3" Core Barrel
ATD - At time of drilling

Unified Soil Classification based on field visual observations.

URS

URS (ENVIRON) LOG SITE R O&M 21561391.GPJ URSSTLEV.GDT 8/8/05

LOG OF BORING
PZ-7D

Completion Date: 5/25/05
Casing Elevation:
Ground Elevation:

Depth in feet	Inches Driven	Inches Recovered	PID (ppm)	Sampler Graphic	Symbol	USCS	DESCRIPTION	NOTES
	18	8					trace coarse sand	
80	18	8				SW	Dense, wet, olive gray with multi-colored grains, medium grained, well graded SAND (SW) with trace fine sand, coarse sand, and fine gravel	
85	18	6				SP	Grading to dense, wet, olive gray with multi-colored grains, medium grained, poorly graded SAND (SP)	
90	18	8						1st attempt: no recovery - large rock stuck in shoe 2nd attempt: no recovery - broken sample catcher
95	18	8					Dense, wet, olive gray with multi-colored grains, medium to coarse grained, well graded SAND (SW) with some fine sand	
							Grading to trace fine sand and fine gravel	

Completion Depth: 136.00 Ft.
Project No.: 21561391.00000
Project Name: Site R O&M
Drilling Contractor: Layne
Drilling method: HSA / Mud Rotary
Logged by: R. Exceen / Golder

URS

Water Depth: _____ ft., After _____ hrs.
Water Depth: _____ ft., After _____ hrs.
▼ Water level at time of drilling
▽ Water level after drilling
Splitspoon Sampler
Roto Sonic-3" Core Barrel

ATD - At time of drilling

Unified Soil Classification based on field visual observations.

URS (ENVIRON) LOG SITE R O&M 21561391.GPJ URSSTLEV.GDT 8/8/05

LOG OF BORING
PZ-7D

Completion Date: 5/25/05
Casing Elevation:
Ground Elevation:

Depth In feet	Inches Driven	Inches Recovered	PID (ppm)	Sampler Graphic	Symbol	USCS	DESCRIPTION	NOTES
	18	8						
105	18	6				SW		
110	18	8						
							Grading to trace fine sand, fine gravel, and coarse gravel	
115	18	6						
120	18	14				CL	Hard, moist, olive gray with multi-colored grains silty CLAY (CL) with trave coarse sand and fine gravel	
						SM	Dense, wet, olive gray with multi-colored grains, fine grained silty SAND (SM) with trave medium sand,	

Completion Depth: 136.00 Ft.
Project No.: 21561391.00000
Project Name: Site R O&M
Drilling Contractor: Layne
Drilling method: HSA / Mud Rotary
Logged by: R. Exceen / Golder

Water Depth: _____ ft., After _____ hrs.
Water Depth: _____ ft., After _____ hrs.
▼ Water level at time of drilling
▽ Water level after drilling
Splitspoon Sampler
Roto Sonic-3" Core Barrel
ATD - At time of drilling

Unified Soil Classification based on field visual observations.

URS

URS (ENVIRON) LOG SITE R O&M 21561391.GPJ URSSTLEV.GDT 8/8/05

LOG OF BORING
PZ-7D

Completion Date: 5/25/05
Casing Elevation:
Ground Elevation:

Depth In feet	Inches Driven	Inches Recovered	PID (ppm)	Sampler Graphic	Symbol	USCS	DESCRIPTION	NOTES
	18	6					coarse gravel, and little clay	
130	18	5				GC	Dense, wet, multi-colored grains, coarse GRAVEL (GC) with some clay and trace silt and fine sand	1st attempt: no recovery 2nd attempt: no recovery 3rd attemt: change splitspoon
135								
140	18	5						
145								

Completion Depth: 136.00 Ft.
Project No.: 21561391.00000
Project Name: Site R O&M
Drilling Contractor: Layne
Drilling method: HSA / Mud Rotary
Logged by: R. Exceen / Golder

URS

Water Depth: _____ ft., After _____ hrs.
Water Depth: _____ ft., After _____ hrs.
▼ Water level at time of drilling
▽ Water level after drilling
Splitspoon Sampler
Roto Sonic-3" Core Barrel

ATD - At time of drilling

Unified Soil Classification based on field visual observations.

URS (ENVIRON) LOG SITE R O&M 21561391.GPJ URSST1EV.GDT 8/8/05

LOG OF BORING
PZ-7U

Completion Date: 5/19/05
Casing Elevation:
Ground Elevation:

Depth In feet	Inches Driven	Inches Recovered	PID (ppm)	Sampler Graphic	Symbol	USCS	DESCRIPTION	NOTES
							Dense, dry sandy CINDERS (FILL) with wood, gravel, and some clay	
5			76.1				Medium stiff, moist, blackish gray silty CLAY (FILL)	Sheen & odor present
							Medium dense, moist to dry, dark brown sandy FILL (FILL) with wood, metal, plastic, and paper debris, cinders and, trace clayey sand	
			96.1			Fill		
10								
15							With 2" pipe fragments	
							Becomes wet	
			67.1				With metal shavings	Hydrocarbon sheen present
						SC	Medium dense, wet, grayish brown, fine grained, well graded clayey SAND (SC)	
20							Loose to very loose, moist to wet, tannish brown to brown, fine grained, well graded SAND (SW) with trace clayey sand and silty sand	
			136					

Completion Depth: 145.50 Ft.
Project No.: 21561391.00000
Project Name: Site R O&M
Drilling Contractor: Prosonic
Drilling method: Rotosonic
Logged by: M. Miller

URS

Water Depth: _____ ft., After _____ hrs.
Water Depth: _____ ft., After _____ hrs.
▼ Water level at time of drilling
▽ Water level after drilling
Splitspoon Sampler
Roto Sonic-3" Core Barrel

ATD - At time of drilling

Unified Soil Classification based on field visual observations.

URS (ENVIRON) LOG SITE R O&M 21561391.GPJ URSSTLEV.GDT 8/8/05

LOG OF BORING
PZ-7U

Completion Date: 5/19/05
Casing Elevation:
Ground Elevation:

Depth in feet	Inches Driven	Inches Recovered	PID (ppm)	Sampler Graphic	Symbol	USCS	DESCRIPTION	NOTES
30			441			SW		
35								
40							Medium dense, wet, dark gray to blackish gray, fine to medium grained, poorly graded SAND (SP)	
45						SP		

Completion Depth: 145.50 Ft.
Project No.: 21561391.00000
Project Name: Site R O&M
Drilling Contractor: Prosonic
Drilling method: Rotosonic
Logged by: M. Miller

Water Depth: _____ ft., After _____ hrs.
Water Depth: _____ ft., After _____ hrs.
▼ Water level at time of drilling
▽ Water level after drilling
Splitspoon Sampler
Roto Sonic-3" Core Barrel

ATD - At time of drilling

Unified Soil Classification based on field visual observations.

URS

URS (ENVIRON) LOG SITE R O&M 21561391.GPJ URSSTLEV.GDT 8/8/05

LOG OF BORING
PZ-7U

Completion Date: 5/19/05
Casing Elevation:
Ground Elevation:

Depth In feet	Inches Driven	Inches Recovered	PID (ppm)	Sampler Graphic	Symbol	USCS	DESCRIPTION	NOTES
							Medium dense, wet, dark gray to gray, medium to coarse grained, poorly graded SAND (SP) with trace fine sand	
55								
60						SP		
65								
70								
							Medium dense to loose, wet, dark gray, coarse grained, well graded SAND (SW) with trace cobbles	

Completion Depth: 145.50 Ft.
Project No.: 21561391.00000
Project Name: Site R O&M
Drilling Contractor: Prosonic
Drilling method: Rotosonic
Logged by: M. Miller

Water Depth: _____ ft., After _____ hrs.
Water Depth: _____ ft., After _____ hrs.
▼ Water level at time of drilling
▽ Water level after drilling
Splitspoon Sampler
Roto Sonic-3" Core Barrel

Unified Soil Classification based on field visual observations.

ATD - At time of drilling

URS

URS (ENVIRON) LOG SITE R O&M 21561391.GPJ URSSTLEV.GDT 8/8/05

LOG OF BORING
PZ-7U

Completion Date: 5/19/05
Casing Elevation:
Ground Elevation:

Depth in feet	Inches Driven	Inches Recovered	PID (ppm)	Sampler Graphic	Symbol	USCS	DESCRIPTION	NOTES
80						SW		
85								
90							With some fine to medium gravel	
						GP	Medium dense to loose, wet, dark gray, fine to medium grained, subangular, poorly graded sandy GRAVEL (GP) with little clay	
95							Medium dense to dense, wet, brown, coarse grained, well graded gravelly SAND (SW) with trace cobbles	

Completion Depth: 145.50 Ft.
Project No.: 21561391.00000
Project Name: Site R O&M
Drilling Contractor: Prosonic
Drilling method: Rotosonic
Logged by: M. Miller

URS

Water Depth: _____ ft., After _____ hrs.
Water Depth: _____ ft., After _____ hrs.
▼ Water level at time of drilling
▽ Water level after drilling
Splitspoon Sampler
Roto Sonic-3" Core Barrel

ATD - At time of drilling

Unified Soil Classification based on field visual observations.

URS (ENVIRON) LOG SITE R O&M 21561391.GPJ URSSTLEV.GDT 8/8/05

LOG OF BORING
PZ-7U

Completion Date: 5/19/05
Casing Elevation:
Ground Elevation:

Depth In feet	Inches Driven	Inches Recovered	PID (ppm)	Sampler Graphic	Symbol	USCS	DESCRIPTION	NOTES
105								
110								
115						SW		
120								

Completion Depth: 145.50 Ft.
Project No.: 21561391.00000
Project Name: Site R O&M
Drilling Contractor: Prosonic
Drilling method: Rotosonic
Logged by: M. Miller

URS

Water Depth: _____ ft., After _____ hrs.
Water Depth: _____ ft., After _____ hrs.
▼ Water level at time of drilling
▽ Water level after drilling
Splitspoon Sampler
Roto Sonic-3" Core Barrel

ATD - At time of drilling

Unified Soil Classification based on field visual observations.

URS (ENVIRON) LOG SITE R O&M 21561391.GPJ URSSTLEV.GDT 8/8/05

LOG OF BORING
PZ-7U

Completion Date: 5/19/05
Casing Elevation:
Ground Elevation:

Depth In feet	Inches Driven	Inches Recovered	PID (ppm)	Sampler Graphic	Symbol	USCS	DESCRIPTION	NOTES
130								
135								
						CLG	Stiff, wet, brownish gray gravelly CLAY (CLG) with trace cobbles	
140								
145								

Completion Depth: 145.50 Ft.
Project No.: 21561391.00000
Project Name: Site R O&M
Drilling Contractor: Prosonic
Drilling method: Rotosonic
Logged by: M. Miller

URS

Water Depth: _____ ft., After _____ hrs.
Water Depth: _____ ft., After _____ hrs.
▼ Water level at time of drilling
▽ Water level after drilling
Splitspoon Sampler
Roto Sonic-3" Core Barrel

ATD - At time of drilling

Unified Soil Classification based on field visual observations.

URS (ENVIRON) LOG SITE R O&M 21561391.GPJ URSSTLEV.GDT 8/8/05

LOG OF BORING
PZ-8D

Completion Date: 5/13/05
Casing Elevation:
Ground Elevation:

Depth In feet	Inches Driven	Inches Recovered	PID (ppm)	Sampler Graphic	Symbol	USCS	DESCRIPTION	NOTES
							GRAVEL (FILL)	
	18	18						
5							Dense, dry, black sandy CINDERS (FILL)	
	18	18				FILL		
10								
	18	18						
15								
							Loose, gray, fine grained silty SAND (SM) with trace clay	
	18	18						
20						SM		
	18	18						

Completion Depth: 132.50 Ft.
Project No.: 21561391.00000
Project Name: Site R O&M
Drilling Contractor: Layne
Drilling method: HSA / Mud Rotary
Logged by: E. Fritsch

URS

Water Depth: _____ ft., After _____ hrs.
Water Depth: _____ ft., After _____ hrs.
▼ Water level at time of drilling
▽ Water level after drilling
Splitspoon Sampler
Roto Sonic-3" Core Barrel

ATD - At time of drilling

Unified Soil Classification based on field visual observations.

URS (ENVIRON) LOG SITE R O&M 21561391.GPJ URSSTLEV.GDT 8/8/05

LOG OF BORING
PZ-8D

Completion Date: 5/13/05
Casing Elevation:
Ground Elevation:

Depth in feet	Inches Driven	Inches Recovered	PID (ppm)	Sampler Graphic	Symbol	USCS	DESCRIPTION	NOTES
						SM		
							Stiff, moist, dark gray silty CLAY (CL)	With black staining
	18	18				CL		
30								
							Loose, wet, gray, fine to medium grained, poorly graded SAND (SP)	Set HSA @ 32 ft Setup for mud rotary
	18	18						
35								
	18	18						
40								
	18	18						
45								
							Becomes dark gray with coarse sand	
	18	18						

Completion Depth: 132.50 Ft.
Project No.: 21561391.00000
Project Name: Site R O&M
Drilling Contractor: Layne
Drilling method: HSA / Mud Rotary
Logged by: E. Fritsch

URS

Water Depth: _____ ft., After _____ hrs.
Water Depth: _____ ft., After _____ hrs.
▼ Water level at time of drilling
▽ Water level after drilling
Splitspoon Sampler
Roto Sonic-3" Core Barrel

ATD - At time of drilling

Unified Soil Classification based on field visual observations.

URS (ENVIRON) LOG SITE R O&M 21561391.GPJ URSSTLEV.GDT 8/8/05

LOG OF BORING
PZ-8D

Completion Date: 5/13/05
Casing Elevation:
Ground Elevation:

Depth In feet	Inches Driven	Inches Recovered	PID (ppm)	Sampler Graphic	Symbol	USCS	DESCRIPTION	NOTES
	18	18						
55							with trace clay	
	18	18						
60								
	18	18				SP	Dense, wet, dark gray, fine grained SAND (SP)	
65						SP		
	18	18						
70								
	18	8					Loose to medium dense, wet, gray to brown, fine grained, poorly graded SAND (SP)	

Completion Depth: 132.50 Ft.
Project No.: 21561391.00000
Project Name: Site R O&M
Drilling Contractor: Layne
Drilling method: HSA / Mud Rotary
Logged by: E. Fritsch

Water Depth: _____ ft., After _____ hrs.
Water Depth: _____ ft., After _____ hrs.
▼ Water level at time of drilling
▽ Water level after drilling
Splitspoon Sampler
Roto Sonic-3" Core Barrel

ATD - At time of drilling

Unified Soil Classification based on field visual observations.

URS

URS (ENVIRON) LOG SITE R O&M 21561391.GPJ URSSTLEV.GDT 8/8/05

LOG OF BORING
PZ-8D

Completion Date: 5/13/05
Casing Elevation:
Ground Elevation:

Depth In feet	Inches Driven	Inches Recovered	PID (ppm)	Sampler Graphic	Symbol	USCS	DESCRIPTION	NOTES
	18	6						
80								
	18	8					Loose, wet, medium grained, gray to brown, medium grained, poorly graded SAND (SP) with trace coarse grained sand	
85								
	18	18				SP	With fine gravel	
90								
	18	4					Dense, wet, gray, fine grained, poorly graded SAND (SP) with trace fine gravel	
95	18	8						
	18	6						

Completion Depth: 132.50 Ft.
Project No.: 21561391.00000
Project Name: Site R O&M
Drilling Contractor: Layne
Drilling method: HSA / Mud Rotary
Logged by: E. Fritsch

URS

Water Depth: _____ ft., After _____ hrs.
Water Depth: _____ ft., After _____ hrs.
▼ Water level at time of drilling
▽ Water level after drilling
Splitspoon Sampler
Roto Sonic-3" Core Barrel

ATD - At time of drilling

Unified Soil Classification based on field visual observations.

URS (ENVIRON) LOG SITE R O&M 21561391.GPJ URSSTLEV.GDT 8/8/05

LOG OF BORING
PZ-8D

Completion Date: 5/13/05
Casing Elevation:
Ground Elevation:

Depth In feet	Inches Driven	Inches Recovered	PID (ppm)	Sampler Graphic	Symbol	USCS	DESCRIPTION	NOTES
						SP		
	18	6					Wet, brown to reddish brown, fine, subrounded to rounded, poorly graded GRAVEL (GP) with trace coarse gravel and coarse sand	
105						GP	With no coarse gravel or coarse sand	
	18	4						
110								
	18	6					LIMESTONE: fractured, rock and gravel	
115						LIMESTONE		
	18	8					Loose, gray to brown to black, poorly graded SAND (SP) with fine gravel	
120						SP		
	18	8						

Completion Depth: 132.50 Ft.
Project No.: 21561391.00000
Project Name: Site R O&M
Drilling Contractor: Layne
Drilling method: HSA / Mud Rotary
Logged by: E. Fritsch

Water Depth: _____ ft., After _____ hrs.
Water Depth: _____ ft., After _____ hrs.
▼ Water level at time of drilling
▽ Water level after drilling
Splitspoon Sampler
Roto Sonic-3" Core Barrel

ATD - At time of drilling

Unified Soil Classification based on field visual observations.

URS

URS IENVIRON LOG SITE R O&M 21561391.GPJ URSSTLEV.GDT 8/8/05

LOG OF BORING
PZ-8D

Completion Date: 5/13/05
Casing Elevation:
Ground Elevation:

Depth in feet	Inches Driven	Inches Recovered	PID (ppm)	Sampler Graphic	Symbol	USCS	DESCRIPTION	NOTES
	18	6				SP	With trace coarse rounded gravel, cobbles, and rocks	
130								
	3						With fractured limestone	
135								
140								
145								

Completion Depth: 132.50 Ft.
Project No.: 21561391.00000
Project Name: Site R O&M
Drilling Contractor: Layne
Drilling method: HSA / Mud Rotary
Logged by: E. Fritsch

URS

Water Depth: _____ ft., After _____ hrs.
Water Depth: _____ ft., After _____ hrs.
▼ Water level at time of drilling
▽ Water level after drilling
Splitspoon Sampler
Roto Sonic-3" Core Barrel

ATD - At time of drilling

Unified Soil Classification based on field visual observations.

URS (ENVIRON) LOG SITE R O&M 21561391.GPJ URSSTLEV.GDT 8/8/05

LOG OF BORING
PZ-8U

Completion Date: 5/17/05
Casing Elevation:
Ground Elevation:

Depth in feet	Inches Driven	Inches Recovered	PID (ppm)	Sampler Graphic	Symbol	USCS	DESCRIPTION	NOTES
							White, crushed, limestone GRAVEL (FILL) parking lot	
							Dark gray to black, silty gravel CINDERS (FILL)	
	18	15						
5								
							Dark gray to black, silty gravel CINDERS (FILL) with railroad tie (wood)	With creosote odor
	18	2				FILL		
	18	3						
10								With petroleum odor
	18	6						
15								
							Stiff, moist, dark gray, silty CLAY (CL)	With oil and strong odor
	18	10				CL		
20								
							Loose, moist, dark gray, fine grained, non-cohisive, poorly graded SAND (SP)	With staining
	18	12				SP		

Completion Depth: 134.00 Ft.
Project No.: 21561391.00000
Project Name: Site R O&M
Drilling Contractor: Layne
Drilling method: HSA / Mud Rotary
Logged by: E. Fritsch

URS

Water Depth: _____ ft., After ___ hrs.
Water Depth: _____ ft., After _____ hrs.
▼ Water level at time of drilling
▽ Water level after drilling
Splitspoon Sampler
Roto Sonic-3" Core Barrel

Unified Soil Classification based on field visual observations.

ATD - At time of drilling

URS (ENVIRON) LOG SITE R O&M 21561391.GPJ URSSTLEV.GDT 8/8/05

LOG OF BORING
PZ-8U

Completion Date: 5/17/05
Casing Elevation:
Ground Elevation:

Depth In feet	Inches Driven	Inches Recovered	PID (ppm)	Sampler Graphic	Symbol	USCS	DESCRIPTION	NOTES
							Becomes medium dense	With no staining
	18	12						
30							Becomes wet	
	18	12						Set HSA @ 33 ft Setup for mud rotary
35								
	18	12				SP		
40								
	18	6						
45								
	18	6					Loose, wet, brown to gray, medium grained, non-cohesive, poorly graded SAND (SP) with trace coarse sand	

Completion Depth: 134.00 Ft.
Project No.: 21561391.00000
Project Name: Site R O&M
Drilling Contractor: Layne
Drilling method: HSA / Mud Rotary
Logged by: E. Fritsch

URS

Water Depth: _____ ft., After _____ hrs.
Water Depth: _____ ft., After _____ hrs.
▼ Water level at time of drilling
▽ Water level after drilling
Splitspoon Sampler
Roto Sonic-3" Core Barrel

ATD - At time of drilling

Unified Soil Classification based on field visual observations.

URS (ENVIRON) LOG SITE R O&M 21561391.GPJ URSSTLEV.GDT 8/8/05

LOG OF BORING
PZ-8U

Completion Date: 5/17/05
Casing Elevation:
Ground Elevation:

Depth in feet	Inches Driven	Inches Recovered	PID (ppm)	Sampler Graphic	Symbol	USCS	DESCRIPTION	NOTES
	18	6						
55							Becomes fine grained with trace fine gravel	
	18	2						
	18	6						
60						SP		
	18	6						
65								
	18	6						
70							Becomes dense with trace coarse sand and no gravel	
	18	3						
	18	3						

Completion Depth: 134.00 Ft.
Project No.: 21561391.00000
Project Name: Site R O&M
Drilling Contractor: Layne
Drilling method: HSA / Mud Rotary
Logged by: E. Fritsch

URS

Water Depth: _____ ft., After _____ hrs.
Water Depth: _____ ft., After _____ hrs.
▼ Water level at time of drilling
▽ Water level after drilling
Splitspoon Sampler
Roto Sonic-3" Core Barrel
ATD - At time of drilling

Unified Soil Classification based on field visual observations.

URS (ENVIRON) LOG SITE R O&M 21561391.GPJ URSSTLEV.GDT 8/8/05

LOG OF BORING
PZ-8U

Completion Date: 5/17/05
Casing Elevation:
Ground Elevation:

Depth In feet	Inches Driven	Inches Recovered	PID (ppm)	Sampler Graphic	Symbol	USCS	DESCRIPTION	NOTES
							Dense, wet, gray, fine grained, non-cohesive poorly graded SAND (SP)	
	18	6						
80						SP		
							Loose, wet, gray to brown, medium grained, poorly graded SAND (SP) with fine to medium gravel and rock fragments	
	18	0						
	18	6						
85								
	18	18					Loose, wet, fine grained, poorly graded GRAVEL (GP)	
90						GP		
							Dense, wet, gray, fine grained, non-cohesive, poorly graded SAND (SP)	
	18	6						
95						SP		
							Medium dense, gray to brown, medium grained, poorly graded SAND (SP) with trace fine gravel	
	18	0						
	18	12						

Completion Depth: 134.00 Ft.
Project No.: 21561391.00000
Project Name: Site R O&M
Drilling Contractor: Layne
Drilling method: HSA / Mud Rotary
Logged by: E. Fritsch

Water Depth: _____ ft., After _____ hrs.
Water Depth: _____ ft., After _____ hrs.
▼ Water level at time of drilling
▽ Water level after drilling
Splitspoon Sampler
Roto Sonic-3" Core Barrel

ATD - At time of drilling

Unified Soil Classification based on field visual observations.

URS

URS (ENVIRON) LOG SITE R O&M 21561391.GPJ URSSTLEV.GDT 8/2/05

LOG OF BORING
PZ-8U

Completion Date: 5/17/05
Casing Elevation:
Ground Elevation:

Depth In feet	Inches Driven	Inches Recovered	PID (ppm)	Sampler Graphic	Symbol	USCS	DESCRIPTION	NOTES
							Medium to coarse GRAVEL (GP)	
	18	0				GP		
105							Loose, wet, medium grained, poorly graded SAND (SP) with large gravel	Switched to 3" spoon
	18	5						
110							With fractured limestone	
	18	6				SP		
115							Becomes coarse grained	
	18	6						
120							Fine grained, poorly graded GRAVEL (GP)	
	18	3				GP		

Completion Depth: 134.00 Ft.
Project No.: 21561391.00000
Project Name: Site R O&M
Drilling Contractor: Layne
Drilling method: HSA / Mud Rotary
Logged by: E. Fritsch

URS

Water Depth: _____ ft., After _____ hrs.
Water Depth: _____ ft., After _____ hrs.
▼ Water level at time of drilling
▽ Water level after drilling
Splitspoon Sampler
Roto Sonic-3" Core Barrel

ATD - At time of drilling

Unified Soil Classification based on field visual observations.

URS (ENVIRON) LOG SITE R O&M 21561391.GPJ URSSTLEV.GDT 8/8/05

LOG OF BORING
PZ-8U

Completion Date: 5/17/05
Casing Elevation:
Ground Elevation:

Depth In feet	Inches Driven	Inches Recovered	PID (ppm)	Sampler Graphic	Symbol	USCS	DESCRIPTION	NOTES
						GP		
	18	6					Loose, wet, gray to brown, medium grained, poorly graded SAND (SP) with fine gravel	
130						SP		
	18						With coarse sand	
135								
140								
145								

Completion Depth: 134.00 Ft.
Project No.: 21561391.00000
Project Name: Site R O&M
Drilling Contractor: Layne
Drilling method: HSA / Mud Rotary
Logged by: E. Fritsch

URS

Water Depth: _____ ft., After _____ hrs.
Water Depth: _____ ft., After _____ hrs.
▼ Water level at time of drilling
▽ Water level after drilling
Splitspoon Sampler
Roto Sonic-3" Core Barrel

ATD - At time of drilling

Unified Soil Classification based on field visual observations.

URS (ENVIRON) LOG SITE R O&M 21561391.GPJ URSSTLEV.GDT 8/8/05

Documents in Appendix B is stamped draft due to it being currently reviewed by USEPA at the time of this submission.

GROUNDWATER MIGRATION CONTROL SYSTEM OPERATION AND MAINTENANCE PLAN

SITE R
SAUGET, ILLINOIS

DRAFT

Prepared for
Solutia Inc.
575 Maryville Centre Drive
St. Louis, MO 63141

January 29, 2008

URS Corporation
1001 Highlands Plaza Drive West
St. Louis, Missouri 63110
(314) 429-0100
Project #21561391.00000

TABLE OF CONTENTS

GLOSSARY OF ACRONYMS/ABBREVIATIONS G-1

SECTION 1 NORMAL OPERATION/MAINTENANCE 1-1

1.1 Operation of GMCS 1-1
1.1.1 Theory of Operation 1-2
1.1.2 Extraction Wells 1-3
1.1.2.1 Extraction Wells 1-3
1.1.2.2 Pumps, Motors and Appurtenances 1-4
1.1.3 Automated Control and Monitoring System 1-5
1.1.3.1 River Stage Transmitter 1-6
1.1.3.2 Power Distribution Panel 1-6
1.1.3.3 Pump Control Panels with Variable Frequency Drives 1-7
1.1.3.4 Magnetic Flow Meters 1-7
1.1.3.5 Automated Piezometers 1-8
1.1.4 Effluent Pipeline and Appurtenances 1-8
1.1.5 Alarm Conditions 1-9
1.2 Description of Tasks for GMCS Maintenance 1-10
1.2.1 Extraction Wells 1-10
1.2.2 Extraction Well Pumps and Motors 1-11
1.2.3 Well Flow Meters 1-13
1.2.4 Measurement and Control Unit, Variable Frequency Drives, Controls, and Appurtenances 1-13
1.2.5 Piezometers 1-14
1.2.6 Automatic Water Sampler 1-15
1.2.7 Data Management 1-15
1.3 Description of Prescribed Operation Conditions 1-16
1.4 Schedule Showing Frequency of O&M Tasks 1-17

SECTION 2 ROUTINE MONITORING AND LABORATORY TESTING 2-1

2.1 Groundwater Quality Monitoring 2-1
2.2 Groundwater Level Monitoring 2-2
2.3 Sediment and Surface Water Monitoring 2-2
2.4 Institutional Controls 2-3

SECTION 3 PROJECT ORGANIZATION AND RESPONSIBILITIES 3-1

3.1 Project Organization 3-1
3.2 Management Responsibilities 3-1
3.2.1 Solutia Project Manager 3-1
3.2.2 Contractor Project Manager 3-1
3.3 Quality Assurance Responsibilities 3-2
3.3.1 Contractor QA Officer 3-2

SECTION 4 POTENTIAL OPERATING PROBLEMS AND CORRECTIVE ACTION 4-1

DRAFT

TABLE OF CONTENTS

4.1 Potential Operating Problems 4-1
4.1.1 Sources of Information 4-1
4.1.2 Remedies 4-2
4.2 Corrective Action 4-2
4.2.1 Field Corrective Action 4-2
4.2.1.1 Corrective Action Related to Sampling Activities 4-3
4.2.1.2 Corrective Action Related to Site Conditions 4-4
4.2.1.3 Corrective Action Related to Inspection of GMCS 4-4
4.2.2 Data Analysis and Assessment Corrective Action 4-5

SECTION 5 HEALTH AND SAFETY 5-1

5.1 Health and Safety Plan 5-1
5.2 Permit Requirements for Field Work 5-1
5.2.1 Lockout/Tagout Permits 5-1
5.2.2 Line Break Permits 5-1
5.2.3 Hot Work Permits 5-2
5.2.4 High Work Permits 5-2
5.2.5 Excavation Permits 5-2
5.2.6 Confined Space Permits 5-2

SECTION 6 EQUIPMENT 6-1

SECTION 7 RECORD KEEPING AND REPORTING 7-1

7.1 Record Keeping 7-1
7.2 Reporting 7-1

List of Tables

Table 1-1 Extraction Well Installation Data 1-2
Table 1-2 Pump Installation Data 1-3
Table 1-3 Installation Data for Automated Piezometers 1-6
Table 1-4 Individual Alarm Conditions for ACMS 1-6
Table 1-5 Specific Capacity (gpm/ft) Based on One-Hour Test @700 gpm 1-12
Table 1-6 Normal Ohm and Megaohm Values Between All Leads and Ground 1-9
Table 1-7 Control Scheme for Each Extraction Well Pump 1-9
Table 1-8 Operation and Maintenance Schedule 1-14
Table 2-1 Monitoring Well Installation Data 2-1
Table 2-2 Piezometer Installation Data for Piezometers Monitored Quarterly 2-2

DRAFT

TABLE OF CONTENTS

List of Drawings

Drawing 1-1 Site Location Map
Drawing 1-2 Abbreviations & Symbols
Drawing 1-3 Overall Site Plan
Drawing 1-4 Boring Location Plan
Drawing 1-5 Barrier Wall – Profile Sta. 5+00 to 12+00
Drawing 1-6 Barrier Wall – Profile Sta. 12+00 to 21+50
Drawing 1-7 Barrier Wall – Profile Sta. 21+50 to 32+00
Drawing 1-8 Barrier Wall – Profile Sta. 32+00 to 37+97
Drawing 1-9 Barrier Wall Details
Drawing 1-10 Stockpile Details
Drawing 1-11 Measurement and Control Unit (MCU)
Drawing 1-12 Monitoring Well/Piezometer Location Map
Drawing 1-13 Typical Extraction Well
Drawing 1-14 Extraction Well Pump/VFD Enclosure, Flow Meter and Well Instrumentation
Drawing 1-15 Automated Control and Monitoring System Site Plan
Drawing 1-16 Power Distribution Panels and River Stage Gage
Drawing 1-17 Electrical Power Diagram
Drawing 1-18 Existing Property and Utility Plan
Drawing 1-19 Details for RMUs 2, 4 and 5
Drawing 1-20 Plan of Effluent Pipeline
Drawing 1-21 Profile of Effluent Pipeline
Drawing 1-22 Piping Plan & Details at Discharge Plant
Drawing 1-23 Piping Detail
Drawing 1-24 Electrical Plan & Details at Discharge Point
Drawing 1-25 Discharge Pipe Modifications
Drawing 1-26 Pump Control/VFD Enclosure

DRAFT

TABLE OF CONTENTS

Appendices

Appendix A – Well Installation Reports
- Layne-Western Company Well Installation Reports
- Installation Reports for Extraction Wells, Monitoring Wells and Piezometers Installed by Golder Associates

Appendix B – Grundfos Pump Test Data

Appendix C – Manufacturer's Information
- American Sigma (Hach) 900 MAX All Weather Refrigerated Sampler Instrument Manual, Cat. 8854, July 2002, Ed. 4
- American Sigma (Hach) 900 MAX All Weather Refrigerated Sampler Thermal System, Service Manual, Cat No. 3540-04, July 2002, Ed. 3
- Belden VFD Cable Data
- Baker Monitor Pitless Adapter Product Data
- Eurotherm Model MV408 Current Input Isolating Signal Conditioner
- Federal Signal Group, Telephone Activated Remote Control, Model 300RC
- Flowserve/Pleuger Submersible Motor Pump Installation, Operation and Maintenance Manual
- Franklin Electric Submersible Motors Manual
- General Electric 230/208 Volt Window/Wall Mount Heat & Cool Unit Specifications
- General Electric Room Air Conditioners Owner's Manual and Installation Instructions
- Geokon 4500HD Heavy Duty Pressure Transducer Specifications
- Geomation Measurement and Control Systems 2380 MCU Technical Manual
- HD Supply Waterworks Gate Valve Specifications
- Invensys Action Pak AP4390/AP4391/AP4392
- Krohne Installation Instructions, Aquaflux F Electromagnetic Flowmeters
- Krohne Signal Converter Data
- Limitorque LY-MOD 20 Integral Control Diagram Dwg 17-500-0008-3, Rev A.
- Limitorque PT20SD Position Transmitter Calibration Instructions
- Limitorque (Mead O'Brien, Inc.) Dwg. No. I33762 (dimensioned drawing of Milliken 6" valve with Limitorque Actuator)
- Limitorque Dwg 03-459-0077-1, Rev E (1-22-92), LY-1001 Unit with A1 Top Mount Integral Compartment
- Limitorque Actuation Systems, Modutronic 20 II, Installation & Maintenance Manual
- Limitorque LY Series, Installation & Maintenance for LY 1001, LY 2001, and LY 3001
- Millcentric (Plug Valves) Operations and Maintenance Manual, Series 600
- Milliken Valve Co. Dwg. S 49071, 3-89, Dimensions of Millcentric Plug Valves.
- Milliken Eccentric Plug Valves Product Data Sheet
- ProAir Air Conditioner Manufacturer's Data (VFD)
- Raychem Industrial Heat-Tracing Installation and Maintenance Manual

DRAFT

TABLE OF CONTENTS

- Rockwell Automation (Reliance Electric/Allen Bradley) SP600 AC Drive User Manual, Version 1.0, 6SB401 Series, 460 VAC (20 HP to 100 HP), Instruction Manual D2-3501-1
- Sensaphone 2000 Engineering Specifications
- Val-Matic Wastewater Air/Vacuum Valve Drawing No. VM-302A
- Val-Matic Wastewater Air/Vacuum Valve with Backwash Accessories Drawing No. VM-302ABW
- Val-Matic Wastewater Air/Vacuum Valve Operation, Maintenance and Installation Manual
- Val-Matic Wastewater Air/Vacuum Valve Specification

DRAFT

GLOSSARY OF ACRONYMS/ABBREVIATIONS

ABRTF	American Bottoms Regional Wastewater Treatment Facility
ACMS	Automated Control and Monitoring System
BART	Biological Activity Reaction Test
FCR	Field Change Request
FSP	Field Sampling Plan
FTP	File Transfer Protocol
GMCS	Groundwater Migration Control System
IC	Institutional Control
IOP	Interim Operating Period
MCU	Measurement and Control Unit
MSL	Mean Sea Level
NGVD	National Geodetic Vertical Datum
OD	Outer Diameter
O&M	Operation and Maintenance
OU-2	Operable Unit 2
PC	Personal Computer
PM	Project Manager
QA	Quality Assurance
QC	Quality Control
QA/QC	Quality Assurance/Quality Control
QAO	Quality Assurance Officer
QAPP	Quality Assurance Project Plan
ROD	Record of Decision
SVOC	Semi Volatile Organic Compound
TDS	Total Dissolved Solids
TOC	Total Organic Carbon
TOR	Top of Riser
UPS	Uninterruptible Power Supply
URS	URS Corporation
USACE	United States Army Corps of Engineers
USEPA	United States Environmental Protection Agency
VFD	Variable Frequency Drive
VOC	Volatile Organic Compound
WWTP	Waste Water Treatment Plant

DRAFT

SECTIONONE Normal Operation/Maintenance

The Groundwater Migration Control System (GMCS) was constructed at Site R in Sauget, Illinois, between November 2002 and June 2005. This Operation and Maintenance (O&M) Plan covers the long term operation and maintenance of the GMCS and the maintenance of site institutional controls (ICs). This O&M Plan will be updated if the system is modified. Depending on the extent of the modifications, either the O&M Plan will be resubmitted, or replacement pages and figures may be submitted for the existing O&M Plan.

Drawings 1-1 and 1-2 are the site location map (Drawing 1-1) and a list of abbreviations and symbols used throughout the rest of the drawings (Drawing 1-2). Drawing 1-3 presents the Overall Site Plan.

Several subsurface investigations have been done at Site R between 2001 and 2002, and this information was used during the design of the barrier wall. The results of these investigations (including boring log information) can be found in the following geotechnical data report prepared by URS Corporation in January of 2003: *"GMCS, Sauget Area 2 Superfund Site, Volume 1, Prefinal Design Submittal, Attachment 4-1, Geotechnical Data, dated January 21, 2003"*. Drawing 1-4 shows the locations of the soil borings included in this report. Drawings 1-5 through 1-8 show the profile of the barrier wall. Graphic logs depicting soil conditions were included in the profile when they were available. Drawing 1-9 shows other barrier wall details.

A stockpile was created inside the boundaries of Site R for spoils generated during construction of the barrier wall. Drawing 1-10 shows the location of this stockpile.

1.1 OPERATION OF THE GMCS

The Groundwater Migration Control System is an automated system which is designed to control the flow of groundwater at the site. This system consists of a barrier wall and an automated pumping system which pumps groundwater from three extraction wells at the site and discharges it to the P-Chem plant. The system is designed to operate over a range of pumping rates between 0 and about 700 gallons per minute per extraction well.

The Automated Migration Control System (ACMS) consists of the following components:

- Measurement and Control Unit (MCU)

- River stage transmitter
- Power distribution panel
- Pump control panels with variable frequency drives
- Electric valve actuators and associated plug valves
- Magnetic flow meters at each extraction well
- Extraction well water level sensors
- Magnetic flow meter at system discharge point east of P-Chem Plant (American Bottoms WWTP Manhole)
- Host/Remote Access PC at Control Building.

DRAFT

The MCU sends the pumping rate control signal to each variable frequency drive at each of the extraction wells. MCU details are found in Drawing 1-11. The variable frequency drive maintains the appropriate pump motor speeds to produce the necessary pump flow based on the defined system control criteria. For the higher flows, the variable frequency drives (VFDs) provide adequate control of the pump flows. Lower flows require automatic throttling using the actuator controlled plug valves. The magnetic flow meters at each extraction well provide closed loop feedback to the MCU for flow regulation and to record readings into the database. The river stage and individual pump flow hourly averages are recorded in the database.

1.1.1 Theory of Operation

Based on the results of three separate interim operating periods (IOPs), the following control scheme was developed to determine how much groundwater should be pumped from the GMCS extraction wells. Stated simply, the amount of groundwater that flows into the barrier wall should equal the amount of groundwater that is pumped from the site by the extraction wells – thus preventing groundwater from mounding up behind the barrier wall and flowing out around the edges of the wall. During the last two interim operating periods, Darcy's law was used to calculate the groundwater flow into the barrier wall and this calculated flow was compared with the actual flow into the barrier wall which was estimated using groundwater flow line and flow

vector deflections. After completion of these interim operating periods, it was proposed to use Darcy's Law to calculate the amount of groundwater that should be pumped from the extraction wells.

The following information is being used in the Darcy's Law calculation to determine the amount of groundwater that needs to be pumped from the site.

Darcy's Law Equation: Q = KIA

Where: Q = Groundwater Discharge into Barrier Wall

K = Aquifer Hydraulic Conductivity (1E-1 cm/sec or 285 ft/day)

I = Groundwater Gradient (Average of PZ-5 U/D and PZ-8 U/D)

A = Groundwater Discharge Area (209,522 square feet)

DRAFT

Once the total groundwater discharge (Q) has been calculated using the above calculation, this value is used in the control scheme for each pump as discussed in Section 1.3 below.

1.1.2 Extraction Wells, Pumps and Appurtenances

1.1.2.1 Extraction Wells

The extraction well system consists of one 10-inch and two 12-inch diameter wells ranging from 110 to 140 ft deep at the locations shown on the piezometer/well location map (Drawing 1-12). The extraction wells are constructed as shown on Drawing 1-13 and have Type 304 stainless steel screens with 0.040-in. wide slots from about 40 ft below the existing ground surface to 5 ft above the bottoms of the wells. The bottom 5 ft of each well consists of Type 304 stainless steel tight-wind screen (zero slot). Well installation and pump information are found in Tables 1-1 and 1-2. Installation logs are included in Appendix A of this document and are also included in the Golder Associates report on the installation of extraction wells and piezometers.

Table 1-1

Extraction Well Installation Data[1]

Well	Elevation (Ft, NGVD)					Length (Ft)			Well OD (in.)
	Ground Surface	Center-line of Disch. Pipe	Top of Screen (Exposed)	Btm of Screen	Btm of Well	Casing (bgs)	Exposed Screen	Blank	
EW-1	422.02	417.29	369.0	291.0	285.8	53.0	78.0	5.2	12.75
EW-2	418.53	415.26	380.3	313.6	308.5	41.5	63.4	5.1	10.75
EW-3	420.58	416.26	364.1	294.6	289.3	56.7	69.4	5.3	12.75

DRAFT

1.1.2.2 Pumps, Motors, and Appurtenances

Detailed descriptions and dimensions of the pumps and their characteristic curves (based on factory tests on the actual original pumps installed in the wells using different motors) are included in Appendix B. The pumps are 8- and 10-in. diameter, all stainless steel Grundfos submersible pumps with 6-inch diameter 3450-rpm, 3-phase, 460-volt Flowserve/Pleuger submersible motors or Franklin submersible motors. The pumps discharge through 4.5-in. and 6.625-in. OD Schedule 40 threaded-and-coupled Type 304 stainless steel drop pipe supported by Baker Monitor pitless adapters. The power cable (manufactured by Belden) is a jacketed cable designed especially for variable frequency drives (VFDs). Details of the pump installations are shown on Drawing 1-13. Installation data for the pumps are summarized in Table 1-2. As shown on Drawing 1-14, each pump discharge pipe is routed through a 4-ft deep pre-cast concrete vault containing an air release valve, sampling port, Krohne Aquaflux electromagnetic flowmeter, a Limitorque electric valve actuator and a Millcentric plug valve to enable flow throttling and to isolate the well from the pipeline during maintenance. The manual valve that is located on the air release line from the air release valve in the concrete vault should normally be in a closed position. The location of this manual valve is shown on Drawing 1-14.

[1] Well installation data are from Well Completion Records prepared by Dave Meyer, Layne-Western Division, Layne Christensen Company, July 28, 2003

Table 1-2

Pump Installation Data

Well	Top of Riser Elevation (ft, NGVD)	Elevation (ft, NGVD)		Drop Pipe Dia. (in.)	Grundfos Model No.	Flow (gpm)	Efficiency (%)	Shutoff Head (ft)	Motor HP
		Discharge (centerline)	Pump Intake						
EW-1	422.72	417.29	340	6	625S400-2-1	750	80	235	40
EW-2	419.84	415.26	337	5	475S400-3	750	73	310	30
EW-3	421.45	416.26	339	6	625S400-2-1	700	80	235	40

Limitorque electric valve actuators were added to the plug valves in February 2005. The actuators communicate the position of the valve (% open) to the MCU using a 4-20 milliamp signal. Electronic float switches were added in each concrete vault. The float switches are set to automatically stop the pumps if flooding of the vault is detected.

Downstream of the vault, the stainless steel discharge pipe connects to a 6-in. diameter HDPE pipe, which then connects to the 12-in. diameter HDPE discharge pipeline. In May of 2007, gate valves from HD Supply Waterworks in Granite City, Illinois were installed outside (downstream) of each of the extraction well vaults, along the 6-inch diameter HDPE section of the discharge pipe. The gate valves allow each extraction well to be isolated from the rest of the system, thus allowing maintenance on an individual extraction well and its associated equipment, without shutting down the entire AMCS. Gate valves are manually opened and closed using a T-handle. The location of the gate valve with respect to the extraction well vault, can be found in Drawing 1-14.

Manufacturer's cut-sheets and technical specifications for all of these components are included in Appendix C of this document.

1.1.3 Automated Control and Monitoring System

The Automated Control and Monitoring System (ACMS) is a primary component of the Groundwater Migration Control System. Drawing 1-15 shows the ACMS Site Plan, and

Drawing 1-12 shows a plan view of the barrier wall, extraction wells, piezometers and Mississippi River.

The ACMS has been designed based on the following parameters:

- Automatically monitor flow from three extraction wells. Each well has a maximum pumping capacity of between 700 and 750 gpm. Therefore, the total system capacity is about 2200 gpm.
- Automatically read and record Mississippi River stage elevations.
- Automatically adjust pump flow rates based on operating criteria discussed below in Section 1.3 "Description of Prescribed Operation Conditions".
- Remote alarm annunciation in the event of system operational problems.
- Maintain measurement database for monthly archiving purposes.
- ACMS components have been selected and located to minimize the potential effects of a 100-year flood event (approximately Elevation 425 ft, NGVD at Site R) on the system.

DRAFT

Numerous components make up the ACMS. The following sections discuss in more detail, some of the more prominent components. Manufacturer's literature, operating and maintenance instructions, and specifications for this equipment are included in Appendix C of this document.

1.1.3.1 River Stage Transmitter

The river stage signal is transmitted to the MCU by cable in conduit from American Bottoms' river stage station as shown on Drawings 1-15 and 1-16.

1.1.3.2 Power Distribution Panel

There is a power distribution panel located east of the Control Building. This power distribution panel is shown in Drawing 1-16. The power distribution panel is sized to accommodate power connections for the three extraction well pumps and disconnects. There are also disconnects at each well location. Drawing 1-17 shows the electrical power diagram for the ACMS.

All of the wiring from the power distribution panel to the three extraction wells has been buried at a depth of 3 to 4 ft. All power for the VFDs and the pump motors is 480vac, 60hz, 3-phase. There is a separate breaker and a separate 120vac circuit at each well location. Drawing 1-18 shows the locations of the buried power cables at the site.

1.1.3.3 Pump Control Panels with Variable Frequency Drives

A pump control panel, including the variable frequency drive and flow meter readout unit, is located in a cabinet, at least 1 foot above the 100-year flood stage at each of the extraction wells.

A Rockwell Automation (Reliance Electric/Allen Bradley) SP600 variable frequency AC drive (VFD) operates each pump motor. The VFD allows variable speed operation of the pump to achieve variable pump flows. The 4-20ma outputs from the flow meter and valve actuator at each well provides feedback signals to the MCU to allow closed loop operation of the pumps and valves. This allows each VFD to maintain the flow (in gallons per minute) set point provided by the MCU for given system control criteria. Each VFD provides switch closure signals to the MCU to indicate fault conditions. As described in Section 1.1.5 below, the MCU will then generate an alarm annunciation.

A manual pump control panel is mounted in the same enclosure as the VFD and flow meter readout unit at each extraction well. The VFD has an automatic control bypass mode to allow manual starting and stopping of the pump motor.

1.1.3.4 Magnetic Flow Meters

Krohne Aquaflux magnetic flow meters are installed at each extraction well location. The flow meters measure the pump flow rate and the total flow, and they work in conjunction with the VFDs to maintain the correct pump speed to achieve the required pumping rate. The magnetic flow meters are 6-inch diameter and are mounted in the flow meter vault at each extraction well. The flow meters output a 4-20ma signal to the MCU.

In addition to the individual flow meters at the extraction wells, there is an 8-inch diameter magnetic flow meter immediately upstream of the discharge point at the ABRTF manholes east of the P-Chem Plant (see discussion in subsequent section on effluent pipeline and appurtenances). ABRTF uses the readings from this meter to invoice for treatment of the

effluent from the extraction wells. The sum of the flows measured at the extraction wells and the total flow at the ABRTF discharge point are compared every ten minutes.

1.1.3.5 Automated Piezometers

The control scheme for the AMCS uses four automated piezometers. Drawing 1-12 shows the locations of the AMCS piezometers. Installation data for the automated piezometers used in the control scheme, are found in Table 1-3 below.

Table 1-3
Installation Data for Automated Piezometers

Piezometer/ Monitoring Well	Top of Riser (TOR) Elevation (Ft, NGVD)	Screened Interval (Ft, NGVD)	Transducer Depth from TOR (Ft)	Transducer Elevation (Ft, NGVD)	Transducer Model
PZ-5U	420.99	382-282	60.0	360.97	4500HD25PSI
PZ-5D	420.97	381-281	60.0	360.99	4500HD25PSI
PZ-8U	419.69	377-287	60.0	361.05	4500HD25PSI
PZ-8D	421.05	380-290	60.0	359.69	4500HD25PSI

The vibrating wire pressure transducers used in the automated piezometers are manufactured by Geokon. Piezometers PZ-5U and PZ-5D are connected to remote monitoring unit (RMU) 2 and PZ-8U and PZ-8D are connected to RMU 4. RMU locations are found on Drawing 1-15 and RMU details are found in Drawing 1-19.

1.1.4 Effluent Pipeline and Appurtenances

The effluent pipeline is designed for a maximum flow of 700 to 750 gpm per well for the three Site R extraction wells, or a total flow of 2,200 gpm. It consists of:

- Buried 12.75-in. OD SDR 21 HDPE along the well line to the levee crossing near the intersection of Pitzman Ave. and Riverview Drive, 20-in. OD SDR 13.5 pipe under the levee and railroad tracks, and buried 12.75-in. OD SDR 21 HDPE pipe to a point immediately north of Existing Manholes B and C east of the P-Chem Plant. At that point, the line changes from HDPE to ductile iron and emerges above grade. Drawings 1-20 through 1-22 show the

plan view and details of the effluent pipeline.

- A combination air valve west of the levee at the high point of the effluent pipeline to exhaust air that accumulates in the pipeline and to assure that pressures in the pipeline will be above atmospheric pressure. Details of this air valve are found on Drawing 1-23.

- A plug valve is located in the pipeline immediately west of levee, to close the pipeline in the event of a flood.

- A flow meter, automatic water sampler, valves, pipe and fittings are located at the discharge point. Details of the piping and fittings and the electrical system at the discharge point are shown on Drawings 1-22 and 1-24. The discharge is measured with an 8-inch diameter Krohne Aquaflux magnetic flowmeter and is sampled with an American Sigma automatic sampler (discussed in Section 1.2.6 below) before being directed into Manholes B and C. All of the aboveground piping upstream of the plug valves is protected from freezing by self-limiting heat tracing and insulation. The pipe is supported on 3-ft deep concrete piers. There is an area light on the power service pole that is switched on automatically by a dusk-to-dawn photoelectric cell. In May and June of 2007, a vertical U-shaped pipe was added to the effluent pipeline at the outfall location. Drawing 1-25 shows the details of this modification. The purpose of this addition is to maintain "pipe full" conditions at all times so that the total flow measured at the outfall will more accurately reflect the total flow measured from the extraction well pumps. Currently, the effluent outlet discharge to the American Bottoms Regional Wastewater Treatment Facility (ABRTF) is compared with the total flow from the GMCS extraction wells every 10 minutes. If the flow measurements differ by more than 10%, a Leak Alarm is triggered and the pumping is stopped.

1.1.5 Alarm Conditions

The following table (Table 1-4) contains a list of the individual alarm conditions:

DRAFT

Table 1-4

Individual Alarm Conditions for ACMS

Alarm Name	Alarm Description	Corresponding Phone Callout Alarm
FLOW_ALARM	No flow or low flow condition	Pumping Stopped
VFD_FAULT ALARM	Variable Frequency Drive fail	VFD Failed
LEAK_ALARM	Total flow from extraction wells differs from outlet flow by more than 10%	Pumping Stopped
VAULT FLD	Vault Flood Alarm-water within vault exceeds one foot in depth	Pumping Stopped
EMERG_SHUTDN	System manually shut down for emergency	Pumping Stopped
HIGHPRESSURE	High Pressure limit exceeded on pipeline	Pumping Stopped
FLOOD ALARM	River at flood stage	Flood
REMOTE OFF ALARM	System shut down remotely with phone	Pumping Stopped

If all of the pumping stops for any reason, an alarm will be instantly generated by the VFD and the received fault signal at the MCU will result in the MCU logging the event and dialing, via the phone line, to notify appropriate personnel.

The effluent outlet discharge to the American Bottoms Regional Wastewater Treatment Facility (ABRTF) is compared with the total flow from the GMCS extraction wells every 10 minutes. If the flow measurements differ by more than 10%, a Leak Alarm is triggered and the pumping is stopped.

Section 4.1 below discusses the procedures to be used to address alarm conditions.

1.2 DESCRIPTION OF TASKS FOR GMCS MAINTENANCE

1.2.1 Extraction Wells

To monitor well performance, the extraction wells will be individually tested annually for specific capacity (gpm per foot of drawdown) based on a one-hour test at the maximum flow rate of 700 gpm. The initial (baseline) tests were performed in 2005. Ideally, there should be no pumping for 24 hours preceding the test and the river stage should be relatively stable. The test should be performed during a period of relatively high river stage when the extraction wells would otherwise have zero discharge. The initial and subsequent annual specific capacity test

results will be recorded in Table 1-5. In addition to specific capacity testing, a down-hole video inspection will be performed on each well once every five years.

A Biological Activity Reaction Test (BART) will also be performed if biofouling of the extraction well is suspected. This will be done if the video inspection shows plugging or if there is a large decrease in specific capacity or a large increase in drawdown for the same flow.

If the specific capacity of a well has decreased to less than 75% of the initial specific capacity, the well will be rehabilitated. Protocols for rehabilitation will be based on consultation with local water well contractors and Illinois State Water Survey personnel experienced with rehabilitation of wells in the American Bottoms aquifer.

Table 1-5.

Specific Capacity (gpm/ft) Based on One-Hour Test at 700 gpm

Year	Well	Initial Specific Capacity (2005)	Specific Capacity (current year)	Percent of Initial Specific Capacity
2008	**EW-1**	41 gpm/ft		
2008	**EW-2**	30 gpm/ft		
2008	**EW-3**	39 gpm/ft		
	EW-1	41 gpm/ft		
	EW-2	30 gpm/ft		
	EW-3	39 gpm/ft		
	EW-1	41 gpm/ft		
	EW-2	30 gpm/ft		
	EW-3	39 gpm/ft		

Surge protectors at each extraction well will be inspected annually and replaced as necessary.

1.2.2 Extraction Well Pumps and Motors

The pumps will be checked annually to assure that the impellers are not excessively worn. An index of the condition of the impellers is the shutoff head, measured using a pressure gauge on the discharge pipe inside the flow meter vault. After the pump is first installed and checked for proper rotation, the valve in the discharge line will be slowly closed to measure the shutoff head at the pressure gauge. This head or pressure will be recorded for future reference and

comparison with shutoff head measurements after the pump is in operation. If the shutoff head ever falls below 85% of the initial shutoff head, the pump end will be replaced with a new pump end.

Note: Any time the extraction well pumps are replaced, the O-ring on the Baker Monitor pitless adapter will also be replaced.

The motors will be visually inspected annually, at the same time that the pumps are inspected. If the visual inspection indicates that the condition of the pumps is questionable, further testing may be necessary. The motors may be checked for insulation to ground in accordance with the following procedures. Table 1-6[2] gives insulation resistances for motors and drop cables for readings taken with a megohmmeter with a 500V DC output. Readings may vary using a lower voltage ohmmeter.

Table 1-6

Normal Ohm and Megohm Values Between All Leads and Ground

Condition of Motor and Leads	Ohm Value	Megohm Value
A new motor (without drop cable)	20,000,000 (or more)	20 (or more)
A used motor that can be reinstalled in well	10,000,000 (or more)	10 (or more)
Motor in well. Readings are for drop cable plus motor		
New motor	2,000,000 (or more)	2 (or more)
Motor in good condition	500,000 – 2,000,000	0.5 – 2.0
Insulation damage, locate and repair	Less than 500,000	Less than 0.5

The correct motor rotation will be established by running in both directions and rotation will be changed by switching any two of the three motor leads. The rotation that gives the most water flow is always the correct rotation. After rotation has been established, check the current in each of the three motor leads and calculate the current unbalance[3]. If the current unbalance is 2% or

[2] Franklin Electric (August, 2000) *Submersible Motors: Application, Installation, Maintenance Manual*, Table 39, Page 39

[3]Difference between the current in the leg that is furthest from the average current and the average current, divided by the average current

less, leave the leads as connected. If the current unbalance is more than 2%, current readings will be checked on each leg using each of the three possible hookups. Roll the motor leads across the starter in the same direction to prevent motor reversal. The current unbalance should not exceed 10%[4] at rated input load. If the unbalance cannot be corrected by rolling leads, the source of the unbalance must be identified and corrected. If, on the three possible hookups, the leg farthest from the average stays on the same power lead, most of the unbalance is coming from the power source. However, if the reading farthest from average moves with the same motor lead, the primary source of the unbalance is on the motor side of the starter, and may be caused by a damaged cable, leaking splice, poor connection, or faulty motor winding. If motors are determined to be in poor condition, then they will be replaced.

1.2.3 Well Flow Meters

The electromagnetic flow meters normally require no maintenance unless there is a buildup of precipitate inside of the discharge pipe. This can be monitored by comparing the sum of individual well flows with the total flow at the ABRTF discharge point. This is being done once every ten minutes. If it becomes necessary to further evaluate the potential buildup of precipitate, the back pressure in the discharge line at each well may be measured with all pumps running at maximum capacity. Increasing back pressure for the same total flow would indicate buildup of scale in the discharge line. In that event, the pump drop pipe and the horizontal discharge pipe between the well and the effluent pipeline will require cleaning to remove the precipitated mineral deposits. Instructions for the meters are included in Appendix C or may be viewed or downloaded online at:

http://www.krohne.com/html/dlc/MA_AQUAFLUX_e_72.pdf.

1.2.4 Measurement and Control Unit, Variable Frequency Drives, Controls, and Appurtenances

A Geomation Model 2380-20 measurement and control unit (MCU) is located in the Control Building at the north end of the property. In addition to the MCU, there is a computer (PC) with a modem, a Sensaphone autodialer (http://www.sensaphone.com/express-two-support.html), a phone activated switch, and a manual control panel. Normal maintenance consists of replacing the 12-v, 7.5-amp-hr battery in the MCU approximately once every 5 years. Manuals for the

[4] Ibidem, Page 29

Geomation unit can be found at http://www.geomation.com/docs_home.cfm and are included in Appendix C. There is also an uninterruptible power supply (UPS) for the computer and it is recommended that those batteries be replaced at the same time as the MCU battery.

The Sensaphone autodialer will be checked monthly to verify proper operation. The autodialer call list will be updated as necessary.

A new GE air conditioning/heating unit was installed in the Control House in October of 2007. Filters for this unit will be checked quarterly and replaced as necessary.

The variable frequency drives (VFDs) are located in the large enclosure at each pump panel. The VFDs do not require any normal maintenance. Manuals for the VFDs can be found at http://literature.rockwellautomation.com/idc/groups/public/documents/webassets/browse_category.hcst and are included in Appendix C.

Spare fuses for any of the fuses in the large enclosure are located in the Control Building.

The condenser fins for the air conditioning unit at each of the large enclosures at each pump panel will be checked twice yearly and cleaned as needed. The condenser fins are located on the outside of the AC unit. Some grills may need to be removed to access the condenser fins. The fins will be cleaned only when the unit is OFF. The AC filters at of these locations will be checked quarterly and cleaned if necessary. The manual for the AC units is included in Appendix C of this document.

1.2.5 Piezometers

As a part of the development of the control scheme, four pairs of piezometers were installed upgradient of the site. They are as follows: PZ-5U and PZ-5D, PZ-6U and PZ-6D, PZ-7U and PZ-7D, and PZ-8U and PZ-8D. Currently only piezometers PZ-5U, PZ-5D, PZ-8U and PZ-8D are being used in the control scheme.

The water levels for the four GMCS piezometers which are a part of the control scheme (PZ-5U, PZ-5D, PZ-8U and PZ-8D), will be manually read quarterly for comparison to automated water level readings. Pressure transducers will be adjusted/recalibrated if there is a discrepancy between the manual and automated readings.

The total depth of each of the four GMCS piezometers which are included in the control scheme will be measured annually to determine if sediment deposits are blocking the screen. The annual depth measurements will be compared to the constructed (as-built) total depth and screen interval depths. If any of the annual depth measurements indicate that sediment obstructs 10% or more of the screened interval, the piezometer will be flushed to remove the sediment. Screened intervals for these piezometers can be found in Table 2-2 of this document.

If necessary, the ability of the GMCS piezometers to yield timely and accurate aquifer head measurements may be evaluated by measuring the hydrostatic response time using a falling head test (USACE, 1995). The response time is the time required for 90% or more of excess head to dissipate following the instantaneous addition of a slug of water.

Surge protectors at each piezometer will be inspected annually and replaced as necessary.

1.2.6 Automatic Water Sampler

The American Sigma 900MAX automatic water sampler is located at the discharge point at the P-Chem plant. Manuals for this sampler are included in Appendix C, or they can be downloaded at:

http://www.americansigma.com/support/downloads/354004.pdf

The automatic water sampler on the effluent pipeline was installed at the request of the American Bottoms Regional Treatment Facility (ABRTF). American Bottoms personnel are responsible for collecting any samples and for checking the operation of the sampler. As such, additional sampling details are not presented in this O&M Plan.

1.2.7 Data Management

The GMCS instrument readings are automatically acquired from the MCU and stored in a database on the Host PC in the Site R Control Building. Data are automatically exported hourly to a text file which is transmitted via FTP to a server in the URS office in St. Louis, Missouri. The file is then automatically imported to a database on a separate server in the URS-St. Louis office. This remote (off-site) database is manually backed up once per month to a third server. The GMCS database on the Host PC at Site R and the remote database at the URS-St. Louis office effectively serve as daily backups of each other. Each month archived data tapes are

DRAFT

updated for off-site storage.

1.3 DESCRIPTION OF PRESCRIBED OPERATION CONDITIONS

Under the prescribed operating conditions, Darcy's law is used to calculate the groundwater flow into the barrier wall as discussed above in Section 1.1.1, "Theory of Operation." The calculated groundwater flow (Q) is used as a part of the control logic for the GMCS. This control logic is presented in Table 1-7 below. As shown in this table, the current calculated groundwater flow value (Q) determines which pumps will be turned on or off and at what rate each of the pumps will be operated.

DRAFT

Table 1-7

Control Scheme for Each Extraction Well Pump

Total Flow (Q) In GPM	EW1 Pump	EW2 Pump	EW3 Pump
0	Off	Off	Off
1 to 25	Off	=25	Off
26 to 100	Off	=Q	Off
101 to 1500	=Q/2	Off	=Q/2
1501 to 2200	=Q/3	=Q/3	=Q/3

The pump flow is regulated by a closed loop feedback between the MCU controller in the Control House and the output flow meter at the top of each extraction well. The magnetic flow meter is monitored by sampling the feedback flow signal every 5 seconds. A simple proportional error correction is used to keep the pump flow with in 0.5 GPM of the pumps set point.

To obtain lower flow rates on EW2 an electric actuated valve is partially closed at certain set points to enable the pump to operate between 25 and 80 GPM.

A pump control system block diagram is shown on Drawing 1-26.

SECTIONONE Normal Operation/Maintenance

1.4 SCHEDULE SHOWING FREQUENCY OF O&M TASKS

The following operation and maintenance schedule (Table 1-8 below) includes key operations and maintenance activities for proper operation of the Site R GMCS.

Table 1-8
Operation and Maintenance Schedule

ACTIVITY	Section or Footnote Reference	FREQUENCY						
		DAILY BY PROCESS CONTROL SYSTEM	WEEKLY	MONTHLY	QUARTERLY	SEMIANNUALLY	ANNUALLY	WHEN REQUIRED
Data Management	**1.2.7**							
Make monthly backup of the project database located in the URS-St. Louis Office	**1.2.7**			**X**				
System automatically makes hourly backup of data in Host PC database located in Control Building	**1.2.7**	**X**						
Extraction Wells and Extraction Well Pumps								
System automatically checks flow rates hourly and adjusts when necessary - Call into system and check that operations are showing normal		**X**						
Inspect extraction well pumps annually (includes checking pump shutoff head) and replace pumps as needed – if pump shutoff head is less than 85% of original or if pumps show signs of excessive wear, then replace pumps	**1.2.2**						**X**	
Test wells for specific capacity (pump each well alone @ 700 gpm for 1 hour); rehabilitate well if specific capacity <75% of initial specific capacity	**1.2.1**						**X**	
Visually inspect motors annually when pumps are inspected – if necessary, motors may be checked for resistance to insulation ground – replace motors as needed	**1.2.2**						**X**	
Downhole video camera inspection of well screens (once every 5 years)	**1.2.1**							**X**

DRAFT

Table 1-8

Operation and Maintenance Schedule

ACTIVITY	Section or Footnote Reference	FREQUENCY						
		DAILY BY PROCESS CONTROL SYSTEM	WEEKLY	MONTHLY	QUARTERLY	SEMIANNUALLY	ANNUALLY	WHEN REQUIRED
Biological Activity Reaction Test (BART) (when biofouling is suspected)[5]	**1.2.1**							**X**
Flow Meters								
Compare sum of individual well flows with total flow at the ABRTF discharge point; perform every 10 minutes (Automatically performed)	**1.2.3**	**X**						
Electric Valve Actuators								
Verify valve positions and 4-20 ma scaling							**X**	
Variable Frequency Drives/Panels								
Check A/C filters at VFD panels, clean if necessary	**1.2.4**				**X**			
Check condenser fins for the air conditioning unit at each of the large enclosures at each pump panel and clean as needed	**1.2.4**					**X**		
Equipment in Control Building								
Inspect surge protectors and replace as required	**1.2.1 & 1.2.5**						**X**	
Check MCU and UPS batteries, replace once every five years	**1.2.4**							**X**
Autodialers – verify proper operation	**1.2.4**			**X**				
Autodialers –update call list as needed	**1.2.4**							**X**
Check A/C and heater filters and replace if necessary	**1.2.4**				**X**			

[5] Perform if the video inspection shows plugging or if there is a large decrease in specific capacity or a large increase in drawdown for the same flow.

Table 1-8

Operation and Maintenance Schedule

ACTIVITY	Section or Footnote Reference	FREQUENCY						
		DAILY BY PROCESS CONTROL SYSTEM	WEEKLY	MONTHLY	QUARTERLY	SEMIANNUALLY	ANNUALLY	WHEN REQUIRED
Piezometers and Wells								
Collect manual water level data from piezometers used in system control scheme: PZ-5U, PZ-5D, PZ-8U and PZ-8D	**2.2**				**X**			
Measure total depth of each piezometer used in control scheme (PZ-5U, PZ-5D, PZ-8U and PZ-8D) and flush if >10% of screen interval is blocked by sediment	**1.2.5**						**X**	
Perform measurements of response time in piezometers using a falling head test if needed; flush piezometers if falling head test results indicate that it is needed	**1.2.5**							**X**
Sediment and Surface Water Sampling								
Sediment and surface water sampling of Mississippi River, as specified in the Record of Decision[6]	**2.3**					**X**		
Well Sampling								
Water quality sampling of designated monitoring wells	**2.1**				**X**			
Site Inspection								
Mow Grass	**2.4**					**X**		
Inspect stockpile cover for erosion and ponding caused by settlement (inspect quarterly and after any site flooding event)	**2.4**				**X**			
Inspect warning signs, perimeter fencing and locks	**2.4**				**X**			

[6] Sediment and surface water samples will be collected twice a year, once during the summer low flow period and once during the winter low flow period when the rate of groundwater discharge to the Mississippi River is at a high.

Table 1-8

Operation and Maintenance Schedule

ACTIVITY	Section or Footnote Reference	FREQUENCY						
		DAILY BY PROCESS CONTROL SYSTEM	WEEKLY	MONTHLY	QUARTERLY	SEMIANNUALLY	ANNUALLY	WHEN REQUIRED
Inspect erosion and sedimentation controls, and drainage structures (inspect quarterly and after any site flooding event)	2.4				X			
Inspect all utility markers	2.4						X	
Inspect slurry wall alignment for signs of settlement or subsidence	2.4						X	
Miscellaneous								
Inspect and tighten all cable terminations, replace if necessary							X	

DRAFT

SECTION TWO Routine Monitoring and Laboratory Testing

Required routine monitoring and laboratory testing for the GMCS was identified in the Record of Decision (ROD) for the Groundwater Operable Unit (OU-2), dated September 2002.

2.1 GROUNDWATER QUALITY MONITORING

Groundwater quality samples will be collected quarterly from 4 sets of monitoring wells that are located downgradient of the barrier wall. These monitoring wells can be found on Drawing 1-12. Each set of wells has a shallow (S), a medium (M) and a deep (D) well. The monitoring wells that will be sampled are listed in Table 2-1 below, along with their installation data.

Table 2-1

Monitoring Well Installation Data

Piezometer	Top of Riser (TOR) Elevation (Ft, NGVD)	Screened Interval (Ft, NGVD)
BWMW-1S	423.93	389-379
BWMW-1M	424.19	354-344
BWMW-1D	424.20	314-304
BWMW-2S	422.37	392-382
BWMW-2M	422.33	348-338
BWMW-2D	422.33	303-293
BWMW-3S	423.28	398-388
BWMW-3M	423.23	349-339
BWMW-3D	424.23	303-293
BWMW-4S	422.98	398-388
BWMW-4M	422.92	353-343
BWMW-4D	423.26	304-294

Each well will be sampled for the following constituents: volatile organic compounds (VOCs), semi-volatile organic compounds (SVOCs), pesticides, herbicides, metals, total organic carbon (TOC) and total dissolved solids (TDS). These wells will be sampled quarterly.

As required by the ROD, mass loading will be calculated for each hydrogeologic unit along with the total mass loading for the Mississippi River.

Groundwater sampling and analysis are discussed in more detail in the approved Field Sampling Plan (FSP) for the GMCS, dated January 31, 2003. The approved Quality Assurance Project Plan (QAPP) dated January 31, 2003, includes all quality assurance (QA) and quality control

SECTION TWO Routine Monitoring and Laboratory Testing

(QC) requirements.

The data generated from the groundwater sampling will be presented to the Agency quarterly.

2.2 GROUNDWATER LEVEL MONITORING

Groundwater level monitoring will be done in the following GMCS piezometers which are currently being used in the control scheme: PZ-5U, PZ-5D, PZ-8U and PZ-8D. Automated groundwater level measurements for these four GMCS piezometers are collected and stored hourly. Manual water level measurements for these four GMCS piezometers will be collected quarterly for comparison to automated water level readings. Pressure transducers will be adjusted/recalibrated if there is a discrepancy between the manual and automated readings. Table 2-2 presents the piezometer installation data for these four piezometers.

Table 2-2
Piezometer Installation Data for Piezometers Monitored Quarterly

Piezometer	Top of Riser (TOR) Elevation (Ft, NGVD)	Screened Interval (Ft, NGVD)
PZ-5U	420.99	382-282
PZ-5D	420.97	381-281
PZ-8U	419.69	377-287
PZ-8D	421.05	380-290

2.3 SEDIMENT AND SURFACE WATER MONITORING

Both sediment and surface water samples will be collected semi-annually from the Mississippi River, to determine the effect of any contaminants migrating through, past or beneath the barrier wall and being released to the Mississippi River.

Surface water and sediment samples will be collected from Sediment Sampling Stations 2, 3, 4, 5 and 9, which are located in the former plume release area. They will be analyzed for VOCs, SVOCs, Herbicides, Pesticides and Metals. These samples will be collected once during a typical low-flow period in the summer and once during a typical low flow period in the winter.

As per the ROD the sediment and surface water data will be used in the following manner:

"Constituent concentrations will be plotted as a function of time and compared to the

site-specific, toxicity-based, protective concentrations to determine progress toward achieving these targets".

Sediment and surface water sampling are discussed in more detail in the approved FSP**,** dated January 31, 2003. The approved QAPP, dated January 31, 2003, includes all QA/QC requirements.

The data generated from the surface water and sediment sampling will be presented to the Agency semi-annually.

2.4 INSTITUTIONAL CONTROLS

As per the ROD, routine maintenance and inspection of the institutional controls at the site will be performed. Some of the routine inspection and maintenance items will be done quarterly. Institutional controls that will be inspected quarterly include: perimeter fencing, locks, and warning signs (signage along the riverbank warning of the dangers of fishing near the groundwater release area). Quarterly inspections will also include inspection of the stockpile cover for erosion and ponding caused by settlement, and inspection of erosion and sedimentation controls and drainage structures. The site will also be inspected for erosion and settlement after any flooding events.

The grass at the site will be mowed at least twice per year.

Annual maintenance activities include inspection of all utility markers and inspection of the slurry wall alignment for signs of settlement or subsidence.

DRAFT

SECTION THREE Project Organization and Responsibilities

3.1. PROJECT ORGANIZATION

Sections 3.2 through 3.4 of this Plan present the responsibilities of the key project personnel. The lines of authority for the project personnel are described in each section.

3.2 MANAGEMENT RESPONSIBILITIES

3.2.1 Solutia Project Manager

The Solutia Project Manager (Solutia PM) will have the overall responsibility for all phases of the project. The Project Manager will be responsible for implementing the project, and will have the authority to commit the resources necessary to meet project objectives and requirements. The PM's primary function is to verify that technical, financial, and scheduling objectives are achieved successfully. The PM will provide the major point of contact and control for matters concerning the project. The Solutia Project Manager will:

- Define project objectives and develop a schedule
- Establish project policy and procedures to address the specific needs of the project as a whole, as well as the objectives of each task
- Acquire and apply technical and financial resources as needed to verify performance within budget and schedule constraints
- Monitor and direct the field personnel
- Develop and meet ongoing project staffing requirements
- Review the work performed on each task to verify its, quality, responsiveness, and timeliness
- Review and analyze overall task performance with respect to planned requirements and authorizations
- Ultimately be responsible for the preparation and quality of reports.

3.2.2 Contractor Project Manager

The Contractor Project Manager (Contractor PM). As such, the Contractor PM will have overall responsibility for project administration and for verifying that the project meets the stated

DRAFT

SECTION THREE Project Organization and Responsibilities

objectives and the Contractor's quality standards. The Contractor PM will report directly to the Solutia PM and is responsible for technical quality control and project oversight.

3.3 QUALITY ASSURANCE (QA) RESPONSIBILITIES

3.3.1 Contractor QA Officer

It is expected that the Contractor Project Manager will also perform the tasks of the Contractor QA Officer. However, if two individuals are used the Contractor QA Officer (Contractor QAO) will report directly to the Contractor PM. The Contractor QA Officer will be responsible for verifying that all Contractor QA procedures for this project are being followed.

DRAFT

SECTION FOUR Potential Operating Problems and Corrective Action

4.1 POTENTIAL OPERATING PROBLEMS

The Groundwater Migration Control System is a complex system made up of numerous components. Each individual component of the system could have operational problems at some point during operations. As a result, the operation and maintenance guides provided by the manufacturers will be used for troubleshooting when there are problems with equipment operation.

To ensure that problems within the system are identified in a timely manner, project data are reviewed weekly. There are also alarms set up in the system that notify designated individuals if the system does not appear to be functioning properly. Table 1-4 found in Section 1.1.5 above, identifies these alarms. When the designated individual is notified that the system is not functioning properly, that individual will assess the situation and if necessary, contact any relevant project personnel to determine what actions need to be taken to get the system up and running again. Alarm descriptions are as follows:

- Flow Alarm – No flow or low flow condition.
- VFD Fault Alarm – Variable frequency drive failed.
- Leak Alarm – Flow from extraction wells greater than total seen at outlet flow meter.
- Emergency Shutdown Alarm – System manually shut down for emergency.
- High Pressure Alarm – High Pressure limit exceeded.
- Vault Flood Alarm – Water within vault exceeds one foot in depth – emergency system shutdown.
- Flood Alarm – River is at flood stage.
- Remote Off Alarm - System Shutdown remotely by phone.

4.1.1 Sources of Information

Manufacturer's operation and maintenance manuals will be used to address problems with the system. The manuals for the major components of the system are found in Appendix C of this

SECTION FOUR Potential Operating Problems and Corrective Action

document. Manufacturers will be contacted directly if the manuals do not address the specific problem.

4.1.2 Remedies

Once a remedy has been identified, corrective action will be taken as soon as possible, as discussed below. It should be noted that some of the equipment used for this system has been custom-made. As a result, the lead times for obtaining some of this equipment can be several weeks. Spares of items that are known to have a long lead time will be kept on site, so that repairs to the system can be made in an expedient manner. In the event that spare equipment is not readily available, the repairs will be made as soon as that equipment is available.

4.2 CORRECTIVE ACTION

Corrective action is the process of identifying, recommending, approving and implementing measures to counter unacceptable procedures or out-of control performance, which can affect data quality. Corrective action can occur during any field activities; data analysis and assessment activities; or system analysis and assessment activities. Corrective action proposed and implemented will be documented in the regular quality assurance reports to management. Corrective action should only be implemented after approval by the PM or the CPM. If immediate corrective action is required, approvals secured by telephone from the Project Manager will be documented in an additional memorandum.

For significant problems, a formal corrective action program will be developed and implemented at the time the problem is identified. The person who identifies the problem is responsible for notifying the Contractor PM, who in turn will notify the Solutia PM. Implementation of corrective action will be confirmed in writing through the same channels.

4.2.1 Field Corrective Action

Field activities for the GMCS include the following:

- Quarterly Monitoring Well Sampling
- Sediment and Surface Water Sampling
- Manual Water Level Measurement

DRAFT

SECTION FOUR Potential Operating Problems and Corrective Action

- Site Inspection (i.e. ground surface, ground cover, site drainage, institutional controls, etc.)

- Inspection of All Equipment Associated with the GMCS at the Site (including motors, pumps, VFDs, actuators, MCUs, etc.)

4.2.1.1 Corrective Action Related to Sampling Activities

Corrective action in the field can be needed when the sample network is changed (i.e., more or less samples, sampling location changes, and related modifications) or sampling procedures and/or field analytical procedures require modification due to unexpected conditions. Technical staff and project personnel will be responsible for reporting all suspected technical or QA nonconformances or suspected deficiencies of any activity or issued document by reporting the situation to the Contractor PM. The Contractor PM will be responsible for assessing the suspected problems and assessing the potential for the situation to impact the quality of the data. If the situation warrants reportable nonconformance requiring corrective action, a nonconformance report will be initiated by the PM.

If appropriate, the Contractor PM will verify that no additional work dependent on the nonconforming activity is performed until the corrective actions are completed.

If it becomes necessary to modify a program, the responsible person notifies the Contractor PM of the anticipated change and implements the necessary changes after obtaining the approval of the PM. The change in the program will be documented on the field change request (FCR) that will be signed by the initiators and the Contractor PM. The FCR for each document will be numbered serially as required. The FCR will be attached to the file copy of the affected document. The Contractor PM must approve the change in writing or verbally prior to field implementation, if feasible. If unacceptable, the action taken during the period of deviation will be evaluated to determine the significance of any departure from established program practices. Reports on changes will be distributed to affected parties which includes USEPA Region V.

Corrective actions will be implemented and documented in the field notebook. No staff member will initiate corrective action without prior communication of findings through the proper channels.

DRAFT

SECTION FOUR Potential Operating Problems and Corrective Action

4.2.1.2 Corrective Action Related to Site Conditions

During the site inspection activities identified in Table 1-8 above, the following areas will be inspected:

- The stockpile cover will be inspected for erosion and ponding caused by settlement.
- Erosion and sedimentation controls, and drainage structures will be inspected to ensure that they are still functioning as they were designed.
- The slurry wall alignment will be inspected for signs of settlement or subsidence.
- The institutional controls (i.e. fencing, locks, warning signs) will be inspected to ensure that they are all still intact and in good working order.
- The utility markers will be inspected to ensure that they are all still in place and have not been damaged or removed unless they are no longer needed.

DRAFT

If any deficiencies are noted during the field inspection, field personnel will be responsible for assessing the problems in consultation with the PM. All deficiencies will be noted in the field service report. If the situation requires corrective, the PM will be responsible for seeing that corrective actions are initiated. Corrective actions will be taken as soon as supplies, equipment and personnel are available to perform the corrective action.

4.2.1.3 Corrective Action Related to Inspection of GMCS Equipment

Inspection and maintenance of GMCS equipment will be performed in accordance with Table 1-8 above. If the field personnel identify any additional maintenance activities (i.e. cleaning, lubricating, replacement of worn out equipment, etc.) they will consult with the PM to discuss what needs to be done. If any of these maintenance activities require the system to be shut down, the system shutdown will be scheduled to minimize the amount of downtime of the system. If the system does not need to be shut down for the necessary maintenance activities, the maintenance will be performed as soon as the required parts, equipment and personnel are available.

It should be noted that some of the equipment used for this system has been custom-made. As a result, the lead times for obtaining some of this equipment can be several weeks. An attempt

will be made to keep spare equipment on hand for those items that that have long lead times, so that repairs to the system can be made in an expedient manner. In the event that spare equipment is not readily available, the repairs will be made as soon as that equipment is available.

4.2.2 Data Analysis and Assessment Corrective Action

The Contractor Quality Assurance Officer (QAO) or the Laboratory QAO may identify the need for corrective action during either the data validation or assessment. Potential types of corrective action may include re-sampling by the field team or re-injection or reanalysis of samples by the laboratory. These actions are dependent upon the ability to mobilize the field team or, whether the data to be collected is necessary to meet the required quality assurance objectives. When the Contractor QAO or Laboratory QAO identifies a corrective action situation, it is the PM who will be responsible for approving the implementation of corrective action, including re-sampling, during data assessment. Corrective actions of this type will be documented by the Contractor QAO and the Laboratory QAO.

DRAFT

SECTIONFIVE Health and Safety

5.1 HEALTH AND SAFETY PLAN

A Health and Safety Plan was prepared to provide both general procedures and specific requirements to be followed by Consultant and subcontractors while conducting performance monitoring activities associated with the operation of the Groundwater Migration Control System. This report is dated January 31, 2003 and was approved by the Agency. Updated hospital maps were generated in May 2007 during field work. These maps have been placed in the Control House at the site for workers' reference.

5.2 PERMIT REQUIREMENTS FOR FIELD WORK

Solutia requires certain permits for work done on their property. The following permits may apply to work done at Site R.

5.2.1 Lockout/Tagout Permits

Lockout/tagout permits will be issued by URS. When it is necessary to provide maintenance activities at an individual extraction well location while the system is still operational, lockout/tagout procedures will only be necessary at the control panel located next to the extraction well. When it is necessary to shut down the entire GMCS for maintenance, lockout/tagout procedures will be done at the main power panel located next to the control house. Once the system is locked out, it will remain locked out until all construction activities are completed (the locks do not have to be removed at the end of each work shift, unless there is a specific need to do so).

5.2.2 Line Break Permits

A line break permit is required by Solutia any time that a line is broken. All lines will be broken, in accordance with Solutia guidelines. Line break permits will be issued by URS, at the time that the line is broken. Personnel breaking the line will be required to wear protective equipment such as face shields and rain gear. A portable shower and eye wash station will be present on site, in case of emergency. A separate line break permit will be required each time the line is broken. If the entire system is shut down, two line break permits will be required – one at the extraction well EW-2 location and the other at the ABRTF discharge point. If only one well is being worked on while the rest of the system remains running, then a line break permit will be required only at that well location where work is being done.

DRAFT

SECTION FIVE Health and Safety

5.2.3 Hot Work Permits

A hot work permit will be required if anything with an ignition source will be used at the site (i.e. welding equipment, anything with an electric motor such as a generator, drill rig, etc.). Solutia will issue hot work permits in accordance with their guidelines. A fire extinguisher will need to be present on site at all times during hot work. The fire extinguisher should be located on the ground, nearby the work area (not left inside the vehicle) and it should be visible to all personnel. Care should be taken not to place the fire extinguisher in a location that would cause a potential tripping hazard.

5.2.4 High Work Permits

A high work permit will be required for any work done at the site where a worker's feet are 6 feet above the ground surface, or if any workers need to stand along the edge of the discharge pit at the ABRTF discharge location. This permit will be issued by Solutia, and all work will be done in accordance with Solutia guidelines.

5.2.5 Excavation Permits

An excavation permit is required whenever soil is being excavated on Solutia property. Excavation will be done in accordance with Solutia guidelines. Excavation permits will be issued by Solutia, for each excavation location. Extreme care should be taken when excavating in the vicinity of the discharge pipeline and/or utilities, to avoid damaging the existing discharge/utility lines.

NOTE: Since the ABRTF discharge location next to the P-Chem plant is not on Solutia property, Solutia determined that an excavation permit is not necessary for any excavations at this location.

5.2.6 Confined Space Permits

Confined space permits will be issued by Solutia personnel. The extraction well vaults have been classified by Solutia as "non-permit required confined spaces". Non-permit required confined spaces still require a confined space permit from Solutia. If work is to be done on the equipment in the vault, URS will need to issue a lockout/tag out permit and a line break permit, prior to Solutia issuing the "confined space" permit. Appropriate PPE will also need to be worn when entering the "non-permit required confined space."

DRAFT

SECTION FIVE Health and Safety

As per Solutia guidelines, non-permit required confined spaces require the same general entry procedures as permit-required confined spaces, with the following exceptions:

- Air monitoring (for oxygen, flammable vapors, and H2S) will only need to be done inside the vault each morning before the contractor enters the space. Daily readings will be recorded on the permit.
- A blower is not required to ventilate the vault while workers are inside the vault.
- A tripod and harness are not required for emergency exit while the workers are inside the vault.
- Five minute rescue packs will not be required for workers in the vault.
- A "certified emergency rescue team" will not need to be present on site.

If there is evidence of chemicals in the pit or if conditions change after the piping in the pit is broken into that could harm workers in the pit, then the pit would no longer be considered a non-permit required confined space. It would then become a confined space and work would then need to be done in accordance with Solutia's confined space procedures.

DRAFT

SECTION SIX Equipment

Many components were used to construct the Groundwater Migration Control System. Some of the major components are as follows:

- Grundfos Pumps – Pumps used in extraction wells.
- Baker Monitor Pitless Adapter – Adapter for Extraction Wells
- Belden VFD Cable – A jacketed cable designed especially for VFDs.
- Franklin Electric Submersible Motors – Motors used for extraction well pumps.
- Rockwell Automation (aka Reliance Electric/Allen Bradley) SP600 AC Drive – Variable frequency drive (which is located in the pump control panels) which controls the pump flows.
- ProAir Air Conditioner – Air conditioner used for enclosures.
- Krohne Aquaflux F Electromagnetic Flowmeters – Flowmeters used at extraction wells and at discharge point near P-Chem Plant.
- Milliken Valve Co. Millcentric Plug Valves. Series 600 – Plug valves have 6-inch, flanged, stainless steel bodies with Viton coated, stainless steel DI plugs. They are located in the flow meter and sampling vault which is located next to the extraction wells.
- Limitorque Actuator - LY-1001 Unit with A1 Top Mount Integral Compartment – Actuator located in the flow meter and sampling vault which is located next to the extraction wells.
- Val-Matic Wastewater Air/Vacuum Valve – A 2-inch Val-Matic 302BW wastewater air/vacuum valve was installed at the high point along the discharge line (it is accessible via the manhole located northeast of the pole barn).
- Geokon 4500HD Pressure Transducers – Pressure Transducers are being used to monitor water levels in piezometers.
- Geomation Measurement and Control Systems 2380 MCU - Located at the remote

DRAFT

SECTION SIX Equipment

monitoring unit at the Control Building.

- Eurotherm Model MV408 Current Input Isolating Signal Conditioner – Isolating signal conditioner with web viewing capability.
- Sensaphone 2000 – Autodialer located at the Control Building.
- Invensys Action Pak AP4390/AP4391/AP4392 – A dual, three port industrial isolator.
- Raychem Industrial Heat-Tracing – Heat tracing system used for above ground piping at the site.
- American Sigma (Hach) 900 MAX All Weather Refrigerated Sampler Instrument – Water sampler located at the discharge point at the P-Chem Plant.

Manufacturer's specifications and installation, operation and maintenance manuals for these components can be found in Appendix C of this document.

Equipment will be replaced as needed.

DRAFT

SECTION SEVEN Record Keeping and Reporting

7.1 RECORD KEEPING

Solutia will maintain records of design documents, plans, operational procedures, monitoring results, inspections and maintenance activities. These records include:

- Hourly groundwater elevations for extraction wells
- Hourly flow averages for pumps at extraction wells and discharge point
- Hourly readings of river stage data
- Inspection/Maintenance Records (all inspections and maintenance activities listed in the O&M Plan will be addressed in these records)
- Routine Reports (submitted quarterly) and any Additional Reports (submitted as needed) – See Section 7.2 below for further discussion of these reports
- Laboratory Data
- Final Design Documents
- Plans (including O&M Plan, FSP, QAPP, etc.)

DRAFT

These records will be made available to the Agency for review.

7.2 REPORTING

Routine reports summarizing O&M activities will be prepared by Solutia and submitted to the Agency. These reports will be submitted on a quarterly basis and will cover activities performed and information gathered during that quarter. These reports will include:

- Operating records (i.e. pump rates, volumes discharged, river elevations, etc.),
- Results from routine inspections,
- Documentation of equipment repairs and maintenance performed,
- Verification of the integrity of the institutional controls,

SECTION SEVEN Record Keeping and Reporting

- Data collection information, and
- Summary of sampling results and associated calculations.

If problems are encountered during operations which require the shutdown of the system, the USEPA will be notified by the Solutia PM in a timely manner and an additional report will be provided to the Agency within ten business days of the discovery of the problem. This report will identify the problem and describe the corrective action taken to address this problem.

DRAFT

Drawings

DRAFT

SITE R

SAUGET, ILLINOIS

INDEX

GROUNDWATER MIGRATION CONTROL SYSTEM

AUTOMATED CONTROL AND MONITORING SYSTEM

SOLUTIA™

Applied Chemistry, Creative Solutions

DRAWING NO.	DESCRIPTION
1–1	SITE LOCATION MAP
1–2	ABBREVIATIONS AND SYMBOLS
1–3	OVERALL SITE PLAN
1–4	BORING LOCATION PLAN
1–5	BARRIER WALL – PROFILE STA. 5+00 TO 12+00
1–6	BARRIER WALL – PROFILE STA. 12+00 TO 21+50
1–7	BARRIER WALL – PROFILE STA. 21+50 TO 32+00
1–8	BARRIER WALL – PROFILE STA. 32+00 TO 37+97
1–9	BARRIER WALL DETAILS
1–10	STOCKPILE DETAILS
1–11	MEASUREMENT AND CONTROL UNIT (MCU)
1–12	MONITORING WELL/PIEZOMETER LOCATION MAP
1–13	TYPICAL EXTRACTION WELL
1–14	EXTRACTION WELL PUMP/VFD ENCLOSURE, FLOW METER AND WELL INSTRUMENTATION
1–15	AUTOMATED CONTROL AND MONITORING SYSTEM SITE PLAN
1–16	POWER DISTRIBUTION PANELS AND RIVER STAGE GAGE
1–17	ELECTRICAL POWER DIAGRAM
1–18	EXISTING PROPERTY AND UTILITY PLAN
1–19	DETAILS FOR RMUs 2, 4, AND 5
1–20	PLAN OF EFFLUENT PIPELINE
1–21	PROFILE OF EFFLUENT PIPELINE
1–22	PIPING PLAN & DETAILS AT DISCHARGE POINT
1–23	PIPING DETAIL
1–24	ELECTRICAL PLAN & DETAILS AT DISCHARGE POINT
1–25	DISCHARGE PIPE MODIFICATIONS
1–26	PUMP CONTROL/VFD ENCLOSURE

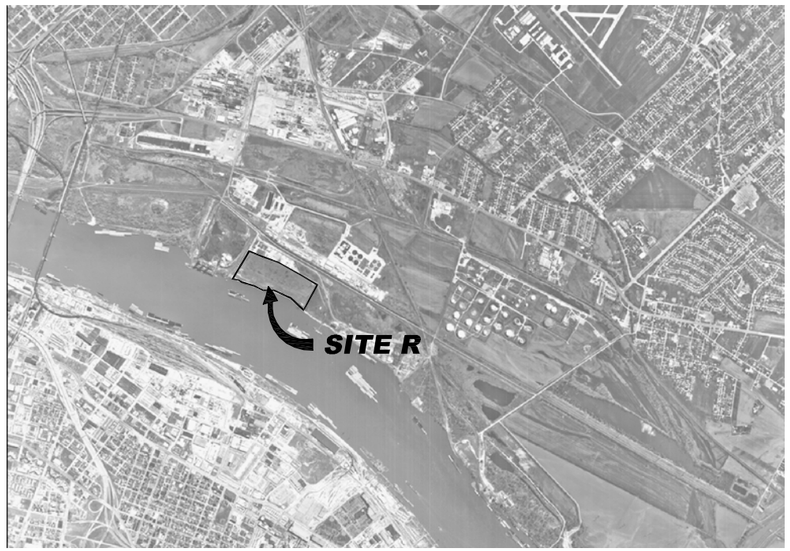

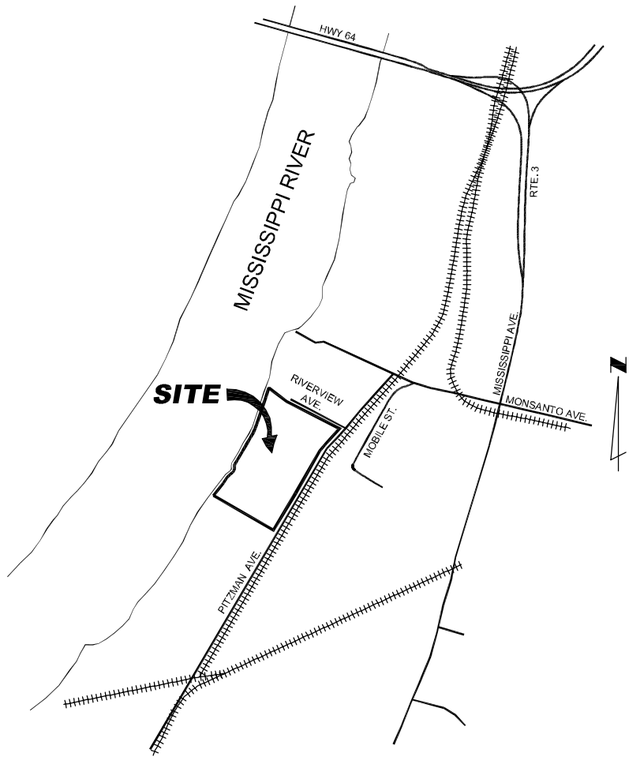

LOCATION MAP

NO.	DATE	REVISION DESCRIPTION	APPROVED

NOTE:
EXISTING SURFACE FEATURES HAVE BEEN PLOTTED FROM AN AERIAL SURVEY BY SURDEX. THE LOCATIONS OF UNDERGROUND UTILITIES, STRUCTURES AND FACILITIES HAVE BEEN PLOTTED FROM PLANS AND DRAWINGS OF EXISTING FACILITIES PROVIDED BY SOLUTIA. THEIR LOCATIONS MUST BE CONSIDERED APPROXIMATE ONLY. THERE MAY BE OTHER IMPROVEMENTS AND UTILITIES WITHIN THE PROJECT AREA, WHICH ARE NOT SHOWN. THE CONTRACTOR SHALL VERIFY, PRIOR TO EXCAVATION OR CONSTRUCTION, THE LOCATIONS, ELEVATIONS AND DIMENSIONS OF ALL EXISTING UTILITIES, STRUCTURES, WELLS AND OTHER FEATURES AFFECTING HIS WORK, WHETHER OR NOT SHOWN ON THE PLANS. USE OF A SUBSURFACE LOCATOR IS RECOMMENDED.

SEAL

DATE: 12/11/07
SCALE: AS SHOWN
DESIGNED: DJD
DRAWN: DJD
CHECKED: JH
SUBMITTED:

PREPARED BY:
URS
1001 Highlands Plaza Dr. West, Suite 300
St. Louis, MO 63110
Tel: 314-429-0100
fax: 314-429-0462

THE PROFESSIONAL WHOSE SIGNATURE AND PERSONAL SEAL APPEAR HEREON ASSUMES RESPONSIBILITY ONLY FOR WHAT APPEARS ON THIS SHEET AND DISCLAIMS ANY RESPONSIBILITY FOR ALL OTHER DRAWINGS, SPECIFICATIONS, ESTIMATES, REPORTS, SURVEYS OR OTHER DOCUMENTS OR INSTRUMENTS NOT SEALED BY THE PROFESSIONAL.

PROJECT NO.
21561391.00000

DRAWING NO.
1-1

File: P:\GEOTECHNICAL\21561391.00000 SITE R O&M REPORT\ASBUILTS 12-11-07\SHEET 1-1.DWG Last edited: DEC. 12, 07 @ 12:02 p.m. by: david_deguire

ABBREVIATIONS

A ——— AMP
AMSL ——— ABOVE MEAN SEA LEVEL
C.I. ——— CAST IRON
CL ——— CENTER LINE
DI ——— DUCTILE IRON
DIA. ——— DIAMETER
EA. ——— EACH
EL. ——— ELEVATION
EW ——— EXTRACTION WELL
FT ——— FOOT OR FEET
GMCS ——— GROUNDWATER MIGRATION CONTROL SYSTEM
GND ——— GROUND
GPM ——— GALLONS PER MINUTE
HDPE ——— HIGH DENSITY POLYETHYLENE
I.D. ——— INSIDE DIAMETER
I/O ——— INPUT/OUTPUT
Ma ——— MILLIAMP
MCU ——— MEASUREMENT CONTROL UNIT
Min. ——— MINIMUM
mILS ——— MEASUREMENT OF LENGTH = .ØØ1 INCHES
NTS ——— NOT TO SCALE
O.C. ——— ON CENTER
O.D. ——— OUTSIDE DIAMETER
P ——— PIEZOMETER
PVC ——— POLYVINYL CHLORIDE
Req'd ——— REQUIRED
RS ——— RIVER STAGE GAUGE
SCH ——— SCHEDULE
SDR ——— STANDARD DIMENSION RATIO
S.S. ——— STAINLESS STEEL
SQ ——— SQUARE
TYP. ——— TYPICAL
V ——— VOLTAGE
VAC ——— VOLTAGE ALTERNATIVING CURRENT
VDC ——— VOLTAGE DIRECT CURRENT
VFD ——— VARIABLE FREQUENCY DRIVE
VW ——— VIBRATING WIRE
W/ ——— WITH

LEGEND

- EXTRACTION WELL FOR GMCS
- PIEZOMETER FOR GMCS
- STANDARD PENETRATION TEST BORING
- CPT OR SONIC BORING LOCATION
- BWMW MONITORING WELL
- J JUNCTION BOX
- P PULL BOX
- MEASUREMENT CONTROL UNIT (MCU)
- RIVER STAGE GAUGE
- "B" MONITORING WELLS

File: P:\GEOTECHNICAL\21561391.00000 SITE R O&M REPORT\ASBUILTS 12-11-07\SHEET 1-2.DWG Last edited: DEC. 12, 07 @ 12:07 p.m. by: davis_deguire

NO.	DATE	REVISION DESCRIPTION	APPROVED

URS
1001 Highlands Plaza Dr. West, Suite 300
St. Louis, MO 63110

THE PROFESSIONAL WHOSE SIGNATURE AND PERSONAL SEAL APPEAR HEREON ASSUMES RESPONSIBILITY ONLY FOR WHAT APPEARS ON THIS SHEET AND DISCLAIMS ANY RESPONSIBILITY FOR ALL OTHER DRAWINGS, SPECIFICATIONS, ESTIMATES, REPORTS, SURVEYS OR OTHER DOCUMENTS OR INSTRUMENTS NOT SEALED BY THE PROFESSIONAL.

SEAL

DATE: 12/11/07
SCALE:
DESIGNED: MJB
DRAWN: DJD
CHECKED:
SUBMITTED:

SOLUTIA™
Applied Chemistry, Creative Solutions
SOLUTIA INC.
575 MARYVILLE CENTRE DRIVE
ST. LOUIS, MO. 63141

GROUNDWATER MIGRATION CONTROL SYSTEM

BARRIER WALL

ABBREVIATIONS AND SYMBOLS

PROJECT NO. 21561391.00000

DRAWING NO. 1-2

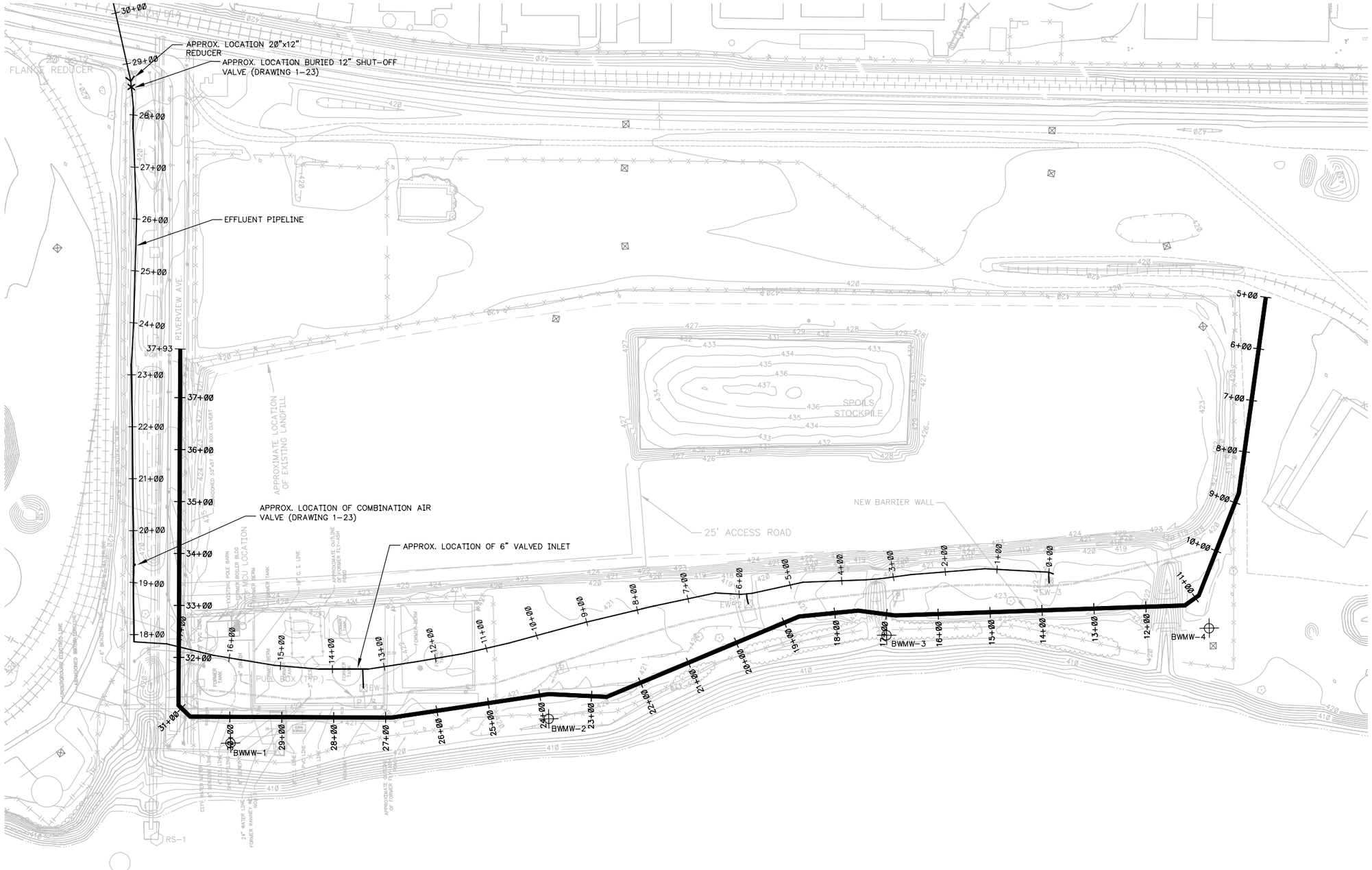

0 100
SCALE FEET

NO.	DATE	REVISION DESCRIPTION	APPROVED

URS
1001 Highlands Plaza Dr. West, Suite 300
St. Louis, MO 63110

THE PROFESSIONAL WHOSE SIGNATURE AND PERSONAL SEAL APPEAR HEREON ASSUMES RESPONSIBILITY ONLY FOR WHAT APPEARS ON THIS SHEET AND DISCLAIMS ANY RESPONSIBILITY FOR ALL OTHER DRAWINGS, SPECIFICATIONS, ESTIMATES, REPORTS, SURVEYS OR OTHER DOCUMENTS OR INSTRUMENTS NOT SEALED BY THE PROFESSIONAL.

SEAL

DATE:	12/11/07
SCALE:	
DESIGNED:	MJB
DRAWN:	DJD
CHECKED:	
SUBMITTED:	

SOLUTIA™ Applied Chemistry, Creative Solutions
SOLUTIA INC.
575 MARYVILLE CENTRE DRIVE
ST. LOUIS, MO. 63141

GROUNDWATER MIGRATION CONTROL SYSTEM

BARRIER WALL

OVERALL SITE PLAN

PROJECT NO. 21561391.00000

DRAWING NO. 1-3

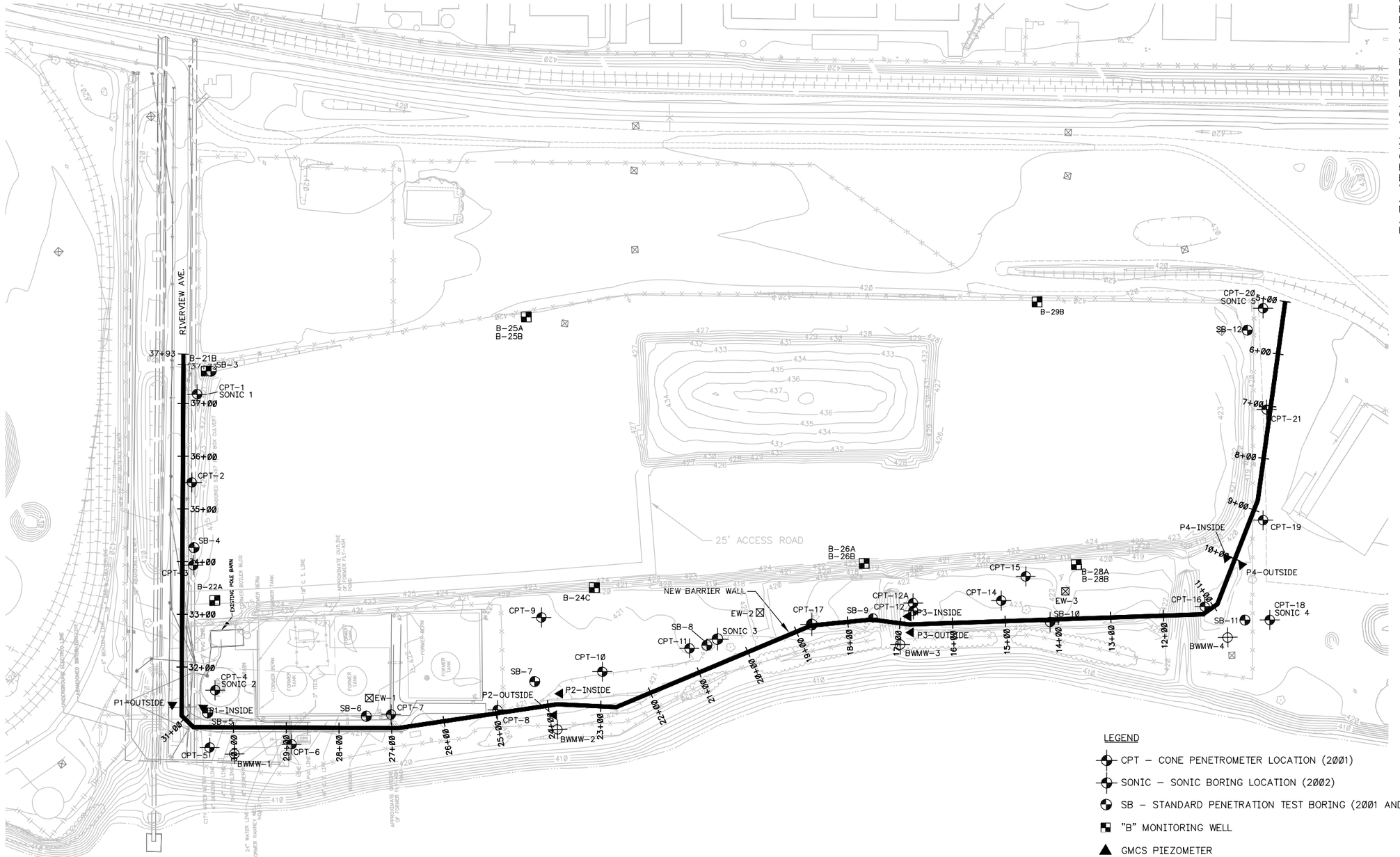

NOTE:
EXISTING SURFACE FEATURES HAVE BEEN PLOTTED FROM AN AERIAL SURVEY BY SURDEX. THE LOCATIONS OF UNDERGROUND UTILITIES, STRUCTURES AND FACILITIES HAVE BEEN PLOTTED FROM PLANS AND DRAWINGS OF EXISTING FACILITIES PROVIDED BY SOLUTIA. THEIR LOCATIONS MUST BE CONSIDERED APPROXIMATE ONLY. THERE MAY BE OTHER IMPROVEMENTS AND UTILITIES WITHIN THE PROJECT AREA, WHICH ARE NOT SHOWN. THE CONTRACTOR SHALL VERIFY, PRIOR TO EXCAVATION OR CONSTRUCTION, THE LOCATIONS, ELEVATIONS AND DIMENSIONS OF ALL EXISTING UTILITIES, STRUCTURES, WELLS AND OTHER FEATURES AFFECTING HIS WORK, WHETHER OR NOT SHOWN ON THE PLANS. USE OF A SUBSURFACE LOCATOR IS RECOMMENDED.

LEGEND

- CPT – CONE PENETROMETER LOCATION (2001)
- SONIC – SONIC BORING LOCATION (2002)
- SB – STANDARD PENETRATION TEST BORING (2001 AND 2002)
- "B" MONITORING WELL
- GMCS PIEZOMETER
- BWMW MONITORING WELL
- EXTRACTION WELL

SCALE 0 100 FEET

NO.	DATE	REVISION DESCRIPTION	APPROVED

URS
1001 Highlands Plaza Dr. West, Suite 300
St. Louis, MO 63110

THE PROFESSIONAL WHOSE SIGNATURE AND PERSONAL SEAL APPEAR HEREON ASSUMES RESPONSIBILITY ONLY FOR WHAT APPEARS ON THIS SHEET AND DISCLAIMS ANY RESPONSIBILITY FOR ALL OTHER DRAWINGS, SPECIFICATIONS, ESTIMATES, REPORTS, SURVEYS OR OTHER DOCUMENTS OR INSTRUMENTS NOT SEALED BY THE PROFESSIONAL.

SEAL

DATE: 12/11/07
SCALE:
DESIGNED: MJB
DRAWN: DJD
CHECKED:
SUBMITTED:

SOLUTIA™ Applied Chemistry, Creative Solutions
SOLUTIA INC.
575 MARYVILLE CENTRE DRIVE
ST. LOUIS, MO. 63141

GROUNDWATER MIGRATION CONTROL SYSTEM
BARRIER WALL
BORING LOCATION PLAN

PROJECT NO. 21561391.00000
DRAWING NO. 1-4

File: P:\GEOTECHNICAL\21561391.00000 SITE R O&M REPORT\ASBUILTS 12-11-07\SHEET 1-4.DWG Last edited: DEC. 12, 07 @ 12:22 p.m. by: david_despire

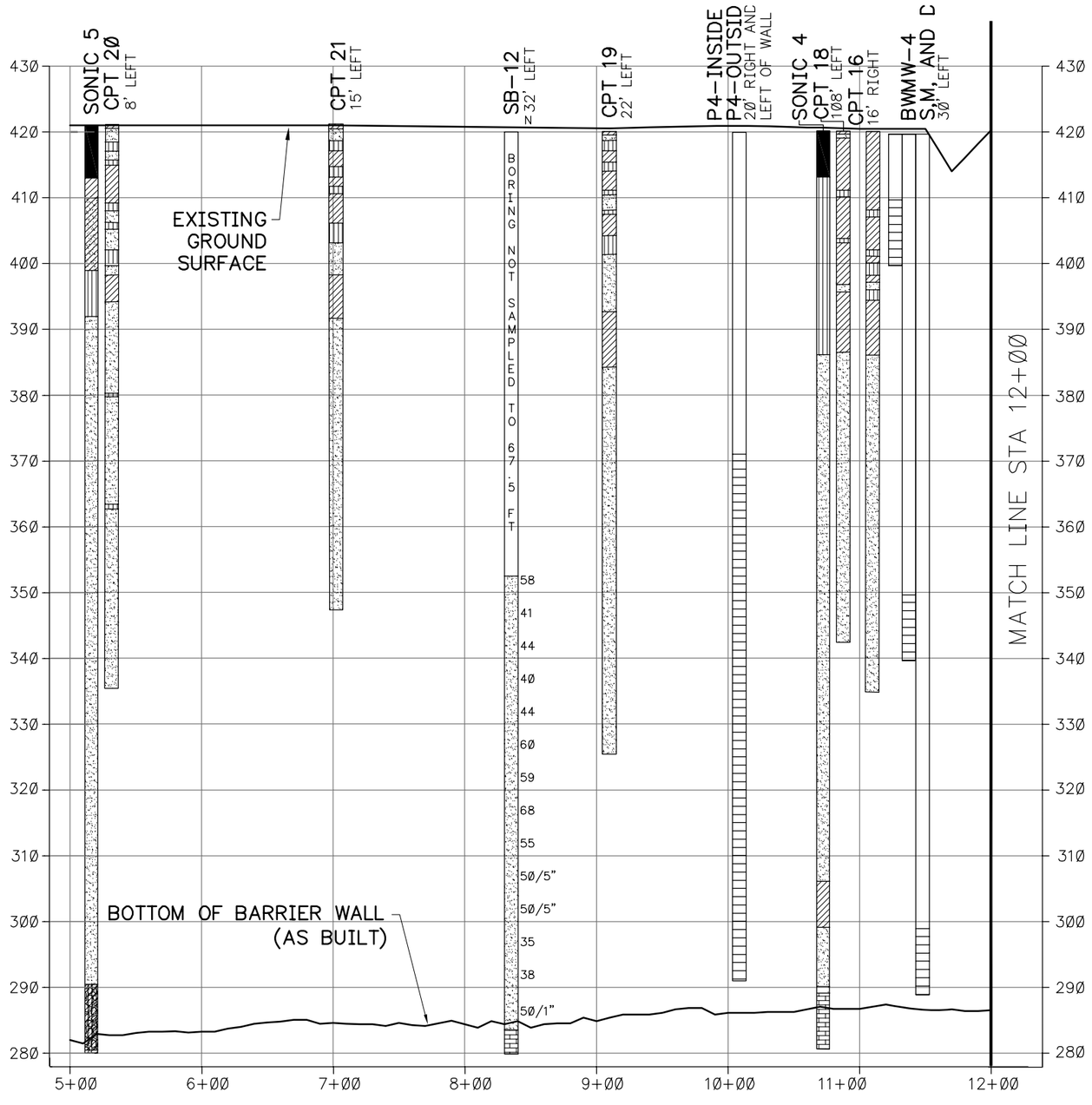

LEGEND

- CLAY (CL OR CH)
- SILT (ML)
- CLAYEY SAND (SC)
- SAND (SP OR SW)
- GRAVEL AND/OR COBBLES
- LIMESTONE
- PROPOSED SCREENED INTERVAL OF EXTRACTION WELL OR PIEZOMETER

10+00 — WALL STATION AT CENTERLINE OF BARRIER WALL

CPT-1 — CONE PENETROMETER TEST NUMBER (2001)

SONIC 1 — SONIC BORING NUMBER (2002)

SB-1 — SOIL BORING NUMBER (2002)

62 — STANDARD PENETRATION TEST BLOW COUNT (N). BLOWS /12" PENETRATION OF SAMPLER UNLESS INDICATED OTHERWISE

P — HYDRAULICALLY PUSHED SAMPLE

NOTE:
THESE GRAPHIC LOGS DEPICT GENERALIZED SOIL CONDITIONS. WHEN SOIL INFORMATION WAS NOT AVAILABLE, SCREENED INTERVALS WERE SHOWN. REFER TO INDIVIDUAL LOGS FOR DETAILS.

0 10
VERTICAL SCALE FEET

0 50
HORIZONTAL SCALE FEET

NO.	DATE	REVISION DESCRIPTION	APPROVED

URS
1001 Highlands Plaza Dr. West, Suite 300
St. Louis, MO 63110

THE PROFESSIONAL WHOSE SIGNATURE AND PERSONAL SEAL APPEAR HEREON ASSUMES RESPONSIBILITY ONLY FOR WHAT APPEARS ON THIS SHEET AND DISCLAIMS ANY RESPONSIBILITY FOR ALL OTHER DRAWINGS, SPECIFICATIONS, ESTIMATES, REPORTS, SURVEYS OR OTHER DOCUMENTS OR INSTRUMENTS NOT SEALED BY THE PROFESSIONAL.

SEAL

DATE: 12/11/07
SCALE:
DESIGNED: MJB
DRAWN: DJD
CHECKED:
SUBMITTED:

SOLUTIA™
Applied Chemistry, Creative Solutions
SOLUTIA INC.
575 MARYVILLE CENTRE DRIVE
ST. LOUIS, MO. 63141

GROUNDWATER MIGRATION CONTROL SYSTEM

BARRIER WALL

BARRIER WALL – PROFILE
STA 5+00 TO 12+00

PROJECT NO.
21561391.00000

DRAWING NO.
1-5

File: P:\GEOTECHNICAL\21561391.00000 SITE R O&M REPORT\ASBUILTS 12-11-07\SHEET 1-5 THRU 1-8.DWG Last edited: DEC. 12, 07 @ 12:23 p.m. by: david_deguire

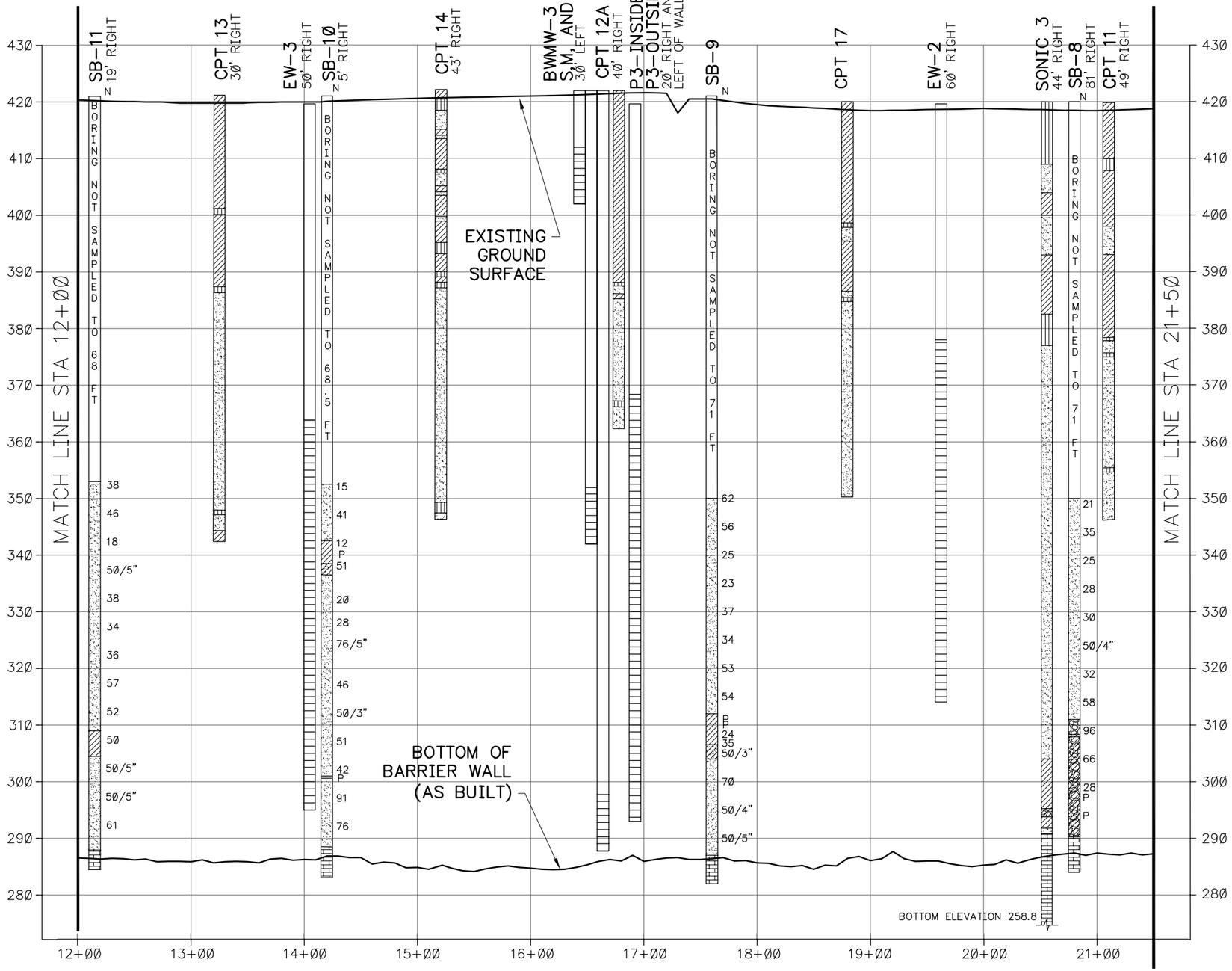

LEGEND

- CLAY (CL OR CH)
- SILT (ML)
- CLAYEY SAND (SC)
- SAND (SP OR SW)
- GRAVEL AND/OR COBBLES
- LIMESTONE
- PROPOSED SCREENED INTERVAL OF EXTRACTION WELL OR PIEZOMETER
- 10+00 WALL STATION AT CENTERLINE OF BARRIER WALL
- CPT-1 CONE PENETROMETER TEST NUMBER (2001)
- SONIC 1 SONIC BORING NUMBER (2002)
- SB-1 SOIL BORING NUMBER (2002)
- 62 STANDARD PENETRATION TEST BLOW COUNT (N). BLOWS /12" PENETRATION OF SAMPLER UNLESS INDICATED OTHERWISE
- P HYDRAULICALLY PUSHED SAMPLE

NOTE:
THESE GRAPHIC LOGS DEPICT GENERALIZED SOIL CONDITIONS. WHEN SOIL INFORMATION WAS NOT AVAILABLE, SCREENED INTERVALS WERE SHOWN. REFER TO INDIVIDUAL LOGS FOR DETAILS.

0 10
VERTICAL SCALE FEET

0 50
HORIZONTAL SCALE FEET

NO.	DATE	REVISION DESCRIPTION	APPROVED

URS
1001 Highlands Plaza Dr. West, Suite 300
St. Louis, MO 63110

THE PROFESSIONAL WHOSE SIGNATURE AND PERSONAL SEAL APPEAR HEREON ASSUMES RESPONSIBILITY ONLY FOR WHAT APPEARS ON THIS SHEET AND DISCLAIMS ANY RESPONSIBILITY FOR ALL OTHER DRAWINGS, SPECIFICATIONS, ESTIMATES, REPORTS, SURVEYS OR OTHER DOCUMENTS OR INSTRUMENTS NOT SEALED BY THE PROFESSIONAL.

SEAL

DATE: 12/11/07
SCALE:
DESIGNED: MJB
DRAWN: DJD
CHECKED:
SUBMITTED:

SOLUTIA™ Applied Chemistry, Creative Solutions
SOLUTIA INC.
575 MARYVILLE CENTRE DRIVE
ST. LOUIS, MO. 63141

GROUNDWATER MIGRATION CONTROL SYSTEM

BARRIER WALL

BARRIER WALL – PROFILE
STA 12+00 TO 21+50

PROJECT NO.
21561391.00000

DRAWING NO.
1-6

File: P:\GEOTECHNICAL\21561391.00000 SITE R O&M REPORT\ASBUILTS 12-11-07\SHEET 1-5 THRU 1-8.DWG Last edited: DEC. 12, 07 @ 12:23 p.m. by: david_deguire

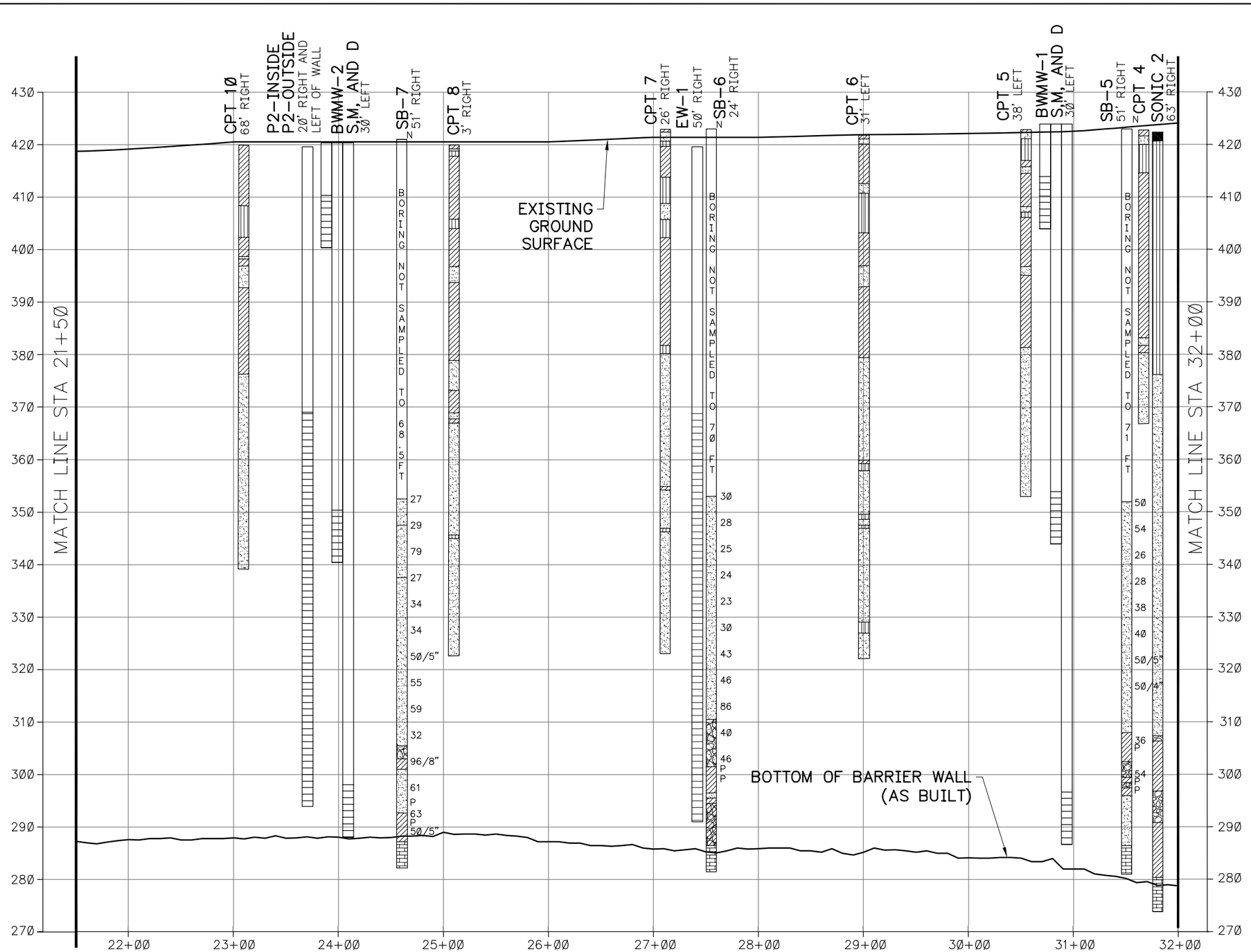

LEGEND

- CLAY (CL OR CH)
- SILT (ML)
- CLAYEY SAND (SC)
- SAND (SP OR SW)
- GRAVEL AND/OR COBBLES
- LIMESTONE
- PROPOSED SCREENED INTERVAL OF EXTRACTION WELL OR PIEZOMETER
- 10+00 WALL STATION AT CENTERLINE OF BARRIER WALL
- CPT-1 CONE PENETROMETER TEST NUMBER (2001)
- SONIC 1 SONIC BORING NUMBER (2002)
- SB-1 SOIL BORING NUMBER (2002)
- 62 STANDARD PENETRATION TEST BLOW COUNT (N). BLOWS /12" PENETRATION OF SAMPLER UNLESS INDICATED OTHERWISE
- P HYDRAULICALLY PUSHED SAMPLE

NOTE:
THESE GRAPHIC LOGS DEPICT GENERALIZED SOIL CONDITIONS. WHEN SOIL INFORMATION WAS NOT AVAILABLE, SCREENED INTERVALS WERE SHOWN. REFER TO INDIVIDUAL LOGS FOR DETAILS.

0 10 VERTICAL SCALE FEET

0 50 HORIZONTAL SCALE FEET

NO.	DATE	REVISION DESCRIPTION	APPROVED

URS
1001 Highlands Plaza Dr. West, Suite 300
St. Louis, MO 63110

THE PROFESSIONAL WHOSE SIGNATURE AND PERSONAL SEAL APPEAR HEREON ASSUMES RESPONSIBILITY ONLY FOR WHAT APPEARS ON THIS SHEET AND DISCLAIMS ANY RESPONSIBILITY FOR ALL OTHER DRAWINGS, SPECIFICATIONS, ESTIMATES, REPORTS, SURVEYS OR OTHER DOCUMENTS OR INSTRUMENTS NOT SEALED BY THE PROFESSIONAL.

SEAL

DATE: 12/11/07
SCALE:
DESIGNED: MJB
DRAWN: DJD
CHECKED:
SUBMITTED:

SOLUTIA™
Applied Chemistry, Creative Solutions

SOLUTIA INC.
575 MARYVILLE CENTRE DRIVE
ST. LOUIS, MO. 63141

GROUNDWATER MIGRATION CONTROL SYSTEM

BARRIER WALL

BARRIER WALL – PROFILE
STA 21+50 TO 32+00

PROJECT NO. 21561391.00000

DRAWING NO. 1-7

File: P:\GEOTECHNICAL\21561391.00000 SITE R O&M REPORT\ASBUILTS 12-11-07\SHEET 1-5 THRU 1-8.DWG Last edited: DEC. 12, 07 @ 12:26 p.m. by: davidd_deguire

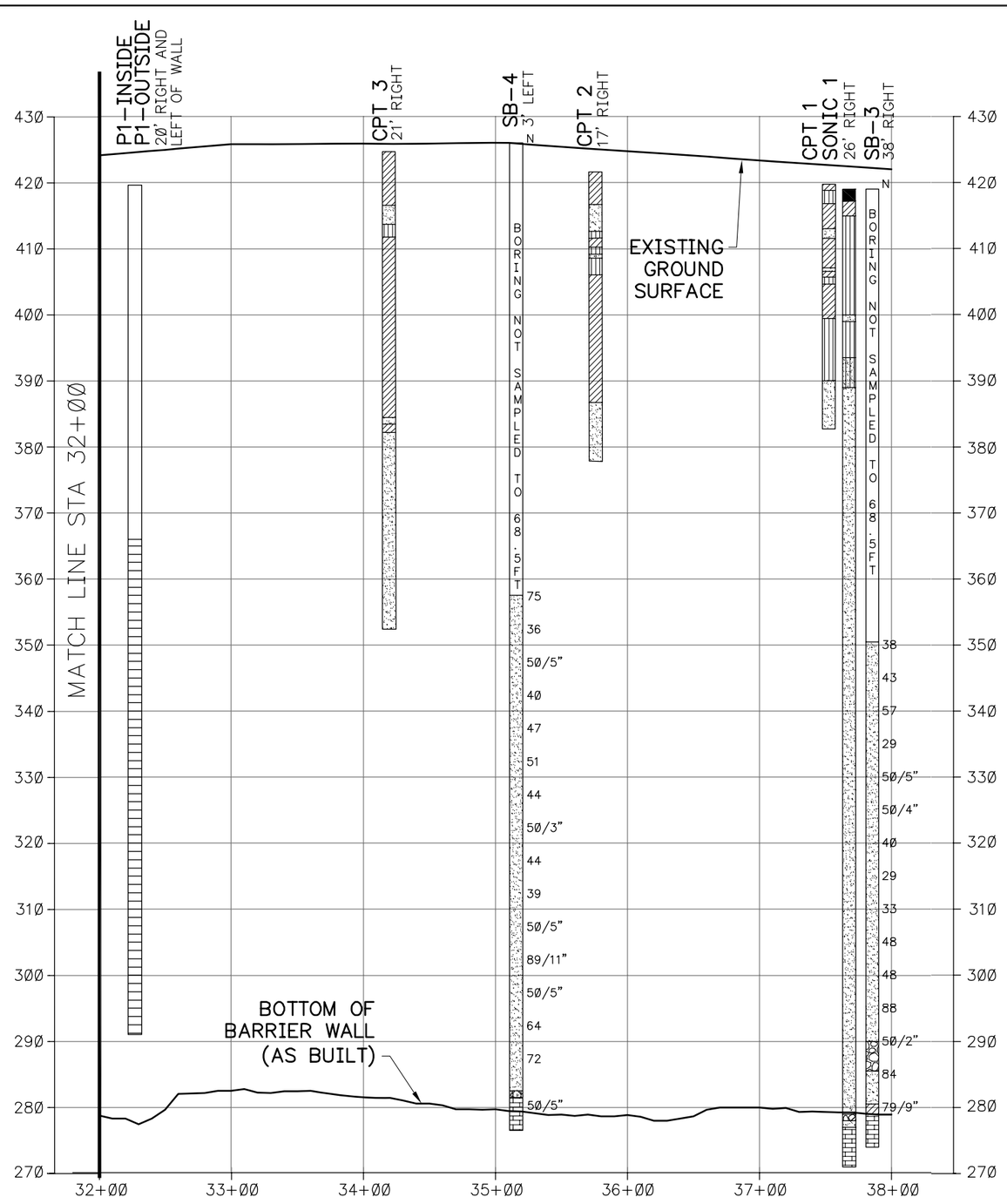

LEGEND

	CLAY (CL OR CH)
	SILT (ML)
	CLAYEY SAND (SC)
	SAND (SP OR SW)
	GRAVEL AND/OR COBBLES
	LIMESTONE
	PROPOSED SCREENED INTERVAL OF EXTRACTION WELL OR PIEZOMETER
1Ø+ØØ	WALL STATION AT CENTERLINE OF BARRIER WALL
CPT–1	CONE PENETROMETER TEST NUMBER (2ØØ1)
SONIC 1	SONIC BORING NUMBER (2ØØ2)
SB–1	SOIL BORING NUMBER (2ØØ2)
62	STANDARD PENETRATION TEST BLOW COUNT (N). BLOWS /12" PENETRATION OF SAMPLER UNLESS INDICATED OTHERWISE
P	HYDRAULICALLY PUSHED SAMPLE

NOTE:
THESE GRAPHIC LOGS DEPICT GENERALIZED SOIL CONDITIONS. WHEN SOIL INFORMATION WAS NOT AVAILABLE, SCREENED INTERVALS WERE SHOWN. REFER TO INDIVIDUAL LOGS FOR DETAILS.

Ø 1Ø
VERTICAL SCALE FEET

Ø 5Ø
HORIZONTAL SCALE FEET

NO.	DATE	REVISION DESCRIPTION	APPROVED

URS
1001 Highlands Plaza Dr. West, Suite 300
St. Louis, MO 63110

THE PROFESSIONAL WHOSE SIGNATURE AND PERSONAL SEAL APPEAR HEREON ASSUMES RESPONSIBILITY ONLY FOR WHAT APPEARS ON THIS SHEET AND DISCLAIMS ANY RESPONSIBILITY FOR ALL OTHER DRAWINGS, SPECIFICATIONS, ESTIMATES, REPORTS, SURVEYS OR OTHER DOCUMENTS OR INSTRUMENTS NOT SEALED BY THE PROFESSIONAL.

SEAL

DATE: 12/11/07
SCALE:
DESIGNED: MJB
DRAWN: DJD
CHECKED:
SUBMITTED:

SOLUTIA™
Applied Chemistry, Creative Solutions
SOLUTIA INC.
575 MARYVILLE CENTRE DRIVE
ST. LOUIS, MO. 63141

GROUNDWATER MIGRATION CONTROL SYSTEM

BARRIER WALL

BARRIER WALL – PROFILE
STA 32+00 TO 37+97

PROJECT NO.
21561391.00000

DRAWING NO.
1-8

File: P:\GEOTECHNICAL\21561391.00000 SITE R O&M REPORT\ASBUILTS 12-11-07\SHEET 1-5 THRU 1-8.DWG Last edited: DEC. 12, 07 @ 12:27 p.m. by: david_deguire

BARRIER WALL LAYOUT TABLE

STATION	NORTHING (FT)	EASTING (FT)
5+00	702093.32	2290630.87
8+80	702321.24	2290326.81
10+92	702484.17	2290191.57
11+25	702517.38	2290187.87
16+82	703013.51	2290440.68
17+55	703072.25	2290483.86
18+69	703177.29	2290529.50
22+70	703575.90	2290573.44
23+43	703671.30	2290632.46
26+89	703958.35	2290739.40
30+76	704296.37	2290929.08
31+07	704304.80	2290959.04
37+93	703969.63	2291557.27

MONITORING WELL LAYOUT TABLE

MONITORING WELL LAYOUT TABLE

MONITORING WELL	NORTHING (FT)	EASTING (FT)
BWMW-1S	704161.05	2290812.52
BWMW-1M	704151.31	2290806.39
BWMW-1D	704153.22	2290816.67
BWMW-2S	703698.70	2290611.69
BWMW-2M	703688.64	2290604.69
BWMW-2D	703678.81	2290602.00
BWMW-3S	703097.24	2290470.11
BWMW-3M	703106.51	2290472.28
BWMW-3D	703081.75	2290466.26
BWMW-4S	702680.85	2290245.18
BWMW-4M	702674.74	2290237.64
BWMW-4D	702674.30	2290245.40

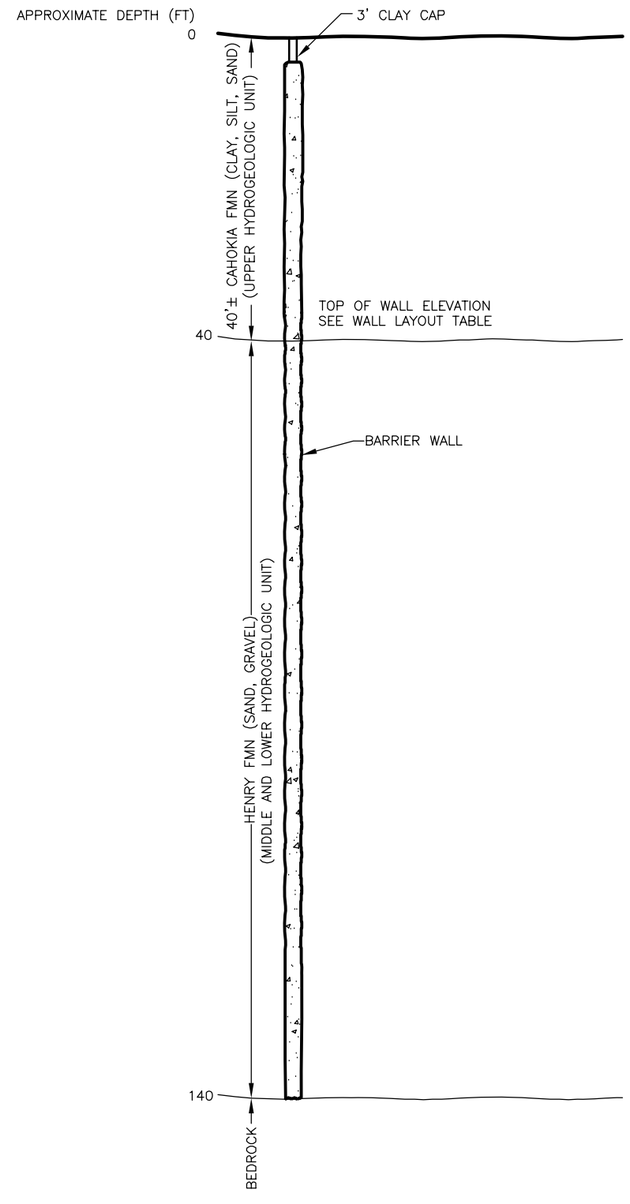

BARRIER WALL DETAIL

NOT TO SCALE

NO.	DATE	REVISION DESCRIPTION	APPROVED

URS

1001 Highlands Plaza Dr. West, Suite 300
St. Louis, MO 63110

THE PROFESSIONAL WHOSE SIGNATURE AND PERSONAL SEAL APPEAR HEREON ASSUMES RESPONSIBILITY ONLY FOR WHAT APPEARS ON THIS SHEET AND DISCLAIMS ANY RESPONSIBILITY FOR ALL OTHER DRAWINGS, SPECIFICATIONS, ESTIMATES, REPORTS, SURVEYS OR OTHER DOCUMENTS OR INSTRUMENTS NOT SEALED BY THE PROFESSIONAL.

SEAL

DATE: 12/11/07
SCALE:
DESIGNED: MJB
DRAWN: DJD
CHECKED:
SUBMITTED:

SOLUTIA™
Applied Chemistry, Creative Solutions

SOLUTIA INC.
575 MARYVILLE CENTRE DRIVE
ST. LOUIS, MO. 63141

GROUNDWATER MIGRATION CONTROL SYSTEM

BARRIER WALL

BARRIER WALL DETAILS

PROJECT NO.
21561391.00000

DRAWING NO.
1-9

File: P:\GEOTECHNICAL\21561391.00000 SITE R O&M REPORT\ASBUILTS 12-11-07\SHEET 1-9.DWG Last edited: DEC. 12, 07 @ 12:28 p.m. by: david desire

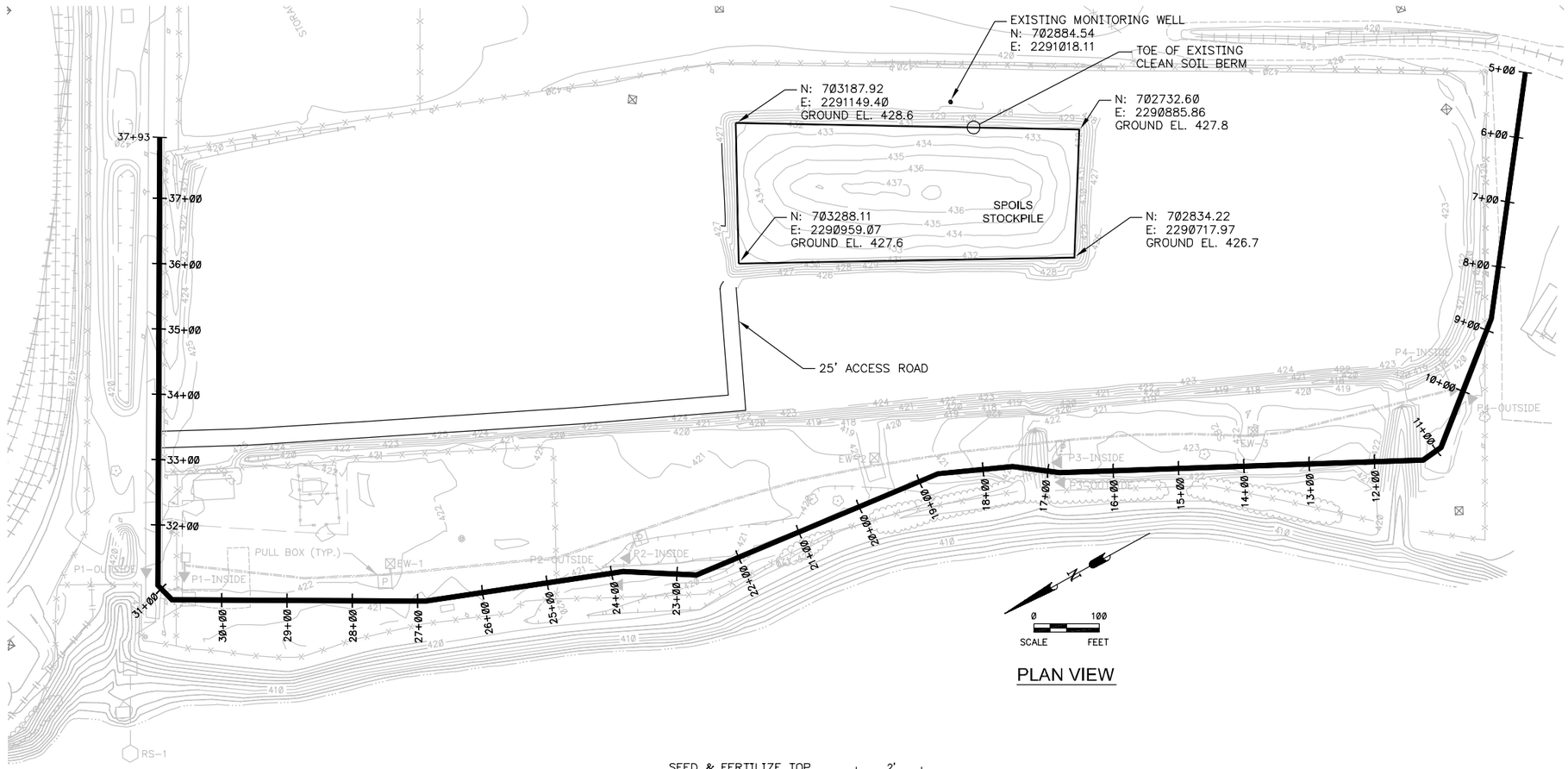

PLAN VIEW

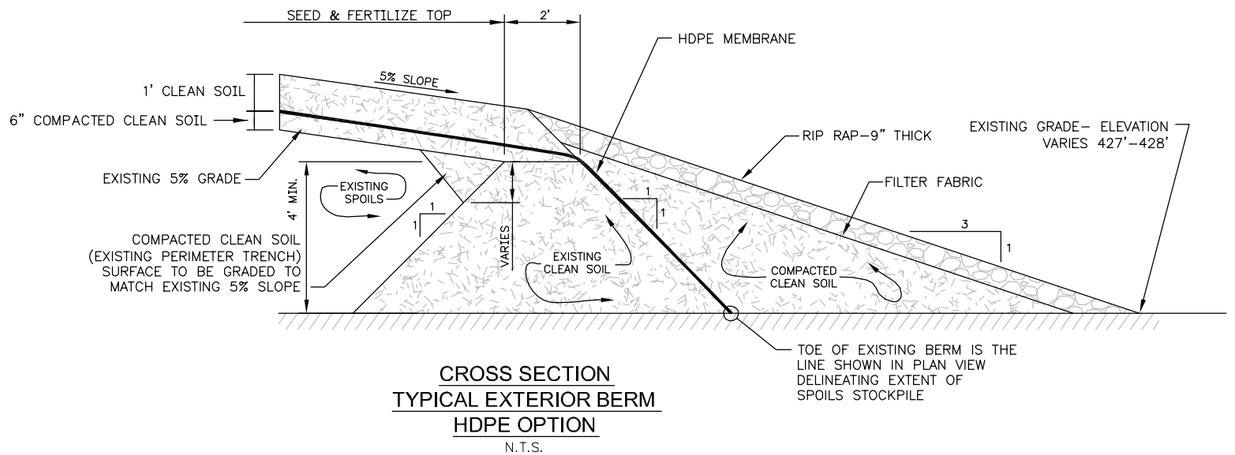

CROSS SECTION
TYPICAL EXTERIOR BERM
HDPE OPTION
N.T.S.

NOTE:
EXISTING SURFACE FEATURES HAVE BEEN PLOTTED FROM AN AERIAL SURVEY BY SURDEX. THE LOCATIONS OF UNDERGROUND UTILITIES, STRUCTURES AND FACILITIES HAVE BEEN PLOTTED FROM PLANS AND DRAWINGS OF EXISTING FACILITIES PROVIDED BY SOLUTIA. THEIR LOCATIONS MUST BE CONSIDERED APPROXIMATE ONLY. THERE MAY BE OTHER IMPROVEMENTS AND UTILITIES WITHIN THE PROJECT AREA, WHICH ARE NOT SHOWN. THE CONTRACTOR SHALL VERIFY, PRIOR TO EXCAVATION OR CONSTRUCTION, THE LOCATIONS, ELEVATIONS AND DIMENSIONS OF ALL EXISTING UTILITIES, STRUCTURES, WELLS AND OTHER FEATURES AFFECTING HIS WORK, WHETHER OR NOT SHOWN ON THE PLANS. USE OF A SUBSURFACE LOCATOR IS RECOMMENDED. SURVEY COORDINATES WERE PROVIDED BY ZAHNER & ASSOCIATES.

NO.	DATE	REVISION DESCRIPTION	APPROVED

URS
1001 Highlands Plaza Dr. West, Suite 300
St. Louis, MO 63110

THE PROFESSIONAL WHOSE SIGNATURE AND PERSONAL SEAL APPEAR HEREON ASSUMES RESPONSIBILITY ONLY FOR WHAT APPEARS ON THIS SHEET AND DISCLAIMS ANY RESPONSIBILITY FOR ALL OTHER DRAWINGS, SPECIFICATIONS, ESTIMATES, REPORTS, SURVEYS OR OTHER DOCUMENTS OR INSTRUMENTS NOT SEALED BY THE PROFESSIONAL.

SEAL

DATE: 12/11/07
SCALE:
DESIGNED: MJB
DRAWN: DJD
CHECKED:
SUBMITTED:

SOLUTIA™ Applied Chemistry, Creative Solutions
SOLUTIA INC.
575 MARYVILLE CENTRE DRIVE
ST. LOUIS, MO. 63141

GROUNDWATER MIGRATION CONTROL SYSTEM
BARRIER WALL
STOCKPILE DETAILS

PROJECT NO.
21561391.00000

DRAWING NO.
1-10

File: P:\GEOTECHNICAL\21561391.00000 SITE R O&M REPORT\ASBUILTS 12-11-07\SHEET 1-10.DWG Last edited: DEC. 12, 07 @ 12:29 p.m. by: david_deguire

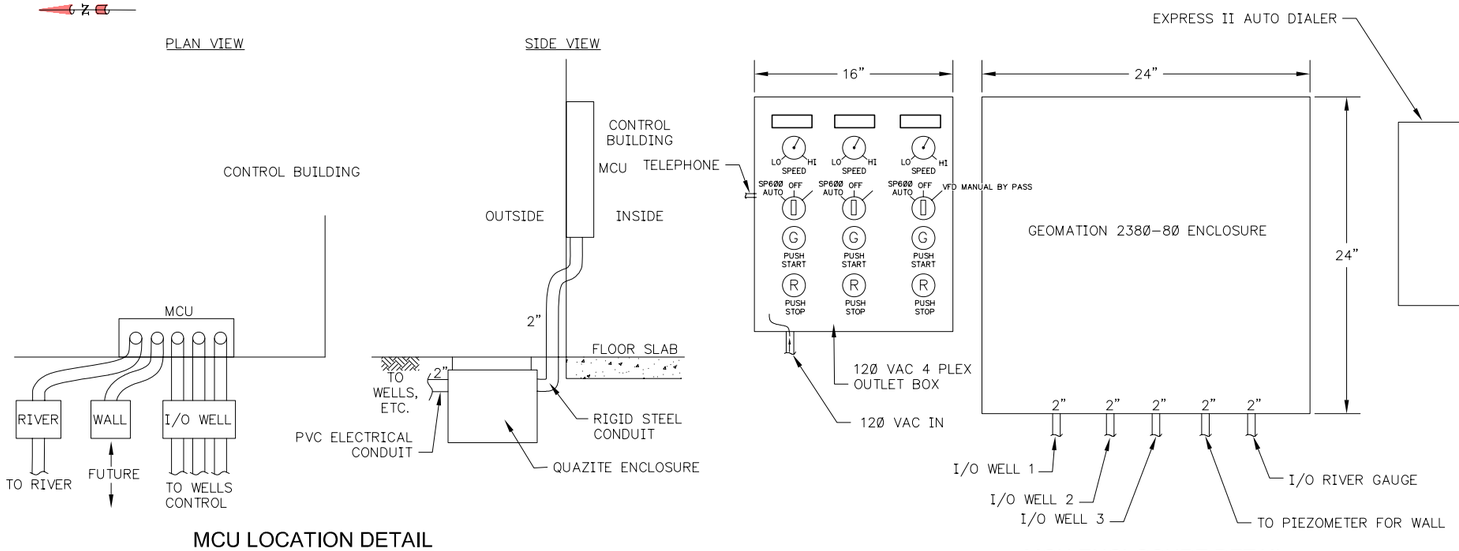

MCU LOCATION DETAIL
NOT TO SCALE

MCU ENCLOSURE DETAIL
NOT TO SCALE

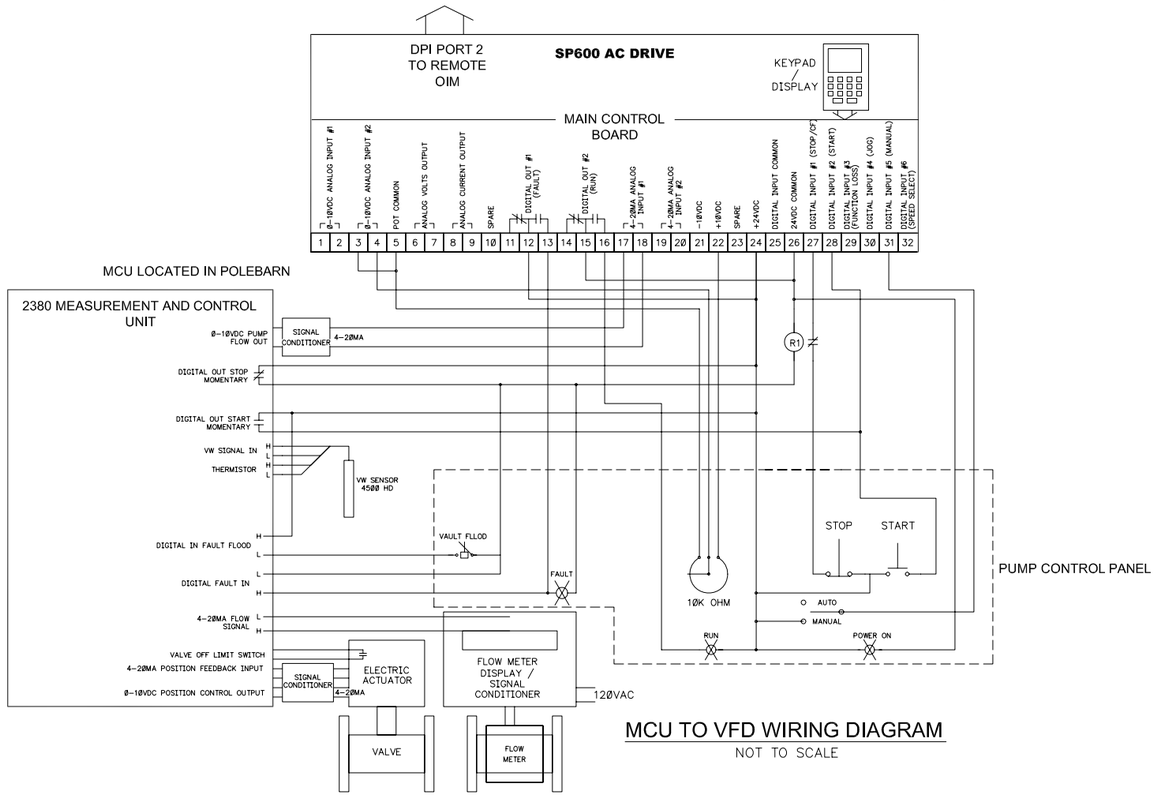

MCU TO VFD WIRING DIAGRAM
NOT TO SCALE

Solutia
RMCS Instrumentation
Input/Output Table for MCU

As of: 2/16/2004

Item	Tag	Description	Type	S/N	Range	I/O	Card	Ch	Comment
1	PZ-1W	Outside wall	VW		0-25 psi	ASM, Analog Input	1	1	
2	PZ-2W	Outside wall	VW		0-25 psi			2	
3	PZ-3W	Outside wall	VW		0-25 psi			3	
4	PZ-4W	Outside wall	VW		0-25 psi			4	
5	PZ-1E	Inside wall	VW		0-25 psi			5	
6	PZ-2E	Inside wall	VW		0-25 psi			6	
7	PZ-3E	Inside wall	VW		0-25 psi			7	
8	PZ-4E	Inside wall	VW		0-25 psi			8	
9	PZ-EW1	Well 1	VW		0-50 psi			9	
10	PZ-EW2	Well 2	VW		0-50 psi			10	
11	PZ-EW3	Well 3	VW		0-50 psi	ASM, Analog Input	2	1	
12	FL-EW1	Flow, well 1	4-20 ma in		0-1,000 gpm			2	
13	FL-EW2	Flow, well 2	4-20 ma in		0-1,000 gpm			3	
14	FL-EW3	Flow, well 3	4-20 ma in		0-1,000 gpm			4	
15	RIVER	River Stage	4-20 ma in		375-425 ft msl			5	
16	BARO	Barometer	0-1vdc					6	
17	BARO	Baro Power	15vdc					7	
18	EW2 Temp	Well water temp	thermistor					8	
19								9	
20								10	
21	FAULT-EW1	VFD-1 Fault	Digital		24 vdc	PSI, Digital Input	3	1	Voltage divider to reduce voltage to 12vdc input
22	FAULT-EW2	VFD-2 Fault	Digital		24 vdc			2	Voltage divider to reduce voltage to 12vdc input
23	FAULT-EW3	VFD-3 Fault	Digital		24 vdc			3	Voltage divider to reduce voltage to 12vdc input
24	REMOTE OFF	EXPRESS II	N/O contact		Relay			4	System Shutdown via Phone
25	HIGH PRESSURE	PIPELINE	N/C contact		60 PSI Pressure Switch			5	High Pressure System Shutdown
26	EW-1 MODE	AUTO/MANUAL	SWITCH		Manual Switch			6	
27	EW-2 MODE	AUTO/MANUAL	SWITCH		Manual Switch			7	
28	EW-3 MODE	AUTO/MANUAL	SWITCH		Manual Switch			8	
29	EW-1 VAULT FLD	Vault Flood	SWITCH		Float Switch			9	
30	EW-2 VAULT FLD	Vault Flood	SWITCH		Float Switch			10	
31	EW-1 RATE	Pumping rate	4-20 ma out			ANO, Analog Output	4	1	Via Signal conditioner 0-10vdc to 4-20mA
32	EW-2 RATE	Pumping rate	4-20 ma out					2	Via Signal conditioner 0-10vdc to 4-20mA
33	EW-3 RATE	Pumping rate	4-20 ma out					3	Via Signal conditioner 0-10vdc to 4-20mA
34	EW-1 VALVE	ELECT. ACTUATOR	4-20 ma out		% OPEN Control Signal			4	Via Signal conditioner 0-10vdc to 4-20mA
35	EW-2 VALVE	ELECT. ACTUATOR	4-20 ma out		% OPEN Control Signal			5	Via Signal conditioner 0-10vdc to 4-20mA
36	EW-3 VALVE	ELECT. ACTUATOR	4-20 ma out		% OPEN Control Signal			6	Via Signal conditioner 0-10vdc to 4-20mA
37								7	
38								8	
39								9	
40								10	
41	EW-1 ON	Start Pump 1	Digital		24 vdc	ARO, Relay Output	5	1	Control Signal To VFD
42	EW-1 OFF	Stop Pump 1	Digital		24 vdc			2	VIA INTERPOSER N/C RELAY, To VFD
43	EW-2 ON	Start Pump 2	Digital		24 vdc			3	Control Signal To VFD
44	EW-2 OFF	Stop Pump 2	Digital		24 vdc			4	VIA INTERPOSER N/C RELAY, To VFD
45	EW-3 ON	Start Pump 3	Digital		24 vdc			5	Control Signal To VFD
46	EW-3 OFF	Stop Pump 3	Digital		24 vdc			6	VIA INTERPOSER N/C RELAY, To VFD
47								7	
48								8	
49								9	
50	DIALER 1	Well Low	Digital		Switch closure			10	Phone / Voice Alarm Notification
51	DIALER 2	Flood	Digital		Switch closure	ARO, Relay Output	6	1	Phone / Voice Alarm Notification
52	DIALER 3	PIEZO FAIL	Digital		Switch closure			2	Phone / Voice Alarm Notification
53	DIALER 4	VFD Fail	Digital		Switch closure			3	Phone / Voice Alarm Notification
54	DIALER 5	EW1 Pump stopped	Digital		Switch closure			4	Phone / Voice Alarm Notification
55	DIALER 6	EW2 Pump stopped	Digital		Switch closure			5	Phone / Voice Alarm Notification
56	DIALER 7	EW3 Pump stopped	Digital		Switch closure			6	Phone / Voice Alarm Notification
57	DIALER 8	Vault Flood	Digital		Switch closure			7	Phone / Voice Alarm Notification
58								8	
59								9	
60								10	
61	EW-1 VALVE	POSITION FB	4-20 ma in		%OPEN	ASM, Analog Input	7	1	
62	EW-2 VALVE	POSITION FB	4-20 ma in		%OPEN			2	
63	EW-3 VALVE	POSITION FB	4-20 ma in		%OPEN			3	
64	BWMW-1S	PIEZO CLUSTER 1	VW		0-50 psi			4	
65	BWMW-1M	PIEZO CLUSTER 1	VW		0-50 psi			5	
66	BWMW-1D	PIEZO CLUSTER 1	VW		0-50 psi			6	
67								7	
68								8	
69								9	
70								10	
71	EW-1 VALVE	LIMIT SWITCH	SWITCH		VALVE FULLY CLOSED	PSI, Digital Input	8	1	
72	EW-2 VALVE	LIMIT SWITCH	SWITCH		VALVE FULLY CLOSED			2	
73	EW-3 VALVE	LIMIT SWITCH	SWITCH		VALVE FULLY CLOSED			3	
74	EW-1 ON	Manual Control	SWITCH		Push Button			4	Status input signal to MCU
75	EW-2 ON	Manual Control	SWITCH		Push Button			5	Status input signal to MCU
76	EW-3 ON	Manual Control	SWITCH		Push Button			6	Status input signal to MCU
77	EW-1 OFF	Manual Control	SWITCH		Push Button			7	Status input signal to MCU
78	EW-2 OFF	Manual Control	SWITCH		Push Button			8	Status input signal to MCU
79	EW-3 OFF	Manual Control	SWITCH		Push Button			9	Status input signal to MCU
80	EW-3 VAULT FLD	Vault Flood	SWITCH		Float Switch			10	Vault Flood Alarm

NO.	DATE	REVISION DESCRIPTION	APPROVED

URS
1001 Highlands Plaza Dr. West, Suite 300
St. Louis, MO 63110

THE PROFESSIONAL WHOSE SIGNATURE AND PERSONAL SEAL APPEAR HEREON ASSUMES RESPONSIBILITY ONLY FOR WHAT APPEARS ON THIS SHEET AND DISCLAIMS ANY RESPONSIBILITY FOR ALL OTHER DRAWINGS, SPECIFICATIONS, ESTIMATES, REPORTS, SURVEYS OR OTHER DOCUMENTS OR INSTRUMENTS NOT SEALED BY THE PROFESSIONAL.

SEAL

DATE: 12/11/07
SCALE:
DESIGNED: MJB
DRAWN: DJD
CHECKED:
SUBMITTED:

SOLUTIA™
Applied Chemistry, Creative Solutions
SOLUTIA INC.
575 MARYVILLE CENTRE DRIVE
ST. LOUIS, MO. 63141

GROUNDWATER MIGRATION CONTROL SYSTEM

BARRIER WALL

MEASUREMENT AND CONTROL UNIT (MCU)

PROJECT NO. 21561391.00000

DRAWING NO. 1-11

File: P:\GEOTECHNICAL\21561391.00000 SITE R O&M REPORT\ASBUILTS 12-11-07\SHEET 1-11.DWG Last edited: DEC. 12, 07 @ 12:34 p.m. by: david.dequire

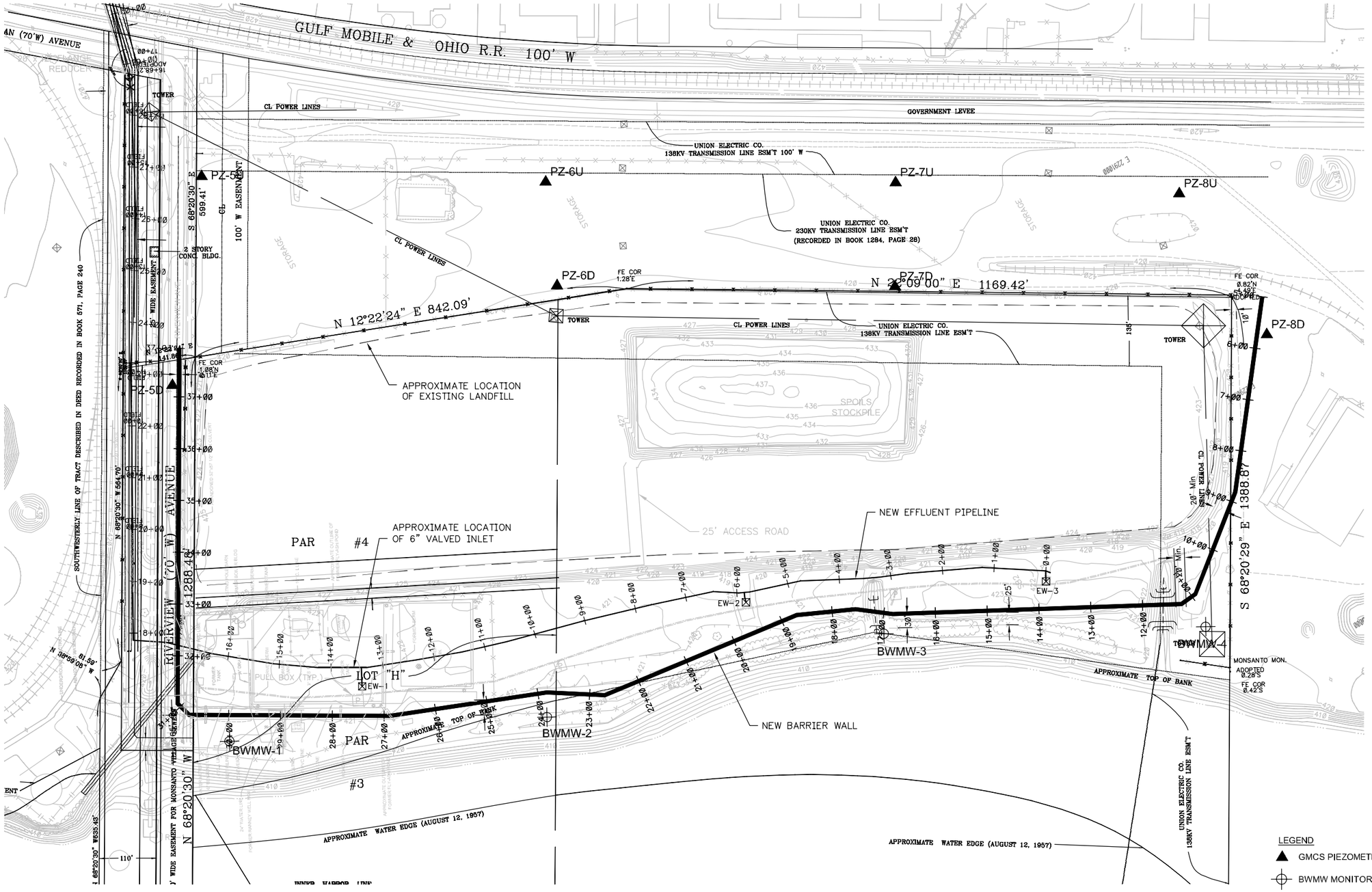

NOTE:
EXISTING SURFACE FEATURES HAVE BEEN PLOTTED FROM AN AERIAL SURVEY BY SURDEX. LOCATIONS OF MOST UNDERGROUND UTILITIES, STRUCTURES AND FACILITIES HAVE BEEN PLOTTED FROM PLANS AND DRAWINGS OF EXISTING FACILITIES PROVIDED BY SOLUTIA. THEIR LOCATIONS MUST BE CONSIDERED APPROXIMATE ONLY. THERE MAY BE OTHER IMPROVEMENTS AND UTILITIES WITHIN THE PROJECT AREA, WHICH ARE NOT SHOWN. NEWLY INSTALLED UTILITIES ASSOCIATED WITH THE GMCS WERE SURVEYED. THESE UTILITIES SHOULD ALSO BE CONSIDERED APPROXIMATE, BASED ON THE SCALE OF THIS DRAWING. PRIOR TO ANY NEW EXCAVATION OR CONSTRUCTION, THE LOCATIONS, ELEVATIONS AND DIMENSIONS OF ALL EXISTING UTILITIES, STRUCTURES, WELLS, AND OTHER FEATURES SHOULD BE VERIFIED. USE OF A SUBSURFACE LOCATOR IS RECOMMENDED.

LEGEND
- GMCS PIEZOMETER
- BWMW MONITORING WELL
- EXTRACTION WELL
- BARRIER WALL

SCALE 0 100 FEET

NO.	DATE	REVISION DESCRIPTION	APPROVED

URS
1001 Highlands Plaza Dr. West, Suite 300
St. Louis, MO 63110

THE PROFESSIONAL WHOSE SIGNATURE AND PERSONAL SEAL APPEAR HEREON ASSUMES RESPONSIBILITY ONLY FOR WHAT APPEARS ON THIS SHEET AND DISCLAIMS ANY RESPONSIBILITY FOR ALL OTHER DRAWINGS, SPECIFICATIONS, ESTIMATES, REPORTS, SURVEYS OR OTHER DOCUMENTS OR INSTRUMENTS NOT SEALED BY THE PROFESSIONAL.

SEAL

DATE: 12/11/07
SCALE:
DESIGNED: MJB
DRAWN: DJD
CHECKED:
SUBMITTED:

SOLUTIA™ Applied Chemistry, Creative Solutions
SOLUTIA INC.
575 MARYVILLE CENTRE DRIVE
ST. LOUIS, MO. 63141

GROUNDWATER MIGRATION CONTROL SYSTEM
BARRIER WALL
MONITORING WELL/PIEZOMETER LOCATION MAP

PROJECT NO. 21561391.00000
DRAWING NO. 1-12

File: P:\GEOTECHNICAL\21561391.00000 SITE R O&M REPORT\ASBUILTS 12-11-07\SHEET 1-12.DWG Last edited: DEC. 12, 07 @ 12:35 p.m. by: david_deguire

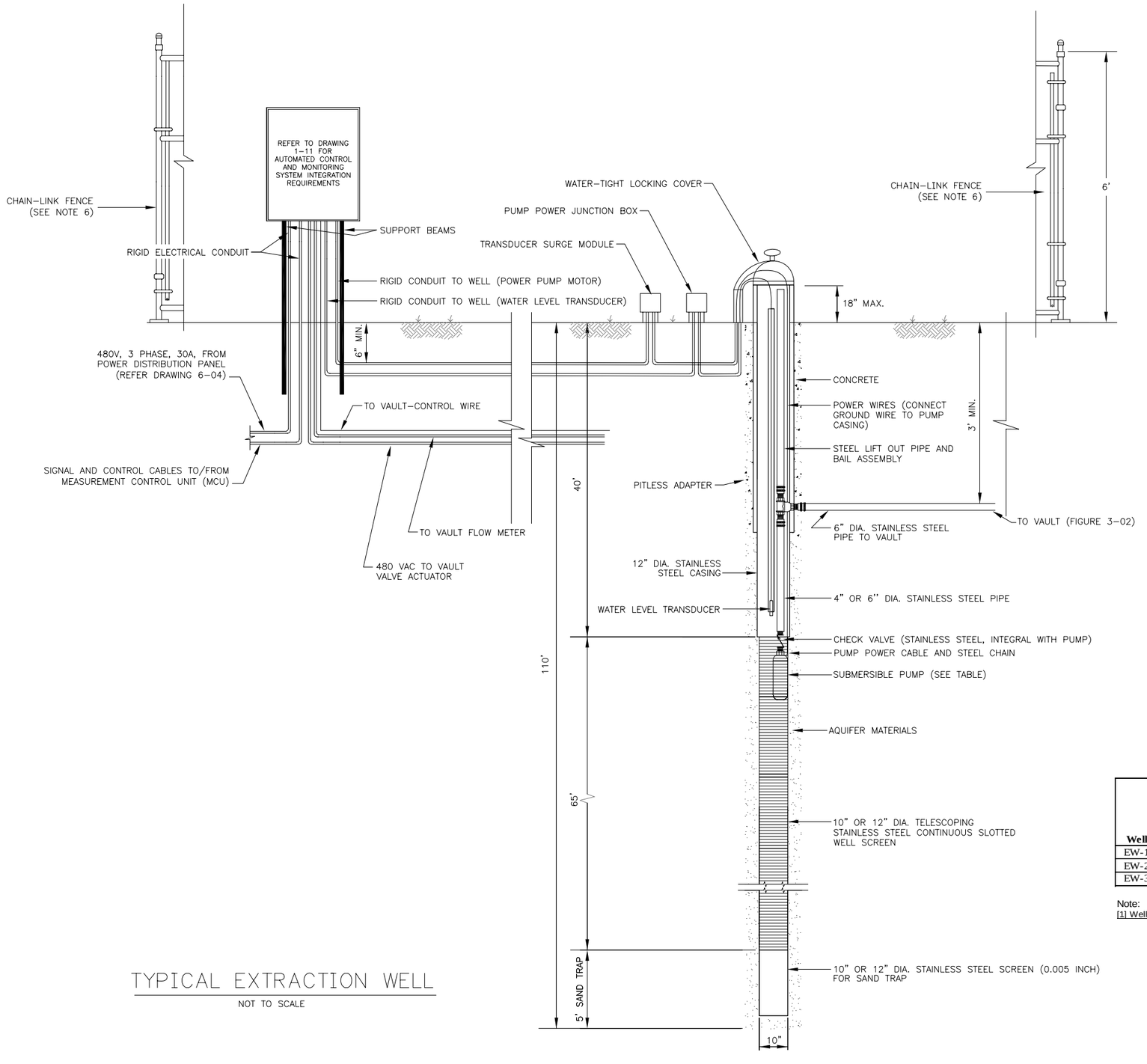

TYPICAL EXTRACTION WELL

NOT TO SCALE

NOTES

1.) TYPICAL WELL CONSTRUCTION. ACTUAL PLACEMENT OF WELL SCREEN AND CASING WAS MODIFIED BY REMEDIAL DESIGNER BASED ON FIELD CONDITIONS.

2.) COMPLETION OF EXTRACTION WELLS WAS UNDER THE DIRECT SUPERVISION OF THE REMEDIAL DESIGNER OR OTHER QUALIFIED PROFESSIONAL DESIGNATED BY SOLUTIA. THE FINAL COMPLETION OF EXTRACTION WELLS WAS BASED ON ACTUAL CONDITIONS ENCOUNTERED DURING WELL CONSTRUCTION.

3.) SUPPORT PUMP AND DISCHARGE PIPING FROM TOP. PITLESS ADAPTER DOES NOT SUPPORT PUMP UNLESS PITLESS ADAPTER IS CONCRETED IN PLACE. STAINLESS STEEL CHAIN ATTACHES TO PUMP.

4.) ALL WIRING BETWEEN THE EXTRACTION WELLS AND CONTROL PANEL IS SUBMERSIBLE. CONNECTED WIRES TO WELL CONDUIT USING SEAL TIGHT CONNECTORS. PROVIDE ELECTRICAL BOX (NEMA 6)AT GROUND SURFACE SIZED TO STORE A MINIMUM OF 5 FEET OF EXCESS WIRES (SLACK) COILED NEATLY IN JUNCTION BOX FOR ADJUSTING DEPTH IN WELLS.

5.) PRESSURE TRANSDUCERS WERE INSTALLED IN EACH WELL ABOVE TOP OF PUMP IN ORDER TO GAUGE DRAWDOWN.

6.) CONTRACTOR INSTALLED A CHAIN LINK FENCE ENCLOSURE AROUND THE PERIMETER OF EACH WELL.

7.) SUBMERSIBLE PUMP PLACED WITHIN SCREEN AT DEPTH OF APPROXIMATELY 60 FEET BELOW GROUND SURFACE.

8.) EXISTING WELL EW-2 HAS 10.75-IN. O.D. CASING AND 10-IN. TELESCOPING WELL SCREEN.

Extraction Well Transducer Data

Piezometer	Top of Riser (TOR) Elevation (Ft, NGVD)	Transducer Depth from TOR (Ft)	Transducer Elevation (Ft, NGVD)	(Geokon) Transducer Model
EW-1	422.72	65.02	357.7	4500S-50PSI
EW-2	419.84	68.59	351.25	4500S-50PSI
EW-3	421.45	64.35	357.1	4500S-50PSI

Pump Installation Data

Well	Elevation (ft, NGVD)		Drop Pipe Dia. (in.)	Grundfos Model No.	Flow (gpm)	Head (ft)	Efficiency (%)	Shutoff Head (ft)	Motor HP
	Discharge (centerline)	Pump Intake							
EW-1	417.29	340	6	625S400-2-1	750	150	80	235	40
EW-2	415.26	337	5	475S400-3	750	150	73	310	30
EW-3	416.26	339	6	625S400-2-1	700	150	80	235	40

WELL INSTALLATION DATA

Well	Elevation (Ft, NGVD)						Length (Ft)			Well OD (in.)
	Ground Surface	Top of Riser	Center-line of Disch. Pipe	Top of Screen (Exposed)	Btm of Screen	Btm of Well	Casing bgs)	Exposed Screen	Blank	
EW-1	422.02	422.72	417.29	369.0	291.0	285.8	53	78	5.2	12.75
EW-2	418.53	419.84	415.26	380.3	313.6	308.5	41.5	63.4	5.1	10.75
EW-3	420.58	421.45	416.26	364.1	294.6	289.3	56.7	69.4	5.3	12.75

Note:
[1] Well installation data are from Well Completion Records prepared by Dave Meyer, Layne-Western Division, Layne Christensen Company, July 28, 2003

File: P:\GEOTECHNICAL\21561391.00000 SITE R O&M REPORT\ASBUILTS 12-11-07\SHEET 1-13.DWG Last edited: DEC. 12, 07 @ 12:37 p.m. by: david.deguire

REV	DATE	DES	REVISION DESCRIPTION	CADD	CHK	RVW

Golder Associates
St. Louis, Missouri

URS
1001 Highlands Plaza Dr. West, Suite 300
St. Louis, MO 63110

SEAL

DATE: 12/11/07
SCALE: AS SHOWN
DESIGNED: JH
DRAWN: MRM/DJD
CHECKED: JH
SUBMITTED:

SOLUTIA™
Applied Chemistry, Creative Solutions

SOLUTIA INC.
575 MARYVILLE CENTRE DRIVE
ST. LOUIS, MO. 63141

GROUNDWATER MIGRATION CONTROL SYSTEM

PACKAGE 2 – BARRIER WALL

TYPICAL EXTRACTION WELL

URS PROJECT NO.
21561391.00000

DRAWING NO.
1-13

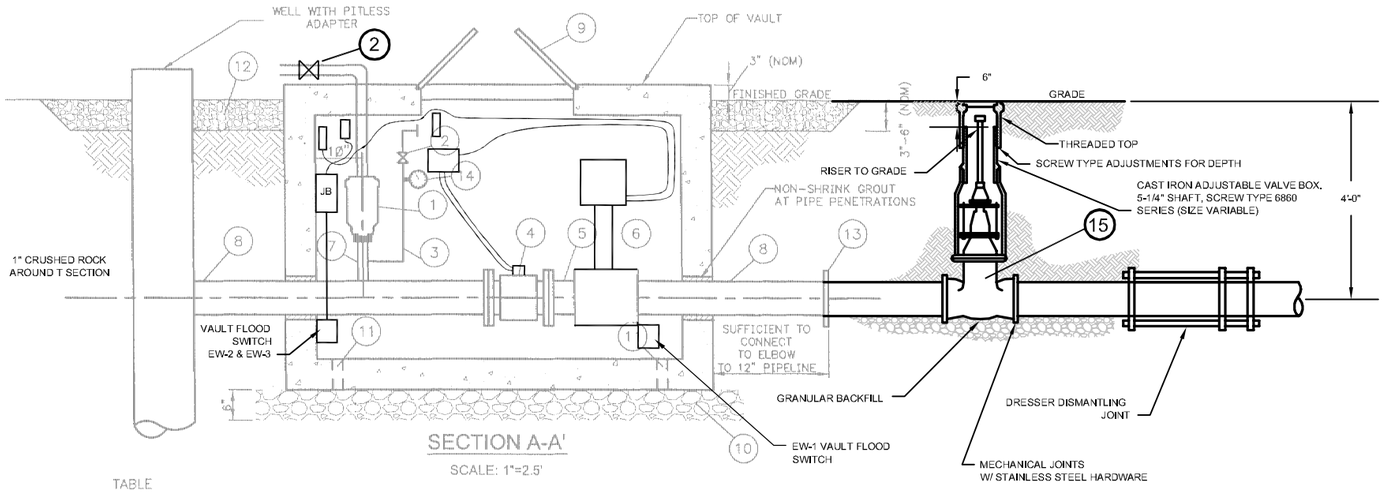

TABLE

(1)	–2" NPT AIR RELEASE VALVE	(8)	–6" SCH. 40 SS PIPE
(2)	–¾" NPT BALL VALVE, SS	(9)	–30"x30" BILCO LID WITH SEAL
(3)	–¾" SCH. 40 S.S. PIPE, T&C (SAMPLING PORT)	(10)	–GRAVEL OR CLEAN CRUSHED ROCK
(4)	–6" MAGNETIC FLOW METER FL.xFL.	(11)	–2" DIA. HOLE FOR DRAINAGE (ALL FOUR CORNERS)
(5)	–6" SCH. 40 SS. SPOOL, FL.xFL.	(12)	–1½" MINUS CRUSHED ROCK
(6)	– ACTUATOR	(13)	–6" SS FLANGE
(7)	–1" SS STEM WITH 3/4" TEE TO SAMPLING PORT	(14)	–PRESSURE GAUGE
		(15)	–6" GATE VALVE AND VALVE BOX

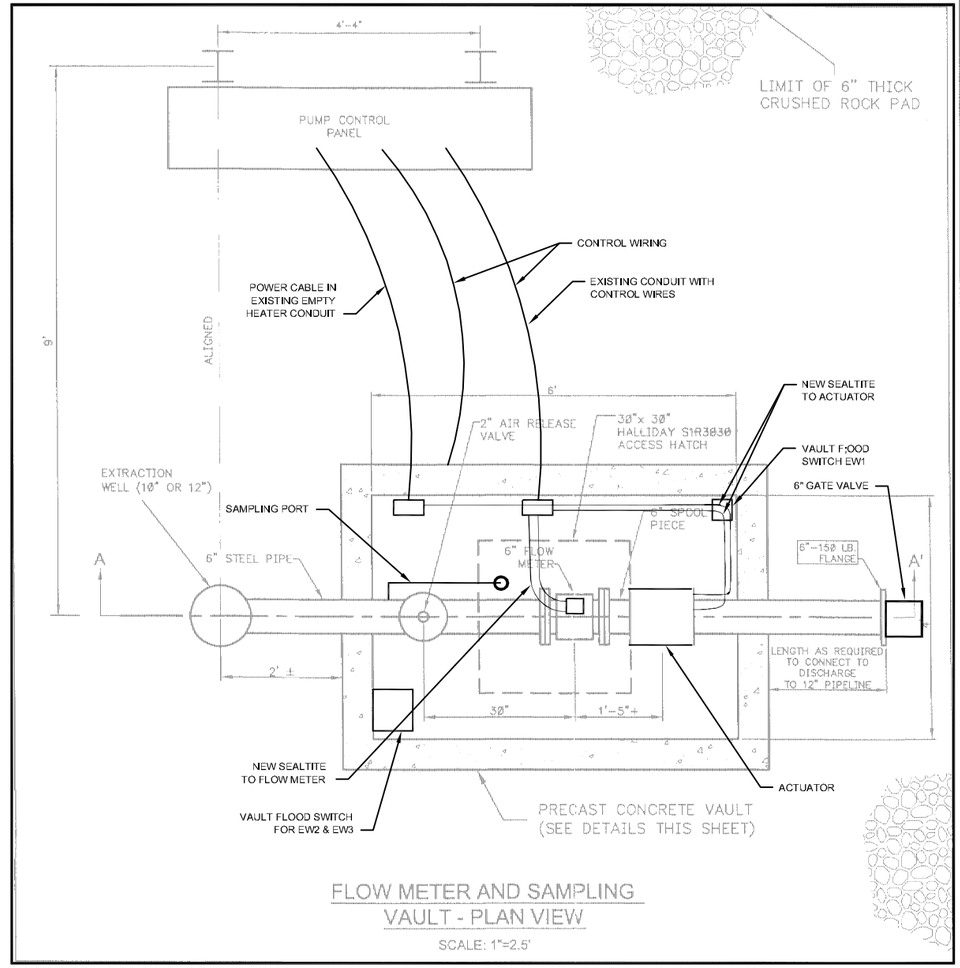

FLOW METER AND SAMPLING VAULT - PLAN VIEW

SCALE: 1"=2.5'

NOTES:

1) HDPE GRADE PIPE GRADE IS USED OUTSIDE (DOWNSREAM FROM) THE VAULT TO TRANSFER FLOW TO THE WASTEWATER DISCHARGE SYSTEM AT ITS DESIGN ELEVATION.

2) CONTRATOR INSTALLED A GRAVEL PAD AND A CHAIN LINK FENCE ENCLOSURE AROUND THE PERIMETER OF EACH WELL. THE GATE USES A PADLOCKING LATCH FOR EACH ENCLOSURE AND ARE POSITIONED TO ALLOW DIRECT ACCESS TO VAULT AND INTERNAL COMPONENTS. THE CHAIN LINK FENCE ENCLOSES THE WELL, VAULT AND CONTROL PANEL STRUCTURES.

3) ALL WIRING BETWEEN THE FLOW METER, VALVE ACTUATOR AND VAULT FLOOD SWITCH AND CONTROL PANEL IS IN CONDUIT INSTALLED BY DIRECT BURIAL.

4) NORTH ARROW INDICATES PROJECT NORTH, THE DIRECTION OF PIPELINE FLOW,

REV	DATE	DES	DESCRIPTION	CADD	CHK	RVW
2	06/09/03	MRS	ALIGNMENT, CONTROL PANEL AND PAD MODIFICATIONS	MSL	JRS	MRS
1	05/28/03	FMB	DIMENSION AND DETAIL REVISIONS	JAC	MRS	FMB

PROJECT

SOLUTIA, INC.
SOLUTIA SITE R EXTRACTION WELLS
Sauget, Illinois

TITLE

EXTRACTION WELL VAULT LAYOUT

Golder Associates
St. Louis, Missouri

PROJECT No.	023-9606		FILE No.	0239606.001	
DESIGN	MRS	6/10/03	SCALE	AS SHOWN	REV. 0
CADD	JAC	6/10/03			
CHECK	JRS	6/10/03			
REVIEW					

1-14

File: P:\GEOTECHNICAL\2156139.00000 SITE R O&M REPORT\SBUILTS 12-11-07\SCANNED 1-14.DWG Last edited: DEC. 12, 07 @ 12:00 p.m. by: david_deguire

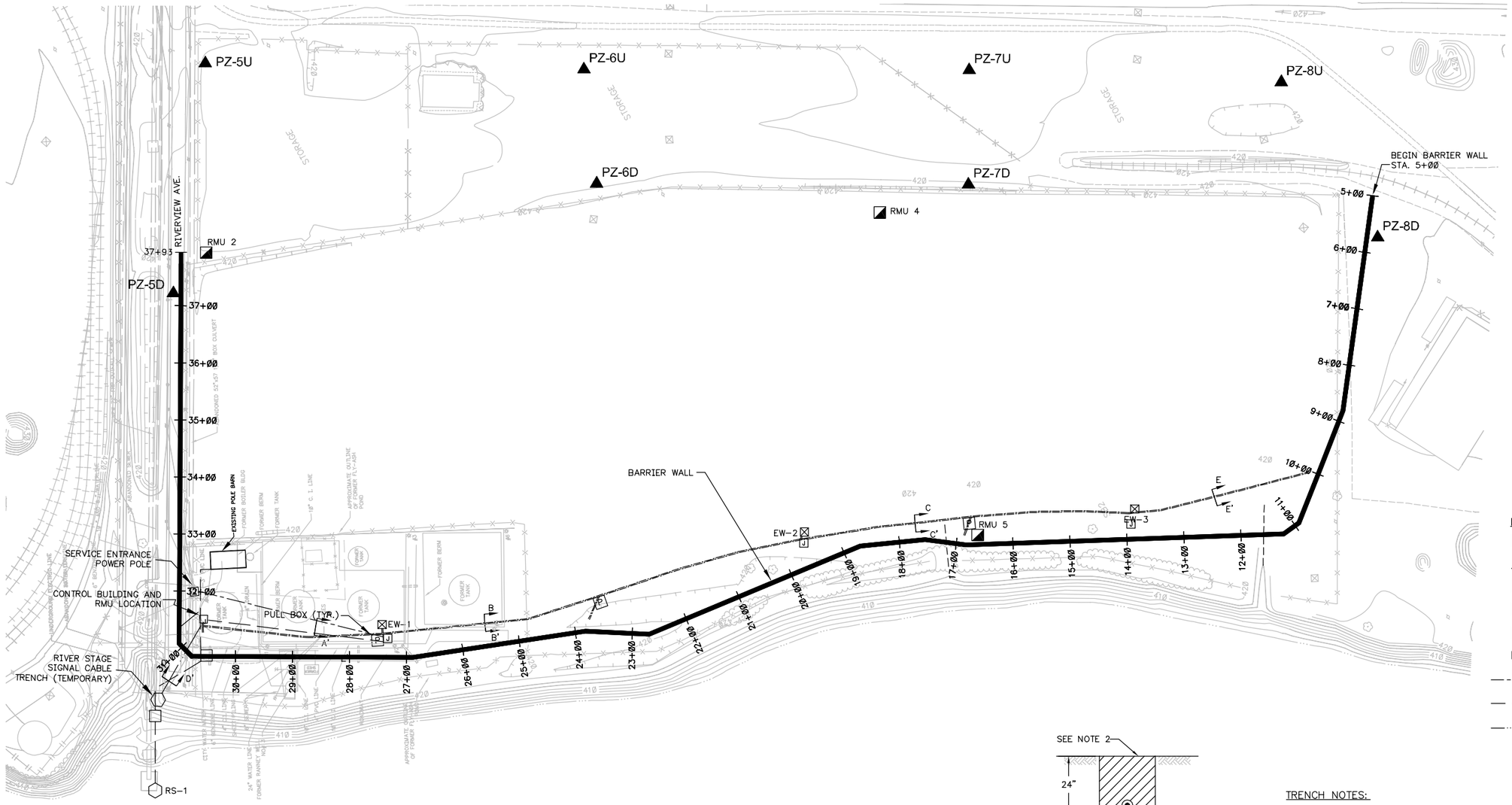

NOTE:
EXISTING SURFACE FEATURES HAVE BEEN PLOTTED FROM AN AERIAL SURVEY BY SURDEX. LOCATIONS OF MOST UNDERGROUND UTILITIES, STRUCTURES AND FACILITIES HAVE BEEN PLOTTED FROM PLANS AND DRAWINGS OF EXISTING FACILITIES PROVIDED BY SOLUTIA. THEIR LOCATIONS MUST BE CONSIDERED APPROXIMATE ONLY. THERE MAY BE OTHER IMPROVEMENTS AND UTILITIES WITHIN THE PROJECT AREA, WHICH ARE NOT SHOWN. NEWLY INSTALLED UTILITIES ASSOCIATED WITH THE GMCS WERE SURVEYED. THESE UTILITIES SHOULD ALSO BE CONSIDERED APPROXIMATE, BASED ON THE SCALE OF THIS DRAWING. PRIOR TO ANY NEW EXCAVATION OR CONSTRUCTION, THE LOCATIONS, ELEVATIONS AND DIMENSIONS OF ALL EXISTING UTILITIES, STRUCTURES, WELLS, AND OTHER FEATURES SHOULD BE VERIFIED. USE OF A SUBSURFACE LOCATOR IS RECOMMENDED.

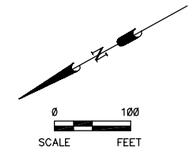

LEGEND

- ⊠ EW – EXTRACTION WELL FOR GMCS
- ▲ P – PIEZOMETER FOR GMCS
- [J] – JUNCTION BOX
- [P] – PULL BOX
- ◪ – MEASUREMENT CONTROL UNIT (MCU)
- ⬡ RS – RIVER STAGE GAUGE
- —-—- – POWER CABLE/CONDUIT TRENCH
- —— —— – SIGNAL CABLE/CONDUIT TRENCH
- —·—·— – RIVER STAGE CABLE/CONDUIT TRENCH

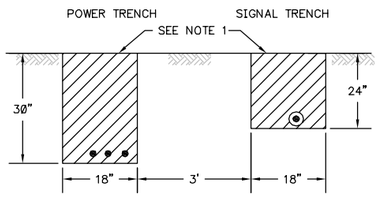

POWER: 3 – 3 EACH #1/0 cu (XHHW), W/ #6 GR.(ANIXTER 3H1013)
SIGNAL: (1) 3" PVC ELECTRICAL CONDUIT
3 – 1 EACH (ANIXTER E–001222DFC)
3 – 1 EACH (ANIXTER E–000622DFC)

SECTION A-A'
NOT TO SCALE

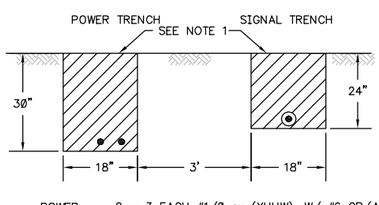

POWER: 2 – 3 EACH #1/0 cu (XHHW), W/ #6 GR.(ANIXTER 3H1013)
SIGNAL: (1) 3" PVC ELECTRICAL CONDUIT
2 – 1 EACH (ANIXTER E–001222DFC)
3 – 1 EACH (ANIXTER E–000622DFC)

SECTION B-B'
NOT TO SCALE

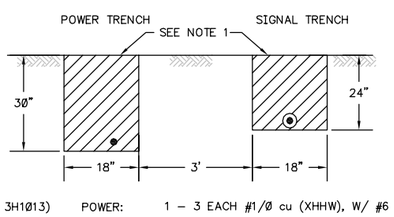

POWER: 1 – 3 EACH #1/0 cu (XHHW), W/ #6 GR.(ANIXTER 3H1013)
SIGNAL: (1) 3" PVC ELECTRICAL CONDUIT
1 – 1 EACH (ANIXTER E–001222DFC)
1 – 1 EACH (ANIXTER E–000622DFC)

SECTION C-C'
NOT TO SCALE

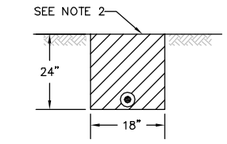

SIGNAL: (1) 2" PVC ELECTRICAL CONDUIT
1 – 1 EACH (ANIXTER E–000252DFC)

SECTION D-D'
NOT TO SCALE

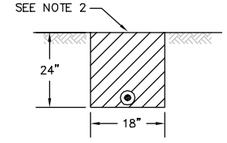

SIGNAL: (1) 2" PVC ELECTRICAL CONDUIT
1 – 1 EACH (ANIXTER E–000622DFC)

SECTION E-E'

TRENCH NOTES:

1. BACKFILLED POWER TRENCH AND SIGNAL CABLE TRENCH WITH COMPACT NATIVE BACKFILL FREE OF ROCKS AND DEBRIS. PLACED DETECTABLE WARNING TAPE AT DEPTH OF 12 INCHES.
2. BACKFILLED SIGNAL TRENCH WITH COMPACT NATIVE BACKFILL FREE OF ROCKS AND DEBRIS. PLACED DETECTABLE WARNING TAPE AT DEPTH OF 12 INCHES.

ELECTRICAL NOTES:

1. SPLICES WERE NOT PERMITTED IN ANY FIELD SIGNAL CABLE.
2. ALL JUNCTION BOXES AND PULL BOXES ARE QUAZITE MODEL NO. PG2436BA24 W/ PG2436HA00 COVER.
3. MAINTAINED CONTINUITY OF SHIELDS ACROSS ALL JUNCTION BOXES FOR SIGNAL CABLE.

NO.	DATE	REVISION DESCRIPTION	APPROVED

URS
1001 Highlands Plaza Dr. West, Suite 300
St. Louis, MO 63110

THE PROFESSIONAL WHOSE SIGNATURE AND PERSONAL SEAL APPEAR HEREON ASSUMES RESPONSIBILITY ONLY FOR WHAT APPEARS ON THIS SHEET AND DISCLAIMS ANY RESPONSIBILITY FOR ALL OTHER DRAWINGS, SPECIFICATIONS, ESTIMATES, REPORTS, SURVEYS OR OTHER DOCUMENTS OR INSTRUMENTS NOT SEALED BY THE PROFESSIONAL.

SEAL

DATE: 12/11/07
SCALE:
DESIGNED: MJB
DRAWN: DJD
CHECKED:
SUBMITTED:

SOLUTIA™ Applied Chemistry, Creative Solutions
SOLUTIA INC.
575 MARYVILLE CENTRE DRIVE
ST. LOUIS, MO. 63141

GROUNDWATER MIGRATION CONTROL SYSTEM
BARRIER WALL
AUTOMATED CONTROL AND MONITORING SYSTEM SITE PLAN

PROJECT NO. 21561391.00000
DRAWING NO. 1-15

File: P:\GEOTECHNICAL\21561391.00000 SITE R O&M REPORT\ASBUILTS 12-11-07\SHEET 1-15.DWG Last edited: DEC. 12, 07 @ 11:48 a.m. by: dsvd_dequire

KEYED NOTES:

1. EXISTING UTILITY COMPANY METER.
2. EXISTING FUSED DISCONNECT SWITCH TO POLE BARN.
3. EXISTING FEEDER TO POLE BARN.
4. EXISTING 200 AMP FUSED DISCONNECT SWITCH. REPLACED 2 EXISTING FUSES WITH 3 NEW TYPE FRS-R 200 AMP FUSES. USE TO SERVE NEW DISTRIBUTION PANEL (KEYED NOTE 8).
5. REMOVED CONDUIT, AND WIRING SERVED BY THESE EXISTING DISCONNECT SWITCHES (KEYED NOTE 4).
6. PROVIDED NEW TREATED PLYWOOD BACKBOARD IN THIS LOCATION ON BACK OF EXISTING SERVICE ENTRANCE BACKBOARD.
7. EXISTING TELEPHONE PANEL ONTO NEW BACKBOARD.
8. PROVIDED NEW 480 VOLT PANEL, EQUAL TO SIEMENS SENTRON IN NEMA 3R LOCKABLE ENCLOSURE WITH 225 AMP OR 250 AMP MAIN LUGS, TVSS UNIT BOLTED TO THE MAIN BUS, AND BOLT-ON BRANCH CIRCUIT BREAKERS INDICATED IN SINGLE-LINE DIAGRAM, IN THIS LOCATION ON NEW BACKBOARD, TO SERVE NEW PUMPING SYSTEMS AND SINGLE PHASE TRANSFORMER.
9. PROVIDED NEW SINGLE PHASE TRANSFORMER (NEMA 3R ENCLOSURE) IN THIS LOCATION ON NEW BACKBOARD.
10. PROVIDED NEW NEMA 3R 2-POLE FUSED DISCONNECT SWITCH, IN THIS LOCATION ON NEW BACKBOARD, TO SERVE PANEL IN PORTABLE CONTROL BUILDING FROM SINGLE PHASE TRANSFORMER.
11. 4-20mA SIGNAL ISOLATION UNIT. ISOLATES SIGNAL SENT TO THE GMCS MCU.
12. TERMINAL BLOCK WIRING BETWEEN 4-20mA SIGNAL ISOLATOR AND THE GMCS MCU.

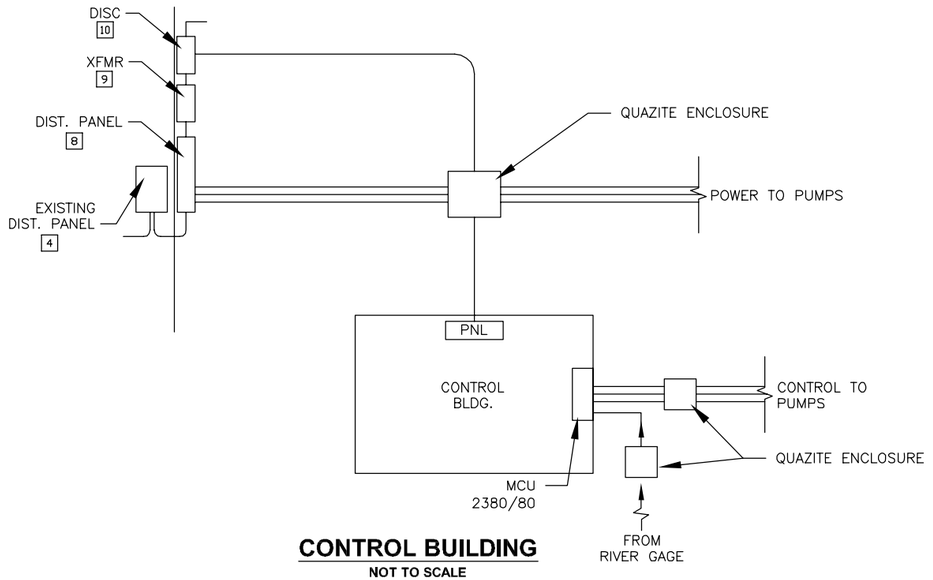

CONTROL BUILDING
NOT TO SCALE

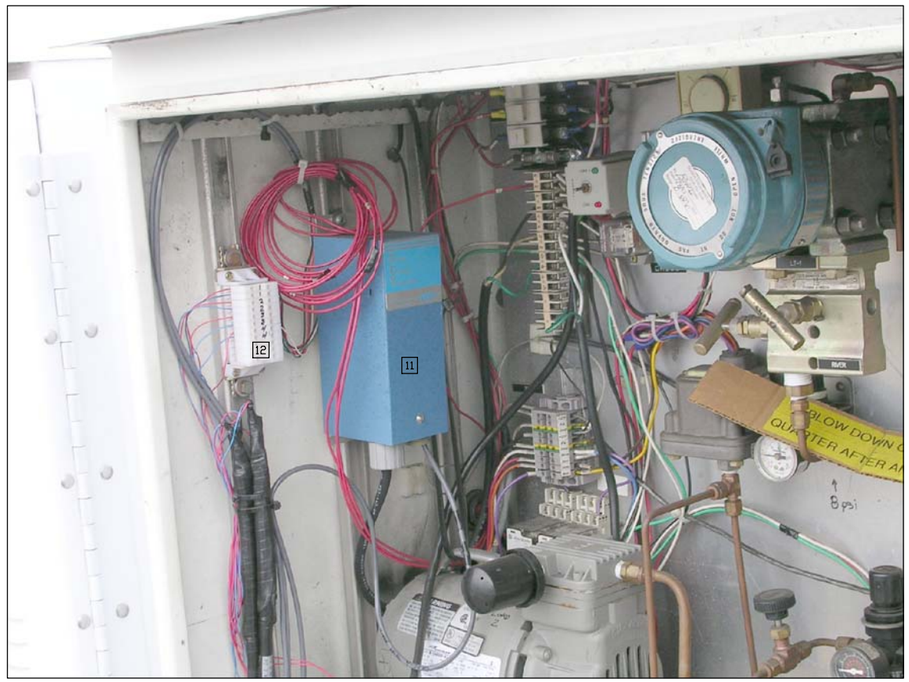

AMERICAN BOTTOMS RIVER GAGE SYSTEM
NOT TO SCALE

File: P:\GEOTECHNICAL\21561391.00000 SITE R O&M REPORT\ASBUILTS 12-11-07\SHEET 1-16.DWG Last edited: DEC. 12, 07 @ 12:38 p.m. by: david_deguire

NO.	DATE	REVISION DESCRIPTION	APPROVED

URS
1001 Highlands Plaza Dr. West, Suite 300
St. Louis, MO 63110

THE PROFESSIONAL WHOSE SIGNATURE AND PERSONAL SEAL APPEAR HEREON ASSUMES RESPONSIBILITY ONLY FOR WHAT APPEARS ON THIS SHEET AND DISCLAIMS ANY RESPONSIBILITY FOR ALL OTHER DRAWINGS, SPECIFICATIONS, ESTIMATES, REPORTS, SURVEYS OR OTHER DOCUMENTS OR INSTRUMENTS NOT SEALED BY THE PROFESSIONAL.

SEAL

DATE:	12/11/07
SCALE:	
DESIGNED:	MJB
DRAWN:	DJD
CHECKED:	
SUBMITTED:	

SOLUTIA™
Applied Chemistry, Creative Solutions

SOLUTIA INC.
575 MARYVILLE CENTRE DRIVE
ST. LOUIS, MO. 63141

GROUNDWATER MIGRATION CONTROL SYSTEM

BARRIER WALL

POWER DISTRIBUTION PANELS AND RIVER STAGE GAGE

PROJECT NO.
21561391.00000

DRAWING NO.
1-16

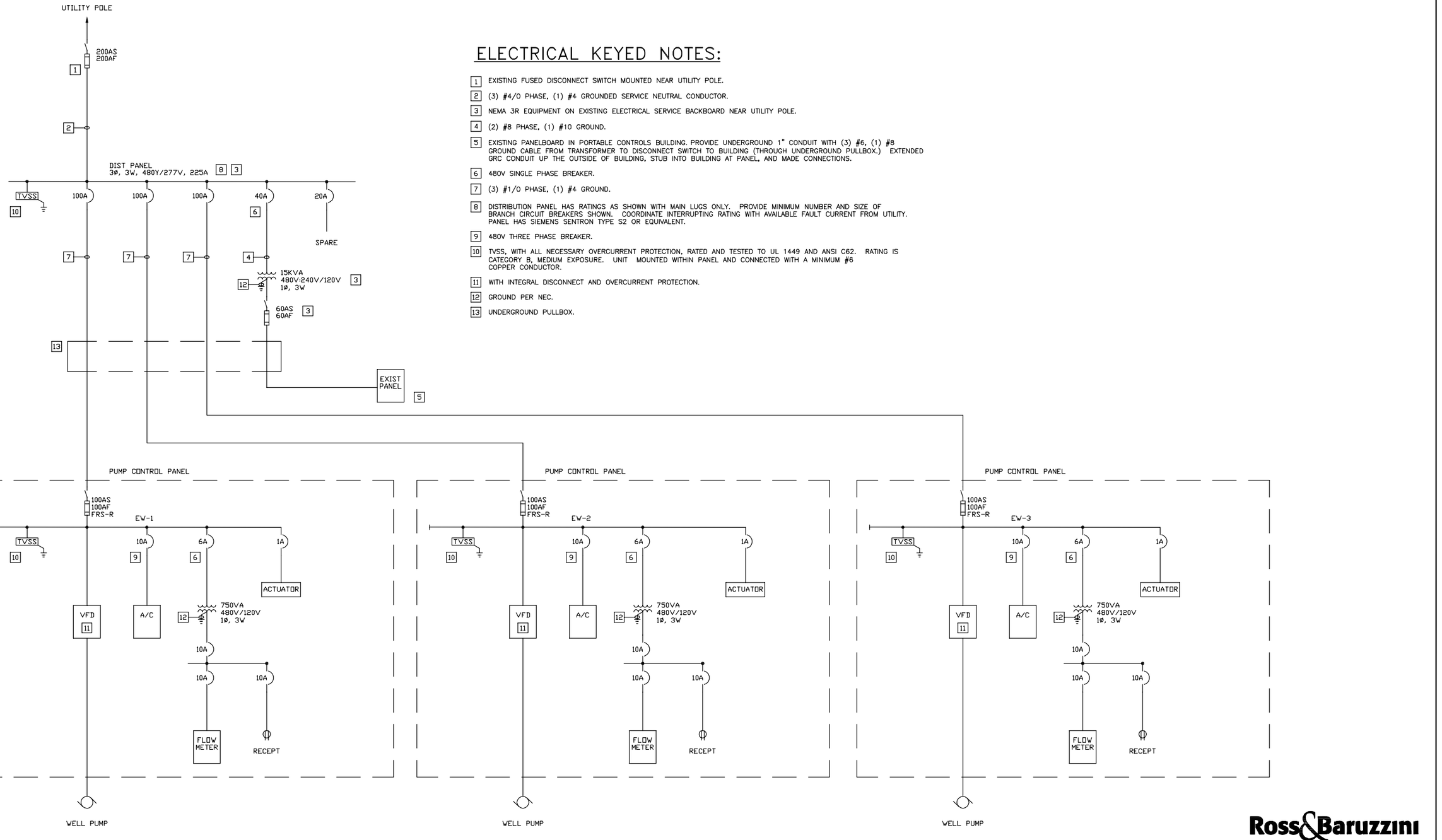

ELECTRICAL KEYED NOTES:

1. EXISTING FUSED DISCONNECT SWITCH MOUNTED NEAR UTILITY POLE.
2. (3) #4/0 PHASE, (1) #4 GROUNDED SERVICE NEUTRAL CONDUCTOR.
3. NEMA 3R EQUIPMENT ON EXISTING ELECTRICAL SERVICE BACKBOARD NEAR UTILITY POLE.
4. (2) #8 PHASE, (1) #10 GROUND.
5. EXISTING PANELBOARD IN PORTABLE CONTROLS BUILDING. PROVIDE UNDERGROUND 1" CONDUIT WITH (3) #6, (1) #8 GROUND CABLE FROM TRANSFORMER TO DISCONNECT SWITCH TO BUILDING (THROUGH UNDERGROUND PULLBOX.) EXTENDED GRC CONDUIT UP THE OUTSIDE OF BUILDING, STUB INTO BUILDING AT PANEL, AND MADE CONNECTIONS.
6. 480V SINGLE PHASE BREAKER.
7. (3) #1/0 PHASE, (1) #4 GROUND.
8. DISTRIBUTION PANEL HAS RATINGS AS SHOWN WITH MAIN LUGS ONLY. PROVIDE MINIMUM NUMBER AND SIZE OF BRANCH CIRCUIT BREAKERS SHOWN. COORDINATE INTERRUPTING RATING WITH AVAILABLE FAULT CURRENT FROM UTILITY. PANEL HAS SIEMENS SENTRON TYPE S2 OR EQUIVALENT.
9. 480V THREE PHASE BREAKER.
10. TVSS, WITH ALL NECESSARY OVERCURRENT PROTECTION, RATED AND TESTED TO UL 1449 AND ANSI C62. RATING IS CATEGORY B, MEDIUM EXPOSURE. UNIT MOUNTED WITHIN PANEL AND CONNECTED WITH A MINIMUM #6 COPPER CONDUCTOR.
11. WITH INTEGRAL DISCONNECT AND OVERCURRENT PROTECTION.
12. GROUND PER NEC.
13. UNDERGROUND PULLBOX.

Ross&Baruzzini
6 SOUTH OLD ORCHARD
WEBSTER GROVES, MO. 63119
314-918-8383

NO.	DATE	REVISION DESCRIPTION	APPROVED

URS
1001 Highlands Plaza Dr. West, Suite 300
St. Louis, MO 63110

THE PROFESSIONAL WHOSE SIGNATURE AND PERSONAL SEAL APPEAR HEREON ASSUMES RESPONSIBILITY ONLY FOR WHAT APPEARS ON THIS SHEET AND DISCLAIMS ANY RESPONSIBILITY FOR ALL OTHER DRAWINGS, SPECIFICATIONS, ESTIMATES, REPORTS, SURVEYS OR OTHER DOCUMENTS OR INSTRUMENTS NOT SEALED BY THE PROFESSIONAL.

SEAL

DATE: 12/11/07
SCALE:
DESIGNED: MJB
DRAWN: DJD
CHECKED:
SUBMITTED:

SOLUTIA™
Applied Chemistry, Creative Solutions
SOLUTIA INC.
575 MARYVILLE CENTRE DRIVE
ST. LOUIS, MO. 63141

GROUNDWATER MIGRATION CONTROL SYSTEM

BARRIER WALL

ELECTRICAL POWER DIAGRAM

PROJECT NO. 21561391.00000

DRAWING NO. 1-17

File: P:\GEOTECHNICAL\21561391.00000 SITE R O&M REPORT\ASBUILTS 12-11-07\SHEET 1-17.DWG Last edited: DEC. 12, 07 @ 12:39 p.m. by: david_deguire

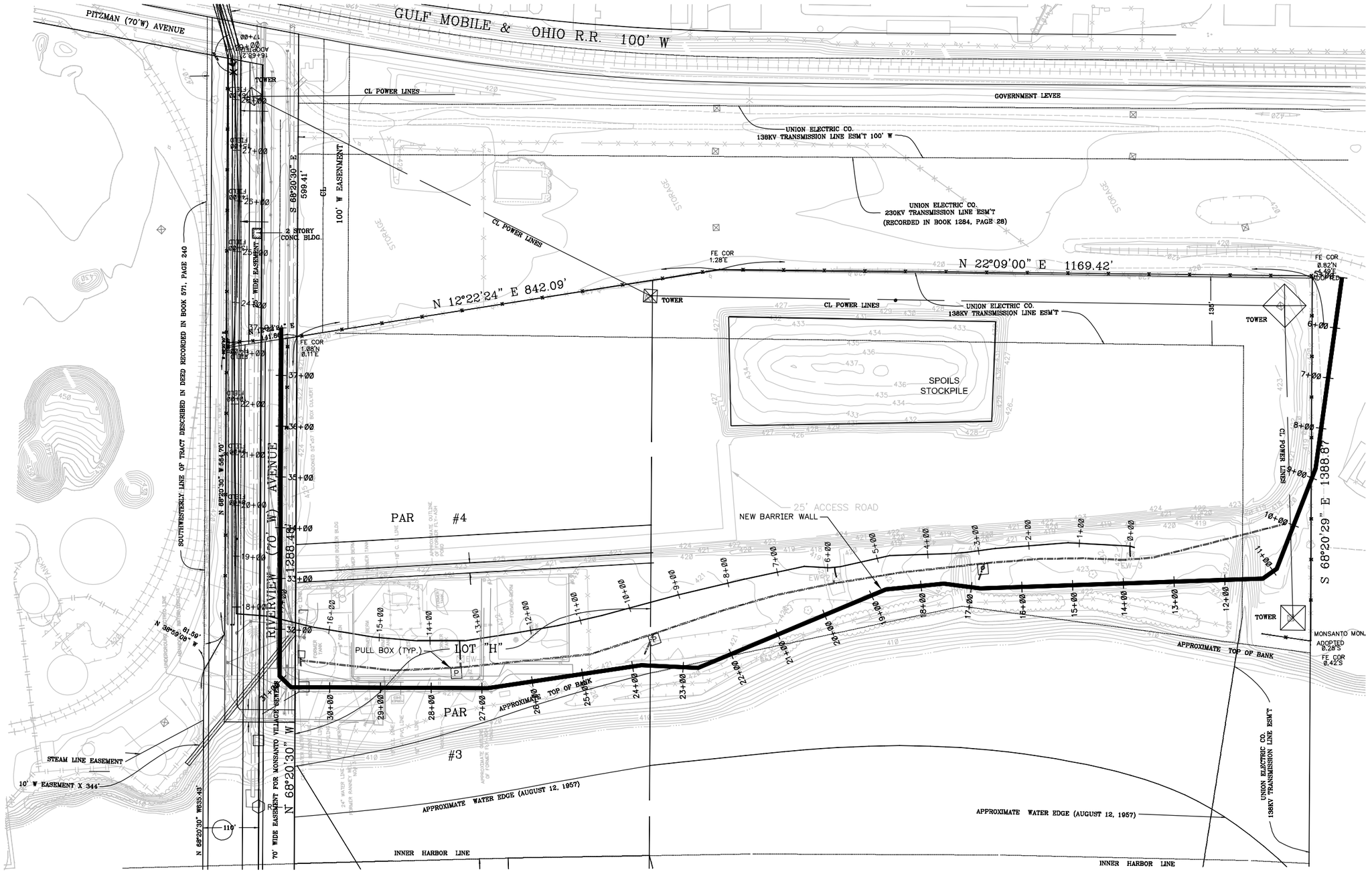

NOTE:
EXISTING SURFACE FEATURES HAVE BEEN PLOTTED FROM AN AERIAL SURVEY BY SURDEX. LOCATIONS OF MOST UNDERGROUND UTILITIES, STRUCTURES AND FACILITIES HAVE BEEN PLOTTED FROM PLANS AND DRAWINGS OF EXISTING FACILITIES PROVIDED BY SOLUTIA. THEIR LOCATIONS MUST BE CONSIDERED APPROXIMATE ONLY. THERE MAY BE OTHER IMPROVEMENTS AND UTILITIES WITHIN THE PROJECT AREA, WHICH ARE NOT SHOWN. NEWLY INSTALLED UTILITIES ASSOCIATED WITH THE GMCS WERE SURVEYED. THESE UTILITIES SHOULD ALSO BE CONSIDERED APPROXIMATE, BASED ON THE SCALE OF THIS DRAWING. PRIOR TO ANY NEW EXCAVATION OR CONSTRUCTION, THE LOCATIONS, ELEVATIONS AND DIMENSIONS OF ALL EXISTING UTILITIES, STRUCTURES, WELLS, AND OTHER FEATURES SHOULD BE VERIFIED. USE OF A SUBSURFACE LOCATOR IS RECOMMENDED.

NO.	DATE	REVISION DESCRIPTION	APPROVED

METRONA Surveying Co.
2505 METRO BLVD. SUITE J
MARYLAND HEIGHTS, MO, 63043
314-432-5400 FAX: 314-432-5401

THE PROFESSIONAL WHOSE SIGNATURE AND PERSONAL SEAL APPEAR HEREON ASSUMES RESPONSIBILITY ONLY FOR WHAT APPEARS ON THIS SHEET AND DISCLAIMS ANY RESPONSIBILITY FOR ALL OTHER DRAWINGS, SPECIFICATIONS, ESTIMATES, REPORTS, SURVEYS OR OTHER DOCUMENTS OR INSTRUMENTS NOT SEALED BY THE PROFESSIONAL.

SEAL

DATE: 12/11/07
SCALE:
DESIGNED: MJB
DRAWN: DJD
CHECKED:
SUBMITTED:

SOLUTIA™
Applied Chemistry, Creative Solutions
SOLUTIA INC.
575 MARYVILLE CENTRE DRIVE
ST. LOUIS, MO. 63141

GROUNDWATER MIGRATION CONTROL SYSTEM

BARRIER WALL

EXISTING PROPERTY AND UTILITY MAP

PROJECT NO. 21561391.00000

DRAWING NO. 1-18

File: P:\GEOTECHNICAL\21561391.00000 SITE R O&M REPORT\ASBUILTS 12-11-07\SHEET 1-18.DWG Last edited: DEC. 12, 07 @ 12:40 p.m. by: davd_deguire

ENCLOSURE MOUNT
FOR
RMU2, RMU4 AND RMU5

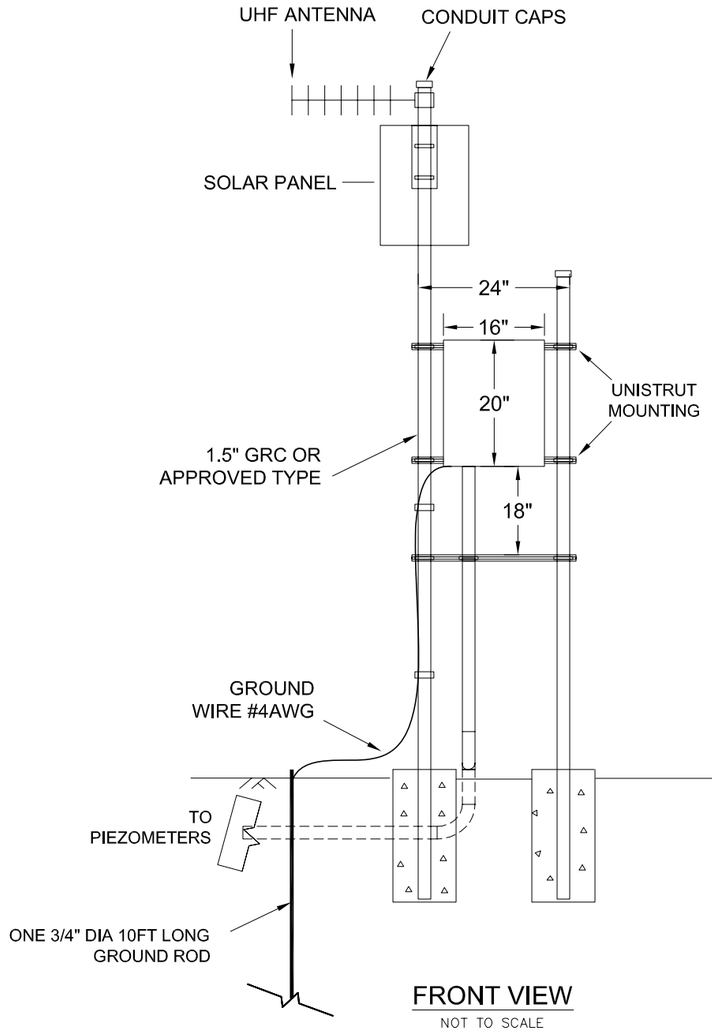

FRONT VIEW
NOT TO SCALE

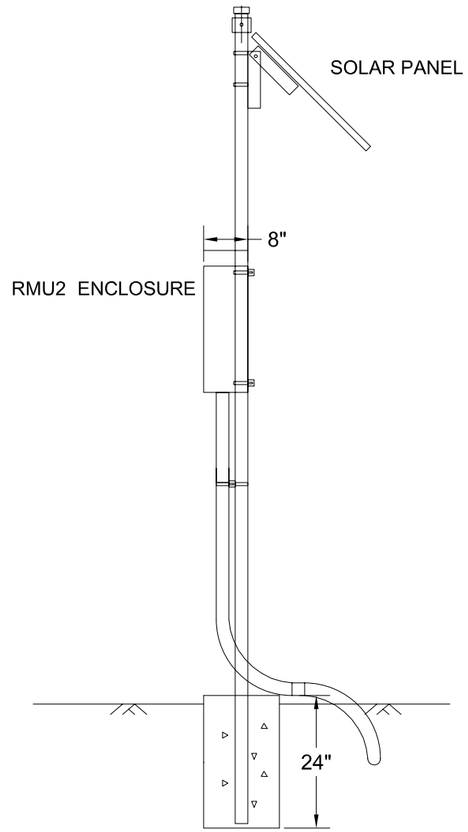

SIDE VIEW
NOT TO SCALE

Solutia
RMCS Instrumentation

Input/Output Table for MCU RMU2

As of: 12/10/2007

Item	Tag	Description	Type	S/N	Range	I/O	Card	Ch	Comment
1	PZ-21B	Piezometer	VW		0-50 psi	ASM, Analog Input	1	1	
2								2	
3								3	
4								4	
5								5	
6	PZ-6U	Up Grade Piezometer	VW		0-50 psi			6	
7	PZ-6D	Donw Grade Piezometer	VW		0-50 psi			7	
8	PZ-5U	Up Grade Piezometer	VW		0-50 psi			8	
9	PZ-5D	Donw Grade Piezometer	VW		0-50 psi			9	
10								10	

Input/Output Table for MCU RMU4

Item	Tag	Description	Type	S/N	Range	I/O	Card	Ch	Comment
1						ASM, Analog Input	1	1	
2								2	
3	PZ-8U	Up Grade Piezometer	VW		0-50 psi			3	
4	PZ-8D	Donw Grade Piezometer	VW		0-50 psi			4	
5								5	
6	PZ-7D	Donw Grade Piezometer	VW		0-50 psi			6	
7	PZ-7U	Up Grade Piezometer	VW		0-50 psi			7	
8								8	
9								9	
10								10	

Input/Output Table for MCU RMU5

Item	Tag	Description	Type	S/N	Range	I/O	Card	Ch	Comment
1						ASM, Analog Input	1	1	
2								2	
3	PZ-8U	Up Grade Piezometer	VW		0-50 psi			3	
4	PZ-8D	Donw Grade Piezometer	VW		0-50 psi			4	
5								5	
6	PZ-7D	Donw Grade Piezometer	VW		0-50 psi			6	
7	PZ-7U	Up Grade Piezometer	VW		0-50 psi			7	
8								8	
9								9	
10								10	

NO.	DATE	REVISION DESCRIPTION	APPROVED

URS
1001 Highlands Plaza Dr. West, Suite 300
St. Louis, MO 63110

THE PROFESSIONAL WHOSE SIGNATURE AND PERSONAL SEAL APPEAR HEREON ASSUMES RESPONSIBILITY ONLY FOR WHAT APPEARS ON THIS SHEET AND DISCLAIMS ANY RESPONSIBILITY FOR ALL OTHER DRAWINGS, SPECIFICATIONS, ESTIMATES, REPORTS, SURVEYS OR OTHER DOCUMENTS OR INSTRUMENTS NOT SEALED BY THE PROFESSIONAL.

SEAL

DATE: 12/11/07
SCALE:
DESIGNED: MJB
DRAWN: DJD
CHECKED:
SUBMITTED:

SOLUTIA™
Applied Chemistry, Creative Solutions
SOLUTIA INC.
575 MARYVILLE CENTRE DRIVE
ST. LOUIS, MO. 63141

GROUNDWATER MIGRATION CONTROL SYSTEM

BARRIER WALL

DETAILS FOR
RMU2, RMU4 AND RMU5

PROJECT NO.
21561391.00000

DRAWING NO.
1-19

File: P:\GEOTECHNICAL\21561391.00000 SITE R O&M REPORT\ASBUILTS 12-11-07\SHEET 1-19.DWG Last edited: DEC. 12, 07 @ 12:41 p.m. by: david_dejuire

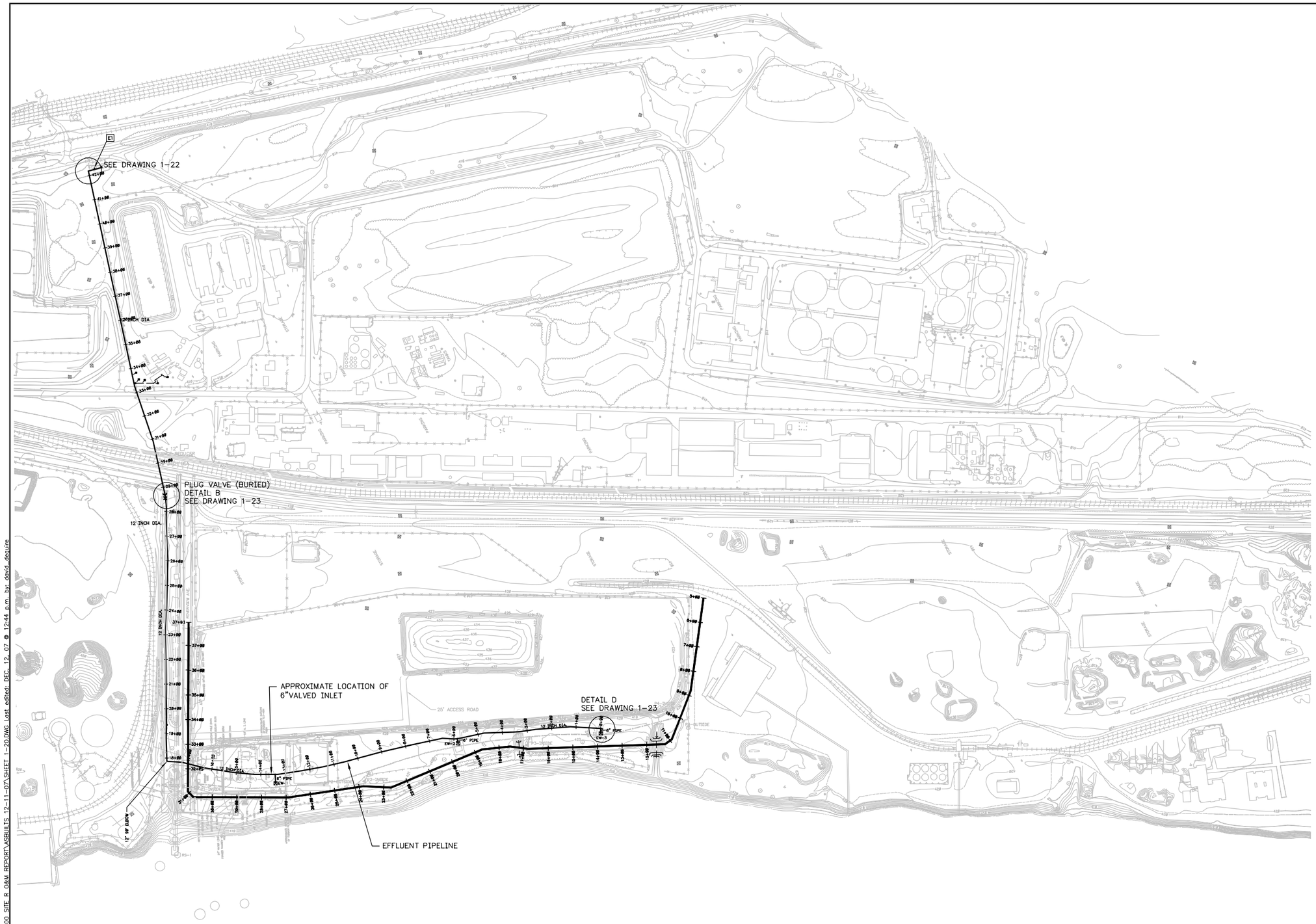

NOTE:

EXISTING SURFACE FEATURES HAVE BEEN PLOTTED FROM AN AERIAL SURVEY BY SURDEX. THE LOCATIONS OF UNDERGROUND UTILITIES, STRUCTURES AND FACILITIES HAVE BEEN PLOTTED FROM PLANS AND DRAWINGS OF EXISTING FACILITIES PROVIDED BY SOLUTIA. THEIR LOCATIONS MUST BE CONSIDERED APPROXIMATE ONLY. THERE MAY BE OTHER IMPROVEMENTS AND UTILITIES WITHIN THE PROJECT AREA, WHICH ARE NOT SHOWN. THE CONTRACTOR SHALL VERIFY, PRIOR TO EXCAVATION OR CONSTRUCTION, THE LOCATIONS, ELEVATIONS AND DIMENSIONS OF ALL EXISTING UTILITIES, STRUCTURES, WELLS AND OTHER FEATURES AFFECTING HIS WORK, WHETHER OR NOT SHOWN ON THE PLANS. USE OF A SUBSURFACE LOCATOR IS RECOMMENDED. FOR PIPE ELEVATION SEE DRAWING 1-21.

Legend

- EW – Extraction Well for GMCS
- New Barrier Wall
- Effluent PipeLine
- Reducer
- Plug Valve (Buried)

N

0 200

SCALE FEET

NO.	DATE	REVISION DESCRIPTION	APPROVED

URS

1001 Highlands Plaza Dr. West, Suite 300
St. Louis, MO 63110

THE PROFESSIONAL WHOSE SIGNATURE AND PERSONAL SEAL APPEAR HEREON ASSUMES RESPONSIBILITY ONLY FOR WHAT APPEARS ON THIS SHEET AND DISCLAIMS ANY RESPONSIBILITY FOR ALL OTHER DRAWINGS, SPECIFICATIONS, ESTIMATES, REPORTS, SURVEYS OR OTHER DOCUMENTS OR INSTRUMENTS NOT SEALED BY THE PROFESSIONAL.

SEAL

DATE: 12/11/07
SCALE:
DESIGNED: MJB
DRAWN: DJD
CHECKED:
SUBMITTED:

SOLUTIA™ Applied Chemistry, Creative Solutions

SOLUTIA INC.
575 MARYVILLE CENTRE DRIVE
ST. LOUIS, MO. 63141

GROUNDWATER MIGRATION CONTROL SYSTEM

BARRIER WALL

PLAN OF EFFLUENT PIPELINE

PROJECT NO. 21561391.00000

DRAWING NO. 1-20

File: P:\GEOTECHNICAL\21561391.00000 SITE R O&M REPORT\ASBUILTS 12-11-07\SHEET 1-20.DWG Last edited: DEC. 12, 07 @ 12:44 p.m. by: david_deguire

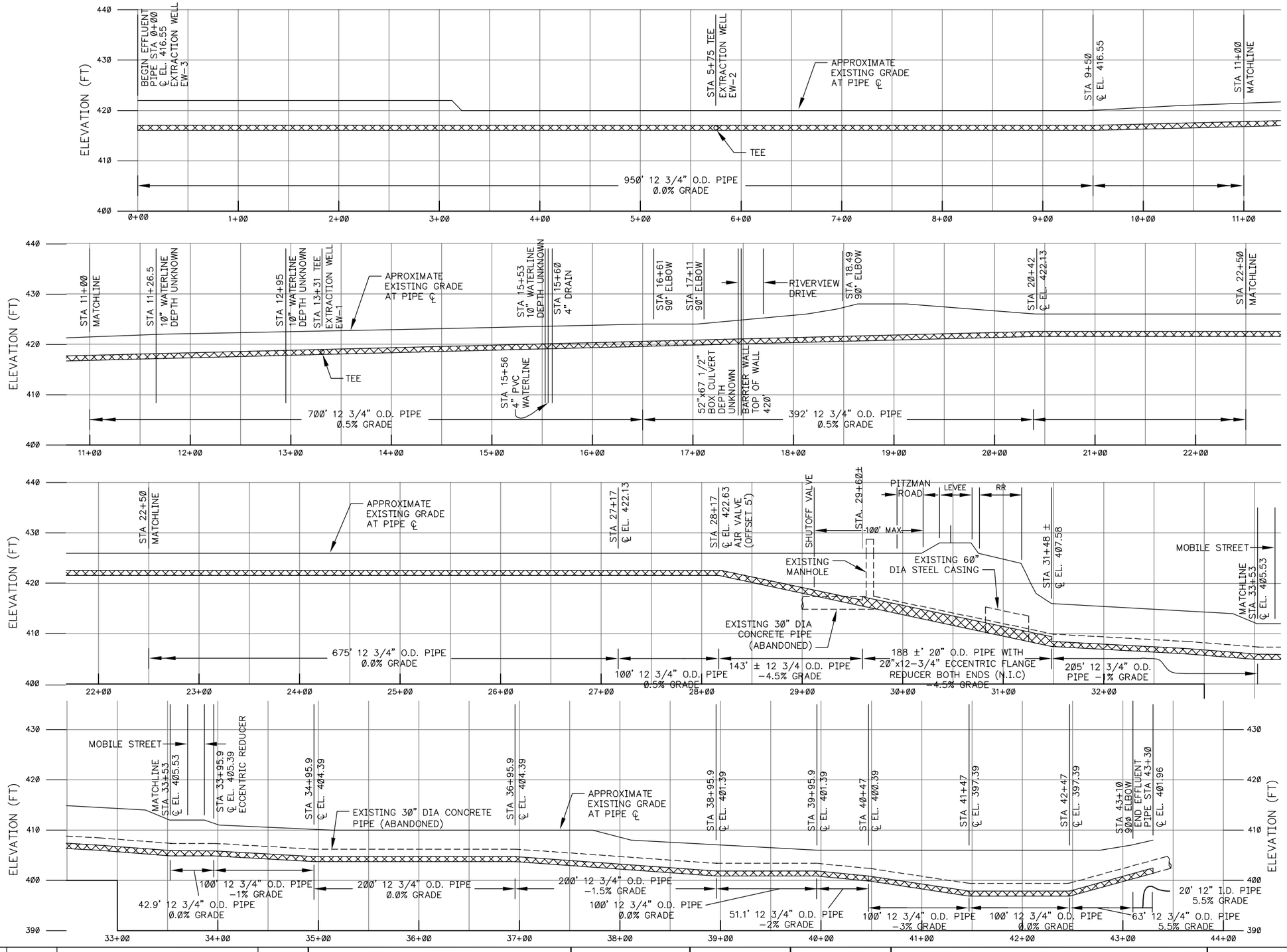

NOTES ON:
PLAN FOR CONSTRUCTION OF PIPELINE FOLLOW. IN GENERAL, THESE NOTES WERE FOLLOWED.

1) REMOVE EXISTING 6-IN DIA. SULFURIC ACID CARRIER PIPE AND 12-IN DIA. STEEL CASING PIPE AND SLIP 2Ø-IN. OD HDPE PIPE INTO EXISTING 3Ø-IN. ID ABANDONED REINFORCED CONCRETE WATER PIPE AT ABOUT STA 29+6Ø AND EXTEND TO STA 43+1Ø. IT MAYBE NECESSARY TO EXCAVATE AT INTERMEDIATE LOCATIONS TO ACCOMPLISH THE SLIPLINING.(SEE REFERENCE DRAWINGS).

2) GROUT ANNULUS BETWEEN 2Ø-IN. DIAMETER HDPE PIPE AND ID OF 3Ø-IN. DIAMETER RCP FROM AT LEAST STA 29+6Ø± TO STA 31+48. INSTALL SUFFICIENT CENTERING GUIDES TO ASSURE UNIFORM ANNULAR GROUT THICKNESS IN THIS REACH. DEVELOP AND SUBMIT DESIGN OF PACKER TO CONTAIN GROUT AT STA 31+48.

3) DEMOLISH EXISTING 3Ø-IN. VALVE MANHOLE AND 3Ø-IN. PIPE AT SUCH LOCATIONS NECESSARY TO INSTALL HDPE LINE. LOAD AND HAUL DEMOLITION DEBRIS TO TEMPORARY STOCKPILE.

4) GRADES OF THE EXISTING ABANDONED 3Ø-IN. DIAMETER REINFORCED CONCRETE PIPE ARE BASED ON THE FOLLOWING REFERENCE DRAWINGS AND ADDING 312.36 FT TO THE ELEVATIONS SHOWN ON THE REFERENCE DRAWINGS TO CONVERT THEM TO FT, NGVD:

A. MONSANTO CHEMICAL CO. DWG D-13054, REV 4, 4/19/54
B. MONSANTO CHEMICAL CO. DWG D-13055, REV. 4, 4/19/54
C. MONSANTO CHEMICAL CO. DWG D-13056, REV. 4, 4/19/54
D. MONSANTO CHEMICAL CO. DWG D-13057, REV. 6, 5/7/54
E. MONSANTO CHEMICAL CO. DWG D-13059, REV. 4, 5/19/54
F. MONSANTO CHEMICAL CO. DWG D-13060, REV. 2, 1/21/54

5) OTHER REFERENCE DRAWINGS
A. MONSANTO COMPANY DRAWING TS-B-15062, REV. 2, 9/10/79
B.MONSANTO COMPANY DRAWING TS-D-15071, REV. Ø, 9/6/79 AS A MINIMUM UNDER THE LEVEE

6) THE DRAWINGS SHOW THE PIPELINE WITHIN THE EXISTING 3Ø-IN. DIA RCP FROM ABOUT STA 29+6Ø TO STA 43+1Ø. THE PIPELINE SHALL BE WITHIN THE RCP AND RAILROAD TRACKS (APPROXIMATELY STA 29+6Ø TO STA 31+48). AT OTHER LOCATIONS, THE PIPELINE MAY BE INSTALLED EITHER IN THE 3Ø-IN. RCP OR IN ITS OWN TRENCH ALONGSIDE THE 3Ø-IN. RCP. CONTRACTOR SHALL FURNISH AND INSTALL THE NECESSARY HDPE FITTINGS TO ACCOMPLISH TRANSITIONS IN THE LOCATION OF THE PIPELINE EITHER WITHIN OR OUTSIDE OF THE 3Ø-IN. RCP.

7) THE 2Ø-IN. OD PIPE UNDER THE LEVEE AND RAILROAD TRACKS WILL BE INSTALLED UNDER ANOTHER CONTRACT. THIS CONTRACT INCLUDES FURNISHING AND INSTALLING THE NECESSARY PIPE FITTINGS TO REDUCE FROM 2Ø IN. O.D. TO 12.75 IN. O.D. BOTH UPSTREAM AND DOWNSTREAM OF THE 2Ø IN. O.D. PIPE UNDER THE LEVEE AND RAILROAD TRACKS HAS BEEN INSTALLED UNDER ANOTHER CONTRACT. THIS CONTRACT INCLUDES FURNISHING AND INSTALLING THE NECESSARY PIPE FITTINGS TO REDUCE FROM 2Ø-IN. O.D. TO 12.75-IN. O.D. BOTH UPSTREAM AND DOWNSTREAM OF THE 2Ø-IN. O.D. PIPE.

8) FURNISH AND INSTALL 12-IN. PLUG VALVE IN LINE NOT MORE THAN 1ØØ FT. RIVERWARD OF RIVERSIDE TOE OF LEVEE.

9) CONSTRUCT MANHOLE FOR COMBINATION AIR VALVE AT HIGH POINT IN PIPELINE.

NO.	DATE	REVISION DESCRIPTION	APPROVED

URS
1001 Highlands Plaza Dr. West, Suite 300
St. Louis, MO 63110

THE PROFESSIONAL WHOSE SIGNATURE AND PERSONAL SEAL APPEAR HEREON ASSUMES RESPONSIBILITY ONLY FOR WHAT APPEARS ON THIS SHEET AND DISCLAIMS ANY RESPONSIBILITY FOR ALL OTHER DRAWINGS, SPECIFICATIONS, ESTIMATES, REPORTS, SURVEYS OR OTHER DOCUMENTS OR INSTRUMENTS NOT SEALED BY THE PROFESSIONAL.

SEAL

DATE: 12/11/07
SCALE:
DESIGNED: MJB
DRAWN: DJD
CHECKED:
SUBMITTED:

SOLUTIA™ Applied Chemistry, Creative Solutions
SOLUTIA INC.
575 MARYVILLE CENTRE DRIVE
ST. LOUIS, MO. 63141

GROUNDWATER MIGRATION CONTROL SYSTEM
BARRIER WALL
PROFILE OF EFFLUENT PIPELINE

PROJECT NO. 21561391.00000
DRAWING NO. 1-21

File: P:\GEOTECHNICAL\21561391.00000 SITE R O&M REPORT\ASBUILTS 12-11-07\SHEET 1-21.DWG Last edited: DEC. 12, 07 @ 12:45 p.m. by: david_deguire

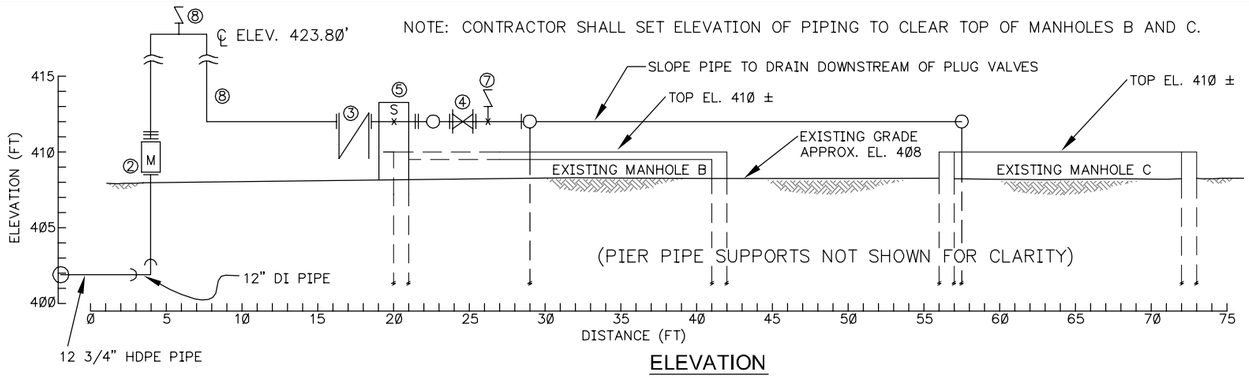

ELEVATION

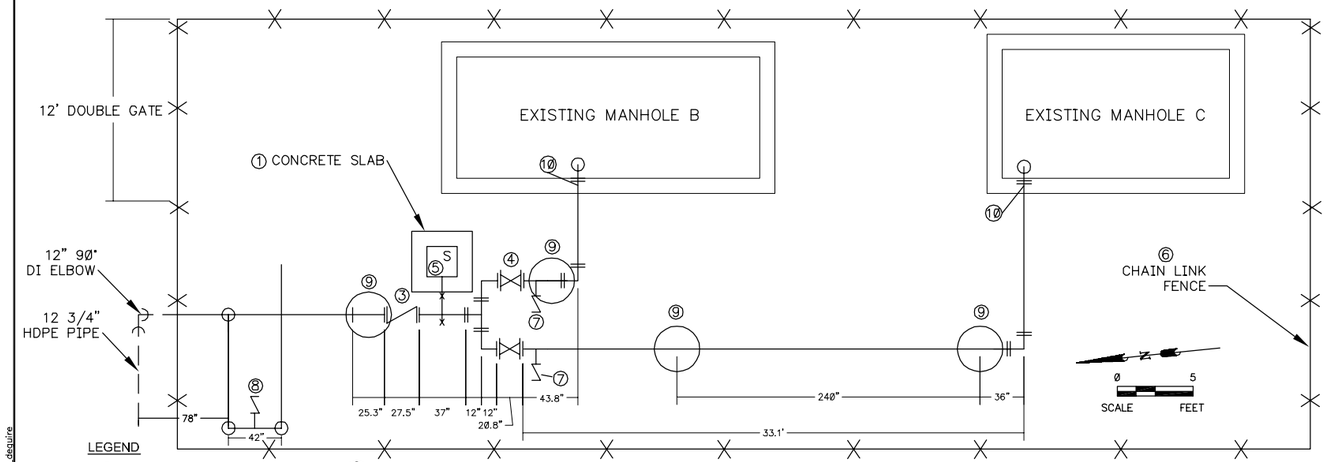

PLAN

LEGEND

①	CONCRETE SLAB ON GRADE	⑥	CHAIN LINK FENCE
②	12" MAGNETIC FLOW METER (FURNISHED BY OTHERS)	⑦	2" VENT/CHECK VALVE
③	12" CHECK VALVE	⑧	VACUUM BREAKER VALVE
④	12" PLUG VALVE	⑨	PIPE SUPPORT ON PIER
⑤	SIGMA 900 MAX SAMPLER	⑩	PIPE SUPPORT ON WALL

NOTES ON PLAN FOR CONSTRUCTION OF PIPELINE FOLLOW. IN GENERAL, THESE NOTES WERE FOLLOWED.

1) ADD TO EXISTING CHAIN LINK FENCE AROUND MANHOLES B AND C AS REQUIRED TO ACCOMODATE THE NEW PIPING AND FITTINGS. MAINTAIN SOUTHEASTERN CORNER OF ENCLOSURE IN ITS CURRENT LOCATION, MOVE EXISTING DOUBLE GATE AS REQUIRED, AND EXTEND THE FENCE TO THE NORTH AND SOUTH AS APPROVED BY OWNER. ALL NEW FENCE SHALL MATCH THE EXISTING FENCE.

2) DESIGN, FURNISH, AND INSTALL INSULATION AND HEAT TRACING ON ABOVE GROUND PIPING UPSTREAM OF PLUG VALVES.

3) DESIGN, FURNISH AND INSTALL AREA LIGHTING WITH DUSK-TO-DAWN CELLS.

4) DESIGN AND INSTALL POWER SERVICE AND ELECTRICAL DISTRIBUTION FOR HEAT TRACING, INSTRUMENTS, AND AREA LIGHTING.

5) ANCHOR PIPE TO EXISTING MANHOLES USING 4, 3/4-IN. DIA. STAINLESS STEEL ANCHORS EMBEDDED 6 IN. WITH 3 IN. OF EXPOSED THREADS. CENTER SUPPORTS ON WALLS.

REFERENCE DRAWINGS:

MANHOLES C AND I, VILLAGE OF SAUGET, ILLINOIS SEWER REHABILITATION, SHEET 1, AS-BUILT 1/24/91, P.H. WEIS & ASSOCIATES INCORPORATED

T.R.R.A., VILLAGE OF SAUGET, ILLINOIS SEWER REHABILITATION, SHEET 1, AS-BUILT 1/24/91, P.H. WEIS & ASSOCIATES INCORPORATED

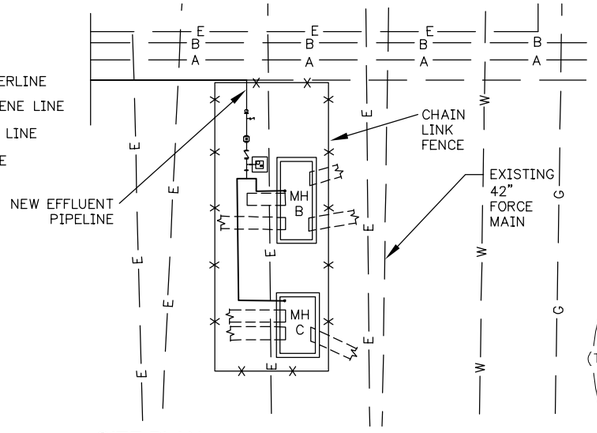

SITE PLAN

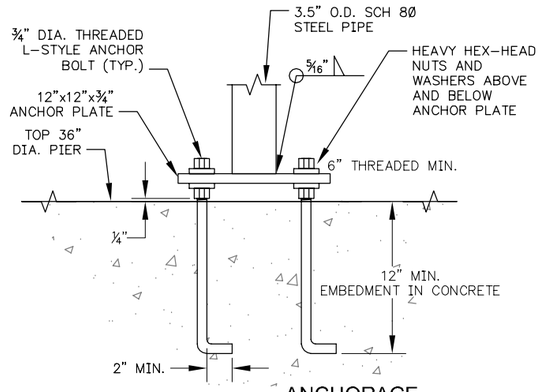

ANCHORAGE
1"=6"

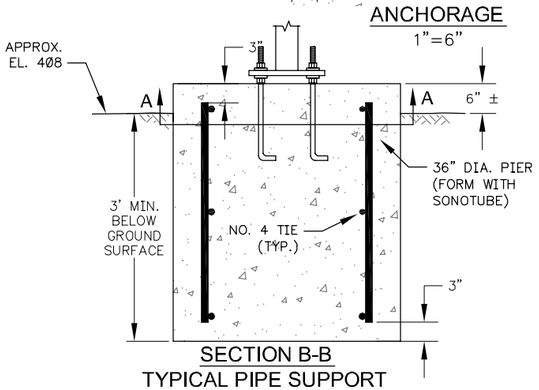

SECTION B-B
TYPICAL PIPE SUPPORT
1"=1'

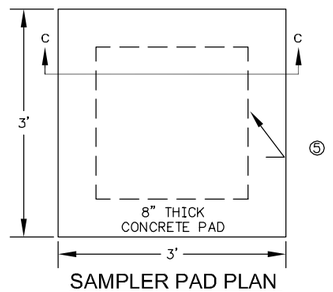

SAMPLER PAD PLAN
1"=1'

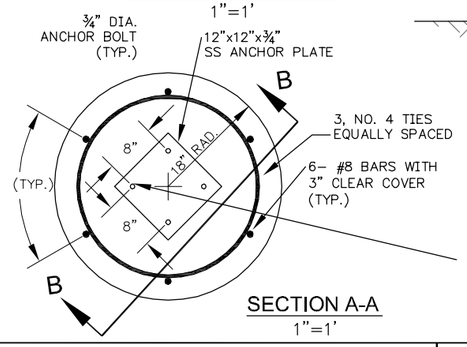

SECTION A-A
1"=1'

	FLANGED	SCREWED	BELL & SPIG
JOINT			
ELBOW 90 DEG.			
ELBOW 45 DEG			
ELBOW TURNED UP			
ELBOW TURNED DOWN			
TEE			
TEE-OUTLET UP			
TEE-OUTLET DOWN			
GATE VALVE			
CHECK VALVE			
REDUCER			

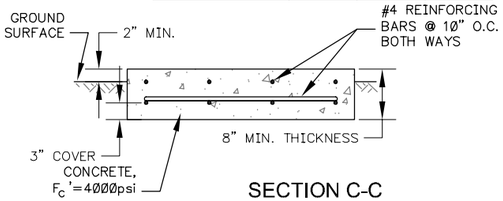

SECTION C-C
1"=1'

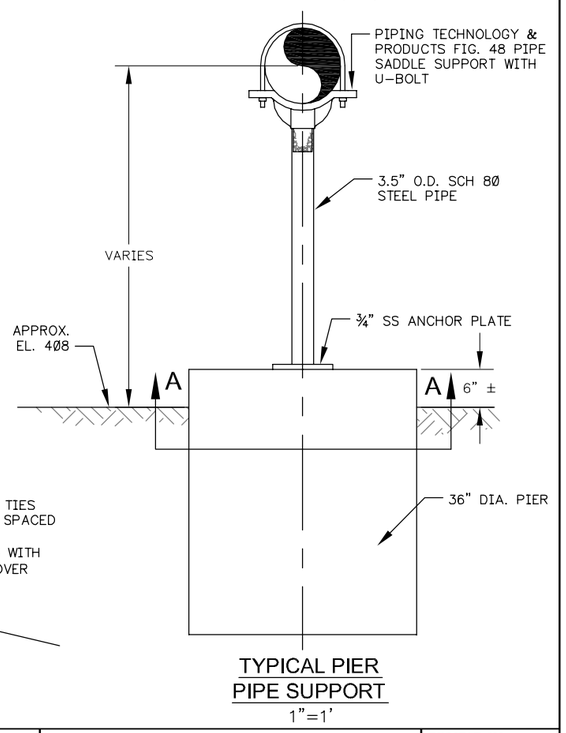

TYPICAL PIER PIPE SUPPORT
1"=1'

NO.	DATE	REVISION DESCRIPTION	APPROVED

URS
1001 Highlands Plaza Dr. West, Suite 300
St. Louis, MO 63110

THE PROFESSIONAL WHOSE SIGNATURE AND PERSONAL SEAL APPEAR HEREON ASSUMES RESPONSIBILITY ONLY FOR WHAT APPEARS ON THIS SHEET AND DISCLAIMS ANY RESPONSIBILITY FOR ALL OTHER DRAWINGS, SPECIFICATIONS, ESTIMATES, REPORTS, SURVEYS OR OTHER DOCUMENTS OR INSTRUMENTS NOT SEALED BY THE PROFESSIONAL.

SEAL

DATE: 12/11/07
SCALE:
DESIGNED: MJB
DRAWN: DJD
CHECKED:
SUBMITTED:

SOLUTIA™ Applied Chemistry, Creative Solutions
SOLUTIA INC.
575 MARYVILLE CENTRE DRIVE
ST. LOUIS, MO. 63141

GROUNDWATER MIGRATION CONTROL SYSTEM
BARRIER WALL
PIPING PLAN & DETAILS AT DISCHARGE POINT

PROJECT NO. 21561391.00000
DRAWING NO. 1-22

File: P:\GEOTECHNICAL\21561391.00000 SITE R O&M REPORT\ASBUILTS 12-11-07\SHEET 1-22.DWG Last edited: DEC. 12, 07 @ 12:46 p.m. by: david_deguire

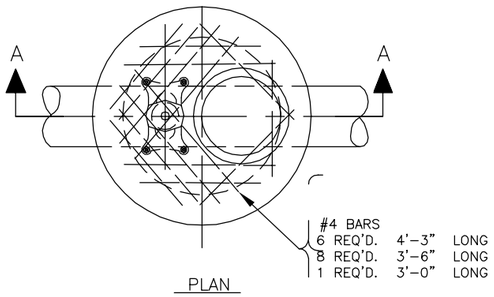

PLAN

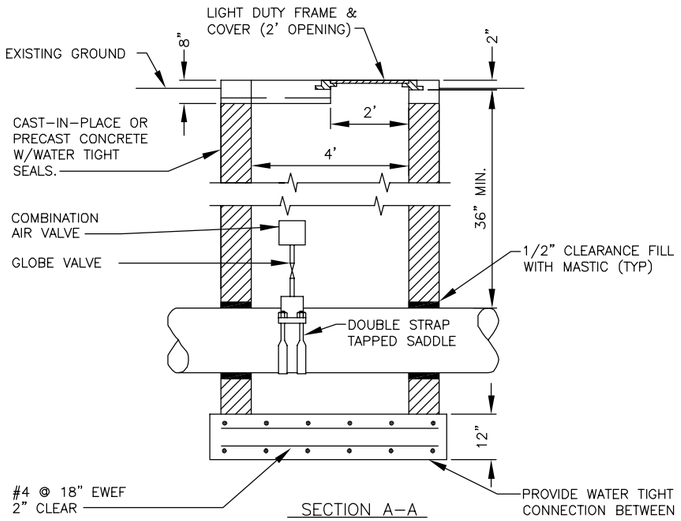

SECTION A-A

DETAIL B
VACUUM AND AIR RELIEF VALVE MANHOLE
NOT TO SCALE

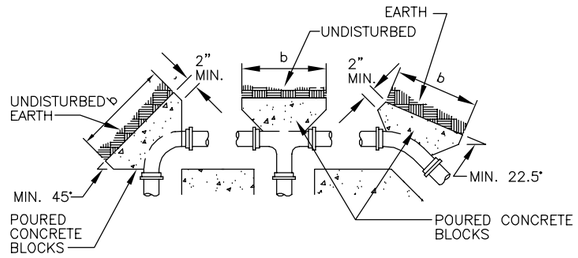

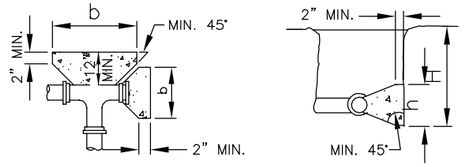

THRUST BLOCKING NOTES:

1. PLACE 4 MIL. POLYETHYLENE BETWEEN CONCRETE AND FITTING (CONCRETE SHALL NOT INTERFERE WITH JOINT.)
2. MINIMUM CONCRETE THICKNESS SHALL BE 12 INCHES.
3. THE HORIZONTAL DIMENSION (b) OF THE BEARING AREA SHALL BE BETWEEN 1.0 AND 2.0 TIMES THE VERTICAL DIMENSION (h). (h <= b <= 2h)
4. THE VERTICAL DIMENSION (h) OF THE BEARING AREA SHALL BE EQUAL TO ONE-HALF THE TOTAL DEPTH (H) TO THE BOTTOM OF THE THRUST BLOCK BUT NOT LESS THAN THE OUTSIDE DIAMETER (Do) OF THE FITTING (Do < h <= H/2).
5. THRUST BLOCK ORIENTATION SHALL BE SUCH THAT THE CENTER OF THE FITTING CORRESPONDS WITH THE CENTER OF THE THRUST BLOCK.
6. THE MINIMUM ALLOWABLE ANGLE (EITHER VERTICAL OR HORIZONTAL) SHALL BE 45 DEGREES.

BEARING AREA OF BLOCK IN SQ. FT. (b x h)					
FITTING SIZES	TEE & END	90° BEND	45° BEND	22 1/2° BEND	11 1/4° BEND
12"	4.0	4.0	4.0	2.0	2.0

(FIGURES TO BE ENTERED IN TABLE WHEN RANGE OF PIPE SIZES IS DETERMINED)

TYPICAL THRUST BLOCKING DETAILS
NOT TO SCALE

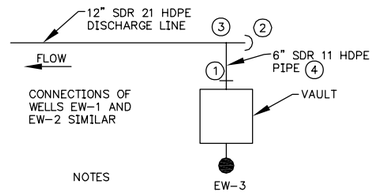

NOTES

1. FLANGE OR OTHER APPROVED CONNECTION
2. MOLDED SDR 11 HDPE CAP
3. 12"X6" SDR 11 HDPE BRANCH SADDLE
4. BED HDPE PIPE IN SAND SIMILAR TO DETAIL C

DETAIL D
WELL-TO-DISCHARGE CONNECTION
NOT TO SCALE

PIPELINE TRENCH NOTE:

1) SLOPE SIDES OF TRENCH AS REQUIRED BY SOIL CONDITIONS AND OSHA REGULATIONS.

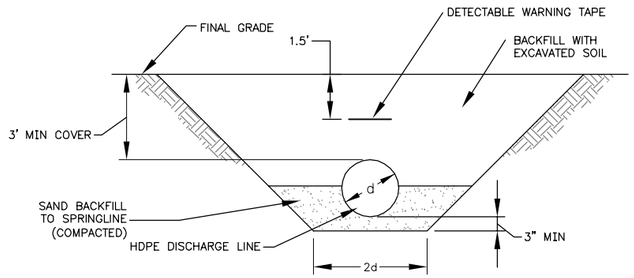

DETAIL C
PIPELINE TRENCH DETAIL
NOT TO SCALE
1

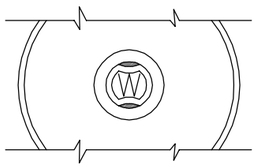

VALVE BOX TOP
NOT TO SCALE

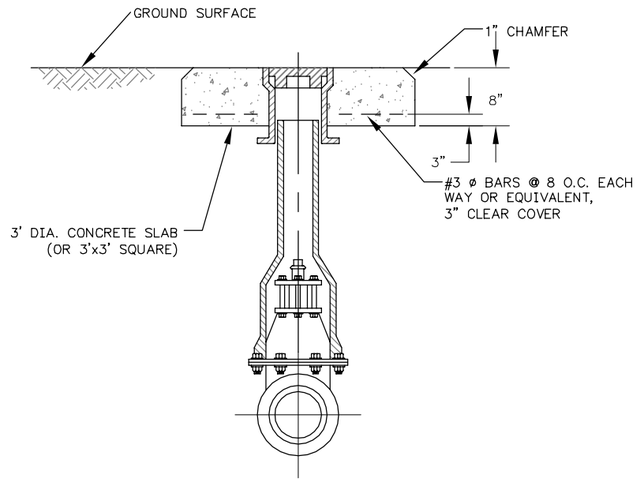

DETAIL OF VALVE BOX
NOT TO SCALE

NO.	DATE	REVISION DESCRIPTION	APPROVED

URS
1001 Highlands Plaza Dr. West, Suite 300
St. Louis, MO 63110

THE PROFESSIONAL WHOSE SIGNATURE AND PERSONAL SEAL APPEAR HEREON ASSUMES RESPONSIBILITY ONLY FOR WHAT APPEARS ON THIS SHEET AND DISCLAIMS ANY RESPONSIBILITY FOR ALL OTHER DRAWINGS, SPECIFICATIONS, ESTIMATES, REPORTS, SURVEYS OR OTHER DOCUMENTS OR INSTRUMENTS NOT SEALED BY THE PROFESSIONAL.

SEAL

DATE: 12/11/07
SCALE:
DESIGNED: MJB
DRAWN: DJD
CHECKED:
SUBMITTED:

SOLUTIA™
Applied Chemistry, Creative Solutions
SOLUTIA INC.
575 MARYVILLE CENTRE DRIVE
ST. LOUIS, MO. 63141

GROUNDWATER MIGRATION CONTROL SYSTEM
BARRIER WALL
PIPING DETAILS

PROJECT NO. 21561391.00000
DRAWING NO. 1-23

File: P:\GEOTECHNICAL\21561391.00000 SITE R O&M REPORT\ASBUILTS 12-11-07\SHEET 1-23.DWG Last edited: DEC. 12, 07 @ 12:48 p.m. by: david_deguire

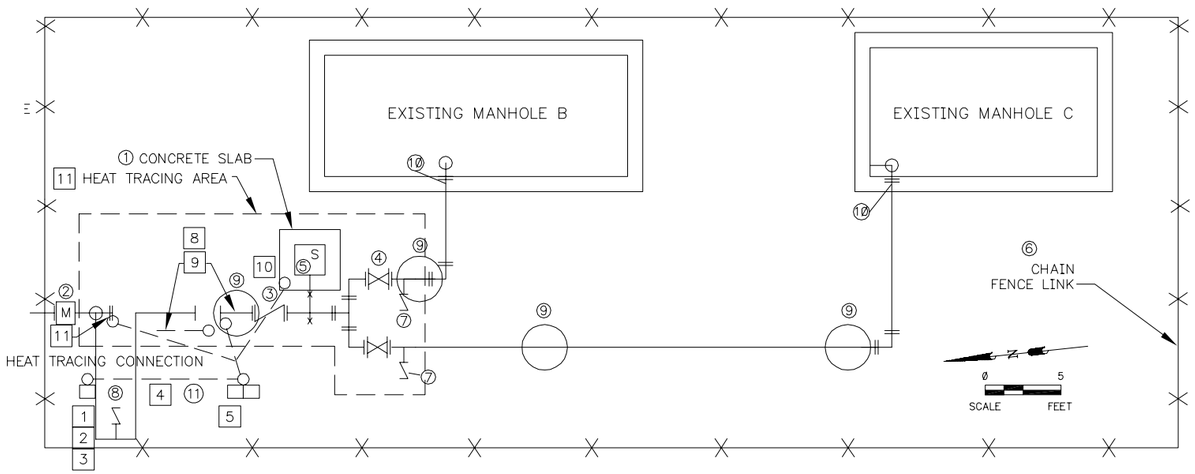

ELECTRICAL PLAN
AT DISCHARGE POINT
1"=1'

LEGEND

(1) CONCRETE SLAB ON GRADE	(6) CHAIN LINK FENCE
(2) 12" MAGNETIC FLOW METER	(7) 2" VENT/CHECK VALVE
(3) 12" CHECK VALVE	(8) VACUUM BREAKER VALVE
(4) 12" GATE OR PLUG VALVE	(9) PIPE SUPPORT ON PIER
(5) SIGMA 900 MAX SAMPLER	(10) PIPE SUPPORT ON WALL
	(11) REMOTE UNIT RMU-3

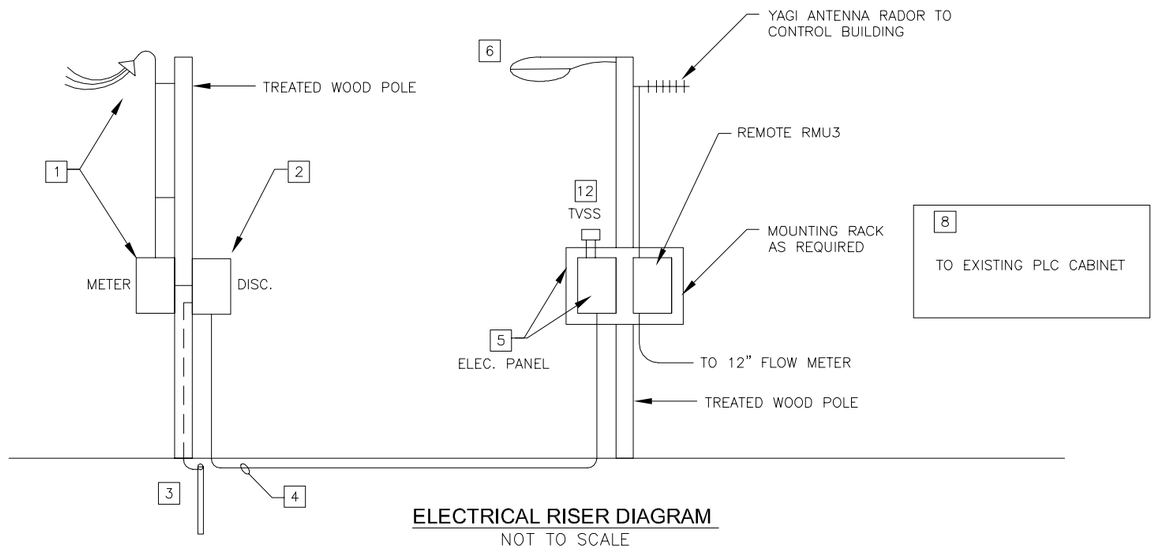

ELECTRICAL RISER DIAGRAM
NOT TO SCALE

ELECTRICAL KEYED NOTES:

1. WOOD POLE WITH WEATHERHEAD, CONDUITS, METER BASE, AND WIRED REQUIRED BY UTILITY FOR NEW 120/240 VOLT, SINGLE PHASE SERVICE. SERVICE FROM ELECTRIC UTILITY COMPANY.
2. 2P–60/60A FUSED DISCONNECT SWITCH IN NEMA 3R ENCLOSURE IN SERVICE ENTRANCE EQUIPMENT.
3. 5/8" x 8' GROUND ROD WITH #8 GROUNDING ELECTRODE CONDUCTOR CONNECTED TO GROUND LUG OF DISCONNECT.
4. UNDERGROUND 1" GALVANIZED RIGID CONDUIT WITH 3 #6, 1 #8 GROUND FROM DISCONNECT SWITCH TO PANEL.
5. 120/240 VOLT, SINGLE PHASE, 60 AMP MAIN LUG PANEL IN NEMA 3R ENCLOSURE ON WOOD POLE (MINIMUM 26' LONG POLE WITH 20' ABOVE GRADE) WITH THE FOLLOWING BRANCH CIRCUIT DEVICES:

   (1) 1P–20A FLOW METER
   (1) 1P–20A AREA LIGHT
   (1) 1P–20A SAMPLER
   (3) 1P–20A SPARES
   (1) 1P–20A (30MA EQUIPMENT GROUND FAULT) HEAT TRACING.
   AT LEAST (4) 1P–SPACE FOR FUTURE DEVICES.

6. LIGHT NEAR TOP OF POLE (LITHONIA CHLD OR APPROVED EQUAL, 150 WATT HIGH PRESSURE SODIUM, 120 VOLT WITH INTEGRAL FUSING AND PHOTO CELL). CONNECT TO AREA LIGHT CIRCUIT IN PANEL.
8. EXISTING PLC AT P–CHEM PLANT. REFER TO DRAWING 1–21 FOR LOCATION AND CONDUIT. CONNECT FLOWMETER ANALOG WIRING (NOTE 9) TO OWNER–FURNISHED 4–20 mA INPUT CARD.
9. MAGNETIC FLOWMETER (120 VOLT POWER SOURCE, 4–20MA ANALOG SIGNAL IN SEPARATE CONDUIT). ANALOG WIRING AND GROUND CONNECTION PER MANUFACTURER RECOMMENDATIONS.
10. 120 VAC POWER CONNECTIONS (HARD–WIRED) TO SAMPLER UNIT.
11. ON PIPING SYSTEM IN AREA INDICATED, PROVIDE SELF–LIMITING HEAT TRACING EQUAL TO RAYCHEM TYPE BTV. FOLLOW MANUFACTURER RECOMMENDATIONS FOR CABLE INSTALLATION DESIGN AND WATT DENSITY. FOLLOW MANUFACTURER DETAILS FOR INSTALLATION ON PIPING, FITTINGS, VALVES, FLOWMETER, ETC. PROVIDE FIXED LINE THERMOSTAT TO ENERGIZE TRACING BELOW 40 DEGREES FAHRENHEIT. CONNECT TO EQUIPMENT GROUND FAULT CIRCUIT IN PANEL.
12. CATEGORY C, OF MEDIUM EXPOSURE, TRANSIENT VOLTAGE SURGE SUPPRESSOR (TVSS) AT LUGS OF PANELBOARD. CONNECTED DISCHARGE TO GROUND BUS.

Ross&Baruzzini
6 SOUTH OLD ORCHARD
WEBSTER GROVES, MO. 63119
314–918–8383

NO.	DATE	REVISION DESCRIPTION	APPROVED

URS
1001 Highlands Plaza Dr. West, Suite 300
St. Louis, MO 63110

THE PROFESSIONAL WHOSE SIGNATURE AND PERSONAL SEAL APPEAR HEREON ASSUMES RESPONSIBILITY ONLY FOR WHAT APPEARS ON THIS SHEET AND DISCLAIMS ANY RESPONSIBILITY FOR ALL OTHER DRAWINGS, SPECIFICATIONS, ESTIMATES, REPORTS, SURVEYS OR OTHER DOCUMENTS OR INSTRUMENTS NOT SEALED BY THE PROFESSIONAL.

SEAL

DATE: 12/11/07
SCALE:
DESIGNED: MJB
DRAWN: DJD
CHECKED:
SUBMITTED:

SOLUTIA™
Applied Chemistry, Creative Solutions
SOLUTIA INC.
575 MARYVILLE CENTRE DRIVE
ST. LOUIS, MO. 63141

GROUNDWATER MIGRATION CONTROL SYSTEM

BARRIER WALL

ELECTRICAL PLAN & DETAILS AT DISCHARGE POINT

PROJECT NO. 21561391.00000

DRAWING NO. 1-24

File: P:\GEOTECHNICAL\21561391.00000 SITE R O&M REPORT\ASBUILTS 12-11-07\SHEET 1-24.DWG Last edited: DEC. 12, 07 @ 12:49 p.m. by: david_deguire

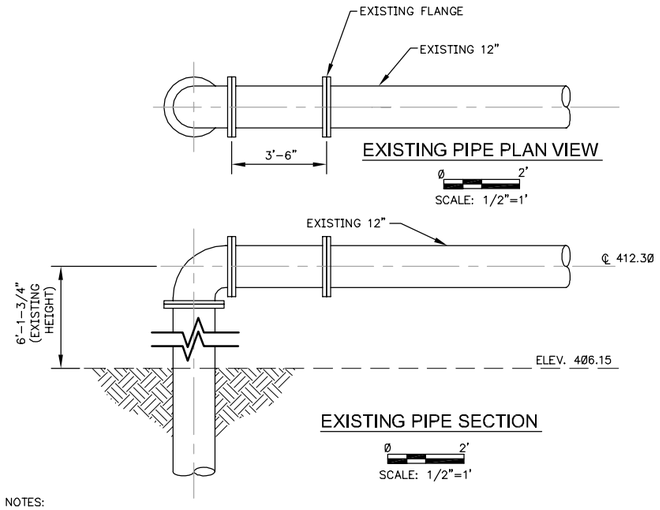

NOTES:

1. THE 10' LENGTH OF HORIZONTAL PIPE MAY BE CHANGED TO ADJUST THE LOCATION OF THE VERTICAL PIPE SECTION IN RELATION TO THE EXISTING OVERHEAD POWER LINES.
2. ALL PROPOSED PIPE SHALL BE INSULATED WITH THE SAME MATERIAL AS THE EXISTING PIPING.
3. ALL PROPOSED PIPE SHALL BE PRESSURE CLASS 250 OR HIGHER DUCTILE IRON AND SHALL MEET REQUIREMENTS OF AWWA C150/A21.50.
4. ALL DUCTILE IRON PIPE FITTINGS AND JOINTS SHALL MEET REQUIREMENTS OF AWWA C110/A21.10 OR A21.53 AND SHALL BE PRESSURE CLASS 250 OR HIGHER.
5. CEMENT MORTAR LINING FOR PIPE AND FITTINGS SHALL MEET REQUIREMENTS OF AWWA C104/A21.4.
6. ALL GASKET MATERIALS SHALL BE BUNA-N

LEGEND

1. CONCRETE SLAB ON GRADE
2. 12" MAGNETIC FLOW METER (FURNISHED BY OTHERS)
3. 12" CHECK VALVE
4. 12" PLUG VALVE
5. SIGMA 900 MAX SAMPLER
6. CHAIN LINK FENCE
7. 2" VENT/CHECK VALVE
8. AIR RELEASE VALVE (1")
9. PIPE SUPPORT ON PIER
10. PIPE SUPPORT ON WALL

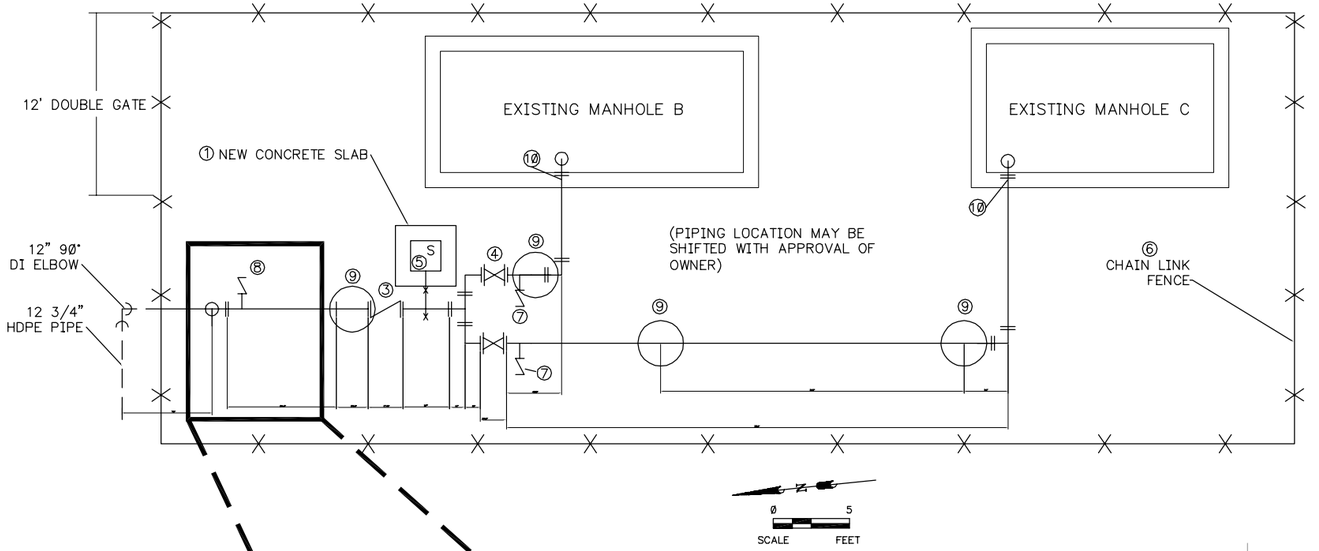

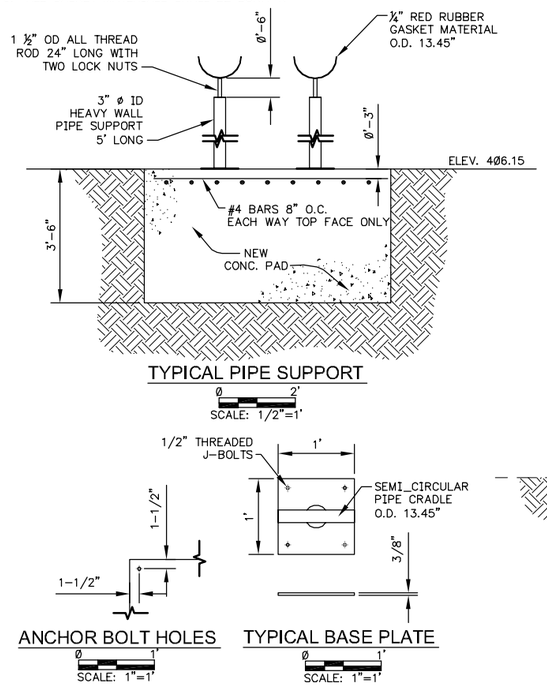

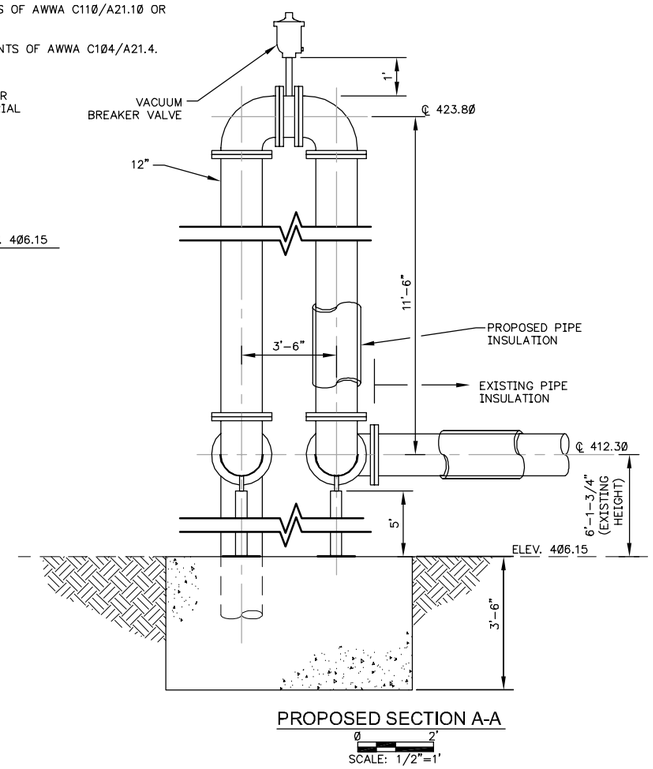

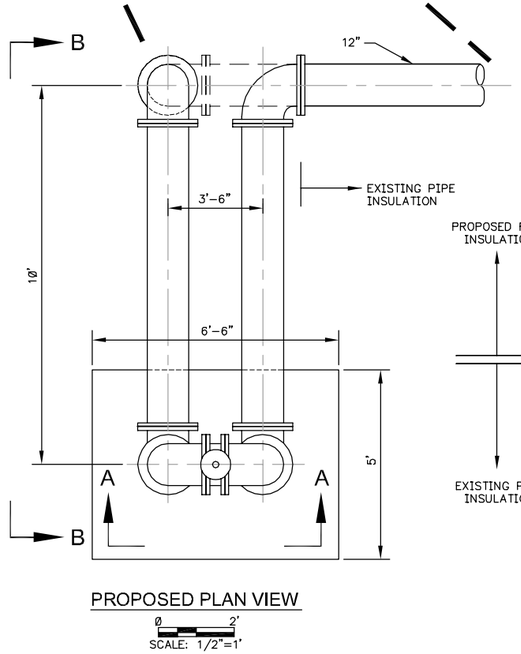

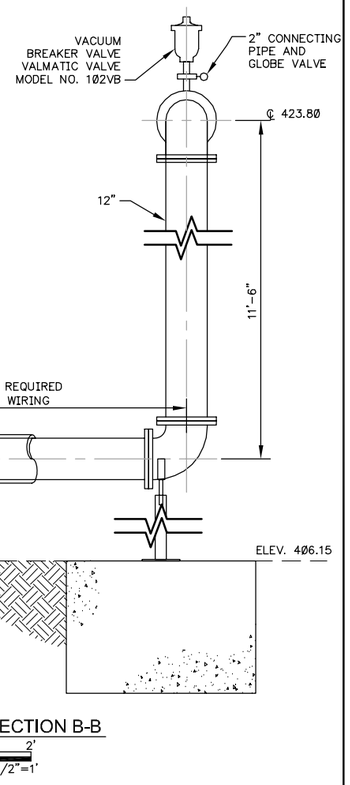

NO.	DATE	REVISION DESCRIPTION	APPROVED

URS
1001 Highlands Plaza Dr. West, Suite 300
St. Louis, MO 63110

THE PROFESSIONAL WHOSE SIGNATURE AND PERSONAL SEAL APPEAR HEREON ASSUMES RESPONSIBILITY ONLY FOR WHAT APPEARS ON THIS SHEET AND DISCLAIMS ANY RESPONSIBILITY FOR ALL OTHER DRAWINGS, SPECIFICATIONS, ESTIMATES, REPORTS, SURVEYS OR OTHER DOCUMENTS OR INSTRUMENTS NOT SEALED BY THE PROFESSIONAL.

SEAL

DATE: 12/11/07
SCALE:
DESIGNED: MJB
DRAWN: DJD
CHECKED:
SUBMITTED:

SOLUTIA™ Applied Chemistry, Creative Solutions
SOLUTIA INC.
575 MARYVILLE CENTRE DRIVE
ST. LOUIS, MO. 63141

GROUNDWATER MIGRATION CONTROL SYSTEM
BARRIER WALL
DISCHARGE PIPE MODIFICATIONS

PROJECT NO. 21561391.00000
DRAWING NO. 1-25

File: P:\GEOTECHNICAL\21561391.00000 SITE R O&M REPORT\ASBUILTS 12-11-07\SHEET 1-25.DWG Last edited: DEC. 12, 07 @ 12:50 p.m. by: david_deguire

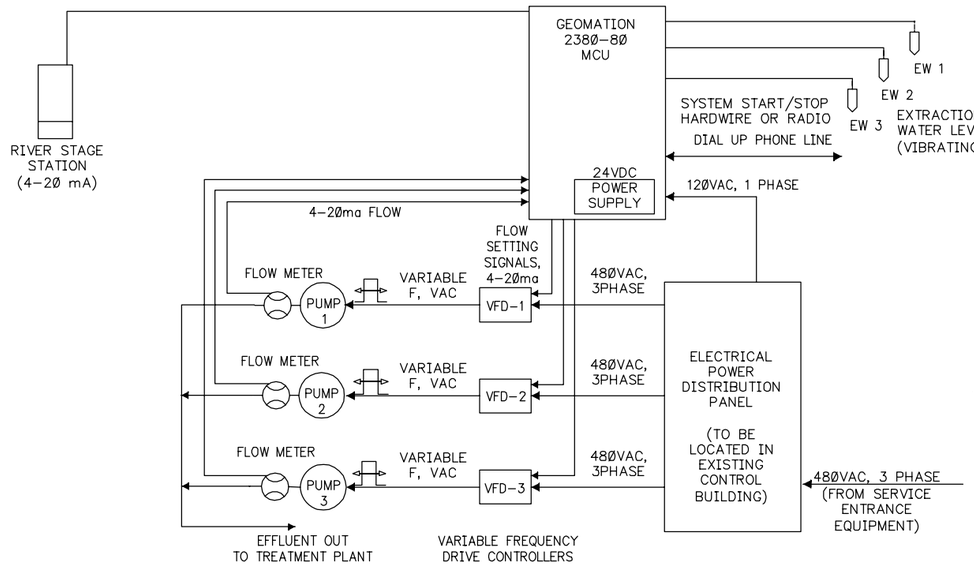

PUMP CONTROL SYSTEM BLOCK DIAGRAM

NOT TO SCALE

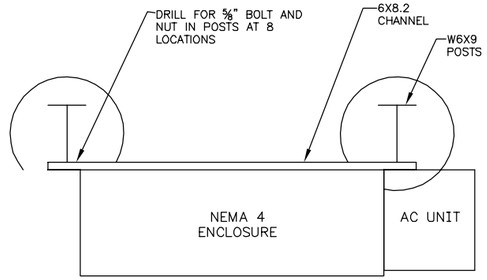

TOP VIEW

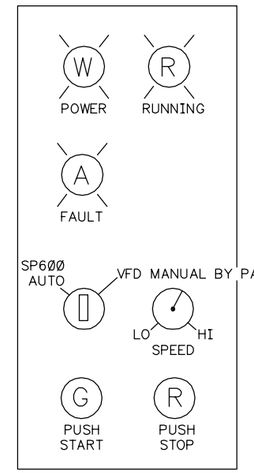

DETAIL OF PUMP CONTROL PANEL

NOT TO SCALE

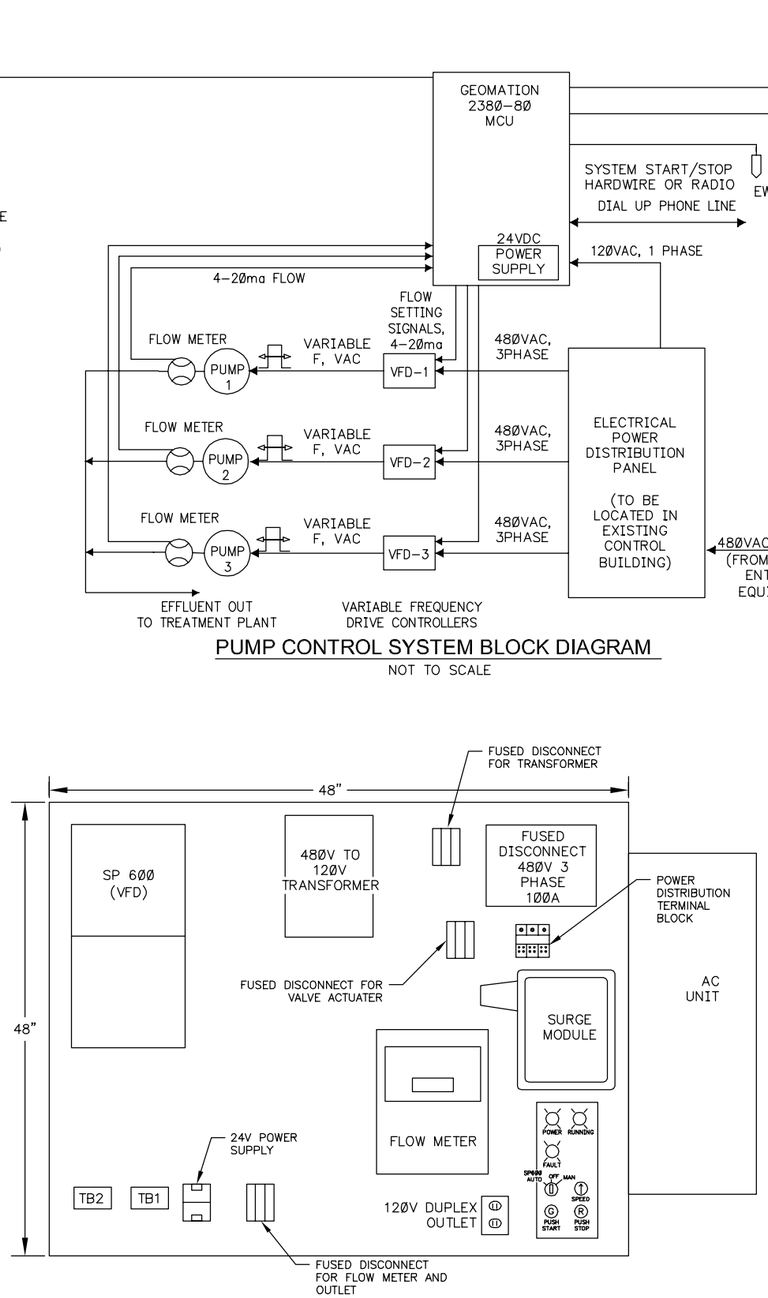

PUMP CONTROL PANEL/VFD ENCLOSURE
(TYPICAL EACH EXTRACTION WELL)

NOT TO SCALE

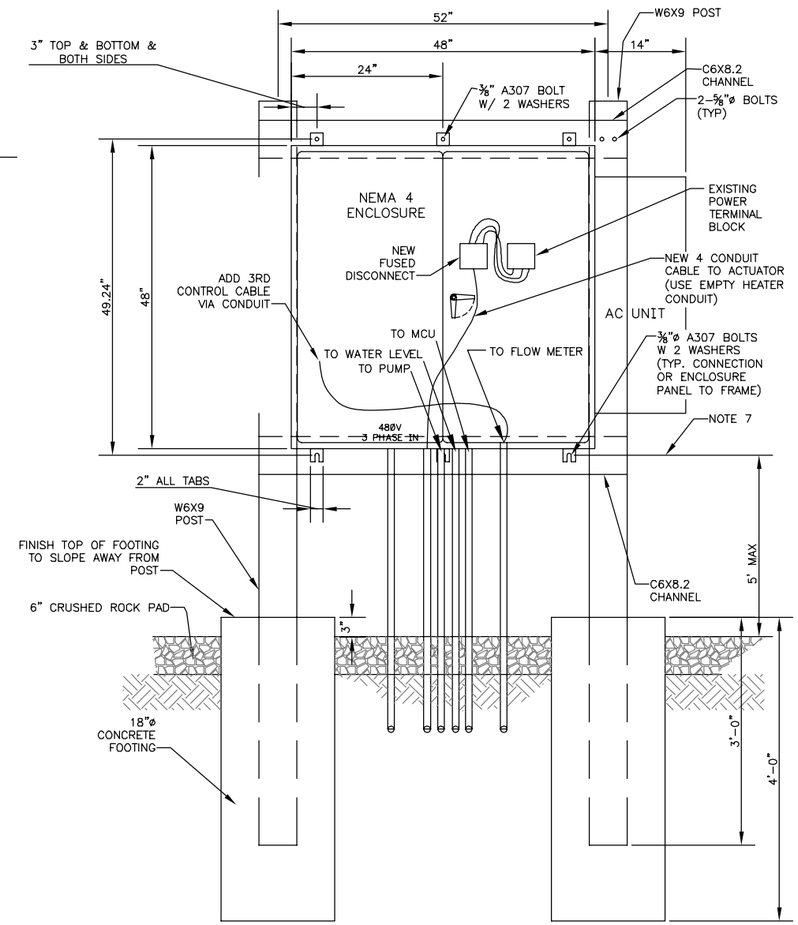

PUMP CONTROL PANEL AND VFD ENCLOSURE

NOT TO SCALE

NOTES:
1.) THE W6X9 POSTS & C6X8.2 CHANNEL IS GRADE 36 STEEL.

2.) ALL BOLTS ARE A307 USING 2 WASHERS AND 1 NUT PER EACH BOLT.

3.) ALL STEEL SHAPES, BOLTS, WASHERS, & NUTS ARE GALVANIZED IN ACCORDANCE WITH ASTM. POSTS AND CHANNELS WERE GALVANIZED AFTER FABRICATION.

4.) THE BOTTOM OF ENCLOSURE WAS SET AT EL. 425.0 FEET NGVD.

NO.	DATE	REVISION DESCRIPTION	APPROVED

URS
1001 Highlands Plaza Dr. West, Suite 300
St. Louis, MO 63110

THE PROFESSIONAL WHOSE SIGNATURE AND PERSONAL SEAL APPEAR HEREON ASSUMES RESPONSIBILITY ONLY FOR WHAT APPEARS ON THIS SHEET AND DISCLAIMS ANY RESPONSIBILITY FOR ALL OTHER DRAWINGS, SPECIFICATIONS, ESTIMATES, REPORTS, SURVEYS OR OTHER DOCUMENTS OR INSTRUMENTS NOT SEALED BY THE PROFESSIONAL.

SEAL

DATE: 12/11/07
SCALE:
DESIGNED: MJB
DRAWN: DJD
CHECKED:
SUBMITTED:

SOLUTIA™
Applied Chemistry, Creative Solutions
SOLUTIA INC.
575 MARYVILLE CENTRE DRIVE
ST. LOUIS, MO. 63141

GROUNDWATER MIGRATION CONTROL SYSTEM

BARRIER WALL

PUMP CONTROL/VFD ENCLOSURE

PROJECT NO. 21561391.00000

DRAWING NO. 1-26

File: P:\GEOTECHNICAL\21561391.00000 SITE R O&M REPORT\ASBUILTS 12-11-07\SHEET 1-26.DWG Last edited: DEC. 12, 07 @ 12:51 p.m. by: david_deguire

APPENDIX A
Well Installation Reports

DRAFT

APPENDIX A
Well Installation Reports

Layne-Western Company
Well Installation Reports

DRAFT

WELL COMPLETION RECORD

PROJECT Solutia SiteR LOCATION Sauget

WELL NUMBER EW-1 DATE INSTALLED 5-30-03

REPRESENTATIVE Golden DRILLER Skouby

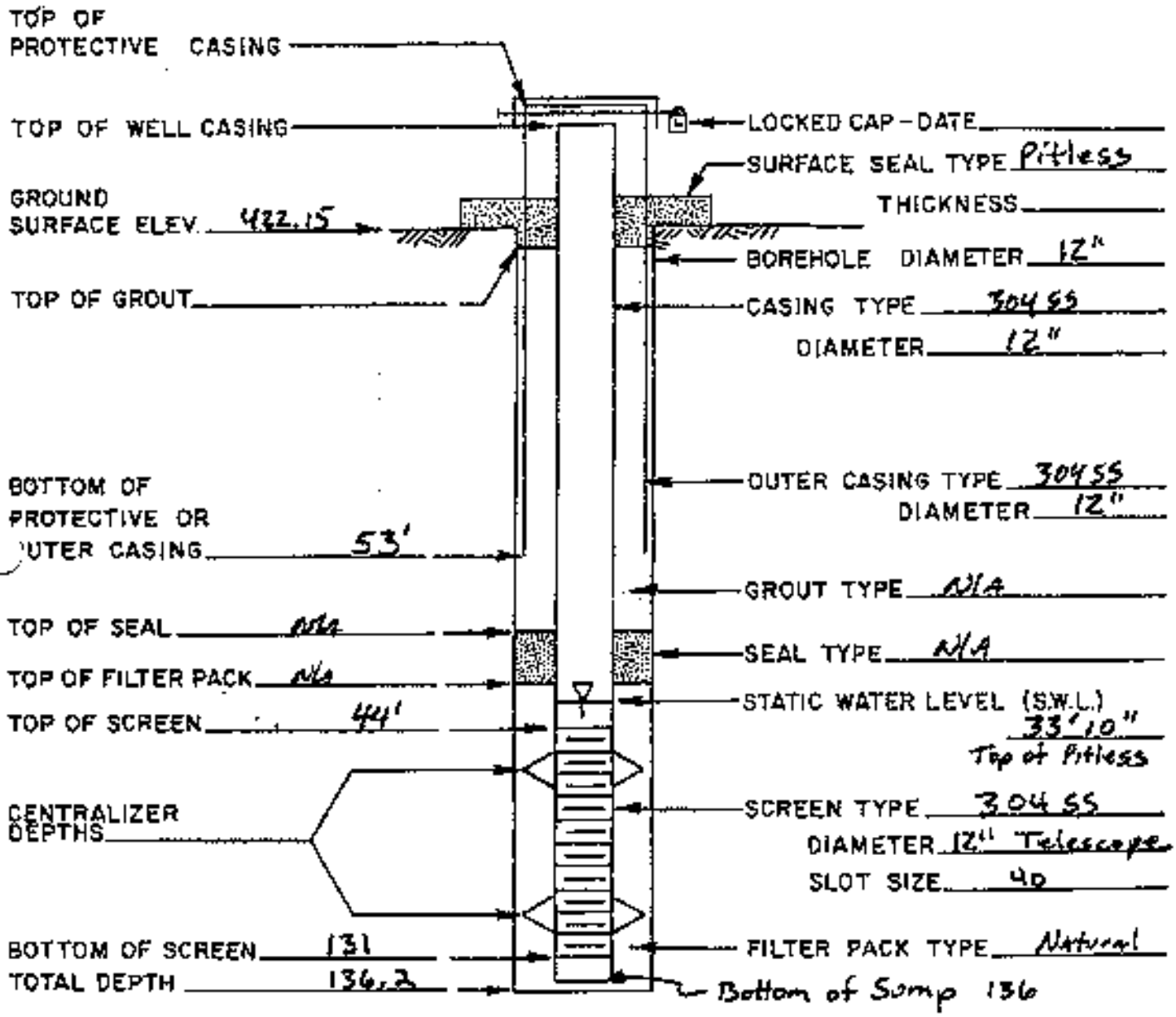

COMMENTS 12" Telescope Well - Cable Tool

REPRESENTATIVE SIGNATURE DMeyer DATE 7-28-03

Layne

WELL COMPLETION RECORD

PROJECT Solutia Site R LOCATION Sauget IL

WELL NUMBER EW-2 DATE INSTALLED 11-12-02

REPRESENTATIVE Golder DRILLER Watkins / Stanley

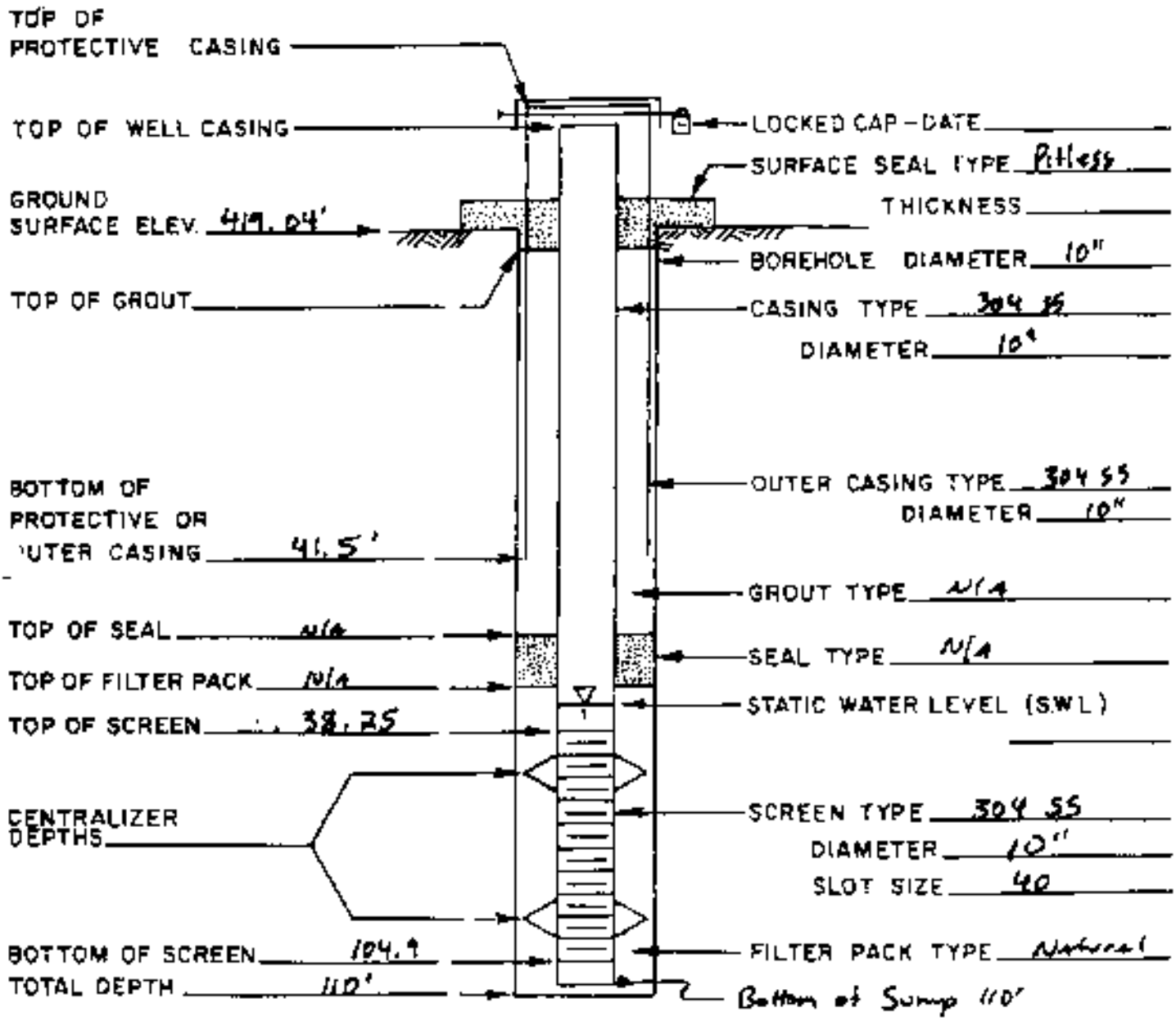

COMMENTS 10" Telescope Well - Cable Tool

REPRESENTATIVE SIGNATURE D Meyer DATE 7-28-03

Layne

WELL COMPLETION RECORD

PROJECT Solutia Site R LOCATION Sauget IL

WELL NUMBER EW 3 DATE INSTALLED 6-12-03

REPRESENTATIVE Golder DRILLER Skouby / Gilbert

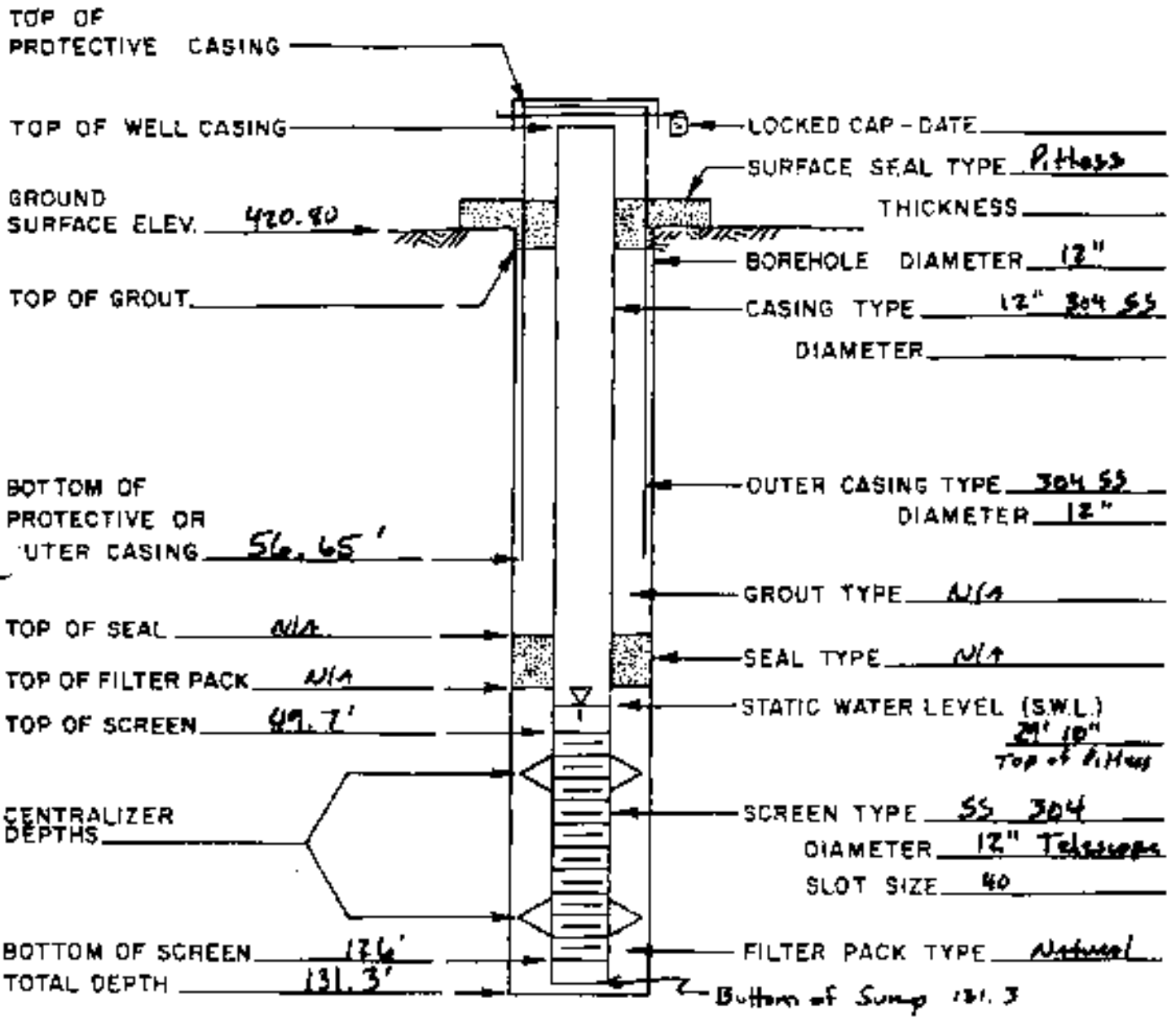

COMMENTS 12" Telescope Well - Cable Tool

REPRESENTATIVE SIGNATURE [signature] DATE 7-28-03

APPENDIX A Well Installation Reports

Installation Reports for Extraction Wells, Monitoring Wells and Piezometers Installed by Golder Associates

DRAFT

GROUNDWATER MONITORING WELL EW1

SITE NAME: AREA 2 SIRR		LOCATION: SAUGET, IL	
CLIENT: SCLUTH		SURFACE ELEVATION: -	
GEOLOGIST: M HADDOCK	NORTHING: -	EASTING: -	
DRILLER: J Workman	STATIC WATER LEVEL: -	COMPLETION DATE: JUNE 2003	
DRILLING COMPANY: Layne		DRILLING METHODS: CABLE TOOL	

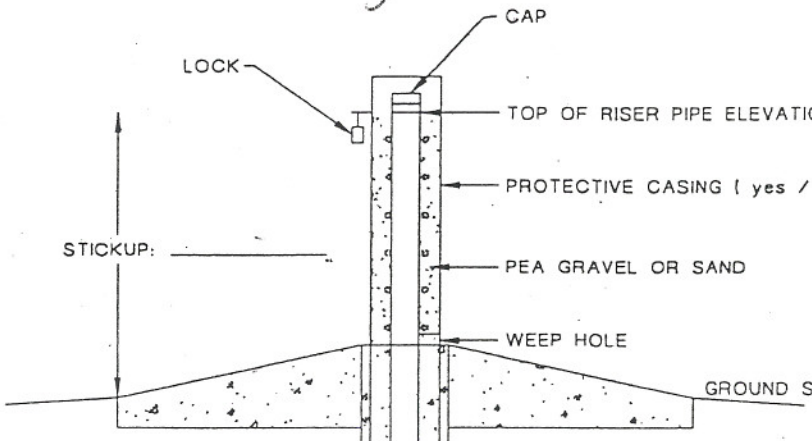

TOP OF RISER PIPE ELEVATION: -

PROTECTIVE CASING (yes / no): -

PEA GRAVEL OR SAND

WEEP HOLE

GROUND SURFACE ELEVATION: -

CONCRETE SEAL DEPTH: 6 FT. BGS.

DIAMETER OF RISER PIPE (in.): 12

DIAMETER OF BOREHOLE (in.): 12

TYPE AND AMOUNT OF ANNULAR SEAL: N/A

TOP OF SEAL DEPTH: N/A FT. BGS.

TYPE OF BENTONITE SEAL: N/A

TOP OF SAND PACK DEPTH: N/A FT. BGS.

CENTRALIZER (yes / no) - TYPE: N/A

TOP OF SCREEN DEPTH: 53 FT. BGS.

TYPE OF SCREEN: Johnson Stainless Steel wirewrap

SCREEN SLOT SIZE (in.): 0.040

SIZE OF SAND PACK: Natural Formation

AMOUNT OF SAND: N/A

BOTTOM OF SCREEN DEPTH: 131.0 FT. BGS.

BOTTOM OF WELL DEPTH: 136.2 FT. BGS.

BOTTOM OF FILTER PACK: N/A FT. BGS.

TYPE AND AMOUNT OF BACKFILL: N/A

136.2 TOTAL DEPTH OF BOREHOLE

NOTE. DEPTHS MEASURED FROM GROUND SURFACE

GROUNDWATER MONITORING WELL EW-2

SITE NAME: SOLUTIA SITE R		LOCATION: Sauget, IL	
CLIENT: SOLUTIA		SURFACE ELEVATION:	
GEOLOGIST: M HADDOCK	NORTHING: —		EASTING: —
DRILLER: J WORKMAN	STATIC WATER LEVEL: —		COMPLETION DATE: 11-12-02
DRILLING COMPANY: LAYNE		DRILLING METHODS: CABLE TOOL	

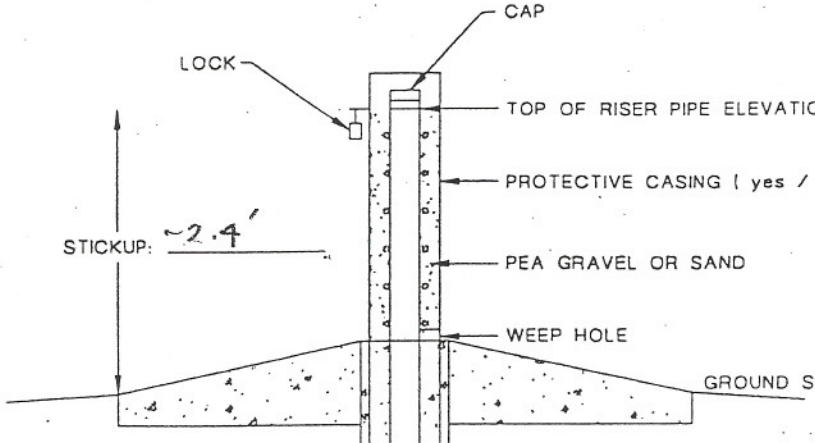

TOP OF RISER PIPE ELEVATION —

PROTECTIVE CASING (yes / no) —

PEA GRAVEL OR SAND

WEEP HOLE

GROUND SURFACE ELEVATION —

CONCRETE SEAL DEPTH 6 FT. BGS.

DIAMETER OF RISER PIPE (in.) 10

DIAMETER OF BOREHOLE (in.) 11

TYPE AND AMOUNT OF ANNULAR SEAL 2 BAGS BENTONITE CHIPS (50 lb. bags)
FROM 1.5 - 8.0 FT BGS IN ANNULUS

CASING

#1	20.20'	(SS)
#2	21.05'	(SS)
#3	21.05'	(SS)
#4	21.05'	(SS)
#5	20.25'	(Steel)
#6	14.10'	(steel)

SCREEN

Sump + 20'	25.55	(sump 5.1)
15'	15.25	
10'	10.30	
gasketed 20'	20.65	
	71.75	

TOP OF SEAL DEPTH N/A FT. BGS.

TYPE OF BENTONITE SEAL N/A

TOP OF SAND PACK DEPTH N/A NATURAL FORMATION FT. BGS.

CENTRALIZER (yes / no) - TYPE N/A

TOP OF SCREEN DEPTH 38.25 FT. BGS.
(casing @ ~41.5 FT BGS)

TYPE OF SCREEN 10" WIRE WRAP STAINLESS STEEL

SCREEN SLOT SIZE (in.) 0.040

SIZE OF SAND PACK NATURAL FORMATION

AMOUNT OF SAND —

BOTTOM OF SCREEN DEPTH 104.9 FT. BGS.

BOTTOM OF WELL DEPTH 110.0 FT. BGS.

BOTTOM OF FILTER PACK N/A NATURAL FORMATION FT. BGS.

TYPE AND AMOUNT OF BACKFILL N/A NATURAL FORMATION

110.0 TOTAL DEPTH OF BOREHOLE

NOTE. DEPTHS MEASURED FROM GROUND SURFACE

GROUNDWATER MONITORING WELL EW 3

SITE NAME: AREA 2 SITE R		LOCATION: SAUGET, ILL	
CLIENT: SOLUTIA		SURFACE ELEVATION: —	
GEOLOGIST: M HADDOCK	NORTHING: —	EASTING: —	
DRILLER: E. SKOUBY	STATIC WATER LEVEL: —	COMPLETION DATE: JUNE 2003	
DRILLING COMPANY: LAYNE		DRILLING METHODS: CABLE TOOL	

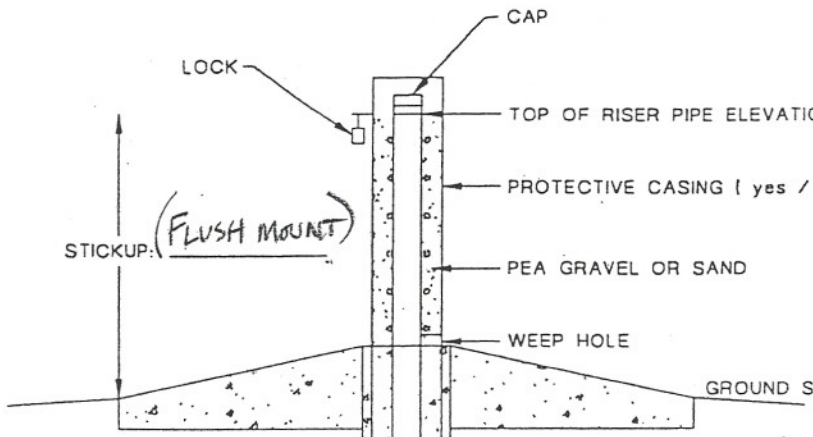

TOP OF RISER PIPE ELEVATION: —

PROTECTIVE CASING (yes / no): —

PEA GRAVEL OR SAND

WEEP HOLE

GROUND SURFACE ELEVATION: —

CONCRETE SEAL DEPTH: 6 FT. BGS.

DIAMETER OF RISER PIPE (in.): 12" ID

DIAMETER OF BOREHOLE (in.): 12.8"

TYPE AND AMOUNT OF ANNULAR SEAL: N/A

TOP OF SEAL DEPTH: N/A FT. BGS.

TYPE OF BENTONITE SEAL: N/A

TOP OF SAND PACK DEPTH: N/A FT. BGS.

CENTRALIZER (yes / no) - TYPE: N/A

TOP OF SCREEN DEPTH: 56.5 FT. BGS.

TYPE OF SCREEN: Johnson wire wrap

SCREEN SLOT SIZE (in.): 0.040

SIZE OF SAND PACK: N/A Natural Formation

AMOUNT OF SAND: N/A

BOTTOM OF SCREEN DEPTH: 126.0 FT. BGS.

BOTTOM OF WELL DEPTH: 131.3 FT. BGS.

BOTTOM OF FILTER PACK: N/A FT. BGS.

TYPE AND AMOUNT OF BACKFILL: N/A

131.3 TOTAL DEPTH OF BOREHOLE

NOTE. DEPTHS MEASURED FROM GROUND SURFACE

GROUNDWATER MONITORING WELL P1S

SITE NAME: SITE R	LOCATION: S & Road - N Piezo Dir
CLIENT: SOLUTIA	SURFACE ELEVATION: —
GEOLOGIST: JAC	NORTHING: — EASTING: —
DRILLER: J CRANK	STATIC WATER LEVEL: — COMPLETION DATE: 6-27-07
DRILLING COMPANY: Roberts	DRILLING METHODS: 6.5" Mud Rotary

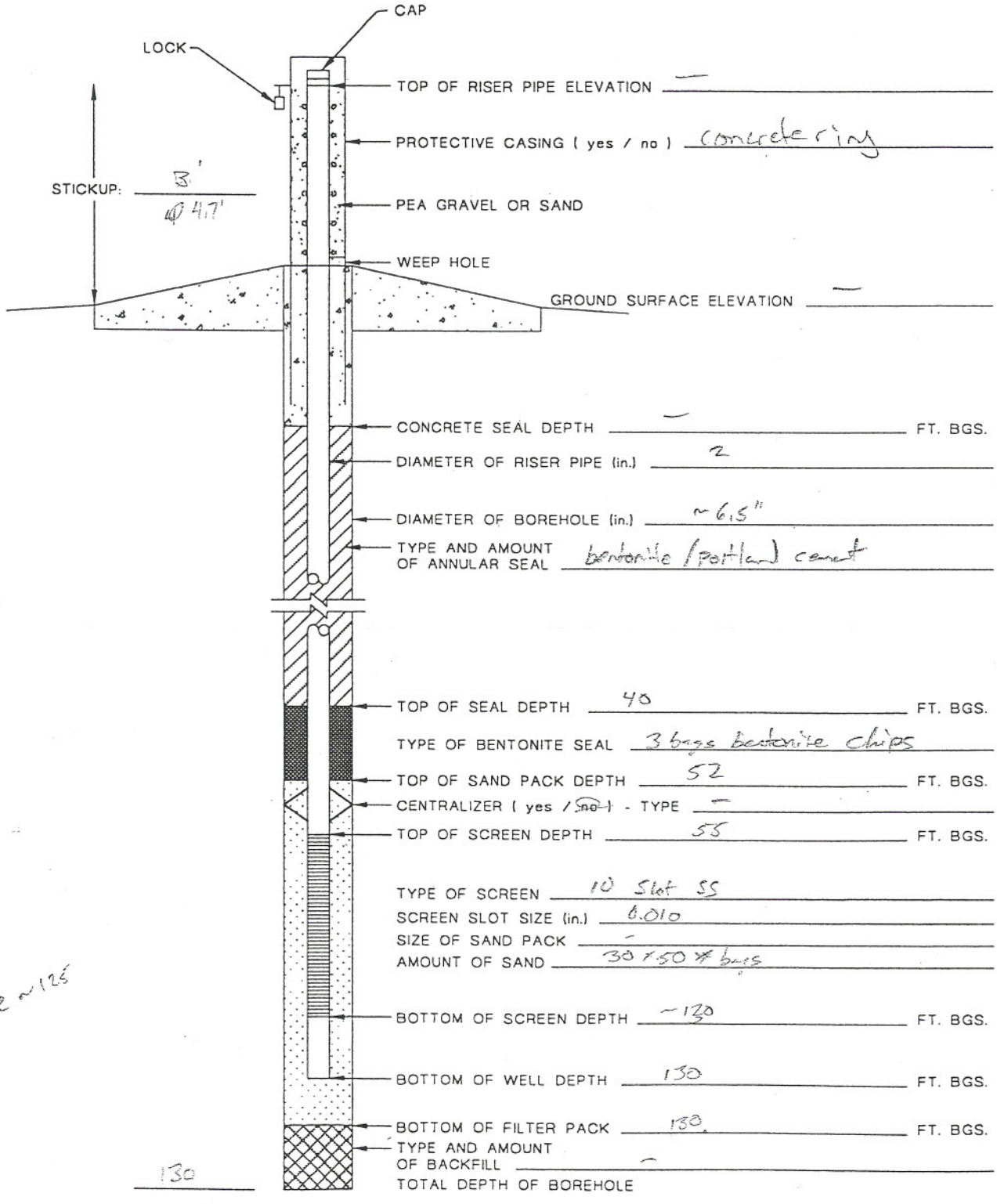

NOTE: DEPTHS MEASURED FROM GROUND SURFACE

GROUNDWATER MONITORING WELL PW

SITE NAME: S.t.e R		LOCATION: South of Concrete wall/In Road	
CLIENT: Solutia		SURFACE ELEVATION: –	
GEOLOGIST: JAP	NORTHING: –	EASTING: –	
DRILLER: J CRANE	STATIC WATER LEVEL: –	COMPLETION DATE: 7-9-03	
DRILLING COMPANY: Roberts		DRILLING METHODS: 6.5" Mud Rotary	

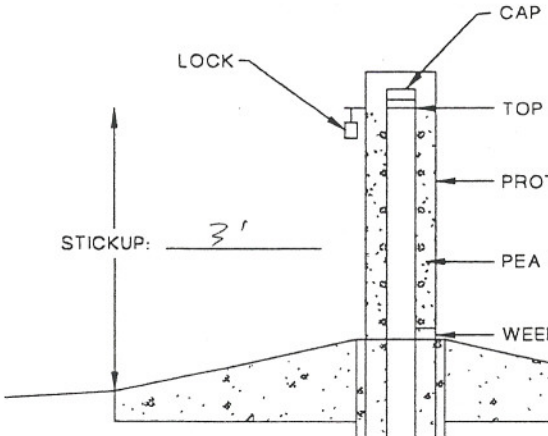

TOP OF RISER PIPE ELEVATION –

PROTECTIVE CASING (yes / no) concrete ring

PEA GRAVEL OR SAND

WEEP HOLE

GROUND SURFACE ELEVATION –

CONCRETE SEAL DEPTH – FT. BGS.

DIAMETER OF RISER PIPE (in.) 2.0"

DIAMETER OF BOREHOLE (in.) 4.0"

TYPE AND AMOUNT OF ANNULAR SEAL Bentonite/Cement Grout

TOP OF SEAL DEPTH 44.0 FT. BGS.

TYPE OF BENTONITE SEAL medium chip

TOP OF SAND PACK DEPTH 54.0 FT. BGS.

CENTRALIZER (yes / (no)) - TYPE No

TOP OF SCREEN DEPTH 57.0 FT. BGS.

TYPE OF SCREEN SS Slot

SCREEN SLOT SIZE (in.) .010

SIZE OF SAND PACK

AMOUNT OF SAND 24 x 50 lbs Bags

BOTTOM OF SCREEN DEPTH 132.0 FT. BGS.

BOTTOM OF WELL DEPTH 132.0 FT. BGS.

BOTTOM OF FILTER PACK 132.0 FT. BGS.

TYPE AND AMOUNT OF BACKFILL 132.0

TOTAL DEPTH OF BOREHOLE 132

NOTE: DEPTHS MEASURED FROM GROUND SURFACE

GROUNDWATER MONITORING WELL P2W

SITE NAME: SITE R GMCS	LOCATION: P2-West	
CLIENT: SOCUTIA	SURFACE ELEVATION: —	
GEOLOGIST: MRE	NORTHING: —	EASTING: —
DRILLER: J CRANK	STATIC WATER LEVEL: —	COMPLETION DATE: 6-16-03
DRILLING COMPANY: Roberts	DRILLING METHODS: 6 3/4" Mud Rotary	

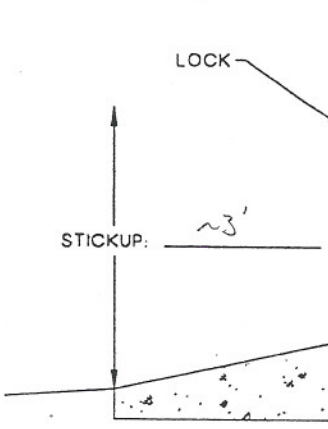

TOP OF RISER PIPE ELEVATION —

PROTECTIVE CASING (yes / no) concrete ring

PEA GRAVEL OR SAND

WEEP HOLE

GROUND SURFACE ELEVATION —

CONCRETE SEAL DEPTH — FT. BGS.

DIAMETER OF RISER PIPE (in.) 2"

DIAMETER OF BOREHOLE (in.) ~7"

TYPE AND AMOUNT OF ANNULAR SEAL bentonite / cement grout

TOP OF SEAL DEPTH ~45 FT. BGS.

TYPE OF BENTONITE SEAL CHIPS

TOP OF SAND PACK DEPTH ~49 FT. BGS.

CENTRALIZER (yes / (no)) - TYPE —

TOP OF SCREEN DEPTH ~52' FT. BGS.

TYPE OF SCREEN 10 Slot SS

SCREEN SLOT SIZE (in.) 0.010

SIZE OF SAND PACK —

AMOUNT OF SAND 26 x 50# bags

BOTTOM OF SCREEN DEPTH ~127 FT. BGS.

BOTTOM OF WELL DEPTH ~127 FT. BGS.

BOTTOM OF FILTER PACK 127 FT. BGS.

TYPE AND AMOUNT OF BACKFILL —

TOTAL DEPTH OF BOREHOLE 127

NOTE: DEPTHS MEASURED FROM GROUND SURFACE

GROUNDWATER MONITORING WELL P2E

SITE NAME: Site P GMCS	LOCATION: P2 - East	
CLIENT: Solutia	SURFACE ELEVATION: —	
GEOLOGIST: MRF	NORTHING: —	EASTING: —
DRILLER: J Crank	STATIC WATER LEVEL: —	COMPLETION DATE: 6-18-03
DRILLING COMPANY: REDI	DRILLING METHODS: 6 3/4" Mud Rotary	

TOP OF RISER PIPE ELEVATION —

PROTECTIVE CASING (yes / no) concrete ring

PEA GRAVEL OR SAND

WEEP HOLE

GROUND SURFACE ELEVATION —

CONCRETE SEAL DEPTH NA FT. BGS.

DIAMETER OF RISER PIPE (in.) 2

DIAMETER OF BOREHOLE (in.) ~7"

TYPE AND AMOUNT OF ANNULAR SEAL bentonite / cement grout

TOP OF SEAL DEPTH ~46 FT. BGS.

TYPE OF BENTONITE SEAL CHIPS

TOP OF SAND PACK DEPTH ~51 FT. BGS.

CENTRALIZER (yes / no) - TYPE —

TOP OF SCREEN DEPTH ~54 FT. BGS.

TYPE OF SCREEN 10 Slot SS

SCREEN SLOT SIZE (in.) 0.010

SIZE OF SAND PACK —

AMOUNT OF SAND 32 x 50# bags

BOTTOM OF SCREEN DEPTH ~129 FT. BGS.

BOTTOM OF WELL DEPTH 129 FT. BGS.

BOTTOM OF FILTER PACK 129 FT. BGS.

TYPE AND AMOUNT OF BACKFILL —

TOTAL DEPTH OF BOREHOLE

NOTE: DEPTHS MEASURED FROM GROUND SURFACE

GROUNDWATER MONITORING WELL P3W

SITE NAME: SITE R	LOCATION: ~	
CLIENT: SCOTIA	SURFACE ELEVATION: ~	
GEOLOGIST: J CLARK	NORTHING: ~	EASTING: ~
DRILLER: J CRANK	STATIC WATER LEVEL: ~	COMPLETION DATE: 7-2-03
DRILLING COMPANY: Roberts	DRILLING METHODS: 5 7/8" Mud Rotary	

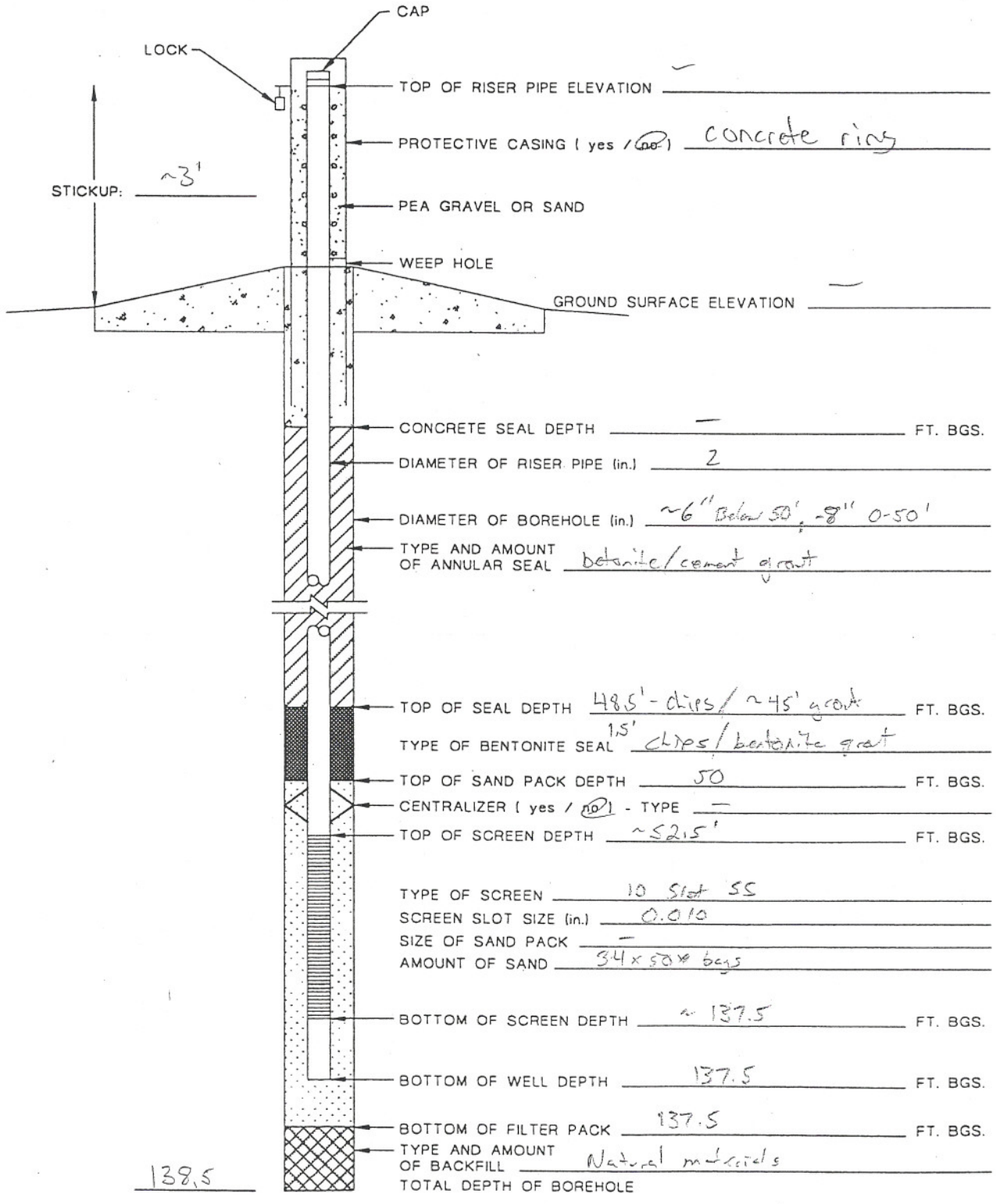

TOP OF RISER PIPE ELEVATION ~

PROTECTIVE CASING (yes / no) concrete ring

PEA GRAVEL OR SAND

GROUND SURFACE ELEVATION ~

CONCRETE SEAL DEPTH ~ FT. BGS.

DIAMETER OF RISER PIPE (in.) 2

DIAMETER OF BOREHOLE (in.) ~6" Below 50', ~8" 0-50'

TYPE AND AMOUNT OF ANNULAR SEAL bentonite/cement grout

TOP OF SEAL DEPTH 48.5' - chips / ~45' grout FT. BGS.

TYPE OF BENTONITE SEAL 1.5' chips / bentonite grout

TOP OF SAND PACK DEPTH 50 FT. BGS.

CENTRALIZER (yes / no) - TYPE ~

TOP OF SCREEN DEPTH ~52.5' FT. BGS.

TYPE OF SCREEN 10 Slot SS

SCREEN SLOT SIZE (in.) 0.010

SIZE OF SAND PACK ~

AMOUNT OF SAND 34 x 50# bags

BOTTOM OF SCREEN DEPTH ~137.5 FT. BGS.

BOTTOM OF WELL DEPTH 137.5 FT. BGS.

BOTTOM OF FILTER PACK 137.5 FT. BGS.

TYPE AND AMOUNT OF BACKFILL Natural materials

138.5 TOTAL DEPTH OF BOREHOLE

NOTE: DEPTHS MEASURED FROM GROUND SURFACE

GROUNDWATER MONITORING WELL P3E

SITE NAME: Site R	LOCATION: —	
CLIENT: Solutia	SURFACE ELEVATION: —	
GEOLOGIST: J Perez	NORTHING: —	EASTING: —
DRILLER: J Crank	STATIC WATER LEVEL: —	COMPLETION DATE: 7-8-03
DRILLING COMPANY: REDI	DRILLING METHODS: 5 7/8" Mud Rotary	

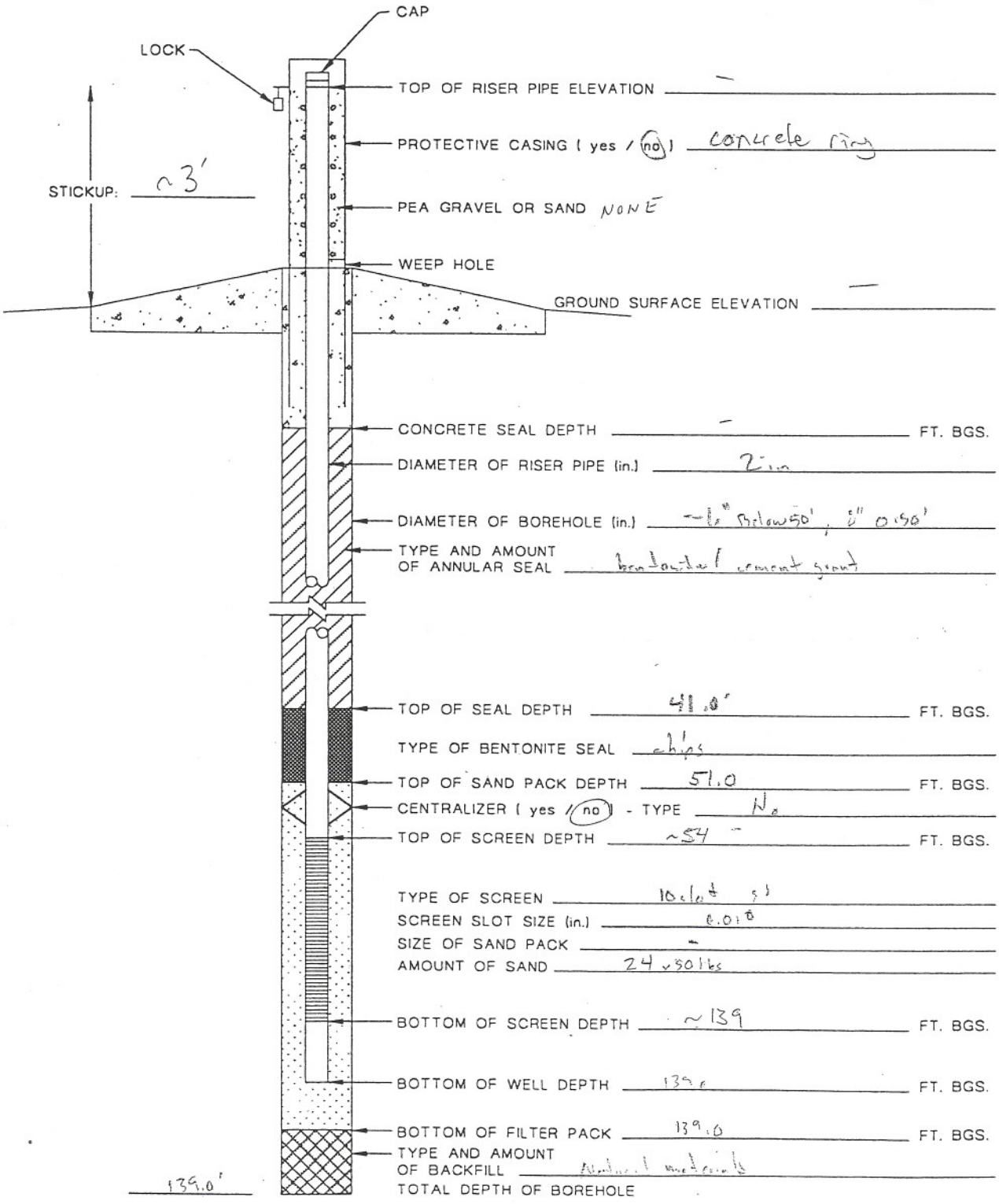

NOTE: DEPTHS MEASURED FROM GROUND SURFACE

GROUNDWATER MONITORING WELL PHW

SITE NAME: Solutia Site R	LOCATION: S end & Std.	
CLIENT: Solutia	SURFACE ELEVATION: —	
GEOLOGIST: MRF	NORTHING: —	EASTING: —
DRILLER: J Crank	STATIC WATER LEVEL: —	COMPLETION DATE:
DRILLING COMPANY: REDI	DRILLING METHODS: 6 3/4" Mud Rotary	

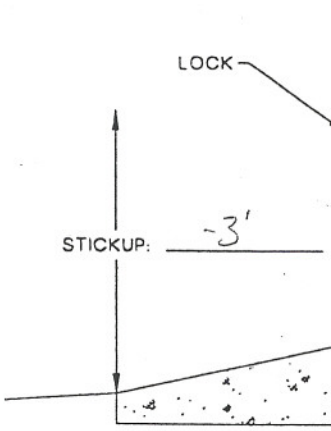

TOP OF RISER PIPE ELEVATION —

PROTECTIVE CASING (yes / (no)) —

PEA GRAVEL OR SAND

WEEP HOLE

GROUND SURFACE ELEVATION —

CONCRETE SEAL DEPTH NA FT. BGS.

DIAMETER OF RISER PIPE (in.) 2"

DIAMETER OF BOREHOLE (in.) ~7"

TYPE AND AMOUNT OF ANNULAR SEAL bentonite / cement grout

TOP OF SEAL DEPTH ~45 FT. BGS.

TYPE OF BENTONITE SEAL chips

TOP OF SAND PACK DEPTH ~50' FT. BGS.

CENTRALIZER (yes / (no)) - TYPE —

TOP OF SCREEN DEPTH ~52.5 FT. BGS.

80' screen

TYPE OF SCREEN 10 Slot SS

SCREEN SLOT SIZE (in.) 0.010

SIZE OF SAND PACK —

AMOUNT OF SAND ~26 x 50# bags

BOTTOM OF SCREEN DEPTH ~132.5 FT. BGS.

BOTTOM OF WELL DEPTH ~132.5 FT. BGS.

BOTTOM OF FILTER PACK ~132.5 FT. BGS.

TYPE AND AMOUNT OF BACKFILL —

~132.5 TOTAL DEPTH OF BOREHOLE

NOTE: DEPTHS MEASURED FROM GROUND SURFACE

GROUNDWATER MONITORING WELL P4E

SITE NAME: Solutia Site R	LOCATION: S end	
CLIENT: Solutia	SURFACE ELEVATION: —	
GEOLOGIST: MRF	NORTHING: —	EASTING: —
DRILLER: J Crank	STATIC WATER LEVEL: —	COMPLETION DATE:
DRILLING COMPANY: Roberts	DRILLING METHODS: 6 3/4" Mud Rotary	

TOP OF RISER PIPE ELEVATION —

PROTECTIVE CASING (yes / (no))

PEA GRAVEL OR SAND

WEEP HOLE

GROUND SURFACE ELEVATION —

CONCRETE SEAL DEPTH NA FT. BGS.

DIAMETER OF RISER PIPE (in.) 2"

DIAMETER OF BOREHOLE (in.) ~7"

TYPE AND AMOUNT OF ANNULAR SEAL bentonite / cement grout

TOP OF SEAL DEPTH ~45 FT. BGS.

TYPE OF BENTONITE SEAL chips

TOP OF SAND PACK DEPTH ~50 FT. BGS.

CENTRALIZER (yes / (no)) - TYPE —

TOP OF SCREEN DEPTH ~52.5 FT. BGS.

TYPE OF SCREEN 10 slot SS

SCREEN SLOT SIZE (in.) 0.010

SIZE OF SAND PACK —

AMOUNT OF SAND ~26 x 50 # bags

BOTTOM OF SCREEN DEPTH ~132.5 FT. BGS.

BOTTOM OF WELL DEPTH ~132.5 FT. BGS.

BOTTOM OF FILTER PACK ~132.5 FT. BGS.

TYPE AND AMOUNT OF BACKFILL —

TOTAL DEPTH OF BOREHOLE

NOTE: DEPTHS MEASURED FROM GROUND SURFACE

APPENDIX B

Grundfos Pump Test Data

DRAFT

GRUNDFOS®

Company name: Grundfos Pumps Corporation USA
Created by: Shawn Chong
Phone: 913.227.3400
Fax: 913.227.3548
Date: 06/03/2003

Position	Count	Description	Single Price
	1	475S300-3	Price on request

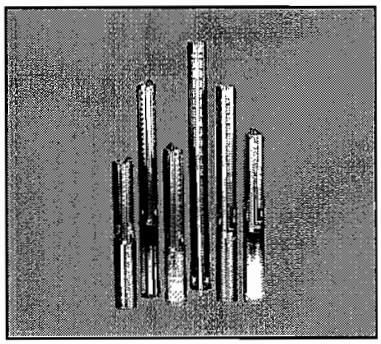

Product No.: 19243003
Multi-stage submersible pump for raw water supply, groundwater lowering and pressure boosting. The pump is suitable for pumping clean, thin, non-agressive liquids without solid particles or fibres.

The pump is made entirely of Stainless steel DIN W.-Nr. 1.4301 DIN W.-Nr. and suitable for horizontal as well as vertical installation.
The pump is fitted with a built-in non-return valve.

The motor is a 3 -phase motor of the canned type with sand shield, liquid-lubricated bearings and pressure equalizing diaphragm.

Technical:

Speed for pump data:	3450 rpm
Approvals on nameplate:	CSA

Materials:

Material, pump:	Stainless steel 1.4301 DIN W.-Nr. 304 AISI
Material, impeller:	Stainless steel 1.4301 DIN W.-Nr. 304 AISI
Material, motor:	Stainless steel 1.4301 DIN W.-Nr. 304 AISI

Installation:

Maximum ambient pressure:	870 psi
Size, pump outlet:	5" NPT
Motor diameter:	6 inch
Minimum borehole diameter:	8" in

Electrical data:

Motor type:	MS6000
Rated power (P2):	30 HP
Mains frequency:	60 Hz
Rated voltage:	3 x 208-230 V
Starting method:	DOL
Rated current:	101-97,0 A
Service factor:	1.15
Rated current:	-93 A
Starting current:	474 A

GRUNDFOS®

Company name: Grundfos Pumps Corporation USA
Created by: Shawn Chong
Phone: 913.227.3400
Fax: 913.227.3548
Date: 06/03/2003

Position	Count	Description	Single Price
		Cos phi - power factor: 0,87-0,82 Rated speed: 3450-3480 rpm Full load motor efficiency: 85.0 % Enclosure class (IEC 34-5): IP58 Insulation class (IEC 85): F Built-in temp. transmitter: Y	

GRUNDFOS

Company name: Grundfos Pumps Corporation USA
Created by: Shawn Chong
Phone: 913.227.3400
Fax: 913.227.3548
Date: 06/03/2003

Description	Value
Product Number	19243003
Product name	475S300-3
EAN number	5700390085223
Pump Number	19240003
Motor Number	78305518
Stages	3
Tempurature Control	Y
Start. method	DOL
Motor diameter	6 inch
IP Class	IP58
Insulation	F
P2	30 HP
Phase	3
U	208-230 V
Rated current	101-97,0 A
Service factor	1,15
I start	474 A
n	3450-3480 rpm
Eff. 1/1	85,0 %
f	60 Hz
Model	B
Motor type	MS6000
n	3450 rpm
Impeller	Stainless steel
	1.4301 DIN W.-Nr.
	304 AISI
Sales region	Namreg
Cos phi	0,87-0,82
Motor protection	NONE
Thermal protec	EXT.
Pump outlet	5" NPT
Max flow	653 US GPM
Approvals	CSA
I max	93 A
Pump	Stainless steel
Motor	Stainless steel
	1.4301 DIN W.-Nr.
	304 AISI
Pump	1.4301 DIN W.-Nr.
	304 AISI
Axial load max	4410 lb
Ambient pressure maximum	870 psi
Applic. motor	NEMA
Valve	Y
Borehole	8" in
Min flow	65.2 US GPM
KVA code	G
Starter	4 1/2
Heather	K87

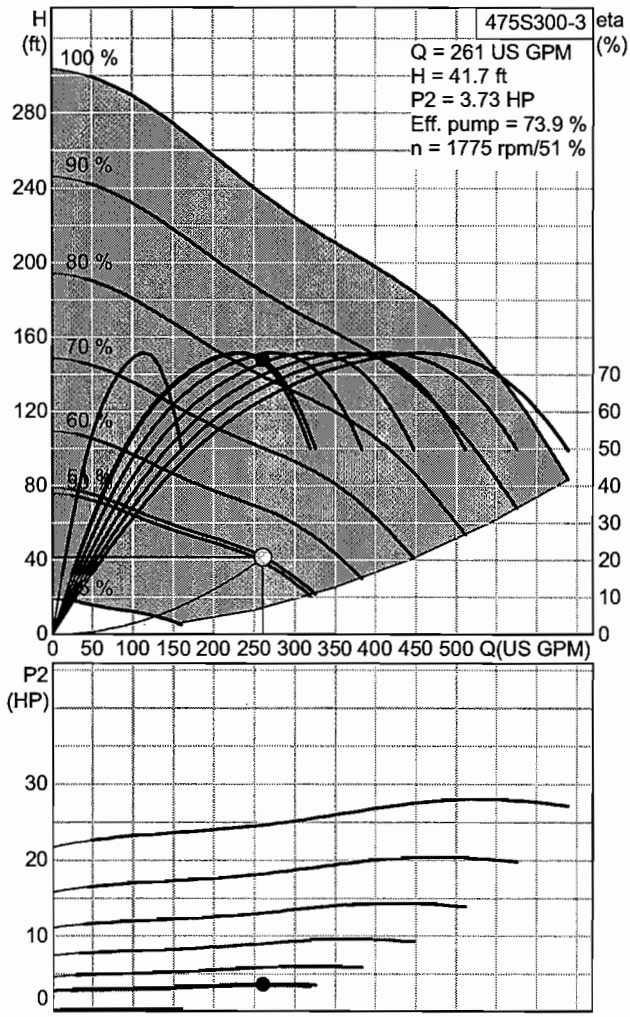

GRUNDFOS®

Company name: Grundfos Pumps Corporation USA
Created by: Shawn Chong
Phone: 913.227.3400
Fax: 913.227.3548
Date: 06/03/2003

19243003 475S300-3

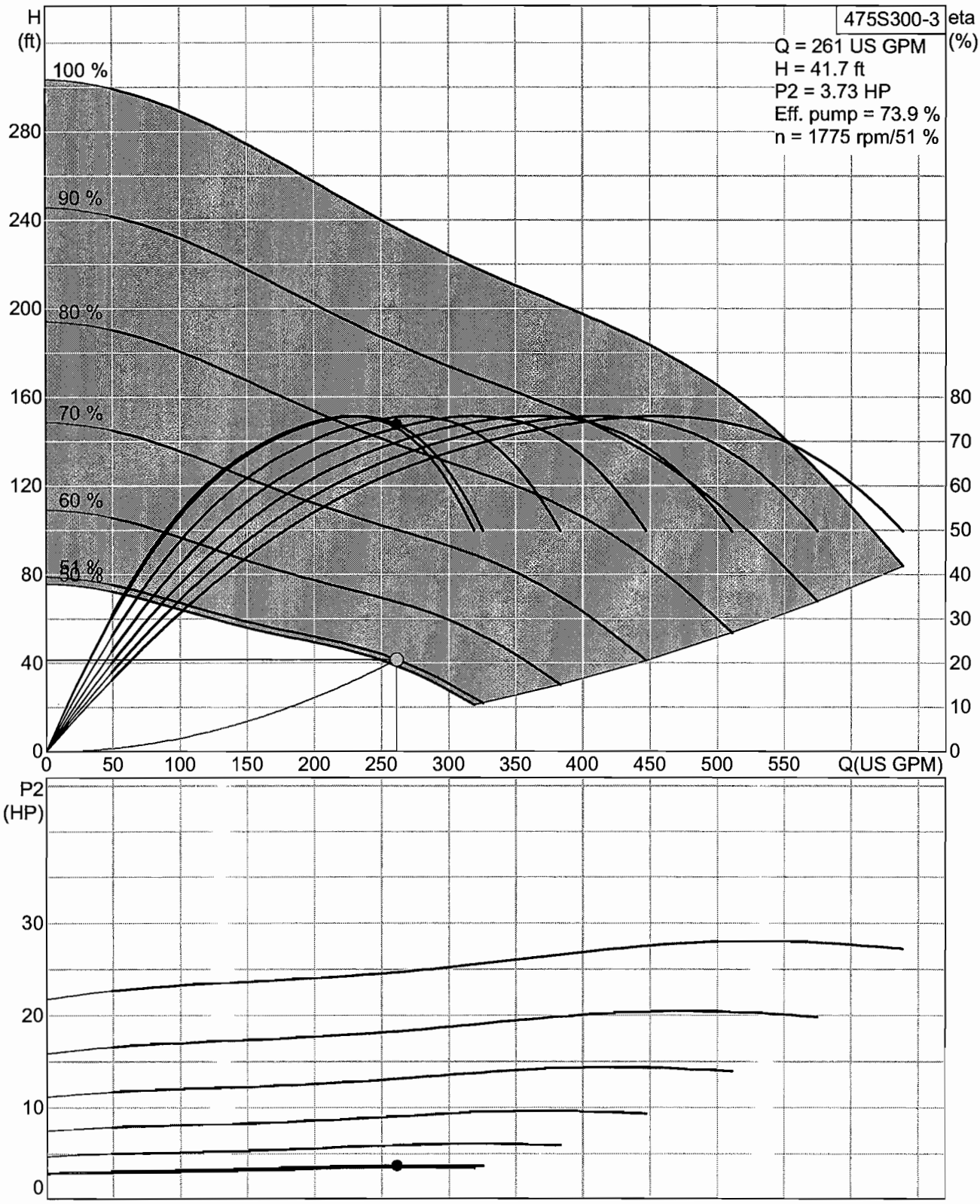

GRUNDFOS®

Company name: Grundfos Pumps Corporation USA
Created by: Shawn Chong
Phone: 913.227.3400
Fax: 913.227.3548
Date: 06/03/2003

19243003 475S300-3

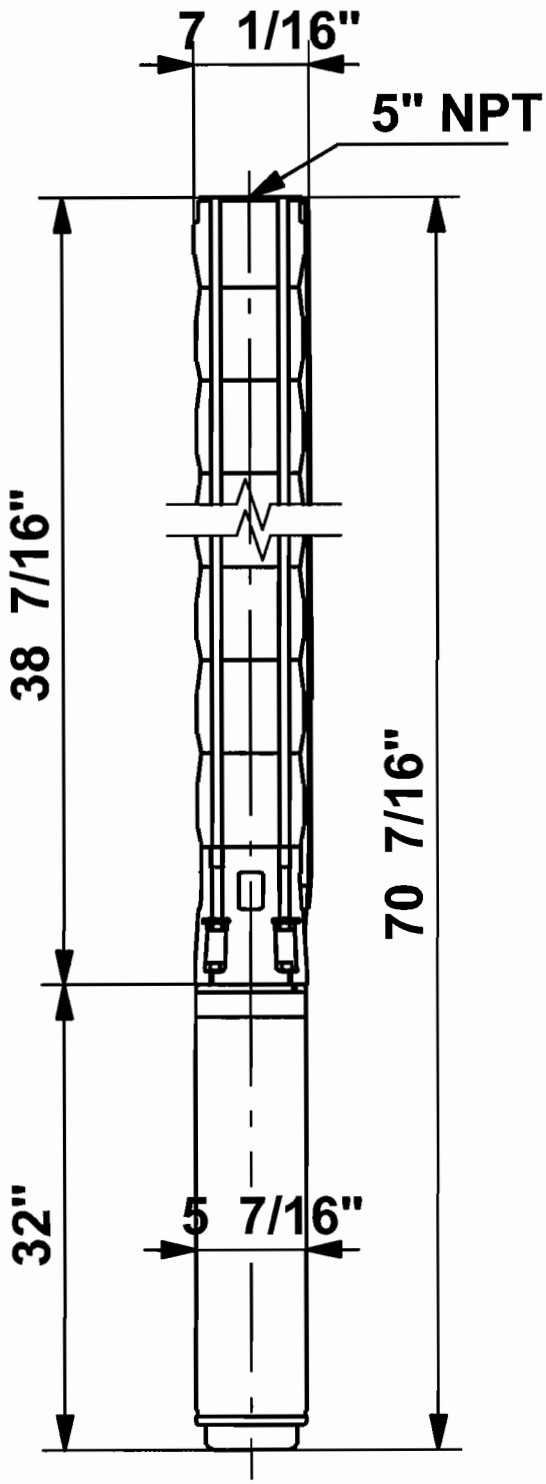

Note! All units are in [mm] unless others are stated.

GRUNDFOS®

Company name: Grundfos Pumps Corporation USA
Created by: Shawn Chong
Phone: 913.227.3400
Fax: 913.227.3548
Date: 06/02/2003

Position	Count	Description	Single Price
	1	625S400-2-A	Price on request

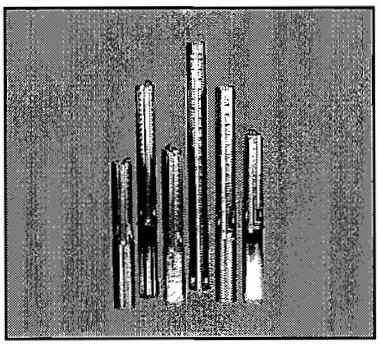

Product No.: 17BG19A2
Multi-stage submersible pump for raw water supply, groundwater lowering and pressure boosting. The pump is suitable for pumping clean, thin, non-agressive liquids without solid particles or fibres.

The pump is made entirely of Stainless steel DIN W.-Nr. 1.4301 DIN W.-Nr. and suitable for horizontal as well as vertical installation.
The pump is fitted with a built-in non-return valve.

The motor is a 3 -phase motor of the canned type with sand shield, liquid-lubricated bearings and pressure equalizing diaphragm.

Liquid:

Max liquid t at 0.08 m/sec:	86 °F

Technical:

Rated flow:	625 US GPM
Rated head:	165 ft

Materials:

Material, pump:	Stainless steel 1.4301 DIN W.-Nr. 304 AISI
Material, impeller:	Stainless steel 1.4301 DIN W.-Nr. 304 AISI
Material, motor:	Stainless steel 1.4301 DIN W.-Nr. 304 AISI

Installation:

Size, pump outlet:	6" NPT
Motor diameter:	6" inch
Minimum borehole diameter:	10" in

Electrical data:

Motor type:	Super - 6"
Rated power (P2):	40 HP
Mains frequency:	60 Hz
Rated voltage:	3 x 460 V
Starting method:	DOL
Rated current:	53.5 A
Service factor:	1.15

GRUNDFOS®

Company name: Grundfos Pumps Corporation USA
Created by: Shawn Chong
Phone: 913.227.3400
Fax: 913.227.3548
Date: 06/02/2003

Position	Count	Description	Single Price
		Rated current: -62 A Starting current: 397 A Cos phi - power factor: 0.86 Rated speed: 3450 rpm Full load motor efficiency: 83.2 %	

GRUNDFOS

Company name: Grundfos Pumps Corporation USA
Created by: Shawn Chong
Phone: 913.227.3400
Fax: 913.227.3548
Date: 06/02/2003

Description	Value
Product Number	17BG19A2
Product name	625S400-2-A
EAN number	5700393567917
Pump Number	17BG00A2
Motor Number	823228F
Stages	2
Impeller reduc.	A
Start. method	DOL
Motor diameter	6" inch
P2	40 HP
Phase	3
U	460 V
Rated current	53.5 A
Service factor	1,15
I start	397 A
n	3450 rpm
Eff. 1/1	83,2 %
f	60 Hz
Rated flow	625 US GPM
Rated head	165 ft
Model	D
Motor type	Super - 6"
Impeller	Stainless steel
	1.4301 DIN W.-Nr.
	304 AISI
Sales region	Namreg
Cos phi	0,86
Motor protection	None
Thermal protec	External
Pump outlet	6" NPT
Max flow	859 US GPM
I max	62 A
Pump	Stainless steel
Motor	Stainless steel
	1.4301 DIN W.-Nr.
	304 AISI
Pump	1.4301 DIN W.-Nr.
	304 AISI
Axial load max	6010 lb
Applic. motor	Franklin
Valve	Y
Borehole	10" in
Min flow	85.9 US GPM
KVA code	J
Standard	150 A
Delay	70 A
Starter	3
Heather	K77

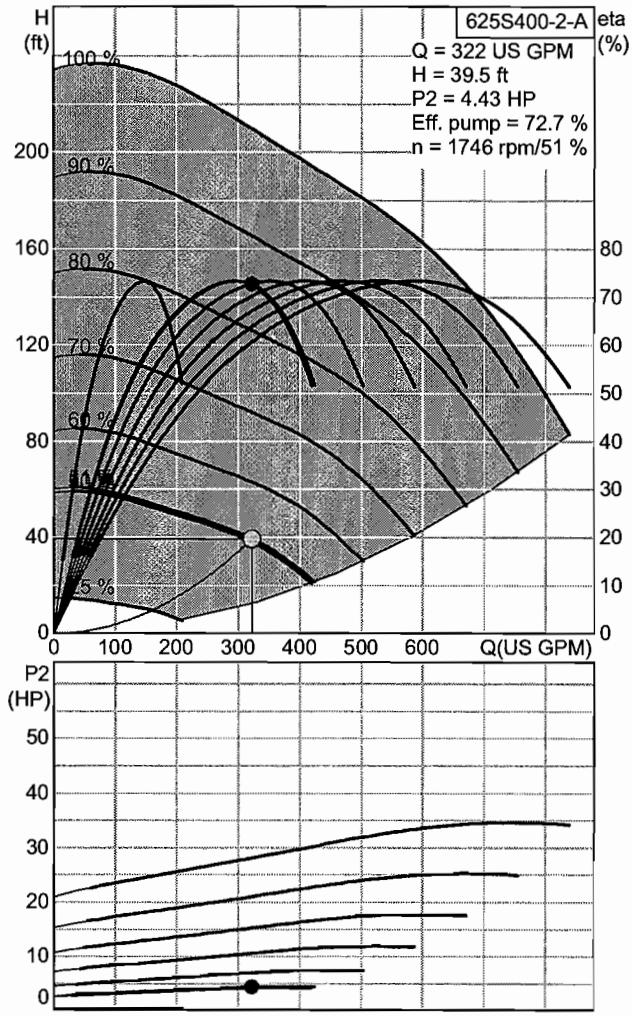

GRUNDFOS®

Company name: Grundfos Pumps Corporation USA
Created by: Shawn Chong
Phone: 913.227.3400
Fax: 913.227.3548
Date: 06/02/2003

17BG19A2 625S400-2-A

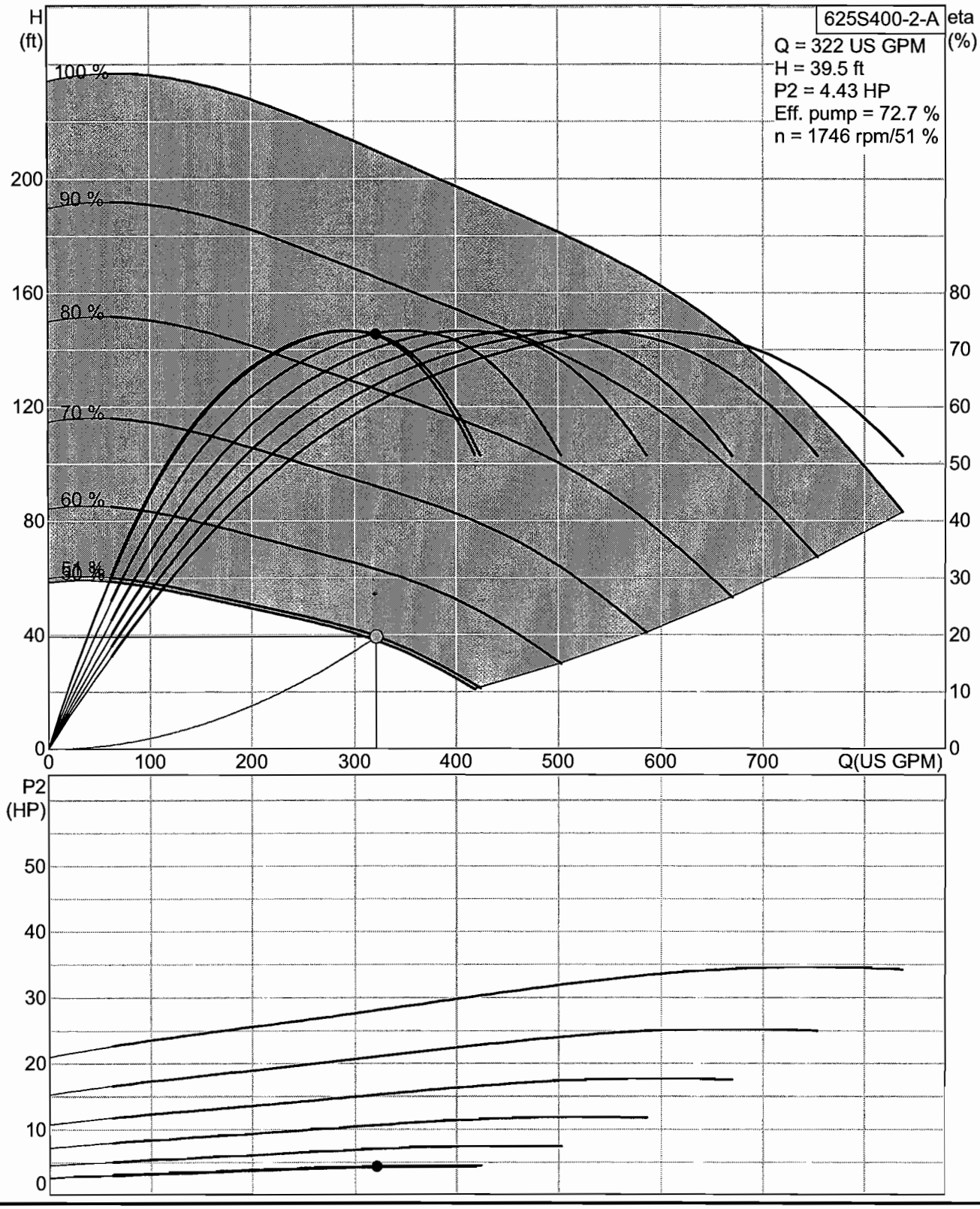

GRUNDFOS®

Company name: Grundfos Pumps Corporation USA
Created by: Shawn Chong
Phone: 913.227.3400
Fax: 913.227.3548
Date: 06/02/2003

17BG19A2 625S400-2-A

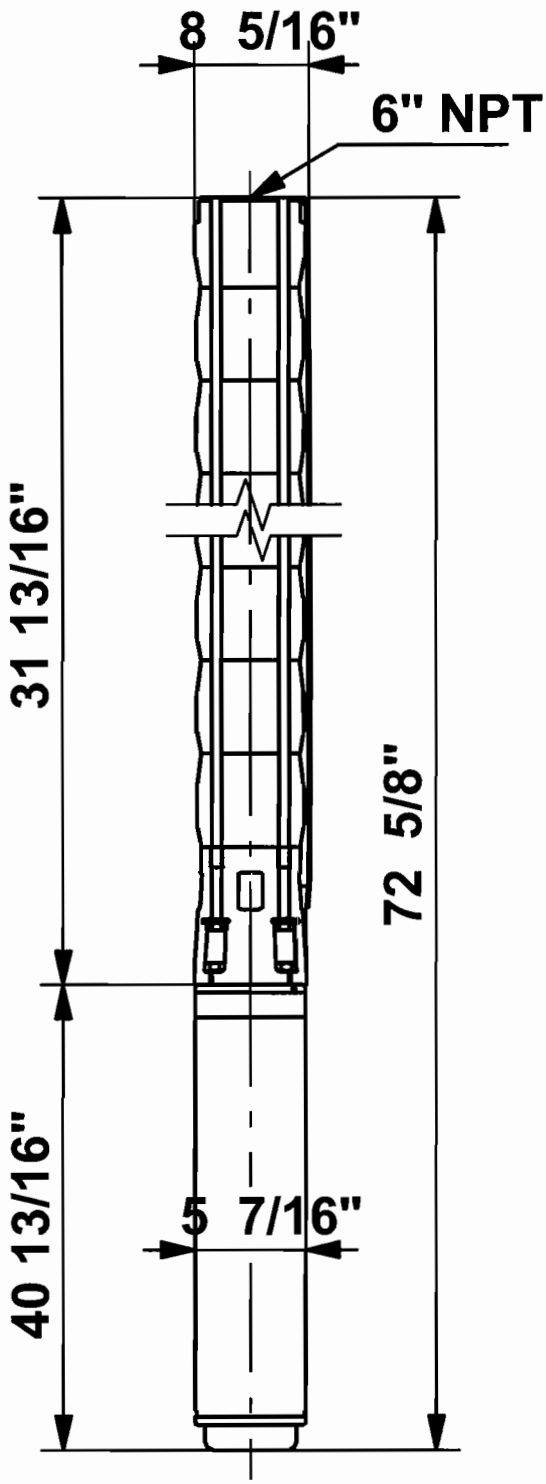

Note! All units are in [mm] unless others are stated.

APPENDIX C

Manufacturer's Information

DRAFT

APPENDIX C Manufacturer's Information

Contents of Appendix C

- American Sigma (Hach) 900 MAX All Weather Refrigerated Sampler Instrument Manual, Cat. 8854, July 2002, Ed. 4
- American Sigma (Hach) 900 MAX All Weather Refrigerated Sampler Thermal System, Service Manual, Cat No. 3540-04, July 2002, Ed. 3
- Baker Monitor Pitless Adapter Product Data
- Belden VFD Cable Data
- Eurotherm Model MV408 Current Input Isolating Signal Conditioner
- Federal Signal Group, Telephone Activated Remote Control, Model 300RC
- Flowserve/Pleuger Submersible Motor Pump Installation, Operation and Maintenance Manual
- Franklin Electric Submersible Motors Manual
- General Electric 230/208 Volt Window/Wall Mount Heat & Cool Unit Specifications
- General Electric Room Air Conditioners Owner's Manual and Installation Instructions
- Geokon 4500HD Heavy Duty Pressure Transducer Specifications
- Geomation Measurement and Control Systems 2380 MCU Technical Manual
- HD Supply Waterworks Gate Valve Specifications
- Invensys Action Pak AP4390/AP4391/AP4392
- Krohne Installation Instructions, Aquaflux F Electromagnetic Flowmeters
- Krohne Signal Converter Data
- Limitorque LY-MOD 20 Integral Control Diagram Dwg 17-500-0008-3, Rev A.
- Limitorque PT20SD Position Transmitter Calibration Instructions
- Limitorque (Mead O'Brien, Inc.) Dwg No. I33762 (dimensioned drawing of Milliken 6" valve with Limitorque Actuator)
- Limitorque Dwg 03-459-0077-1, Rev E (1-22-92), LY-1001 Unit with A1 Top Mount Integral Compartment
- Limitorque Actuation Systems, Modutronic 20 II, Installation & Maintenance Manual
- Limitorque LY Series, Installation & Maintenance for LY 1001, LY 2001, and LY 3001
- Milliken Valve Co. Dwg. S 49071, 3-89, Dimensions of Millcentric Plug Valves
- Milliken Eccentric Plug Valve Product Data
- Millcentric (Plug Valves) Operations and Maintenance Manual, Series 600
- ProAir Air Conditioner Manufacturer's Data (VFD)
- Raychem Industrial Heat-Tracing Installation and Maintenance Manual
- Rockwell Automation (Reliance Electric/Allen Bradley) SP600 AC Drive User Manual, Version 1.0, 6SB401 Series, 460 VAC (20 HP to 100 HP), Instruction Manual D2-3501-1
- Sensaphone 2000 Engineering Specifications
- Val-Matic Wastewater Air/Vacuum Valve Drawing No. VM-302A
- Val-Matic WW Air/Vacuum Valve with Backwash Accessories Dwg No. VM-302ABW
- Val-Matic Wastewater Air/Vacuum Valve Operation, Maintenance & Installation Manual

DRAFT

APPENDIX C Manufacturer's Information

- Val-Matic Wastewater Air/Vacuum Valve Specification

DRAFT

WASTEWATER AIR/VACUUM VALVE
Val-Matic Specification

1 Scope
1.1 This specification is intended to cover the design, manufacture, and testing of 1 in. (25 mm) through 8 in. (200 mm) Wastewater Air/Vacuum Valves suitable for pressures up to 150 psig (1000 kPa).
1.2 Wastewater Air/Vacuum valves shall be fully automatic float operated valves designed to exhaust large quantities of air during the filling of a piping system and close upon liquid entry. The valve shall re-open during draining or if a negative pressure occurs. [NOTE: See Wastewater Air Release Valves for releasing air during system operation and Wastewater Combination Air Valves for both air release and air/vacuum functions.]

2 Standards, Approvals and Verification
2.1 Valves shall be manufactured and tested in accordance with American Water Works Association (AWWA) Standard C512.
2.2 Manufacturer shall have a quality management system that is certified to ISO 9001:2000 by an accredited, certifying body.

3 Connections
3.1 Valve sizes 3 in.(75 mm) and smaller shall have full size NPT inlets and outlets equal to the nominal valve size with a 2 in. (50 mm) inlet on 1 in. (25 mm) valves. The body inlet connection shall be hexagonal for a wrench connection. The valve body shall have 2" NPT cleanout and 1" NPT drain connections on the side of the casting.
3.2 Valve sizes 4 in. (100 mm) and larger shall have bolted flange inlets with NPT outlets. Flanges shall be in accordance with ANSI B16.1 for Class 125 iron flanges.
3.3 The valve shall have three additional NPT connections for the addition of backwash accessories.

4 Design
4.1 The extended valve body shall provide a through flow area equal to the nominal valve size. A bolted cover with alloy screws and flat gasket shall be provided to allow for maintenance and repair.
4.2 Tandem floats shall be unconditionally guaranteed against failure including pressure surges. The float assembly shall have a hexagonal guide shaft supported in the body by circular bushings to prevent binding from debris. The upper float shall be protected against direct water impact by an internal baffle.
4.3 The resilient seat shall provide drop tight shut off to the full valve pressure rating. The seat shall be a minimum of .5 in. (12 mm) thick on 2 in. (50 mm) and larger valves and secured in such a manner as to prevent distortion.
4.4 On valve sizes 4 in. (100 mm) and larger, the cover shall be fitted to the valve body by means of a machined register to maintain concentricity between the top and bottom guide bushings at all times. The tandem float shall be double guided with a guide shaft extending through the float. A resilient bumper shall be provided to cushion the float during sudden opening conditions.

5 Materials
5.1 The valve body, cover, and baffle shall be constructed of ASTM A126 Class B cast iron.
5.2 The float, guide shafts, and bushings shall be constructed of Type 316 stainless steel. Non-metallic guides and bushings are not acceptable. Resilient seats shall be Buna-N.

6 Options
6.1 A flanged or screwed outlet connection shall be provided when specified for vault piping.
6.2 An optional Regulated Exhaust Device shall be provided when specified to reduce pressure surges due to column separation or rapid changes in velocity and pressure in the pipeline.
6.2.1 The Regulated Exhaust Device shall be mounted on the outlet of the Wastewater Air/Vacuum Valve, allow free air flow in and out of the valve, close upon rapid air exhaust, and control the air exhaust rate to reduce pressure surges.
6.2.2 The device shall have a threaded or flanged globe-style body with a center guided disc and seat assembly. The disc shall have threaded holes to provide adjustment of the air exhaust rate thuough the valve. The holes shall provide for a flow area of 5% of the nominal valve size.
6.2.3 The material of the body shall be consistent with the Air Valve. The seat and disc shall be ASTM A351 Grade CF8M stainless steel.
6.3 Backwash accessories shall be furnished when specified and shall consist of an inlet shut-off valve, a blow-off valve, a clean water inlet valve, rubber supply hose, and quick disconnect couplings. Accessory valves shall be quarter-turn, full ported bronze ball valves.
6.4 Optional body materials include ASTM A536 Grade 65-45-12 ductile iron, ASTM A351 Grade CF8M stainless steel, and ASTM B584 Alloy C83600 cast bronze.

7 Manufacture
7.1 The manufacturer shall demonstrate a minimum of five (5) years experience in the manufacture of wastewater air valves. When requested, the manufacturer shall provide test certificates, dimensional drawings, parts list drawings, and operation and maintenance manuals.
7.2 The exterior of the valve shall be coated with a universal alkyd primer.
7.3 Wastewater Air/Vacuum Valves shall be Series 300 as manufactured by Val-Matic and Manufacturing Corporation, Elmhurst, Il, USA or approved equal.

APPENDIX C

Manufacturer's Information

American Sigma (Hach) 900 MAX
All Weather Refrigerated Sampler Instrument Manual,
Cat. 8854, July 2002, Ed. 4

DRAFT

Cat. No. 8854

900 MAX All Weather Refrigerated Sampler

Instrument Manual

July 2002, Ed. 4

Cat. No. 8854

900 MAX All Weather Refrigerated Sampler

Instrument Manual

© American Sigma, 2002. All rights reserved. Printed in the U.S.A.
eac 07/02 4ed

Table of Contents

Table of Contents 3
Safety Precautions 7
Specifications 10

Section 1 Introduction 15
1.1 Controller Cover 15
1.2 Controller Compartment Heater 15
1.3 Refrigeration Compartment Door 15
1.4 Interface Connectors 16
    1.4.1 Receptacle Caps 17
1.5 Front Panel 17
    1.5.1 Keypad Description 18
    1.5.2 Liquid Crystal Display 19
    1.5.3 Internal Humidity Indicator 20

INSTALLATION 21

Section 2 Installation 23
2.1 Unpacking the Instrument 23
2.2 Selecting the Installation Site 23
2.3 Installing the 900 MAX All Weather Refrigerated Sampler 24
2.4 Installing the Pump Tube in the Sensor Body 25
    2.4.1 Attaching the Intake Line 26
    2.4.2 Setting Up the Intake Line and Strainer 27
2.5 Choosing Bottle and Retainer Configurations 28
2.6 Setting Up the Bottles 29
    2.6.1 One-Bottle Sampling 29
    2.6.2 Two- and Four-bottle Sampling 29
    2.6.3 Eight-, 12-, or 24-bottle Sampling 29
2.7 Installing the Distributor 30
    2.7.1 Distributor Arm Alignment 31
2.8 Installing the Full-Bottle Shut-Off Device 32
2.9 Power Connections 32
2.10 Auxiliary Receptacle Pin Identification 33
    2.10.1 Splitter Interface 33
2.11 Thermal Control 34

OPERATION 35

Section 3 Basic Programming Setup 37
3.1 Initial Power-Up of Sampler 37
3.2 Basic Programming Setup 37
3.3 Advanced Sampling 50

Table of Contents

Section 4 Sensor Setup 63
4.1 Downlook Ultrasonic Sensor 63
4.1.1 Downlook Ultrasonic Sensor Connection 63
4.1.2 Downlook Ultrasonic Sensor Programming 63
4.1.3 Downlook Ultrasonic Sensor Calibration 63
4.2 Submerged Area/Velocity Sensor 65
4.2.1 Submerged Area/Velocity Sensor Connection 65
4.2.2 Submerged Area/Velocity Sensor Programming 66
4.2.3 Submerged Area/Velocity Sensor Calibration 66
4.3 Submerged Pressure Sensor 68
4.3.1 Submerged Pressure Sensor Connection 68
4.3.2 Submerged Pressure Sensor Programming 68
4.3.3 Submerged Pressure Sensor Calibration 68
4.4 Thermal Sensor 70
4.4.1 Thermal Sensor Programming 70
4.4.2 Thermal Sensor Calibration 70

Section 5 Optional Device Installation 73
5.1 Rain Gauge 73
5.1.1 Rain Gauge Programming 74
5.2 pH Probe 74
5.2.1 pH Probe Connection 74
5.2.2 pH Probe Programming 75
5.2.3 pH Probe Calibration 76
5.3 ORP Probe 77
5.3.1 ORP Probe Connection 77
5.3.2 ORP Probe Programming 77
5.3.3 ORP Probe Calibration 78
5.4 Dissolved Oxygen Probe 79
5.4.1 Dissolved Oxygen Probe Connection 79
5.4.2 Dissolved Oxygen Probe Programming 79
5.4.3 Dissolved Oxygen Probe Temperature Programming 79
5.4.4 Dissolved Oxygen Probe Calibration 80
5.5 Conductivity Probe 81
5.5.1 Conductivity Probe Connection 81
5.5.2 Conductivity Probe Programming 81
5.5.3 Conductivity Temperature Programming 81
5.5.4 Conductivity Probe Calibration 82

Section 6 Communication Setup 85
6.1 RS232 Cable 85
6.1.1 RS232 Connection 85
6.1.2 RS232 Programming 85
6.2 Modem 86
6.2.1 Modem Connection 86
6.2.2 Modem Programming 86
6.3 4–20 mA Option 93
6.3.1 4–20 mA Programming 94

6.3.2 4–20 mA Calibration 95
6.4 Alarm Relays 96
6.4.1 Alarm Relays Connection 96
6.4.2 Alarm Relays Programming 98
6.5 Analog Inputs 100
6.5.1 Analog Inputs Connection 100
6.5.2 Analog Inputs Programming 100

MAINTENANCE 103

Section 7 Maintenance 105
7.1 Cleaning the Sampler 105
7.1.1 Cleaning the Refrigerator 105
7.1.2 Cleaning the Sampler Cabinet 105
7.1.3 Cleaning the Sample Bottles 105
7.1.4 Cleaning the Intake Tubing and Pump Tubing 105
7.1.5 No Lubrication Required 105
7.2 Pump Tubing Maintenance 106
7.2.1 Tubing Life Estimates 106
7.2.2 Replacing Pump Tubing 107
7.3 Upgrades, Repairs, General Maintenance 107
Electrostatic Discharge (ESD) Considerations 107
7.4 Internal Maintenance Items 108
7.5 Removing and Opening the Controller 108
7.6 Re-installing the Bottom Panel 109
7.7 Circuit Board Identification 109
7.8 Replacing the Fuse 112
7.9 Motor/Gear Box 112
7.10 Internal Desiccant Module 112
7.10.1 Internal Case Humidity Indicator 112
7.11 Memory Battery 113

Appendix A Quick Start Guides 115
900 MAX All Weather Refrigerated Sampler Main Menu Flow Chart 115
900 MAX All Weather Refrigerated Sampler Setup Flow Chart 116
900 MAX All Weather Refrigerated Sampler Options Flow Chart 117
900 MAX All Weather Refrigerated Sampler Advanced Sampling Flow Chart 118
900 MAX All Weather Refrigerated Sampler Alarms Flow Chart 119
900 MAX All Weather Refrigerated Sampler Calibration Flow Chart (1 of 2) 120
900 MAX All Weather Refrigerated Sampler Calibration Flow Chart (2 of 2) 121

Appendix B Programming Features 123
Review All Items 123
Running a Program 123
Displaying Data 123
Selecting the Channel 124
Tabular or Graph Format 124
Graph Manipulation 125

Table of Contents

Graphic Display Averaging 125
Sample History 125
Options Menu Features 126
Setting the Time and Date 126
Volume Calibration 126
Data Log 128
Logging Intervals 129
Dynamic Memory Allocation 130
Data Logging Configuration 131
Diagnostics 131
Load Program 135
Screen Saver Mode 136
Flow Totalizer 136

Appendix C Troubleshooting and Error Messages 139
Error Messages 139
Trouble Alarm Conditions, Causes, and Solutions 141
Downlook Ultrasonic Sensor Troubleshooting 142
pH Troubleshooting 143
900 MAX All Weather Refrigerated Sampler Troubleshooting Issues 144

Appendix D How to Calculate Pulses/Counts 145

Appendix E Assembly Drawings 149
900 MAX All Weather Refrigerated Sampler Assembly Drawing (1 of 7) 149
900 MAX All Weather Refrigerated Sampler Assembly Drawing (2 of 7) 150
900 MAX All Weather Refrigerated Sampler Assembly Drawing (3 of 7) 151
900 MAX All Weather Refrigerated Sampler Assembly Drawing (4 of 7) 152
900 MAX All Weather Refrigerated Sampler Assembly (5 of 7) 153
900 MAX All Weather Refrigerated Sampler Assembly Drawing (6 of 7) 154
900 MAX All Weather Refrigerated Sampler Assembly Drawing (7 of 7) 155

GENERAL INFORMATION 157
Parts and Accessories 159
Ordering and Technical Support 165
Repair Service 166
Warranty 167
Index 169

Please read this entire manual before unpacking, setting up, or operating this instrument.

Pay particular attention to all danger and caution statements. Failure to do so could result in serious injury to the operator or damage to the equipment.

To ensure the protection provided by this equipment is not impaired, do not use or install this equipment in any manner other than that which is specified in this manual.

Use of Hazard Information

If multiple hazards exist, this manual will use the signal word (Danger, Caution, Note) corresponding to the greatest hazard.

DANGER
Indicates a potentially or imminently hazardous situation which, if not avoided, could result in death or serious injury.

CAUTION
Indicates a potentially hazardous situation that may result in minor or moderate injury.

NOTE
Information that requires special emphasis.

Precautionary Labels

Read all labels and tags attached to the instrument. Personal injury or damage to the instrument could occur if not observed.

	This symbol, if noted on the instrument, references the instruction manual for operation and/or safety information.
	This symbol, when noted on a product enclosure or barrier, indicates that a risk of electrical shock and/or electrocution exists and indicates that only individuals qualified to work with hazardous voltages should open the enclosure or remove the barrier.
	This symbol, when noted on the product, identifies the location of a fuse or current limiting device.
	This symbol, when noted on the product, indicates that the marked item can be hot and should not be touched without care.
	This symbol, when noted on the product, indicates the presence of devices sensitive to Electro-static Discharge and indicates that care must be taken to prevent damage to them.

	This symbol, when noted on the product, identifies a risk of chemical harm and indicates that only individuals qualified and trained to work with chemicals should handle chemicals or perform maintenance on chemical delivery systems associated with the equipment.
	This symbol, if noted on the product, indicates the need for protective eye wear.
	This symbol, when noted on the product, identifies the location of the connection for Protective Earth (ground).

Hazardous Locations

The 900 MAX All Weather Refrigerated Sampler is not approved for use in hazardous locations as defined in the National Electrical Code.

DANGER
Although some Sigma products are designed and certified for installation in hazardous locations as defined by the National Electrical Code, many Sigma products are not suitable for use in hazardous locations. It is the responsibility of the individuals who are installing the products in hazardous locations to determine the acceptability of the product for the environment. Additionally, to ensure safety, the installation of instrumentation in hazardous locations must be per the manufacturer's control drawing specifications. Any modification to the instrumentation or the installation is not recommended and may result in life threatening injury and/or damage to facilities.

DANGER
Bien que certains produits Sigma soient conçus et certifiés pour être installés dans des endroits dangereux tels que définis par le National Electric Code, de nombreux produits Sigma ne conviennent pas pour de tels endroits. Il relève de la responsabilité des personnes qui placent les produits dans des endroits dangereux de déterminer s'ils sont adaptés à cet environnement. En outre, à des fins de sécurité, le placement de machines dans des endroits dangereux doit s'effectuer dans le respect des consignes des schémas de contrôle du fabricant. Toute modification apportée aux machines ou tout déplacement de celles-ci est déconseillé, car susceptible de provoquer des accidents matériels et/ou corporels.

PELIGRO
Aunque algunos productos Sigma están diseñados y homologados para su instalación en entornos peligrosos, entendidos éstos conforme a la definición del "National Electrical Code" (Reglamento Eléctrico Nacional), muchos de los productos Sigma no son aptos para su utilización en lugares peligrosos. Es responsabilidad de quienes instalen los productos en entornos peligrosos el asegurarse de la idoneidad de dichos productos para este tipo de entorno. Además, para garantizar la seguridad, la instalación de los instrumentos en lugares peligrosos deberá realizarse conforme a las especificaciones del plano del fabricante. Se desaconseja cualquier modificación de los instrumentos o de la instalación, ya que podría provocar lesiones corporales graves, e incluso fatales, y/o daños materiales a los equipos.

GEFAHR
Einige Sigma-Produkte sind für den Einbau in explosionsgefährdeten Bereichen gemäß den Festlegungen des National Electrical Code speziell geprüft und zugelassen. Dies gilt jedoch keineswegs für das gesamte Sigma-Produktangebot. Die Entscheidung, ob ein Produkt für den Einsatz in explosionsgefährden Bereichen geeignet ist oder nicht, bleibt in die Verantwortung des jeweiligen Installateurs gestellt. Im Interesse der Sicherheit ist es zudem erforderlich, dass ein etwaiger Einbau des Geräts in explosionsgefährdeten Bereichen genau nach den Steuerungsanlagen-Zeichnungen des Herstellers erfolgt. Von der Vornahme von Änderungen an meß- bzw. regeltechnischen Geräten bzw. abweichender Installation wird dringend abgeraten, da hierdurch lebensbedrohliche Personen- und/oder Sachschäden verursacht werden können!

PERICOLO
Nonostante alcuni prodotti Sigma, siano predisposti e certificati per l'installazione in ambienti pericolosi, come previsto dal Codice Normativo Nazionale che concerne l'elettricità, è sconsigliabile utilizzare prodotti Sigma in ambienti considerati pericolosi. E' diretta responsabilità della persona che installa lo strumento in un luogo ritenuto "pericoloso" appurare se lo strumento è compatibile con tale ambiente. Inoltre, per maggior sicurezza, l'installazione dello strumento in ambienti pericolosi deve seguire le specifiche di progettazione del produttore. Si deve evitare qualunque manomissione allo strumento o all'installazione, tali modifiche possono rappresentare una minaccia per la vita delle persone e creare guasti.

Confined Space Entry

Important Note: *The following information is provided to guide users of 900 MAX Samplers on the dangers and risks associated with entry into confined spaces.*

On April 15, 1993, OSHA's final ruling on CFR 1910.146, Permit Required Confined Spaces, became law. This new standard directly affects more than 250,000 industrial sites in the United States and was created to protect the health and safety of workers in confined spaces.

Definition of Confined Space

A Confined Space is any location or enclosure that presents or has the immediate potential to present one or more of the following conditions:

- An atmosphere with less than 19.5% or greater than 23.5% oxygen and/or more than 10 ppm Hydrogen Sulfide (H_2S)
- An atmosphere that may be flammable or explosive due to gases, vapors, mists, dusts, or fibers
- Toxic materials which upon contact or inhalation, could result in injury, impairment of health, or death

Confined spaces are not designed for human occupancy. They have restricted entry and contain known or potential hazards.

Examples of confined spaces include manholes, stacks, pipes, vats, switch vaults, and other similar locations.

Standard safety procedures must always be followed prior to entry into confined spaces and/or locations where hazardous gases, vapors, mists, dusts, or fibers may be present.

Before entering any confined space check with your employer for procedures related to confined space entry.

Specifications

Specifications are subject to change without notice.

900 MAX All Weather Refrigerated Sampler

General	
Dimensions	Width 71 cm (28 in.), Depth 71 cm (28 in.), Height 125 cm (49 in.), Weight 79 kg (175 lb)
Cabinet	Fiberglass reinforced plastic with beige UV inhibited polymer laminate.
Temperature Range	-29 to +50 °C (-20 to 122 °F); With optional controller compartment heater, -40 to +50 °C (-40 to 122 °F)
Recovery Time	With door open one minute in 24 °C (75 °F) ambient and 4 °C sample temperature, 5 minutes.
Pull-Down Time	From 24 °C (75 °F) to 4 °C (39 °F), 15 minutes
Thermal System	Top mounted compressor/condenser with fan forced air cooled condenser; 3 sided wrap-around evaporator plate; 2" rigid foam insulation; microprocessor controlled thermostat maintains sample liquid at 4 °C (±1 °C); frost free; compression gasket door seal; refrigeration components and plumbing are corrosion protected with conformal coating.
Power Requirements	115 V ac, 60 Hz (230 and 100 V ac optional); Compressor Running Amperage 1.5–2.0 A. Locked rotor current 12 amps. Installation Category II.
Optional ac Power Backup (Pump Controller Only)	Pump/Controller Only: Rechargeable 6 amp-hour gel lead acid battery takes over automatically with ac line power failure. Integral trickle charger maintains battery at full charge (factory installed option).
Internal Battery	Two C cell alkaline batteries; maintains program logic and real time clock for five years. Internal battery current draws less than 40 micro amps.
Control Panel	21 key membrane switch keypad with 4 multiple function soft keys; 8 line x 40 character alphanumeric, back-lit liquid-crystal graphics display. Self prompting/menu driven program.
Data Logging	Records program start time and date, stores up to 400 sample collection times/dates, all program entries, operational status including number of minutes or pulses to next sample, bottle number, number of samples collected, number remaining, sample identification number, and all logged data (i.e. level, flow, pH, stream temperature, refrigerated compartment sample temperature, ORP, rainfall, and any externally logged data - up to 7 external channels). Also, up to 200 events are logged, including alarm conditions, program run/stop events, etc.
Set Point Sample Trigger	When equipped with integral flow meter, pH/temperature/ORP meter, conductivity, and/or D.O. monitoring options...sampling can be triggered upon an upset condition when field selectable limits are exceeded. Concurrent with normal sampling routine, sample liquid is deposited in designated “trouble bottle(s)”.
Sampling Modes	Multiple Bottle Time, Multiple Bottle Flow, Composite Multiple Bottle Time, Composite Multiple Bottle Flow, Composite Time, Composite Flow, Flow with Time Override, Variable Interval, Start/Stop, and Level Actuation.
Program Delay	Three formats: (1) 1-9,999 minutes or flow pulses in one unit increments (2) programmable sampler start time/date, and (3) programmable time/day of week.
Overload Protection	Controller: 5 amp dc line fuse. Compressor: Thermal overload relay opens at 110 °C (230 °F)
Diagnostics	Tests keypad, display, ROM, pump, and distributor.
Program Lock	Access code protection precludes tampering.
Communications	
EPROM Flash Memory	Via RS232. Permits embedded software upgrades in the field.
Serial Interface	RS232 compatible; allows on-site collection of stored data.
Modem (optional)	14400, V.32 bis, V.42, MNP2-4 error correction. V.42 bis MNP5 data compression. MNP10-EC Cellular Protocol.

Sample Bottle Capacity	
Sample Bottle Capacity	(24) 1-L polyethylene and/or 350 mL glass bottles. (8) 2.3-L polyethylene and/or 1.9-L glass bottles. (4) 3-gal polyethylene and/or 2½-gal glass bottles. (2) 3-gal polyethylene and/or 2½-gal glass bottles, (1) 6-gal polyethylene.
Sampling Features	
Multiple Programs	Stores up to five separate sampling programs.
Cascade	Allows using two samplers in combination where the first sampler at the completion of the program initiates the second.
Upset Sampling	When equipped with integral flow meter, pH/temperature/ORP meter, conductivity, and/or D.O. monitoring options... Sampling can be triggered upon an upset condition when field selectable limits are exceeded, concurrent with normal sampling routine, sample liquid is deposited in designated “trouble bottle(s)”. Can also be triggered from an external trigger.
Status Output	Alerts operator to low main battery, low memory power, plugged intake, jammed distributor arm, sample collected, and purge failure.
Automatic Shutdown	Multiple Bottle Mode: After complete revolution of distributor arm (unless Continuous Mode selected). Composite Mode: After preset number of samples have been delivered to composite container, from 1–999 samples, or upon full container.
Sample Volume	Programmed in milliliters, in one mL increments from 10 to 9,999 mL.
Sample Volume Repeatability	±5% typical
Interval Between Samples	Time Proportional Sampling: Format: Selectable in single increments from 1 to 9,999 minutes in one minute increments. Flow Proportional Sampling - Continuous Volume, Variable Time (CVVT):1 to 9,999 “units” of flow volume, where “units” are whatever is set up for in the integral flow option. or-1 to 9,999 external-meter flow pulses: (momentary contact closure 25 msec. Or 5–12 V dc pulse; 4–20 mA interface optional) Flow Proportional Sampling - Constant Time, Variable Volume (CTVV): Format: 999: 00 hrs:min.Selectable in 1-minute increments of 1 to 59,940 minutes.
Multiplex (Multiple Bottle Mode)	Multiple Bottle Mode: Programming allows multiple samples per bottle and/or multiple bottles per sample collection.
Sample Pump and Strainer	
Sample Pump	High speed peristaltic, dual roller, with 3/8” ID by 5/8” OD medical grade silicone rubber pump tube.
Pump Body	Impact/corrosion resistant, glass reinforced Delrin®
Vertical Lift	27 ft maximum (Remote Pump Option recommended for lifts from 22 to 35 ft).
Sample Transport Velocity	2 ft/sec minimum, at 15 ft vertical lift in a 3/8” ID intake tube.
Pump Flow Rate	60 mL/sec at 3 ft vertical lift in a 3/8” ID intake line.
Liquid Sensor	Non-wetted, non-contact, ultrasonic.
Intake Purge	Air purged automatically before and after each sample; duration automatically compensates for varying intake line lengths.
Pump/Controller Housing	High impact injection molded ABS; submersible, watertight, dust tight, corrosion & ice resistant; NEMA 4X,6.
Internal Clock	Indicates real time and date; 0.007% time base accuracy.
Manual Sample	Initiates a sample collection independent of program in progress.
Intake Rinse	Intake line automatically rinsed with source liquid prior to each sample, from 0 to 3 rinses.
Intake Retries	Sample collection cycle automatically repeated from 0 to 3 times if sample is not obtained on initial attempt.

Intake Tubing	¼" and 3/8" ID vinyl or 3/8" ID Teflon* lined polyethylene with protective outer cover.
Intake Strainers	Choice of Teflon® and 316 stainless construction, and all 316 stainless steel in standard size and low profile for shallow depth applications.

Factory Installed Options

pH/Temperature/ORP Meter	
Control/Logging	Field selectable to log pH/temperature or ORP independent of sample operation or to control sample collection in response to volume exceeding low/high setpoints.
pH/Temperature Sensor	Temperature compensated; impact resistant ABS plastic body. Combination electrode with porous Teflon®-junction.
Measurement Range	0 to 14 pH, -10 to 105 °C
Operating Temperature	-18 to 80 °C (0 to 176 °F)
Dimensions	1.9 cm dia. × 15.2 cm long (0.75 in. × 6 in.) with 1.9 cm (0.75 in.) mpt cable end.
Dissolved Oxygen Meter	
Control/Logging	Field selectable to log dissolved oxygen independent of sampler operation or to control sample collection in response to volume exceeding low/high setpoints.
Measurement Method	Galvanic
Sensor	Temperature compensated; impact resistant polypropylene body.
Measurement Range	0 to 20 mg/L
Resolution	0.01 mg/L
Accuracy	±3% of reading or 0.1 mg/L
Operating Temperature	0 to 50 °C (32 to 122 °F)
Dimensions	1.7 mm diameter × 15.7 cm long (0.65 in. × 6.25 in.) with 1.9 cm (0.75 in.)
Conductivity Meter	
Control/Logging	Field selectable to log conductivity independent of sampler connection or to control sample collection in response to volume exceeding low/high setpoints.
Sensor	Temperature compensated; impact resistant polypropylene body.
Measurement Range	0 to 20 mS/cm
Resolution	0.01 mS/cm or 1 mS/cm
Accuracy	±2% of reading or 0.01 mS
Operating Temperature	0 to 50 °C (32 to 122 °F)
Dimensions	1.7 cm diameter × 15.2 cm long (0.67 in. x 6 in.) with 1.9 cm (0.75 in.) mpt cable end.

Rain Gauge Input	
General Information	For use with Tipping Bucket Rain Gauge. The Sampler Program can be initiated upon field selectable rate of rain. Sampler records rainfall data. Each tip = 0.25 mm (0.01in.) of rain.
Analog Input Channels	
General Information	Up to 3 additional data logging channels record data from external source(s) Field assignable units. -4.0 to +4.0 V dc and 0 to 20 mA
4–20 mA Output	
General Information	Up to 2 output signals available. User assignable.
Maximum Resistive Load	600 ohms
Output Voltage	24 V dc—no load
Insulation Voltage	Between flow meter and 4–20 mA output—2500 V ac. Between the two 4–20 mA outputs—1500 V ac.
Alarm Relays	
General Information	(4) 10 amp/120 V ac or 5 amp/220 V ac form C relays ±0.1% FS Error User assignable for any internal or external data channel or event.

Downlook Ultrasonic Sensor 40 kHz	
Accuracy	0.003 m (±0.01 ft)
Maximum Range	3.35 m (11 ft) with a 3.05 m (10 ft) span
Deadband	38 cm (15 in.) maximum, self-minimizing
Material	PVC housing with Buna-N acoustic window.
Cable	4 conductor with integral stainless steel support cable

Specifications

Submerged Pressure Transducer	
Material	Epoxy body with stainless steel diaphragm.
Cable	Polyurethane sensor cable with air vent.
Cable Length	7.6 m (25 ft) standard; 76 m (250 ft) maximum
Sensor Dimensions	2 cm H x 3.8 cm W x 12.7 cm L (0.8 in. x 1.5 in. x 5 in.)
Maximum Range	5 psi, 0.063 to 3.5 mm (0.018 to 11.5 ft) 15 psi, 0.063 m to 10.5 m (0.018 to 34.6 ft)
Maximum Allowable Level	3x over pressure
Operating Temperature Range	0 to 71 °C (32 to 160 °F)
Compensated Temperature Range	0 to 30 °C (32 to 86 °F)
Air Intake	Atmospheric pressure reference is desiccant protected.

Submerged Area/Velocity Probe	
Method	Doppler Principle/Pressure Transducer.
Material	Polymer body, 316 series stainless steel diaphragm.
Cable	8-conductor urethane sensor cable with air vent.
Cable Length	7.6 m (25 ft) standard
Sensor Dimension	Length: 12.7 cm (5 in.) Width: 3.8 cm (1.5 in.) Height: 2 cm (0.8 in.)
Velocity	Velocity accuracy: 2% of reading; Zero Stability: <0.015 m/s (<0.05 fps). Response time: 4.8 seconds. Profile Time: 4.8 seconds. Range: -1.52 to 6.1 m/s (-5 to +20 fps). Resolution: 0.3 cm (0.01 fps).
Depth	Depth Accuracy: 0–3.35 m (0–11 ft) 1.37 mm (±0.054 in.) 0–10.06 m (0–33 ft) 4.09 mm (±0.161 in.)
	Maximum Allowable Level: 3x over pressure.
	Operating Temperature Range: 0 to 71 °C (32 to 160 °F).
	Compensated Temperature Range: 0 to 30 °C (32 to 86 °F).
	Temperature Error: 0.005 to 3.5 m ±0.0022 m/°C (0.018 to 11.5 ft ±0.004 ft/°F) 0.005 to 10.5 m ±0.006 m/°C (0.018 to 34.6 ft ±0.012 ft/°F) (maximum error w/in compensated temperature range—per degree of change)
	Velocity Induced Error on Depth (patent pending): 0 to 3.05 m/s (0 to 10 ft/s) = 0.085% of reading.
	Air Intake: Atmospheric pressure reference is desiccant protected.

Section 1 Introduction

The 900 MAX Sampler is housed in a resin transfer-molded fiberglass cabinet which is designed for indoor or outdoor locations. No secondary enclosure is required. The refrigeration compressor is located on top of the 900 MAX Sampler to avoid hydrogen sulfide and other corrosive, heavier than air gases. The microprocessor in the 900 MAX Sampler controller runs all refrigeration and heating operations directly without relying on mechanical thermostats. No mechanical thermostat adjustments are required. All temperature settings, setup, and calibrations are performed via the front panel.

1.1 Controller Cover

The lockable top cover protects the controller compartment from extreme weather as well as unauthorized use. When open, it is supported with a simple rod and clip similar to a car hood support (see Figure 1). Padlocks are available from the manufacturer (Cat. No. 954).

Figure 1 Controller Cover

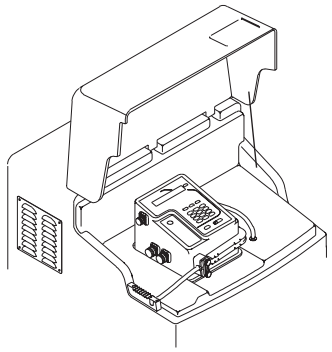

1.2 Controller Compartment Heater

The optional 500 watt controller compartment heater provides several benefits in colder climates:

- Prevents residual liquid from freezing in the pump.
- Pump tubing stays resilient, prolonging the life of the tubing, pump rollers, motor, and gear box.
- Prevents ice and snow from building up on the cover.
- Keeps LCD functional and electronics from temperature extremes.

The compartment heater operation is microprocessor controlled and totally automatic.

1.3 Refrigeration Compartment Door

The lockable front door opens by pressing the round button in the center of the latch. When closing the door, flip the latch closed to pull the door tight. Two keys are provided for the door lock.

Since the door gasket may compress slightly over time, an adjustment screw is provided to allow the door to be tightened. Loosen the lock nut before making adjustments and retighten the lock nut when done (Figure 2).

Figure 2 Door Latch

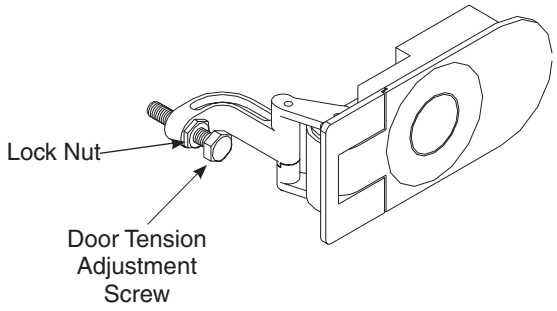

1.4 Interface Connectors

Interface connectors are located on the left side of the controller housing. An optional weather tight terminal box located on the back of the sampler provides conduit termination for all input/output lines.

The sampler comes standard with two interface receptacles.

- 12 V dc (Power Input)
- Auxiliary (Multi-purpose input/output port)
- RS232 (Serial communications port)
- Thermal (Control port for heating and cooling system)

In addition, the sampler can be used with a wide variety of optional devices:

- Level and Flow Sensors
- Rain Gauge
- pH/ORP
- Dissolved Oxygen
- Temperature
- Conductivity
- Modem
- 4–20 mA Current Loop Output
- Three additional analog inputs of 4–20 mA or -4.0 V dc to +4.0 V dc

Figure 3 Controller Housing Connectors

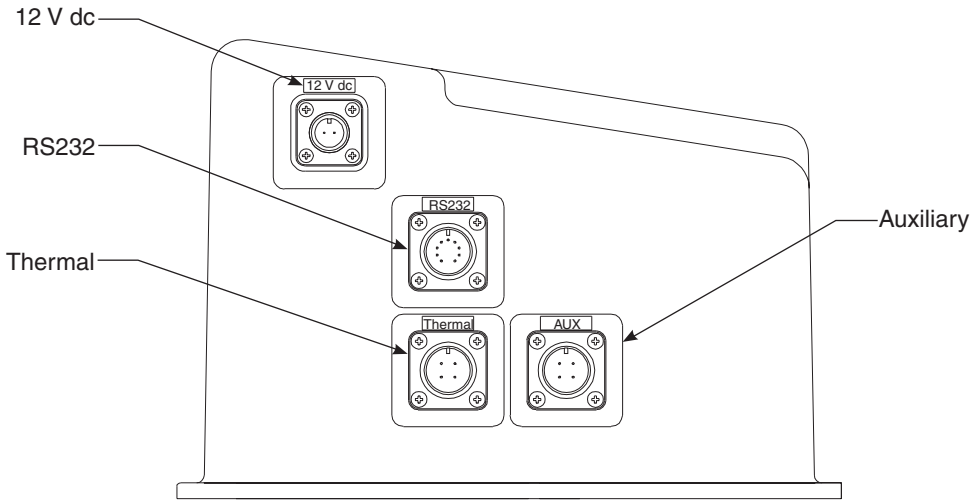

1.4.1 Receptacle Caps

Interface receptacles are covered with push-on receptacle caps. These caps protect the connector pins from dirt and moisture and should be attached to any receptacle not in use.

1.5 Front Panel

The front panel of the sampler consists of the following parts:

- Keypad
- Liquid crystal display
- Internal case humidity indicator

Figure 4 Front Panel

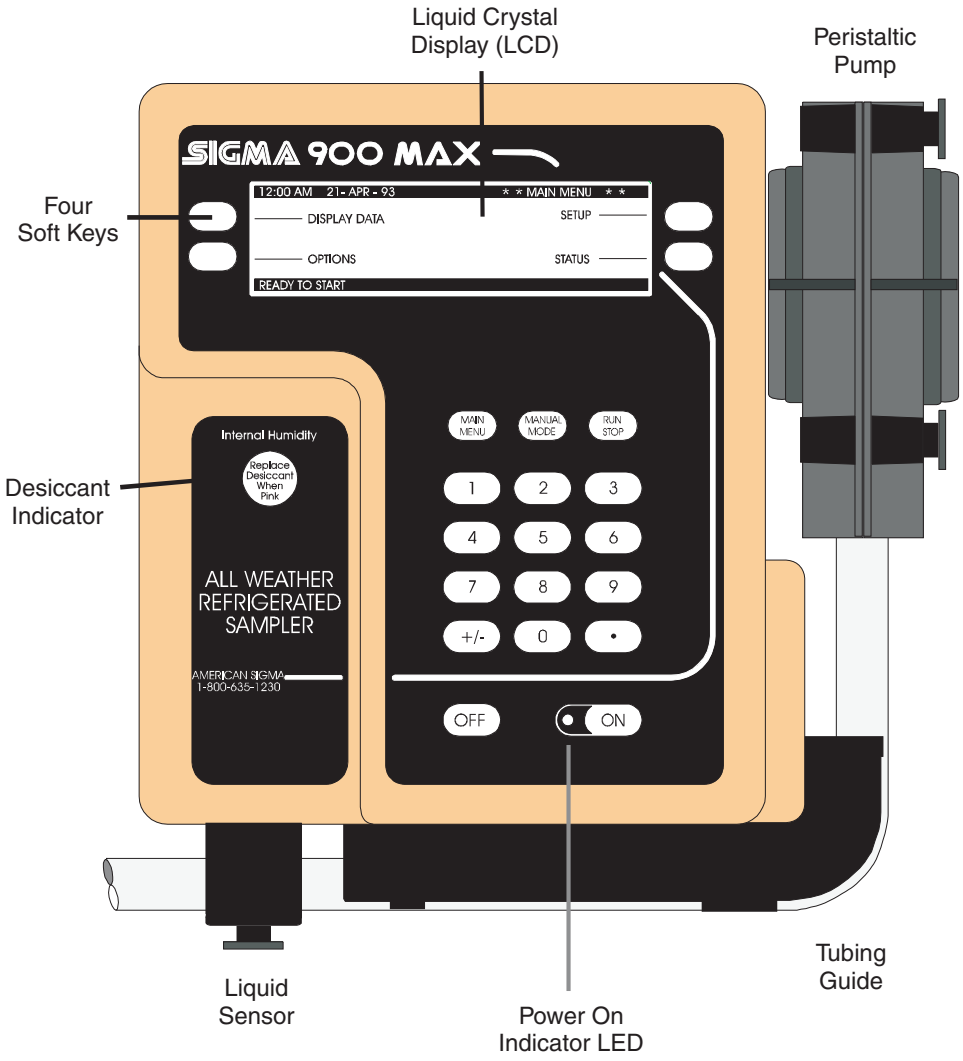

1.5.1 Keypad Description

The 900 MAX Sampler keypad has three components: numeric keypad, soft keys, and function keys.

Numeric Keypad
The numeric keypad consists digits 0 through 9, a +/- key, and a decimal key.

“Soft” Keys
Soft keys are blank, white keys located to the left and right of the display. The appearance of each function key depends on the display. If no function is shown for a specific key, that key is not currently active. The soft key labels appear on the display and point (with a straight line) to the proper soft key to push for that action.

In some cases during a programming step an item from a list needs to be selected. The soft keys on the right side of the display will change to display “up” and “down” arrows. Scroll up and down the list of choices.

Power ON/OFF Key
To turn the instrument on, press the **ON** key. When the instrument is turned on, a green light located next to the **ON** key flashes to indicate that the sampler power is turned on. To turn the instrument off, press the **OFF** key.

Function Keys
There are three function keys that are used often while operating the sampler. These functions are dedicated keys to allow quick access. They are the white keys located just above the numeric keypad

Function Key	Description
Main Menu	
	This is the starting point to get to any other point in the program. Press the Main Menu key at any time during programming to return to the Main Menu Screen. The current action is cancelled if changes are not yet accepted.
Manual Mode	
	Manually controls the operation of the sample pump and the distributor arm.
	ADVANCED DISTRIBUTOR soft key: Moves the distributor arm to the user selected bottle. Used to verify the operation of the distributor or when repositioning the arm if it was moved by hand.
	GRAB SAMPLE soft key: Takes a sample in the same manner as when a program is running. Includes all pre-rinses and sample retries, if programmed.
	PUMP OPERATION soft key: Allows manual control of the pump in both forward and reverse directions. Once started, the pump is stopped by pressing any key.
Run/Stop	
	Runs (or resumes) a program and stops a currently running program.

1.5.2 Liquid Crystal Display

The 900 MAX Sampler liquid crystal display (LCD) works in conjunction with the four soft keys. When a soft key changes function, the display shows the new function.

Menu Bar
The Menu Bar appears in a black band on the top edge of the display. The upper left corner of the menu bar shows the time and date. The upper right corner shows the name of the current menu (Figure 4).

Status Bar
The Status Bar appears along the bottom edge of the display. The appearance of the status bar changes depending upon the function performed (Figure 4).

The lower left corner of the Status Bar indicates whether a program is Complete, Running, Halted, or Ready To Start. If it is not needed during a programming step, it disappears.

The lower right corner displays system alarm conditions, such as low memory battery, jammed distributor etc. For a list of possible alarms refer to section 6.4 on page 96. The status bar also lists the valid choices when entering certain programming information.

1.5.3 Internal Humidity Indicator

The internal case humidity indicator (Cat. No. 2660) turns pink when the internal case humidity exceeds 60 percent.

The sampler is equipped with an internal desiccant module (Cat. No. 8849) to absorb any humidity trapped in the case during final assembly. Under normal operating conditions, this desiccant provides long-term protection against condensed moisture inside the case.

Replacement of the internal desiccant module is only necessary if the indicator turns pink. (Refer to section 7.10 on page 112 for details on replacing the internal desiccant.)

AMERICAN SIGMA

INSTALLATION

DANGER

Some of the following manual sections contain information in the form of warnings, cautions and notes that require special attention. Read and follow these instructions carefully to avoid personal injury and damage to the instrument. Only personnel qualified to do so, should conduct the installation/maintenance tasks described in this portion of the manual.

DANGER

Certains des chapitres suivants de ce mode d'emploi contiennent des informations sous la forme d'avertissements, messages de prudence et notes qui demandent une attention particulière. Lire et suivre ces instructions attentivement pour éviter les risques de blessures des personnes et de détérioration de l'appareil. Les tâches d'installation et d'entretien décrites dans cette partie du mode d'emploi doivent être seulement effectuées par le personnel qualifié pour le faire.

PELIGRO

Algunos de los capítulos del manual que presentamos contienen información muy importante en forma de alertas, notas y precauciones a tomar. Lea y siga cuidadosamente estas instrucciones a fin de evitar accidentes personales y daños al instrumento. Las tareas de instalación y mantenimiento descritas en la presente sección deberán ser efectuadas únicamente por personas debidamente cualificadas.

GEFAHR

Einige der folgenden Abschnitte dieses Handbuchs enthalten Informationen in Form von Warnungen, Vorsichtsmaßnahmen oder Anmerkungen, die besonders beachtet werden müssen. Lesen und befolgen Sie diese Instruktionen aufmerksam, um Verletzungen von Personen oder Schäden am Gerät zu vermeiden. In diesem Abschnitt beschriebene Installations- und Wartungsaufgaben dürfen nur von qualifiziertem Personal durchgeführt werden.

PERICOLO

Alcune parti di questo manuale contengono informazioni sotto forma d'avvertimenti, di precauzioni e di osservazioni le quali richiedono una particolare attenzione. La preghiamo di leggere attentivamente e di rispettare quelle istruzioni per evitare ogni ferita corporale e danneggiamento della macchina. Solo gli operatori qualificati per l'uso di questa macchina sono autorizzati ad effettuare le operazioni di manutenzione descritte in questa parte del manuale.

DANGER
This instrument should be installed by qualified technical personnel to ensure adherence to all applicable electrical codes.

DANGER
Cet appareil doit être installé par du personnel technique qualifié, afin d'assurer le respect de toutes les normes applicables d'électricité.

PELIGRO
Este instrumento debe ser instalado por personal técnico capacitado para asegurar el cumplimiento con todos los códigos eléctricos y de plomería aplicables.

GEFAHR
Um zu gewährleisten, daß alle elektrischen VDE-Vorschriften und gegebenenfalls die Zusatzvorschriften der zuständigen Elektrizitäts- und Wasserwerke erfüllt werden, darf dieses Gerät nur von geschultem Fachpersonal installiert werden.

PERICOLO
Lo strumento deve essere installato da personale tecnico qualificato per garantire la conformità delle norme in materia di elettricità.

2.1 Unpacking the Instrument

Remove the 900 MAX Sampler from the shipping carton and inspect it for any damage. If the shipment arrives damaged or incomplete contact: Technical Support at 1-800-635-1230 or send an e-mail to techhelp@hach.com.

2.2 Selecting the Installation Site

DANGER
This product is not designed for hazardous locations where combustible environments may exist.

DANGER
Ce produit n'est pas conçu pour des endroits dangereux dans lesquels il peut exister des environnements combustibles.

PELIGRO
Este producto no está diseñado para su uso en entornos peligrosos donde exista riesgo de combustión.

VORSICHT - LEBENSGEFAHR!
Dieses Produkt ist nicht zur Verwendung in explosionsgefährdeteten Bereichen bzw. Umgebungen mit potentiell brennbarer Atmosphäre geeignet.

PERICOLO
Questo prodotto non è studiato per localizzazioni pericolose in cui possono esistere pericoli ambientali.

Follow the simple guidelines below to allow complete drainage of the intake line and prevent cross-contamination between samples.

- Install the sampler as close to the sample source as site conditions permit. This will increase pump tube life and optimize overall sampler performance.
- Install the sampler above the sample source, with the intake tubing sloping downward to the sample.
- Make sure that the intake tubing is free of kinks or loops.

2.3 Installing the 900 MAX All Weather Refrigerated Sampler

The 900 All Weather Refrigerated Sampler can be installed using the optional anchor bracket mounting kit (Cat. No. 8935).

1. Determine the proper site location for individual permanent installation.
2. Level the sampler using four leveling feet. Raise the sampler by turning the feet clockwise.
3. Locate the screws around the base of cabinet. The front and rear screws are used to mount the anchor brackets to the sampler.
4. Remove one screw from the cabinet. Slide the screw through the slot in the anchor bracket and tighten halfway.

Note: *Install only one bracket at a time. The sampler may become unstable if multiple screws are removed at once.*

5. With screw still loose, allow the anchor to drop down firmly in contact with mounting surface (floor, concrete, etc.)
6. Assemble the remaining three brackets.
7. Complete installation by securing the anchor brackets to the mounting surface as required for individual installation.

Note: *A customer-supplied 7/16 bolt or stud is recommended to ensure secure mounting.*

Figure 5 Anchor Bracket Mounting Kit

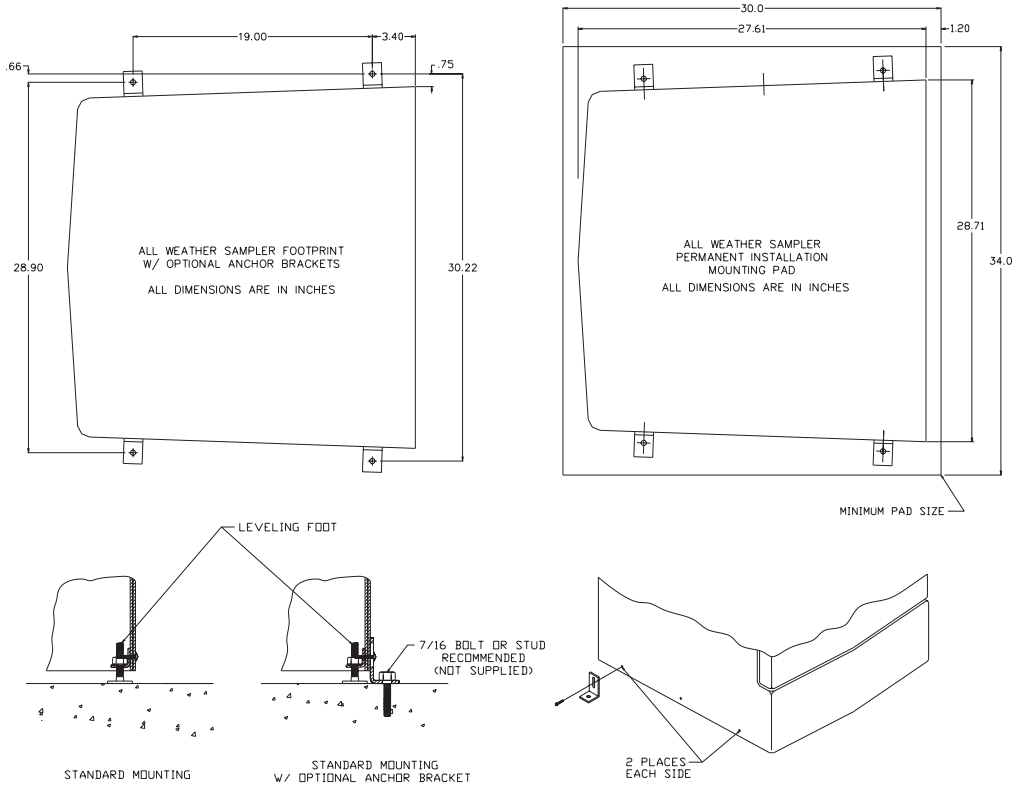

2.4 Installing the Pump Tube in the Sensor Body

Note: *Do not stretch the tubing in the sensor body, as this could affect the ability of the sensor to detect liquid through the pump tubing.*

Note: *You must use the proper length of silicone tubing in the pump body. An improper length can reduce the life of the tubing and pump rollers. Refer to Figure 6 for the correct length.*

1. Remove the four screws on the pump cover.
2. Remove the front cover of the pump housing. Remove the tubing. Locate the black dots on the tubing. The end of the tube that extends farthest beyond the black dot attaches to the stainless steel tubing connector.
3. Install the pump tube in the pump housing so the black dots are visible just outside the pump body.
4. After inserting the new pump tube as shown, reinstall the front cover and secure it with the four screws until finger tight.
5. Make sure that the tubing extends through the liquid sensor and out of the controller as shown in Figure 7.

Figure 6 Pump Tube Loading

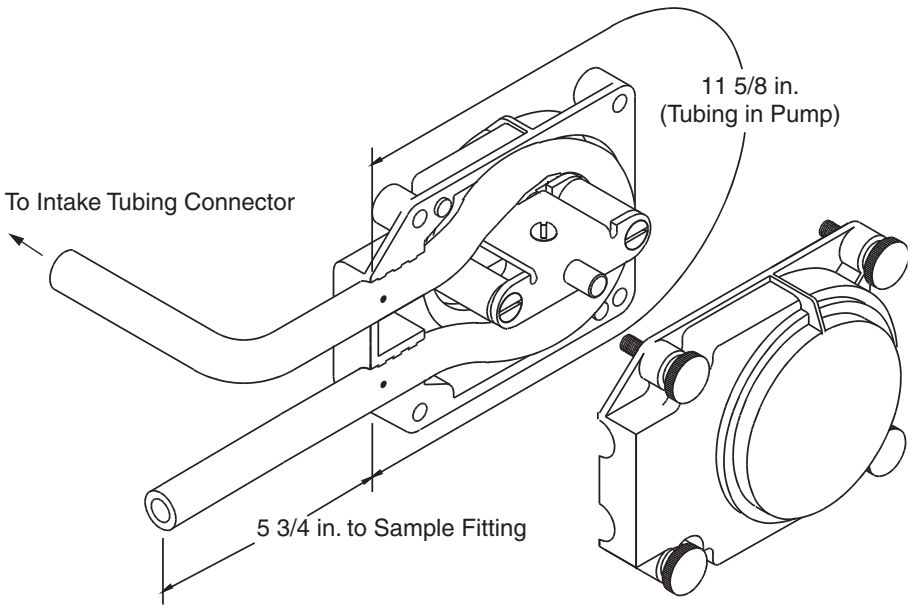

Figure 7 Installing Pump Tube Through the Sensor Body

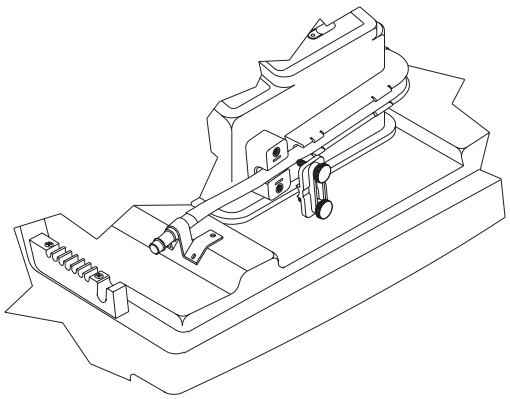

2.4.1 Attaching the Intake Line

Attaching the Vinyl Tubing
The connection kit (Cat. No. 2248) contains two identical assemblies, one for connecting vinyl tubing to the tubing attached to the sampler, and the other for connecting the vinyl tubing to an intake strainer or remote pump. The kit contains four hose clamps and two stainless steel tubing connectors.

1. Push one end of the tubing connector into the vinyl tubing attached to the controller until the tubing abuts the shoulder of the tubing connector. Secure with a tubing clamp (Figure 1).

2. Push the other end of the tubing connector into the vinyl tubing until the tubing abuts the shoulder of the tubing connector and secure with a tubing clamp (Figure 1).

3. Repeat Step 1 and Step 2 for the fitting that connects the vinyl tubing to an intake strainer or a remote pump.

Figure 1 3/8” Vinyl Tubing Connector

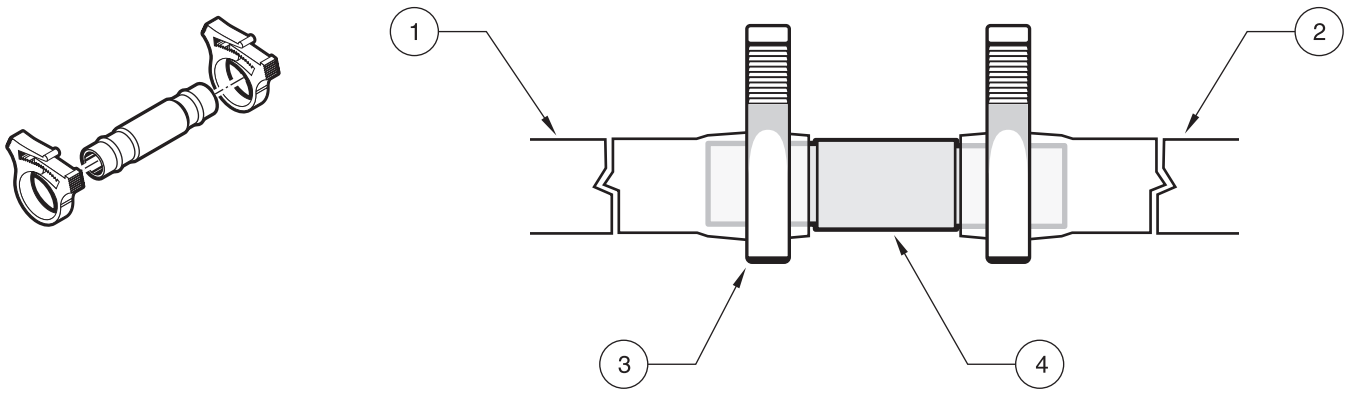

1. Vinyl tubing to controller	**3.** Tubing clamp (2 required)
2. Vinyl tubing to strainer or pump.	**4.** Stainless steel tubing connector

Attaching the Teflon®-Lined Tubing
The Connection Kit for Teflon-lined Tubing (Cat. No. 2186) contains two identical assemblies, one for connecting the Teflon-lined tubing to the stainless steel tubing connector and the other for connecting the Teflon-lined tubing to the intake strainer. The kit contains six clamps, two lengths of silicone tubing, and two stainless steel barbed fittings.

To connect the Teflon-lined tubing follow the instructions and Figure 2 below:

1. Place the Teflon-lined tubing over the tubing connector nipple until it abuts the shoulder of the tubing connector and secure with a tubing clamp.
2. Place one end of the silicone tubing over the wide end of the tubing connector and secure with a tubing clamp.
3. Slide a second tubing clamp over the other end of the silicone tubing. Push the silicone tubing over the stainless steel fitting on the intake strainer and tighten the tubing clamp.

4. Repeat the procedure for the fitting that connects the Teflon-lined tubing to the silicone pump tubing.

Figure 2 3/8″ ID Teflon-lined Tubing Attached to Intake Strainer and Tubing Connector

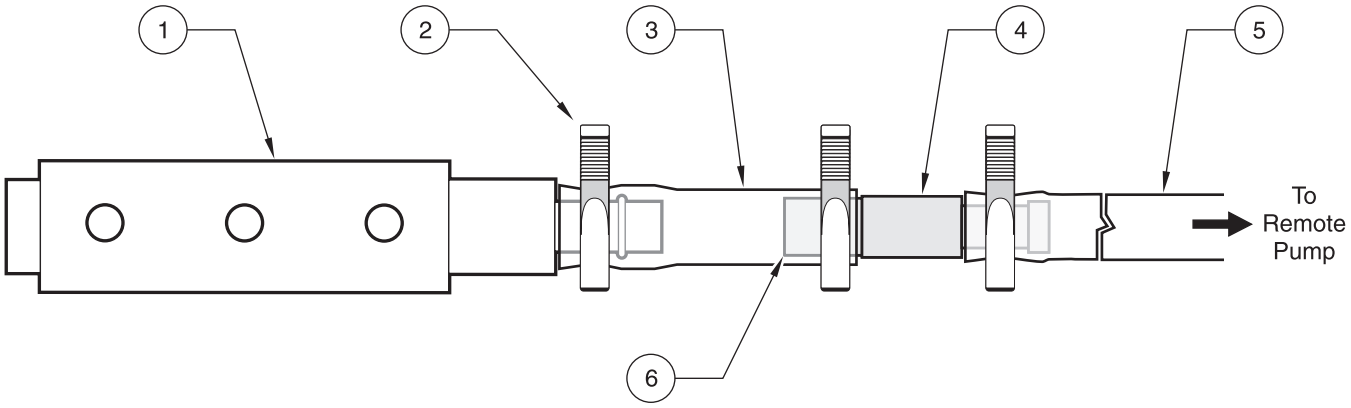

1.	Intake strainer	**4.**	Stainless steel tubing connector
2.	Tubing clamp (3 required)	**5.**	Teflon-lined intake tubing
3.	Two-inch piece of silicone tubing	**6.**	Wide end of stainless steel tubing connector

2.4.2 Setting Up the Intake Line and Strainer

Note: *If site conditions do not permit the intake to slope downward from the sampler to the sample source, disable the liquid sensors and calibrate the sample volume using the Timed Calibrate method when programming the sampler.*

For each sampling location, the intake line should be as short as practical, and be free of any sharp bends, coils, or loops. Install the intake line with a downward slope from the sampler to the sample source because:

- This will ensure the complete drainage of the intake line when it is air-purged before and after each sample, and will help to prevent cross-contamination of the individual samples.
- Complete drainage is important in freezing conditions, as any liquid slugs that remain could freeze and plug the line.

Place the sample intake and strainer in the mainstream of the sampling source, in an area of turbulent and well mixed flow.

Note: *Vertical lift should not exceed 27 ft. If your site requires more lift, you may purchase the Remote Pump Option. See* *Parts and Accessories on page 159**.*

Also, you must account for the vertical location of the intake. A position too near the surface may yield excess lighter materials, while a position too near the bottom may yield excess heavy materials. The constituents of interest must be considered when positioning the intake strainer.

2.5 Choosing Bottle and Retainer Configurations

A broad range of bottle configurations is available for the 900 MAX All Weather Refrigerated Sampler.

Figure 3 Bottle Configurations

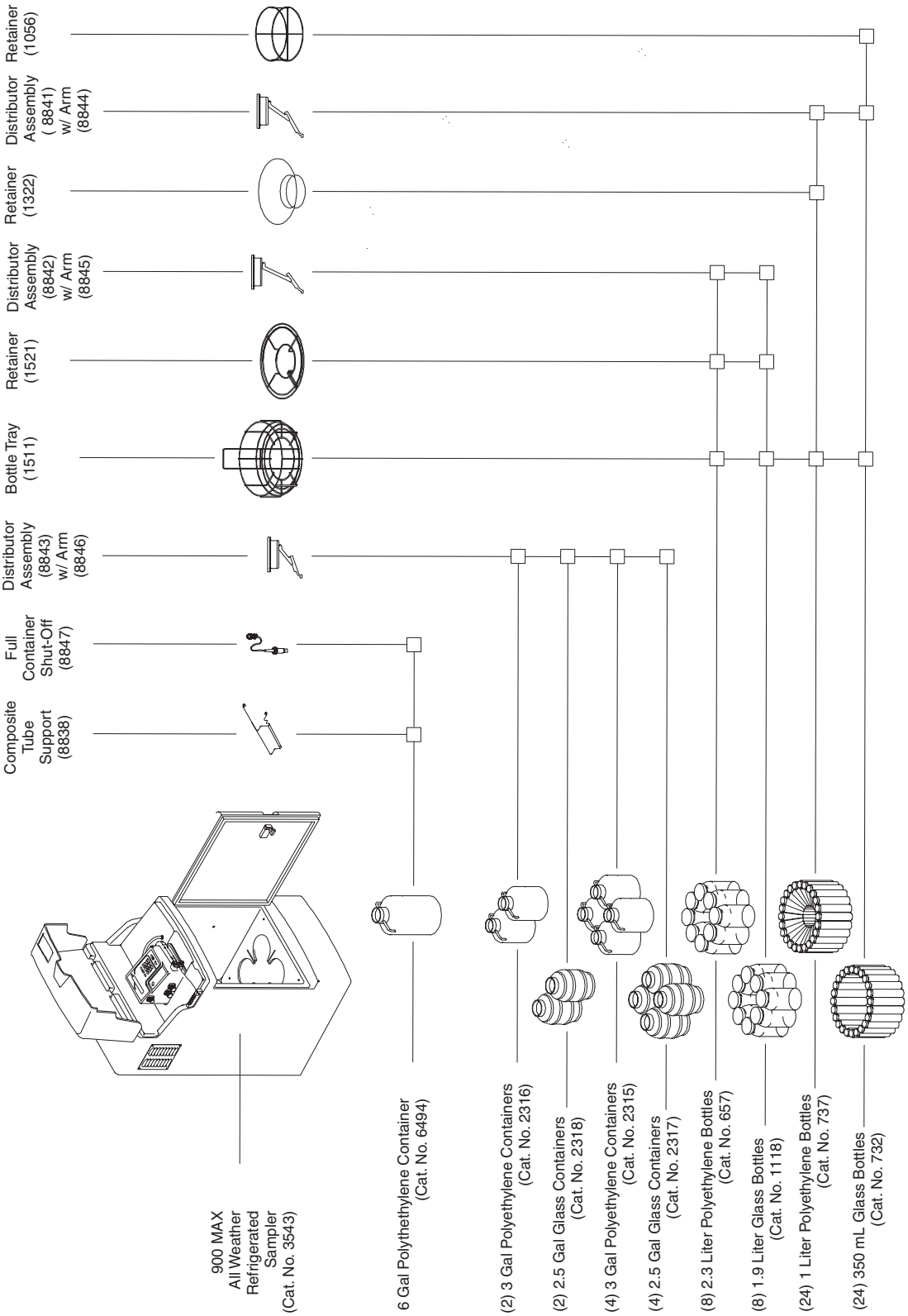

2.6 Setting Up the Bottles

2.6.1 One-Bottle Sampling

For single bottle composite sampling, install the Full Bottle Shut-off (refer to Section 2.8 on page 32) and place the bottle in the center of the bottle tray (Figure 9 on page 32). The Full Bottle Shut-off positions the sample tubing over the bottle mouth.

2.6.2 Two- and Four-bottle Sampling

For two-bottle sampling, install the distributor (refer to Section 2.7 on page 30) and place the bottles in the Bottle #1 and Bottle #2 positions in the tray as shown in Figure 4.

For four-bottle sampling, install the distributor and place all four bottles in the tray as shown in Figure 5.

Figure 4 Two-bottle Locations

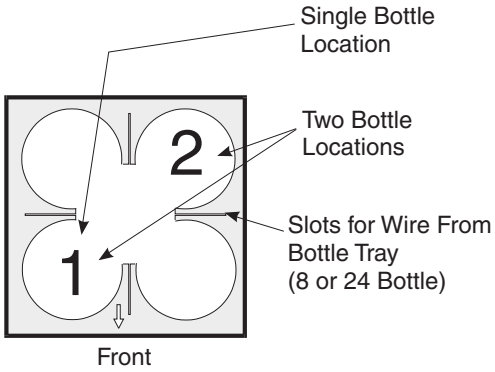

Figure 5 Four-bottle Locations

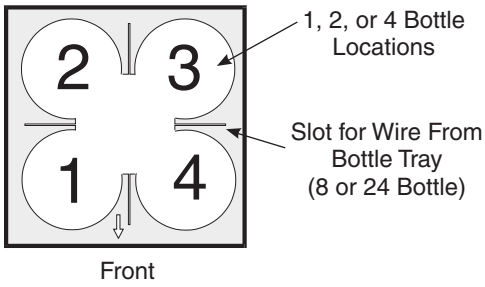

2.6.3 Eight-, 12-, or 24-bottle Sampling

For eight-, 12- or 24-bottle sets, install the distributor (refer to section 2.7 on page 30). Place the bottles in the tray and install the proper bottle retainer (Figure 6).

Bottle #1 is the first bottle clockwise (looking down on the tray) from the right side of the tray. Bottle #1 is located on the inside of each bottle tray for all multiple bottle sets (Figure 6).

Figure 6 Eight-, 12-, or 24-bottle Configuration

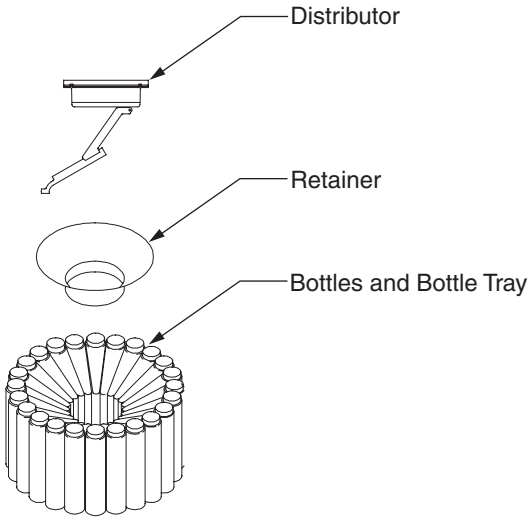

2.7 Installing the Distributor

Note: *Make sure the sampler is powered off before removing or installing the distributor.*

For multiple bottle sampling, a motorized arm (Distributor) is provided to automatically position the sample tube over the proper bottle. The microprocessor-controlled distributor arm can automatically locate two, four, eight, 12, or 24 discrete bottles.

To install the distributor:

1. Locate the two slots along one edge of the distributor assembly base plate (Figure 8). Slide the distributor assembly, slots first, under the shoulder screws located on the top inside surface of the controller section.

2. When fully seated, hand tighten the knurled thumbscrew to hold the distributor in place.

3. To ensure the arm has sufficient freedom of movement, hand-rotate the arm to the opposite end of the Arm Stop.

4. Install the silicone distributor tubing to the sample fitting on the top underside surface of the controller housing.

Note: *Do not force the arm past the Arm Stop clip. The Arm Stop keeps the arm from being rotated more than 360 degrees. This keeps the distributor tubing from kinking.*

The distributor tubing should be installed so that the end of the tubing extends out of the nozzle end of the distributor arm no more than 1/8 in. (Figure 7). Do not let the tubing extend more than 1/8 in. past the nozzle end of the arm.

2.7.1 Distributor Arm Alignment

1. Program the sampler for 24-bottle operation.
2. Press the **START PROGRAM** key to set the distributor shaft to the Bottle #1 position.
3. Place the arm on the distributor shaft and align the rib on the inside wall of the control housing skirt.
4. Secure the arm to the shaft by tightening the 1/8 in. hex-head screw, located on the distributor arm.

Figure 7 Distributor Tubing in Arm

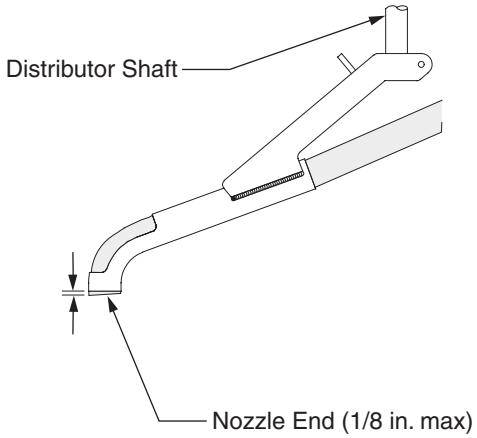

Figure 8 Distributor Installation

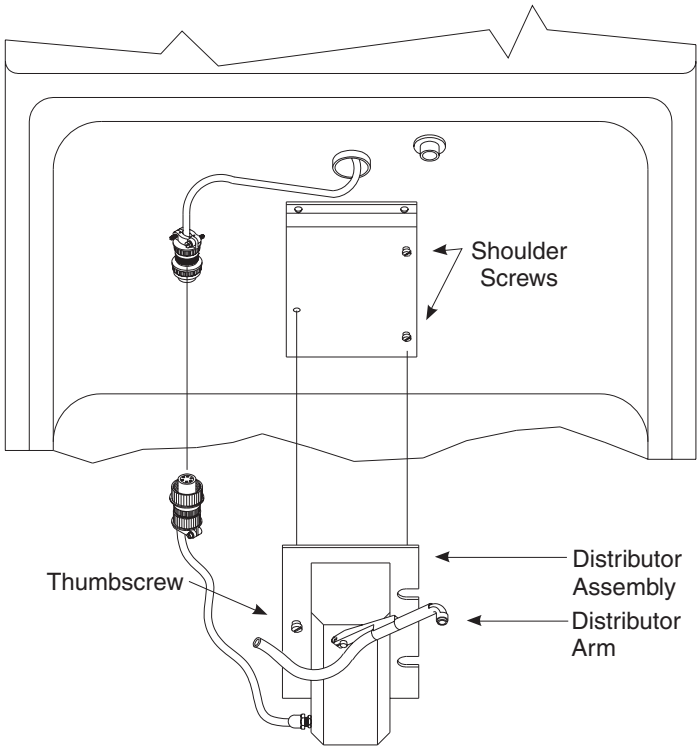

2.8 Installing the Full-Bottle Shut-Off Device

1. Install the rubber grommet into the hole provided in the cap of the composite bottle.

2. Slide the Full Bottle Shut-Off, float first, into the bottle through the center of the grommet.

3. Insert the Full Bottle Shut-Off connector into the receptacle (Figure 9).

Figure 9 Full Bottle Shut-off Installation

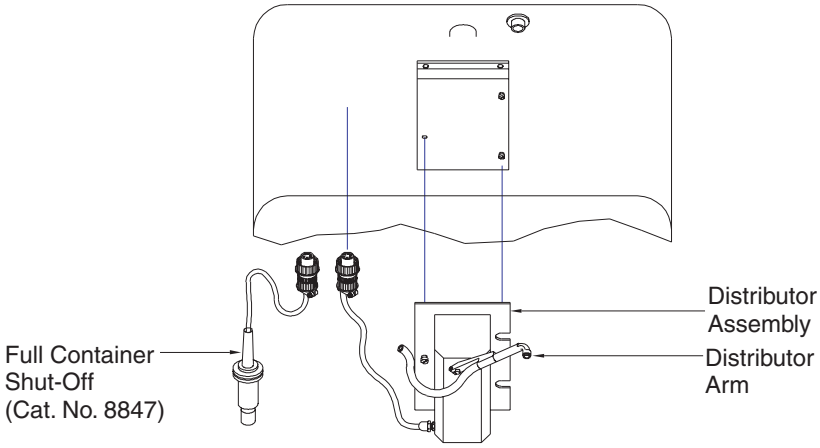

2.9 Power Connections

Note: *Install the 900 MAX Sampler on its own circuit to ensure a continuous, stable source of power.*

The sampler refrigerator operates on a 120 V ac (100 and 230 V ac optional). The controller requires 12 V dc which is supplied via an internal ac/dc power converter. The unit may be ordered with a 3-prong ac power cord or with a conduit connection suitable for a junction box and hard-wire permanent installation.

Important: Whenever electricity is present, there is a possibility of electrical shock. Before connecting the sampler to an ac power source, take the following safety precautions:

1. Check the power source to make sure that it satisfies the ac power requirements of the sampler.

2. Make sure that all electrical installations and connections are in accordance with national and local electrical codes.

3. Before performing any maintenance, disconnect the sampler from the power source.

4. Do not attempt to make any connection or otherwise handle the electrical components of the sampler when connected to ac line power if the immediate area is wet, or if hands or clothing are wet.

5. If the circuit breaker or fuse in the ac power source is tripped, determine the cause before restoring power to the sampler.

6. Make sure the power circuit is grounded and protected with a Ground Fault Interrupter (GFI).

2.10 Auxiliary Receptacle Pin Identification

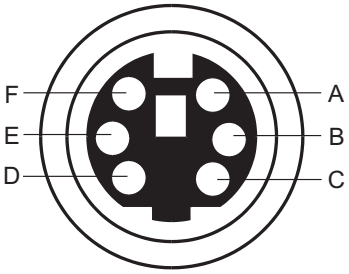

Pin A/White (12 V dc)	Powers an external device or flow meter. Must be used in conjunction with Pin B (ground).
Pin B/Blue (Ground)	Connected to dc ground and is isolated from the earth ground found in the ac power line.
Pin C/Yellow (Pulse Input)	With the sampler in Flow Proportional mode and connected to an external flow meter, a 5 to 12 V dc input pulse lasting at least 25 milliseconds will cause the sampler to decrement one count. The 12 V dc line found on Pin A can be used directly with a simple contact closure to Pin C or an external 5 to 12 V dc pulse may be applied providing the ground side of the external signal is connected to the sampler ground at Pin B. This count is actuated at the beginning of the input signal (the leading edge of the pulse).
Pin D/Black (Liquid Level Actuator/ Auxiliary Control Input)	This line is held at 5 V dc inside the sampler. When shorted to ground (Pin B), a signal is sent to the microprocessor inside the sampler causing it to “wake up” and begin or resume its sampling program. It can be used in conjunction with a simple level float to actuate the sampler when liquid is present or to take over after a second sampler has finished its program. It may also be used with any device (such as a pH meter) that produces a dry contact output to control the sampler in response to some user-defined condition (i.e. high or low pH); must be used in conjunction with Pin B.
Pin E/Red (Special Output)	Normally at 0 V dc, this line goes to 12 V dc upon any of the selected events.
Pin F/Green (Program Complete Output)	Normally an open circuit, this line switches to ground for 90 seconds at the conclusion of the sampling program. Used to “wake up” another sampler to take over sampling or to signal an operator or data logger upon the completion of the sampling program. This pin is also used to signal the bottle full condition in a single bottle/continuous mode, and will transmit the bottle # to a 950 Flow Meter if the program complete signal is disabled.

2.10.1 Splitter Interface

Use the Splitter Interface (Cat. No. 939) when more than one of the signals listed above are needed simultaneously. Connecting the interface to the 6-pin connector on the sampler provides three additional connectors. Two or more interfaces may be connected in series to allow for additional connections.

Figure 10 Splitter Interface

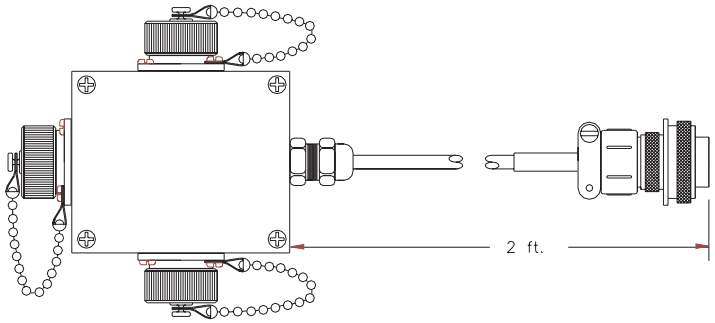

2.11 Thermal Control

The thermal control port is used to connect the sampler controller to the Power Supply/Thermal Control Box located inside the sampler back cover of the unit. This port carries all temperature measurement, refrigeration, and heating control signals.

Table 1 Thermal Control Pin Assignments

Pin	Signal Description	Wire Color
A	TS-1	Orange
B	TS-2	Brown
C	TS-3	Yellow
D	Heat	Black
E	V AD+	Red
F	AD Ref	Green
G	Evaporator Heater	Purple
H	Compressor Fan	Gray
J	A Ground	Blue
K	Ground	White

OPERATION

DANGER

Handling chemical samples, standards, and reagents can be dangerous. Review the necessary Material Safety Data Sheets and become familiar with all safety procedures before handling any chemicals.

DANGER

La manipulation des échantillons chimiques, étalons et réactifs peut être dangereuse. Lire les Fiches de Données de Sécurité des Produits (FDSP) et se familiariser avec toutes les procédures de sécurité avant de manipuler tous les produits chimiques.

PELIGRO

La manipulación de muestras químicas, estándares y reactivos puede ser peligrosa. Revise las fichas de seguridad de materiales y familiarícese con los procedimientos de seguridad antes de manipular productos químicos.

GEFAHR

Das Arbeiten mit chemischen Proben, Standards und Reagenzien ist mit Gefahren verbunden. Es wird dem Benutzer dieser Produkte empfohlen, sich vor der Arbeit mit sicheren Verfahrensweisen und dem richtigen Gebrauch der Chemikalien vertraut zu machen und alle entsprechenden Materialsicherheitsdatenblätter aufmerksam zu lesen.

PERICOLO

La manipolazione di campioni, standard e reattivi chimici può essere pericolosa. La preghiamo di prendere conoscenza delle Schede Techniche necessarie legate alla Sicurezza dei Materiali e di abituarsi con tutte le procedure di sicurezza prima di manipolare ogni prodotto chimico.

3.1 Initial Power-Up of Sampler

After pressing the ON key, the 900 MAX Sampler performs a complete diagnostic test and displays the menu shown when the unit was last turned off. Set the instrument's programming features when the Main Menu is displayed. The Main Menu is the starting point for all programming operations. The Main Menu offers four choices:

- Setup—Basic and Advanced Sampling programming
- Status—Lists all current sampling status, power supply voltage, and values of any data channels that are enabled.
- Display Data—Shows graphs and tables of logged data (Displaying Data on page 123)
- Options—Optional Device Programming

Setup and Option functions lead to sub-menus and will configure the basic and advanced features of the sampler. Refer to the Quick Start Guides on page 115. The Display Data and Status Menus lead to sub-menus and will provide information only. Press the **STATUS** soft key to display any data channels that have enabled logging (flow, pH, temp., etc.)

3.2 Basic Programming Setup

Basic programming setup must be performed, step-by-step and in its entirety, after the instrument is installed. Refer to the Quick Start Guides on page 115 for more information. The basic program setup will modify the following items:

- Bottles
- Program Lock
- Sample Collection
- Liquid Sensor
- Intake Rinses
- Site ID
- Intake Tubing
- Program Delay
- Sample Distribution
- Sample Volume
- Sample Retries

In addition, several advanced sampling features are found on a sub-menu called Advanced Sampling. Refer to section 3.3 on page 50 for Advanced Sampling Basic Programming Setup.

To make changes to the program entries after the basic programming setup, press the **MAIN MENU** key and select **SETUP>MODIFTY SELECTED ITEMS** and highlight the program entry using the up and down arrow soft keys.

To review all information in the Setup and Option menus without worrying about accidentally changing the information. Use the Review All Items function to verify that the program is setup properly. For more information on this function refer to Review All Items on page 123.

1. Press the **SETUP** soft key from the Main Menu to prepare the instrument for use.

2. From the Main Menu select **SETUP>MODIFY ALL ITEMS**.

3. Press the **ACCEPT** soft key to begin setting up the Bottles.

Step 1 - Bottles

1-A. Enter the total number of sample bottles in the refrigeration compartment, using the numeric keypad.

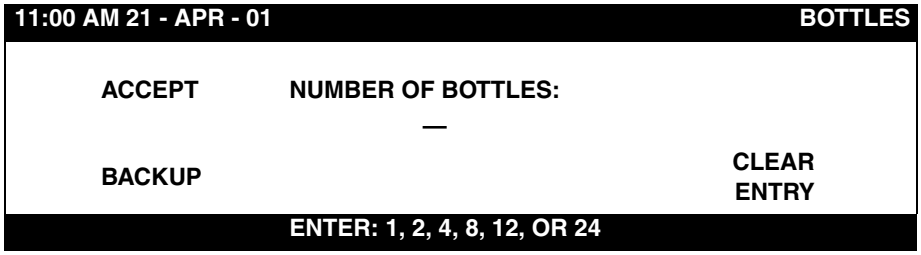

Note: *The bottles may be installed directly in the refrigeration compartment or in the removable bottle tray when using sets greater than four bottles.*

1-B. Press the **ACCEPT** soft key to continue and move to the Bottle Volume menu.

1-C. Enter the bottle volume using the numeric keypad and select gallons or milliliters using the **CHANGE UNITS** soft key.

1-D. Press the **ACCEPT** soft key and continue to Intake Tubing.

Step 2 - Intake Tubing

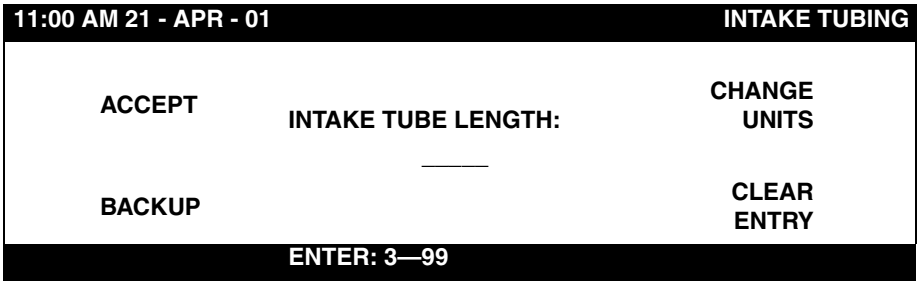

2-A. Enter the intake tube length of the intake tubing attached to the sampler, using the numeric keypad. Length values from 100 to 3000 cm (3 to 99 ft) are valid. Change the measurement unit using the **CHANGE UNITS** soft key.

Note: *Intake tube length affects sample volume accuracy, cut the tubing to the nearest whole foot. Avoid excessively long tubing runs. Doubling the intake tubing length can quadruple the pump tubing wear if intake rinses or sample retries are enabled. Always locate the sampler close to the sample liquid source to minimize tubing, pump, motor, and gearbox maintenance.*

2-B. Press the **ACCEPT** soft key to move to the Intake Tube Type menu.

2-C. Select the type of intake tube (3/8 in. Vinyl, ¼ in. Vinyl, 3/8 in. Teflon®) using the **CHANGE UNITS** soft key.

2-D. Press the **ACCEPT** soft key to select the intake tube type and continue with Program Lock.

Step 3 - Program Lock

Note: *The program lock password is configured at the factory as **"9000"** and cannot be changed.*

Enabling the Program Lock will provide a protective "password" which will keep unauthorized personnel from tampering with the instrument keypad.

3-A. Select Enable or Disable Program Lock using the **CHANGE CHOICE** soft key.

Note: *When program lock is enabled and a user attempts to make a change in the program, a screen will ask the operator to enter the password. The operator must enter 9000 and press the **ACCEPT** soft key.*

3-B. Press the **ACCEPT** soft key to continue the basic program setup and continue with Program Delay.

Step 4 - Program Delay

Note: *If both Setpoint Sampling and Program Delay are enabled, the program delay is evaluated first, prior to any checking for setpoint conditions.*

4-A. Select Enable or Disable Program Delay using the **CHANGE CHOICE** soft key. Enabling the Program Delay will cause the sampling program to delay starting until a user specified time and day of week are programmed.

4-B. After enabling the program delay, enter the time and day of week that the program will begin. Use the soft keys to change the day of week as well as the AM/PM indicator.

11:00 AM 21 - APR - 01		PROGRAM DELAY
ACCEPT	START PROGRAM:	CHANGE AM/PM
	00:00 AM MON	
CLEAR ENTRY		CLEAR DAY
(USE THE NUMERIC KEYPAD)		

4-C. Press the **ACCEPT** soft key to continue with Sample Collection.

Step 5 - Sample Collection

5-A. Select the type of sample collection; Time Proportional, Flow- Proportional Constant Volume, Variable Time (CVVT), or Flow-Proportional Constant Time, Variable Volume (CTVV).

11:00 AM 21 - APR - 01		SAMPLE COLLECTION
ACCEPT	SAMPLE COLLECTION	CHANGE CHOICE
	_____	
BACKUP		
CHOICES: TIMED, FLOW PROPORTIONAL		

Timed-Proportional Sampling Intervals

When the program starts, a sample is taken immediately or delayed until after the first interval has elapsed. Select either, Take First Sample Immediately or After the First Interval.

Timed-Proportional samples are taken each time a user defined time interval has elapsed. Samples can be continually taken at that interval until the completion of the program.

a. From the Sample Collection menu, press the **CHANGE CHOICE** soft key until Timed Proportional is displayed. Press the **ACCEPT** soft key to continue.

11:00 AM 21 - APR - 01		SAMPLE COLLECTION
ACCEPT	SAMPLE COLLECTION	CHANGE CHOICE
	TIMED PROPORTIONAL	
BACKUP		
CHOICES: TIMED, FLOW PROPORTIONAL		

b. Use the numeric keypad to enter the Interval Between Samples. Press the **ACCEPT** soft key to continue.

11:00 AM 21 - APR - 01		SAMPLE COLLECTION
ACCEPT	INTERVAL:	
CANCEL	00:00 (hrs:min)	CLEAR ENTRY
ENTER: 000:01—999.00 (hrs:min)		

c. Select either Take First Sample Immediately or After The First Interval?

Note: *When the program is started, the first sample is taken immediately upon pressing the start button or after the first interval has elapsed.*

11:00 AM 21 - APR - 01		SAMPLE COLLECTION
ACCEPT	TAKE FIRST SAMPLE:	CHANGE CHOICE
	_____	
CANCEL		
CHOICES: IMMEDIATE, AFTER 1st SAMPLE		

d. Press the **ACCEPT** soft key to continue to Sample Distribution.

Flow Proportional Constant Volume, Variable Time (CVVT)

CVVT sampling is a flow-proportional method of sampling. CVVT samples are taken when a user-defined flow volume occurs in the flow stream. This occurs when the sampler is programmed to take a sample every time a specified volume of flow occurs in the flow stream. Specified flow volume intervals can vary with the flow rate of the stream, therefore varied time intervals can occur when constant (fixed) volume occurs.

Flow volume is determined internally, by the optional integral flow meter or by an external flow meter.

a. In the Sample Collection, press the **CHANGE CHOICE** soft key until Flow Proportional is displayed. Press the **ACCEPT** soft key.

11:00 AM 21 - APR - 01		SAMPLE COLLECTION
ACCEPT	SAMPLE COLLECTION: FLOW-PROPORTIONAL	CHANGE UNITS
CANCEL		
ENTER: 1.00 - 99999999		

b. In the Flow Proportional menu, press the **CHANGE CHOICE** soft key until Constant Volume, Variable Time is displayed. Press the **ACCEPT** soft key.

11:00 AM 21 - APR - 01		FLOW PACING
ACCEPT	FLOW PACING MODE: CONST VOL / VAR TIME	CHANGE CHOICE
CANCEL		
CHOICES: VAR T / CST VOL, CST T / VAR VOL		

c. Select either Integral or External flow meter and press the **ACCEPT** soft key.

d. Enter the flow volume between samples using the numeric keypad and select a unit of measure using the **CHANGE UNITS** soft key, then press the **ACCEPT** soft key. Refer to Table 2 for flow unit choices.

11:00 AM 21 - APR - 01		SAMPLE COLLECTION
ACCEPT	TAKE SAMPLE EVERY: 1500 gal	CHANGE UNITS
CANCEL		CLEAR ENTRY
ENTER: 1.00—99999999		

Table 2 Sampler Pacing Flow Units

Abbreviation	Volume
gal	gallons
ltr	liters
m^3	cubic meters
af	acre-feet
cf	cubic feet

e. Select Enable or Disable Timed Over-Ride using the **CHANGE CHOICE** soft key. Press the **ACCEPT** soft key to continue, then enter a time period using the numeric keypad.

Note: *Select Timed Over-Ride if the flow rate drops to an unusually low value during flow-proportional sampling and if the sample is collected once an hour for example, even if the flow interval has not elapsed.*

11:00 AM 21 - APR - 01		SAMPLE COLLECTION
ACCEPT	TIMED OVER-RIDE: 00:00 (hrs:min)	
CANCEL		CLEAR ENTRY
ENTER: 000:01 — 999:00 (hrs:min)		

f. Select Take First Sample Immediately or After First Interval?

Note: *When the program is started, the first sample is taken immediately upon pressing the start button or after the first interval has elapsed.*

11:00 AM 21 - APR - 01	SAMPLE COLLECTION
ACCEPT	CHANGE CHOICE
TAKE FIRST SAMPLE: _____	
CANCEL	
CHOICES: IMMEDIATE, AFTER 1st SAMPLE	

g. Press the **ACCEPT** soft key to continue to Sample Distribution.

Flow Proportional Constant Time, Variable Volume Sampling (CTVV)

A Level-Velocity Sensor Input must be logged and electrically connected for the CTVV feature to work correctly.

CTVV samples are taken at user-specified constant (fixed) intervals. However the actual volume of each sampling is based on the known average flow rate of the site, the actual metered flow rate for each specific interval, the total sample volume desired, the user-specified collection period, and the specified Sampling Interval. Depending on the flow volumes of a stream and various intervals within the Collection Period, the volume of individual sampling can vary. Also, the total sample collected during the entire period can carry slightly above or below the Total Volume Desired. For these reasons, the manufacturer advises using a sampling container that has a larger volume than the Total Volume Desired value.

- Sample Distribution menus are not available when CTVV is selected.
- A level-velocity sensor input must be logged and electrically connected for the CTVV feature to correctly work.
- The Flow Pacing Mode menu within the Flow Proportional menus sequence will not remember the previous setting whenever you re-enter this menu, it will revert to the CVVT default. When re-entering this menu, press the **CHANGE CHOICE** soft key to select the sampling method, CVVT or CTVV.

Example:

This is an example of how the instrument determines sample volume, based on user inputs and actual metered flow volume.

The user entered values are the following:

- Average Flow Rate (historical, site specific): 150 gph
- Sampling Interval: 2 minutes
- Total Sample Volume Desired: 1500 mL
- Collection Sampling Period: 30 minutes

Calculation 1: Total Number of Samples

$$\frac{\text{Sample Period}}{\text{Sampling Interval}} = \frac{30 \text{ min.}}{2 \text{ min.}} = 15 \text{ samples total within specified period}$$

Calculation 2: Average Sample Volume

$$\frac{\text{Total Sample Volume Desired}}{\text{Total Number of Samples}} = \frac{1500\ \text{mL}}{15\ \text{samples Total}} = 100\ \text{mL/sample}$$

Calculation 3: Sample's Volume per unit of Flow Rate

$$\frac{\text{Avg. Sample Volume}}{\text{Avg. Flow Rate}} = \frac{100\ \text{mL/Sample}}{150\ \text{gph}} = 0.7\text{mL/gph}$$

Calculation 4: Actual Sample Volume to be Collected

Sample Volumes per unit of Flow Rate $\times$ Actual metered Flow Rate

0.7 mL/gph $\times$ 150 gph = 105 mL for this sample interval

a. In the Sample Collection menu, press the **CHANGE CHOICE** soft key until Flow Proportional is displayed. Press the **ACCEPT** soft key.

11:00 AM 21 - APR - 01		SAMPLE COLLECTION
ACCEPT	SAMPLE COLLECTION: FLOW-PROPORTIONAL	CHANGE UNITS
CANCEL		
ENTER: 1.00 - 99999999		

b. In the Flow Pacing menu, press the **CHANGE CHOICE** key until Const Time/Var Vol appears. Press the **ACCEPT** soft key.

11:00 AM 21 - APR - 01		FLOW PACING
ACCEPT	FLOW PACING MODE: CONST TIME/ VAR VOL	CHANGE CHOICE
CANCEL		
CHOICES: VAR T / CST VOL, CST T / VAR VOL		

c. In the Average Flow Rate menu use the numeric keypad to enter the known historical Average Flow Rate for a particular site.

11:00 AM 21 - APR - 01		CONST TIME/ VAR VOL
ACCEPT	AVERAGE FLOW RATE: 150.00 gph	
CANCEL		CLEAR ENTRY
ENTER: 1.00—99999999		

d. In the Interval menu use the numeric keypad to enter the time interval between sample collections. Press the **ACCEPT** soft key.

11:00 AM 21 - APR - 01		CONST TIME/ VAR VOL
ACCEPT	INTERVAL: 0:02 (hrs:min)	
CANCEL		CLEAR ENTRY
ENTER: 1.00—999:00 (hrs:min)		

e. In the Total Volume Desired menu use the numeric keypad to enter the total volume of the sample. Press the **ACCEPT** soft key.

11:00 AM 21 - APR - 01		CONST TIME/ VAR VOL
ACCEPT	TOTAL VOLUME DESIRED: 1500 Ml	
CANCEL		CLEAR ENTRY
ENTER: 10—9999		

f. In the Collection Period menu use the numeric keypad to enter the time period for collecting samples.

11:00 AM 21 - APR - 01		CONST TIME/ VAR VOL
ACCEPT	COLLECTION PERIOD 0:30 (hrs:min)	
CANCEL		CLEAR ENTRY
ENTER: 000:01—999:00 (hrs: min)		

g. Press the **ACCEPT** soft key to continue to Sample Distribution.

Step 6 - Sample Distribution

Sample distribution describes the way samples are deposited in a bottle(s). Several bottle combinations are available with the 900 MAX Sampler (Figure 3 on page 28). Sample distribution is deposited into a single bottle or multiple bottles. Multiple bottle applications use a distributor arm to automatically aim the sample intake tubing into the proper bottle. Multiple bottle sets deliver each sample to all bottles or deliver each sample into individual bottles or a subset of bottles.

Single Bottle

6-A. Select either Stop After Last Bottle or Run Continuously? Stop After Last Bottle mode stops the program when the sample is deposited into the last bottle. Run Continuously mode continues running until it is manually stopped.

11:00 AM 21 - APR - 01		SAMPLE DISTRIBUTION
ACCEPT	RUN MODE: RUN CONTINUOUSLY	CHANGE CHOICE
CANCEL		
CHOICES: CONTINUOUS, STOP AFTER LAST		

6-B. Press the **ACCEPT** soft key to continue to Liquid Sensor setup.

Multiple Bottle Sets

Multiple bottle applications use a distributor arm to automatically aim the sample intake tubing into the proper bottle. Multiple bottle sets deliver each sample to all bottles or deliver each sample into individual bottles or a subset of bottles.

6-A. Select **YES** or **NO** for Deliver Each Sample to All Bottles.

11:00 AM 21 - APR - 01		SAMPLE DISTRIBUTION
ACCEPT	DELIVER EACH SAMPLE TO ALL BOTTLES?	CHANGE CHOICE
CANCEL	NO	
	CHOICES: YES, NO	

If **NO** is selected:

a. Select Samples per Bottle or Bottles per Sample.

Example 1: Samples Per Bottle

- Bottles—8
- Sample Collection; Time-Proportional; Sampling Interval—30 min.
- Sample Distribution; Deliver Each Sample to All Bottles?— No
  Samples Per Bottle— Yes
  Number of Samples Per Bottle— 3
- Sample Volume—100 mL

Every 30 minutes a sample is initiated. A 100 mL sample is drawn into bottle #1, 30 minutes later a second sample is drawn into bottle #1, 30 minutes later a third sample is drawn into bottles #1. Thirty minutes later the distributor arm advances to bottle #2 and a 100 mL sample is drawn into bottle #2. The sequence continues until all bottles are filled. Each bottle receives three samples before the distributor moves to the next bottle.

Example 2: Bottles Per Sample

- Bottles—4
- Sample Collection; Timed Proportional; Sampling Interval—30 min.
- Sample Distribution; Deliver Each Sample to All Bottles?—No
  Bottles Per Sample—Yes
  Number of Bottles Per Sample—2
- Sample Volume—1000 mL

Every 30 minutes a sample cycle is initiated. A 1000 mL sample is drawn into the first bottle. the distributor arm immediately advances to bottle #2 and a 1000 mL sample is drawn into the second bottle. Thirty minutes later, the distributor arm advances to bottle #3, and a 1000 mL sample is taken. The distributor arm immediately advances to bottle #4 and a 1000 mL sample is drawn into the fourth bottle. The pattern continues each sample cycle with each set of two bottles receiving a sample each time.

Note: *A high pressure air purge is automatically applied to the intake tube between each sample intake cycle.*

b. Press the **ACCEPT** soft key to continue with Liquid Sensor setup.

If **YES** is selected:

Each time a sample is taken it is consecutively placed in all bottles. This allows for split samples.

a. Select Stop After Last Sample or Run Continuously.

11:00 AM 21 - APR - 01		SAMPLE DISTRIBUTION
ACCEPT	RUN MODE: RUN CONTINUOUSLY	CHANGE CHOICE
BACKUP		
CHOICES: CONTINUOUS, STOP AFTER LAST		

b. If Stop After Last Sample is chosen, enter the samples to collect using the numeric keypad.

11:00 AM 21 - APR - 01		SAMPLE DISTRIBUTION
ACCEPT	SAMPLES TO COLLECT:	
BACKUP	2	CLEAR ENTRY
ENTER: 1 — 999		

Example 1: The following example creates four identical composite samples automatically if the sampler is programmed as follows:

- Bottles—4
- Sample Collection; Sampling Interval—30 minutes
- Sample Collection; Samples to Collect—25
- Sample Volume—100 mL

Every 30 minutes a sample is initiated and a 100 mL sample is drawn into the first bottle. The distributor arm advances to bottle #2 and 100 mL. sample is drawn into the second. This also occurs in bottles #3 and #4.

Sampling will continue every 30 minutes until 25 samples are deposited. Once all samples are deposited the program will terminate. If Run Continuously is selected the sampling will restart automatically.

c. Press the **ACCEPT** soft key to continue to Liquid Sensor.

Step 7 - Liquid Sensor

The liquid sensor contains a pair of ultrasonic transducers which sense the presence of liquid inside silicone tubing.

7-A. Select Enable or Disable Liquid Sensor using the **CHANGE CHOICE** soft key.

Note: *Sample retries cannot be enabled when the liquid sensor is disabled.*

Enabling the Liquid Sensor
When the liquid sensor is enabled, the 900 MAX Sampler will perform two duties:

- It senses when liquid reaches the pump during an intake cycle. The pump then reverses to rinse the line, up to 3 times.
- It senses the absence of liquid during a sample intake cycle if the intake tubing is plugged or if the water level has dropped below the level of the intake tube strainer. This initiates a Sample Retry if programmed

Disabling the Liquid Sensor/Timed Calibration
Disabling the liquid sensor turns the liquid sensor off. The sample volume is then metered using a timed method (Timed Calibration), instead of a sensed method.

7-B. Press the **ACCEPT** soft key to continue to Sample Volume.

Step 8 - Sample Volume

Note: *The minimum sample volume is ten milliliters.*

When multiple bottles are selected in Bottle Per Sample mode all bottles in a subset receive a full sample volume. The volume is not divided among the bottles.

8-A. Enter the desired volume of each sample using the numeric keypad. Press **ACCEPT** soft key to continue to Intake Rinses.

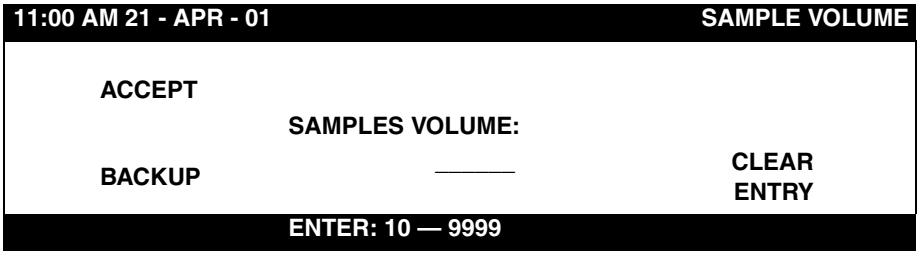

Step 9 - Intake Rinses

9-A. Enter number of rinses using the numeric keypad.

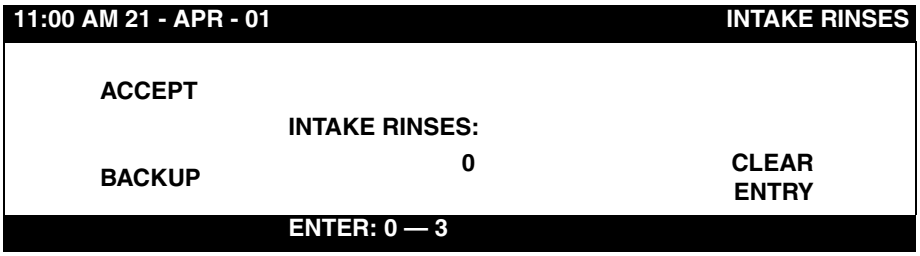

Up to three intake rinses are enabled per sample cycle. After the sample cycle's initial purge has been completed, the sample liquid is drawn in until it reaches the liquid sensor. The pump stops and purges the line before any liquid enters the bottle. This is repeated up to three times before the actual sample is taken and the line purged for the final time during that cycle.

Intake rinse can prevent cross contamination of samples. When the line is purged at the end of each sample cycle, a few droplets of sample liquid may cling to the inside walls of the tubing and the droplets are drawn in with the following sample. Intake rinses will condition the intake line with a source liquid that minimizes contamination from the previous sample.

9-B. Press the **ACCEPT** soft key to continue to Sample Retries.

Step 10 - Sample Retries

Note: *Excessive intake tube line lengths combined with multiple Intake Rinses and Sample Retries can increase the pump tube and drive train wear. Locate the sampler as close to the sample liquid source as possible to minimize wear and maintenance requirements.*

10-A. Enter the number of Sample Retries using the numeric keypad.

Up to three sample retries are enabled per sample cycle. After the initial purge is completed, the sample liquid is drawn until it reaches the liquid sensor. If the sample liquid does not reach the sensor within a reasonable time (determined using the tubing length), the sample attempt is aborted, a purge is initiated and the first of up to three sample retries is attempted.

After three attempts and no sample liquid has been collected, the cycle is aborted, a Missed Sample is reported to the Sample History Log, and the sampler begins a new sample interval.

10-B. Press the **ACCEPT** soft key to continue to Site ID.

Step 11 - Site ID

11-A. Enter a site identification number of up to 8 digits. This Site ID will appear on all data printouts. This feature is useful when multiple sites are monitored using a single flow meter or if data readings from multiple flow meters are collected.

11:00 AM 21 - APR - 01		SITE ID
ACCEPT		
	SITE ID:	
BACKUP	00000000	CLEAR ENTRY
	(USE NUMERIC KEYPAD)	

11-B. Press the **ACCEPT** soft key.

11-C. After Site ID is accepted the following menu will appear:

11:00 AM 21 - APR - 01	ADVANCED SAMPLING
DO YOU WISH TO ACCESS THE ADVANCED SAMPLING FEATURES?	YES
	NO
ENTER: 1 — 999	

11-D. If **NO**, the basic setup program is complete.

Note: *To return to the Advanced Sampling options at a later time, from the Main Menu select,* ***SETUP>MODIFY SELECTED ITEMS>PROGRAM ENTRIES.***

4. Highlight Advanced Sampling and press the **SELECT** soft key. In the Advanced Sampling menu highlight the an item using the up and down arrows and press the **SELECT** soft key

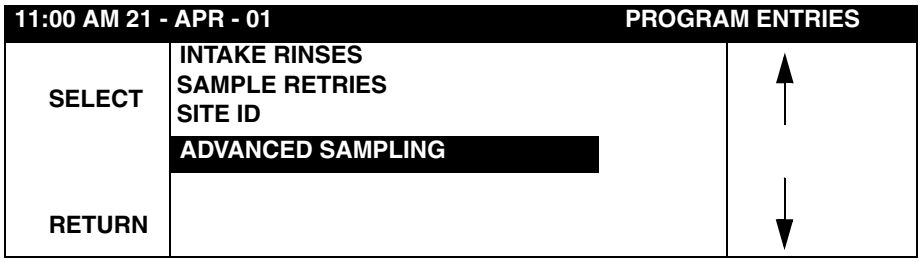

11-E. If **YES**, continue to Advanced Sampling, section 3.3.

3.3 Advanced Sampling

Advanced sampling choices:

- Program Complete Output
- Setpoint Sampling
- Special Output
- Start/Stop Times
- Storm Water
- Timed Bottle Sets
- Upset Sample
- Variable Intervals
- Variable Volumes

Step 12 - Program Complete Output

Program Complete Output sends a +12 V dc signal out Pin F of the Auxiliary Receptacle at the completion of the sampling program. This signal is also sent when a Full Bottle condition causes the program to complete. The Program Complete signal remains on (+12 V dc) for 61 seconds and then turns back off (0 V dc).

Program Complete Output is used for the following purposes:

- Multiple Sampler Operation. Samplers are arranged in a “Cascade” control where the first sampler signals a second sampler to start its program when the first sampler’s program is complete. This feature requires the second sampler to be programmed for external start operation.
- To interface to a PC to signal the end of the sampling program.
- To interface to a relay that trips a signal light in a control room to indicate that sampling is finished and samples are ready to be picked up.

12-A. From the Advanced Sampling menu highlight Program Complete using the up and down arrow soft keys. Press **SELECT** soft key to continue.

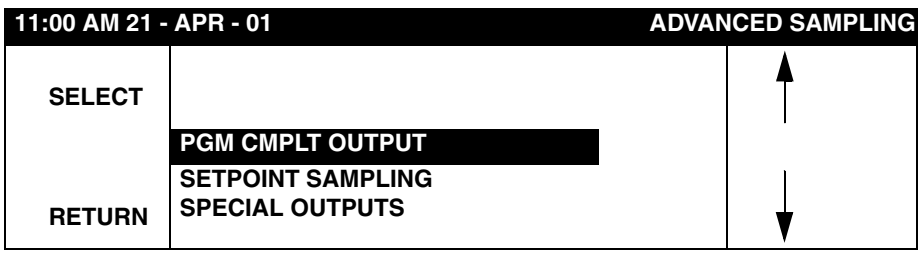

12-B. Select Enable or Disable Program Complete using the **CHANGE CHOICE** soft key.

12-C. Press the **ACCEPT** soft key to continue to Setpoint Sampling.

Step 13 - Setpoint Sampling

Setpoint sampling allows the control of an automatic liquid sampler from one of up to 14 sources. Setpoint sampling defines a set of limits that inhibit sampling until an upset condition occurs, causing the limits to exceed. Sampling is enabled only when the waste stream falls outside the setpoints.

13-A. Highlight Setpoint Sampling using the up and down arrow soft keys on the Advanced Sampling Menu. Press the **SELECT** soft key.

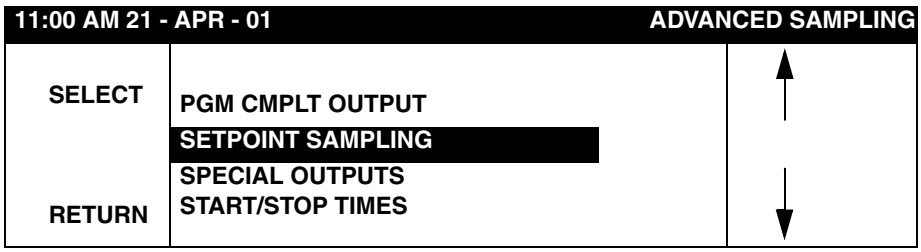

13-B. Select Enable or Disable Setpoint Sampling using the **CHANGE CHOICE** soft key. Press the **ACCEPT** soft key to continue.

13-C. Select either Start on Setpoint or Stop on Setpoint by pressing the **CHANGE CHOICE** soft key. Press the **ACCEPT** soft key to continue.

- Start on Setpoint will start a program when the setpoint condition is met. The program continues to run even if the condition falls back within the setpoint limits.
- Stop On Setpoint halts the program if the setpoint condition falls back within the setpoint limits and starts again if the limits are exceeded.

13-D. Highlight the desired channel to trigger from, then press **SELECT**.

13-E. Press either the **HIGH CONDITION** soft key or the **LOW CONDITION** soft key.

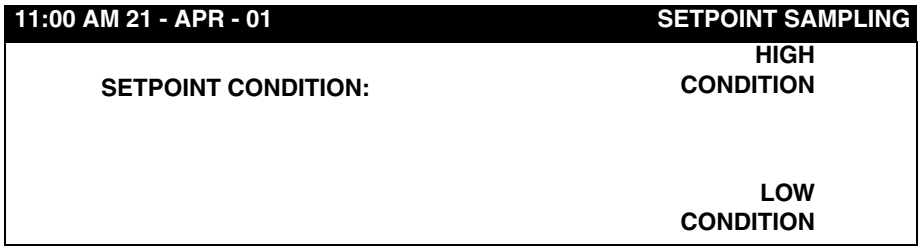

Note: *Flow Rate of Change and Rainfall are signals that only increase and never decrease in value, therefore these signals do not require Low Condition.*

The external control signal must be configured on the external equipment for the desired setpoint. An external control device must provide a dry contact and can include a float switch, push-button, external flow meter, etc. For interface connections refer to section 2.10 on page 33.

13-F. Select Enable or Disable the trigger point using the **CHANGE CHOICE** soft key.

13-G. Select the desired high or low trigger point using the numeric keypad. Press the **ACCEPT** soft key continue. Refer to Table 3.

11:00 AM 21 - APR - 01		SETPOINT SAMPLING
ACCEPT	SETPOINT SAMPLING: HIGH TRIGGER POINT:	
CANCEL	00000 in.	CLEAR ENTRY
	(USE NUMERIC KEYPAD)	

13-H. Enter the Deadband value if required or, if programming Flow Rate Of Change or Rainfall, enter a time interval that the flow or rainfall change must take place (refer to section 6.4 on page 96).

11:00 AM 21 - APR - 01		SETPOINT SAMPLING
ACCEPT	SETPOINT SAMPLING DEADBAND:	
CANCEL	0.000	CLEAR ENTRY
	(USE NUMERIC KEYPAD)	

13-I. Enter a delay when input is active. This delay will keep the program from starting until the end of the delay period. Using the numeric keypad, enter the delay in minutes and/or hours. Press the **ACCEPT** soft key to continue.

11:00 AM 21 - APR - 01		SETPOINT SAMPLING
ACCEPT	DELAY WHEN INPUT BECOMES ACTIVE:	
CANCEL	(hrs:min)	CLEAR ENTRY
	(USE NUMERIC KEYPAD)	

Table 3 Sampling Triggers and Settings

Channel	Sampling Trigger	Settings
1	Level	High and/or Low Condition, Deadband
2	Flow	High and/or Low Condition, Deadband
3	Flow Rate of Change	High Condition within Time Interval
4	pH or ORP	High and/or Low Condition, Deadband
5	Process Temperature	High and/or Low Condition, Deadband
6	Rainfall	High Condition within Timed Interval
7	Analog Input Channel 1	High and/or Low Condition, Deadband
8	Analog Input Channel 2	High and/or Low Condition, Deadband
9	Analog Input Channel 3	High and/or Low Condition, Deadband
10	Analog Input Channel 4 or DO	High and/or Low Condition, Deadband

Table 3 Sampling Triggers and Settings (continued)

Channel	Sampling Trigger	Settings
11	Analog Input Channel 5 or DO Temperature	High and/or Low Condition, Deadband
12	Analog Input Channel 6 or Conductivity	High and/or Low Condition, Deadband
13	Analog Input Channel 7 or Conductivity Temperature	High and/or Low Condition, Deadband
14	External Control	Configured in External Equipment

Step 14 - Special Output

The Special Output is a +12 V dc signal that appears on Pin E of the Auxiliary Receptacle (refer to section 2.10 on page 33).

14-A. Highlight Special Output using the up and down arrow soft keys on the Advanced Sampling Menu. Press the **SELECT** soft key to continue.

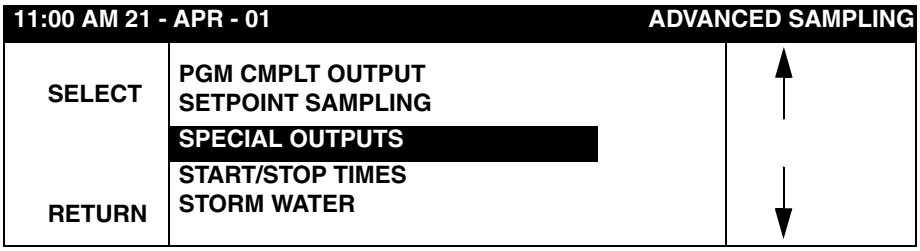

14-B. Select Enable or Disable Special Outputs using the **CHANGE CHOICE** soft key. Press the **SELECT** soft key to continue.

14-C. If enabled, select After Each Sample, Only When Pumping, or From Rinse to Purge.

Bottle Number
If the Program Complete Output is disabled, then it is used in conjunction with this special Output to transmit the bottle number to the connected device.

The Special Output signal can be configured to activate during one of the following conditions:

- After Each Sample– One second pulse at the completion of each sample cycle. It signals an external datalogger or PC that a sample cycle was initiated. When this choice is enabled, the sample success/failure is also transmitted to the external datalogger by means of Pin F on the Auxiliary connector.
- Only When Pumping– During sample intake portion of cycle only, ignoring all purges and rinse cycles. Used for tipping solenoid or ball valves when sampling from a pressurized line.
- From Rinse To Purge– During entire sample cycle, including all purge and rinse cycles. Used for tripping solenoid or ball valves when sampling from a pressurized line.

Step 15 - Start/Stop Times

Start/Stop Times start and stop a program at pre-arranged times. For example, this feature can be used to run a program during weekdays and stop the program during weekends, restarting on the following Monday. It can also halt sampling for nighttime shutdowns.

Up to 12 Start and 12 Stop time entries can be set in any one program. Either a Start Time and Date or a Start Time and Day of the Week may be selected.

15-A. Highlight the Start/Stop Time choices on the Advanced Sampling menu. Press the **SELECT** soft key to continue.

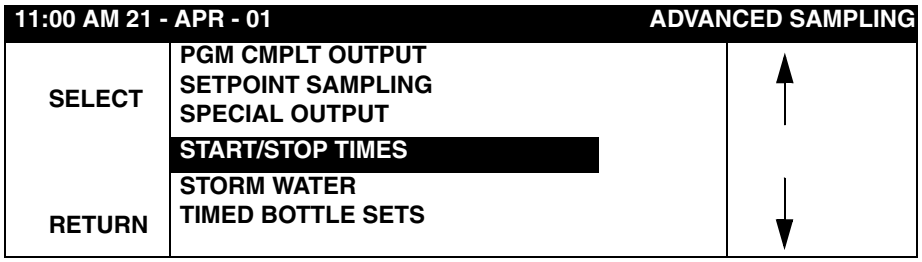

15-B. Select Enable or Disable Start/Stop Times using the **CHANGE CHOICE** soft key. Press the **ACCEPT** soft key to continue.

15-C. Press the **CHANGE CHOICE** soft key to select either Time/Date or Time/Weekday. Select Time/Date if the start and stop times cover longer than one week. Select Time/Weekday if the program repeats on a daily or weekly basis.

15-D. Press the **ACCEPT** soft key to continue.

15-E. Enter the Start Time #1, press the **ACCEPT** soft key to continue. Enter Stop Time # and press the **ACCEPT** soft key to continue.

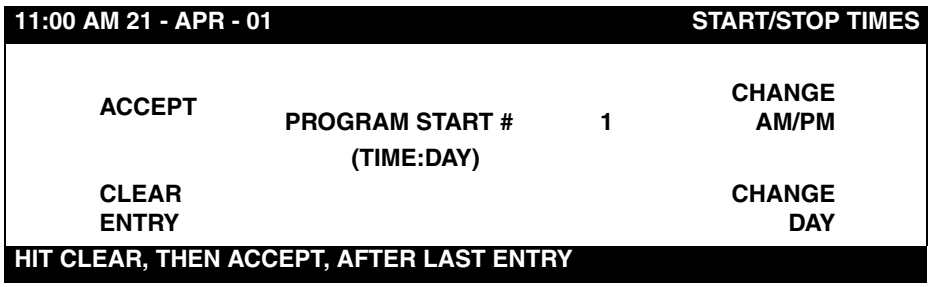

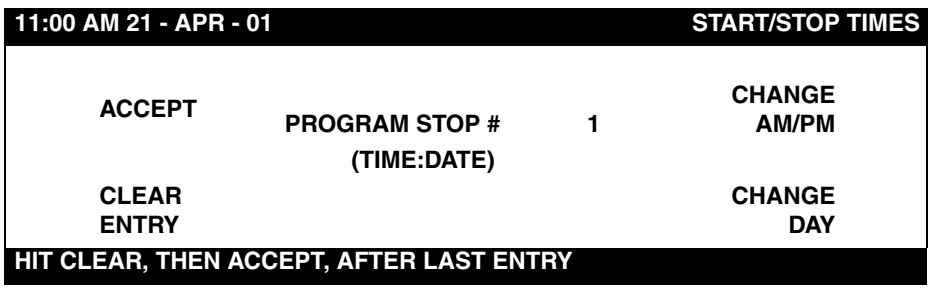

15-F. Continue entering Start and Stop times until finished. To exit and save entries, enter a blank time and date. Press the **CLEAR ENTRY** soft key and then press the **ACCEPT** soft key to continue to Storm Water.

Step 16 - Storm Water

EPA regulations for storm water discharges require monitoring of precipitation, flow, and water samples in order to assess the impact of storm or snow melt runoff on receiving waters. The manufacturer can help you create a storm water monitoring system that consists of a multiple bottle sampler, an external flow meter, and a tipping bucket rain gauge.

In addition to performing basic sampling routines, 900 MAX Samplers that are equipped with the storm water monitoring program have the following additional capabilities:

- The storm water sampling routine allows collection of automatic grab sample(s) at user-selectable timed intervals (up to 24 different intervals may be selected) during the storm's early stage or “first flush.” First flush grab and main program flow-weighted composite samples are automatically segregated. The first flush sample volume may be set independently of the sample volume for the flow-weighted composite.
- The special storm water program allows an external device to initiate the start of the sampling program. A dry contact closure across Pins B and D on the Auxiliary receptacle, held closed for at least 61 seconds, is required.
- When sampling with multiple bottles, the sampler can be programmed to collect one large “first flush” sample (or small multiple samples) at timed interval(s). The number of bottles segregated for the first flush sample is selectable. Concurrently, flow-weighted samples are collected from the beginning of the storm until all remaining bottle(s) are filled, or after a user selected time has elapsed.
- Storm water samplers are equipped with a special prerinse that occurs only with the first sample collection. This “one time only” rinse ensures a clean intake for installations that may remain dormant for extended periods, and extends battery life by eliminating the prerinse for subsequent samples.

16-A. Highlight Storm Water using the up and down arrow soft keys on the Advanced Sampling Menu. Press the **SELECT** soft key to continue.

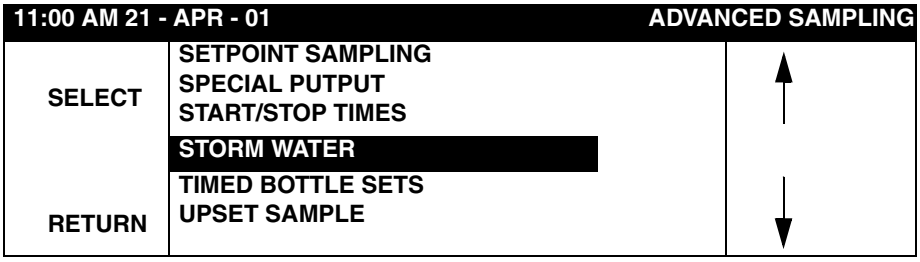

16-B. Select Enable or Disable Storm Water using the **CHANGE CHOICE** soft key. Press the **ACCEPT** soft key to continue.

16-C. Select a Start Condition using the **CHANGE CHOICE** soft key.

- Rain
- Level
- Rain or Level (either condition must be met for the program to begin)
- Rain and Level (both conditions must be met for the program to begin)
- Immediate (program starts as soon as the **RUN** key is pressed, a start condition is not required)
- External Trigger (program starts when signaled by an external device at least 61 seconds through the Auxiliary connector. No start condition is required).

16-D. Enter the Start Condition Limits. Rainfall times will depend on the historical rainfall in a specific area. Consult your state or an EPA regional office for details.

Table 4 Start Condition Requirements

Rain	Enter the amount of rainfall and the time period when it must fall.
Level	Level Limit
Rain and Level	Enter the amount of rainfall and the time period when it must fall, and desired level limit.
Immediate	No start condition required
External Trigger	No start condition required

First Flush Bottles
First flush describes the initial storm water runoff. This runoff may contain higher concentrations of pollutants and is sequestered in separate bottles from the flow or time-weighted composite samples.

a. Enter the number of bottles to set aside for the First Flush portion of the sampling program using the numeric keypad.

The number of first flush bottles will depend on the sample volume requirements in your NPDES permit.

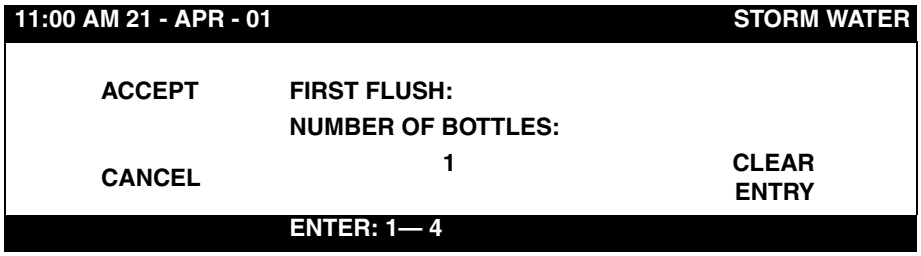

b. Enter number of samples to collect using the numeric keypad.

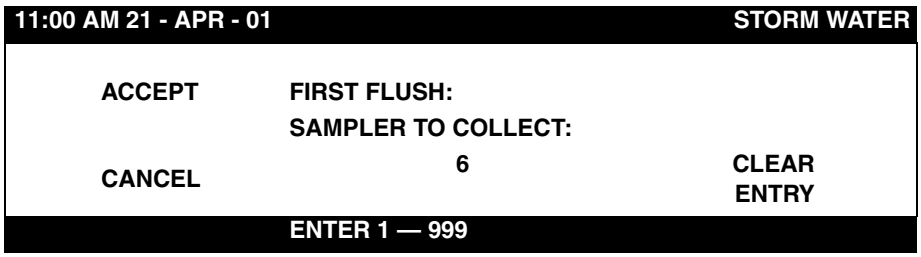

c. Enter the first flush sampling interval. This is the time period between sample cycles. The first flush samples are usually collected within thirty minutes of the storm.

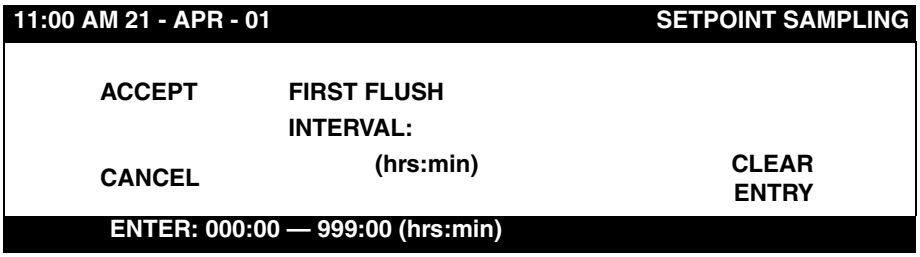

Variable time intervals may be entered or the same interval may be carried through the entire first flush. Pressing the **FINAL ENTRY** soft key carries the last displayed interval through the remainder of the first flush sampling period.

d. Enter the first flush sample volume using the numeric keypad.

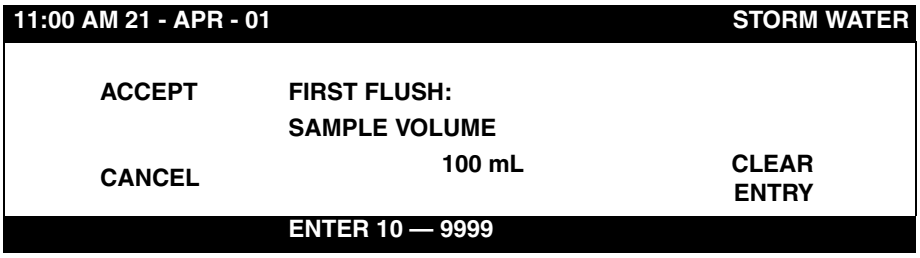

e. Select Enable or Disable Program Time Limit using the **CHANGE CHOICE** soft key. When enabled, the Program Time Limit will stop all sampling activity at the end of the time limit, however data logging will continue.

f. Enter the Program Time Limit. NPDES requirements typically ask that you monitor the first three hours of any given storm. If the flow volume was not as high as expected, flow-weighted sampling could continue for some time as flow rates drop off and sample intervals become longer.

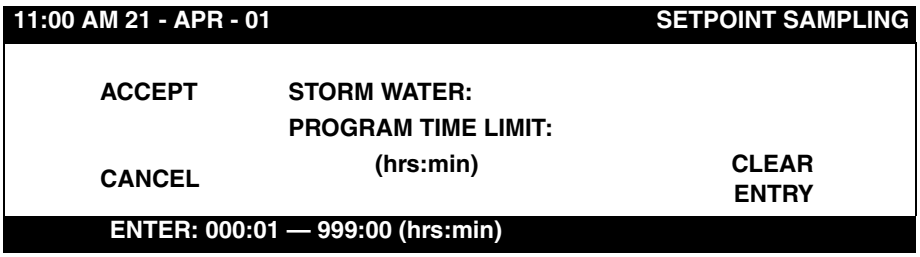

g. Press the **ACCEPT** soft key to continue to Timed Bottle Sets.

Step 17 - Timed Bottle Sets

Timed Bottle Sets enables a single sampler to function like multiple samplers. With Timed Bottle Sets you can take a 24-bottle sampler and sample using the first 12 bottles on the first day and the second 12 bottles on the next day.

When a subset of bottles is set aside for each user defined time interval the sampler will treat that subset as if it were the entire set. At the end of the time interval the sampler will switch to the next subset and continue sampling.

17-A. Highlight Timed Bottle Sets using the up and down arrow soft keys on the Advanced Sampling Menu. Press the **SELECT** soft key to continue.

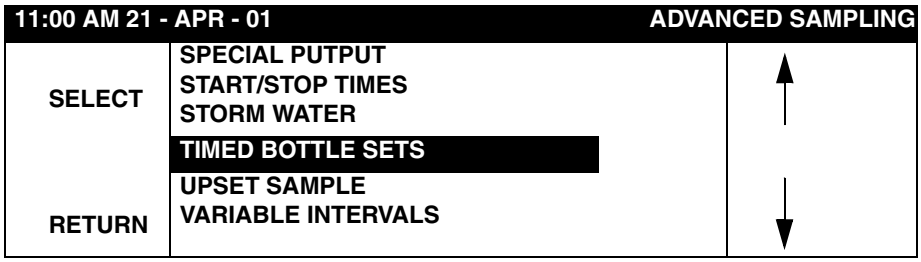

17-B. Select Enable or Disable Timed Bottle Sets using the **CHANGE CHOICE** soft key. Press the **ACCEPT** soft key to continue.

17-C. Select a method for switching bottle sets. Select either clock time that switches bottle sets every 24 hours or select duration that sets the bottles sets in minutes and hours.

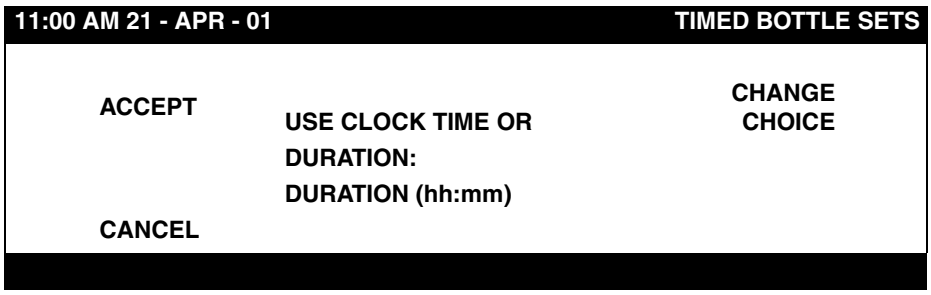

The number of bottles that were selected in bottles-per-sample mode are used as the bottle set size. Two bottles per-sample means two bottles per Timed Bottle Set.

17-D. Select Enable or Disable Continuous Mode using the **CHANGE CHOICE** soft key. If Continuous Mode is enabled the program will continuously run and switch bottle sets after every specified duration elapses, until manually stopped. If Continuous Mode is disabled, then the sampling halts when the last bottle set in the tray is full.

17-E. Press the **ACCEPT** soft key to continue to Upset Sample.

Step 18 - Upset Sample

Upset Sampling analyzes the collected samples to determine when samples meet or exceed specified upset limits. The sampler will swing the distributor arm around to a sequestered set of bottles and grab an upset bottle.

The upset sample bottles are always the last bottles in the tray. For example, if there are 24 bottles in the tray, 4 first flush bottles and 4 upset bottles, then the bottles assignment is 1–4 first flush, 5–20 main program, and 21–24 upset samples.

Note: *Unlike Setpoint Sampling, Upset Sampling can be enabled while the 900 MAX Sampler is performing a regular sampling program. There must be more than one bottle in the sampler to perform Upset Sampling.*

Upset Samples are collected even when there are no more regular samples to be taken; when the status screen says Program Complete, but the bottom line of the display says Program Running.

Refer to the Quick Start Guides on page 115 for more setup information for individual channels.

18-A. Highlight Upset Sampling using the up and down arrow soft keys on the Advanced Sampling Menu. Press the **SELECT** soft key to continue.

11:00 AM 21 - APR - 01		ADVANCED SAMPLING
SELECT	START/STOP TIMES STORM WATER TIMED BOTTLE SETS	↑
	UPSET SAMPLING	
RETURN	VARIABLE INTERVALS VARIABLE VOLUME	↓

18-B. Select Enable or Disable Upset Sampling using the **CHANGE CHOICE** soft key. Press the **ACCEPT** soft key to continue.

18-C. Press the **CHANGE CHOICE** soft key to select the desired channel to trigger from. Press the **ACCEPT** soft key to make the selection.

18-D. Press either the **HIGH CONDITION** soft key or the **LOW CONDITION** soft key.

- Flow Rate of Change and Rainfall are signals that only increase in value and do not require Low Condition.
- The external control signal (such as an external flow meter) must be configured in the external equipment for the desired setpoint.

11:00 AM 21 - APR - 01	UPSET SAMPLES
UPSET CONDITION:	HIGH CONDITION
	LOW CONDITION

18-E. Enter the desired high or low trigger point using the numeric keypad. Press the **ACCEPT** soft key to continue.

11:00 AM 21 - APR - 01		UPSET SAMPLES
ACCEPT	UPSET SAMPLING: HIGH TRIGGER POINT:	
CANCEL	00000 in.	CLEAR ENTRY
	(USE NUMERIC KEYPAD)	

18-F. Enter the Deadband value or, if programming for Flow Rate Of Change or Rainfall, enter a time interval when the flow or rainfall change must take place (refer to Alarm Relays Programming on page 98).

11:00 AM 21 - APR - 01		UPSET SAMPLES
ACCEPT	UPSET SAMPLING DEADBAND:	
CANCEL	0.000	CLEAR ENTRY
	(USE NUMERIC KEYPAD)	

18-G. Enter the number of bottles (out of the total set) to set aside for upset samples. These will be the last bottles in the tray.

11:00 AM 21 - APR - 01		UPSET SAMPLES
ACCEPT	UPSET SAMPLING: NUMBER OF BOTTLES	
CANCEL	2	CLEAR ENTRY
	ENTER 1 — 4	

18-H. Select the method of distribution, Sample Per Bottle or Bottles Per Sample.

18-I. Enter the sample volume using the numeric keypad.

11:00 AM 21 - APR - 01		UPSET SAMPLES
ACCEPT	UPSET SAMPLING SAMPLE VOLUME:	
CANCEL	0000	CLEAR ENTRY
	ENTER 10 — 9999	

18-J. Press the **ACCEPT** soft key to continue to Variable Intervals.

Step 19 - Variable Intervals

19-A. Highlight Variable Intervals using the up and down arrow soft keys on the Advanced Sampling Menu. Press the **SELECT** soft key to continue.

11:00 AM 21 - APR - 01		ADVANCED SAMPLING
SELECT	STORM WATER TIMED BOTTLE SETS UPSET SAMPLING	↑
	VARIABLE INTERVALS	
RETURN	VARIABLE VOLUME	↓

19-B. Select Enable or Disable Variable Intervals using the **CHANGE CHOICE** soft key. Press the **ACCEPT** soft key to continue.

19-C. Set sample intervals using the numeric keypad. Press the **ACCEPT** soft key to enter another interval or press the **ACCEPT AS FINAL** to return to the Advanced Sampling menu and continue to Variable Volumes.

Step 20 - Variable Volume

20-A. Highlight Variable Volume using the up and down arrow soft keys on the Advanced Sampling Menu. Press the **SELECT** soft key to continue.

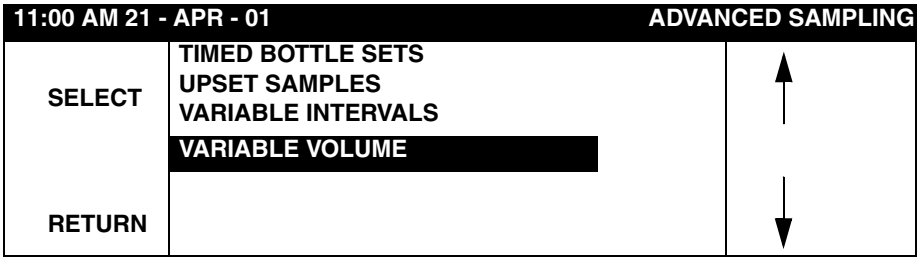

20-B. Select Enable or Disable Variable Volume using the **CHANGE CHOICE** soft key. Press the **ACCEPT** soft key to continue.

20-C. Enter the Sample Volume counts using the numeric keypad. Press the **ACCEPT** soft key to return to the Advanced Sampling Menu.

4.1 Downlook Ultrasonic Sensor

The 900 MAX All Weather Refrigerated Sampler uses a 40 kHz Downlook Ultrasonic Sensor.

4.1.1 Downlook Ultrasonic Sensor Connection

The downlook ultrasonic sensor connection is located on the back side of the 900 MAX All Weather Refrigerated cabinet. The gray rectangular box houses the ultrasonic module and the transducer connector labeled ULTRASONIC. The connector is keyed and can only be inserted in the proper orientation (key up).

4.1.2 Downlook Ultrasonic Sensor Programming

The downlook ultrasonic sensor does not require specific programming, unless more than one sensor option is connected to the sampler. When more than one sensor option is connected to the sampler:

1. From the Main Menu, select **OPTIONS>LEVEL SENSOR.**
2. Select Ultra-Sonic using the **CHANGE CHOICE** soft key, then press the **ACCEPT** soft key.

4.1.3 Downlook Ultrasonic Sensor Calibration

Calibrate the current water level via one of two methods; Liquid Depth or Sensor Height. An Invisible Range can also be set which allows the transducer to ignore reflections from obstructions between the sensor and the water surface, such as ladder rungs, channel side walls, etc. Each method has its own advantages and disadvantages; selecting the proper method will depend upon the site conditions. Calibrate the ultrasonic sensor each time the sensor is installed at a new site.

4.1.3.1 Liquid Depth

This method requires the level or depth of liquid in the channel that is contributing to flow. In a round pipe, the entire depth typically contributes to flow. In a weir, only the depth that is flow over the weir plate contributes to flow. Many flumes have specific requirements. Level Depth calibration is primarily is used when:

- Access is available to the primary device for a physical measurement of the liquid depth, and
- When water is flowing during installation (channel is not dry).

Note: *Always re-check the Level Adjust when re-installing the flow meter.*

1. From the Main Menu, select **OPTIONS>ADVANCED OPTIONS>CALIBRATION>ULTRASONIC SENSOR.**
2. Select Calibrate U-Sonic using the up and down arrow soft keys. Press the **SELECT** soft key.
3. Select Standard as the type of Ultrasonic Transducer using the **CHANGE CHOICE** soft key. Press the **ACCEPT** soft key to continue.

Temperature Time Constant

The speed of sound in air varies with the temperature of the air. The ultrasonic sensor is equipped with temperature compensation to help eliminate the

effect of temperature variation under normal site conditions. The transducer must be equal to the ambient air temperature at the site prior to calibration for optimum results. The manufacturer also recommends that sensors be shielded from direct sunlight for this reason.

4. Enter the ambient air temperature at the transducer location. For optimum results, allow enough time (100 minutes) to ensure that the sensor is at equilibrium with the surrounding ambient temperature. Press the **ACCEPT** soft key to continue.

5. Select the Liquid Depth method and enter the new level.

6. Take a physical measurement of the liquid depth (level) and enter the value.

7. Press the **ACCEPT** soft key when finished.

4.1.3.2 Sensor Height

This method requires you to enter the distance between the face of the ultrasonic sensor and the zero flow point in the primary device. The zero flow point in a primary device is the level at which flow ceases. In a round pipe the zero flow point would typically be the invert or bottom of the pipe. In a V-notch weir the zero flow point occurs when the liquid behind the weir is level with the bottom of the 'V'. (There would still be liquid behind the weir plate but it would not be contributing to flow). Sensor Height calibration is generally used when:

- Access to the primary device is difficult (such as confined space entry in a manhole) or
- There is no liquid flowing during installation of the flow meter.

1. From the Main Menu, select **OPTIONS>ADVANCED OPTIONS>CALIBRATION>ULTRASONIC SENSOR.**

2. Select Calibrate U-Sonic using the up and down arrow soft keys. Press the **SELECT** soft key.

3. Select Standard as the type of Ultrasonic Transducer using the **CHANGE CHOICE** soft key. Press the **ACCEPT** soft key to continue.

   The speed of sound in air varies with the temperature of the air. The ultrasonic sensor is equipped with temperature compensation to help eliminate the effect of temperature variation under normal site conditions.

4. Enter the ambient air temperature at the transducer location. For optimum results, allow enough time (100 minutes) to ensure that the sensor is at equilibrium with the surrounding ambient temperature. Press the **ACCEPT** soft key to continue.

5. Select the Sensor Height method and enter the new level.

6. Enter the distance from the face of the transducer to the zero flow point of the primary device.

7. Press the **ACCEPT** soft key when finished.

4.1.3.3 Setting the Invisible Range

1. From the Main Menu, select **OPTIONS>ADVANCED OPTIONS>CALIBRATION>ULTRASONIC SENSOR.**

2. Select the Invisible Range option using the up and down arrow soft keys. Press **SELECT** to continue.

3. Enter the Distance to End of the Invisible Range using the numeric keypad.

4. Select either inches or centimeters using the **CHANGE UNITS** soft key. The distance must be greater than the minimum deadband of 10 in. (25.4 cm) for the 75 kHz sensor and 15 in. (38.1 cm) for the 50 kHz sensor.

5. Press **ACCEPT** soft key when finished.

4.2 Submerged Area/Velocity Sensor

Submerged Area/Velocity Sensor utilizes a pressure transducer in conjunction with the Doppler method of velocity measurement to calculate flow in open channels. A small sensor containing both a transducer and velocity sensor is affixed in the flow stream. The instrument reads the pressure of the water and converts it to a level reading. The instrument then calculates the 'wetted area' of the flow stream utilizing the user centered channel shape. Once the wetted area and the velocity are known the following formula is used:
Area x Velocity = Flow.

4.2.1 Submerged Area/Velocity Sensor Connection

Table 5 Submerged/Area Velocity Sensor Connection

Pin	Signal Description	Wire Color
A	+12 V dc	Red
B	ground	Green
C	Receive (ground)	B/W Shield
D	Receive (+)	B/W Center
E	Transmit (ground)	Black Shield
F	Transmit (+)	Black Center
G	Depth (-)	Black
H	Depth (+)	White

Recommended Routing of Submerged Area/Velocity Cable
Proper routing of the cable serves two functions:

- Keeps the in-line desiccant assembly inside the cover and out of the way when installing and removing the sampler from tight manholes.
- Keeps the desiccant out of direct contact with the elements. Also, keeps water from dripping directly onto the desiccant assemble.

To secure the submerged area velocity cable, route the cable around the battery and clip it under the battery hold downs.

4.2.2 Submerged Area/Velocity Sensor Programming

1. From the Main Menu, select **OPTIONS>LEVEL SENSOR.**
2. Select Submerged Xducer using the **CHANGE CHOICE** soft key, then press the **ACCEPT** soft key.
3. From the **MAIN MENU**, select **SETUP>MODIFY SELECTED ITEMS.**
4. Highlight Velocity Direction using the up and down arrow soft keys. Press the **SELECT** soft key to continue.
5. Set the velocity direction (upstream, downstream, or always positive) using the **CHANGE CHOICE** soft key. Press the **ACCEPT** soft key to continue.
6. Highlight Velocity Units using the up and down arrow soft keys. Press the **SELECT** soft key to continue.
7. Set the Velocity Units (fps or m/s), using the up and down arrow soft keys. Press the **ACCEPT** soft key to continue.
8. Highlight Velocity Cutoff, using the up and down arrow soft keys. Press **SELECT** to continue.
9. Read the Velocity Cutoff information screen. Press any key to continue.
10. Set the Velocity Cutoff using the numeric keypad. Press the **ACCEPT** soft key to continue.
11. Set the Velocity Default, using the numeric keypad. Press the **ACCEPT** soft key. Press the **RETURN** soft key to go back to the Setup Menu or the Main Menu key to return to the Main Menu display.

4.2.3 Submerged Area/Velocity Sensor Calibration

This calibration requires a graduated cylinder or bucket with at least 16 cm (6 in.) of water and a ruler. Calibrating the Submerged Area/Velocity Sensor characterizes the 900 MAX Portable Sampler electronics to the unique characteristics of each individual sensor. In addition, the calibration compensates for any sensor drift that may occur over time (6 months or greater) as the materials in the sensor age.

The Submerged Area/Velocity Sensor is a pressure transducer that contains a stainless steel diaphragm. As the water pressure increases, (with increasing level in the flow stream) the diaphragm is deflected, or pushed, against a solid state device called a strain gauge. The strain gauge converts the pressure against the diaphragm to a voltage. As the level in the flow stream increases, so does the voltage coming from the Submerged Area/Velocity Sensor. The voltage is read by the microprocessor in the sampler at regular intervals and converted to a number that represents the level in the flow stream.

The manufacturer recommends calibrating the submerged area/velocity sensor when:

- The sensor is first used.
- Installing a new or different sensor on a flow meter or input receptacle.

Note: *The data is constant if the difference between the level reading of the flow meter and the independent verification is constant; recalibration is not required.*

Note: *Errors can occur with the flow meter level reading and the independent verification. Errors are caused by variation in site conditions and measurement abilities. These errors may cause slight changes in the difference, therefore, not indicating a true change in the difference.*

Note: *Always check the Level Adjust when reinstalling the sampler following a calibration. (See Keypad Description on page 17.)*

- The difference between the level reading of the flow meter and the independent verification (measurement with a dipstick or ruler) is increasing.

1. From the Main Menu, select **OPTIONS > ADVANCED OPTIONS > CALIBRATION > SUBMERGED PROBE.**
2. Place the sensor flat on a table top or floor with the sensor (the plate with holes) facing down onto the surface (Figure 11).
3. Press any key to continue.
4. Place the sensor face up in the bucket or liquid. Tap lightly to remove air bubbles. If these bubbles are not removed you can receive false readings from the sensor during calibration (Figure 11).
5. Place the sensor face down under at least 16 cm (6 in.) of water and wait 20 seconds. Make sure the water surface is calm and the sensor is stable.
6. Press any key to continue.
7. Measure the depth from the bottom of the bucket to the surface of the water and enter the value using the numeric keypad (Figure 11).
8. Press the **ACCEPT** soft key

Figure 11 Calibrating the Submerged Area/Velocity Sensor

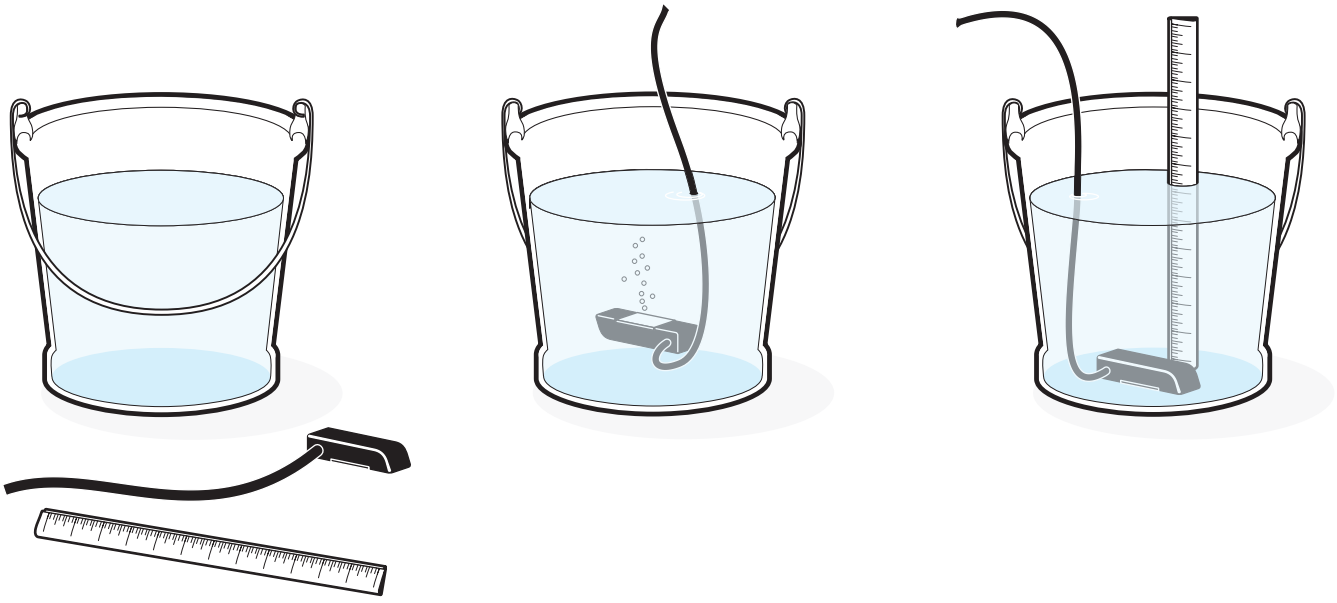

4.3 Submerged Pressure Sensor

The submerged pressure sensor contains a submerged pressure transducer that measures level in an open channel flow stream.

The submerged pressure sensor is mounted in the flow stream at the proper location for level measurement. As the level in the channel increases and decreases, the pressure at the submerged sensor varies proportionately. The pressure transducer converts the water pressure to a voltage. The sampler uses the voltage to calculate the liquid level in the channel. After calculating the level, the sampler then converts the level reading to a flow rate based on the user-defined characteristics of the installed primary device.

The transducer in the submerged sensor first reads the pressure in the channel, then at regular intervals, switches to a reference port to compare it to the atmospheric pressure. This pressure difference is converted to a number which represents the liquid level. At regular intervals, both the pressure transducer diaphragm and the reference port are switched to atmosphere together. Then they are electronically zeroed to eliminate any drift due to changing barometric pressure.

4.3.1 Submerged Pressure Sensor Connection

The submerged pressure sensor connection is located on the left side of the controller housing and is labeled submerged pressure sensor. The connector is keyed and can only be inserted in the proper orientation (key up).

Table 6 Submerged Level Sensor Base Board Connection (J-21)

Pin	Signal Description	Wire Color
A	V +	Red
B	Out +	Yellow
C	Out -	Green
D	Ground	Black

4.3.2 Submerged Pressure Sensor Programming

1. From the Main Menu, select **OPTIONS>LEVEL SENSOR.**

2. Select Submerged Xducer using the **CHANGE CHOICE** soft key, then press the **ACCEPT** soft key.

4.3.3 Submerged Pressure Sensor Calibration

To ensure optimum accuracy, calibrate the sampler approximately twice per year or when changing to a different submerged pressure sensor.

In sites where harsh conditions (extremes of level, temperature, harsh chemicals, etc.) calibration should be performed more often.

1. From the Main Menu, select **OPTIONS > ADVANCED OPTIONS > CALIBRATION > SUBMERGED PROBE.**

2. Choose the orientation that the sensor will be mounted in the flow stream, horizontal or vertical, using the **CHANGE CHOICE** soft key. Press the **ACCEPT** soft key to continue.

11:00 AM 21 - APR - 01		CALIBRATION
ACCEPT	ORIENTATION OF SUBMERGED PROBE: HORIZONTAL	CHANGE CHOICE
CANCEL		
	SELECT APPROPRIATE UNITS	

3. Lift the sensor out of the water and hold it in the air in the same orientation that you selected in the previous step (horizontal or vertical) (Figure 12). Then press the **ACCEPT** soft key to continue.

Figure 12 Lifting the Sensor Out of the Water

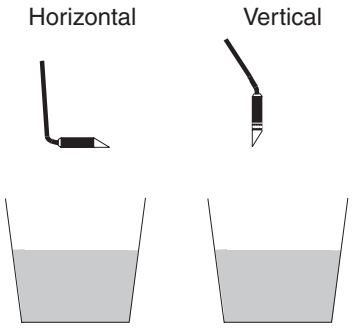

4. Follow either the vertical or horizontal procedure below.

Vertical Orientation Only

a. Place the sensor under at least 16 cm (6 in.) of water in a vertical orientation. Make sure the sensor is stable and not moving around. Then press the **ACCEPT** soft key to continue.

b. Carefully measure the depth (D_1) from the surface of the water to the first weld mark that encircles the sensor body just above the breather vent holes (Figure 13). The weld mark indicates the location of the internal diaphragm.

c. Enter the depth (D_1) using the numeric keypad then press the **ACCEPT** soft key when done.

Figure 13 Measuring Submerged Depth, Vertical Orientation

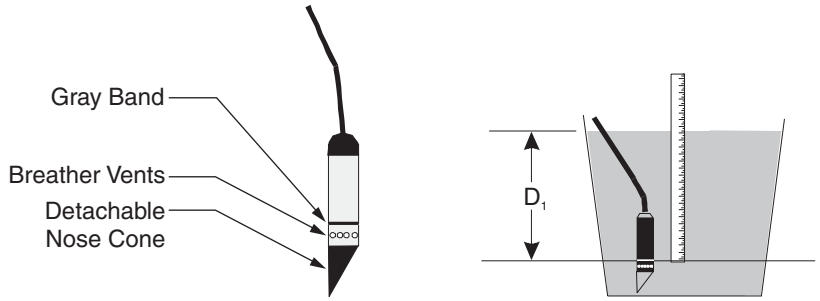

Note: *Always check the Level Adjust when reinstalling the sampler following a calibration.*

Horizontal Orientation Only

a. Place the sensor under at least 16 cm (6 in.) of water in a horizontal orientation. Make sure the sensor is stable and not moving around. Then press the **ACCEPT** soft key to continue.

b. Measure the depth from the bottom of the bucket to the surface of the water (D_1) (Figure 14) and enter the value using the numeric keypad. Press the **ACCEPT** soft key to continue.

Figure 14 Measuring Submerged Depth, Horizontal Orientation

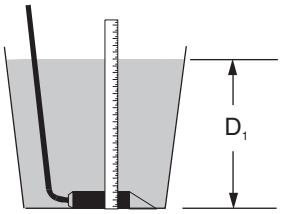

4.4 Thermal Sensor

The 900 MAX All Weather Sampler utilizes a unique refrigeration compartment thermal sensor which is encased in a thermal mass (you can see this thermal mass in the back right corner of the refrigerator compartment). This mass is designed to simulate the thermal characteristics of a typical liquid sample. When the refrigerator door is opened, warm air rushes in and displaces some of the cool air. When the door is shut, the refrigerator cools the interior air back to 4 °C again.

The temperature of the sample is not affected as quickly as the temperature of the air. It takes time for a volume of water to change temperature. Since it is the sample we wish to keep at 4°C and not the air, the 900 MAX thermal sensor accurately simulates the sample so the controller can maintain the sample temperature exactly. Typical air sensing thermostats fight to maintain air temperature, not sample temperature and so are not as accurate or efficient at preserving samples.

4.4.1 Thermal Sensor Programming

1. From the Main Menu: **OPTIONS>ADVANCED OPTIONS>CALIBRATION> THERMAL SETUP.**

2. Enter the desired refrigeration compartment temperature in degrees centigrade from 2 to 10 °C. Typical sample preservation temperature is 4 °C.

4.4.2 Thermal Sensor Calibration

1. To verify the accuracy of the refrigerator compartment temperature which is indicated on the sampler controller display, place a laboratory grade thermometer into a beaker with 150 mL water into the right rear corner of the refrigerated compartment, and then close the refrigerator compartment door.

2. Allow the refrigerator to run for 2–3 hours. This will ensure equilibrium between the temperature in the compartment and the water in the beaker.

3. Compare the temperature readout on the Status display (from the Main Menu press the **STATUS** soft key) with the temperature indicated on the thermometer. If the readings do not agree, it is necessary to calibrate the Reference Temperature Sensor. This cylindrical shaped sensor is located in the refrigerated compartment right rear corner, and is held in place by a clip bracket.

4. Shut off the sampler controller by pressing **OFF** button.

5. Prepare an ice bath in a 500 mL beaker, using a 50/50 mix of crushed ice and water.

6. Remove the Reference Temperature Sensor (RTS) from the bracket, and place the beaker next to the bracket.

7. Place the sensor in the beaker/ice bath along with the lab grade thermometer.

8. With the sampler controller off and the door closed, wait approximately 30 minutes for the reference sensor and lab thermometer to stabilize within the ice bath temperature. After waiting 30 minutes, mix (swirl) ice bath.

9. Turn on the controller by pressing the **ON** button.

10. From the Main Menu, select **OPTIONS> ADVANCED OPTIONS> THERMAL SETUP>THERMAL CALIBRATE.**

11. In degrees C, enter the reading indicated on the thermometer in the Ice bath, to the nearest one tenth degree.

12. Press the **ACCEPT** soft key to continue. This completes the calibration procedure.

13. Reinstall the RTS.

Section 5 Optional Device Installation

This section describes how to setup a rain gauge to the Sampler as well as how to connect, program, and calibrate the optional water quality probes:

- Rain Gauge (section 5.1 on page 73)
- pH Probe (section 5.2 on page 74)
- ORP Probe (section 5.3 on page 77)
- Dissolved Oxygen Probe (section 5.4 on page 79)
- Conductivity Probe (section 5.5 on page 81)

5.1 Rain Gauge

An external “tipping bucket” rain gauge (Cat. No. 2149) can be connected to the Rain Gauge connector of the sampler (Figure 15). The rain gauge provides a dry contact closure to the sampler.

As rainfall collects in the 20 cm (8 in.) diameter funnel, it is directed into one side of a “tipping bucket” assembly. As each bucket fills, it causes the bucket assembly to tip and empty out into the bottom of the rain gauge. Each tip of the bucket causes a single contact closure to the rain gauge and sends a short 12 V dc pulse into pin C of the Rain Gauge connector. Each pulse (tip) represents 0.025 cm (0.01 in.) of rain.

Figure 15 Rain Gauge Tipping Bucket

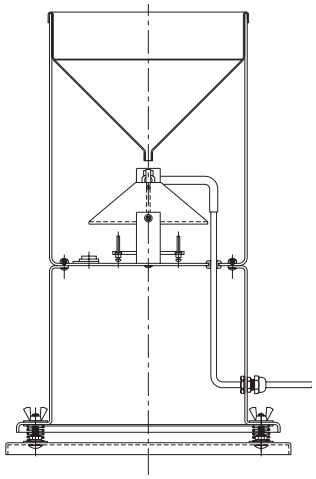

Table 7 Rain Gauge Base Board Connections (J-5)

Pin	Signal Description
A	+12 V dc source output
B	not used
C	+12 V dc pulse input
D	not used
E	not used
F	not used

5.1.1 Rain Gauge Programming

Note: *If logging is enabled on any channel, then that channel will have an arrow in front of the channel name that signifies that the channel is logged.*

1. From the Main Menu select **OPTIONS>ADVANCED OPTIONS>DATALOG.**
2. Highlight Select Inputs using the up and down arrow soft keys and then press the **SELECT** soft key to continue.
3. Highlight Rainfall using the up and down arrow soft keys, then press the **SELECT** soft key.
4. Press the **CHANGE CHOICE** soft key to cycle between Logged and Not Logged, then press the **ACCEPT** soft key.
5. Enter a logging interval using the numeric keypad, then press the **ACCEPT** soft key. Valid logging intervals are shown on the status bar along the bottom edge of the display.
6. Select Rainfall Units (in. or cm).
7. Select another channel to configure, or press the **RETURN** soft key to back up one step or press the **MAIN MENU** function key to return to the Main Menu.

5.2 pH Probe

The pH probes are shipped with a wetting cap that covers the probe tip. Remove the cap by turning it counter-clockwise and gently easing it off. Keep this cap for long-term probe storage. Rinse the probe tip with distilled water.

Store the probe in a pH 4.0 buffer (Cat. No. 2104) for both overnight and long term storage. Never store a probe in distilled or deionized water because this will deplete the probe filling solution.

5.2.1 pH Probe Connection

This connector is for installing the pH or ORP pre-amp interface junction box or a stand-alone temperature sensor. The pH probe is attached to a terminal strip in the junction box. The stand-alone temperature probe plugs directly into the receptacle on the case.

The pre-amplifier junction box is provided to allow for fast, easy replacement of the pH probe.

Table 8 pH Connector Pin Assignments (J-3)

Pin	Signal Description	Wire Color
A	+5 V dc	White
B	ground	Blue
C	reference	Yellow
D	pH/ORP	Black
E	-5 V dc	Red
F	RTD	Green

Figure 16 shows the wiring of the pH probe in the pre-amplifier junction box. Since the pH reading needs to compensate for temperature variation, a temperature sensor is built into every pH electrode. The pH probe consists of five wires, three for the pH probe and two for the temperature sensor.

Stray electrical currents are sometimes found in wastewater stream. These stray electrical currents can affect the pH readings. In the case of stray electrical currents, a grounded pH probe is required (Figure 17).

Figure 16 pH Probe Wiring to Junction Box (grounded)

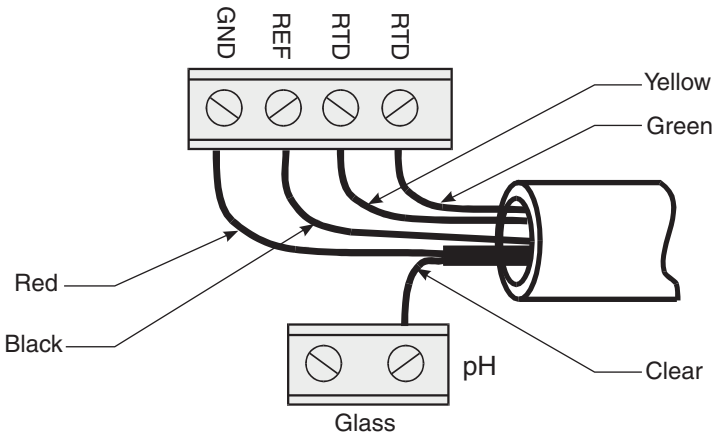

Figure 17 pH Probe Wiring to Junction Box (un-grounded)

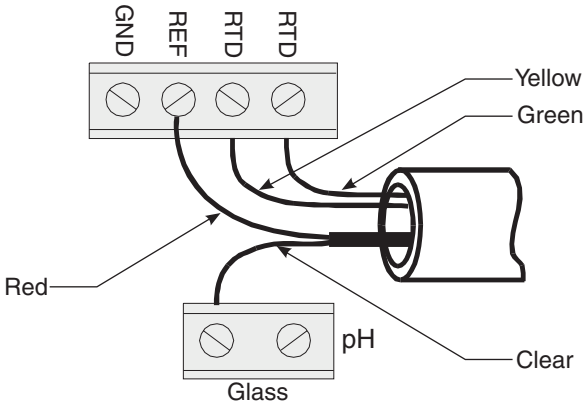

5.2.2 pH Probe Programming

1. From the Main Menu, select **OPTIONS>ADVANCED OPTIONS>DATALOG.**
2. Highlight Select Inputs using the up and down arrow soft keys and then press the **SELECT** soft key.
3. Highlight pH using the up and down arrow soft keys, then press the **SELECT** soft key.
4. Press the **CHANGE CHOICE** soft key to cycle between Logged and Not Logged, then press the **ACCEPT** soft key.

5. Enter a logging interval using the numeric keypad, then press the **ACCEPT** soft key. Valid logging intervals are shown on the status bar along the bottom edge of the display.

6. Select another channel to configure or press the **RETURN** soft key to back up one step or press the **MAIN MENU** function key to return to the Main Menu display.

5.2.3 pH Probe Calibration

Calibrate the pH probe after the pH probe is connected and programmed. Calibrating the pH probe requires a thermometer and any two of the following buffer solutions: 4, 7, or 10 pH.

The pH probe is an application sensitive device. When used in harsh environments, the accuracy and life expectancy of pH probes can decrease considerably. Probes must be calibrated to the sampler each time they are cleaned or replaced. Regular inspection and comparison to a hand-held pH meter can help determine the optimum cleaning and calibration schedule for specific applications.

1. From the Main Menu, select **OPTIONS > ADVANCED OPTIONS > CALIBRATION > pH.**

2. Place the pH probe into the first buffer solution, then press any key to continue.

3. Enter the temperature of the first buffer solution using the numeric keypad. Press the **ACCEPT** soft key to continue.

4. Select the pH for the first buffer solution (4, 7, or 10 pH) using the **CHANGE CHOICE** soft key, then press the **ACCEPT** soft key to continue.

5. Remove the probe from the first buffer solution, rinse it under distilled water and place it into the second buffer solution (4, 7, or 10 pH, different from the first buffer used). Press any key to continue.

6. Select the pH for the second buffer solution using the **CHANGE CHOICE** soft key, then press the **ACCEPT** soft key to continue.

   If the pH probe is damaged and cannot be calibrated or if the buffer solutions do not fall within an acceptable range, an error message will be displayed as shown below.

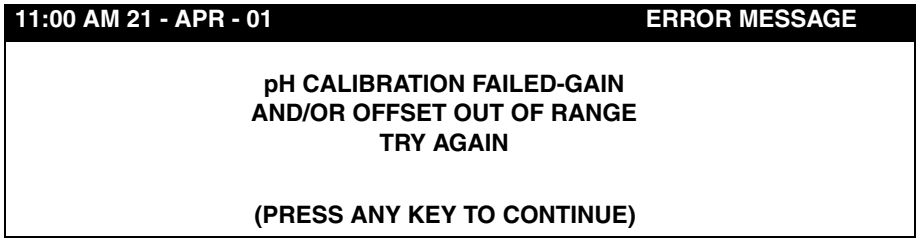

   Another attempt at reading the second buffer solution will be made after pressing a key. If this fails, it is likely that you have a bad pH probe or bad buffer solutions. Try a new set of buffer solutions and if that fails try a different pH probe.

5.3 ORP Probe

The probes are shipped with a wetting cap that covers the probe tip. Remove the cap by turning it counter-clockwise and gently easing it off. Keep this cap for long-term probe storage. Rinse the probe tip with distilled water.

Store the probe in a pH 4.0 buffer (Cat. No. 22834-49) for both overnight and long term storage. Never store a probe in distilled or deionized water because this will deplete the probe filling solution.

5.3.1 ORP Probe Connection

This connector is for installing the pH or ORP pre-amp interface junction box or a stand-alone temperature sensor. The ORP probe is attached to a terminal strip in the junction box.

Table 9 ORP Connector Pin Assignments (J3)

Pin	Signal Description	Wire Color
A	+5 V dc	White
B	ground	Blue
C	reference	Yellow
D	pH/ORP	Black
E	-5 V dc	Red
F	RTD	Green

The ORP probe consists of three wires; a pink, black, and red wire. There is no temperature sensor on the ORP probe. Figure 18 shows the wiring of the ORP probe in the pre-amp interface junction box.

Figure 18 ORP Probe Wiring to Junction Box

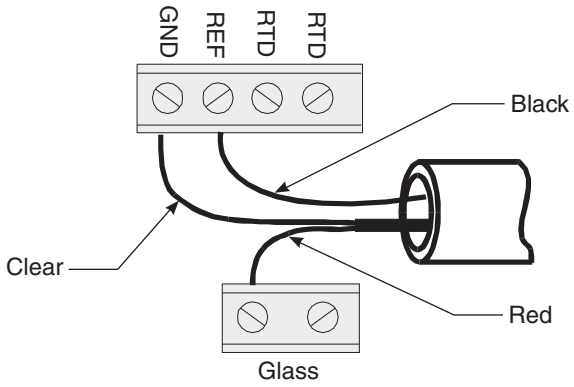

5.3.2 ORP Probe Programming

1. From the Main Menu, select **OPTIONS>ADVANCED OPTIONS>DATALOG.**
2. Highlight Select Inputs using the up and down arrow soft keys and then press the **SELECT** soft key to continue.
3. Highlight ORP using the up and down arrow soft keys, then press the **SELECT** soft key to continue.

4. Press the **CHANGE CHOICE** soft key to cycle between Logged and Not Logged, then press the **ACCEPT** soft key to continue.

5. Enter a logging interval using the numeric keypad, then press the **ACCEPT** soft key. Valid logging intervals are shown on the status bar along the bottom edge of the display.

6. Select another channel to configure or press the **RETURN** soft key to back up one step or press the **MAIN MENU** function key to return to the Main Menu.

5.3.3 ORP Probe Calibration

5.3.3.1 ORP Preamplifier/Junction Box Calibration

Calibration of the ORP input circuit requires a source of dc voltage between 500 and 2000 mV dc. The reference voltage must be applied to the ORP input terminals on the preamplifier/junction box during calibration. A regulated dc power supply or a standard “C” cell battery (1500 mV dc) make excellent sources for reference voltage.

1. From the Main Menu, select **OPTIONS > ADVANCED OPTIONS > CALIBRATION > ORP.**

2. Install the ORP junction box on the sampler with the ORP probe removed.

3. Apply a positive reference voltage to the ORP probe terminals in the junction box, using either a 1.5 V dc “C” cell battery or a regulated power supply.

4. Attach the positive battery terminal to the terminal block screw labeled “glass” and the negative battery terminal to the terminal block screw labeled “ref.”

5. After making all connections, measure the exact voltage on the “C” cell or power supply with a voltmeter. Then press a key to continue. The sampler displays the message “Waiting for ORP to Stabilize.”

6. Once the reading is sufficiently stable enter a new millivolt level. The “C” cell battery should be approximately 1500 mV (or 1.5 V) when new. Enter the exact voltage of the current source in millivolts using the numeric keypad.

7. Press the **ACCEPT** soft key to store the new calibration values.

8. Disconnect the “C” cell battery or regulated power supply from the ORP input terminals.

9. Reconnect the ORP Probe leads to the input terminals.

5.4 Dissolved Oxygen Probe

5.4.1 Dissolved Oxygen Probe Connection

This connection is for interfacing the optional D.O. probe to the D.O./Conductivity Pre-Amp (Cat. No. 3369).

Table 10 D.O. Connections (J-20)

Pin	Signal Description	Wire Color
A	DO - (neg)	Green
B	DO + (pos)	Red
C	Thermister	Black
D	Thermister	Yellow

Strain Relief Recommendation

It is recommended that a strain relief be used to protect the cable/probe junction during application where the sensor will be thrown or tossed into liquid.

5.4.2 Dissolved Oxygen Probe Programming

1. From the Main Menu, select **OPTIONS>ADVANCED OPTIONS>DATALOG.**
2. Highlight Select Inputs using the up and down arrow soft keys and then press the **SELECT** soft key.
3. Highlight D.O. using the up and down arrow soft keys, then press the **SELECT** soft key.
4. Press the **CHANGE CHOICE** soft key to cycle between Logged and Not Logged, then press the **ACCEPT** soft key.
5. Enter a logging interval using the numeric keypad, then press the **ACCEPT** soft key. Valid logging intervals are shown on the status bar along the bottom edge of the display.
6. Press the **CHANGE CHOICE** soft key to select the appropriate units (ppm, ppb, mg/L, sat). Press the **ACCEPT** soft key to continue.
7. Select another channel to configure or press the **RETURN** soft key to back up one step or press the **MAIN MENU** function key to return to the Main Menu.

5.4.3 Dissolved Oxygen Probe Temperature Programming

1. From the Main Menu, select **OPTIONS>ADVANCED OPTIONS>DATALOG**
2. Highlight Select Inputs using the up and down arrow soft keys and then press the **SELECT** soft key.
3. Highlight D.O. Temp. using the up and down arrow soft keys, then press the **SELECT** soft key.
4. Press the **CHANGE CHOICE** soft key to cycle between Logged and Not Logged, then press the **ACCEPT** soft key.

5. Enter a logging interval using the numeric keypad, then press the **ACCEPT** soft key. Valid logging intervals are shown on the status bar along the bottom edge of the display.

6. Press the **CHANGE CHOICE** soft key to select the temperature units (°C, °F). Press the **ACCEPT** soft key.

5.4.4 Dissolved Oxygen Probe Calibration

1. Connect a suitable power supply to the sampler.

2. Power up the unit by pressing the **ON** button.

3. From the Main Menu, select **OPTIONS > ADVANCED OPTIONS > CALIBRATION > DO.**

4. Enter the ambient air temperature (the current reading is displayed for reference) using the numeric keypad.

5. Enter the elevation above sea level for the specific location.

6. Enter the membrane thickness. The operation of the 900 MAX Sampler will be affected by the choice of membrane thickness for the oxygen sensor.

For general purpose applications, the 1 Mil thick membrane is standard. This membrane allows measurements in the 0 to 20 ppm range of dissolved oxygen and provides the best general purpose trade-off between response time and durability.

The 2 Mil thick membrane can be used to measure up to 40 ppm dissolved oxygen. Its increased thickness slows the response time of the sensor, but this membrane has increased resistance to cuts and tears. For this reason, it is recommended for use in wastewater aeration basins where solids in the water are in rapid motion.

7. Enter the chlorinity (salinity) of the flow stream (typical wastewater is zero, sea water is higher).

8. Place the D.O. probe in open air and press any key. The 900 MAX Sampler will wait for the reading to stabilize before storing the calibration value. The screen will automatically return to the calibration menu.

Note: *The membrane of a charged sensor must be kept moist. If the membrane is allowed to dry completely, the electrolyte film between the membrane and the platinum will evaporate, destabilizing the sensor. If the sensor will be out of water for more than 30 minutes, put a small amount of water in the silicon soaking cap, and install it over the protective guard. Lift the edge of the cap to break the seal as it is being removed. This will prevent a vacuum from forming inside the soaking cap while it is being removed which can result in the membrane becoming stretched.*

Calibrating the D.O. Temperature

1. Place the probe and the thermometer in a liquid.

2. Wait for the temperature reading to stabilize.

3. Enter the actual temperature of the liquid.

5.5 Conductivity Probe

5.5.1 Conductivity Probe Connection

Table 11 Conductivity Probe Wiring (J-20)

Pin	Signal Description	Wire Color
A	Probe	Black
B	Probe	Red
C	RTD	White
D	RTD	Green

5.5.2 Conductivity Probe Programming

1. From the Main Menu, select **OPTIONS>ADVANCED OPTIONS>DATALOG.**
2. Highlight Select Inputs using the up and down arrow soft keys and then press the **SELECT** soft key.
3. Highlight Conductivity (COND.) using the up and down arrow soft keys, then press the **SELECT** soft key.
4. Press the **CHANGE CHOICE** soft key to cycle between Logged and Not Logged, then press the **ACCEPT** soft key.
5. Enter a logging interval using the numeric keypad, then press the **ACCEPT** soft key. Valid logging intervals are shown on the status bar along the bottom edge of the display.
6. Press the **CHANGE CHOICE** soft key to select the appropriate units (ms, µs). Press the **ACCEPT** soft key to continue.
7. Select another channel to configure or press the **RETURN** soft key to back up one step or press the **MAIN MENU** function key to return to the Main Menu display.

5.5.3 Conductivity Temperature Programming

1. From the Main Menu, select **OPTIONS>ADVANCED OPTIONS>DATALOG.**
2. Highlight Select Inputs using the up and down arrow soft keys and then press the **SELECT** soft key.
3. Highlight Conductivity Temperature (COND. TEMP.) using the up and down arrow soft keys, then press the **SELECT** soft key.
4. Press the **CHANGE CHOICE** soft key to cycle between Logged and Not Logged, then press the **ACCEPT** soft key.
5. Enter a logging interval using the numeric keypad, then press the **ACCEPT** soft key. Valid logging intervals are shown on the status bar along the bottom edge of the display.
6. Press the **CHANGE CHOICE** soft key to select temperature units (°C, °F). Press the **ACCEPT** soft key.

5.5.4 Conductivity Probe Calibration

1. From the Main Menu, select **OPTIONS > ADVANCED OPTIONS > CALIBRATION > CONDUCTIVITY.**

2. Clean and dry the probe.

3. Place the sensor and thermometer in the calibration solution (Cat. No. 3230). The temperature sensor is located in the middle of the sensor body allowing the probe to be completely submerged in the solution.

4. Allow the sensor to stabilize in the solution about 10 minutes to ensure that the probe and the solution are the same temperature.

5. Enter the temperature correction factor or enter zero (0) for no correction factor.

Note: *The temperature correction factor is used to compensate for the effects of temperature on the conductivity readings at the point of installation. The conductivity of a solution is temperature sensitive. Therefore the actual conductivity of the solution will change with the temperature. Each site may have a different correction factor depending on the major constituent of the flow stream. This is not used for calibration and has no effect on the calibration of the sensor. Below are some examples of compensation factors of various liquids.*

- *0.96%/°C 5% Sulfuric Acid*
- *1.88%/°C Dilute Ammonia*
- ***1.91%/°C 'Typical' Wastewater***
- *1.97%/°C Potassium Chloride*
- *2.12%/°C Salt (Sodium Chloride)*
- *2.84%/°C 98% Sulfuric Acid*
- *4.55%/°C Ultra-pure Water*

6. With the sensor still in the calibration solution, press any key. Wait for the sensor to stabilize. Calculate the actual conductivity of the calibration solution. If using the KCl solution provided by the manufacturer, make your selection from the calibration (refer to Table 12 on page 83). If using a solution other than 1.0 mS @ 25 °C KCl available from the manufacturer, you must calculate the conductivity of the solution using temperature correction factors. See the following example.

   Example:

   The KCl calibration solution is 1.0 mS. at 25°C. The temperature correction factor for KCl is 1.97%/°C. If the actual temperature of the KCl at the time of calibration is 18.4 °C, then the solution has a conductivity value of 0.870 mS.

   a. Find the difference between the labeled temperature and the actual temperature of the calibration solution at the time of calibration.

   25 °C – 18.4 °C = 6.6 °C

   b. Multiply the difference (6.6) by the correction factor per °C (1.97% or 0.0197).

   6.6 °C x 0.0197/°C = 0.13002

c. If the calibration temperature is lower than the labeled value, then subtract that value from the standard (1.0 mS) to get the actual value to be used for calibration.

1.0 mS - (correction factor) 0.13002 = 0.86998 mS

d. If the calibration temperature is higher than the labeled value, then add that value to the standard (1.0 mS) to get the actual value to be used for calibration.

7. Using the value that was calculated in step 6, enter the conductivity of the solution then press the **ACCEPT** soft key.

Calibrating the Conductivity Temperature
Necessary when logging temperature only.

1. Place the probe in a liquid. Wait for the temperature reading to stabilize.

2. Enter the actual temperature of the liquid (the current reading is shown for reference). Temperature calibration is complete.

Table 12 Conductivity Values at Temperature for KCl Solution

Solution Temp °C	Calibration Value to be Entered	Solution Temp °C	Calibration Value to be Entered	Solution Temp °C	Calibration Value to be Entered
30	1.099	25	1.000	20	0.902
29.8	1.095	24.8	0.996	19.8	0.898
29.6	1.091	24.6	0.992	19.6	0.894
29.4	1.087	24.4	0.988	19.4	0.890
29.2	1.083	24.2	0.984	19.2	0.886
29	1.079	24	0.980	19	0.882
28.8	1.075	23.8	0.976	18.8	0.878
28.6	1.071	23.6	0.972	18.6	0.874
28.4	1.067	23.4	0.968	18.4	0.870
28.2	1.063	23.2	0.965	18.2	0.866
28	1.059	23	0.961	18	0.862
27.8	1.055	22.8	0.957	17.8	0.858
27.6	1.051	22.6	0.953	17.6	0.854
27.4	1.047	22.4	0.949	17.4	0.850
27.2	1.043	22.2	0.945	17.2	0.846
27	1.039	22	0.941	17	0.842
26.8	1.035	21.8	0.937	16.8	0.838
26.6	1.032	21.6	0.933	16.6	0.835
26.4	1.028	21.4	0.929	16.4	0.831
26.2	1.024	21.2	0.925	16.2	0.827
26	1.020	21	0.921	16	0.823
25.8	1.016	20.8	0.917	15.8	0.819
25.6	1.012	20.6	0.913	15.6	0.815
25.4	1.008	20.4	0.909	15.4	0.811
25.2	1.004	20.2	0.905	15.2	0.807

Communication setup details connections and programming features of the:

- RS232 Serial Port (section 6.1 on page 85)
- Optional Modem (section 6.2 on page 86)
- 4–20 mA Interface (section 6.3 on page 93)
- Alarm Relays (section 6.4 on page 96)
- Analog Inputs (section 6.5 on page 100)

6.1 RS232 Cable

6.1.1 RS232 Connection

The RS232 connector is a serial input/output port for communicating with a sampler from an external device such as a Data Transfer Unit (DTU-II) or direct serial connection to a personal computer running InSight® Gold Software.

This port can be configured to communicate at 1200, 2400, 4800, 9600, or 19,200 baud.

Table 13 RS232 Connection

Pin	Signal Description	Wire Color
A	not used	White
B	ground	Blue
C	DSR	Yellow
D	RCD	Black
E	DTR	Red
F	TXD	Green

Cable Required
RS232 Sampler/Flow Meter to PC Cable Assembly (Cat. No. 1727), 10’ long, 6-pin connector on one end, 9-pin D connector on the other end (9-pin to 25-pin D type adapter included).

6.1.2 RS232 Programming

1. From the Main Menu, select **OPTIONS > ADVANCED OPTIONS > COMMUNICATIONS SETUP > RS232 SETUP**.

2. Select a baud rate for data communications by pressing the **CHANGE CHOICE** soft key to cycle through the possible choices; 1200, 2400, 4800, 9600 or 19,200 baud. The higher the baud rate setting, the faster data will transfer. Set the baud rate to the highest setting allowed by the computer. The baud rate must correspond to the baud rate selected in the software. Press the **ACCEPT** soft key.

Note: *Long runs of RS232 cable, especially if they are run near large motors or fluorescent lights can cause communication errors and may require a slower baud rate.*

Note: *Some early generation IBM compatibles may have a serial port that is not capable of communicating reliable at 19,200 baud. If errors develop at high baud rates, try lowering the baud rate one step at a time (on both the 900 MAX Sampler and Streamlogg II™, InSight®, Vision®, or Insight® Gold software) until error free communications is achieved.*

6.2 Modem

6.2.1 Modem Connection

This connection is for interfacing the optional internal modem (Cat. No. 1602) with a standard public telephone line.

Table 14 Modem CPU Connections (J-8)

Pin	Signal Description
A	Tip
B	Ring
C	12 V dc
D	12 V dc Reference

6.2.2 Modem Programming

1. From the Main Menu, select **OPTIONS>ADVANCED OPTION>COMMUNICATIONS SETUP**.

Note: *There is no way of independently enabling power to just the internal modem without also enabling the power to the Cellular Communications Option if it is present. However, this poses no problem even if the sampler is physically connected directly to a phone line without a cellular phone.*

2. Highlight Modem Setup using the up and down arrow soft keys. Press **ACCEPT** to continue.

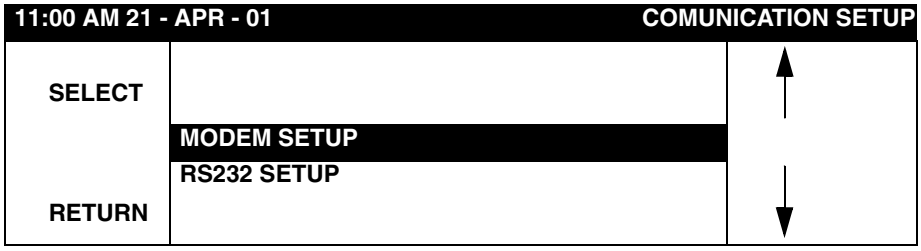

3. Enable modem power by pressing the **CHANGE CHOICE** soft key. Modem power is turned off when not in use to conserve battery power.

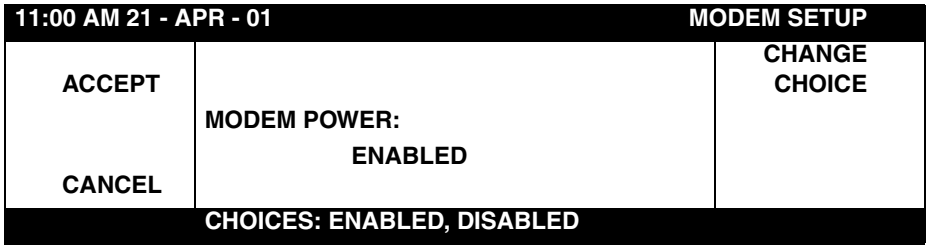

4. Select either pulse or tone dialing modes. This will depend on the type of phone service selected for the site phone line. Press the **ACCEPT** soft key to continue.

11:00 AM 21 - APR - 01		MODEM SETUP
ACCEPT	DIAL METHOD: TONE	CHANGE CHOICE
CANCEL		
	CHOICES: TONE, PULSE	

5. Enter a phone number using the numeric keypad. This phone number is used by the modem when it sends an alarm report to a personal computer running InSight® Gold software.

11:00 AM 21 - APR - 01		MODEM SETUP
ACCEPT	INPUT CHANNEL: FLOW	CHANGE CHOICE
CANCEL		
	(USE NUMERIC KEYPAD)	

6.2.2.1 Cellular Communication Option

Note: *To ensure reliable communications between the sampler and the host computer, it is required that the host computer is equipped with a Cellular Compatible modem, it must support the MNP.10EC protocol. Computers equipped with modems that do not support this protocol are able to connect to the sampler but will not be able to maintain a reliable connection.*

This option couples the 900 MAX Sampler to an external, 3-watt, cellular phone. The cellular phone is mounted in a NEMA 4X enclosure and is powered through the 900 MAX Sampler by the 900 MAX Sampler power supply. Enabling Modem Power in the Main Screen also provides power to the Cellular Communication via a connector cable.

The cellular phone is set to activate upon an alarm. Additionally, the end user can use the phone to make cellular voice calls directly from the installation site as needed.

Site Selection

The quality and availability of cellular service varies considerably from one geographical location and from day to day. Factors that affect the quality of cellular service include but are not limited to: weather, time of day, distance to the nearest cell tower, other cellular traffic, etc.

Installation and Setup

Note: *Mount the antenna as high and as far away from the 900 MAX Sampler as possible. RF power radiated during transmission by the cell phone antenna in close proximity to the sampler may have adverse affects on data measurements.*

1. Connect the four conductor cable between the four pin connector on the side of the cellular phone housing and to the connector in the side of the sampler case labeled MODEM. This cable supplies both the data and the 12 V dc power for the cell modem.

Figure 19 Cellular Communication Option Components

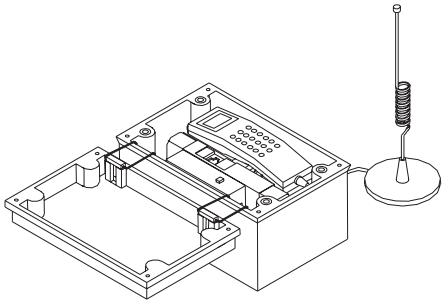

Note: *If the display on the cell phone is not present, check to make sure the cell phone power is enabled in the setup of the sampler. Also check to make sure that the sampler is connected to a power source and is turned on.*

2. Attach the magnetic base cell phone antenna to any flat metal object in the immediate area. For optimum performance, mount the antenna in a vertical position.

3. When necessary, reposition the antenna to obtain optimum signal strength.

4. Loosen the four screws on the cover of the cell phone enclosure and remove the cover, to view the signal strength. The signal strength is indicated by the number of dashes across the bottom of the cell phone display. The more dashes across the bottom of the display the greater the signal.

6.2.2.2 Reliable Communications

In order to ensure reliable communications between the sampler and the host computer, it is absolutely essential that the host computer is equipped with a Cellular Compatible modem. The modem on the host computer must support the “MNP.10ED” protocol. Computers equipped with modems that do not support this protocol may be able to connect to the sampler but will not be able to maintain reliable connections.

6.2.2.3 Cellular Modem Scheduling

With Cellular Modem Scheduling enabled, both the modem and cell phone power will simultaneously be turned off and on at user defined intervals to conserve battery power. If Cellular Modem Scheduling is disabled the sampler will assume that a land line is available and that the cell phone is not connected to the sampler. With Cellular Modem Scheduling disabled (and the sampler on battery power) the sampler will leave the modem turned off until a call is received on the land line.

Note: *If the Cellular Modem Scheduling is disabled and the sampler is connected to a cell phone rather than a land line, the sampler will not be able to answer any incoming calls.*

If the sampler is on ac power or the battery voltage is over 14.5 volts, the power to both the cell phone and modem will constantly be on regardless of whether Cellular Modem Scheduling is enabled or not.

If the sampler is configured to call a pager for alarms and the alarm condition is met, the sampler will still call the pager even if modem scheduling is disabled. In this situation the cell phone and modem will temporally be powered back up again to allow the sampler to call the pager and transmit the alarm code. However, as soon as the alarm code is transmitted, the power to the cell phone and modem will again be turned off.

1. To enable Cellular Modem Scheduling, Modem Power must be enabled.

Note: *If Modem Power is not enabled the prompts for Cellular Modem Scheduling will not appear.*

2. Enable the Cellular Modem Scheduling using the **CHANGE CHOICE** soft key.

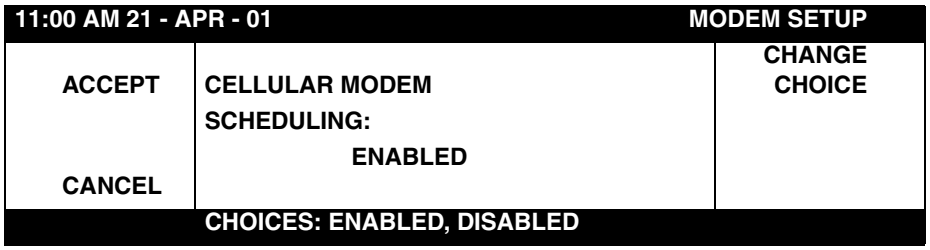

3. Press the **ACCEPT** soft key to continue.

6.2.2.4 Cellular Modem Scheduling Basis

After enabling Cellular Modem Scheduling it will be necessary to choose the type of scheduling; Hourly, Daily or Weekly. If Hourly is chosen the modem and cell phone are powered up once every hour on the hour for a user defined duration. If Daily is chosen the modem and cell phone are powered up once a day, every day, at a user defined time and duration. If Weekly is chosen the cell phone and modem are powered up only once a week, every week, on a user defined day, time, and duration.

1. To set the Cellular Modem Scheduling Basis press the **CHANGE CHOICE** soft key until the correct choice appears in the center of the display. Press the **ACCEPT** soft key to continue.

2. Set up the actual time and duration when the modem will be enabled using the numeric keypad.

3. If Hourly is chosen enter the duration time that the modem will be turned on. Press the **ACCEPT** soft key.

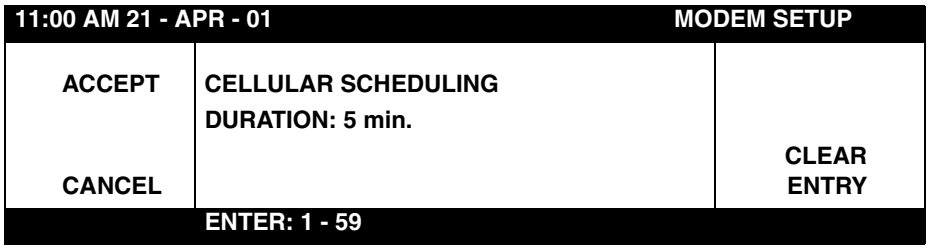

4. If Daily is selected enter the Cellular Scheduling Start Time and Duration.

11:00 AM 21 - APR - 01		MODEM SETUP
ACCEPT	CELLULAR SCHEDULING START TIME: 1:00 (hrs:min)	CLEAR ENTRY
CANCEL		
	ENTER: 000:01 - 024:00 (hrs:min)	

5. If Weekly is selected enter the Cellular Modem Schedule Day, Start time, and Duration.

11:00 AM 21 - APR - 01		MODEM SETUP
ACCEPT	CELLULAR MODEM SCHEDULE DAY: FLOW	CLEAR ENTRY
CANCEL		
	CHOICES: MON, TUE, WED, THU, FRI, SAT, SUN	

6.2.2.5 Cellular Modem Triggering

When Cellular Modem Triggering is enabled both the cell phone and modem remains on for a user specified duration after calling a pager or remote computer when an alarm condition is met. It is useful when calling back to a site via modem, after receiving an alarm, or viewing the current status.

11:00 AM 21 - APR - 01		MODEM SETUP
ACCEPT	CELLULAR MODEM TRIGGERING: ENABLED	CLEAR ENTRY
CANCEL		
	CHOICES: ENABLED, DISABLED	

Note: *This display will not appear unless Cellular Modem Scheduling is enabled.*

If Cellular Modem Triggering is disabled the sampler is still able to call a pager or remote computer when an alarm condition is met. However, both the modem and cell phone will immediately turn off after the call is completed.

Cellular Modem Triggered Duration

After enabling Cellular Modem Triggering, enter a value for Cellular Modem Triggered Duration. This is the amount of time that the modem remains on after it dials a pager or remote computer when an alarm condition has been met. The value is in minutes and can be anywhere between 1 to 120 minutes.

11:00 AM 21 - APR - 01		MODEM SETUP
ACCEPT	CELLULAR MODEM TRIGGERING DURATION: 30 min.	CLEAR ENTRY
CANCEL		
	ENTER 1 - 120	

Note: *This display will not appear unless Cellular Modem Triggering is enabled.*

6.2.2.6 Pager Option

The 900 MAX Sampler can be set up to call up to 3 individual pagers or a remote computer when an alarm condition has been met. The pager setup is an extension of the Modem Setup menus. To have the 900 MAX Sampler call a pager, the Pager Option must be enabled.

1. Enable the Pager Option, using the **CHANGE CHOICE** soft key until enabled is displayed. Press the **ACCEPT** soft key to continue.

11:00 AM 21 - APR - 01		MODEM SETUP
ACCEPT		CHANGE CHOICE
	PAGER OPTION: ENABLED	
CANCEL		
	CHOICES: ENABLED, DISABLED	

2. Enter the phone number of the paging service. Press the **ACCEPT** soft key to continue.

11:00 AM 21 - APR - 01		MODEM SETUP
ACCEPT	PAGER SERVICE PHONE NUMBER:	
	555-5555	CLEAR ENTRY
CANCEL		
	(USE NUMERIC KEYPAD)	

3. Enter the number of pagers to call when an alarm occurs. The 900 MAX Sampler will support up to 3 pagers. Press the **ACCEPT** soft key to continue.

11:00 AM 21 - APR - 01		MODEM SETUP
ACCEPT		
	NUMBER OF PAGERS: 3	CLEAR ENTRY
CANCEL		
	ENTER 1 - 3	

4. Enter the phone numbers of the individual pagers you wish to send the message to. This is usually the phone number that is given to the pager when it is purchased. Press the **ACCEPT** soft key to continue.

11:00 AM 21 - APR - 01		MODEM SETUP
ACCEPT	PAGER #1 PHONE NUMBER:	CHANGE CHOICE
	555-5555	
CANCEL		
	CHOICES: ENABLED, DISABLED	

6.2.2.7 Reporting Devices

The reporting order of the communication devices can be set to **MODEM ONLY, PAGER ONLY, PAGER THEN MODEM,** and **MODEM THEN PAGER**.

1. Press the **CHANGE CHOICE** soft key until the desired reporting method is displayed then press the **ACCEPT** soft key.

11:00 AM 21 - APR - 01		MODEM SETUP
ACCEPT	REPORTING ORDER: PAGER THAN MODEM	CHANGE CHOICE
CANCEL		
CHOICES: MODEM AND / OR PAGER		

When the 900 MAX Sampler calls the pager service, it will transmit a Pager Alarm Code number (Table 15) which corresponds to a specific alarm condition.

Table 15 Pager Alarm Codes

Alarm	Code	Equipment	Reason	Alarm	Code	Equipment	Reason
Low Main Battery	1	—	Battery pack is less than 11.5 V	High CH5	28	—	—
Memory Battery	2	—	Internal memory battery is low	High CH6	29	—	—
Low Slate Memory	3	—	Less than 10% slate memory left	High CH7	30	—	—
Slate Memory Full	4	—	Slate memory is used up	High Reference Temp.	31	—	—
Modem Failure	5	—	Modem chip/modem board failure	High Velocity	32	—	—
Missed Sample	6	—	No liquid detected when sampling	High D.O.	33	—	—
Purge Failure	7	—	Water present at sensors after purge	High D.O. Temp.	34	—	—
Jammed Distributor	8	—	Sensors indicate arm is not moving	High Conductivity	35	—	—
Bottle is Full	9	—	Full bottle option indicator is on	High Cond. Temp.	36	—	—
U-Sonic Echo Loss	10	—	No return signal detected	Low Level	37	—	—
Xducer Ringing	11	—	The return signal is detected too soon	Low Flow	38	—	—
U-Sonic failure	12	—	Ultrasonic board detects an error	Low pH/ORP	39	—	—
RS485 Timed Out	13	—	Communication problems with RS485	Low Process Temp.	40	—	—
Unable to Cool	14	AWRS only	Too high temperature in a compartment	Low CH1	41	—	—
Unable to heat	15	AWRS only	Too cold a temperature in compartment	Low CH2	42	—	—
Low Bubbler Pres.	16	(not applicable)	Possible leak in bubble tank	Low CH3	43	—	—
Clogged Bubbler	17	(not applicable)	Bubbler tube is plugged	Low CH4	44	—	—

Table 15 Pager Alarm Codes (continued)

Alarm	Code	Equipment	Reason	Alarm	Code	Equipment	Reason
High Level	18	—	—	Low CH5	45	—	—
High Flow	19	—	—	Low CH6	46	—	—
High Flow Rate of Change	20	—	—	Low CH7	47	—	—
High pH/ORP	21	—	—	Low Reference Temp.	48	—	—
High Process Temperature	22	—	—	Low Velocity	49	—	—
High Rainfall	23	—	—	Low D.O.	50	—	—
High CH1	24	—	—	Low D.O. Temp.	51	—	—
High CH2	25	—	—	Low Conductivity	52	—	—
High CH3	26	—	—	Low Cond. Temp.	53	—	—
High CH4	27	—	—				

6.3 4–20 mA Option

The 4–20 mA option provides a current loop for controlling external devices such as a chart recorder or PC. Either one or both of the 4–20 mA outputs can be factory installed and are isolated from each other.

The interface has a 3 ft cable with a connector on one end, and a 10 ft cable with two open wire leads on the other. Insert the connector into the sampler receptacle labeled “Auxiliary”, located on the left side of the control housing. On the 10 ft cable, the wire with clear insulation is positive (+) and the wire with black insulation is negative (-).

Table 16 4–20 mA Connections (J-18)

Pin	Signal Description	Wire Color
A	Output 1 + (pos)	Yellow
B	Output 1 - (neg)	Black
C	Output 2 + (pos)	Red
D	Output 2 - (neg)	Green

Rating:

- Isolation Voltage:
  Between sampler and either 4–20 mA output: 2500 V ac
  Between the two 4–20 mA outputs: 1500 V ac
- Maximum Resistive Load: 600 ohm
- Output Voltage: 24 V dc - no load

Cable Required
4–20 mA Interface Cable (Cat. No. 2924), 25 ft long, 4-pin connector on one end, tinned wire leads on the other end.

6.3.1 4–20 mA Programming

Note: *When the 4–20 mA outputs are disabled and not completely turned off, they will continue to output a steady 4 mA.*

1. From the Main Menu, select **OPTIONS > ADVANCED OPTIONS > 4–20 mA OUTPUTS > SELECT**.

2. Enable the 4–20 mA outputs by pressing the **CHANGE CHOICE** soft key while in the 4–20 mA output menu.

3. When the display shows the outputs as enabled, press the **ACCEPT** soft key.

4. Choose either **OUTPUT A** or **OUTPUT B**. Use the up and down arrow soft keys to highlight the choice, then press the **SELECT** soft key.

5. Select an analog Input Channel (e.g., channel 1, 2, 3, or, flow, etc.) to assign to that output. Press the **CHANGE CHOICE** soft key to cycle through the channel names. When the desired channel is displayed, press the **ACCEPT** soft key to select that channel.

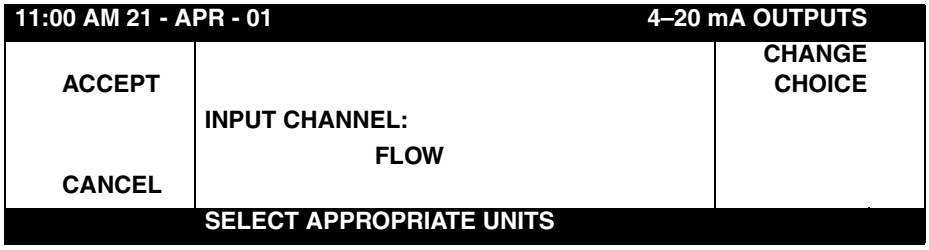

6. Assign a channel value to the 4 mA current value. This value is typically 0, however any value can be set. Enter the value of the input needed to generate 4 mA of current at the output.

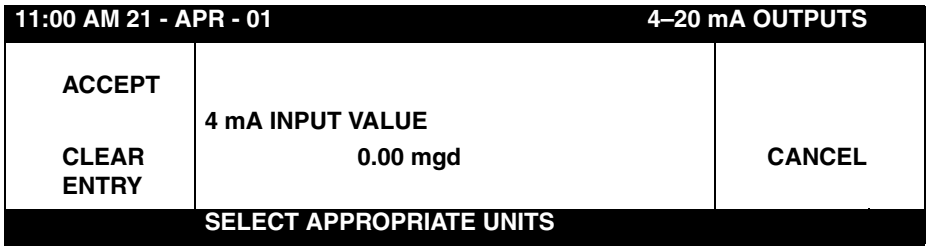

7. Assign an input value to the 20 mA current level using the numeric keypad.

8. Repeat this process to configure the other 4–20 mA output.

6.3.2 4–20 mA Calibration

After wiring the 4–20 mA connection perform a 4–20 mA output calibration. The 4–20 mA output calibration requires a multimeter and an interface or access to the 4–20 mA current loop wiring. Two 4–20 mA outputs are available and are designated Output A and Output B. Both outputs are calibrated the same way and are isolated from each other.

Calibration may be performed while the 4–20 mA device is in the current loop, as shown in Figure 20 or disconnected from the current loop as shown in Figure 21. In either case, the multimeter must be set to a 20 milliamp dc range or greater.

1. From the Main Menu, select **OPTIONS > ADVANCED OPTIONS > CALIBRATION > 4–20 mA OUTPUTS.**
2. Connect a multimeter to the 4–20 mA current outputs per Figure 20 and Figure 21.
3. Make sure that the 4–20 mA output is enabled. If it is not enabled, press the **CHANGE CHOICE** soft key so that the display shows Enabled and then press the **ACCEPT** soft key.
4. Select the output (A or B) to calibrate.
5. Press any key to set the selected output to 4.00 mA dc.
6. Measure the current on the selected output using the multimeter and enter the measured value using the numeric keypad. Press the **ACCEPT** soft key to proceed.
7. Press any key to set the output to 20.00 mA dc.
8. Measure the current on the selected output using the multimeter and enter the measured value using the numeric keypad. Press the **ACCEPT** soft key to complete the calibration.

By entering the measured current values, the microprocessor will electronically adjust the outputs to compensate for the difference between the measured values and the expected values.

Figure 20 Calibration with the Meter in the Loop

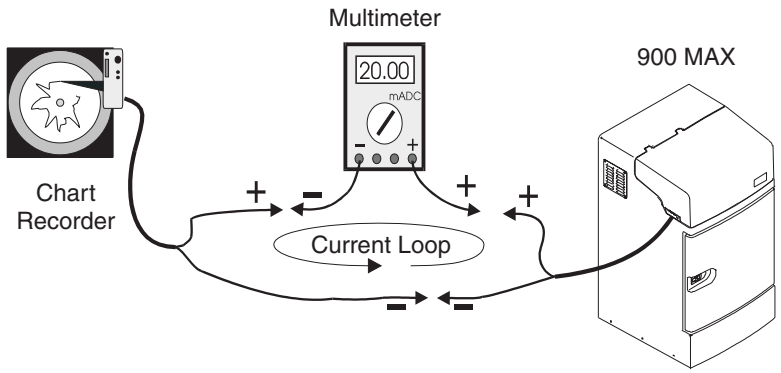

Figure 21 Calibration with the 4–20 mA Device Disconnected from the Loop

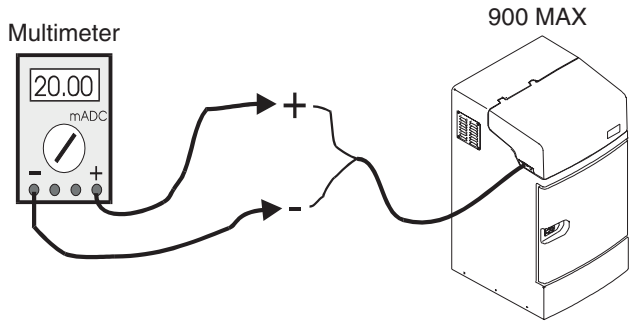

6.4 Alarm Relays

Note: *Current to the relay contacts must be limited to 5 amps. A means to remove power from the relays locally in case of an emergency or for servicing the product must be provided by the user. This can be accomplished with an external switch and a 5-amp fuse or with a switched 5-amp circuit breaker.*

Four alarm relay outputs are available as a factory installed option. The relays are mounted in an external NEMA 4X enclosure for installation to a wall or panel. Alarm contacts are rated for 10 amps at 240 V ac (resistive load).

The alarm wiring can be sized according to the load being used. The relay connector will accept wire sizes from 18 AWG to 12 AWG with a rating of 300 V, 80 °C minimum. Do not use wire smaller than 18 AWG.

For relay pin assignments refer to Table 17 and Figure 22.

6.4.1 Alarm Relays Connection

Table 17 Relay Connector on 900 MAX Sampler (J17)

Pin	Signal Description	Wire Color
A	+12 V dc	Red
B	Relay #1	Yellow
C	Relay #2	Black
D	Relay #3	Red
E	Relay #4	Green

Figure 22 Relay Pin Connections

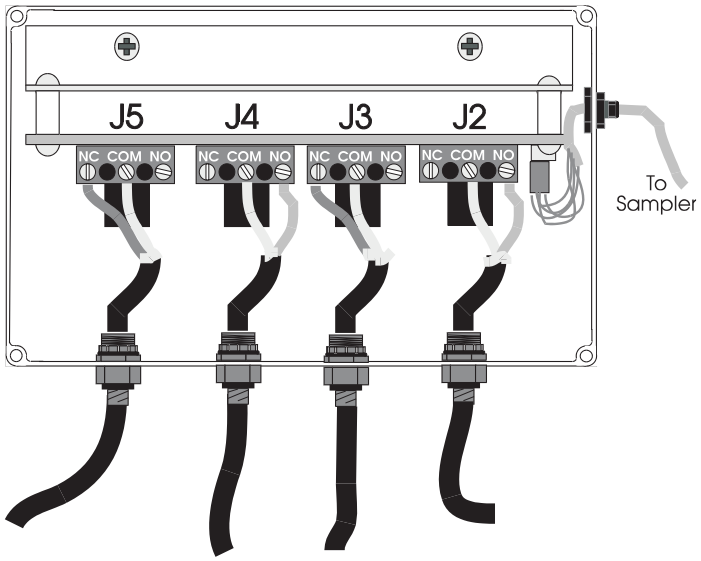

Table 18 Relays

Connector	Relay
J2	1
J3	2
J4	3
J5	4

Relay Junction Box

Required relay box is an alarm relay box assembly with a 10-ft long cable with a 6-pin connector on one end and a relay box on the other end (Figure 23).

1. Choose Normally Closed (NC) or Normally Open (NO) connections.

2. Hook into the terminal strip one wire in the common (COM) and the other in the connector with the preferred signal.

Figure 23 Single Relay Wiring Inside the Relay Junction Box

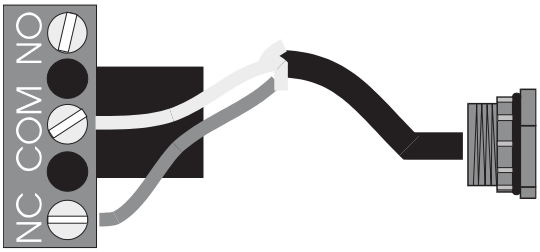

6.4.2 Alarm Relays Programming

Alarms can be programmed to activate based on certain conditions (low battery, low memory, etc.). When an alarm is tripped, an action is initiated (report via modem, dial a pager, or set a relay). There are two types of alarms:

- Trouble Alarms
- Set Point Alarms

6.4.2.1 Trouble Alarms

Trouble Alarms initiate an action when a trouble condition occurs. For example, a relay may close when the memory is full. Refer to Troubleshooting and Error Messages on page 139 for more information on trouble alarms.

1. From the Main Menu, select **SETUP > ADVANCED OPTIONS > ALARMS.**
2. Select one of the trouble conditions.
3. Select an action to occur when the alarm is activated. The list below shows each Trouble Condition. Refer to Appendix C on page 139 for causes and solutions.

Trouble Condition

- Low Main Battery
- Memory Battery
- Low Slate Memory
- Slate Memory Full
- Modem Failure
- Missed Sample
- Purge Failure
- Jammed Distributor
- RS485 Timed Out

Alarm Actions

- Set Relay #1
- Set Relay #2
- Set Relay #3
- Set Relay #4
- Report Via Modem

6.4.2.2 Set Point Alarms

Set Point Alarms look for trip points to be reached (either high or low or both) before initiating an action. For example an initiated action may be the closing of a relay when the water level exceeds 60 cm (24 in.) or drops below 10 cm (4 in.) Set Point Alarms activate when a user-definable high and/or low set point is reached.

1. Enable one of the alarm conditions.
2. Select an action to occur when the alarm is activated.
3. Set either a High trip point or a Low trip point.
4. After entering the trip point enter the deadband value.

Note: *Log rainfall to use an alarm on a rainfall condition; likewise, log flow in order to implement and alarm on a flow rate of change.*

Set Point Alarm Conditions:

- Level
- Flow
- Flow Rate of Change
- pH
- ORP
- Process Temperature
- Rainfall
- Cabinet Temperature (refrigerated samplers)
- Analog Channels 1–3
- Analog Ch. 4 or D.O.
- Analog Ch. 5 or D.O. Temp.
- Analog Ch. 6 or Conductivity
- Analog Ch. 7 or Conductivity Temp.

Note: *Rainfall and Flow Rate of Change alarms are HIGH set point conditions; they take no deadband and they are time dependant.*

Deadband

After entering the trip point, enter a deadband value. The deadband is the area between alarm “turn-on” and “turn-off”.

The purpose of setting the deadband is to eliminate alarm chatter which may occur if the “turn-on” and “turn-off” values are too close together. Small fluctuations occurring when the reading is at or near the trip point can rapidly toggle an alarm relay on and off.

In the pH example (Figure 24) the deadband is set to 0.10 pH. When the pH reached 6.9 (lower dashed line), the alarm tripped, but the alarm did not turn off until the pH came back up to 7.00. This difference is the deadband setting which should be set according to the characteristics of the item being measured.

Figure 24 Deadband Concept

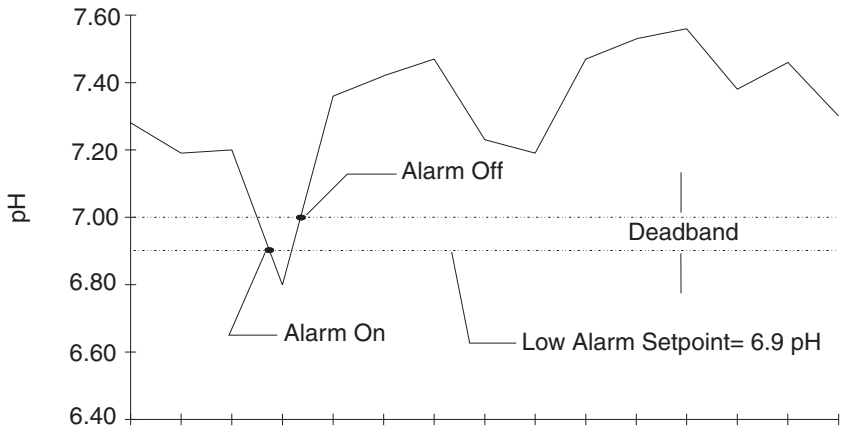

6.5 Analog Inputs

6.5.1 Analog Inputs Connection

Note: *4–20 mA inputs must be isolated. Maximum load per unit is 200 ohms.*

Analog voltage as well as analog current input signals are accommodated in a single connector. To connect the analog voltage signal (-4.0 to +4.0 V dc):

1. Tie ground wire to Pin B (ground).
2. Tie analog voltage wire to the appropriate voltage input pin (Pin C, E, or G).

For example, to connect an analog voltage input to analog input channel 1, tie the ground wire to pin B and your positive wire to pin C.

To connect and analog current signal (4–20 mA dc)

1. Tie ground wire to Pin B (ground).
2. Connect analog current wire to both voltage and current input pins for the appropriate channel (Pin C and D, or E and F, or G and H).

Table 19 Analog Input Pin Assignments

Pin	Signal Description	Wire Color
A	+12 V dc	White
B	Signal Ground	Blue
C	Voltage Input 1 (-4.0 V dc to +4.0 V dc)	Yellow
D	Current Input 1 (4–20 mA dc)	Black
E	Voltage Input 2 (-4.0 V dc to +4.0 V dc)	Red
F	Current Input 2 (4–20 mA dc)	Green
G	Voltage Input 3 (-4.0 V dc to +4.0 V dc)	Gray
H	Current Input 3 (4–20 mA dc)	Brown
J	not used	Violet
K	not use	Orange
Note: *There is no pin labeled "I".*		

There are a total of three analog input channels available on the 900 MAX Sampler. These inputs accept 4–20 mA dc or -4.0 to +4.0 V dc analog signals. They can be logged and graphed and can also be used to trigger alarms, cause setpoint samples, and control 4–20 mA outputs.

6.5.2 Analog Inputs Programming

Analog input channels can accept a signal from an external device. This signal may range from -4.0 V dc (min) to +4.0 V dc (max) or from 4 to 20 mA dc depending on the input selected. In some cases, input signals from certain devices may also fall somewhere within those ranges. For that reason, each analog input channel must be mapped to the minimum and maximum signal limits of the external device.

To map an external device to an analog input channel:

1. From the Main Menu, select **OPTIONS>ADVANCED OPTIONS>DATALOG.**

Note: *If logging is enabled on any channel, then that channel will have an arrow in front of the channel name to signify the channel is logged.*

2. Highlight Select Inputs using the up and down arrow soft keys and then press the **SELECT** soft key.

3. Highlight the analog channel to log using the up and down arrow soft keys, then press the **SELECT** soft key.

4. Press the **CHANGE CHOICE** soft key to cycle between Logged and Not Logged, then press the **ACCEPT** soft key.

5. Enter a Logging Interval using the numeric keypad. Press the **ACCEPT** soft key to continue.

6. Select Unit of measurement (ppm, ppb, afd, cfs, cfm, cfd, cms, cmm, cmh, cmd, gps, gpm, gph, lps, lpm, lph, or mgd).

7. Enter Low Point.

8. Enter High Point.

9. Select another channel to configure, or press the **RETURN** soft key to back up one step, or press the **MAIN MENU** function key to return to the Main Menu display.

AMERICAN SIGMA

MAINTENANCE

DANGER

Some of the following manual sections contain information in the form of warnings, cautions and notes that require special attention. Read and follow these instructions carefully to avoid personal injury and damage to the instrument. Only personnel qualified to do so, should conduct the installation/maintenance tasks described in this portion of the manual.

DANGER

Certains des chapitres suivants de ce mode d'emploi contiennent des informations sous la forme d'avertissements, messages de prudence et notes qui demandent une attention particulière. Lire et suivre ces instructions attentivement pour éviter les risques de blessures des personnes et de détérioration de l'appareil. Les tâches d'installation et d'entretien décrites dans cette partie du mode d'emploi doivent être seulement effectuées par le personnel qualifié pour le faire.

PELIGRO

Algunos de los capítulos del manual que presentamos contienen información muy importante en forma de alertas, notas y precauciones a tomar. Lea y siga cuidadosamente estas instrucciones a fin de evitar accidentes personales y daños al instrumento. Las tareas de instalación y mantenimiento descritas en la presente sección deberán ser efectuadas únicamente por personas debidamente cualificadas.

GEFAHR

Einige der folgenden Abschnitte dieses Handbuchs enthalten Informationen in Form von Warnungen, Vorsichtsmaßnahmen oder Anmerkungen, die besonders beachtet werden müssen. Lesen und befolgen Sie diese Instruktionen aufmerksam, um Verletzungen von Personen oder Schäden am Gerät zu vermeiden. In diesem Abschnitt beschriebene Installations- und Wartungsaufgaben dürfen nur von qualifiziertem Personal durchgeführt werden.

PERICOLO

Alcune parti di questo manuale contengono informazioni sotto forma d'avvertimenti, di precauzioni e di osservazioni le quali richiedono una particolare attenzione. La preghiamo di leggere attentivamente e di rispettare quelle istruzioni per evitare ogni ferita corporale e danneggiamento della macchina. Solo gli operatori qualificati per l'uso di questa macchina sono autorizzati ad effettuare le operazioni di manutenzione descritte in questa parte del manuale.

CAUTION
Always disconnect power to the sampler before performing any maintenance or service.

ATTENTION
Débranchez toujours l'alimentation de l'analyseur d'echantillonneur avant de procéder à un entretien ou une réparation.

¡CUIDADO!
Siempre desconecte el tomamuestras antes de realizar cualquier tarea de mantenimiento.

ACHTUNG!
Vor Durchführung von Wartungs- oder Insthandhaltungsmassnahmen ist das Probenentnahmesystem unbedingt spannungsfrei zu machen!

ATTENZIONE
Disconnettere sempre l'energia elettrica dal campionatore prima di operare tutti I servizi di assistenza alla macchina.

7.1 Cleaning the Sampler

7.1.1 Cleaning the Refrigerator

Clean the condenser fins and coils every 6 to 8 months to maintain efficient heat transfer.

7.1.2 Cleaning the Sampler Cabinet

Clean the interior and exterior of the sampler cabinet with a damp sponge and mild detergent. Do not use abrasive cleaners.

7.1.3 Cleaning the Sample Bottles

Clean the bottles using a brush and water with a mild detergent, followed by a fresh water rinse and a distilled water rinse. Glass bottles may also be autoclaved.

7.1.4 Cleaning the Intake Tubing and Pump Tubing

Clean the tubing by pumping water with mild detergent or other cleaning solution through the tubing, using the peristaltic pump in Manual Pump Mode. Press the ***MANUAL MODE*** soft key.

7.1.5 No Lubrication Required

The 900 MAX Sampler **does not** require routine lubrication. Do not lubricate the pump tube with petroleum jelly, silicone grease, oil, or any other lubricant, as this will substantially reduce the life of the pump tube and roller assembly.

If you need assistance in performing any of the following service steps, please contact the factory.

7.2 Pump Tubing Maintenance

CAUTION
Always disconnect power to the sampler before removing the pump cover.

ATTENTION
Débranchez toujours l'alimentation de l'analyseur d'echantillonneur avant de déposer le couvercle de la pompe.

¡CUIDADO!
Desconecte siempre el tomamuestras antes de retirar la tapa de la bomba.

ACHTUNG!
Vor Ausbau der Pumpenabdeckung ist das Probenentnahmesystem unbedingt spannungsfrei zu machen!

ATTENZIONE
Disconnettere sempre l'energia elettrica prima di rimuovere la copertura della pompa.

Replacement pump tubing is available from the manufacturer in 15' bulk length (Cat. No. 4600-15), and 50' bulk length (Cat. No. 4600-50). Use of tubing other than that supplied by the manufacturer may cause excessive wear on mechanical parts and/or poor pump performance.

7.2.1 Tubing Life Estimates

Pump tubing life depends on several factors:

- Distance from sample source. Locate the sampler as close to the sample source as possible.
- Vertical lift. Minimize the vertical lift (ideally, 15 feet or less).
- Intake Rinses. Minimize the number of intake rinses prior to sample collection.
- Pump roller assembly condition. Remove (clean) the silicone residue in the interior of the pump housing and on the rollers before installing a new tube.
- Constituents in the sample liquid. Grit and other abrasive solids cause greater wear on the tubing as they are squeezed through the pump rollers.

Experience at a particular site will be your best indicator of tubing life. Visually inspect the tubing and rollers on a regular basis after initial installation to get a feel for what maintenance your site will require. Be sure to replace the pump tubing before it splits to prolong the life of the sampler and keep the work area free of contamination from the sample liquid.

Note: *To extend the life of the tubing, rotate the pump tube 90 degrees in the pump housing after approximately 2/3 of the life has been realized (once the tube life has been determined through use).*

You must use the proper length of silicone tubing in the pump body. An improper length can reduce the life of the tubing and pump rollers. Refer to Figure 25 for the correct length.

Figure 25 Pump Tube Loading

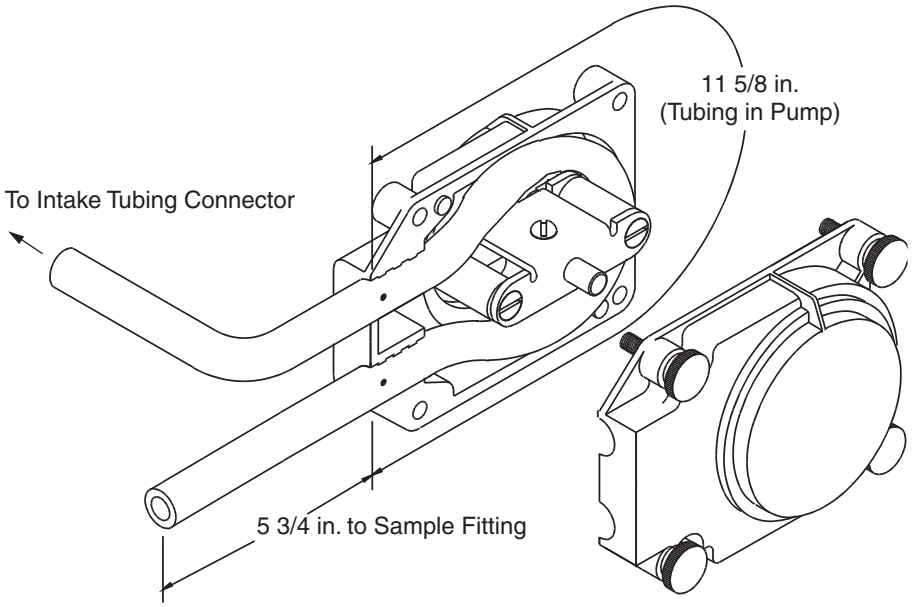

7.2.2 Replacing Pump Tubing

1. To replace the pump tube, remove the four screws on the pump cover.
2. Remove the front cover of the pump housing.
3. Remove the existing tubing. Locate the black dot on the new tubing. The end of the tube that extends farthest beyond the black dot attaches to the stainless steel tubing connector.
4. Install the pump tube in the pump housing until the black dots are visible just outside the pump body.
5. After inserting the new pump tube, reinstall the front cover and secure it with the four screws until finger tight.

7.3 Upgrades, Repairs, General Maintenance

Only a qualified technician should service the 900 MAX Sampler. For example, steps that require knowledge of CMOS electrostatic discharge precautions and advanced electronics training and should only be performed by a qualified technician. If you need assistance in performing any of the following service steps, contact the manufacturer.

Electrostatic Discharge (ESD) Considerations

To minimize ESD risks, maintenance procedures not requiring power to the sampler should be performed with power removed.

Delicate internal electronic components can be damaged by static electricity, resulting in degraded instrument performance or eventual failure.

The manufacturer recommends taking the following steps to prevent ESD damage to your instrument:

- Before touching any instrument electronic components (such as printed circuit cards and the components on them) discharge static electricity from your body. This can be accomplished by touching an

earth-grounded metal surface such as the chassis of an instrument, or a metal conduit or pipe.

- To reduce static build-up, avoid excessive movement. Transport static-sensitive components in anti-static containers or packaging.
- To discharge static electricity from your body and keep it discharged, wear a wrist strap connected by a wire to earth ground.

Handle all static-sensitive components in a static-safe area. If possible, use anti-static floor pads and work bench pads.

7.4 Internal Maintenance Items

The following items require access to the inside of the case for service:

- Fuses for the RS485 and analog interface connectors (if equipped)
- Internal desiccant module
- RAM memory batteries
- System upgrades (4–20 mA, modem, alarm relays, etc.)
- Circuit board repair

7.5 Removing and Opening the Controller

CAUTION
Always power the unit OFF and then disconnect all cables from the 900 MAX Sampler before removing the controller.

ATTENTION
Débranchez toujours l'alimentation de l'analyseur d'echantillonneur et débranchez tous les câbles de l'analyseur avant de déposer l'unité de commande.

¡CUIDADO!
Desconecte siempre el tomamuestras y quite todos los cables del mismo antes de retirar el controlador.

ACHTUNG!
Vor Ausbau des Reglers ist das Probenentnahmegerät unbedingt spannungsfrei zu machen. Trennen Sie zusätzlich alle Kabelanschlüsse vom Gerät, bevor mit der Demontage des Reglers begonnen wird.

ATTENZIONE
Disconnettere sempre l'energia elettrica dall'autocampionatore e tutti I cavi dall'autocampionatore prima di rimuovere il panello di comando.

To remove the controller from the controller center section:

1. Turn the unit off by pressing the **OFF** key.
2. Disconnect and remove all cables to the controller housing, including the distributor/full bottle shutoff cable.
3. Disconnect all tubing.
4. Remove the front clip which holds the controller housing to the top of the cabinet.
5. Lift the controller off the cabinet using care to guide the distributor/full bottle shut-off cable through the hole in the refrigerated compartment.

Note: *The front panel gasket has a light coating of grease to help assure a watertight seal. Do not contaminate the grease or gasket area with dirt or debris during servicing. Always replace the gasket if it is damaged or missing. Never reassemble the case without the gasket properly installed.*

6. Remove the 17 screws from around the perimeter of the controller back panel.

7. Carefully pull open the bottom panel and let the attached connectors swing out of the way.

8. If necessary for the repair being performed, unplug the appropriate connectors. Always note each connector location before unplugging anything. **Re-installing a plug into the wrong connector can cause extensive damage.**

7.6 Re-installing the Bottom Panel

Note: *Always follow the procedure below when re-installing the 900 MAX Sampler bottom panel. Improper panel installation may result in damage to the instrument.*

1. Hand tighten each nut until it makes contact with the panel.

2. Tighten the nuts in sequence shown in Figure 26 to 5 in.-lb (0.56 N-m).

3. Repeat the tightening procedure in the same sequence to 10 in.-lb (1.13 N-m).

Figure 26 Tightening the Nuts on the Bottom Panel

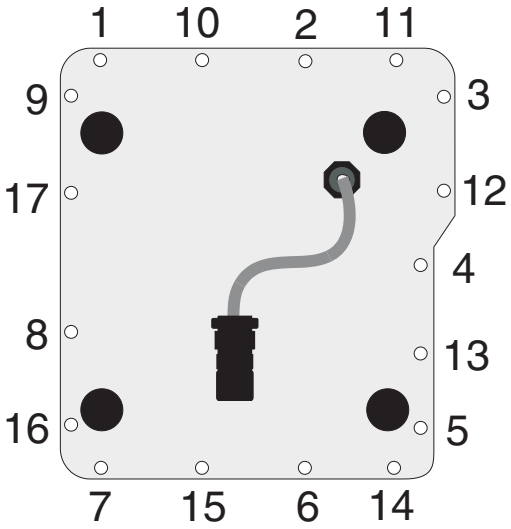

7.7 Circuit Board Identification

There are two main circuit boards in the 900 MAX Sampler; the Utility Board and the CPU board. The CPU board is attached to the bottom panel and the Utility board is located inside the control housing behind the motor/gearbox assembly.

Note: *Removal and handling of the circuit boards used in the 900 MAX Sampler requires knowledge of ESD (Electro-Static Discharge) precautions and the CMOS (Complementary Metal-Oxide Semiconductor) circuit components used in the 900 MAX Sampler. Static electricity has the potential to damage the CMOS components of the 900 MAX when the boards are unplugged and removed from the case. Precautions must be taken to assure static free personnel and work area prior to handling the circuit boards.*

Figure 27 CPU Board

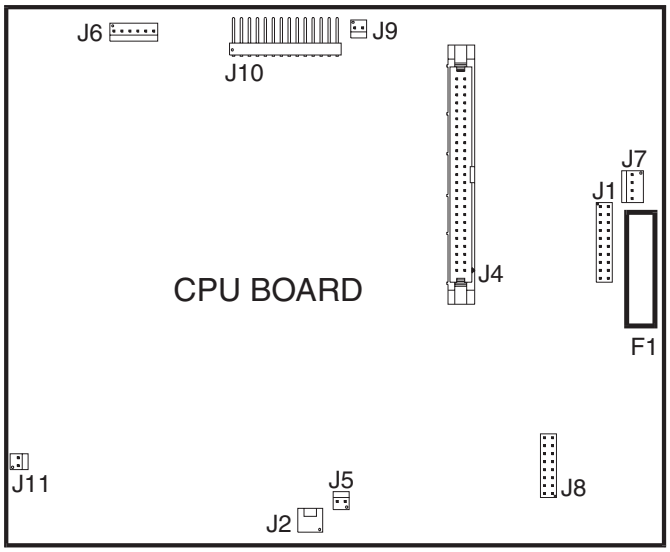

Table 20 CPU Board Connectors

ID	Description	ID	Description
J-1	Liquid Crystal Display	J-7	RS485 Submerged Pressure Transducer
J-2	Mechanical Totalizer	J-8	Modem Option Module
J-3	not used	J-9	Liquid Crystal Display (LED back-light)
J-4	Base Board	J-10	Keypad
J-5	Memory Backup Battery Pack	J-11	not used
J-6	RS232 Serial Port		

Figure 28 Utility Board

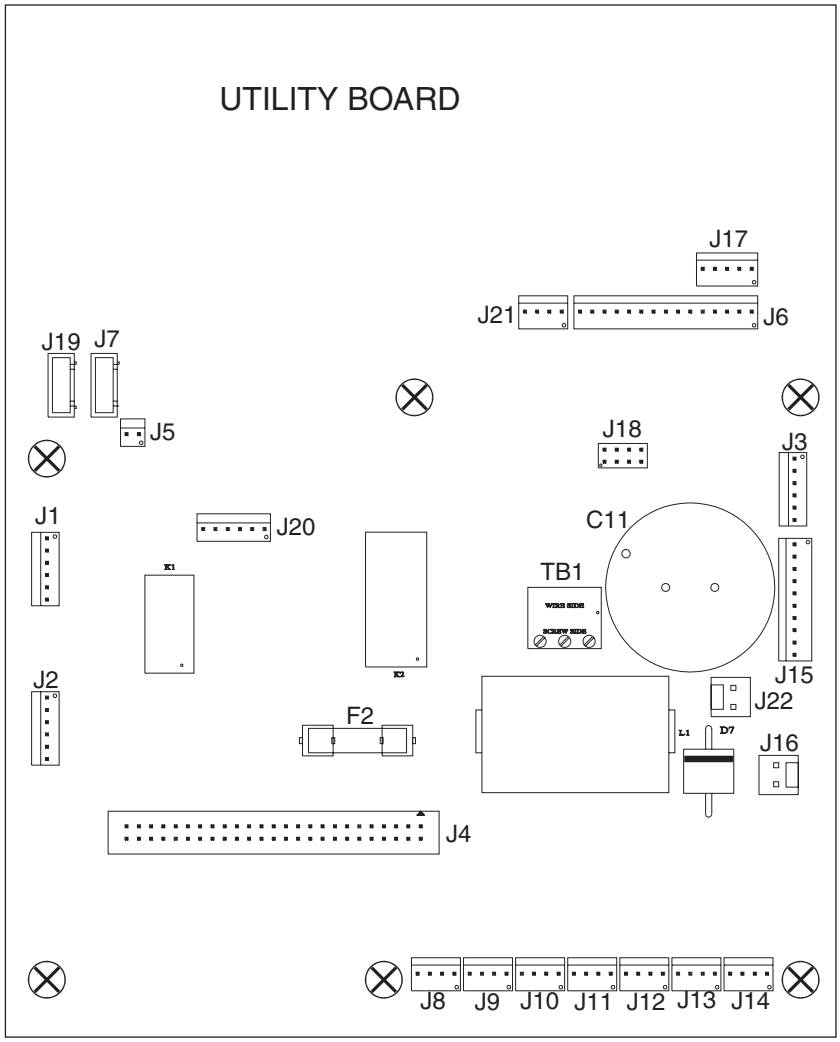

Table 21 Utility Board Connections

ID	Description	ID	Description
J-1	Distributor	J-12	Analog Input Channel 5
J-2	Auxiliary	J-13	Analog Input Channel 6
J-3	pH/ ORP	J-14	Analog Input Channel 7
J-4	CPU Board	J-15	Thermal Control
J-5	Rain Gauge	J-16	12 V dc Main
J-6	Bubbler Module	J-17	Relay Output
J-7	Fluid Sensor #1	J-18	4–20 mA PCB
J-8	Analog Input Channel 1	J-19	Fluid Sensor #2 (closest to pump)
J-9	Analog Input Channel 2	J-20	D.O. / Conductivity
J-10	Analog Input Channel 3	J-21	Submerged Sensor
J-11	Analog Input Channel 4	J-22	5 amp External Fuse

7.8 Replacing the Fuse

DANGER
For continued protection against fire, replace fuses with only fuses of specified type and current rating.

PELIGRO
Para una continua protección contra incendios, reemplace los fusibles únicamente por los del tipo y capacidad recomendados.

PERIGO
Para proteçao contínua contra fogo, troque os fusíveis somente por fusíveis do tipo especificado para a força da corrente.

DANGER
Pour assurer la protection contre les risques d'incendies, remplacez les fusibles uniquement par des fusibles du même type et pour la même intensité.

GEFAHR
Zur Wahrung des kntinuierlichen Brandschutzes durfen die Sicherungen nur mit Sicherungen des gleichen Typs und mit gleichen Stromkennwerten verwendet werden.

5-amp Medium Delay Fuse (Cat. No. 8753)
The main 12 volt line is fused as soon as it enters the controller housing. This is a 5 amp medium delay fuse and is accessible from outside the case on the back side of the controller housing. To remove the fuse unscrew the cap on the fuse holder with a flat blade screwdriver.

PCB Fuse Removal and Inspection
Pull the fuse straight out of the holding clips to remove the fuse. The wire strand inside the glass tube will be broken. Use an ohmmeter to tell for sure if a fuse needs to be replaced.

7.9 Motor/Gear Box

The motor/gear box requires no regular maintenance. The special formulation gears are self lubricating and require no oil or grease.

7.10 Internal Desiccant Module

Note: *The desiccant module cannot be recharged by heating. Do not attempt to bake the desiccant module in an oven to remove the moisture as this could be a fire hazard.*

The Internal Desiccant Module (Cat. No. 8849) consists of a moisture-absorbent material inside a poly bag. If the humidity indicator on the front panel turns pink, replace the module and the back panel perimeter gasket (Cat. No. 8606). The desiccant module is located under the CPU board.

7.10.1 Internal Case Humidity Indicator

After replacing the desiccant module and re-sealing the case, the Internal Case Humidity indicator disc (Cat. No. 2660) should return to its original blue color. Replace the indicator disc if it fails to return to blue after replacing the desiccant module. To replace the indicator disc, remove the bottom panel that is held in place by a small clip and screw.

7.11 Memory Battery

Random Access Memory (RAM) is a very reliable data storage medium for microprocessor applications. However, RAM requires power at all times. If power is removed, the data stored in the RAM chip is lost. Therefore, you cannot power the RAM chips from the 900 MAX Sampler power supply because you would lose data and program settings every time you unplugged the power cord. A separate battery located inside the sampler controller is provided to power the RAM chips and the real-time clock. The memory battery keeps the program entries and logged sample data alive inside the RAM memory when the main power fails or is removed for transport or replacement.

The 900 MAX Sampler memory battery consists of two C-cell batteries.

Should the memory battery voltage fall too low to properly maintain the program settings, a warning: **MEMORY POWER LOW** will alert you to replace the batteries. The 900 MAX Sampler utilizes a very small amount of energy from the memory batteries during normal operation. The service life of the batteries in this application is typically five years.

Appendix A Quick Start Guides

For best results, read the instrument manual before beginning. Use this guide as a reminder.

900 MAX All Weather Refrigerated Sampler Main Menu Flow Chart

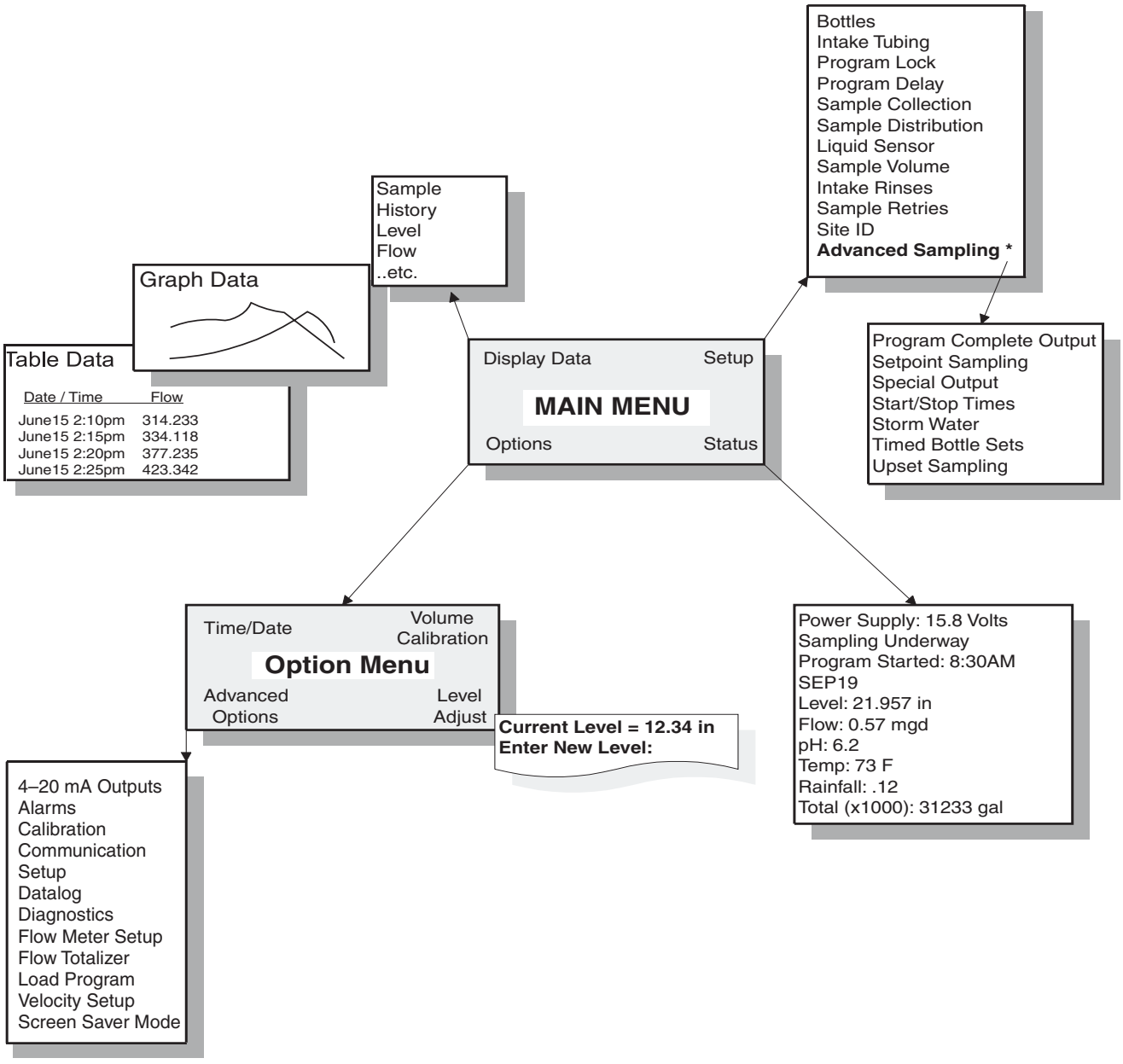

900 MAX All Weather Refrigerated Sampler Setup Flow Chart

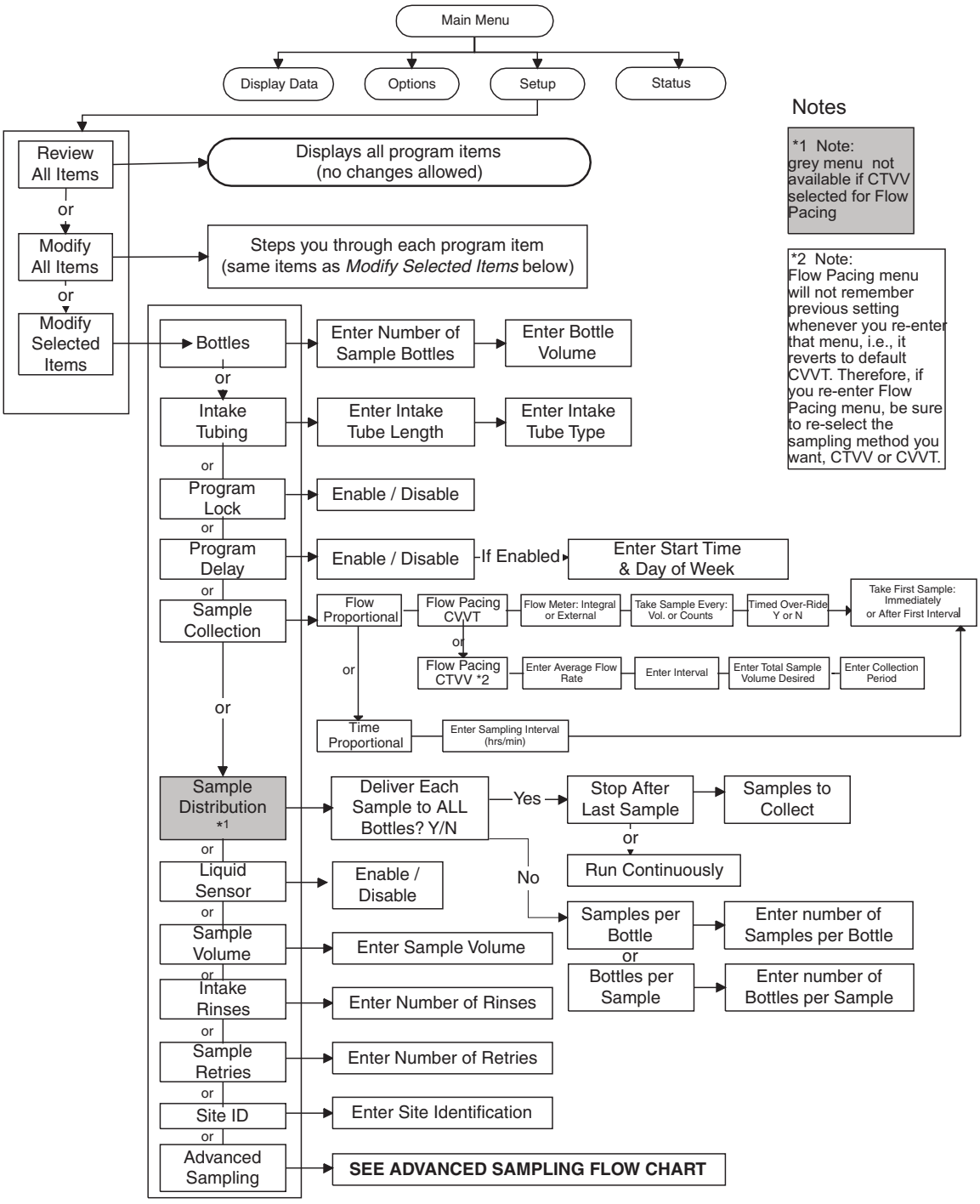

900 MAX All Weather Refrigerated Sampler Options Flow Chart

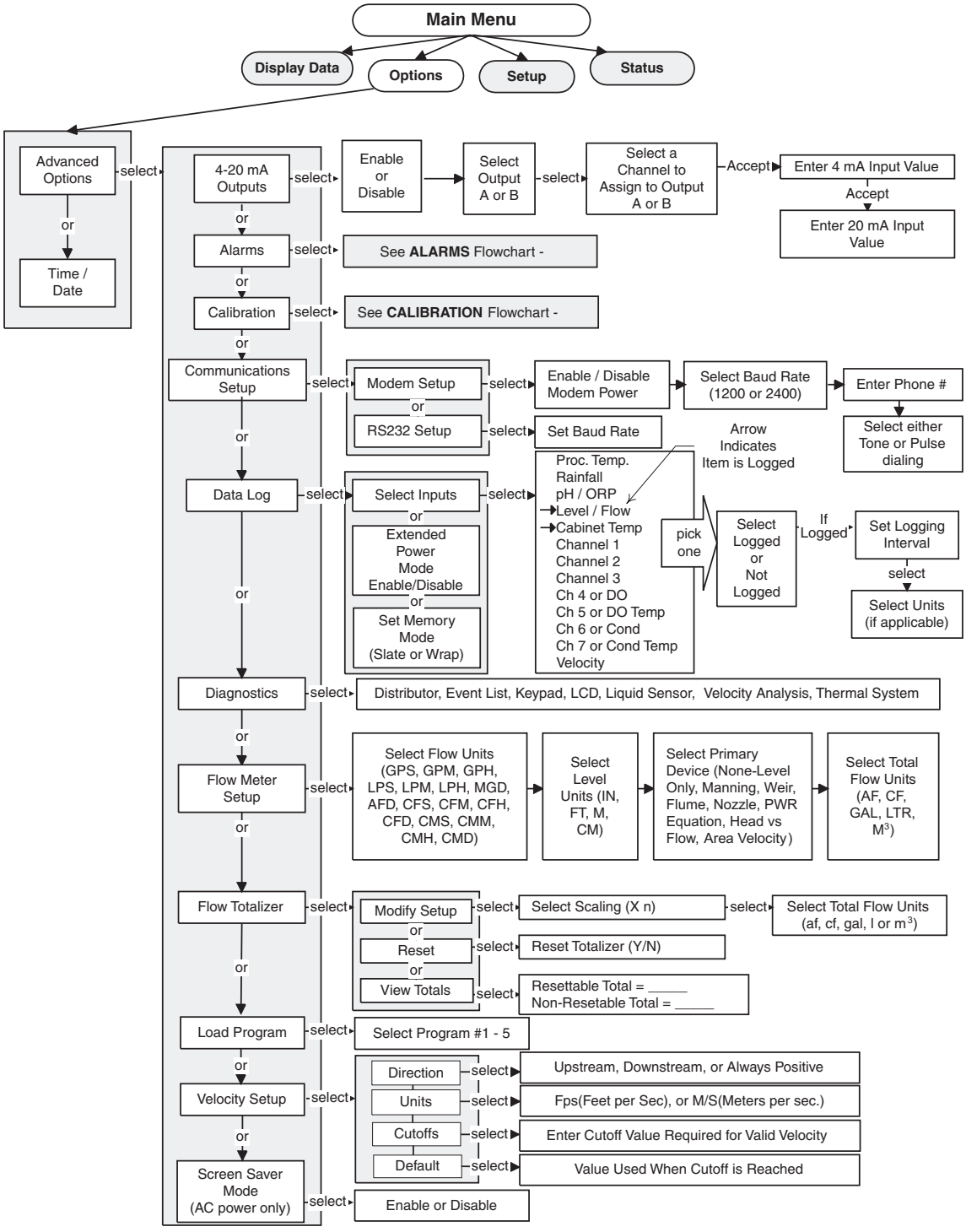

Appendix A

900 MAX All Weather Refrigerated Sampler Advanced Sampling Flow Chart

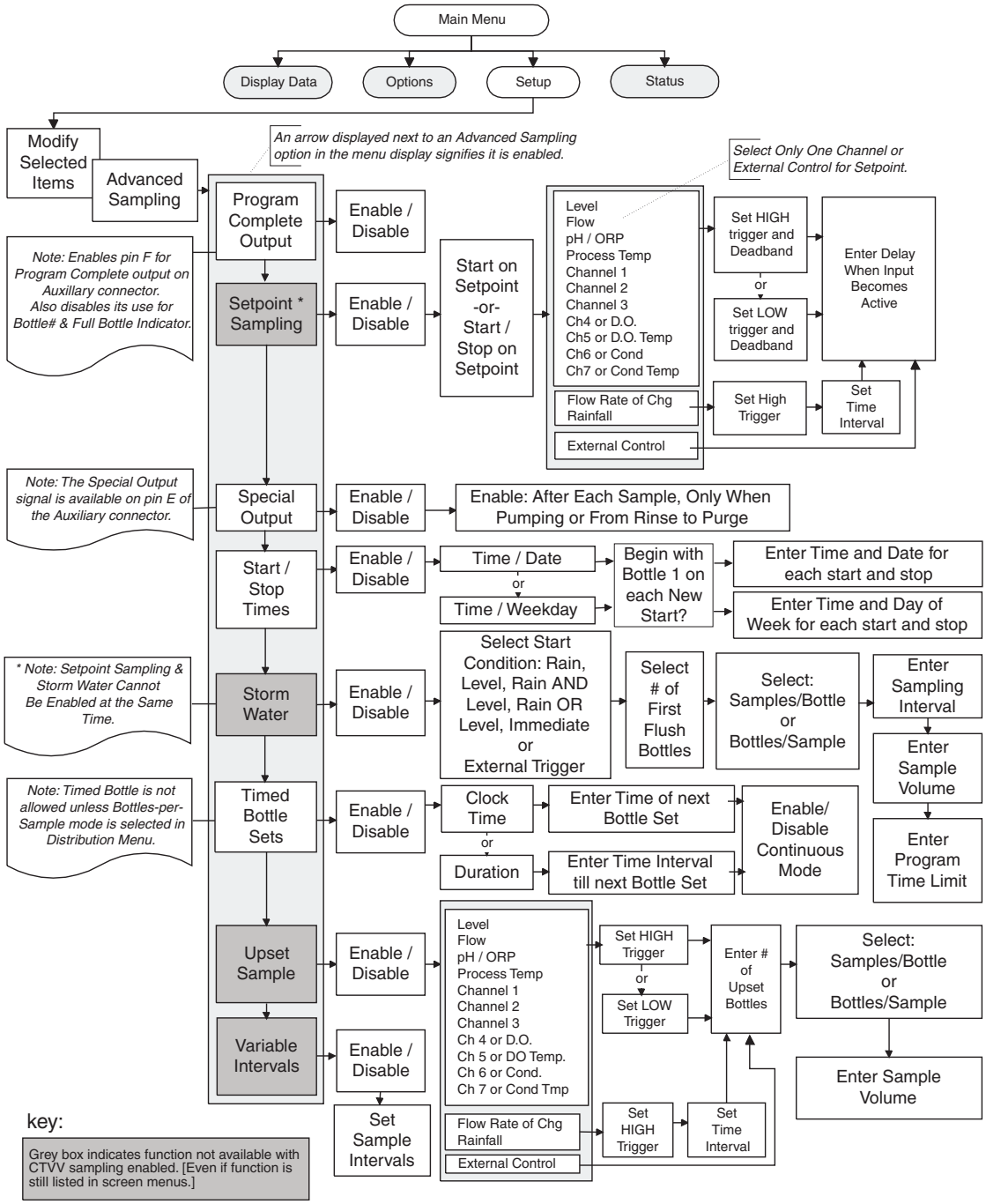

900 MAX All Weather Refrigerated Sampler Alarms Flow Chart

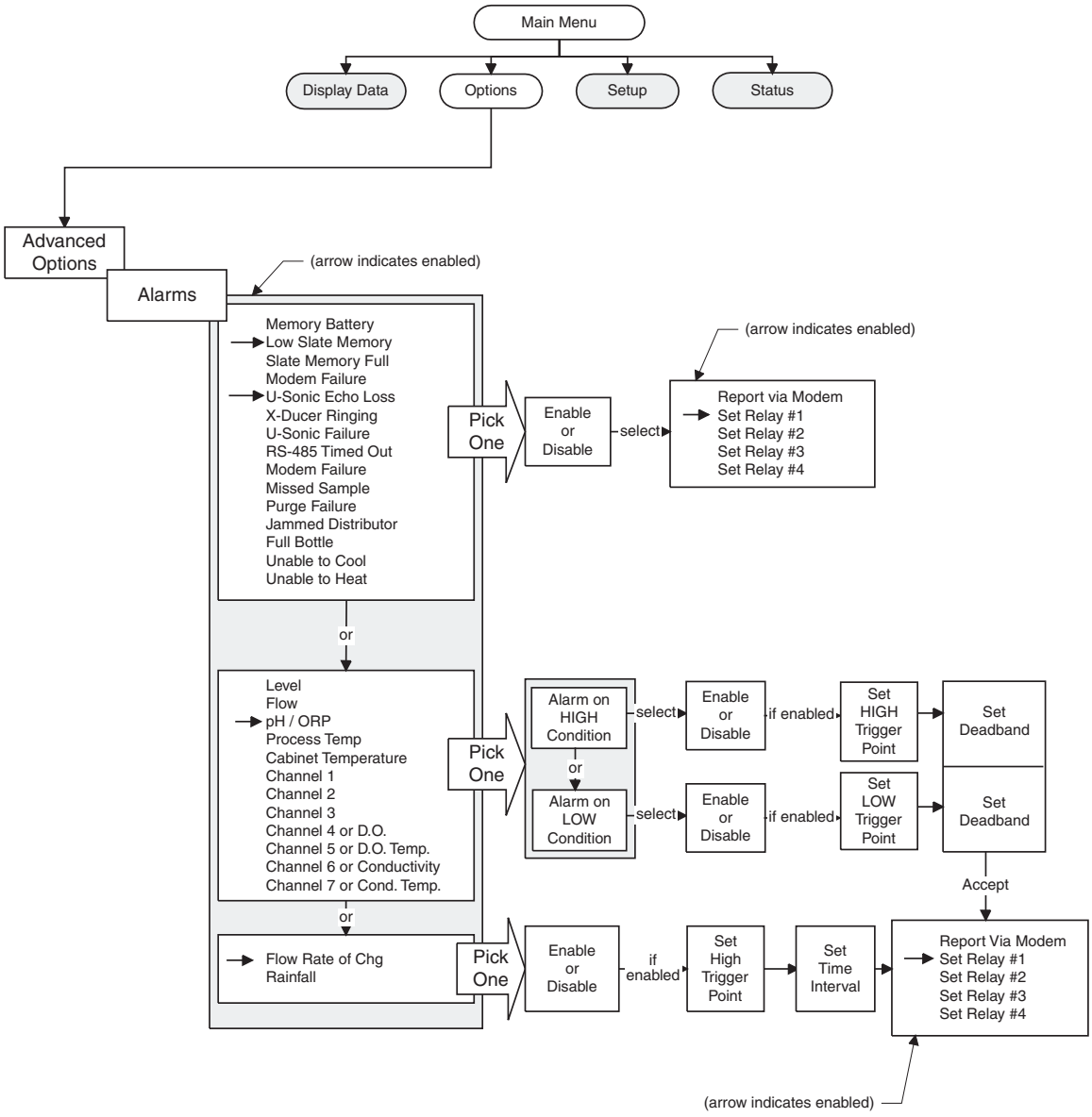

900 MAX All Weather Refrigerated Sampler Calibration Flow Chart (1 of 2)

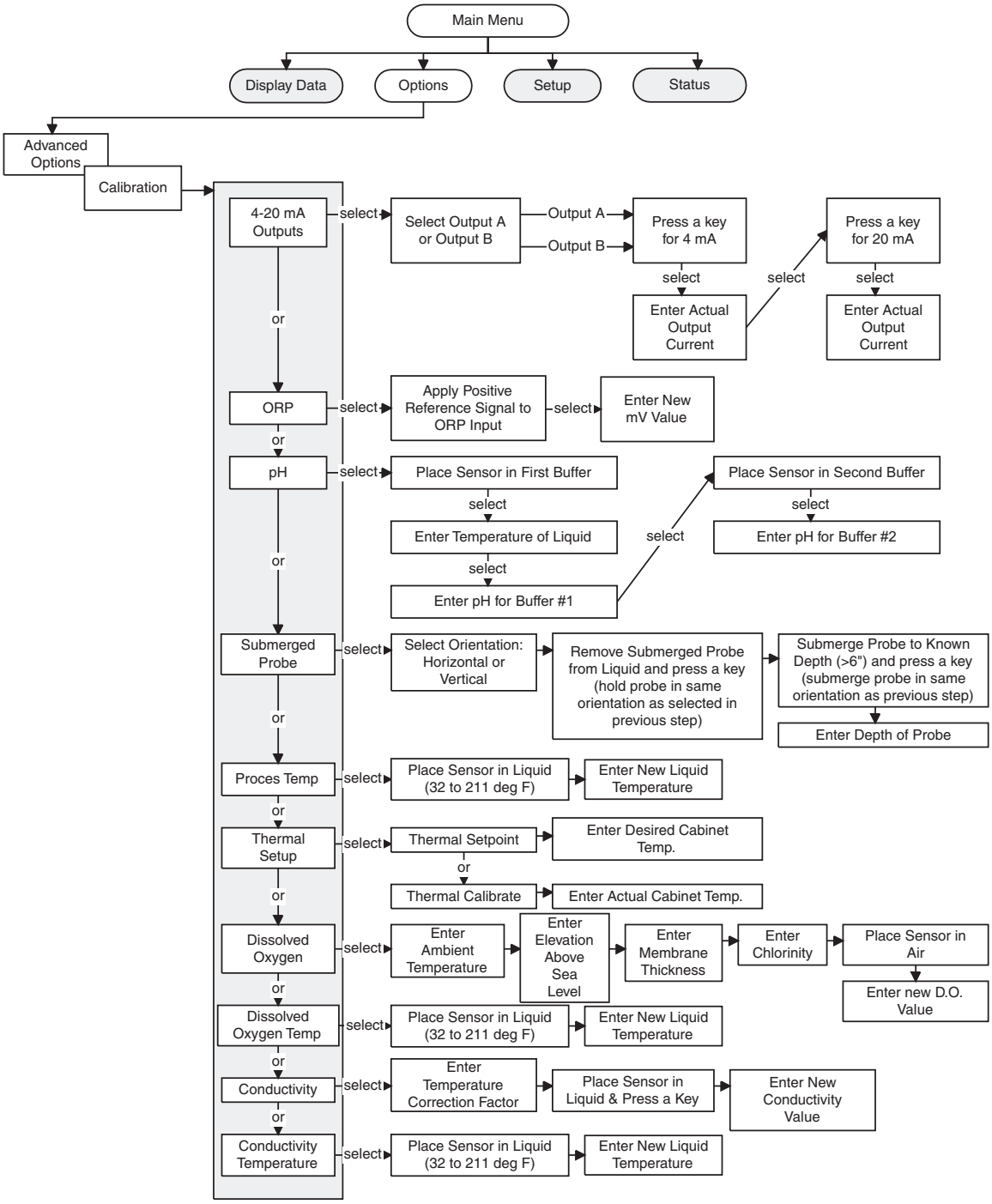

900 MAX All Weather Refrigerated Sampler Calibration Flow Chart (2 of 2)

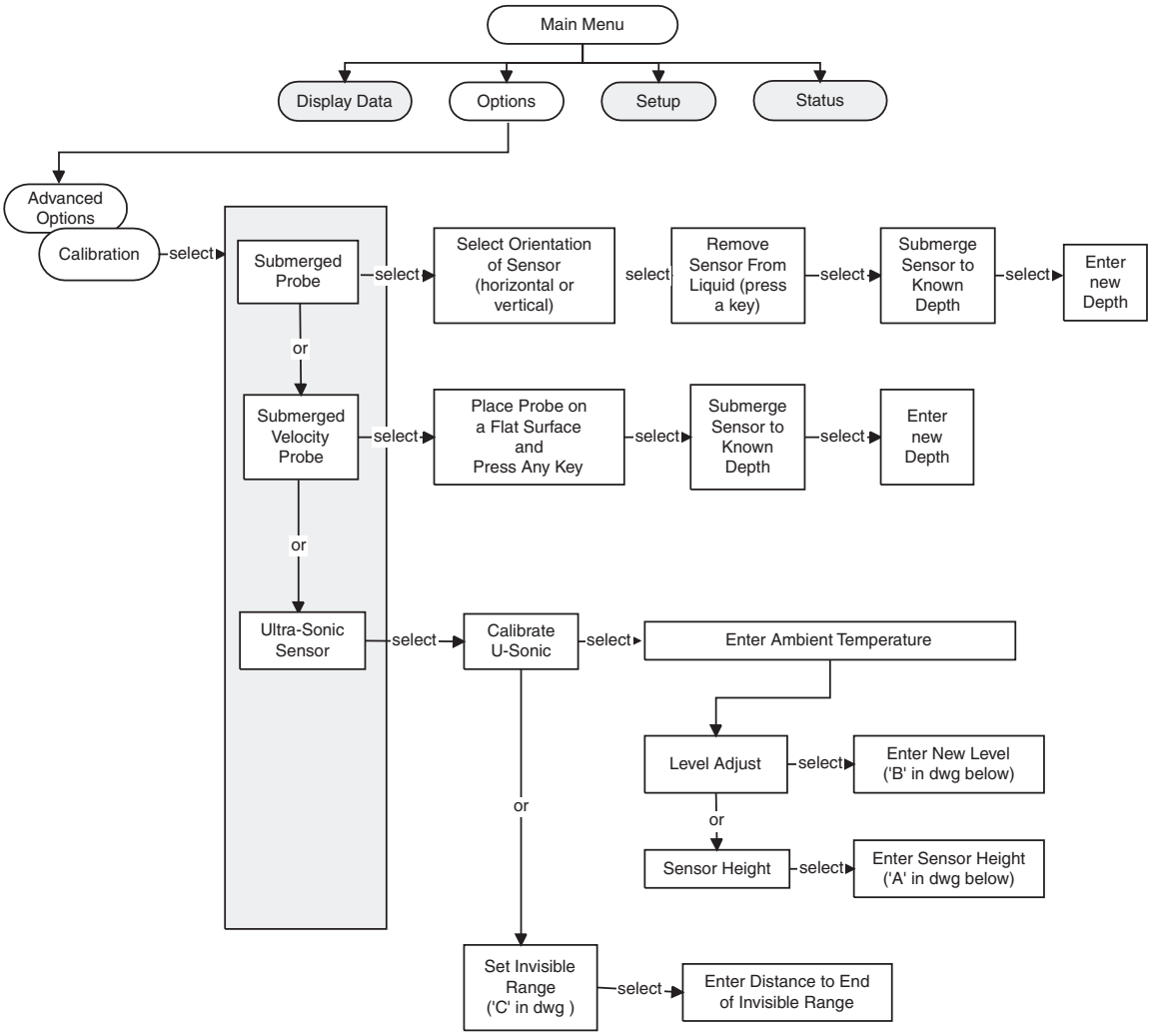

Review All Items

This function lets you review all information in the Setup and Option menus without worrying about accidentally changing the information. Use this function to verify that the program is setup properly.

All program entries and the status of all logged channels are displayed. Since this information fills more than one screen, scroll through the setup information one page at a time with the arrow keys.

11:00 AM 21 - APR - 01		SETUP REVIEW
900 MAX VERSION:	1.00	
NUMBER OF BOTTLES:	4	
BOTTLE VOLUME:	10.00 gal	
INTAKE TUBE LENGTH	50 ft	
INTAKE TUBE TYPE	3/8" VINYL	↓
PROGRAM LOCK	OFF	

When you get to the last screen you will see only an up arrow soft key meaning that you have now reached the last screen. Scroll back up the list or press the **MAIN MENU** key to exit.

11:00 AM 21 - APR - 01				SETUP REVIEW
CHANNEL 3	ppm	NOT LOGGED	1min	↑
CHANNEL 4	ppm	NOT LOGGED	1min	
CHANNEL 5	ppm	NOT LOGGED	1min	
CHANNEL 6	ppm	NOT LOGGED	1min	
CHANNEL 7	ppm	NOT LOGGED	1min	
MEMORY MODE		WRAP		

When you are satisfied that all program entries are set up properly, press the **MAIN MENU** key to exit this screen and return to the main menu.

Review All Items Screen Contents
The first line of the Setup Review screen shows the software revision level for the internal embedded software (firmware) of the sampler and should be noted before calling the factory.

Running a Program

To run or halt a program, press the **RUN/STOP** key on the front panel. If the program has been stopped (and no changes to the program settings were made while it was stopped), pressing the RUN key will cause the program to ask to resume the previously running program (and retain all logged data) or Start From Beginning (and clear all logged data).

Note: *When selecting Start from Beginning, all logged data will be cleared from memory. If this data needs to be saved make sure it is downloaded to a DTU or personal computer prior to pressing the* ***START FROM BEGINNING*** *soft key.*

Displaying Data

The Display Data function provides the recorded data for any channel being logged in a tabular report or a graph.

In addition, for tabular reports, the data can be viewed from the beginning, from the end, or from a specific point in time. A graph can display any 24-hour

period, zoom in to any portion of the 24-hour period for finer detail, or center the graph on a specific point in time.

Selecting the Channel

Note: Only the channels for which logging has been enabled will be listed.

1. Press **DISPLAY DATA** soft key from the Main Menu to display a list of logged channels.
2. Highlight the desired channel using the up and down arrow soft keys then press the **SELECT** soft key.

Tabular or Graph Format

1. Highlight the desired display method using the up and down arrow soft keys then press the **SELECT** soft key.

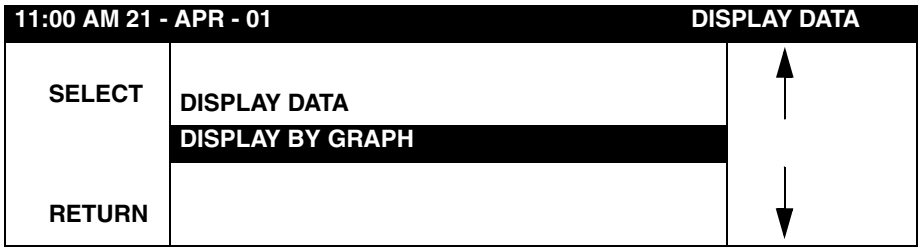

Table 1 Display Data Functions and Descriptions

Function	Description
Display Data by Table	
	View from start: Displays the data for the selected channel beginning with the first (oldest) data point in memory.
	View from end: Displays the data for the selected channel beginning from the most recent point in memory.
	View from time/date: Displays the data for the selected channel beginning from any desired time and date. Enters a new desired time and date.
	Note: *Totals displayed are calculated by summing the logged data. If the date selected precedes available logged data (memory has wrapped), the total will be incorrect.*
Display Data by Graph	
	Graph day: Displays data for a specified date. Data for the selected date is graphed from midnight to midnight.
	Graph point in time: Displays data for a specified time and date. The graph displays three hours of data with the selected point in the time at the corner of the graph.
	Graph partial day: Zooms in on a portion of the logged data.

Graph Manipulation

Table 2 Graphing Functions and Descriptions

Functions	Description
Status Bar	
	Displays the time, date, measured value, and unit of measure at the intersection of the data cursor. Placing the cursor's data on the status bar eliminates the need for X or Y axis labels and provides a larger graph viewing area.
Moving the Data Cursor with the Arrow Keys	
	The data cursor appears as a vertical line in the center of the graph. Move the data cursor to the left or right by using the soft keys or the numeric keypad.
Moving the Data Cursor with the Numeric Keypad	
	The keys 0–9 represent a percentage of full scale. Pressing a numeric key on the keypad while a graph is displayed causes the data cursor to jump to the location on the graph that is represented by that key. For example, pressing the 0 key moves the data cursor to the far left end or 0% position on the graph. Pressing the 5 key moves the data cursor to the middle or 50% position of the graph. Pressing the 9 key moves the cursor to the 90% position.
Next Channel Soft Key	
	Graphs data from the next logged channel. For example, if the 900 MAX Sampler is logging Level, Flow, and pH and the Level graph is currently displayed, the **NEXT CHANNEL** soft key causes the Flow channel to be graphed. Pressing Next Channel again will create a graph for pH channel. Pressing **NEXT CHANNEL** again returns to the Level graph, selects a time period of interest, and compares different graphs.

Graphic Display Averaging

The 900 MAX Sampler can display a graph that consists of a maximum of 180 individual dots. Since a 24-hour period could contain as many as 1,440 data points (assuming a one-minute recording interval, one reading each minute) it would be impossible to plot every data point on the graph.

When more than three hours (more than 180 minutes worth) of data is graphed, the data points must be averaged. When graphing a partial day of three hours or less, all data points are graphed with no averaging.

When viewing a graph with more than 180 data point, zoom in to the area of interest (using the Graph Partial Day option) before all of the individual data points are displayed.

Sample History

Sample History displays a running history of the sampling program. Displays include sampler number, date and time of each sample, the bottle number it was put in, and the results of the sample cycle. Result messages include:

Message	Results
Success	Sample taken as expected.
No Liquid	No liquid was detected at the liquid sampler.
Key Press	A key was pressed twice during pumping, canceling that sample.

Appendix B

Options Menu Features

1. From the Main Menu, select **OPTIONS**.

11:00 AM 21 - APR - 01		OPTION MENU
		VOLUME CALIBRATION
TIME / DATE		
ADVANCED OPTIONS		LEVEL ADJUST
READY TO START		

Optional Programs

- Time and Date for internal real-time clock
- Calibrate the sample volume
- Advanced Features
- Adjust level readings of optional integral flow meter

Setting the Time and Date

1. From the Main Menu, select **OPTIONS>TIME/DATE**

11:00 AM 21 - APR - 01		TIME / DATE
ACCEPT		CHANGE AM / PM
	_ _: _ _ AM _ _ -APR- _ _	
CLEAR ENTRY	MODE: 12-HR FORMAT	CHANGE MONTH
USE +/- KEY TO CHANGE 12/24 HR FORMAT		

2. Adjust the real time clock and date setting, using the **CHANGE AM/PM** soft key and the **CHANGE MONTH** soft key.

Volume Calibration

From the Main Menu, select **OPTIONS> VOLUME CALIBRATION.**

The liquid sensor on the 900 MAX Sampler offers unparalleled sample accuracy and repeatability. For most site conditions, no volume calibration is necessary, and the volume collected is accurate within 10% of the requested volume. To improve volume accuracy to 5%, or when sample volume accuracy is adversely affected by unusual site conditions (such as the sample source located higher than the sampler pump), or when the liquid sensor is disabled, then volume calibration should be performed.

Sensor Disabled
When the sensor is disabled, you must calibrate the sample volume(s). If more than one volume is programmed (such as when using storm water or upset sampling), you must calibrate each volume independently (see chart below).

Sensor Enabled
When the sensor is enabled, and volume calibration is selected, a single manual calibration is taken. It does not matter if multiple volumes are programmed (such as when using stormwater or upset sampling). When the sensor is enabled, a single “Manual Calibration” choice provides sufficient information to adjust the sensor to all programmed volumes (see table below).

Liquid Sampler	Available Calibration Volumes
Enabled	Manual Calibration
Disabled	Main Sample Volume
Disabled/Stormwater	Main Sample Volume
	First Flush Volume
Disabled/Upset Sampling	Main Sample Volume
	Upset Sample Volume
Disabled/Storm & Upset	Main Sample Volume
	Upset Sample Volume
	First Flush Volume
Disabled/If Timed Rinse Set	Timed Rinse (in addition to the above)

Note: *Before calibrating, make certain the desired sample volume in the Setup menu is selected.*

Calibration Procedure—Sensor Disabled:

1. From the Main Menu, press the **OPTIONS** soft key.
2. Press the **VOLUME CALIBRATION** soft key
3. Select the desired volume to calibrate if more than one is listed (see chart above).
4. Slip the pump tube off the sample fitting (near where it exits the pump housing) and direct the end of the pump tube into a graduated cylinder.
5. Press the **START PUMPING** soft key. The pump will purge the line, and start pumping a sample.
6. Press any key when the desired sample volume has been reached in the graduated cylinder. The pump will stop to allow the line to completely drain and then reverse to post-purge the line.
7. If the pumped sample volume is correct, then press the **DONE** soft key. If not, repeat the calibration cycle by pressing the **TRY AGAIN** soft key.
8. When finished, re-install the pump tube onto the sample fitting.

Note: *To check the sample size after calibration use the Manual Mode function key to take a grab sample. Do not go back into calibration to check the volume since the volume compensation is reset to zero at the start of a calibration.*

If one or more Timed Rinses are selected (sensor disabled), then they must be calibrated as well. The Timed Rinse will rinse the intake line up to 3 times prior to taking a sample.

When calibrating a Timed Rinse, the line is purged, then liquid is pumped toward the sensor. When the liquid reaches the predetermined point, press any key to stop the pump. The pump will reverse and purge the line.

Timed Rinse Calibration Procedure—Sensor Disabled:

1. From the Main Menu press the **OPTIONS** soft key.
2. Press the **VOLUME CALIBRATION** soft key
3. Select **TIMED CALIBRATE** and press the **SELECT** soft key.
4. Press the **START PUMPING** soft key. Wait while the pump purges the line, it will then start pulling liquid toward the pump.
5. Press any key when the liquid reaches the desired point. The pump then reverses to post-purge the line. Stop the pump when liquid has reached the point past the sensor, but not into the pump body.
6. If the timed rinse stopped where you wanted, press the **DONE** soft key. If not, repeat the timed rinse cycle by pressing the **TRY AGAIN** soft key.

Calibration Procedure—Sensor Enabled:

Note: *Before calibrating, make certain the desired sample volume in the Setup menu is selected.*

1. From the Main Menu, press the **OPTIONS** soft key.
2. Press the **VOLUME CALIBRATION** soft key
3. Main Calibration is the only choice with the sensor enabled. Press the **SELECT** soft key to select it.
4. Slip the pump tube off the sample fitting (near where it exits the pump housing) and direct the end of the pump tube into a graduated cylinder.

Note: *To check the sample size after calibration use the Manual Mode function key to take a grab sample. Do not go back into calibration to check the volume since the volume compensation is reset to zero at the start of a calibration.*

5. Press the **START PUMPING** soft key. The pump will purge the line, and pump a sample into the graduated cylinder. The pump will then stop to allow the line to completely drain and finally reverse to post-purge the line.
6. If the sample was taken, then press the **DONE** soft key. If not, repeat the cycle by pressing the **TRY AGAIN** soft key.
7. After pressing the **DONE** soft key, a screen will be displayed asking for the Actual Volume. This is the volume measured in the graduated cylinder. Enter this volume and press the **ACCEPT** soft key when done. Note that the requested sample volume is shown on top for reference.
8. When finished, re-install the pump tube onto the sample fitting.

Data Log

From the Main Menu, select **SETUP > ADVANCED OPTIONS > DATALOG.**

The 900 MAX Sampler can record up to 116,000 readings from any or all input channels and store them in solid state, battery-backed memory for later viewing or retrieval.

This option allows the selection of channels to log, how often to log, and how to treat the memory when it becomes full (Slate or Wrap).

The 900 MAX Sampler has two data logging modes:

- Power Save Mode
- Continuous Mode

Logging Intervals

Logging Intervals are designed to optimize the available memory so that readings can be logged for a longer period of time. A logging interval is the time period over which readings are taken and then averaged.

Power Save Mode
Power Save Mode is automatically initiated upon power-up if a battery is installed on the sampler. When operating in Power Save Mode, the 900 MAX Sampler microprocessor spends most of its time asleep conserving battery power. Once per minute, the sampler wakes up, logs the readings from all enabled input channels, performs any other necessary functions and then goes back to sleep.

Selecting a five minute logging interval means that the readings are still taken every minute but the data is not logged until the five minute logging interval is up, at which time the readings are averaged over the previous five minutes and that average is logged

Continuous Mode
Continuous Mode is automatically initiated upon power up if ac power is supplied. The microprocessor stays awake at all times taking readings every second. At the end of the logging interval specified, the readings are averaged over the previous interval and stored in memory. If you select a one-minute logging interval, a reading will be taken approximately every second but no data are logged until the logging interval ends. At that time, the readings are averaged over the logging interval and only the average is logged.

If you select a five-minute logging interval, readings are still taken every second but the data are not logged until the five-minute logging interval ends. At that time, the readings are averaged over the previous five minutes and the average is logged.

Extended Power Mode
Extended Power Mode provides additional battery life by keeping a 900 MAX Sampler powered down during the entire logging interval. For example, if a logging interval of five minutes is selected, the 900 MAX Sampler stays asleep until the five minutes has expired. It then wakes up, takes a reading, logs it in memory and then goes back to sleep for another five minutes. The 900 MAX Sampler does not wake up every minute as it does in normal Power Save Mode.

Selecting a five minute logging interval in Extended Power Mode cause a reading to be taken every five minute and the reading is logged. All channels must share the same logging interval.

Note: *The Review All Items selection from the Setup menu indicates the maximum available logging hours for the channels and recording intervals you selected. The sampler calculates this information when the program is run using the* **RUN/STOP** *key.*

Longer logging intervals result in a longer total recording time. Lower resolution also occurs since more averaging is done at higher logging intervals. You should choose the shortest logging interval possible, while still making data collection convenient. If possible, visit the site once per month to collect data, and then pick a logging interval that almost fills memory over the course of one month.

For example, if the sampler is equipped with the standard complement of RAM memory (128K) and only one channel is logged, then a 2-minute logging interval would take 24 days to completely fill the available memory
If, on the other hand, you chose a 1-minute logging interval, the memory would become full after 12 days.

Table 3 Logging Intervals vs. Total Recording Time for Each Memory Configuration*

Logging Interval	Total Recording Time (days) before memory is full, with 128K Bytes of RAM (standard) (approx. 18,482 readings)	Total Recording Time (days) before memory is full with 512K Bytes of RAM (optional) (approx. 115,630 readings)
1	12.15	80.55
2	24.30	161.10
3	36.45	241.65
5	60.75	402.75
6	72.90	483.30
10	121.50	805.50
12	145.80	966.60
15	182.25	1208.25
20	243.00	1611.00
30	364.50	2416.50
60	729.00	4833.00

* Assuming **one** logged channel.

Dynamic Memory Allocation

The 900 MAX Sampler uses a management scheme called “Dynamic Memory Allocation.” All readings are logged in battery-backed Random Access Memory (RAM). RAM memory is allocated to each channel dynamically during operation. If one channel is logging at 5-minute intervals and a second channel logging at 1-minute intervals, the sampler automatically configures memory so that both channels fill memory at the same time. Five times as much memory is assigned to the channel that is logging at 1-minute intervals than the channel that is logging at 5-minute intervals.

Memory can be configured in two ways:

- Slate Memory Mode
- Wrap Memory Mode

Slate Memory Mode
Slate mode causes logging to stop when memory becomes full. The sampler continues to operate but no more data is logged. Use this mode if you don't want to lose any data from the beginning of the logging period.

Wrap Memory Mode
In Wrap mode, when memory becomes full, the oldest reading is discarded each time a new reading is taken. When memory becomes full, the sampler continues to operate and log data. This mode is best used if you are interested in the most recent data readings.

Memory Mode Configuration
To configure the Memory Mode for either Slate mode or Wrap mode:

1. Select **DATA LOG** from the Advanced Options menu.
2. Select **MEMORY MODE** using the up and down arrow soft keys, then press the **ACCEPT** soft key to continue.
3. Press the **CHANGE CHOICE** soft key to pick either Slate or Wrap, then press the **ACCEPT** soft key to complete your selection.

Data Logging Configuration

Note: *If logging is enabled on any channel, then that channel will have an arrow in front of it to signify that the channel is logged.*

To configure the 900 MAX Sampler for data logging:

1. Select **DATA LOG** from the Advanced Options menu.
2. Highlight Select Inputs using the up and down arrow soft keys and then press the **SELECT** soft key to continue.
3. Highlight the channel you wish to log using the up and down arrow soft keys, then press the **SELECT** soft key to continue.
4. Press the **CHANGE CHOICE** soft key to cycle between Logged and Not Logged, then press the **ACCEPT** soft key to continue.
5. Enter a logging interval using the numeric keypad, then press the **ACCEPT** soft key to continue. Valid logging intervals are shown on the status bar along the bottom edge of the display for your reference.
6. Select another channel to configure or press the **RETURN** soft key to back up one step or press the **MAIN MENU** function key to return to the Main Menu display.

Diagnostics

From the Main Menu, select **OPTIONS> ADVANCED OPTIONS > DIAGNOSTICS.**

In addition to the automatic diagnostics that are performed upon power up, the following manual diagnostics are available:

- Distributor Test
- Event List
- Keypad Test
- LCD Test
- Liquid Sensor
- Velocity Analysis

Distributor Test
The distributor positions the sample tube over the appropriate bottle during multiple bottle sampling. If the distributor arm is obstructed or if a problem exists with the distributor assembly, the arm will not position over the desired bottle correctly.

This test assumes that 24 bottles are installed which is the most difficult to position for the distributor (the most stops and the smallest bottle mouth). Upon selecting the Distributor Test, the arm returns to the bottle #1 position then moves one bottle at a time for all 24 bottle positions. The arm then reverses direction and again stops at all 24 positions on its way back to the bottle #1 position. Make sure no obstructions interfere with the distributor arm rotation.

Event List
The Event List diagnostic provides a time/date stamped list of significant events occurring in the sampler. You can review these events to find out when an event occurred and what events preceded or followed the event of interest. Events may be viewed in chronological order from the beginning or end of the event list by selecting View From Start or View From End.

The event list cannot be erase, even when the program is started. Up to 200 events are logged before the list wraps around and the oldest entry is discarded as each new entry is posted.

Logged events include:

- Power On/Off
- Level Adjustments
- Program started, stopped, halted, or resumed.
- Error Messages
- Alarm Activation/De-activation
- Calibration
- Missed Samples (if liquid sensor is enabled)

Keypad Test
Keypad Test provides a simple means of verifying the operation of all front panel keys. Selecting Keypad Test from the diagnostics menu will bring up the following screen:

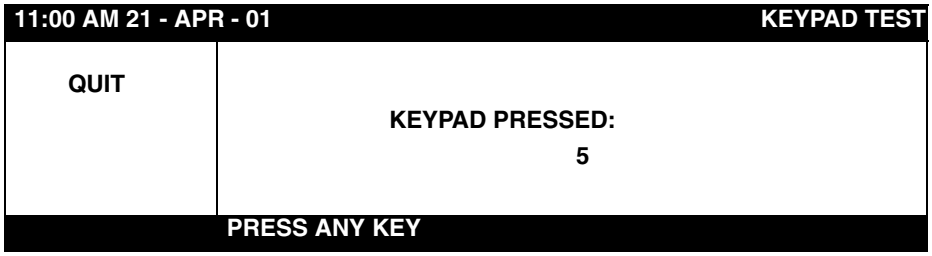

Pressing any key on the front panel (except for the upper left soft key will cause that key label to appear in the center of the display.

All numeric keypad keys, soft keys, and function keys may be tested in this manner. To end, press the **QUIT** soft key (this also verifies the upper left soft key operation).

LCD Test
Display Test allows you to verify that all pixels in the Liquid Crystal Display (LCD) are functional. The LCD is made up of 14,400 pixels that are turned on and off as needed to create the display of graphics and text. Each individual pixel is turned on and off by its own transistor, which means that if a transistor failed, the pixel might not turn on, which could cause an unreadable or confusing display.

Selecting LCD Test from the Diagnostics menu will cause the display to become black for 3 seconds. This allows you to verify that all pixels are functional. A defective pixel will stand out as a white dot in the field of black dots. A message, “The display will remain inverted for 3 seconds” is shown for 2 seconds followed by a 3 second period with all dots turned on.

Liquid Sensor

The liquid sensor contains a high frequency sound transmitter and receiver. High frequency sound waves are sent through the silicone pump tubing by vibrating a piezo-electric crystal. They are picked up on the other side of the tubing by a receiving crystal acting much like a microphone. Since sound waves travel much more efficiently through a liquid than they do through air, the receiving crystal gets a much louder signal when water passes through the tubing in the sensor. The signal from the receiving crystal is converted to a voltage which is proportional to the signal strength. This voltage is used by the 900 MAX Sampler microprocessor to sense the exact moment water reaches the sensor. The liquid sensor compares the voltage (signal strength) when the tubing is dry (such as when purging the line) to the voltage when the tubing is full of water (such as when pumping a sample). The dry verses wet voltage reading must be at least 0.8 V dc higher than the 0.3 volts, when liquid is sensed it would be 1.1 volts or higher.

The Liquid Sensor is designated as #1. The diagnostic screen displays the voltage coming from the sensor electronics. Should a problem arise where the liquid sensor is not reliably sensing the liquid, (inaccurate sample volumes, water getting to the bottle during an intake rinse, purge failure), use of the Liquid Sensor diagnostics values will provide valuable information as to the sensor sensitivity.

Velocity Analysis

A velocity probe must be installed in the flow stream and be connected to the meter in order for this diagnostic to work. This diagnostic allows you to view a ‘real time’ reading directly from the Submerged Area Velocity Probe. It will show you the current velocity Signal Strength (percentage of Doppler signal returning to the probe) and a ‘real time’ velocity measurement of the flow stream. Use this diagnostic to determine if you have the probe mounted for optimal velocity measurement. The closer to 100% the Signal Strength is, the more stable the velocity reading will be. If the signal seems low (50% or less), it may be due to improper installation of the probe or a lack of particulate in the flow stream.

Thermal System

The 900MAX All Weather Refrigerated Sampler Thermal Control System is designed to maintain the temperature of water-based samples deposited in containers within the sample compartment at a set point temperature (set point temperature range = 2 to 10 °C) ±1 °C over an ambient temperature range of -40 to +50 °C.

The Thermal Control System is microprocessor controlled, utilizing (sharing) the Sampler Controller microprocessor located on the Sampler Controller CPU board. The microprocessor and associated circuitry are connected via cable to the Thermal Control Interface located in the Power Supply/Thermal Control assembly. Thermal Control Interface circuitry and associated sensors provide temperature data to the microprocessor. Also, Thermal Control Interface circuitry receives control signals from the microprocessor and controls the major thermal components (compressor, fan and heaters).

Temperature of the sample compartment is sensed by the Reference Temperature Sensor. The Reference Temperature Sensor is comprised of an electronic sensing device (thermistor) embedded in a thermal mass. This thermal mass, sized to simulate 150 mL of water, introduces a calculated thermal time constant into the temperature sensing system. Use of a thermal mass results in temperature readings/recordings that are more representative of the actual sample (and not the sample compartment air temperature) and also results in fewer compressor starts (i.e., less mechanical wear on compressor due to starting).

Note: *The refrigerator compressor will not come on when you turn on the power. A timer within the microprocessor is invoked every time the compressor is turned off. Subsequent compressor operations cannot occur until the timer has expired. This timer is also invoked upon initial power up, preventing short cycling due to momentary power failures.*

The microprocessor turns the compressor or evaporator heater on or off based on temperature information gathered by the Reference Temperature Sensor. If ambient temperatures are hot, compressor operation is called for. The compressor is turned on when the sample compartment temperature rises above the defined ON threshold and is turned off when the sample compartment temperature drops below the defined OFF threshold. If ambient temperatures are cold, evaporator heater operation is called for. The evaporator heater is turned on when the sample compartment temperature drops below the defined ON threshold and is turned off when the sample compartment rises above the defined OFF threshold. During periods when the ambient temperature is near the sample compartment set point temperature, both compressor and evaporator heater operation are possible; however, the compressor and evaporator heater are never on at the same time (except during the compressor exercise mode).

The Thermal Control System provides frost free operation. This is accomplished through use of temperature information from the Evaporator Temperature Sensor. Each time the compressor turns on, the system first checks the evaporator temperature. If the evaporator temperature is below freezing (0 °C), it is determined that frost or ice has built up on the evaporator plate. The evaporator heater is turned on and the evaporator temperature is monitored. Once the evaporator temperature rises above freezing, it is determined that no more frost or ice exists and the evaporator heater is turned off. Normal compressor operation follows.

The Thermal Control System controls operation of the compressor heater and optional sampler controller compartment heater. This is accomplished through use of temperature information from the Ambient Temperature Sensor. Ambient temperatures above 10 °C inhibit heater operation. As ambient temperatures drop below 10 °C, these heaters are modulated on and

off as a function of ambient temperature using a 5-minute period. At 10 °C, heaters are off (0% duty cycle). At –15 °C, both heaters are on for 2.5 minutes and off for 2.5 minutes (50% duty cycle). At –40 °C, both heaters are on continuously (100% duty cycle).

The Thermal Control System provides two other unique features. The first is the compressor exercise mode. According to the compressor manufacturer, the compressor should be “exercised” or run during periods of non use (e.g., cold weather operation). During periods of non use, the compressor is turned on once every 7 days (at midnight) and run for a period of 5 minutes. The second unique feature is short cycle prevention. Again, according to the compressor manufacturer, the compressor should never be short cycled (i.e., started within 5 minutes of its last operation). Short cycling can cause compressor damage.

Thermal System Diagnostics Screen Contents

- Cabinet Temperature (representative of typical sample temperature)
- Evaporator Temperature (temperature of evaporator plate)
- Outside Air Temperature (ambient air temperature)
- Calibration Offset (offset that results from thermal setup calibration)
- Set point (user-defined sample temperature)
- Heater Status (On/Off)
- Compressor Status (On/Off)
- Exercise Timer Status (Time until compressor is exercised)
- Short Cycle Timer (Time until compressor is allowed to start)

Load Program

From the Main Menu, select **OPTIONS> ADVANCED OPTIONS> LOAD PROGRAM.**

The 900 MAX Sampler stores up to five sets of program instructions. Each program consists of entries made in the Setup Menu and the Advanced Options Menu.

The 900 MAX Sampler is shipped with PROGRAM #1 as the loaded program. To see what program is currently loaded, press the **REVIEW ALL ITEMS** soft key in the Setup Menu. All program entries made in the Setup Menu and the Advanced Options Menu pertain to the currently loaded program. To change programs, select the program number (1–5), in the Load Program menu, then make the desired changes in both the Setup Menu and the Advanced Options Menu.

To load a new program

1. Highlight Load Program in the Advanced Options Menu, then press the **SELECT** soft key.

2. Enter a number from 1 to 5 using the numeric keypad, then press the **ACCEPT** soft key.

The Site ID is also displayed on the Load Program Menu for your reference. The Site ID can be modified in the Setup menu.

Screen Saver Mode

From the Main Menu, select **SETUP > ADVANCED OPTIONS > SCREEN SAVER MODE.**

The power required to properly light the LCD can consume valuable battery life. Screen Saver Mode is a power saving feature of the 900 MAX Sampler.

Battery Power
When the sampler senses that it is operating on battery power, Screen Saver Mode conserves battery life by automatically turning the LCD display off after 3 minutes of keypad inactivity. Pressing any key will turn the LCD display back on. No configuration is required; the meter automatically senses ac or battery operation on power up.

ac Power
When operated under ac power, Screen Saver Mode can be enabled or disabled manually. Enabling the Screen Saver when operating on ac power will prolong the life of the LCD display by minimizing its use.

To change the Screen Saver mode:

1. Highlight **SCREEN SAVER MODE** on the Advanced Options Menu using the up and down arrow soft keys, then press the **SELECT** soft key.

2. Press the **CHANGE CHOICE** soft key to select a new Screen Saver Mode (Enabled or Disabled). When you have made your selection, press the **ACCEPT** soft key to save your changes.

Flow Totalizer

The Flow Totalizer consists of three numeric counters that keep track of the total flow being measured. Two software totalizers are standard with a third external mechanical totalizer as an option. The two software totalizers consist of a resettable totalizer and a non-resettable totalizer. Both totalizers are set to zero upon program start.

Scaling multipliers are provided to allow tailoring of the totalizer response to meet the requirements of the application. Some applications with high flow rates will require a high scaling factor, while low flow rates will require a low scaling factor.

The scaling factor is displayed whenever a total flow number is displayed. As indicated in the Status Screen below, the total flow is displayed as “TOTAL (x1000): 465 gal.” Multiplying the displayed total flow by the scaling factor (1000) gives an actual total flow of 465,000 gallons.

11:00 AM 21 - APR - 01	STATUS SCREEN
LEVEL:	8.688 in.
FLOW:	71.39 mgd
TOTAL (X1000):	465 gal
pH:	7.2 pH
BATTERY:	16.9 volts
RUNNING	

1. From the Main Menu, select **OPTIONS> ADVANCED OPTIONS > FLOW TOTALIZER to display the Modify Setup, Reset, and View Total screen.**

Modify Setup
Modify Setup selects a totalizer scaling factor and a flow unit of measure.

1. Highlight **MODIFY SETUP** using the up and down arrow soft keys.

2. Press the **SELECT** soft key to continue.

3. Set the Totalizer Scaling factor using the **CHANGE CHOICE** soft key. All three totalizers are scaled with one of seven scaling factors: X1, X10, X100, X1000, X10,000, X100,000 or X1,000,000. The selected scaling factor always applies to all totalizers. Press the **CHANGE CHOICE** soft key to cycle through the available scaling choices.

4. Press the **ACCEPT** soft key to continue.

5. Set the Total Flow Units using the CHANGE CHOICE soft key to cycle through the choices. Total Flow Units are independent of the flow units selected in the Setup Menu. Flow units of measure include:

   - Acre-feet
   - Liters
   - Gallons
   - Cubic Feet
   - Cubic Meters

6. Press the **ACCEPT** soft key to continue.

Reset (Totalizer)
The non-resettable totalizer will only be reset if one of the following conditions occur:

- Change in totalizer scaling
- Change in primary device
- Change in totalizer units of measure
- Start of new program

Note: *The totalizer cannot be reset manually.*

1. Select **RESET** from the **TOTALIZER** menu. A confirmation message will be displayed.

2. Press the **YES** soft key to reset the totalizer or press the **NO** soft key to not reset the totalizer.

To reset both software totalizers at once, start a program with the **RUN/STOP** key.

Note: If any type of condition occurs, both the resettable and the non-resettable totalizers are reset. The resettable totalizer can be used to total flow over a finite period and can be reset as often as desired without affecting the other totalizers.

View Totals

To view the current totals of both the resettable and non-resettable totalizers, press **VIEW TOTALS** from the Totalizer menu. Both totalizer values will appear.

Error Messages

Error Message	Reason
*****Warning!***** Logged data will be lost if you choose to continue? Yes/No.	Making a program change when a program is halted.
• A minimum of 4 points are required. • The entered level value must be greater than the previous value. • No values have been entered in the selectable table.	When entering level-flow or area-level tables, or when attempting to use the tables, a minimum of 4 points must be entered to create a valid table, and level values must increase value as they are entered.
Bottle number must be: 1–xx (where xx = #bottles in the tray).	When selecting a bottle to move to after selecting distributor movement from the manual menu screen.
Bottle quantity must be: 1, 2, 4, 8, 12, 24.	An invalid bottle quantity was entered.
Calibration requires a minimum submersion of six inches.	Level sensor calibration of the bubbler or submerged sensor.
Day must be: 01—xx (where xx is the last day in month).	Invalid number when setting a date.
Distributor movement halted due to key press.	A key was pressed during the distributor test (diagnostics) or distributor movement from the manual menu screen.
Error: Distributor arm is not functioning properly!	The distributor test failed due to an arm obstruction, cable not installed properly, or defect in the distributor assembly.
Function disabled while a pgm is running. Use run/stop key.	Attempted to use manual menu functions or the distributor test while the program is running.
Hours must be: 00—23.	Invalid number entered when setting a time, 24-hour format.
Hours must be: 01—12.	Invalid number entered when setting a time, 12-hour format.
Incorrect password! Access denied.	Incorrect password was entered (password is **9000**).
Interval must be: 000:01–xxx:xx (where xxx:xx is max. interval).	An invalid duration (hrs:min) was entered.
Invalid floating point format, only one decimal point allowed.	A number was entered with two or more decimal points.
Logging intervals must be: 1,2,3,5,6,10,12,15,20,30,60.	An invalid logging interval was entered.
Minutes must be: 00—59.	Invalid number entered when setting a time.
No changes allowed while a pgm is running. Use run/stop key.	An inaccessible selection was made on a menu screen. Stop the program before proceeding.
No retries are possible when the liquid sensor is disabled.	Occurs if Sample Retries is selected from the Modify Selected Items scrolling list, and liquid sensor are disabled. Enable liquid sensor to use retries.
No year entered.	Invalid number entered when setting a date.
pH calibration failed—gain and/or offset out of range. Try again.	The pH calibration calculations yielded an invalid number. Try fresh buffers or a new probe.
Pumping took too long, please try again.	Occurs when the maximum time for timed calibration of a sample volume (or rinse) is exceeded (the maximum is 65000 tens-of-milliseconds, which is roughly equal to 10.5 minutes).
• Sampling halted because of key press. • Sampling halted because the bottle is full. • Sampling halted due to fluid presence after pre-purge. • Sampling halted during rinse—no liquid detected. • Sampling halted due to fluid presence after rinse purge. • Sampling halted—no liquid detected during sample phase.	May occur at the end of a sample attempt. Messages are self explanatory. Investigate the tubing setup from strainer to liquid sensor. Strainer may be plugged or out of water. Tubing may not be installed properly in liquid sensor.
Sensor output voltage too low—cannot calibrate.	The D.O. calibration yielded an invalid result. Try another probe.
Setpoint Sampling and Storm Water cannot both be enabled.	Enabled Setpoint Sampling with Storm Water enabled, or enabled Storm Water with Setpoint Sampling enabled.

Stormwater mode is not allowed when the sampler is configured with one bottle.	Tried to enable Storm Water with a single bottle.
The program cannot start: timed rinse required.	Occurs if the liquid sensor is disabled and timed calibration has not been performed for the rinse cycle.
The program cannot start: the primary device is not properly set up.	If the operator goes partially through the flow meter setup screens but stops before entering all necessary parameters.
The program cannot start: volume calibration required.	If the liquid sensor is disabled and timed calibration has not been performed for the main sample, the first flush or the upset sample volume.
The program setup needs flow to be logged at an interval < or = to the flow time limit.	If an alarm, setpoint or stormwater uses flow rate-of-change as a trip point.
The program setup needs rain to be logged at an interval < or = to the rainfall time limit.	If an alarm, setpoint or stormwater uses rainfall as a trip point.
The signal did not stabilize in time—calibration failed.	When calibrating pH, process temperature, ORP, D.O., D.O. temperature, conductivity, or conductivity temperature, the signal from the probe did not respond within the calibration time limits. Replace buffer solutions (if applicable) or try another probe.
• The time entered is before the first logged value. Data will be display from beginning. • The time entered is after the last logged value. Data will be displayed from the end.	When selecting the time/date for graphing and the selected beginning or ending time falls outside the range of data.
The value must be: xxx—yyy (xxx is minimum, yyy is maximum).	The value entered was out of the legal range, when changing any numeric parameter. The appropriate range is always displayed on the bottom line on the entry screen.
• This program stop is prior to the last program start. • This program start is prior to the last program stop.	When entering start/stop times. Start/stop times must be entered in chronological order.
Timed bottle sets are not allowed unless distribution is bottles-per-sample mode.	Tried to enable Timed Bottle Sets when bottles per sample have not been specified (the bottles-per-sample is used as the bottle set quantity).
Timed bottle sets are not allowed when the sampler is configured with one bottle.	Tried to enable Timed Bottle Sets with a single bottle.
Times cannot be more than 24 hours apart.	When selecting a start and stop time for a graph display the limit (due to screen resolution) is 24 hours.
Too few bottles—review timed bottle sets, upset sampling, & stormwater. Minimum needed:	Occurs if there are not enough bottles to perform all the various functions. Either install more bottles or decrease number if programmed functions.
Too many alarms and setpoints have been requested.	Occurs if more than 20 alarm and setpoint conditions are set. Storm Water start conditions use one or two setpoints.
• Too many samples-per-bottle for the bottle volume. • The sample volume is too large for the bottle volume.	Occurs when the sample volume is checked, if the requested sample volume is too big to fit in the bottle.
Upset sampling is not allowed when the sampler is configured with one bottle.	Tried to enable Upset Sampling with a single bottle.

Trouble Alarm Conditions, Causes, and Solutions

Trouble Condition	Cause	Solution
Low Main Battery	Power supply voltage is less than 11 V dc.	Change batteries.
Memory Battery	Internal memory battery voltage is too low.	Change memory batteries.
Low Slate Memory	Free slate memory is less than 20%. RAM memory is almost full and will stop recording soon.	Download data from unit, halt and restart the program or download data, halt, and change data to wrap mode.
Slate Memory Full	No more slate memory. Unit is in slate memory mode and cannot log any more data.	Download data and restart the program or download data then change the memory mode.
Modem Failure	Unable to initialize modem PCB.	If the modem is enabled, the problem may be found on the modem board and the board may need to be replaced.
Missed Sample	Sample cycle did not result in getting a sample.	—
Purge Failure	Sensor(s) still detecting liquid after a line purge.	—
Jammed Distributor	Distributor arm has jammed on an obstruction.	Remove obstruction.
Unable to Cool	Refrigeration system is unable to reduce temperature in refrigeration compartment to user defined setpoint.	—
Unable to Heat	Heater is unable to increase temperature in refrigeration compartment to user defined setpoint.	—
U-Sonic Echo Loss	The echo has been temporarily deflected by a change in site conditions such as floating debris or foam in the channel, wind, etc.	Check for excessive foam. Remove any debris or build-up.
Xducer Ringing	Transducer is operating within the deadband,	—
U-Sonic Failure	Transducer not plugged in. Cable damaged. Transducer thermal sensor damaged.	Check that the transducer is plugged in and that there is no damage to the sensor.
RS485 Timed Out	Communication error between CPU and remote ultrasonic module.	—
	CPU is not communicating with the Velocity board.	Wait a few minutes to see if it goes away, if it continues it is an indication that there is a problem with the CPU board.
	Not receiving a good velocity reading.	If the logging interval is 1 or 2 minutes and conditions are poor with the problem continuing indefinitely, try increasing the logging interval to allow more time to capture the signal.

Appendix C

Downlook Ultrasonic Sensor Troubleshooting

Problems	Causes	Solutions
RS485 Time Out—Did not get a reading with the specified time allotted.	CPU is having trouble communicating with the Ultrasonic board.	Wait a few minutes and see if the condition goes away. If it continues there amy be a problem in the Ultrasonic, Velocity, or CPU board.
	Difficulty receiving a velocity reading.	Indicates an internal problem.
Loss of Ultrasonic as Level Measuring Device	Blown fuse on CPU board.	Replace fuse. The fuse is located in position F-1 under the gray ribbon cable that connects at position J-1.
	Problem with the ultrasonic board.	Replace if necessary.
U-Sonic Echo Loss—Flow Meter Not Receiving a Return Echo from the Ultrasonic Transducer.	Excessive foam on the water surface causes sound waves to be absorbed rather than reflected.	Check for excessive foam.
	Sensor is nicked, cut, or improperly installed.	Check for nicks, cuts, and check the sensor installation.
	Sensor must be level for proper return of signals.	Make sure the ultrasonic transducer is level.
	Convection currents are present which varies the speed of sound.	Try shielding the transducer from convection currents. Echo loss should not exceed more than two hours.
	Temperature calibration set up incorrectly. Extreme high or low temperature indicates a bad temperature transducer in the temperature sensor.	Go through the temperature calibration procedure and determine what the temperature the unit is sensing. Replace transducer if necessary.
U-Sonic Failure—No Signal from the Ultrasonic Transducer.	Transducer is not connected.	Check the ultrasonic sensor connection on the flow meter.
	Cut or broken cable.	Check for any knick or cuts in the cable.
	Unusual temperature or inability to read new calibrated level.	Re-calibrate the unit.
XDucer Ringing—False Return Echo mask Real Echoes.	Liquid is too close to the transducer.	Try moving the transducer farther from the liquid.
	Obstructions under the transducer.	Check for obstructions on the front and sides of the transducer.
	Coating on the face of the transducer.	Clean the transducer face. If this is a constant problem, try coating the face of the transducer with a very thin film of silicone grease to keep the debris from collecting.
	The transducer resonates against steel mounting rails.	Use the proper rubber isolation washers.
No Change in Level Readings or Inaccurate Level Readings.	—	Check the logged data to see when this started to occur. Go to the event log to see if anything happened during the same time.
	Calibration	Re-calibrate the unit.
	Bad transducer.	Try a different transducer.

pH Troubleshooting

Symptom	Possible Cause	Solution
Meter continuously reads pH 14 or drifts above 14.	Open circuit in either glass or reference electrode.	• Inspect the cable and connector of the faulty electrode for evidence of a crushed or broken cable jacket or brittleness of the cable due to exposure to heat. Discard the electrode if damage is present. • Manipulate meter/electrode connections to check for intermittent continuity. Replace if faulty. • Inspect the bulb, making sure it is filled with solution. If not, shake down (like a clinical thermometer) to displace air in the pH bulb. Retest. • Inspect the bulb for signs of coating.
Temperature is constant or incorrect.	Interface is wired wrong.	Check interface wiring.
	Thermistor is open.	Check interface wiring. Check for open at electrode RTD wire. Disconnect to make measurement. (Should read approximately 100–110 ohms.)
Electrode won't calibrate.	Gain or offset error.	• Ensure that solutions are fresh and labeled properly. • Confirm that electrode and buffer temperatures have stabilized. • Confirm that the wetting cap is removed. • Check bulb for cracks or other damage. • Confirm that interface wires are connected properly. • Check interface connections for corrosion.
Slow response and/or erratic readings.	Very high impedance in either glass or reference electrode.	• Inspect the pH bulb for coating or clogging. If present, clean thoroughly. • Keep the electrode wet at all times. If it dries out, the impedance will increase dramatically. To restore performance, soak in 0.1 N HCl (Cat. No. 1481253) for 30 minutes and rinse well with distilled water. • Chemical degradation of pH glass can occur rapidly in a high temperature or high pH environment, yielding sluggish response. Low temperature environments can double the impedance for every 8 °C drop below 25°C. • A high impedance electrode is extremely sensitive to electrical noise, e.g., oscillating electrical fields generated by motors, generators or discharges from electrical thermostats. A free-hanging cable swinging due to air currents will also generate erratic signals. • Manipulate electrode cable and connections to check for intermittent continuity. Replace as necessary.
	Ground loop problem.	• Check to see if the ground wire is connected properly at the pre-amp junction box. • Check for continuity between the stainless steel lug on the electrode and the ground wire at the interface.
	Temperature is incorrect.	See "Temperature" symptom in this table.
No response to pH change.	Cracked glass bulb.	If the electrode gives readings between 5.8 and 6.2 pH in all solutions, inspect the glass bulb. If damaged, discard.
	Short Circuit.	If a constant reading of 7.0 pH or 0.0 mV is obtained, inspect the cable. If no visible damage exists, remove the connector and test for a short circuit. Replace if faulty.
	High impedance bridge.	Inspect the connector for moisture or corrosion. If wet, rinse well with distilled water and dry thoroughly. Determine the cause of wetness and correct it.

Appendix C

900 MAX All Weather Refrigerated Sampler Troubleshooting Issues

Problem	Cause	Solution
Instrument Will Not Power Up With ac Power.	Blown Fuse.	Check the 5 amp fuse located on the back of the controller.
	Circuit breaker issue.	Check the circuit breaker for the main power.
	Breaker is good, but still no power.	Check to see if the outlet is receiving power.
	Breaker and outlet are good, still no power.	Try using a battery or another power supply
Sampler Will Not Create Sufficient Lift.	If any of the holes on the anchor strainer is not submerged the sampler will not create a lift.	Make sure the anchor strainer is completely submerged.
	Intake tubing is nicked or has a small hole.	Replace with new tubing.
	Worn roller assembly and/or pump tubing.	Replace assembly and/or tubing.
Inaccurate Sample Volumes.	The volume was calibrated incorrectly the first time.	Make sure the proper calibration method is used for the site conditions (Auto or Timed calibrate).
	Incorrect intake tube length is programmed in the sampler.	Re-enter the tube length.
	Intake tubing is not completely purging.	Place the tubing at a downward slope from the sampler to the liquid source.
	Anchor stainer is intermittently submerged.	Install the shallow depth anchor strainer, (Cat. No. 2071 or 4652).
	Worn roller assembly and/or pump tubing.	Replace assembly and/or pump tubing.
	When using “Timed Calibrate” (liquid sensor disabled) variable lifts will cause variable sample volumes.	Enable sensor and calibrate volume if site conditions allow.
	Liquid sensor is not functioning properly.	Check the liquid diagnostics screen for valuable information about sensor sensitivity.
	RPM of the motor vary.	Replace motor if necessary.
Submerged Pressure Sensor level readings are inaccurate or no change in level readings.	Improper calibration.	Make sure the unit has been calibrated.
	Desiccant is pink.	Replace the desiccant.
	The sensor was not acclimated to the air temperature before calibrated.	Re-calibrate the sensor making sure the temperature of the sensor is at ambient temperature.
	Water or debris in the atmospheric reference tube.	Clean the area and re-calibrate. To reduce debris collecting on the cable and mounting band, route the cable along the edge of the band and wrap the cable and mounting band with plastic tape. The cable should exit at or near the top of the pipe to keep it out of the flow stream.
	Level is trending downward because of debris at the diaphragm.	Remove the plate and carefully clean the transducer. Re-calibrate the sensor.

Appendix D How to Calculate Pulses/Counts

The 900 MAX Sampler is equipped to receive either a momentary dry contact closure or a +5 to +12 V dc pulse from a flow meter, where each pulse represents a known flow increment.

For example, if the flow meter is set to send a flow pulse for every 1,000 gallons of measured flow and the sampler can count 1 to 9,999 flow pulses between sample intervals, you can program the sampler to receive 10 pulses between samples to take one sample for every 10,000 gallons of liquid flow.

To determine the number of flow pulses between sample intervals, you must determine the total number of samples (represented by *n* in the following examples) to be collected, and the period of time over which they are to be collected. You must also know the total flow, *Q*, during the sampling program. The following two-step method should be useful for determining the value for **INTV = _ _ _ _ CNTS** during setup.

1. Determine *f*, where *f* represents the flow increment between samples and n represents the total number of samples to be collected.

   $$f = \frac{Q}{n}$$

2. Multiply the flow increment between samples, *f*, by the pulse frequency output of the flow meter (i.e. 1 pulse per 100 gallons, 1 pulse per 1,000 gallons, etc.). If the pulse frequency output of the flow meter is not known, consult the flow meter manufacturer.

Note: *The final result is not necessarily a whole number. You must round off the result to the nearest whole number.*

Flow-Proportional Sampling Intervals - Using External Pulses
Our samplers are equipped to receive either a momentary dry contact closure or +5 to +12 V dc pulse from a flow meter, where each pulse represents a known flow increment.

Example 1
You want to collect 35 samples over a 24-hour period. The total expected flow over this period is 235,000 gallons. The flow meter pulse frequency is one pulse for every 100 gallons.

1. Determine the flow increment between samples:

   $$f = \frac{Q}{n} = \frac{235{,}000 \text{ gallons}}{35 \text{ samples}} = 6{,}714 \text{ gallons/sample}$$

2. Multiply the flow increment, *f*, by the pulse frequency output of the flow meter.

   $$6{,}714 \text{ gallons/sample} \times \frac{1 \text{ pulse}}{100 \text{ gallons}} = 67.14 \text{ pulse/sample}$$

   Therefore, the value for **INTV = _ _ _ _ CNTS** is 67.
   (67.14 is rounded off to 67.)

Example 2
You want to collect 24 samples over an 8-hour period. The total expected flow over this 8-hour period is 85,000 gallons. The flow meter pulse frequency output is one pulse for every 50 gallons.

1. Determine the flow increment between samples:

   $$f = \frac{Q}{n} = \frac{85{,}000 \text{ gallons}}{24 \text{ samples}} = 3{,}542 \text{ gallons/sample}$$

2. Multiply the flow increment, *f*, by the pulse frequency output of the flow meter.

$$3{,}542 \text{ gallons/sample} \times \frac{1 \text{ pulse}}{50 \text{ gallons}} = 70.84 \text{ pulse/sample}$$

Therefore, the value for **INTV = _ _ _ _ CNTS** is 71.

Example 3
You want to collect 48 samples over a 16-hour period. The total expected flow over this period is 1,750,000 gallons. The flow meter pulse frequency output is one pulse for every 1,000 gallons.

1. Determine the flow increment between samples:

$$f = \frac{Q}{n} = \frac{1{,}750{,}000 \text{ gallons}}{48 \text{ samples}} = 36{,}458 \text{ gallons/sample}$$

2. Multiply the flow increment, *f*, by the pulse frequency output of the flow meter.

$$36{,}458 \text{ gallons/sample} \times \frac{1 \text{ pulse}}{1{,}000 \text{ gallons}} = 36.458 \text{ pulses/sample}$$

Therefore, the value for **INTV = _ _ _ _ CNTS** is 36.

Flow Proportional Sampling, External—Using 4–20 mA Signal Converted to Pulses, Flow Signal Interface

The Flow Signal Interface (Cat. No. 2021) is an optional 4–20 mA interface that converts 4–20 mA current signals (from a flow meter) to 12 V dc pulses.

At 20 mA, the interface transmits 10 12-volt pulses per minute. As the current signal decreases, the 12 V pulses decrease proportionally. Typically, users collect a certain number of samples over a given period of time when sampling in proportion to the flow rate.

To calculate the number of 12 V dc output pulses between samples, determine the total number of samples (represented by *n* in the following examples) that you want to collect, and the period of time over which you want to collect them. Use the three-step method presented below to determine the "Total Count" value that you will enter while programming the Setup section of the sampler.

1. Calculate *Q*, where *Q* is the average flow rate (during the sampling program) divided by the maximum flow rate. (The maximum flow rate corresponds to the 20 mA output of the flow meter.)
2. Calculate *t*, where *t* is defined as *a/n*; *n* is the total number of samples collected over a given period of time; and *a* represents time in minutes, over which *n* samples are collected.
3. Multiply *Q* x *t x 10*. Enter the result in the programming step: **INTV = _ _ _ _ CNTS**.

Note: *The product of Q x t x 10 is not necessarily a whole number. You must round off the result to the nearest whole number.*

Use the following examples to help you determine the value that you need to enter when programming for sampling based on counts.

Example 1
You want to collect 24 samples over a 24-hour period on a 4–20 mA flow proportional basis.

Average Flow Rate = 3.5 mgd (average flow rate over the 24-hour period)
Maximum Flow Rate = 10 mgd
a = 1440 minutes

1. Calculate *Q*.

$$Q = \frac{\text{Average Flow Rate}}{\text{Maximum Flow Rate}} = \frac{3.5 \text{ mgd}}{10 \text{ mgd}} = 0.35 \text{ mgd}$$

2. Calculate *t*.

$$t = \frac{a}{n} = \frac{1440 \text{ min}}{24 \text{ samples}} = 60 \text{ min/sample}$$

3. Multiply *Q* x *t x 10*.

$0.35 \text{ mgd} \times 60 \text{ min/sample} \times 10 = 210$
Therefore, the value entered for **INTV = _ _ _ _ CNTS** is 210.

Example 2
You want to collect 48 samples over a 24-hour period on a 4–20 mA flow proportional basis.

Average Flow Rate = 1.75 mgd (average flow rate over the 24-hour period)
Maximum Flow Rate = 3 mgd
a = 1440 minutes

1. Calculate *Q*.

$$Q = \frac{\text{Average Flow Rate}}{\text{Maximum Flow Rate}} = \frac{1.75 \text{ mgd}}{3 \text{ mgd}} = 0.583 \text{ mgd}$$

2. Calculate *t*.

$$t = \frac{a}{n} = \frac{1440 \text{ min}}{48 \text{ samples}} = 30 \text{ min/sample}$$

3. Multiply *Q* x *t x 10*.
$0.583 \text{ mgd} \times 30 \text{ min/sample} \times 10 = 174.9$

Therefore, the value entered for **INTV = _ _ _ _ CNTS** is 175.

Example 3
You want to collect 96 samples over a 24-hour period on a 4–20 mA flow proportional basis.

Average Flow Rate = 0.52 mgd (average flow rate over the 24-hour period)
Maximum Flow Rate = 2 mgd
a = 1440 minutes

1. Calculate *Q*.

$$Q = \frac{\text{Average Flow Rate}}{\text{Maximum Flow Rate}} = \frac{0.52 \text{ mgd}}{2.0 \text{ mgd}} = 0.26 \text{ mgd}$$

2. Calculate *t*.

$$t = \frac{a}{n} = \frac{1440 \text{ min}}{96 \text{ samples}} = 15 \text{ min/sample}$$

3. Multiply *Q* x *t x 10*.

$0.26 \text{ mgd} \times 15 \text{ min/sample} \times 10 = 39$
Therefore, the value entered for **INTV = _ _ _ _ CNTS** is 39.

Example 4
You want to collect 32 samples over an 8-hour period.

Average Flow Rate = 70 gpm (average flow rate over the 8-hour period)
Maximum Flow Rate = 210 gpm
a = 480 minutes

1. Calculate *Q*.

$$Q = \frac{\text{Average Flow Rate}}{\text{Maximum Flow Rate}} = \frac{70 \text{ gpm}}{210 \text{ gpm}} = 0.33 \text{ gpm}$$

2. Calculate *t*.

$$t = \frac{a}{n} = \frac{480 \text{ min}}{32 \text{ samples}} = 15 \text{ min/sample}$$

3. Multiply *Q* x *t x 10*.

$$0.33 \text{ mgd} \times 15 \text{ min/sample} \times 10 = 49.5$$

Therefore, the value entered for **INTV = _ _ _ _ CNTS** is 50.

Example 5
It is desired to collect 30 samples over a 2-day period.

Average Flow Rate = 0.25 cfs (average flow rate over the 48-hour period)
Maximum Flow Rate = 1 cfs
a = 2,880 minutes

1. Calculate *Q*.

$$Q = \frac{\text{Average Flow Rate}}{\text{Maximum Flow Rate}} = \frac{0.25 \text{ cfs}}{1 \text{ cfs}} = 0.25 \text{ cfs}$$

2. Calculate *t*.

$$t = \frac{a}{n} = \frac{2{,}880 \text{ min}}{30 \text{ samples}} = 96 \text{ min/sample}$$

3. Multiply *Q* x *t x 10*.

$$0.25 \text{ cfs} \times 96 \text{ min/sample} \times 10 = 240$$

Therefore, the value entered for **INTV = _ _ _ _ CNTS** is 240.

You will notice from the previous five examples that the average and maximum flow rate can be expressed in any units, i.e. mgd, gpm, cfs, etc. However, express the average and maximum flow rate in the **same units** for any given situation.

900 MAX All Weather Refrigerated Sampler Assembly Drawing (1 of 7)

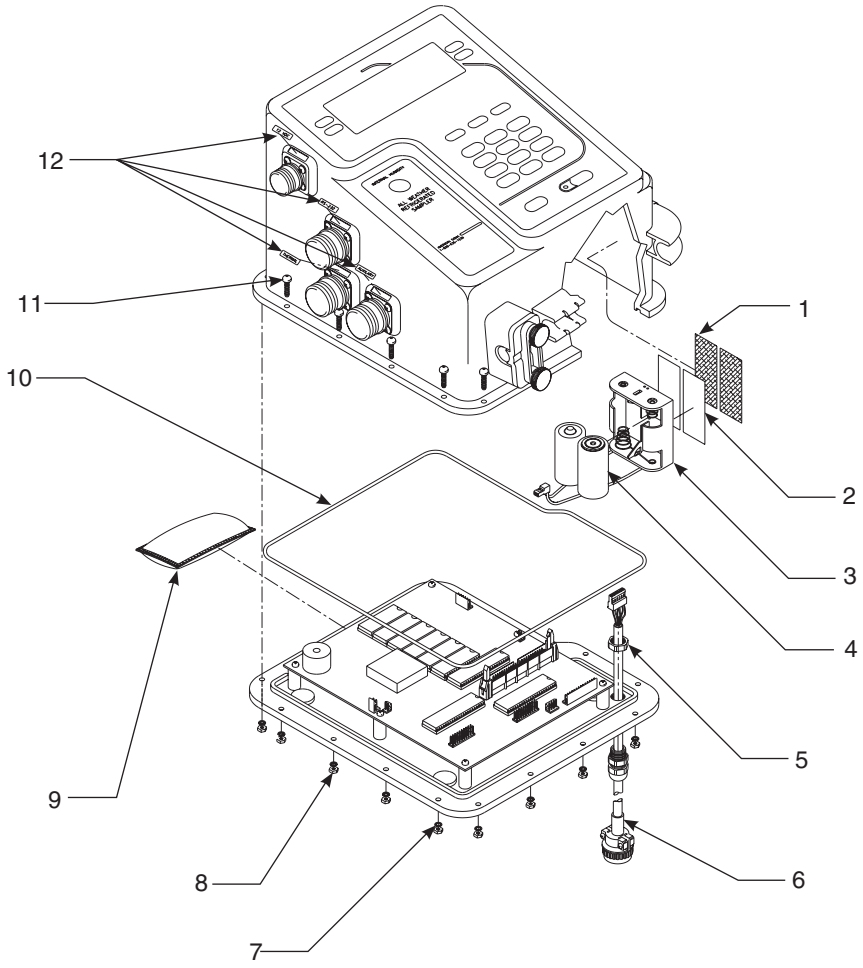

Table 4 Parts List for Assembly Drawing 1 of 7

Item	Description	Quantity	Catalog Number
1	Hook & Loop Fastener	2	8791
2	Hook Fastener	1	8792
3	Battery Pack	1	8765
4	C-Cell Battery	2	2709
5	Power Supply Cable Assembly	1	8793
6	Distributor Cable Assembly	1	8623
7	Nut	17	SE 301
8	Lock Washer	17	SE 306
9	Desiccant Bag	1	8849
10	O-Ring (O-ring Lubricant SE 1048)	1	8606
11	Screw	17	SE 343
12	Overlay	1	8807

900 MAX All Weather Refrigerated Sampler Assembly Drawing (2 of 7)

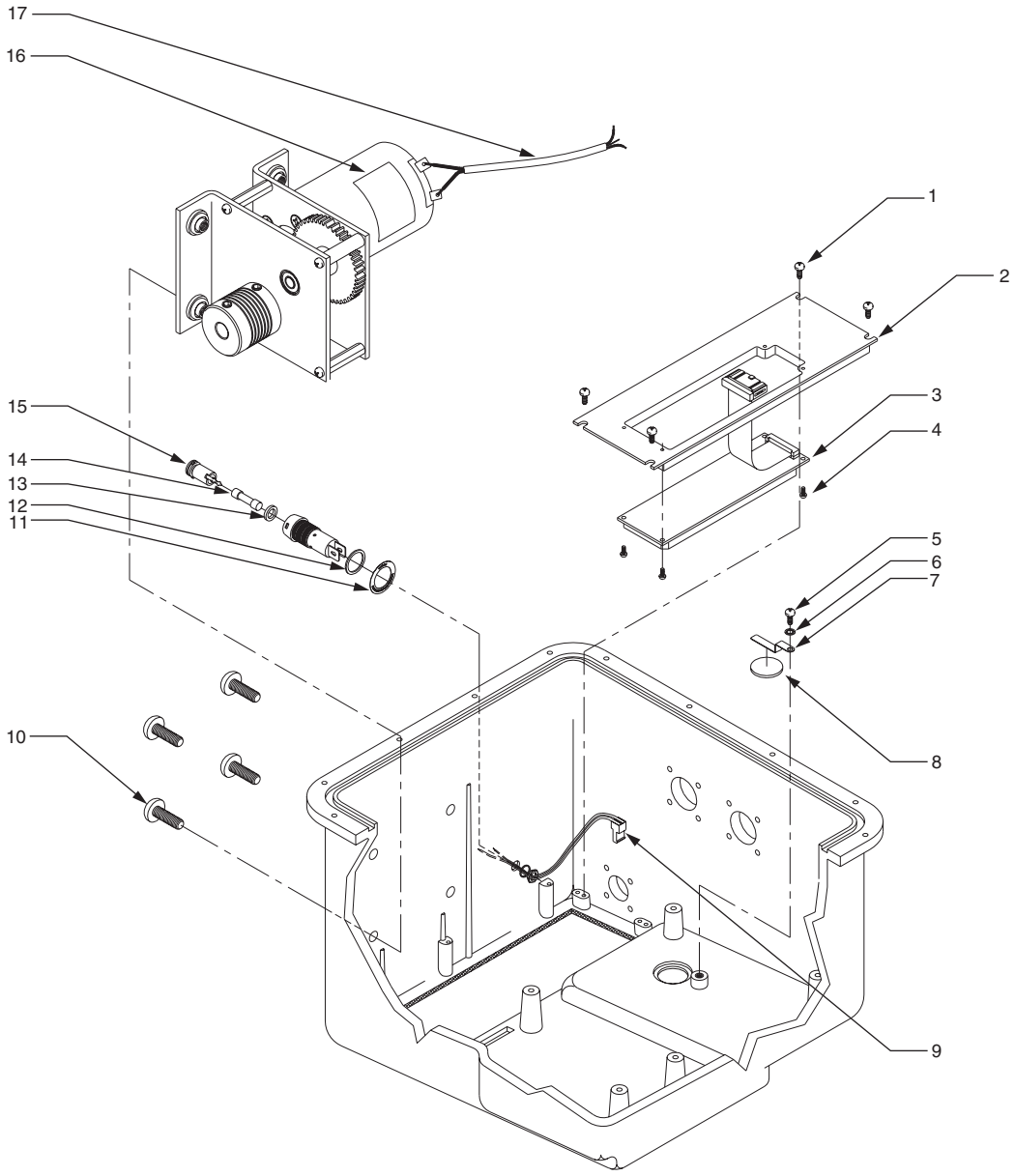

Table 5 Parts List for Assembly Drawing 2 of 7

Item	Description	Quantity	Catalog Number	Item	Description	Quantity	Catalog Number
1	Screw	4	SE 244	10	Screw	4	SE 738
2	Bracket	1	8898	11	Overlay, Fuse Holder	1	1436
3	Display Assembly	1	8911	12	O-ring, 1 x 10 mm	1	3319
4	Screw	4	SE 105	13	O-ring	1	3321
5	Screw	1	SE 214	14	Fuse, 5 A, 250 V, slow blow	1	8753
6	Washer	1	SE 208	15	Fuse Holder, 5 x 20 mm	1	3320
7	Bracket, Desiccant Card	1	2594	16	Gear Box Assembly	1	8910
8	Humidity Indicator Card	1	2660	17	Cable Assembly, Motor	1	8859
9	Cable Assembly, Fuse Holder	1	3146				

900 MAX All Weather Refrigerated Sampler Assembly Drawing (3 of 7)

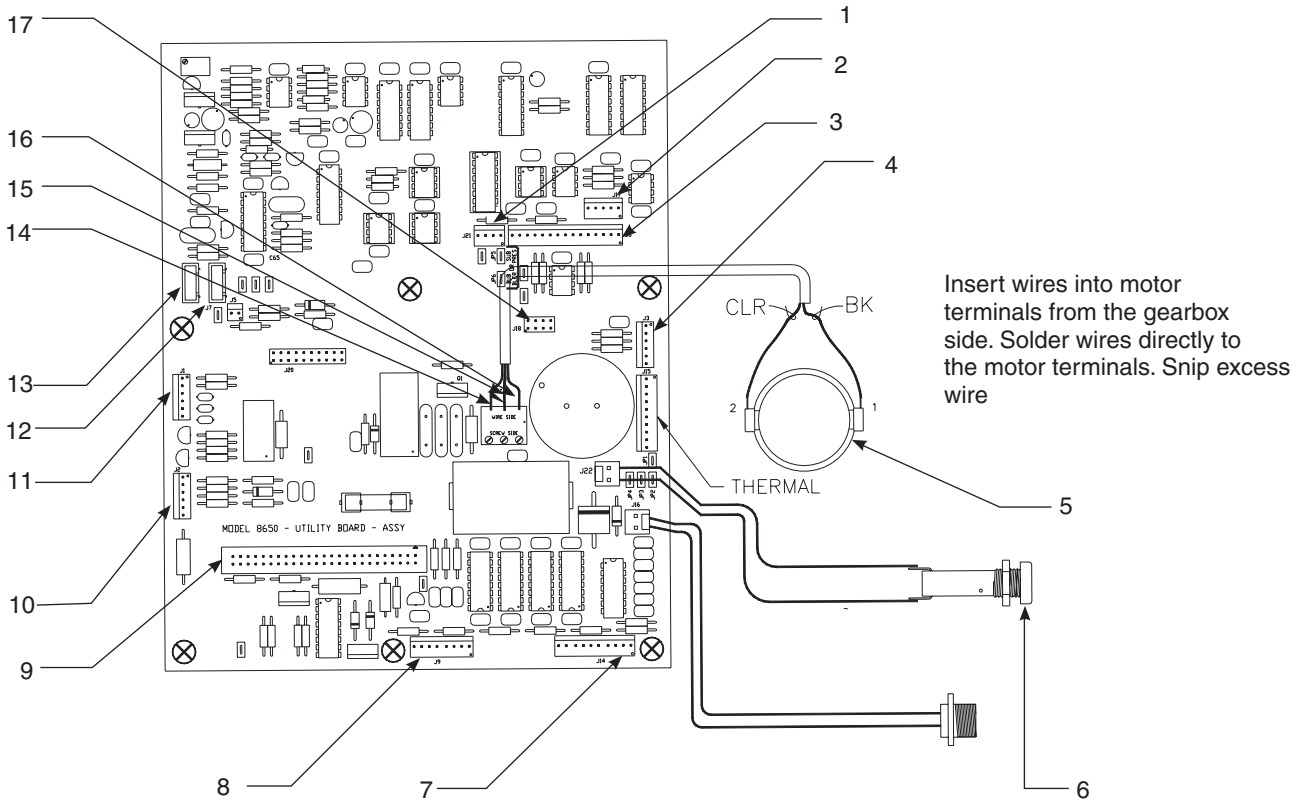

Table 6 Parts List for Assembly Drawing 3 of 7

Item	Description
1	Sub Probe
2	Relay Option
3	Bubbler
4	pH/ORP
5	Gearbox Assembly (Cat. No. 8910)
6	Fuse Assembly (Cat. No. 3229)
7	DO & Conductivity
8	3 Channel Data Log
9	CPU
10	AUX
11	Distributor
12	Sensor 2
13	Sensor 1
14	Black TB3
15	Shield TB2
16	Clear TB1
17	4–20 mA

900 MAX All Weather Refrigerated Sampler Assembly Drawing (4 of 7)

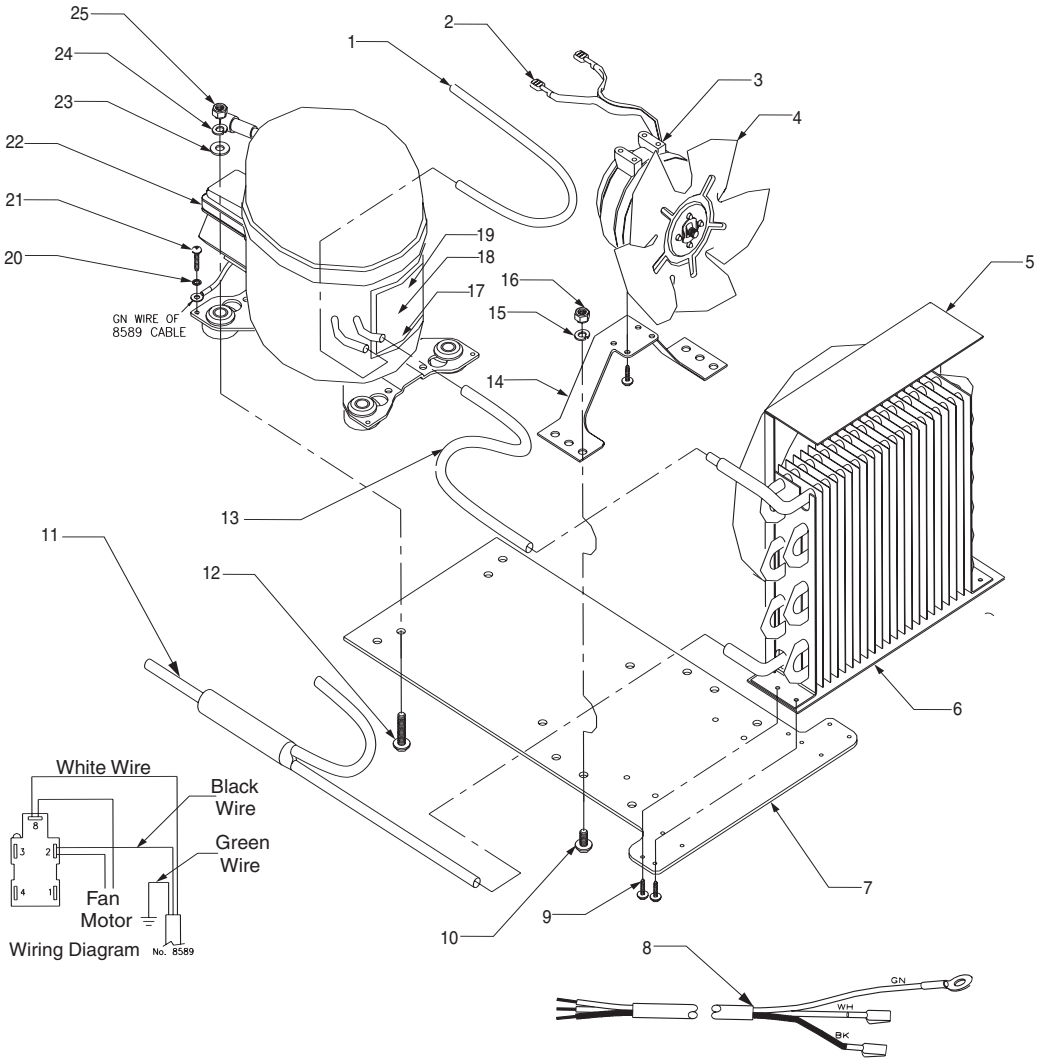

Table 7 Parts List for Assembly Drawing 4 of 7

Item	Description	QTY	Catalog Number	Item	Description	QTY	Catalog Number
1	Copper Tube, ¼ OD	1	1965	14	Fan Motor Bracket	1	8692
2	Quick Disconnect Terminal	2	SE 892	15	Lock Washer	4	SE 704
3	Fan Motor	1	8548	16	Hex Nut	4	SE 701
4	Fan Blade	1	8550	17	Primer	1	SE 1051
5	R134A Shroud	1	8554	18	Adhesive	1	SE 893
6	Condenser	1	8553	19	Compressor Heater 100/120 V ac	1	8689
7	Support Plate	1	8556	20	Lock Washer	1	SE 405
8	Compression Fan Cable Assembly	1	8589	21	Screw	1	SE 430
9	Screw	4	SE 430	22	120 V Compressor	1	8546
10	Screw	4	SE 709	23	Flat Washer	4	SE 703
11	Drier Assembly	1	8552	24	Lock Washer	4	SE 704
12	Screw	4	SE 717	25	Hex Nut	4	SE 701
13	Copper Tubing 3/16 OD	1	2864				

900 MAX All Weather Refrigerated Sampler Assembly (5 of 7)

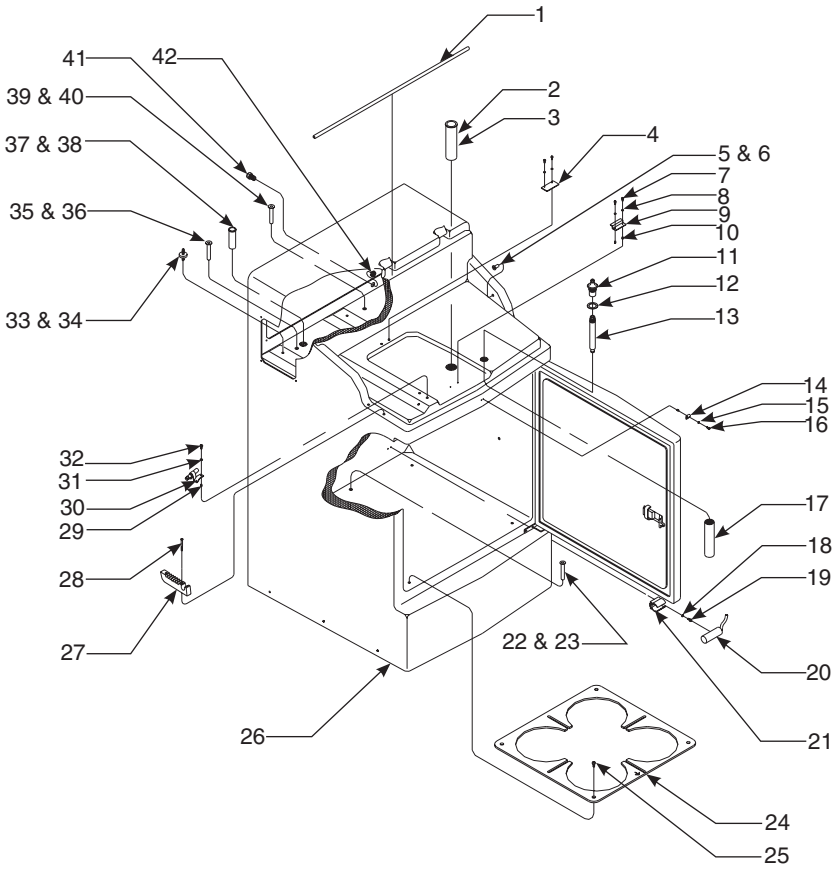

Table 8 Parts List for Assembly Drawing 5 of 7

Item	Description	Quantity	Catalog Number	Item	Description	Quantity	Catalog Number
1	Gasket	1	2962	22	Molded Thru Fitting	1	8936
2	Cable Feed Thru Fitting	1	8734	23	Adhesive	1	SE 1054
3	Adhesive	1	SE 979	24	Bottle Positioner Plate	1	8733
4	Bracket	1	8738	25	Screw	4	SE 702
5	Lid Support Bushing	1	8824	26	Cabinet Assembly	1	8790
6	Adhesive	1	SE 977	27	Wire Tubing Exit Bracket	1	8737
7	Screw	4	SE 408	28	Screw	2	SE 445
8	Lock Washer	4	SE 401	29	Nut Rivet	3	SE 446
9	Bracket	1	8836	30	Strain Relief	1	8889
10	Nut	2	SE 446	31	Lock Washer	3	SE 401
11	Fitting	1	1794	32	Screw	3	SE 416
12	Gasket	1	2885	33	Vibration Mounting	4	8709
13	Fitting	1	2045	34	Adhesive	4	SE 979
14	Lid Latch	1	8896	35	Molded Fitting	1	8936
15	Lock Washer	2	SE 306	36	Adhesive	1	SE 979
16	Screw	2	SE 323	37	Evaporator Feed Thru	1	8750
17	Tubing Feed Thru Fitting	1	8736	38	Adhesive	1	SE 979
18	Lock Washer	2	SE 401	39	Molded Fitting	1	8936

Table 8 Parts List for Assembly Drawing 5 of 7 (continued)

19	Screw	2	SE 408	40	Adhesive	1	SE 1054
20	Sensor Assembly	1	8728	41	Power Supply Cable Assembly	1	8786
21	Bracket	1	8731	42	Nylon Nut	1	8774

900 MAX All Weather Refrigerated Sampler Assembly Drawing (6 of 7)

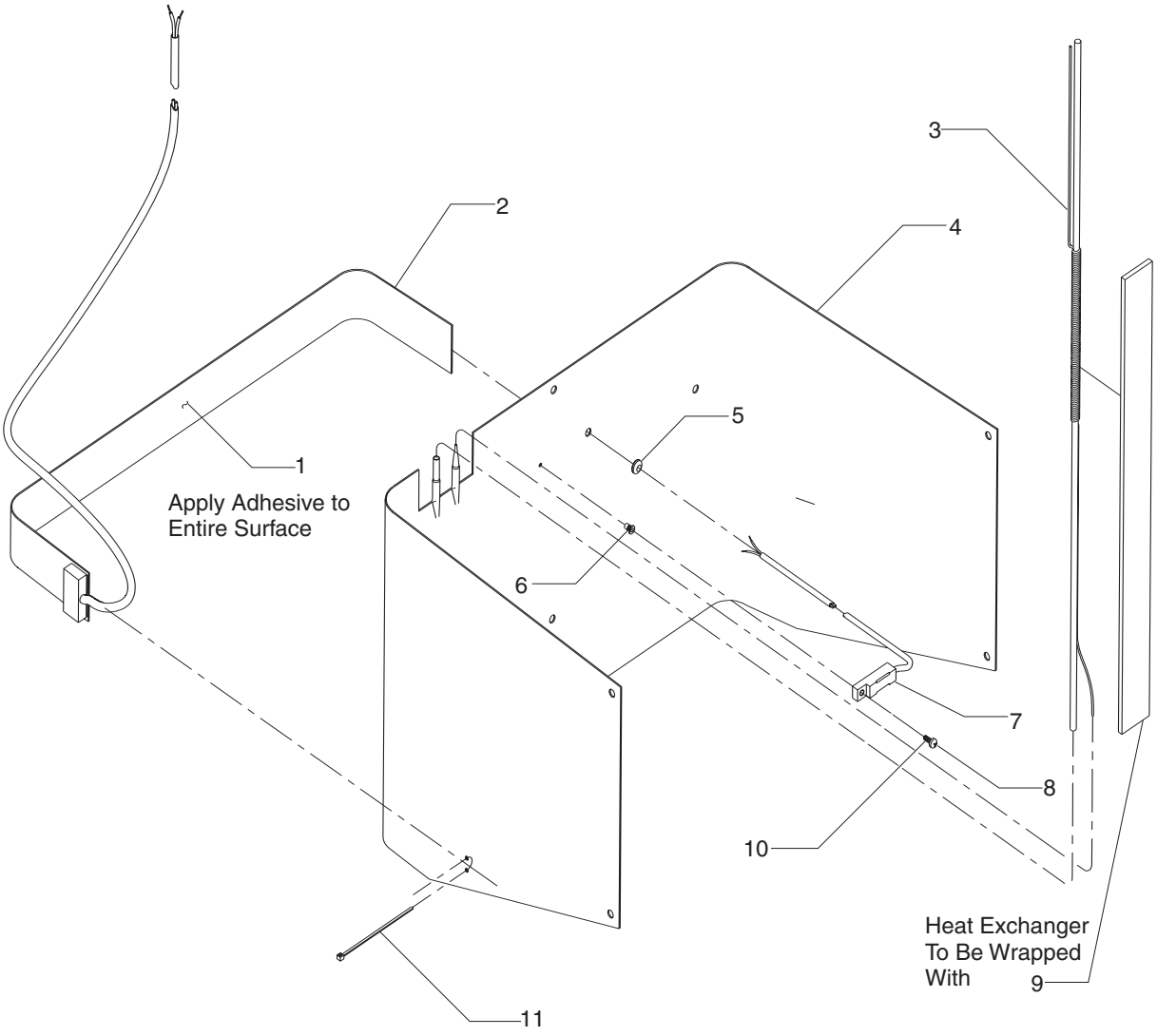

Table 9 Parts List for Assembly Drawing 6 of 7

Item	Description	Quantity	Catalog Number	Item	Description	Quantity	Catalog Number
1	Adhesive	1	SE 893	7	Evaporator Temp. Sensor Assembly	1	8726
2	Evaporate Heater, 100/120 V ac	1	8687	8	Screw	1	SE 408
3	Heat Exchange	1	8551	9	Insulator Cork Tape	1	SE 941
4	Evaporator	1	8730	10	Threadlock	1	SE 957
5	Grommet Seal	1	1297	11	Cable Tie	1	SE 817
6	Aluminum Rivet Nut	1	SE 446				

900 MAX All Weather Refrigerated Sampler Assembly Drawing (7 of 7)

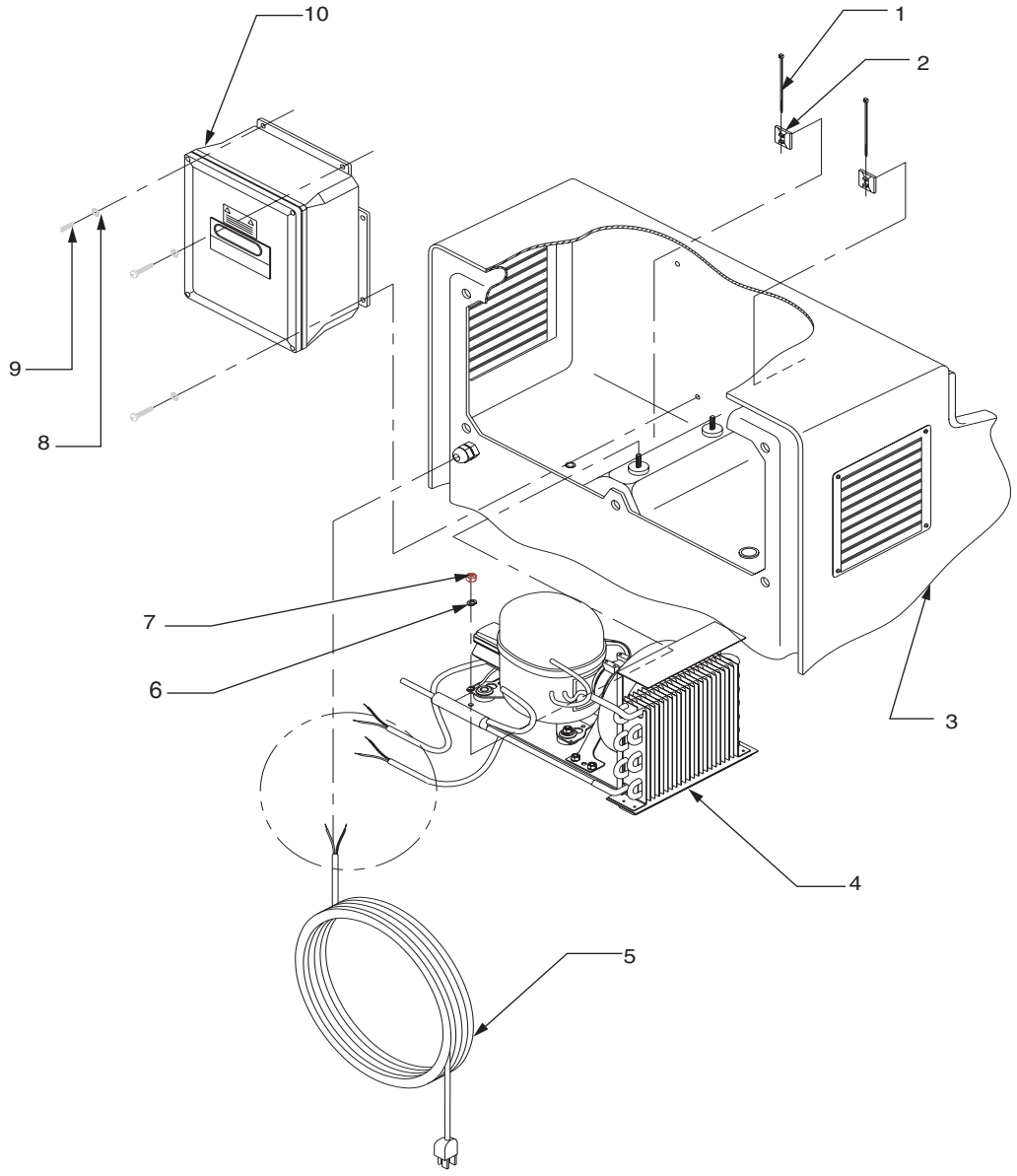

Table 10 Parts List for Assembly Drawing 7of 7

Item	Description	Quantity	Catalog Number	Item	Description	Quantity	Catalog Number
1	Cable Tie	1	SE 817	6	Washer	4	SE 704
2	Wire-Hold Down	1	7289	7	Nut	4	SE 701
3	Final Cabinet Assembly	1	8700	8	Washer	3	SE 708
4	120 V Refrigerator Assembly	1	3546	9	Screw	3	SE 702
5	Power Supply Cord	1	8853	10	Power Junction Assembly Thermal Control	1	8725

AMERICAN SIGMA

GENERAL INFORMATION

At American Sigma, customer service is an important part of every product we make.

With that in mind, we have compiled the following information for your convenience.

Base/Bottle Tray, Composite/Multiple Sampling Accessories

Sampler	Bottle Type	Part Number						
		Bottle	Full Bottle Shut-Off	Tube Support	Extension Tube	Bottle Tray/Positioner	Retainer	Distributor
Composite	2.5 gal. Glass	6559	8847	8838	3527	N/A	N/A	N/A
	3 gal. Poly.	1918	8847	8838	3527	N/A	N/A	N/A
	6 gal. Poly.	6494	8847	8838	N/A	N/A	N/A	N/A
Multiple Bottle	(24) 1 L Poly.	737	N/A	N/A	N/A	1511	1322	8841
	(24) 350 mL Glass	732	N/A	N/A	N/A	1511	1056	8841
	(8) 2.3 L Poly.	657	N/A	N/A	N/A	1511	1322	8842
	(8) 1.9 L Glass	1118	N/A	N/A	N/A	1511	1322	8842
	(4) 3 gal. Poly.	2315	N/A	N/A	N/A	N/A	N/A	8843
	(4) 2.5 gal. Glass	2317	N/A	N/A	N/A	N/A	N/A	8843
	(2) 2.5 gal. Glass	2318	N/A	N/A	N/A	N/A	N/A	8843
	(2) 3 gal. Poly	2316	N/A	N/A	N/A	N/A	N/A	8843

Intake Tubing and Strainers

Intake Tubing	Description	Part Number
Vinyl	25 ft 3/8 in. ID Tubing	920
	100 ft 3/8 in. ID Tubing	923
	500 ft 3/8 in. ID Tubing	924
Teflon Lined Requires Connection Kit (P/N 2186).	10 ft 3/8 in. ID Tubing	921
	25 ft 3/8 in. ID Tubing	922
	100 ft 3/8 in. ID Tubing	925
	Connection Kit	2186

Strainer	Description	Part Number
Teflon/Stainless Steel	Teflon/Stainless Steel, 5.5 in. long x 0.875 in. OD	926
	Teflon/Stainless Steel, 11.0 in. long x 0.875 in. OD	903
Stainless Steel	All 316 Stainless Steel, 7.94 in. long x 1.0 in. OD	2070
	All 316 Stainless Steel, for Shallow Depths, 6.0 in. long x 0.406 in. OD	2071
	High Velocity and Shallow Depths, 3.9 in. long x 0.406 in. OD	4652

Pump Tubing

Type	Description	Part Number
For 900 Series Peristaltic Pump	Pump Tubing, 15 ft long	4600-15
	Pump Tubing, 50 ft long	4600-50
	Pump Tube Insert	8888
For All Distributors and 800 Series Peristaltic Pumps	Distributor Tubing, 15 ft long	3866-15
	Distributor Tubing, 50 ft long	3866-50

Area x Velocity Measurement Sensors

Option	Description	Part Numbers	
		Connectors	Bare Leads
Standard Submerged Area/Velocity Sensor	Factory Installed Integral Area x Velocity Flow Meter Option ***Note:*** *Factory Installed Integral Depth Only Flow Meter Option is not available with this option.*	4041	4041
	Standard Sensor, Range 0–10 ft (requires cable P/N 3564)	88000	88001
	Standard Sensor, Range 0–30 ft (requires cable P/N 3564)	88002	88003
	Cable, sold by the ft, specify length needed per sensor. Min=10 ft Max=250’	3564	3564
	Junction Box, required for bare lead sensor connection to flow meter.	N/A	4730
	Remote AV, use when the flow meter to sensor distance is greater than 250 ft (requires cable SE 818 and sensor).	5250	5250
	Remote AV Cable, sold by the ft, specify length needed per sensor. Min=10 ft Max=1,000’	SE 818	SE 818
Keppler Submerged Area/Velocity Sensor For cleaner water/few particulates.	Factory Installed Integral Area x Velocity Flow Meter Option ***Note:*** *Factory Installed Integral Depth Only Flow Meter Option is not available with this option.*	4041	4041
	Standard Sensor, Range 0–10 ft (requires cable P/N 3564)	88012	88013
	Standard Sensor, Range 0–30 ft (requires cable P/N 3564)	88014	88015
	Cable, sold by the ft, specify length needed per sensor. Min=10 ft Max=250’	3564	3564
	Junction Box, required for bare lead sensor connection to flow meter.	N/A	4730
	Remote AV, use when the flow meter to sensor distance is greater than 250 ft (requires cable SE 818 and sensor).	5250	5250
	Remote AV Cable, sold by the ft, specify length needed per sensor. Min=10 ft Max=1,000’	SE 818	SE 818

Depth Measurement Sensors

Option	Description	Part Number
Ultrasonic Sensor 40 kHz	Factory Installed Integral Ultrasonic Flow Meter Option	3758
	40 KHz Range 0–10 ft, with 25-ft cable	3028
	Ultrasonic Sensor with Horn, 40 KHz, with 25-ft cable	4008
	Ultrasonic Sensor, CSA Approved for Class I, Division I, Groups A, B, and D Hazardous Locations; with 50-ft cable	4010
	Ultrasonic Sensor, 40 KHz, Range 0–10 ft, with 25-ft cable with bare lead ends.	2653
	Junction Box for ultrasonic sensor conduit installations	3658
Depth Sensor	Factory Installed Depth Only Flow Meter Option ***Note:*** *Factory Installed Integral Area x Velocity Flow Meter Option is not available with Factory Installed Integral Depth Only Flow Meter Option*	8794
	General Purpose Depth Sensor, Range 0–0.576 ft with 25-ft cable	2963
	Range 0–10 ft with 25-ft cable	2343
	Range 0–23 ft with 50-ft cable	2333
Note: *Ultrasonic and depth sensor cables cannot be extended.*		

Sensor Mounting Hardware

Type	Pipe Diameter (Inches)	Part Number	
		Mounting Ring/Band	Mounting Clip
Submerged Area/Velocity Sensor Mounting Rings For 6–24 in. Pipes	6	1361	3263
	8	1362	3263
	10	1363	3263
	12	1364	N/A
	15	1365	N/A
	18	1366	N/A
	20–21	1353	N/A
	24	1370	N/A
Submerged Depth/Velocity Mounting Bands for 15–42 in. Pipes	15	9706100	N/A
	18	9706200	N/A
	21	9706300	N/A
	24	9706400	N/A
	27	9706500	N/A
	30	9706600	N/A
	33	9706700	N/A
	36	9706800	N/A
	42	9706900	N/A
	45	3766	N/A
Submerged Depth Only Sensor Mounting Ring for 6–24 in. Pipes	6	1361	1771
	8	1362	1771
	10	1363	1771
	12	1364	1771
	15	1365	1771
	18	1366	1771
	20–21	1353	1771
	24	1370	1771
Submerged Depth Only Sensor Mounting Band for 15–42 in. Pipes	15	9706100	1771
	18	9706200	1771
	21	9706300	1771
	24	9706400	1771
	27	9706500	1771
	30	9706600	1771
	33	9706700	1771
	36	9706800	1771
	42	9706900	1771

Option	Description	Part Number
Insertion Tool	To remove P/N 1361–1370 mounting rings.	9574

Mounting Plate Hardware for Directly Mounting to Pipe Wall

Option	Pipe Diameter	Part Number
Submerged Depth/Velocity Mounting Plate	All Pipe Sizes	4939

Mounting Plate Hardware for Directly Mounting to Pipe Wall

Submerged Depth Only Mounting Plate	All Pipe Sizes	2312

Ultrasonic Sensor Mounting Hardware

Part Description	Part Number
Permanent Wall Mounting Bracket	2974
Adjustable for Floor or Wall	2904
Tripod with Mounting Bracket for Sensor	9538
Cable Straightener	2883
Cable Grip (Requires P/N 2883)	3183

Factory Installed Options

Options	Description	Part Number
Controller Compartment Heater	115 V ac	8805
Controller Compartment Heater	230 V ac	8808
pH ***Note:*** *Requires factory installed option and probe.*	Factory Installed Integral pH-Temp/ORP includes: Pre-amp Interface (P/N 3323) ***Note:*** *pH and ORP cannot be used simultaneously. If the distance from the probe to the sampler is greater than 50 ft, order additional SE 813 cable to extend the distance on the Pre-amp Interface (max. cable length is 100 ft) pH and ORP probes are not available in lengths longer than 50 ft*	8793
	pH-Temperature Probe (grounded), includes 25-ft cable.	3328
	pH Temperature Probe (grounded), includes 50-ft cable.	5172
	ORP Probe, includes 25-ft cable	2080
	ORP PRobe, includes 50-ft cable	5174
	Buffer for pH calibration–4.00 pH (±0.02 pH) 10 capsules in vial.	2104
	Buffer for pH calibration–7.00 pH (±0.02 pH) 10 capsules in vial.	2105
	Buffer for pH calibration–10.00 pH (±0.02 pH) 10 capsules in vial.	2106
D.O and Conductivity ***Note:*** *Requires factory installed option and probe.*	Factory Installed DO and Conductivity Option includes: Pre-amp Interface (P/N 3369) ***Note:*** *If the distance from the probe to the sampler is greater than 50 ft, order additional SE 998 cable to extend the distance on the Pre-amp Interface (max. cable length is 1350 ft) DO and Conductivity probes not available in lengths longer than 50 feet.*	3227
	DO Kit, includes: DO Probe with 25-ft cable (P/N 3222) Box of 25 Teflon Membranes (P/N 3219) 16 oz. Electrolyte Solution (P/N 3221) and Instructions	3216
	DO Kit, includes: DO Probe with 50-ft cable (P/N 5899) Box of 25 Teflon Membranes (P/N 3219) 16 oz. Electrolyte Solution (P/N 3221) and Instructions	5175
	Conductivity Kit, includes: Conductivity Probe with 25-ft cable (P/N 3223) 16 oz. Calibration Solution (P/N 3765) and Instructions	3225
	Conductivity Kit, includes: Conductivity Probe with 50-ft cable (P/N 5898) 16 oz. Calibration Solution (P/N 3765) and Instructions	5134
First 4–20 mA Output	Includes (P/N 2924) 25 ft cable, 115 V ac ***Note:*** ** If longer than 25 ft cable is needed, order additional SE 813.*	8797

Second 4–20 mA Output	Requires the first 4–20 mA Output and ac power. Does not need cable, it uses the same cable from the first set of 4–20 mA	8798
Alarm Relays	Four (4) Alarm Relays (form C, user assignable with settable trip points). Includes 25-ft cable (P/N 2705) ***Note:*** *If longer than 15-ft cable is needed, order additional SE 888 cable.*	8984
Modem	14,400 Baud, for use with conventional phone lines, DOMESTIC USE ONLY ***Note:*** *When ordering flow option and 14.4 Modem, Flow Option must be remote.*	1602
Cellular Phone	Option with a phone (includes modem) ***Note:*** *When ordering flow option and 14.4 Modem, Flow Option must be remote.*	1669
	Option without a phone (includes modem) ***Note:*** *When ordering flow option and 14.4 Modem, Flow Option must be remote.*	1670
Expanded Memory	Increases memory from 18,432 to 116,000 data readings	2861
Rain Gauge	Factory Installed Rain Gauge Option	8800
	Rain Gauge with 25-ft cable	2149
	Rain Gauge Extension with 100-ft cable	2221
Analog Inputs	Three (3) Analog Input Data Logging Channels, includes 25-ft cable (P/N 2706) ***Note:*** *If longer than 25-ft cable is needed, order additional SE 888 cable*	8795
Solenoid Valve	2-Way/3-Way Solenoid Valve Option with Pump, no valves	5176
	3-Way Solenoid Valve Option with Pump, no valves	5177
Remote Pump (Recommended for vertical lift distances between 23-35 ft) ***Note:*** *Requires factory installed option, remote pump and connection kit.*	Factory Installed Integral Remote Pump Option	8799
	Remote Pump (P/N 2241) w/ 35-ft 12 V dc cable (P/N 2247) and 35-ft suspension cable (P/N 5225)	2246
	Connection Kit: For remote pump with 3/8 in. ID vinyl tubing	2248
	Connection Kit: For remote pump with 3/8 in. ID Teflon-Lined tubing	3152
Mechanical Totalizer	6 digit, field selectable, non-resetable (In separate NEMA 4X Enclosure)	8944
ac Back-up	Ac Power back-up, battery included	8801
Junction Box	NEMA 4X, for ac power conduit	8860
Terminal Box	NEMA 4X, recommended when it is desired to hard wire via conduit. 6-pin auxiliary, 4-20 mA output(s), RS232, and modem.	8804

Support Software and Data Transfer Unit

Option	Description	Part Number
DTU II	**DTU II, 115 V ac, includes:** DTU to sampler or flow meter cable (P/N 1726), 115 V ac DTU to PC Cable, 115 V ac (P/N 3513) ***Note:*** *If sampler or flow meter to DTU cable longer than 10 ft is needed, order additional SE 813 cable.*	3516
	DTU II, 230 V ac, includes: DTU to sampler or flow meter cable (P/N 1726), 230 V ac DTU to PC Cable, 230 V ac (P/N 3580) ***Note:*** *If sampler or flow meter to DTU cable longer than 10 ft is needed, order additional SE 813 cable.*	3517
Software	InSight® Gold CD ROM: Includes 10 ft sampler or flow meter to PC cable (P/N 1727) ***Note:*** *Order additional SE 813 cable if 10 ft or longer cable is needed.*	6210000

Cables and Interfaces

Cable	Description	Part Number
Multi-Purpose Half Cable, 25 ft with 6 pin connector on one end and open leads on the other end. ***Note:*** *If cable longer than 25 ft is needed, order additional SE 813 cable.*	Connects a Sigma sampler/flow meter to a non-sigma sampler/flow meter.	541
Multi-Purpose Half Cable, 10 ft with 6 pin connector on one end and open leads on the other end. ***Note:*** *If cable longer than 10 ft is needed, order additional SE 813 cable.*	Connects a Sigma sampler/flow meter to a non-sigma sampler/flow meter.	941
Multi-Purpose Full Cable, 25 ft with 6 pin connector on both ends. ***Note:*** *If cable longer than 25 ft is needed, order additional SE 813 cable.*	Connects a Sigma sampler to a Sigma flow meter.	540
Multi-Purpose Full Cable, 10 ft with 6 pin connector on both ends. ***Note:*** *If cable longer than 10 ft is needed, order additional SE 813 cable.*	Connects a Sigma sampler to a Sigma flow meter.	940
Cascade Sampling for 25-ft cable ***Note:*** *If cable longer than 25 ft is needed, order additional SE 828 cable.*	Leading sampler wakes up second sampler upon program completion.	2817
Synchronized Sampling 25-ft cable ***Note:*** *If cable longer than 25 ft is needed, order additional SE 828 cable.*	Both samplers collect samples at the same time.	2818
3-Way Splitter Assembly	Simplifies multiple connection to sampler 6-pin auxiliary receptacle.	939
4-20 mA Interface, 10-ft cable. ***Note:*** *If cable longer than 10 ft is needed, order additional SE 853 cable.*	Converts analog signals from flow meter to pulse. Compatible with 800/900 series samplers (10 ppm at 20 mA).	2021

Accessories

Accessory	Description	Part Number
All Weather Refrigerator Cabinet	115 V ac	3548
Lid Assembly with latch		8968
Liquid Level Actuator, 25-ft cable ***Note:*** *If cable longer than 25 ft is needed, order SE 828 cable.*	Float switch used to initiate sampler when liquid is detected.	943
Door Assembly		8702
900 MAX Controller Desiccant Replacement Parts	Humidity Indicator: For Inside the 900 MAX Controller	2660
	Desiccant Bag (1 pillow inside case)	8849
	O-Ring, main seal	8606
Desiccant Replacement Parts for Submerged Depth/Velocity Probe	Cartridge Assemble, Filled (Replaces entire cartridge)	5059
	Refill, 1.5 lb. (refills existing cartridge)	3624
	Cartridge Membrane (replaces membrane on existing cartridge)	3390
	O-Ring, need to replace in existing cartridge.	5252
Desiccant Replacement Parts for Submerged Depth Only Sensor	Desiccant Cartridge	2418
Distributor Arm Only	For 24 Bottle Sampling	8844
	For 8 Bottle Sampling	8845
	For 2 and 4 Bottle Sampling	8846
Flow-Thru Module	Flanged ends, 3 in. diameter, not for pressurized sampling.	2471
Anchor Kit	Set of 4, 316 stainless steel; for securing to concrete pad.	8935
Operating Maintenance Manual	900 MAX All Weather Refrigerated Sampler	8854

U.S.A. Customers

By Telephone:
(800) 635-4567

By Fax:
(970) 461-3915

Ordering information by E-mail:
sigma@americansigma.com

By Mail:
American Sigma
P.O. Box 389
Loveland, Colorado 80539-0389
U.S.A

Information Required

- American Sigma account number (if available)
- Your name and phone number
- Purchase order number
- Brief description or model number
- Billing address
- Shipping address
- Catalog number
- Quantity

Ordering Outside the U.S.A.

American Sigma maintains a worldwide network of dealers and distributors. To locate the representative nearest you, send E-mail to intl@hach.com or visit www.americansigma.com.

Technical Support in the U.S.A. or Outside Europe

Technical and Customer Service Department personnel are eager to answer questions about our products and their use. In the U.S.A., call 1-800-635-1230. Outside the U.S.A. and Europe, send E-mail to intl@hach.com.

Technical Support for European Customers

Contact Bühler Montec Group, Ltd.

By Telephone:
+44 (0) 161 872 1487

By Fax:
+44 (0) 161 848 7324

By E-mail:
helpdesk@bmgl.com

By Mail:
Bühler Montec Group, Ltd.
Pacific Way
Salford
Manchester
M5 2DL
U.K.

Repair Service

Authorization must be obtained from American Sigma before sending any items for repair. Please contact the American Sigma Service Center serving your location.

In the United States or Outside Europe

American Sigma
P.O. Box 389
Loveland, Colorado, 80539-0389 U.S.A.

Telephone: 1-800-635-1230 or (970) 669-3050
Fax: (970) 669-2932

In Europe

Bühler Montec Group, Ltd.
Pacific Way
Salford
Manchester
M5 2DL
U.K.

Fax: +44 (0) 161 848 7324
E-mail: helpdesk@bmgl.com
By Telephone: +44 (0) 161 872 1487

American Sigma warrants this product to the original purchaser against any defects that are due to faulty material or workmanship for a period of one year from date of shipment.

In the event that a defect is discovered during the warranty period, American Sigma agrees that, at its option, it will repair or replace the defective product or refund the purchase price, excluding original shipping and handling charges. Any product repaired or replaced under this warranty will be warranted only for the remainder of the original product warranty period.

This warranty does not apply to consumable products such as chemical reagents; or consumable components of a product, such as, but not limited to, lamps and tubing.

Contact American Sigma or your distributor to initiate warranty support. Products may not be returned without authorization from American Sigma.

Limitations

This warranty does not cover:

- **Damage caused by acts of God, natural disaster, labor unrest, acts of war (declared or undeclared), terrorism, civil strife or acts of any governmental jurisdiction**
- **Damage caused by misuse, neglect, accident or improper application or installation**
- **Damage caused by any repair or attempted repair not authorized by American Sigma**
- **Any product not used in accordance with the instructions furnished by American Sigma**
- **Freight charges to return merchandise to American Sigma**
- **Freight charges on expedited or express shipment of warranted parts or product**
- **Travel fees associated with on-site warranty repair**

This warranty contains the sole express warranty made by American Sigma in connection with its products. All implied warranties, including without limitation, the warranties of merchantability and fitness for a particular purpose, are expressly disclaimed.

Some states within the United States do not allow the disclaimer of implied warranties and if this is true in your state the above limitation may not apply to you. This warranty gives you specific rights, and you may also have other rights that vary from state to state.

This warranty constitutes the final, complete, and exclusive statement of warranty terms and no person is authorized to make any other warranties or representations on behalf of American Sigma.

Limitation of Remedies

The remedies of repair, replacement or refund of purchase price as stated above are the exclusive remedies for the breach of this warranty. On the basis of strict liability or under any other legal theory, in no event shall American Sigma be liable for any incidental or consequential damages of any kind for breach of warranty or negligence.

Numerics

4-20 mA Option 93
- Calibration 95
- Connection 93
- Programming 94
- Pulse Duration Input 145

A

ac Power 136
Access Code 39
Advanced Sampling 50
- Program Complete 50
- Setpoint Sampling 51
- Special Output 53
- Start/Stop Times 54
- Storm Water 55
- Timed Bottle Sets 57
- Upset Sample 58
- Variable Intervals 60
- Variable Volume 61

Alarm Relays 96
- Connections 97
- Interface Connector 96
- Junction Box 97
- Programming 98

Alarms
- Actions 98
- Deadband 99
- Set Point Alarms 98
- Trouble Alarm Troubleshooting 141
- Trouble Alarms 98

Analog Inputs 100
- Connection 100
- Programming 100

Anchor Bracket Mounting 24
Arm Stop 30
Auxiliary Receptacle 33

B

Basic Programming Setup 37
Battery Power 136
Baud Rate 85
Bottle Number 53
Bottle Volume 38
Bottles 28, 38
Bottom Panel 109

C

Calibration
- 4-20 mA 95
- Conductivity Probe 82
- Dissolved Oxygen Probe 80
- Downlook Ultrasonic Sensor 63
- ORP Probe 78
- pH Probe 76
- Submerged Area Velocity Sensor 66
- Submerged Pressure Sensor 68

Cellular Communications 86
Cellular Modem Scheduling 88
Cellular Modem Triggering 90
Circuit Board 109
Cleaning the Sampler 105
Conductivity Probe 81
- Calibration 82
- Connection 81
- Programming 81
- Temperature Calibration 83
- Temperature Programming 81

Connectors
- Auxiliary 33

Constant Time, Variable Volume Sampling 43
Constant Volume, Variable Time 41
Continous Mode 129
Controller
- Cover 15
- Heater 15
- Removal and Opening 108

D

Data Log 128
Deadband 99
Desiccant module, internal 20
Diagnostics 131
- Distributor Test 131
- Event Log 132
- Keypad Test 132
- LCD Test 132
- Liquid Sensor 133
- Velocity Analysis 133

Displaying Data 123
Dissolved Oxygen Probe
- Calibration 80
- Connection 79
- Membrane Thickness 80
- Programming 79
- Strain Relief 79
- Temperature Calibration 80
- Temperature Programming 79

Distributor
- Arm Alignment 31
- Installation 30

Door Latch 16
Downlook Ultrasonic Sensor 63

Calibration 63
Connection 63
Programming 63
DTU-II 85

E

Eight-, 12-, or 24-bottle Sampling 29
Electrostatic Discharge 107
Error Messages 139
Extended Power Mode 129

F

First Flush Bottles 56
Flow Totalizer 136
Flow Units 42, 137
Front Panel 17
Full-Bottle Shut-Off 32
Function Keys 19
Fuse Replacement 112

G

Graph Manipulation 125
Graphic Display Averaging 125
Graphs 124

H

Humidity Indicator 20

I

Installation site 23
Intake Line 26, 27
Intake Rinses 48
Intake Tubing 39
Interface Connectors 16
Internal Desiccant 112
Internal Humidity Indicator 112

K

Keypad 18

L

Level Adjust 67, 70
Liquid Crystal Display 19
Liquid Depth 63
Liquid Sensor 47
Load Program 135
Logging Intervals 129
Lubrication 105

M

Maintenance 105
Memory Allocation 130
Memory Battery 92, 113, 141
Memory Modes 130
Menu Bar and Status Bar 19
Modem
Connection 86
Programming 86
Modify Setup 137
Motor/Gear Box 112
Multiple Bottle 45

N

Numeric Keypad 18

O

ON/OFF Key 19
Option Menu 126
ORP Probe
Calibration 78
Junction Box 77
Junction Box Calibration 78
Programming 77

P

Pager Alarm Codes 92
Pager Option 91
Password 39
pH Probe
Calibration 76
Connection 74
Junction Box (grounded) 75
Junction Box (un-grounded) 75
Programming 75
Troubleshooting 143
Pin 33
Power Connectors 32
Power Save Mode 129
Program Delay 40
Program Lock 39
Pulses/Counts 145
Pump Tube
Installation 25, 27
Pump Tube Installation 25
Pump Tube Replacement 107

Q

Quick Start Guides 115

R

Rain Gauge 73
Connection 73
Programming 74
Tipping Bucket 73
RAM 130
Receptacle Caps 17
Refrigerator Door 15
Reliable Communications 88
Reporting Devices 92
Reset (Totalizer) 137
Retainers 28
Review All Items 123
RS232
Connection 85
Programming 85
Running a Program 123

S

Sample Collection 40
Sample Distribution 45
Multiple Bottle 45
Single Bottle 45
Sample History 125
Sample Retries 49
Sample Volume 48
Sampler Housing 71
Sampling Triggers and Settings 52
Screen Saver Mode 136
Sensor Body 25
Sensor Height 64
Set Point Alarms 98
Single-Bottle Sampling 29, 45
Site Selection 23, 87
Slate Mode 130
Soft Keys 18
Specifications 10
Splitter Interface 33
Status 37
Strain Relief 79
Strainer 27
Submerged Area/Velocity Sensor 65
Cable Routing 65
Calibration 66
Connection 65
Installation 68
Programming 66
Submerged Pressure Sensor 68
Calibration 68
Connection 68
Programming 68

T

Tables 124
Time/Date 126
Timed Over-Ride 42
Timed Proportional Sampling 40
Trouble Alarms
Troubleshooting 141
Trouble Condition 98
Troubleshooting 139
Two- and Four-bottle Sampling 29

U

Utility Board 111

V

Vertical Lift 11
Vinyl Tubing 26
Volume Calibration 126

W

Wrap Mode 131

AMERICAN SIGMA

American Sigma c/o
Hach Company
P.O. Box 389
Loveland, Colorado 80539-0389
Telephone: (970) 669-3050
FAX: (970) 669-2932

FOR TECHNICAL ASSISTANCE, PRICE INFORMATION AND ORDERING:
In the U.S.A. - Call toll-free 800-635-4567
In Europe - Contact Bühler Montec Group, Ltd., +44 (0) 161 872 1487
On the Worldwide Web - www.americansigma.com; E-mail - sigma@americansigma.com

APPENDIX C

Manufacturer's Information

American Sigma (Hach) 900 MAX
All Weather Refrigerated Sampler Thermal System,
Service Manual,
Cat. No. 3540-04, July 2002, Ed. 3

DRAFT

Cat. No. 3540-04

900 and 900 MAX All Weather Refrigerated Sampler Thermal System

Service Manual

July 2002, Ed. 3

Cat. No. 3540-04

900 and 900 MAX All Weather Refrigerated Sampler Thermal System Service Manual

July 2002, Ed. 3

AMERICAN SIGMA

© American Sigma, 2000, 2002. All rights reserved. Printed in the U.S.A.

eac 07/02 3ed

Table of Contents

Safety Precautions 5

Section 1 System Descriptions 7
1.1 Disclaimer 7
1.2 System Performance 7
1.3 Thermal Control System 7
1.4 Description of the 900/900 MAX Refrigeration System 8
1.5 Description of the 900/900 MAX Heat System 9
1.5.1 Heater Description 9
1.5.2 Compressor Heater Description 10
1.5.3 Optional Sampler Controller Compartment Heater 10

Section 2 Troubleshooting 11

Section 3 Servicing the AWRS Refrigeration System 13
3.1 Required Tools 13
3.2 Turning System Power On 13
3.3 Turning System Power Off 13
3.4 Accessing Diagnostic Information on the Model 900 Controller 13
3.5 Accessing Diagnostic Information on the 900 MAX Controller 14
3.6 Adjusting the Cabinet Set Point Temperature on the 900 MAX Controller 14
3.7 Using the Thermostat 14
3.7.1 Using the Thermostat on the Model 900 Sampler Controller 14
3.7.2 Using the Thermostat on the 900 MAX Sampler Controller 15
3.8 Checking the Power 17
3.9 Checking the Ambient Temperature 17
3.10 Performing Diagnostics 17
3.11 Detecting and Repairing Leaks 17
3.12 Compressor Replacement 17
3.13 Evacuation 17
3.14 Refrigerant Charge 19
3.15 Test Run Following Repair 19
3.16 Routine Maintenance 19
3.17 Thermal System Calibration Procedure 19
3.18 Summary 20

Section 4 Compressor Specifications 21

Appendix A Troubleshooting Flowcharts 25

Appendix B Conversion Charts 29

Appendix C Circuit Board Schematic 33

GENERAL INFORMATION 35
Ordering and Technical Support 37
Repair Service 38
Warranty 39

Please read this entire manual before unpacking, setting up, or operating this instrument. Pay particular attention to all danger and caution statements. Failure to do so could result in serious injury to the operator or damage the equipment.

To ensure the protection provided by this equipment is not impaired, do not use or install this equipment in any manner other than that which is specified in this manual.

Use of Hazard Information

If multiple hazards exist, this manual will use the signal word (Danger, Caution,Note) corresponding to the greatest hazard.

DANGER
Indicates a potentially or imminently hazardous situation which, if not avoided, could result in death or serious injury.

CAUTION
Indicates a potentially hazardous situation that may result in minor or moderate injury.

NOTE
Information that requires special emphasis.

Precautionary Labels

Read all labels and tags attached to the instrument. Personal injury or damage to the instrument could occur if not observed.

This symbol, if noted on the instrument, references the instruction manual for operation and/or safety information.

Section 1 System Descriptions

1.1 Disclaimer

This manual is intended to provide the refrigeration and air conditioning service engineer or end user with helpful information for servicing the All Weather Refrigerated Sampler (AWRS). This manual is not an air conditioning, refrigeration, or heating system textbook.

Refrigeration and heating devices are extremely complicated by nature. Servicing or repairing these products should be undertaken only by those with the knowledge, training, and necessary tools and equipment. Any attempt to adjust or service these products by an unqualified person can result in damage to the instrument and lead to severe injury or loss of life.

1.2 System Performance

The Thermal Control System in the Sigma 900 & 900 MAX was designed to maintain sample temperatures at a set point temperature range of 35.6 to 50 °F (2 to 10 °C) plus or minus 1.8 °F (1 °C) over an outdoor (ambient) temperature range of -40 to 120 °F (-40 to 49 °C). A refrigeration system operates when outdoor temperatures are above the desired temperature and a heating system (attached to the back of the evaporator) operates when outdoor temperatures are below the desired temperature.

1.3 Thermal Control System

The Thermal Control System is microprocessor controlled. It shares the Sampler Controller microprocessor located on the Sampler Controller CPU board. The microprocessor and associated circuitry are connected by cable to the Thermal Control Interface located in the Power Supply/Thermal Control assembly. Thermal Control Interface circuitry and associated sensors send temperature data to the microprocessor. Also, Thermal Control Interface circuitry receives control signals from the microprocessor and controls the major thermal components (compressor, fan, and heaters).

The Reference Temperature Sensor detects the sample compartment temperature. The Reference Temperature Sensor is a thermistor that is embedded in a large thermal mass. The thermal mass is sized to simulate 150 mL of water. The mass introduces a calculated thermal time constant into the temperature sensing system and produces temperature readings/recordings that are more representative of the actual sample (rather than the air temperature of the sample compartment). It also results in fewer compressor starts, which produce less mechanical wear on the compressor.

The microprocessor turns the compressor or evaporator heater on or off based on temperature information gathered by the Reference Temperature Sensor. If ambient temperatures are above a defined threshold, the microprocessor starts the compressor. The compressor will turn off when the sample compartment temperature drops below another threshold.

If ambient temperatures drop below a defined threshold, the microprocessor initiates heater operation. The heater turns off when the sample compartment rises above another threshold. When the ambient temperature is near the set point temperature of the sample compartment, alternating compressor and heater operation are possible. However, the compressor and heater never operate simultaneously, except during Compressor Exercise mode.

The Thermal Control System uses temperature information from the Evaporator Temperature Sensor to provide frost-free operation. Each time the

compressor turns on, the system checks the evaporator temperature. Evaporator temperatures below freezing (0 °C) indicate that frost or ice have built up on the evaporator plate. This turns the heater on; the evaporator temperature is monitored. When the evaporator temperature rises above freezing, the frost or ice has melted and the heater turns off. Normal compressor operation follows.

The Thermal Control System uses information from the Ambient Temperature Sensor to control the compressor heater and optional sampler controller compartment heater. Ambient temperatures above 10 °C inhibit heater operation. As ambient temperatures drop below 10 °C, the heaters are modulated on and off (as a function of ambient temperature) using a 5-minute cycle. At 10 °C, heaters are off (0% duty cycle). At -15 °C, both heaters are on for 2.5 minutes and off for 2.5 minutes (50% duty cycle). At -40 °C, both heaters are on continuously (100% duty cycle).

The Thermal Control System provides two other unique features. The first is the Compressor Exercise mode. According to the compressor manufacturer, the compressor should be “exercised” or run during periods of non-use (e.g., cold weather operation). During periods of non-use, the compressor is turned on once every seven days (at midnight) and run for five minutes.

The second unique feature is short-cycle prevention. Again, the compressor should never be short-cycled (i.e., started within five minutes of its last operation) because it can cause compressor damage. Therefore, a timer counts down every time the compressor is turned off. Subsequent compressor operations can not occur until the timer has expired. This timer is also initiated upon initial power up, preventing short cycling due to momentary plant power failures.

1.4 Description of the 900/900 MAX Refrigeration System

The refrigeration system is a simple “capillary tube” type system (Figure 1). Liquid refrigerant flows from the condenser, through the liquid line, to the filter-drier. From the filter-drier, refrigerant flows through the capillary tube. The capillary tube meters refrigerant into the evaporator. The liquid refrigerant is at high pressure, as it enters the capillary tube at the filter-drier end. The capillary tube restricts the refrigerant flow, causing a pressure and temperature drop in the evaporator and creating a cooling effect.

The capillary tube maintains a pressure difference that allows just enough liquid to pass through it to make up for the amount that is vaporized in the evaporator while the compressor is operating. The compressor maintains a low pressure in the evaporator and the refrigerant boils, rapidly absorbing heat. The vaporized refrigerant moves through the suction line and back to the compressor where it is compressed and discharged into the condenser. It cools in the condenser, returns to a liquid and again flows into the liquid line.

The capillary tube allows the high and low side pressures to equalize when the compressor is not operating. This results in easier compressor motor starts and increases compressor life expectancy.

The refrigeration cycle continues until the thermal element (Reference Temperature Sensor) is cooled to the set point temperature. When that temperature is reached, the thermal element operates the motor control mechanism (solid state relay) located in the Power Supply/Thermal Control Box and turns off power to the motor. The refrigeration cycle stops. It will remain stopped until the thermal element warms up, operates the motor control mechanism, and turns on power to the motor.

Figure 1 900/900 MAX Refrigeration System

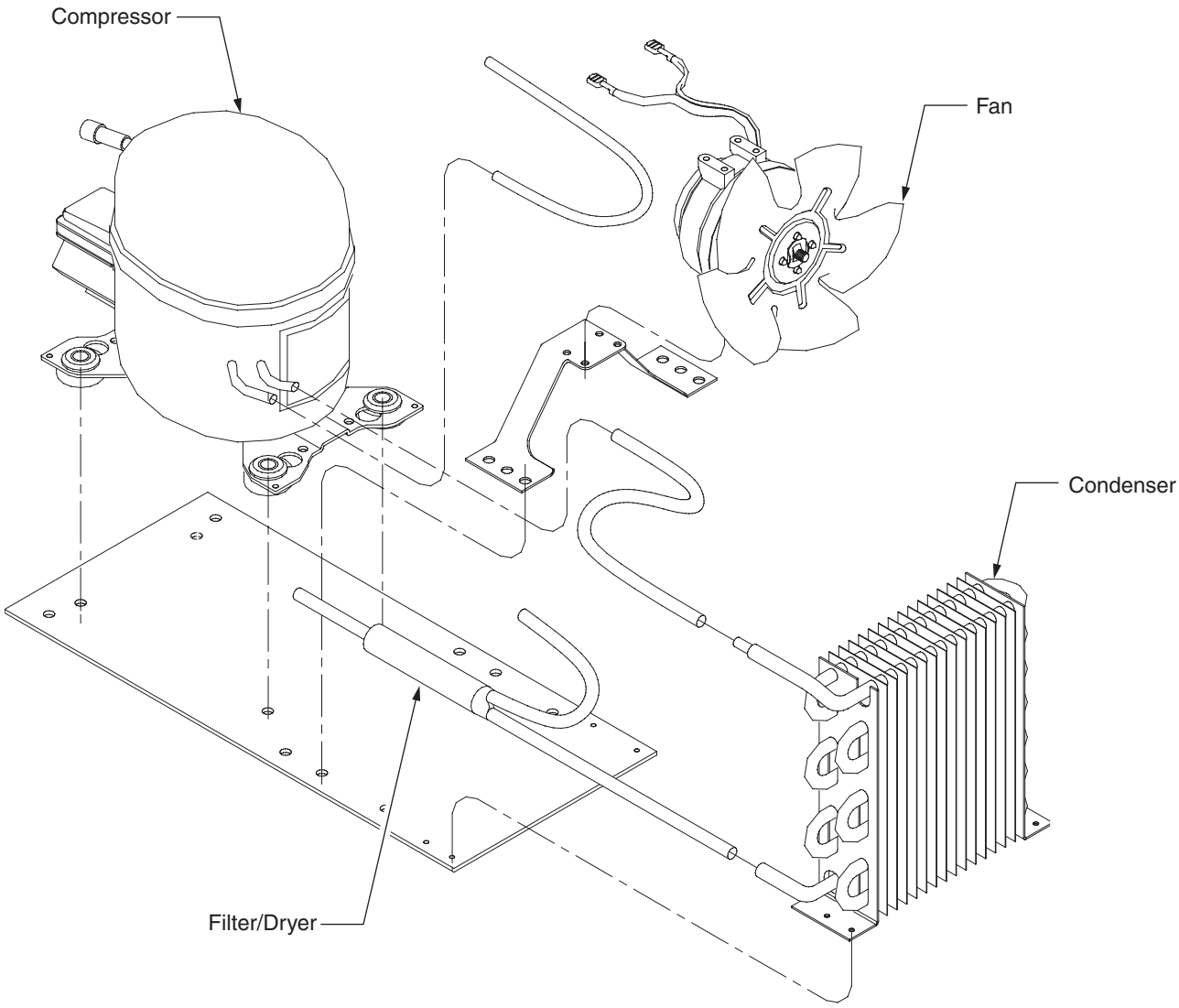

1.5 Description of the 900/900 MAX Heat System

The heat system is composed of a heater, a compressor heater, and an optional sampler controller compartment heater (Figure 2).

1.5.1 Heater Description

When outside temperatures are below the sample compartment (cabinet) set point temperature, the heater maintains the sample compartment set point temperature. The heater is controlled by the thermostat (Sampler Controller) through a solid state relay in the Power Supply/Thermal Control Box.

The heater's secondary purpose is to defrost the evaporator, as required, during refrigeration system operation.

Figure 2 Evaporator (Showing the Heater)

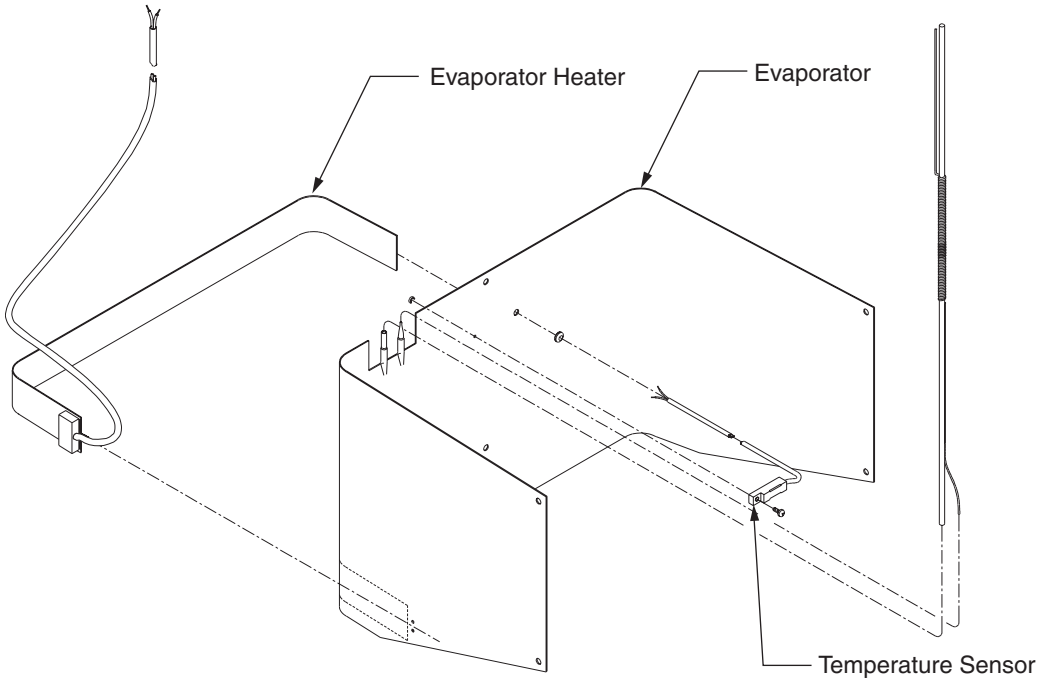

1.5.2 Compressor Heater Description

When outside temperatures are below 10 °C, the compressor crankcase needs heat applied to it.

Liquid refrigerant migration to the compressor occurs naturally within a refrigeration system. Liquid refrigerant migration results because oil has a great affinity for refrigerant and because the two liquids have different vapor pressures. The lower the temperature of the compressor crankcase oil in relation to the rest of the system, the faster and more completely the oil absorbs the refrigerant.

A refrigerant-oil mixture in the compressor will foam violently when the compressor starts and can cause all or most of the oil charge to be pumped out of the compressor (oil slugging). The compressor will then try to pump a liquid—causing broken valves, damaged pistons, and blown head gaskets. Also, a flooded start will deprive cylinders and bearings of proper lubrication.

Ideally, the compressor heater keeps the compressor crankcase oil warmer than the rest of the system. The compressor heater is controlled by the thermostat (Sampler Controller) through a solid state relay in the Power Supply/Thermal Control Box.

1.5.3 Optional Sampler Controller Compartment Heater

When outside temperatures drop below freezing, the Sampler Controller Compartment requires heat to prevent the pump tube from freezing. The Sampler Controller Compartment Heater is controlled by the thermostat (sampler controller) through a solid state relay in the Power Supply / Thermal Control Box.

Problem	Probable Cause/Solution
The displayed cabinet temperature does not agree with the measured cabinet temperature.	The thermal system is out of calibration. Perform a thermal system calibration (see page 19).
Cabinet Temp Fault or **Unable to Cool** appears on the Sampler Controller display. Cabinet temperature is above the set point temperature	Refer to 900/900 MAX All Weather Refrigerated Sampler, Troubleshooting Chart #1 on page 25
Cabinet Temp Fault or **Unable to Heat** appears on the Sampler Controller display. Cabinet temperature is below the set point temperature.	Refer to 900/900 MAX All Weather Refrigerated Sampler, Troubleshooting Chart #2 on page 27.
The power is turned on or the unit is plugged in and the compressor does not start for five minutes.	This is normal. The AWRS has a five-minute short cycle timer to protect the compressor. You must wait five minutes before the compressor will turn on (if called for).
The compressor turns on once every week during cold weather operation.	This is normal. The sampler has an exercise mode where the compressor is turned on once per week during cold weather operation. The compressor will remain on for five minutes.

Section 3 Servicing the AWRS Refrigeration System

WARNING
Only a trained and skilled service technician should perform repairs to this system.

Small, fractional horsepower refrigeration systems and compressors, such as the ones used in the AWRS, can be easily damaged. While larger systems can be very complex, fractional horsepower systems often require a higher level of skill and more meticulous workmanship to service successfully. For this reason, American Sigma recommends using the services of a skilled professional. All repair procedures should be done "by the book".

In the event of a compressor failure or any other major problem, contact American Sigma before proceeding with repairs. We will advise you concerning the most suitable replacement parts or procedures according to our most current design revision and we will give you information on any other improvements that should be implemented.

3.1 Required Tools

You must have the following tools to successfully repair an AWRS system. If you do not have these tools, contact a trained professional.

- Digital multimeter
- Refrigerant recovery system
- Gauge manifold
- Vacuum pump
- Vacuum manifold and vacuum lines
- Thermocouple vacuum gauge
- Charge scale accurate to 0.24 oz.

3.2 Turning System Power On

1. Confirm that the unit is plugged in and/or the circuit breaker is turned on.
2. Press the **ON** key located in the bottom right hand corner of the keypad.
3. The On LED should begin to blink and the display should turn on.

Note: *The refrigeration system will not start for five minutes after the sampler is plugged in/turned on. This provides for compressor "short cycle" protection.*

3.3 Turning System Power Off

1. Press the **OFF** key located in the bottom left hand corner of the keypad.
2. The On LED should stop blinking and the display should turn off.

3.4 Accessing Diagnostic Information on the Model 900 Controller

To access diagnostic information, press the **PUMP** key followed by the **TIME READ** key.

Press the **TIME READ** key to step through the following diagnostic information:

- OUTSIDE TEMP
- CABINET TEMP
- EVAP TEMP
- REFRIG-ON
- REFRIG-OFF
- HEAT-ON

- CALIB OFFSET
- SETPT TEMP

The remaining diagnostic information does not pertain to this manual. Quickly step through it.

The 900 Controller is the “thermostat”. To determine the cabinet set point temperature or the cabinet actual temperature, press the **TIME READ** key. The time and date appear, followed by the cabinet temperature then the cabinet set point temperature.

To adjust the cabinet set point temperature, refer to *Parameter Entry Mode* in the *Sigma 900 O & M Manual*.

To calibrate the thermal system, refer to the Thermal System Calibration Procedure on section 3.17 on page 19.

3.5 Accessing Diagnostic Information on the 900 MAX Controller

To access important diagnostic information, enter the following key strokes:

1. Press **MAIN MENU**.
2. Press **OPTIONS**.
3. Press **ADVANCED OPTIONS**.
4. Highlight **DIAGNOSTICS** and press **SELECT**.
5. Highlight **THERMAL SYSTEM** and press **SELECT**.

The 900 MAX Controller is the “thermostat”. To determine the cabinet set point temperature or the actual cabinet temperature, access the diagnostic information above.

3.6 Adjusting the Cabinet Set Point Temperature on the 900 MAX Controller

Enter the following keystrokes:

1. Press **MAIN MENU**.
2. Press **OPTIONS**.
3. Press **ADVANCED OPTIONS**.
4. Highlight **CALIBRATION** and press **SELECT**.
5. Highlight **THERMAL SETUP** and press **SELECT**.
6. Highlight **THERMAL SETPOINT** and press **SELECT**.
7. Enter the new cabinet set point temperature in °C and press **ACCEPT**.

To calibrate the thermal system, refer to the Thermal System Calibration Procedure.

3.7 Using the Thermostat

3.7.1 Using the Thermostat on the Model 900 Sampler Controller

The Power Supply / Thermal Control Box is located in the compressor compartment adjacent to the compressor. Cabinet temperature is controlled by the Sampler Controller (Figure 3).

3.7.1.1 Verifying Cabinet Temperature

1. Press the **TIME READ** key. After displaying the date and time, the cabinet temperature will appear.

Figure 3 900 Sampler Controller

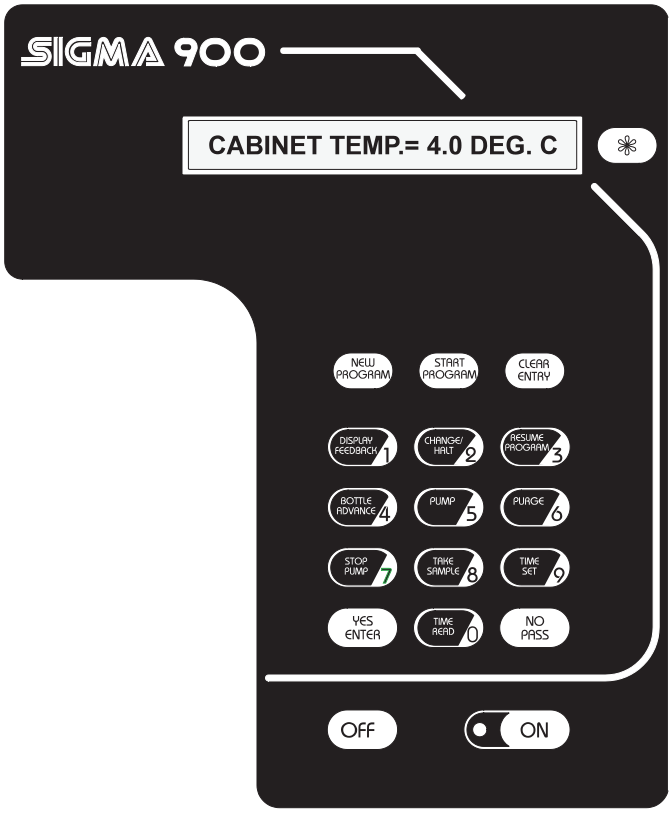

3.7.1.2 Verifying the Cabinet Set Point Temperature:

1. Press the **TIME READ** key. After observing the date, time, and cabinet temperature, the cabinet set point temperature will appear.

3.7.1.3 Resetting Cabinet Set Point Temperature:

1. Refer to *Parameter Entry Mode* in the *Sigma 900 Operation and Maintenance Manual*.

3.7.2 Using the Thermostat on the 900 MAX Sampler Controller

Cabinet temperature is controlled by the Sampler Controller (Figure 4).

Figure 4 900 Max Sampler Controller

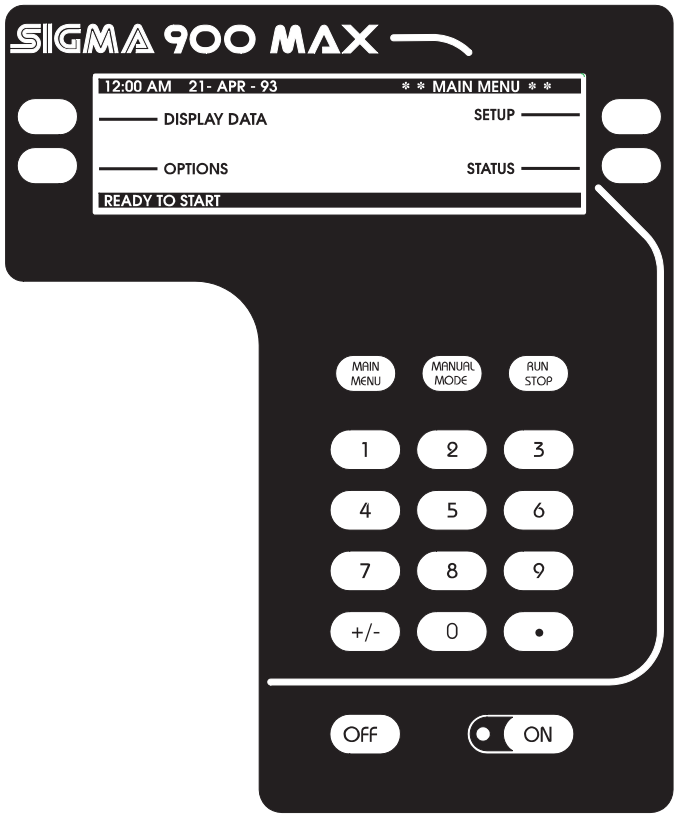

3.7.2.1 Verifying Cabinet Temperature

1. Press **MAIN MENU**.
2. Press **OPTIONS**.
3. Press **ADVANCED OPTIONS**.
4. Highlight **DIAGNOSTICS** and press **SELECT**.
5. Highlight **THERMAL SYSTEM** and press **SELECT**.

3.7.2.2 Verifying the Cabinet Set Point Temperature

1. Press **MAIN MENU**.
2. Press **OPTIONS**.
3. Press **ADVANCED OPTIONS**.
4. Highlight **DIAGNOSTICS** and press **SELECT**.
5. Highlight **THERMAL SYSTEM** and press **SELECT**.

3.7.2.3 Adjusting the Cabinet Set Point Temperature

1. Press **MAIN MENU**.
2. Press **OPTIONS**.
3. Press **ADVANCED OPTIONS**.
4. Highlight **CALIBRATION** and press **SELECT**.
5. Highlight **THERMAL SETUP** and press **SELECT**.
6. Highlight **THERMAL SETPOINT** and press **SELECT**.
7. Enter the new cabinet set point temperature in °C and press **ACCEPT**.

3.8 Checking the Power

Make sure that the unit is being served by an appropriate power line. For best results, use a dedicated branch circuit to limit the impact of other equipment on the AWRS operation. If you know, or suspect, that the line feeding the AWRS may be susceptible to “sagging” or occasions of low voltage, make a plan for its protection. Line voltage monitors with safety cut-out switches are relatively inexpensive and easy to install. Consider one as cheap insurance.

3.9 Checking the Ambient Temperature

Record the temperature in the area. Regardless of the AWRS design tolerances, try wherever possible to arrange a working environment of 60 to 80 °F.

3.10 Performing Diagnostics

First look for the obvious cause of trouble. Check to be sure electrical connections are tight and clean.

Be cautious if the compressor won't run, but is hot. The compressor has an internal thermal protector that must be allowed to cool before it will restart. Don't ruin an otherwise good compressor by being too impatient to let it cool.

When trying a restart, confirm that there is adequate line voltage at the compressor terminals. If the line voltage is very low, it may be that the compressor is indeed failed or failing, or merely means that a starting component is defective. Replace the start components and test again before changing the compressor.

3.11 Detecting and Repairing Leaks

When searching for refrigerant leaks, first look for evidence in the form of oil deposits or corroded fittings. Use an effective leak detector to narrow down your search and finish with a liquid leak finder to pinpoint the leak. Because refrigerant can move around and give misleading indications, you'll want to see the leak demonstrated with a bubble for positive proof.

Make the necessary repairs and replace the liquid line drier. Use proper refrigerant recovery, piping, evacuation and charging techniques (see section 3.13), being sure to comply with applicable regulations. Never operate the system if a leak is known to exist. This only delays the inevitable repair and may cause compressor failure.

3.12 Compressor Replacement

Contact American Sigma for guidance concerning proper replacement parts. Flush the system to ensure that no oil from the previous compressor remains. Pour out a little oil from the failed compressor and if appropriate, check for acid. You need to get the system running again, and also determine and correct the cause of the failure.

3.13 Evacuation

In this very important step, you will prepare the system to accept a fresh refrigerant charge. Do not use ordinary charging hoses to evacuate the system. They regularly leak and collect contaminants that will corrupt the vacuum. Use only copper lines or hoses designed specifically for vacuum duty. Apply the vacuum pump and lines to both the high and low sides of the system. Evacuate for as long as is reasonable; from one hour to as long as overnight if convenient.

While the primary function of the evacuation is to “de-gas” or remove air left in the system by the repair procedure, use it for more than that. Use it to make sure that no leaks remain in the system. By using a “leak-back” or “pressure rise” testing procedure, you can determine the presence of a leak or moisture.

After you have attained a good vacuum (about 20 to 100 microns), record the value and shut the main vacuum manifold valve to isolate the vacuum pump from the system. Record the starting time. After one minute, check and record the system pressure. This first minute allows the pressures in the system and manifold to balance and provides a baseline for testing the rate of “leak-back.” Expect a starting value around 100 to 300 microns.

Continue to record the observed pressure values over time, for example, every five minutes for a total sampling time of 20 to 60 minutes. To better observe any trends, plot this data on a graph.

When interpreting the trend, four possible results exist (see Figure 5):

1. The pressure values show a steady climb. This indicates a leak in the system or vacuum lines.
2. The pressure climbs to about 1500 microns and stops. This indicates the presence of moisture in the system.
3. The pressure rises but slows down quickly. This suggests that contaminants such as air are present. Repeat the evacuation and pressure-rise procedure one or more times. If air is present, each subsequent test will show improvement over the previous test.
4. The pressure rises a bit, then stops. A value between 100 and 500 microns indicates that your system is prepared for charging.

Make whatever corrections are indicated by your test. Repeat the tests until you can demonstrate #4, above.

Figure 5 Interpreting the Trend

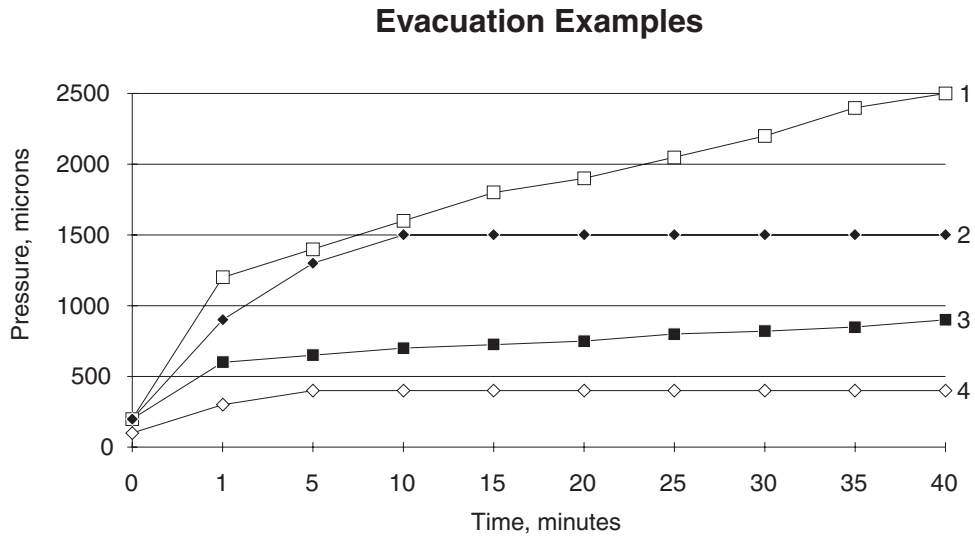

3.14 Refrigerant Charge

Use care when introducing new refrigerant into the system. This unit requires a “critical charge”. A slight difference in weight is significant!

Do not leave your gauge manifold connected to the system any longer than necessary. Standard manifolds are notorious for leaks (both in losing refrigerant and introducing air), especially after having been in service for a few months or longer.

3.15 Test Run Following Repair

Recheck the main power to the unit. Have a qualified electrician tighten all electrical connections in the line, even as far back as the circuit breaker panel. Many compressors have been replaced when the problem was a loose connection. Low voltage, for any reason, is very damaging and very common.

Keep accurate records of your observations. They may prove invaluable in future troubleshooting efforts.

3.16 Routine Maintenance

The AWRS requires little maintenance. The easy checks below will result in longer life:

- Condenser and air inlet and outlet grills (the most common and obvious routine maintenance function): Set up a schedule suited to your operating environment to ensure that these remain clean and unobstructed.
- Door gasket: A deteriorating gasket or door that fails to latch properly or consistently will not only compromise the sample compartment temperature, it will require much more running time, and will quickly age the system.
- Power cord: Don't allow an added extension cord or combine the AWRS with other units on the same outlet.
- Clearances: Keep an appropriate air space around the back and sides of the unit and don't permit clutter to accumulate on or around the unit.

3.17 Thermal System Calibration Procedure

To verify the cabinet temperature, place a laboratory-grade thermometer into a beaker with 150 mL water. Place the beaker into the right rear corner of the sample compartment and close the sample compartment door. Allow the unit to run for 2 to 3 hours. This will assure equilibrium between the cabinet temperature and the water in the beaker.

Compare the cabinet temperature reading from the display with the temperature indicated on the thermometer. If the readings do not agree, calibrate the Thermal System.

1. Shut off the unit by pressing the **OFF** key on the sampler controller.
2. Prepare an ice bath in a 500 mL beaker, using a 50/50 mix of crushed ice and water.
3. Remove the Reference Temperature Sensor (RTS), a cylindrical-shaped sensor located in the sample compartment right rear corner, from its bracket. Place the RTS and a laboratory grade thermometer into the ice bath.
4. Place the ice bath in the right rear corner of the sample compartment next to the RTS bracket.

5. With the unit off and its door closed, wait approximately 30 minutes for the RTS and laboratory grade thermometer to stabilize temperature within the ice bath.
6. After waiting 30 minutes, mix (swirl) the ice bath.
7. Turn on the unit by pressing the **ON** key on the controller.
8. For the 900 controller, with the controller in any one of the three standby states (Ready to Start, Program Halted, or Program Complete):
   a. Press and hold the **CHANGE/HALT** key for several seconds until the display reads **CALIBRATE CABINET TEMP?**.
   b. Press the **YES/ENTER** key and the display will read **CABINET TEMP = ___ DEG C**.
   c. Enter the reading indicated on the thermometer in the ice bath in °C, to the nearest 0.1 °C.
   d. Two additional questions will be displayed after the temperature is entered. Press the **NO/PASS** key to each of these questions and the controller will return to the standby state.
9. For the 900 MAX controller, enter the following keystrokes:
   a. Press **MAIN MENU**.
   b. Press **OPTIONS**.
   c. Press **ADVANCED OPTIONS**.
   d. Highlight **CALIBRATION** and press **SELECT**.
   e. Highlight **THERMAL SETUP** and press **SELECT**.
   f. Highlight **THERMAL CALIBRATE** and press **SELECT**.
10. Enter the new value read from the thermometer in the ice bath. Enter temperature in °C to the nearest 0.1 °C and press **ACCEPT**.

3.18 Summary

Emphasize to AWRS users the importance of noticing changes in the unit's sound or behavior. Early reporting and diagnosis is essential in limiting downtime and expense. Whenever doing any work to or around the unit, always leave it neat and clean and fully reassembled. Equipment that is unsightly will get less care and respect from others.

Sigma 900 and 900 MAX R-134A (Non-CFC) Compressor Specifications

Matsushita 115 V, 60 Hz Compressor or 100 V, 50 Hz Compressor

Model No.	SD43C90JAU6
HP	1/10
Rated BTUH	461 BTUH
Refrigerant	R134A
Oil Charge	7.25 fl. oz.
Refrigerant Charge	6.0 oz.
Running Current Draw	approx. 1.6 Amps

Tecumseh, 115 V, 60 Hz Compressor or 100 V, 50 Hz Compressor

Model No.	AE1332Y
HP	1/10
Rated BTUH	466 BTUH
Refrigerant	R134A
Oil Charge	10.0 fl. oz.
Refrigerant Charge	10.0 oz.
Running Current Draw	approx. 2.2 Amps

Tecumseh, 220 V Compressor

Model No.	AEA1338YXC
HP	1/10
Rated BTUH	466 BTUH
Refrigerant	R134A
Oil Charge	10.0 fl. oz.
Refrigerant Charge	8.0 oz.
Running Current Draw	approx. 0.95 Amps

R12 Replacement

If you have an older unit and R12 refrigerant is no longer available in your area, Sigma recommends using R406A (Blend) as a suitable replacement for R12.

When using R406A, the charge levels for compressors will be 3.5 oz. due to the volume difference in the refrigerants. Take care to avoid overcharging the

unit. Contact your local representative or technical support for a supplier of R406A in your area.

900/900 MAX Thermal Problem Evaluation Fax Back Form

AWRS Thermal Problem Evaluation - 010, American Sigma, Inc., 1-800-635-4567

To: AWRS Problem Evaluation	**From:**
Company: American Sigma, Inc.	**Company:**
Fax: (970) 461-3915	**Fax:**

Date:	**Evaluated by:**	**Company:**
Site ID:	**Company Phone No.: ( )**	
AWRS Serial No.:	**AWRS Model No.:**	
Compressor Model No.:	**Compressor Serial No.:**	

Detailed description of problem:

DANGER: AC line voltage is exposed (heat sinks, wiring, circuit board, etc.) when power supply/thermal control box cover is removed!

Is the AWRS on its own AC power circuit? ❒ Yes ❒ No

Is the AC power circuit breaker on, is the unit plugged in, and is AC power supplied to the unit? ❒ Yes ❒ No

Is the Sampler Controller fuse good? ❒ Yes ❒ No

Is the Power Supply/Thermal Control Board fuse good? ❒ Yes ❒ No

Are all wires within the Power Supply/Thermal Control Box properly inserted into terminal blocks and tight?
Be sure that AC power is totally removed from the AWRS during this check! ❒ Yes ❒ No

Is the "On" LED blinking on the Sampler Controller keypad? ❒ Yes ❒ No

If the problem still exists, follow the steps below:

1. Turn the sampler controller off.
2. Open the sample compartment door.
3. Wait 15 minutes.
4. Close the sample compartment door.
5. Turn the Sample Controller on.
6. Wait 5 minutes.
7. Begin taking readings.

AC Measurements (located in Power Supply/Thermal Control Box)

AC voltage at TB8 (AC line input) ..... _____ V AC
AC voltage at TB4 (evaporator heater) ..... _____ V AC
AC voltage at TB5 (compressor)..... _____ V AC
AC voltage at TB9 (compressor heater)..... _____ V AC
AC voltage at TB7 (xformer secondary)..... _____ V AC
AC amp draw (AC line feeding AWRS) ..... _____ V AC Amps

DANGER: AC line voltage is exposed (heat sinks, wiring, circuit board, etc.) when power supply/thermal control box cover is removed!

DC Measurements (located in Power Supply/Thermal Control Box)

DC voltage at TB6C pin 1 (VAD+)..... _____ V DC (A/D 5 volt supply)
DC voltage at TB6C pin2 (ADREF)..... _____ V DC (A/D 2.5 volt reference)
DC voltage at TP1 (EVAPHTR) ..... _____ V DC (0 or 5 volt DC drive signal)
DC voltage at TP2 (COMPFAN) ..... _____ V DC (0 or 5 volt DC drive signal)
DC voltage at TP5 (HEAT)..... _____ V DC (0 or 5 volt DC drive signal)
DC voltage at TP8 (AMB) ..... _____ V DC (Thermistor voltage, outside temp.)
DC voltage at TP7 (REF)..... _____ V DC (Thermistor voltage, cabinet temp.)
DC voltage at TP6 (EVAP)..... _____ V DC (Thermistor voltage, evap. temp.)

Diagnostic LEDs (located in the Power Supply/Thermal Control Box)

Power Supply: ❒ On ❒ Off

Comp Enable: ❒ On ❒ Off

Evap. Heater Enable: ❒ On ❒ Off

Comp./Cntl. Heater Enable: ❒ On ❒ Off

Thermal Diagnostic Display (refer to the Service or Instrument Manual to access the display)

Outside Temp.:_____°C

Cabinet Temp.: _____°C

Evap. Temp.: _____°C

Calib. Offset (may not yet be implemented): _____°C

Refrig-On: _____ minutes (900 only)

Refrig-Off: _____ minutes (900 only)

Heat-On: _____ minutes, (900 only)

Setpt Temp. (may not yet be implemented): _____°C

Visual

Is the compressor physically running? ❒ Yes ❒ No

Is the fan physically running? ❒ Yes ❒ No

What is the door gasket condition? ❒ Good ❒ Bad

Has the evaporator appeared heavily frosted lately? ❒ Yes ❒ No

Ambient Conditions

Installation: ❒ Indoors ❒ Outdoors

If outdoors, is it exposed to direct sun? ❒ Yes ❒ No

Local conditions (recent lightning storm, near high voltage lines or microwave tower):

Ambient temperature during test: _____°F

Additional Questions

Date of last thermal calibration? _____/_____/_____

Was a crushed ice bath used during the thermal calibration? ❒ Yes ❒ No

How long has the AWRS been in service? _____ ❒ Years ❒ Months

Is the evaporator heater warm? (Use caution, it may be hot!) ❒ Yes ❒ No

Has the evaporator heater separated from the evaporator? (Use caution, it may be hot!) ❒ Yes ❒ No

Is the optional Sampler Controller Compartment Heater installed in your unit? ❒ Yes ❒ No

900/900 MAX All Weather Refrigerated Sampler, Troubleshooting Chart #1

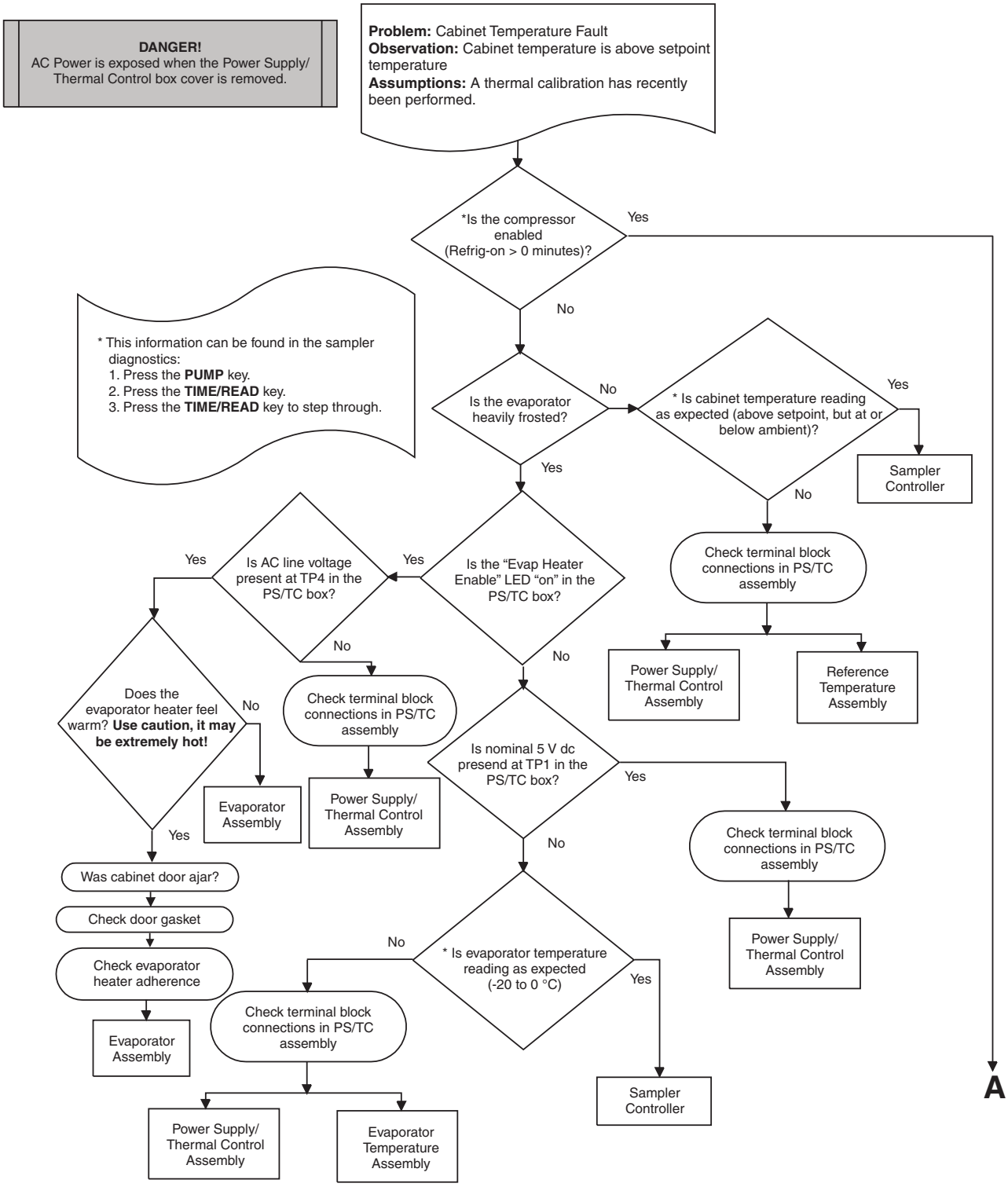

Troubleshooting Chart #1, continued

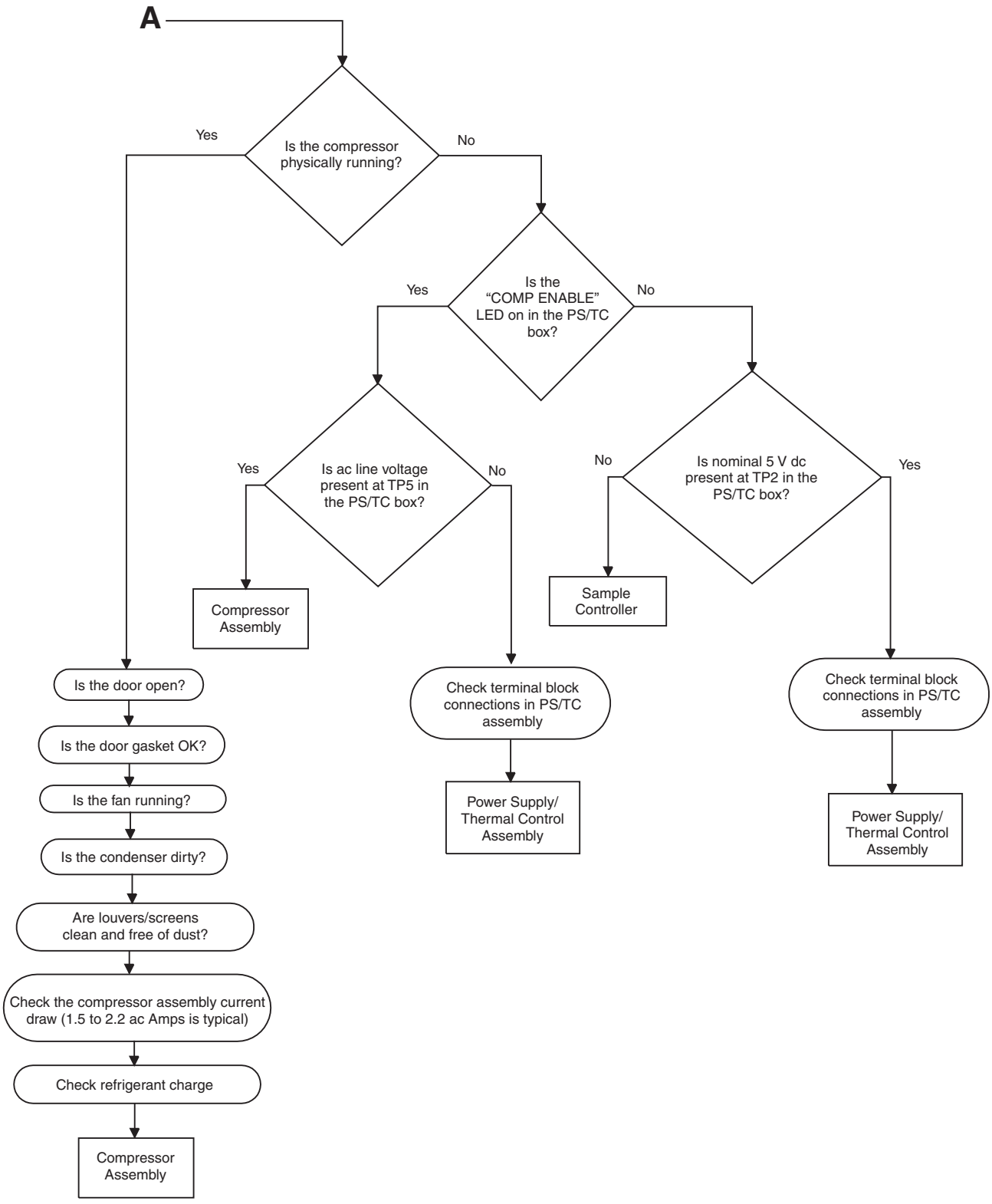

900/900 MAX All Weather Refrigerated Sampler, Troubleshooting Chart #2

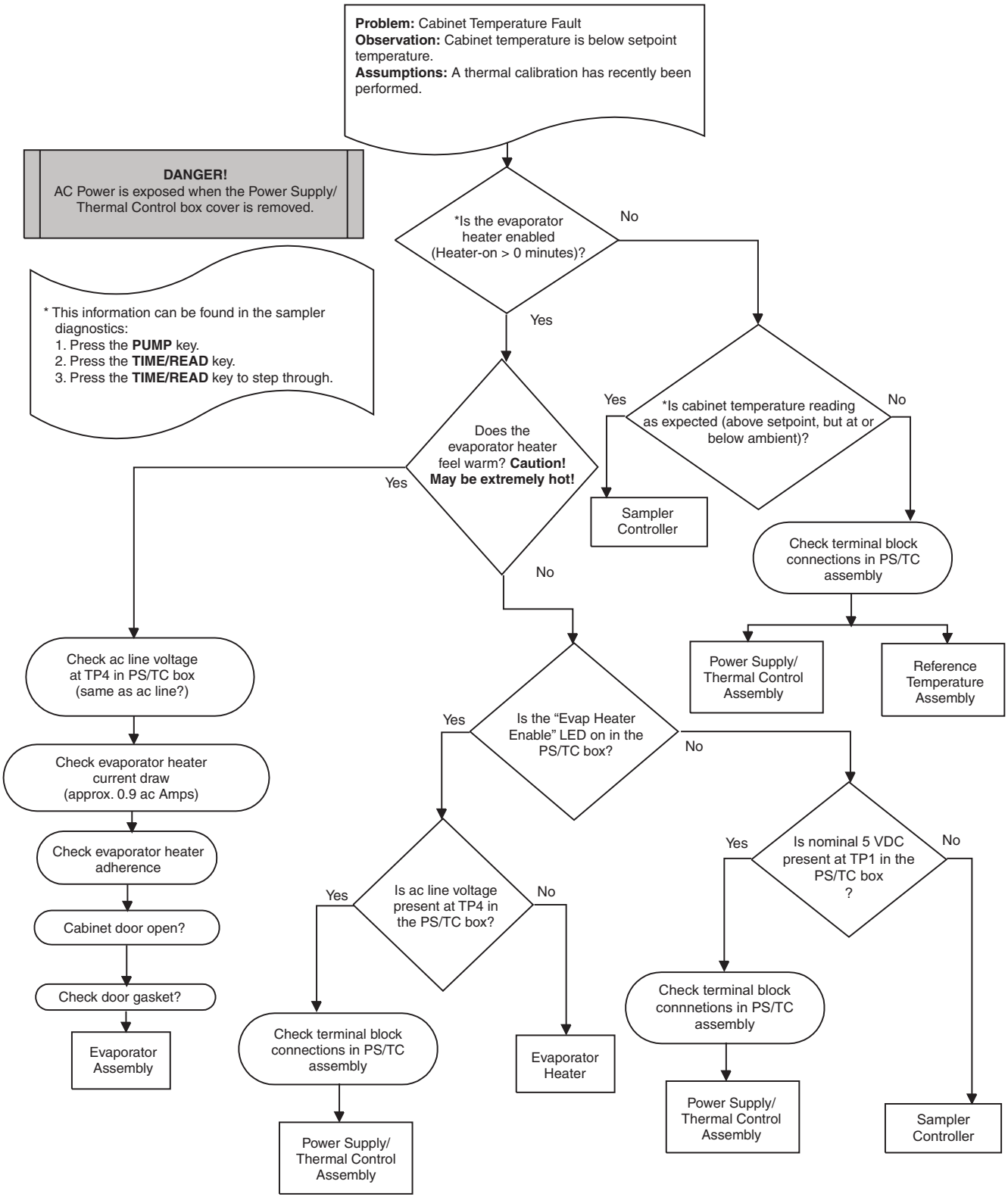

Appendix B Conversion Charts

The electronic temperature sensor voltage-to-temperature conversion can be used with any of the three electronic temperature sensors to diagnose a bad sensor or bad sensor interface circuitry.

Example (to be performed by a qualified service technician only):
To determine if the reference temperature sensor is working correctly, measure the reference temperature sensor dc voltage.

DANGER
ac line voltage is present in the Power Supply / Thermal Control Box.

The reference temperature sensor dc voltage can be measured between TP7 (REF) and TP4 (AGND) in the Power Supply /Thermal Control Box

Using the voltage-to-temperature conversion chart, find the measured dc voltage (Vthermistor, volts). Read the corresponding temperature (°C) from the adjacent column. The temperature from the chart, minus any calibration offset, should correspond with displayed cabinet temperature.

Determine the actual cabinet temperature by placing a beaker filled with 150 mL of water and a thermometer near the reference temperature sensor. Wait 60 minutes to allow the beaker of water to stabilize in temperature. If the temperatures do not correspond, you may have a bad sensor.

The temperature read from the chart should also correspond with the temperature shown in the sampler controller thermal diagnostics* (**CABINET TEMP = ?? DEGREES C**). If they do not, bad sensor interface circuitry is possible.

* Access the sampler controller thermal diagnostics on the 900 sampler controller display by pressing the **PUMP** key, followed by the **TIME READ** key. Subsequently pressing the **TIME READ** key will step you through the different diagnostic information. Access the sampler controller thermal diagnostics on the 900 MAX sampler controller display by pressing the following keystrokes: **MAIN MENU**, **OPTIONS**, **ADVANCED OPTIONS**, **DIAGNOSTICS**, **THERMAL**.

Electronic Temperature Sensor Voltage to Temperature Conversion Chart

Vthermistor (V)	Temperature (°C)	Vthermistor (V)	Temperature (°C)	Vthermistor (V)	Temperature (°C)
0.310	50.19	0.730	24.26	1.160	8.59
0.320	49.24	0.740	23.83	1.170	8.27
0.330	48.31	0.750	23.40	1.180	7.95
0.340	47.42	0.760	22.98	1.190	7.63
0.350	46.55	0.770	22.57	1.200	7.31
0.360	45.70	0.780	22.15	1.210	6.99
0.370	44.88	0.790	21.75	1.220	6.67
0.380	44.08	0.800	21.34	1.230	6.36
0.390	43.31	0.810	20.94	1.240	6.04
0.400	42.55	0.820	20.54	1.250	5.73
0.410	41.81	0.830	20.15	1.260	5.42
0.420	41.09	0.840	19.76	1.270	5.10
0.430	40.38	0.850	19.38	1.280	4.79
0.440	39.70	0.860	18.99	1.290	4.48
0.450	39.02	0.870	18.61	1.300	4.17
0.460	38.36	0.880	18.24	1.310	3.86
0.470	37.72	0.890	17.86	1.320	3.55
0.480	37.09	0.900	17.49	1.330	3.24
0.490	36.47	0.910	17.12	1.340	2.93
0.500	35.86	0.920	16.76	1.350	2.62
0.510	35.26	0.930	16.39	1.360	2.31
0.520	34.68	0.940	16.03	1.370	2.00
0.530	34.10	0.950	15.67	1.380	1.69
0.540	33.54	0.960	15.32	1.390	1.39
0.550	32.98	0.970	14.96	1.400	1.08
0.560	32.43	0.980	14.61	1.410	0.77
0.570	31.90	0.990	14.26	1.420	0.46
0.580	31.37	1.000	13.92	1.430	0.15
0.590	30.85	1.010	13.57	1.440	-0.15
0.600	30.33	1.020	13.23	1.450	-0.46
0.610	29.83	1.030	12.88	1.460	-0.77
0.620	29.33	1.040	12.54	1.470	-1.08
0.630	28.84	1.050	12.21	1.480	-1.39
0.640	28.35	1.060	11.87	1.490	-1.70
0.650	27.87	1.070	11.54	1.500	-2.00
0.660	27.40	1.080	11.20	1.510	-2.31
0.670	26.94	1.090	10.87	1.520	-2.62
0.680	26.48	1.110	10.21	1.530	-2.93
0.690	26.02	1.120	9.88	1.540	-3.24
0.700	25.57	1.130	9.56	1.550	-3.55
0.710	25.13	1.140	9.23	1.560	-3.87
0.720	24.69	1.150	8.91	1.570	-4.18

Vthermistor (V)	Temperature (°C)	Vthermistor (V)	Temperature (°C)	Vthermistor (V)	Temperature (°C)
1.580	-4.49	1.850	-13.38	2.110	-23.87
1.590	-4.80	1.860	-13.74	2.120	-24.35
1.600	-5.12	1.870	-14.09	2.130	-24.84
1.610	-5.43	1.880	-14.46	2.140	-25.34
1.620	-5.75	1.890	-14.82	2.150	-25.85
1.630	-6.07	1.900	-15.19	2.160	-26.36
1.640	-6.38	1.910	-15.56	2.170	-26.89
1.650	-6.70	1.920	-15.93	2.180	-27.43
1.660	-7.02	1.930	-16.30	2.190	-27.98
1.670	-7.34	1.940	-16.68	2.200	-28.55
1.680	-7.66	1.950	-17.07	2.210	-29.13
1.690	-7.99	1.960	-17.46	2.220	-29.72
1.700	-8.31	1.970	-17.85	2.230	-30.33
1.710	-8.64	1.980	-18.24	2.240	-30.96
1.720	-8.97	1.990	-18.64	2.250	-31.60
1.730	-9.29	2.000	-19.05	2.260	-32.26
1.740	-9.62	2.010	-19.46	2.270	-32.95
1.750	-9.96	2.020	-19.87	2.280	-33.66
1.760	-10.29	2.030	-20.29	2.290	-34.39
1.770	-10.63	2.040	-20.72	2.300	-35.15
1.780	-10.96	2.050	-21.15	2.310	-35.95
1.790	-11.30	2.060	-21.59	2.320	-36.77
1.800	-11.64	2.070	-22.03	2.330	-37.64
1.810	-11.99	2.080	-22.48	2.340	-38.54
1.820	-12.33	2.090	-22.94	2.350	-39.49
1.830	-12.68	2.100	-23.40	2.560	-40.50
1.840	-13.03				

Appendix C Circuit Board Schematic

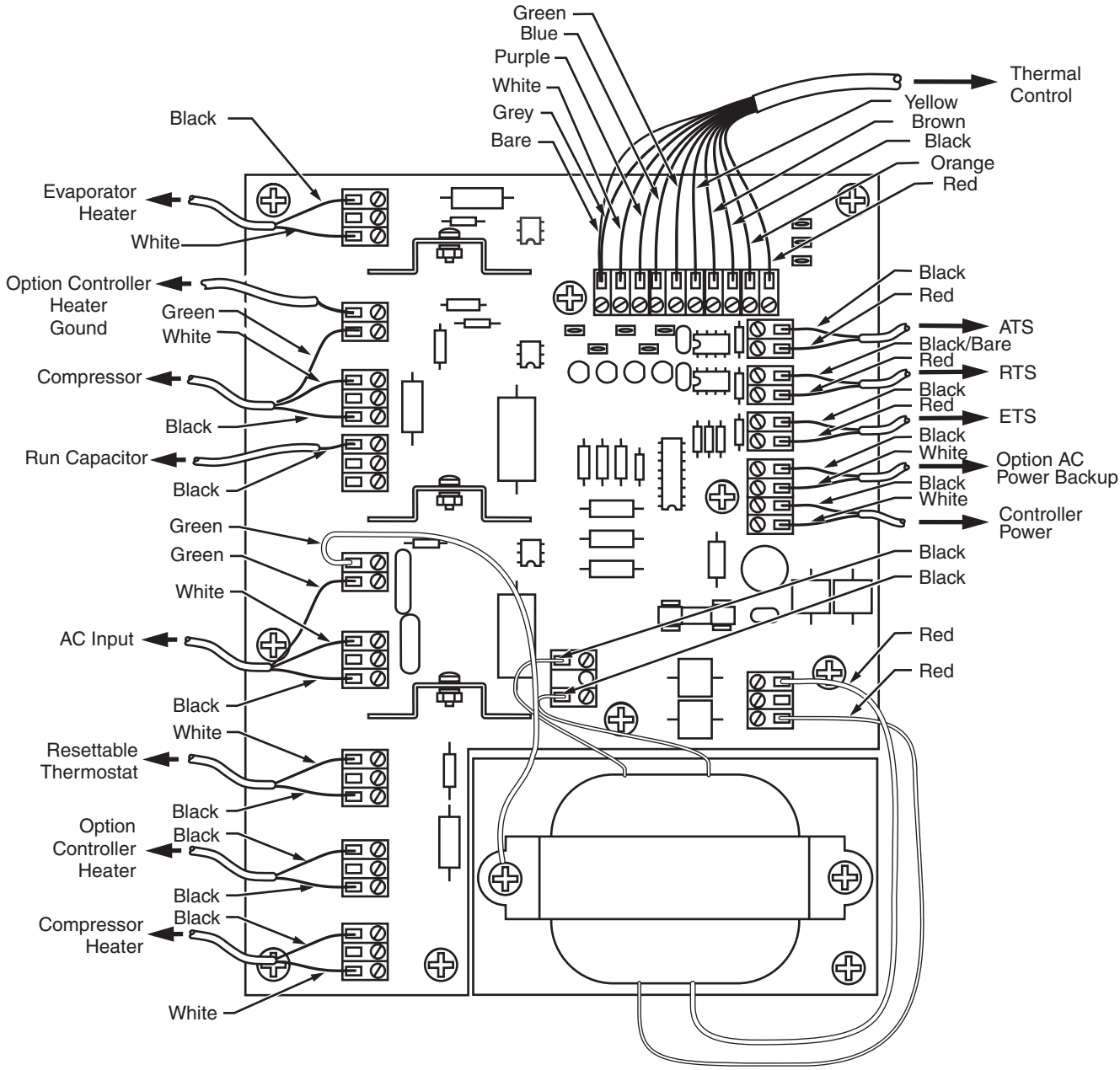

GENERAL INFORMATION

At American Sigma, customer service is an important part of every product we make.

With that in mind, we have compiled the following information for your convenience.

U.S.A. Customers

By Telephone:
(800) 635-4567

By Fax:
(970) 461-3915

Ordering information by E-mail:
sigma@americansigma.com

By Mail:
American Sigma
P.O. Box 389
Loveland, Colorado 80539-0389
U.S.A

Information Required

- American Sigma account number (if available)
- Your name and phone number
- Purchase order number
- Brief description or model number
- Billing address
- Shipping address
- Catalog number
- Quantity

Ordering Outside the U.S.A.

American Sigma maintains a worldwide network of dealers and distributors. To locate the representative nearest you, send E-mail to intl@hach.com or visit www.americansigma.com.

Technical Support in the U.S.A. or Outside Europe

Technical and Customer Service Department personnel are eager to answer questions about our products and their use. In the U.S.A., call 1-800-635-1230. Outside the U.S.A. and Europe, send E-mail to intl@hach.com.

Technical Support for European Customers

Contact Bühler Montec Group, Ltd.

By Telephone:
+44 (0) 161 872 1487

By Fax:
+44 (0) 161 848 7324

By E-mail:
helpdesk@bmgl.com

By Mail:
Bühler Montec Group, Ltd.
Pacific Way
Salford
Manchester
M5 2DL
U.K.

Repair Service

Authorization must be obtained from American Sigma before sending any items for repair. Please contact the American Sigma Service Center serving your location.

In the United States or Outside Europe

American Sigma
P.O. Box 389
Loveland, Colorado, 80539-0389 U.S.A.

Telephone: 1-800-635-1230 or (970) 669-3050
Fax: (970) 669-2932

In Europe

Bühler Montec Group, Ltd.
Pacific Way
Salford
Manchester
M5 2DL
U.K.

Fax: +44 (0) 161 848 7324
E-mail: helpdesk@bmgl.com
By Telephone: +44 (0) 161 872 1487

American Sigma warrants this product to the original purchaser against any defects that are due to faulty material or workmanship for a period of one year from date of shipment.

In the event that a defect is discovered during the warranty period, American Sigma agrees that, at its option, it will repair or replace the defective product or refund the purchase price, excluding original shipping and handling charges. Any product repaired or replaced under this warranty will be warranted only for the remainder of the original product warranty period.

This warranty does not apply to consumable products such as chemical reagents; or consumable components of a product, such as, but not limited to, lamps and tubing.

Contact American Sigma or your distributor to initiate warranty support. Products may not be returned without authorization from American Sigma.

Limitations

This warranty does not cover:

- **Damage caused by acts of God, natural disaster, labor unrest, acts of war (declared or undeclared), terrorism, civil strife or acts of any governmental jurisdiction**
- **Damage caused by misuse, neglect, accident or improper application or installation**
- **Damage caused by any repair or attempted repair not authorized by American Sigma**
- **Any product not used in accordance with the instructions furnished by American Sigma**
- **Freight charges to return merchandise to American Sigma**
- **Freight charges on expedited or express shipment of warranted parts or product**
- **Travel fees associated with on-site warranty repair**

This warranty contains the sole express warranty made by American Sigma in connection with its products. All implied warranties, including without limitation, the warranties of merchantability and fitness for a particular purpose, are expressly disclaimed.

Some states within the United States do not allow the disclaimer of implied warranties and if this is true in your state the above limitation may not apply to you. This warranty gives you specific rights, and you may also have other rights that vary from state to state.

This warranty constitutes the final, complete, and exclusive statement of warranty terms and no person is authorized to make any other warranties or representations on behalf of American Sigma.

Limitation of Remedies

The remedies of repair, replacement or refund of purchase price as stated above are the exclusive remedies for the breach of this warranty. On the basis of strict liability or under any other legal theory, in no event shall American Sigma be liable for any incidental or consequential damages of any kind for breach of warranty or negligence.

AMERICAN SIGMA

American Sigma c/o
Hach Company
P.O. Box 389
Loveland, Colorado 80539-0389
Telephone: (970) 669-3050
FAX: (970) 669-2932

FOR TECHNICAL ASSISTANCE, PRICE INFORMATION AND ORDERING:
In the U.S.A. - Call toll-free 800-635-4567
In Europe - Contact Bühler Montec Group, Ltd., +44 (0) 161 872 1487
On the Worldwide Web - www.americansigma.com; E-mail - sigma@americansigma.com

APPENDIX C
Manufacturer's Information

Baker Monitor Pitless Adapter
Product Data

DRAFT

Monitor® PS

MUNICIPAL/INDUSTRIAL PRODUCTS CATALOG INDEX

Page No.

WELD ON PITLESS ADAPTER 2

STANDARD INDUSTRIAL UNITS 4-27
6" thru 16" Well Sizes Available
Units available for Flowing Wells
- General Information 4
- Part Number Explanation 5
- Engineering Specs 6-7
- Specifications 9-12
- Shipping Weights 13-14
- Spools & Spool Cable Seals 15
- Cap Cable Seals 15
- O-Ring Guide 16
- Installation Instructions 17
- Parts Breakdown 19-27
- Transition Sleeve 29

CUSTOM INDUSTRIAL UNITS 28-52
10" thru 30" Well Sizes Available
Units available for Flowing Wells
- General Information 29
- Part Number Explanation 30
- Specifications 31-45
- Cap Cable Seals 46
- Installation Instructions 47
- Parts Breakdown 48-51
- Water Sampler 52
- Transition Sleeve 29

BOOSTER STATIONS 53-73
4" thru 30" Well Sizes Available
- General Information 53-55
- Part Number Explanation 56
- Engineering Specs 57
- Specifications 58-67
- Parts Breakdown 68-73

CUSTOM TURBINE UNITS 74-90
10" thru 20" Well Sizes Available
Units available for Flowing Wells
- Part Number Explanation 74
- General Information 75
- Specifications 76-87
- Parts Breakdown 89-90
- Installation Instructions 88

A Division of :

BAKER manufacturing company

Printed in the USA
Revised 7-15-05

Monitor Pitless units conform to the Recommended Standards for Water Works, Great Lakes Upper Mississippi River Board of State Public Health & Environmental Managers and Water Systems Council PAS-97 standards.

Custom Pitless Installation

Booster Station Installation

WARRANTY STATEMENT

Baker warrants the goods manufactured by it to be free from defects in material or workmanship under normal use or service, for a period of one year from date of shipment.

This warranty does not apply to goods or parts not manufactured by Baker, instead Baker's obligation for these goods or parts is limited to the actual warranty extended to Baker by the manufacturer.

BAKER MAKES NO OTHER EXPRESS OR IMPLIED WARRANTIES OF ANY KIND WITH RESPECT TO THE GOODS, PARTS AND MATERIALS, INCLUDING BUT NOT LIMITED TO, ANY IMPLIED WARRANTY AS TO MERCHANTABILITY OR AS TO THE FITNESS OF THE MERCHANDISE FOR A PARTICULAR USE AND SHALL NOT BE LIABLE FOR ANY LOSS OR DAMAGE, DIRECTLY OR INDIRECTLY, ARISING FROM THE USE OF SUCH MERCHANDISE OR FOR CONSEQUENTIAL OR INCIDENTAL DAMAGES.

WELD ON PITLESS ADAPTER

8123BEZ EZ WELD ON TEAR DROP DESIGNED BOTTOM
FOR EZ WELDING ONTO A STEEL CASING IN
8", 10" AND 12" I.D. WELL SIZES

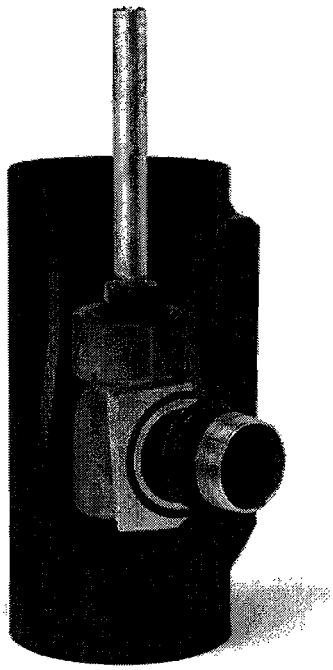

8123BEZ FEATURES:

- Durable fabricated steel housing - lead free brass elbow, stainless steel discharge, large drain hole in the pull pipe port, 3" FIP pull pipe, 3" FIP drop pipe, 3" stainless steel MIP discharge and large o-ring seal.
- Designed to be welded onto 8", 10" and 12" I.D. steel casing
- Designed for shallow or deep settings and high working pressures up to 300 PSI
- Durable steel housing with tear drop design for EZ bottom welding
- Water contacts only 304 stainless steel and lead free brass elbow for long term corrosion protection.
- No obstruction in the casing I.D. when the lead free brass elbow is removed.
- Stainless steel 10° tapered slip fitting design on the elbow for easy installation and removal at time of servicing.
- Large O-Ring neoprene seal
- Large drain hole in the 3" FIP pull pipe port.
- Designed for 10,000 lbs. load.

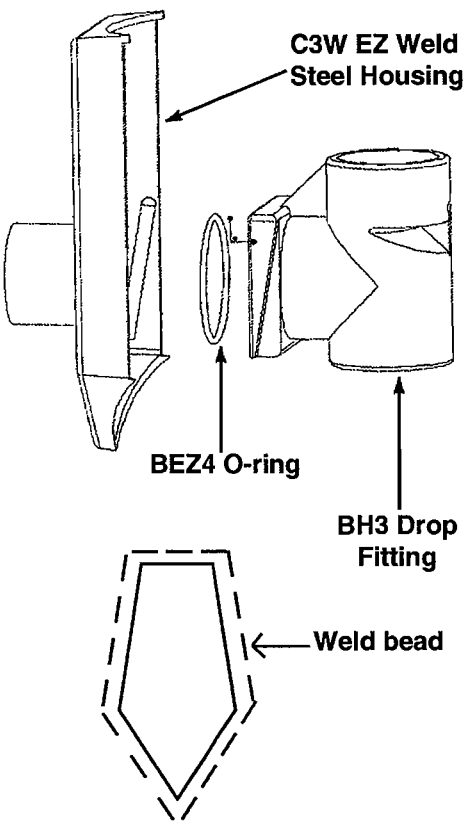

INSTALLATION INSTRUCTIONS

- Locate the template (provided) over the installation location on the steel pipe where you want to install the Monitor E-Z Weld Pitless Adapter.
- Center punch at points A on the template.
- Connect all A points with A lines.
- Flame cut over lines. Note: Cut must be parallel with centerline of pipe.
- After opening has been cut, pry out the cut casing at the bottom corner.
- BH3 drop fitting must fit through the cut hole.
- Clean off all slag and burrs on the cut casing opening. Place the C3W EZ weld steel housing onto the opening. Tac the corners to hold the steel housing in place. Weld the top and sides to the steel casing. Note: see diagram.

8123BEZ Pitless Adapter Pressure Drop Test

Using an 80gpm pump to supply water flow
8/20/02 data

Flow Rate (GPM)	Inlet Pressure (PSI)	Outlet Pressure (PSI)	Pressure Drop (PSI)
40	4	3	1
60	5.5	4.5	1
80	8.5	7	1.5

WHY A PITLESS UNIT?

The standard above ground "Well House" or "Well Pit" left much to be desired as solutions to sanitation, convenience and freeze protection.

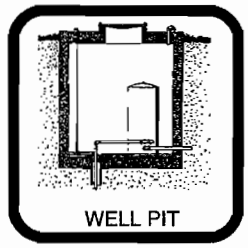

Monitor (A Division of Baker Manufacturing) developed the first solution to eliminate the "well house and well pit" – with the Pitless Adapter and Pitless System.

The Pitless system allows the water to be directed to the service underground below the frost line, thus preventing any form of surface contamination.

The Pitless Adapter and Pitless Units are designed so you can remove the pump for service and not disturb any of the external piping in the well system.

STANDARD

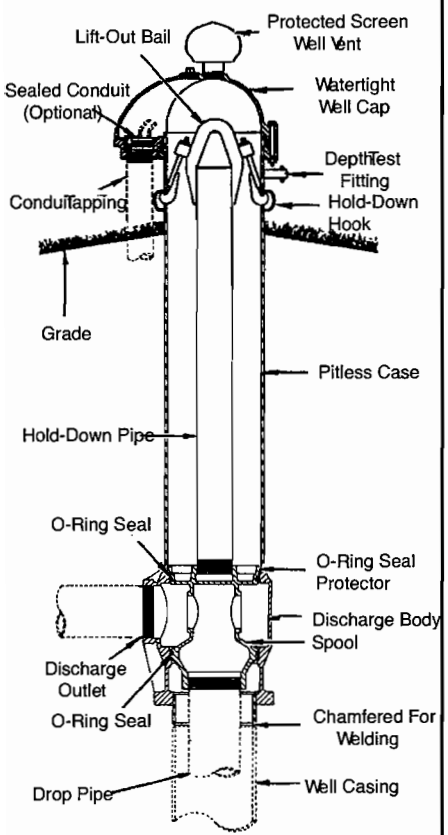

CUSTOM

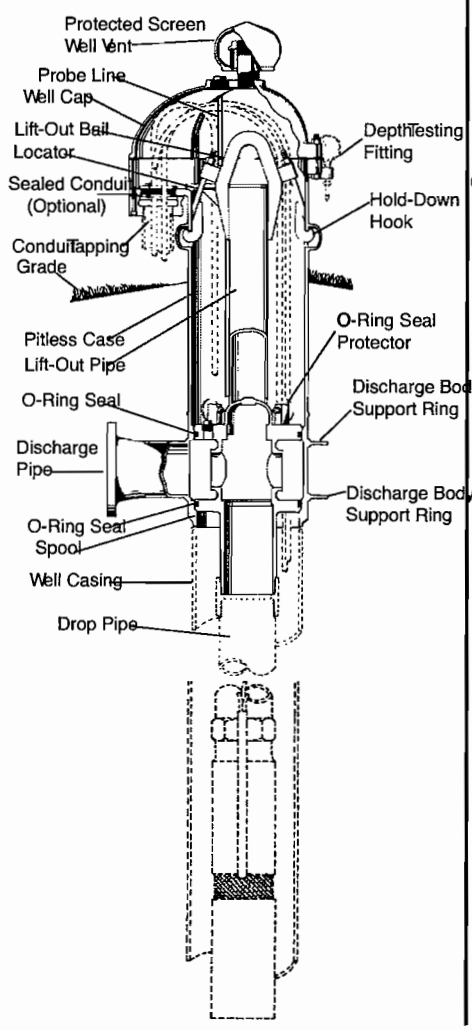

BOOSTER

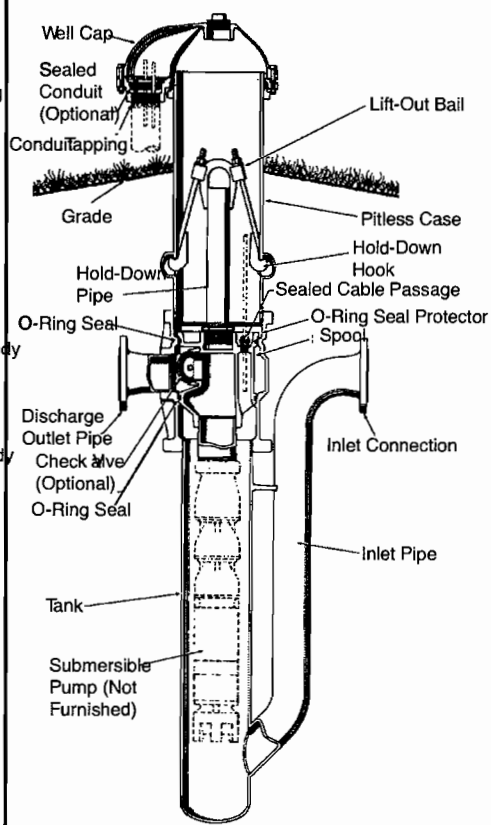

Monitor units conform to the Recommended Standards for Water Works, Great Lakes Upper Mississippi River Board of State Public Health & Environmental Managers, Water Systems Council and PAS-97 Standards.

STANDARD INDUSTRIAL PITLESS UNITS

INDUSTRIAL PITLESS UNITS FOR SUBMERSIBLE PUMPS
6", 6.6", 8", 10", 12" 14" and 16" WELL SIZES

The Monitor PS Industrial Pitless Unit for submersible pumps forms a watertight extension of the well casing which starts below the frostline, where it is buried permanently, and continues upward 12 or more inches above grade, where the pitless case is closed with a watertight cap.

ALL INDUSTRIAL UNITS ARE AVAILABLE IN STAINLESS STEEL UPON REQUEST

TO INSTALL A PS INDUSTRIAL UNIT:

An excavation around the well casing below the frost line is made and well casing cut off at a prescribed level. The well cap is removed and the spool assembly lifted out of the pitless case with a hoist and set aside.* The pitless case is then welded or threaded tightly onto the well casing. The submersible motor, pump, and cable are attached to the drop pipe which is lowered into the well with a hoist; when the top of the last section of the drop pipe is one foot or more above the pitless case, the spool assembly is screwed onto the drop pipe. The spool assembly and drop pipe with motor, pump and cable are lowered into place; then finally the electrical service and well cap are installed.

* The spool assembly includes: A spool with two or no silent check valves; two O-ring seals and hold-down assembly.

FEATURES:

CORROSION PROTECTION . . . All water passages are either hot-dipped lead free galvanized or constructed of corrosion resistant material.

EASY TO SERVICE . . . Well cap can be removed without disconnecting cables. O-ring seals on spool permit withdrawal of the entire inner assembly simply by lifting. Replacement is equally simple. Spool support eliminates vertical adjustment and any possibility of dropping the inner assembly into the well.

RELIABLE SEAL . . . Neoprene O-rings between accurately machined hot-dipped lead free galvanized surfaces on the spool and within the unit provide positive seals.

O-RING SEAL PROTECTION . . . Monitor seal protection prevents seal damage during installation and service.

FROST PROOF . . . No heating is required. All water passages are below the frost line.

QUICK TO INSTALL . . . A quality pump installation can be made easily and economically without delay for masonry or building construction.

ALTERNATIVE SPOOLS . . . Are available on 6", 6.6" and 8" I.D. well sizes only. Spools are available plain (EO) or with silent check valves (E2-double). The Monitor Silent Check Valve has its operating parts automatically exposed when the spool is withdrawn. Complication and cost of installing separate check valve in the drop pipe are eliminated. Spools are supplied with tapping for either a pressure relief valve, or a pressure control. In-line check valves are available for 10" and larger wells.

WATERTIGHT WELL CAP WITH SCREENED AIR VENT . . . Designed to permit removal without disconnecting cables. Separate Junction Box is eliminated. Watertight cable and conduit sealing is optional.

HOLD-DOWN . . . Supplied with each unit. Hold-down pipe also serves as lift-out pipe for installation and servicing.

REINFORCED O-RING LANDS . . . Cast in to prevent discharge body from becoming out of round.

DEPTH TEST BLOCK . . . Standard on all unit.

LOCKING BOLTS . . . Supplied for 12 inch wells and larger.

OPTIONS:

SEALED CONDUIT CONNECTION . . . Watertight conduit seals made of neoprene are available for most common cable sizes. (Round wire only)

EPOXY PAINTING . . . can be done, if required, for extra protection in certain soil types.

ADDITIONAL TAPPING IN SPOOL

TRANSITION SLEEVE FOR MECHANICAL JOINT DISCHARGE.

PROBE TUBE . . . on 8" and larger sizes.

WATER SAMPLER VALVE . . . on 8" and larger well sizes.

FLOWING WELL UNITS . . . for all sizes.

STANDARD INDUSTRIAL PITLESS UNITS

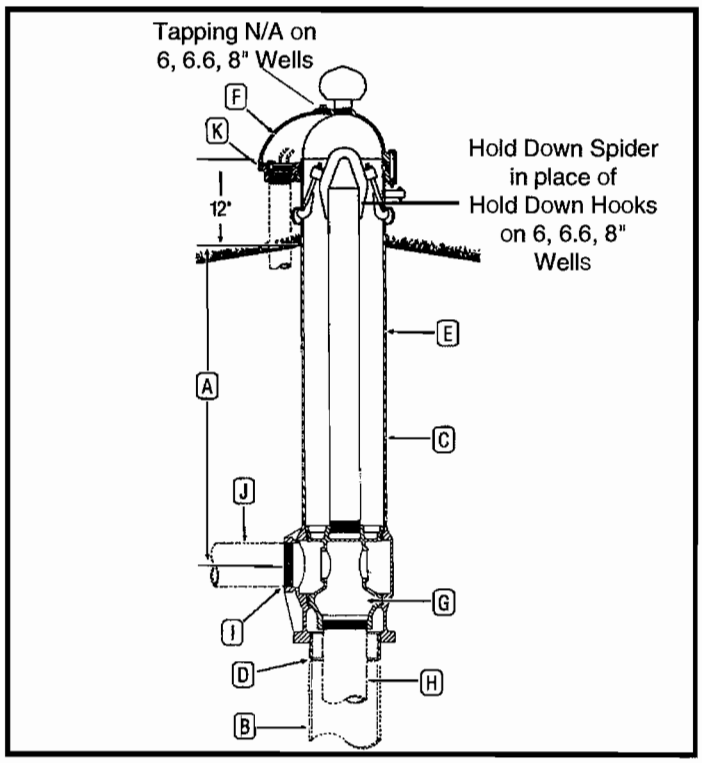

DESCRIPTION - ORDERING NUMBERS			
A		Bury Depth in Feet	
	PS	Pitless Unit for Submersible Pump	
B		Well Size - Ins.	
C		Upper Case Size - Ins.	
D		Attachment to Well Casing (W–Welded N–Compression)	
E	B	Black Upper Case	
F	W	Watertight Cap w/Screened Air Vent	
	E	Pressure Equalizing Spool Passages	
G		No. of Check Valves: (**0** or **2**)	
H		Drop Pipe I.D. Ins.	
I	T	Threaded NPT Std. Connection	
		Flange, ASA 150#	Accessory Discharge Connections
		Welded	
		Mech. Joint w/transition sleeve	
J		Discharge I.D. Ins.	
	E	Std. Industrial 10" and Larger	
K		Elec. Cable Seal (**S**) O.D. 3 Wire____ O.D. Grounding Wire____	
OPTIONS		Probe Tube (**P**) 8" & Larger	
		Water Sampler Valve (**H**) 8" & Larger	
		Flowing Well (**F**)	
		Special Provision (**X**)	

6" thru 16" Wells Sizes

EXPLANATION OF PITLESS UNIT ORDERING NUMBERS

The diagram illustrates the meaning of the various letters and numerals used in Monitor Standard Industrial Pitless Unit ordering numbers. A typical order number and the pitless unit it stands for are shown.

Typical Order Number

3PS810WBWE24T4S

3 — **A.** The first numeral in the order number indicates the bury depth, in feet. Bury depth on all units is measured from the center of the discharge line to ground level. The top of the pitless case extends 12" above ground level as is required by many codes. However, any length can be manufactured.

PS — These letters indicate the type of pump the pitless unit is designed for. The unit shown is a PS for submersible pumps.

8 — **B.** This numeral indicates the well casing size, 8" I.D.

10 — **C.** This numeral indicates the upper pitless case size, 10" I.D.

W — **D.** Indicates the attachment to the well casing is a welded joint ("N" for KwiKonect - 6" I.D. & 8" I.D. only).

B — **E.** Indicates the upper pitless case is black pipe.

W — **F.** Indicates the unit has a watertight cap with screened vent installed.

E — **G.** Indicates spool has pressure equalizing passages, for venting well.

2 — This numeral indicates the type of spool which the pitless unit has. In this case it is a spool having two silent check valves. Spool check valves not available on 10" wells and larger. See In-Line check valves page 12.

4 — **H.** Indicates the size of drop pipe in inches.

T — **I.** Indicates the discharge connection is threaded.

4 — **J.** Indicates the size of discharge pipe in inches.

S — **K.** Sealed Conduit Connection. (Optional)

SAMPLE
ENGINEERING SPECIFICATIONS
FOR PITLESS UNITS

PART 1 GENERAL

1.01 SUMMARY

A. Section Includes:

Complete assembled Pitless Unit System including well cap, lift-out bail, hold down hooks, lift out pipe, discharge body with support ring, spool with or without check valves and pressure equalizing passages.

1.02 SUBMITTALS

A. All bidders shall submit as part of their bid:

1. The Manufacturer and Model of the Pitless Unit to be installed.

2. Detailed Specifications with Drawings of the System furnished by the manufacturer.

PART 2 PRODUCTS

2.01 PITLESS UNIT

The Pitless Unit shall be equal to Baker Manufacturing Company, Monitor Division, Model_____. The unit should be factory assembled, before shipping to the site. The pitless unit must conform to the Recommended Standards for Water Works, Great Lakes Upper Mississippi River Board of State Public Health & Environmental Managers, Health Education Services, Albany, NY.

2.01.01 WELL CAP

The Watertight Cap shall be secured to the pitless casing with a compression gasket. The top of the cap can be removed without affecting the sealed conduit or wiring. The heavy duty watertight cap will have a separate protected downward facing screened well vent with pipe nipple. Construction of the cap and well vent will be of heavy duty gray cast iron and painted with a green enamel finish.

2.01.02 UPPER CASING

The Upper Casing is factory assembled to the discharge body, and the lift out and hold down mechanism are factory assembled to the spool. Upper casing thickness must conform to the Recommended Standards for Water Works, and be coated with a rust protective alkyd coating. The upper casing must provide a watertight connection from the discharge body to the well cap. The discharge port center line

to be_____ feet below grade, and the pitless upper casing to extend _____feet above grade.

2.01.03 SPOOL

The spool shall include _____NPT per ANSI B 1.20.1 male or female drop pipe connection and shall be constructed of lead-free galvanized heavy duty gray cast iron, ductile iron, or steel with a lead-free galvanized plating on the wetted surface of over .010 inches thick. The spool will have o-ring grooves machined into the spool retaining the o-rings when setting or pulling the system.

The positive pressure o-ring seals shall be constructed of neoprene or equivalent. Spool shall be designed to accommodate probe tubes or water samplers and NPT ports for discharge pressure taps. O-ring protection should be provided to prevent the seals from dragging on the upper casing when the pump is installed or removed.

2.01.04 DISCHARGE BODY

The Discharge Body shall be constructed of lead-free galvanized ductile iron or lead-free galvanized steel. O-ring seat to be designed to prevent crevice and galvanic corrosion, **dissimilar metals should be avoided.** Discharge body designed to be strong enough to prevent distortion due to vertical movement of discharge pipe thereby allowing spool to bind in the discharge body. Minimum I.D. of the discharge body to be equal to or greater than I.D. of the well casing for ease in well servicing.

2.01.05 HOLD-DOWN MECHANISM

The Pitless Unit spool should have a hold down mechanism, factory assembled to spool and capable of preventing rotation of the pitless spool relative to the discharge body, at full rated locked rotor torque of the submersible pump motor. The spool must also have a factory assembled lift out pipe and bail capable of _____lbs. rated load, to allow lifting a water filled drop pipe and pump out of the well for service. Components to be constructed of ductile iron or steel with a corrosion resistant coating.

2.01.06 CHECK VALVES (Optional)

Optional Check Valves may or may not be provided in the removable spool of the pitless unit. These should be low pressure drop, self cleaning, swing type check valves, with elastomer seal at seat, and constructed of corrosion resistant materials.

NOTES

STANDARD INDUSTRIAL PITLESS UNITS

Monitor® INDUSTRIAL PITLESS UNITS FOR SUBMERSIBLE PUMPS
6", 6.6" & 8" I.D. WELL SIZES

FIRST

Choose well size then make-up basic ordering number from proper column in specifications

ORDERING NUMBER SELECTION GUIDE

Bury Depth (Select One)	Pitless Submersible	Well Size - Inches	Upper Case Size - Inches	Attachment to Well Casing (Welded or Kwikonect)	Black Upper Case	Watertight Cap (Vent Installed)	Pressure Equalizing Spool Passages	Number of Check Valves (Select One)	Drop Pipe I.D. Inches	Discharge Connect (Threaded)*	Discharge I.D. - Inches
1 & Up	PS	6.6 6 8	7 7 10	W N	B	W	E	0 2	3 3 4	T	3 3 4

SECOND

Add desired accessory symbol

Note: *Cap must be removed for sampler, see page 52*

Accessory	Symbol
Sealed Conduit Connection	S
Flowing Well	F
Water Sampler Valve	H
Special Provisions	X

COMPONENT MATERIALS

Well Vent - cast iron, green enamel finish.
Cap & Conduit Box - cast iron, green enamel finish.
Hold-Down Spider - cast iron, green enamel finish.
Hold-Down Pipe, 2" or 3" - steel Sch. 80, black.
Pitless Case - steel, black.
Spool - cast iron, lead-free galvanized.
Discharge Body - cast iron, lead-free galvanized.
Discharge Body - 8" x 10" - Ductile Iron, lead-free galvanized.
Check Valve Body & Arms - brass.
Check Valve Seat - Brass.
Check Valve Spring - Monel.
Compression Seal Ring & Check Valve Facing - Neoprene.
Electrical Conduit Cable Seal - Neoprene.
Maximum Rated Discharge Pressure - 300PSI

*Optional flange, weld or mechanical joint available upon request.

Note: Pitless units conform to the Recommended Standards for Water works, Great Lakes Upper Mississippi River Board of State Public Health & Environmental Managers and Water Systems Council PAS-97 standards.

*Optional flange, weld or mechanical joint available upon request.

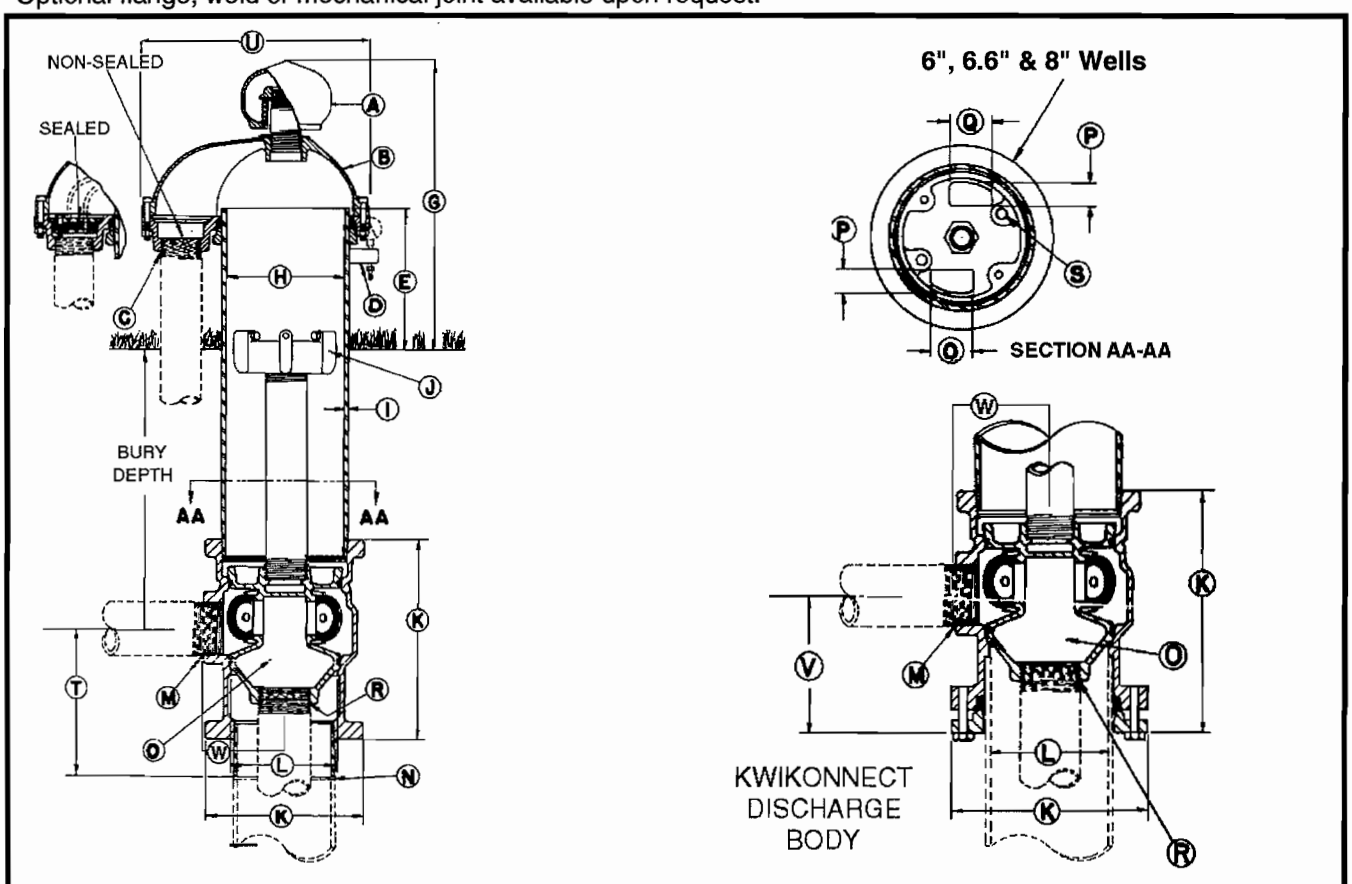

Specifications Subject to Change Without Notice.

100% Made in the U.S.A.

Monitor®

INDUSTRIAL PITLESS UNITS FOR SUBMERSIBLE PUMPS
6", 6.6" & 8" I.D. WELL SIZES

SPECIFICATIONS

(See drawing on page 9)

	6" I.D.	6.6"I.D. 7" O.D.	8" I.D.
A Screened Well Vent tap size:	1-1/2" NPT	1-1/2" NPT	2-1/2" NPT
B Seal Cap: *The Watertight cap bolts to a compression seal ring securing around the pitless case and comes with the screened well vent installed.*			
C Conduit Tapping size: *Watertight conduit seals for most common cable sizes are available for watertight cap.*	1-1/2" NPT	1-1/2" NPT	3" NPT
D Depth Tester Tapping:	1/4" NPT	1/4" NPT	1/4" NPT
E Distance from ground level to top of Pitless Case:	12"	12"	12"
G Distance from ground level to top of Screened Well Vent:	19-1/2"	19-1/2"	24-5/16"
H Pitless Case I.D. size:	7"	7"	10"
I Pitless Case wall thickness:	.300"	.300"	.365"
J "Hold-Down" - "Lift-Out" Mechanism *Three set screws in a spider atop the "Hold-Down" - "Lift-Out" pipe brace against the interior of the pitless casing, locking the spool in place.* Hold-Down, Lift-Out pipe size (Schedule 80):	2" NPT	2" NPT	3" NPT
Designed "Lift-Out" Mechanism load:	15,000 lbs.	15,000 lbs.	30,000 lbs.
DISCHARGE BODY - THREADED			
K Discharge Body outside diameter:	9-11/16"	9-11/16"	13-1/2"
K Discharge Body length:	11-1/4"	11-1/4"	15-11/16"
DISCHARGE BODY - KWIKONECT			
K Discharge Body outside diameter:	10"	N/A	13.197"
K Discharge Body length:	12-9/32"	N/A	15-1/2"
L Pitless Unit minimum inside diameter.:	6-3/8"	6-3/8"	9-1/8"
M Discharge Connection Tapping size:	3" NPT	3" NPT	4" NPT
N Pitless Unit to well casing connection I.D.:	6" Weld	6.6" Weld	8" Weld
O **SPOOL ASSEMBLY** Spool Design Load:	15,000 lbs.	15,000 lbs.	30,000 lbs.
P **MOTOR CABLE PASSAGES THROUGH SPOOL** Will clear rigid rod parallel to casing:	13/16"	13/16"	1-3/4" 1.49"
Q	1-3/4"	1-3/4"	3-3/8"
R Spool to Drop Pipe Connection:	3" NPT	3" NPT	4" NPT
S Pressure switch tapping: 3/8" NPT:	(2) available	(2) available	(2) available
T Dimension from center of discharge outlet to bottom of weld nipple:	9-3/8"	9-3/8"	12"
U Overall length of seal cap:	12-7/8"	12-7/8"	18-1/2"
V Dimension from center of discharge to bottom of discharge body:	7-3/4"	N/A	10-1/2"
W Dimension from center of well casing to end of discharge outlet:	5-25/32"	5-25/32"	6-15/16"

STANDARD INDUSTRIAL PITLESS UNITS

Monitor® INDUSTRIAL PITLESS UNITS FOR SUBMERSIBLE PUMPS
10", 12", 14" & 16" I.D. WELL SIZES

FIRST

Choose well size then make-up basic ordering number from proper column in specifications.

ORDERING NUMBER SELECTION GUIDE

Bury Depth - Ft. (Select one)	Pitless Submersible	Well Size - In.	Upper Case Size - In.	Attachment to Well Casing (Welded)	Black Upper Case	Watertight Cap (Well Vent Installed)	Pressure Equalizing Spool Passages	Spool Check Valves (Not furnished)	Drop Pipe I.D. - In.	Discharge Connection (Threaded)*	Discharge I.D. - In.	Standard Model
1 & Up	P S	10 12 14 16	12 14 18 18	W	B	W	E	0	6 6 8 8	T	6 6 8 8	E

SECOND

Add Desired Accessory Symbol

ACCESSORY LIST	SYMBOL
Cable Seal	S
Probe Tube 1" PVC Pipe	P
Water Sampler Valve (see page 51)	H
Flowing Well	F
Special Provisions	X

*Optional flange, weld or mechanical joint available upon request.

COMPONENT MATERIALS

Well Vent: cast iron, green enamel finish.
Cap: cast iron, green enamel finish, with locking bolts 12" & larger.
Hold-Down & Lift-Out Mechanism: Black Steel
Hold-Down Pipe: Steel, corrosion resistant coating.
Pitless Case: Steel, corrosion resistant coating.
Spool: Lead-Free Galvanized cast iron.
Spool for 14 & 16": Lead-Free Galvanized ductile iron.
Discharge Body: Lead-Free Galvanized ductile iron.
Electrical Conduit Cable Seal: Neoprene
Maximum rated discharge pressure - 300 PSI

Note: Pitless units conform to the Recommended Standards for Water works, Great Lakes Upper Mississippi River Board of State Public Health & Environmental Managers and Water Systems Council PAS-97 standards.

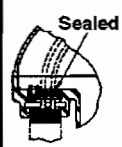

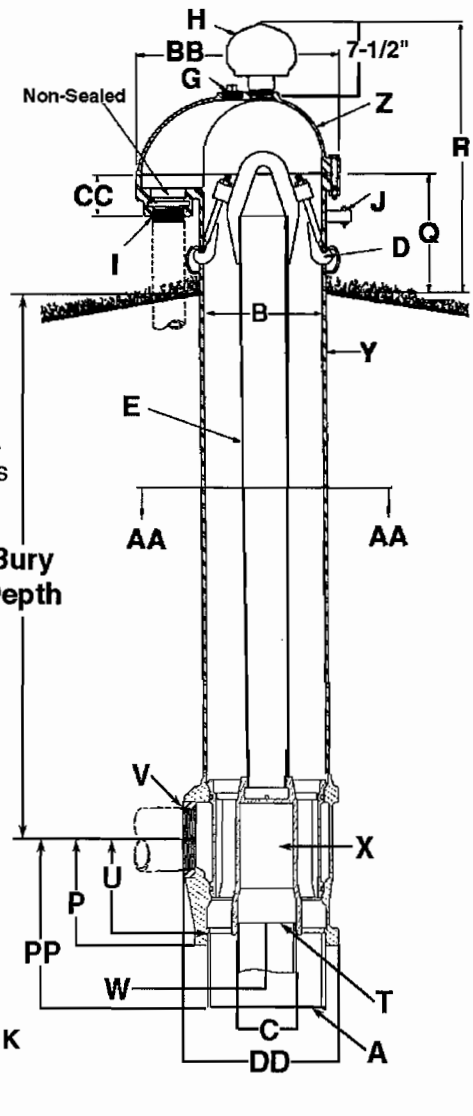

Section AA-AA
10" & 12" Wells
Only

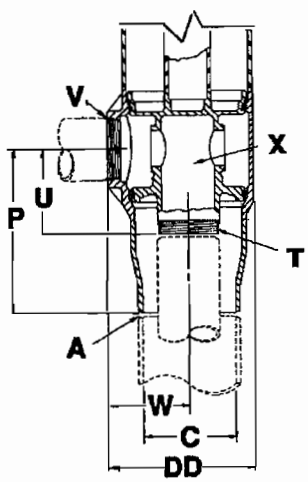

14" x 18" Well Only

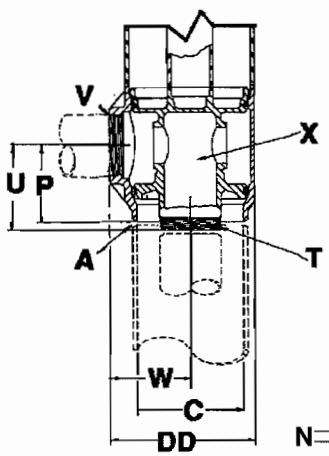

16" x 18" Well Only

Specifications subject to change without notice. - Printed in the U.S.A.
BB-3 (7-15-05)

STANDARD INDUSTRIAL PITLESS UNITS

Monitor® INDUSTRIAL PITLESS UNITS FOR SUBMERSIBLE PUMPS
10", 12", 14" & 16" I.D. WELL SIZES

SPECIFICATIONS

(See drawing on Page 11)

		10" Well	12" Well	14" & 16" Well
A	Pitless Unit to Well Casing Connection:	Chamfered for butt weld	Chamfered for butt weld	Chamfered for butt weld
B	Pitless Unit with black upper case:	12" I.D. X 12-3/4" O.D.	13-1/8" I.D., 14" O.D.	17-1/4" I.D., 18" O.D
C	Discharge body minimum I.D.	11"	12"	(14")-14" & (16")-15-1/4"
D	Hold-down Mechanism:	Locks spool in place and prevents lifting and turning during pump start-up. Two adjustable hooks on lift-out pipe hook into side of pitless case.	Locks spool in place and prevents lifting and turning during pump start-up. Two adjustable hooks on lift-out pipe hook into side of pitless case.	Locks spool in place and prevents lifting and turning during pump start-up. Four adjustable hooks on lift-out pipe hook into side of pitless case.
E	Lift-out pipe with lifting bail:	4" NPT assembly designed for a 48,000 lb. load	4" NPT assembly designed for a 48,000 lb. load	5" NPT assembly designed for a 103,000 lb. load
G	Tap Size:	2" NPT	2" NPT	2" NPT
H	Well vent:	Screws into a 2-1/2" NPT tap	Screws into a 2-1/2" NPT tap	Screws into a 2-1/2" NPT tap
I	Conduit tappings:	3" NPT Watertight conduit seals for most common cable sizes are available.	2" & 1" std. Also available with single 2", 3" or 4" NPT	2 " & 1" std. Also available with single 2", 3" or 4" NPT
J	Depth tester block tappings:	1/4" NPT standard	1/4" NPT standard	1/4" NPT standard
K	Pressure switch tap:	(2) 3/8" NPT	(2) 3/8" NPT standard	3/8" NPT standard
L	**MOTOR CABLE PASSAGES THROUGH SPOOL (SECTION AA-AA)** Will clear rigid rod parallel to casing	1.39"	1.77"	1.93"
M	} Some restrictions apply	6"	4-1/2"	4-9/16"
N		1-5/16"	1-1/2"	1-1/8"
O		1-5/16"	1-1/2"	2"
P	Dimension from center of discharge outlet to bottom of discharge Body:	11-7/8"	11-7/8"	(14") 23-11/16" (16") 13-11/16"
PP	Dimension from center of discharge outlet to bottom of weld nipple:	15-7/16"	17-1/4"	(14") 23-11/16" (16") 13-11/16"
Q	Distance from ground level to top of the pitless case:	12"	12"	12"
R	Distance from ground level to top of the screened well vent:	28-1/2"	27-9/16"	28-1/4"
S	Water sampler tapping:	Optional	Optional	3/4" N.P.T. standard.
T	**SPOOL TO DROP PIPE CONNECTION:**	6" NPT tapping Spool designed for 48,000 lb. load	6" NPT tapping Spool designed for 48,000 lb. load	8" male NPT tapping Spool designed for 103,000 lbs. load
U	Dimension from center of discharge outlet to bottom of spool:	9-5/8"	10-1/2"	12-5/16"
V	Discharge connection tapping size:	6" NPT	6" NPT	8" NPT
W	Dimension from center of well casing to the end of discharge outlet:	9-1/8"	9-1/16"	11"
X	**SPOOL ASSEMBLY**			
Y	Pitless case wall thickness:	.375"	.375"	.375"
Z	**SEAL CAP:**	Watertight cap bolts to a gasketed surface securing around the pitless casing and comes installed with 2-1/2" screened well vent.		
BB	Overall length of seal Cap:	22-1/2"	22-1/2"	25-3/8"
CC		2-15/16"	4-5/8"	6-1/4"
DD		17"	17"	20-1/8"

STANDARD INDUSTRIAL PITLESS UNITS

Monitor Standard Industrial Pitless Units for 6"& 6.6" Well Sizes

EXPLANATION OF ORDERING NUMBERS

3	PS	6	7	W	B	W	E0	3	T	3
Bury Depth in Feet (Available in 1/2 Foot increments)	Submersible Pumps	Well Size	Pitless Upper Case Size	Attachment To Well Casing W-Welded N-Kwikonect (6x7 & 8x10 only)	Black Upper Case	Cap Premium Watertight w/screened air vent	Spool Type E0=No Checks E2 = 2 Checks	Drop Pipe I.D. in Ins.	Discharge Connection (threaded). Flanged Discharge Kits Available	Discharge I.D. in Inches

ORDERING NUMBER for a PS Pitless Unit is formed by placing the Bury Depth in front of the ordering number below that is in line with the well casing I.D. to which the unit is to be attached. **Watertight cap is furnished with screened air vent installed.**
NOTE: Depth test tapping on all units is 1/4".

Ordering No.	Bury Depth	Shpg. Wt.	Check Valves	General Information
PS67WBWE03T3 (6 in. I.D.)	3	211	No	Well Casing I.D.: 6" Upper Case I.D.: 7" Drop Pipe Tap: 3" Discharge Tapping: 3" Conduit Tapping: 1-1/2" Vent Size: 1-1/2" AW Control or Relief Valve Tapping: (2)3/8"
	4	235		
	5	258		
	6	282		
	7	305		
	8	329		
	9	352		
PS67NBWE03T3 (6 in. I.D.) **Kwikonect**	3	211	No	
	4	235		
	5	258		
	6	282		
	7	305		
	8	329		
	9	352		
PS67WBWE23T3 (6 in. I.D.)	3	211	Yes	
	4	235		
	5	258		
	6	282		
	7	305		
	8	329		
	9	352		
PS67NBWE23T3 (6 in. I.D) **Kwikonect**	3	211	Yes	
	4	235		
	5	258		
	6	282		
	7	305		
	8	329		
	9	352		
PS6.67WBWE03T3 (For welding to 7" O.D. only)	3	210	No	Well Casing I.D.: 6-5/8" Upper Case I.D.: 7" Drop Pipe Tap: 3" Discharge Tapping: 3" Conduit Tapping: 1-1/2" Vent Size: 1-1/2" AW Control or Relief Valve Tapping: (2)3/8"
	4	234		
	5	257		
	6	281		
	7	304		
	8	328		
	9	351		
PS6.67WBWE23T3 (For welding to 7" O.D. only)	3	210	Yes	
	4	234		
	5	257		
	6	281		
	7	304		
	8	328		
	9	351		

STANDARD INDUSTRIAL PITLESS UNITS

Monitor Standard Industrial Pitless Units for 8", 10", 12", 14" & 16" Well Sizes

Ordering No.	Bury Depth	Shpg. Wt.	Check Valves	General Information
PS810WBWE04T4 (8 in. I.D.)	3	428	No	Well Casing I.D.: 8" Upper Case I.D.: 10" Drop Pipe Tap: 4" Discharge Tapping: 4" Conduit Tapping: 3" Vent Size: 2-1/2" AW Control or Relief Valve Tapping: (2)3/8"
	4	468		
	5	508		
	6	548		
	7	588		
	8	628		
	9	668		
PS810NBWE04T4 (8 in. I.D.) **Kwikonect**	3	428	No	
	4	468		
	5	508		
	6	548		
	7	588		
	8	628		
	9	668		
PS810WBWE24T4 (8 in. ID.)	3	430	Yes	
	4	470		
	5	510		
	6	550		
	7	590		
	8	630		
	9	670		
PS810NBWE24T4 (8 in. I.D.) **Kwikonect**	3	430	Yes	
	4	470		
	5	510		
	6	550		
	7	590		
	8	630		
	9	670		
PS1012WBWE06T6E (10" I.D.) **Standard Model**	3	532	No	Well Casing I.D.: 10" Upper Case I.D.: 12" Drop Pipe Tap: 6" Discharge Tapping: 6" Conduit Tapping: 3" Vent Size: 2-1/2" AW Control or Relief Valve Tapping: (2)3/8"
	4	598		
	5	664		
	6	730		
	7	796		
	8	862		
	9	928		
PS1214WBWE06T6E (12 in. I.D.) **Standard Model**	3	606	No	Well Casing I.D.: 12" Upper Case O.D.: 14" Drop Pipe Tap: 6" Discharge Tapping: 6" Conduit Tapping: 2" & 1" Vent Size: 2-1/2" AW Control or Relief Valve Tapping: (2)3/8"
	4	680		
	5	754		
	6	828		
	7	902		
	8	976		
	9	1050		
PS1418WBWE08T8E (14 in. O.D.) **Standard Model**	3	920	No	Well Casing O.D.: 14" Upper Case O.D.: 18" Drop Pipe Tap: 8" Discharge Tapping: 8" Conduit Tapping: 2" & 1" Vent Size: 2-1/2" AW Control or Relief Valve Tapping: (1)3/8"
	4	1007		
	5	1094		
	6	1181		
	7	1268		
	8	1355		
	9	1442		
PS1618WBWE08T8E (16 in. O.D.) **Standard Model**	3	855	No	Well Casing O.D.: 16" Upper Case O.D.: 18" Drop Pipe Tap: 8" Discharge Tapping: 8" Conduit Tapping: 2" & 1" Vent Size: 2-1/2" AW Control or Relief Valve Tapping: (1)3/8"
	4	942		
	5	1029		
	6	1116		
	7	1203		
	8	1290		
	9	1377		

Flowing Wells are available on all industrial units.

STANDARD INDUSTRIAL PITLESS UNITS

STANDARD SPOOLS

Ordering No.	Upper Case Well
7E0PS3	7"
10E0PSA	10"
12E0PSA	12"
14E0PSA	14"

SILENT CHECK VALVE SPOOLS

Ordering No.	Upper Case Well
7E2PS3	7"
10E2PSA	10"

Reducer Bushings

Ordering No.	Size
PC335 Galv.	3" x 2"
UK254x29 Galv.	4" x 2"
G18.4x3 Galv.	4" x 3"
UL168 Galv.	6" x 3"
G18.6x4 Galv.	6" x 4"
UL254 Galv.	6" x 5"

INDUSTRIAL SPOOL CABLE SEALS

Ordering No.	Cable Range O.D.
UG255	.312 - .437
UG193	.125 - .186
UG192	.187 - .312
UG355	.37 - .50

FLANGED DISCHARGE KITS

Ordering No.	Discharge Size
3UC	3"
4UG	4"
6UJ	6"
8UM	8"

Flange discharge kits convert discharge on 6 x 7 through 16 x 18 (Standard Model) Industrial Pitless Units from threaded to flanged. (Each kit includes 150 lb. raised flange). Swagged nipples also available.

FLOWING WELL SPOOLS

Ordering No.	Upper Case Well
7E0PS3F	7"
10E0PSF	10"
12E0PSF	12"
14E0PSF	14"

FLOWING WELL SILENT CHECK VALVE SPOOLS

Ordering No.	Upper Case Well
7E2PS3F	7"
10E2PSF	10"

For use with 10", 12" & 14" Monitor Premium Watertight caps.

Model	Cable Range	Cable Size	Cable Material
53UK4	.125-.187 O.D.	#14, 12	4 wire Twstd Plastic
54UK4	.187-.312 O.D.	#10, 8, 6	4 wire Twstd Plastic
		#14, 12, 10	4 wire Twstd Rubber
55UK4	.312-.437 O.D.	#8, 6, 4, 3	4 wire Twstd Rubber
56UK4	.437-.500 O.D.	#2	4 wire Twstd Rubber
57UK4	.500-.625 O.D.	#1, 1/0, 2/0	4 wire Twstd Rubber
58UK4	.625-.750 O.D.	#3/0, 4/0	4 wire Twstd Rubber

FOR FURTHER INFORMATION ON ORDER NUMBERS SEE SPECIFICATION SHEETS

PITLESS UNITS O-RING GUIDE

O-RING SELECTION GUIDE FULL PITLESS UNITS

Model (Well Size X Upper Case Size	O-Ring Part No.	Inside Diameter	Thickness
2 x 2-1/2	NA15	3.100 ± .024	.210 ± .005
2 x 3	NA115	2.350 ± .018	.210 ± .005
3 x 4	NB15	3.400 ± .015	.210 ± .005
4 x 5	UB15	4.10 ± .028	.210 ± .005
4 x 8	UB15	4.10 ± .028	.210 ± .005
5 x 6	NC15	5.10 ± .037	.275 ± .006
5 x 8	NC15	5.10 ± .037	.275 ± .006
5.6 x 7	UC15	5.975 ± .037	.275 ± .006
6 x 7	UC15	5.975 ± .037	.275 ± .006
6.6 x 7	UC15	5.975 ± .037	.275 ± .006
6 x 8	UH15	6.975 ± .040	.275 ± .006
7 x 8	UH15	6.975 ± .040	.275 ± .006
8 x 10	UG15	8.475 ± .055	.275 ± .006
10 x 12	UJ15	10.550 ± .030	.375 ± .010
12 x 14	UK15	11.540 ± .030	.375 ± .010
14 x 16	UL15	13.110 ± .030	.500 ± .020
16 x 18	UM15	14.900 ± .030	.625 ± .022
18 x 20	UN15	16.840 ± .030	.625 ± .022
20 x 22	UQ15A	18.550 ± .030	.625 ± .022
24 x 26	UR15A	22.430 ± .030	.625 ± .022
26 x 28	US15	24.600 ± .030	.625 ± .022

INSTALLATION INSTRUCTIONS:

1. All pitless unit cases are joined by welding or threading the unit to the well casing, or kwikonect style by slipping the unit onto the top of the well casing and tightening the bolts.

2. Establish ground level at the well location. It is desirable to have the ground slope away, from pitless unit case, in all directions.

3. The pitless unit case should extend above the ground level according to state well code. To accomplish this the well casing must be cut off at a distance below the ground level equal to the overall pitless unit length less the length unit is to be above the ground.

4. In order to do work, excavate around the well casing according to government regulations where well casing is to be cut off.

5. Cut off the well casing PERPENDICULAR to the well casing center line.

6. Remove the pitless unit cap then loosen the hold-down hooks or spider and remove spool assembly and set aside.
NOTE: (the spool assembly includes a spool with two or no silent check valves; two o-ring seals, lift-out pipe and bail, or hold down spider.

7. Lower the pitless case into place and rotate the discharge outlet to the desired location and weld the pitless case to the well casing. THIS JOINT MUST BE WATERTIGHT AND IT IS ESSENTIAL THAT THE CENTER LINE OF THE PITLESS CASE AND WELL CASING BE THE SAME.

8. The submersible motor, pump and cable are attached to the drop pipe and then lowered into the well. When the top of the last section of the drop pipe is one foot or more above the pitless case screw the spool assembly onto the drop pipe.

9. Wipe the rubber o-ring seals with a clean cloth and then coat with a heavy layer of petroleum jelly (vaseline) for proper seating of rings. Lower the spool assembly, drop pipe with motor, pump and cable into place.

10. Install and tighten hold-down hooks/hold down spider.

11. Complete electrical service and install pitless cap.

12. Connect discharge outlet to distribution line and complete all wiring.

13. The unit is now ready to operate under power and should be run a sufficiently long time to see that there are no leaks present.

14. The hole should not be filled in until the unit is running satisfactorily. Care should be exercised to fill under discharge line properly before back filling.

NOTE: Dissimilar metals should be avoided.

STANDARD INDUSTRIAL PITLESS UNITS

Monitor® SPOOL TYPE PITLESS UNITS FOR 6" I.D. AND 7" O.D. INDUSTRIAL WELLS

The drawings and parts list apply to the model numbers listed below.
Note: **Add (F) at end of model number for flowing well unit.**

Bury Depth	Unit	Well Size Tap	Case Size	Well Casing Attach.	Upper Case	Cap Style	Spool	Drop Pipe I.D.	Drop Discharge Conn.	Discharge I.D.
1' & Up	PS	6"	7"	W	B	W	E0	3	T	3
1' & Up	PS	6"	7"	W	B	W	E2	3	T	3
1' & Up	PS	6"	7"	N	B	W	E0	3	T	3
1' & Up	PS	6"	7"	N	B	W	E2	3	T	3
1' & Up	PS	6.6"	7"	W	B	W	E0	3	T	3
1' & Up	PS	6.6"	7"	W	B	W	E2	3	T	3

All units have a watertight cap with screened vent.
Monitor Pitless Units listed above are equipped with one of the following types of Spools:

- E2 Spool with check valves, Figure No.2
- E0 Spool without check valves, Figure No. 3
- E2 Spool with check valves for Flowing Well, Figure 4
- E0 Spool without check valves for Flowing Well, Figure 4

Note: See Index for Optional Cable Seals.

Key No.	Ordering Number	Description	Quantity
		FIGURE 1	
-----	7WPSM	Watertight Cap, includes Key Nos. 1-12	
-----	WBAG2	Pkg. of S.S. bolts & Nuts for Cap	1
1	PS150	Vent Assembly	1
2	PS263	Pipe Nipple	1
3	PS217	Seal Cap & Plug Assembly	1
4	PS93S	Machine Bolt, 3/8-16NC x 2 1/2" L.	1
5	PS197	Gasket	1
6	PS377	Retainer Ring	1
7	PS187	Depression Ring	1
8	PS94S	Machine Bolt, 3/8-16NC x 3 1/2" L.	6
9	PS132S	Machine Bolt, 5/16-18NC x 2" L.	2
10	PS167	Seal Ring	1
11	UB17S	Hex Nut, 3/8-16NC	7
12	PC434S	Hex Nut, 5/16-18NC	2
		FIGURE 2	
13	UC129	Hold-Down Assembly, includes Key Nos. 13 & 14 assembled	1
14	UC139	Set Screw, 7/16-14NC X 1 3/4" long	3
15	UC299	Hinge Pin	2
16	UC127	Hinge Pin Gasket	2
17	ZA66	Pipe plug, 3/8-18 NPT	2
18	UC301	Valve Rocker Arm	4
19	UC302	Valve Spring	2
20	UC300	Center Coil Support	2
21	UC296	Check Valve Assembly, includes Key Nos. 22-25 assembled	
22	UC292	Valve Body	2
23	UC295	Rubber Check Valve Facing	2
24	PS158	Brass Washer	2
25	PS159	Brass Nut, 3/8-16NC x 1/4" thick	2
26	UC293	Check Valve Seat	2

Key No.	Ordering Number	Description	Quantity
27	UC290	Spool only	1
27	7E2PS3	Alternate spool with check valves includes Key Nos. 15-28 assembled.	
28	UC15	"O" Ring	2
30	UC291	Discharge Body	1
30A	UC391	Discharge Body for 6.6	1
31	6AWN	Welding Nipple	1
31A	7AWN	Welding Nipple for 6.6	1
		FIGURE 3	
32	7E0PS3	Spool without check valves includes Key Nos. 17, 28, 32 assembled	
32	UC142	Spool, also includes Key No. 17 assembled.	1
		FIGURE 4	
-----	UC392	Flowing Well Spool with check valves (7E2PS3F - Boxed)	1
34	-------	Cable Seals (See product catalog for proper size)	4
35	UC393	Flowing Well Spool w/o check valves (7E0PS3F - Boxed)	1
		FIGURE 5	
36	UC491	Discharge body for kwikonect Style Units-not available for 6.6"	1
37	PC433	Hex Nut, 1/2"-13NC	6
38	PS166	Seal Ring	1
39	UC285	Depression Ring	1
40	UB201	Machine bolt, 1/2" x 13NC x 4 1/2" L.	6

Monitor®

SPOOL TYPE PITLESS UNITS FOR 6" I.D. AND 7" O.D. INDUSTRIAL WELLS

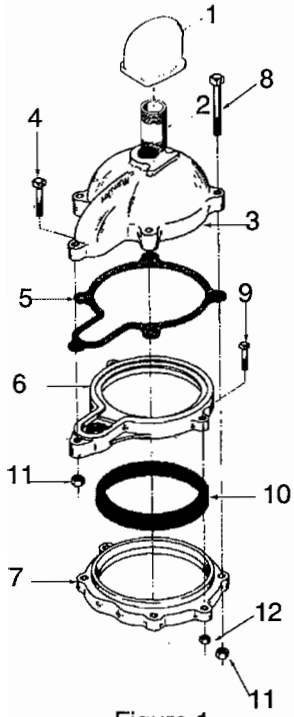

Figure 1

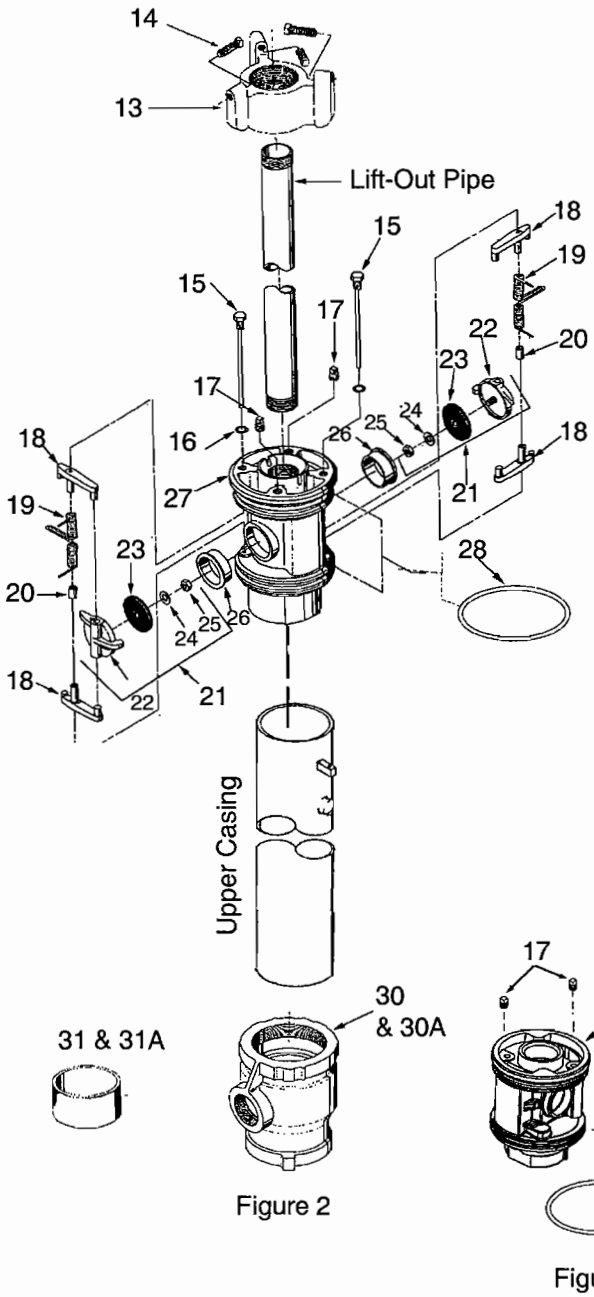

Figure 2

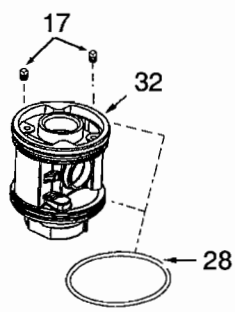

Figure 3

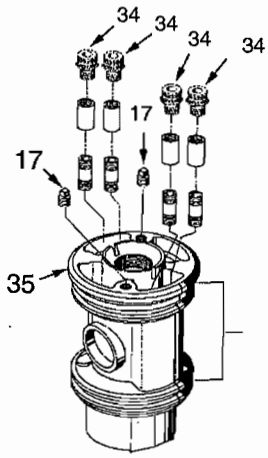

Figure 4-Flowing Well Spool with check Valves includes Key Nos. 18-26. (W/O Check Valves same as Fig. 3)

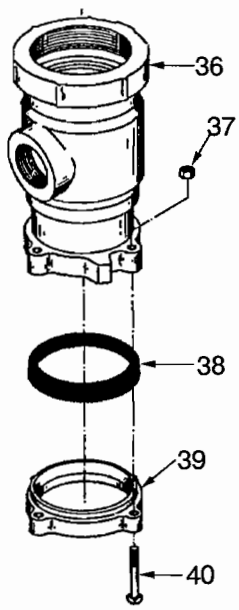

Figure 5

STANDARD INDUSTRIAL PITLESS UNITS

Monitor® SPOOL TYPE PITLESS UNITS FOR 8" Wells

The drawings and parts list apply to the model numbers listed below.
Note: **Add (F) at end of model number for flowing well unit.**

Bury Depth	Unit	Well Size Tap	Case Size	Well Casing Attach.	Upper Case	Cap Style	Spool	Drop Pipe I.D.	Drop Discharge Conn.	Discharge I.D.
1' & Up	PS	8"	10"	W	B	W	E0	4	T	4
1' & Up	PS	8"	10"	N	B	W	E0	4	T	4
1' & Up	PS	8"	10"	W	B	W	E2	4	T	4
1' & Up	PS	8"	10"	N	B	W	E2	4	T	4

All units have a watertight cap with screened vent.
Monitor Pitless Units listed above are equipped with one of the following types of Spools:

- E2 Spool with check valves, Figure No.2
- E0 Spool without check valves, Figure No. 3
- E2 Spool with check valves for Flowing Well, Figure 4
- E0 Spool without check valves for Flowing Well, Figure 4

NOTE: See Index for Optional Cap Cable Seals

Key No.	Ordering Number	Description	Quantity
		FIGURE 1	
-----	10W	Watertight Cap, includes Key Nos. 3-12	
1	PS155	Vent Assembly	1
2	PS365	Pipe Nipple	1
3	PS350	Seal Cap	1
4	APC7	Bolt, 1/2 x 3" L.	1
5	PS342	Gasket	1
6	PS341	Retainer Ring	1
7	PS189	Depression Ring	1
8	PS221	Bolt, 1/2 x 4 1/2" L.	6
9	PS111	Bolt, 1/2 x 2 1/2" L.	3
10	PS170	Seal Ring	1
11 & 12	PC433	Nut, 1/2 - 13NC	10
		FIGURE 2	
13	UG260	Hold-Down Assembly, includes Key Nos. 13 & 14 assembled	1
14	UG191	Set Screw 7/16-14NC x 2 1/4" L.	3
15	UG29	Hinge Pin	2
16	SW84	Hinge Pin Gasket	2
17	ZA66	Pipe plug 3/8-18NPT	2
18	UG209A	Spool	1
18	10E2PSA	Spool with check valves includes Key Nos. 15-30 assembled	
19	UG147	Rocker Arm Top	2
20	UG146	Valve Spring Top	2
21	UG150	Valve Spring Center	2
22	UG145	Valve Spring Bottom	2
23	UG22	Check Valve Seat	2
24	TP34	Brass Nut 1/2-13NC x 5/16 thick	2
25	UG68	Brass Washer	2
26	UG23	Rubber Check Valve Facing	2
27	UG149	Valve Body	2

Key No.	Ordering Number	Description	Quantity
28	UG148	Rocker Arm Bottom	2
29	UG323	Check Valve assembly includes Key Nos. 24-27 assembled	
30	UG15	O-Ring	2
32	UG3A	Discharge Body	1
33	UG335	Pipe	1
		FIGURE 3	
31	UG42A	Spool	1
31	10E0PSA	Alternate Spool w/o check valves includes Key Nos. 17 & 30 assembled	
		FIGURE 4	
34	-------	Spool Cable Seals (See product catalog for proper size	4
35	UG254	Flowing Well Spool with check valves (10E2PSF)	1
-----	UG273	Flowing Well Spool without check valves (10E0PSF)	1
		FIGURE 5	
36	UG333B	Discharge body for kwikonect Style Units	1
37	KG255	Lockwasher	8
38	PS168	Seal Ring	1
39	PS188	Depression Ring	1
40	PS111	Screw, 1/2" x 13NC x 2.5" L.	6

SPOOL TYPE PITLESS UNITS FOR 8" Wells

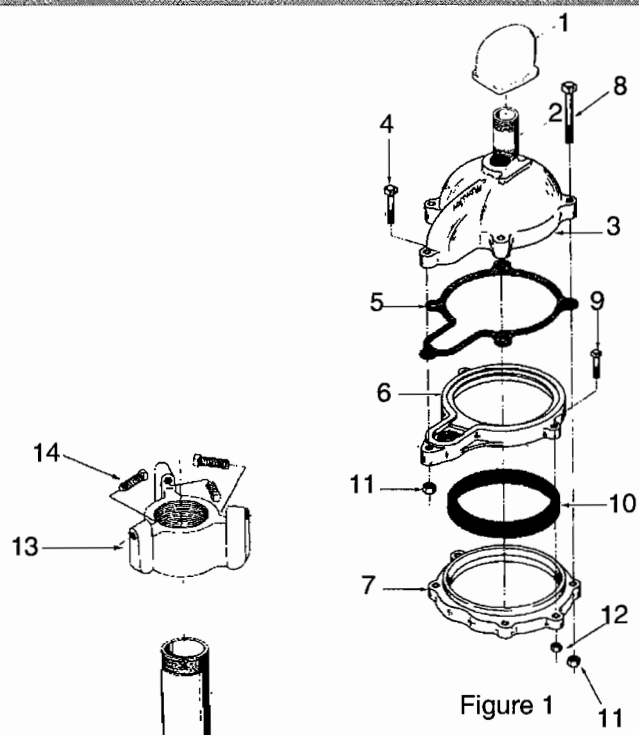

Figure 1

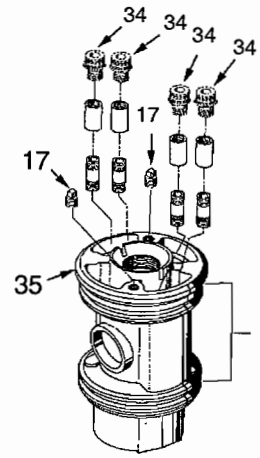

Figure 4-Flowing Well Spool with check valves include Key Nos. 19-29. (W/O Check Valves same as Fig. 3)

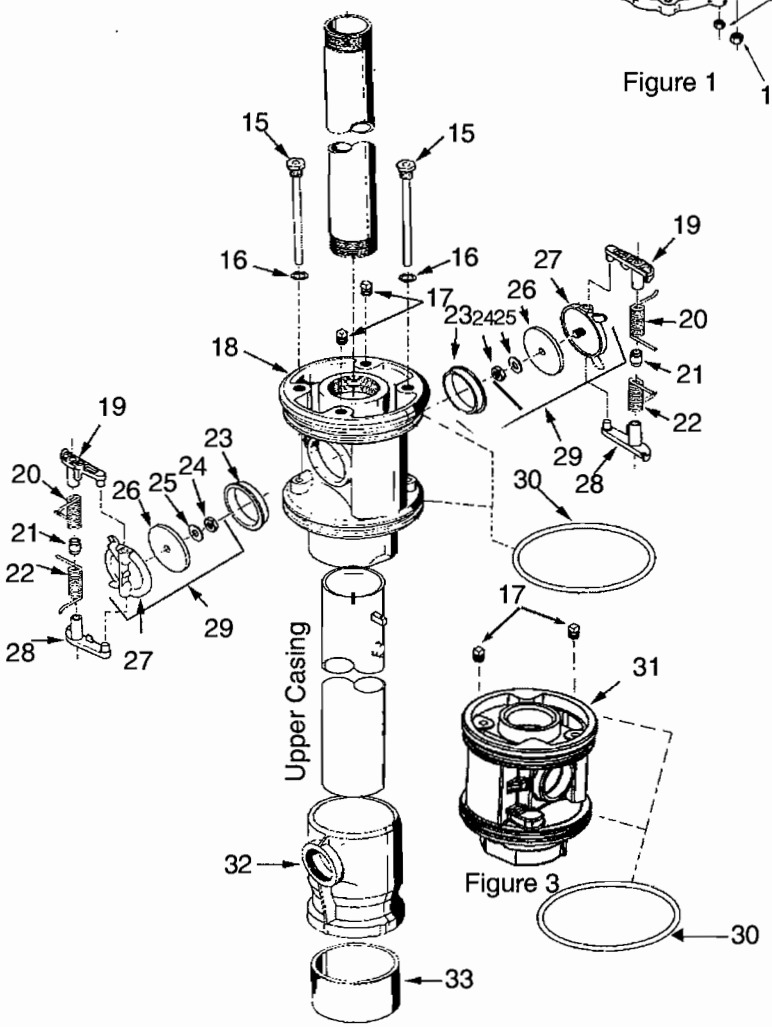

Figure 2

Figure 3

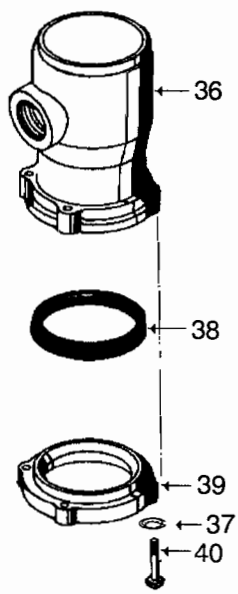

Figure 5

STANDARD INDUSTRIAL PITLESS UNITS

STANDARD MODEL SPOOL TYPE PITLESS UNITS FOR 10" WELLS

The drawings and parts list apply to the model numbers listed below.
Note: **Add (F) at end of model number for flowing well unit.**

Bury Depth	Unit	Well Size Tap	Case Size	Well Casing Attach.	Upper Case	Cap Style	Spool	Drop Pipe I.D.	Drop Discharge Conn.	Discharge I.D.	Std. Model
1' & Up	PS	10"	12"	W	B	W	E0	6	T	6	E

All units have a watertight cap with screened vent.
This Monitor Pitless Unit listed above is equipped with the following type of spool:
Spool without check valves, Figure No. 3
Spool without check valves for Flowing Well, Figure 4

NOTE: See Index for Optional Cap Cable Seals

Key No.	Ordering Number	Description	Quantity
		FIGURE 1	
-----	12W	Watertight Cap, includes Key Nos. 3-13 plus (1) 74PS Vent	
1	PS155	Vent Assembly	1
2	PS365	Pipe nipple, 2 1/2" NPT x 6" L.	1
3	UJ50	Pipe plug, 2" NPT	1
4	UG54	Pipe plug, 1 1/2" NPT	1
5	UK12	Seal cap	1
6	PC286	Hex nut, 5/8-11NC	10
7	UK72	Gasket	1
8	UJ174	Retainer ring	1
9	UJ176	Seal ring	1
10	UJ175	Depression ring	1
11	KP145	Hex head cap screw, 5/8-11NC x 6" L.	5
12	UJ177	Hex head cap screw, 5/8-11NC x 3 1/2" L.	3
13	LK4	Hex head cap screw, 5/8-11NC x 4 3/4" L.	2
		FIGURE 2	
14	PC286	Hex nut, 5/8-11NC	2
15	PC417	Washer	2
16	UK7M	Hold-down hook	2
17	------	Lift-out pipe & bail assembly (Order by bury depth)	1
		FIGURE 3	
18	UJ141A	Spool - without check valves (12E0PSA)	1
19	ZA66	Pipe plug 3/8-18 NPT	2
20	UJ15	Static seal ring	2
		FIGURE 4	
21	UJ241A	Flowing Well Spool-w/o check valves (12E0PSF)	1
22	ZA66	Pipe plug 3/8-18 NPT	2
23	------	Spool Cable Seals (See product catalog for proper size)	4
		FIGURE 5	
24	UJ140	Discharge Body	1
25	10AWN	Weld Nipple	1

STANDARD MODEL SPOOL TYPE PITLESS UNITS FOR 10" WELLS

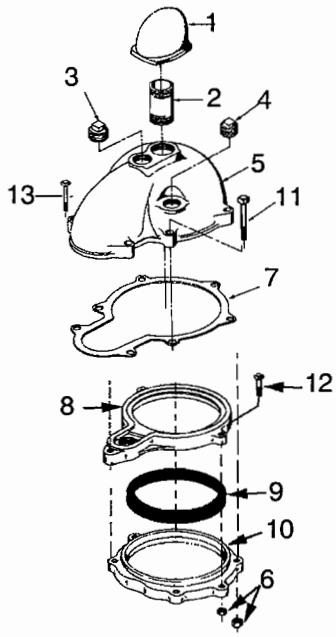

Figure 1

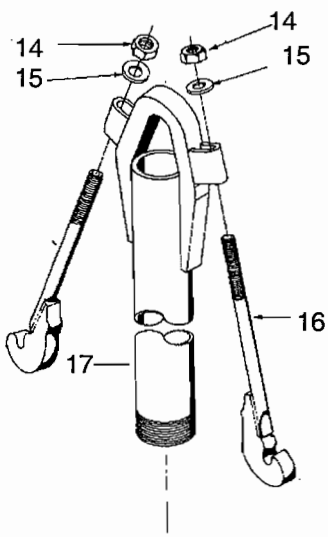

Figure 2

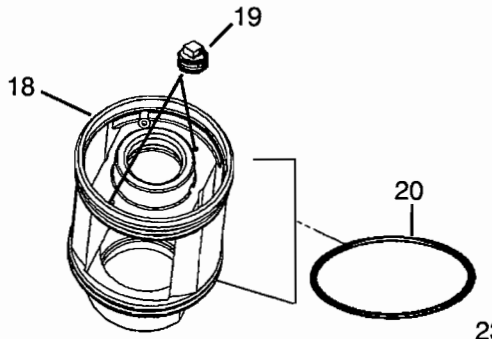

Figure 3

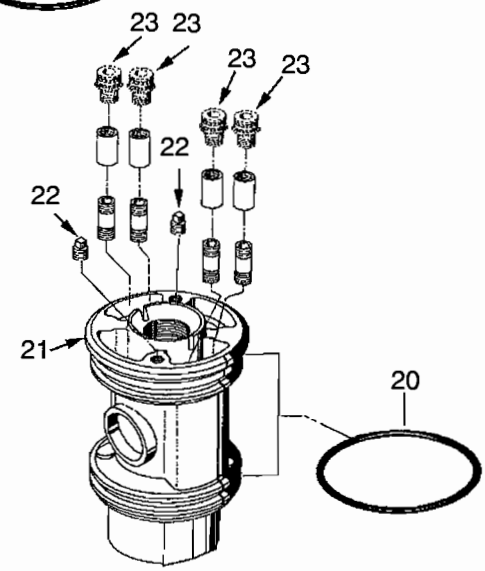

Figure 4

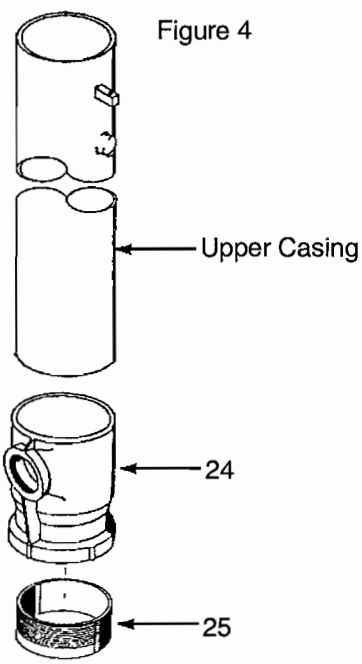

Figure 5

STANDARD INDUSTRIAL PITLESS UNITS

STANDARD MODEL SPOOL TYPE PITLESS UNITS FOR 12" WELLS

The drawings and parts list apply to the model numbers listed below.
Note: **Add (F) at end of model number for flowing well unit.**

Bury Depth	Unit	Well Size Tap	Case Size	Well Casing Attach.	Upper Case	Cap Style	Spool	Drop Pipe I.D.	Drop Discharge Conn.	Discharge I.D.	Std. Model
1' & Up	PS	12"	14"	W	B	W	E0	6	T	6	E

All units have a watertight cap with screened vent.
This Monitor Pitless Unit listed above is equipped with the following type of spool:
Spool without check valves, Figure No. 2
Spool without check valves for Flowing Well, Figure 4

NOTE: See Index for Optional Cap Cable Seals

Key No.	Ordering Number	Description	Qty.
		FIGURE 1	
1	PS155	Protected Screen Vent 2 1/2" NPT	1
2	PS365	Pipe Nipple 2 1/2" NPt x 6" L.	1
3	UJ50	Pipe Plug 2" NPT	1
4	UG54	Pipe plug 1 1/2" NPT	1
5	UK12	Seal Cap	1
6	PC286	Hex nut 5/8" - 11NC	9
7	UK72	Gasket	1
8	------	Lift out bail & Lift out pipe assembly (Order by bury depth)	1
9	PC417	Washer	2
10	UJ7	Hold-down hook	2
		Figure 2	
11	UK659A	Spool - without check valves (14E0PSA)	1
12	UN122	Pipe plug, 3/8" - 18 NPT	2
13	UK15	Static seal ring	2
		Figure 3	
14	UN73	Hex head cap screw 5/8" - 11NC x 4 3/4" L.	5
14A	UN81	Washer	5
15	UK60E	Discharge Body only	1
16	12AWN	Welding Nipple	1
20	LK4	Locking Bolt - 5/8" x 4 3/4" L.	2
		Figure 4	
17	UK6S4EF	Flowing Well Spool - without checks (14E0PSF)	1
18	UN122	Pipe plug - 3/8" - 18NPT	1
19	-------	Spool Cable Seals (See product catalog for proper size)	4
21	UN120	Pipe Plug - 1"	1

Monitor®

STANDARD MODEL SPOOL TYPE PITLESS UNITS FOR 12" WELLS

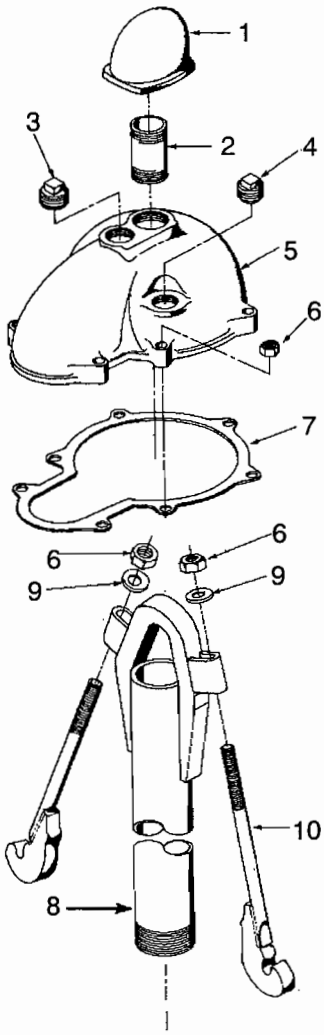

Figure 1

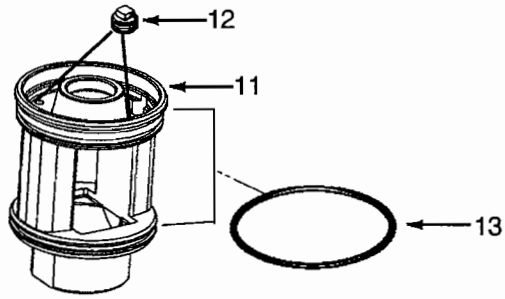

Figure 2

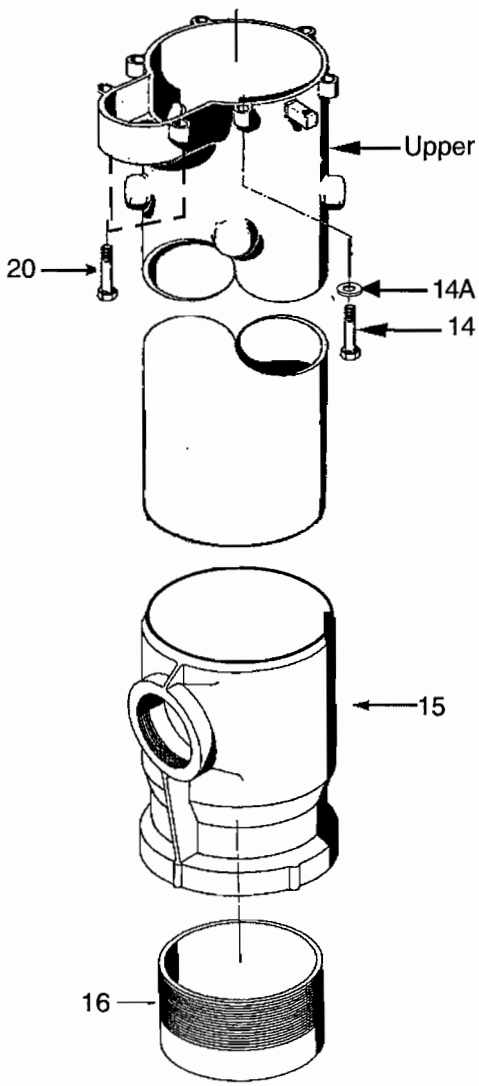

Figure 3

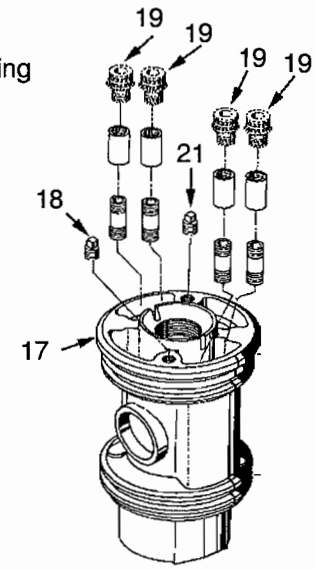

Figure 4

STANDARD INDUSTRIAL PITLESS UNITS

STANDARD MODEL SPOOL TYPE PITLESS UNITS FOR 14" & 16" WELLS

The drawings and parts list apply to the model numbers listed below.
Note: **Add (F) at end of model number for flowing well unit.**

Bury Depth	Unit	Well Size Tap	Case Size	Well Casing Attach.	Upper Case	Cap Style	Spool	Drop Pipe I.D.	Drop Discharge Conn.	Discharge I.D.	Std. Model
3' to 8'	PS	14"	18"	W	B	W	E0	8	T	8	E
3' to 8'	PS	16"	18"	W	B	W	E0	8	T	8	E

All units have a watertight cap with screened vent.
This Monitor Pitless Unit listed above is equipped with the following type of spool:
Spool without check valves, Figure No. 2
Spool without check valves for Flowing Well, Figure 4

NOTE: See Index for Optional Cap Cable Seals

Key No.	Ordering Number	Description	Quantity
		FIGURE 1	
1	PS155	Protected Screen Vent 2 1/2" NPT	1
2	PS365	Pipe Nipple, 2 1/2" NPT x 6" L.	1
3	UJ50	Pipe Plug, 2" NPT	1
4	UG54	Pipe Plug, 1 1/2" NPT	1
5	UM1	Seal Cap	1
6	PC286	Hex Nut, 5/8-11NC	12
7	UM72	Gasket	1
		FIGURE 2	
8	------	Spool & lift-out assembly w/o check valves. Order by bury depth	1
9	PC417	Washer	4
10	UM7	Hold-down hook	4
11	UN122	Pipe plug 3/8"-18NPT	1
12	E0188EFR	Spool without check valves	1
13	UM15	Static seal ring	2
22	UJ91	Pipe Plug 3/4"	1
23	UG54G	Pipe Plug 1 1/2"	1
		FIGURE 3	
14	UN81	Washer	8
15	UN73	Hex head cap screw, 5/8-11NC x 4 3/4" L	6
16	UM60E	Discharge Body	1
21	LK4	Lock Bolt - 5/8" x 4 3/4" L.	2
		FIGURE 4	
17	UM8S4EF	Flowing Well Spool without check valves	1
18	UN122	Pipe plug - 3/8"-18NPT	1
19	------	Spool Cable Seals (See product catalog for proper size)	4
22	UJ91	Pipe Plug 3/4"	1
		FIGURE 5	
20	UJ32X22	16"x14" Concentric Reducer	1

Monitor®

STANDARD MODEL SPOOL TYPE PITLESS UNITS FOR 14" & 16" WELLS

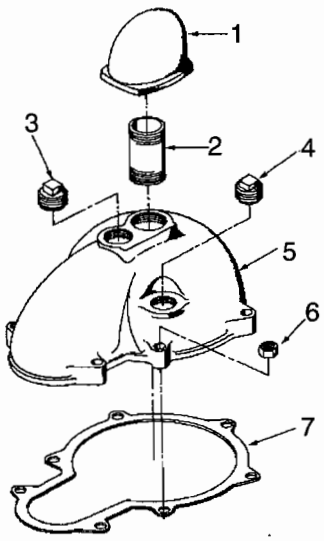

Figure 1

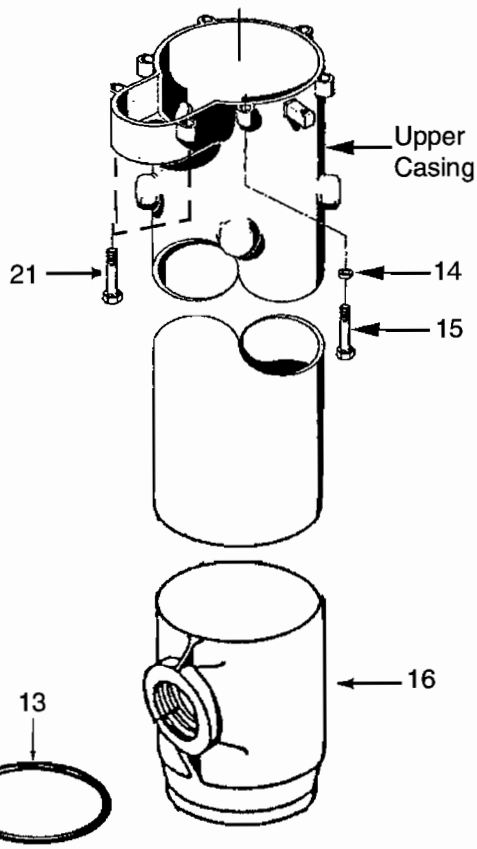

Figure 3

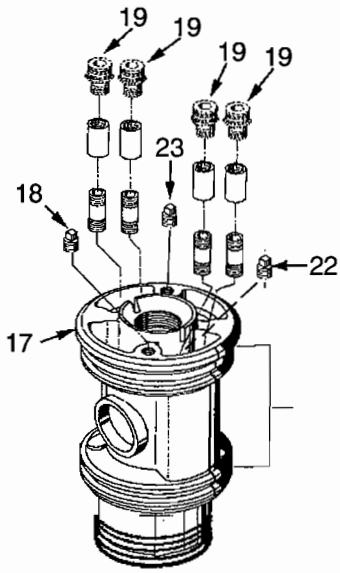

Figure 4

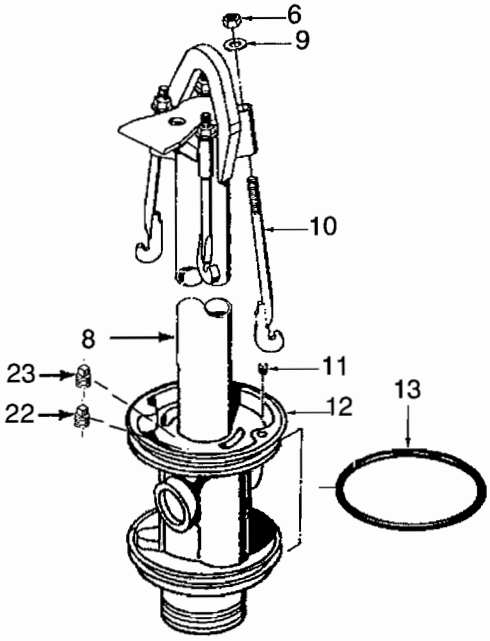

Figure 2

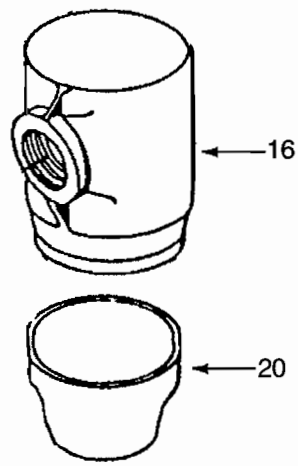

Figure 5

CUSTOM INDUSTRIAL PITLESS UNITS

Monitor®

CUSTOM INDUSTRIAL PITLESS UNITS FOR SUBMERSIBLE PUMPS
10", 12", 14", 16", 18", 20", 24" & 26" WELL SIZES

The Monitor PS Custom Industrial Pitless Unit for submersible pumps forms a watertight extension of the well casing which starts below the frost line, where it is buried permanently, and continues upward 12 or more inches above grade, where the pitless case is closed with a watertight cap.

FEATURES:

FROST PROOF . . . No heating is required. All water passages are below the frost line.

QUICK TO INSTALL . . . A quality pump installation can be made easily and economically without delay for masonry or building construction.

EASY TO SERVICE . . . Well cap can be removed without disconnecting electric cables. O-ring seals on spool permit withdrawal of the entire inner assembly simply by releasing hold-downs and lifting out. Replacement is equally simple. Spool support eliminates vertical adjustment and any possibility of dropping the inner assembly into the well.

RELIABLE SEALS . . . Neoprene O-rings between accurately machined hot-dipped lead free galvanized surfaces on the spool and within the unit provide positive seals.

O-RING SEAL PROTECTION . . . Monitor seal protection prevents seal damage during installation and servicing.

WATERTIGHT WELL CAP WITH SCREENED VENT & LOCKING BOLTS . . . Designed to permit removal without disconnecting cables. Separate Junction Box is eliminated. Watertight cable and conduit sealing is optional.

WATER SAMPLING VALVE–FROST PROOF...(Optional).

TO INSTALL A PS CUSTOM INDUSTRIAL UNIT:

An excavation around the well casing below the frost line is made and well casing cut off at a prescribed level. The well cap is removed, the hold-down hooks and spool assembly are lifted out of the pitless case with a hoist and set aside.* The pitless case is welded (watertight) to the well casing. The submersible motor, pump, and cable are attached to the drop pipe which is lowered into the well with a hoist; when the top of the last section of the drop pipe is one foot or more above the pitless case, the spool assembly is screwed onto the drop pipe. The spool assembly and drop pipe with motor, pump, and cable are lowered into place; then finally, the hold-down hooks, electrical service, and well cap are installed.

*The spool assembly includes: a spool with two o-ring seals; lift-out pipe and bail.

ALTERNATIVE DISCHARGE CONNECTIONS

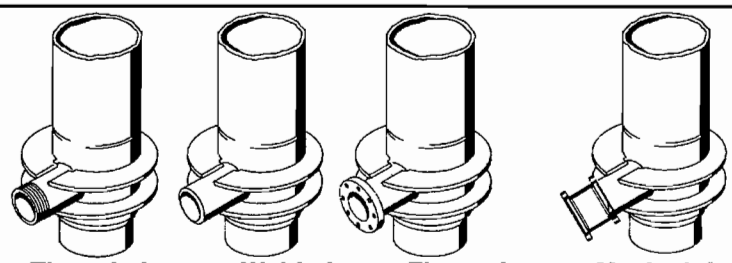

Threaded **Welded** **Flanged** **Mech. Joint w/trans. sleeve**

Units can be supplied with a discharge designed for threaded, welded, flanged or mechanical joint with transition sleeve connection. Column pipe connection is male iron pipe thread.

CORROSION PROTECTION... All water passages are either hot-dipped lead free galvanized or constructed of corrosion resistant material.

LIFT-OUT BAIL . . . Standard on all units.

HOLD-DOWN . . . Supplied with each unit. Hold-down pipe also serves as lift-out pipe for installation and servicing.

DEPTH TESTS BLOCKS . . . Standard on all units.

PROTECTED SCREEN VENT . . . Standard on all units.

PROBE TUBE . . . Standard on all units.

SPOOL STYLES

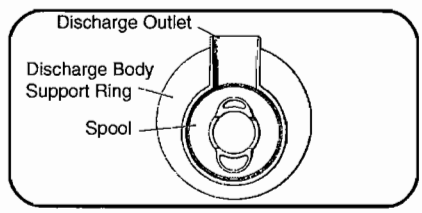

NO VALVES SPOOL

SUPPORT RINGS . . . Prevent distortion of the Discharge Body due to vertical movement of Discharge Pipe.

FLOWING WELLS . . . Units available for most well sizes.

LOCKING BOLTS on all units.

100% Made in the U.S.A.

CUSTOM INDUSTRIAL PITLESS UNITS

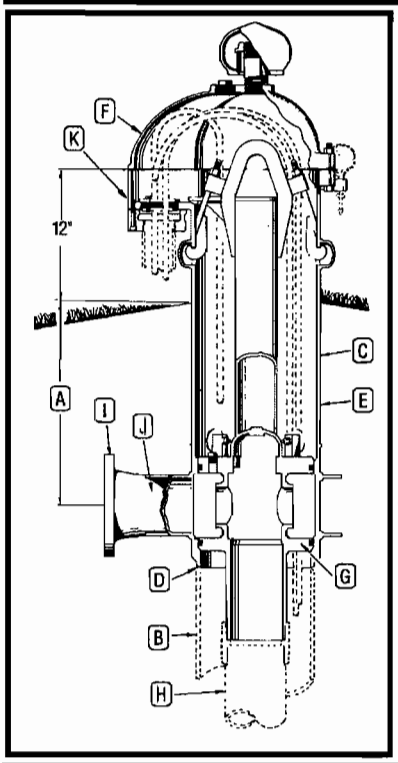

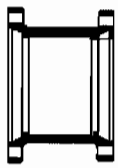

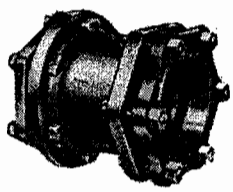

Transition Sleeve

UNITS AVAILABLE BY QUOTATION ONLY
10" THROUGH 30" WELL SIZES

EXPLANATION OF PITLESS UNIT ORDERING NUMBERS

The diagram illustrates the meaning of the various letters and numerals used in Monitor Custom Industrial Pitless Unit ordering numbers. A typical order number and the pitless unit it stands for are shown.

Typical Order Number
3PS1014WBWE06F6S

3 **A.** The first numeral in the order number indicates the bury depth, in feet, of the unit. Bury depth on all units is measured from the center of the discharge line to ground level. The top of the pitless case extends 12" above ground level as is required by many codes.

PS These letters indicate the type of pump the pitless unit is designed for. The unit shown is a PS for submersible pump.

10 **B.** Indicates the well casing size. The 10 is for 10" wells, 12 for 12" wells and so on through 26".

14 **C.** Indicates the upper pitless case size is 14".

W **D.** Indicates the attachment to the well casing is a welded joint.

B **E.** Indicates the upper pitless case is black pipe.

W **F.** Indicates the unit has a watertight cap with screened vent installed.

E **G.** Indicates spool has pressure equalizing passages.

0 Indicates this type of spool has no check valves.

6 **H.** Indicates the size of drop pipe in inches.

F **I.** Indicates the discharge connection is Flanged. Other options are Welded, Threaded and Mechanical Joint with transition sleeve.

6 **J.** Indicates the size of discharge pipe in inches.

S **K.** Sealed Conduit Connection. (Optional)

DESCRIPTION - ORDERING NUMBERS			
A		Bury Depth in Feet	
	PS	Pitless Unit for Submersible Pump	
B		Well Size - Ins.	
C		Upper Case Size - Ins.	
D	W	Attachment to Well Casing-Welded	
E	B	Black Upper Case	
F	W	Watertight Cap w/Screened Air Vent	
	E	Pressure Equalizing Spool Passages	
G	0	Standard Spool	
H		Drop Pipe I.D. Ins.	
I		Welded	Discharge Connection
		Flange, ASA 150#	
		Threaded NPT	
		Mech. Joint w/Transition Sleeve	
J		Discharge I.D. Ins.	
K		Elec. Cable Seal (**S**) O.D. 3 Wire ____ O.D. Grounding Wire ___	
OPTIONS		Water Sampler Valve (**H**)	
		Flowing Well (**F**)	
		Special Provision (**X**)	

CUSTOM INDUSTRIAL PITLESS UNITS

Monitor®

CUSTOM INDUSTRIAL PITLESS UNITS
FOR SUBMERSIBLE PUMPS
10" & 12" WELL SIZES

FIRST *Choose well size then make-up basic ordering number from proper column in specifications*

ORDERING NUMBER SELECTION GUIDE

Bury Depth - Ft. (Select one)	Pitless Submersible	Well Size - In. (Select One)	Upper Case Size - In.	Attachment to Well Casing (Welded)	Black Upper Case	Watertight Cap	Pressure Equalizing Spool Passages	Plain Spool	Drop Pipe I.D. - In. (Select One)	Discharge Connection (Select One)				Discharge I.D. - In. (Select One)
										Welded	Flanged	Threaded	Mech. Joint W/Trans. Sleeve	
1									4					4
&	PS1014	W	B	W	E		0	5	W	F	T		M	5
Up	12							6						6

SECOND: *Add Desired Accessories Symbol*

ACCESSORY LIST	SYMBOL
Electrical Cable Seal	S
Water Sampler Valve	H
Flowing Well	F
Special Provisions	X

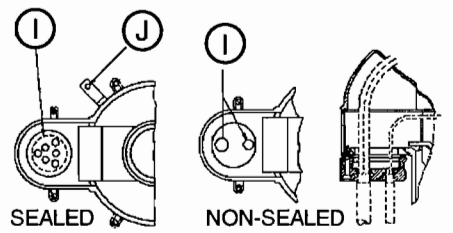

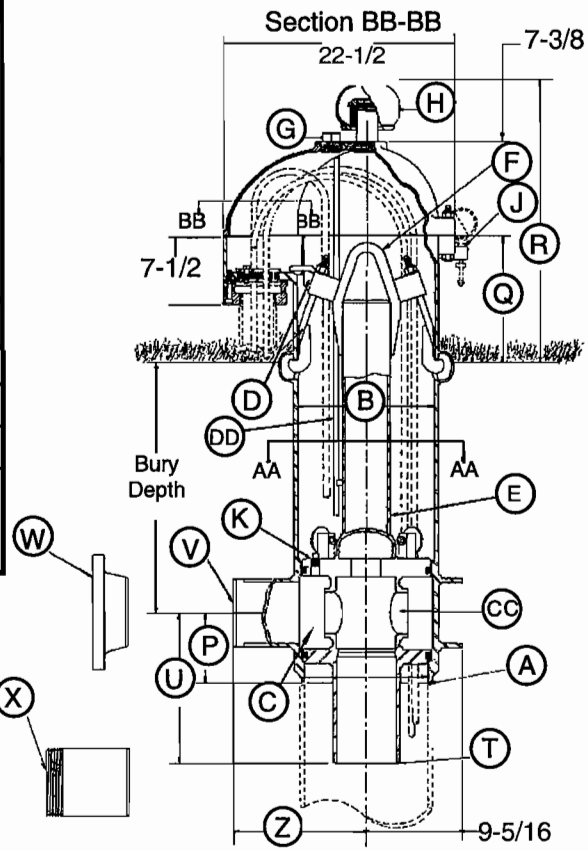

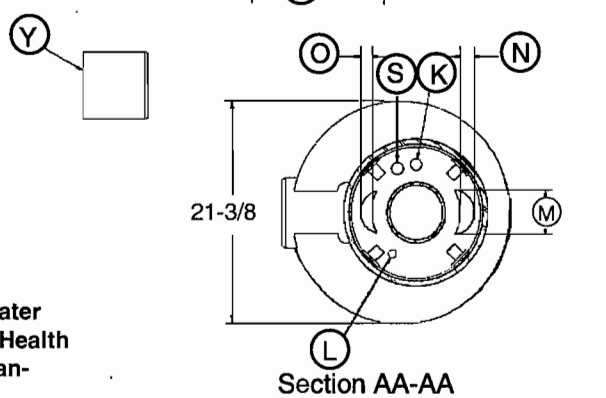

COMPONENT MATERIALS

Well Vent - cast iron, green enamel finish.
Cap - cast iron, green enamel finish.
Conduit Box - steel, corrosion resistant coating.
Electrical Cable Seal - cast iron, green enamel finish.
Combination Hold-Down & Lift-Out Mechanism - lead free galvanized.
Hold-Down Pipe - steel, corrosion resistant coating.
Pitless Case - steel, corrosion resistant coating.
Discharge Body - steel, lead free galvanized.
Spool - steel, lead free galvanized.
Probe Tube - 1" PVC

NOTE: Any combination between Drop Pipe and Discharge Outlet size is possible, if required.
NOTE: Maximum rated discharge pressure = 300 PSI

Note: Pitless units conform to the Recommended Standards for Water works, Great Lakes Upper Mississippi River Board of State Public Health & Environmental Managers and Water Systems Council PAS-97 standards.

Specifications Subject to Change Without Notice

Monitor®

CUSTOM INDUSTRIAL PITLESS UNITS
FOR SUBMERSIBLE PUMPS
10" & 12" WELL SIZES

SPECIFICATIONS

(See drawing on Page 30)

A **Pitless Unit to well casing connection:** Chamfered for butt weld.
B **Pitless Unit with Black Upper Case:** 13-1/8 in. I.D., 14 in. O.D.
C **Discharge Body minimum I.D. 10":** Large enough to permit insertion of 10 in. pipe during well servicing.
Discharge Body minimum I.D. 12": Large enough to permit insertion of 12 1/4" O.D. x 1/8" wall tube during well servicing.
D **Hold-Down Mechanism and Locator:** Locks spool in place and prevents lifting and turning during pump start-up. Two adjustable hooks on lift-out pipe hook into side of pitless case.
DD Probe Tube Standard 1 in. PVC Pipe. (Standard).
E **Lift-Out Pipe:** 4 in. NPT with standard lift-out bail.
F **Lift-Out Bail:** Lift-out pipe and bail assembly designed for a 68,000 lb. load.
G 2 in. NPT Tapping.
H **Well Vent:** Screws into a 2-1/2 in. NPT Tapping.

CAP CABLE SEALS (SECTION BB-BB)

I **Conduit Tapping:** 2 in. and 1 in. Std. Also available with single 2 in., 3 in., or 4 in. NPT. All tapping sizes available with or without electrical cable seal.
J **Depth Tester Block Tappings:** 1/4 in. NPT Std.
K 1 in. NPT Tapping ported to Drop Pipe.
L **Pressure switch tapping:** 3/8 in. NPT Std.

MOTOR CABLE PASSAGES THROUGH SPOOL (SECTION AA-AA)

M 4 in.
N 1-1/2 in.
O 1 in.
P **Dimension from center of Discharge Outlet to bottom of Discharge Body:** 15-3/4 in.
Q **Distance from ground level to top of the pitless case:** 12 in.
R **Distance from ground level to top of the vent cap:** 28-1/2 in. (Vent Height may be increased if necessary).
S **3/4 in. NPT Tapping:** used for optional Water Sampler.

T	**SPOOL TO DROP PIPE THREAD SIZES:**	**4 in. NPT**	**5 in. NPT**	**6 in. NPT**
U	Dimension from center of discharge outlet to bottom of Spool:	13-7/16 in.	14-7/16 in.	14-1/2 in.
	DISCHARGE CONNECTIONS AND SIZES:			
V	For Butt Weld (IPS):	4 in. I.D.	5 in. I.D.	6 in. I.D.
W	For Flanged (A.S.A. Std. 150 lb.):	4 in. I.D.	5 in. I.D.	6 in. I.D.
X	For Threaded (NPT):	4 in. I.D.	5 in. I.D.	6 in. I.D.
Y	For Transition Sleeve (IPS):	4 in. I.D.	Not Available	6 in. I.D.
Z	Dimension from center of Well Casing to the end of Discharge Outlet.			
	With [**V**] Butt Weld Discharge:	18-1/2 in.	18-1/2 in.	12-15/16 in.
	With [**W**] Flanged Discharge:	21-1/2 in.	22 in.	16-7/16 in.
	With [**X**] Threaded Discharge:	21-7/16 in.	21-7/16 in.	16-15/16 in.
	With [**Y**] Transition Sleeve:	30-1/2 in.	Not Available	24-15/16 in.
CC	**SPOOL ASSEMBLY - WITHOUT CHECK VALVES -**			
	Area of Water Passage(s):	25.12 sq. in.	25.12 sq. in.	25.12 sq. in.
	Percent area of water passages to area of drop pipe	195%	125%	87%

CUSTOM INDUSTRIAL PITLESS UNITS

Monitor®

CUSTOM INDUSTRIAL PITLESS UNITS
FOR SUBMERSIBLE PUMPS
14" WELL SIZES

FIRST *Choose well size then make-up basic ordering number from proper column in specifications*

ORDERING NUMBER SELECTION GUIDE

Bury Depth - Ft. (Select one)	Pitless Submersible	Well Size - In. (Select One)	Upper Case Size - In.	Attachment to Well Casing (Welded)	Black Upper Case	Watertight Cap	Pressure Equalizing Spool Passages	Plain Spool	Drop Pipe I.D. - In. (Select One)	Discharge Connection (Select One)				Discharge I.D. - In. (Select One)
										Welded	Flanged	Threaded	Mech. Joint W/Trans. Sleeve	
1									5					5
& Up	PS1416	W	B	W	E		0	6 8	W	F	T	M		6 8

SECOND: *Add Desired Accessories Symbol*

ACCESSORY LIST	SYMBOL
Electrical Cable Seal	S
Water Sampler Valve	H
Flowing Well	F
Special Provisions	X

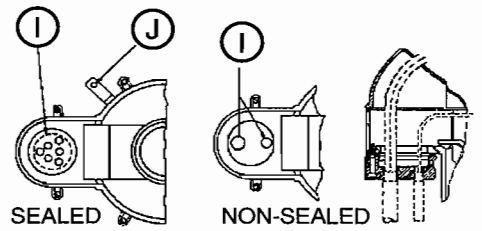

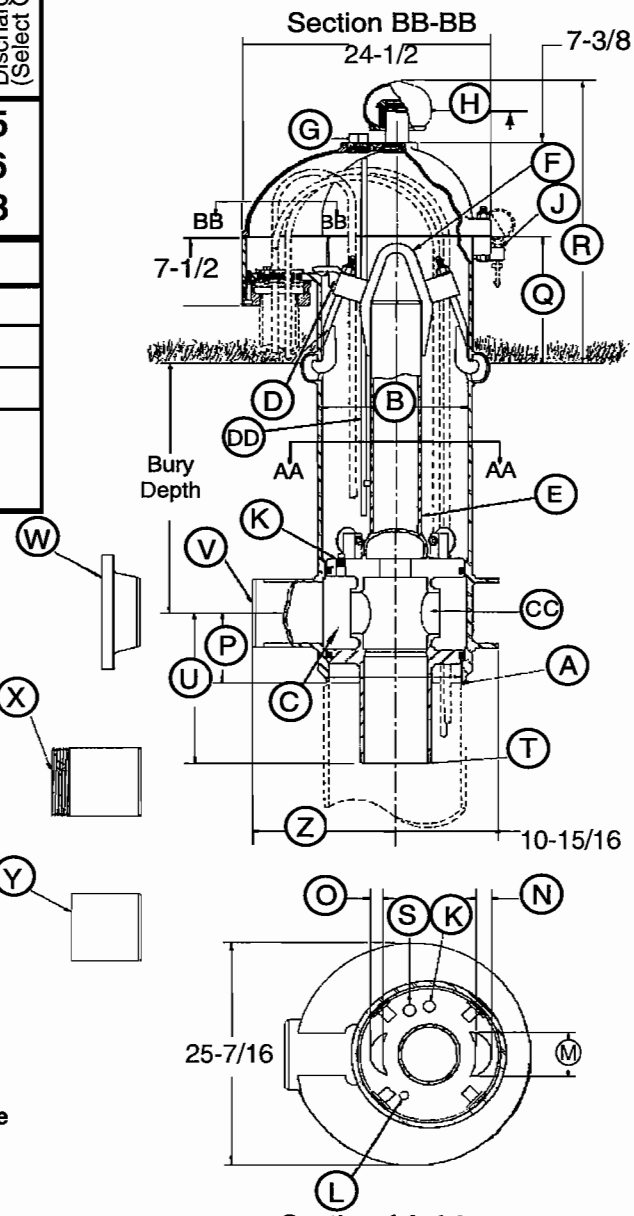

COMPONENT MATERIALS

Well Vent - cast iron, green enamel finish.
Cap - cast iron, green enamel finish.
Conduit Box - steel, corrosion resistant coating.
Electrical Cable Seal - cast iron, green enamel finish.
Combination Hold-Down & Lift-Out Mechanism - lead free galvanized.
Hold-Down Pipe - steel, corrosion resistant coating.
Pitless Case - steel, corrosion resistant coating.
Discharge Body - steel, lead free galvanized.
Spool - steel, lead free galvanized.
Probe Tube - 1" PVC

NOTE: Any combination between Drop Pipe and Discharge Outlet size is possible, if required.
NOTE: Maximum rated discharge pressure = 300 PSI

Note: Pitless units conform to the Recommended Standards for Water works, Great Lakes Upper Mississippi River Board of State Public Health & Environmental Managers and Water Systems Council PAS-97 standards.

Specifications Subject to Change Without Notice

Monitor®

CUSTOM INDUSTRIAL PITLESS UNITS
FOR SUBMERSIBLE PUMPS
14" WELL SIZES

SPECIFICATIONS

(See drawing on Page 32)

A **Pitless Unit to well casing connection:** Chamfered for butt weld.
B **Pitless Unit with Black Upper Case:** 15-1/4 in. I.D., 16 in. O.D.
C **Discharge Body minimum I.D. 13-1/4":** Large enough to permit insertion of 14 in. O.D. tubing to this point for well servicing.
D **Hold-Down Mechanism and Locator:** Locks spool in place and prevents lifting and turning during pump start-up. Two adjustable hooks on lift-out pipe hook into side of pitless case.
DD Probe Tube Standard 1 in. PVC Pipe. (Standard).
E **Lift-Out Pipe:** 5 in. NPT with standard lift-out bail.
F **Lift-Out Bail:** Lift-out pipe and bail assembly designed for a 110,000 lb. load.
G 2 in. NPT Tapping.
H **Well Vent:** Screws into a 2-1/2 in. NPT Tapping.

CAP CABLE SEALS (SECTION BB-BB)

I **Conduit Tapping:** 2 in. and 1 in. Std. Also available with single 2 in., 3 in., or 4 in. NPT. All tapping sizes available with or without electrical cable seal.
J **Depth Tester Block Tappings:** 1/4 in. NPT Std.
K Two 1 in. NPT Tappings ported to Drop Pipe.
L **Pressure switch tapping:** 3/8 in. NPT Std.

MOTOR CABLE PASSAGES THROUGH SPOOL (SECTION AA-AA)

M 4 in.
N 1 7/8 in.
O 1-1/4 in.
P **Dimension from center of Discharge Outlet to bottom of Discharge Body:** 11-1/16 in.
Q **Distance from ground level to top of the pitless case:** 12 in.
R **Distance from ground level to top of the vent cap:** 28-15/16 in. (Vent Height may be increased if necessary).
S **3/4 in. NPT Tapping:** used for optional Water Sampler.

T	**SPOOL TO DROP PIPE THREAD SIZES:**	**5 in. NPT**	**6 in. NPT**	**8 in. NPT**
U	Dimension from center of discharge outlet to bottom of Spool:	16-3/16 in.	21-13/16 in.	15-13/16 in.
	DISCHARGE CONNECTIONS AND SIZES:			
V	For Butt Weld (IPS):	5 in. I.D.	6 in. I.D.	8 in. I.D.
W	For Flanged (A.S.A. Std. 150 lb.):	5 in. I.D.	6 in. I.D.	8 in. I.D.
X	For Threaded (NPT):	5 in. I.D.	6 in. I.D.	8 in. I.D.
Y	For Transition Sleeve (IPS):	5 in. I.D.	6 in. I.D.	8 in. I.D.
Z	Dimension from center of Well Casing to the end of Discharge Outlet.			
	With [V] Butt Weld Discharge:	20-9/16 in.	20-9/16 in.	14-1/2 in.
	With [W] Flanged Discharge:	24-1/16 in.	24-1/16 in.	18-1/2 in.
	With [X] Threaded Discharge:	23-9/16 in.	24-9/16 in.	18-1/2 in.
	With [Y] Transition Sleeve:	Not Available	32-9/16 in.	26-1/2 in.
CC	**SPOOL ASSEMBLY - WITHOUT CHECK VALVES -**			
	Area of Water Passage(s):	19.6 sq. in.	39.2 sq. in.	39.2 sq. in.
	Percent area of water passages to area of drop pipe	100%	138%	78.2%

CUSTOM INDUSTRIAL PITLESS UNITS

Monitor®

CUSTOM INDUSTRIAL PITLESS UNITS
FOR SUBMERSIBLE PUMPS
16" WELL SIZES

FIRST *Choose well size then make-up basic ordering number from proper column in specifications*

ORDERING NUMBER SELECTION GUIDE

Bury Depth - Ft. (Select one)	Pitless Submersible	Well Size - In. (Select One)	Upper Case Size - In.	Attachment to Well Casing (Welded)	Black Upper Case	Watertight Cap	Pressure Equalizing Spool Passages	Plain Spool	Drop Pipe I.D. - In. (Select One)	Discharge Connection (Select One)				Discharge I.D. - In. (Select One)
										Welded	Flanged	Threaded	Mech. Joint W/Trans. Sleeve	
1									5					5
& Up	PS1618	W	B	W	E	0	6	W	8	F	T	M		6 8

SECOND: *Add Desired Accessories Symbol*

ACCESSORY LIST	SYMBOL
Electrical Cable Seal	S
Water Sampler Valve	H
Flowing Well	F
Special Provisions	X

COMPONENT MATERIALS

Well Vent - cast iron, green enamel finish.
Cap - cast iron, green enamel finish.
Conduit Box - steel, corrosion resistant coating.
Electrical Cable Seal - cast iron, green enamel finish.
Combination Hold-Down & Lift-Out Mechanism - lead free galvanized.
Hold-Down Pipe - steel, corrosion resistant coating.
Pitless Case - steel, corrosion resistant coating.
Discharge Body - steel, lead free galvanized.
Spool - steel, lead free galvanized.
Probe Tube - 1" PVC

NOTE: Any combination between Drop Pipe and Discharge Outlet size is possible, if required.
NOTE: Maximum rated discharge pressure = 300 PSI

Note: Pitless units conform to the Recommended Standards for Water works, Great Lakes Upper Mississippi River Board of State Public Health & Environmental Managers and Water Systems Council PAS-97 standards.

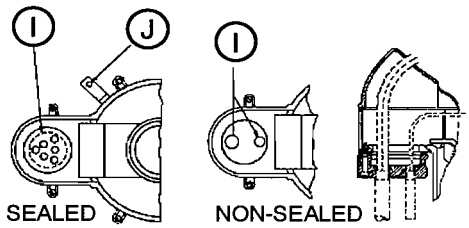

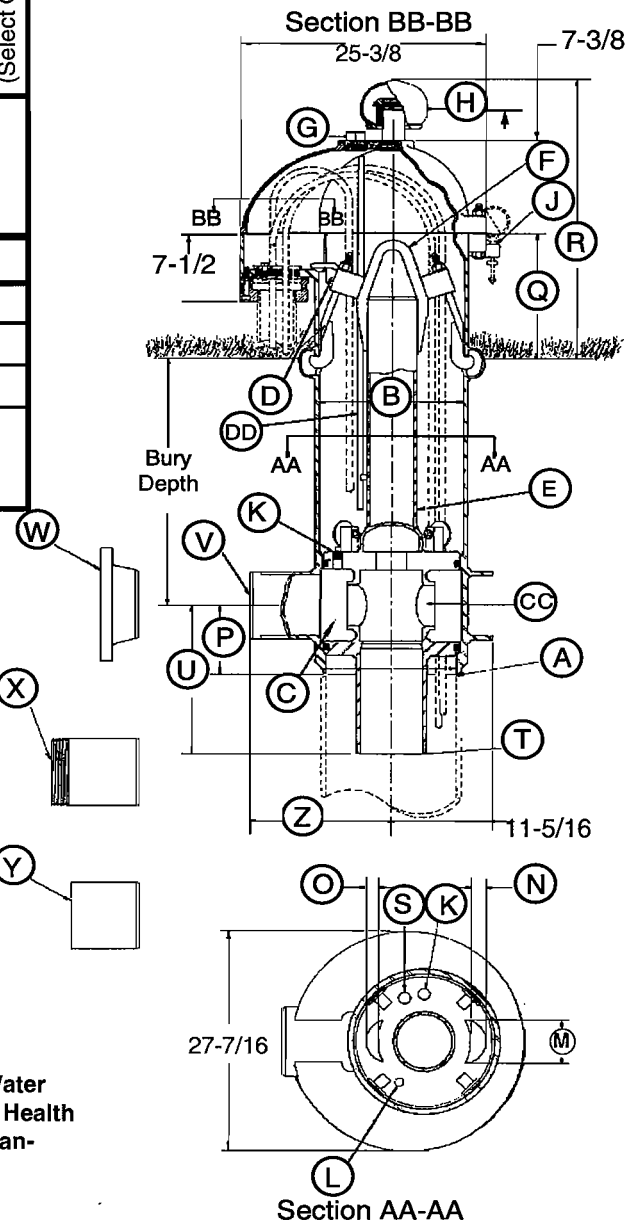

Specifications Subject to Change Without Notice

Monitor®

CUSTOM INDUSTRIAL PITLESS UNITS
FOR SUBMERSIBLE PUMPS
16" WELL SIZES

SPECIFICATIONS

(See drawing on Page 34)

A **Pitless Unit to well casing connection:** Chamfered for butt weld.
B **Pitless Unit with Black Upper Case:** 17-1/4 in. I.D., 18 in. O.D.
C **Discharge Body minimum I.D. 15-1/4":** Large enough to permit insertion of 16 in. O.D. tubing to this point for well servicing.
D **Hold-Down Mechanism and Locator:** Locks spool in place and prevents lifting and turning during pump start-up. Four adjustable hooks on lift-out pipe hook into side of pitless case.
DD Probe Tube Standard 1 in. PVC Pipe. (Standard).
E **Lift-Out Pipe:** 5 in. NPT with standard lift-out bail.
F **Lift-Out Bail:** Lift-out pipe and bail assembly designed for a 110,000 lb. load.
G 2 in. NPT Tapping.
H **Well Vent:** Screws into a 2-1/2 in. NPT Tapping.

CAP CABLE SEALS (SECTION BB-BB)

I **Conduit Tapping:** 2 in. and 1 in. Std. Also available with single 2 in., 3 in., or 4 in. NPT. All tapping sizes available with or without electrical cable seal.
J **Depth Tester Block Tappings:** 1/4 in. NPT. Std.
K Two 1 in. NPT Tappings ported to Drop Pipe.
L **Pressure switch tapping:** 3/8 in. NPT Std.

MOTOR CABLE PASSAGES THROUGH SPOOL (SECTION AA-AA)

M 5 in.
N 2-1/4 in.
O 1-1/4 in.
P **Dimension from center of Discharge Outlet to bottom of Discharge Body:** 11-1/16 in.
Q **Distance from ground level to top of the pitless case:** 12 in.
R **Distance from ground level to top of the vent cap:** 28-1/4 in. (Vent Height may be increased if necessary).
S **3/4 in. NPT Tapping:** used for optional Water Sampler.

T	**SPOOL TO DROP PIPE THREAD SIZES:**	**5 in. NPT**	**6 in. NPT**	**8 in. NPT**
U	Dimension from center of discharge outlet to bottom of Spool:	16-1/4 in.	21-7/8 in.	15-13/16 in.
	DISCHARGE CONNECTIONS AND SIZES:			
V	For Butt Weld (IPS):	5 in. I.D.	6 in. I.D.	8 in. I.D.
W	For Flanged (A.S.A. Std. 150 lb.):	5 in. I.D.	6 in. I.D.	8 in. I.D.
X	For Threaded (NPT):	5 in. I.D.	6 in. I.D.	8 in. I.D.
Y	For Transition Sleeve (IPS):	5 in. I.D.	6 in. I.D.	8 in. I.D.
Z	Dimension from center of Well Casing to the end of Discharge Outlet.			
	With [**V**] Butt Weld Discharge:	23 in.	23 in.	17 in.
	With [**W**] Flanged Discharge:	26-1/2 in.	26-1/2 in.	21 in.
	With [**X**] Threaded Discharge:	26 in.	27 in.	21 in.
	With [**Y**] Transition Sleeve:	Not Available	35 in.	29 in.
CC	**SPOOL ASSEMBLY - WITHOUT CHECK VALVES -**			
	Area of Water Passage(s):	19.6 sq. in.	39.2 sq. in.	39.2 sq. in.
	Percent area of water passages to area of drop pipe	100%	138%	78.2%

Monitor®

CUSTOM INDUSTRIAL PITLESS UNITS FOR SUBMERSIBLE PUMPS

18" WELL SIZES

FIRST *Choose well size then make-up basic ordering number from proper column in specifications*

ORDERING NUMBER SELECTION GUIDE

Bury Depth - Ft. (Select one)	Pitless Submersible	Well Size - In. (Select One)	Upper Case Size - In.	Attachment to Well Casing (Welded)	Black Upper Case	Watertight Cap	Pressure Equalizing Spool Passages	Plain Spool	Drop Pipe I.D. - In. (Select One)	Discharge Connection (Select One)				Discharge I.D. - In. (Select One)
										Welded	Flanged	Threaded	Mech. Joint W/Trans. Sleeve	
1									6					6
&	PS1820	W	B	W	E		0	8	W	F	T		M	8
Up									10					10

SECOND: *Add Desired Accessories Symbol*

ACCESSORY LIST	SYMBOL
Electrical Cable Seal	S
Water Sampler Valve	H
Flowing Well	F
Special Provisions	X

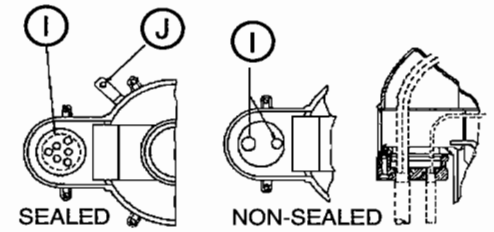

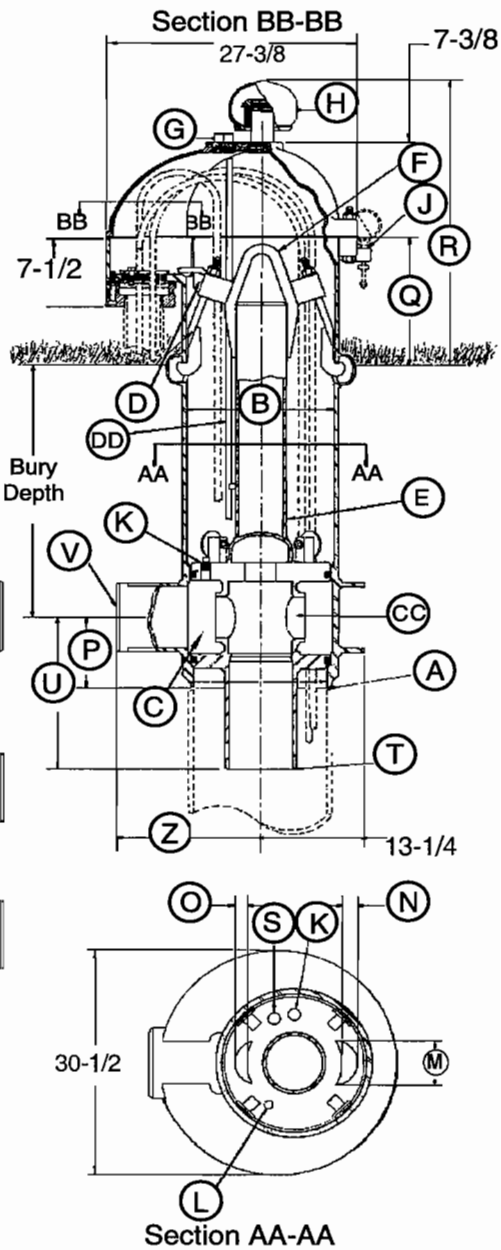

COMPONENT MATERIALS

Well Vent - cast iron, green enamel finish.
Cap - cast iron, green enamel finish.
Conduit Box - steel, corrosion resistant coating.
Electrical Cable Seal - cast iron, green enamel finish.
Combination Hold-Down & Lift-Out Mechanism - lead free galvanized.
Hold-Down Pipe - steel, corrosion resistant coating.
Pitless Case - steel, corrosion resistant coating.
Discharge Body - steel, lead free galvanized.
Spool - steel, lead free galvanized.
Probe Tube - 1" PVC

NOTE: Any combination between Drop Pipe and Discharge Outlet size is possible, if required.
NOTE: Maximum rated discharge pressure = 300 PSI

Note: Pitless units conform to the Recommended Standards for Water works, Great Lakes Upper Mississippi River Board of State Public Health & Environmental Managers and Water Systems Council PAS-97 standards.

Specifications Subject to Change Without Notice

Monitor®

CUSTOM INDUSTRIAL PITLESS UNITS
FOR SUBMERSIBLE PUMPS
18" WELL SIZES

SPECIFICATIONS

(See drawing on Page 36)

A **Pitless Unit to well casing connection:** Chamfered for butt weld.
B **Pitless Unit with Black Upper Case:** 19-1/4 in. I.D., 20 in. O.D.
C **Discharge Body minimum I.D. 17-1/4":** Large enough to permit insertion of 18 in. O.D. tubing to this point for well servicing.
D **Hold-Down Mechanism and Locator:** Locks spool in place and prevents lifting and turning during pump start-up. Four adjustable hooks on lift-out pipe hook into side of pitless case.
DD Probe Tube Standard 1 in. PVC Pipe. (Standard).
E **Lift-Out Pipe:** 6 in. NPT with standard lift-out bail.
F **Lift-Out Bail:** Lift-out pipe and bail assembly designed for a 142,000 lb. load.
G 2 in. NPT Tapping.
H **Well Vent:** Screws into a 2-1/2 in. NPT Tapping.

CAP CABLE SEALS (SECTION BB-BB)

I **Conduit Tapping:** 2 in. and 1 in. Std. Also available with single 2 in., 3 in., or 4 in. NPT. All tapping sizes available with or without electrical cable seal.
J **Depth Tester Block Tappings:** 1/4 in. NPT Std.
K Two 1 in. NPT Tappings ported to Drop Pipe.
L **Pressure switch tapping:** 3/8 in. NPT Std.

MOTOR CABLE PASSAGES THROUGH SPOOL (SECTION AA-AA)

M 6 in.
N 2-5/8 in.
O 1-1/2 in.
P **Dimension from center of Discharge Outlet to bottom of Discharge Body:** 12-13/16 in.
Q **Distance from ground level to top of the pitless case:** 12 in.
R **Distance from ground level to top of the vent cap:** 28-1/4 in. (Vent Height may be increased if necessary).
S **3/4 in. NPT Tapping:** used for optional Water Sampler.

		6 in. NPT	8 in. NPT	10 in. NPT
T	**SPOOL TO DROP PIPE THREAD SIZES:**			
U	Dimension from center of discharge outlet to bottom of Spool:	24-1/16 in.	24-1/16 in.	19-3/32 in.
	DISCHARGE CONNECTIONS AND SIZES:			
V	For Butt Weld (IPS):	6 in. I.D.	8 in. I.D.	10 in. I.D.
W	For Flanged (A.S.A. Std. 150 lb.):	6 in. I.D.	8 in. I.D.	10 in. I.D.
X	For Threaded (NPT):	6 in. I.D.	8 in. I.D.	10 in. I.D.
Y	For Transition Sleeve (IPS):	6 in. I.D.	8 in. I.D.	10 in. I.D.
Z	Dimension from center of Well Casing to the end of Discharge Outlet.			
	With [**V**] Butt Weld Discharge:	25-1/2 in.	25-1/2 in.	18-1/2 in.
	With [**W**] Flanged Discharge:	29 in.	29-1/2 in.	22-1/2 in.
	With [**X**] Threaded Discharge:	29-1/2 in.	29-1/2 in.	23-5/8 in.
	With [**Y**] Transition Sleeve:	37-9/16 in.	37-9/16 in.	30-9/16 in.
CC	**SPOOL ASSEMBLY - WITHOUT CHECK VALVES -**			
	Area of Water Passage(s):	33.18 sq. in.	66.36 sq. in.	66.36 sq. in.
	Percent area of water passages to area of drop pipe	115%	132%	85%

Monitor®

CUSTOM INDUSTRIAL PITLESS UNITS FOR SUBMERSIBLE PUMPS
20" WELL SIZES

FIRST *Choose well size then make-up basic ordering number from proper column in specifications*

ORDERING NUMBER SELECTION GUIDE

Bury Depth - Ft. (Select one)	Pitless Submersible	Well Size - In. (Select One)	Upper Case Size - In.	Attachment to Well Casing (Welded)	Black Upper Case	Watertight Cap	Pressure Equalizing Spool Passages	Plain Spool	Drop Pipe I.D. - In. (Select One)	Discharge Connection (Select One)				Discharge I.D. - In. (Select One)
										Welded	Flanged	Threaded	Mech. Joint W/Trans. Sleeve	
1									6					6
& Up	PS2022	W	B	W	E	0		8	10	W	F	T	M	8 10

SECOND: *Add Desired Accessories Symbol*

ACCESSORY LIST	SYMBOL
Electrical Cable Seal	S
Water Sampler Valve	H
Flowing Well	F
Special Provisions	X

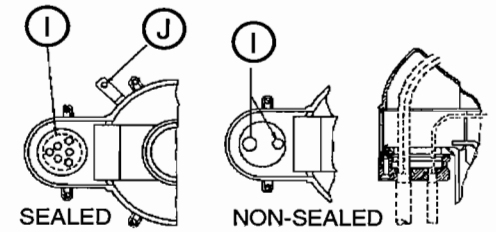

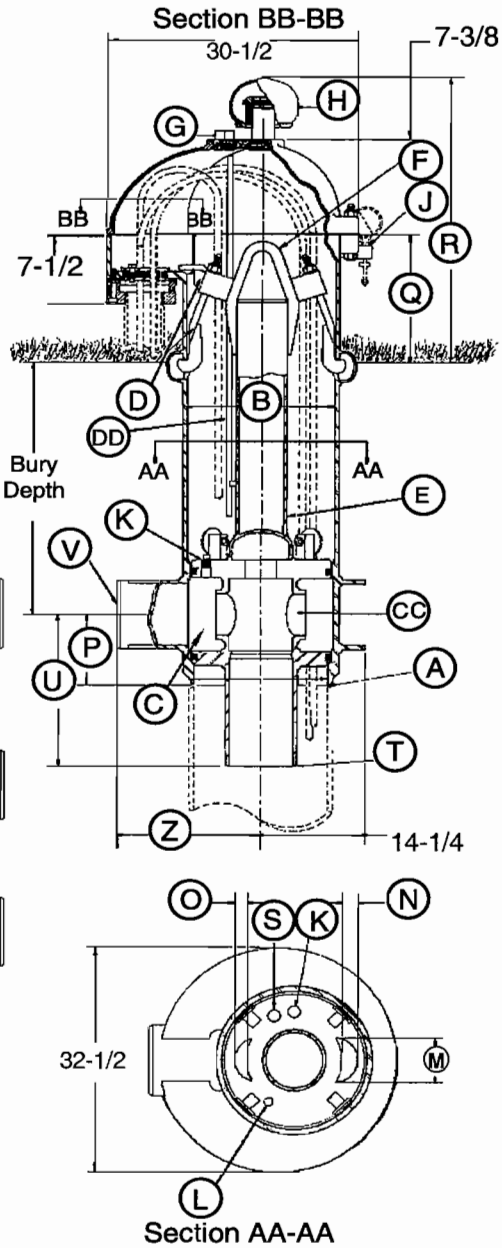

COMPONENT MATERIALS

Well Vent - cast iron, green enamel finish.
Cap - cast iron, green enamel finish.
Conduit Box - steel, corrosion resistant coating.
Electrical Cable Seal - cast iron, green enamel finish.
Combination Hold-Down & Lift-Out Mechanism - lead free galvanized.
Hold-Down Pipe - steel, corrosion resistant coating.
Pitless Case - steel, corrosion resistant coating.
Discharge Body - steel, lead free galvanized.
Spool - steel, lead free galvanized.
Probe Tube - 1" PVC

NOTE: Any combination between Drop Pipe and Discharge Outlet size is possible, if required.
NOTE: Maximum rated discharge pressure = 300 PSI

Note: Pitless units conform to the Recommended Standards for Water works, Great Lakes Upper Mississippi River Board of State Public Health & Environmental Managers and Water Systems Council PAS-97 standards.

Specifications Subject to Change Without Notice

Monitor®

CUSTOM INDUSTRIAL PITLESS UNITS
FOR SUBMERSIBLE PUMPS
20" WELL SIZES

SPECIFICATIONS

(See drawing on Page 38)

A **Pitless Unit to well casing connection:** Chamfered for butt weld.
B **Pitless Unit with Black Upper Case:** 21 in. I.D., 22 in. O.D.
C **Discharge Body minimum I.D.:** 19"
D **Hold-Down Mechanism and Locator:** Locks spool in place and prevents lifting and turning during pump start-up. Four adjustable hooks on lift-out pipe hook into side of pitless case.
DD Probe Tube Standard 1 in. PVC Pipe. (Standard).
E **Lift-Out Pipe:** 6 in. IPS with standard lift-out bail.
F **Lift-Out Bail:** Lift-out pipe and bail assembly designed for a 142,000 lb. load.
G 2 in. NPT Tapping.
H **Well Vent:** Screws into a 2-1/2 in. NPT Tapping.

CAP CABLE SEALS (SECTION BB-BB)

I **Conduit Tapping:** 2 in. and 1 in. Std. Also available with single 2 in., 3 in., or 4 in. NPT. All tapping sizes available with or without electrical cable seal.
J **Depth Tester Block Tappings:** 1/4 in. NPT Std.
K Three 1 in. NPT Tappings ported to Drop Pipe.
L **Pressure switch tapping:** 3/8 in. NPT Std.

MOTOR CABLE PASSAGES THROUGH SPOOL (SECTION AA-AA)

M 6-3/4 in.
N 3-3/8 in.
O 2 in.
P **Dimension from center of Discharge Outlet to bottom of Discharge Body:** 13-3/4 in.
Q **Distance from ground level to top of the pitless case:** 12 in.
R **Distance from ground level to top of the vent cap:** 28-1/4 in. (Vent Height may be increased if necessary).
S **3/4 in. NPT Tapping:** used for optional Water Sampler.

	SPOOL TO DROP PIPE THREAD SIZES:	**6 in. NPT**	**8 in. NPT**	**10 in. NPT**
U	Dimension from center of discharge outlet to bottom of Spool:	24-9/16 in.	24-9/16 in.	19-11/16 in.
	DISCHARGE CONNECTIONS AND SIZES:			
V	For Butt Weld (IPS):	6 in. I.D.	8 in. I.D.	10 in. I.D.
W	For Flanged (ASA Std. 150 lb.):	6 in. I.D.	8 in. I.D.	10 in. I.D.
X	For Threaded (NPT):	6 in. I.D.	8 in. I.D.	10 in. I.D.
Y	For Transition Sleeve (IPS):	6 in. I.D.	8 in. I.D.	10 in. I.D.
Z	Dimension from center of Well Casing to the end of Discharge Outlet.			
	With [**V**] Butt Weld Discharge:	26-1/2 in.	26-1/2 in.	19-1/2 in.
	With [**W**] Flanged Discharge:	30 in.	30-1/2 in.	23-1/2 in.
	With [**X**] Threaded Discharge:	30-9/16 in.	30-9/16 in.	31-9/16 in.
	With [**Y**] Transition Sleeve:	38-9/16 in.	38-9/16 in.	31-1/2 in.
CC	**SPOOL ASSEMBLY - WITHOUT CHECK VALVES -**			
	Area of Water Passage(s):	33.18 sq. in.	66.36 sq. in.	66.36 sq. in.
	Percent area of water passages to area of drop pipe	115%	132%	85%

CUSTOM INDUSTRIAL PITLESS UNITS

CUSTOM INDUSTRIAL PITLESS UNITS FOR SUBMERSIBLE PUMPS
24" WELL SIZES

FIRST *Choose well size then make-up basic ordering number from proper column in specifications*

ORDERING NUMBER SELECTION GUIDE														
Bury Depth - Ft. (Select one)	Pitless Submersible	Well Size - In. (Select One)	Upper Case Size - In.	Attachment to Well Casing (Welded)	Black Upper Case	Watertight Cap	Pressure Equalizing Spool Passages	Plain Spool	Drop Pipe I.D. - In. (Select One)	Discharge Connection (Select One)				Discharge I.D. - In. (Select One)
										Welded	Flanged	Threaded	Mech. Joint W/Trans. Sleeve	
1									8					8
& Up	PS	2426	W	B	W	E	0	10 12	W	F	T	M		10 12

SECOND: *Add Desired Accessories Symbol*

ACCESSORY LIST	SYMBOL
Electrical Cable Seal	S
Water Sampler Valve	H
Flowing Well	F
Special Provisions	X

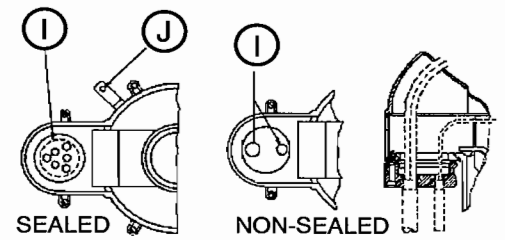

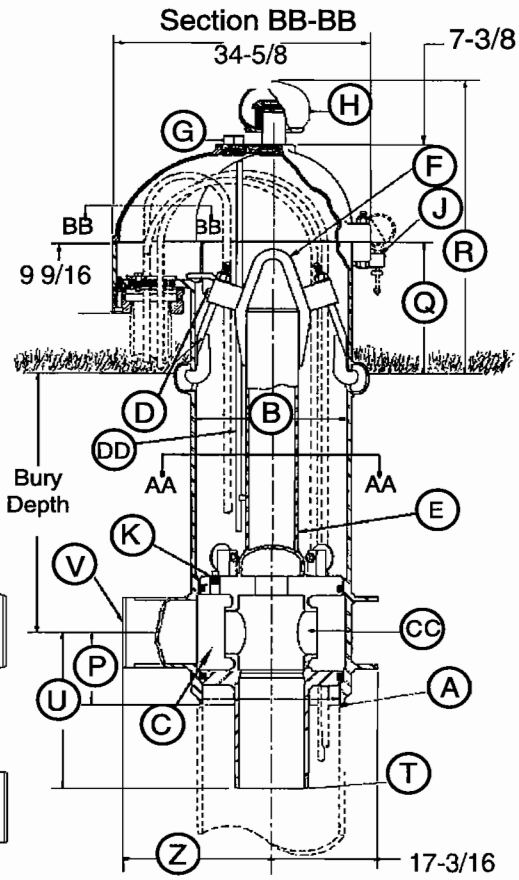

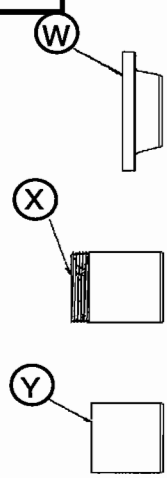

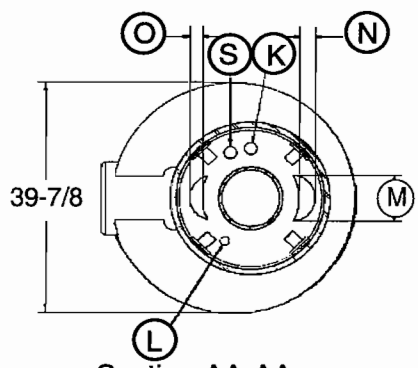

COMPONENT MATERIALS

Well Vent - cast iron, green enamel finish.
Cap - cast iron, green enamel finish.
Conduit Box - steel, corrosion resistant coating.
Electrical Cable Seal - cast iron, green enamel finish.
Combination Hold-Down & Lift-Out Mechanism - lead free galvanized.
Hold-Down Pipe - steel, corrosion resistant coating.
Pitless Case - steel, corrosion resistant coating.
Discharge Body - steel, lead free galvanized.
Spool - steel, lead free galvanized.
Probe Tube - 1" PVC

NOTE: Any combination between Drop Pipe and Discharge Outlet size is possible, if required.
NOTE: Maximum rated discharge pressure = 300 PSI

Note: Pitless units conform to the Recommended Standards for Water works, Great Lakes Upper Mississippi River Board of State Public Health & Environmental Managers and Water Systems Council PAS-97 standards.

Specifications Subject to Change Without Notice

Monitor®

CUSTOM INDUSTRIAL PITLESS UNITS
FOR SUBMERSIBLE PUMPS
24" WELL SIZES

SPECIFICATIONS

(See drawing on Page 40)

A **Pitless Unit to well casing connection:** Chamfered for butt weld.
B **Pitless Unit with Black Upper Case:** 25 in. I.D., 26 in. O.D.
C **Discharge Body minimum I.D. 23".**
D **Hold-Down Mechanism and Locator:** Locks spool in place and prevents lifting and turning during pump start-up. Four adjustable hooks on lift-out pipe hook into side of pitless case.
DD Probe Tube Standard 1 in. PVC Pipe. (Standard).
E **Lift-Out Pipe:** 8 in. IPS with standard lift-out bail.
F **Lift-Out Bail:** Lift-out pipe and bail assembly designed for a 218,000 lb. load.
G 2 -1/2 in. NPT Tapping.
H **Well Vent:** Screws into a 2-1/2 in. NPT Tapping.

CAP CABLE SEALS (SECTION BB-BB)

I **Conduit Tapping:** 2 in. and 1 in. Std. Also available with single 2 in., 3 in., or 4 in. NPT. All tapping sizes available with or without electrical cable seal.
J **Depth Tester Block Tappings:** 1/4 in. NPT Std.
K Three 1 in. NPT Tappings ported to Drop Pipe.
L **Pressure switch tapping:** 3/8 in. NPT Std.

MOTOR CABLE PASSAGES THROUGH SPOOL (SECTION AA-AA)

M 7-1/16 in.
N 3-7/16 in.
O 2-1/8 in.
P **Dimension from center of Discharge Outlet to bottom of Discharge Body:** 17-1/2 in.
Q **Distance from ground level to top of the pitless case:** 12 in.
R **Distance from ground level to top of the vent cap:** 29-7/16 in. (Vent Height may be increased if necessary).
S **3/4 in. NPT Tapping:** used for optional Water Sampler.

		8 in. NPT	10 in. NPT	12 in. NPT
T	**SPOOL TO DROP PIPE THREAD SIZES:**			
U	Dimension from center of discharge outlet to bottom of Spool:	18-13/16 in.	20-15/16 in.	22-15/16 in.
	DISCHARGE CONNECTIONS AND SIZES:			
V	For Butt Weld (IPS):	8 in. I.D.	10 in. I.D.	12 in. I.D.
W	For Flanged (A.S.A. Std. 150 lb.):	8 in. I.D.	10 in. I.D.	12 in. I.D.
X	For Threaded (NPT):	8 in. I.D.	10 in. I.D.	12 in. I.D.
Y	For Transition Sleeve (IPS):	8 in. I.D.	10 in. I.D.	12 in. I.D.
Z	Dimension from center of Well Casing to the end of Discharge Outlet.			
	With [**V**] Butt Weld Discharge:	32-1/2 in.	32-1/2 in.	24-7/16 in.
	With [**W**] Flanged Discharge:	36-1/2 in.	36-1/2 in.	29 in.
	With [**X**] Threaded Discharge:	36-1/2 in.	37-1/2 in.	31-1/2 in.
	With [**Y**] Transition Sleeve:	44-1/2 in.	44-1/2 in.	36-1/2 in.
CC	**SPOOL ASSEMBLY - WITHOUT CHECK VALVES -**			
	Area of Water Passage(s):	120.26 sq. in.	120.26 sq. in.	120.26 sq. in.
	Percent area of water passages to area of drop pipe	240%	152%	106%

Monitor®

CUSTOM INDUSTRIAL PITLESS UNITS FOR SUBMERSIBLE PUMPS

26" WELL SIZES

FIRST *Choose well size then make-up basic ordering number from proper column in specifications*

ORDERING NUMBER SELECTION GUIDE

Bury Depth - Ft. (Select one)	Pitless Submersible	Well Size - In. (Select One)	Upper Case Size - In.	Attachment to Well Casing (Welded)	Black Upper Case	Watertight Cap	Pressure Equalizing Spool Passages	Plain Spool	Drop Pipe I.D. - In. (Select One)	Discharge Connection (Select One)				Discharge I.D. - In. (Select One)
										Welded	Flanged	Threaded	Mech. Joint W/Trans. Sleeve	
1									8					8
& Up	PS2628	W	B	W	E	0	10 12	W	F	T	M	10 12		

SECOND: *Add Desired Accessories Symbol*

ACCESSORY LIST	SYMBOL
Electrical Cable Seal	S
Water Sampler Valve	H
Flowing Well	F
Special Provisions	X

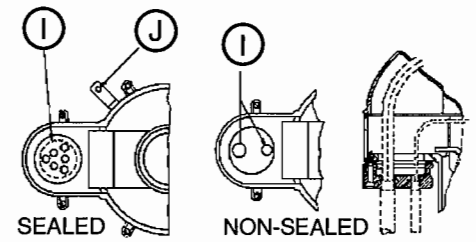

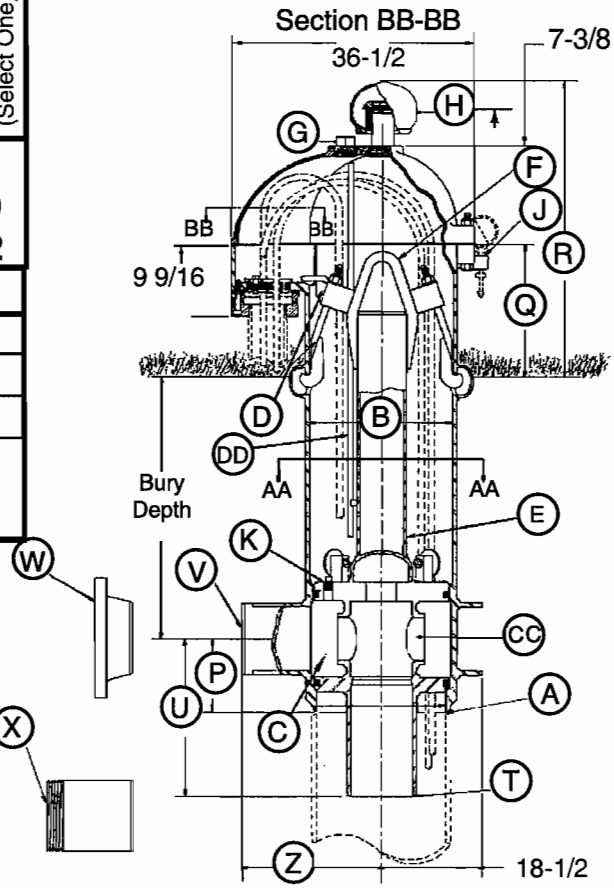

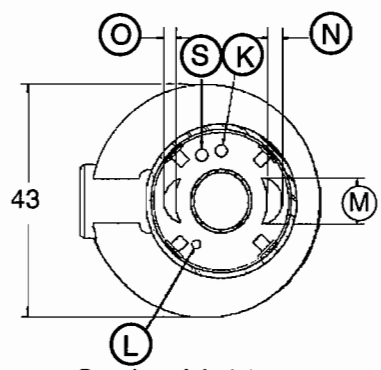

COMPONENT MATERIALS

Well Vent - cast iron, green enamel finish.
Cap - cast iron, green enamel finish.
Conduit Box - steel, corrosion resistant coating.
Electrical Cable Seal - cast iron, green enamel finish.
Combination Hold-Down & Lift-Out Mechanism - lead free galvanized.
Hold-Down Pipe - steel, corrosion resistant coating.
Pitless Case - steel, corrosion resistant coating.
Discharge Body - steel, lead free galvanized.
Spool - steel, lead free galvanized.
Probe Tube - 1" PVC

NOTE: Any combination between Drop Pipe and Discharge Outlet size is possible, if required.
NOTE: Maximum rated discharge pressure = 300 PSI

Note: Pitless units conform to the Recommended Standards for Water works, Great Lakes Upper Mississippi River Board of State Public Health & Environmental Managers and Water Systems Council PAS-97 standards.

Specifications Subject to Change Without Notice

SPECIFICATIONS

(See drawing on Page 42)

A **Pitless Unit to well casing connection:** Chamfered for butt weld.
B **Pitless Unit with Black Upper Case:** 27 in. I.D., 28 in. O.D.
C **Discharge Body minimum I.D. 25".**
D **Hold-Down Mechanism and Locator:** Locks spool in place and prevents lifting and turning during pump start-up. Four adjustable hooks on lift-out pipe hook into side of pitless case.
DD Probe Tube Standard 1 in. PVC Pipe. (Standard).
E **Lift-Out Pipe:** 8 in. IPS with standard lift-out bail.
F **Lift-Out Bail:** Lift-out pipe and bail assembly designed for a 218,000 lb. load.
G 2 -1/2 in. NPT Tapping.
H **Well Vent:** Screws into a 2-1/2 in. NPT Tapping.

CAP CABLE SEALS (SECTION BB-BB)

I **Conduit Tapping:** 2 in. and 1 in. Std. Also available with single 2 in., 3 in., or 4 in. NPT. All tapping sizes available with or without electrical cable seal.
J **Depth Tester Block Tappings:** 1/4 in. NPT Std.
K Three 1 in. NPT Tappings ported to Drop Pipe.
L **Pressure switch tapping:** 3/8 in. NPT Std.

MOTOR CABLE PASSAGES THROUGH SPOOL (SECTION AA-AA)

M 7-3/16 in.
N 3-3/8 in.
O 2 in.
P **Dimension from center of Discharge Outlet to bottom of Discharge Body:** 17-7/16 in.
Q **Distance from ground level to top of the pitless case:** 12 in.
R **Distance from ground level to top of the vent cap:** 30-13/16 in. (Vent Height may be increased if necessary).
S **3/4 in. NPT Tapping:** used for optional Water Sampler.

		8 in. NPT	10 in. NPT	12 in. NPT
T	**SPOOL TO DROP PIPE THREAD SIZES:**			
U	Dimension from center of discharge outlet to bottom of Spool:	18-13/16 in.	20-15/16 in.	22-15/16 in.
	DISCHARGE CONNECTIONS AND SIZES:			
V	For Butt Weld (IPS):	8 in. I.D.	10 in. I.D.	12 in. I.D.
W	For Flanged (A.S.A. Std. 150 lb.):	8 in. I.D.	10 in. I.D.	12 in. I.D.
X	For Threaded (NPT):	8 in. I.D.	10 in. I.D.	12 in. I.D.
Y	For Transition Sleeve (IPS):	8 in. I.D.	10 in. I.D.	12 in. I.D.
Z	Dimension from center of Well Casing to the end of Discharge Outlet.			
	With [**V**] Butt Weld Discharge:	34-1/4 in.	34-1/4 in.	26-1/4 in.
	With [**W**] Flanged Discharge:	38-5/16 in.	38-5/16 in.	30-3/4 in.
	With [**X**] Threaded Discharge:	38-5/16 in.	39-5/16 in.	33-5/16 in.
	With [**Y**] Transition Sleeve:	46-1/4 in.	46-1/4 in.	38-1/4 in.
CC	**SPOOL ASSEMBLY - WITHOUT CHECK VALVES -**			
	Area of Water Passage(s):	120.26 sq. in.	120.26 sq. in.	120.26 sq. in.
	Percent area of water passages to area of drop pipe	240%	152%	106%

CUSTOM INDUSTRIAL PITLESS UNITS

CUSTOM INDUSTRIAL PITLESS UNITS FOR SUBMERSIBLE PUMPS
30" WELL SIZES

FIRST *Choose well size then make-up basic ordering number from proper column in specifications*

ORDERING NUMBER SELECTION GUIDE

Bury Depth - Ft. (Select one)	Pitless Submersible	Well Size - In. (Select One)	Upper Case Size - In.	Attachment to Well Casing (Welded)	Black Upper Case	Watertight Cap	Pressure Equalizing Spool Passages	Plain Spool	Drop Pipe I.D. - In. (Select One)	Discharge Connection (Select One)				Discharge I.D. - In. (Select One)
										Welded	Flanged	Threaded	Mech. Joint W/Trans. Sleeve	
1									8					8
& Up	PS3036	W	B	W	E		0	10 12	W	F	T	M		10 12

SECOND: *Add Desired Accessories Symbol*

ACCESSORY LIST	SYMBOL
Electrical Cable Seal	S
Water Sampler Valve	H
Flowing Well	F
Special Provisions	X

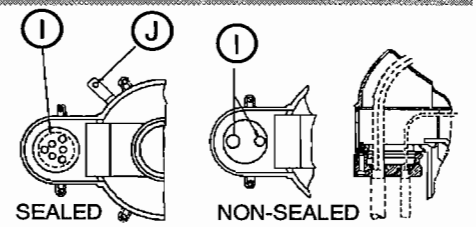

Section BB-BB

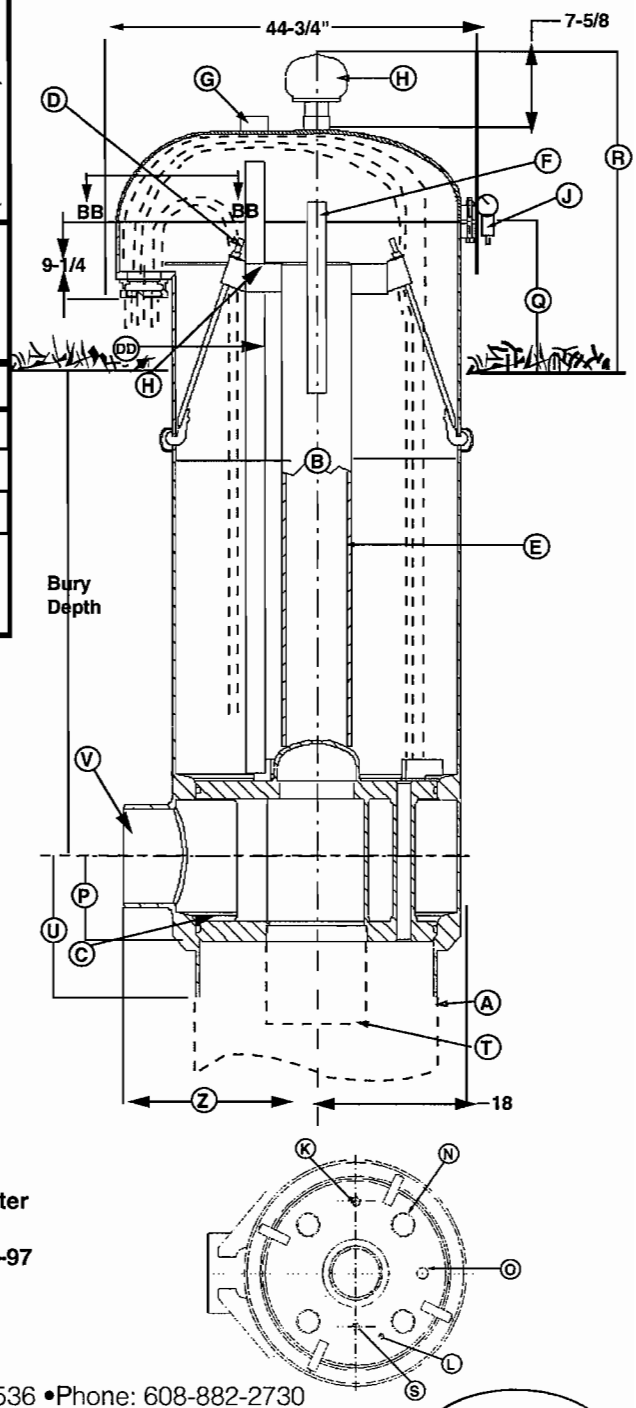

COMPONENT MATERIALS

Well Vent - cast iron, green enamel finish.
Cap - cast iron, green enamel finish.
Conduit Box - steel, corrosion resistant coating.
Electrical Cable Seal - cast iron, green enamel finish.
Combination Hold-Down & Lift-Out Mechanism - lead free galvanized.
Hold-Down Pipe - steel, corrosion resistant coating.
Pitless Case - steel, corrosion resistant coating.
Discharge Body - steel, lead free galvanized.
Spool - steel, lead free galvanized.
Probe Tube - 1" PVC

NOTE: Any combination between Drop Pipe and Discharge Outlet size is possible, if required.
NOTE: Maximum rated discharge pressure = 300 PSI

Note: Pitless units conform to the Recommended Standards for Water works, Great Lakes Upper Mississippi River Board of State Public Health & Environmental Managers and Water Systems Council PAS-97 standards.

Specifications Subject to Change Without Notice

Monitor®

CUSTOM INDUSTRIAL PITLESS UNITS
FOR SUBMERSIBLE PUMPS
30" WELL SIZES

SPECIFICATIONS

(See drawing on Page 44)

A **Pitless Unit to well casing connection:** Chamfered for butt weld.
B **Pitless Unit with Black Upper Case:** 35 in. I.D., 36 in. O.D.
C **Discharge Body minimum I.D. 29".**
D **Hold-Down Mechanism and Locator:** Locks spool in place and prevents lifting and turning during pump start-up. Four adjustable hooks on lift-out pipe hook into side of pitless case.
DD Probe Tube Standard 2 in. PVC Pipe. (Standard).
E **Lift-Out Pipe:** 8 in. IPS with standard lift-out bail.
F **Lift-Out Bail:** Lift-out pipe and bail assembly designed for a 218,000 lb. load.
G 2 -1/2 in. NPT Tapping.
H **Well Vent:** Screws into a 2-1/2 in. NPT Tapping.

CAP CABLE SEALS (SECTION BB-BB)

I **Conduit Tapping:** 2 in. and 1 in. Std. Also available with single 2 in., 3 in., or 4 in. NPT. All tapping sizes available with or without electrical cable seal.
J **Depth Tester Block Tappings:** 1/4 in. NPT Std.
K One 1 in. NPT Tapping ported to Discharge.
L **Pressure switch tapping:** 3/8 in. NPT Std.

MOTOR CABLE PASSAGES THROUGH SPOOL (SECTION AA-AA)

N 3-7/16 in.
O 1-3/4 in.
P **Dimension from center of Discharge Outlet to bottom of Discharge Body:** 17-7/16 in.
Q **Distance from ground level to top of the pitless case:** 12 in.
R **Distance from ground level to top of the vent cap:** 32-11/16 in. (Vent Height may be increased if necessary).
S **3/4 in. NPT Tapping:** used for optional Water Sampler.

	SPOOL TO DROP PIPE THREAD SIZES:	**8 in. NPT**	**10 in. NPT**	**12 in. NPT**
T				
U	Dimension from center of discharge outlet to bottom of Spool:	10-1/2 in.	10-1/2 in.	10-1/2 in.
	DISCHARGE CONNECTIONS AND SIZES:			
V	For Butt Weld (IPS):	8 in. I.D.	10 in. I.D.	12 in. I.D.
W	For Flanged (A.S.A. Std. 150 lb.):	8 in. I.D.	10 in. I.D.	12 in. I.D.
X	For Threaded (NPT):	8 in. I.D.	10 in. I.D.	12 in. I.D.
Y	For Transition Sleeve (IPS):	8 in. I.D.	10 in. I.D.	12 in. I.D.
Z	Dimension from center of Well Casing to the end of Discharge Outlet.			
	With [**V**] Butt Weld Discharge:	24 in.	24 in.	24 in.
	With [**W**] Flanged Discharge:	28-1/16 in.	28-1/16 in.	28-9/16 in.
	With [**X**] Threaded Discharge:	28-1/16 in.	29-1/16 in.	29-1/16 in.
	With [**Y**] Transition Sleeve:	36-1/16 in.	36-1/16 in.	36-1/16 in.

Monitor®

CUSTOM INDUSTRIAL PITLESS UNITS FOR SUBMERSIBLE PUMPS - 10" - 26"
OPTIONAL SEALED CONDUIT

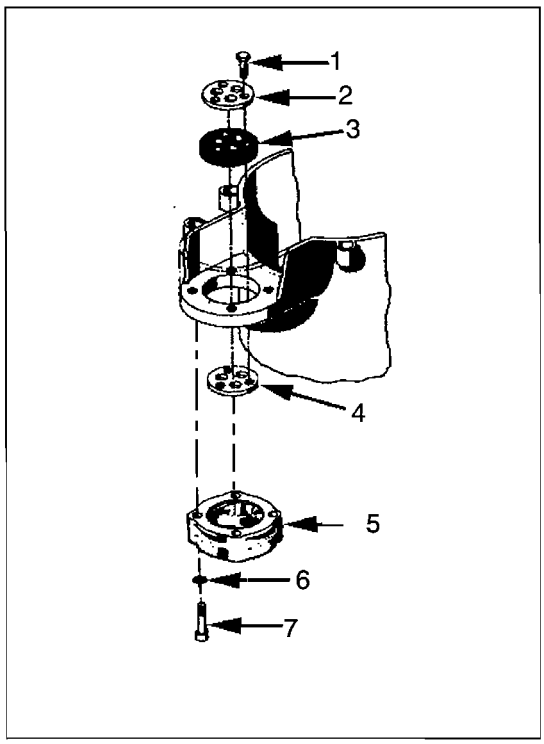

Key No.	Ordering Number	Description	Quantity
1	PS171	Hex head cap screw, 3/8-16NC x 1 1/2" L.	3
2	------	Upper Compression Plate	1
3	------	Cable seal gasket	1
4	------	Lower compression plate	1
5	------	Conduit seal adapter	1
6	UK355	Gasket	4
7	------	Hex socket cap screw	4

NOTE: All of the above parts must be ordered by description and unit serial number. Please specify pump wire size.

INSTALLATION INSTRUCTIONS:

1. All pitless unit cases are joined by welding or threading the unit to the well casing.

2. Establish ground level at the well location. It is desirable to have the ground slope away, from pitless unit case, in all directions.

3. The pitless unit case should extend above the ground level according to state well code. To accomplish this the well casing must be cut off at a distance below the ground level equal to the overall pitless unit length less the length unit is to be above the ground.

4. In order to do work, excavate around the well casing according to government regulations, where well casing is to be cut off.

5. Cut off the well casing PERPENDICULAR to the well casing center line.

6. Remove the pitless unit cap then loosen the hold-down hooks or spider and remove spool assembly and set aside.
   NOTE: (the spool assembly includes a spool with two or no silent check valves; two o-ring seals, lift-out pipe and bail, or hold down spider.

7. Lower the pitless case into place and rotate the discharge outlet to the desired location and weld the pitless case to the well casing. THIS JOINT MUST BE WATERTIGHT AND IT IS ESSENTIAL THAT THE CENTER LINE OF THE PITLESS CASE AND WELL CASING BE THE SAME.

8. The submersible motor, pump and cable are attached to the drop pipe and then lowered into the well. When the top of the last section of the drop pipe is one foot or more above the pitless case screw the spool assembly onto the drop pipe.

9. Wipe the rubber o-ring seals with a clean cloth and then coat with a heavy layer of petroleum jelly (vaseline) for proper seating of rings. Lower the spool assembly, drop pipe with motor, pump and cable into place.

10. Install and tighten hold-down hooks/hold down spider.

11. Complete electrical service and install pitless cap.

12. Connect discharge outlet to distribution line and complete all wiring.

13. The unit is now ready to operate under power and should be run a sufficiently long time to see that there are no leaks present.

14. The hole should not be filled in until the unit is running satisfactorily. Care should be exercised to fill under discharge line properly before back filling.

NOTE: Dissimilar metals should be avoided.

Monitor®

CUSTOM INDUSTRIAL
PITLESS UNITS FOR SUBMERSIBLE PUMPS
10" through 14" WELL SIZES

ANY ORDER FOR REPAIR PARTS MUST BE ACCOMPANIED BY THE PITLESS UNIT SERIAL NUMBER AND ORDER NUMBER

Serial Number _____

Ordering Number _____

Size			10" & 12"	14"
Key No.	Quantity	Description	Ord. No.	Ord. No.
		FIGURE 1		
1	1	Protected Screen Well Vent 2 1/2" NPT	PS155	PS155
2	1	Pipe Nipple 2 1/2" NPT x 6" L.	PS365	PS365
3	1	Plug Plug 2" NPT	UJ50	UJ50
4	1	Pipe Plug 1 1/2" NPT	UG54	UG54
5	1	Seal Cap	UK12	UL1
6	9	Hex Nut 5/8-11NC	PC286	PC286
7	1	Gasket	UK72	UL102
		FIGURE 2		
9	2	Washer	PC417	PC417
10	2	Hold-Down Hook	UJ7	UK7
11	1	*Spool & Lift-Out Assembly (Serial No. Required)	------	------
12	4	Hex Nut 3/8-16NC	UB17	UB17
13	4	Lockwasher	TX31	TX31
14	2	Static Seal Ring	UK15	UL15
15	4	Washer	SW68	SW68
16	4	Washer	UL95	UL95
17	4	Machine Screw, 3/8-16NC x 2 1/4" L.	UM222	UM222
18	7	Washer	UN81	UN81
19	5	Hex Head cap screw, 5/8-11NC x 5" L.	UN73	UN73
19A	2	Lock Bolt, 5/8-11NC x 4 3/4" L.	LK4	LK4
20	1	Discharge Body & Upper Casing Assembly (Serial No. Required)	------	------
21	---	(4) different discharge connections are available, (A) Welded, (B) Flanged, (C) Threaded or (D) Mechanical Joint with or without Transition Sleeve		

*Flowing Well Spools Available upon request

Monitor®

CUSTOM INDUSTRIAL
PITLESS UNITS FOR SUBMERSIBLE PUMPS
10" through 14" WELL SIZES

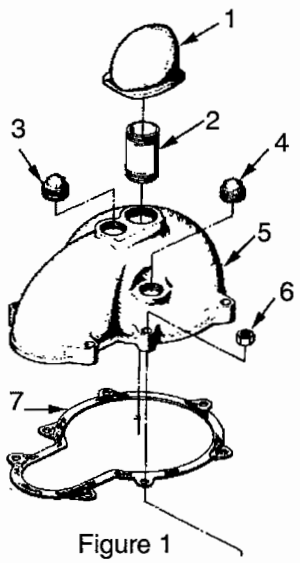

Figure 1

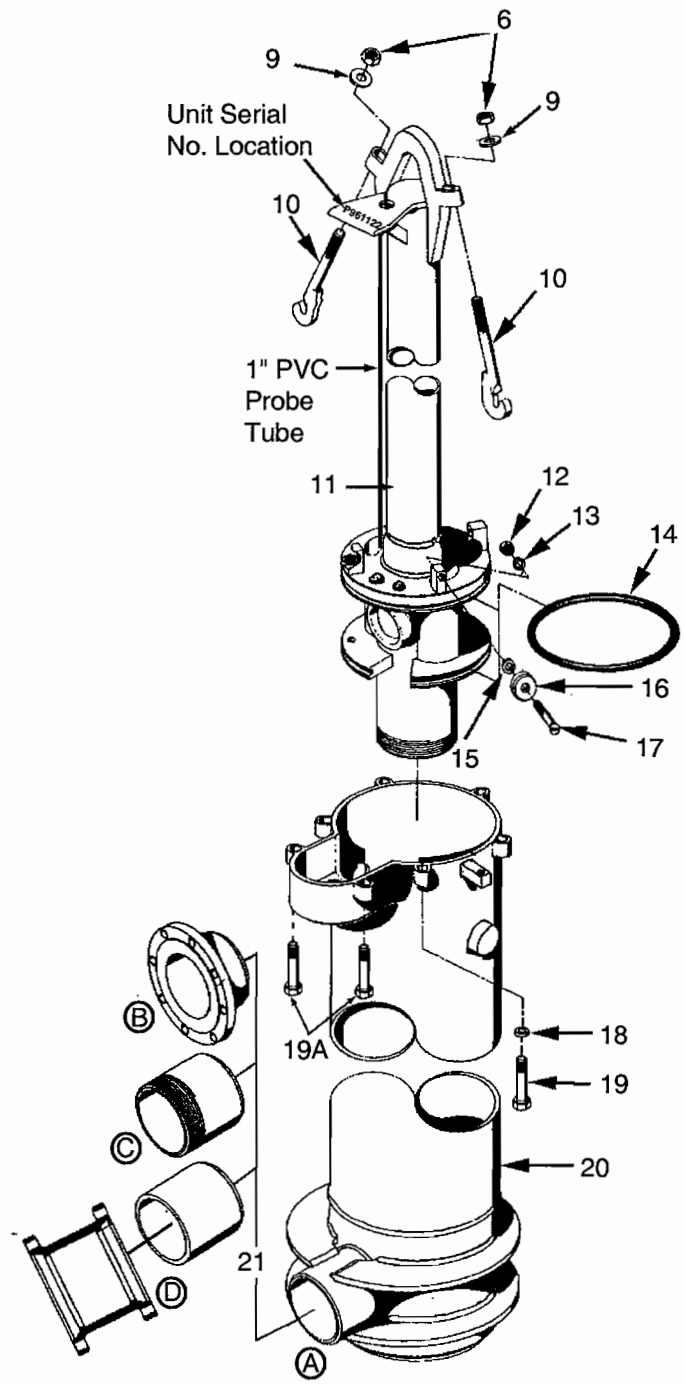

Figure 2

Monitor®

CUSTOM INDUSTRIAL
PITLESS UNITS FOR SUBMERSIBLE PUMPS
16" through 26" WELL SIZES

ANY ORDER FOR REPAIR PARTS MUST BE ACCOMPANIED BY THE PITLESS UNIT SERIAL NUMBER AND ORDER NUMBER

Serial Number _____

Ordering Number _____

Size			16"	18"	20"	24"	26"
Key No.	Qty.	Description	Ord. No.	Ord. No.	Ord. No.	Ord. No.	Ord. No.
		FIGURE 1					
1	1	Protected Screen Well Vent 2 1/2" NPT	PS155	PS155	PS155	PS155	PS155
2	1	Pipe Nipple 2 1/2" NPT x 6" L.	PS365	PS365	PS365	PS365	PS365
3	1	Plug Plug 2" NPT	UJ50	UJ50	UK50	UK50	UK50
4	1	Pipe Plug 1 1/2" NPT	UG54	UG54	UG54	UG54	UG54
5	1	Seal Cap	UM1	UN1	UQ1	UR1	US1
6	9	Hex Nut 5/8-11NC	PC286	PC286	PC286	PC286	PC286
7	1	Gasket	UM72	UN72	UQ72	UR72	US72
		FIGURE 2					
9	4	Washer	PC417	PC417	PC417	PC417	PC417
10	4	Hold-Down Hook	UM7	UN7	UQ7A	UR7A	US7A
11	1	Spool & Lift-Out Assembly (Serial No. Required)	------	------	------	------	------
12	4	Hex Nut 3/8-16NC	UB17	UB17	UB17	UB17	UB17
13	4	Lockwasher	TX31	TX31	TX31	TX31	TX31
14	2	Static Seal Ring	UM15	UN15	UQ15A	UR15A	US15
15	4	Washer	SW68	SW68	SW68	SW68	SW68
16	4	Washer	UL95	UL95	UL95	UL95	UL95
17	4	Machine Screw, 3/8-16NC x 2 1/4" L.	UM222	UM222	UM222	UM222	UM222
18	7	Washer	UN81	UN81	UN81	UN81	UN81
19	6	Hex Head cap screw, 5/8-11NC x 5" L.	UN73	UN73	UN73	UN73	UN73
19A	2	Lock Bolt, 5/8-11NC x 4 3/4" L	LK4	LK4	LK4	LK4	LK4
20	1	Discharge Body & Upper Casing Assembly (Serial No. Required)	------	------	------	------	------
21	---	(4) different discharge connections are available, (A) Welded, (B) Flanged, (C) Threaded or (D) Mechanical Joint with or without Transition Sleeve					

*Flowing Well Spools Available upon request

Monitor®

CUSTOM INDUSTRIAL
PITLESS UNITS FOR SUBMERSIBLE PUMPS
16" through 26" WELL SIZES

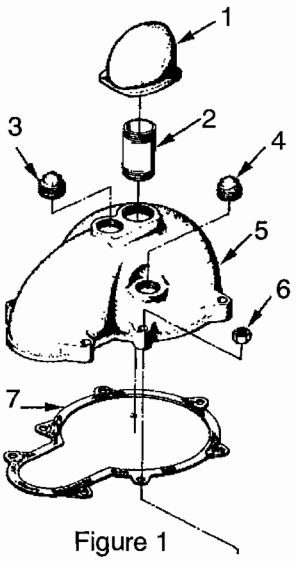

Figure 1

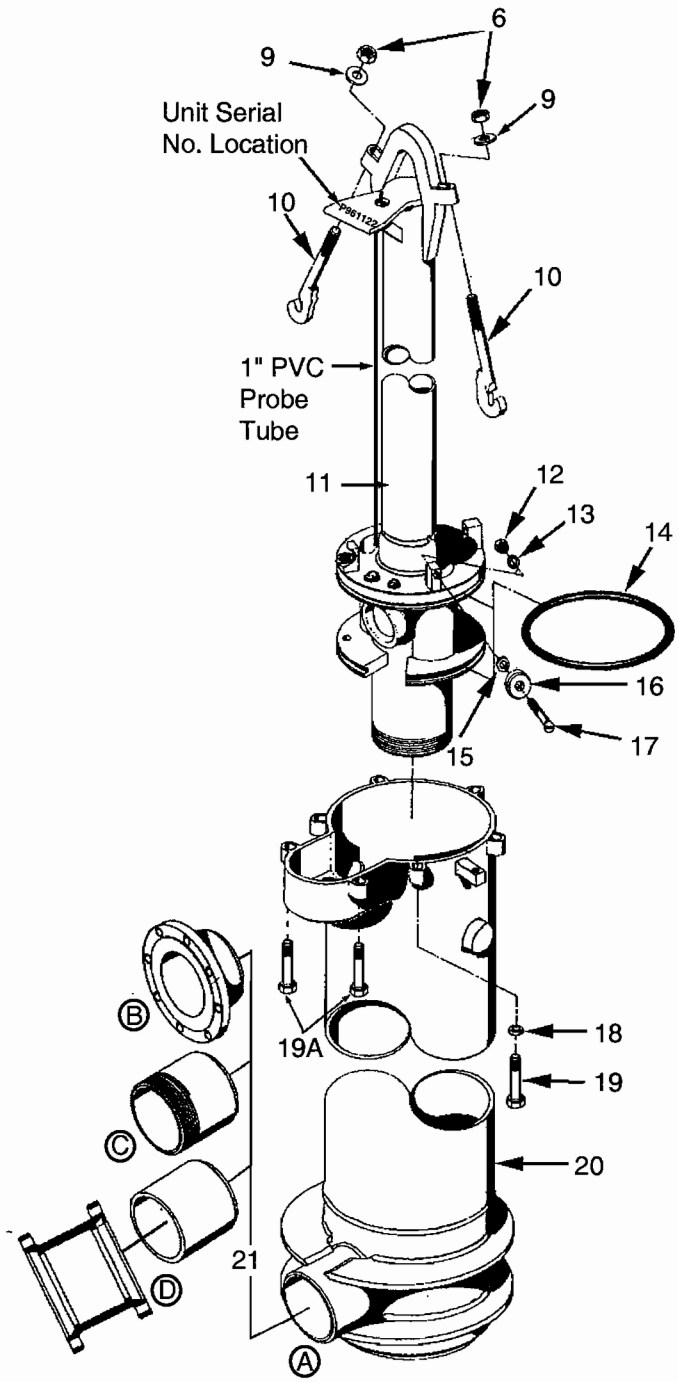

Figure 2

Water Sampler for Industrial Pitless Units

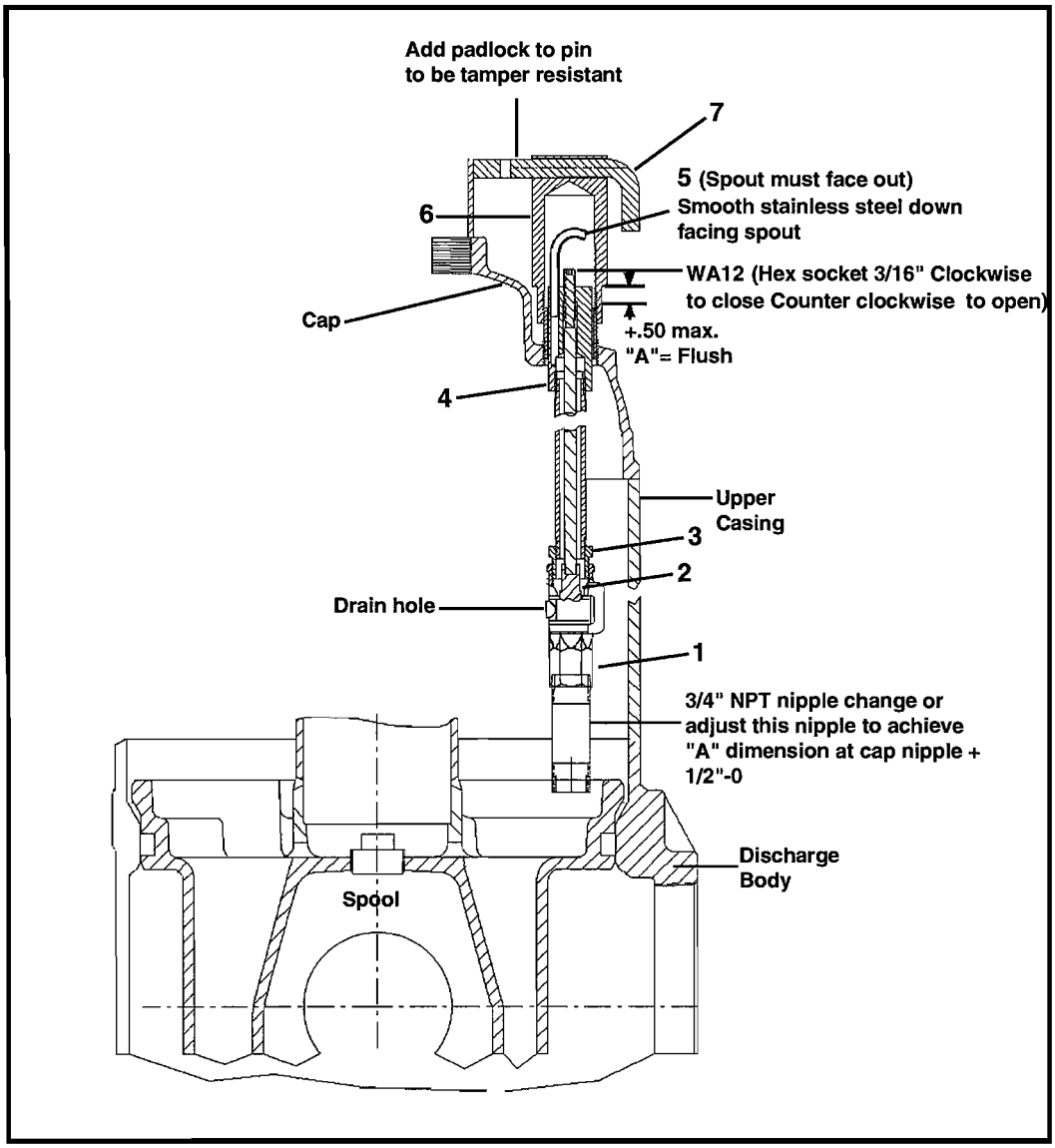

Item	Qty	Description	Ord. No.
1	1	Valve Body	WA11
2	1	Poppet	WA14
3	1	Hex Bushing	WA13
4	1	Water Sampler Top	WA8
5	1	Spout	UK308
6	1	Cap	UN320A
7	1	Pin	WA9

MONITOR PITLESS SYSTEMS BACKED BY MORE THAN A CENTURY OF QUALITY AND SERVICE BRINGS YOU A BELOW GROUND PITLESS BOOSTER SYSTEM FOR SUBMERSIBLE PUMPS

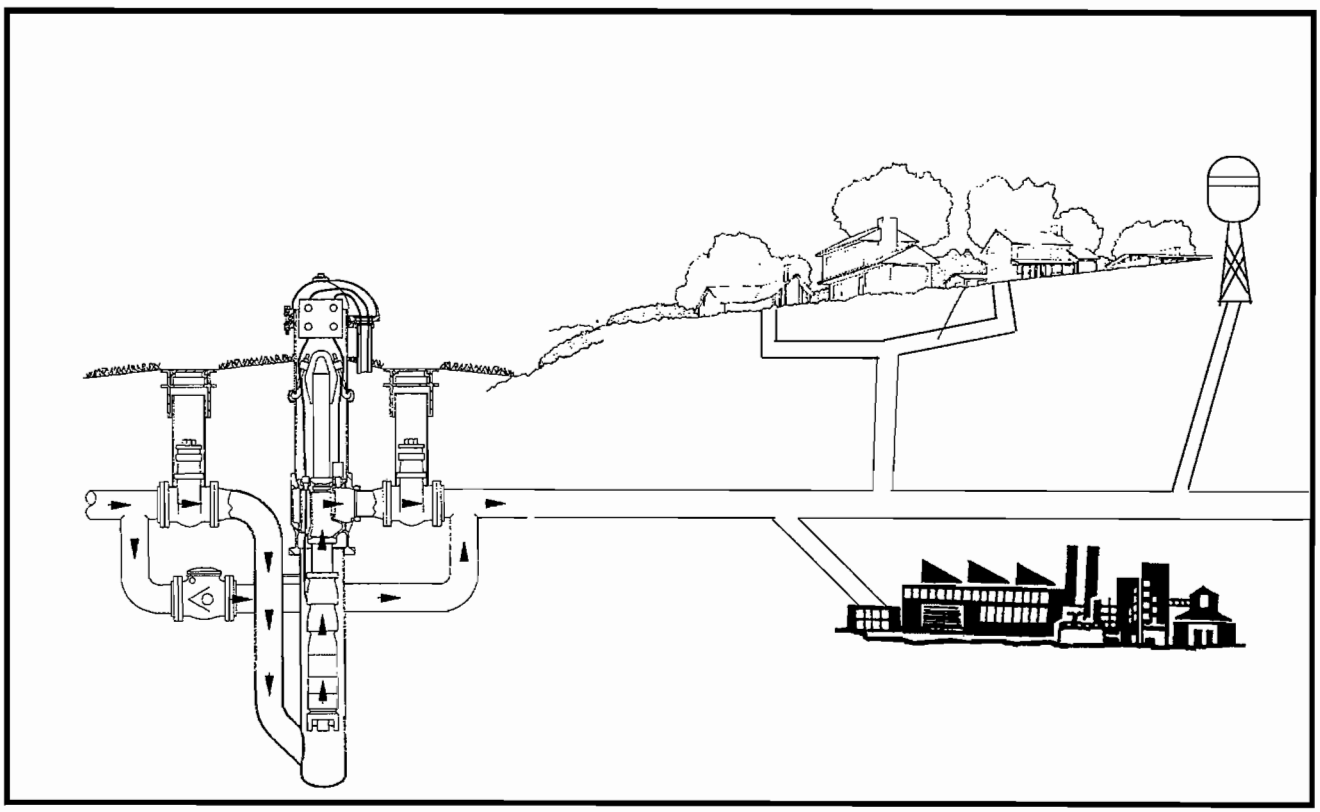

MONITOR PITLESS BOOSTER –
THE SOLUTION TO LOW PRESSURE WATER SYSTEMS

FEATURES:

EASY ACCESS TO SERVICE . . . Well cap can be removed without disconnecting cables. O-ring seals on spool permit withdrawal of the entire inner assembly simply by lifting. Replacement is equally simple. Spool support eliminates vertical adjustment allowing service above ground.

CORROSION PROTECTION . . . Spool and Discharge Body are either lead free hot-dipped galvanized or constructed of corrosion resistant material for longer life, less service.

RELIABLE SEAL . . . Neoprene O-rings between accurately machined lead free hot-dipped galvanized surfaces on the spool and within the unit provide positive seals to ensure maintenance free performance.

O-RING SEAL PROTECTION . . . Monitor seal protection prevents seal damage during installation and service eliminating potential service costs.

QUICK TO INSTALL . . . A quality booster pump installation can be made easily and economically without delay for masonry or building construction creating a sound cost savings solution.

ALTERNATIVE SPOOLS (6x7 and 8x10 only) . . . Spools are available plain or with silent check valves. The Monitor silent check valve has its operating parts automatically exposed when the spool is withdrawn. Spools are supplied with tappings for pressure controls. In-line check valves available for 10x12 and larger.

WATERTIGHT WELL CAP . . . Designed to permit removal without disconnecting cables. Separate junction box is eliminated. Watertight cable and conduit sealing is available for additional protection.

HOLD DOWN . . . Supplied with each unit. Hold-down pipe also serves as lift-out pipe for installation and allowing speedy service.

FROST PROOF . . . No heating is required. All water passages are below the frost line.

ALTERNATIVE DISCHARGE & INLET CONNECTIONS . . . Are available to meet your requirements.

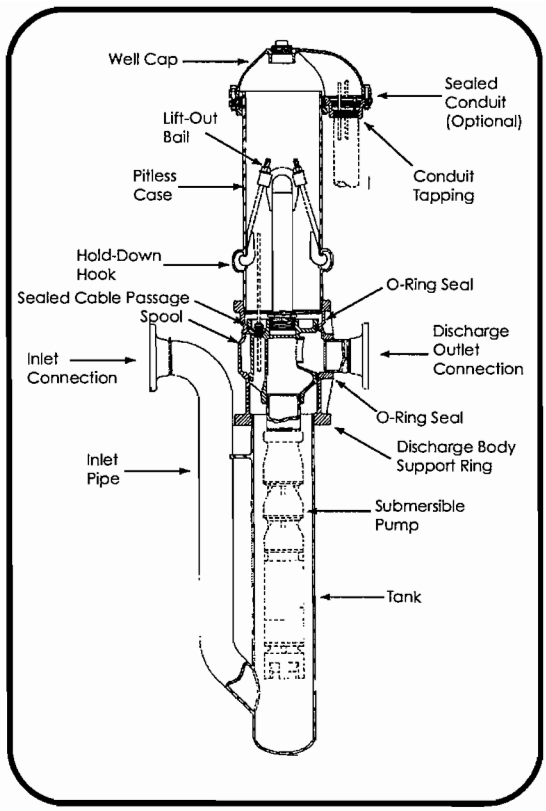

INFORMATION NECESSARY FOR PROPER SIZING

Fill in the blank squares in the description of the Pitless Unit and the pump information, and Monitor's sales engineers will be able to select and quote the proper unit for your individual application. Drawings are available upon request. Phone: 800/356-5130 Fax: 608/882-6776.

A. The first numeral in the order number indicates the bury depth in feet of the unit. Bury depth on all units is measured from the center of the discharge line to ground level. The top of the pitless case extends 12" above ground level as required by many codes.

B. This numeral indicates the reservoir tank inside diameter size.

C. This numeral indicates the upper pitless case diameter size.

D. The letter indicates the attachment to the reservoir tank is a threaded or welded joint.

E. The presence of the letter "B" in the order number indicates the upper pitless case is black pipe.

F. Indicates the unit has a watertight cap.

G. Indicates spool passages are closed.

H. Indicates the size of drop pipe in inches.

I. Indicates the discharge connection can be welded, flanged, threaded or a mechnical joint.

J. Indicates the size of discharge pipe in inches.

K. Indicates the length of the reservoir tank and is measured from the center of the discharge line to the bottom of the unit.

L. Indicates the inlet pipe size in inches.

M. Indicates the inlet pipe connection can be welded, flanged, threaded or a mechanical joint.

N. Sealed conduit connection. (Optional)

DESCRIPTION - ORDERING NUMBERS			
A		Bury Depth in Feet	
	PS	Pitless Booster for Submersible Pump	
B		Reservoir Tank Size - Ins.	
C		Upper Case Size - Ins.	
D		(T) Threaded Joint (W) Welded	
E	B	Black Upper Case	
F	W	Watertight Cap	
G	X	Spool Passages Closed	
		Check Valves: 0 or 2	
H		Size of Drop Pipe in Ins.	
I		Welded	Discharge Connection
		Flange, ASA 150#	
		Threaded NPT	
		Mech. Joint w/trans. sleeve	
J		Size of Discharge Pipe - Ins.	
K		Length of Reservoir Tank - Feet	
L		Inlet Pipe Size - Ins.	
M		Welded	Suction Pipe Connection
		Flange, ASA 150#	
		Threaded NPT	
		Mech. Joint w. trans. sleeve	
	E	Standard Unit	
N		Elec. Cable Seal(S) O.D. 3 Wire ____ O.D. Ground Wire ____	
		Special Provision (X)	

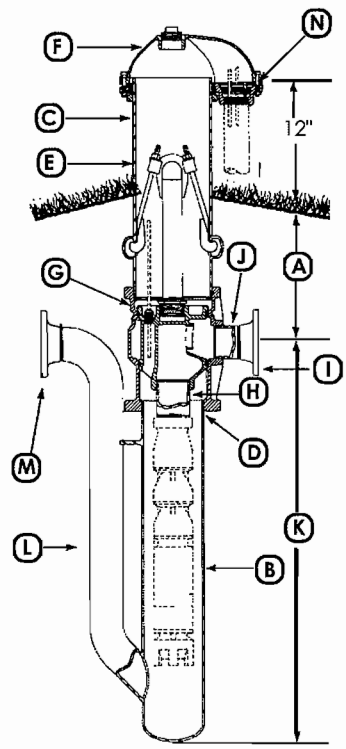

100% Made in the U.S.A.

TYPICAL INSTALLATION

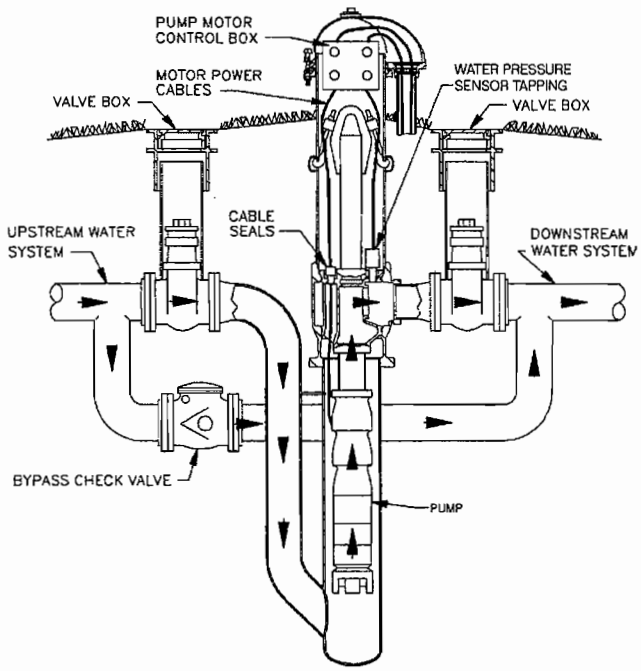

Typical Booster System

THE BOOSTER SYSTEM PUMP

Ever increasing public demands for water may cause reductions in pressure in municipal supply systems.

"The purpose of the Booster Pump is to increase the pressure and cause water to flow at increased velocity.

The Monitor Booster System is ideal for rural water lines, condominiums, subdivisions, Industrial parks, or anywhere water pressure problems exist.

The Monitor Booster System is:

- Quiet
- Does not detract from the landscape. (anywhere that esthetics are important)
- Economical - Sanitary vs underground vault
- Pumps and motors are immune to flood damage. Air vent can be extended above flood level.
- Easy to service

SELECTION OF A PUMP FOR THE BOOSTER

It is not our intent to size pumps or controls for the Monitor Booster Pump System. This is the decision of the design or project engineer who has the proper information for the job requirements.

All pump manufacturers are available to assist in the selection of a pump for the Booster application.

In order to adequately size a Booster System, knowledge of the conditions you wish to create in terms of pressure and flow rate are necessary. After this is accomplished, the next step is to determine the pressure at which the desired flow rate can be delivered to the inlet of the booster pump. The difference between the desired pressure and the pressure at the booster pump inlet, plus any pressure losses between the booster pump discharge and high pressure location, will indicate what pressure increase the booster pump must produce at the desired flow rate.

Monitor will recommend the proper size Booster Station to match the submersible pump that is specified. Our engineers will ensure the Booster Station will allow proper cooling for the submersible motor according to the motor manufacturers specifications.

MAGNETIC STARTER

The UL approved Magnetic Starter is the device that controls the submersible pump. For safety, convenience or appearance, the pumping plant panel can be located away from the well, or even placed by the well by using a NEMA 3 enclosure. The Magnetic Starter can include the additional material to the standard starter: Alarm test circuit; low suction pressure shutdown; alarm horn; lightning arrester; phase reversal/failure relay. NEMA 3R (if outdoor) cabinet; HOA selector switch; start-stop push button; standard magnetic contactor with ambient compensated quick-trip overload relays.

PUMP CONTROL VALVE

This is how the valve works: the pump starts against a closed valve. When the pump starts, the solenoid control is energized and the valve begins to open slowly, gradually increasing the line pressure to the design point of the pump. When the pump is signaled to shut off, the solenoid control is de-energized and the valve begins to close slowly, gradually reducing flow while the pump continues to run. When the valve is closed, the pump is shut off.

The pump control valve protects against pipeline surges and water hammer during normal starting and stopping of a pump by opening and closing at relatively slow controlled rates

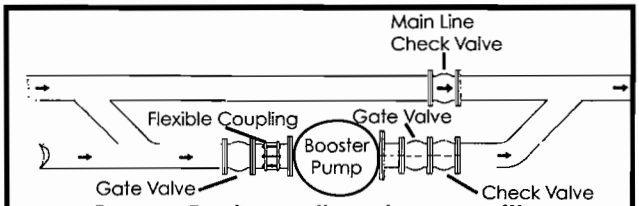

Bypass Design - allows bypass with pump removal

PROTECTION FOR SUBMERSIBLE BOOSTER DUE TO DECREASE IN FLOW TO SYSTEM

The Booster Pump must be protected against a low flow condition. When this occurs, the Booster Pump inlet flow is reduced, thus a vacuum could occur on the suction line.

The submersible pump motor could over heat causing an overload on the motor due to the low inlet flow. The submersible pump motor requires 0.5 ft/sec. minimum flow of water around motor to prevent over heating. To protect the pump you can use a "low flow" control. The "low flow" device would not only detect a drop in the incoming water supply, but is capable of detecting, overloads, underloads, overheating and rapid cycling.

INDUSTRIAL PITLESS BOOSTER STATIONS

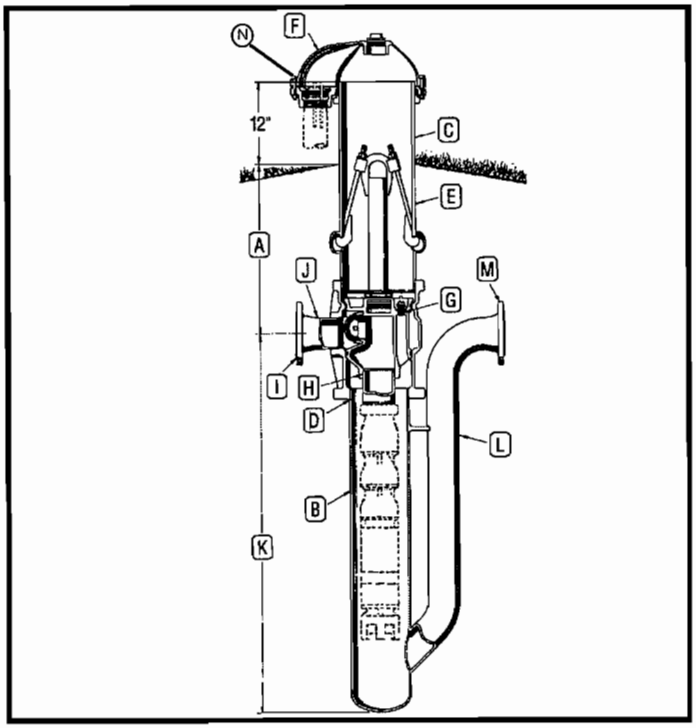

DESCRIPTION - ORDERING NUMBERS			
A		Bury Depth in Feet	
	PS	Pitless Booster for Submersible Pump	
B		Reservoir Tank Size - Ins.	
C		Upper Case Size - Ins.	
D		Threaded Joint W-Welded	
E	B	Black Upper Case	
F	W	Watertight Cap	
G	X	Spool Passages Closed	
		No. of Check Valves: 0 2	
H		Size of Drop Pipe in Ins.	
I		Welded	Discharge Connection
		Flange, ASA 150#	
		Threaded NPT	
		Mech. Joint w/trans. sleeve	
J		Size of Discharge Pipe - Ins.	
K		Length of Reservoir Tank - Feet	
L		Inlet Pipe Size - Ins.	
M		Welded	Suction Pipe Connection
		Flange, ASA 150#	
		Threaded NPT	
		Mech. Joint w/ trans. sleeve	
	E	Standard Unit	
N		Elec. Cable Seal (S) O.D. 3 Wire___ O.D. Grounding Wire ____	
		Special Provision (X)	

UNITS AVAILABLE BY QUOTATION ONLY

EXPLANATION OF PITLESS UNIT ORDERING NUMBERS

The diagram illustrates the meaning of the various letters and numerals used in Monitor Booster Station Unit ordering numbers. A typical order number and the pitless booster station it stands for are shown.

Typical Order Number

6PS810WBWX24F464FS

6 **A.** This first numeral in the order number indicates the bury depth, in feet, of the unit. Bury depth on all units is measured from the center of the discharge line to ground level. The top of the pitless case extends 12" above ground level as is required by many codes.

PS These letters indicate the type of pump the Pitless Booster Station is designed for. The unit shown is a PS for Submersible Pumps.

8 **B.** This numeral indicates the reservoir tank size. 8 is for an 8" I.D. diameter tank.

10 **C.** This numeral indicates the upper pitless case size, 10 is for a 10" diameter case.

W **D.** This letter indicates the attachment to the reservoir tank is a welded joint on 8"-30".

B **E.** The presence of the letter "B" in the order number indicates the upper pitless case is black pipe.

W **F.** Indicates the unit has a watertight cap.

X **G.** Indicates spool passages are closed.

2 This numeral indicates the type of spool which the pitless unit has. In this case it is a spool having two silent check valves. Available with 6 and 8 inch tanks only. In-Line check valves are available.

4 **H.** Indicates the size of drop pipe in inches.

F **I.** Indicates the discharge connection is flanged.

4 **J.** Indicates the size of discharge pipe in inches.

6 **K.** Indicates the length of the reservoir tank in feet, and is measured from the center of the discharge line to the bottom of the unit.

4 **L.** Indicates the inlet pipe size in inches.

F **M.** Indicates the inlet pipe connection is flanged.

S **N.** Sealed conduit connection. (Optional)

SAMPLE ENGINEERING SPECIFICATIONS
PITLESS BOOSTER STATION

Completely assembled Pitless Booster Station for submersible pump including well cap, lift out bail, hold down hooks, lift out pipe, spool with or without check valves, specified inlet and outlet connections and reservoir tank.

SUBMITTALS: All bidders shall submit as part of their bid:

1. The Manufacturer and Model of the pitless booster station to be installed.
2. Detailed specifications with drawings of the Booster system furnished by the manufacturer.
3. Detailed specifications on the submersible pump and submersible wire to be used in conjunction with the Booster Station.
4. System to be assembled and pressure tested without submersible pump prior to shipping.

SUBMERSIBLE PUMP: Manufacture_____Model No. _____.
The submersible pump will be designed for_____GPM @_____TDH (includes_____# incoming pressure), with a_____HP_____Volt____phase motor. _____ft. of No. submersible wire will be furnished with the system. The unit should be factory assembled, and tested, before shipping to the site.

SUBMERSIBLE BOOSTER STATION: The Submersible Booster Station shall be equal to Baker Manufacturing Company, Monitor Division, Model_____.

WELL CAP: The Watertight Cap shall be secured to the pitless casing with a compression gasket. The top of the cap can be removed without affecting the sealed conduit or wiring. Construction of the cap will be of heavy duty gray cast iron and painted with a green enamel finish. The well cap will be watertight to 46 feet of head. All wall thickness, including upper casing and reservoir to conform to steel well casing per the recommended standards for water works, Great Lakes Upper Mississippi River Board of State Public Health and Environmental Managers, Health Education Services, Albany, NY.

UPPER CASING: The Upper Casing is factory assembled to the discharge body, and the lift out and hold down mechanism are factory assembled to the spool. The upper casing must provide a water tight connection from the discharge body to the well cap. The inlet and discharge center line to be_____feet below grade, and the booster station upper casing to extend_____feet above grade.

SPOOL: The spool shall be_____inches per ANSI B 1.20.1 with male drop pipe connection and shall be constructed of heavy duty gray cast iron, ductile iron, or steel with a lead free galvanized plating on the wetted surface of over .010 inches thick. The spool will have o-ring grooves machined into the spool, retaining the o-rings when setting or pulling the system. Spool to include cable seals to seal specified wires up to the specified inlet pressure.

DISCHARGE BODY: The Discharge Body shall be constructed of lead-free galvanized ductile iron or lead-free galvanized steel. O-ring seat to be designed to prevent crevice and galvanic corrosion, dissimilar metals should be avoided. Discharge outlet port to be_____inches,_____type. (flanged, threaded, welded or transition)

RESERVOIR TANK: The Reservoir Tank is to be constructed of heavy duty steel, coated with a rust protective coating of non-toxic alkyd black paint. The I.D. of the tank to be_____ inches. Suction inlet to be _____inches, _____ type. (flanged, threaded, welded or transition) Tank length to accommodate_____ft. long pump and motor.

—STANDARD INDUSTRIAL PITLESS BOOSTER STATIONS—

STANDARD INDUSTRIAL PITLESS BOOSTER STATION UNITS FOR SUBMERSIBLE PUMPS
6" & 8" TANK SIZE

FIRST *Choose well size then make-up basic ordering number from proper column in specifications.*

ORDERING NUMBER SELECTION GUIDE

Bury Depth - Ft. (Select One)	Pitless Submersible	Tank Size - Inches	Upper Case Size - Inches	Attachmt to Tank Casing (Thd/welded)	Black Upper Case	Watertight Cap	Closed Spool Passages	No. of Check Valves (Select One)	Drop Pipe I.D. - Inches	DISCHARGE CONNECTION (Select One)				Discharge I.D. Inche	Tank Length *	INLET CONNECTION (Select One)				Inlet ID. - Inches
										Flanged	Threaded	Welded	Mechanical Joint**			Flanged	Threaded	Welded	Mechanical Joint**	
1 & Up	P	S 8	6 7 10	T	B	W	X	0 2	3 4	F	T	W	M	3 4	*	3 4	F	T	W	M

* To determine tank length add overall length of pump plus 2' & round up to next even foot. Insert number in this space.
** With transition sleeve.

SECOND
Add desired accessory symbol

Accessory	Symbol
Sealed Conduit Connection	S
Special Provision	X

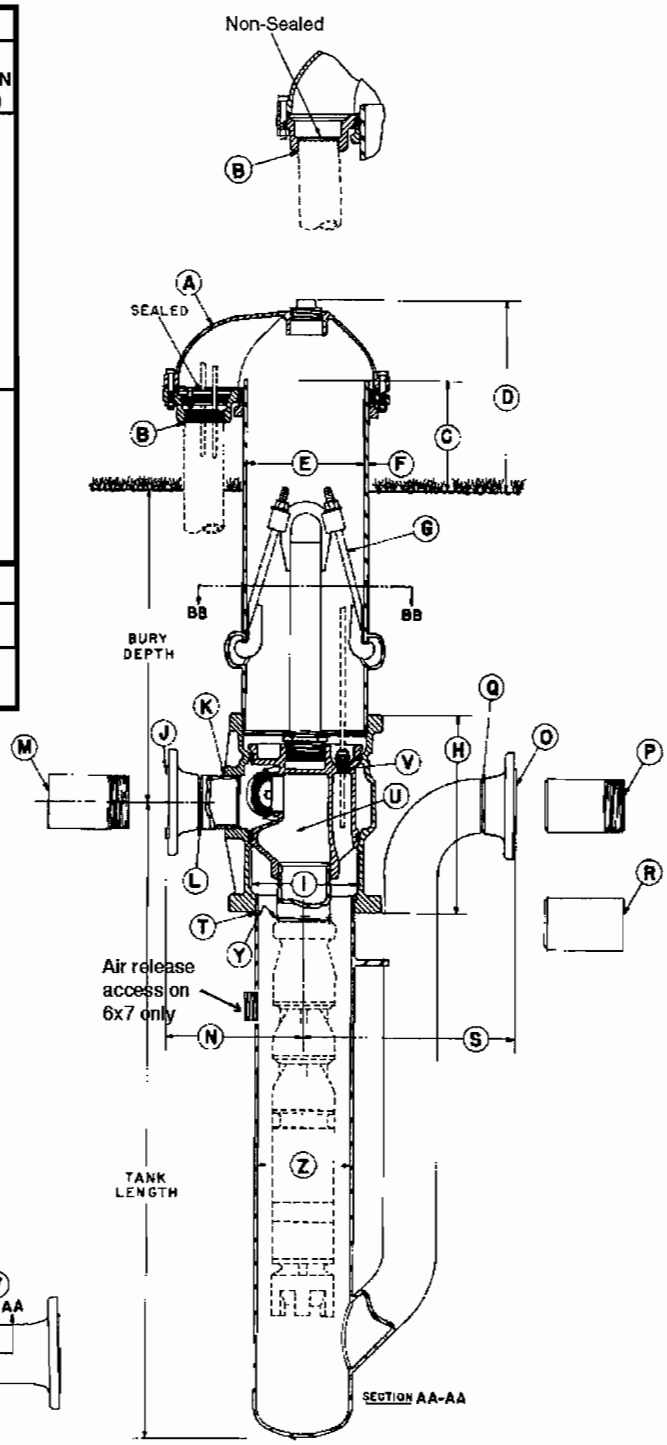

COMPONENT MATERIALS
Cap & Conduit Box - Cast iron,Green enamel finish.
Combination Hold-Down & Lift-Out Mechanism - lead free galvanized
Hold-Down Pipe - Steel, corrosion resistant coating.
Pitless Case - Steel, black corrosion resistant coating.
Spool - Cast iron, lead free galvanized.
Discharge Body - Ductile or Cast Iron, lead free galvanized.
Check Valve Body & Arms - Brass.
Check Valve Seat - Brass.
Check Valve Spring - Monel.
Compression Seal Ring & Check Valve Facing - Neoprene.
Conduit Seal & O-Rings - Neoprene.
Tank & Inlet Pipes - Steel, black corrosion resistant coating.

NOTE: Inlet pipe, tank pipe & spool tested to 300 P.S.I.

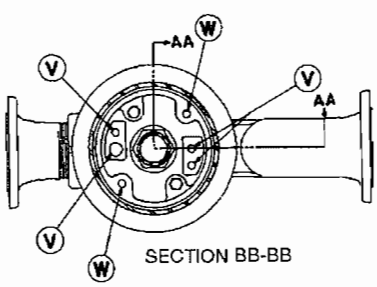

6" Spool Assembly

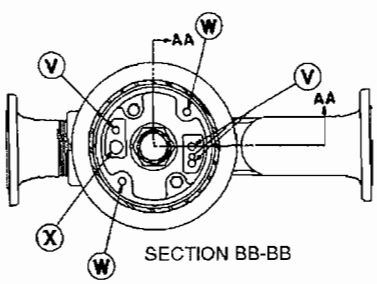

8" Spool Assembly

Monitor®

STANDARD INDUSTRIAL PITLESS BOOSTER STATION UNITS FOR SUBMERSIBLE PUMPS
6" & 8" TANK SIZES

SPECIFICATIONS

(See drawing on Page 58)

		6"	8"
A	Seal Cap: The watertight cap bolts to a compression seal ring securing around the pitless casing.		
B	Conduit Tapping Size (Standard): Watertight conduit seals for most common cable sizes are available.	1-1/2" NPT	3 in. NPT
C	Distance from ground level to top of Pitless Case	12 in.	12 in.
D	Distance from ground level to top of Well Cap	14-3/4 in.	18-7/8 in.
E	Pitless Case Size	7 in.	10 in.
F	Pitless Case wall thickness	.300 in.	.365 in.
G	"Hold Down-Lift Out Assembly": positions & clamps spool to Discharge Body to prevent rotation during pump start up.		
	Hold-Down, Lift-Out Pipe size:	1-1/4"	2 in.
	Designed "Lift-Out" assembly load:	8400 lbs.	15,000 lbs.
H	Discharge Body Size:	9-11/16 in. O.D. x 11-1/4 in. long	14 1/8 in. O.D. x 13-1/2 in. long
I	Pitless Unit minimum I.D.:	6-3/8 in.	9-1/8 in.
	DISCHARGE CONNECTIONS AND SIZES		
J	For Flanged (ASA Std. 150 lbs.):	3 in. I.D.	4 in. I.D.
K	For Threaded Nipple (NPT):	3 in. I.D.	4 in. I.D.
L	For Butt Weld (IPS):	3 in. I.D.	4 in. I.D.
M	For Transition Sleeve (IPS):	3 in. I.D.	4 in. I.D.
N	Dimension from center of Booster Unit to end of discharge outlet.		
	With **J** Flanged Discharge:	10-5/8 in.	12 in.
	With **K** Threaded Discharge:	5-25/32 in.	6-15/16 in.
	With **L** Welded Discharge:	7-7/8 in.	9 in.
	With **M** Transition Discharge:	12-1/2 in.	13-31/32 in.
	INLET CONNECTIONS AND SIZES		
O	For Flanged (ASA Std. 150 lbs.):	3 in. I.D.	4 in. I.D.
P	For Threaded Nipple (NPT):	3 in. I.D.	4 in. I.D.
Q	For Butt Weld (IPS):	3 in. I.D.	4 in. I.D.
R	For Transition Sleeve (IPS):	3 in. I.D.	4 in. I.D.
S	Dimension from center of Booster Unit to end of Inlet Connection.		
	With **O** Flanged Inlet:	15-5/8 in.	18-3/16 in.
	With **P** Threaded Inlet:	15-7/8 in.	18-3/16 in.
	With **Q** Welded Inlet:	12-7/8 in	15-3/16 in.
	With **R** Transition Inlet:	18-7/8 in.	21-3/16 in.
T	Discharge Body to tank pipe connection:	6 in. NPT	Welded
U	SPOOL ASSEMBLY		
	Spool design load:	64,000 lbs.	88,000 lbs.
	- WITHOUT CHECK VALVES -		
	Area of water passages:	10 sq. in.	15.8 sq. in.
	Percent area of water passages to area of Drop Pipe:	135%	124%
	_ WITH TWO CHECK VALVES -		
	Area of valve passages:	6.28 sq. in.	12.6 sq. in.
	Percent area of valve passages to area of Drop Pipe:	89%	100%
V	Motor Cable tappings through spool (w/cable connectors):	(4) 3/8 in. NPT	(4) 1/2 in. NPT
	Maximum allowable	(4) 3/8 in. NPT	(6) 1/2 in. NPT
W	Tapping into Pressure Zone: (Furnished with square head plug)	3/8 in. NPT	3/8 in. NPT
X	Tapping into Suction Zone (Furnished with square head plug)	Not Available	1 in. NPT
Y	Spool to drop pipe nipple connection:	3 in. NPT	4 in. NPT
Z	Tank Pipe Size:	6 in. I.D.	8 in. I.D.

—STANDARD INDUSTRIAL PITLESS BOOSTER STATIONS—

STANDARD INDUSTRIAL PITLESS BOOSTER STATION UNITS FOR SUBMERSIBLE PUMPS
10" STANDARD TANK SIZE

FIRST

Choose well size then make-up basic ordering number from proper column in specifications

ORDERING NUMBER SELECTION GUIDE

BURY DEPTH - FT. (Select one)	PITLESS SUBMERSIBLE	TANK SIZE - IN.	UPPER CASE SIZE - IN.	ATTACHMENT TO TANK CASING (Welded)	BLACK UPPER CASE	WATERTIGHT CAP	CLOSED SPOOL PASSAGES	NO CHECK VALVES	DROP PIPE I.D.-IN. (Select one)	DISCHARGE CONNECTION (Select One)				DISCHARGE I.D -IN. (Select one)	TANK LENGTH*	INLET I.D. - IN. (Select one)	INLET CONNECTION (Select One)				STANDARD MODEL
										FLANGED	THREADED	WELDED	MECHANICAL JOINT**				FLANGED	THREADED	WELDED	MECHANICAL JOINT**	
1 & Up	PS	10	12	W	B	W	X	0	4 5 6	F	T	W	M	4 5 6	*	4 5 6	F	T	W	M	E

* To determine tank length add overall length of pump plus 2' & round up to next even foot. Insert number in this space.
** With transition sleeve.

SECOND
Add desired accessory symbol

Accessory	Symbol
Sealed Conduit Connection	S
Special Provision	X

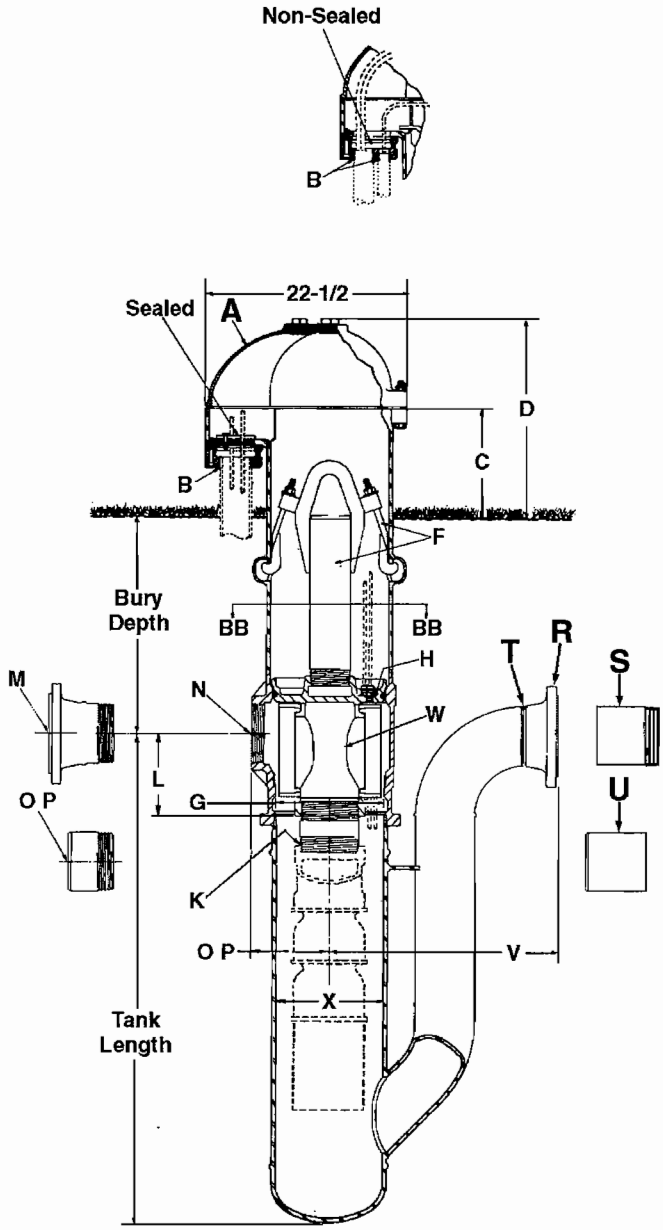

COMPONENT MATERIALS
Tank & Inlet Pipes - Steel, black corrosion resistant coating.
Cap - Cast iron, green enamel finish.
Conduit Box - Steel, black corrosion resistant coating.
Conduit Connector - Cast iron, green enamel finish.
Combination Hold-Down & Lift-Out Assembly - Galvanized
Hold-Down Pipe - Steel, black corrosion resistant coating.
Pitless Case - Steel, black corrosion resistant coating.
Discharge Body - Ductile iron, lead free galvanized.
Spool - Ductile iron, lead free galvanized.

NOTE: Inlet pipe, tank pipe & spool tested to 150 PSI

NOTE: Any combination between Drop Pipe and Discharge Outlet size is possible, if required.

Specifications subject to change without notice

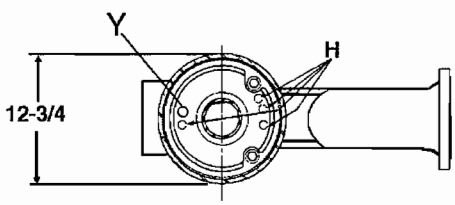

SECTION BB-BB

Monitor®

STANDARD INDUSTRIAL PITLESS BOOSTER STATION
UNITS FOR SUBMERSIBLE PUMPS
10" STANDARD TANK SIZES

SPECIFICATIONS

(See drawing on Page 60)

A Seal Cap: The watertight cap bolts on top of the upper casing forming a watertight connection with a gasket.

B Conduit Tapping Sizes: 3" NPT with sealed conduit connection. Watertight conduit seals for most common cable sizes are available..

C Distance from ground level to top of Pitless Case: 12".

D Distance from ground level to top of Seal Cap: 23".

E Pitless Case size: 12" I.D. 12-3/4" O.D.

F "Hold Down-Lift Out Assembly: Positions and clamps spool to discharge body to prevent rotation during pump start up. Hold Down-Lift-Out pipe size 4" IPS. Designed Lift-Out assembly load: 60,000 lbs. (2) Hold-Down hooks supplied.

G Pitless Unit minimum I.D.: 10"

H Motor cable tappings through spool: (4) 1/2" NPT (with cable connectors)

K	Spool to Drop Pipe connection sizes:	4" NPT	5"NPT	6" NPT
L	Dimension from center of discharge outlet to bottom of spool:	10-11/16"	10-9/16"	9-5/8"
	DISCHARGE CONNECTIONS & SIZES			
M	For Flanged (ASA Std. 150 lbs.):	4" I.D.	5" I.D.	6" I.D.
N	For Threaded Nipple (NPT):	4" I.D.	5" I.D.	6" I.D.
O	For Butt Weld (IPS):	4" I.D.	5" I.D.	6" I.D.
P	For Transition Sleeve (IPS):	4" I.D.	N.A.	6" I.D.
Q	Dimension from center of Booster Unit to end of discharge outlet.			
	With **M** Flanged Discharge:	15-1/4"	15-1/2"	15-9/16"
	With **N** Threaded Discharge:	10-9/32"	10-5/32"	9-1/8"
	With **O** Welded Discharge	12-7/32"	12-1/32"	12-1/16"
	With **P** Transition Discharge	17-7/32"	N.A.	16-1/16"
	INLET CONNECTIONS & SIZES			
R	For Flanged (ASA Std. 150 lbs.):	4" I.D.	5" I.D.	6" I.D.
S	For Threaded Nipple (NPT):	4" I.D.	5" I.D.	6" I.D.
T	For Butt Weld (IPS):	4" I.D.	5" I.D.	6" I.D.
U	For Transition Sleeve (IPS):	4" I.D.	N.A.	6" I.D.
V	Dimension from center of Booster Unit to end of Inlet Connection.			
	With **R** Flanged Inlet:	30 3/16"	30-11/16"	25-3/16"
	With **S** Threaded Inlet:	30-3/16"	30-3/16"	25-11/16"
	With **T** Welded Inlet:	27-3/16"	27-3/16"	21-11/16"
	With **U** Transition Inlet	33-3/16"	N.A.	27-11/16"
W	**SPOOL ASSEMBLY**			
	Area of water passages	25.12 Sq. In.	25.12 Sq. In.	25.12 Sq. In.
	Percent area of water passages to area of drop pipe	197%	125%	87%
X	Tank Pipe size:	10" I.D.	10" I.D.	10" I.D.
Y	Tapping into Suction Zone	1" NPT	1" NPT	1" NPT

—STANDARD INDUSTRIAL PITLESS BOOSTER STATIONS—

STANDARD INDUSTRIAL PITLESS BOOSTER STATION UNITS FOR SUBMERSIBLE PUMPS
12" STANDARD TANK SIZE

FIRST

Choose well size then make-up basic ordering number from proper column in specifications

ORDERING NUMBER SELECTION GUIDE

BURY DEPTH - FT. (Select one)	PITLESS SUBMERSIBLE	TANK SIZE - IN.	UPPER CASE SIZE - IN.	ATTACHMENT TO TANK CASING (Welded)	BLACK UPPER CASE	WATERTIGHT CAP	CLOSED SPOOL PASSAGES	NO. CHECK VALVES	DROP PIPE I.D.-IN. (Select one)	DISCHARGE CONNECTION (Select One)				DISCHARGE I.D -IN. (Select one)	TANK LENGTH*	INLET I.D. - IN. (Select one)	INLET CONNECTION (Select One)				STANDARD MODEL
										FLANGED	THREADED	WELDED	MECHANICAL JOINT**				FLANGED	THREADED	WELDED	MECHANICAL JOINT**	
1 & Up	PS	12 14	W	B	W	X	0	5 6	4	F	T	W	M	5 6	*	5 6	F	T	W	M	E

* To determine tank length add overall length of pump plus 2' & round up to next even foot. Insert number in this space.
** With transition sleeve.

SECOND
Add desired accessory symbol

Accessory	Symbol
Sealed Conduit Connection	S
Special Provision	X

COMPONENT MATERIALS

Tank & Inlet Pipes - Steel, black corrosion resistant coating.
Cap - Cast iron, green enamel finish.
Conduit Box - Steel, black corrosion resistant coating.
Conduit Connector - Cast iron, green enamel finish.
Combination Hold-Down & Lift-Out Assembly - Galvanized
Hold-Down Pipe - Steel, black corrosion resistant coating.
Pitless Case - Steel, black corrosion resistant coating.
Discharge Body - Ductile iron, lead free galvanized.
Spool - Ductile iron, lead free galvanized.

NOTE: Inlet pipe, tank pipe & spool tested to 150 PSI

NOTE: Any combination between Drop Pipe and Discharge Outlet size is possible, if required.

Specifications subject to change without notice

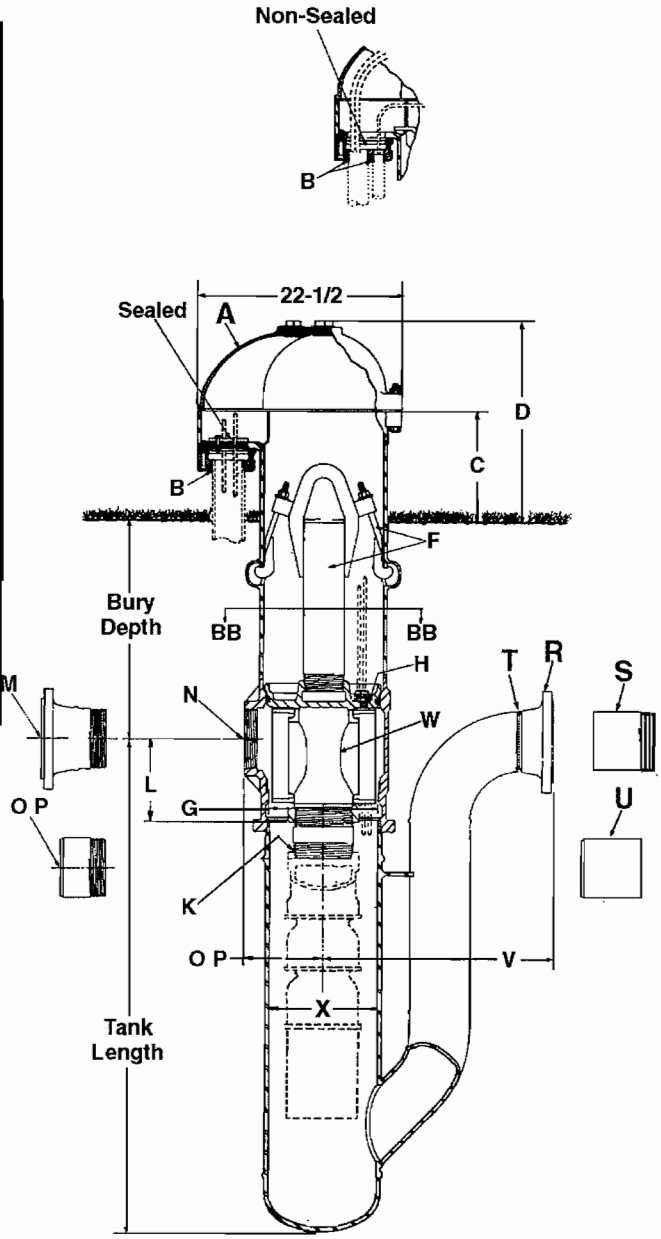

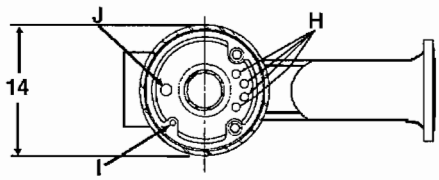

SECTION BB-BB

Monitor®

STANDARD INDUSTRIAL PITLESS BOOSTER STATION
UNITS FOR SUBMERSIBLE PUMPS
12" STANDARD TANK SIZES

SPECIFICATIONS

(See drawing on Page 62)

A Seal Cap: The watertight cap bolts on top of the upper casing forming a watertight connection with a gasket.

B Conduit Tapping Sizes: 2" & 1" NPT without sealed conduit connection; 2" & 1", 2", or 3" NPT with sealed conduit connection. Watertight conduit seals for most common cable sizes are available.

C Distance from ground level to top of Pitless Case: 12".

D Distance from ground level to top of Seal Cap: 22-1/16".

E Pitless Case size: 13-1/4" I.D. 14" O.D.

F "Hold Down-Lift Out Assembly: Positions and clamps spool to discharge body to prevent rotation during pump start up. Hold Down-Lift-Out pipe size 4" IPS. Designed Lift-Out assembly load: 60,000 lbs. (2) Hold-Down hooks supplied.

G Pitless Unit minimum I.D.: 12"

H Motor cable tappings through spool: 1/2" NPT. (with cable connectors)

I Tapping into Pressure Zone: 3/8" NPT. (Furnished with square head plug)

J Tapping into Suction Zone: 1" NPT. (Furnished with square head plug).

K	Spool to Drop Pipe connection sizes:	4" NPT	5"NPT	6" NPT
L	Dimension from center of discharge outlet to bottom of spool:	11-5/8"	11-1/2"	10-1/2"
	DISCHARGE CONNECTIONS & SIZES			
M	For Flanged (ASA Std. 150 lbs.):	4" I.D.	5" I.D.	6" I.D.
N	For Threaded Nipple (NPT):	4" I.D.	5" I.D.	6" I.D.
O	For Butt Weld (IPS):	4" I.D.	5" I.D.	6" I.D.
P	For Transition Sleeve (IPS):	4" I.D.	N.A.	6" I.D.
Q	Dimension from center of Booster Unit to end of discharge outlet.			
	With **M** Flanged Discharge:	15-1/4"	15-1/2"	15-1/2"
	With **N** Threaded Discharge:	10-7/32"	10-3/32"	9-1/16"
	With **O** Welded Discharge	12-5/32"	12-1/32"	12"
	With **P** Transition Discharge	17-1/4"	N.A.	16"
	INLET CONNECTIONS & SIZES			
R	For Flanged (ASA Std. 150 lbs.):	4" I.D.	5" I.D.	6" I.D.
S	For Threaded Nipple (NPT):	4" I.D.	5" I.D.	6" I.D.
T	For Butt Weld (IPS):	4" I.D.	5" I.D.	6" I.D.
U	For Transition Sleeve (IPS):	4" I.D.	N.A.	6" I.D.
V	Dimension from center of Booster Unit to end of Inlet Connection.			
	With **R** Flanged Inlet:	30 1/8"	30-5/8"	25-1/16"
	With **S** Threaded Inlet:	30-1/8"	30-1/8"	25-9/16"
	With **T** Welded Inlet:	27-1/16"	27-1/16"	21-9/16"
	With **U** Transition Inlet	33-1/8"	N.A.	27-5/8"
W	**SPOOL ASSEMBLY**			
	Area of water passages	25.12 Sq. In.	25.12 Sq. In.	25.12 Sq. In.
	Percent area of water passages to area of drop pipe	197%	125%	87%
X	Tank Pipe size:	12" I.D.	12" I.D.	12" I.D.

CUSTOM PITLESS BOOSTER STATIONS

CUSTOM PITLESS BOOSTER STATION UNITS FOR SUBMERSIBLE PUMPS
12" TANK SIZES

FIRST

Choose well size then make-up basic ordering number from proper column in specifications

ORDERING NUMBER SELECTION GUIDE

BURY DEPTH - FT. (Select one)	PITLESS SUBMERSIBLE	TANK SIZE - IN.	UPPER CASE SIZE - IN.	ATTACHMENT TO TANK CASING (Welded)	BLACK UPPER CASE	WATERTIGHT CAP	CLOSED SPOOL PASSAGES	NO CHECK VALVES	DROP PIPE I.D.-IN. (Select one)	DISCHARGE CONNECTION (Select One)				DISCHARGE I.D -IN. (Select one)	TANK LENGTH*	INLET I.D. - IN. (Select one)	INLET CONNECTION (Select One)			
										FLANGED	THREADED	WELDED	MECHANICAL JOINT**				FLANGED	THREADED	WELDED	MECHANICAL JOINT**
1 & Up	PS	12 14	W	B	W	X	0		4 5 6	F	T	W	M	4 5 6	*	4 5 6	F	T	W	M

* To determine tank length add overall length of pump plus 2' & round up to next even foot. Insert number in this space.
** With transition sleeve.

SECOND

Add desired accessory symbol

Accessory	Symbol
Sealed Conduit Connection	S
Special Provision	X

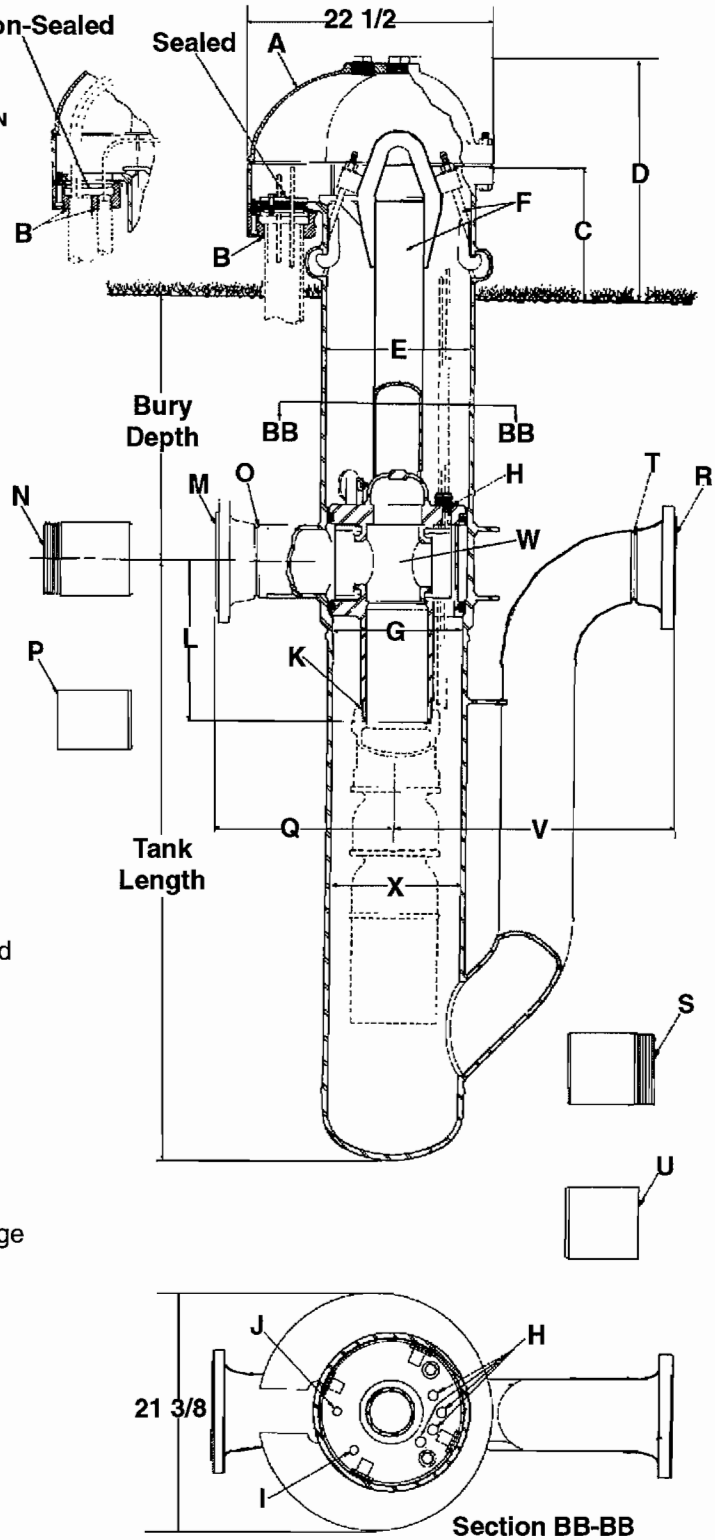

COMPONENT MATERIALS

Tank & Inlet Pipes - Steel, black corrosion resistant coating.
Cap - Cast iron, green enamel finish.
Conduit Box - Steel, black corrosion resistant coating.
Conduit Connector - Cast iron, green enamel finish.
Combination Hold-Down & Lift-Out Assembly - Galvanized
Hold-Down Pipe - Steel, black corrosion resistant coating.
Pitless Case - Steel, black corrosion resistant coating.
Discharge Body - Steel, lead free galvanized.
Spool - Steel, lead free galvanized.

NOTE: Inlet pipe, tank pipe & spool tested to 180 PSI

NOTE: Any combination between Drop Pipe and Discharge Outlet size is possible, if required.

Specifications subject to change without notice

Monitor®

CUSTOM PITLESS BOOSTER STATION
UNITS FOR SUBMERSIBLE PUMPS
12" TANK SIZES

SPECIFICATIONS

(See drawing on Page 64)

A Seal Cap: The watertight cap bolts on top of the upper casing forming a watertight connection with a gasket.

B Conduit Tapping Sizes: 2" & 1" NPT without sealed conduit connection; 2" & 1", 2", or 3" NPT with sealed conduit connection. Watertight conduit seals for most common cable sizes are available. (See Accessory List)

C Distance from ground level to top of Pitless Case: 12".

D Distance from ground level to top of Seal Cap: 22-1/16".

E Pitless Case size: 13-1/8" I.D. 14" O.D.

F "Hold Down-Lift Out Assembly: Positions and clamps spool to discharge body to prevent rotation during pump start up. Hold Down-Lift-Out pipe size 4" IPS. Designed Lift-Out assembly load: 60,000 lbs. (2) Hold-Down hooks supplied.

G Pitless Unit minimum I.D.: 12"

H Motor cable tappings through spool: (4) 1/2" NPT. (with cable connectors)

I Tapping into Pressure Zone: 3/8" NPT. (Furnished with square head plug)

J Tapping into Suction Zone: 1" NPT. (Furnished with square head plug).

K	Spool to Drop Pipe connection sizes:	4" NPT	5"NPT	6" NPT
L	Dimension from center of discharge outlet to bottom of spool:	13-7/16"	14-7/16"	14-1/2"
	DISCHARGE CONNECTIONS & SIZES			
M	For Flanged (ASA Std. 150 lbs.):	4" I.D.	5" I.D.	6" I.D.
N	For Threaded Nipple (NPT):	4" I.D.	5" I.D.	6" I.D.
O	For Butt Weld (IPS):	4" I.D.	5" I.D.	6" I.D.
P	For Transition Sleeve (IPS):	4" I.D.	5" I.D.	6" I.D.
Q	Dimension from center of Booster Unit to end of discharge outlet.			
	With **M** Flanged Discharge:	21-1/2"	22"	16-7/16"
	With **N** Threaded Discharge:	21-7/16"	21-7/16"	16-15/16"
	With **O** Welded Discharge	18-1/2"	18-1/2"	12-15/16"
	With **P** Transition Discharge	24-1/2"	N.A.	18-15/16"
	INLET CONNECTIONS & SIZES			
R	For Flanged (ASA Std. 150 lbs.):	4" I.D.	5" I.D.	6" I.D.
S	For Threaded Nipple (NPT):	4" I.D.	5" I.D.	6" I.D.
T	For Butt Weld (IPS):	4" I.D.	5" I.D.	6" I.D.
U	For Transition Sleeve (IPS):	4" I.D.	5" I.D.	6" I.D.
V	Dimension from center of Booster Unit to end of Inlet Connection.			
	With **R** Flanged Inlet:	30 1/8"	30-5/8"	25-1/16"
	With **S** Threaded Inlet:	30-1/8"	30-1/8"	25-9/16"
	With **T** Welded Inlet:	27-1/16"	27-1/16"	21-9/16"
	With **U** Transition Inlet	33-1/8"	N.A.	27-5/8"
W	**SPOOL ASSEMBLY**			
	Area of water passages	25.12 Sq. In.	25.12 Sq. In.	25.12 Sq. In.
	Percent area of water passages to area of drop pipe	100%	125%	87%
X	Tank Pipe size:	12" I.D.	12" I.D.	12" I.D.

—STANDARD INDUSTRIAL PITLESS BOOSTER STATIONS—

STANDARD INDUSTRIAL PITLESS BOOSTER STATION UNITS FOR SUBMERSIBLE PUMPS
16" STANDARD TANK SIZES

FIRST

Choose well size then make-up basic ordering number from proper column in specifications

ORDERING NUMBER SELECTION GUIDE

BURY DEPTH - FT. (Select one)	PITLESS SUBMERSIBLE	TANK SIZE - IN.	UPPER CASE SIZE - IN.	ATTACHMENT TO TANK CASING (Welded)	BLACK UPPER CASE	WATERTIGHT CAP	CLOSED SPOOL PASSAGES	NO CHECK VALVES	DROP PIPE I.D.-IN. (Select one)	DISCHARGE CONNECTION (Select One)				DISCHARGE I.D -IN. (Select one)	TANK LENGTH*	INLET I.D. - IN. (Select one)	INLET CONNECTION (Select One)				STANDARD MODEL
										FLANGED	THREADED	WELDED	MECHANICAL JOINT**				FLANGED	THREADED	WELDED	MECHANICAL JOINT**	
2 to 19	PS	16	18	W	B	W	X	0	5 6 8	F	T	W	M	5 6 8	*	5 6 8	F	T	W	M	E

* To determine tank length add overall length of pump plus 2' & round up to next even foot. Insert number in this space.
** With transition sleeve.

SECOND

Add desired accessory symbol

Accessory	Symbol
Sealed Conduit Connection	S
Special Provision	X

COMPONENT MATERIALS

Tank & Inlet Pipes - Steel, black corrosion resistant coated.
Cap - Cast iron, green enamel finish.
Conduit Box - Steel, black corrosion resistant coated.
Conduit Connector - Cast iron, green enamel finish.
Combination Hold-Down & Lift-Out Assembly - Galvanized
Hold-Down Pipe - Steel, back corrosion resistant coated.
Pitless Case - Steel, black corrosion resistant coated.
Discharge Body - Ductile iron, lead free galvanized.
Spool - Ductile iron, lead free galvanized.

NOTE: Inlet pipe, tank pipe & spool tested to 175 PSI

NOTE: Any combination between Drop Pipe and Discharge Outlet size is possible, if required.

Specifications subject to change without notice

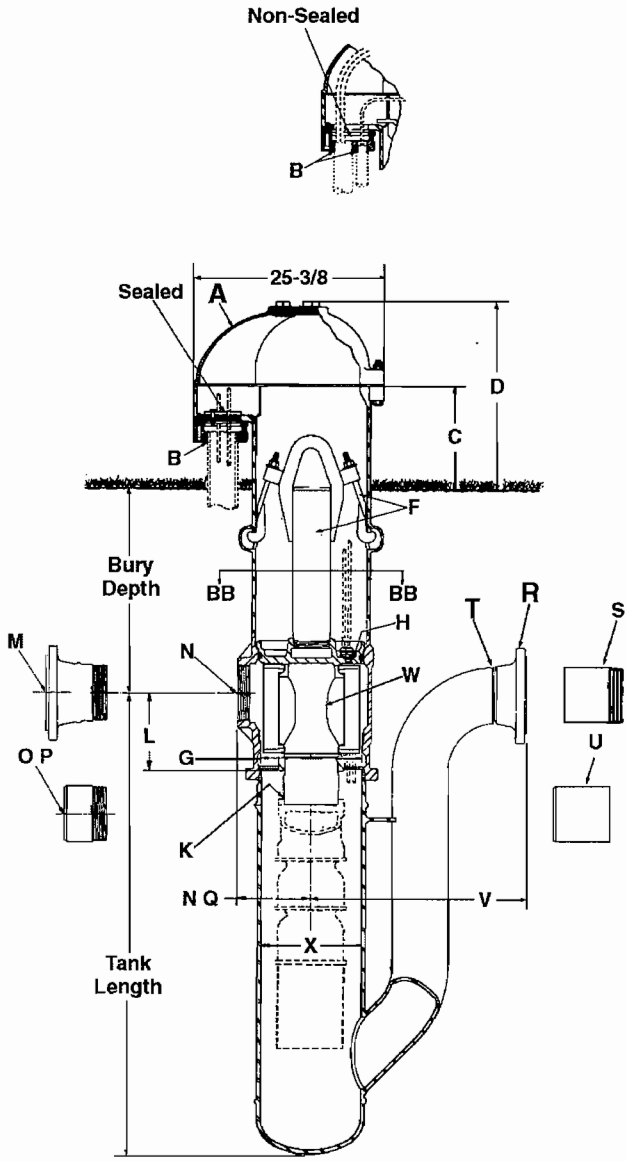

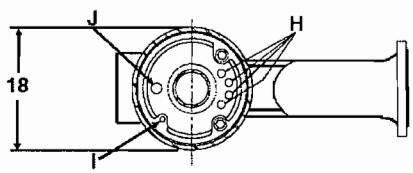

SECTION BB-BB

Monitor®

STANDARD INDUSTRIAL PITLESS BOOSTER STATION
UNITS FOR SUBMERSIBLE PUMPS
16" STANDARD TANK SIZES

SPECIFICATIONS

(See drawing on Page 66)

A Seal Cap: The watertight cap bolts on top of the upper casing forming a watertight connection with a gasket.

B Conduit Tapping Sizes: 2" & 1" NPT without sealed conduit connection; 2" & 1", 2", or 3" NPT with sealed conduit connection. Watertight conduit seals for most common cable sizes are available.

C Distance from ground level to top of Pitless Case: 12".

D Distance from ground level to top of Seal Cap: 21-13/16".

E Pitless Case size: 17-1/4" I.D. 18" O.D.

F "Hold Down-Lift Out Assembly: Positions and clamps spool to discharge body to prevent rotation during pump start up. Hold Down-Lift-Out pipe size 5" IPS. Designed Lift-Out assembly load: 110,000 lbs. (4) Hold-Down hooks supplied.

G Pitless Unit minimum I.D.: 15-1/4"

H Motor cable tappings through spool: (4) 1/2" NPT. (with cable connectors)

I Tapping into Pressure Zone: 3/8" NPT. (Furnished with square head plug)

J Tapping into Suction Zone: 1" NPT. (Furnished with square head plug).

K	Spool to Drop Pipe connection sizes:	5" NPT	6"NPT	8" NPT
L	Dimension from center of discharge outlet to bottom of spool:	17-5/16"	18-5/16"	12-5/16"
	DISCHARGE CONNECTIONS & SIZES			
M	For Flanged (ASA Std. 150 lbs.):	5" I.D.	6" I.D.	8" I.D.
N	For Threaded Nipple (NPT):	5" I.D.	6" I.D.	8" I.D.
O	For Butt Weld (IPS):	5" I.D.	6" I.D.	8" I.D.
P	For Transition Sleeve (IPS):	5" I.D.	6" I.D.	8" I.D.
Q	Dimension from center of Booster Unit to end of discharge outlet.			
	With **M** Flanged Discharge:	18-23/32"	18-23/32"	17-13/16"
	With **N** Threaded Discharge:	12-9/32"	12-9/32"	11"
	With **O** Welded Discharge	14-7/16"	15-7/32"	13-13/16"
	With **P** Transition Discharge	N.A.	19-7/32"	19-13/16"
	INLET CONNECTIONS & SIZES			
R	For Flanged (ASA Std. 150 lbs.):	5" I.D.	6" I.D.	8" I.D.
S	For Threaded Nipple (NPT):	5" I.D.	6" I.D.	8" I.D.
T	For Butt Weld (IPS):	5" I.D.	6" I.D.	8" I.D.
U	For Transition Sleeve (IPS):	5" I.D.	6" I.D.	8" I.D.
V	Dimension from center of Booster Unit to end of Inlet Connection.			
	With **R** Flanged Inlet:	36-7/8"	36-7/8"	31-3/8"
	With **S** Threaded Inlet:	36-3/8"	37-3/8"	31-3/8"
	With **T** Welded Inlet:	33-3/8"	33-3/8"	27-3/8"
	With **U** Transition Inlet	N.A.	39-3/8"	33-3/8"
W	**SPOOL ASSEMBLY**			
	Area of water passages	41.25 Sq. In.	41.25 Sq. In.	41.25 Sq. In.
	Percent area of water passages to area of drop pipe	206%	143%	82%
X	Tank Pipe size:	15-1/4" I.D.	15-1/4" I.D.	15-1/4" I.D.

STANDARD INDUSTRIAL PITLESS BOOSTER STATION UNITS FOR SUBMERSIBLE PUMPS

6" & 8" TANK SIZES

ANY ORDER FOR REPAIR PARTS MUST BE ACCOMPANIED BY THE PITLESS UNIT SERIAL NUMBER AND ORDER NUMBER

SERIAL NUMBER _____

ORDERING NUMBER _____

Key No.	Qty	Description	6" Ord. No.
1	1	Pipe Plug, 1 1/2" NPT	UG54
2	6	Machine Bolt, 3/8-16NCx3 1/2" L	PS94
3	1	Machine Bolt, 3/8-16NCx2 1/2" L.	PS93
4	1	Seal Cap & Plug Assy.	PS217
5	1	Gasket	PS197
6	2	Machine bolt, 5/16-18NCx2" L.	PS132
7	1	Retainer Ring	PS377
8	7	Hex Nut, 3/8-16NC	UB17
8A	2	Hex Nut, 5/16-18NC	PC434
9	1	Seal Ring	PS167
10	1	Depression Ring	PS187
11	2	Hex Nut, 5/8-11NC	PC286
12	2	Washer	PC417
13	2	Hold-Down Hook	UJ7B
14	1	Lift-Out Pipe & Bail Assembly Note: Must be ordered by description & unit Serial Number	------
15	1	Reducer Bushing, 2x1 1/4	PC330
17	4	Cable Connectors Note: Must be ordered by description & unit Serial Number	------
18	2	Pipe Plug, 3/8-18 NPT	UN122
19	1	Spool (7E0PS3F)	UC271
--	1	Spool Assy. w/check valves, inc. Key Nos. 19 -31 except 25 & 26 (7E2PS3F)	UC393
20	2	Hinge Pin	UC299
21	2	Hinge Pin Gasket	UC127A
22	4	Rocker Arm	UC301
23	2	Valve Spring	UC302
24	2	Valve Spring Center Support	UC300
25	4	Coupling 3/8-18NPT	PS182
26	4	Nipple 3/8-18 NPT	PS181
27	2	Valve Body	UC292
28	2	Rubber Check Valve Facing	UC295
29	2	Brass Washer	UG217
30	2	Brass Nut, 3/8-13NC	PS159
31	2	Check Valve Seat	UC293
32	2	Check Valve Assy. includes	UC296
		Key Nos. 27 thru 30	
33	2	Static Seal Ring	UC15
34	1	Pipe Nipple, 3" NPTx6" L.	UK351
35	1	Spool	UC287
---	1	Spool Assy. less check valves Includes key nos 16-18, 25-26 & 35	UC392
36	1	Casing	------
37	1	Discharge Body, FIP discharge outlet standard. Note: Must be ordered by description & unit Serial Number.	UC291
38	1	Tank & Inlet Pipe Assy. Note: Must be ordered by description & unit Serial Number	------

Key No.	Qty	Description	8" Ord. No.
1	1	Pipe Plug, 2 1/2" NPT	UK50
2	6	Machine Bolt, 1/2-13NCx4 1/2" L.	PS220
3	1	Machine Bolt, 1/2-13NCx3 1/2" L.	UE201
4	1	Seal Cap & Plug Assy.	PS350
5	1	Gasket	PS342
6	3	Machine bolt, 1/2-13NCx 2 1/2" L.	PS111
7	1	Retainer Ring	PS341
8	10	Hex Nut, 1/2-13NC	PC433
9	1	Seal Ring	PS170
10	1	Depression Ring	PS189
11	2	Hex Nut, 5/8-11NC	PC286
12	2	Washer	PC417
13	2	Hold-Down Hook	UG7
14	1	Lift-Out Pipe & Bail Assembly Note: Must be ordered by description & unit Serial Number	------
16	1	Pipe Plug, 1" NPT-Galv.	UN120
17	4	Cable Connectors Note: Must be ordered by description & unit Serial Number	------
18	2	Pipe Plug, 3/8-18 NPT	UN122
19	1	Spool (10E0PSF)	UG204
--	1	Spool Assy. w/check valves, includes Key Nos. 19 thru 31 (10E2PSF)	UG208
20	2	Hinge Pin	UG29
21	2	Hinge Pin Gasket	SW84
22	2	Rocker Arm-Right Hand	UG147
22A	2	Rocker Arm-Left Hand	UG148
23	2	Valve Spring-Right Hand	UG145
23A	2	Valve Spring-Left Hand	UG146
24	2	Valve Spring Center Support	UG150
25	2	Coupling 1/2-18NPT	PS182
26	2	Nipple 1/2-18NPT	PS181
27	2	Valve Body	UG149
28	2	Rubber Check Valve Facing	UG23
29	2	Brass Washer	UG68
30	2	Brass Nut, 1/2-13NC	TP34
31	2	Check Valve Seat	UG22
32	2	Check Valve Assy. includes	UG323
		Key Nos. 27 thru 30	
33	2	Static Seal Ring	UG15
34	1	Pipe Nipple, 4" NPTx6" L.	UK251
35	1	Spool	UG244
---	1	Spool Assy. less check valves Includes key nos 16-18, 25-26 & 35	UG253
36	1	Casing	------
37	1	Discharge Body, FIP discharge outlet standard. Note: Must be ordered by description & unit Serial Number.	UG3
38	1	Tank & Inlet Pipe Assy. Note: Must be ordered by description & unit Serial Number	------

Monitor®

STANDARD INDUSTRIAL PITLESS BOOSTER STATION UNITS FOR SUBMERSIBLE PUMPS

6" & 8" TANK SIZES

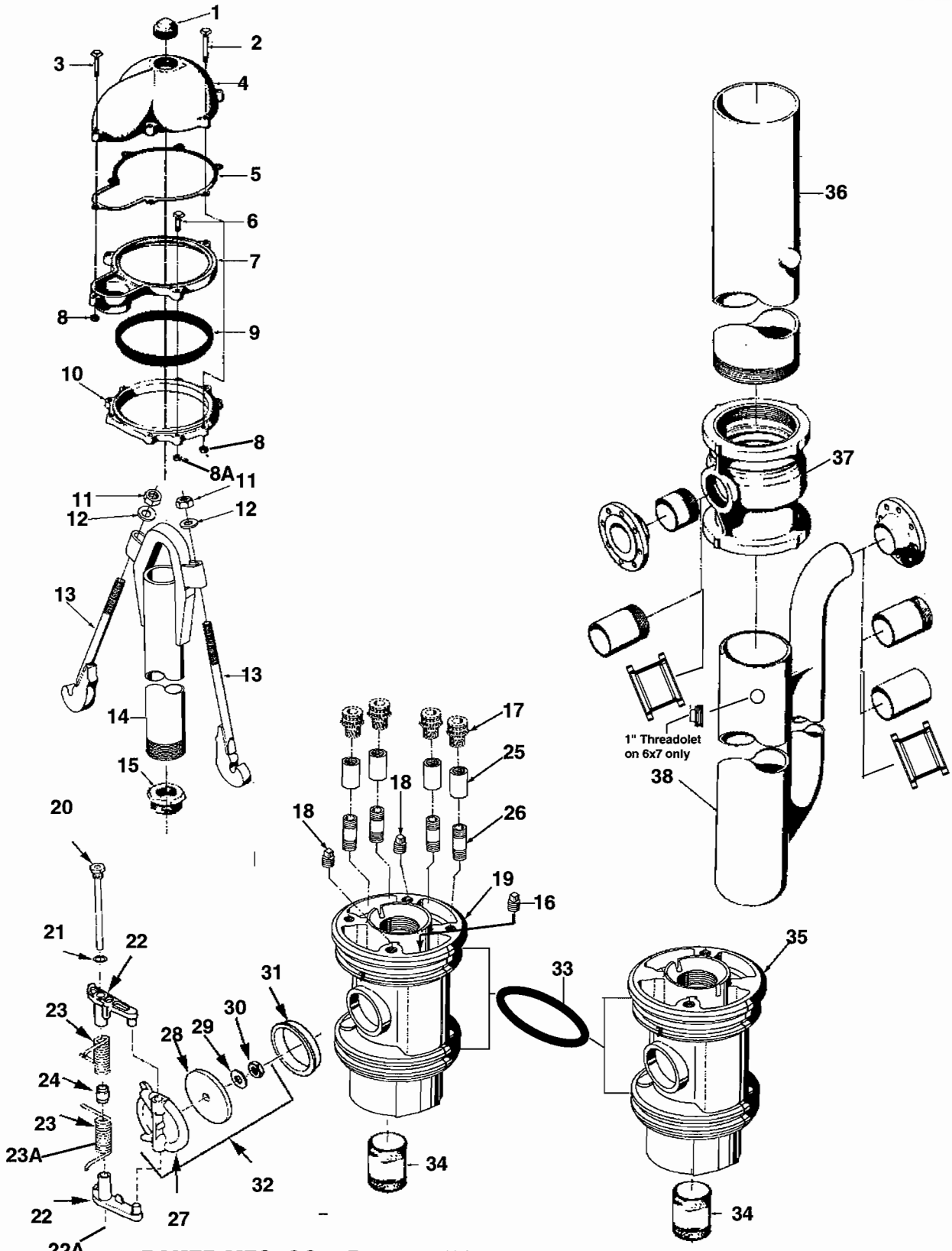

Monitor®

STANDARD INDUSTRIAL PITLESS BOOSTER STATION UNITS FOR SUBMERSIBLE PUMPS
10" STANDARD TANK SIZE

ANY ORDER FOR REPAIR PARTS MUST BE ACCOMPANIED BY THE PITLESS UNIT SERIAL NUMBER AND ORDER NUMBER

SERIAL NUMBER _____

ORDERING NUMBER _____

Key No.	Quantity	Description	Ord. No.
1	1	Pipe Plug, 2 1/2"	UK50
2	2	Lock Bolt, 5/8-11NC x 4 3/4" L.	UK4
3	1	Pipe plug, 2" NPT	UJ50
4	1	Pipe plug, 1 1/2" NPT	UG54
5	1	Seal Cap (UK850)	UK12
6	10	Hex nut, 5/8-11NC	PC286
7	1	Gasket	UK72
8	1	Retainer Ring	UJ174
9	1	Seal Ring	UJ176
10	1	Depression Ring	UJ175
11	5	Hex head cap screw, 5/8-11NC x 6" L	KP145
12	3	Hex head cap screw, 5/8-11NC x 3 1/2" L.	UJ177
13	4	Cable Connectors (Note: Must be ordered by description & Unit Serial No.	------
14	2	Hex nut, 5/8-11NC	PC286
15	2	Washer	PC417
16	2	Hold down Hook	UJ7B
17	1	Lift-out pipe & bail assy. (Order by bury depth	------
18	1	Spool - without check valves (12E0PSF)	UJ241
19	2	Static seal ring	UJ15
20	1	Discharge body & upper case assy. (Order by bury depth)	------
21	2	Pipe Nipple 6" NPT x 8 1/2" L.	UL125
22	1	Tank & Inlet pipe Assy. (Note: Must be ordered by description & Serial No.	------
23	1	Pipe plug, 3/8-18 NPT	UN122

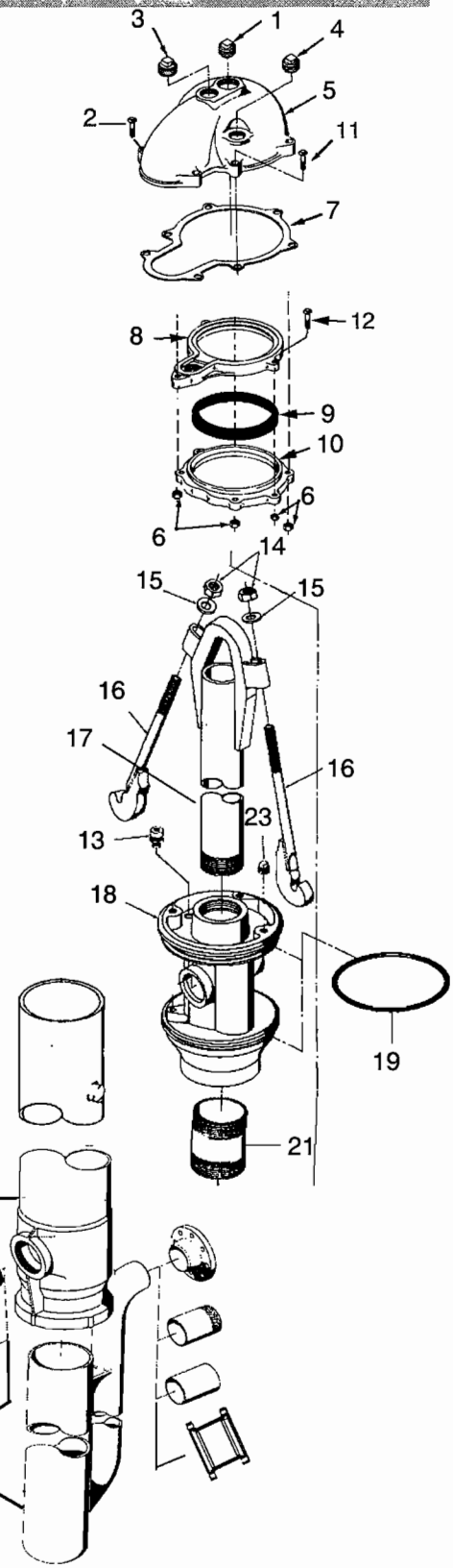

Monitor®

STANDARD INDUSTRIAL PITLESS BOOSTER STATION UNITS FOR SUBMERSIBLE PUMPS
12" STANDARD TANK SIZE

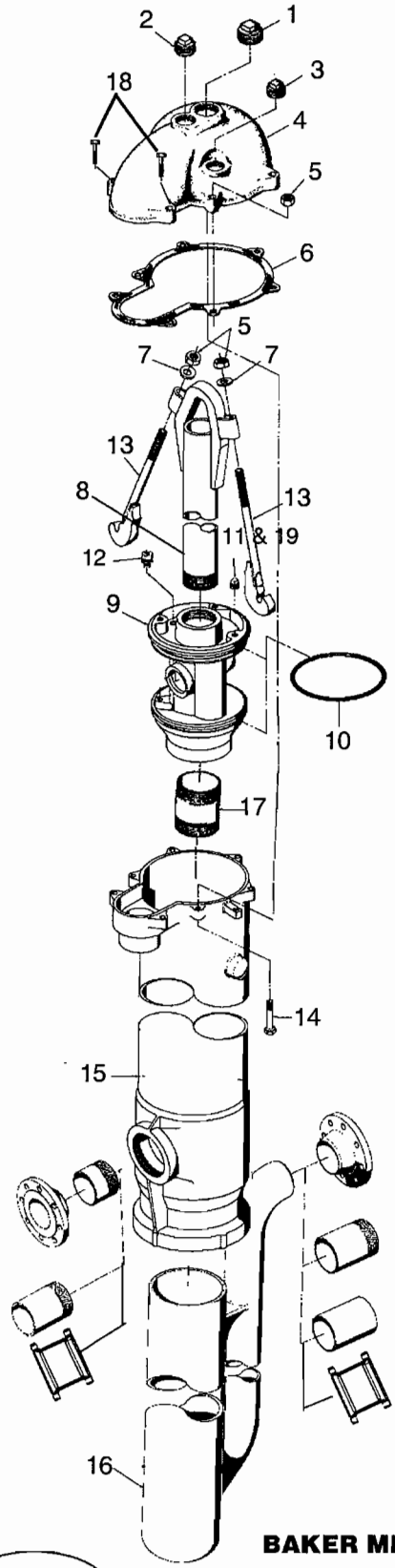

ANY ORDER FOR REPAIR PARTS MUST BE ACCOMPANIED BY THE PITLESS UNIT SERIAL NUMBER AND ORDER NUMBER

SERIAL NUMBER _____

ORDERING NUMBER _____

Key No.	Quantity	Description	Ord. No.
1	1	Pipe Plug, 2 1/2"	UK50
2	1	Pipe Plug, 2" NPT	UJ50
3	1	Pipe Plug, 1 1/2" NPT	UG54
4	1	Seal Cap (UK850)	UK12
5	9	Hex Nut, 5/8-11NC	PC286
6	1	Gasket	UK72
7	2	Washer	PC417
8	1	Lift Out Bail & Lift Out Pipe Assy.	------
		(Order by bury depth)	
9	1	Spool (14E0PSF)	UK6S4EF
10	2	Static Seal Ring	UK15
11	1	Pipe Plug, 3/8-18 NPT	UN122
12	4	Cable Connectors (Note: Must be ordered	------
		by description & unit Serial No.)	
13	2	Hold-Down Hook	UJ7B
14	5	Hex Hd. Cap Screw, 5/8-11HCx 4 3/4" L	UN73
15	1	Discharge Body & Upper Casing Assy.	------
		(Order by bury depth)	
16	1	Inlet pipe and tank assembly. (Note: Must be ordered by description & unit Serial No.)	------
17	1	Pipe Nipple 6" NPTx8 1/2" L	UL125
18	2	Lock Bolt - 5/8 x 4 3/4" L.	UK4
19	1	Pipe Plug - 1" NPT	UN120

CUSTOM PITLESS BOOSTER STATION UNITS FOR SUBMERSIBLE PUMPS
12" TANK SIZES

ANY ORDER FOR REPAIR PARTS MUST BE ACCOMPANIED BY THE PITLESS UNIT SERIAL NUMBER AND ORDER NUMBER

SERIAL NUMBER _____

ORDERING NUMBER _____

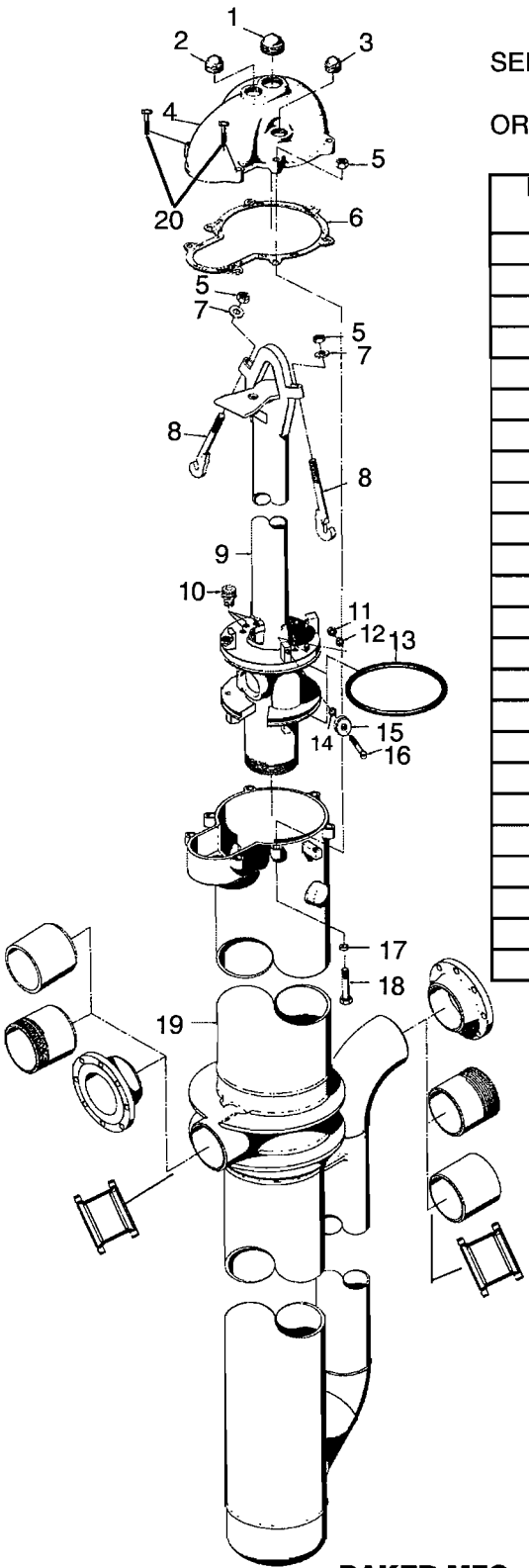

Key No.	Quantity	Description	Ord. No.
1	1	Pipe Plug, 2 1/2"	UK50
2	1	Pipe Plug, 2" NPT	UJ50
3	1	Pipe Plug, 1 1/2" NPT	UG54
4	1	Seal Cap (UK850)	UK12
5	9	Hex Nut, 5/8-11NC	PC286
6	1	Gasket	UK72
7	2	Washer	PC417
8	2	Hold-Down Hook	UJ7B
9	1	Spool & Lift-Out Assembly	------
		(Note: Ordered by description	
		& serial no.)	
10	3	Cable connectors (Note: Must be ordered	------
		by description & Unit serial number)	
11	4	Hex Nut, 3/8-16NC	UB17
12	4	Lockwasher	TX31
13	2	Static Seal Ring	UK15
14	4	Washer	SW68
15	4	Washer	UL95
16	4	Machine Screw, 3/8-16NC x 2 1/4" L.	UM222
17	7	Washer	UN81
18	5	Hex Head cap screw, 5/8-11NC x 5" L.	UN73
19	1	Inlet pipe, tank, discharge body &	------
		upper case assembly.	
20	2	Lock Bolt - 5/8 x 4 3/4" L.	LK4

STANDARD INDUSTRIAL PITLESS BOOSTER STATION UNITS FOR SUBMERSIBLE PUMPS

16" STANDARD TANK SIZES

ANY ORDER FOR REPAIR PARTS MUST BE ACCOMPANIED BY THE PITLESS UNIT SERIAL NUMBER AND ORDER NUMBER

SERIAL NUMBER _____

ORDERING NUMBER _____

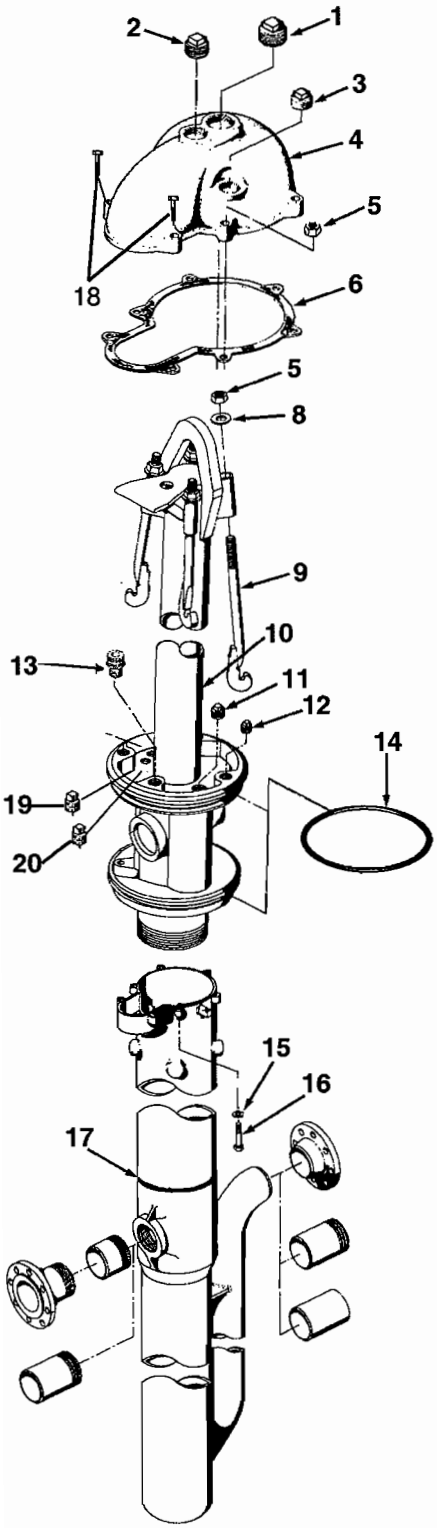

Key No.	Quantity	Description	Ord. No.
1	1	Pipe Plug, 2 1/2"	UK50
2	1	Pipe Plug, 2" NPT	UJ50
3	1	Pipe Plug, 2" NPT	UJ54
4	1	Seal Cap (UM850)	UM1
5	12	Hex Nut, 5/8-11NC	PC286
6	1	Gasket	UM72
8	4	Washer	PC417
9	4	Hold-Down Hook	UM7
10	1	Spool & Lift-Out Assy. (Order by descripiton & serial no.)	------
11	1	Pipe plug, 1" x 11 1/2 NPT	UN120
12	1	Pipe plug 3/8"-18 NPT	UN122
13	4	Cable Connectors (Note: Must be ordered by description & unit Serial No.)	------
14	2	Static Seal Ring	UM15
15	8	Washer	UN81
16	6	Head Head cap screw 5/8-11NC x 4 3/4" L	UN73
17	1	Inlet pipe, tank, discharge body & upper case assembly	UM125
18	2	Lock Bolt - 5/8 x 4 3/4" L.	LK4
19	1	Pipe plug - 1 1/2" NPT	UG54
20	1	Pipe Plug - 3/4" NPT	UJ91

CUSTOM TURBINE PITLESS UNITS

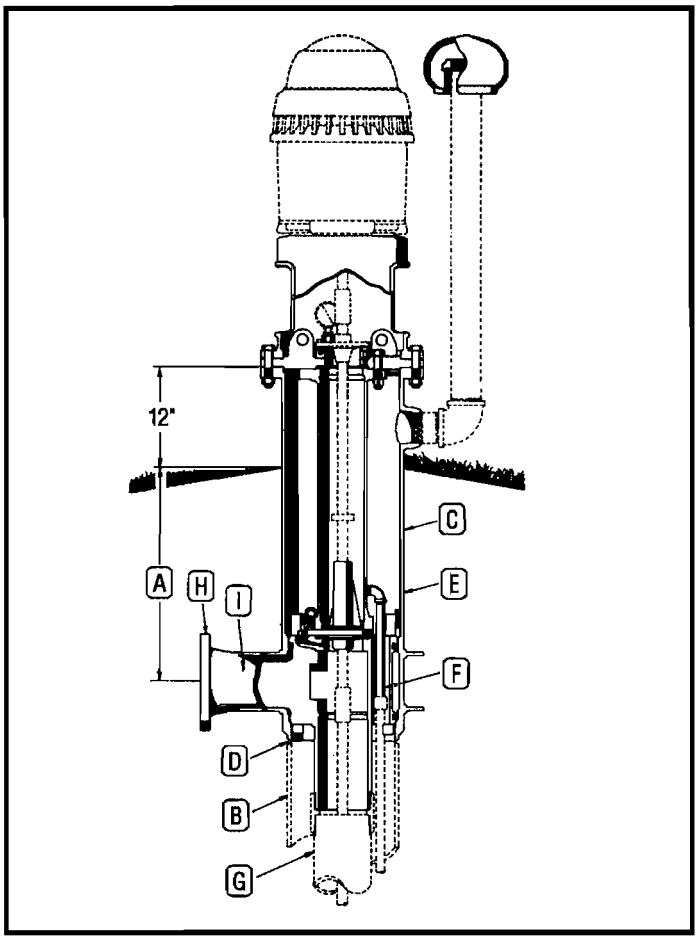

DESCRIPTION - ORDERING NUMBERS			
A		Bury Depth in Feet	
	PT	Pitless Unit for Turbine Pump	
B		Well Size - Ins.	
C		Upper Case Size - Ins.	
D	W	Attachment to Well Casing-Welded	
E	B	Black Upper Case	
F	E	Pressure Equalizing Spool Passages	
	0	Standard Spool	
G		Size of Column Pipe - Ins.	
H		Welded	Discharge Connection
		Flange, ASA 150#	
		Threaded NPT	
		Mech. Joint	
		Accessory - Transition Sleeve	
I		Discharge Size-Ins.	
	W	Waterlube	
		Water Sampler Valve (H)	
		Special Provision (X)	

UNITS AVAILABLE BY QUOTATION ONLY

EXPLANATION OF PITLESS UNIT ORDERING NUMBERS

The diagram illustrates the meaning of the various letters and numerals used in Monitor Turbine Pitless Unit ordering numbers. A typical order number and the pitless unit it stands for are shown.

Typical Order Number
3PT1014WBE06F6W

3 **A.** The first numeral in the order number indicates the bury depth, in feet, of the unit. Bury depth on all units is measured from the center of the discharge line to ground level. The top of the pitless case extends 12" above ground level as is required by many codes.

PT The type of pump the pitless unit is designed for. The unit shown is a PT for Line Shaft Turbine Pumps.

10 **B.** The well casing size is for 10" wells.

14 **C.** The upper pitless case size is 14".

W **D.** The attachment to the well casing is a welded joint.

B **E.** The upper pitless case is black pipe.

E **F.** The spool has pressure equalizing passages.

0 The type of spool has no silent check valves.

6 **G.** The size of column pipe in inches.

F **H.** The discharge connection is flanged.

6 **I.** The size of discharge line in inches.

W The type of Line Shaft Turbine the unit is designed for, "W" water-lubricated.

Monitor®

INDUSTRIAL PITLESS UNITS FOR LINE SHAFT TURBINE PUMPS
FOR WELL SIZES 10", 12", 14", 16", 18" & 20"

The Monitor PT Industrial Pitless Unit for Line Shaft Turbine Pumps forms a watertight extension of the well casing which starts below the frostline, where it is buried permanently, and continues upward 12 or more inches above grade, where the pitless case is flanged to receive a motor support and motor. The completed assembly of the motor support and motor closes the Pitless Case making a watertight installation.

FEATURES:

CORROSION PROTECTION . . . All water passages are either hot-dipped lead free galvanized or constructed of corrosion resistant material.

EASY TO SERVICE . . . The inner parts of the pitless unit and the column pipe may be removed without digging up the discharge pipe. The Pitless unit and the pump or well may then be serviced. This easy removal, by lifting, is made possible due to the o-ring seals in the spool. Replacement is equally simple.

RELIABLE SEALS . . . Neoprene O-rings between accurately machined hot-dipped lead free galvanized surfaces on the spool and and within the unit provide positive seals.

O-RING SEAL PROTECTION . . . Monitor seal protection prevents seal damage during installation and service.

FROST PROOF . . . No heating is required. All water passages are below the frost line.

QUICK TO INSTALL . . . A quality pump installation can be made easily and economically without delay for masonry or building construction.

PROTECTED SCREEN VENT . . . standard on all units.

TO INSTALL A PS INDUSTRIAL UNIT:

An excavation around the well casing below the frost line is made and well casing cut off at a prescribed level. On all but the 16" well size unit the motor support is removed and the spool assembly is lifted out of the Pitless Case, with a hoist, using the lifting lugs avaiable, and set aside.* On the 16" well size unit only (due to the design not shown) the unit is lifted by attaching to the motor support. The Pitless Unit is welded (watertight) to the well casing. The turbine pump is attached to the column pipe which is lowered into the well with a hoist; when the top of the last section of the column pipe is one foot or more above the pitless case, the spool assembly is screwed onto the drop pipe. The spool assembly and column pipe with pump are lowered into place; then finally the motor support and the turbine motor are installed.

* The spool assembly includes: A spool with no check valves; two O-ring seals, lift-out pipe and motor support plate with lifting lugs.

SUPPORT RINGS . . . Prevent distortion of the discharge body due to vertical movement of discharge pipe.

ACCURATE ALIGNMENT . . .Precision machining assures accurate alignment.

OPTIONS:

EPOXY PAINTING . . . can be done, if required, for extra protection in certain soil types.

ADDITIONAL TAPPING IN SPOOL . . . is available upon request.

TRANSITION SLEEVE FOR MECHANICAL JOINT . . . is available upon request.

WATER SAMPLING VALVE-FROST PROOF (Optional)

SPOOL ASSEMBLY

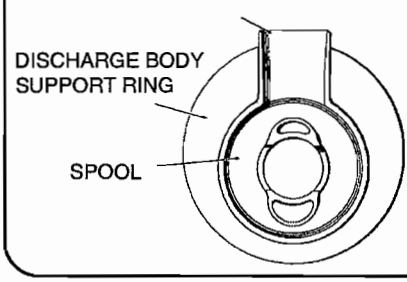

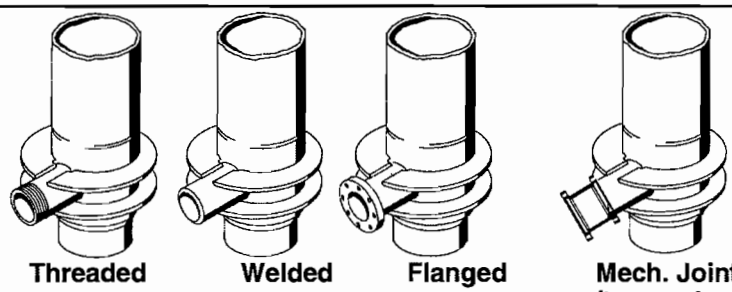

Threaded **Welded** **Flanged** **Mech. Joint w/trans. sleeve**

Units can be supplied with a discharge designed for threaded, welded, flanged or mechanical joint with transition sleeve connection. Column pipe connection is male iron pipe thread.

CUSTOM TURBINE PITLESS UNITS

Monitor®

INDUSTRIAL PITLESS UNITS FOR WATER LUBRICATED TURBINE PUMPS
10" WELL SIZES

FIRST: *Make-Up Basic Ordering Number*

ORDERING NUMBER SELECTION GUIDE

Bury Depth - Ft. (Select one)	Pitless Turbine	Well Size - In.	Upper Case Size - In.	Attachment to Well Casing (Welded)	Black Upper Case	Pressure Equalizing Spool Passages	No Check Valves	Column Pipe I.D. - In. (Select One)	Discharge Connection (Select One)				Discharge I.D. - In. (Select One)	Water Lubricated
									Welded	Flanged	Threaded	Transition Sleeve		
1								4					4	
&	PT1014	W	B		E	0	5	W	F		T	M	5	W
Up							6						6	

SECOND: *Add Desired Accessories Symbol*

ACCESSORY LIST	SYMBOL
Water Sampler Valve	H

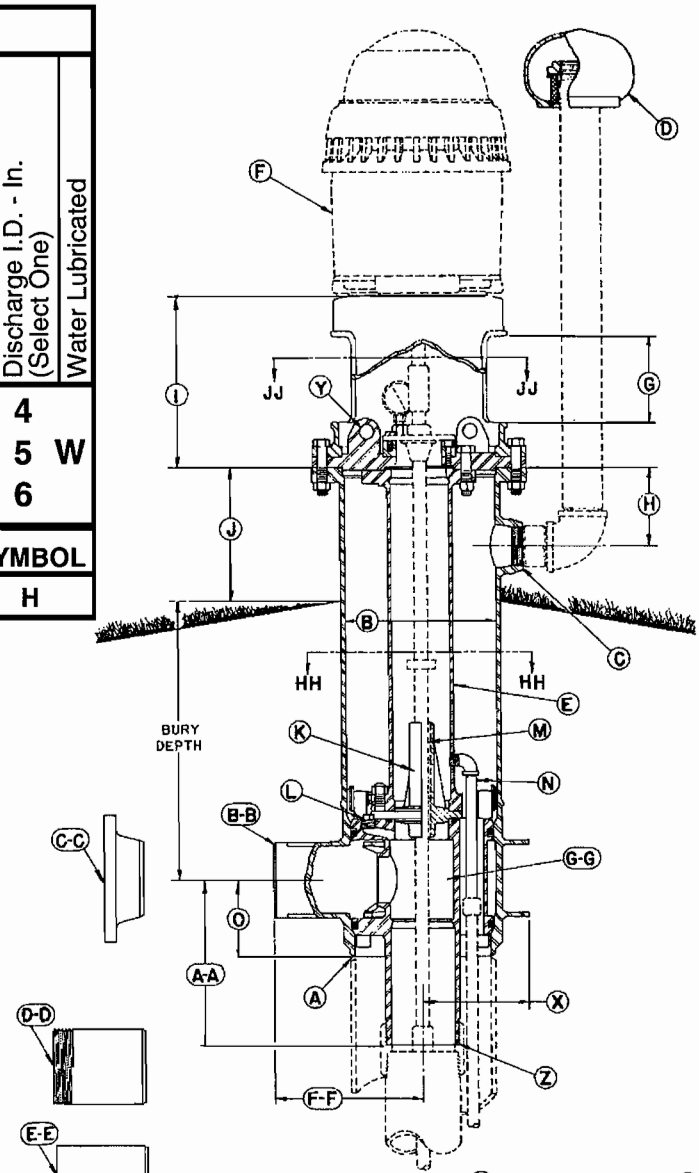

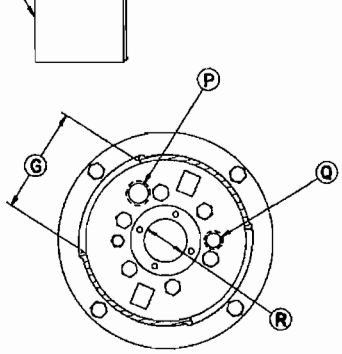

SECTION JJ-JJ

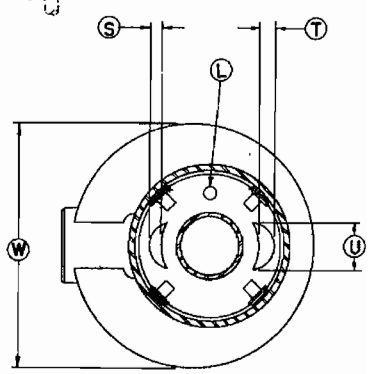

SECTION HH-HH

COMPONENT MATERIALS

Well Vent - cast iron, green enamel finish.
Motor Support - cast iron, black corrosion resistant coating.
Combination Hold-Down & Lift-Out Mechanism - steel, black corrosion resistant coating.
Hold-Down Pipe - steel, black corrosion resistant coating.
Pitless Case - steel, corrosion resistant coating.
Discharge Body - steel, lead free galvanized.
Spool - steel, lead free galvanized.

NOTE: Provision for prelubrication not available.

NOTE: Units are designed for motors having an RPM of 1800 or less and a 10" or 12" base diameter having a 9-1/8" bolt circle. Maximum bury depth will be 9 feet. For units requiring exceptions to these conditions of design, special specifications must be used.

NOTE: Any combination between Column Pipe and Discharge Outlet size is possible, if required.

Specifications Subject to Change Without Notice

Monitor®

INDUSTRIAL PITLESS UNITS
FOR WATER LUBRICATED TURBINE PUMPS
10" WELL SIZES

SPECIFICATIONS

(See drawing on Page 76)

A Unit minimum I.D. 10 in.: chamfered for butt weld to well casing.
B Pitless Unit with Black Upper Case Std.: 13-1/4 in. I.D., 14 in. O.D.
C 2-1/2 in. NPT Tapping for Well Vent.
D 2-1/2 in. Protected Screen Well Vent.
E Lift-Out Pipe: 5 in. IPS.
F Turbine Motor having a maximum base diameter of 12 in. *(Supplied by others)*
G Motor Mount Access Openings: (2) openings measuring 9 in. wide x 8-1/2 in. high.
H 6-7/8 in.
I 15 in.
J 12 in.
K Shaft Bearing Housing.
L 1 in. N.P.T. Tapping ported to Column Pipe.
M Shaft Bearings *(Supplied by pump manufacturer)*: Total length of bearing to be 10 in. and a maximum O.D. of 1-5/8 in.
N 3/4 in. drain.
O Dimension from center of Discharge Outlet to bottom of Discharge Body: 15-3/4 in.
P 1-1/2 in. NPT Tapping for optional Water Sampler.
Q 1 in. NPT Tapping.
R Rabbet Fit for Upper Grease Seal Bearing Housing: Minimum O.D. of 3 in. and maximum O.D. of 4 in.; maximum Bolt Circle of Bearing Housing - 5-1/4 in.
(Bearing & Bearing Housing supplied by others)
S 1 in.
T 1-1/2 in.
U 4 in.
W 21-3/8 in.
X 9-5/16 in.
Y Lifting Lug: (2) Lugs for inserting or removal of inner well parts.

Z	**SPOOL TO DROP PIPE CONNECTION SIZES:** The Standard Spool is designed for a 65,000 lb. maximum load. Spools are available to sustain higher loads.	4 in. NPT (3/4 Taper)	5 in. NPT (3/4 Taper)	6 in. NPT (3/4 Taper)
AA	Dimension from center of Discharge Outlet to bottom of Spool:	13-7/16 in.	14-7/16 in.	14-1/2 in.
	DISCHARGE CONNECTIONS & SIZES:			
	For [**BB**] Butt Weld (IPS):	4 in. I.D.	5 in. I.D.	6 in. I.D.
	For [**CC**] Flanged (ASA Std. 150 lb.):	4 in. I.D.	5 in. I.D.	6 in. I.D.
	For [**DD**] Threaded Nipple (NPT):	4 in. I.D.	5 in. I.D.	6 in. I.D.
	For [**EE**] Transition Sleeve (IPS):	4 in. I.D.	N.A.	6 in. I.D.
FF	Dimension from center of Well Casing to the end of Discharge Outlet.			
	With [**BB**] Butt Weld Discharge:	18-1/2 in.	18-1/2 in.	12-15/16 in.
	With [**CC**] Flanged Discharge:	21-1/2 in.	22 in.	16-7/16 in.
	With [**DD**] Threaded Discharge:	21-7/16 in.	21-7/16 in.	16-15/16 in.
	With [**EE**] Transition Sleeve Discharge:	24-1/2 in.	N.A.	18-15/16 in.
GG	**SPOOL ASSEMBLY**			
	Area of Water Passage(s):	12.56 sq. in.	25.12 sq. in.	25.12 sq. in.
	Percent Area of Water Passage(s) to Area of Drop Pipe:	100%	125%	87%

CUSTOM TURBINE PITLESS UNITS

INDUSTRIAL PITLESS UNITS FOR WATER LUBRICATED TURBINE PUMPS
12" WELL SIZES

FIRST: *Make-Up Basic Ordering Number*

ORDERING NUMBER SELECTION GUIDE

Bury Depth - Ft. (Select one)	Pitless Turbine	Well Size - In.	Upper Case Size - In.	Attachment to Well Casing (Welded)	Black Upper Case	Pressure Equalizing Spool Passages	No Check Valves	Column Pipe I.D. - In. (Select One)	Discharge Connection (Select One)				Discharge I.D. - In. (Select One)	Water Lubricated
									Welded	Flanged	Threaded	Transition Sleeve		
1								4					4	
&	PT1214	W	B	E	0			5	W	F	T	M	5	W
Up								6					6	

SECOND: *Add Desired Accessories Symbol*

ACCESSORY LIST	SYMBOL
Water Sampler Valve	H

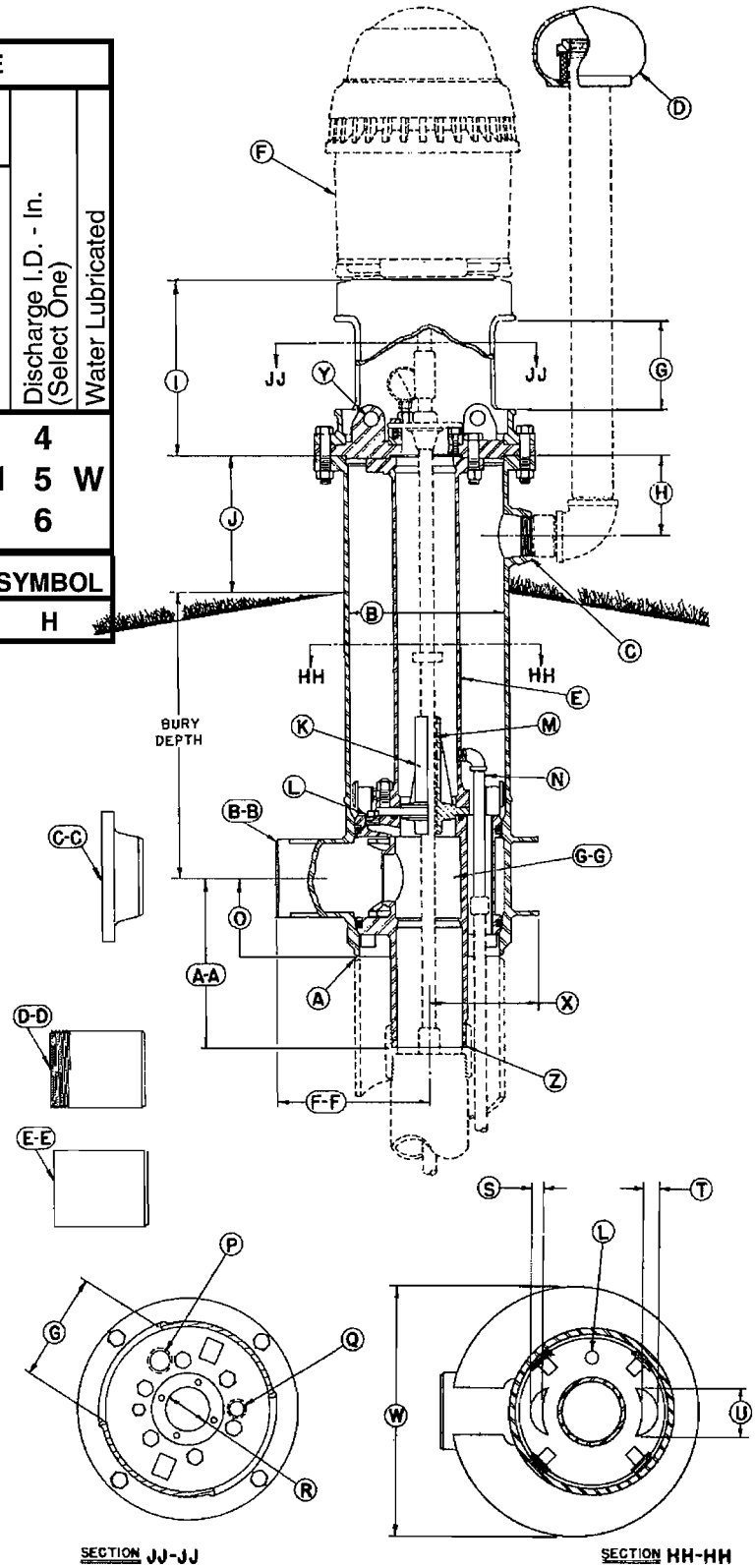

COMPONENT MATERIALS

Well Vent - cast iron, green enamel finish.
Motor Support - cast iron, black corrosion resistant coating.
Combination Hold-Down & Lift-Out Mechanism - steel, black corrosion resistant coating.
Hold-Down Pipe - steel, black corrosion resistant coating.
Pitless Case - steel, corrosion resistant coating.
Discharge Body - steel, lead free galvanized.
Spool - steel, lead free galvanized.

NOTE: Provision for prelubrication not available.

NOTE: Units are designed for motors having an RPM of 1800 or less and a 10" or 12" base diameter having a 9-1/8" bolt circle. Maximum bury depth will be 9 feet. For units requiring exceptions to these conditions of design, special specifications must be used.

NOTE: Any combination between Column Pipe and Discharge Outlet size is possible, if required.

Specifications Subject to Change Without Notice

Monitor®

INDUSTRIAL PITLESS UNITS
FOR WATER LUBRICATED TURBINE PUMPS
12" WELL SIZES

SPECIFICATIONS

(See drawing on Page 78)

A Unit minimum I.D. 12 in.: chamfered for butt weld to well casing.
B Pitless Unit with Black Upper Case Std.: 13-1/4 in. I.D., 14 in. O.D.
C 2-1/2 in. NPT Tapping for Well Vent.
D 2-1/2 in. Protected Screen Well Vent.
E Lift-Out Pipe: 5 in. IPS.
F Turbine Motor having a maximum base diameter of 12 in. *(Supplied by others)*
G Motor Mount Access Openings: (2) openings measuring 9 in. wide x 8-1/2 in. high.
H 6-7/8 in.
I 15 in.
J 12 in.
K Shaft Bearing Housing.
L 1 in. NPT Tapping ported to Column Pipe.
M Shaft Bearings *(Supplied by pump manufacturer)*: Total length of bearing to be 10 in. and a maximum O.D. of 1-5/8 in.
N 3/4 in. drain.
O Dimension from center of Discharge Outlet to bottom of Discharge Body: 7-11/16 in.
P 1-1/2 in. NPT Tapping for optional Water Sampler.
Q 1 in. NPT Tapping.
R Rabbet Fit for Upper Grease Seal Bearing Housing: Minimum O.D. of 3 in. and maximum O.D. of 4 in.; maximum Bolt Circle of Bearing Housing - 5-1/4 in.
(Bearing & Bearing Housing supplied by others)
S 1 in.
T 1-1/2 in.
U 4 in.
W 21-3/8 in.
X 9-5/16 in.
Y Lifting Lug: (2) Lugs for inserting or removal of inner well parts.

Z	**SPOOL TO DROP PIPE CONNECTION SIZES:**	4 in. NPT	5 in. NPT	6 in. NPT
	The Standard Spool is designed for a 65,000 lb. maximum load. Spools are available to sustain higher loads.	(3/4 Taper)	(3/4 Taper)	(3/4 Taper)
AA	Dimension from center of Discharge Outlet to bottom of Spool:	14-7/16 in.	14-7/16 in.	14-1/2 in.
	DISCHARGE CONNECTIONS & SIZES:			
	For [**BB**] Butt Weld (IPS):	4 in. I.D.	5 in. I.D.	6 in. I.D.
	For [**CC**] Flanged (ASA Std. 150 lb.):	4 in. I.D.	5 in. I.D.	6 in. I.D.
	For [**DD**] Threaded nipple (NPT):	4 in. I.D.	5 in. I.D.	6 in. I.D.
	For [**EE**] Transition Sleeve (IPS):	4 in. I.D.	N.A.	6 in. I.D.
FF	Dimension from center of Well Casing to the end of Discharge Outlet.			
	With [**BB**] Butt Weld Discharge:	18-1/2 in.	18-1/2 in.	12-15/16 in.
	With [**CC**] Flanged Discharge:	21-1/2 in.	22 in.	16-7/16 in.
	With [**DD**] Threaded Discharge:	21-7/16 in.	21-7/16 in.	16-15/16 in.
	With [**EE**] Transition Sleeve Discharge:	24-1/2 in.	N.A.	18-15/16 in.
GG	**SPOOL ASSEMBLY**			
	Area of Water Passage(s):	12.56 sq. in.	25.12 sq. in.	25.12 sq. in.
	Percent Area of Water Passage(s) to Area of Drop Pipe:	100%	125%	87%

CUSTOM TURBINE PITLESS UNITS

Monitor®

INDUSTRIAL PITLESS UNITS FOR WATER LUBRICATED TURBINE PUMPS
14" WELL SIZES

FIRST: *Make-Up Basic Ordering Number*

ORDERING NUMBER SELECTION GUIDE

Bury Depth - Ft. (Select one)	Pitless Turbine	Well Size - In.	Upper Case Size - In.	Attachment to Well Casing (Welded)	Black Upper Case	Pressure Equalizing Spool Passages	No Check Valves	Column Pipe I.D. - In. (Select One)	Discharge Connection (Select One)				Discharge I.D. - In. (Select One)	Water Lubricated
									Welded	Flanged	Threaded	Transition Sleeve		
1								5					5	
&	PT1416	W	B	E	0	6	W	F	T	M	6	W		
Up								8					8	

SECOND: *Add Desired Accessories Symbol*

ACCESSORY LIST	SYMBOL
Water Sampler Valve	H

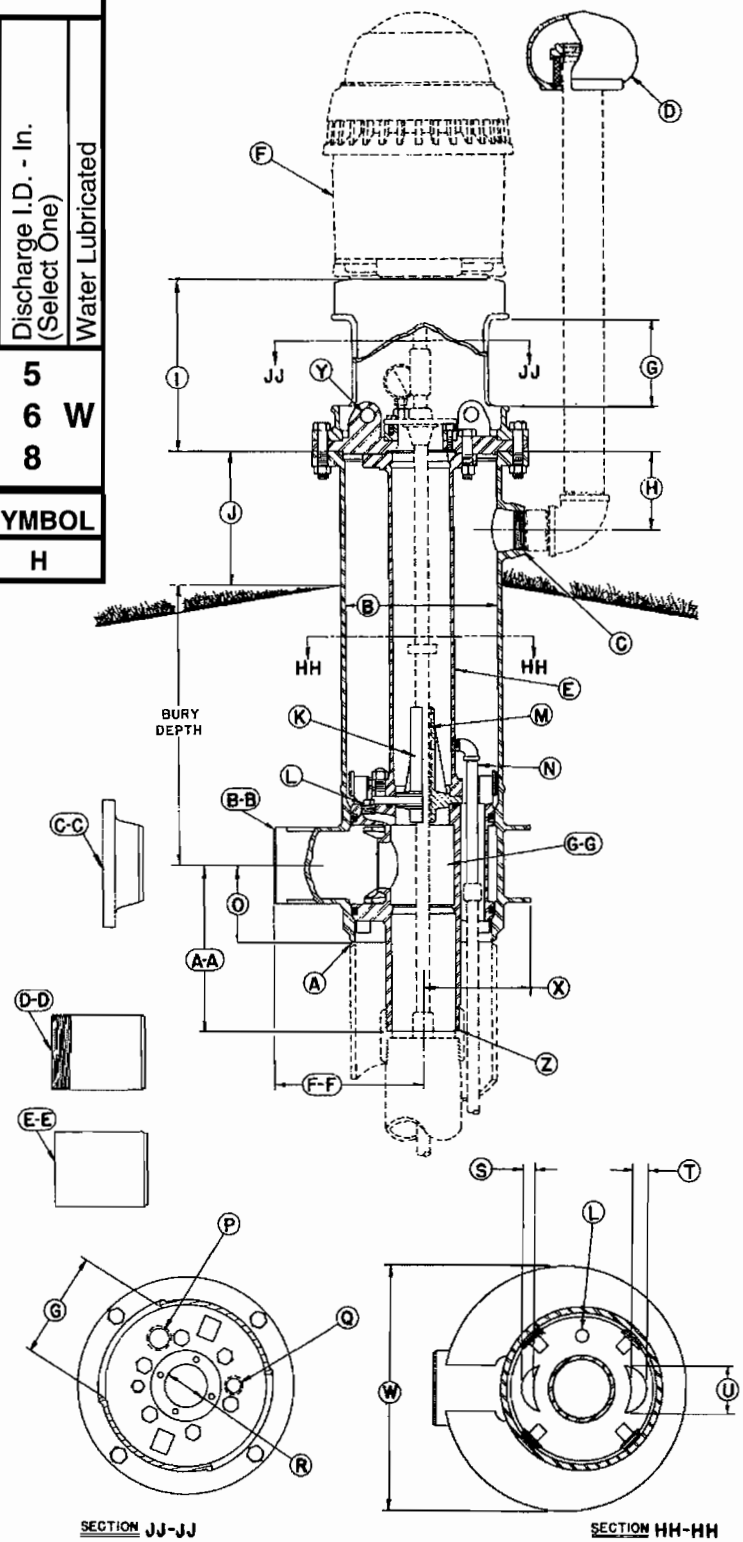

COMPONENT MATERIALS

Well Vent - cast iron, green enamel finish.
Motor Support - cast iron, black corrosion resistant coating.
Combination Hold-Down & Lift-Out Mechanism - steel, black corrosion resistant coating.
Hold-Down Pipe - steel, black corrosion resistant coating.
Pitless Case - steel, corrosion resistant coating.
Discharge Body - steel, lead free galvanized.
Spool - steel, lead free galvanized.

NOTE: Provision for prelubrication not available.

NOTE: Units are designed for motors having an RPM of 1800 or less and a 16 1/2" base diameter having a 14 3/4" bolt circle. Maximum bury depth will be 9 feet. For units requiring exceptions to these conditions of design, special specifications must be used.

NOTE: Any combination between Column Pipe and Discharge Outlet size is possible, if required.

Specifications Subject to Change Without Notice

Monitor®

INDUSTRIAL PITLESS UNITS
FOR WATER LUBRICATED TURBINE PUMPS
14" I.D. WELL SIZES

SPECIFICATIONS

(See drawing on page 80)

A Unit minimum I.D. 13-1/4 in.: chamfered for butt weld to well casing.
B Pitless Unit with Black Upper Case Std.: 15-1/4 in. I.D., 16 in. O.D.
C 2-1/2 in. NPT Tapping for Well Vent.
D 2-1/2 in. Protected Screen Well Vent.
E Lift-Out Pipe: 6 in. IPS.
F Turbine Motor having a maximum base diameter of 16-1/2 in. *(Supplied by others)*
G Access Openings: (2) openings measuring 9 in. wide x 8-1/2 in. high.
H 7-1/8 in.
I 15 in.
J 12 in.
K Shaft Bearing Housing.
L Two 1 in. NPT Tappings ported to Column Pipe.
M Shaft Bearings *(Supplied by pump manufacturer)*: Total length of bearing to be 10 in. and a maximum O.D. of 2-1/2 in.
N 3/4 in. drain.
O Dimension from center of Discharge Outlet to bottom of Discharge Body: 9-3/4 in.
P 1-1/2 in. NPT Tapping for optional Water Sampler.
Q 1 in. NPT Tapping.
R Rabbet Fit for Upper Grease Seal Bearing Housing: Minimum O.D. of 3 in. and maximum O.D. of 4 in.; maximum Bolt Circle of Bearing Housing - 5-1/4 in.
(Bearing & Bearing Housing supplied by others)
S 1-1/4 in.
T 2 in.
U 4 in.
W 25-7/16 in.
X 10-15/16 in.
Y Lifting Lug: (2) Lugs for inserting or removal of inner well parts.

Z	**SPOOL TO DROP PIPE CONNECTION SIZES:**	5 in. NPT	6 in. NPT	8 in. NPT
	The Standard Spool is designed for a 120,000 lb. maximum load. Spools are available to sustain higher loads.	(3/4 Taper)	(3/4 Taper)	(3/4 Taper)
AA	Dimension from center of Discharge Outlet to bottom of Spool:	16-3/16 in.	21-13/16 in.	15-13/16 in.
	DISCHARGE CONNECTIONS & SIZES:			
	For [**BB**] Butt Weld (IPS):	5 in. I.D.	6 in. I.D.	8 in. I.D.
	For [**CC**] Flanged (ASA Std. 150 lb.):	5 in. I.D.	6 in. I.D.	8 in. I.D.
	For [**DD**] Threaded Nipple (NPT):	5 in. I.D.	6 in. I.D.	8 in. I.D.
	For [**EE**] Transition Sleeve (IPS):	N.A.	6 in. I.D.	8 in. I.D.
FF	Dimension from center of Well Casing to the end of Discharge Outlet.			
	With [**BB**] Butt Weld Discharge:	20-9/16 in.	20-9/16 in.	14-1/2 in.
	With [**CC**] Flanged Discharge:	24-1/16 in.	24-1/16 in.	18-1/2 in.
	With [**DD**] Threaded Discharge:	23-9/16 in.	24-9/16 in.	18-1/2 in.
	With [**EE**] Transition Sleeve Discharge:	N.A.	26-9/16 in.	20-1/2 in.
GG	**SPOOL ASSEMBLY ****			
	Area of Water Passage(s):	19.6 sq. in.	39.2 sq. in.	39.2 sq. in.
	Percent Area of Water Passage(s) to Area of Drop Pipe:	100%	138%	78.2%

CUSTOM TURBINE PITLESS UNITS

Monitor®

INDUSTRIAL PITLESS UNITS FOR WATER LUBRICATED TURBINE PUMPS
16" WELL SIZES

FIRST: *Make-Up Basic Ordering Number*

ORDERING NUMBER SELECTION GUIDE

Bury Depth - Ft. (Select one)	Pitless Turbine	Well Size - In.	Upper Case Size - In.	Attachment to Well Casing (Welded)	Black Upper Case	Pressure Equalizing Spool Passages	No Check Valves	Column Pipe I.D. - In. (Select One)	Discharge Connection (Select One)				Discharge I.D. - In. (Select One)	Water Lubricated
									Welded	Flanged	Threaded	Transition Sleeve		
1								5					5	
&	PT	16	18	W	B	E	0	6	W	F	T	M	6	W
Up								8					8	

SECOND: *Add Desired Accessories Symbol*

ACCESSORY LIST	SYMBOL
Water Sampler Valve	H

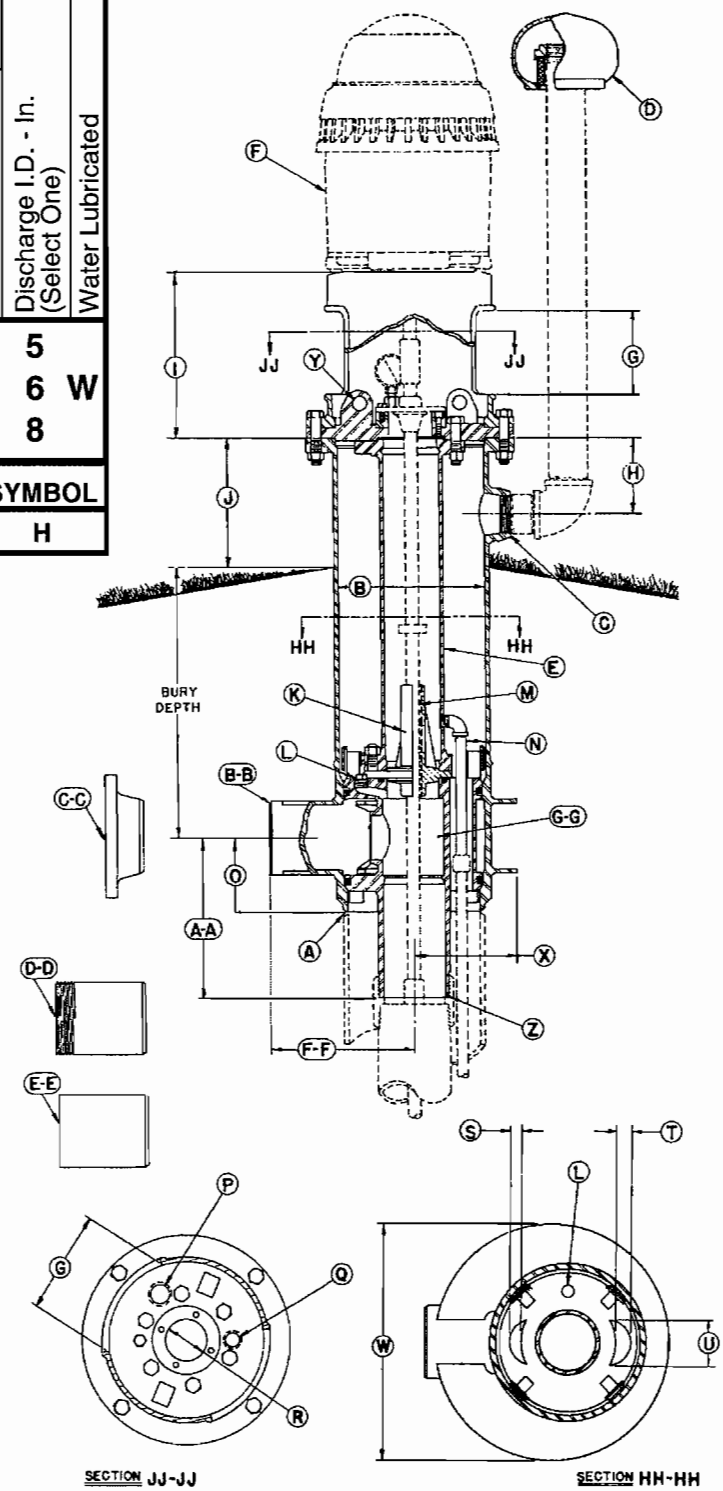

COMPONENT MATERIALS

Well Vent - cast iron, green enamel finish.
Motor Support - cast iron, black corrosion resistant coating.
Combination Hold-Down & Lift-Out Mechanism - steel, black corrosion resistant coating.
Hold-Down Pipe - steel, black corrosion resistant coating.
Pitless Case - steel, corrosion resistant coating.
Discharge Body - steel, lead free galvanized.
Spool - steel, lead free galvanized.

NOTE: Provision for prelubrication not available.

NOTE: Units are designed for motors having an RPM of 1800 or less and a 18 5/8" base diameter having a 14-3/4" bolt circle. Maximum bury depth will be 9 feet. For units requiring exceptions to these conditions of design, special specifications must be used.

NOTE: Any combination between Column Pipe and Discharge Outlet size is possible, if required.

NOTE: Design responsibility of these units is under the supervision of a Registered Professional Engineer (Certification of specifications by a Wisconsin Registered Engineer on request.)

Specifications Subject to Change Without Notice

Monitor®

INDUSTRIAL PITLESS UNITS
FOR WATER LUBRICATED TURBINE PUMPS
16" WELL SIZES

SPECIFICATIONS

(See drawing on Page 82)

A Unit minimum I.D. 15-1/4 in.: chamfered for butt weld to well casing.
B Pitless Unit with Black Upper Case Std.: 17-1/4 in. I.D., 18 in. O.D.
C 2-1/2 in. NPT Tapping for Well Vent.
D 2-1/2 in. Protected Screen Well Vent.
E Lift-Out Pipe: 6 in. IPS.
F Turbine Motor having a maximum base diameter of 18-5/8 in. *(Supplied by others)*
G Motor Mount Access Openings: (2) openings measuring 8-3/4 in. wide x 8-1/4 in. high.
H 7-5/32 in.
I 14 in.
J 12 in.
K Shaft Bearing Housing.
L Two 1 in. NPT Tappings ported to Column Pipe.
M Shaft Bearings *(Supplied by pump manufacturer)*: Total length of bearing to be 10 in. and a maximum O.D. of 2-1/2 in.
N 3/4 in. drain.
O Dimension from center of Discharge Outlet to bottom of Discharge Body: 11-1/16 in.
P 1-1/2 in. NPT Tapping for optional Water Sampler.
Q 1 in. NPT Tapping.
R Rabbet Fit for Upper Grease Seal Bearing Housing: Minimum O.D. of 3 in. and maximum O.D. of 4 in.; maximum Bolt Circle of Bearing Housing - 5-1/4 in.
(Bearing & Bearing Housing supplied by others)
S 1-1/4 in.
T 2-1/4 in.
U 5 in.
W 27-7/16 in.
X 11-15/16 in.

Z	**SPOOL TO DROP PIPE CONNECTION SIZES:** ..... The Standard Spool is designed for a 120,000 lb. ..... maximum load. Spools are available to sustain higher loads.	5 in. NPT (3/4 Taper)	6 in. NPT (3/4 Taper)	8 in. NPT (3/4 Taper)
AA	Dimension from center of Discharge Outlet to bottom of Spool:	16-1/4 in.	21-7/8 in.	15-13/16 in.
	DISCHARGE CONNECTIONS & SIZES:			
	For [**BB**] Butt Weld (IPS):	4 in. I.D.	5 in. I.D.	6 in. I.D.
	For [**CC**] Flanged (ASA Std. 150 lb.):	4 in. I.D.	5 in. I.D.	6 in. I.D.
	For [**DD**] Threaded nipple (NPT):	4 in. I.D.	5 in. I.D.	6 in. I.D.
	For [**EE**] Transition Sleeve (IPS):	N.A.	5 in. I.D.	6 in. I.D.
FF	Dimension from center of Well Casing to the end of Discharge Outlet.			
	With [**BB**] Butt Weld Discharge:	23 in.	23 in.	17 in.
	With [**CC**] Flanged Discharge:	26-1/2 in.	26-1/2 in.	21 in.
	With [**DD**] Threaded Discharge:	26 in.	27 in.	21 in.
	With [**EE**] Transition Sleeve Discharge:	N.A.	29 in.	23 in.
GG	**SPOOL ASSEMBLY**			
	Area of Water Passage(s):	19.6 sq. in.	39.2 sq. in.	39.2 sq. in.
	Percent Area of Water Passage(s) to Area of Drop Pipe:	100%	138%	78.2%

CUSTOM TURBINE PITLESS UNITS

Monitor®

INDUSTRIAL PITLESS UNITS FOR WATER LUBRICATED TURBINE PUMPS
18" WELL SIZES

FIRST: *Make-Up Basic Ordering Number*

ORDERING NUMBER SELECTION GUIDE															
Bury Depth - Ft. (Select one)	Pitless Turbine	Well Size - In.	Upper Case Size - In.	Attachment to Well Casing (Welded)	Black Upper Case	Pressure Equalizing Spool Passages	No Check Valves	Column Pipe I.D. - In. (Select One)	Discharge Connection (Select One)				Discharge I.D. - In. (Select One)	Water Lubricated
									Welded	Flanged	Threaded	Transition Sleeve		
1								6					6	
&	PT1820	W	B		E	0	8	W	F		T	M	8	W
Up								10					10	

SECOND: *Add Desired Accessories Symbol*

ACCESSORY LIST	SYMBOL
Water Sampler Valve	H

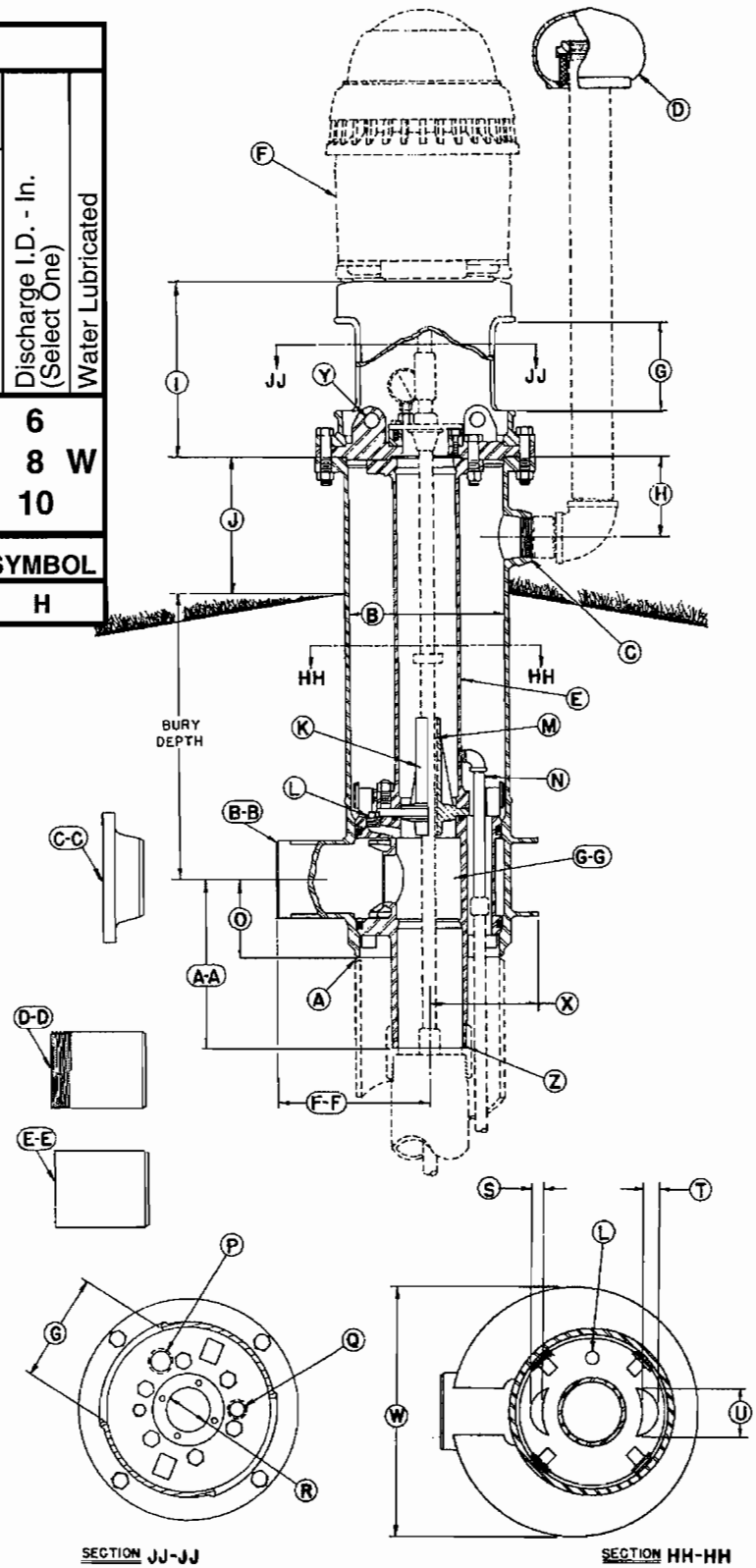

COMPONENT MATERIALS

Well Vent - cast iron, green enamel finish.
Motor Support - cast iron, black corrosion resistant coating.
Combination Hold-Down & Lift-Out Mechanism - steel, black corrosion resistant coating.
Hold-Down Pipe - steel, black corrosion resistant coating.
Pitless Case - steel, corrosion resistant coating.
Discharge Body - steel, lead free galvanized.
Spool - steel, lead free galvanized.

NOTE: Provision for prelubrication not available.

NOTE: Units are designed for motors having an RPM of 1800 or less and a 20" base diameter having a 14 3/4" bolt circle. Maximum bury depth will be 9 feet. For units requiring exceptions to these conditions of design, special specifications must be used.

NOTE: Any combination between Column Pipe and Discharge Outlet size is possible, if required.

Specifications Subject to Change Without Notice

Monitor®

INDUSTRIAL PITLESS UNITS
FOR WATER LUBRICATED TURBINE PUMPS
18" WELL SIZES

SPECIFICATIONS

(See drawing on page 84)

A Unit minimum I.D. 17-1/4 in.: chamfered for butt weld to well casing.
B Pitless Unit with Black Upper Case Std.: 19-1/4 in. I.D., 20 in. O.D.
C 2-1/2 in. NPT Tapping for Well Vent.
D 2-1/2 in. Protected Screen Well Vent.
E Lift-Out Pipe: 7 in. IPS.
F Turbine Motor having a maximum base diameter of 20 in. *(Supplied by others)*
G Mtor Mount Access Openings: (2) openings measuring 12-3/8 in. wide x 8-1/2 in. high.
H 7-1/8 in.
I 15 in.
J 12 in.
K Shaft Bearing Housing.
L Two 1 in. NPT Tappings ported to Column Pipe.
M Shaft Bearings *(Supplied by pump manufacturer)*: Total length of bearing to be 10 in. and a maximum O.D. of 3-1/4 in.
N 3/4 in. drain.
O Dimension from center of Discharge Outlet to bottom of Discharge Body: 10-15/16 in.
P 1-1/2 in. NPT Tapping for optional Water Sampler.
Q 1 in. NPT Tapping.
R Rabbet Fit for Upper Grease Seal Bearing Housing: Minimum O.D. of 3 in. and maximum O.D. of 4 in.; maximum Bolt Circle of Bearing Housing - 5-1/4 in.
(Bearing & Bearing Housing supplied by others)
S 1-1/2 in.
T 2-5/8 in.
U 6 in.
W 30-1/2 in.
X 13-1/4 in.
Y Lifting Lug: (2) Lugs for inserting or removal of inner well parts.

Z **SPOOL TO DROP PIPE CONNECTION SIZES:**	6 in. NPT	8 in. NPT	10 in. NPT
The Standard Spool is designed for a 150,000 lb. maximum load. Spools are available to sustain higher loads.	(3/4 Taper)	(3/4 Taper)	(3/4 Taper)
AA Dimension from center of Discharge Outlet to bottom of Spool:	24-1/16 in.	24-1/16 in.	19-3/32 in.
DISCHARGE CONNECTIONS & SIZES:			
For [**BB**] Butt Weld (IPS):	6 in. I.D.	8 in. I.D.	10 in. I.D.
For [**CC**] Flanged (ASA Std. 150 lb.):	6 in. I.D.	8 in. I.D.	10 in. I.D.
For [**DD**] Threaded nipple (NPT):	6 in. I.D.	8 in. I.D.	10 in. I.D.
For [**EE**] Transition Sleeve (IPS):	6 in. I.D.	8 in. I.D.	10 in. I.D.
FF Dimension from center of Well Casing to the end of Discharge Outlet.			
With [**BB**] Butt Weld Discharge:	25-1/2 in.	25-1/2 in.	18-1/2 in.
With [**CC**] Flanged Discharge:	29 in.	29-1/2 in.	22-1/2 in.
With [**DD**] Threaded Discharge:	29-1/2 in.	29-1/2 in.	23-5/8 in.
With [**EE**] Transition Sleeve Discharge:	31-9/16 in.	31-9/16 in.	24-9/16 in.
GG **SPOOL ASSEMBLY**			
Area of Water Passage(s):	33.18 sq. in.	66.36 sq. in.	66.36 sq. in.
Percent Area of Water Passage(s) to Area of Drop Pipe:	115%	132%	85%

CUSTOM TURBINE PITLESS UNITS

Monitor®

INDUSTRIAL PITLESS UNITS FOR WATER LUBRICATED TURBINE PUMPS
20" WELL SIZES

FIRST: *Make-Up Basic Ordering Number*

ORDERING NUMBER SELECTION GUIDE

Bury Depth - Ft. (Select one)	Pitless Turbine	Well Size - In.	Upper Case Size - In.	Attachment to Well Casing (Welded)	Black Upper Case	Pressure Equalizing Spool Passages	No Check Valves	Column Pipe I.D. - In. (Select One)	Discharge Connection (Select One)				Discharge I.D. - In. (Select One)	Water Lubricated
									Welded	Flanged	Threaded	Transition Sleeve		
1								6					6	
&	PT	20	22	W	B	E	0	8	W	F	T	M	8	W
Up								10					10	

SECOND: *Add Desired Accessories Symbol*

ACCESSORY LIST	SYMBOL
Water Sampler Valve	H

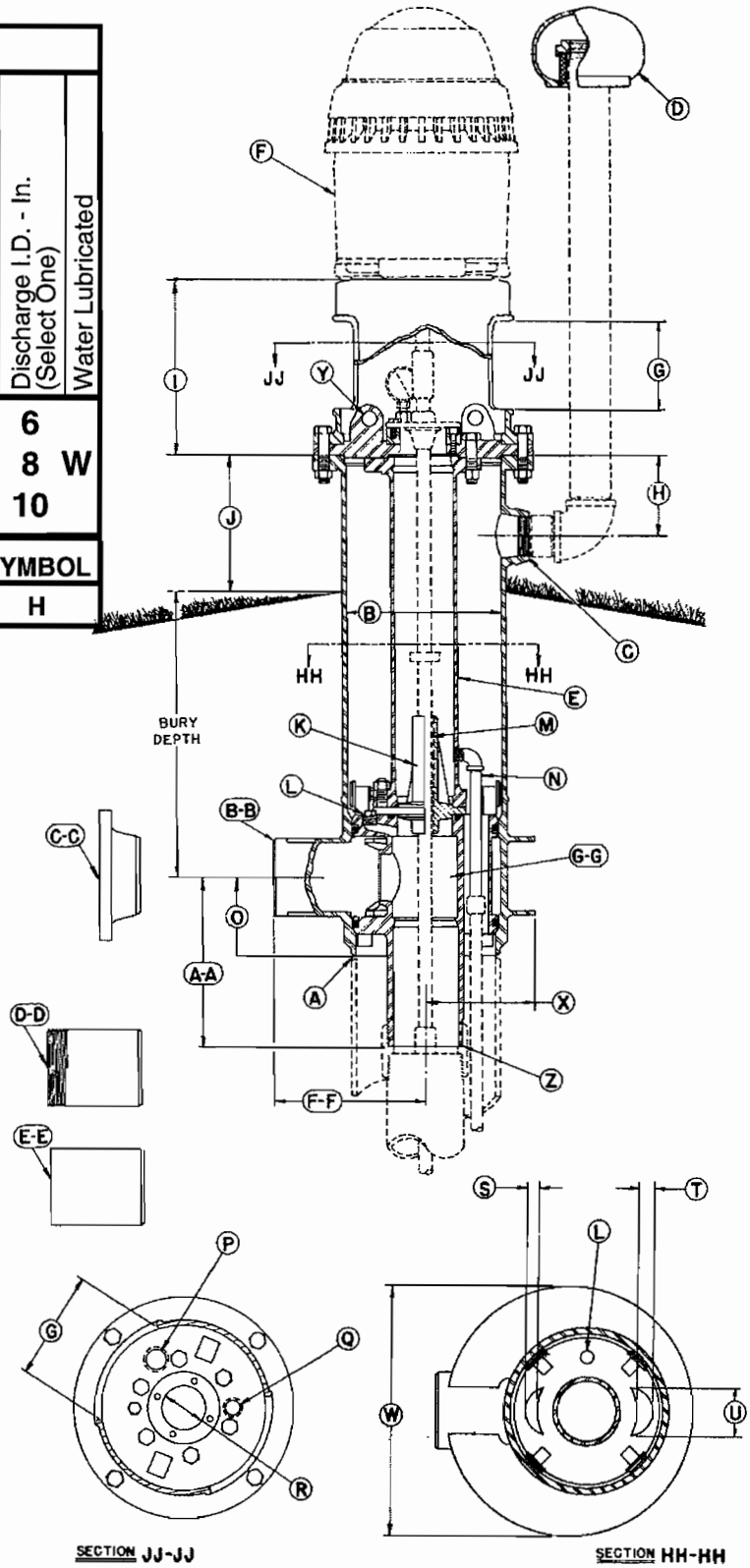

COMPONENT MATERIALS

Well Vent - cast iron, green enamel finish.
Motor Support - cast iron, black corrosion resistant coating.
Combination Hold-Down & Lift-Out Mechanism - steel, black corrosion resistant coating.
Hold-Down Pipe - steel, black corrosion resistant coating.
Pitless Case - steel, corrosion resistant coating.
Discharge Body - steel, lead free galvanized.
Spool - steel, lead free galvanized.

NOTE: Provision for prelubrication not available.

NOTE: Units are designed for motors having an RPM of 1800 or less and a 24-1/2" base diameter having a 14-3/4" bolt circle. Maximum bury depth will be 9 feet. For units requiring exceptions to these conditions of design, special specifications must be used.

NOTE: Any combination between Column Pipe and Discharge Outlet size is possible, if required.

Specifications Subject to Change Without Notice

Monitor®

INDUSTRIAL PITLESS UNITS
FOR WATER LUBRICATED TURBINE PUMPS
20" WELL SIZES

SPECIFICATIONS

(See drawing on page 86)

A Unit minimum I.D. 19-1/4 in.: chamfered for butt weld to well casing.
B Pitless Unit with Black Upper Case Std.: 21 in. I.D., 22 in. O.D.
C 2-1/2 in. NPT Tapping for Well Vent.
D 2-1/2 in. Protected Screen Well Vent.
E Lift-Out Pipe: 7 in. IPS.
F Turbine Motor having a maximum base diameter of 24-1/2 in. *(Supplied by others)*
G Motor Mount Access Openings: (2) openings measuring 12-3/8 in. wide x 8-1/2 in. high.
H 7-1/8 in.
I 15 in.
J 12 in.
K Shaft Bearing Housing.
L Three 1 in. NPT Tappings ported to Column Pipe.
M Shaft Bearings *(Supplied by pump manufacturer)*: Total length of bearing to be 10 in. and a maximum O.D. of 3-1/4 in.
N 3/4 in. drain.
O Dimension from center of Discharge Outlet to bottom of Discharge Body: 13-3/4 in.
P 1-1/2 in. NPT Tapping for optional Water Sampler.
Q 1 in. NPT Tapping.
R Rabbet Fit for Upper Grease Seal Bearing Housing: Minimum O.D. of 3 in. and maximum O.D. of 4 in.; maximum Bolt Circle of Bearing Housing - 5-1/4 in.
(Bearing & Bearing Housing supplied by others)
S 2 in.
T 3-3/8 in.
U 6-3/4 in.
W 32-1/2 in.
X 14-1/4 in.
Y Lifting Lug: (2) Lugs for inserting or removal of inner well parts.

Z	**SPOOL TO DROP PIPE CONNECTION SIZES:**	6 in. NPT	8 in. NPT	10 in. NPT
	The Standard Spool is designed for a 150,000 lb. maximum load. Spools are available to sustain higher loads.	(3/4 Taper)	(3/4 Taper)	(3/4 Taper)
AA	Dimension from center of Discharge Outlet to bottom of Spool:	24-9/16 in.	24-9/16 in.	19-11/16 in.
	DISCHARGE CONNECTIONS & SIZES:			
	For [**BB**] Butt Weld (IPS):	6 in. I.D.	8 in. I.D.	10 in. I.D.
	For [**CC**] Flanged (ASA Std. 150 lb.):	6 in. I.D.	8 in. I.D.	10 in. I.D.
	For [**DD**] Threaded nipple (NPT):	6 in. I.D.	8 in. I.D.	10 in. I.D.
	For [**EE**] Transition Sleeve (IPS):	6 in. I.D.	8 in. I.D.	10 in. I.D.
FF	Dimension from center of Well Casing to the end of Discharge Outlet.			
	With [**BB**] Butt Weld Discharge:	26-1/2 in.	26-1/2 in.	19-1/2 in.
	With [**CC**] Flanged Discharge:	30 in.	30-1/2 in.	23-1/2 in.
	With [**DD**] Threaded Discharge:	30-9/16 in.	30-9/16 in.	31-9/16 in.
	With [**EE**] Transition Sleeve Discharge:	32-9/16 in.	32-9/16 in.	25-1/2 in.
GG	**SPOOL ASSEMBLY**			
	Area of Water Passage(s):	33.18 sq. in.	66.36 sq. in.	66.36 sq. in.
	Percent Area of Water Passage(s) to Area of drop pipe	230%	132%	85%

INSTALLATION INSTRUCTIONS

1. All pitless unit cases are joined by welding the unit to the well casing.

2. Establish ground level at the well location. It is desirable to have the ground slope away, from pitless unit case, in all directions.

3. The pitless unit case should extend above the ground level according to state well code. To accomplish this the well casing must be cut off at a distance below the ground level equal to the overall pitless unit length less the length the unit is to be above the ground.

4. In order to do work, excavate around the well casing according to government regulations where well casing is to be cut off.

5. Cut off the well casing PERPENDICULAR to the well casing center line.

6. Remove the motor support stand and then the spool assembly, using lift-out hooks assembled, and set aside. NOTE: (The spool assembly includes a spool with two o-ring seals, lift-out pipe and support plate.)

7. Lower the pitless case into place and rotate the discharge outlet to the desired location. Weld the pitless case to the well casing. THIS JOINT MUST BE WATERTIGHT AND IT IS ESSENTIAL THAT THE CENTER LINE OF THE PITLESS CASE AND WELL CASING BE THE SAME.

8. Attach the turbine pumps to the column pipe and lower into well making drive shaft etc., connections while lowering. When the last section of column pipe, shaft etc., is one foot or more above the pitless case, lower the spool assembly over the shaft and screw onto the column pipe.

9 Wipe the rubber o-ring seals with a clean cloth and then coat with a heavy layer of petroleum jelly (vaseline) for proper seating of rings. Lower the spool assembly into place.

10. Install motor support stand and upper shaft seal.

11. Connect discharge outlet to distribution line.

12. Mount turbine motor onto motor support plate making all necessary shaft assemblies.

13. After all wiring has been completed the unit is ready to operate under power and should be run a sufficiently long time to see that there are no leaks present.

14. The hole should not be filled in until the unit is running satisfactorily. Care should be exercised to fill under the discharge line properly before back filling.

NOTE: Dissimilar metals should be avoided.

Monitor®

INDUSTRIAL PITLESS UNITS
FOR WATER LUBRICATED TURBINE PUMPS
10" through 20"Wells

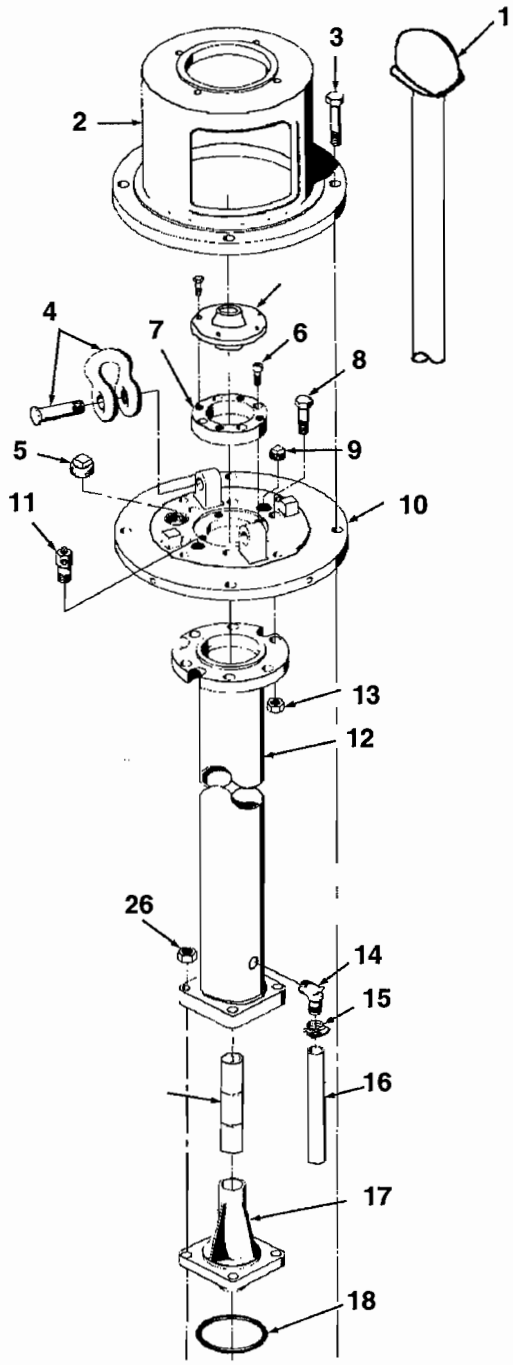

ANY ORDER FOR REPAIR PARTS MUST BE ACCOMPANIED BY THE PITLESS UNIT SERIAL NUMBER AND ORDER NUMBER

SERIAL NUMBER _____

ORDERING NUMBER _____

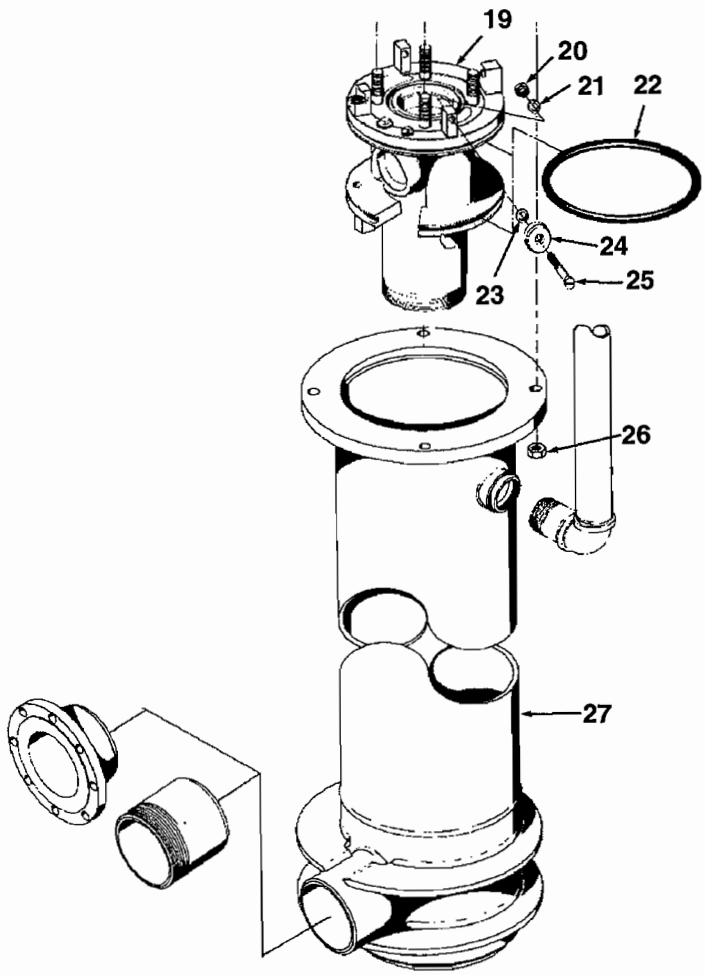

CUSTOM TURBINE PITLESS UNITS

Monitor®

INDUSTRIAL PITLESS UNITS
FOR WATER LUBRICATED TURBINE PUMPS
10" through 20"Wells

Key No.	Qty	Description	10&12" Ord. No.	14" Ord. No.	16" Ord. No.	18" Ord. No.	20" Ord. No.
1	1	Screen Well Vent 2 1/2" NPT	PS155	PS155	PS155	PS155	PS155
2	1	Motor Support Stand*	UK400	UL400	UM400	UN400	UQ400
3	4	Hex Head Cap Screw 3/4"-10NCx4" L.	UK470				
3	4	Hex Head Cap Screw 1"-8Ncx4 1/2" L.		UL173	------	UL173	UL173
4	2	Screw Pin Anchor Shackle-1 1/8" Bow Size	UK469				
4	2	Screw Pin Anchor Shackle-1 3/8" Bow Size		UL175	------	UL175	UL175
5	1	Pipe Plug 1 1/2x11 1/2" NPT	UG54	UG54	UG54	UG54	UG54
6	4	Hex Socket Cap Screw-1/2-13NCx 1 1/2" L.	UK468	UK468	UK468	UK468	UK468
7	1	Upper Bearing Seal Housing (Machined to customer specifications)	UK564	UK564	UK564	UK564	UK564
8	6	Hex Head Cap Screw-7/8-9NCx3 1/2" L.	UK471	UK471	UK471	UK471	UK471
9	1	Pipe Plug, 1"-11 1/2"NPT	SW33	SW33	SW33	SW33	SW33
10	1	Motor Support Plate*	UK550	UL550	UM400	UN550	UQ550
11	1	Air Test Adapter	UK180	UK180	UK180	UK180	UK180
12	1	Lift-Out Pipe Assembly	UK157	UL563	UM563	UN563	UN563
13	10	Hex Nut, 7/8-11NC	UK188	UK188	UK188	UK188	UK188
14	1	Elbow, 3/4" IPx 3/4"-Plastic	UM149	UM149	UM149	UM149	UM149
15	1	Pipe Clamp - 3/4"	UM147	UM147	UM147	UM147	UM147
16	1	Drain Pipe	UM142	UL88	UL88	UI88	UL88
17	1	Bearing Seal Housing	UK183	UM83	UM83	UN183	UN183
18	1	Static Seal Ring	PS575	PS576A	PS576A	UN170	UN170
19	1	Spool Assembly	------	------	------	------	------
		(Order by description & Unit Serial No.)					
20	4	Hex Nut, 3/8-16NC	UB17	UB17	UB17	UB17	UB17
21	4	Lockwasher	TX31	TX31	TX31	TX31	TX31
22	2	Static Seal Rings for spool	UK15	UL15	UM15	UN15	UQ15A
23	4	Washer	SW68	SW68	SW68	ZA81	ZA81
24	4	Washer	UL95	UL95	UL95	UI95	UL95
25	4	Machine Screw, 3/8-16NCx2 1/4" L	UM222	UM222	UM222	UM222	UM222
26	4	Hex Nut, 3/4-10NC	UM33	UM140	UM140	UM140	UM140
27	1	Discharge Body & Upper Case Assembly (Order by description & Unit Serial No.)	------	------	------	------	------

***Note: On 16" units the Motor Support Stand and the Motor Support Plate are one piece construction. (Key Nos. 2 and 10)**

NOTES

NOTES

APPENDIX C Manufacturer's Information

Belden VFD Cable Data

DRAFT

New Product
BULLETIN

Belden® Introduces a New Line Of Cable for Variable-Frequency AC Motor Drive Applications

NP 147

Designed specifically for AC motor drives, this new series of 1000V UL Flexible Motor Supply Cable/UL 1277 600V TC/1000V CSA shielded tray cable — with open wiring approval — provides higher reliability, lower cost and easier installation than metal clad cables or lead wire in conduit.

Variable-frequency AC motor drive output cables are subject to a harsh operating environment characterized by high voltage spikes, high noise levels and adverse environmental conditions. Typical cabling solutions for this application have been unshielded tray cables, single-conductor lead wire installed in conduit or continuously-welded armored cable. These solutions suffer from complex, costly installation and potential reliability problems. Belden Variable-Frequency Drive (VFD) cables were designed to overcome these shortcomings.

The Special Needs of VFD Applications

VFD cables carry the power from AC drive systems to AC motors. As a result, these cables must handle not only the overall high power levels of the pulse-width modulated (PWM) signals, but also the extremely high voltage which can occur when standing waves develop on the conductors. This high voltage can cause corona discharge between the conductors of conventional cables, causing damage not only to the cabling itself but also to the associated AC drive system components. This type of failure results in expensive downtime of the entire drive system.

VFD cables carry the power from AC drive systems to AC motors and must handle not only high power levels, but also extremely high voltage.

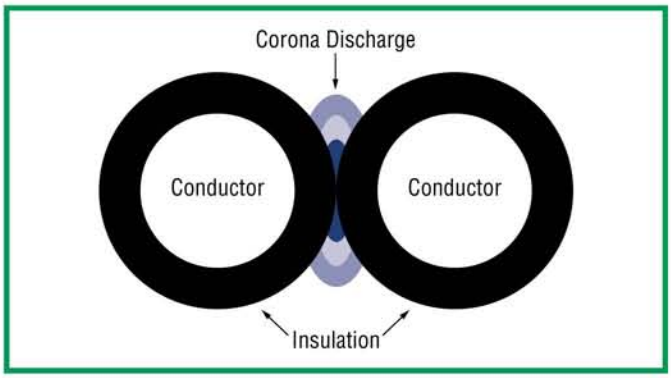

Conventional VFD cabling is susceptible to corona discharge failure which can cause damage not only to the cabling itself but also to the associated AC drive system components.

VFD systems exist in both process and discrete industries such as general assembly, automotive, food and beverage, pulp and paper and petrochemical. In all of these settings, VFD cables can be exposed to high temperature as well as wet environments, posing additional challenges for conventional cabling.

The Limitations of Conventional VFD Solutions

In addition to experiencing failures due to corona discharge or adverse conditions, conventional VFD cabling is also difficult and expensive to install. Armored cable and lead wire-in-conduit are cumbersome and heavy, and require extremely large installation bending radii. And — even with their inconvenient installation — they still do not solve noise and corona discharge problems. In addition, these installations do not properly address the high levels of noise generated by VFDs.

The Belden VFD Solution

Belden VFD cables utilize unique construction to overcome the problems and limitations of other cabling systems.

First, they use a much thicker, much more stable electrical insulation on the conductors. This thicker insulation increases the physical distance between conductors, thereby decreasing the likelihood of corona discharge. And even if there is some corona discharge, Belden VFD cables use thermoset XLPE insulation which will not melt. This insulation is also rated for use in wet environments to a full 90°C.

The increased distance between the conductors also reduces the capacitance between conductors, increasing the efficiency of power transfer and increasing the life expectancy of both the motor and the cable. Cable life expectancy can be expected to increase by as much as 10 years over standard tray cables or metal clad cables for VFD applications. Decreased capacitance also helps to reduce the magnitude of standing waves.

The second unique construction feature of Belden VFD cables is their highly-effective dual shield. A combination of tinned copper braid and foil provides a high degree of shielding effectiveness while ensuring easy installation. This shield furnishes the lowest resistance ground path and the most effective shield for VFD applications to date.

As a result, Belden VFD cable can be installed at a lower cost than the least expensive, viable VFD cable alternative.

Cable Construction Details

Belden VFD cables are 1000V UL Flexible Motor Supply Cable, 600V UL 1277 Type TC and 1000V CSA listed cables with four conductors (three signal plus one ground). They are available with a choice of conductor gauges ranging from 16 AWG up to 2 AWG. The cable features highly-flexible tinned copper conductors with high strand counts. This makes the cable very easy to install and able to withstand tight minimum bending radii even during heavy vibration.

Insulation is black, numbered XLPE. Ground conductor is insulated with green XLPE. Shield is 100%-coverage overall Beldfoil® plus 85%-coverage tinned copper braid with drain wire. Jacket material is industrial grade black PVC. This cable is sunlight-resistant, direct burial, and is rated at 90°C wet or dry.

Belden VFD cable is certified to meet numerous safety standards including 1000V UL Flexible Motor Supply Cable; UL Subject 1277 Type TC; UL Subject 44; NEC Article 340 for Open Wiring; NEC RHW-2 singles Class I & II; Division 2 hazardous locations; CSA AWM I/II A/B; and 1kV RW90 singles. The cable meets UL1581 vertical tray flame tests and IEEE1202 vertical tray flame tests at 70,000 BTU/hour.

Product Cross Reference

Belden VFD cable is approved for use with the following Rockwell Automation drives: Series 1305 AC Drives, Series 1336 Plus and Plus II AC Drives, Series 1336 Impact AC Drives and Series 1336 Force Field-Oriented Control AC Drives.

Belden VFD cable is also appropriate for drives manufactured by the following companies: AA Electric, ABB, Baldor, Cutler-Hammer, Fivestar Electric Motors, General Electric, Hitachi, Magnetek, Mitsubishi Electric Automation, Motion Industries, Quality Drive Systems, Robicon, Siemens, Square D, Toshiba and TB Woods.

Product Availability

Belden Variable Frequency Drive Cables are available in various standard lengths. Armored versions also available. For more information, contact Belden Electronics Division.

Variable-Frequency Drive Cable

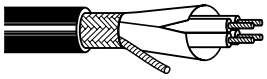

1000V UL Flexible Motor Supply Cable
600V, UL 1277 Type TC
1000V CSA AWM
Open wiring per NEC Article 340

Product Description:

Three stranded tinned copper conductors with a full size insulated ground; XLPE insulation. Overall Beldfoil® shield plus an 85% tinned copper braid. Full sized tinned copper drain wire. Black sunlight-resistant PVC jacket suitable for direct burial.

Trade No.	AWG	Strand Count	Nominal OD		Max. Pull Tension		Min. Bend Radius		Standard Lengths		Standard Unit Weight	
			Inch	mm	Lbs.	kg	Inch	mm	Ft.	m	Lbs.	kg
29500	16	19	.48	12	83	37.6	3.9	99	250 500 1000 6000	76.2 152.4 304.9 1829.3	40.3 93.5 169.0 1067.0	18.3 42.4 76.7 484.0
29501	14	41	.55	14	174	78.9	4.5	114	250 500 1000 5000	76.2 152.4 304.9 1524.4	55.0 124.0 243.0 1218.0	24.9 56.2 110.2 552.5
29502	12	65	.60	15	243	110.2	4.8	122	250 500 1000 5000	76.2 152.4 304.9 1524.4	69.8 151.5 298.0 1572.0	31.7 68.7 135.2 713.0
29503	10	105	.66	17	329	149.2	5.4	137	250 500 1000 5000	76.2 152.4 304.9 1524.4	91.3 194.5 375.0 2025.0	41.4 88.2 170.1 918.5
29504	8	133	.89	23	523	237.2	7.3	185	250 500 1000 5000	76.2 152.4 304.9 1524.4	158.5 332.0 660.0 3448.0	71.9 150.6 299.4 1564.0
29505	6	133	.99	25	840	381.0	8.0	203	250 1000 3500	76.2 304.9 1067.1	221.3 906.0 3205.0	100.4 411.0 1453.8
29506	4	133	1.15	29	1327	601.9	9.2	233	250 1000 3000	76.2 304.9 914.6	319.5 1250.0 3843.0	140.4 567.0 1743.2
29507	2	133	1.29	33	2110	957.1	10.5	266	250 500 1000 2000	76.2 152.4 304.9 609.8	437.8 875.5 1711.0 3681.0	198.6 397.1 776.1 1669.7

Color code per ICEA Table 4, black and numbered. Consult drive manufacturer for exact horsepower ratings.
NEC ampacity interpretations subject to user's and local codes.

For More Information:

Belden Electronics Division
Technical Support:

1-888-BELDEN-8

www.belden.com

© Copyright 2001, 2002, Belden Inc.

APPENDIX C

Manufacturer's Information

Eurotherm Model MV408
Current Input
Isolating Signal Conditioner

DRAFT

WV408

MODEL

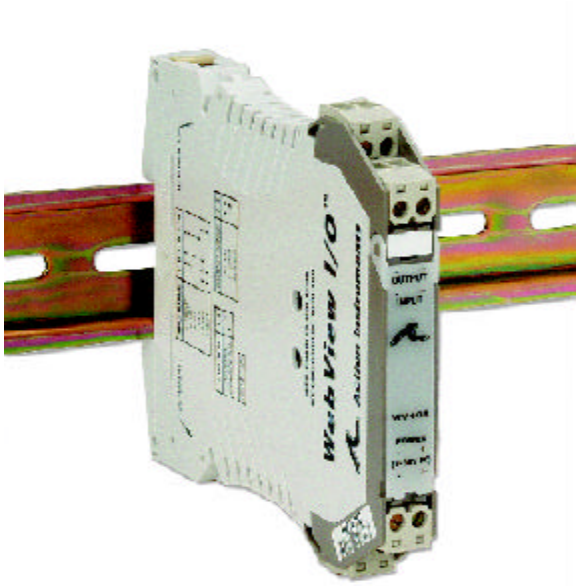

WebView I/O DC Voltage/ Current Input Isolating Signal Conditioner

Traditional Signal Isolator with Web Viewing Capability

- Lower Power Requirements with Smart Power Control
- Greatly Improved Input/ Output Accuracy and Stability
- Configurable with or without Ethernet Connection
- Direct Access to Sensor Data when Connected to the Intranet
- Provides Remote Diagnostic Capability (with optional WVC16)
- Versatile Alarm Capabilities Provide Email Notification when Problems Occur (with optional WVC16)
- Lifetime Warranty

DESCRIPTION

The WebView I/O Series from Eurotherm Action Instruments is an exciting new line of isolating signal conditioners. This new line provides features never before found in traditional signal conditioners. The WV Series has greater input and output accuracy than most signal conditioners on the market today. In addition, the stability of the unit beats that of most signal conditioners as well. Another feature, unique from other signal conditioners, is Smart Power. Smart Power eliminates wasted power in current output mode for low loop resistances loads. In addition, the WV Series provides the user with the capability to view sensor data directly over your company's intranet with a standard web browser. Just imagine, the WV Series will allow you to view configuration, maintenance and process information through a remote web browser. Further, the modules are capable of generating scripted e-mail messages, triggered when process variables or maintenance based performance parameters exceed or fall below pre-set levels.

The WV408 has both voltage and current input ranges available. For voltage, four ranges are DIP switch selectable, ±150mV, ±1.5V, ±15V and ±150V. Each of these ranges has at least 95% zero and span adjustment, making it no problem to select a 0-20mV user range on the ±150mV full scale range. Plenty of resolution is available due to the use of Sigma-Delta conversion at 15 effective bits. For current, there are two input ranges that are DIP switch selectable, ±2.5mA or ±25mA. Both voltage and current have an input accuracy of 0.015% of full scale. Outputs include 0-10V, 0-20mA and 4-20mA. The WV408 also supports reverse output.

ACTION INSTRUMENTS

invensys EUROTHERM

SMART POWER

The WV Series modules incorporate Smart Power for their output supplies, providing a potential power savings of 500mW per unit. Smart Power adjusts its output voltage and current, depending upon the power output required to drive the current load. A low impedance current loop will now use less power than a high impedance current loop. Previous technology only allowed for a single supply at the highest voltage required to drive the highest impedance load. Low impedance loops only require an output supply voltage of 5VDC. For a 20mA current, this consumes 100mW. In comparison, a high impedance load or older style supply requires 26VDC. This would consume 520mW.

ENHANCED LED DIAGNOSTICS

Other then when executing the push button calibration routine, the LEDs blink under the following conditions:

GREEN: 2Hz when the **input** is **under** range
8Hz when the **input** is **over** range

RED: 2Hz when the **output** is **under** range
8Hz when the **output** is **over** range

An Under range condition exists when the signal is lower than the operational low value minus 6.25% of the operational span. An Over Range condition exists when the signal is higher than the operational high value plus 6.25% of the operational span.

A voltage output short circuit may cause an under range condition (RED blinking at 2Hz rate). A current output open circuit may cause an over range condition (RED blinking at an 8Hz rate).

There could be two or more LEDs blinking at the same time. That means the module has more than one error condition. Only when all error conditions have been removed, will the LEDs be back to normal (Green ON, Red and Yellow Off).

CONFIGURING MODULES

As mentioned above, configuration is accomplished via setting DIP switches and using an push button for calibrating ranges. Additionally, it is possible to remotely modify parameters of each module, such as range, using as Ethernet connection to the WVC16 and a remote PC-based web browser. The browsers supported include Internet Explorer 5 or later and Netscape Navigator 4.7. From the browser, it is possible to configure any of three alarms that would be available from each input (see ALARMS below). The configuration of alarms includes the ability to set alarm limit values for each input and the ability to trigger generation of an e-mail message when an alarm limit condition is invoked. Once the alarm is triggered, the WVC16 will e-mail the specified users (up to 10) if desired. The message can contain the following: Date/Time the trigger occurred, Trigger Name, trigger Type, Trigger value (if applicable), Module Name and WVC16 name.

ALARMS

Each module supports up to three alarms. These alarms could be configured to support the following: high limit, low limit and a timer for routine maintenance.

WEBVIEW COMMUNICATIONS INTERFACE

Each WVC16 is capable of communicating with up to 32 I/O modules. The interface contains a web page server and an e-mail server as well as being the interface to the modules. All memory to support the signal conditioner's historical data, storage of the web pages and all e-mail messages is contained in the WVC16.

The WVC16 actually downloads a JAVA applet to the client's computer. The applet provides access to the signal conditioner's data. The information available includes the following:

- Module configuration summary
- Module configuration editing
- Diagnostic/warning status
- Alarm setup & status
- E-mail setup, editing & address book
- Process variable viewing

FACTORY ASSISTANCE

For additional information on installation, operation and calibration, please contact Action's Technical Services Group. Call toll free:

800-767-5726

DIMENSIONS

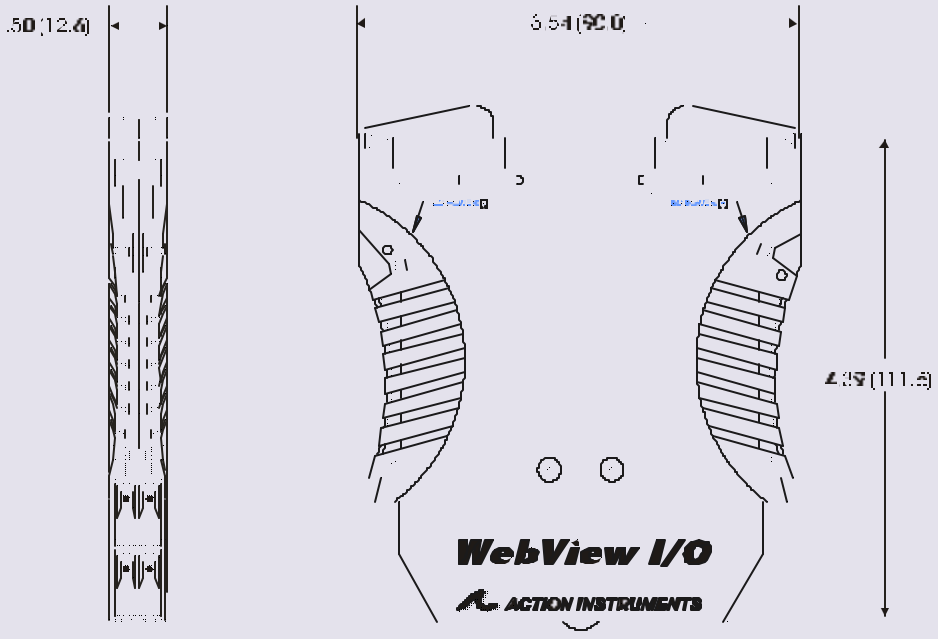

SPECIFICATIONS

Electrical

Inputs	Voltage: ±150mV, ±1.5V, ±15V or ±150VDC
	Impedance: >100kΩ
	Over-Voltage: 180Vrms
	Current: ±2.5mA or ±25mA
	Impedance: <75Ω
	Over-Current: 170mA, protected by self-resetting fuse
	Over-Voltage: 60V
Zero & Span Adjustment	±95% of Full Scale
Input Accuracy	±0.015% of Full Scale
Outputs	Voltage: 0 to 10VDC
	Source Impedance: <10Ω
	Drive: 10mA
	Current: 0 to 20mA
	Source Impedance: >100kΩ
	Compliance: 18V@20mA (900W max)
Output Accuracy	±0.05% of Full Scale
	Local Range
Selection	By DIP switch
LED Indication	GREEN: RUN, on when unit is powered.
	Flashes at 2Hz rate when input is under range by 6.25%
	Flashes at 8Hz rate when input is over range by 6.25%
	RED: OUTPUT, on while calibrating the output level
	Flashes at 2Hz rate when the output is under range by 6.25%
	Flashes at 8Hz rate when the output is over range by 6.25%
	YELLOW: INPUT, on while calibrating the input level
Response Time	100mSec (10 to 90%)
Stability	±100ppm of full scale/°C (±0.01%/°C)
Common Mode Rejection	120dB @ DC, >90dB @ 60Hz, or better
Isolation	1800VDC or peak AC between input, output & power
ESD Susceptibility	Capable of meeting IEC 801-2 level 3 (8kV)
Power	9-30VDC
	1.0W typ., 2.0W max
	Host Module
Interface	IR Link
Physical	
Size	DIN rail case – 0.5" (12.5mm) wide
Operating Temperature	0°C to +60°C (32 to 140°F)
Storage Temperature	-25°C to +85°C (-13 to 185°F)
Operating Humidity	15% to 95% RHNC @ 45°C
Storage Humidity	90% RHNC @ 60°C for 24 hours
Agency Approvals	CE, EN50081-1, EN50082-2, EN61010, pending
	(EMC & Safety) CSA C22.2, No. 0-M91, 142-M1987 pending
	UL508 pending

Specifications are subject to change.

MODELS & ACCESSORIES

Ordering Information

Specify:

1. Model: **WV408-0000**
2. Optional Custom Factory Calibration (specify **C620** with desired input and output range.
3. Accessories

Accessories

All WV Series modules will mount on standard TS35 (model MD03) DIN rail. In addition, the following accessories are available:

WVC16	WebView Communications Interface
MD03	TS35 x 7.5 DIN Rail (2 meters)
WV905	24VDC Power Supply (0.5 Amp)
H910	24VDC Power Supply (1 Amp)
H915	24VDC Power Supply (2.3 Amp)
MB03	End Bracket for MD03

Terminal Connections

Terminal	Function
11	DC Power (+)
12	DC Power (-)
21	DC Power (+)
22	DC Power (-)
41	Input (+)
42	Input Common
51	Output (+)
52	Output Common

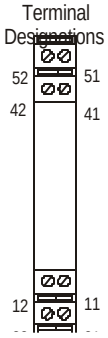

invensys EUROTHERM
8601 Aero Drive, San Diego, CA 92123
Tel:(800)767-5726 Fax:(858) 279-6290
e-mail:sales@actionio.com
www.actionio.com
www.eurotherm.com

Copyright info 2002

An Invensys company

APPENDIX C

Manufacturer's Information

Federal Signal Group
Telephone Activated Remote Control,
Model 300RC

DRAFT

FEDERAL SIGNAL CORPORATION

Telephone Activated Remote Control

Model 300RC

ACTIVATES SIGNALS FROM A TOUCH-TONE PHONE

- Magnetic latching relays hold contact closure until reset
- User-selectable access code provides security
- L.E.D. status indicators
- Unique tones indicate status and prompt commands for remote access
- UL Listed power supply
- Terminal block connections

The Federal Signal 300RC provides remote control of ten single-pole/double-throw (SPDT) relays and remote monitoring of ten external switch contacts or logic levels. The 300RC is simple to understand, easy to install, secure and effective.

The Model 300RC is connected to a phone line with a standard 6-position modular cable. At the time of installation, a security access code is recorded directly into the 300RC via dip-switches. After the third ring on the line, the 300RC will answer and prompt the user to enter the user-defined access code. If the wrong code is entered four times, the device hangs up.

Entry of the access code is followed by a command prompt. The user can check the status of ten switch contact inputs through easily distinguishable audio tones. Once status is determined, the user can turn the switches on or off remotely via the touch-tone keypad of their telephone.

When the 300RC is wired directly to Federal Signal SelecTone® panels (300VSC-1, 300SCW-1, 300SSC and 300Z), it is possible to remotely activate the tone signals. The 300RC can also be used to activate messages from the 300MB or 300MC pre-recorded message units.

In addition to initiating control panel inputs, the 300RC can be used to activate relays which control the power to audible visual signals or other devices.

Mounting holes on the cover include two #8 holes on the end flanges or two holes on the narrow flanges for mounting on a 1¾" rack panel.

The 300RC is ideal for applications where it is difficult or costly to run dedicated control wiring to remote devices, or where the convenience of telephone activation or monitoring is desired. For those facilities that have existing PBX wiring, the phone system can now be utilized as a means of signal activation and status monitoring.

TELEPHONE ACTIVATED REMOTE CONTROL (300RC)

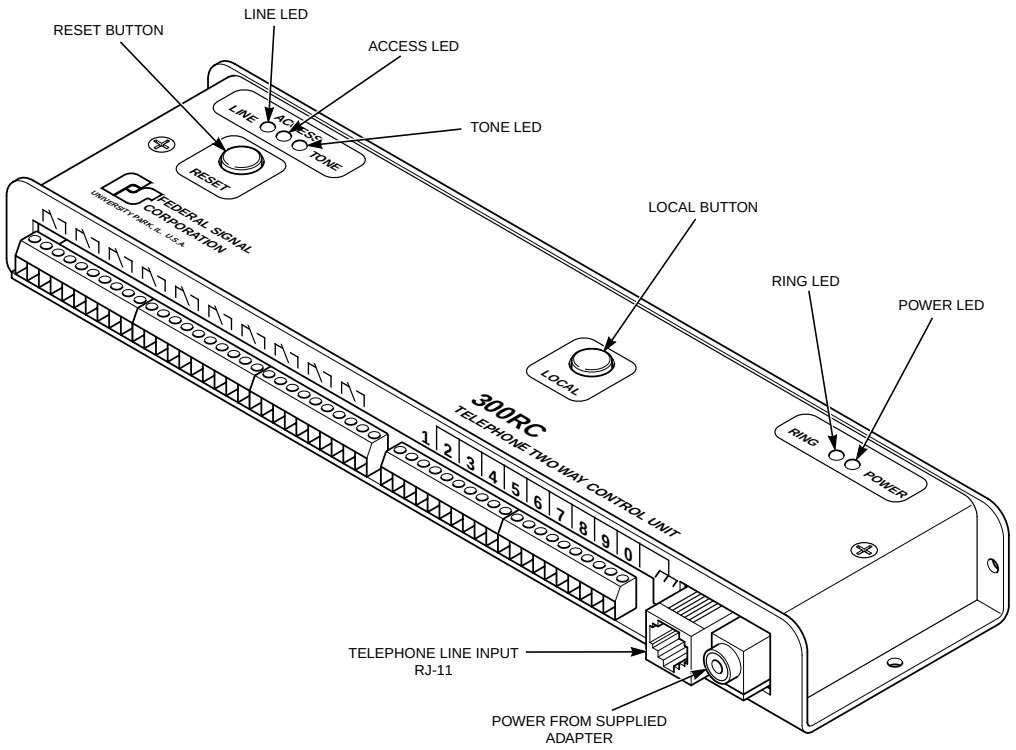

RELAY COMMANDS

0	Pressing keys 0 - 9 will turn on relays 0 - 9. As long as the key is pressed, the associated relay will stay on.
# 0	Pressing the pound sign key followed by the numeric key will latch the associated key on.
# # 0	Pressing the pound sign key twice followed by the numeric key will latch the associated relay off.
# # #	Pressing the pound sign key three times will turn all relays off.

STATUS REQUEST COMMANDS

* 0	Pressing the star sign key followed by a numeric key will poll the status of the associated input channel.
* * 0	Pressing the star sign key twice followed by the numeric key will indicate if the status of an input has changed since the last call.
* * * 0	Pressing the star sign key three times followed by the numeric key will poll the status of the associated relay.

MISC

* * * *	Pressing the star sign key four times will cancel a command.
* # *	Unconditionally hang up

TOGGLE SWITCH FOR ACCESS CODE

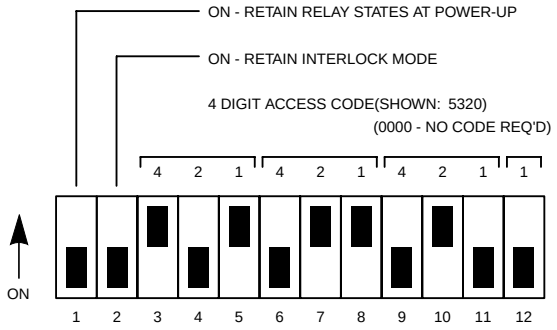

SPECIFICATIONS

Net Weight:	1.20 lbs.	.54 kg
Shipping Weight:	1.85 lbs.	.84 kg
Size:	9.5" x 2.5" x 1"	
	24.1 x 6.4 x 2.5 (cm)	
Relay Contact:	SPDT 2A Resistive 50VDC	
Power:	8-15VDC@50mA (110VAC adapter supplied)	

HOW TO ORDER

- Specify model number

APPENDIX C

Manufacturer's Information

Flowserve/Pleuger
Submersible Motor Pump
Installation, Operation and Maintenance Manual

DRAFT

FLOWSERVE®

Pump Division

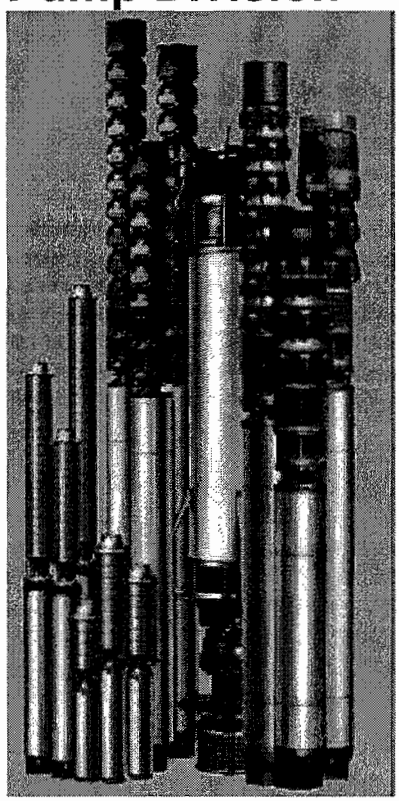

Type: PLEUGER - STANDARD

SUBMERSIBLE MOTOR PUMPS

USER INSTRUCTIONS:
INSTALLATION, OPERATION, MAINTENANCE

PCN=71569293 09-05 (E) **(incorporating 1042.277/7)**

⚠ ***These instructions must be read prior to installing, operating, using and maintaining this equipment.***

CONTENTS

	Page
1 INTRODUCTION AND SAFETY	3
1.1 General	3
1.2 CE marking and approvals	3
1.3 Disclaimer	3
1.4 Copyright	3
1.5 Duty conditions	3
1.6 Safety	4
2 TRANSPORT AND STORAGE	4
2.1 Consignment receipt and unpacking	4
2.2 Handling and lifting	5
2.3 Storage	5
2.4 Recycling and end of product life	6
3 DESCRIPTION	6
3.1 Technical data	6
3.2 Delivery contents	6
3.3 General data	6
3.4 General description	6
3.5 Submersible motor	7
3.6 Pump and check valve	9
4 INSTALLATION	9
4.1 Hydraulic installation	9
4.2 General advice for installation	9
4.3 Flexible hose riser pipe	9
4.4 Centralisers	10
4.5 Checks before installation	10
4.6 Installation of pre-assembled pump units	10
4.7 Riser pipes with flange connections	10
4.8 Riser pipes with pipe socket	11
4.9 Assembly of submersible motor pumps before installation	11
5 ELECTRICAL CONNECTIONS	11
5.1 Motor	11
5.2 Protective measures against shock-hazard voltages	12
5.3 Motor protection	12
5.4 Short circuit protection	12
5.5 Motor connection diagrams	13
5.6 Adjustments for soft-starter and soft-stop devices	15
5.7 Operation of submersible motors with static frequency converter	15
5.8 Resistance sensor PT100 (RTD)	16
6 MOTOR FILLING	16
6.1 Antifreeze	16
6.2 Type of use	17
6.3 Filling quantities	17
6.4 Accessories and hardware for filling and topping up	17
6.5 General information about filling	17
6.6 Filling instructions	18
7 COMMISSIONING START-UP, OPERATION AND SHUTDOWN	28
7.1 Commissioning	28
7.2 Operation	28
8 MAINTENANCE	29
8.1 General information	29
8.2 Measuring insulation of the motor (including power cable)	29
8.3 Pump units	30
8.4 Temperature sensor PT100 (RTD)	30
8.5 Removal of the pump unit	31
8.6 Overhaul of the pump unit	31
9 FAULTS; CAUSES AND REMEDIES	32
10 CERTIFICATION	34

1 INTRODUCTION AND SAFETY

1.1 General

⚠ ***These Instructions must always be kept close to the product's operating location or directly with the product.***

Flowserve products are designed, developed and manufactured with state-of-the-art technologies in modern facilities. The unit is produced with great care and commitment to continuous quality control, utilising sophisticated quality techniques, and safety requirements.

Flowserve is committed to continuous quality improvement and being at service for any further information about the product in its installation and operation or about its support products, repair and diagnostic services.

These instructions are intended to facilitate familiarization with the product and its permitted use. Operating the product in compliance with these instructions is important to help ensure reliability in service and avoid risks. The instructions may not take into account local regulations; ensure such regulations are observed by all, including those installing the product. Always coordinate repair activity with operations personnel, and follow all plant safety requirements and applicable safety and health laws and regulations.

⚠ ***These instructions should be read prior to installing, operating, using and maintaining the equipment in any region worldwide. The equipment must not be put into service until all the conditions relating to safety, noted in the instructions, have been met.***

1.2 CE marking and approvals

It is a legal requirement that machinery and equipment put into service within certain regions of the world shall conform with the applicable CE Marking Directives covering Machinery and, where applicable, Low Voltage Equipment, Electromagnetic Compatibility (EMC), Pressure Equipment Directive (PED) and Equipment for Potentially Explosive Atmospheres (ATEX).

Where applicable, the Directives and any additional Approvals, cover important safety aspects relating to machinery and equipment and the satisfactory provision of technical documents and safety instructions.

Where applicable this document incorporates information relevant to these Directives and Approvals. To confirm the Approvals applying and if the product is CE marked, check the serial number plate markings and the Certification, see section 10, *Certification*.

1.3 Disclaimer

Information in these User Instructions is believed to be reliable. In spite of all the efforts of Flowserve Pump Division to provide sound and all necessary information the content of this manual may appear insufficient and is not guaranteed by Flowserve as to its completeness or accuracy.

Flowserve manufactures products to exacting International Quality Management System Standards as certified and audited by external Quality Assurance organisations. Genuine parts and accessories have been designed, tested and incorporated into the products to help ensure continued product quality and performance in use. As Flowserve cannot test parts and accessories sourced from other vendors the incorrect incorporation of such parts and accessories may adversely affect the performance and safety features of the products. The failure to properly select, install or use authorised Flowserve parts and accessories is considered to be misuse. Damage or failure caused by misuse is not covered by the Flowserve warranty. In addition, any modification of Flowserve products or removal of original components may impair the safety of these products in their use.

The operational safety of the delivered unit is only guaranteed for use according to the limitations described in section 3.1, *Technical data*. The limits given in the data sheet may not be exceeded.

1.4 Copyright

All rights reserved. No part of these instructions may be reproduced, stored in a retrieval system or transmitted in any form or by any means without prior permission of Flowserve Pump Division.

1.5 Duty conditions

This product has been selected to meet the specifications of your purchaser order. The acknowledgement of these conditions has been sent separately to the Purchaser. A copy should be kept with these instructions.

⚠ ***The product must not be operated beyond the parameters specified for the application. If there is any doubt as to the suitability of the product for the application intended, contact Flowserve for advice, quoting the serial number.***

If the conditions of service on your purchase order are going to be changed (for example liquid pumped, temperature or duty) it is requested that the user seeks the written agreement of Flowserve before start up.

1.6 Safety

1.6.1 Summary of safety markings

These User Instructions contain specific safety markings where non-observance of an instruction would cause hazards. The specific safety markings are:

DANGER This symbol indicates electrical safety instructions where non-compliance will involve a high risk to personal safety or the loss of life.

This symbol indicates safety instructions where non-compliance would affect personal safety and could result in loss of life.

This symbol indicates "hazardous and toxic fluid" safety instructions where non-compliance would affect personal safety and could result in loss of life.

CAUTION This symbol indicates safety instructions where non-compliance will involve some risk to safe operation and personal safety and would damage the equipment or property.

Note: This sign is not a safety symbol but indicates an important instruction in the assembly process.

1.6.2 Personnel qualification and training

All personnel involved in the operation, installation, inspection and maintenance of the unit must be qualified to carry out the work involved. If the personnel in question do not already possess the necessary knowledge and skill, appropriate training and instruction must be provided. If required the operator may commission the manufacturer/supplier to provide applicable training.

Always coordinate repair activity with operations and health and safety personnel, and follow all plant safety requirements and applicable safety and health laws and regulations.

1.6.3 Safety action

This is a summary of conditions and actions to help prevent injury to personnel and damage to the environment and to equipment.

DANGER Before maintenance and repair work is started the motor of the pump unit must first be completely isolated from the electrical power supply. Work on the unit can only be performed when it is isolated and locked off.

The procedures for stopping the unit in these User Instructions must be strictly followed.

DANGER Danger from electricity must be eliminated (for details see, for example, the regulations of the VDE and local power supply companies).

In addition to the safety instructions covered in the main *Safety* section also note any special safety instructions mentioned in all other sections, eg for private use.

Before restarting, the instructions listed in section 7, *Commissioning, start-up, operation and shutdown,* must be followed.

Information placed directly on the unit must be strictly observed, for example:

- Labelling of connections
- Rating plate

Units conveying hazardous substances must be decontaminated.

CAUTION The unit may only operated in a fully assembled condition and with the pump completely filled and immersed.

Non-compliance may result in the following:

- Failure of important unit functions
- Failure of stipulated methods of maintenance and repair
- Risks to personnel from electrical, mechanical or chemical effects
- Danger to the environment by leakage during production of dangerous media

2 TRANSPORT AND STORAGE

2.1 Consignment receipt and unpacking

Submersible pumps are subjected to a thorough inspection before leaving the factory and are supplied with operating instructions for fitting, starting, care etc, that conform to international safety regulations.

Immediately after receipt of the equipment it must be checked against the delivery and shipping documents for its completeness and that there has been no damage in transportation. Any shortage and or damage must be reported immediately to Flowserve Pump Division and must be received in writing within one month of receipt of the equipment. Later claims cannot be accepted.

Check any crates, boxes and wrappings for any accessories or spare parts that may be packed separately with the equipment or attached to side walls of the box or equipment.

Each product has a unique serial number. Check that this number corresponds with that advised and always quote this number in correspondence as well as when ordering spare parts or further accessories.

2.2 Handling and lifting

CAUTION Take special care when handling the pump unit. Make certain that it does not hit against walls, steel structures or floors etc.

Overlong pump units must be handled according to the following section.

2.2.1 Erection of long units

CAUTION For transport, ensure that the hoist has an adequate carrying capacity.

Note: Units less than 1 000 kg (2 200 lb.) do not carry any weight information.

Units that are delivered or stored in several sub-assemblies due to extreme length must be assembled during installation into the well. Special fitting instructions must be requested from the manufacturer for this.

A unit that is shipped on a transport rail due to its extreme length must be lifted into the vertical position on this rail (ie an auxiliary carrier) before fitting into the well.

CAUTION Due to the danger of sagging, pump units that exceed the permissible length must be supported by an auxiliary carrier (U or H carrier) when lifted into the vertical position. This carrier may only be removed after the pump unit is hanging vertically from the crane or lifting block. (See Figure 2-1.)

When assessing the diameter of the unit, use the smaller size from the pump and motor. This can be found on the rating plate or the data sheet.

Rated diameter	Permissible length
152 mm (6 in.)	3.3 m (10.8 ft)
203 mm (8 in.)	3.5 m (11.5 ft)
254 mm (10 in.)	4.4 m (14.4 ft)
305 mm (12 in.)	4.7 m (15.4 ft)

CAUTION Under no circumstances must the power cables be used for lifting or moving the motor.

Figure 2-1

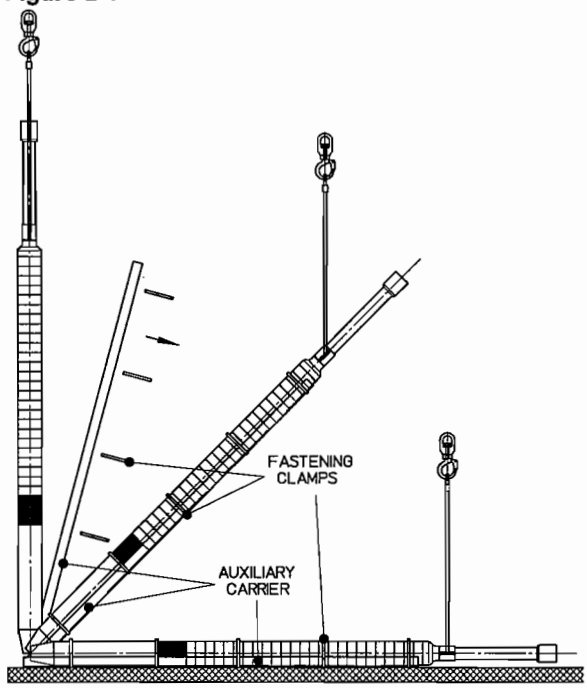

2.3 Storage

CAUTION Store the pump unit vertically in a dry, well ventilated location. If it cannot be foreseen when the unit will be installed, the following instructions must be followed.

2.3.1 General remarks

CAUTION Submersible pump units need special storage conditions. For functional reasons some inner parts (eg the stator and rotor plates) cannot be produced from corrosion-resistant materials and are therefore sensitive to any type of air humidity.

All units may basically be stored either in a filled or unfilled condition; however these two types of storage require different treatment of the unit.

CAUTION All units must be stored vertically, secured appropriately in this position to prevent tipping over.

CAUTION The leads of the power cables must be protected from moisture. Ensure that the power cables and, if applicable, the signal cables are not bent during storage.

2.3.2 Requirements for the storage area

a) The storage area must be well ventilated.
b) Air humidity should be in a range of 40 to 60%.
c) Temperatures:
   +50 to -25 °C (+122 to -13 °F) for units with unfilled motors
   +50 to 0 °C (+122 to +32 °F) for units with MX type motors (water-filled without antifreeze)
   +50 to -15 °C (+122 °F to +5 °F) for units with motors originally filled by the manufacturer
d) For temperatures down to -15°C, (+5 °F) see the guidelines in the instructions for filling submersible pump motors in section 6.1, *Antifreeze*.

2.3.3 Storing for up to four weeks

No special arrangements are required.

2.3.4 Storing between one and 24 months

For storage between one and 24 months, it is recommended that the shaft of the unit be turned at intervals of approximately 8 weeks. For this it may be necessary to remove a mounted pressure housing, including the check valve. On pump units where this is not possible, the pump and motor must be separated.

If needed, separate instructions should be requested from the manufacturer.

2.3.5 Storing for over 24 months

CAUTION If the pump unit is stored for more than 24 months a complete visual inspection at the Flowserve manufacturing plant is recommended. An authorised Flowserve factory representative can also carry out this inspection.

2.4 Recycling and end of product life

At the end of the service life of the product or its parts, the relevant materials and parts should be recycled or disposed of using an environmentally acceptable method and local regulations. If the product contains substances that are harmful to the environment, these should be removed and disposed of in accordance with current regulations. This also includes the liquids and or gases in the "seal system" or other utilities.

Make sure that hazardous substances are disposed of safely and that the correct personal protective equipment is used. The safety specifications must be in accordance with the current regulations at all times.

3 DESCRIPTION

3.1 Technical data

Each unit is individually manufactured to the special requirements of the customer. The specific technical data regarding head, delivery rate, current requirement, minimum permissible flow velocity on the external motor surfaces etc can be found in the data sheet delivered with the unit or in the order confirmation.

3.2 Delivery contents

- Pump unit
- These User Instructions
- Technical data sheet

3.3 General data

3.3.1 Normal operating conditions

- Temperature: see data sheet
- Sand content: max. 25 mg/l (0.03 oz/fl.oz.)
- Water velocity along motor surface: see data sheet
- No impurities that could lead to deposits and blockages within the pump or to deposits on the motor surface
- No water hammer
- Maximum 3 minutes operation against closed slide valve
- Operation within prescribed voltage tolerances
- Permissible operational range: 50 to 120 % of the best efficiency point (BEP)
- Correctly selected and adjusted motor protection
- Observation of the maximum permissible starting frequency

CAUTION If other working conditions are required please contact Flowserve for advice.

CAUTION At higher ambient temperatures and/or lower flow velocities on the external motor surfaces, or if there is risk of clogging, special measures for heat dissipation are required. This must be checked with the manufacturer by indicating the ambient conditions. In this case, the suitability of the unit for its planned application must be confirmed by the manufacturer.

3.4 General description

Submersible motor pumps are subjected to a thorough inspection before leaving the factory and are supplied with operating instructions for fitting, starting and care that conform to general safety regulations.

Standard submersible motor pumps are used to transport cold clean water under normal operating conditions.

The Pleuger submersible motor pump has been developed for installation in wells and as a result has a distinctive slim design. The Pleuger submersible motor pump, because of its various features, can also be used for other applications with different design modifications.

The submersible motor pump consists of a submersible motor, a submersible pump and usually a check valve. The complete pump unit is freely suspended on the rising main, which is supported at the wellhead.

Other uses or applications must be agreed by the manufacturer.

Power cables and, if applicable, signal cables are fixed to the riser pipes by means of cable clips.

The ideal construction of a water supply system is shown in Figure 3-1. Since this shows a basic arrangement, the actual layout must be adapted to local and technical conditions.

The additional listed components are recommendations for operational safety and the protection of the pump unit.

Figure 3-1: Water supply system

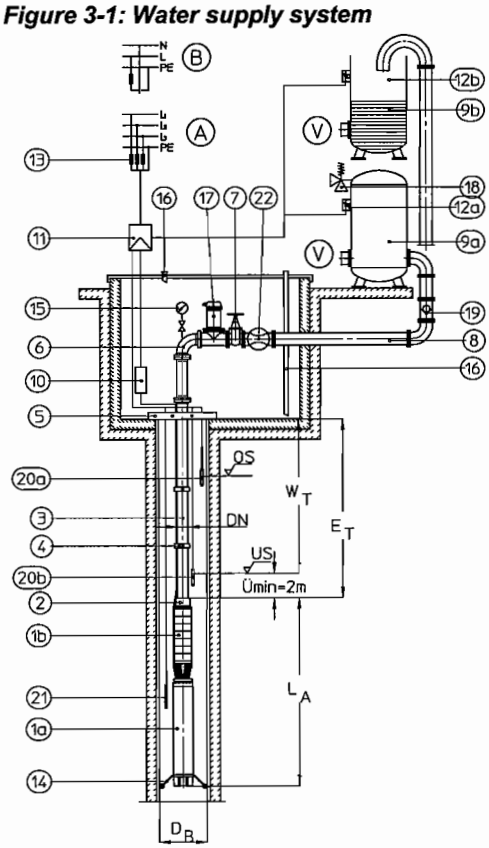

Ref.	Description
1a	Submersible motor
1b	Submersible pump
2	Check valve
3	Riser pipe
4	Cable clips
5	Support clamp
6	Elbow
7	Control valve
8	Delivery pipe
9a	Pressure vessel
9b	High level tank
10	Terminal box for power cable
11	Switchgear or switchboard
12a	Pressure switch
12b	Float switch
13	System fuses
14	Centering device
15	Pressure gauge
16	Well shaft vents
17	Double orifice air valve
18	Safety valve
19	Check valve (optional)

For safe operation, the following are also recommended:

20a	Water level detector, upper
20b	Water level detector, lower
21	Pressure sensor for water level measuring system
22	Flowmeter

Explanations and abbreviations:

- D_B Well diameter
- E_T Installation depth
- L_A Unit length incl. check valve
- US Lower operating level = dry running protection
- OS Upper operation level (only for automatic operation)
- Ü Minimum water level above pump outlet
- V To the consuming device
- W_T Minimum (dynamic) water level (depending on NPSH)
- A Connection for a three-phase motor
- B Connection of a single-phase motor

3.5 Submersible motor

The so-called "wet" electric motor is a water-filled three-phase AC squirrel-cage motor with a watertight winding, which is operating in water and is designed especially for direct drive of submersible pumps. The motor filling-water cools the winding and bearings as well as lubricating the thrust and radial bearings.

The submersible-motor-pump is connected to the lower end of a riser pipe and submerged in the pumped medium. The power supply is through water resistant power cables fastened to the riser pipes with cable clips.

For operation the motor must be filled with potable water. Antifreeze can be added to the potable water if there is a risk of freezing. As the motor is hermetically sealed and equipped with a pressure/volume compensating device the motor filling remains in the motor for the duration of operation.

On motors larger than 254 mm (10 in.) an impeller fitted on the motor shaft provides an internal water circuit for better cooling.

When the unit is operating, the motor filling-water becomes warm and increases in volume. Excess water is released through a vent valve/pressure relief valve located at the top of the motor. After the unit is switched off, the filling-water cools down and the volume decreases. A breather diaphragm compensates for the lower pressure resulting from the decrease in volume. This arrangement avoids under-pressure in the motor and the ingress of pumped medium. The change of volume by varying temperatures continues over the entire lifetime of the pump unit.

Although the motor filling-water and the pumped liquid surrounding the motor will mix if there is leakage from the seals, the motor remains operative due to its water-lubricated journal bearings.

At lower installation depth the motor can, on customer request, be equipped with a header tank connected to the motor with a filling and venting pipeline instead of a pressure compensating system.

Basically, "wet" motors operate maintenance-free with the ammeter acting as a monitoring device.

The internal temperature of the motor can be monitored with one or two additional temperature sensors mounted inside the end coils of the motor winding. These sensors can trigger a high temperature warning signal or switch off the motor.

3.5.1 Stator winding

The stator winding consists of winding wire provided with special insulation.

The power cables are connected to the winding by a special watertight splice and leave the motor through stuffing boxes.

The winding and cable connections are tested at high voltage according VDE 0530 IEC60034-1 immersed in water, at twice the operating voltage plus 1 000 volts, or a minimum of 2 000 volts.

3.5.2 Rotor

The rotor winding consists of induction welded copper bars with short-circuit rings. The rotors are dynamically balanced and are protected against corrosion by a protective varnish. The drive shaft end is made of stainless steel.

3.5.3 Bearings

The "Michel type" axial thrust bearing is located in the motor base and is designed to handle very high thrust loads; they are dimensioned so that they can support the axial thrust of the pump's rotating assembly as well as all hydraulic loads.

The thrust bearing is bi-directional.

A fixed counter-thrust bearing is also provided.

The journal bearings are slide bearings.

The motor filling liquid lubricates the journals and thrust bearings.

3.5.4 Mechanical seal

The motor is equipped with a single directional operating mechanical seal, which can operate in both directions of rotation.

3.5.5 Starting procedures

The motors can have different operating modes and starting procedures. Essentially, these are:

- Direct-on-line (DOL)
- Star-delta starting
- Starting via an auto-transformer
- Starting via soft-starter. (See also section 3.5.6, *Starting via soft-starter.*)
- Static-frequency converter operating. (See also section 3.5.7, *Static-frequency converter operating with submersible motors.*)
- Single-phase motor - refer to Flowserve.

For direct-on-line (DOL), Star-delta starting and starting via an auto-transformer only the particular starting procedures, the electrical data and the connection diagram for the motor and the operating data for the motor have to be followed. These are marked in the technical data sheet.

For all other operating modes special procedures have to be followed that are described in detail below.

3.5.6 Starting via soft-starter

Pleuger submersible motors can be operated via "soft-start and soft-stop devices". These instructions relate to radial and mixed flow pumps.

Axial flow pumps must be referred to the manufacturer on an individual basis.

A compensation-capacitor must not be installed at the junction between soft-start and soft-stop devices and the motor.

Power output reduction is not necessary if the conditions in section 5.6, *Adjustments for soft-start and soft-stop devices,* are observed.

Soft-start ramp up and soft-stop ramp down times must be clarified with the manufacturer after the hydraulic system data is finalised.

3.5.7 Static-frequency converter operating with submersible motors
Technical data needs to be taken from the specific data sheet.

For submersible motors that are later converted to static-frequency converter operation, the required data must be requested from the manufacturer.

3.5.8 Direction of rotation
The direction of rotation depends on the pump type. Reversing two phases of the power supply will change the direction of rotation of all three-phase squirrel-cage motors; changing the direction of rotation of a single-phase motor is not possible.

3.5.9 Resistance thermometer PT100 (RTD)
Either one or two temperature sensors PT100 (RTD) are installed with pressure and watertight connections to a signal cable. As the temperature sensors are mounted on the winding head they can only be removed after dismantling the motor.

3.6 Pump and check valve

Radial or semi-axial centrifugal pumps are used as single or multistage pumps. The pump stages of pump types NB6 and NB8 are bolted together with tie-bolts. The pump bowls of all other types of pumps are bolted together one by one.

The dynamically balanced impellers are fixed to the pump shaft by means of keys. The pump shaft runs in journal bearings that are lubricated by the pumped medium.

Power transmission for 152 mm (6 in.) and 203 mm (8 in.) motors is via a spline coupling; on all other motors a keyed coupling is used.

The check valve of pump types NB6 and NB8 is an integral part of the pump. On all other pump types the check valve is an independent part, mounted onto the discharge casing of the pump.

4 INSTALLATION

4.1 Hydraulic installation

A typical design for a water supply system is shown in Figure 3.1. As this shows a basic arrangement, the actual layout must be adapted to local conditions. (The additional components listed are recommendations for operational safety and protection of the pump unit.)

4.2 General advice for installation

The following criteria must be taken into account to determine the installation position and depth:

- Vertical installation in the well above the filter line, so that an adequate motor cooling flow is guaranteed along the external motor surface
- Sufficient water cover
- Static water level at least 2 m (6.6 ft.) above the pump outlet
- A dynamic water level above the suction housing, taking into account the required NPSH for the pump. (See pump characteristic curve.)
- Flow rate. (See pump characteristic curve.)
- Supply conditions of the pumping medium (depends on the installation conditions)

CAUTION Regardless of the above, the pump unit should be installed above the well screen whenever possible, to avoid foreign matter being drawn directly into the pump inlet, and also to ensure that there is sufficient water flowing across the motor to assist heat transfer. If this is not possible a flow shroud should be provided to induce the flow of water over the motor.

CAUTION Pump units can only be operated with a completely filled and immersed motor. The liquid level of the motor must always be checked before installation, and if necessary adjusted according to the information on the data card supplied with the motor.

4.3 Flexible hose riser pipe

CAUTION If a flexible hose is used instead of steel pipes, these will twist against the direction of rotation of the motor when it is switched on, depending on the locked rotor torque of the motor. In this case, the power cable (and, if provided, the signal cable) fastened to the riser hose would also twist and tighten. To prevent the cables being pulled out of their junction boxes, they should not be laid parallel to the riser hose but wound around it in the opposite direction to the rotation of the motor. The number of turns required will depend on the length and stiffness of the riser hose line and the locked rotor torque of the motor. The exact operating characteristics will need to be requested from the hose manufacturer.

4.4 Centralisers

When pump units are installed in narrow wells the risers, whether steel pipes or hose lines, will need to be centralised to prevent them from touching the wall of the well which could cause damage to any cables fastened to them.

4.5 Checks before installation

⚠ Before beginning installation, check the dependability of auxiliary equipment, particularly hoists, as well as comparing the information on the data sheet with that on the rating plate on the motor.

Ensure that the line voltage (measured between two phases) is equal to the motor voltage shown on the rating plate.

The maximum permissible voltage fluctuation can be seen in the data sheet. Greater voltage and frequency fluctuations must be stated in the order and confirmed by the factory. In case of doubt, contact Flowserve or the nearest factory representative before starting up the unit.

Before installing, the insulating resistance of the motor must be measured as shown in section 8.2, *Insulation measurement of motor and power cable.*

Ensured that the well diameter is large enough down to the installation depth, so that the pump unit can be installed without difficulties. If the riser connections are made of pipes with flanges, these must have cut outs for the cable if the well diameter is narrow.

When lowering the unit, ensure the power cable is neither squeezed nor scraped. To protect the power cables, we recommend that the well head is lined with a rubber sheet at the entry point of the power/signal cable into the well pipe and it is fed into the well shaft using a cable roller. (See Figure 4-1.)

During lowering, the unit must always hang freely and must not become wedged in the well shaft. Always ensure that the pump can be rotated freely. If needed, attach a cable clip every 3 m (approx 10 ft.) of pipe length.

For especially narrow and deep wells, the insulating measurements shown in section 8.2, *Insulation measurement of motor and power cable*, should be repeated to determine possible damage to the power cables in time.

Figure 4-1

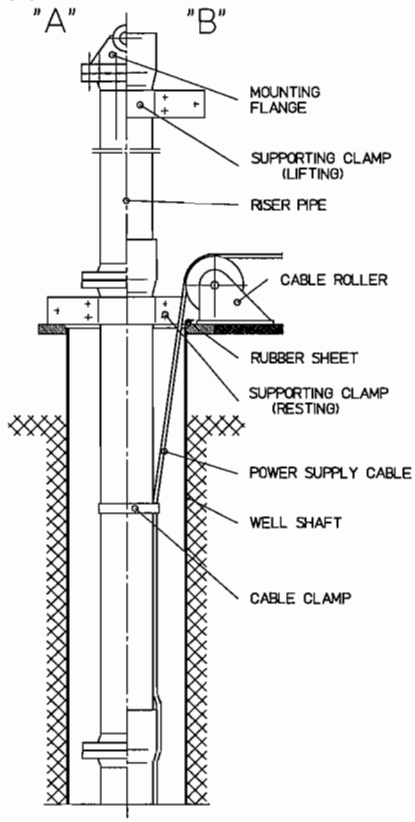

4.6 Installation of pre-assembled pump units

Mount the first length of pipe, which should not be longer than 1 m (39 in.), onto the assembled pump unit.

Fasten the power cables, control lines and instrument leads (if any) with cable clips onto the pipe.

4.7 Riser pipes with flange connections

(Reference "A" in Figure 4-1.)

a) Mount a "lifting dolly" to the riser pipe flange, and hang the complete unit on a suitable hoist.
b) Lower the pump unit into the well, allowing sufficient pipe to protrude above the well to enable the installation clamp to be mounted onto the riser pipe.
c) Continue to lower the unit until the installation clamp rests on the well rim flange.
d) Remove the lifting dolly, and attach it to the next riser pipe to be installed.
e) Fasten the power cable, control lines and instrument leads (if any) with cable clips to the riser pipe.
f) Lift the next pipe to be installed into a vertical position and bolt it to the pipe resting on the well rim flange.

g) When this has been completed lift the unit sufficiently to enable the supporting clamp to be removed.

⚠ Do not allow the pipe to be lowered or to slip whilst carrying out this operation. This could result in damage to hands and in extreme cases loss of fingers.

h) Install the remaining riser pipes as described from point b). to e).

i) Finally mount the wellhead support plate onto the last length of riser pipe. Feed the power cables and, if necessary, the control lines and/or instrument leads through the corresponding holes in the wellhead support plate and connect them to the junction box or control panel.

4.8 Riser pipes with pipe socket

(Reference "B" in Figure 4-1.)

a) Connect a lifting clamp undemeath the pipe socket of the screwed riser pipe ("B" in Figure 4-1) and lift the complete pump unit with a suitable hoist.

b) Lower the pump unit into the well as far as the installation clamp mounted undemeath the socket of the riser pipe.

c) Lower the unit and rest it on the well rim flange.

⚠ CAUTION Do not let the pump unit slip through the installation clamp.

d) Remove the lifting clamp and attach it to the next riser pipe and connect this to the pipe already installed.

e) Fasten the power cables and, if necessary, the control lines and/or instrument leads with cable clips onto the riser pipe.

f) Lift the unit and remove the resting supporting clamp.

g) Install the remaining riser pipes as described from point b) to f).

h) Finally mount the wellhead support plate onto the last riser pipe. Feed the power cables and, if necessary, the control lines and/or instrument leads through the corresponding holes in the wellhead support plate and connect them to the junction box or control panel.

4.9 Assembly of submersible motor pumps before installation

Submersible motor pump units that are delivered in sub-assemblies have to be assembled during or before installation. For assembly of these submersible motor pump units the specific installation instructions have to be requested from the manufacturer if they have not been delivered with the unit.

5 ELECTRICAL CONNECTIONS

5.1 Motor

⚠ DANGER All work on the electrical system must be performed by a qualified Electrician in accordance with relevant local, national and international regulations.

The connection diagrams in the following sections show the basic structure of the connection possibilities and the line arrangement of the mains and motor power cable.

Detailed information about the connection of motors and, if necessary, of control and monitoring devices can be taken from the appropriate circuit diagrams from the control panel manufacturer.

To ensure a good connection with the least possible contact resistance when connecting the power lines, the conductor ends should not be tin-plated.

If the conductor ends are tin-plated, these should be removed. The exposed fine-strand wires must be connected to the electrical supply with suitable terminal screws or by crimping or soldered cable lugs.

5.1.1 Labelling of conductor ends and rotation direction of three-phase motors

The conductor ends of the power cables are labelled so that all three-phase motors rotate clockwise (seen from the coupling ends and towards the shaft) when connected to a clockwise rotating system according to Figure 5.1 to 5.5.

Counter clockwise rotation occurs if two phases of the main connection are transposed from that shown in the clockwise connection diagrams (compare Figures 5-07 to 5-11).

Power supply cables with round or flat cross-sections are connected to the motor. Depending on power consumption or if the installation circumstances are restricted then several single core cables can be used.

5.1.2 Single-phase motors

The direction of rotation of single-phase motors (alternating current motors) is preset by the manufacturer and cannot be changed. The rotation direction preset by the manufacturer can be seen in the data sheet. Connection can only be made using the switching device accompanying the motor for which the labelling of the leads can be found in Figure 5-06 or 5-12.

5.1.3 Motors with one power cable

One four lead power cable is connected to the motor for direct-on-line starting, also auto transformer starting, starting via soft-start and soft-running-out devices as well as for static-frequency operating (compare Figures 5-01 and 5-07), if the current load of the leads allow it.

5.1.4 Motors with two power supply cables, parallel connection

CAUTION See attachment TI 01-04 E for the interim solution for motors with old and new coloured power supply cables until 01 April 2006.

When a motor's rated current cannot be supplied by one cable it is equipped with two parallel cables.

The connections for a motor with two power cables, with parallel connection, as well as the colour and letter labelling of the conductor ends, is shown in Figure 5-02 or 5-08.

5.1.5 Motors with two power supply cables, parallel connection (open delta-connection)

CAUTION See attachment TI 01-04 E for the interim solution for motors with old and new coloured power supply cables until 01 April 2006.

For motors with star-delta starting (Figure 5-03 or 5-09), motors whose star connection (Figure 5-04 or 5-10) and/or delta connection (Figure 5-05 or 5-11) is in the control panel, as well as for motors provided with two different voltages, two three-lead and/or one three- and one four-lead power cables are connected to the motor.

5.2 Protective measures against shock-hazard voltages

Protective measures against shock-hazard voltages must be taken according to IEC regulations and the local electricity supply company ordinances.

According to IEC-regulations the protective conductor must be connected directly to the motor on new systems. This also applies when the unit is installed in an inaccessible well.

CAUTION If there is no earth lead on the motor, a separate earth lead must be connected to the motor using the earth screw supplied. This is labelled with a ⏚ symbol.

5.3 Motor protection

To protect the motor against current overload, a thermal overload relay must be provided. The tripping time of the relay should have temperature compensation to allow for variations in ambient temperature. It should also have accelerated tripping under single-phase conditions.

Trip reset should only be possible manually.

The setting of the thermal overload relay must be chosen according to the data sheet provided with the pump.

For star-delta motor starters, it is important that the protection relay is in the motor line (see Figure 5-03 or 5-09). The adjusted current level will then be 58% of the operational current. If the protection relay has been installed in the power line in exception to this rule, the adjusted current is the same as the operational current.

Table 5-1, Overload relay tripping characteristics

I_A		t	L
100 mm (4 in.)	150 mm (6 in.) or larger		
1.05 x I_E		> 2 hours	cold
1.20 x I_E		< 2 hours	warm
5 x I_E	6 x I_E	≤ 10 seconds	cold

I_A = Release current
I_E = Operational current (rated current)
t = Delay time until release
L = Operational temperature before overload

The adjustment of the motor protection relay (thermally delayed over current release) must be set according to the value given in the data sheet.

The value given in the data sheet is a standard value for the operating point. If the actual operational current in the operating point of the pump is less than this given value, the motor protection must be adjusted lower so that there is effective protection and malfunctions can be indicated in time.

CAUTION The motor protection adjustment must never be set higher than the highest permissible value given in the data sheet. Testing the correct operation of a motor protection switch by deliberate single phasing is not permitted!

5.4 Short circuit protection

To prevent a short circuit in the power cable and the motor, safety precautions must be taken according to local regulations.

Guide values for safety fuse sizes can be found in the data sheet.

5.5 Motor connection diagrams

5.5.1 Clockwise rotation

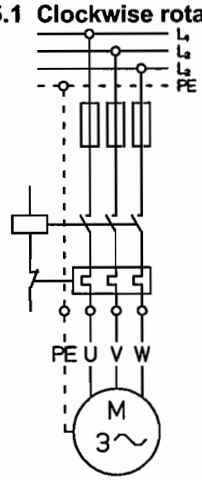

Figure 5-01, Direct-on-line-starting - one power supply cable

		Old	New
U	=	black	
V	=	light blue	brown
W	=	brown	grey
PE	=	green/yellow	

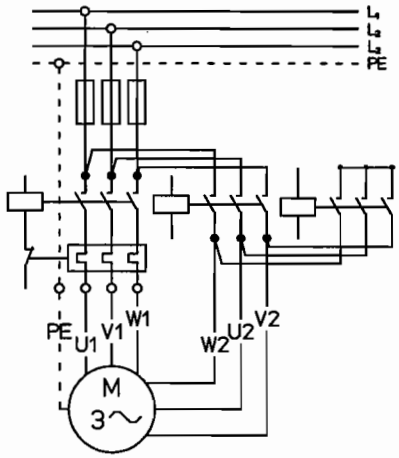

Figure 5-03, Star-delta-starting

		Old	New
U_1/U_2	=	black	
V_1/V_2	=	light blue	brown
W_1/W_2	=	brown	grey
PE	=	green/yellow	

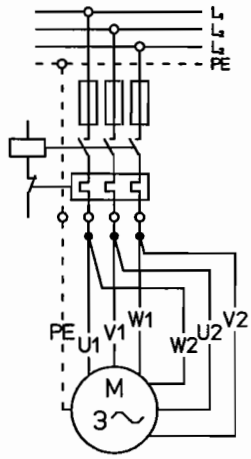

Figure 5-05, Direct-on-line-starting - delta-connection in control panel

		Old	New
U_1/U_2	=	black	
V_1/V_2	=	light blue	brown
W_1/W_2	=	brown	grey
PE	=	green/yellow	

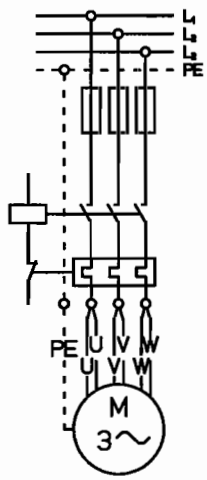

Figure 5-02, Direct-on-line-starting - two power supply cables

		Old	New
U	=	black	
V	=	light blue	brown
W	=	brown	grey
PE	=	green/yellow	

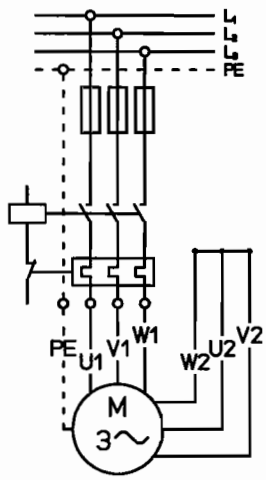

Figure 5-04, Direct-on-line-starting - star-connection in control panel

		Old	New
U_1/U_2	=	black	
V_1/V_2	=	light blue	brown
W_1/W_2	=	brown	grey
PE	=	green/yellow	

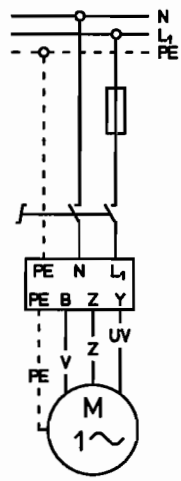

Figure 5-06, Single phase motor

V	=	light blue
UV	=	brown
Z	=	black
PE	=	green/yellow

5.2.2 Counter-clockwise rotation

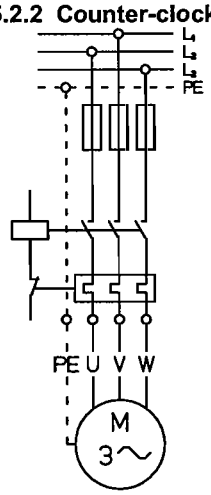

Figure 5-07, Direct-on-line-starting - one power supply cable

		Old	New
U	=	black	
V	=	light blue	brown
W	=	brown	grey
PE	=	green/yellow	

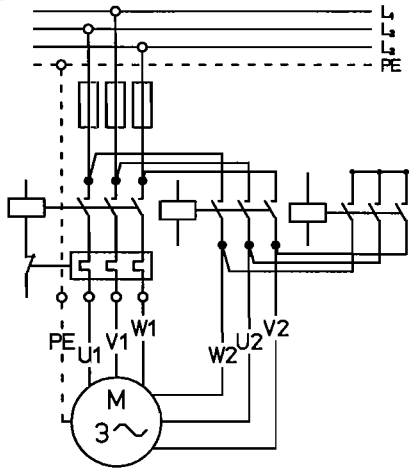

Figure 5-09, Star-delta-starting

		Old	New
U_1/U_2	=	black	
V_1/V_2	=	light blue	brown
W_1/W_2	=	brown	grey
PE	=	green/yellow	

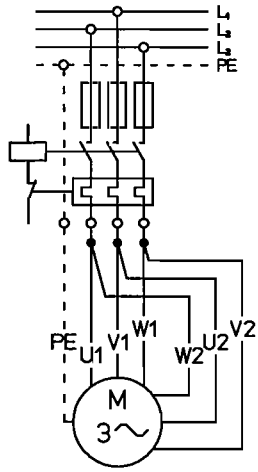

Figure 5-11, Direct-on-line-starting - delta-connection in control panel

		Old	New
U_1/U_2	=	black	
V_1/V_2	=	light blue	brown
W_1/W_2	=	brown	grey
PE	=	green/yellow	

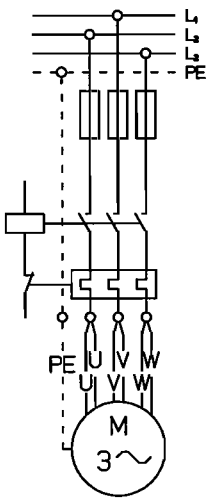

Figure 5-08, Direct-on-line-starting - two power supply cables

		Old	New
U	=	black	
V	=	light blue	brown
W	=	brown	grey
PE	=	green/yellow	

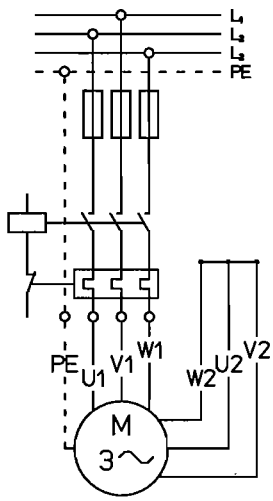

Figure 5-10, Direct-on-line-starting - star-connection in control panel

		Old	New
U_1/U_2	=	black	
V_1/V_2	=	light blue	brown
W_1/W_2	=	brown	grey
PE	=	green/yellow	

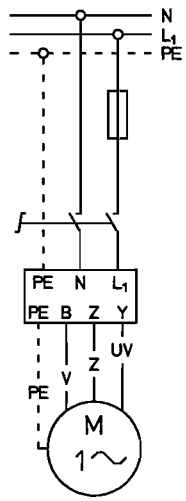

Figure 5-12, Single phase motor

V	=	light blue
UV	=	brown
Z	=	black
PE	=	green/yellow

5.6 Adjustments for soft-starter and soft-stop devices

5.6.1 Minimum permissible current limits

Table 5-2

Motor type	Minimum permitted current limit as % of motor rated current
M 6	250
M 8 up to VNI 14	300
MI 16	350
> MI 16	On request

5.6.2 Minimum start-up voltage

On adjustable devices do not adjust the start-up voltage lower than 55% of the rated voltage.

5.6.3 Permissible ramp-up time

To avoid thermal overload and damage to the bearings DO NOT adjust the ramp-up time above 5 seconds.

On units with a dual ramp-time function or pump function the sum of the dual ramp-time must not exceed 5 seconds. Any other ramp-up time above 5 seconds must be referred to Flowserve for approval.

Should external guidelines state differing values than those stated above, the above values must take precedent. This function should not be used for speed adjustment of the motor.

5.6.4 Permissible ramp-down time

The maximum ramp-down time must not exceed 20 seconds.

On units with a dual ramp-time-function or pump-function the total amount of ramp-time must not exceed 20 seconds. The amount of running-out voltage in this case must not be less than 45% of the rated voltage.

Any other ramp-down time above 20 seconds must be referred to Flowserve for approval.

Should external guidelines state differing values than those stated above, the above values must take precedent. This function should not be used for speed adjustment of the motor.

5.6.5 Starting frequency

Table 5-3

Motor type	Maximum starts and run-outs per hour
M 6	8
M 8 to MI 16	6
> MI 16	On request

The number of starts per hour should be spread equally over the hour.

In addition, pay attention to the starting frequency of the soft-start device, which could possibly be less.

5.6.6 Soft starter current limit

To have sufficient reserve for any required additional acceleration torque, the choice of the soft-start device must be carefully considered to ensure that the starter can deliver at least four times the motor rated current.

5.7 Operation of submersible motors with static frequency converter

5.7.1 General

Motors for operation with a static frequency converter are specially designed. Major operating criteria are the temperature rise of the motor depending on additional losses and the higher voltage stress on static frequency converter operation.

5.7.2 Cooling

Generally, the flow velocity along the motor must be guaranteed for the nominal condition according the following figures:

30 °C (86 °F) - 0.5 m/s (1.64 ft/sec)
20 °C (68 °F) - 0.2 m/s (0.66 ft/sec)

5.7.3 Starting conditions

The minimum frequency of 10 Hertz must be reached within 0.5 seconds.

5.7.4 Permissible operating frequency range

The acceptable operating frequency is from a minimum of 10 Hertz up to a maximum of the nominal frequency. (Refer to the data card.)

⚠ CAUTION In this case the allowable pumping capacity range must be observed. (See section 3.3.1.) This may result in a minimum operating frequency above 10Hz.

5.7.5 Maximum voltage stress

The rise in voltage should be less than 500 V/µs and be limited to 1.5 U_N.

5.7.6 Power cable

Shielded power cables should be used at the top of the borehole/well. The cables between the submersible motor and the surface connections must be installed in an adequate Cu-mesh shield that is extensively earthed on both sides.

Any power supply cables must be sized for this higher voltage, depending on the static frequency converter.

Follow the instructions of the manufacturer of the frequency converter regarding the maximum length of the power cables.

The signal cables for temperature sensors should be installed at a distance as far as possible from the high voltage power cables.

5.8 Resistance sensor PT100 (RTD)

Figure 5-1, Standard connection diagram for one PT100 (RTD)

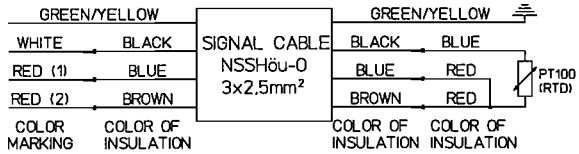

Figure 5-2, Standard connection diagram for two PT100 (RTD)

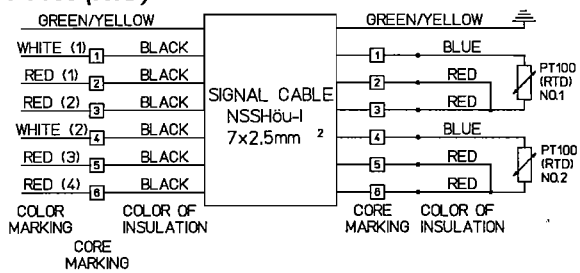

5.8.1 Adjustment of motor temperature protection relay

The adjustment of the motor temperature protection relays depends on the rated output and the flow conditions along the motor surface. The permissible temperatures are shown on the enclosed data sheet as far as the motor is equipped with Pt100 resistance sensors. Examples of values are:

At 60 °C (140 °F) high temperature: early warning
At 65 °C (149 °F) high temperature: motor shut down

6 MOTOR FILLING

The motor must be filled with clean, oil-free and grease-free drinking water, to which antifreeze can be added if there is a risk of freezing.

CAUTION Never use distilled water.

All motors delivered ready-filled by the manufacturer have antifreeze added which gives protection down to -15 °C (5 °F) unless specifically ordered (certain regions only) filled only with drinking water. For specifically ordered units filled only with drinking water the client is responsible for ensuring that storage and use do not permit freezing.

This standard concentration is always the same unless the customer or operator expressly states a different preference.

For units supplied with a header tank, the fitting of an audible or visual alarm is recommended to monitor the filling level of the motor in case of leakage. This can be, for example, a float switch installed in the overhead tank.

6.1 Antifreeze

CAUTION Only Type MF motor filling should be used as antifreeze.

6.1.1 Motor filling - Type MF

Type MF motor filling is a liquid consisting of "FSM1" antifreeze and water. "FSM1" antifreeze is manufactured based on propylene-glycol. The mixing ratios must be prepared according to Table 6-1.

Table 6-1

Motor filling type	"FSM1" % volume	Water % volume	Protection down to: °C (°F)
MF 15 *	35	65	-15 (5)
MF 20	40	60	-20 (-4)
MF 25	45	55	-25 (-13)
MF30	50	50	-30 (-22)

* Standard filling

6.1.2 As-delivered state

These instructions apply to the motor types listed in Table 6-2. They are also applicable to Polder pumps, prefixed with a "P". As a general rule, all motors are delivered as shown in table 6-2.

Table 6-2

Filled	Unfilled
M 6	MX 6
M 8	MX 8
MI 10	MIX 10
VNI 12	
VNI 14	
MI 16	
MI 19	
VNI 22	
MI 26	
VNI 30	

Every motor carries a label indicating its state of filling on delivery.

Yellow label = filled
Green label = unfilled

In all cases the state of filling stated on the label must be observed.

6.1.3 Topping up of pre-filled motors

Topping up of pre-filled motors can be done with potable water without antifreeze if the quantity of topping up liquid is relatively small (1-2%).

6.2 Type of use

The filling of motors depends not only on the motor size and type, but also on the type of use. The standard uses are described below.

6.2.1 Vertical installation

- Normal design
- Normal design in cooling/suction shroud
- Normal design in closed shroud
- Polder pump
- Cavern pump

6.2.2 Horizontal installation

- Normal design
- Normal design in closed shroud
- Pumping station
- Heeling pump

6.3 Filling quantities

The filling quantities stated in Table 6-3 are approximate and may vary slightly due to differing lamination lengths.

Table 6-3

Motor type		Filling quantity litres (US gal)
M 6	MX 6	4.0 to 4.5 (1.0 to 1.2)
M 8	MX 8	8.5 to 9.0 (2.2 to 2.4)
MI 10	MX 10	15.0 (4.0)
VNI 12		35 to 40 (9 to 11)
VNI 14		53 to 60 (14 to 16)
MI 16		75 (20)
MI 19		150 (40)
VNI 22		200 (53)
MI 26		300 (80)
VNI 30		360 (95)

6.4 Accessories and hardware for filling and topping up

Motors must be filled and topped up as shown in the descriptions and accompanying diagrams from Section 6.6 onwards.

The various components referred to in the individual descriptions and diagrams are summarized here for the sake of simplicity and shown in Table 6-4.

6.5 General information about filling

The *General Information* in this section applies to all motor types, unless stated otherwise in the individual descriptions. If units that require filling are not mentioned in these instructions, special instructions must be requested from the manufacturer.

Table 6-4, Accessories and hardware

DESIGNATION	DIAGRAM	SIZE	PART NO.
VENT VALVE		<03.bar	B6523
		>08.bar	
FILLING VALVE		R3/8"	B6514
		R3/4"	
SCREW PLUG	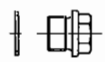	R3/8"	6780
		R3/4"	
		M16x1,5	
FILLING SCREW		-.-	-.-
PROTECTING CAP		-.-	0236
FILLING NIPPEL		M10	①
		M16	

6.5.1 Filling pressure

⚠ CAUTION To avoid damage to the shaft seal and pressure equalization system, the filling pressure at the inlet of the screw connection must not exceed the maximum pressure stated below when connected to a water supply such as a household tap:

Table 6-5

Motor type		Suction shroud	Filling valve	Screw plug * filling nipple thread size – hose diameter	Filling accessory
M 6	MX 6	without	without	screw plug	funnel
		with	⅜ in.	* M 10 – Ø15/19	pump
M 8	MX 8	without	without	screw plug	funnel
		with	⅜ in.	* M 10 – Ø15/19	pump
MI 10	MIX 10	without	without	screw plug	funnel
		with	⅜ in.	* M 10 – Ø15/19	pump
VNI 12			¾ in.	* M 16 – Ø15/19	pump
VNI 14					
MI 16					
MI 19					
VNI 22					
MI 26					
VNI 30					

6.5.4 Filling pump

The filling pump is only suitable for filling motors that are equipped with a filling valve [B6514] in the bottom bearing or thrust bearing housing.

A filling valve [B6514] can be fitted in place of a screw plug [6780]. However, the valve cannot be screwed out again after the motor has been filled; it must remain fitted. Replacing the screw plug does not affect the functioning of the motor.

6.5.5 Sealing cap

The sealing cap [0236] must only be fitted for transportation and storage.

⚠ CAUTION The sealing cap [023]) must always be removed when the motor is put into service.

6.5.6 Filling liquid

If a motor has to be filled or topped up with a mixture of water and antifreeze, this must be prepared in a clean container before filling the motor.

6.5.7 Header tank (optional)

If a header tank is installed it is recommended that it is fitted with a float switch for automatic monitoring of the liquid. This ensures that the motor is always full. The header tank must be not more than 5 m (16.4 ft), corresponding to 0.5 bar (7.25 psi), above the lowest level of the pumped liquid, or the motor, to ensure sealing of the motor. If a greater height cannot be avoided, the manufacturer must be consulted.

6.5.7.1 Pipes

When installing a header tank, pipes with a nominal size of at least 13 mm (1/2 in.) must be used between tank and motor for venting and filling the motor.

To ensure the motor is properly filled, the installation of a drain valve in the return pipe below the tank bottom is recommended. This valve must remain open during filling and topping up until the liquid escaping from it is free of bubbles.

⚠ CAUTION The drain valve must never be fitted so that it can shut off the return pipe.

6.5.8 Vent valves

Vent valves are available with different pressure ratings. The appropriate valve is selected according to the purpose for which the submersible motors are to be used. So that filling with liquid does not have to take place against the opening pressure of the vent valve, it can be screwed out for the duration of filling if the installation position allows this.

⚠ CAUTION It is essential that the vent valve is screwed in again after filling.

6.5.9 Accessory pack

For submersible motors installed horizontally, and in some cases vertically, the vent valves and screw plugs must be exchanged or replaced on site. The parts required for this are supplied in accessory pack "Z", as shown in Table 6-6, with the respective motor. Relevant instructions are given in the filling details for the particular motor type and for the specific application.

Table 6-6, accessory pack "Z"

Item no.	Description	Quantity
B6523	Vent valve	1
6780	Screw plug	1
4510	Sealing ring	3

6.6 Filling instructions

The procedures for filling and topping up submersible motors described below depend on the method of installation and the type of motor used. As a rule it is not possible to use all motor types for all installation methods, and for this reason the following table shows which motors are used as standard for the different installation methods. For special cases not mentioned here, the manufacturer must be consulted.

The relevant section for motor filling must be taken from the data sheet belonging to the corresponding unit. In special cases the filling instructions must be requested from the manufacturer.

Table 6-7

Motor type	Section numbers										
	6.6.1	6.6.2	6.6.3	6.6.4	6.6.5	6.6.6	6.6.7	6.6.8	6.6.9	6.6.10	6.6.11
M 6	•		○	•	•				○	○	•
MP 6			○			•			○	○	
MX 6		•	○	•	•				○	○	•
M 8	•		○	•	•				○	○	•
MP 8			○				•		○	○	
MX 8		•	○	•	•				○	○	•
MI 10	•		○	•	•				○	○	•
MIP 10			○				•		○	○	
MIX 10		•	○	•	•				○	○	•
VNI 12		•	○	•	•				○	○	•
VNI 14		•	○	•	•			•	○	○	•
MI 16		•	○	•	•			•	○	○	•
MI 19		•	○								
VNI 22		•	○								
MI 26		•	○								
VNI 30		•	○								

• = standard ○ = optional [ ] = not currently scheduled

The following instructions are only relevant for filling and topping up before the first installation, for motors without a header tank. Before installation ensure that the motors do not have any leaks.

For installations with a header tank, the liquid level must be monitored. Installation of an automatic level control is recommended.

6.6.1 Filling and topping up with a funnel

(See Figure 6-1)

a) Remove the cap [0236] of the vent valve [B6523] with a screwdriver or similar tool.

⚠ CAUTION The cap [0236] is only used for protection during transportation and must always be removed before installation.

b) Screw out the vent valve [B6523] with a ring wrench or socket wrench (size 17).

⚠ CAUTION Handle seal ring [4510.10] with care.

c) Fit together the two-part funnel [1], and insert it into the threaded hole of the removed vent valve.

d) Fill or top up until liquid escapes from the vent opening.

e) Screw the vent valve [B6523] back in with its seal ring [4510.10].

Figure 6-1

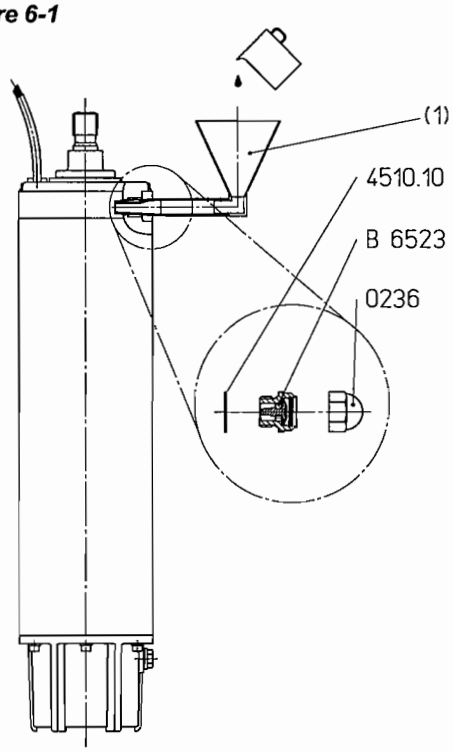

6.6.2 Filling and topping up with filling pump

(See Figure 6-2)

a) Position the motor vertically and prevent the unit from falling over.

b) Remove the cap [0236] of the vent valve [B6523] with a screwdriver or similar tool.

⚠ CAUTION The cap [0236] is only used for protection during transportation and must always be removed before installation.

c) Screw out the inner screw plug [0168] of the filling valve [B6514].

⚠ CAUTION Handle seal ring [4510] with care.

d) Screw the filling nipple supplied [2] into the screw plug threaded hole.

Note: The connections of the filling nipple [2] are different sizes. Fit the relevant filling nipple [M 10 or M 16] into the threaded hole.

e) Fit the hose end of the filling pump over the nipple [2] and place the pump into a container [3] filled with the filling liquid.

f) Fill the motor until the liquid escapes from the vent valve [B6523] with no bubbles.

g) Pull the pump hose off the nipple and screw out the nipple.

h) Refit the screw plug [0168] into the filling valve [B6514] together with the seal ring [4510].

Figure 6-2

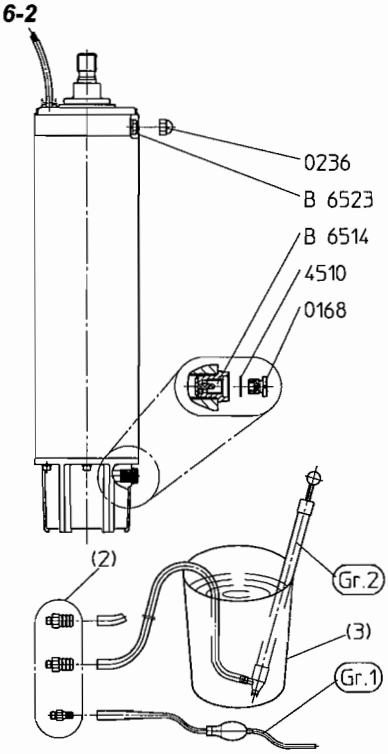

6.6.3 Motors with header tank for vertical installation

(See Figure 6-3)

Note: Motors for this type of installation are specially equipped.

a) Position the motor vertically and prevent the unit from falling over.
b) Screw out the adapter with vent valve [2] from the vent pipe "V".
c) Remove the adapter and plug [3] from the filing pipe "F". This is replaced with a length of threaded pipe (M16 x 1.5).
d) Fill the motor before installation using a funnel [4] into filling pipe "F" until the liquid escapes with no bubbles from vent pipe "V".
e) Install the motor and fill the connected filling and venting pipes during installation. (If using multiple pipes it is advisable to fill the subsequent pipes with liquid immediately after fitting to test the connections for leakage.)
f) After installing the header tank [1] and connecting the pipes to it, fill the tank with liquid up to the mark indicated. When filling the tank, ensure that no liquid enters the vent pipe "V".

Figure 6-3

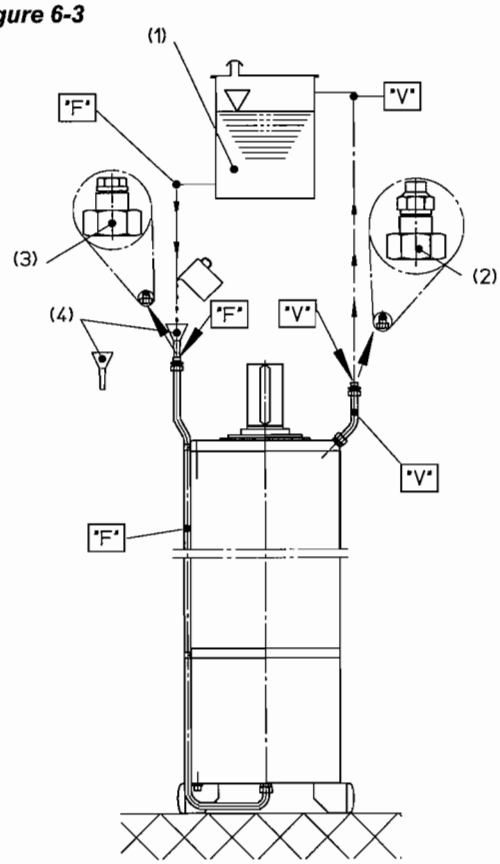

6.6.4 Filling and topping up units with cooling/ suction shroud

(See Figure 6-4)

a) Position the unit vertically and prevent the unit from falling over.
b) Remove the inner screw plug [0168] of the filling valve [B6514].

⚠ CAUTION Handle seal ring [4510] with care.

c) Screw the filling nipple into the threaded hole from which the screw plug [0168] was removed.

Note: The hose connections of the filling nipples [2] are different sizes. The correct one for the thread size (M 10 or M 16) and the pump hose must be fitted.

d) Fit the hose end of the filling pump over the filling nipple and place the pump in a container [3] filled with liquid.
e) Fill the motor until the liquid escaping from the vent valve (B 6523) contains no bubbles. (As the area in which the vent valve [B6523] is fitted is not accessible to inspection, a relatively large amount of liquid should be allowed to escape to ensure that the motor is completely full.)
f) Pull the filling pump hose off the filling nipple [2] and screw out the filling nipple.
g) Refit the screw plug [0168] into the filling valve [B6514] together with its seal ring [4510].

Figure 6-4

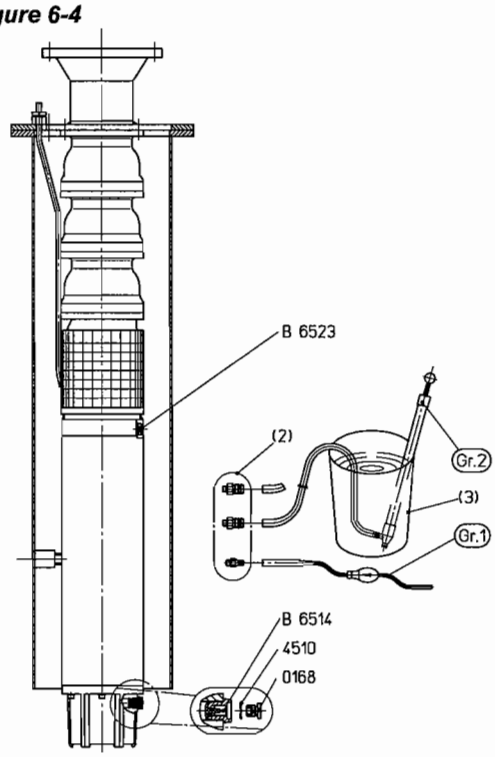

6.6.5 Filling and topping up units with shrouds for vertical installation

(See Figure 6-5)

Note: This section is also valid for horizontal installation of 150 mm (6 in.), 200 mm (8 in.) and 250 mm (10 in.) units with shrouds.

a) Position the unit vertically and prevent it from falling over.

b) Remove the screw plug [2] from the filling connection [1].

CAUTION Handle seal ring [3] with care. When undoing screw plug [2] hold the filling connection [1] securely with a wrench (size 27) so that the pipe or hose fitted inside the shroud is not twisted.

c) Screw the M 10 filling nipple supplied [5] into the threaded hole of the screw plug.

d) Fit the hose end of the filling pump over the filling nipple [5] and place the pump in a container filled with liquid [4].

e) Fill the motor until the liquid escaping from the vent valve (B6523) contains no bubbles. As the area in which the vent valve [B6523] is fitted is not accessible to inspection, a relatively large quantity of liquid should be allowed to escape from it to ensure that the motor is completely full. If the unit is fitted with a foot valve [6] it must be removed to allow the overflow of liquid to be monitored.

f) Pull the filling pump hose off the filling nipple [5] and screw out the filling nipple.

g) Refit the screw plug [2] into the filling connection [1] together with its seal ring [3].

CAUTION When tightening the screw plug [3] hold the filling connection [1] securely with a wrench [size 27] so that the pipe or hose fitted inside the shroud is not twisted.

Figure 6-5

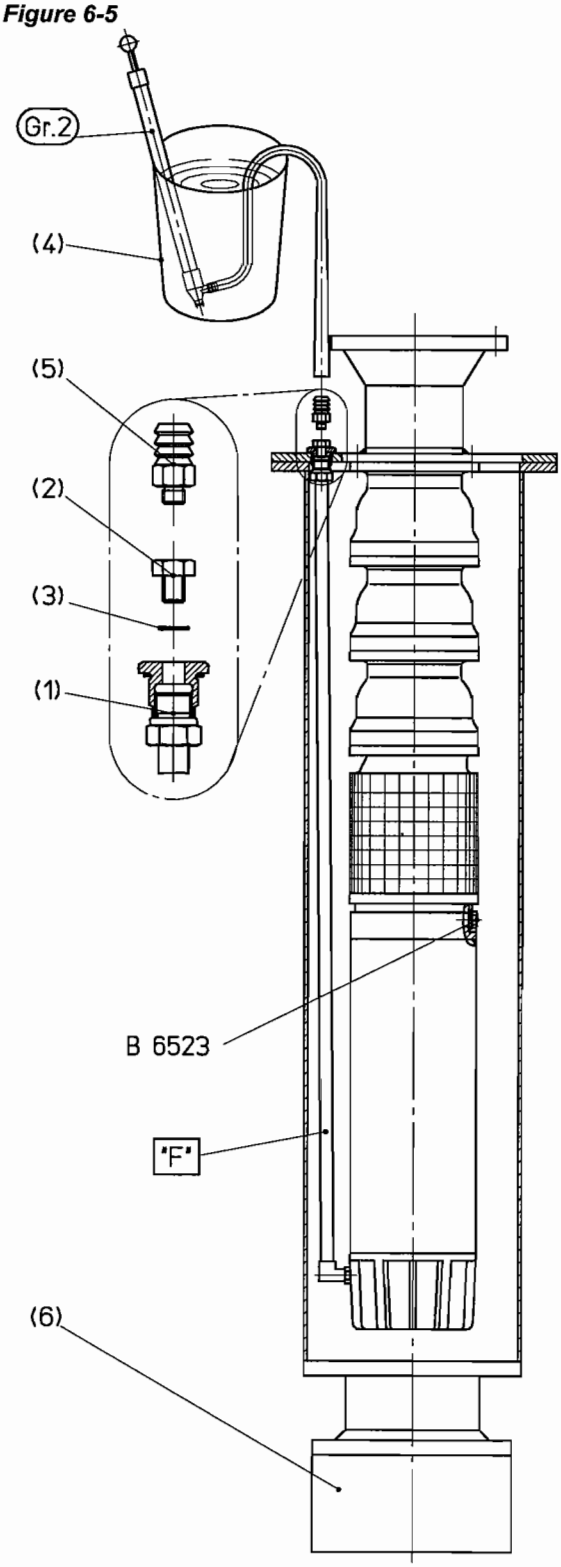

6.6.6 MP6 Polder motors

(See Figure 6-6)

a) Position the unit with the motor vertical and prevent the unit from falling over.

b) Screw off the cap nuts including plug [1] from the filling and return pipes [A].

c) To fill or top up the motor, insert a funnel [5] into one of the two pipes and pour in the liquid until it escape with no bubbles from the other pipe.

Note: Polder motor filling and vent pipes do not generally have identifying markings, therefore either pipe can be selected.

d) To enable the filling of the motor with a pump [3] a filling valve [9701.259/7] together with an adapter piece [1078.615/2] must be fitted onto one of the pipes. For the supplementary installation the following parts (not supplied as standard) are required:

- 1 x adapter piece TLN 1078.615/2
- 1 x filling valve TLN 9701.259/7
- 1 x filling nipple [2] TLN 9452.558/2
- 1 x filling pump [3] with filling hose

Alternatively, large motors can be filled with a filling pump via a pressurised water connection.

CAUTION The filling pressure at the inlet of the screw connection must not exceed 0.5 bar (7.25 psi) maximum when connected to a water supply such as a household tap.

e) After filling, unscrew the filling valve and the adapter piece and screw the cap nuts including plugs [1] back onto the filling and return pipe.

Figure 6-6

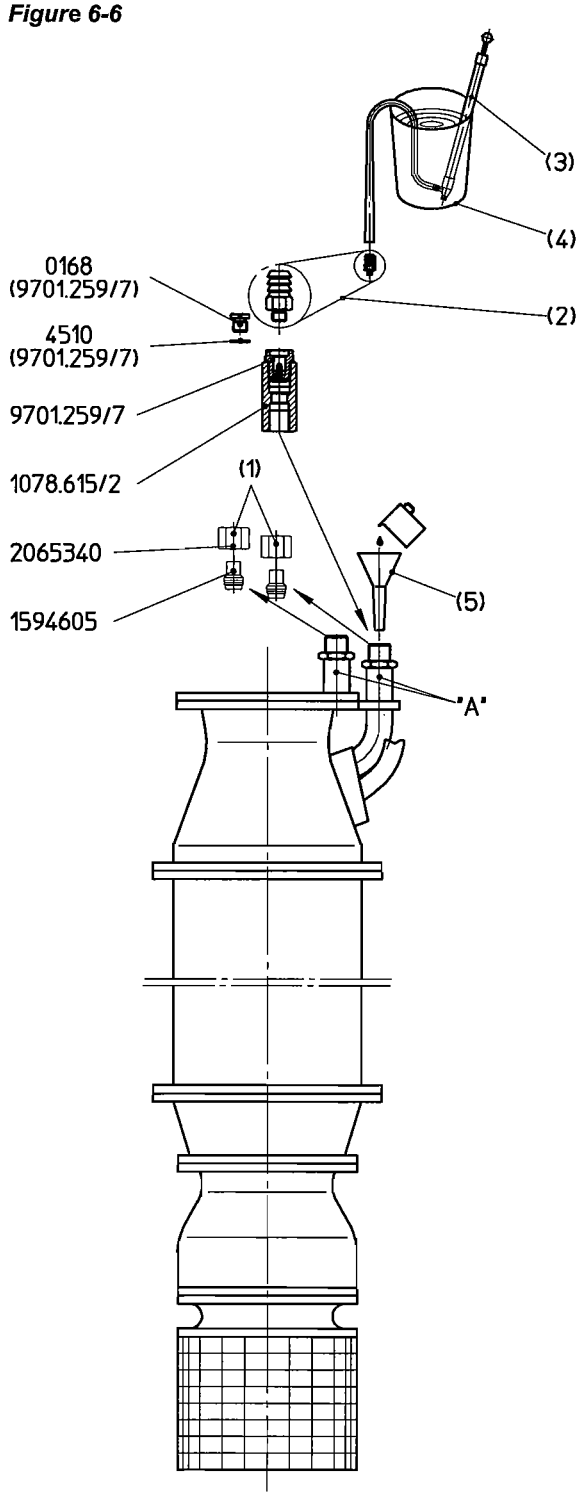

6.6.7 Filling and topping up MP 8/MIP 10 motors for polder pumps using a filling pump (with filling and venting pipe on top)

(See Figure 6-7)

a) Position the unit with the motor vertical and prevent the unit falling over.

b) Screw off the cap nuts with plug [1a] (thread size M 12 x 1.5) from the venting pipe "V" and [1b] (thread size M 16 x 1.5) from the filling pipe "F".

c) Screw in a filling valve [9701.259/7] together with an adapter piece [1078.615/2] onto the thread for the cap nut [1b].

d) Unscrew the plug screw [4510] from the filling valve [9701.259/7] and fit a filling nipple [2] into the threaded hole.

e) Using the filling pump [3] fill the motor until the liquid escapes from the return pipe "V" with no bubbles.

f) After filling, unscrew the adapter piece and the filling valve and screw the cap nut and plug screws back onto the filling and return pipes. For the supplementary installation the following parts (not supplied as standard) are required:

- 1 x adapter piece TLN 1078.615/2
- 1 x filling valve TLN 9701.259/7
- 1 x filling nipple [2] TLN 9452.558/2
- 1 x filling pump [3] with filling hose

Large motors can be filled via a pressurised water connection. For this a hose can be pulled onto the filling nipple [2].

⚠ CAUTION The filling pressure at the inlet of the screw connection must not exceed 0.5 bar (7.25 psi) maximum when connected to a water supply such as a household tap.

Figure 6-7

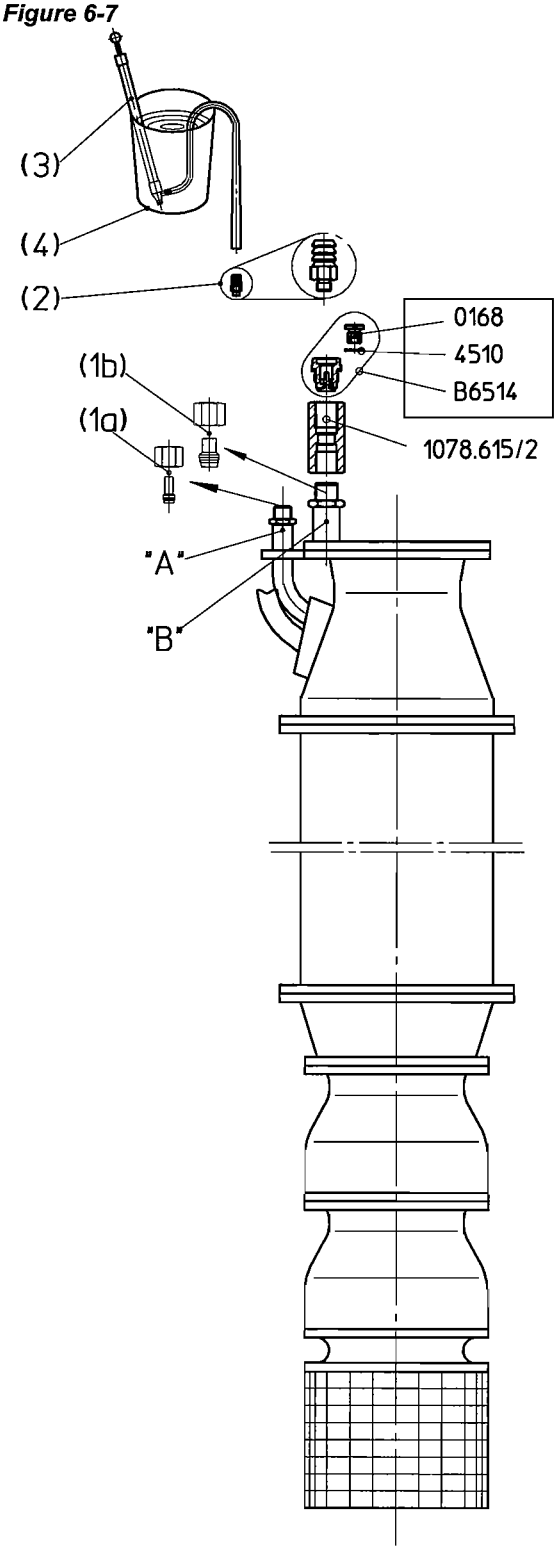

6.6.8 Filling motors with external pressure equalization (outside compensation pipe)

(See figure 6-8)

a) Position the unit with the motor vertical and prevent the unit from falling over.
b) Remove the vent screw [1].
c) Remove the inner screw plug [0168] of the filling valve [B 6514].

CAUTION Handle seal ring [4510] with care.

d) Screw the filling nipple [2] into the threaded hole from which the screw plug [0168] was removed.

Note: The hose connections of the filling nipples are different sizes. The correct one must be fitted according to the thread size (M 10 or M 16) and the pump hose size.

e) Fit the hose end of the filling pump supplied over the nipple and place the pump in a container [3] filled with liquid.
f) Fill the motor until the liquid escaping from the opening for the vent screw [1] contains no bubbles. Refit the vent screw [1].
g) Continue filling the motor via the filling valve [B6514] until the liquid escaping from the vent valve [B 6523] contains no bubbles.
h) For filling the motor, it is recommended to completely screw out the vent valve.
i) Refit the screw plug [0168] into the filling valve [B6514] together with its seal ring [4510].
j) Remove the inner screw plug [0168] of the filling valve.

CAUTION Handle seal ring [4510] with care.

k) Screw the supplied filling nipple [2] into the threaded hole from which the screw plug [0168] was removed, and fill the expansion pipe [5] until the liquid escapes from the top end, "U".
l) Screw the filling nipple out of the filling valve [4] and refit the screw plug [0168] into the filling valve together with the seal ring [4510].

Figure 6-8

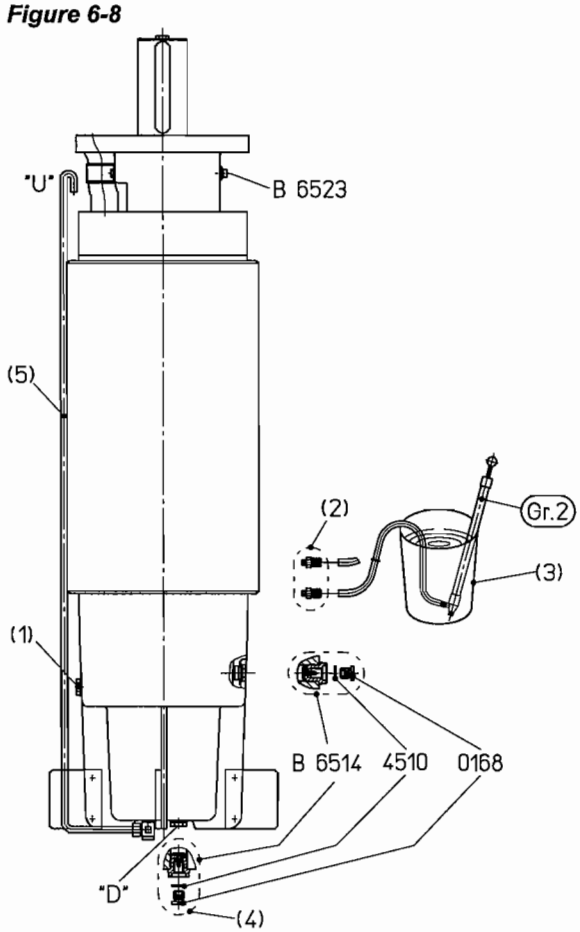

6.6.9 Motors for horizontal installation

(See Figure 6-9A, as-delivered state)
(See Figure 6.9B, operating state)

a) Fill or top up the motor before installation, as described in Section 6.6.1 or 6.6.2.
b) Replace the vent valve [B6523] by a screw plug [6780]. (Marked "A".)
c) Put the motor or complete pump unit into its horizontal position for normal use so that the carriers located on the stator housing (marked "B") are at the highest point of the stator housing.
d) Screw the two plugs [6780] out of the carriers and fit vent valves [B6523] in their place (marked "B").
e) Exchange the screw plugs [6780] for vent valves [B6523]. This must be carried out immediately before installation on site.
f) The screw plug [6780] and one of the two vent valves [B6523] mentioned above must be taken from the accessory pack "Z" supplied with the motor. (See section 6.5.9, *Accessory pack.*) For the second vent valve [B6523], use the one that has been screwed out, as described in b) above.
g) The screw plug [6780] and one of the two vent valves [B6523] mentioned above must be taken from the accessory pack "Z" supplied with the motor. (See section 6.5.9, *Accessory pack.*) For the second vent valve [B6523], use the one that has been screwed out, as described in b) above.
h) All seals [4510] for replacement are contained in accessory pack "Z".

CAUTION After installing the vent valves, the motor must not be rotated or positioned vertically.

i) Top up the motor again in its installed position until the liquid escaping from the vent valve [B6523] contains no bubbles.
j) Pull the filling pump hose off the filling nipple [2], and screw out the filling nipple (if the filling has been carried out with a filling pump) and refit the screw plug [0168] into the filling valve [B6514] together with the seal ring [4510].

Figure 6-9A

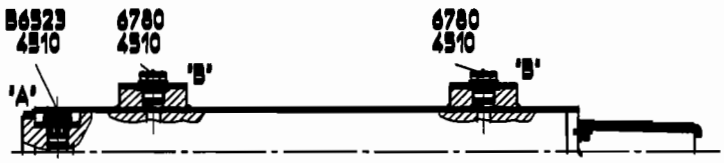

Figure 6-9B

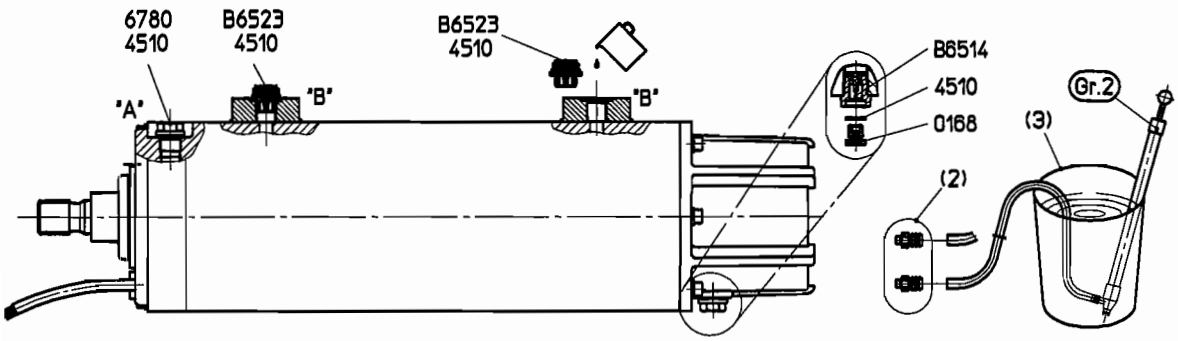

6.6.10 Motors with header tank for horizontal installation

(See Figure 6-10)

Note: Motors for this type of installation must be specially equipped.

a) Put the motor horizontally with the vent valve [B6523] at the top. Screw out the vent valve [B6523] and replace it with a screw plug [6780] from accessory pack "Z". (See section 6.5.9.)
b) Rotate the motor so that the carriers located on the stator housing are at the top. Remove the screw plugs [6780] from the carriers, and screw the pipe connectors [2 and 3] into the threaded holes (M16 x 1.5).
c) Fit the pipes "V" into the connectors [2 and 3] up to the points marked "Y" and close the pipe on the end.
d) Rotate the motor so that the filling valve [B6514] is at the top. Screw out the filling valve [B6514] and screw a pipe connector [4] into the threaded hole (R ⅜ in. or R ¾ in.).
e) Fit the pipes/hoses ["F"] into the connector [4] up to the points marked "X" and close the pipe on the end.
f) Install the motor horizontally and lay further pipes up to the header tank [1].
g) When carrying out this work, it is essential to ensure that no liquid escapes from pipes "V" and "F". If necessary, temporarily plug the pipes at points "X" and "Y" until the pipes have been connected to the header tank [1]. If using multiple pipes, it is advisable to fill the subsequent pipes with liquid immediately after fitting to test the connections for leakage.
h) After installing the header tank [1] and connecting the pipes to it, fill the tank with liquid up to the level mark.

Figure 6-10

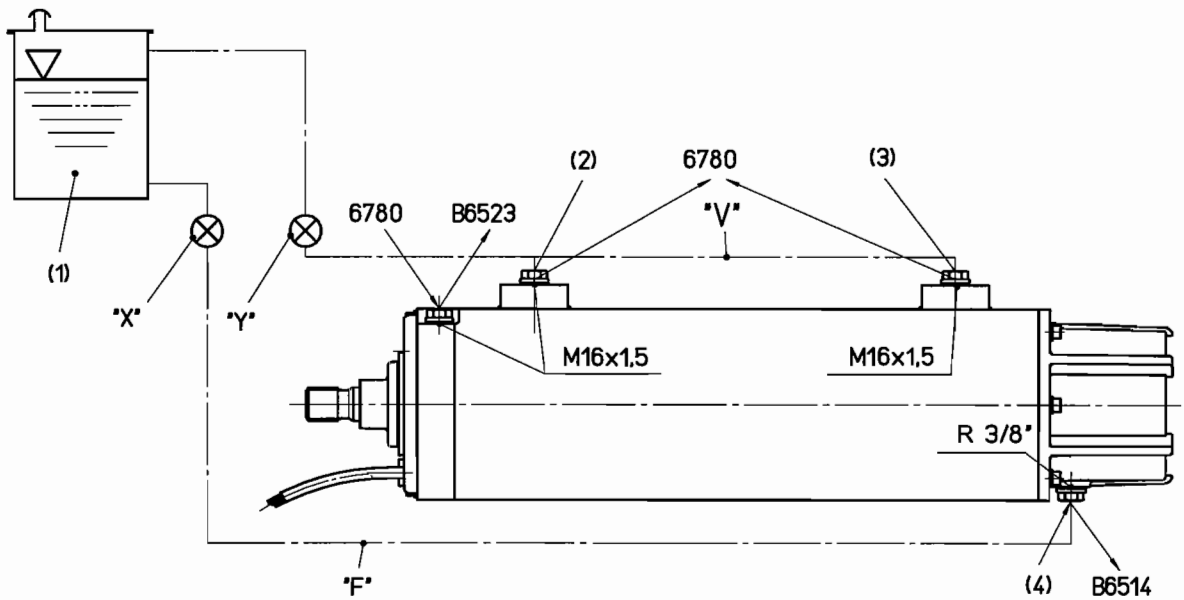

6.6.11 Filling and topping up units with shroud for horizontal installation

(See Figure 6-11)

This instruction is only valid for units above 300 mm (12 in.). For units up to 300 mm (12 in.), see section 6.6.5.

Position the unit with motor vertically and prevent the unit to tilt over

a) Remove the screw plugs [2] from the screw-in sockets "F" (filling pipe) and "V" (vent pipe).

b) ⚠ CAUTION Handle seal ring [3] with care. When undoing the screw plugs [2], hold the screw-in sockets [1] securely with a wrench (size 27) so that the pipes or hoses fitted inside the shroud are not twisted.

c) Screw the filling nipple [4] (thread size M 10) into the threaded hole of the filling pipe "F".

d) Fit the hose end of the filling pump over the filling nipple [4] and place the pump in a container [5] filled with liquid.

e) Using the filling pump, fill the motor until the liquid escaping from the threaded hole of vent pipe "V" contains no bubbles.

f) Pull the filling pump hose off the nipple and screw out the filling nipple.

g) Refit the screw plugs [2] into the screw-in sockets together with the seal rings [3]. When tightening the screw plugs [2] hold the screw-in sockets [1] securely with a wrench (size 27) so that the pipes or hoses fitted inside the shroud are not twisted.

Figure 6-11

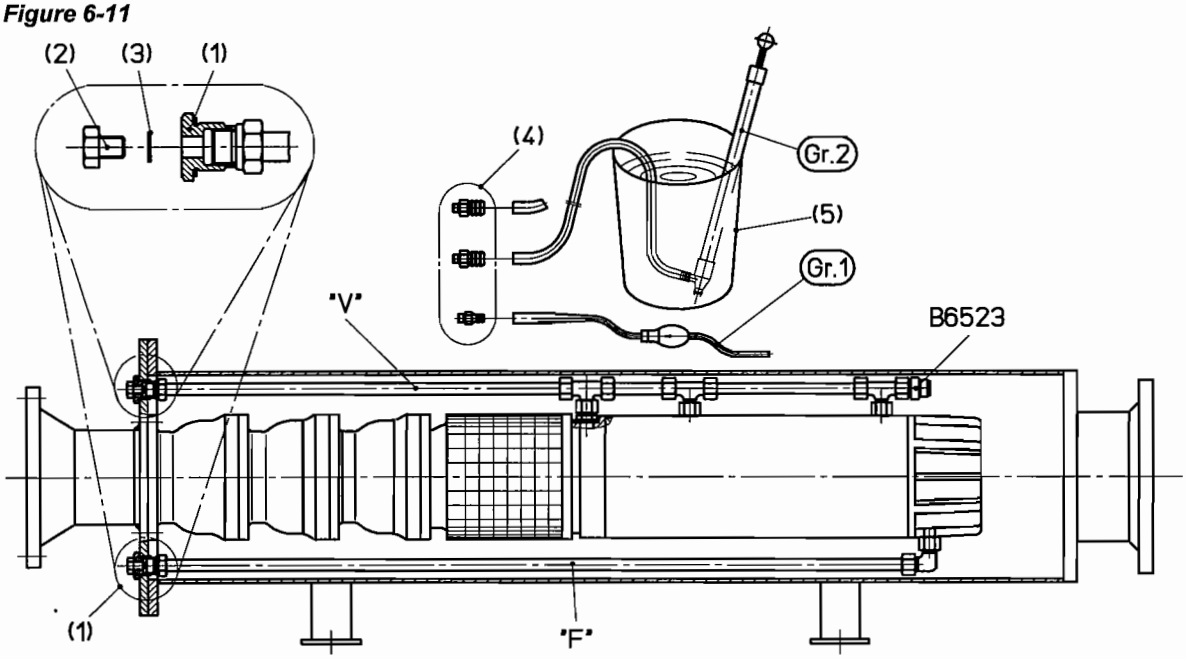

7 COMMISSIONING START-UP, OPERATION AND SHUTDOWN

7.1 Commissioning

7.1.1 General notes

Due to the slender design of the submersible motors, different current values can be measured in the individual phases. This is especially true for two-pole motors. These differences can be reinforced by voltage differences between the phases already present from the line side.

This effect can be reduced to a minimum by transposing the line side phase connections in clockwise order.

Details concerning the electrical switchgear must be taken from the Operating Instructions from the control panel manufacturer.

For practical reasons, the pressure pipe downstream of the slide valve is first closed when the pumped water is free of sand and/or impurities.

7.1.2 First switching on

After the pump unit has been fully installed and all pipelines have been connected upstream and downstream as far as the control valve, the control valve is closed except for a small gap for venting the ascending pipeline. After this, the unit can be switched on.

⚠ CAUTION S-type pump units (pumps with axial impellers) must never be started against a closed slide valve. Overloading could then occur, with consequent damage to the motor.

After switching on, the pressure at the manometer must be greater than the head given in the data sheet minus the water depth (W_t).

If the pressure at the manometer is less than that given in the data sheet, the drive is rotating in the wrong direction. When the direction of rotation is incorrect, the pump will have no or extremely reduced performance.

⚠ CAUTION The unit must not be driven for longer than three minutes in the wrong direction.

If incorrect rotation occurs, exchange two phases with one another on the motor power cable in the control panel.

⚠ CAUTION Do not transpose anything on the star-delta contactor combination.

Single-phase machines are wired within the motor so that they have the correct rotation on every supply system with the prescribed voltage when connected. The direction of rotation on these machines cannot be changed.

As the empty ascending pipeline is being filled, the ammeter may show a higher current than in the data sheet even after the switching-on current has decayed during the initial switching-on.

After this the operational current must be lower than the highest permissible current given in the data sheet.

Open the slide valve slowly, so that the well is not overloaded by too great a flow and sand is also not swept up. Watch the current consumption of the motor on the ammeter whilst opening the valve.

Slowly open the slide valve until the ammeter just shows the operational current according to the data sheet.

When the design operating point for the pump unit has been reached, current consumption must approximate with that given in the data sheet.

The fitting conditions and electrical connections must be checked once again if this is not the case.

The pressure pipe can be connected if there are no abnormalities during and after the test run, if this has not yet been carried out.

7.2 Operation

After the unit has operated for a period of time, it is possible that a minimal readjustment of the motor circuit breaker may be required, due to changed operating conditions, for example by the sinking of the water level.

⚠ CAUTION Do not select a motor protection adjustment setting greater than the highest permissible value given in the data sheet.

For monitoring the water level in the well and in the header tank, we recommend water level detectors or water level measuring units.

7.2.1 Starting frequency

The amount of regularly spaced starts per hour can be found in the data sheet. More frequent starts are only permissible if agreed with the manufacturer.

Maximum number of permissible starts in sequence:

Cold motor:	3 starts
Warm motor:	2 starts
Resting time after each cycle:	5 minutes

It is suggested that the motor is protected by a time relay against unauthorised reconnection.

8 MAINTENANCE

Submersible pump units normally run without needing maintenance.

If a pump unit should stand idle for a lengthy period of time, perform a 10 minute test run every month, so that potential malfunctions can be recognized in time.

CAUTION The pump unit must be completely submersed in pumping medium for this test run.

8.1 General information

As the units are normally used at very great depths, it is recommended that the following checks are performed and recorded at regular intervals, in order to recognize malfunctions in time:

- Current consumption
- Head
- Flow
- System voltage
- Operating hours
- Insulation test
- Temperature (only if temperature sensors PT100 [RTD] exist)

Current consumption of the motor is the most important test for monitoring the unit.

For finding problems, their cause and elimination, see Section 9, *Faults, causes and remedies.*

8.2 Measuring insulation of the motor (including power cable)

Before initial starting, or after long storage or idle time, the insulation resistance of the drive must be measured.

During and after measurement, the conductor ends of the motor power cable and/or the connection terminals may carry dangerous voltage (up to the test voltage) and must not be touched. Before measuring, ensure that there is no line voltage.

To measure the insulation of the system, disconnect all leads of the power supply cable.

All leads must be carefully cleaned to remove dirt or corrosion. Follow the instructions given with the insulation measurement instrument.

Insulation measurement is always performed with a measuring-circuit voltage of 500 volts. The value must be read for the duration of a minute.

The motor windings or power cable, charged up to the measuring-circuit voltage, must be discharged after measurement using the insulation-measuring device.

The minimum insulation resistance and critical insulation resistance limits for measurements at a winding temperature of 25 °C (77 °F) are as follows:

New motors	over 500 MΩ
Minimum insulation value of new motors with power supply cable	5.0 MΩ
Critical insulation value after longer operational time	0.5 MΩ

If the insulation value is near the minimum causes could be increased air humidity and/or dirty, moist conductor ends or a winding temperature higher than 25 °C (77 °F).

A relatively low insulation resistance does not definitely show that the motor will break down due to insulation problems.

However the insulation must be inspected, if after measurements over a longer period, an extreme drop in the insulation resistance occurs within a short time.

If the insulation resistance falls below the minimum value, the cause must be determined or the faulty part (power cable, line connection or windings) identified and the insulation weakness removed.

8.2.1 Motors with one power supply cable

DANGER ***The cable conductors become charged with the test voltage while measuring the blank ends of the power cable and they must therefore be insulated.***

Only one lead must be measured to earth as all other leads are internally connected.

8.2.2 Motors with two power supply cables

DANGER ***The cable conductors become charged with the test voltage while measuring the blank ends of the power cable and they must therefore be insulated.***

The following insulating measurements of the winding and power cables are possible, depending on the internal motor connections:

1) two cables on open phase connection - measurement to be taken between each core of the cable and earth.
2) two parallel cables with internal star connection - measurement to be taken between one core and earth.
3) two parallel cables with individual coil systems (star or delta connection) - measurement to be taken between one core of each system and earth.

8.3 Pump units

The pump unit can be operated without maintenance, insofar as there are no irregularities in operation or pumping, caused by sand or a corrosive pumping medium, that make premature removal necessary.

Fluctuating and/or rapidly increasing current consumption indicate mechanical problems in the pump or motor.

Strong oscillation of the pressure, and at the same time of the ammeter, can be caused by irregular water inflow.

8.4 Temperature sensor PT100 (RTD)

8.4.1 Continuity check

The continuity check must be carried out with a resistance measurement bridge at a voltage not higher than 5 volts.

To check the correct temperature values of the PT100 (RTD) the ambient temperature must be known.

When units are installed it is possible to test the PT100 (RTD) provided the exact temperature of the well water is known.

8.4.2 One temperature sensor

Carry out the three measurements in table 8-1:

Table 8-1.

	Colour code
Measurement 1	white – red 1
Measurement 2	white – red 2
Measurement 3	red 1 – red 2

The difference between the readings for measurements 1 and 3 or 2 and 3 is the resistance of the RTD (PT100).

These values should be compared with table 8-3.

8.4.3 Two temperature sensors

Carry out the six measurements in table 8-2:

Table 8-2.

Measurement	Colour-code	PT 100
1	white 1 - red 1	No 1
2	white1 - red 2	
3	red 1 - red 2	
4	white 2 - red 3	No 2
5	white 2 - red 4	
6	red 3 - red 4	

The difference between the readings of measurements 1 (4) and 3 (6) or 2 (5) and 3 (6) is the resistance of the RTD (PT100).

These values should be compared with table 8-3.

Table 8-3.

°C (°F)	Ω	°C (°F)	Ω	°C (°F)	Ω
1 (33.8)	100.39	36 (96.8)	113.86	71 (159.8)	127.34
2 (35.6)	100.77	37 (98.6)	114.25	72 (161.6)	127.72
3 (37.4)	101.16	38 (100.4)	114.63	73 (163.4)	128.11
4 (39.2)	101.54	39 (102.2)	115.02	74 (165.2)	128.49
5 (41.0)	101.93	40 (104.0)	115.40	75 (167.0)	128.88
6 (42.8)	102.31	41 (105.8)	115.79	76 (168.8)	129.26
7 (44.6)	102.70	42 (107.6)	116.17	77 (170.6)	129.65
8 (46.4)	103.08	43 (109.4)	116.56	78 (172.4)	130.03
9 (48.2)	103.47	44 (111.2)	116.94	79 (174.2)	130.42
10 (50.0)	103.85	45 (113.0)	117.33	80 (176.0)	130.80
11 (51.8)	104.24	46 (114.8)	117.71	81 (177.8)	131.19
12 (53.6)	104.62	47 (116.6)	118.10	82 (179.6)	131.57
13 (55.4)	105.01	48 (118.4)	118.48	83 (181.4)	131.96
14 (57.2)	105.39	49 (120.2)	118.87	84 (183.2)	132.34
15 (59.0)	105.78	50 (122.0)	119.25	85 (185.0)	132.73
16 (60.8)	106.16	51 (123.8)	119.64	86 (186.8)	133.11
17 (62.6)	106.55	52 (125.6)	120.02	87 (188.6)	133.50
18 (64.4)	106.93	53 (127.4)	120.41	88 (190.4)	133.88
19 (66.2)	107.32	54 (129.2)	120.79	89 (192.2)	134.27
20 (68.0)	107.70	55 (131.0)	121.18	90 (194.0)	134.65
21 (69.8)	108.09	56 (132.8)	121.56	91 (195.8)	135.04
22 (71.6)	108.47	57 (134.6)	121.95	92 (197.6)	135.42
23 (73.4)	108.86	58 (136.4)	122.33	93 (199.4)	135.81
24 (75.2)	109.24	59 (138.2)	122.72	94 (201.2)	136.19
25 (77.0)	109.63	60 (140.0)	123.10	95 (203.0)	136.58
26 (78.8)	110.01	61 (141.8)	123.49	96 (204.8)	136.96
27 (80.6)	110.40	62 (143.6)	123.87	97 (206.6)	137.35
28 (82.4)	110.78	63 (145.4)	124.26	98 (208.4)	137.73
29 (84.2)	111.17	64 (147.2)	124.64	99 (210.2)	138.12
30 (86.0)	111.55	65 (149.0)	125.03	100 (212.0)	138.50
31 (87.8)	111.94	66 (15.8)	125.41		
32 (89.6)	112.32	67 (152.6)	125.80		
33 (91.4)	112.71	68 (154.4)	126.18		
34 (93.2)	113.09	69 (156.2)	126.57		
35 (95.0)	113.48	70 (158.0)	126.95		

8.4.4 Checking insulation resistance

All cores of the temperature sensors PT100 (RTD) have to be connected together to check the insulation resistance. The motor, together with its installed one or two PT100 (RTD) sensors and the signal cable, need to be submerged in water.

The testing voltage must not be higher than 500 volts.

The insulation resistance of a new unit should be at least 250 MΩ.

The critical insulation resistance, after a long time in service should be at least 0.25 MΩ.

The insulation resistance values apply for an ambient temperature of 40 °C (104 °F). At lower values the connection between the PT100 and the signal cable must be separated and the measurements retaken.

These values should be compared with table 8-3.

8.5 Removal of the pump unit

When lifting the pump to withdraw it, take account of the pump weight plus the weight of the water column contained within the riser pipe if the pump unit does not have a check valve with drain holes. (If the check valve does have drain holes the weight of the water column is not applicable.)

8.6 Overhaul of the pump unit

The structural design of a submersible pump unit makes assembly and disassembly possible using simple tools.

In case of removal, installation instructions specific to the unit can be requested from the manufacturer.

It is recommended, however, that the unit is examined by Flowserve technicians or that it is overhauled at a Flowserve authorized service depot.

When taking the unit out of service and before starting removal work, studying these operating instructions once again is recommended.

For special advice regarding additional information or for purchasing replacement parts, the following information is required:

- Serial number of the unit from the nameplate (also printed on the stator housing)
- Description of the unit type according to the nameplate
- For questions regarding replacement parts:
  a. item number from the sectional drawing
  b. part description and number as shown in the parts list
  c. quantity of parts required
- For problems:
  a. short description of the problem and/or the effects
  b. description of the faulty part(s) as shown in the parts list

Please refer all questions directly to the main factory or to a factory representative.

9 FAULTS: CAUSES AND REMEDIES

FAULT SYMPTOM

Motor protection triggered	Pump does not start	Motor overheats	Unit runs but does not pump	Unit vibrates or is noisy	Motor loses filling liquid	Pump requires excessive power	Pump does not draw in water at start	Insufficient pressure developed	Insufficient capacity developed	PROBABLE CAUSES	POSSIBLE REMEDIES
										A. System problems	
●			●	●		●	●	●	●	Suction lift too high or level too low.	Check $NPSH_A$ > $NPSH_R$ proper submergence.
				●			●	●	●	Excessive amount of air or gas in liquid.	Check submergence. Losses on suction strainer.
								●	●	Pipework defective. Leakage in pipework..	Check pipework.
				●			●	●	●	Foot valve too small.	Investigate replacing the foot valve.
		●						●		Foot valve partially clogged.	Clean foot valve. Investigate replacing foot valve.
		●	●	●			●	●	●	Inlet of suction housing insufficiently submerged. Fitting depth inadequate.	Check out system design. Install the unit deeper.
●			●			●		●	●	Total head of system does not correspond to pump characteristics.	Check discharge head and head losses in discharge pipe at the valve settings. Check back pressure is not too high.
●						●		●		Total head of system lower than pump design head.	Throttle at discharge valve or ask Flowserve if the impeller can be trimmed.
						●				Specific gravity of liquid different to design.	Consult Flowserve.
●				●						Operation at very low capacity.	Measure value and check minimum permitted.
●		●		●		●				Operation at high capacity.	Measure value and check maximum permitted.
●		●	●	●		●				Slide valve closed. Pressure pipe not free.	Check slide valve. Check piping.
										B. Mechanical problems	
				●						Improperly designed foundation.	Check setting of baseplate: tighten, adjust, grout base as required.
	●			●		●				Shaft bent.	Check shaft runouts are within acceptable values.
●	●	●		●		●				Rotating part rubbing on stationary part internally.	Check for signs of this and consult Flowserve, if necessary.
●	●	●		●		●				Bearings worn.	Replace bearings.
						●		●	●	Wearing ring surfaces worn.	Touch up or replace worn wearing rings.
			●	●				●	●	Impellers damaged or eroded.	Replace impellers and check for reason.
					●					Mechanical seal improperly installed.	Check alignment of faces or damaged parts and assembly method used.
					●					Incorrect type of mechanical seal for operating conditions.	Consult Flowserve.
●	●			●	●	●				Shaft running off centre because of worn bearings or misalignrnent.	Check misalignment and correct if necessary. If alignment is satisfactory check bearings for excessive wear.
				●						Impeller out of balance resulting in vibration.	Check and consult Flowserve.

FAULT SYMPTOM

Motor protection triggered	Pump does not start	Motor overheats	Unit runs but does not pump	Unit vibrates or is noisy	Motor loses filling liquid	Pump requires excessive power	Pump does not draw in water at start	Insufficient pressure developed	Insufficient capacity developed	PROBABLE CAUSES	POSSIBLE REMEDIES
●				●		●		●		Abrasive solids in liquid pumped.	Check and consult Flowserve.
●	●	●	●	●		●		●		Internal misalignment due to improper repairs causing impeller to rub.	Check method of assembly, possible damage or state of cleanliness during assembly.
●	●	●		●						Excessive thrust caused by a mechanical failure inside the pump.	Check wear condition of impeller, its clearances and liquid passages.
●	●			●		●				Improper installation of bearings.	Check method of assembly, possible damage or state of cleanliness during assembly and type of bearing used.
●	●			●		●				Damaged bearings due to contamination.	Check contamination source and replace damaged bearings.
●						●			●	Slide valve not fully open.	Open slide valve.
●			●			●			●	Pressure pipe clogged. Foreign body in the pipe line.	Clean pipework.
●	●	●				●			●	Pump blocked by impurities inside the pump.	Disassemble pump section and clean.
●	●	●	●	●		●			●	Pump or motor sluggish.	Check smooth running of motor/pump.
●			●					●	●	Well filter clogged up.	Remove unit and regenerate well.
	●		●							Coupling between pump and motor faulty.	Remove unit and repair.
●			●	●			●	●	●	Suction strainer clogged up.	Remove unit and clean suction strainer.
										C. Electrical problems	
			●	●				●	●	Wrong direction of rotation of motor.	Reverse two phases at motor terminal box.
●	●									Motor circuit breaker incorrectly adjusted.	Readjust motor circuit breaker according to data card or rating plate.
●		●	●	●		●		●	●	Motor running too slow. Under voltage or wrong frequency.	Check if system voltage and frequency agree with data sheet.
●	●	●				●		●	●	Phase failure.	Examine power cable for damage. Check fuses.
●	●	●				●		●	●	Blown fuses.	Replace fuses.
●	●								●	Damaged power cables.	Replace power cables.

10 CERTIFICATION

Certificates determined from the Contract requirements are provided with these Instructions where applicable. Examples are certificates for CE marking, ATEX marking etc. If required, copies of other certificates sent separately to the Purchaser should be obtained from the Purchaser for retention with these User Instructions.

Notes:

FLOWSERVE
REGIONAL SALES OFFICES:

USA and Canada
Flowserve Corporation (Pump Division)
5215 North O'Connor Blvd. Suite 2300
Irving, Texas 75039, USA

Tel +1 972 443 6500
Toll free 800 728 PUMP (7867)
Fax +1 972 443 6800

Latin America and Caribbean
Flowserve Corporation (Pump Division)
6840 Wynnwood Lane
Houston, Texas 77008, USA

Tel +1 713 803 4434
Fax +1 713 803 4497

Europe, Middle East and Africa
Flowserve Limited (Pump Division)
Harley House, 94 Hare Lane
Claygate, Esher, Surrey KT10 0RB
United Kingdom

Tel +44 (0)1372 463 700
Fax +44 (0)1372 460 190

Asia Pacific
Flowserve Pte Ltd (Pump Division)
200 Pandan Loop, 06-03/04
Pantech 21, Singapore 128388

Tel +65 775 3003
Fax +65 779 4607

Visit our web site at: www.flowserve.com

Your Flowserve company contact:

Flowserve Hamburg GmbH
Friedrich-Ebert-Damm 105
D-22047, Hamburg, Germany

Post Address:
Flowserve Hamburg GmbH
PO Box 70 13 20
D-22013, Hamburg, Germany

Telephone +49 (0) 40 69 689 379
Repair/Service Fax +49 (0) 40 69 689 480
Sales/Admin Fax +49 (0) 40 69 689 242
Email hamburg@flowserve.com

Your local Flowserve offices:

Flowserve Pump Division
5310 Taneytown Pike, PO Box 91
Taneytown, MD 21787-0091, USA

Telephone (24 hours) +1 (410) 756 2602
Repair/Service Fax +1 (410) 756 2615
Parts inquiry/Order PH +1 (800) 526 3569

Flowserve Pumps Limited
PO Box 17, Newark, Notts NG24 3EN
United Kingdom

Telephone (24 hours) +44 (0) 1636 494 600
Sales/Admin Fax +44 (0) 1636 705 991
Repair/Service Fax +44 (0) 1636 494 833
Email inewark@flowserve.com

To find your local Flowserve representative, please use the Sales Support Locator System found at www.flowserve.com

APPENDIX C

Manufacturer's Information

Franklin Electric Submersible Motors Manual

DRAFT

Submersible Motors

Application ◆ Installation ◆ Maintenance

60 Hz, Single and Three Phase Motors

August 2000 Edition

Franklin Electric

The Company You Trust Deep Down

ATTENTION!
IMPORTANT INFORMATION FOR INSTALLERS OF THIS EQUIPMENT!

THIS EQUIPMENT IS INTENDED FOR INSTALLATION BY TECHNICALLY QUALIFIED PERSONNEL. FAILURE TO INSTALL IT IN COMPLIANCE WITH NATIONAL AND LOCAL ELECTRICAL CODES, AND WITH FRANKLIN ELECTRIC RECOMMENDATIONS, MAY RESULT IN ELECTRICAL SHOCK OR FIRE HAZARD, UNSATISFACTORY PERFORMANCE, AND EQUIPMENT FAILURE. FRANKLIN INSTALLATION INFORMATION IS AVAILABLE FROM PUMP MANUFACTURERS AND DISTRIBUTORS, AND DIRECTLY FROM FRANKLIN ELECTRIC. CALL FRANKLIN TOLL FREE 800-348-2420 FOR INFORMATION.

WARNING

SERIOUS OR FATAL ELECTRICAL SHOCK MAY RESULT FROM FAILURE TO CONNECT THE MOTOR, CONTROL ENCLOSURES, METAL PLUMBING, AND ALL OTHER METAL NEAR THE MOTOR OR CABLE, TO THE POWER SUPPLY GROUND TERMINAL USING WIRE NO SMALLER THAN MOTOR CABLE WIRES. TO REDUCE RISK OF ELECTRICAL SHOCK, DISCONNECT POWER BEFORE WORKING ON OR AROUND THE WATER SYSTEM. DO NOT USE MOTOR IN SWIMMING AREAS.

ATTENTION!
INFORMATIONS IMPORTANTES POUR L'INSTALLATEUR DE CET EQUIPEMENT.

CET EQUIPEMENT DOIT ETRE INTALLE PAR UN TECHNICIEN QUALIFIE. SI L'INSTALLATION N'EST PAS CONFORME AUX LOIS NATIONALES OU LOCALES AINSI QU'AUX RECOMMANDATIONS DE FRANKLIN ELECTRIC, UN CHOC ELECTRIQUE, LE FEU, UNE PERFORMANCE NON ACCEPTABLE, VOIRE MEME LE NON-FONCTIONNEMENT PEUVENT SURVENIR. UN GUIDE D'INSTALLATION DE FRANKLIN ELECTRIC EST DISPONIBLE CHEZ LES MANUFACTURIERS DE POMPES, LES DISTRIBUTEURS, OU DIRECTEMENT CHEZ FRANKLIN. POUR DE PLUS AMPLES RENSEIGNEMENTS, APPELEZ SANS FRAIS LE 800-348-2420.

AVERTISSEMENT

UN CHOC ELECTRIQUE SERIEUX OU MEME MORTEL EST POSSIBLE, SI L'ON NEGLIGE DE CONNECTER LE MOTEUR, LA PLOMBERIE METALLIQUE, BOITES DE CONTROLE ET TOUT METAL PROCHE DU MOTEUR A UN CABLE ALLANT VERS UNE ALIMENTATION D'ENERGIE AVEC BORNE DE MISE A LA TERRE UTILISANT AU MOINS LE MEME CALIBRE QUE LES FILS DU MOTEUR. POUR REDUIRE LE RISQUE DE CHOC ELECTRIQUE. COUPER LE COURANT AVANT DE TRAVAILLER PRES OU SUR LE SYSTEM D'EAU. NE PAS UTILISER CE MOTEUR DANS UNE ZONE DE BAIGNADE.

ATENCION!
INFORMACION PARA EL INSTALADOR DE ESTE EQUIPO.

PARA LA INSTALACION DE ESTE EQUIPO, SE REQUIERE DE PERSONAL TECNICO CALIFICADO. EL NO CUMPLIR CON LAS NORMAS ELECTRICAS NACIONALES Y LOCALES, ASI COMO CON LAS RECOMENDACIONES DE FRANKLIN ELECTRIC DURANTE SU INSTALACION, PUEDE OCASIONAR, UN CHOQUE ELECTRICO, PELIGRO DE UN INCENDIO, OPERACION DEFECTUOSA E INCLUSO LA DESCOMPOSTURA DEL EQUIPO. LOS MANUALES DE INSTALACION Y PUESTA EN MARCHA DE LOS EQUIPOS, ESTAN DISPONIBLES CON LOS DISTRIBUIDORES, FABRICANTES DE BOMBAS O DIRECTAMENTE CON FRANKLIN ELECTRIC. PUEDE LLAMAR GRATUITAMENTE PARA MAYOR INFORMACION AL TELEFONO 800-348-2420.

ADVERTENCIA

PUEDE OCURRIR UN CHOQUE ELECTRICO, SERIO O FATAL DEBIDO A UNA ERRONEA CONECCION DEL MOTOR, DE LOS TABLEROS ELECTRICOS, DE LA TUBERIA, DE CUALQUIER OTRA PARTE METALICA QUE ESTA CERCA DEL MOTOR O POR NO UTILIZAR UN CABLE PARA TIERRA DE CALIBRE IGUAL O MAYOR AL DE LA ALIMENTACION. PARA REDUCIR EL RIESGO DE CHOQUE ELECTRIC, DESCONECTAR LA ALIMENTACION ELECTRICA ANTES DE INICIAR A TRABAJAR EN EL SISTEMA HIDRAULICO. NO UTILIZAR ESTE MOTOR EN ALBERCAS O AREAS EN DONDE SE PRACTIQUE NATACION.

Commitment To Quality

Franklin Electric is committed to provide customers with defect free products through our program of continuous improvement. Quality shall, in every case, take precedence over quantity.

Franklin Electric

Submersible Motors

Application • Installation • Maintenance Manual

The submersible motor is a reliable, efficient and trouble-free means of powering a pump. Its needs for a long operational life are simple. They are:

1. A suitable operating environment
2. An adequate supply of electricity
3. An adequate flow of cooling water over the motor
4. An appropriate pump load

All considerations of application, installation, and maintenance of submersible motors relate to these four areas. This manual will acquaint you with these needs and assist you if service or maintenance is required.

Contents

Application - All Motors

Storage 3
Frequency of Starts 3
Mounting Position 3
Transformer Capacity 4
Effects of Torque 4
Engine Driven Generators 5
Use of Check Valves 5
Well Diameters, Casing, Top Feeding, Screens 6
Water Temperature and Flow 6
Flow Inducer Sleeve 6
Head Loss Past Motor 7
Hot Water Applications 7-8
Drawdown Seals 9
Grounding Control Boxes and Panels 9
Grounding Surge Arrestors 9
Control Box and Panel Environment 9

Application - Single Phase Motors

3-Wire Control Boxes 10
2-Wire Motor Solid State Controls 10
QD Relays (Solid State) 10
Cable Selection - 2-Wire or 3-Wire 11
Two Different Cable Sizes 12
Single Phase Motor Specifications 13
Auxiliary Running Capacitors 14
Buck-Boost Transformers 14

Application - Three Phase Motors

Cable Selection - 60°C Three Wire 15-16
Cable Selection - 60°C Six Wire 17
Cable Selection - 75°C Three Wire 18-19
Cable Selection - 75°C Six Wire 20
Three Phase Motor Specifications 21-23
Overload Protection 24-26
Subtrol-Plus 27
Power Factor Correction 27
Submersible Pump Installation Check List (No.3656)
Submersible Motor Installation Record (No. 2207)
Submersible Booster Installation Record (No. 3655)
Three Phase Starter Diagrams 28
Three Phase Power Unbalance 29
Rotation and Current Unbalance 29
Three Phase Motor Lead Identification 30
Phase Converters 30
Reduced Voltage Starters 31
Inline Booster Pump Systems 31-32
Variable Speed Operation 32

Installation - All Motors

Submersible Motors - Dimensions 33
Tightening Lead Connector Jam Nut 34
Pump to Motor Coupling 34
Shaft Height and Free End Play 34
Submersible Leads and Cables 34
Splicing Submersible Cables 35

Maintenance - All Motors

System Trouble Shooting 36-37
Preliminary Tests 38
Insulation Resistance 39
Resistance of Drop Cable 39

Maintenance - Single Phase Motors & Controls

Identification of Cables 40
Single Phase Control Boxes 40
Ohmmeter Tests 41
QD Control Box Parts 42
Integral HP Control Box Parts 43-44
Control Box Wiring Diagrams 45-48

Maintenance - Electronic Products

Pumptec-Plus Trouble Shooting During Installation .. 49
Pumptec-Plus Trouble Shooting After Installation 50
CP Water Trouble Shooting 51
QD Pumptec and Pumptec Trouble Shooting 52
Subtrol-Plus Trouble Shooting 53-54

Application - All Motors

Storage

Franklin Electric submersible motors are a water-lubricated design. The fill solution consists of a mixture of de-ionized water and Propylene Glycol (a non-toxic antifreeze). The solution will prevent damage from freezing in temperatures to -40°F (-40°C); motors should be stored in areas that do not go below this temperature. The solution will partially freeze below 27°F (-3°C), but no damage occurs. Repeated freezing and thawing should be avoided to prevent possible loss of fill solution.

There may be an interchange of fill solution with well water during operation. Care must be taken with motors removed from wells during freezing conditions to prevent damage.

When the storage temperature does not exceed 100°F (37°C), storage time should be limited to two years. Where temperatures reach 100° to 130°F, storage time should be limited to one year.

Loss of a few drops of liquid will not damage the motor as an excess amount is provided, and the filter check valve will allow lost liquid to be replaced by filtered well water upon installation. If there is reason to believe there has been a considerable amount of leakage, consult the factory for checking procedures.

Frequency of Starts

The average number of starts per day over a period of months or years influences the life of a submersible pumping system. Excessive cycling affects the life of control components such as pressure switches, starters, relays and capacitors. Rapid cycling can also cause motor spline damage, bearing damage, and motor overheating. All these conditions can lead to reduced motor life.

The pump size, tank size and other controls should be selected to keep the starts per day as low as practical for longest life. The maximum number of starts per 24-hour period is shown in Table 3.

Motors should run a minimum of one minute to dissipate heat build up from starting current.

Table 3 Number of Starts

Motor Rating		Max Starts Per 24 Hr. Period	
HP	KW	Single Phase	Three Phase
Up to .75 HP	Up to .55	300	300
1 thru 5.5	.75 thru 4	100	300
7.5 thru 30	5.5 thru 22	50	100
40 and over	30 and over		100

Mounting Position

Franklin submersible motors are designed primarily for operation in the vertical, shaft-up position.

During acceleration, the pump thrust increases as its output head increases. In cases where the pump head stays below its normal operating range during startup and full speed condition, the pump may create upward thrust. This creates upward thrust on the motor upthrust bearing. This is an acceptable operation for short periods at each start, but running continuously with upthrust may cause excessive wear on the upthrust bearing.

With certain restrictions, motors are also suitable for operations in positions from shaft-up to shaft-horizontal. As the mounting position becomes further from vertical and closer to horizontal, the probability of shortened thrust bearing life increases. For normal thrust bearing life expectancy with motor positions other than shaft-up, follow these recommendations:

1. Minimize the frequency of starts, preferably to fewer than 10 per 24-hour period.
2. Do not use in systems which can run even for short periods at full speed without thrust toward the motor.

Transformer Capacity - Single Phase or Three Phase

Distribution transformers must be adequately sized to satisfy the KVA requirements of the submersible motor. When transformers are too small to supply the load, there is a reduction in voltage to the motor.

Table 4 references the motor horsepower rating, single phase and three phase, total effective KVA required, and the smallest transformer required for open or closed three phase systems. Open systems require larger transformers since only two transformers are used.

Other loads would add directly to the KVA sizing requirements of the transformer bank.

Table 4 Transformer Capacity

Motor Rating		Total Effective KVA Required	Smallest KVA Rating-Each Transformer	
HP	KW		Open WYE or DELTA 2-Transformers	Closed WYE or DELTA 3-Transformers
1.5	1.1	3	2	1
2	1.5	4	2	1.5
3	2.2	5	3	2
5	3.7	7.5	5	3
7.5	5.5	10	7.5	5
10	7.5	15	10	5
15	11	20	15	7.5
20	15	25	15	10
25	18.5	30	20	10
30	22	40	25	15
40	30	50	30	20
50	37	60	35	20
60	45	75	40	25
75	55	90	50	30
100	75	120	65	40
125	90	150	85	50
150	110	175	100	60
175	130	200	115	70
200	150	230	130	75

NOTE: Standard KVA ratings are shown. If power company experience and practice allows transformer loading higher than standard, higher loading values may be used for transformer(s) to meet total effective KVA required provided correct voltage and balance is maintained.

Effects of Torque

During starting of a submersible pump, the torque developed by the motor must be supported through the pump, delivery pipe or other supports. Most pumps rotate in the direction which causes unscrewing torque on right-handed threaded pipe or pump stages. All threaded joints, pumps and other parts of the pump support system must be capable of withstanding the maximum torque repeatedly without loosening or breaking. Unscrewing joints will break electrical cable and may cause loss of the pump-motor unit.

To safely withstand maximum unscrewing torques with a minimum safety factor of 1.5, tightening all threaded joints to at least 10 lb. ft. per motor horsepower is recommended (Table 4A). It may be necessary to tack or strap weld pipe joints on high horsepower pumps, especially at shallower settings.

Table 4A Torque Required (Examples)

Motor Rating		HP x 10 lb.Ft.	Minimum Safe Torque-Load
HP	KW		
1 HP & Less	.75 KW & Less	1 X 10	10 lb. Ft.
20 HP	15 KW	20 X 10	200 lb. Ft.
75 HP	55 KW	75 x 10	750 lb. Ft.
200 HP	150 KW	200 x 10	2000 lb. Ft.

Application - All Motors

Use of Engine Driven Generators — Single Phase or Three Phase

Table 5 lists minimum generator sizes based on typical 80°C rise continuous duty generators, with 35% maximum voltage dip during starting, for Franklin's three-wire motors, single or three phase.

This is a general chart. The generator manufacturer should be consulted whenever possible, especially on larger sizes.

There are two types of generators available: externally and internally regulated. Most are externally regulated. They use an external voltage regulator that senses the output voltage. As the voltage dips at motor start-up, the regulator increases the output voltage of the generator.

Internally regulated (self-excited) generators have an extra winding in the generator stator. The extra winding senses the output current to automatically adjust the output voltage.

Generators must be sized to deliver at least 65% of the rated voltage during starting to ensure adequate starting torque. Besides sizing, generator frequency is important as the motor speed varies with the frequency (Hz). Due to pump affinity laws, a pump running at 1 to 2 Hz below motor nameplate frequency design will not meet its performance curve. Conversely, a pump running at 1 to 2 Hz above may trip overloads.

Generator Operation. Always start the generator before the motor is started and always stop the motor before the generator is shut down. The motor thrust bearing may be damaged if the generator is allowed to coast down with the motor running. This same condition occurs when the generator is allowed to run out of fuel.

Follow generator manufacturer's recommendations for de-rating at higher elevations or using natural gas.

Table 5 Engine Driven Generators

Motor Rating		Minimum Rating of Generator			
		Externally Regulated		Internally Regulated	
HP	KW	KW	KVA	KW	KVA
1/3	0.25	1.5	1.9	1.2	1.5
1/2	0.37	2	2.5	1.5	1.9
3/4	0.55	3	3.8	2	2.5
1	0.75	4	5	2.5	3.125
1 1/2	1.1	5	6.25	3	3.8
2	1.5	7.5	9.4	4	5
3	2.2	10	12.5	5	6.25
5	3.7	15	18.75	7.5	9.4
7 1/2	5.5	20	25	10	12.5
10	7.5	30	37.5	15	18.75
15	11	40	50	20	25
20	15	60	75	25	31
25	18.5	75	94	30	37.5
30	22	100	125	40	50
40	30	100	125	50	62.5
50	37	150	188	60	75
60	45	175	220	75	94
75	55	250	313	100	125
100	75	300	375	150	188
125	90	375	469	175	219
150	110	450	563	200	250
175	130	525	656	250	313
200	150	600	750	275	344

NOTE: For best starting of 2-wire motors, the minimum generator rating is 50% higher than shown.

WARNING: To prevent accidental electrocution, automatic or manual transfer switches must be used any time a generator is used as standby or back up on power lines. Contact power company for use and approval.

Use of Check Valves

It is recommended that one or more check valves always be used in submersible pump installations. If the pump does not have a built-in check valve, a line check valve should be installed in the discharge line within 25 feet of the pump and below the draw down level of the water supply. For deeper settings, it is recommended that line check valves be installed per the manufacturer's recommendations.

Swing type check valves are **not** acceptable and should never be used with submersible motors/pumps. Swing type check valves have a slower reaction time which can cause water hammer (see below). Internal pump check valves or spring loaded check valves close quickly and help eliminate water hammer.

Check valves are used to hold pressure in the system when the pump stops. They also prevent backspin, water hammer and upthrust. Any of these can lead to early pump or motor failure.

NOTE: Only positive sealing check valves should be used in submersible installations. Although drilling the check valves or using drain-back check valves may prevent back spinning, they create upthrust and water hammer problems.

A. Backspin - With no check valve or a failed check valve, the water in the drop pipe and the water in the system can flow down the discharge pipe when the motor stops. This can cause the pump to rotate in a reverse direction. If the motor is started while this is happening, a heavy strain may be placed across the pump-motor assembly. It can also cause excessive thrust bearing wear because the motor is not turning fast enough to ensure an adequate film of water between the thrust bearing and thrust shoes.

B. Upthrust - With no check valve, or with a leaking check valve, the unit starts under a zero head condition. This causes an uplifting or upthrust on the impeller-shaft assembly in the pump. This upward movement carries across the pump-motor coupling and creates an upthrust condition in the motor. Repeated upthrust can cause premature failure of both the pump and the motor.

C. Water Hammer - If the lowest check valve is more than 30 feet above the standing water level, or a lower check valve leaks and the check valve above holds, a partial vacuum is created in the discharge piping. On the next

pump start, water moving at very high velocity fills the void and strikes the closed check valve and the stationary water in the pipe above it, causing a hydraulic shock. This shock can split pipes, break joints and damage the pump and/or motor. Water hammer is an easily detected noise. When discovered, the system should be shut down and the pump installer contacted to correct the problem.

Wells-Large Diameter, Uncased, Top Feeding & Screened Sections

Franklin Electric submersible motors are designed to operate with a cooling flow of water over the motor.

If the pump installation does not provide the minimum flow shown in Table 6, a flow inducer sleeve (flow sleeve) must be used. The conditions requiring a flow sleeve are:

- Well diameter is too large to meet Table 6 flow requirements.
- Pump is in an open body of water.
- Pump is in a rock well or below the well casing.
- The well is “top-feeding”.
- Pump is set in or below screens or perforations.

Water Temperature and Flow

Franklin Electric submersible motors, except 8" SEVERE DUTY (see note below), are designed to operate up to maximum service factor horsepower in water up to 86°F (30°C). A flow of 0.25 ft/sec for 4" High Thrust motors and 0.5 ft/sec for 6 and 8 inch motors is required for proper cooling. Table 6 shows minimum flow rates, in GPM, for various well diameters and motor sizes.

If the motor is operated in water over 86°F (30°C), water flow past the motor must be increased to maintain safe motor operating temperatures. See HOT WATER APPLICATIONS on Page 7.

NOTE: 8" SEVERE DUTY motors are designed to operate with loading up to maximum service factor horsepower in water up to 90°C (195°F) with water flow past motor of 0.5 ft/sec (0.15 m/sec).

Table 6 Required Cooling Flow

Minimum GPM required for motor cooling in water up to 86°F (30°C).			
Casing or Sleeve I.D. Inches (mm)	4" High Thrust Motor .25 ft/sec. GPM (l/m)	6" Motor .50 ft/sec. GPM (l/m)	8" Motor .50 ft/sec. GPM (l/m)
4 (102)	1.2 (4.5)	-	-
5 (127)	7 (26.5)	-	-
6 (152)	13 (49)	9 (34)	-
7 (178)	20 (76)	25 (95)	-
8 (203)	30 (114)	45 (170)	10 (40)
10 (254)	50 (189)	90 (340)	55 (210)
12 (305)	80 (303)	140 (530)	110 (420)
14 (356)	110 (416)	200 (760)	170 (645)
16 (406)	150 (568)	280 (1060)	245 (930)

.25 ft/sec = 7.62 cm/sec .50 ft/sec = 15.24 cm/sec
1 inch = 2.54 cm

Flow Inducer Sleeve

If the flow rate is less than specified or coming from above the pump, then a flow inducer sleeve must be used. A flow sleeve is always required in an open body of water. FIG 1 shows a typical flow inducer sleeve construction.

EXAMPLE : A six-inch motor and pump that delivers 60 GPM will be installed in a 10" well.

From Table 6, 90 GPM would be required to maintain proper cooling. In this case adding an 8” or smaller flow sleeve provides the required cooling.

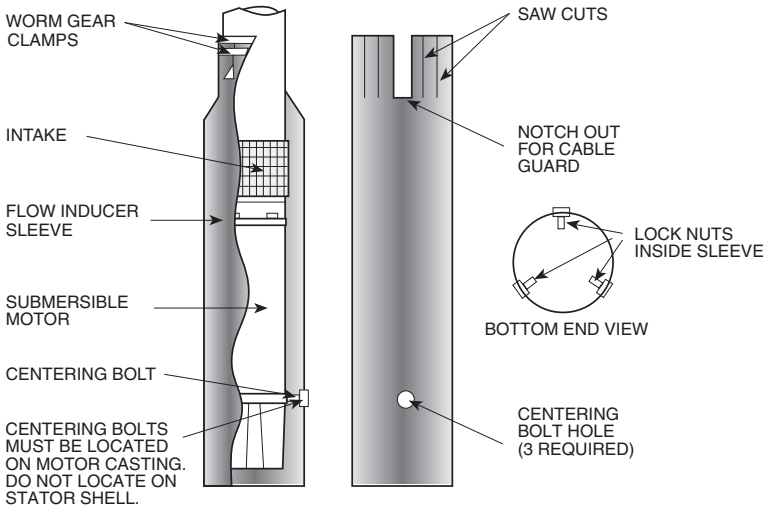

FIG. 1

Application - All Motors

Head Loss From Flow Past Motor

Table 7 lists the approximate head loss due to flow between an average length motor and smooth casing or flow inducer sleeve.

Table 7 Head Loss in Feet (Meters) at Various Flow Rates

Motor Diameter		4"	4"	4"	6"	6"	6"	8"	8"
Casing ID in Inches (mm)		4 (102)	5 (127)	6 (152)	6 (152)	7 (178)	8 (203)	8.1 (206)	10 (254)
Flow Rate in GPM (l/m)	25 (95)	0.3 (.09)							
	50 (189)	1.2 (.37)							
	100 (378)	4.7 (1.4)	0.3 (.09)		1.7 (.52)				
	150 (568)	10.2 (3.1)	0.6 (.18)	0.2 (.06)	3.7 (1.1)				
	200 (757)		1.1 (.34)	0.4 (.12)	6.3 (1.9)	0.5 (.15)		6.8 (2.1)	
	250 (946)		1.8 (.55)	0.7 (.21)	9.6 (2.9)	0.8 (.24)		10.4 (3.2)	
	300 (1136)		2.5 (.75)	1.0 (.30)	13.6 (4.1)	1.2 (.37)	0.2 (.06)	14.6 (4.5)	
	400 (1514)				23.7 (7.2)	2.0 (.61)	0.4 (.12)	24.6 (7.5)	
	500 (1893)					3.1 (.94)	0.7 (.21)	37.3 (11.4)	0.6 (0.2)
	600 (2271)					4.4 (1.3)	1.0 (.30)	52.2 (15.9)	0.8 (0.3)
	800 (3028)								1.5 (0.5)
	1000 (3785)								2.4 (0.7)

Hot Water Applications

When the pump-motor operates in water hotter than 86°F (30°C), a flow rate of at least 3 ft/sec is required. When selecting the motor to drive a pump in over 86°F (30°C) water, the motor horsepower must be de-rated per the following procedure.

1. Using Table 7A, determine pump GPM required for different well or sleeve diameters. If necessary, add a flow sleeve to obtain at least 3 ft/sec flow rate.

Table 7A - Minimum GPM (l/m) Required for 3 ft/sec (.91 m/sec) Flow Rate

Casing or Sleeve I.D.		4" High Thrust Motor		6" Motor		8" Motor	
Inches	(mm)	GPM	(l/m)	GPM	(l/m)	US GPM	(l/m)
4	(102)	15	(57)				
5	(127)	80	(303)				
6	(152)	160	(606)	52	(197)		
7	(178)			150	(568)		
8	(203)			260	(984)	60	(227)
10	(254)			520	(1970)	330	(1250)
12	(305)					650	(2460)
14	(356)					1020	(3860)
16	(406)					1460	(5530)

2. Determine pump horsepower required from the pump manufacturer's curve.

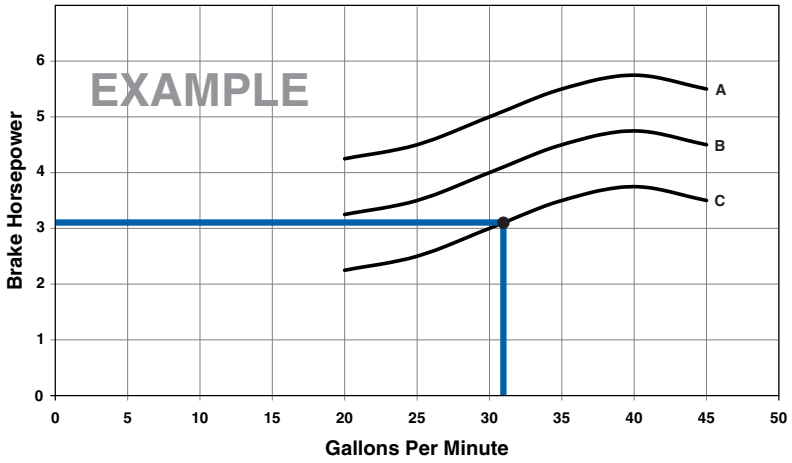

FIG. 2 MANUFACTURER'S PUMP CURVE

3. Multiply the pump horsepower required by the heat factor multiplier from Table 8.

Table 8 Heat Factor Multiplier at 3 ft/sec (.91 m/sec) Flow Rate

Maximum Water Temperature	1/3 - 5 HP .25 - 3.7 KW	7 1/2 - 30 HP 5.5 - 22 KW	Over 30HP Over 22 KW
140°F (60°C)	1.25	1.62	2.00
131°F (55°C)	1.11	1.32	1.62
122°F (50°C)	1.00	1.14	1.32
113°F (45°C)	1.00	1.00	1.14
104°F (40°C)	1.00	1.00	1.00
95°F (35°C)	1.00	1.00	1.00

4. Select a rated HP motor on Table 8A whose Service Factor Horsepower is at least the value calculated in Item 3.

Table 8A Service Factor Horsepower

HP	KW	SFHP	HP	KW	SFHP	HP	KW	SFHP	HP	KW	SFHP
1/3	0.25	0.58	3	2.2	3.45	25	18.5	28.75	100	75	115
1/2	0.37	0.8	5	3.7	5.75	30	22	34.5	125	90	143.75
3/4	0.55	1.12	7 1/2	5.5	8.62	40	30	46	150	110	175.5
1	0.75	1.4	10	7.5	11.5	50	37	57.5	175	130	201.25
1 1/2	1.1	1.95	15	11	17.25	60	45	69	200	150	230
2	1.5	2.5	20	15	23	75	55	86.25			

Hot Water Applications - Example

EXAMPLE: A 6" pump end requiring 39 HP input will pump 124°F water in an 8" well at a delivery rate of 140 GPM. From Table 7A, a 6" flow sleeve will be required to increase the flow rate to at least 3 ft/sec.

Using Table 8, the 1.62 heat factor multiplier is selected because the HP required is over 30 HP and water temperature is above 122°F. Multiply 39 HP x 1.62 (multiplier), which equals 63.2 HP. This is the minimum rated service factor horsepower usable at 39 HP in 124°F. Using Table 8A, select a motor with a rated service factor horsepower above 63.2 HP. A 60 HP motor has a service factor horsepower of 69, so a 60 HP motor may be used.

For many hot water applications Franklin Electric's 8" SEVERE DUTY MOTOR is more economical than a de-rated 8" standard water well motor. See SEVERE DUTY MOTOR application manual for additional options for hot water pumping.

Application - All Motors

Drawdown Seals

Allowable motor temperature is based on atmospheric pressure or higher surrounding the motor. “Drawdown seals,” which seal the well to the pump above it’s intake to maximize delivery, are not recommended, since the suction created can be lower than atmospheric pressure.

Grounding Control Boxes and Panels

The National Electrical Code requires that the control box or panel-grounding terminal always be connected to supply ground. If the circuit has no grounding conductor and no metal conduit from the box to supply panel, use a wire at least as large as line conductors and connect as required by the National Electrical Code, from the grounding terminal to the electrical supply ground.

WARNING: Failure to ground the control frame can result in a serious or fatal electrical shock hazard if a circuit fault occurs.

Grounding Surge Arrestors

An above ground surge arrestor must be grounded, metal to metal, all the way to the water strata for the lightning arrestor to be effective. GROUNDING THE ARRESTOR TO THE SUPPLY GROUND OR TO A DRIVEN GROUND ROD PROVIDES LITTLE OR NO PROTECTION FOR THE MOTOR.

Control Box and Panel Environment

Franklin Electric control boxes meet UL requirements for NEMA Type 3R enclosures. They are suitable for indoor and outdoor applications within temperatures of +14°F (-10°C) to 122°F (50°C). Operating control boxes below +14° F can cause reduced starting torque and loss of overload protection when overloads are located in control boxes.

Control boxes and panels should never be mounted in direct sunlight or high temperature locations. This will cause shortened capacitor life and unnecessary tripping of overload protectors. A ventilated enclosure painted white to reflect heat is recommended for an outdoor, high temperature location.

A damp well pit, or other humid location, accelerates component failure from voltage breakdown and corrosion.

Control boxes with voltage relays are designed for vertical upright mounting only. Mounting in other positions will affect the operation of the relay.

Application - Single Phase Motors

3-Wire Control Boxes

Single phase three-wire submersible motors require the use of control boxes. Operation of motors without control boxes or with incorrect boxes can result in motor failure and voids warranty.

Control boxes contain starting capacitors, a starting relay, and, in some sizes, overload protectors, running capacitors and contactors.

Ratings through 1 HP may use a solid state or a potential (voltage) type starting relay, while larger ratings use potential relays.

Potential (Voltage) Relays

Potential relays have normally closed contacts. When power is applied, both start and main motor windings are energized, and the motor starts. At this instant, the voltage across the start winding is relatively low and not enough to open the contacts of the relay.

As the motor accelerates, the increasing voltage across the start winding (and the relay coil) opens the relay contacts. This opens the starting circuit and the motor continues to run on the main winding alone, or the main plus run capacitor circuit. After the motor is started the relay contacts remain open.

CAUTION: Be certain that control box HP and voltage match the motor.

2-Wire Motor Solid State Controls

BIAC Switch Operation

When power is applied the bi-metal switch contacts are closed so the triac is conducting and energizes the start winding. As RPM increases, the voltage in the sensor coil generates heat in the bi-metal strip, causing the bi-metal strip to bend and open the switch circuit. This removes the starting winding and the motor continues to run on the main winding alone.

Approximately 5 seconds after power is removed from the motor, the bi-metal strip cools sufficiently to return to its closed position and the motor is ready for the next start cycle. If, during operation, the motor speed drops, the lowered voltage in the sensor coil allows the bi-metal contacts to close, and bring the motor back to operating speed.

CAUTION: Restarting the motor within 5 seconds after power is removed may cause the motor overload to trip.

Rapid Cycling

The BIAC starting switch will reset within approximately 5 seconds after the motor is stopped. If an attempt is made to restart the motor before the starting switch has reset, the motor may not start; however, there will be current in the main winding until the overload protector interrupts the circuit. The time for the protector to reset is longer than the reset of the starting switch. Therefore, the start switch will have closed and the motor will operate.

A waterlogged tank will cause fast cycling. When a waterlogged condition does occur, the user will be alerted to the problem during the off time (overload reset time) since the pressure will drop drastically. When the water-logged tank condition is detected the condition should be corrected to prevent nuisance tripping of the overload protector.

Bound Pump (Sandlocked)

When the motor is not free to turn, as with a sandlocked pump, the BIAC switch creates a “reverse impact torque” in the motor in either direction. When the sand is dislodged, the motor will start and operate in the correct direction.

QD Relays (Solid State)

There are two elements in the relay: a reed switch and a triac. The reed switch consists of two tiny rectangular blade-type contacts, which bend under magnetic flux. It is hermetically sealed in glass and is located within a coil, which conducts line current. When power is supplied to the control box, the main winding current passing through the coil immediately closes the reed switch contacts. This turns on the triac, which supplies voltage to the start winding, thus starting the motor.

Once the motor is started, the operation of the QD relay is an interaction between the triac, the reed switch and the motor windings. The solid state switch senses motor speed through the changing phase relationship between start winding current and line current. As the motor approaches running speed, the phase angle between the start current and the line current become nearly in phase. At this point, the reed switch contacts open, turning off the triac. This removes voltage from the start winding and the motor continues to run on the main winding only. With the reed switch contacts open and the triac turned off, the QD relay is ready for the next starting cycle.

2- or 3-Wire Cable, 60 Hz (Service Entrance to Motor - Maximum Length In Feet)

Table 11

Motor Rating			60° C Insulation - AWG Copper Wire Size												
Volts	HP	KW	14	12	10	8	6	4	3	2	1	0	00	000	0000
115	1/3	.25	130	210	340	540	840	1300	1610	1960	2390	2910	3540	4210	5060
	1/2	.37	100	160	250	390	620	960	1190	1460	1780	2160	2630	3140	3770
230	1/3	.25	550	880	1390	2190	3400	5250	6520	7960	9690	11770			
	1/2	.37	400	650	1020	1610	2510	3880	4810	5880	7170	8720			
	3/4	.55	300	480	760	1200	1870	2890	3580	4370	5330	6470	7870		
	1	.75	250	400	630	990	1540	2380	2960	3610	4410	5360	6520		
	1 1/2	1.1	190	310	480	770	1200	1870	2320	2850	3500	4280	5240		
	2	1.5	150	250	390	620	970	1530	1910	2360	2930	3620	4480		
	3	2.2	**120**	190	300	470	750	1190	1490	1850	2320	2890	3610		
	5	3.7	0	0	**180**	280	450	710	890	1110	1390	1740	2170	2680	
	7 1/2	5.5	0	0	0	**200**	310	490	610	750	930	1140	1410	1720	
	10	7.5	0	0	0	0	**250**	390	490	600	750	930	1160	1430	1760
	15	11	0	0	0	0	**170**	**270**	340	430	530	660	820	1020	1260

Table 11A

Motor Rating			75° C Insulation - AWG Copper Wire Size												
Volts	HP	KW	14	12	10	8	6	4	3	2	1	0	00	000	0000
115	1/3	.25	130	210	340	540	840	1300	1610	1960	2390	2910	3540	4210	5060
	1/2	.37	100	160	250	390	620	960	1190	1460	1780	2160	2630	3140	3770
230	1/3	.25	550	880	1390	2190	3400	5250	6520	7960	9690				
	1/2	.37	400	650	1020	1610	2510	3880	4810	5880	7170	8720			
	3/4	.55	300	480	760	1200	1870	2890	3580	4370	5330	6470	7870	9380	
	1	.75	250	400	630	990	1540	2380	2960	3610	4410	5360	6520	7780	9350
	1 1/2	1.1	190	310	480	770	1200	1870	2320	2850	3500	4280	5240	6300	7620
	2	1.5	150	250	390	620	970	1530	1910	2360	2930	3620	4480	5470	6700
	3	2.2	**120**	190	300	470	750	1190	1490	1850	2320	2890	3610	4470	5550
	5	3.7	0	**110**	180	280	450	710	890	1110	1390	1740	2170	2680	3330
	7 1/2	5.5	0	0	**120**	200	310	490	610	750	930	1140	1410	1720	2100
	10	7.5	0	0	0	**160**	250	390	490	600	750	930	1160	1430	1760
	15	11	0	0	0	0	**170**	270	340	430	530	660	820	1020	1260

1 Foot = .3048 Meter

Lengths **not** in bold type meet the U.S. National Electrical Code ampacity for either individual conductors or jacketed 60°C or 75°C cable.

Lengths in bold type meet the National Electric Code ampacity only for individual conductor 60°C or 75°C cable, in free air or water, not in magnetic enclosure or conduit. If any other cable is used, the National Electric Code as well as the local codes should be observed. Flat molded and web cable is considered jacketed cable.

Cable lengths in Table 11 & 11A allow for a 5% voltage drop running at maximum nameplate amperes. If 3% voltage drop is desired multiply Table 11 and 11A lengths by .6 to get maximum cable length.

Table 11 & 11A is based on copper wire. If aluminum wire is used, it must be two sizes larger than copper wire and oxidation inhibitors must be used on connections.

EXAMPLE: If Table 11 & 11A calls for #12 copper wire, #10 aluminum wire would be required.

The portion of the total cable length which is between the supply and single phase control box, with a line contactor, should not exceed 25% of total maximum allowable to ensure reliable contactor operation. Single phase control boxes without line contactors may be connected at any point in the total cable length.

Contact Franklin Electric for 90°C cable lengths. See pages 14, 42, and 43 for applications using 230V motors on 208V power systems.

Application - Single Phase Motors

Two different cable sizes can be used.

Depending on the installation, any number of combinations of cable may be used.

For example, in a replacement installation, the well already has 160 feet of buried #10 cable between the service entrance and the well head. The question is: What size cable is required in the well with a 3 HP, 230 volt, single phase motor setting at 310 feet?

1. From Table 11 & 11A, a 3 HP motor can use up to 300 feet of #10 AWG cable.
2. The application has 160 feet of buried #10 AWG cable.
3. 160 feet ÷ 300 feet (max allowable) is equal to 53.3% of max allowable.
4. 100% - 53.3% = 46.7% remaining of another size cable.
5. 310 feet (well head to motor) is 46.7% of max allowable length of another cable size.
6. 310 feet ÷ .467 (46.7%) = 664 feet is max allowable.
7. 664 feet is less than or equal to what size cable in Table 11 or 11A under the 3 HP listing?

   The table shows #8 is good for 470 feet, which is too short. #6 is good for 750 feet, therefore #6 can be used for the remaining 310 feet.

EXAMPLE: 3 HP, 230 Volt, 1 PH Motor

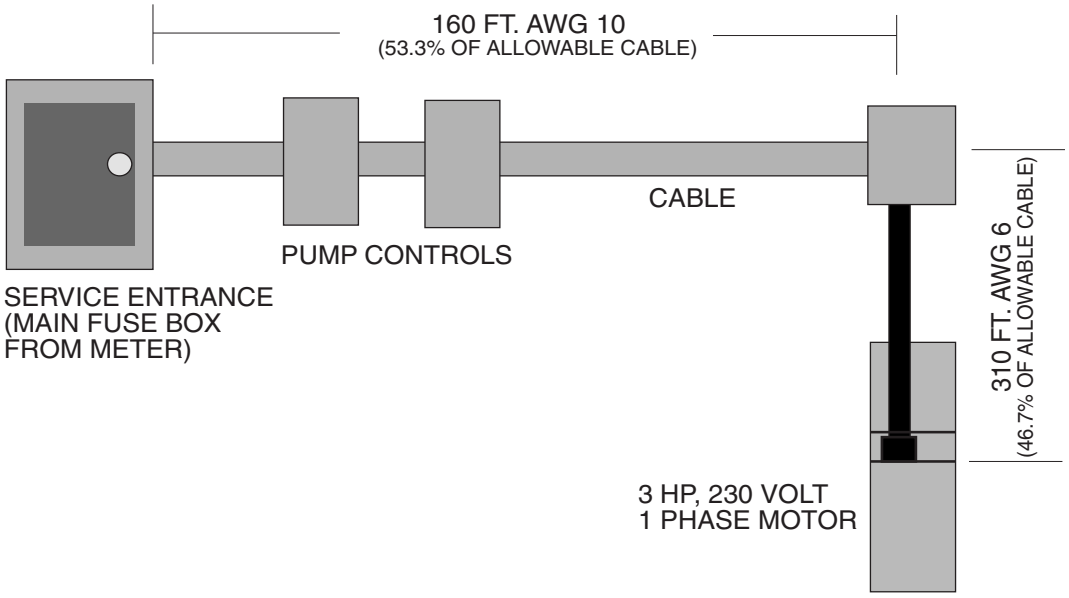

Table 13 Single Phase Motor Specifications (60 Hz) 3450 RPM

Type	Motor Model Prefix	Rating					Full Load	Maximum (S.F. Load)	Winding (1) Res. In Ohms	Efficiency %			Power Factor %			Locked Rotor	KVA	Circuit Breakers or Fuse Amps		
																		Nontime Delay (Std.) Fuse	Dual Element Time Delay Fuse	Inverse Time Breaker
		HP	KW	Volts	Hz	S.F.	(2) Amps	(2) Amps	M=Main Res. S=Start Res.	S.F.	F.L.	3/4	S.F.	F.L.	3/4	AMPS	Code			
4 Inch 2 - Wire	244502	1/3	0.25	115	60	1.75	8.0	9.2	1.4-1.8	60	51	45	71	54	47	48.4	S	25	15	20
	244503	1/3	0.25	230	60	1.75	4.0	4.6	6.0-7.4	60	51	45	71	54	47	24.2	S	15	8	15
	244504	1/2	0.37	115	60	1.60	10.0	12.0	1.0-1.3	62	55	49	73	58	50	64.4	R	35	20	30
	244505	1/2	0.37	230	60	1.60	5.0	6.0	4.2-5.2	62	55	49	73	58	50	32.2	R	20	10	15
	244507	3/4	0.55	230	60	1.50	6.8	8.0	3.0-3.6	64	59	53	74	62	53	40.7	N	25	15	20
	244508	1	0.75	230	60	1.40	8.2	9.8	2.2-2.7	65	62	57	74	63	54	48.7	N	30	20	25
	244309	1 1/2	1.1	230	60	1.30	10.6	13.1	1.5-1.9	65	63	59	80	74	66	66.6	M	35	20	30
4 Inch 3 - Wire	214502	1/3	0.25	115	60	1.75	Y8.0 B8.0 R0	Y9.2 B9.2 R0	M1.4-1.8 S6.5-7.9	60	51	45	71	54	47	34.8	N	25	15	20
	214503	1/3	0.25	230	60	1.75	Y4.0 B4.0 R0	Y4.6 B4.6 R0	M6.0-7.4 S26.1-32.0	60	51	45	71	54	47	17.2	N	15	8	15
	214504	1/2	0.37	115	60	1.60	Y10.0 B10.0 R0	Y12.0 B12.0 R0	M1.0-1.3 S4.1-5.1	62	55	49	73	58	50	50.5	M	35	20	30
	214505	1/2	0.37	230	60	1.60	Y5.0 B5.0 R0	Y6.0 B6.0 R0	M4.2-5.2 S16.7-20.5	62	55	49	73	58	50	23.0	M	20	10	15
	214507	3/4	0.55	230	60	1.50	Y6.8 B6.8 R0	Y8.0 B8.0 R0	M3.0-3.6 S11.0-13.4	64	59	53	74	62	53	34.2	M	25	15	20
	214508	1	0.75	230	60	1.40	Y8.2 B8.2 R0	Y9.8 B9.8 R0	M2.2-2.7 S10.1-12.3	65	62	57	74	63	54	41.8	L	30	20	25
4 Inch 3 - Wire with Run Cap	224300	1 1/2	1.1	230	60	1.30	Y10.0 B9.9 R1.3	Y11.5 B11.0 R1.3	M1.5-2.3 S6.2-12.0	68	66	62	81	74	66	52.0	J	35	20	30
	224301	2	1.5	230	60	1.25	Y10.0 B9.3 R2.6	Y13.2 B11.9 R2.6	M1.6-2.3 S5.2-7.15	70	71	69	93	91	87	51.0	G	30	20	25
	224302	3	2.2	230	60	1.15	Y14.0 B12.2 R4.7	Y17.0 B14.5 R4.5	M.9-1.5 S3.0-4.9	71	72	70	98	98	96	82.0	G	45	30	40
	224303	5	3.7	230	60	1.15	Y23.0 B19.1 R8.0	Y27.5 B23.2 R7.8	M.68-1.0 S2.1-2.8	71	72	70	98	96	94	121.0	F	80	45	60
6 Inch	226110	5	3.7	230	60	1.15	Y23.0 B18.2 R8.0	Y27.5 B23.2 R7.8	M.55-.68 S1.3-1.6	76	75	72	98	98	99	99.0	E	80	45	60
	226111	7 1/2	5.5	230	60	1.15	Y36.5 B34.4 R5.5	Y42.1 B40.5 R5.4	M.36-.50 S.92-1.2	73	74	74	91	90	87	165.0	F	125	70	100
	226112	10	7.5	230	60	1.15	Y44.0 B39.5 R9.3	Y51.0 B47.5 R8.9	M.27-.33 S.80-.99	76	77	76	96	96	95	204.0	E	150	80	125
	226113	15	11	230	60	1.15	Y62.0 B52.0 R17.5	Y75.0 B62.5 R16.9	M.17-.22 S.68-.93	79	80	80	97	98	98	303.0	E	200	125	175

(1) Main winding - yellow to black
Start winding - yellow to red

(2) Y = Yellow lead - line amps
B = Black lead - main winding amp
R = Red lead - start or auxiliary winding amps

Performance is typical, not guaranteed, at specified voltages and specified capacitor values.

Performance at voltage ratings not shown is similar, except amps vary inversely with voltage.

Application - Single Phase Motors

Auxiliary Running Capacitors

Added capacitors must be connected across “Red” and “Black” control box terminals, in parallel with any existing running capacitors. The additional capacitor(s) should be mounted in an auxiliary box. The values of additional running capacitors most likely to reduce noise are given below. The tabulation gives the S.F. amps normally in each lead with the added capacitor.

Table 14 Auxiliary Capacitor Sizing

Motor Rating		Normal Running Capacitor(s)	Auxilary Running Capacitors For Noise Reduction			S.F. Amps with Run Cap		
HP	Volts	Mfd.	Mfd	Min. Volts	Franklin Part	Yellow	Black	Red
1/3	115	0	45(1)	370	One 155327109	6.3	5.3	2.9
1/2		0	60(1)	370	Two 155327101	8.4	7.0	4.0
1/3	230	0	10(1)	370	One 155328102	3.3	3.1	1.2
1/2		0	15(1)	370	One 155328101	4.2	3.5	2.0
3/4		0	20(1)	370	One 155328103	5.8	5.0	2.5
1		0	25(1)	370	One ea. 155328101 155328102	7.1	5.6	3.4
1 1/2		10	20	370	One 155328103	9.3	7.5	4.4
2		20	10	370	One 155328102	11.2	9.2	3.8
3		35	10	370	One 155328102	16.1	13.0	5.9
5		60	None	370		27.5	23.2	7.8
7 1/2		45	45	370	One ea. 155327101 155328101	37.0	32.0	11.3
10		70	30	370	One 155327101	49.0	42.0	13.0
15		135	None			75.0	62.5	16.9

(1) Do not add running capacitors to standard production 1/3 through 1 HP control boxes, which use current relays, solid state starting switches or QD relays! Adding capacitors will cause switch failure. If the control box is converted to use a voltage relay, the specified running capacitance can be added.

Buck-Boost Transformers

When the available power supply voltage is not within the proper range, a buck-boost transformer is often used to adjust voltage to match the motor. The most common usage on submersible motors is boosting a 208 volt supply to use a standard 230 volt single phase submersible motor and control. While tables to give a wide range of voltage boost or buck are published by transformer manufacturers, the following table shows Franklin’s recommendations. The table, based on boosting the voltage 10%, shows the minimum rated transformer KVA needed and the common standard transformer KVA.

Table 14A Buck-Boost Transformer Sizing

Motor HP	1/3	1/2	3/4	1	1 1/2	2	3	5	7 1/2	10	15
Load KVA	1.02	1.36	1.84	2.21	2.65	3.04	3.91	6.33	9.66	11.70	16.60
Minimum XFMR KVA	0.11	0.14	0.19	0.22	0.27	0.31	0.40	0.64	0.97	1.20	1.70
Standard XFMR KVA	0.25	0.25	0.25	0.25	0.50	0.50	0.50	0.75	1.00	1.50	2.00

Buck-Boost transformers are power transformers, not control transformers. They may also be used to lower voltage when the available power supply voltage is too high.

Table 15 Three Phase 60°C Cable, 60 Hz (Service Entrance to Motor) Maximum Length in Feet

Motor Rating			60°C Insulation - AWG Copper Wire Size													MCM Copper Wire Size				
Volts	HP	KW	14	12	10	8	6	4	3	2	1	0	00	000	0000	250	300	350	400	500
	1/2	0.37	710	1140	1800	2840	4420													
200 v	3/4	0.55	510	810	1280	2030	3160													
60Hz	1	0.75	430	690	1080	1710	2670	4140	5140											
Three	1 1/2	1.1	310	500	790	1260	1960	3050	3780											
Phase	2	1.5	240	390	610	970	1520	2360	2940	3610	4430	5420								
3 - Lead	3	2.2	180	290	470	740	1160	1810	2250	2760	3390	4130								
	5	3.7	**110**	170	280	440	690	1080	1350	1660	2040	2490	3050	3670	4440	5030				
	7 1/2	5.5	0	0	200	310	490	770	960	1180	1450	1770	2170	2600	3150	3560				
	10	7.5	0	0	0	**230**	370	570	720	880	1090	1330	1640	1970	2390	2720	3100	3480	3800	4420
	15	11	0	0	0	**160**	**250**	390	490	600	740	910	1110	1340	1630	1850	2100	2350	2570	2980
	20	15	0	0	0	0	**190**	**300**	380	460	570	700	860	1050	1270	1440	1650	1850	2020	2360
	25	18.5	0	0	0	0	0	**240**	**300**	**370**	460	570	700	840	1030	1170	1330	1500	1640	1900
	30	22	0	0	0	0	0	0	**250**	**310**	**380**	470	580	700	850	970	1110	1250	1360	1590
	1/2	0.37	930	1490	2350	3700	5760	8910												
230V	3/4	0.55	670	1080	1700	2580	4190	6490	8060	9860										
60 Hz	1	0.75	560	910	1430	2260	3520	5460	6780	8290										
Three	1 1/2	1.1	420	670	1060	1670	2610	4050	5030	6160	7530	9170								
Phase	2	1.5	320	510	810	1280	2010	3130	3890	4770	5860	7170	8780							
3 - Lead	3	2.2	240	390	620	990	1540	2400	2980	3660	4480	5470	6690	8020	9680					
	5	3.7	**140**	230	370	590	920	1430	1790	2190	2690	3290	4030	4850	5870	6650	7560	8460	9220	
	7 1/2	5.5	0	**160**	260	420	650	1020	1270	1560	1920	2340	2870	3440	4160	4710	5340	5970	6500	7510
	10	7.5	0	0	**190**	310	490	760	950	1170	1440	1760	2160	2610	3160	3590	4100	4600	5020	5840
	15	11	0	0	0	**210**	330	520	650	800	980	1200	1470	1780	2150	2440	2780	3110	3400	3940
	20	15	0	0	0	0	**250**	400	500	610	760	930	1140	1380	1680	1910	2180	2450	2680	3120
	25	18.5	0	0	0	0	0	**320**	400	500	610	750	920	1120	1360	1540	1760	1980	2160	2520
	30	22	0	0	0	0	0	**260**	**330**	**410**	510	620	760	930	1130	1280	1470	1650	1800	2110
	1/2	0.37	2690	4290	6730															
380V	3/4	0.55	2000	3190	5010	7860														
60 Hz	1	0.75	1620	2580	4060	6390	9980													
Three	1 1/2	1.1	1230	1970	3100	4890	7630													
Phase	2	1.5	870	1390	2180	3450	5400	8380												
3 - Lead	3	2.2	680	1090	1710	2690	4200	6500	8020	9830										
	5	3.7	400	640	1010	1590	2490	3870	4780	5870	7230	8830								
	7 1/2	5.5	270	440	690	1090	1710	2640	3260	4000	4930	6010	7290	8780						
	10	7.5	**200**	**320**	510	800	1250	1930	2380	2910	3570	4330	5230	6260	7390	8280	9340			
	15	11	0	0	**370**	590	920	1430	1770	2170	2690	3290	4000	4840	5770	6520	7430	8250	8990	
	20	15	0	0	0	**440**	700	1090	1350	1670	2060	2530	3090	3760	4500	5110	5840	6510	7120	8190
	25	18.5	0	0	0	**360**	570	880	1100	1350	1670	2050	2510	3040	3640	4130	4720	5250	5740	6590
	30	22	0	0	0	0	**470**	730	910	1120	1380	1700	2080	2520	3020	3430	3920	4360	4770	5490
	40	30	0	0	0	0	0	**530**	660	820	1010	1240	1520	1840	2200	2500	2850	3170	3470	3990
	50	37	0	0	0	0	0	0	**540**	**660**	820	1000	1220	1480	1770	2010	2290	2550	2780	3190
	60	45	0	0	0	0	0	0	0	**560**	**690**	850	1030	1250	1500	1700	1940	2150	2350	2700
	75	55	0	0	0	0	0	0	0	0	**570**	**700**	**860**	1050	1270	1440	1660	1850	2030	2350
	100	75	0	0	0	0	0	0	0	0	0	**510**	**630**	**760**	910	1030	1180	1310	1430	1650
	125	90	0	0	0	0	0	0	0	0	0	0	0	**620**	**740**	**840**	**950**	1060	1160	1330
	150	110	0	0	0	0	0	0	0	0	0	0	0	0	**620**	**700**	**790**	**880**	**960**	1090
	175	130	0	0	0	0	0	0	0	0	0	0	0	0	0	**650**	**750**	**840**	**920**	1070
	200	150	0	0	0	0	0	0	0	0	0	0	0	0	0	0	**630**	**700**	**760**	**880**

Continued on page 16

Table 16 Three Phase 60°C Cable (Continued)

Motor Rating			60°C Insulation - AWG Copper Wire Size													MCM Copper Wire Size				
Volts	HP	KW	14	12	10	8	6	4	3	2	1	0	00	000	0000	250	300	350	400	500
	1/2	0.37	3770	6020	9460															
460V	3/4	0.55	2730	4350	6850															
60Hz	1	0.75	2300	3670	5770	9070														
Three	1 1/2	1.1	1700	2710	4270	6730														
Phase	2	1.5	1300	2070	3270	5150	8050													
3 - Lead	3	2.2	1000	1600	2520	3970	6200													
	5	3.7	590	950	1500	2360	3700	5750												
	7 1/2	5.5	420	680	1070	1690	2640	4100	5100	6260	7680									
	10	7.5	310	500	790	1250	1960	3050	3800	4680	5750	7050								
	15	11	0	**340**	540	850	1340	2090	2600	3200	3930	4810	5900	7110						
	20	15	0	0	**410**	650	1030	1610	2000	2470	3040	3730	4580	5530						
	25	18.5	0	0	0	**530**	830	1300	1620	1990	2450	3010	3700	4470	5430					
	30	22	0	0	0	**430**	680	1070	1330	1640	2030	2490	3060	3700	4500	5130	5860			
	40	30	0	0	0	0	**500**	790	980	1210	1490	1830	2250	2710	3290	3730	4250			
	50	37	0	0	0	0	0	**640**	800	980	1210	1480	1810	2190	2650	3010	3420	3830	4180	4850
	60	45	0	0	0	0	0	**540**	**670**	**830**	1020	1250	1540	1850	2240	2540	2890	3240	3540	4100
	75	55	0	0	0	0	0	0	0	**680**	**840**	1030	1260	1520	1850	2100	2400	2700	2950	3440
	100	75	0	0	0	0	0	0	0	0	**620**	**760**	**940**	1130	1380	1560	1790	2010	2190	2550
	125	90	0	0	0	0	0	0	0	0	0	0	**740**	**890**	**1000**	1220	1390	1560	1700	1960
	150	110	0	0	0	0	0	0	0	0	0	0	0	**760**	**920**	**1050**	**1190**	1340	1460	1690
	175	130	0	0	0	0	0	0	0	0	0	0	0	0	**810**	**930**	**1060**	**1190**	1300	1510
	200	150	0	0	0	0	0	0	0	0	0	0	0	0	0	**810**	**920**	**1030**	**1130**	1310
	1/2	0.37	5900	9410																
575V	3/4	0.55	4270	6810																
60 Hz	1	0.75	3630	5800	9120															
Three	1 1/2	1.1	2620	4180	6580															
Phase	2	1.5	2030	3250	5110	8060														
3 - Lead	3	2.2	1580	2530	3980	6270														
	5	3.7	920	1480	2330	3680	5750													
	7 1/2	5.5	660	1060	1680	2650	4150													
	10	7.5	490	780	1240	1950	3060	4770	5940											
	15	11	**330**	530	850	1340	2090	3260	4060											
	20	15	0	**410**	650	1030	1610	2520	3140	3860	4760	5830								
	25	19	0	0	**520**	830	1300	2030	2530	3110	3840	4710								
	30	22	0	0	**430**	680	1070	1670	2080	2560	3160	3880	4770	5780	7030	8000				
	40	30	0	0	0	**500**	790	1240	1540	1900	2330	2860	3510	4230	5140	5830				
	50	37	0	0	0	0	**640**	1000	1250	1540	1890	2310	2840	3420	4140	4700	5340	5990	6530	7580
	60	45	0	0	0	0	0	**850**	1060	1300	1600	1960	2400	2890	3500	3970	4520	5070	5530	6410
	75	55	0	0	0	0	0	**690**	**860**	**1060**	1310	1600	1970	2380	2890	3290	3750	5220	4610	5370
	100	75	0	0	0	0	0	0	0	**790**	**970**	**1190**	1460	1770	2150	2440	2790	3140	3430	3990
	125	90	0	0	0	0	0	0	0	0	**770**	**950**	**1160**	1400	1690	1920	2180	2440	2650	3070
	150	110	0	0	0	0	0	0	0	0	0	**800**	**990**	**1190**	1440	1630	1860	2080	2270	2640
	175	130	0	0	0	0	0	0	0	0	0	0	**870**	**1050**	**1270**	**1450**	1650	1860	2030	2360
	200	150	0	0	0	0	0	0	0	0	0	0	0	**920**	**1110**	**1260**	**1440**	1620	1760	2050

See Footnotes on Page 11 for information on bold figures.

Table 17 Three Phase 60°C Cable (Continued)

Motor Rating			60°C Insulation - AWG Copper Wire Size													MCM Copper Wire Size				
Volts	HP	KW	14	12	10	8	6	4	3	2	1	0	00	000	0000	250	300	350	400	500
200V	5	3.7	160	250	420	660	1030	1620	2020	2490	3060	3730	4570	5500	6660	7540				
60Hz	7 1/2	5.5	110	180	300	460	730	1150	1440	1770	2170	2650	3250	3900	4720	5340				
Three	10	7.5	**80**	130	210	340	550	850	1080	1320	1630	1990	2460	2950	3580	4080	4650	5220	5700	6630
Phase	15	11	0	0	**140**	240	370	580	730	900	1110	1360	1660	2010	2440	2770	3150	3520	3850	4470
6 - Lead	20	15	0	0	0	**170**	280	450	570	690	850	1050	1290	1570	1900	2160	2470	2770	3030	3540
Y-D	25	18.5	0	0	0	**140**	**220**	360	450	550	690	850	1050	1260	1540	1750	1990	2250	2460	2850
	30	22	0	0	0	0	**180**	294	370	460	570	700	870	1050	1270	1450	1660	1870	2040	2380
230V	5	3.7	210	340	550	880	1380	2140	2680	3280	4030	4930	6040	7270	8800	9970				
60Hz	7 1/2	5.5	150	240	390	630	970	1530	1900	2340	2880	3510	4300	5160	6240	7060	8010	8950	9750	
Three	10	7.5	**110**	180	280	460	730	1140	1420	1750	2160	2640	3240	3910	4740	5380	6150	6900	7530	8760
Phase	15	11	0	0	**190**	310	490	780	970	1200	1470	1800	2200	2670	3220	3660	4170	4660	5100	5910
6 - Lead	20	15	0	0	**140**	230	370	600	750	910	1140	1390	1710	2070	2520	2860	3270	3670	4020	4680
Y-D	25	18.5	0	0	0	**190**	300	480	600	750	910	1120	1380	1680	2040	2310	2640	2970	3240	3780
	30	22	0	0	0	**150**	**240**	390	490	610	760	930	1140	1390	1690	1920	2200	2470	2700	3160
380V	5	3.7	600	960	1510	2380	3730	5800	7170	8800										
60Hz	7 1/2	5.5	400	660	1030	1630	2560	3960	4890	6000	7390	9010								
Three	10	7.5	300	480	760	1200	1870	2890	3570	4360	5350	6490	7840	9390						
Phase	15	11	210	340	550	880	1380	2140	2650	3250	4030	4930	6000	7260	8650	9780				
6 - Lead	20	15	**160**	260	410	660	1050	1630	2020	2500	3090	3790	4630	5640	6750	7660	4260	9760		
Y-D	25	18.5	0	**210**	330	540	850	1320	1650	2020	2500	3070	3760	4560	5460	6190	7080	7870	8610	9880
	30	22	0	0	**270**	430	700	1090	1360	1680	2070	2550	3120	3780	4530	5140	5880	6540	7150	8230
	40	30	0	0	0	**320**	510	790	990	1230	1510	1860	2280	2760	3300	3750	4270	4750	5200	5980
	50	37	0	0	0	**250**	**400**	630	810	990	1230	1500	1830	2220	2650	3010	3430	3820	4170	4780
	60	45	0	0	0	0	**340**	540	660	840	1030	1270	1540	1870	2250	2550	2910	3220	3520	4050
	75	55	0	0	0	0	0	**450**	550	690	855	1050	1290	1570	1900	2160	2490	2770	3040	3520
	100	75	0	0	0	0	0	0	**420**	**520**	640	760	940	1140	1360	1540	1770	1960	2140	2470
	125	90	0	0	0	0	0	0	0	**400**	**490**	**600**	730	930	1110	1260	1420	1590	1740	1990
	150	110	0	0	0	0	0	0	0	0	**420**	**510**	**620**	750	930	1050	1180	1320	1440	1630
	175	130	0	0	0	0	0	0	0	0	**360**	**440**	**540**	660	780	970	1120	1260	1380	1600
	200	150	0	0	0	0	0	0	0	0	0	0	**480**	**580**	**690**	790	940	1050	1140	1320
460V	5	3.7	880	1420	2250	3540	5550	8620												
60Hz	7 1/2	5.5	630	1020	1600	2530	3960	6150	7650	9390										
Three	10	7.5	460	750	1180	1870	2940	4570	5700	7020	8620									
Phase	15	11	310	510	810	1270	2010	3130	3900	4800	5890	7210	8850							
6 - Lead	20	15	**230**	380	610	970	1540	2410	3000	3700	4560	5590	6870	8290						
Y-D	25	18.5	**190**	310	490	790	1240	1950	2430	2980	3670	4510	5550	6700	8140					
	30	22	0	**250**	410	640	1020	1600	1990	2460	3040	3730	4590	5550	6750	7690	8790			
	40	30	0	0	**300**	480	750	1180	1470	1810	2230	2740	3370	4060	4930	5590	6370			
	50	37	0	0	0	**370**	590	960	1200	1470	1810	2220	2710	3280	3970	4510	5130	5740	6270	7270
	60	45	0	0	0	**320**	**500**	810	1000	1240	1530	1870	2310	2770	3360	3810	4330	4860	5310	6150
	75	55	0	0	0	0	**420**	660	810	1020	1260	1540	1890	2280	2770	3150	3600	4050	4420	5160
	100	75	0	0	0	0	0	**500**	**610**	760	930	1140	1410	1690	2070	2340	2680	3010	3280	3820
	125	90	0	0	0	0	0	0	**470**	**590**	**730**	880	1110	1330	1500	1830	2080	2340	2550	2940
	150	110	0	0	0	0	0	0	0	**510**	**630**	**770**	950	1140	1380	1570	1790	2000	2180	2530
	175	130	0	0	0	0	0	0	0	0	**550**	**680**	**830**	1000	1220	1390	1580	1780	1950	2270
	200	150	0	0	0	0	0	0	0	0	0	**590**	**730**	**880**	1070	1210	1380	1550	1690	1970
575V	5	3.7	1380	2220	3490	5520	8620													
60Hz	7 1/2	5.5	990	1590	2520	3970	6220													
Three	10	7.5	730	1170	1860	2920	4590	7150	8910											
Phase	15	11	490	790	1270	2010	3130	4890	6090											
6 - Lead	20	15	370	610	970	1540	2410	3780	4710	5790	7140	8740								
Y-D	25	18.5	**300**	490	780	1240	1950	3040	3790	4660	5760	7060								
	30	22	**240**	400	645	1020	1600	2500	3120	3840	4740	5820	7150	8670						
	40	30	0	**300**	480	750	1180	1860	2310	2850	3490	4290	5260	6340	7710	8740				
	50	37	0	0	**380**	590	960	1500	1870	2310	2830	3460	4260	5130	6210	7050	8010	8980	9790	
	60	45	0	0	0	**500**	**790**	1270	1590	1950	2400	2940	3600	4330	5250	5950	6780	7600	8290	9610
	75	55	0	0	0	**420**	**660**	1030	1290	1590	1960	2400	2950	3570	4330	4930	5620	6330	6910	8050
	100	75	0	0	0	0	**400**	**780**	960	1180	1450	1780	2190	2650	3220	3660	4180	4710	5140	5980
	125	90	0	0	0	0	0	**600**	**740**	920	1150	1420	1740	2100	2530	2880	3270	3660	3970	4600
	150	110	0	0	0	0	0	0	**650**	**800**	**990**	1210	1480	1780	2160	2450	2790	3120	3410	3950
	175	130	0	0	0	0	0	0	0	**700**	**860**	1060	1300	1570	1910	2170	2480	2780	3040	3540
	200	150	0	0	0	0	0	0	0	0	**760**	**930**	1140	1370	1670	1890	2160	2420	2640	3070

See Footnotes on Page 11 for information on bold figures.

Application - Three Phase Motors

Table 18 Three Phase 75°C Cable, 60 Hz (Service Entrance to Motor) Maximum Length in Feet

Motor Rating			75°C Insulation - AWG Copper Wire Size													MCM Copper Wire Size				
Volts	HP	KW	14	12	10	8	6	4	3	2	1	0	00	000	0000	250	300	350	400	500
	1/2	0.37	710	1140	1800	2840	4420													
200 v	3/4	0.55	510	810	1280	2030	3160													
60Hz	1	0.75	430	690	1080	1710	2670	4140	5140											
Three	1 1/2	1.1	310	500	790	1260	1960	3050	3780											
Phase	2	1.5	240	390	610	970	1520	2360	2940	3610	4430	5420								
3 - Lead	3	2.2	180	290	470	740	1160	1810	2250	2760	3390	4130								
	5	3.7	**110**	170	280	440	690	1080	1350	1660	2040	2490	3050	3670	4440	5030				
	7 1/2	5.5	0	0	200	310	490	770	960	1180	1450	1770	2170	2600	3150	3560				
	10	7.5	0	0	**150**	230	370	570	720	880	1090	1330	1640	1970	2390	2720	3100	3480	3800	4420
	15	11	0	0	0	**160**	250	390	490	600	740	910	1110	1340	1630	1850	2100	2350	2570	2980
	20	15	0	0	0	0	**190**	300	380	460	570	700	860	1050	1270	1440	1650	1850	2020	2360
	25	18.5	0	0	0	0	0	**240**	300	370	460	570	700	840	1030	1170	1330	1500	1640	1900
	30	22	0	0	0	0	0	**200**	**250**	310	380	470	580	700	850	970	1110	1250	1360	1590
	1/2	0.37	930	1490	2350	3700	5760	8910												
230V	3/4	0.55	670	1080	1700	2580	4190	6490	8060	9860										
60 Hz	1	0.75	560	910	1430	2260	3520	5460	6780	8290										
Three	1 1/2	1.1	420	670	1060	1670	2610	4050	5030	6160	7530	9170								
Phase	2	1.5	320	510	810	1280	2010	3130	3890	4770	5860	7170	8780							
3 - Lead	3	2.2	240	390	620	990	1540	2400	2980	3660	4480	5470	6690	8020	9680					
	5	3.7	**140**	230	370	590	920	1430	1790	2190	2690	3290	4030	4850	5870	6650	7560	8460	9220	
	7 1/2	5.5	0	**160**	260	420	650	1020	1270	1560	1920	2340	2870	3440	4160	4710	5340	5970	6500	7510
	10	7.5	0	0	**190**	310	490	760	950	1170	1440	1760	2160	2610	3160	3590	4100	4600	5020	5840
	15	11	0	0	0	**210**	330	520	650	800	980	1200	1470	1780	2150	2440	2780	3110	3400	3940
	20	15	0	0	0	**160**	**250**	400	500	610	760	930	1140	1380	1680	1910	2180	2450	2680	3120
	25	18.5	0	0	0	0	**200**	320	400	500	610	750	920	1120	1360	1540	1760	1980	2160	2520
	30	22	0	0	0	0	0	**260**	330	410	510	620	760	930	1130	1280	1470	1650	1800	2110
	1/2	0.37	2690	4290	6730															
380V	3/4	0.55	2000	3190	5010	7860														
60 Hz	1	0.75	1620	2580	4060	6390	9980													
Three	1 1/2	1.1	1230	1970	3100	4890	7630													
Phase	2	1.5	870	1390	2180	3450	5400	8380												
3 - Lead	3	2.2	680	1090	1710	2690	4200	6500	8020	9830										
	5	3.7	400	640	1010	1590	2490	3870	4780	5870	7230	8830								
	7 1/2	5.5	270	440	690	1090	1710	2640	3260	4000	4930	6010	7290	8780						
	10	7.5	**200**	320	510	800	1250	1930	2380	2910	3570	4330	5230	6260	7390	8280	9340			
	15	11	0	0	370	590	920	1430	1770	2170	2690	3290	4000	4840	5770	6520	7430	8250	8990	
	20	15	0	0	**280**	440	700	1090	1350	1670	2060	2530	3090	3760	4500	5110	5840	6510	7120	8190
	25	18.5	0	0	0	**360**	570	880	1100	1350	1670	2050	2510	3040	3640	4130	4720	5250	5740	6590
	30	22	0	0	0	**290**	470	730	910	1120	1380	1700	2080	2520	3020	3430	3920	4360	4770	5490
	40	30	0	0	0	0	0	**530**	660	820	1010	1240	1520	1840	2200	2500	2850	3170	3470	3990
	50	37	0	0	0	0	0	**440**	**540**	660	820	1000	1220	1480	1770	2010	2290	2550	2780	3190
	60	45	0	0	0	0	0	**370**	**460**	**560**	690	850	1030	1250	1500	1700	1940	2150	2350	2700
	75	55	0	0	0	0	0	0	0	**460**	**570**	700	860	1050	1270	1440	1660	1850	2030	2350
	100	75	0	0	0	0	0	0	0	0	**420**	**510**	**630**	760	910	1030	1180	1310	1430	1650
	125	90	0	0	0	0	0	0	0	0	0	0	**510**	**620**	**740**	840	950	1060	1160	1330
	150	110	0	0	0	0	0	0	0	0	0	0	0	**520**	**620**	**700**	**790**	880	960	1090
	175	130	0	0	0	0	0	0	0	0	0	0	0	0	**560**	**650**	**750**	**840**	920	1070
	200	150	0	0	0	0	0	0	0	0	0	0	0	0	0	**550**	**630**	**700**	**760**	880

Continued on page 19

Table 19 Three Phase 75°C Cable (Continued)

Motor Rating			75°C Insulation - AWG Copper Wire Size													MCM Copper Wire Size				
Volts	HP	KW	14	12	10	8	6	4	3	2	1	0	00	000	0000	250	300	350	400	500
	1/2	0.37	3770	6020	9460															
460V	3/4	0.55	2730	4350	6850															
60Hz	1	0.75	2300	3670	5770	9070														
Three	1 1/2	1.1	1700	2710	4270	6730														
Phase	2	1.5	1300	2070	3270	5150	8050													
3 - Lead	3	2.2	1000	1600	2520	3970	6200													
	5	3.7	590	950	1500	2360	3700	5750												
	7 1/2	5.5	420	680	1070	1690	2640	4100	5100	6260	7680									
	10	7.5	310	500	790	1250	1960	3050	3800	4680	5750	7050								
	15	11	0	**340**	540	850	1340	2090	2600	3200	3930	4810	5900	7110						
	20	15	0	0	410	650	1030	1610	2000	2470	3040	3730	4580	5530						
	25	18.5	0	0	**330**	530	830	1300	1620	1990	2450	3010	3700	4470	5430					
	30	22	0	0	**270**	430	680	1070	1330	1640	2030	2490	3060	3700	4500	5130	5860			
	40	30	0	0	0	**320**	**500**	790	980	1210	1490	1830	2250	2710	3290	3730	4250			
	50	37	0	0	0	0	**410**	640	800	980	1210	1480	1810	2190	2650	3010	3420	3830	4180	4850
	60	45	0	0	0	0	0	**540**	**670**	830	1020	1250	1540	1850	2240	2540	2890	3240	3540	4100
	75	55	0	0	0	0	0	**440**	**550**	**680**	840	1030	1260	1520	1850	2100	2400	2700	2950	3440
	100	75	0	0	0	0	0	0	0	**500**	**620**	**760**	940	1130	1380	1560	1790	2010	2190	2550
	125	90	0	0	0	0	0	0	0	0	0	**600**	**740**	**890**	1000	1220	1390	1560	1700	1960
	150	110	0	0	0	0	0	0	0	0	0	0	**630**	**760**	**920**	1050	1190	1340	1460	1690
	175	130	0	0	0	0	0	0	0	0	0	0	0	**370**	**810**	**930**	1060	1190	1300	1510
	200	150	0	0	0	0	0	0	0	0	0	0	0	**590**	**710**	**810**	**920**	1030	1130	1310
	1/2	0.37	5900	9410																
575V	3/4	0.55	4270	6810																
60 Hz	1	0.75	3630	5800	9120															
Three	1 1/2	1.1	2620	4180	6580															
Phase	2	1.5	2030	3250	5110	8060														
3 - Lead	3	2.2	1580	2530	3980	6270														
	5	3.7	920	1480	2330	3680	5750													
	7 1/2	5.5	660	1060	1680	2650	4150													
	10	7.5	490	780	1240	1950	3060	4770	5940											
	15	11	**330**	530	850	1340	2090	3260	4060											
	20	15	0	**410**	650	1030	1610	2520	3140	3860	4760	5830								
	25	19	0	0	520	830	1300	2030	2530	3110	3840	4710								
	30	22	0	0	**430**	680	1070	1670	2080	2560	3160	3880	4770	5780	7030	8000				
	40	30	0	0	0	**500**	790	1240	1540	1900	2330	2860	3510	4230	5140	5830				
	50	37	0	0	0	**410**	**640**	1000	1250	1540	1890	2310	2840	3420	4140	4700	5340	5990	6530	7580
	60	45	0	0	0	0	**540**	850	1060	1300	1600	1960	2400	2890	3500	3970	4520	5070	5530	6410
	75	55	0	0	0	0	0	**690**	860	1060	1310	1600	1970	2380	2890	3290	3750	5220	4610	5370
	100	75	0	0	0	0	0	0	**640**	**790**	970	1190	1460	1770	2150	2440	2790	3140	3430	3990
	125	90	0	0	0	0	0	0	0	**630**	**770**	**950**	1160	1400	1690	1920	2180	2440	2650	3070
	150	110	0	0	0	0	0	0	0	0	**660**	**800**	**990**	1190	1440	1630	1860	2080	2270	2640
	175	130	0	0	0	0	0	0	0	0	0	**700**	**870**	**1050**	1270	1450	1650	1860	2030	2360
	200	150	0	0	0	0	0	0	0	0	0	0	**760**	**920**	**1110**	1260	1440	1620	1760	2050

See Footnotes on Page 11 for information on bold figures.

Application - Three Phase Motors

Table 20 Three Phase 75°C Cable (Continued)

Motor Rating			75°C Insulation - AWG Copper Wire Size													MCM Copper Wire Size				
Volts	HP	KW	14	12	10	8	6	4	3	2	1	0	00	000	0000	250	300	350	400	500
200V	5	3.7	160	250	420	660	1030	1620	2020	2490	3060	3730	4570	5500	6660	7540				
60Hz	7 1/2	5.5	110	180	300	460	730	1150	1440	1770	2170	2650	3250	3900	4720	5340				
Three	10	7.5	**80**	130	210	340	550	850	1080	1320	1630	1990	2460	2950	3580	4080	4650	5220	5700	6630
Phase	15	11	0	0	140	240	370	580	730	900	1110	1360	1660	2010	2440	2770	3150	3520	3850	4470
6 - Lead	20	15	0	0	**120**	170	280	450	570	690	850	1050	1290	1570	1900	2160	2470	2770	3030	3540
Y-D	25	18.5	0	0	0	**140**	220	360	450	550	690	850	1050	1260	1540	1750	1990	2250	2460	2850
	30	22	0	0	0	**120**	**180**	294	370	460	570	700	870	1050	1270	1450	1660	1870	2040	2380
230V	5	3.7	210	340	550	880	1380	2140	2680	3280	4030	4930	6040	7270	8800	9970				
60Hz	7 1/2	5.5	150	240	390	630	970	1530	1900	2340	2880	3510	4300	5160	6240	7060	8010	8950	9750	
Three	10	7.5	**110**	180	280	460	730	1140	1420	1750	2160	2640	3240	3910	4740	5380	6150	6900	7530	8760
Phase	15	11	0	**130**	190	310	490	780	970	1200	1470	1800	2200	2670	3220	3660	4170	4660	5100	5910
6 - Lead	20	15	0	0	**140**	230	370	600	750	910	1140	1390	1710	2070	2520	2860	3270	3670	4020	4680
Y-D	25	18.5	0	0	**120**	190	300	480	600	750	910	1120	1380	1680	2040	2310	2640	2970	3240	3780
	30	22	0	0	0	**150**	240	390	490	610	760	930	1140	1390	1690	1920	2200	2470	2700	3160
380V	5	3.7	600	960	1510	2380	3730	5800	7170	8800										
60Hz	7 1/2	5.5	400	660	1030	1630	2560	3960	4890	6000	7390	9010								
Three	10	7.5	300	480	760	1200	1870	2890	3570	4360	5350	6490	7840	9390						
Phase	15	11	210	340	550	880	1380	2140	2650	3250	4030	4930	6000	7260	8650	9780				
6 - Lead	20	15	**160**	260	410	660	1050	1630	2020	2500	3090	3790	4630	5640	6750	7660	4260	9760		
Y-D	25	18.5	0	**210**	330	540	850	1320	1650	2020	2500	3070	3760	4560	5460	6190	7080	7870	8610	9880
	30	22	0	0	**270**	430	700	1090	1360	1680	2070	2550	3120	3780	4530	5140	5880	6540	7150	8230
	40	30	0	0	**210**	320	510	790	990	1230	1510	1860	2280	2760	3300	3750	4270	4750	5200	5980
	50	37	0	0	0	**250**	400	630	810	990	1230	1500	1830	2220	2650	3010	3430	3820	4170	4780
	60	45	0	0	0	0	**340**	540	660	840	1030	1270	1540	1870	2250	2550	2910	3220	3520	4050
	75	55	0	0	0	0	**290**	450	550	690	855	1050	1290	1570	1900	2160	2490	2770	3040	3520
	100	75	0	0	0	0	0	**340**	**420**	520	640	760	940	1140	1360	1540	1770	1960	2140	2470
	125	90	0	0	0	0	0	0	**340**	**400**	**490**	600	730	930	1110	1260	1420	1590	1740	1990
	150	110	0	0	0	0	0	0	0	**350**	**420**	**510**	620	750	930	1050	1180	1320	1440	1630
	175	130	0	0	0	0	0	0	0	0	**360**	**440**	**540**	660	780	970	1120	1260	1380	1600
	200	150	0	0	0	0	0	0	0	0	0	**410**	**480**	**580**	690	790	940	1050	1140	1320
460V	5	3.7	880	1420	2250	3540	5550	8620												
60Hz	7 1/2	5.5	630	1020	1600	2530	3960	6150	7650	9390										
Three	10	7.5	460	750	1180	1870	2940	4570	5700	7020	8620									
Phase	15	11	310	510	810	1270	2010	3130	3900	4800	5890	7210	8850							
6 - Lead	20	15	**230**	380	610	970	1540	2410	3000	3700	4560	5590	6870	8290						
Y-D	25	18.5	**190**	310	490	790	1240	1950	2430	2980	3670	4510	5550	6700	8140					
	30	22	0	**250**	410	640	1020	1600	1990	2460	3040	3730	4590	5550	6750	7690	8790			
	40	30	0	0	**300**	480	750	1180	1470	1810	2230	2740	3370	4060	4930	5590	6370			
	50	37	0	0	**250**	370	590	960	1200	1470	1810	2220	2710	3280	3970	4510	5130	5740	6270	7270
	60	45	0	0	0	**320**	500	810	1000	1240	1530	1870	2310	2770	3360	3810	4330	4860	5310	6150
	75	55	0	0	0	0	**420**	660	810	1020	1260	1540	1890	2280	2770	3150	3600	4050	4420	5160
	100	75	0	0	0	0	**310**	**500**	610	760	930	1140	1410	1690	2070	2340	2680	3010	3280	3820
	125	90	0	0	0	0	0	**390**	**470**	**590**	730	880	1110	1330	1500	1830	2080	2340	2550	2940
	150	110	0	0	0	0	0	0	**420**	**510**	**630**	770	950	1140	1380	1570	1790	2000	2180	2530
	175	130	0	0	0	0	0	0	0	**450**	**550**	**680**	830	1000	1220	1390	1580	1780	1950	2270
	200	150	0	0	0	0	0	0	0	0	**480**	**590**	**730**	880	1070	1210	1380	1550	1690	1970
575V	5	3.7	1380	2220	3490	5520	8620													
60Hz	7 1/2	5.5	990	1590	2520	3970	6220													
Three	10	7.5	730	1170	1860	2920	4590	7150	8910											
Phase	15	11	490	790	1270	2010	3130	4890	6090											
6 - Lead	20	15	370	610	970	1540	2410	3780	4710	5790	7140	8740								
Y-D	25	18.5	**300**	490	780	1240	1950	3040	3790	4660	5760	7060								
	30	22	**240**	400	645	1020	1600	2500	3120	3840	4740	5820	7150	8670						
	40	30	0	**300**	480	750	1180	1860	2310	2850	3490	4290	5260	6340	7710	8740				
	50	37	0	0	**380**	590	960	1500	1870	2310	2830	3460	4260	5130	6210	7050	8010	8980	9790	
	60	45	0	0	**330**	500	790	1270	1590	1950	2400	2940	3600	4330	5250	5950	6780	7600	8290	9610
	75	55	0	0	0	**420**	660	1030	1290	1590	1960	2400	2950	3570	4330	4930	5620	6330	6910	8050
	100	75	0	0	0	0	**400**	780	960	1180	1450	1780	2190	2650	3220	3660	4180	4710	5140	5980
	125	90	0	0	0	0	0	**600**	740	920	1150	1420	1740	2100	2530	2880	3270	3660	3970	4600
	150	110	0	0	0	0	0	**520**	**650**	800	990	1210	1480	1780	2160	2450	2790	3120	3410	3950
	175	130	0	0	0	0	0	0	**570**	**700**	860	1060	1300	1570	1910	2170	2480	2780	3040	3540
	200	150	0	0	0	0	0	0	**500**	**610**	**760**	930	1140	1370	1670	1890	2160	2420	2640	3070

See Footnotes on Page 11 for information on bold figures.

Application - Three Phase Motors

Table 21 Three Phase Motor Specifications (60 Hz)

Type	Motor Model Prefix	Rating					Full Load Amps	Maximum (S.F. Load) Amps	Line to Line Resistance Ohms	Efficiency %			Locked Rotor Amps	KVA Code	Circuit Breakers or Fuse Amps		
		HP	KW	Volts	Hz	S.F.				S.F.	F.L.	3/4			Nontime Delay (Std.) Fuse	Dual Element Time Delay Fuse	Inverse Time Breaker
4 Inch	234501	1/2	0.37	200	60	1.60	2.8	3.4	6.6-7.3	70	64	58	17.5	N	10	5	8
	234511	1/2	0.37	230	60	1.60	2.4	2.9	9.5-10.4	70	64	58	15.2	N	8	5	6
	234541	1/2	0.37	380	60	1.60	1.5	1.8	23.2-23.4	70	64	58	9.2	N	5	3	4
	234521	1/2	0.37	460	60	1.60	1.2	1.5	38.4-41.6	70	64	58	7.6	N	4	3	3
	234502	3/4	0.55	200	60	1.50	3.7	4.4	4.6-5.1	73	69	65	23.1	M	15	8	10
	234512	3/4	0.55	230	60	1.50	3.2	3.8	7.2-7.8	73	69	65	20.1	M	10	6	8
	234542	3/4	0.55	380	60	1.50	1.9	2.3	16.6-20.3	73	69	65	12.2	M	6	4	5
	234522	3/4	0.55	460	60	1.50	1.6	1.9	27.8-30.2	73	69	65	10.7	M	5	3	4
	234503	1	0.75	200	60	1.40	4.6	5.4	4.1-4.5	72	70	66	30.9	M	15	10	15
	234513	1	0.75	230	60	1.40	4.0	4.7	5.2-5.6	72	70	66	26.9	M	15	8	10
	234543	1	0.75	380	60	1.40	2.4	2.8	12.2-14.9	72	70	66	16.3	M	8	5	8
	234523	1	0.75	460	60	1.40	2.0	2.4	21.2-23.0	72	70	66	13.5	M	6	4	5
	234504	1 1/2	1.1	200	60	1.30	5.6	6.8	2.5-3.0	76	76	74	38.2	K	20	10	15
	234514	1 1/2	1.1	230	60	1.30	4.9	5.9	3.2-4.0	76	76	74	33.2	K	15	10	15
	234544	1 1/2	1.1	380	60	1.30	3.0	3.6	8.5-10.4	76	76	74	20.1	K	10	6	8
	234524	1 1/2	1.1	460	60	1.30	2.5	3.0	13.0-16.0	76	76	74	16.6	K	8	5	8
	234534	1 1/2	1.1	575	60	1.30	2.0	2.4	20.3-25.0	76	76	74	13.3	K	6	4	5
	234305	2	1.5	200	60	1.25	7.9	9.3	1.9-2.4	69	69	67	53.6	L	25	15	20
	234315	2	1.5	230	60	1.25	6.9	8.1	2.4-3.0	69	69	67	46.6	L	25	15	20
	234345	2	1.5	380	60	1.25	4.2	4.9	6.6-8.2	69	69	67	28.2	L	15	8	15
	234325	2	1.5	460	60	1.25	3.5	4.1	9.7-12.0	69	69	67	23.3	L	15	8	10
	234335	2	1.5	575	60	1.25	2.8	3.2	15.1-18.7	69	69	67	18.6	L	10	5	8
	234306	3	2.2	200	60	1.15	11.3	12.4	1.3-1.7	75	75	73	71.2	K	35	20	30
	234316	3	2.2	230	60	1.15	9.8	10.8	1.8-2.2	75	75	73	61.9	K	30	20	25
	234346	3	2.2	380	60	1.15	5.9	6.5	4.7-6.0	75	75	73	37.5	K	20	15	15
	234326	3	2.2	460	60	1.15	4.9	5.4	7.0-8.7	75	75	73	31.0	K	15	10	15
	234336	3	2.2	575	60	1.15	3.9	4.3	10.9-13.6	75	75	73	24.8	K	15	8	10
	234307	5	3.7	200	60	1.15	18.4	20.4	.70-.94	74	74	72	122.0	K	60	35	50
	234317	5	3.7	230	60	1.15	16.0	17.7	.93-1.2	74	74	72	106.0	K	50	30	40
	234347	5	3.7	380	60	1.15	9.7	10.7	2.4-3.0	74	74	72	64.4	K	30	20	25
	234327	5	3.7	460	60	1.15	8.0	8.9	3.6-4.4	74	74	72	53.2	K	25	15	20
	234337	5	3.7	575	60	1.15	6.4	7.1	5.6-6.9	74	74	72	42.6	K	20	15	20
	234308	7 1/2	5.5	200	60	1.15	27.1	29.9	.46-.57	76	76	74	188.0	K	90	50	70
	234318	7 1/2	5.5	230	60	1.15	23.6	26.0	.61-.75	76	76	74	164.0	K	80	45	60
	234348	7 1/2	5.5	380	60	1.15	14.3	15.7	1.6-2.3	76	76	74	99.1	K	45	25	40
	234328	7 1/2	5.5	460	60	1.15	11.8	13.0	2.4-3.4	76	76	74	81.9	K	40	25	30
	234338	7 1/2	5.5	575	60	1.15	9.4	10.4	3.5-5.1	76	76	74	65.5	K	30	20	25
	234349	10	7.5	380	60	1.15	20.6	22.4	1.2-1.6	75	75	72	140.0	L	70	40	60
	234329	10	7.5	460	60	1.15	17.0	18.5	1.8-2.3	75	75	72	116.0	L	60	30	45
	234339	10	7.5	575	60	1.15	13.6	14.8	2.8-3.5	75	75	72	92.8	L	45	25	35

Application - Three Phase Motors

Table 22 Three Phase Motor Specifications (60 Hz)

Type	Motor Model Prefix	Rating					Full Load Amps	Maximum (S.F. Load) Amps	Line to Line Resistance Ohms	Efficiency %			Locked Rotor Amps	KVA Code	Circuit Breakers or Fuse Amps		
		HP	KW	Volts	Hz	S.F.				S.F.	F.L.	3/4			Nontime Delay (Std.) Fuse	Dual Element Time Delay Fuse	Inverse Time Breaker
6 Inch	236650	5	3.7	200	60	1.15	17.5	19.1	.68-.84	79	79	77	99	H	60	35	45
	236600	5	3.7	230	60	1.15	15	16.6	.88-1.09	79	79	77	86	H	45	30	40
	236660	5	3.7	380	60	1.15	9.1	10	2.4-3.0	79	79	77	52	H	30	20	25
	236610	5	3.7	460	60	1.15	7.5	8.8	3.5-4.0	79	79	77	43	H	25	15	20
	236620	5	3.7	575	60	1.15	6	6.6	5.9-7.2	79	79	77	34	H	20	15	15
	236651	7 1/2	5.5	200	60	1.15	25.1	28.3	.39-.48	80	80	78	150	H	80	45	70
	236601	7 1/2	5.5	230	60	1.15	21.8	24.6	.57-.71	80	80	78	130	H	70	40	60
	236661	7 1/2	5.5	380	60	1.15	13.2	14.9	1.5-1.8	80	80	78	79	H	45	25	35
	236611	7 1/2	5.5	460	60	1.15	10.9	12.3	2.2-2.7	80	80	78	65	H	35	20	30
	236621	7 1/2	5.5	575	60	1.15	8.7	9.8	3.6-4.4	80	80	78	52	H	30	20	25
	236652	10	7.5	200	60	1.15	32.7	37	.33-.42	79	79	78	198	H	100	60	90
	236602	10	7.5	230	60	1.15	28.4	32.2	.44-.55	79	79	78	172	H	90	60	80
	236662	10	7.5	380	60	1.15	17.2	19.5	1.2-1.5	79	79	78	104	H	60	35	45
	236612	10	7.5	460	60	1.15	14.2	16.1	1.7-2.2	79	79	78	86	H	45	30	40
	236622	10	7.5	575	60	1.15	11.4	12.9	2.8-3.5	79	79	78	69	H	35	25	30
	236653	15	11	200	60	1.15	47.8	54.5	.22-.27	81	81	80	306	H	150	90	125
	236603	15	11	230	60	1.15	41.6	47.4	.27-.33	81	81	80	266	H	150	80	110
	236663	15	11	380	60	1.15	25.2	28.7	.73-.90	81	81	80	161	H	80	45	70
	236613	15	11	460	60	1.15	20.8	23.7	1.1-1.3	81	81	80	133	H	70	40	60
	236623	15	11	575	60	1.15	16.7	19	1.7-2.1	81	81	80	106	H	60	30	45
	236654	20	15	200	60	1.15	61.9	69.7	.14-.17	82	82	81	416	J	200	110	175
	236604	20	15	230	60	1.15	53.8	60.6	.20-.25	82	82	81	362	J	175	100	150
	236664	20	15	380	60	1.15	32.6	36.7	.52-.64	82	82	81	219	J	100	60	90
	236614	20	15	460	60	1.15	26.9	30.3	.76-.94	82	82	81	181	J	90	50	70
	236624	20	15	575	60	1.15	21.5	24.4	1.2-1.5	82	82	81	145	J	70	40	60
	236655	25	18.5	200	60	1.15	77.1	86.3	.11-.14	83	83	82	552	J	250	150	200
	236605	25	18.5	230	60	1.15	67	75	.15-.19	83	83	82	480	J	225	125	175
	236665	25	18.5	380	60	1.15	40.6	45.4	.40-.50	83	83	82	291	J	125	80	110
	236615	25	18.5	460	60	1.15	33.5	37.5	.59-.73	83	83	82	240	J	110	60	90
	236625	25	18.5	575	60	1.15	26.8	30	1.0-1.3	83	83	82	192	J	90	50	70
	236656	30	22	200	60	1.15	90.9	104	.10-.12	83	83	86	653	J	300	175	250
	236606	30	22	230	60	1.15	79	90.4	.12-.15	83	83	86	568	J	250	150	225
	236666	30	22	380	60	1.15	47.8	54.7	.33-.41	83	83	86	317	J	150	90	125
	236616	30	22	460	60	1.15	39.5	45.2	.48-.60	83	83	86	284	J	125	80	110
	236626	30	22	575	60	1.15	31.6	36.2	.78-.95	83	83	86	227	J	100	60	90
	236667	40	30	380	60	1.15	64.8	75	.20-.27	83	83	83	481	J	200	125	175
	236617	40	30	460	60	1.15	53.5	62	.32-.40	83	83	83	397	J	175	100	150
	236627	40	30	575	60	1.15	42.8	49.6	.53-.59	83	83	83	318	H	150	80	110
	236668	50	37	380	60	1.15	82	93.2	.17-.22	82	83	83	501	H	250	150	225
	236618	50	37	460	60	1.15	67.7	77	.25-.32	82	83	83	414	H	225	125	175
	236628	50	37	575	60	1.15	54.2	61.6	.39-.48	82	83	83	331	H	175	100	150
	236669	60	45	380	60	1.15	97.4	110.2	.15-.18	84	84	84	627	H	300	175	250
	236619	60	45	460	60	1.15	80.5	91	.22-.27	84	84	84	518	H	250	150	225
	236629	60	45	575	60	1.15	64.4	72.8	.35-.39	84	84	84	414	H	200	125	175

Model numbers are three lead motors. Six lead motors with different model numbers have the same running performance, but when wye connected for starting have locked rotor amps 33% of the values shown.

Application - Three Phase Motors

Table 23 Three Phase Motor Specifications (60 Hz)

Type	Motor Model Prefix	Rating					Full Load Amps	Maximum (S.F. Load) Amps	Line to Line Resistance Ohms	Efficiency %			Locked Rotor Amps	KVA Code	Circuit Breakers or Fuse Amps		
		HP	KW	Volts	Hz	S.F.				S.F.	F.L.	3/4			Nontime Delay (Std.) Fuse	Dual Element Time Delay Fuse	Inverse Time Breaker
8 Inch	239660	40	30	380	60	1.15	64	72	.162-.198	86	86	85	479	J	200	125	175
	239600	40	30	460	60	1.15	53	60	.247-.303	86	86	85	396	J	175	100	150
	239610	40	30	575	60	1.15	42	48	.399-.487	86	86	85	317	J	150	80	110
	239661	50	37	380	60	1.15	77	88	.127-.156	87	87	86	656	K	250	150	200
	239601	50	37	460	60	1.15	64	73	.181-.221	87	87	86	542	K	200	125	175
	239611	50	37	575	60	1.15	51	59	.280-.342	87	87	86	434	K	175	90	150
	239662	60	45	380	60	1.15	92	104	.090-.110	88	87	86	797	K	300	175	250
	239602	60	45	460	60	1.15	76	86	.142-.174	88	87	86	658	K	250	150	200
	239612	60	45	575	60	1.15	61	69	.227-.277	88	87	86	526	K	200	110	175
	239663	75	55	380	60	1.15	114	130	.069-.085	88	88	87	1046	L	350	200	300
	239603	75	55	460	60	1.15	94	107	.106-.130	88	88	87	864	L	300	175	250
	239613	75	55	575	60	1.15	76	86	.169-.207	88	88	87	691	L	250	150	200
	239664	100	75	380	60	1.15	153	172	.051-.062	89	89	88	1466	L	500	300	400
	239604	100	75	460	60	1.15	126	142	.073-.089	89	89	88	1211	L	400	225	350
	239614	100	75	575	60	1.15	101	114	.110-.134	89	89	88	969	L	350	200	300
	239165	125	90	380	60	1.15	202	228	.032-.042	87	86	85	1596	K	700	400	600
	239105	125	90	460	60	1.15	167	188	.055-.067	87	86	85	1318	K	500	300	450
	239115	125	90	575	60	1.15	134	151	.087-.106	87	86	85	1054	K	450	250	350
	239166	150	110	380	60	1.15	235	266	.028-.034	88	87	86	1961	K	800	450	600
	239106	150	110	460	60	1.15	194	219	.042-.051	88	87	86	1620	K	600	350	500
	239116	150	110	575	60	1.15	155	176	.067-.082	88	87	86	1296	K	500	300	400
	239167	175	130	380	60	1.15	265	302	.028-.035	88	88	87	1991	J	800	500	700
	239107	175	130	460	60	1.15	219	249	.042-.052	88	88	87	1645	J	700	400	600
	239117	175	130	575	60	1.15	175	200	.063-.077	88	88	87	1316	J	600	350	450
	239168	200	150	380	60	1.15	298	342	.024-.029	88	88	87	2270	J	1000	600	800
	239108	200	150	460	60	1.15	246	282	.036-.044	88	88	87	1875	J	800	450	700
	239118	200	150	575	60	1.15	197	226	.057-.070	88	88	87	1500	J	600	350	500

Model numbers are three lead motors. Six lead motors with different model numbers have the same running performance, but when wye connected for starting have locked rotor amps 33% of the values shown.

Overload Protection Of Three Phase Submersible Motors - Class 10 Protection Required

The characteristics of submersible motors are different from standard motors and special overload protection is required.

If the motor is stalled, the overload protector must trip within 10 seconds to protect the motor windings. The installer must use SUBTROL or the quick-trip protection shown in these tables. All recommended overload selections are of the ambient compensated type to maintain protection at high and low air temperatures.

All heaters and amp settings shown are based on total line amps. When a six-lead motor is used with a Wye-Delta starter, divide motor amps by 1.732 to make your selection or adjustment for heaters carrying phase amps.

Tables 24, 25 and 26 list the correct selection and settings for several manufacturers. Approval of other types may be requested.

Refer to notes on Page 25.

Table 24 60 Hz 4" Motors

HP	KW	Volts	NEMA Starter Size	Heaters For Overload Relays			Adjustable Relays (Note 4)	
				Furnas (Note 1)	Allen Bradley (Note 2)	G.E. (Note 3)	Set	Max.
1/2	0.37	200	00	K31	J16	L380A	3.2	3.4
		230	00	K28	J14	L343A	2.7	2.9
		380	00	K22	J9	L211A	1.7	1.8
		460	00	-	J8	L174A	1.4	1.5
		575	00	-	J6	-	1.2	1.3
3/4	0.55	200	00	K34	J19	L51CA	4.1	4.4
		230	00	K32	J17	L420A	3.5	3.8
		380	00	K27	J13	L282A	2.3	2.5
		460	00	K23	J10	L211A	1.8	1.9
		575	00	K21	J8	L193A	1.5	1.6
1	0.75	200	00	K37	J21	L618A	5.0	5.4
		230	00	K36	J19	L561A	4.4	4.7
		380	00	K28	J14	L310A	2.6	2.8
		460	00	K26	J12	L282A	2.2	2.4
		575	00	K23	J10	L211A	1.8	1.9
1 1/2	1.1	200	00	K42	J23	L750A	6.3	6.8
		230	00	K39	J21	L680A	5.5	5.9
		380	00	K32	J17	L420A	3.3	3.6
		460	00	K29	J15	L343A	2.8	3.0
		575	00	K26	J12	L282A	2.2	2.4
2	1.5	200	0	K50	J26	L111B	8.6	9.3
		230	0	K49	J25	L910A	7.5	8.1
		380	0	K36	J20	L561A	4.6	4.9
		460	00	K33	J18	L463A	3.8	4.1
		575	00	K29	J15	L380A	3.0	3.2
3	2.2	200	0	K55	J29	L147B	11.6	12.5
		230	0	K52	J28	L122B	10.1	10.9
		380	0	K41	J23	L750A	6.1	6.6
		460	0	K37	J21	L618A	5.1	5.5
		575	0	K34	J19	L510A	4.1	4.4
5	3.7	200	1	K62	J34	L241B	19.1	20.5
		230	1	K61	J33	L199B	16.6	17.8
		380	0	K52	J28	L122B	10.0	10.8
		460	0	K49	J26	L100B	8.3	8.9
		575	0	K42	J23	L825A	6.6	7.1
7 1/2	5.5	200	1	K68	J38	L332B	28.4	30.5
		230	1	K67	J37	L293B	24.6	26.4
		380	1	K58	J32	L181B	14.9	16.0
		460	1	K55	J30	L147B	12.3	13.2
		575	1	K52	J28	L122B	9.9	10.6
10	7.5	380	1	K63	J35	L265B	21.2	22.8
		460	1	K61	J33	L220B	17.5	18.8
		575	1	K57	J31	L181B	14.0	15.0

Table 25 60 Hz 6" Motors

HP	KW	Volts	NEMA Starter Size	Heaters For Overload Relays			Adjustable Relays (Note 4)	
				Furnas (Note 1)	Allen Bradley (Note 2)	G.E. (Note 3)	Set	Max.
5	3.7	200	1	K61	J33	L220B	17.6	19.1
		230	1	K60	J32	L199B	15.4	16.6
		380	0	K52	J27	L111B	9.4	10.1
		460	0	K49	J25	L910A	7.7	8.3
		575	0	K41	J23	L750A	6.1	6.6
7 1/2	5.5	200	1	K67	J38	L322B	26.3	28.3
		230	1	K64	J36	L293B	22.9	24.6
		380	1	K57	J31	L165B	13.9	14.9
		460	1	K54	J29	L147B	11.4	12.3
		575	1	K52	J27	L111B	9.1	9.8
10	7.5	200	2(1)	K72	J40	L426B	34.4	37.0
		230	2(1)	K70	J38	L390B	29.9	32.2
		380	1	K61	J34	L220B	18.1	19.5
		460	1	K58	J32	L181B	15.0	16.1
		575	1	K55	J30	L147B	12.0	12.9
15	11	200	3(1)	K76	J43	L650B	50.7	54.5
		230	2	K75	J42	L520B	44.1	47.4
		380	2(1)	K68	J37	L322B	26.7	28.7
		460	2(1)	K64	J35	L265B	22.0	23.7
		575	2(1)	K61	J33	L220B	17.7	19.0
20	15	200	3	K78	J45	L787B	64.8	69.7
		230	3(1)	K78	J44	L710B	56.4	60.6
		380	2	K72	J40	L426B	34.1	36.7
		460	2	K69	J38	L352B	28.2	30.3
		575	2	K64	J35	L393B	22.7	24.4
25	18.5	200	3	K86	J71	L107C	80.3	86.3
		230	3	K83	J46	L866B	69.8	75.0
		380	2	K74	J42	L520B	42.2	45.4
		460	2	K72	J40	L426B	34.9	37.5
		575	2	K69	J37	L352B	27.9	30.0
30	22	200	4(1)	K88	J72	L126C	96.7	104.0
		230	3	K87	J71	L107C	84.1	90.4
		380	3(1)	K76	J43	L650B	50.9	54.7
		460	3(1)	K74	J41	L520B	42.0	45.2
		575	3(1)	K72	J39	L390B	33.7	36.2
40	30	380	3	K83	J46	L866B	69.8	75.0
		460	3	K77	J44	L710B	57.7	62.0
		575	3	K74	J42	L593B	46.1	49.6
50	37	380	3	K87	J72	L107C	86.7	93.2
		460	3	K83	J46	L950C	71.6	77.0
		575	3	K77	J44	L710B	57.3	61.6
60	45	380	4(1)	K89	J73	L126C	102.5	110.2
		460	4(1)	K87	J71	L107C	84.6	91.0
		575	4(1)	K78	J45	L866B	67.7	72.8

Footnotes for Tables 24, 25, and 26

NOTE 1: Furnas intermediate sizes between NEMA starter sizes apply where (1) is shown in tables, size 1-3/4 replacing 2, 2-1/2 replacing 3, 3-1/2 replacing 4, and 4-1/2 replacing 5. Heaters were selected from Catalog 294, Table 332 and Table 632 (starter size 00, size B). Size 4 starters are heater type 4 (JG). Starters using these heater tables include classes 14, 17 and 18 (INNOVA), classes 36 and 37 (reduced voltage), and classes 87, 88 and 89 (pump and motor control centers). Overload relay adjustments should be set no higher than 100% unless necessary to stop nuisance tripping with measured amps in all lines below nameplate maximum. Heater selections for class 16 starters (Magnetic Definite Purpose) will be furnished upon request.

NOTE 2: Allen-Bradley heaters were selected from Catalog IC-110, Table 162 (through starter size 4), Table 547 (starter size 5), and Table 196 (starter size 6). Bulletin 505, 509, 520, 540 and 570 use these heater tables. Heater selections for bulletin 1232X and 1233X starters will be furnished upon request.

NOTE 3: General Electric heaters are type CR123 usable only on type CR124 overload relays and were selected from Catalog GEP-126OJ, page 184. Adjustment should be set no higher than 100%, unless necessary to stop nuisance tripping with measured amps in all lines below nameplate maximum.

NOTE 4: Adjustable overload relay amp settings apply to approved types listed. Relay adjustment should be set at the specified SET amps. Only if tripping occurs with amps in all lines measured to be within nameplate maximum amps should the setting be increased, not to exceed the MAX value shown.

NOTE 5: Heaters shown for ratings requiring NEMA size 5 or 6 starters are all used with current transformers per manufacturer standards. Adjustable relays may or may not use current transformers depending on design.

Application - Three Phase Motors

Recommended Adjustable Overload Relays

Advance Controls: MDR3 Overload

AEG Series: B17S, B27S, B27-2

ABB Type: RVH 40, RVH65, RVP160, T25DU, T25CT, TA25DU

AGUT: MT03, R1K1, R1L0, R1L3, TE set Class 5

Allen Bradley: Bulletin 193, SMP-Class 10 only

Automatic Switch Types: DQ, LR1-D, LR1-F, LR2-D13, -D23, -D33 only

Bharita C-H: MC 305 ANA 3

Clipsal: 6CTR, 6MTR

Cutler-Hammer: C316F, C316P, C316S, C310-set at 6 sec max

Fanal Types: K7 or K7D through K400

Franklin Electric: Subtrol-Plus

Fuji Types: TR-OQ, TR-OQH, TR-2NQ, TR-3NQ, TR-4NQ, TR-6NQ, RCa 3737-ICQ & ICQH

Furnas Types: US15 48AG & 48BG, ESP100-Class 10 only, 958L

General Electric: CR4G, CR7G, RT*1, RT*2, RTF3, RT*4, CR324X-Class 10 only

Kasuga: RU Set Operating Time Code = 10 & time setting 6 sec max

Klockner-Moeller Types: ZOO, Z1, Z4, PKZM1, PKZM3 & PKZ2

Lovato: RC9, RC22, RC80, RF9, RF25 & RF95

Matsushita: FKT-15N, 15GN, 15E, 15GE, FT-15N, FHT-15N

Mitsubishi: ET, TH-K12ABKP, TH-K20KF, TH-K20KP, TH-K20TAKF, TH-K60KF, TH-K60TAKF

Omron: K2CM Set Operating Timing Code = 10 & time setting 6 sec max, SE-KP24E time setting 6 sec max

Riken: PM1, PM3

Samwha: EOCRS Set for Class 5, EOCR-ST, EOCR-SE, EOCR-AT time setting 6 sec max

Siemens Types: 3UA50, -52, -54, -55, -58, -59, -60, -61, -62, -66, -68, -70, 3VUI3, 3VE, 3UB (Class 5)

Sprecher and Schuh Types: CT, CT1, CTA 1, CT3K, CT3-12 thru CT3-42, KTA3, CEF1 & CET3 set at 6 sec max, CEP 7 Class 10, CT4, 6, & 7, CT3

Square D/Telemecanique: Class 9065 Types: TD, TE, TF, TG, TJ, TK, TR, TJE & TJF (Class 10) OR LR1-D, LR1-F, LR2-Class 10, Types 18A, 32A, SS- Class 10, SR-Class 10 and 63-A-LB Series. Integral 18,32,63, GV2-L, GV2-M, GV2-P, GV3-M (1.6-10 amp only)

Table 26 60 Hz 8" Motors

HP	KW	Volts	NEMA Starter Size	Heaters For Overload Relays			Adjustable Relays (Note 4)	
				Furnas (Note 1)	Allen Bradley (Note 2)	G.E. (Note 3)	Set	Max.
40	30	380	3	K78	J46	L866B	68	73
		460	3	K77	J43	L710B	56	60
		575	3	K73	J41	L520B	45	48
50	37	380	3	K86	J81	L107C	81	87
		460	3	K78	J46	L866B	68	73
		575	3	K77	J43	L710B	56	60
60	45	380	4(1)	K89	J72	L126C	101	108
		460	4(1)	K86	J70	L107C	83	89
		575	4(1)	K78	J44	L787B	64	69
75	55	380	4	K92	J75	L142C	121	130
		460	4(1)	K89	J72	L126C	100	107
		575	4(1)	K85	J70	L950C	79	85
100	75	380	5(1)	K28	J15	L100B	168	181
		460	4	K92	J76	L155C	134	144
		575	4	K90	J73	L142C	108	116
125	90	380	5	K32	J17	L135B	207	223
		460	5(1)	K29	J15	L111B	176	189
		575	5(1)	K26	J13	L825A	140	150
150	110	380	5	-	J19	L147B	248	267
		460	5(1)	K32	J17	L122B	206	221
		575	5(1)	K28	J14	L100B	165	177
175	130	380	6	K26	J11	-	270	290
		460	5	K33	J18	L147B	233	250
		575	5	K31	J16	L111B	186	200
200	150	380	6	K27	J12	-	316	340
		460	5	K33	J20	L165B	266	286
		575	5	K32	J17	L135B	213	229

Toshiba Type: 2E RC820, set at 8 seconds max.

WEG: RW2

Westinghouse Types: FT13, FT23, FT33, FT43, K7D, K27D, K67D, Advantage (Class 10), MOR, IQ500 (Class 5)

Westmaster: OLWROO and OLWTOO suffix D thru P

Other relay types from these and other manufacturers may or may not provide acceptable protection, and they should not be used without approval of Franklin Electric.

Some approved types may only be available for part of the listed motor ratings. When relays are used with current transformers, relay setting is the specified amps divided by the transformer ratio.

Application - Three Phase Motors

Subtrol-Plus

Subtrol-Plus is a Franklin Electric protection device for 6"and 8" motors that uses microprocessor technology to detect overload, underload, overheat, and rapid cycling. When one of these faults occurs, Subtrol-Plus shuts down the motor and visually displays the fault condition. Some additional features are automatic restart, field adjustable trip settings, and external alarm/back-up system connection.

Subtrol-Plus is supplied as an easy-to-install kit, which fits virtually any three-phase pump panel. Subtrol-Plus calibrates to a particular motor through the use of a rating insert.

Subtrol-Plus easy-to-install kit

Power Factor Correction

In some installations, power supply limitations make it necessary or desirable to increase the power factor of a submersible motor. The table lists the capacitive KVAR required to increase the power factor of large Franklin three phase submersible motors to the approximate values shown at maximum input loading.

Capacitors must be connected on the line side of the overload relay, or overload protection will be lost.

Table 27 KVAR Required 60 Hz

Motor		KVAR Required for P.F. of:		
HP	KW	0.90	0.95	1.00
5	3.7	1.2	2.1	4
7 1/2	5.5	1.7	3.1	6
10	7.5	1.5	3.3	7
15	11	2.2	4.7	10
20	15	1.7	5	12
25	18.5	2.1	6.2	15
30	22	2.5	7.4	18
40	30	4.5	11	24
50	37	7.1	15	32
60	45	8.4	18	38
75	55	6.3	18	43
100	75	11	27	60
125	90	17	36	77
150	110	20	42	90
175	130	9.6	36	93
200	150	16	46	110

Submersible Pump Installation Check List

1. Motor Inspection

- ❑ A. Verify that the model, HP or KW, voltage, phase and hertz on the motor nameplate match the installation requirements.
- ❑ B. Check that the motor lead assembly is not damaged.
- ❑ C. Measure insulation resistance using a 500 or 1000 volt DC megohmmeter from each lead wire to the motor frame. Resistance should be at least 20 megohms with out drop cable.
- ❑ D. Keep a record of motor model number, HP or KW, voltage, and serial number (S/N). (S/N is stamped in shell above the nameplate. A typical example, S/N 98A18 01-0123)

2. Pump Inspection

- ❑ A. Check that the pump rating matches the motor.
- ❑ B. Check for pump damage and verify that the pump shaft turns freely.

3. Pump/Motor Assembly

- ❑ A. If not yet assembled, check that pump and motor mounting faces are free from dirt, debris and uneven paint thickness.
- ❑ B. Pumps and motors over 5HP should be assembled in the vertical position to prevent stress on pump brackets and shafts. Assemble the pump and motor together so their mounting faces are in contact and then tighten assembly bolts or nuts evenly to manufacturer specifications.
- ❑ C. If accessible, check that the pump shaft turns freely.
- ❑ D. Assemble the pump lead guard over the motor leads. Do not cut or pinch lead wires during assembly or installation.

4. Power Supply and Controls

- ❑ A. Verify that the power supply voltage, hertz, and KVA capacity match motor requirements.
- ❑ B. Verify control box HP and voltage matches motor (3-wire only).
- ❑ C. Check that the electrical installation and controls meet all safety regulations and match the motor requirements, including fuse or circuit breaker size and motor overload protection. Connect all metal plumbing and electrical enclosures to the power supply ground to prevent shock hazard. Comply with national and local codes.

5. Lightning and Surge Protection

- ❑ A. Use properly rated surge (lightning) arrestors on all submersible pump installations. Motors 5HP and smaller, which are marked “Equipped with Lightning Arrestors”, contain internal arrestors.
- ❑ B. Ground all above ground arrestors with copper wire directly to the motor frame, or to metal drop pipe or casing which reaches below the well pumping level. Connecting to a ground rod does not provide good surge protection.

6. Electrical Drop Cable

- ❑ A. Use submersible cable sized in accordance with local regulations and the cable charts, see Pages 11 and 15-20. Ground motor per national and local codes.
- ❑ B. Include a ground wire to the motor and surge protection, connected to the power supply ground if required by codes. Always ground any pump operated outside a drilled well.

7. Motor Cooling

- ❑ A. Ensure at all times the installation provides adequate motor cooling; see Page 6 for details.

8. Pump/Motor Installation

- ❑ A. Splice motor leads to supply cable using electrical grade solder or compression connectors, and carefully insulate each splice with watertight tape or adhesive-lined shrink tubing, as shown in motor or pump installation data.
- ❑ B. Support the cable to the delivery pipe every 10 feet (3 meters) with straps or tape strong enough to prevent sagging. Use padding between cable and any metal straps.
- ❑ C. A check valve in the delivery pipe is recommended. More than one check valve may be required, depending on valve rating and pump setting; see Page 5 for details.
- ❑ D. Assemble all pipe joints as tightly as practical, to prevent unscrewing from motor torque. Torque should be at least 10 pound feet per HP (2 meter-KG per KW).
- ❑ E. Set the pump far enough below the lowest pumping level to assure the pump inlet will always have at least the Net Positive Suction Head (NPSH) specified by the pump manufacturer. Pump should be at least 10 feet (3 meters) from the bottom of the well to allow for sediment build up.
- ❑ F. Check insulation resistance as pump/motor assembly is lowered into the well. Resistance may drop gradually as more cable enters the water, but any sudden drop indicates possible cable, splice or motor lead damage; see Page 39.

Submersible Pump Installation Check List

9. After Installation

- ❑ A. Check all electrical and water line connections and parts before starting the pump.
- ❑ B. Start the pump and check motor amps and pump delivery. If normal, continue to run the pump until delivery is clear. If three phase pump delivery is low, it may be running backward. Rotation may reversed (with power off) by interchanging any two motor lead connections to the power supply.
- ❑ C. Check three phase motors for current balance within 5% of average, using motor manufacturer instructions. Imbalance over 5% will cause higher motor temperatures and may cause overload trip, vibration, and reduced life.
- ❑ D. Verify that starting, running and stopping cause no significant vibration or hydraulic shocks.
- ❑ E. After at least 15 minutes running time, verify that pump output, electrical input, pumping level, and other characteristics are stable and as specified.

Date _____ Filled In By _____

Notes_____

_____

_____

_____

_____

_____

_____

_____

Submersible Motor Installation Record

RMA No. _____

INSTALLER'S NAME _____ OWNER'S NAME _____

ADDRESS _____ ADDRESS _____

CITY _____ STATE_____ ZIP_____ CITY _____ STATE_____ ZIP_____

PHONE (____) _____ FAX (____) _____ PHONE (____) _____ FAX (____)_____

CONTACT NAME _____ CONTACT NAME _____

WELL NAME/ID _____ DATE INSTALLED _____ DATE FAILED_____

WATER TEMPERATURE _____°F or _____°C

MOTOR:

Motor No. _____ Date Code _____ HP _____ Voltage _____ Phase _____

PUMP:

Manufacturer _____ Model No. _____ Curve No. _____ Rating: _____ GPM@_____ft. TDH

NPSH Required _____ ft. NPSH Available_____ ft. Actual Pump Delivery_____GPM@ _____ PSI

Operating Cycle _____ON (Min./Hr.) _____ OFF (Min./Hr.) (Circle Min. or Hr. as appropriate)

YOUR NAME _____ DATE _____/_____/_____

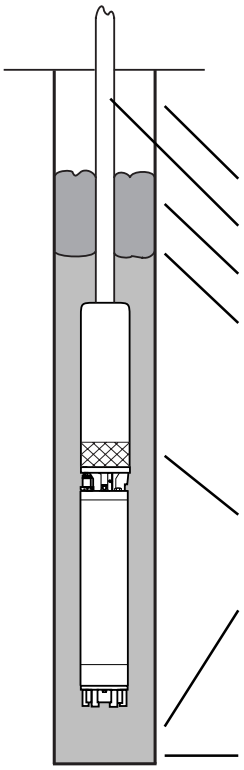

WELL DATA:

Total Dynamic Head _____ft.

Casing Diameter_____in.

Drop Pipe Diameter _____in.

Static Water Level _____ft.

Drawdown (pumping) Water Level_____ft.

Checkvalves at _____&_____&

_____&_____ft.

❑ Solid ❑ Drilled

Pump Inlet Setting _____ft.

Flow Sleeve: ____No____ Yes, Dia. _____in.

Casing Depth_____ft.

❑ Well Screen ❑ Perforated Casing

From_____to_____ft. & _____to_____ft.

Well Depth_____ft.

TOP PLUMBING:
Please sketch the plumbing after the well head (check valves, throttling valves, pressure tank, etc.) and indicate the setting of each device.

Submersible Motor Installation Record

POWER SUPPLY:
Cable: Service Entrance to Control _____ft._____ AWG/MCM ❑ Copper ❑ Aluminum ❑ Jacketed ❑ Individual Conductors

Cable: Control to Motor _____ft._____ AWG/MCM ❑ Copper ❑ Aluminum ❑ Jacketed ❑ Individual Conductors

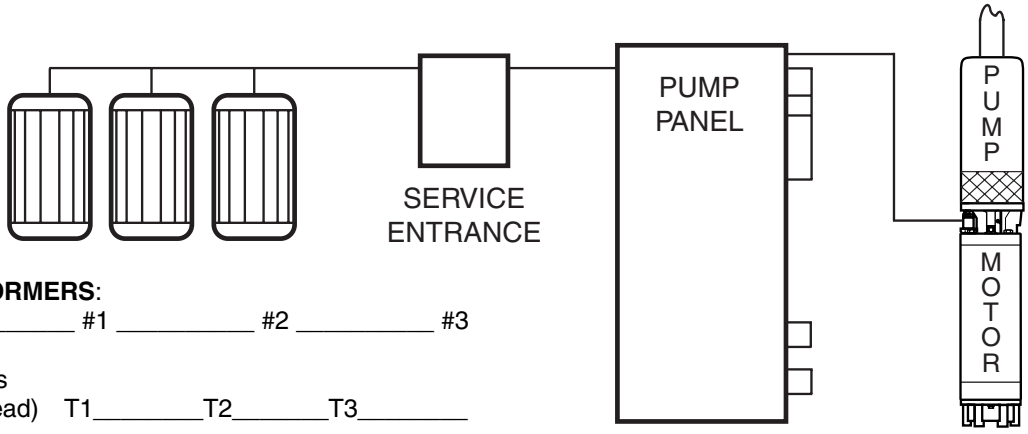

TRANSFORMERS:
KVA _____ #1 _____ #2 _____ #3

Initial Megs
(motor & lead) T1_____T2_____T3_____

Final Megs
(motor, lead & cable) T1_____T2_____T3_____

INCOMING VOLTAGE:
No Load L1-L2_____ L2-L3_____L1-L3_____
Full Load L1-L2_____ L2-L3_____L1-L3_____

RUNNING AMPS:
HOOKUP 1:
Full Load L1_____L2_____L3_____
%Unbalance_____
HOOKUP 2:
Full Load L1_____L2_____L3_____
%Unbalance_____
HOOKUP 3:
Full Load L1_____L2_____L3_____
%Unbalance_____

Ground Wire Size _____AWG/MCM
DC Ground Current _____mA
Motor Surge Protection ❑ Yes ❑ No

CONTROL PANEL:
Panel Manufacturer_____
Short Circuit Device
❑ Circuit Breaker Rating_____Setting_____
❑ Fuses Rating_____ Type_____
❑ Standard ❑ Delay

Starter Manufacturer_____
Starter Size _____
Type of Starter ❑ Full Voltage ❑ Autotransformer
❑ Other:_____Full Voltage in _____sec.

Heater Manufacturer_____
Number_____Adjustable Set at _____amps.
Subtrol-Plus ❑ No ❑ Yes Registration No. _____
If yes, Overload Set? ❑ No ❑ Yes Set at _____amps.
Underload Set? ❑ No ❑ Yes Set at _____amps.

Controls are Grounded to:
❑ Well Head ❑ Motor ❑ Rod ❑ Power Supply

VARIABLE FREQUENCY DRIVES:
Manufacturer_____ Model _____ Output Frequency: _____ Hz Min _____ Hz Max
Cooling Flow at Min. Freq. _____ Cooling Flow at Max. Freq._____
Approved Overload: ❑ Built-in _____ ❑ External Model: (per above) ❑ Cables: (per above) Set Amps _____
Start Time _____sec. Stop Mode ❑ Coast _____sec. ❑ Ramp _____ sec.
❑ Output filter _____ ❑ Reactor _____% Make _____ Model _____ ❑ None

MAXIMUM LOAD AMPS:
Drive Meter Input Amps Line 1 _____ Line 2 _____ Line 3 _____
Drive Meter Output Amps Line 1 _____ Line 2 _____ Line 3 _____
Test Ammeter Output Amps Line 1 _____ Line 2 _____ Line 3 _____
Test Ammeter Make _____ Model _____

Submersible Motor Booster Installation Record

Submersible Motor Booster Installation Record

Date _____ /_____ / _____ Filled In By _____ RMA No. _____

Installation

Owner/User _____ Telephone (_____) _____

Address _____City _____ State _____ Zip _____

Installation Site, If Different _____

Contact _____ Telephone (_____) _____

System Application_____

_____

_____

System Manufactured By_____Model _____ Serial No. _____

System Supplied By_____ City _____ State _____ Zip _____

Motor

Model No. _____ Serial No. _____ Date Code _____

Horsepower _____ Voltage _____ ❑ Single Phase ❑ Three Phase Diameter _____ In.

Slinger Removed? ❑ Yes ❑ No Check Valve Plug Removed? ❑ Yes ❑ No

Pump

Manufacturer _____ Model _____ Serial No. _____

Stages _____ Diameter _____ Flow Rate Of _____ GPM At _____TDH

Booster Case Internal Diameter _____ Construction _____

Controls and Protective Devices

Subtrol? ❑ Yes ❑ No If Yes, Warranty Registration No._____

If Yes, Overload Set? ❑ Yes ❑ No _____ Set At _____

Underload Sets? ❑ Yes ❑ No _____ Set At _____

Reduced Voltage Starter? ❑Yes ❑ No If Yes, Type _____

Mfr. _____ Setting _____%Full Voltage In _____Seconds

Pump Panel? ❑ Yes ❑ No If Yes, Mfr. _____Size _____

Magnetic Starter/Contactor Mfr. _____ Model _____Size_____

Heaters Mfr. _____ No. _____ If Adjustable Set At _____

Fuses Mfr. _____ Size _____ Type _____

Lighning/Surge Arrestor Mfr. _____ Model _____

Controls Are Grounded to _____ with No. _____Wire

Inlet Pressure Control ❑ Yes ❑ No If Yes, Mfr._____ Model _____ Setting_____PSI

Inlet Flow Control ❑ Yes ❑ No If Yes, Mfr._____ Model _____Setting_____ GPM

Outlet Pressure Control ❑ Yes ❑ No If Yes, Mfr._____ Model _____Setting_____PSI

Outlet Flow Control ❑ Yes ❑ No If Yes, Mfr._____ Model _____Setting_____ GPM

Water Temperature Control ❑ Yes ❑ No If Yes, Mfr._____ Model _____

Set At _____ °F Or _____°C Located _____

Submersible Motor Booster Installation Record

Insulation Check

Initial Megs: Motor & Lead Only Black_____ Yellow_____ Red_____

Installed Megs: Motor, Lead, & Cable Black_____ Yellow_____ Red_____

Voltage To Motor

Non-Operating: B-Y_____ Y-R_____ R-B_____

At Rated Flow of _____GPM B-Y_____ Y-R_____ R-B_____

At Open Flow _____GPM B-Y_____ Y-R_____ R-B_____

Amps To Motor

At Rated Flow of _____GPM Black_____ Yellow_____ Red_____

At Open Flow _____GPM Black_____ Yellow_____ Red_____

At Shut Off* Black_____ Yellow_____ Red_____

*Do **NOT** run at Shut Off more than two (2) minutes.

Inlet Pressure _____PSI Outlet Pressure _____PSI Water Temperature _____°F or _____°C

Warranty on three phase motors is void unless Subtrol or proper quick trip ambient compensated protection is used on all three (3) motor lines.

If you have any questions or problems, call the Franklin Electric Toll-Free Hot Line: 1-800-348-2420

Comments:_____

_____

_____

_____

_____

_____

Please sketch the system

Three Phase Starter Diagrams

Three phase combination magnetic starters have two distinct circuits: a power circuit and a control circuit.

The power circuit consists of a circuit breaker or fused line switch, contacts, and overload heaters connecting incoming power lines L1, L2, L3 and the three phase motor.

The control circuit consists of the magnetic coil, overload contacts and a control device such as a pressure switch. When the control device contacts are closed, current flows through the magnetic contactor coil, the contacts close, and power is applied to the motor. Hands-Off-Auto switches, start timers, level controls and other control devices may also be in series in the control circuit.

Line Voltage Control

This is the most common type of control encountered. Since the coil is connected directly across the power lines, L1 and L2, the coil must match the line voltage.

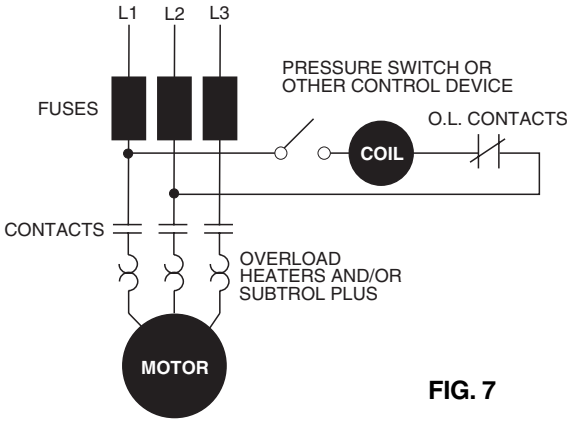

FIG. 7

Low Voltage Transformer Control

This control is used when it is desirable to operate push buttons or other control devices at some voltage lower than the motor voltage. The transformer primary must match the line voltage and the coil voltage must match the secondary voltage of the transformer.

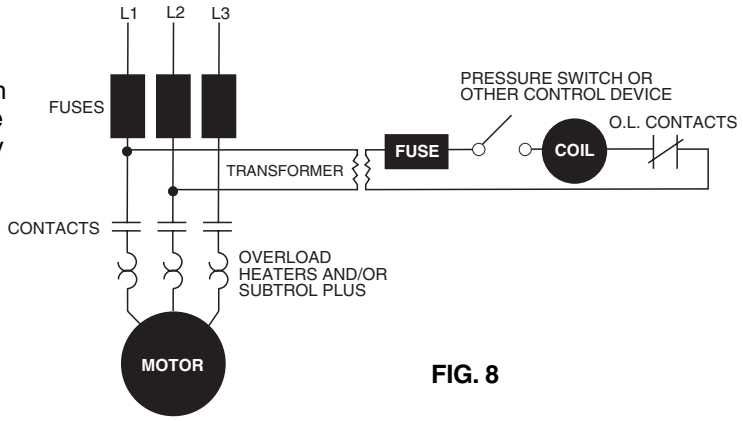

FIG. 8

External Voltage Controls

Control of a power circuit by a lower circuit voltage can also be obtained by connecting to a separate control voltage source. The coil rating must match the control voltage source, such as 115 or 24 volts.

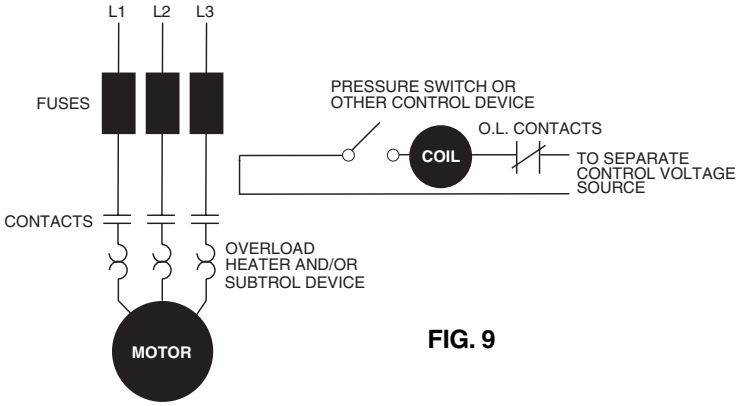

FIG. 9

Application - Three Phase Motors

Three Phase Power Unbalance

A full three phase supply is recommended for all three phase motors, consisting of three individual transformers or one three phase transformer. So-called “open” delta or wye connections using only two transformers can be used, but are more likely to cause problems, such as poor performance, overload tripping or early motor failure due to current unbalance.

Transformer rating should be no smaller than listed in Table 4 for supply power to the motor alone.

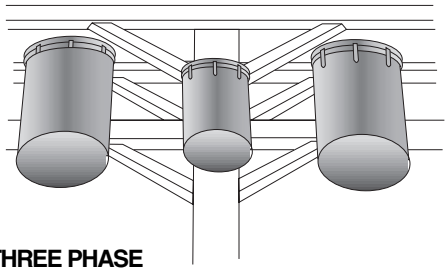

FIG. 10 FULL THREE PHASE

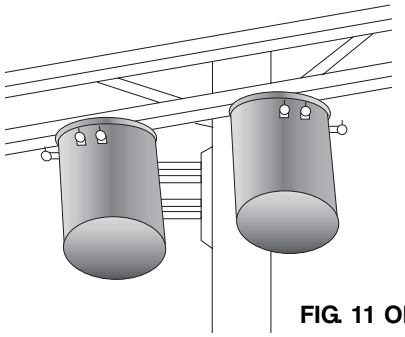

FIG. 11 OPEN DELTA

Checking And Correcting Rotation And Current Unbalance

1. Established correct motor rotation by running in both directions. Change rotation by exchanging any two of the three motor leads. The rotation that gives the most water flow is always the correct rotation.
2. After correct rotation has been established, check the current in each of the three motor leads and calculate the current unbalance as explained in 3 below.

   If the current unbalance is 2% or less, leave the leads as connected.

   If the current unbalance is more than 2%, current readings should be checked on each leg using each of three possible hook-ups. Roll the motor leads across the starter in the same direction to prevent motor reversal.
3. To calculate percent of current unbalance:
   A. Add the three line amps values together.
   B. Divide the sum by three, yielding average current.
   C. Pick the amp value which is furthest from the average current (either high or low).
   D. Determine the difference between this amp value (furthest from average) and the average.
   E. Divide the difference by the average. Multiply the result by 100 to determine percent of unbalance.
4. Current unbalance should not exceed 5% at service factor load or 10% at rated input load. If the unbalance cannot be corrected by rolling leads, the source of the unbalance must be located and corrected. If, on the three possible hookups, the leg farthest from the average stays on the same power lead, most of the unbalance is coming from the power source. However, if the reading farthest from average moves with the same motor lead, the primary source of unbalance is on the “motor side” of the starter. In this instance, consider a damaged cable, leaking splice, poor connection, or faulty motor winding.

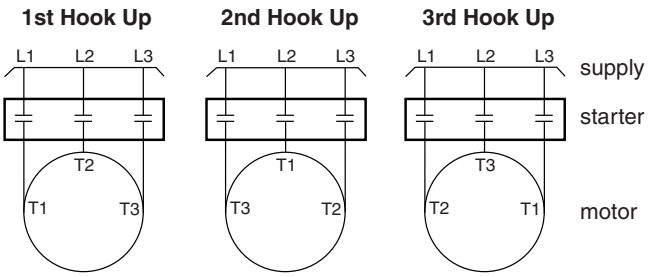

EXAMPLE:

T1 = 50 amps	T3 = 51 amps	T2 = 50 amps
T2 = 49 amps	T1 = 46 amps	T3 = 48 amps
+ T3 = 51 amps	+ T2 = 53 amps	+ T1 = 52 amps
Total = 150 amps	Total = 150 amps	Total = 150 amps
$\frac{150}{3}$ = 50 amps	$\frac{150}{3}$ = 50 amps	$\frac{150}{3}$ = 50 amps
50 - 49 = 1 amp	50 - 46 = 4 amps	50 - 48 = 2 amps
$\frac{1}{50}$ = .02 or 2%	$\frac{4}{50}$ = .08 or 8%	$\frac{2}{50}$ = .04 or 4%

Phase designation of leads for CCW rotation viewing shaft end.

To reverse rotation, interchange any two leads.

Phase 1 or “A”- Black, T1, or U1

Phase 2 or “B”- Yellow, T2, or V1

Phase 3 or “C”- Red, T3, or W1

NOTICE: Phase 1, 2 and 3 may not be L1, L2 and L3.

Application - Three Phase Motors

Three Phase Motor Lead Identification

90° Lead Spacing

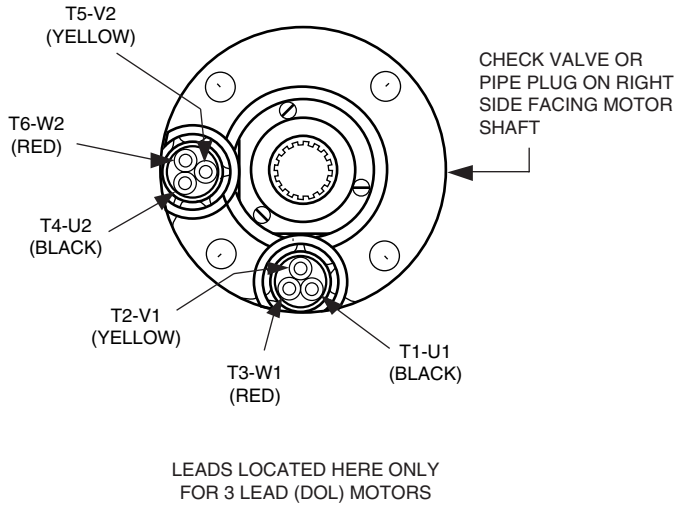

Line Connections — Six Lead Motors

Connections for across-the-line starting, running, and any reduced voltage starting except WYE-DELTA type starters.

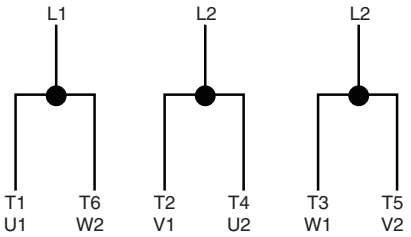

WYE-DELTA starters connect the motor as shown below during starting, then change to the running connection shown at the left.

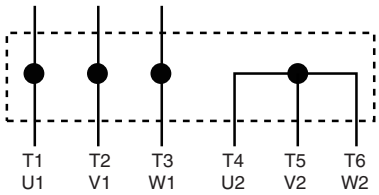

Each motor lead is numbered with two markers, one near each end. To reverse rotation. Interchange any two line connections.

Phase Converters

There are a number of different types of phase converters available. Each generates three phase power from a single phase power line.

In all phase converters, the voltage balance is critical to current balance. Although some phase converters may be well balanced at one point on the system-operating curve, submersible pumping systems often operate at differing points on the curve as water levels and operating pressures fluctuate. Other converters may be well balanced at varying loads, but their output may vary widely with fluctuations in the input voltage.

The following guidelines have been established for submersible installations to be warrantable when used with a phase converter.

1. Limit pump loading to rated horsepower. Do not load into motor service factor.
2. Maintain at least 3 ft/sec. flow past the motor. Use a flow sleeve when necessary.
3. Use time delay fuses or circuit breakers in pump panel. Standard fuses or circuit breakers do not provide secondary motor protection.
4. Subtrol-Plus may be used with electro mechanical type phase converters, however special connections are required. Consult Subtrol-Plus Manual for connections of receiver and lighting arrestor.
5. Subtrol-Plus will not work with electronic solid state phase converters.
6. Current unbalance must not exceed 10%.

Application - Three Phase Motors

Reduced Voltage Starters

All Franklin three phase submersible motors are suitable for full voltage starting. Under this condition the motor speed goes from zero to full speed within a half second or less. The load current goes from zero to locked rotor amps, about 5 to 7 times running amps, and drops to running amps at full speed. This may dim lights, cause momentary voltage dips to other electrical equipment, and shock load power distribution transformers.

Power companies may require reduced voltage starters to limit this voltage dip if started “directly on line”. There are also times when it may be desirable to reduce motor starting torque. This lessens the stress on shafts, couplings, and castings, as well as the supporting discharge piping. A “strong” voltage supply and a small cable voltage drop produces higher starting torque. Reduced voltage starters are used to reduce starting current or torque, and slow the immediate acceleration of the water on start up to control upthrust and water hammer.

With maximum recommended cable length, there is a 5% voltage drop in the cable, and there will be about 20% reduced starting current and about 36% reduction in starting torque compared to having rated voltage at the motor. This may be enough reduction in starting current so that reduced voltage starters may not be required.

Standard three phase motors have three line leads so only resistance, autotransformer, or solid state reduced voltage starters may be used. The autotransformer type is preferred over resistance and solid state types because it draws lower line current for the same starting torque.

Wye-Delta starters are used with six lead Wye-Delta motors. All Franklin 6" and 8" three phase motors are available in six lead Wye-Delta construction. Consult the factory for details and availability. Part winding starters are not usable with Franklin Electric submersible motors.

When reduced voltage starters are used, it is recommended that the motor be supplied with at least 55% of rated voltage to ensure adequate starting torque.

Most autotransformers starters have 65% and 85% taps. Setting the taps on these starters depends on the percentage of the maximum allowable cable length used in the system. If the cable length is less than 50% of the maximum allowable, either the 65% or the 80% taps may be used. When the cable length is more than 50% of allowable, the 80% tap should be used.

Solid state reduced voltage starters may be used with submersibles, but are not usable with Subtrol-Plus.

Both electromechanical and solid state starters have adjustable time delays for starting. Typically they are preset at 30 seconds. They must be set so the motor is at full voltage within TWO TO THREE SECONDS MAXIMUM to prevent overload trip and unnecessary heating.

Open transition starters, which momentarily interrupt power during the starting cycle, are not recommended. Only closed transition starters, which have no interruption of power during the start cycle, should be used.

Inline Booster Pump Systems

Franklin submersible motors are acceptable for booster pump (canned) applications providing the following conditions are taken into consideration in the system design.

1. **Horizontal Operation:** Horizontal operation is acceptable as long as the pump transmits thrust to the motor and the entire assembly is supported sufficiently to prevent binding stresses.
2. **Motor Support:** The motor support assembly must not restrict the flow of cooling water around the full diameter of the motor. The motor supports must be on the motor endbell castings, and not on the motor shell.
3. **Motor Alterations:** On 6” and 8” motors, the sand slinger should be removed. The pipe plug covering the check valve should be removed from Ni-resist and 316 SS motors.
4. **Controls:** Franklin Subtrol-Plus is strongly recommended for all large submersibles. If Subtrol-Plus is not employed, properly sized ambient compensated quick-trip overloads must be utilized. In addition, a surge arrestor should be installed on all systems and properly grounded.
5. **Wiring:** Franklin’s lead assemblies are sized for submerged operation and may not be adequate for use in open air. Any wiring not submerged must comply with Franklin’s cable charts.
6. **Water Temperature:** The temperature of the water should be monitored at the inlet to each booster. When temperatures exceed 86°F (30°C), motor derating is required.
7. **Inlet Pressure:** The inlet pressure on each booster should be monitored and not be allowed below the pump’s specified Net Positive Suction Head Requirements (NPSHR). If NPSHR is unknown, at least 20 PSI should be maintained at all times. **At no time should the pressure surrounding the motor be less than one atmosphere.**
8. **Discharge Flow:** The flow rate for each pump should not be allowed to drop below the minimum required maintaining cooling flow velocities. Pressure relieving valves should be employed to prevent running the pump at shut-off.
9. **Discharge Pressure:** The discharge pressure should be great enough to prevent upthrust.
10. **Can Flooding:** An air bleeder valve must be employed on the booster can so that flooding may be accomplished prior to booster start-up. Once flooding is complete, the booster should be started

Inline Booster Pump Systems (continued)

as quickly as possible to minimize the chance of upthrust. Water should never be forced through the booster can (more than momentarily) without the pump running as failure due to upthrust may occur.

IMPORTANT NOTES:

1. **High Pressure Tests:** Motors intended for booster applications where the pressure exceeds 500 PSI must be special ordered from the factory.
2. **Starting:** Reduced voltage starting may be employed. This will reduce upthrust on start, starting current, and mechanical stresses created by the motor's high starting torque. Reduced voltage starters, if used should accelerate the motor to full speed within two seconds. Note: Solid state reduced voltage starters are not compatible with Subtrol-Plus.

Variable Speed Submersible Pump Operation, Inverter Drives

Franklin three phase submersible motors are operable from variable frequency inverter drives when applied within guidelines shown below. These guidelines are based on present Franklin information for inverter drives, lab tests and actual installations, and must be followed for warranty to apply to inverter drive installations. Franklin two-wire and three-wire single phase submersible motors are not recommended for variable speed operation.

Warning: There is a potential shock hazard from contact with insulated cables from a PWM drive to the motor. This hazard is due to high frequency voltage content of a PWM drive output.

Load Capability: Pump load should not exceed motor nameplate service factor amps at rated voltage and frequency.

Volts/Hz: Use motor nameplate volts and frequency for the drive base settings. Many drives have means to increase efficiency at reduced pump speeds by lowering motor voltage. This is the preferred operating mode.

Motor Current Limits: Load no higher than motor nameplate service factor amps. For 50 Hz ratings, nameplate maximum amps are rated amps. See Overload Protection below.

Carrier Frequency: Applicable to PWM drives only. These drives often allow selection of the carrier frequency. Use a low carrier frequency.

Voltage Rise-time or dV/dt: Limit the voltage peak at the motor to 1000V and the rise time to no more than 2 µsec. See filters and reactors.

Motor Overload: Follow the Franklin guidelines listed in the Application Installation Maintainance (AIM) Manual.

Protection: Drives with built-in motor protection will meet Franklin's quick-trip overload requirements. The ultimate trip (not the setting) must not exceed 115% of nameplate maximum amps in any line.

Subtrol-Plus: Franklin's Subtrol-Plus protection systems ARE NOT USABLE on VFD installations.

Frequency Range: Continuous between 30 and 60 Hz. Consult factory for operations above 60 Hz.

Start and Stop: One second maximum ramp-up and ramp-down times between stopped and 30 Hz. Stopping by coast-down is preferable.

Successive Starts: Allow 60 seconds before restarting.

Filters or Reactors: Required if (1) Voltage is 380 or greater and (2) Drive uses IGBT or BJT switches (rise-times < 2 msec) and (3) Cable from drive to motor is more than 50 ft. A low-pass filter is preferable. Filters or reactors should be selected in conjunction with the drive manufacturer and must be specifically designed for VFD operation.

Cable Lengths : Per Franklin's cable tables.

Motor Cooling Flow: The flow rate past the motor at rated nameplate motor frequency (Hz) must meet Franklin's minimum flow requirements. 4" .25 ft./sec. and 6" and 8" .5 ft./sec.

Installation - All Motors

4” Super Stainless — Dimensions

(Standard Water Well)

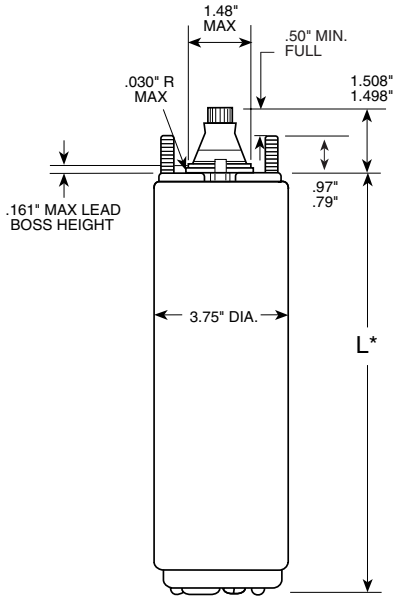

4” High Thrust — Dimensions

(Standard Water Well)

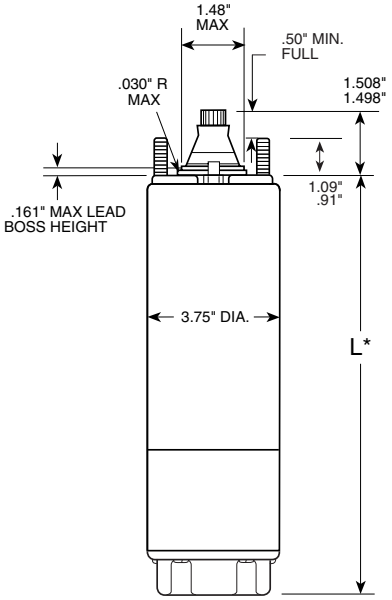

6”— Dimensions

(Standard Water Well)

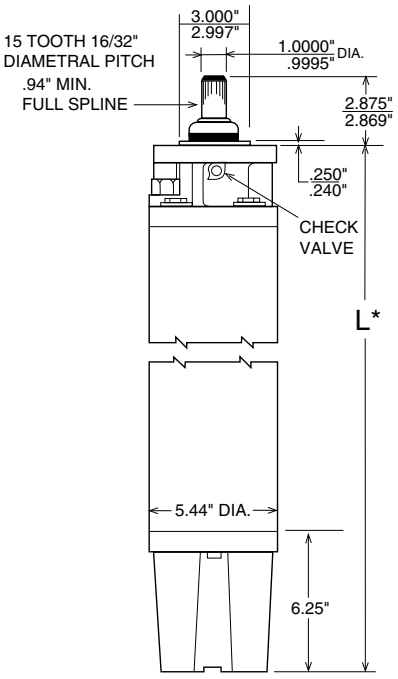

8”— Dimensions

(Standard Water Well)

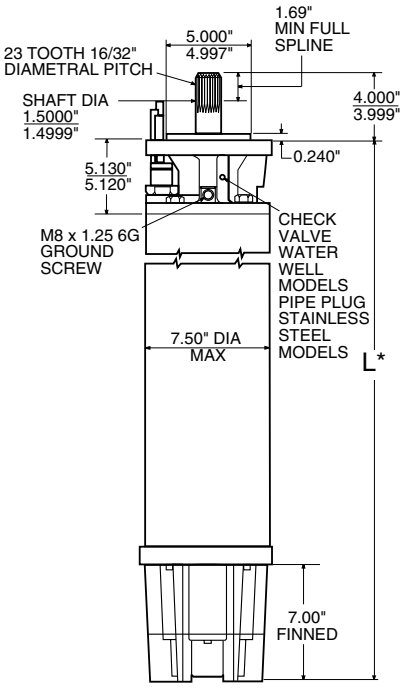

40 to 100 HP

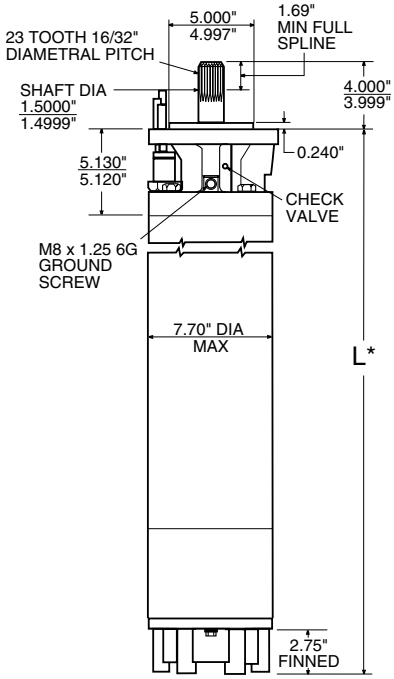

125 to 200 HP

*** Motor lengths and shipping weights are available on Franklin Electric’s web page (www.franklin-electric.com) or by calling Franklin’s submersible hotline (800-348-2420).**

Tightening Motor Lead Connector Jam Nut

4" Motors - 15 to 20 ft-lb. (20 to 27 N-m)
6" Motors - 50 to 60 ft-lb. (68 to 81 N-m)
8" Motors with: 1-3/16" to 1-5/8" Jam Nut - 50 to 60 ft-lb. (68 to 81 N-m)
8" Motors with 4 Screw Clamp Plate: Apply increasing torque to the screws equally in a criss-cross pattern until 80 to 90 in-lb. (9.0 to 10.2 N-m) is reached.

A motor lead assembly should not be reused. A new lead assembly should be used whenever one is removed from the motor, because rubber set and possible damage from removal may prevent proper resealing of the old lead.

All motors returned for warranty consideration must have the lead returned with the motor.

Pump to Motor Coupling

Assemble coupling with non-toxic FDA approved waterproof grease such as Mobile FM102, Texaco CYGNUS2661, or approved equivalent. This prevents abrasives from entering the spline area and prolongs spline life.

Shaft Height and Free End Play

Table 34

Motor	Normal Shaft Height		Dimension Shaft Height			Free End Play Min.	Free End Play Max.
4"	1 1/2"	38.1 mm	1.508" / 1.498"	38.30 / 38.05	mm	.010" / .25 mm	.045" / 1.14 mm
6"	2 7/8"	73.0 mm	2.875" / 2.869"	73.02 / 72.88	mm	.030" / .75 mm	.050" / 1.25 mm
8" Type 1	4"	101.5 mm	4.000" / 3.990"	101.60 / 101.35	mm	.008" / .20 mm	.020" / .50 mm
8" Type 2	4"	101.5 mm	4.000" / 3.990"	101.60 / 101.35	mm	.035" / .89 mm	.060" / 1.52 mm
8" Type 2.1	4"	101.5 mm	4.000" / 3.990"	101.60 / 101.35	mm	.030" / .75 mm	.080" / 2.03 mm

If the height, measured from the pump-mounting surface of the motor, is low and/or end play exceeds the limit, the motor thrust bearing is possibly damaged, and should be replaced.

Submersible Leads and Cables

A common question is why motor leads are smaller than specified in Franklin's cable charts.

The leads are considered a part of the motor and actually are a connection between the large supply wire and the motor winding. The motor leads are short and there is virtually no voltage drop across the lead.

In addition, the lead assemblies **operate under water**, while at least part of the supply cable must **operate in air.** Lead assemblies running under water operate cooler.

CAUTION: Lead assemblies on submersible motors are suitable only for use in water and may overheat and cause failure if operated in air.

Splicing Submersible Cables

When the drop cable must be spliced or connected to the motor leads, it is necessary that the splice be watertight. This splice can be made with commercially available potting, heat shrink splicing kits, or by careful tape splicing.

Tape splicing should use the following procedure.

A) Strip individual conductor of insulation only as far as necessary to provide room for a stake type connector. Tubular connectors of the staked type are preferred. If connector outside diameter (OD) is not as large as cable insulation, build up this area with rubber electrical tape.

B) Tape individual joints with rubber electrical tape, using two layers, with the first layer extending two inches beyond each end of the conductor insulation end, and the second layer extending two inches beyond the ends of the first layer. Wrap tightly, eliminating air spaces as much as possible.

C) Tape over the rubber electrical tape with #33 Scotch electrical tape, (3M) or equivalent, using two layers as in step “B” and making each layer overlap the end of the preceding layer by at least two inches.

In the case of a cable with three conductors encased in a single outer sheath, tape individual conductors as described, staggering joints.

Total thickness of tape should be no less than the thickness of the conductor insulation.

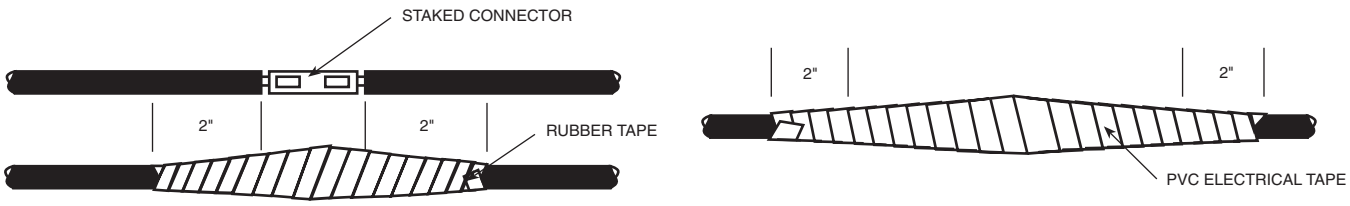

FIG. 12

System Trouble Shooting

Motor Does Not Start

Possible Cause	Checking Procedures	Corrective Action
A. No power or incorrect voltage.	Check voltage at line terminals. The voltage must be ± 10% of rated voltage.	Contact power company if voltage is incorrect.
B. Fuses blown or circuit breakers tripped.	Check fuses for recommended size and check for loose, dirty or corroded connections in fuse receptacle. Check for tripped circuit breakers.	Replace with proper fuse or reset circuit breakers.
C. Defective pressure switch.	Check voltage at contact points. Improper contact of switch points can cause voltage less than line voltage.	Replace pressure switch or clean points.
D. Control box malfunction.	For detailed procedure, see pages 40-41.	Repair or replace.
E. Defective wiring	Check for loose or corroded connections or defective wiring.	Correct faulty wiring or connections.
F. Bound pump.	Check for misalignment between pump and motor or a sand bound pump. Amp readings will be 3 to 6 times higher than normal until the overload trips.	Pull pump and correct problem. Run new installation until the water clears.
G. Defective cable or motor.	For detailed procedure, see pages 38-40.	Repair or replace.

Motor Starts Too Often

A. Pressure switch.	Check setting on pressure switch and examine for defects.	Reset limit or replace switch.
B. Check valve - stuck open.	Damaged or defective check valve will not hold pressure.	Replace if defective.
C. Waterlogged tank.	Check air charge.	Repair or replace.
D. Leak in system.	Check system for leaks.	Replace damaged pipes or repair leaks.

System Trouble Shooting

Motor Runs Continuously

Possible Cause	Checking Procedures	Corrective Action
A. Pressure switch.	Check switch for welded contacts. Check switch adjustments.	Clean contacts, replace switch, or adjust setting.
B. Low water level in well.	Pump may exceed well capacity. Shut off pump, wait for well to recover. Check static and drawdown level from well head.	Throttle pump output or reset pump to lower level. Do not lower if sand may clog pump.
C. Leak in system.	Check system for leaks.	Replace damaged pipes or repair leaks.
D. Worn pump.	Symptoms of worn pump are similar to those of drop pipe leak or low water level in well. Reduce pressure switch setting, if pump shuts off worn parts may be the fault.	Pull pump and replace worn parts.
E. Loose coupling or broken motor shaft.	Check for loose coupling or damaged shaft.	Replace worn or damaged parts.
F. Pump screen blocked.	Check for clogged intake screen.	Clean screen and reset pump depth.
G. Check valve stuck closed.	Check operation of check valve.	Replace if defective.
H. Control box malfunction.	See pages 40-41 for single phase.	Repair or replace.

Motor Runs But Overload Protector Trips

A. Incorrect voltage.	Using voltmeter, check the line terminals. Voltage must be within ± 10% of rated voltage.	Contact power company if voltage is incorrect.
B. Overheated protectors.	Direct sunlight or other heat source can raise control box temperature causing protectors to trip. The box must not be hot to touch.	Shade box, provide ventilation or move box away from source.
C. Defective control box.	For detailed procedures, see pages 40-41.	Repair or replace.
D. Defective motor or cable.	For detailed procedures, see pages 38-40.	Repair or replace.
E. Worn pump or motor.	Check running current. See pages 13 & 21-23.	Replace pump and/or motor.

Table 38 Preliminary Tests - All Sizes Single and Three Phase

"Test"	Procedure	What it Means
Insulation Resistance	1. Open master breaker and disconnect all leads from control box or pressure switch (QD type control, remove lid) to avoid electric shock hazard and damage to the meter. 2. Set the scale lever to R X 100K and set the ohmmeter on zero. 3. Connect one ohmmeter lead to any one of the motor leads and the other lead to the metal drop pipe. If the drop pipe is plastic, connect the ohmmeter lead to ground.	1. If the ohms value is normal (Table 39), the motor is not grounded and the cable insulation is not damaged. 2. If the ohms value is below normal, either the windings are grounded or the cable insulation is damaged. Check the cable at the well seal as the insulation is sometimes damaged by being pinched.
Winding Resistance	1. Open master breaker and disconnect all leads from control box or pressure switch (QD type control, remove lid) to avoid electric shock hazard and damage to the meter. 2. Set the scale lever to R X 1 for values under 10 ohms. For values over 10 ohms, set the scale lever to R X 10. "Zero" the ohmmeter. 3. On 3-wire motors measure the resistance of yellow to black (Main winding) and yellow to red (Start winding). On 2-wire motors measure the resistance from line to line. Three phase motors measure the resistance line to line for all three combinations.	1. If all ohms values are normal (Tables 13, 21, 22 & 23), the motor windings are neither shorted nor open, and the cable colors are correct 2. If any one value is less than normal, the motor is shorted. 3. If any one ohm value is greater than normal, the winding or the cable is open, or there is a poor cable joint or connection. 4. If some ohms values are greater than normal and some less on single phase motors, the leads are mixed. See Page 40 to verify cable colors.

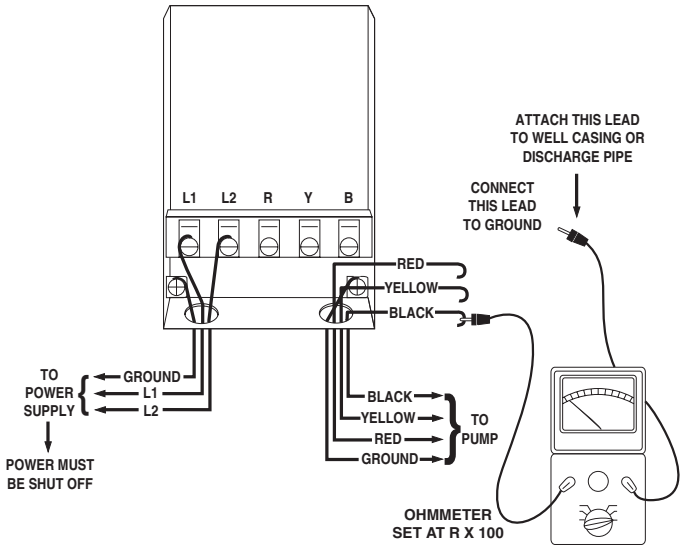

FIG. 13

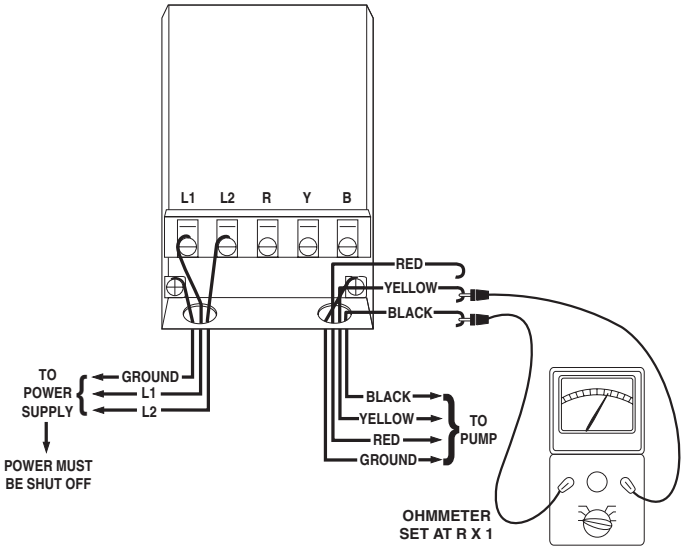

FIG. 14

Insulation Resistance Readings

Table 39 Normal Ohm and Megohm Values Between All Leads and Ground

Condition of Motor and Leads	Ohm Value	Megohm Value
A new motor (without drop cable).	20,000,000 (or more)	20 (or more)
A used motor which can be reinstalled in well.	10,000,000 (or more)	10 (or more)
Motor in well. Readings are for drop cable plus motor.		
New motor.	2,000,000 (or more)	2 (or more)
Motor in good condition.	500,000 - 2,000,000	.5 - 2
Insulation damage, locate and repair.	Less than 500,000	Less than .5

Insulation resistance varies very little with rating. Motors of all HP, voltage, and phase ratings have similar values of insulation resistance.

Table 39 is based on readings taken with a megohmmeter with a 500V DC output. Readings may vary using a lower voltage ohmmeter, consult Franklin Electric if readings are in question.

Resistance of Drop Cable (Ohms)

The values below are for copper conductors. If aluminum conductor drop cable is used, the resistance will be higher. To determine the actual resistance of the aluminum drop cable, divide the ohm readings from this chart by 0.61. This chart shows total resistance of cable from control to motor and back.

Winding Resistance Measuring

When measured as shown in FIG 14, Page 38, motor resistance should fall within the values in Tables 13, 21, 22 & 23. When measured through the drop cable, the resistance of the drop cable as determined from the chart below, must be subtracted from the ohmmeter reading to get the winding resistance of the motor.

DC Resistance in Ohms per 100ft. of Wire (Two conductors) @ 50°F

AWG or MCM Wire Size (Copper)	14	12	10	8	6	4	3	2
Ohms	0.544	0.338	0.214	0.135	0.082	0.052	0.041	0.032

1	1/0	2/0	3/0	4/0	250 MCM	300 MCM	350 MCM	400 MCM	500 MCM	600 MCM	700 MCM
0.026	0.021	0.017	0.013	0.010	0.0088	0.0073	0.0063	0.0056	0.0044	0.0037	0.0032

Identification Of Cables When Color Code Is Unknown (SINGLE PHASE 3-WIRE UNITS)

If the colors on the individual drop cables cannot be found with an ohmmeter, measure:

Cable 1 to Cable 2
Cable 2 to Cable 3
Cable 3 to Cable 1

Find the highest resistance reading.

The lead not used in the highest reading is the yellow lead.

Use the yellow lead and each of the other two leads to get two readings:

Highest is the red lead.
Lowest is the black lead.

EXAMPLE:

The ohmmeter readings were:

Cable 1 to Cable 2—6 ohms
Cable 2 to Cable 3—2 ohms
Cable 3 to Cable 1— 4 ohms

The lead not used in the highest reading (6 ohms) was
Cable 3—Yellow

From the yellow lead, the highest reading (4 ohms) was
To Cable 1—Red

From the yellow lead, the lowest reading (2 ohms) was
To Cable 2—Black

Single Phase Control Boxes

Checking and Repairing Procedures (Power On)

WARNING : Power must be on for these tests. Do not touch any live parts.

A. VOLTAGE MEASUREMENTS

Step 1. Motor Off

1. Measure voltage at L1 and L2 of pressure switch or line contactor.
2. Voltage Reading: Should be ±10% of motor rating.

Step 2. Motor Running

1. Measure voltage at load side of pressure switch or line contactor with pump running.
2. Voltage Reading: Should remain the same except for slight dip on starting. Excessive voltage drop can be caused by loose connections, bad contacts, ground faults, or inadequate power supply.
3. Relay chatter is caused by low voltage or ground faults.

B. CURRENT (AMP) MEASUREMENTS

1. Measure current on all motor leads.
2. Amp Reading: Current in red lead should momentarily be high, then drop within one second to values on Page 13. This verifies relay or solid state relay operation. Current in black and yellow leads should not exceed values on Page 13.
3. Relay or switch failures will cause red lead current to remain high and overload tripping.
4. Open run capacitor(s) will cause amps to be higher than normal in the black and yellow motor leads and lower than normal in the red motor lead.
5. A bound pump will cause locked rotor amps and overloading tripping.
6. Low amps may be caused by pump running at shutoff, worn pump, or stripped splines.
7. Failed start capacitor or open switch/relay are indicated if the red lead current is not momentarily high at starting.

CAUTION : The tests in this manual for components such as capacitors, relays, and QD switches should be regarded as indicative and not as conclusive. For example, a capacitor may test good (not open, not shorted) but may have lost some of its capacitance and may no longer be able to perform its function.

To verify proper operation of QD switches or relays, refer to operational test procedure described above in Section B-2.

Ohmmeter Tests

QD, Solid State Control Box (Power Off)

A. START CAPACITOR AND RUN CAPACITOR IF APPLICABLE (CRC)

1. Meter Setting: R x 1,000.
2. Connections: Capacitor terminals.
3. Correct meter reading: Pointer should swing toward zero, then back to infinity.

B. Q.D. (BLUE) RELAY

Step 1. Triac Test

1. Meter setting: R x 1,000.
2. Connections: Cap and B terminal.
3. Correct meter reading: Infinity for all models.

Step 2, Coil Test

1. Meter Setting: R x 1.
2. Connections: L1 and B.
3. Correct meter reading: Zero ohms for all models.

C. POTENTIAL (VOLTAGE) RELAY

Step 1. Coil Test

1. Meter setting: R x 1,000.
2. Connections: #2 & #5.
3. Correct meter readings: For 115 Volt Boxes
   .7-1.8 (700 to 1,800 ohms).
   For 230 Volt Boxes
   4.5-7.0 (4,500 to 7,000 ohms).

Step 2. Contact Test

1. Meter setting: R x 1.
2. Connections: #1 & #2.
3. Correct meter reading: Zero for all models.

D. SOLID STATE SWITCH

Step 1. Triac Test

1. Meter Setting: R x 1,000.
2. Connections: R (Start) terminal and orange lead on start switch.
3. Correct meter reading: Infinity for all models.

Step 2. Coil Test

1. Meter Setting: R x 1.
2. Connections: Y (Common) and L2.
3. Correct meter reading: Zero ohms for all models.

Ohmmeter Tests

Integral Horsepower Control Box (Power Off)

A. OVERLOADS (Push Reset Buttons to make sure contacts are closed.)

1. Meter Setting: R x 1.
2. Connections: Overload terminals.
3. Correct meter reading: Less than 0.5 ohms.

B. CAPACITOR (Disconnect leads from one side of each capacitor before checking.)

1. Meter Setting: R x 1,000.
2. Connections: Capacitor terminals.
3. Correct meter reading: Pointer should swing toward zero, then drift back to infinity, except for capacitors with resistors which will drift back to 15,000 ohms.

C. RELAY COIL (Disconnect lead from Terminal #5)

1. Meter Setting: R x 1,000.
2. Connections: #2 & #5.
3. Correct meter readings: 4.5-7.0 (4,500 to 7,000 ohms) for all models.

D. RELAY CONTACT (Disconnect lead from Terminal #1)

1. Meter Setting: R x 1.
2. Connections: #1 & #2.
3. Correct meter reading: Zero ohms for all models.

E. CONTACTOR COIL (Disconnect lead from one side of coil)

1. Meter Setting: R x 100.
2. Connections: Coil terminals.
3. Correct meter reading: 180 to 1,400 ohms.

F. CONTACTOR CONTACTS

1. Meter Setting: R X 1.
2. Connections: L1 & T1 or L2 & T2.
3. Manually close contacts.
4. Correct meter reading: Zero ohms.

CAUTION : The tests in this manual for components such as capacitors, relays, and QD switches should be regarded as indicative and not as conclusive. For example, a capacitor may test good (not open, not shorted) but may have lost some of its capacitance and may no longer be able to perform its function.

To verify proper operation of QD switches or relays, refer to operational test procedure described on Page 40, Section B-2.

Table 42 QD Control Box Parts 60 Hz

HP	Volts	Control Box Model Number	QD (Blue) Relay	Start Capacitor	MFD	Volts	Run Capacitor	MFD	Volts
1/3	115	2801024915	223415905	275464125	159-191	110			
	230	2801034915	223415901	275464126	43-53	220			
1/2	115	2801044915	223415906	275464201	250-300	125			
	230	2801054915	223415902	275464105	59-71	220			
	230	2824055015 **(CRC)**	223415912	275464126	43-53	220	156132101	15	370
3/4	230	2801074915	223415903	275464118	86-103	220			
	230	2824075015 **(CRC)**	223415913	275464105	59-71	220	156132102	23	370
1	230	2801084915	223415904	275464113	105-126	220			
	230	2824085015 **(CRC)**	223415914	275464118	86-103	220	156132102	23	370

NOTE 1: Control boxes supplied with QD relays are designed to operate on 230 volt systems. For 208 volt systems or where line voltage is between 200 volts and 210 volts use the next larger cable size, or use a boost transformer to raise the voltage.

NOTE 2: Voltage relays kits for 115 volts (305102 901) and 230 volts (305102 902) will replace current, voltage or QD relays, and solid state switches.

QD Capacitor Replacement Kits

Capacitor Number	Kit
275 464 105	305 207 905
275 464 113	305 207 913
275 464 118	305 207 918
275 464 125	305 207 925
275 464 126	305 207 926
156 132 101	305 203 907
156 132 102	305 203 908

QD Overload Kits 60 Hz

HP	Volts	Kit (1)
1/3	115	305100 901
1/3	230	305100 902
1/2	115	305100 903
1/2	230	305100 904
3/4	230	305100 905
1	230	305100 906

(1) For Control Boxes with model numbers that end with 915.

QD Relay Replacement Kits

QD Relay Number	Kit
223 415 901	305 101 901
223 415 902	305 101 902
223 415 903	305 101 903
223 415 904	305 101 904
223 415 905	305 101 905
223 415 906	305 101 906
223 415 912 (CRC)	305 105 901
223 415 913 (CRC)	305 105 902
223 415 914 (CRC)	305 105 903

Table 43 Integral Horsepower Control Box Parts 60 Hz

Motor Size	Motor Rating HP	Control Box (1) Model No.	Capacitors				Overload (2) Part No.	Relay (3) Part No.	Contactor (2) Part No.
			Part No. (2)	Mfd.	Volts	Qty.			
4"	1 1/2 Standard	282 3008 110	275 464 113 S	105-126	220	1	275 411 107	155 031 102	
			155 328 102 R	10	370	1			
4"	2 Standard	282 3018 110	275 464 113 S	105-126	220	1	275 411 107 S	155 031 102	
			155 328 103 R	20	370	1	275 411 113 M		
4"	2 Deluxe	282 3018 310	275 464 113 S	105-126	220	1	275 411 107 S	155 031 102	155 325 102 L
			155 328 103 R	20	370	1	275 411 113 M		
4"	3 Standard	282 3028 110	275 463 111 S	208-250	220	1	275 411 108 S	155 031 102	
			155 327 102 R	35	370	1	275 411 115 M		
4"	3 Deluxe	282 3028 310	275 463 111 S	208-250	220	1	275 411 108 S	155 031 102	155 325 102 L
			155 327 102 R	35	370	1	275 411 115 M		
4" & 6"	5 Standard	282 1138 110	275 468 119 S	270-324	330	1	275 411 102 S	155 031 102	
			155 327 101 R	30	370	2	275 406 102 M		
4" & 6"	5 Deluxe	282 1138 310 or	275 468 119 S	270-324	330	1	275 411 102 S	155 031 102	155 326 101 L
		282 1139 310	155 327 101 R	30	370	2	275 406 102 M		
6"	7 1/2 Standard	282 2019 210	275 468 119 S	270-324	330	1	275 411 102 S	155 031 601	
			275 468 118 S	216-259	330	1	275 406 122 M		
			155 327 109 R	45	370	1			
6"	7 1/2 Deluxe	282 2019 310	275 468 119 S	270-324	330	1	275 411 102 S	155 031 601	155 326 101 L
			275 468 118 S	216-259	330	1	275 406 121 M		
			155 327 109 R	45	370	1			
6"	10 Standard	282 2029 210	275 468 119 S	270-324	330	1	275 406 103 S	155 031 601	
			275468 120 S	350-420	330	1			
			155 327 102 R	35	370	2	155 409 101 M		
6"	10 Deluxe	282 2029 310	275 468 119 S	270-324	330	1	275 406 103 S	155 031 601	155 326 102 L
			275468 120 S	350-420	330	1			
			155 327 102 R	35	370	2	155 409 101 M		
6"	15 Deluxe	282 2039 310	275 468 120 S	350-420	330	2	275 406 103 S	155 031 601	155 429 102 L
			155 327 109 R	45	370	3	155 409 102 M		

FOOTNOTES:

(1) Lightning arrestors 150 814 902 are suitable for all control boxes.

(2) S = Start, M = Main, L = Line, Deluxe = Control box with line contactors

(3) For 208V systems or where line voltage is between 200V and 210V a low voltage relay is required. Use relay part 155 031 601 in place of 155 031 102 or 155 031 602 in place of 155 031 601. Use the next larger cable size than specified in 230V table. Boost transformers per Page 14 are an alternative to special relays and cable.

Integral HP Capacitor Replacement Kits

Capacitor Number	Kit
275 463 111	305 206 911
275 464 113	305 207 913
275 468 117	305 208 917
275 468 118	305 208 918
275 468 119	305 208 919
155 327 101	305 203 901
155 327 102	305 203 902
155 327 109	305 203 909
155 328 102	305 204 902
155 328 103	305 204 903

Integral HP Overload Replacement Kits

Overload Number	Kit
275 406 102	305 214 902
275 406 103	305 214 903
275 406 121	305 214 921
275 406 122	305 214 922
275 411 102	305 215 902
275 411 107	305 215 907
275 411 108	305 215 908
275 411 113	305 215 913
275 411 115	305 215 915

Integral HP Voltage Relay Replacement Kits

Relay Number	Kit
155 031 102	305 213 902
155 031 601	305 213 961

Control Box Wiring Diagrams

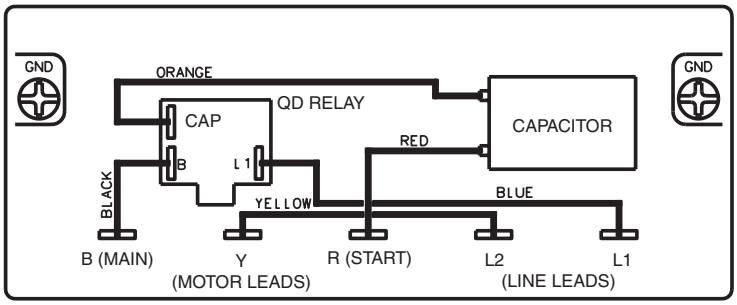

⅓ - 1 HP QD RELAY
280 10_ 4915
Sixth digit depends on HP

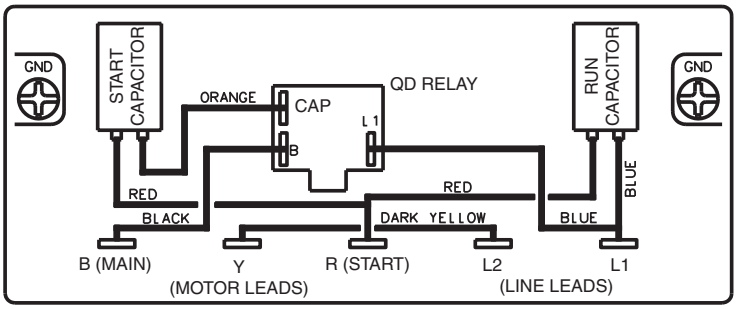

½ - 1 HP CRC QD RELAY
282 40_ 5015
Sixth digit depends on HP

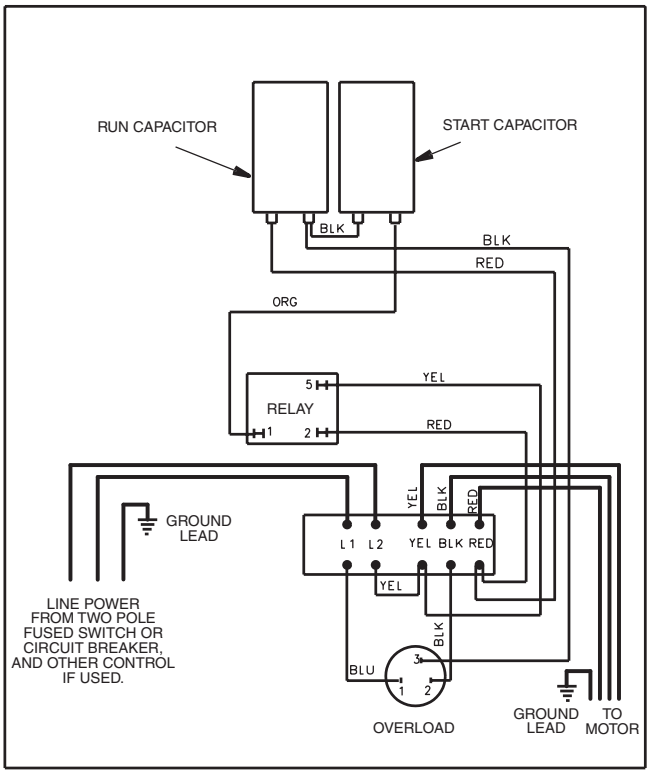

1½ HP
282 300 8110

Maintenance - Single Phase Motors & Controls

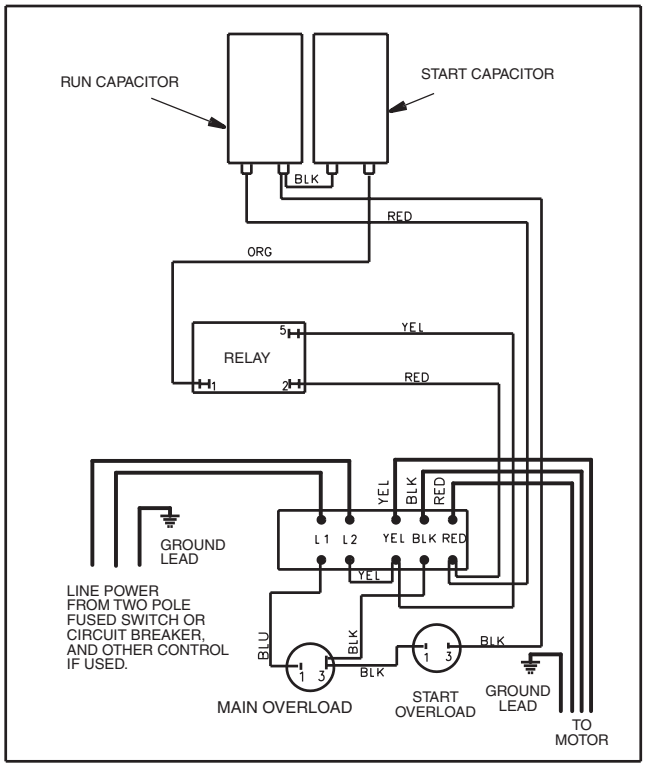

2 HP STANDARD
282 301 8110

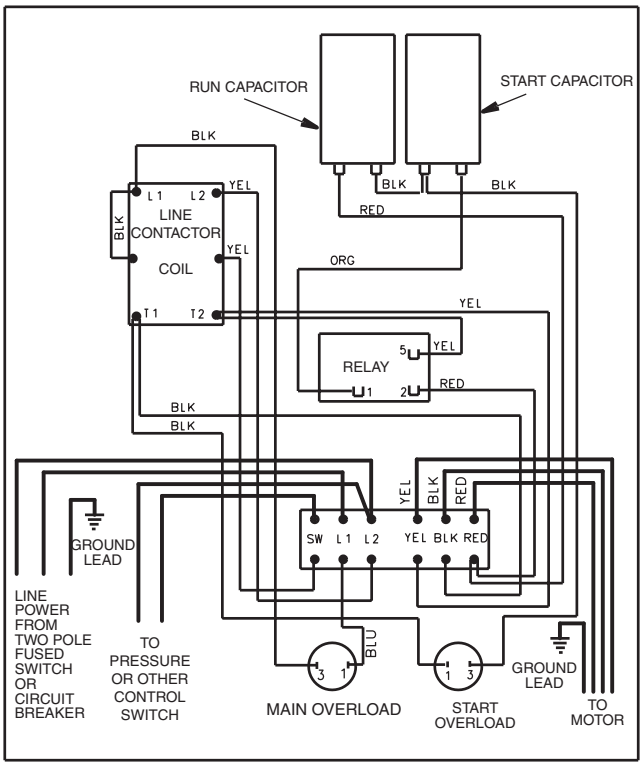

2 HP DELUXE
282 301 8310

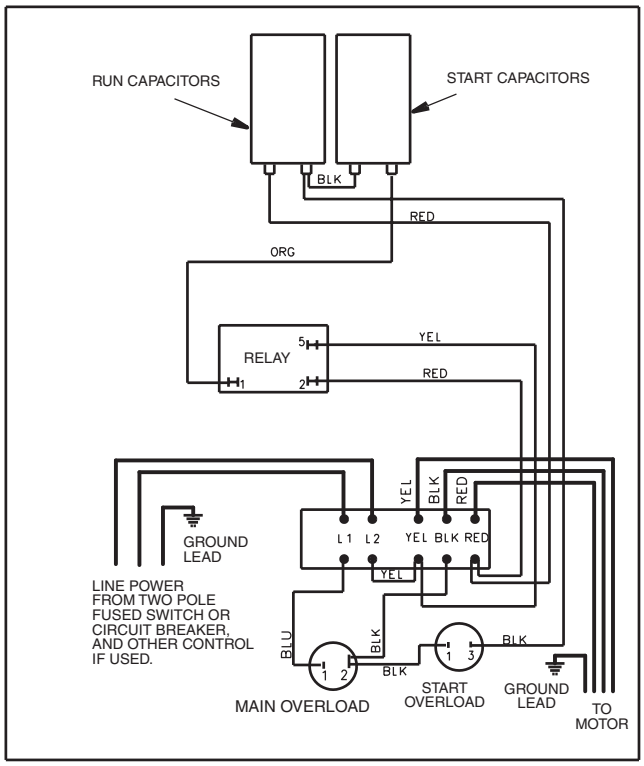

3 HP STANDARD
282 302 8110

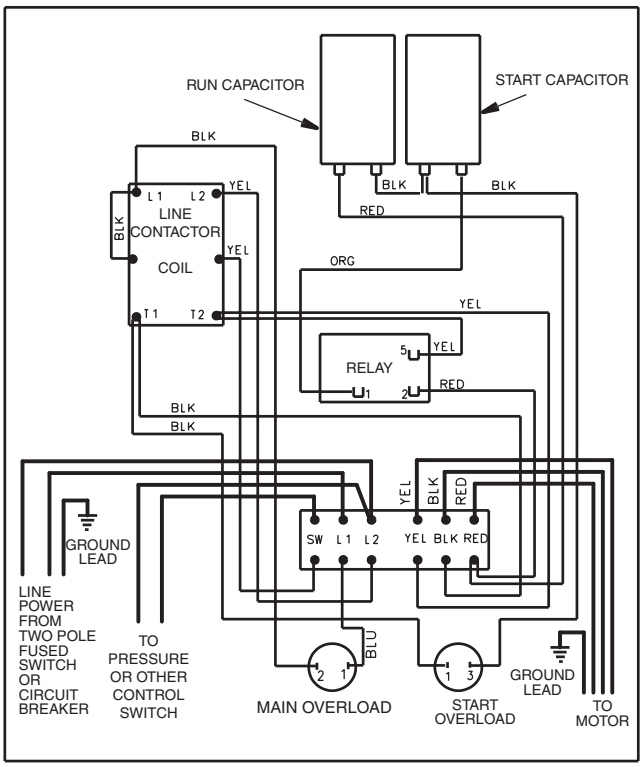

3 HP DELUXE
282 302 8310

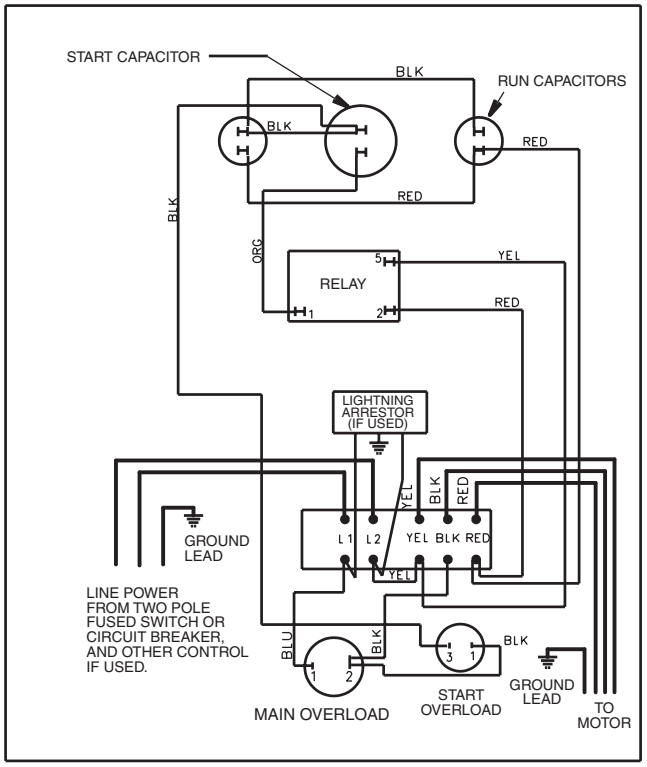

5 HP STANDARD
282 113 8110

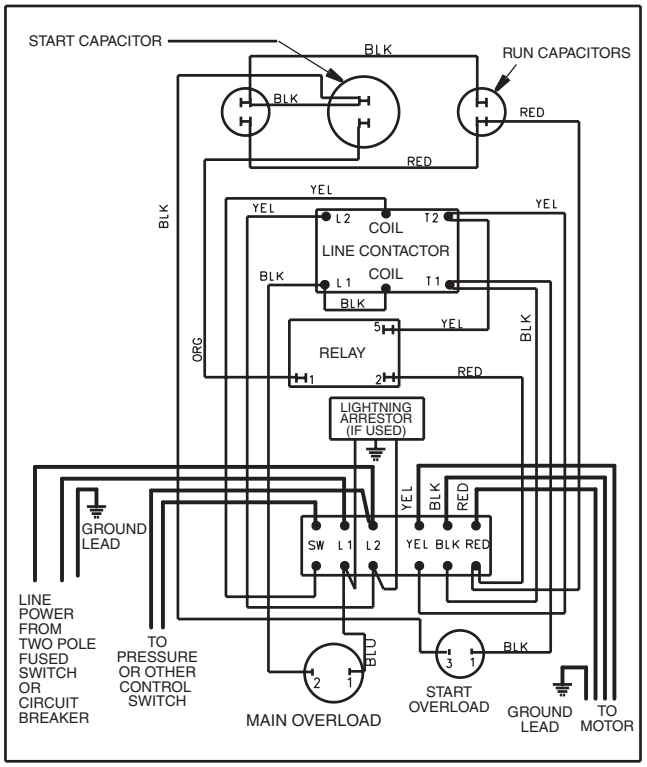

5 HP DELUXE
282 113 8310 or 282 113 9310

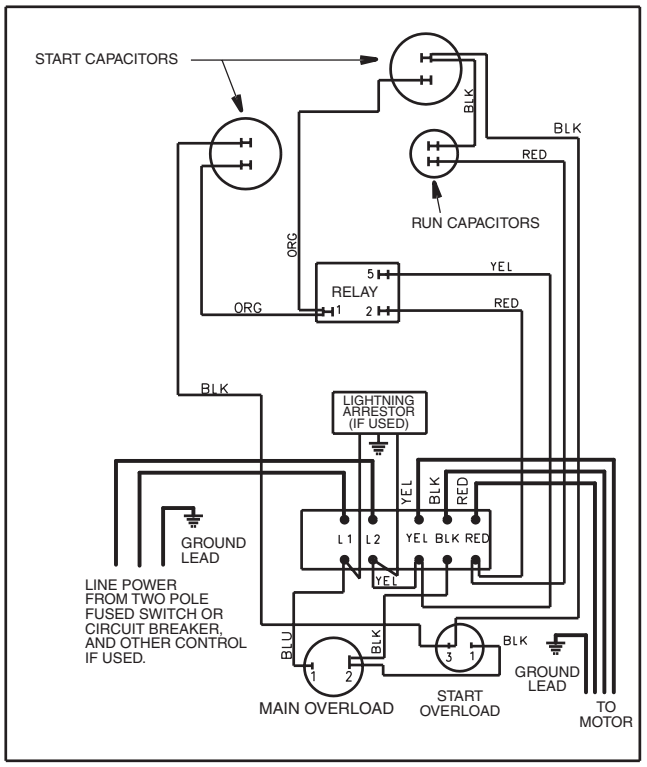

7½ HP STANDARD
282 201 9210

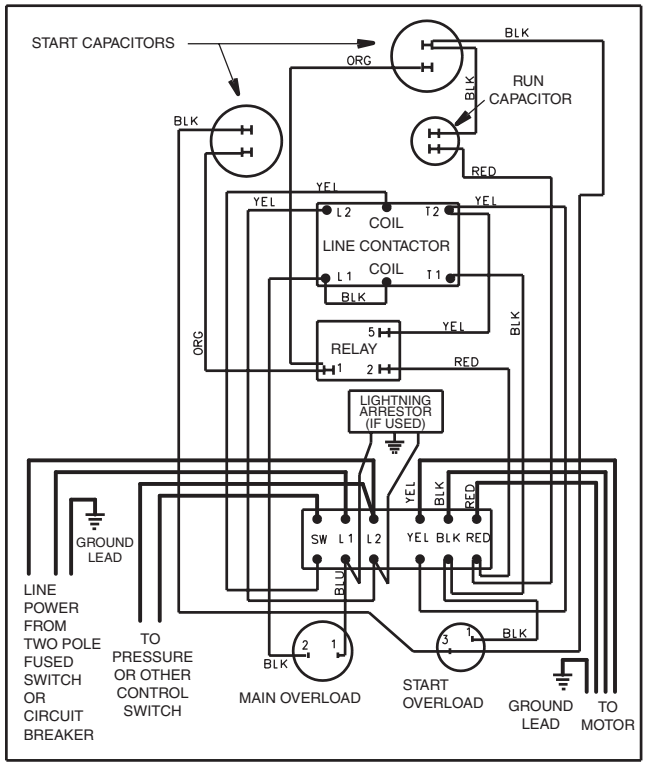

7½ HP DELUXE
282 201 9310

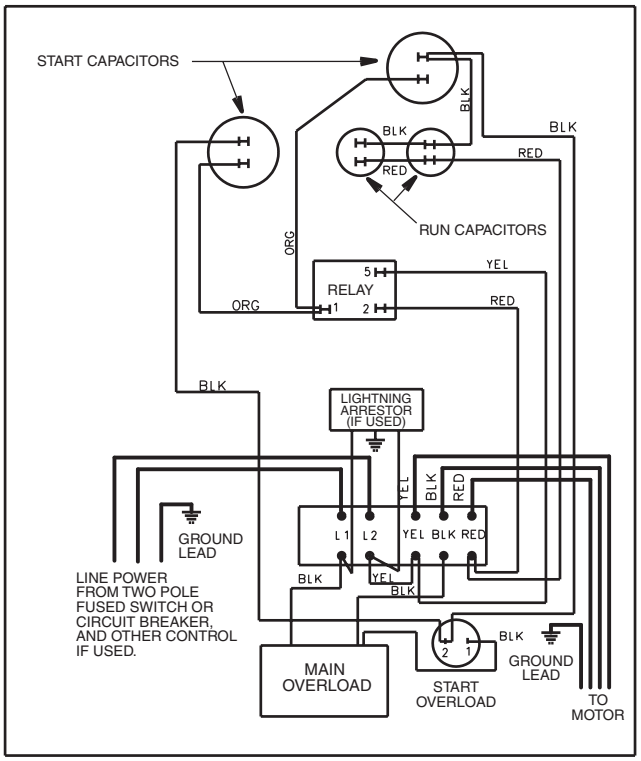

10 HP STANDARD
282 202 9210

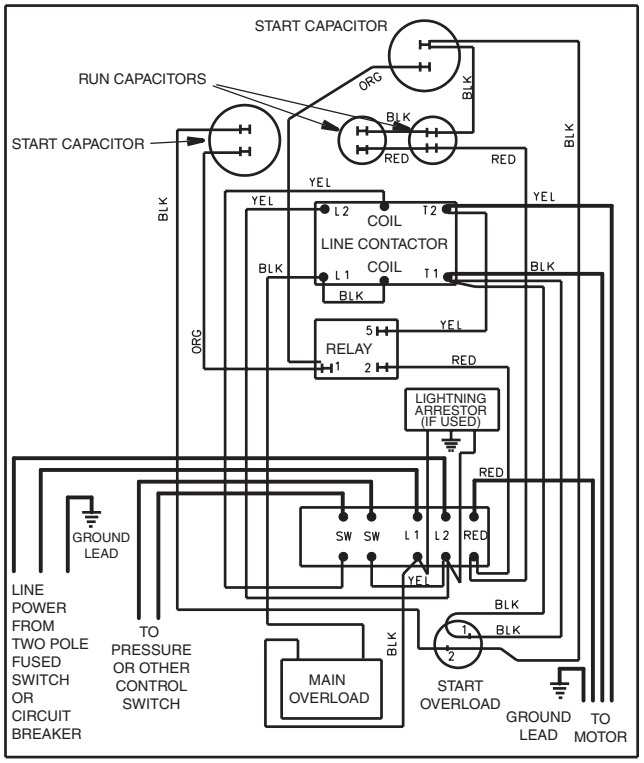

10 HP DELUXE
282 202 9310

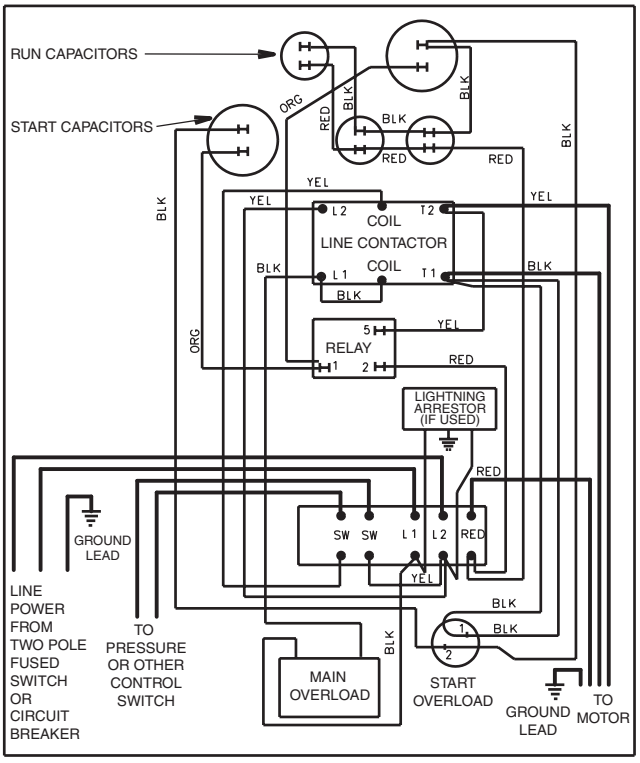

15 HP DELUXE
282 203 9310

Pumptec-Plus

Pumptec-Plus is a pump/motor protection device designed to work on any 230V single phase induction motor (PSC, CSCR, CSIR, and split phase) ranging in size from 1/2 to 5 horsepower. Pumptec-Plus uses a micro-computer to continuously monitor motor power and line voltage to provide protection against dry well, water logged tank, high and low voltage and mud or sand clogging.

Pumptec-Plus - Trouble Shooting During Installation

Symptom	Possible Cause	Solution
Unit Appears Dead (No Lights)	No Power to Unit	Check wiring. Power supply voltage should be applied to L1 and L2 terminals of the Pumptec-Plus. In some installations the pressure switch or other control device is wired to the input of the Pumptec-Plus. Make sure this switch is closed.
Flashing Yellow Light	Unit Needs To Be Calibrated	Pumptec-Plus is calibrated at the factory so that it will overload on most pump systems when the unit is first installed. This overload condition is a reminder that the Pumptec-Plus unit requires calibration before use. See step 7 of the installation instructions.
	Miscalibrated	Pumptec-Plus should be calibrated on a full recovery well with the maximum water flow. Flow restrictors are not recommended.
Flashing Yellow Light During Calibration	Two-Wire Motor	Step C of the calibration instructions indicate that a flashing green light condition will occur 2 to 3 seconds after taking the SNAPSHOT of the motor load. On some two-wire motors the yellow light will flash instead of the green light. Press and release the reset button. The green should start flashing.
Flashing Red and Yellow Lights	Power Interruption	During the installation of Pumptec-Plus power may be switched on and off several times. If power is cycled more than four times within a minute Pumptec-Plus will trip on rapid cycle. Press and release the reset button to restart the unit.
	Float Switch	A bobbing float switch may cause the unit to detect a rapid cycle condition on any motor or an overload condition on two wire motors. Try to reduce water splashing or use a different switch.
Flashing Red Light	High Line Voltage	The line voltage is over 253 volts. Check line voltage. Report high line voltage to the power company.
	Unloaded Generator	If you are using a generator the line voltage may become too high when the generator unloads. Pumptec-Plus will not allow the motor to turn on again until the line voltage returns to normal. Over voltage trips will also occur if line frequency drops too far below 60 Hz.
Solid Red Light	Low Line Voltage	The line voltage is below 207 volts. Check line voltage.
	Loose Connections	Check for loose connections which may cause voltage drops.
	Loaded Generator	If you are using a generator the line voltage may become too low when the generator loads. Pumptec-Plus will trip on undervoltage if the generator voltage drops below 207 volts for more than 2.5 seconds. Undervoltage trips will also occur if the line frequency rises too far above 60 Hz.

Pumptec-Plus

Pumptec-Plus - Trouble Shooting After Installation

Symptom	Possible Cause	Solution
Solid Yellow Light	Dry Well	Wait for the automatic restart timer to time out. During the time out period, the well should recover and fill with water. If the automatic reset timer is set to the manual position, then the reset button must be pressed to reactivate the unit.
	Blocked Intake	Clear or replace pump intake screen.
	Blocked Discharge	Remove blockage in plumbing.
	Check Valve Stuck	Replace check valve.
	Broken Shaft	Replace broken parts.
	Severe Rapid Cycling	Machine gun rapid cycling can cause an underload condition. See flashing red and yellow lights section below.
	Worn Pump	Replace worn pump parts and recalibrate.
Yellow Flashing Light	Stalled Motor	Repair or replace motor. Pump may be sand or mud locked.
	Float Switch	A bobbing float switch can cause two-wire motors to stall. Arrange plumbing to avoid splashing water. Replace float switch.
	Ground Fault	Check insulation resistance on motor and control box cable.
Solid Red Light	Low Line Voltage	The line voltage is below 207 volts. Pumptec-Plus will try to restart the motor every two minutes until line voltage is normal.
	Loose Connections	Check for excessive voltage drops in the system electrical connections (i.e. circuit breakers, fuse clips, pressure switch, and Pumptec-Plus L1 and L2 terminals). Repair Connections.
Flashing Red Light	High Line Voltage	The line voltage is over 253 volts. Check line voltage. Report high line voltage to the power company.
Flashing Red and Yellow Lights	Rapid Cycle	The most common cause for the rapid cycle condition is a waterlogged tank. Check for a ruptured bladder in the water tank. Check the air volume control or snifter valve for proper operation. Check setting on the pressure switch and examine for defects.
	Leaky Well System	Replace damaged pipes or repair leaks.
	Stuck Check Valve	Failed valve will not hold pressure. Replace Valve.
	Float Switch	Press and release the reset button to restart the unit. A bobbing float switch may cause the unit to detect a rapid cycle condition on any motor or an overload condition on two wire motors. Try to reduce water splashing or use a different switch.

CP Water System

The Franklin Electric CP (Constant Pressure) Water System is a variable-speed water system that utilizes a variable-speed drive system to deliver water at a constant pressure.

WARNING:
Serious or fatal electrical shock may result from failure to connect the motor, CP Water Controller, metal plumbing and all other metal near the motor or cable to the power supply ground terminal using wire no smaller than motor cable wires. To reduce the risk of electrical shock, disconnect power before working on or around the water system. Capacitors inside the CP Water Controller can still hold a lethal voltage even after power has been removed. Allow 10 minutes for dangerous internal voltage to discharge. Do not use motor in swimming areas.

CP Water System Troubleshooting

Should an application or system problem occur, a built-in diagnostics will protect the system. The “FAULT” light on the front of the CP Water Controller will flash a given number of times indicating the nature of the fault. In some cases, the system will shut itself off until corrective action is taken. Fault codes and their corrective actions are listed below.

# of Flashes	Fault	Possible Cause	Corrective Action
1	Motor underload	Overpumped or dry well. Worn pump. Broken motor shaft. Blocked pump screen.	Wait for well to recover and automatic restart timer to time out. If the problem does not correct, check motor and pump. See description of "smart reset" in CP Water installation manual.
2	Undervoltage	Low line voltage.	Check for loose connections. Check line voltage. Report low voltage to the power company. Unit will start automatically when proper power is supplied.
3	Locked pump	Motor/pump misaligned. Sand bound pump.	Cycle input power*. On power up, unit will attempt to free a locked pump. If unsuccessful, check the motor and pump.
4	Rapid cycling (unit still runs)	Waterlogged tank.	With no water pressure, check air pressure in tank. Pressure should be 10-15 PSI below CP Water pressure setting.
5	Open circuit	Loose connections. Defective motor or cable.	Check motor wiring. Make certain all connections are tight. Make certain proper motor is installed. Cycle input power* to reset.
6	Short circuit	Defective motor or cable.	Check motor wiring.
7	Overheat	High ambient temperature. Direct sunlight. No water flow through the unit.	This fault automatically resets when temperature returns to a safe level.
8	Internal sensor fault		Cycle input power*. If problem persists, replace CP Water Controller.

*"Cycle input power" means turn the power off for 5 seconds and then back on again.

QD Pumptec and Pumptec

QD Pumptec and Pumptec are load sensing devices that monitor the load on submersible pump/motors. If the load drops below a preset level for a minimum of 4 seconds the QD Pumptec or the Pumptec will shut off the motor.

The QD Pumptec is designed and calibrated expressly for use on Franklin Electric 230V 3-wire motors (1/3 to 1HP). The QD Pumptec must be installed in QD relay boxes.

The Pumptec is designed for use on Franklin Electric 2- and 3-wire motors (1/3 to 1 1/2 HP) 115 and 230V. The Pumptec is not designed for Jet Pumps.

QD Pumptec & Pumptec -Trouble Shooting

Symptom	Checks or Solution
QD Pumptec or Pumptec trips in about 4 seconds with some water delivery.	A. Is the voltage more than 90% of nameplate rating? B. Are the pump and motor correctly matched? C. Is the **QD Pumptec** or **Pumptec** wired correctly? For the **Pumptec** check the wiring diagram and pay special attention to the positioning of the power lead (230V or 115V). For **QD Pumptec** is your system 230V 60 Hz or 220V 50 Hz?
QD Pumptec or Pumptec trips in about 4 seconds with no water delivery.	A. The pump may be airlocked. If there is a check valve on top of the pump, put another section of pipe between the pump and the check valve. B. The pump may be out of water. C. Check the valve settings. The pump may be dead-heading. D. Pump or motor shaft may be broken. E. Motor overload may be tripped. Check the motor current (amperage).
QD Pumptec or Pumptec will not time out and reset.	A. Check switch position on side of circuit board on **Pumptec.** **QD Pumptec** check timer position on top/front of unit. Make sure the switch is not between settings. B. If the reset time switch is set to manual reset (position 0), **QD Pumptec** and **Pumptec** will not reset (turn power off for 5 sec. then back on to reset).
The pump/motor will not run at all.	A. Check voltage. B. Check wiring. C. Remove the **QD Pumptec** from the control box. Reconnect wires in box to original state. If motor does not run the problem is not **QD Pumptec.** Bypass **Pumptec** by connecting L2 and motor lead with jumper. Motor should run. If not, the problem is not **Pumptec**. D. On **Pumptec** only, check that **Pumptec** is installed between the control switch and the motor.
QD Pumptec or Pumptec will not trip when the pump breaks suction.	A. Be sure you have a Franklin motor. B. Check wiring connections. On **Pumptec** is lead power (230V or 115V) connected to correct terminal? Is motor lead connected to correct terminal? C. Check for ground fault in the motor and excessive friction in the pump. D. The well may be "gulping" enough water to keep **QD Pumptec** or **Pumptec** from tripping. It may be necessary to adjust the **QD Pumptec** or the **Pumptec** for these extreme applications. Call the Franklin Electric Service Hotline at 800-348-2420 for information. E. On **Pumptec** applications does the control box have a run capacitor? If so, **Pumptec** will not trip. (Except for Franklin 1 1/2 HP motors)
QD Pumptec or Pumptec chatters when running.	A. Check for low voltage. B. Check for waterlogged tank. Rapid cycling for any reason can cause the **QD Pumptec** or the **Pumptec** relay to chatter. C. On **Pumptec** make sure the L2 and motor wires are installed correctly. If they are reversed, the unit can chatter.

Subtrol-Plus

Subtrol-Plus - Trouble Shooting After Installation

Symptom	Possible Cause or Solution
Subtrol-Plus Dead	When the Subtrol-Plus reset button is depressed and released, all indicator lights should flash. If line voltage is correct at the Subtrol-Plus and the L1, L2, L3 terminals, and the reset button does not cause lights to flash, Subtrol-Plus receiver is malfunctioning.
Green Off Time Light Flashes	The green light will flash and not allow operation unless both sensor coils are plugged into the receiver. If both are properly connected and it still flashes, the sensor coil or the receiver is faulty. An ohmmeter check between the two center terminals of each sensor coil connected should read less than 1 ohm, or coil is faulty. If both coils check good, receiver is faulty.
Green Off Time Light On	The green light is on and the Subtrol-Plus requires the specified off time before the pump can be restarted after having been turned off. If the green light is on except as described, the receiver is faulty. Note that a power interruption when the motor is running will initiate the delay function.
Overheat Light On	This is a normal protective function which turns off the pump when the motor reaches maximum safe temperatures. Check that amps are within the nameplate maximum on all three lines, and that the motor has proper water flow past it. If overheat trip occurs without apparent motor overheating, it may be the result of an arcing connection somewhere in the circuit or extreme noise interference on the power lines. Check with the power company or Franklin Electric. A true motor overheat trip will require at least five minutes for a motor started cold. If trips do not conform to this characteristic, suspect arcing connections, power line noise, ground fault, or SCR variable speed control equipment.
Overload Light On	This is a normal protective function, protecting against an overload or locked pump. Check the amps in all lines through a complete pumping cycle, and monitor whether low or unbalanced voltage may be causing high amps at particular times. If overload trip occurs without high amps, it may be caused by a faulty rating insert, receiver, or sensor coil. Recheck that the insert rating matches the motor. If it is correct, carefully remove it from the receiver by alternately lifting sides with a knife blade or thin screwdriver, and make sure it has no pins bent over. If the insert is correct and its pins are okay, replace receiver and/or sensor coils.
Underload Light On	This is a normal protective function. A. Make sure the rating insert is the correct for the motor. B. Adjusting the underload setting as described to allow the desired range of operating conditions. Note that a DECREASE in underload setting is required to allow loading without trip. C. Check for drop in amps and delivery just before trip, indicating pump breaking suction, and for unbalanced line current. D. With the power turned off, recheck motor lead resistance to ground. A grounded lead can cause underload trip.

Subtrol-Plus

Subtrol-Plus - Trouble Shooting After Installation (Continued)

Symptom	Possible Cause or Solution
Tripped Light On	Whenever the pump is off as a result of Subtrol-Plus protective function, the red tripped light is on. A steady light indicates the Subtrol-Plus will automatically allow the pump to restart as described, and a flashing light indicates repeated trips, requiring manual reset before the pump can be restarted. Any other red light operation indicates a faulty receiver. One-half voltage on 460V will cause tripped light on.
Control Circuit Fuse Blows	With power turned off, check for a shorted contactor coil or a grounded control circuit lead. The coil resistance should be at least 10 ohms and the circuit resistance to panel frame over 1 megohm. A standard or delay-type 2 amp fuse should be used.
Contactor Will Not Close	If proper voltage is at the control coil terminals when controls are operated to turn the pump on, but the contactor does not close, turn off power and replace the coil. If there is no voltage at the coil, trace the control circuit to determine if the fault is in the Subtrol-Plus receiver, fuse, wiring, or panel operating switches. This tracing can be done by first connecting a voltmeter at the coil terminals, and then moving the meter connections step by step along each circuit to the power source, to determine at which component the voltage is lost. With the Subtrol-Plus receiver powered up, with all leads disconnected from the control terminals and with an ohmmeter set at R X 10, measure the resistance between the control terminals. It should measure 100 to 400 ohms. Depress and hold in the reset button. The resistance between the control terminals should measure close to infinity.
Contactor Hums or Chatters	Check that coil voltage is within 10% of rated voltage. If voltage is correct and matches line voltage, turn off power and remove the contactor magnetic assembly and check for wear, corrosion, and dirt. If voltage is erratic or lower than line voltage trace the control circuit for faults similar to the previous item, but looking for a major drop in voltage rather than its complete loss.
Contactor Opens When Start Switch is Released	Check that the small interlocks switch on the side of the contactor closes when the contactor closes. If the switch or circuit is open, the contactor will not stay closed when the selector switch is in HAND position.
Contactor Closes But Motor Doesn't Run	Turn off power. Check the contactor contacts for dirt, corrosion, and proper closing when the contactor is closed by hand.
Signal Circuit Terminals Do Not Energize	With the Subtrol-Plus receiver powered up and all leads disconnected from the Signal terminals, with an ohmmeter set at R X 10, measure the resistance between the Signal terminals. Resistance should measure close to infinite. Depress and hold in the reset button, the resistance between the signal terminals should measure 100 to 400 ohms.

Notes

Notes

Notes

TOLL FREE HELP FROM A FRIEND

1-800-348-2420

1-219-827-5102 FAX

Phone Franklin's toll free SERVICE HOTLINE for answers to your installation questions on submersible pump motors. When you call, a Franklin expert will offer assistance in troubleshooting submersible systems and provide immediate answers to your motor application questions. Technical support is also available online. Visit our website at:

www.franklin-electric.com

Franklin Electric
Bluffton, Indiana 46714

M-1311

APPENDIX C

Manufacturer's Information

General Electric 230/208 Volt Window/Wall Mount
Heat & Cool Unit Specifications

DRAFT

AJES09DCC

GE® 230/208 Volt Window/Wall Mount Heat and Cool Unit

Wall Case Dimensions and Installation Information (in inches)

Note: When installing slide-out chassis units in through-the-wall applications, keep louvers free. Do not restrict air flow areas.

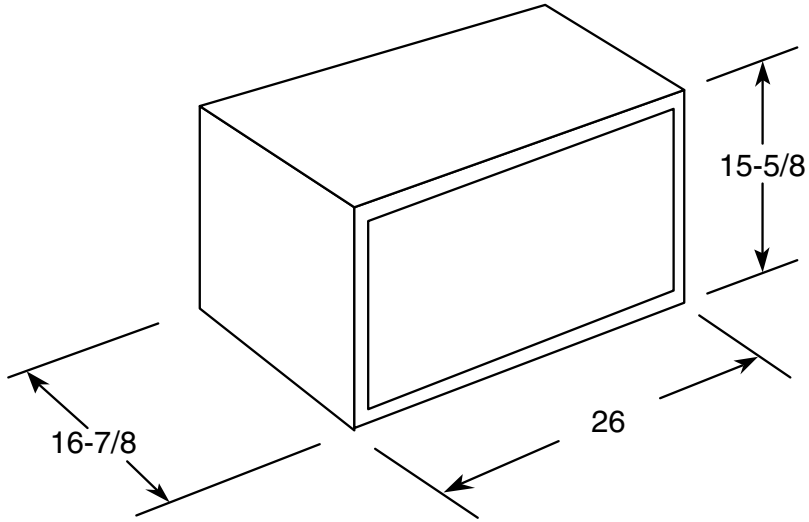

Perpendicular

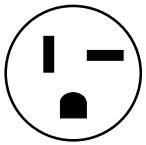

230/208V
20 Amp

For answers to your Monogram,® GE Profile™ or GE® appliance questions, visit our website at ge.com or call GE Answer Center® service, 800.626.2000.

imagination at work

CERTIFIED RATING CAPACITY, EER & AMPERES AHAM

Total volume and shelf area are calculated by the Association of Home Appliance Manufacturers' standards.

Listed by Underwriters Laboratories

Specification Created 1/07

390316

AJES09DCC

GE® 230/208 Volt Window/Wall Mount Heat and Cool Unit

Wall Case Dimensions and Installation Information (in inches)

I**nstallation Information:** A finished opening of 26-1/8" x 15-3/4" clear of intrusions is required. Keep clearance of 4" from side walls. Brick veneer or frame walls should have wood studding surrounding case to provide firm anchoring with screws. Case can be fastened directly to brick or block walls with screws sunk in lead expansion shields.

Note: Units should be caulked on all four sides of case to the building exterior to assure building integrity.

Two Wall Cases for Tenant Option Installation
When the air conditioner is offered as a tenant option, these wall cases provide protection against outside elements.

RAB47 – includes wall case, exterior grille and steel closure panels.

RAB48 – includes wall case, exterior grille, steel closure panel and two layers of insulation.

Standard Wall Case RAB46
Solid-sided wall case fabricated of galvanized steel with baked enamel finish. Welded areas are coated with a sealing compound to help resist rust and corrosion. Polymer gasket surrounds opening to assure tight weather seal. Aluminum grille (RAG13) is included. Panels on interior and between case and grille provide weather protection prior to installation of chassis. Provide firm anchoring with screws. Case can be fastened directly to brick or block walls with screws sunk in lead expansion shields.

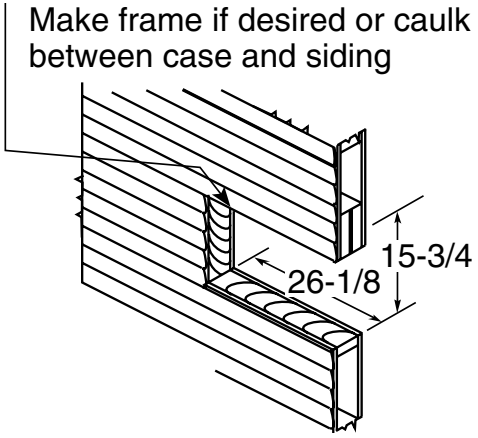

Frame Construction

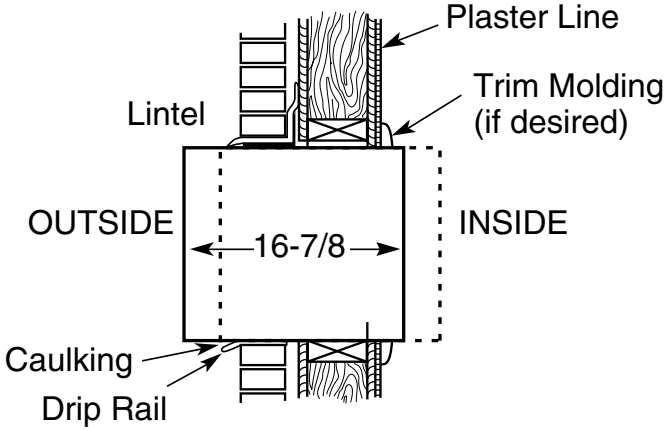

Flexible Mounting Position

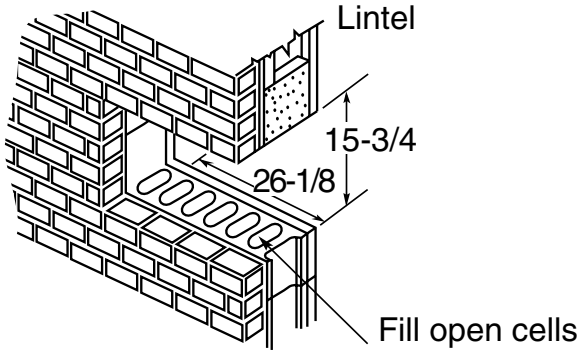

Brick Block and Brick Frame Construction

For answers to your Monogram,® GE Profile™ or GE® appliance questions, visit our website at ge.com or call GE Answer Center® service, 800.626.2000.

imagination at work

CERTIFIED RATING CAPACITY, EER & AMPERES AHAM

Total volume and shelf area are calculated by the Association of Home Appliance Manufacturers' standards.

Listed by Underwriters Laboratories

Specification Created 1/07 390316

AJES09DCC

GE® 230/208 Volt Window/Wall Mount Heat and Cool Unit

Features and Benefits

- 8,900/8,700 BTU
- 11,600/9,480 BTU heat
- 3,670/3,010 Watts heat
- 9.5/9.5 EER
- 230/208 Volts
- Mechanical controls
- Variable position thermostat
- Four-way air direction
- Up-front, washable air filter
- 2 cool/2 heat/2 fan only speeds
- Model AJES09DCC – Soft Gray

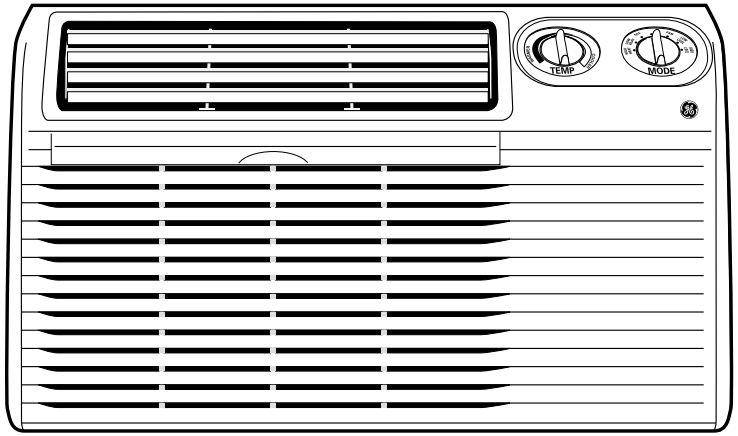

For answers to your Monogram,® GE Profile™ or GE® appliance questions, visit our website at ge.com or call GE Answer Center® service, 800.626.2000.

imagination at work

CERTIFIED RATING CAPACITY, EER & AMPERES AHAM

Total volume and shelf area are calculated by the Association of Home Appliance Manufacturers' standards.

Listed by Underwriters Laboratories

Specification Created 1/07

390316

APPENDIX C

Manufacturer's Information

General Electric Room Air Conditioners
Owner's Manual and Installation Instructions

DRAFT

ge.com

Room Air Conditioners

Owner's Manual and Installation Instructions

Cool Only:	*AJCH 08, 10*	*ACC**
	AJCH 10, 12	*DCC**
	AJCQ 06	*LCC**
	AJCQ 08, 10, 12	*ACC**
	AJCQ 10, 12	*DCC**
	AJCS 06	*LCC**
	AJCS 08, 10	*ACC**
	AJCS 09, 10, 12	*DCC**
Heat/Cool:	*AJEH 12*	*DCC*
	AJES 06	*LSC*
	AJES 08	*ASC*
	AJES 09, 10, 12	*DCC*
	AJES 10	*DSC*
Heat Pump:	*AJHS 08*	*ASC**
	AJHS 08, 10	*DCC**

Safety Instructions 2, 3

Operating Instructions
Controls—Control Knobs 8, 9
Controls—Touch Pads 4–6

Care and Cleaning
Air Filter 11
Front Grille 10
Grille and Case 10
Outdoor Coils 10

Installation Instructions
Before You Begin 12, 13
Installing a J-Model in an Existing Wall Case 14
Through-the-Wall Installation—Optional 15
Window Installation—Optional on models so equipped 16–21

Troubleshooting Tips 22
Normal Operating Sounds 22

Consumer Support
Consumer Support . . . Back Cover
Warranty 23

*ENERGY STAR® labeled product

ENERGY STAR

As an ENERGY STAR® partner, GE has determined that this product meets the ENERGY STAR® guidelines for energy efficiency.

Write the model and serial numbers here:

Model # _____

Serial # _____

Find these numbers on a label on the front of the base pan behind the front grille.

Español

For a Spanish version of this manual, visit our Website at ge.com.

Para consultar una version en español de este manual de instrucciones, visite nuestro sitio de internet ge.com.

Française

For a French version of this manual, visit our Website at www.electromenagersge.ca

Pour une version française de ce manuel d'utilisation, veuillez visiter notre site web à l'adresse www.electromenagersge.ca

TINSEA518JBRZ *49-7572 03-07 JR*

IMPORTANT SAFETY INFORMATION. READ ALL INSTRUCTIONS BEFORE USING.

⚠ WARNING!

For your safety, the information in this manual must be followed to minimize the risk of fire, electric shock or personal injury.

SAFETY PRECAUTIONS

- Use this appliance only for its intended purpose as described in this Owner's Manual.
- This air conditioner must be properly installed in accordance with the Installation Instructions before it is used.
- Never unplug your air conditioner by pulling on the power cord. Always grip plug firmly and pull straight out from the receptacle.
- Replace immediately all electric service cords that have become frayed or otherwise damaged. A damaged power supply cord must be replaced with a new power supply cord obtained from the manufacturer and not repaired. Do not use a cord that shows cracks or abrasion damage along its length or at either the plug or connector end.
- Turn the mode control ***OFF*** and unplug your air conditioner before making any repairs or cleaning.

  NOTE: *We strongly recommend that any servicing be performed by a qualified individual.*
- For your safety…do not store or use combustible materials, gasoline or other flammable vapors or liquids in the vicinity of this or any other appliance.
- All air conditioners contain refrigerants, which under federal law must be removed prior to product disposal. If you are getting rid of an old product with refrigerants, check with the company handling disposal about what to do.

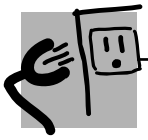

HOW TO CONNECT ELECTRICITY

Do not, under any circumstances, cut or remove the third (ground) prong from the power cord. For personal safety, this appliance must be properly grounded.

The power cord of this appliance is equipped with a 3-prong (grounding) plug which mates with a standard 3-prong (grounding) wall outlet to minimize the possibility of electric shock hazard from this appliance.

Power cord may include a current interrupter device. A test and reset button is provided on the plug case. The device should be tested on a periodic basis by first pressing the ***TEST*** button and then the ***RESET*** button. If the ***TEST*** button does not trip or if the ***RESET*** button will not stay engaged, discontinue use of the air conditioner and contact a qualified service technician.

Have the wall outlet and circuit checked by a qualified electrician to make sure the outlet is properly grounded.

Where a 2-prong wall outlet is encountered, it is your personal responsibility and obligation to have it replaced with a properly grounded 3-prong wall outlet.

The air conditioner should always be plugged into its own individual electrical outlet which has a voltage rating that matches the rating plate.

This provides the best performance and also prevents overloading house wiring circuits which could cause a fire hazard from overheated wires.

See the Installation Instructions, *Electrical Requirements* section for specific electrical connection requirements.

⚠ WARNING!

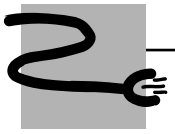

USE OF EXTENSION CORDS—115-Volt models only

Because of potential safety hazards under certain conditions, we strongly recommend against the use of an extension cord.

However, if you must use an extension cord, it is absolutely necessary that it be a UL-listed, 14 gauge, 3-wire grounding type appliance extension cord having a grounding type plug and outlet and that the electrical rating of the cord be 15 amperes (minimum) and 125 volts.

⚠ CAUTION:

DO NOT use an extension cord with any of the 230/208 volt models.

USE OF ADAPTER PLUGS—115-Volt models only

Because of potential safety hazards under certain conditions, we strongly recommend against the use of an adapter plug.

However, if you must use an adapter, where local codes permit, a ***temporary connection*** may be made to a properly grounded 2-prong wall outlet by use of a UL-listed adapter available at most local hardware stores.

The larger slot in the adapter must be aligned with the larger slot in the wall outlet to provide proper polarity in the connection of the power cord.

When disconnecting the power cord from the adapter, always hold the adapter in place with one hand while pulling the power cord plug with the other hand. If this is not done, the adapter ground terminal is very likely to break with repeated use.

If the adapter ground terminal breaks, ***DO NOT USE*** the air conditioner until a proper ground has been established.

Attaching the adapter ground terminal to a wall outlet cover screw does not ground the appliance unless the cover screw is metal, not insulated, and the wall outlet is grounded through the house wiring. You should have the circuit checked by a qualified electrician to make sure the outlet is properly grounded.

READ AND FOLLOW THIS SAFETY INFORMATION CAREFULLY.

SAVE THESE INSTRUCTIONS

About the controls on the air conditioner—models with touch pads.

Appearance may vary.

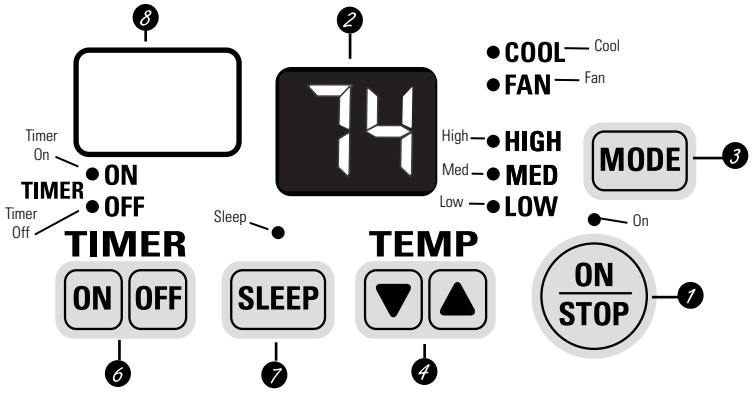

Air Conditioner Controls

Lights beside the touch pads on the air conditioner control panel indicate the selected settings.

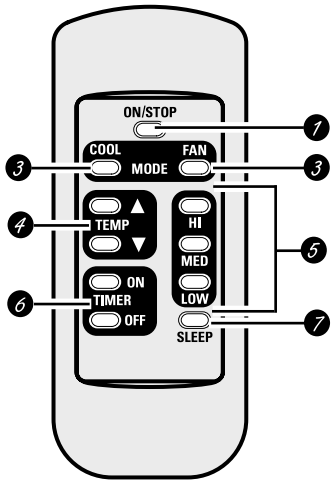

Remote Control

When the air conditioner is turned on, it will automatically start in the setting last used.

Controls

1 ***ON/STOP***
Turns air conditioner on and off.

2 ***Display***

3 ***MODE***
On the remote control, use to set the air conditioner to ***COOL*** or ***FAN*** mode.

On the air conditioner controls, use to set ***COOL*** or ***FAN*** mode at ***HIGH***, ***MED*** or ***LOW*** fan speed. Indicator lights on the air conditioner controls will show the mode and fan speed selected.

4 ***TEMP Increase ▲ /Decrease ▼ Pads***
Use to set temperature when in ***COOL*** mode.

5 ***Fan Speeds (Remote control only)***
Use to set the fan speed at ***LOW, MED*** or ***HIGH***.

6 ***TIMER***
ON—When the air conditioner is off, it can be set to automatically turn on in half an hour to 24 hours at its previous setting. Each touch will set the time in half hours up to 10 and then in hours up to 24.

To cancel (CL) the On Timer press the ***ON*** pad again.

OFF—When the air conditioner is on, it can be set to automatically turn off in half an hour to 24 hours. Each touch will set the time in half hours up to 10 and then in hours up to 24.

To cancel (CL) the Off Timer press the ***OFF*** pad again.

To cancel the timer, press the ***ON*** or ***OFF*** pads until the display time disappears.

7 ***SLEEP***
Press to set the air conditioner to run for 8 hours before it automatically returns to the previous setting.

When the sleep timer is set, the set temperature will automatically increase 2°F after the second hour then 1°F each hour over the next two hours.

To cancel the sleep mode, press the ***MODE*** pad or the ***SLEEP*** pad a second time.

8 ***Remote Control Signal Receiver***

Remote Control

- To ensure proper operation, aim the remote control at the signal receiver on the air conditioner.
- The remote control signal has a range of up to 21 feet.
- Make sure nothing is between the air conditioner and the remote control that could block the signal.
- Make sure batteries are fresh and installed correctly—see the *Care and Cleaning* section.

COOL MODE

Remote Control

1. Press ***COOL*** pad.
2. Press ***LOW***, ***MED*** or ***HI*** pads to set desired fan speed.
3. Press the ***INCREASE ▲ / DECREASE ▼*** pads to set the desired temperature 60°F to 85°F in 1°F increments.

Control Panel

1. Press the ***MODE*** pad until the ***COOL*** indicator light is lit and the ***LOW***, ***MED*** or ***HI*** indicator light is lit for the desired fan speed.
2. Press the ***INCREASE ▲ / DECREASE ▼*** pads to set the desired temperature 60°F to 85°F in 1°F increments.

A thermostat is used to maintain the room temperature. The compressor will cycle on and off to keep the room at the set level of comfort. Set the thermostat at a lower number and the indoor air will become cooler. Set the thermostat at a higher number and the indoor air will become warmer.

NOTE: *If the air conditioner is off and is then turned on while set to* ***COOL****, it will take approximately 3 minutes for the compressor to start and cooling to begin.*

Cooling Descriptions

For Normal Cooling—Select the ***COOL*** mode and ***HIGH*** or ***MED*** fan with a middle set temperature.

For Maximum Cooling—Select the ***COOL*** mode and ***HIGH*** fan with a lower set temperature.

For Quieter & Nighttime Cooling—Select the ***COOL*** mode and ***LOW*** fan with a middle set temperature.

NOTE: *If you switch from a* ***COOL*** *setting to* ***OFF*** *or to a fan setting, wait at least 3 minutes before switching back to a* ***COOL*** *setting.*

Fan Switch

The fan switch is located behind the front grille on the control box. Access through a hole in control box.

When set at ***CYCLE*** (down) the fan cycles on and off.

When set at ***CONT*** (continuous, up) the fan runs all the time providing a more balanced temperature. The unit is shipped in the ***CONT*** setting.

FAN MODE

Use the ***FAN*** mode to provide air circulation and filtering without cooling. Since fan only settings do not provide cooling, a temperature setting will not be displayed.

Remote Control

Press ***FAN*** pad. Press ***LOW***, ***MED*** or ***HI*** pads to set desired fan speed.

Control Panel

Press the ***MODE*** pad until the ***FAN*** indicator light is lit and the ***LOW***, ***MED*** or ***HI*** indicator light is lit for the desired fan speed.

Vent Control

The vent control is located behind the front grille on the right side of the air discharge area. When set at ***CLOSE,*** only the air inside the room will be circulated and conditioned. When set at ***OPEN,*** some inside air is exhausted outside.

To open or close the vent:
1. Remove the front grille.
2. Remove the vent card screw.
3. Remove vent card, turn it over and replace it by locating rear hole in card over locating pin inside air discharge and reattaching screw at front.

The unit leaves the factory set at the CLOSE position.

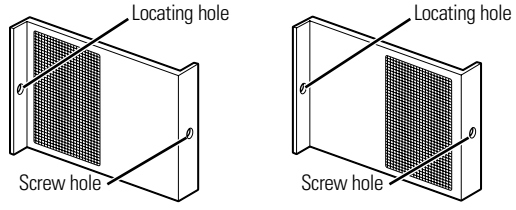

OPEN position (Mesh end toward back)

CLOSE position (Mesh end toward front)

Air Direction

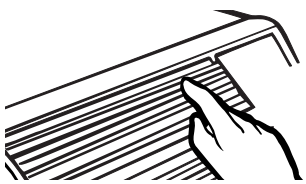

Horizontal louvers on the front grille let you control the air direction up and down.

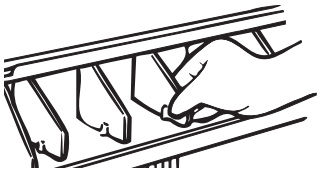

Remove the front grille to adjust the vertical louvers side-to-side to direct the air left or right.

About the controls on the air conditioner—models with touch pads.

Auxiliary Controls – Temperature Limiting

To reach the auxiliary controls remove the front grille. Access them through the small rectangular opening above the control panel.

Temperature limiting can reduce energy costs by limiting the lowest temperature that can be set for cooling. Temperature limiting is controlled by switches 1–3 of auxiliary controls.

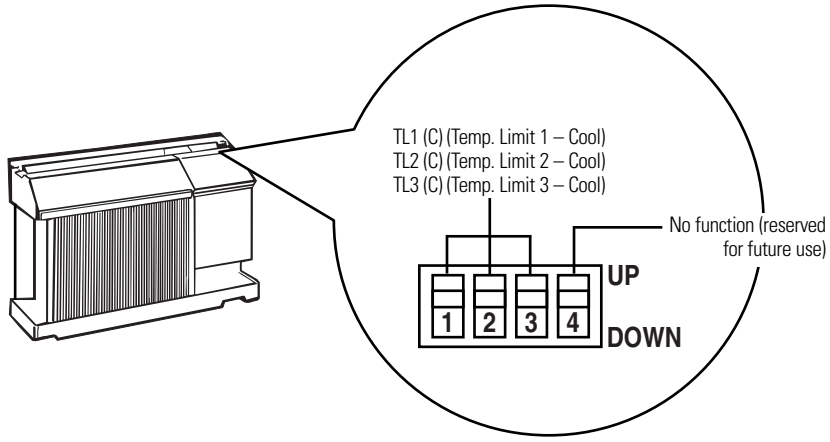

Temperature limiting during COOL mode (all temperatures shown in °F)			
UP	**DOWN**	**Minimum**	**Maximum**
NONE	1, 2, 3	60°	85°
1	2, 3	64°	85°
1, 2	3	66°	85°
2	1, 3	68°	85°
2,3	1	70°	85°
1, 2, 3	NONE	72°	85°
1, 3	2	74°	85°
3	1, 2	76°	85°

Notes.

About the controls on the air conditioner—models with control knobs.

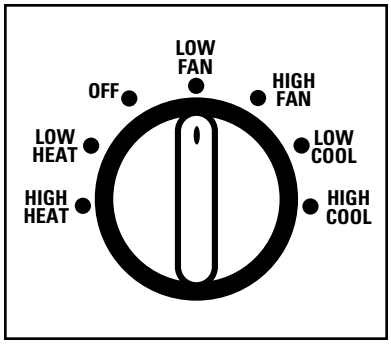

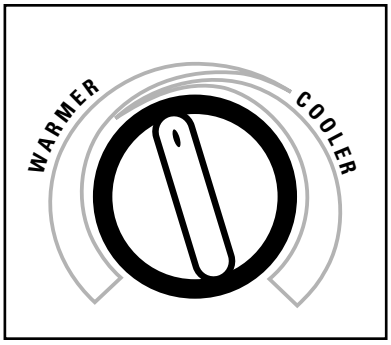

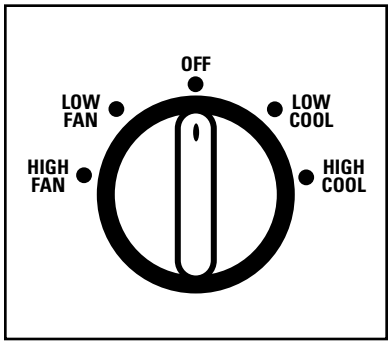

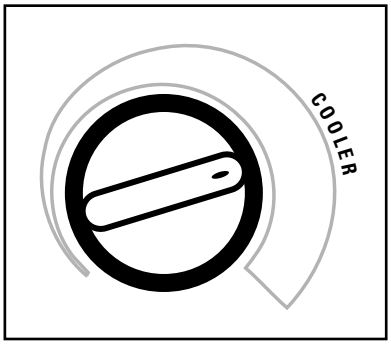

MODE CONTROL 1

TEMP CONTROL 2

Controls

1 Mode Control

HIGH COOL and ***LOW COOL*** provide cooling with different fan speeds.

HIGH HEAT and ***LOW HEAT*** provide heating with different fan speeds.

LOW FAN or ***HIGH FAN*** provides air circulation and filtering without cooling or heating.

NOTE: *If you move the switch from a cool or heat setting to OFF or to a fan setting, wait at least 3 minutes before switching back to a cool or heat setting. A 3-minute delay is automatically provided on the Heat/Cool and Heat Pump models.*

Cooling/Heating Descriptions

For Normal Cooling or Heating—Select ***HIGH COOL*** or ***HIGH HEAT*** with the thermostat at mid point.

For Maximum Cooling—Select ***HIGH COOL*** with the thermostat at maximum cool.

For Maximum Heating—Select ***HIGH HEAT*** with the thermostat at maximum heat.

For Quieter & Nighttime Cooling—Select ***LOW COOL*** with the thermostat at mid point.

2 Temp Control

The temp control is used to maintain the room temperature. The compressor will cycle on and off to keep the room at the same level of comfort. When you turn the knob to ***COOLER*** (blue) the indoor air will become cooler. Turn the knob to ***WARMER*** (red) and the indoor air will become warmer.

Heat Pump Models

When the outdoor temperature is lower than 25°F., heat is provided by the electric heater in the air conditioner instead of by the heat pump.

NOTE: *The electric resistance heater in the 115-volt heat pump model operates during defrost when the outdoor coil temperature is below 36°F. It is not intended to provide full heat capability.*

Fan Switch

To reach the fan switch(es) remove the front grille.

On Heat/Cool and Heat Pump models, the fan switch levers are located in holes accessed through the control box. The top switch is for ***COOL*** settings and the bottom switch is for ***HEAT*** settings. Use a small screwdriver to change the setting. The unit is shipped from the factory set in the ***CONT*** setting for ***COOL*** and in the ***CYCLE*** setting for ***HEAT***.

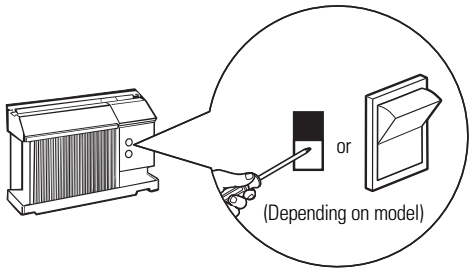

Cool only models have a rocker switch on the front of the control box.

When set at ***CYCLE*** (down) the fan cycles on and off when cooling. When set at ***CONT*** (continuous, up) the fan runs all the time, providing a more balanced temperature. The unit is shipped in the ***CONT*** setting.

Temperature Limiting

Limiting the maximum and minimum settings prevents users from turning the control to the extreme heat or cool positions.

The normal range of the temp control is approximately 60°F to 85°F. The control range may be narrowed by the use of the temperature limiting screws located behind the control panel.

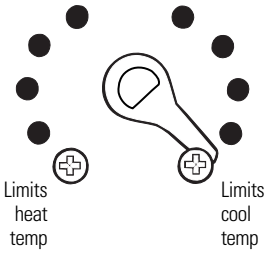

Each position equals approximately 3°F.

Vent Control

The vent control is located behind the front grille on the right side of the air discharge area. When set at ***CLOSE,*** only the air inside the room will be circulated and conditioned. When set at ***OPEN,*** some inside air is exhausted outside.

To open or close the vent:
1. Remove the front grille.
2. Remove the vent card screw.
3. Remove vent card, turn it over and replace it by locating rear hole in card over locating pin inside air discharge and reattaching screw at front.

The unit leaves the factory set at the CLOSE position.

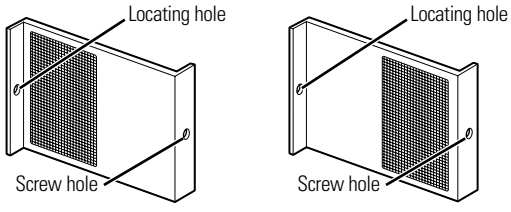

Air Direction

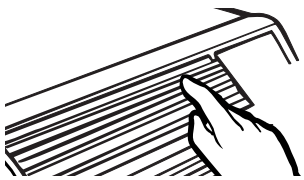

Horizontal louvers on the front grille let you control the air direction up and down.

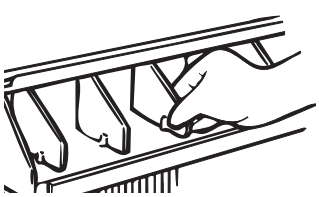

Remove the front grille to adjust the vertical louvers side-to-side to direct the air left or right.

Care and cleaning of the air conditioner.

Grille and Case

Turn the air conditioner off and remove the plug from the wall outlet before cleaning.

To clean, use water and a mild detergent. Do not use bleach or abrasives.

Outdoor Coils

The coils on the outdoor side of the air conditioner should be checked regularly. If they are clogged with dirt or soot they may be professionally steam cleaned, a service available through your GE service outlet.

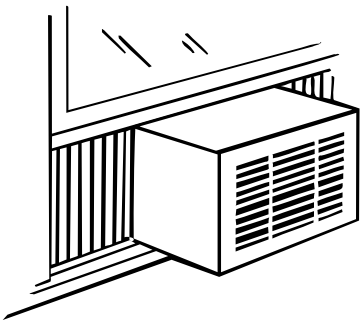

Front Grille

The front grille can be removed for more thorough cleaning or to make the model and serial numbers accessible.

To remove:

1. Pull the filter out.
2. Remove the two grille screws.

On some models

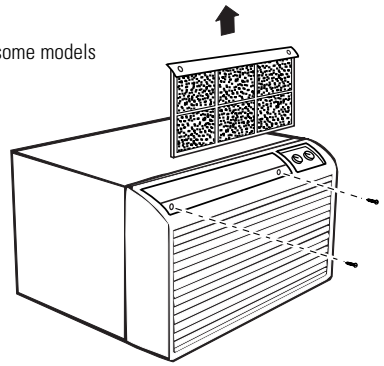

On some models

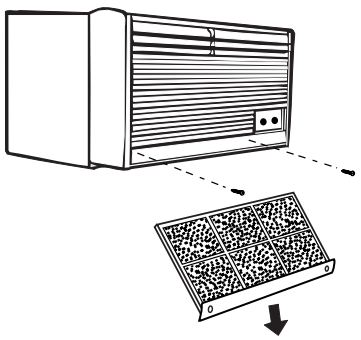

3. Pull the grille out from the bottom and lift up from the tabs on the top of the case.

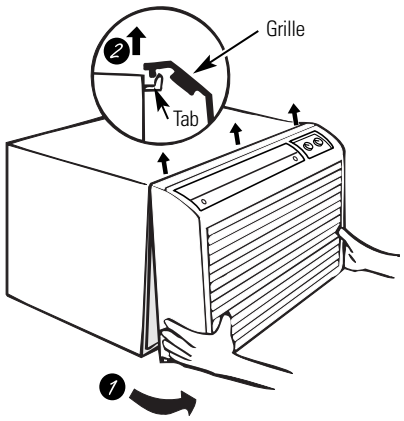

To replace:

Hook the tabs on the front grille even with the tabs on the case and snap into place.

Replace the screws and filter.

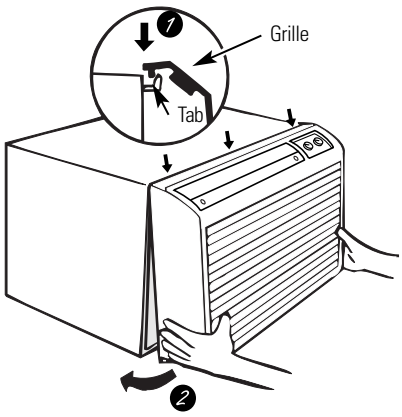

To maintain optimum performance, clean the filter at least every 30 days.

Air Filter

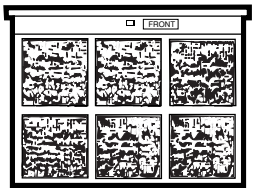

Dirty filter—Needs cleaning

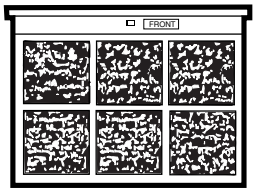

Clogged filter—Greatly reduces cooling, heating and airflow.

Turn the air conditioner off before cleaning.

The most important thing you can do to maintain the air conditioner is to clean the filter at least every 30 days. A clogged filter reduces cooling, heating and air flow.

Keeping the air filter clean will:

- Decrease cost of operation.
- Save energy.
- Prevent clogged heat exchanger coils.
- Reduce the risk of premature component failure.

To clean the air filters:

- Vacuum off the heavy soil.
- Run water through the filters.
- Dry thoroughly before replacing.

To remove the air filter, on some models:

Carefully pull the tab forward, up and out.

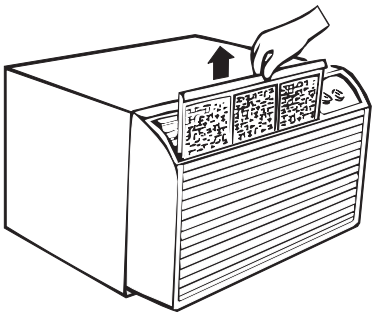

To remove the air filter, on other models:

Pull it down.

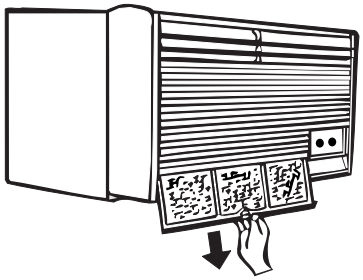

To replace the air filter:

Replace the clean filter by pushing it back into place.

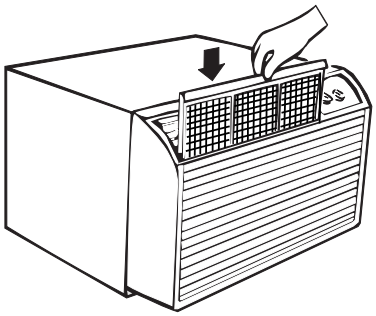

⚠ CAUTION: ***Do not operate the air conditioner without the filter in place. If a filter becomes torn or damaged it should be replaced immediately.***

Operating without the filter in place or with a damaged filter will allow dirt and dust to reach the indoor coil and reduce the cooling, heating, airflow and efficiency of the unit.

Replacement filters are available from your salesperson, GE dealer, GE Service and Parts Center or authorized Customer Care® servicers.

How to Insert the Batteries

1. Remove the battery cover by sliding it according to the arrow direction.
2. Insert new batteries making sure that the (+) and (–) of battery are installed correctly.
3. Reattach the cover by sliding it back into position.

NOTES:

- Use 2 AAA (1.5 volt) batteries. Do not use rechargeable batteries.
- Remove the batteries from the remote control if the system is not going to be used for a long time.

Installation Instructions

Air Conditioner

? Questions? Call 800.GE.CARES (800.432.2737) or Visit our Website at: ge.com

BEFORE YOU BEGIN

Read these instructions completely and carefully.

- **IMPORTANT** — Save these instructions for local inspector's use.
- **IMPORTANT** — Observe all governing codes and ordinances.
- **Note to Installer –** Be sure to leave these instructions with the Consumer.
- **Note to Consumer –** Keep these instructions for future reference.
- **Skill level –** Installation of this appliance requires basic mechanical skills.
- **Completion time –** Approximately 1 hour
- We recommend that two people install this product.
- Proper installation is the responsibility of the installer.
- Product failure due to improper installation is not covered under the Warranty.

ELECTRICAL REQUIREMENTS

Some models require a 115/120-volt a.c., 60 Hz grounded outlet protected with a 15-amp time delay fuse or circuit breaker.

The 3-prong grounding plug minimizes the possibility of electric shock hazard. If the wall outlet you plan to use is only a 2-prong outlet, it is your responsibility to have it replaced with a properly grounded 3-prong wall outlet.

Some models require 230/208-volt a.c., protected with a time delay fuse or circuit breaker. These models should be installed on their own single branch circuit for best performance and to prevent overloading house or apartment wiring circuits, which could cause a possible fire hazard from overheating wires.

⚠CAUTION:

Do not, under any circumstances, cut or remove the third (ground) prong from the power cord.

Do not change the plug on the power cord of this air conditioner.

Aluminum house wiring may present special problems—consult a qualified electrician.

IMPORTANT!

GE strongly recommends the removal of the old wall case and the installation of a new GE Wall Case. If you decide to keep the existing wall case, you may need a kit to ensure proper performance. If you DO NOT use a kit, you run the risk of poor performance or product failure. This is not covered under the terms of the GE warranty.

J-MODEL QUALIFYING QUESTIONS

J-model air conditioners may fit in existing wall cases. However, they often need a kit to properly adapt the case to the GE air conditioner. Answer these questions and see the chart on the next page for the proper kit.

A What brand air conditioner will you be replacing?

B What are the dimensions of the wall case currently in use?

C What is the model number of the chassis currently in use? What is the model (or Type) number of the wall case currently in use?

Frequently, the J-model adapter kit will apply to another brand model "series" or specific vintage. In these cases, you need the chassis model number and/or the wall case or "type" number to confirm the use of the correct adapter kit.

D What type of outdoor grille is used with the current wall case?

There may be an architectural grille attached to a wall case to enhance the exterior appearance of the building. Custom grilles may be used with J-model wall cases provided a J-model adapter kit is also used to ensure proper airflow.

Installation Instructions

Read these instructions completely and carefully.

Power cord may include a current interrupter device. A test and reset button is provided on the plug case. The device should be tested on a periodic basis by first pressing the **TEST** button and then the **RESET** button. If the **TEST** button does not trip or if the **RESET** button will not stay engaged, discontinue use of the air conditioner and contact a qualified service technician.

TOOLS YOU MAY NEED

Phillips head screwdriver

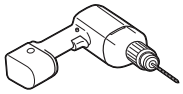
Drill

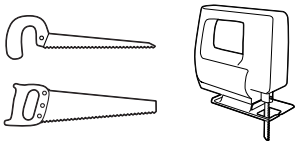
Hand or Saber Saw

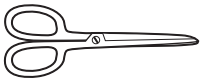
Scissors or knife

Adjustable Wrench

Pencil

Level

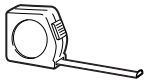
Ruler or Tape Measure

GE KIT NUMBERS

USE GE KIT NUMBER:	FOR:	DESCRIPTION:
RAK56A100	GE RAB13, 14 & 15 (ACLB & RCL Chassis)	Fits all GE wall cases 26″W x 18″H x 24″D
RAK1072	Hotpoint ACXB10 & 11 (ACTB Chassis)	Adapts an older Hotpoint wall case to a "J" model chassis. Fits Hotpoint wall cases 25¾″W x 16⅞″H x 18⅝″D
RAK1082	Whirlpool Type 23W Wall Case	Adapts Whirlpool wall case to a "J" model chassis. Fits Whirlpool wall cases 25⅞″W x 16½″H x 23⅛″D
RAK1102	GE RAB30 ("F" models)	Adapts GE wall case to a "J" model chassis. Fits the RAB 30 wall case 26″W x 18″H x 24″D
RAK123A64	Fedders Wall Case "A"	Adapts Fedders wall case to a "J" model chassis. Fits Fedders wall cases 27″W x 16¾″H x 16¾″D
RAK126	Westinghouse Wall Case (Type 2626D73H01)	Adapts Westinghouse wall case to a "J" model chassis. Fits Westinghouse wall cases 25⅞″W x 15 7/16″H x 16″D
RAB46, 47 & 48	Use these kits for all other brands not listed.	Standard wall case for "J" model chassis. RAG13 stamped aluminum exterior grille included. Remove the existing case and replace.
RAK690	RAB36, 37, 38, 46, 47 or 48 (J-Chassis)	If you attach a custom architectural outdoor grille, use this kit to ensure proper airflow.
RAG13	RAB36, 37, 38, 46, 47 or 48 (J-Chassis)	Standard aluminum exterior grille (included with RAB46, 47, and 48 wall cases)
RAG14E	RAB36, 37, 38, 46, 47 or 48 (J-Chassis)	Architectural louvered exterior grille

INSTALLING A J-MODEL IN AN EXISTING WALL CASE

Read these instructions completely and carefully.

1 REMOVE LOCKING PLATE ON FRONT LEFT SIDE

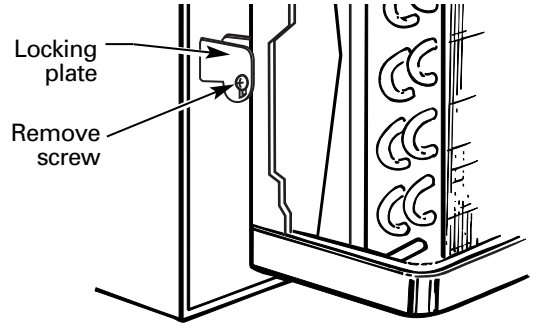

2 REMOVE ALL SHIPPING PADS (IF PRESENT) INSIDE AIR CONDITIONER NEXT TO COMPRESSOR

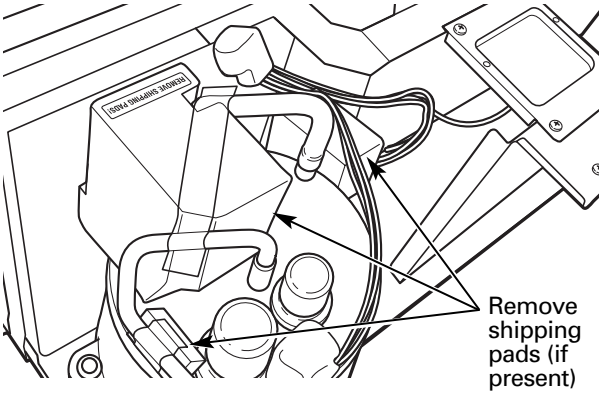

3 CAREFULLY SLIDE AIR CONDITIONER BACK INTO CASE

Make sure that the tubing on the unit does not touch the wall case and that the case installation is secure.

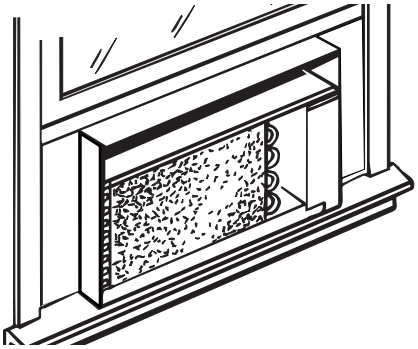

4 REINSTALL LOCKING PLATE WITH TAB BEHIND WALL CASE FLANGE. TIGHTEN SCREW

5 ATTACH POWER CORD TO BASE PAN WITH CLAMP

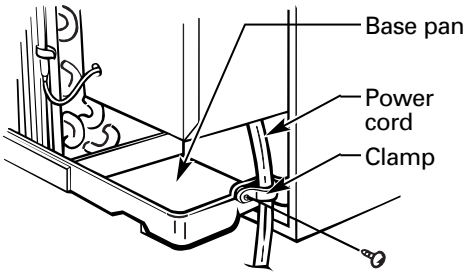

6 ATTACH FRONT GRILLE

An opening for the power cord is on the bottom of the front grille.

INSTALLING THROUGH THE WALL

Read these instructions completely and carefully.

1 PREPARE OPENING IN WALL

Make certain a wall receptacle is available close to the hole location or make arrangements to install a receptacle.

The cord length for the 115-volt models is 72″ to the right and 47″ to the left.

For the 230/208-volt models the cord length is 65″ to the right and 39″ to the left.

2 SUPPORT REQUIREMENTS FOR AIR CONDITIONER

The air conditioner wall case may be installed with 1/4″ min. extension out from the inside wall or with 1/4″ min. extension out from the outside wall.

The finished sides of the opening should be structural wall members.

Lintel – Use a lintel in brick veneer and brick and block types of wall to support the bricks or blocks above the opening. Do not allow the wall case to be used in lieu of a lintel.

Flashing – Install flashing (drip rail) as shown to prevent water from dripping inside the wall and down the outside of the building.

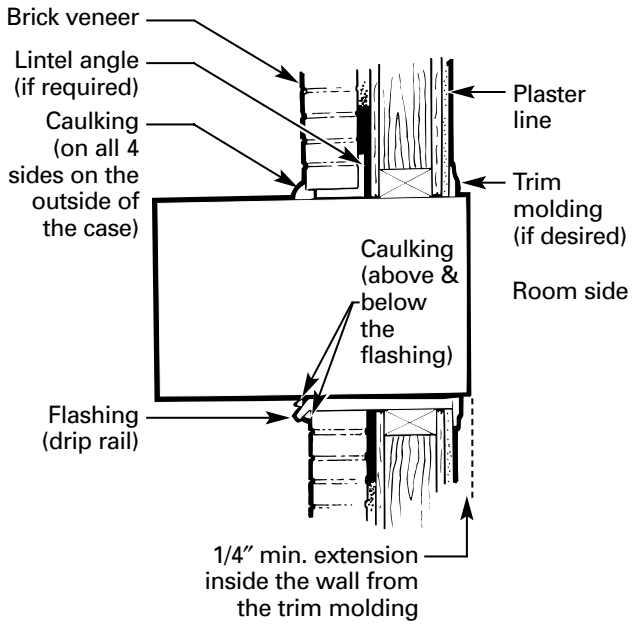

3 SUPPORT REQUIREMENTS FOR AIR CONDITIONER

Mortar between the case and the brick all around the case may be undercut at about 45° for improved caulking.

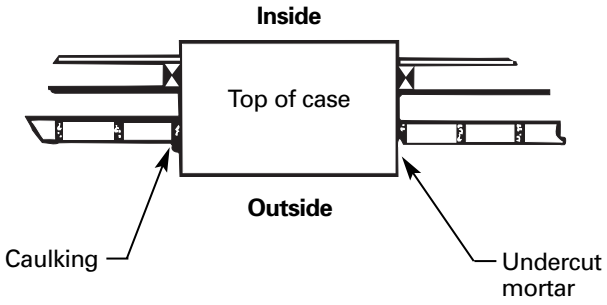

WINDOW INSTALLATION—OPTIONAL

FOR MODELS AJES06LSC, AJES08ASC, AJES10DSC and AJHS08ASC

Read these instructions completely and carefully.

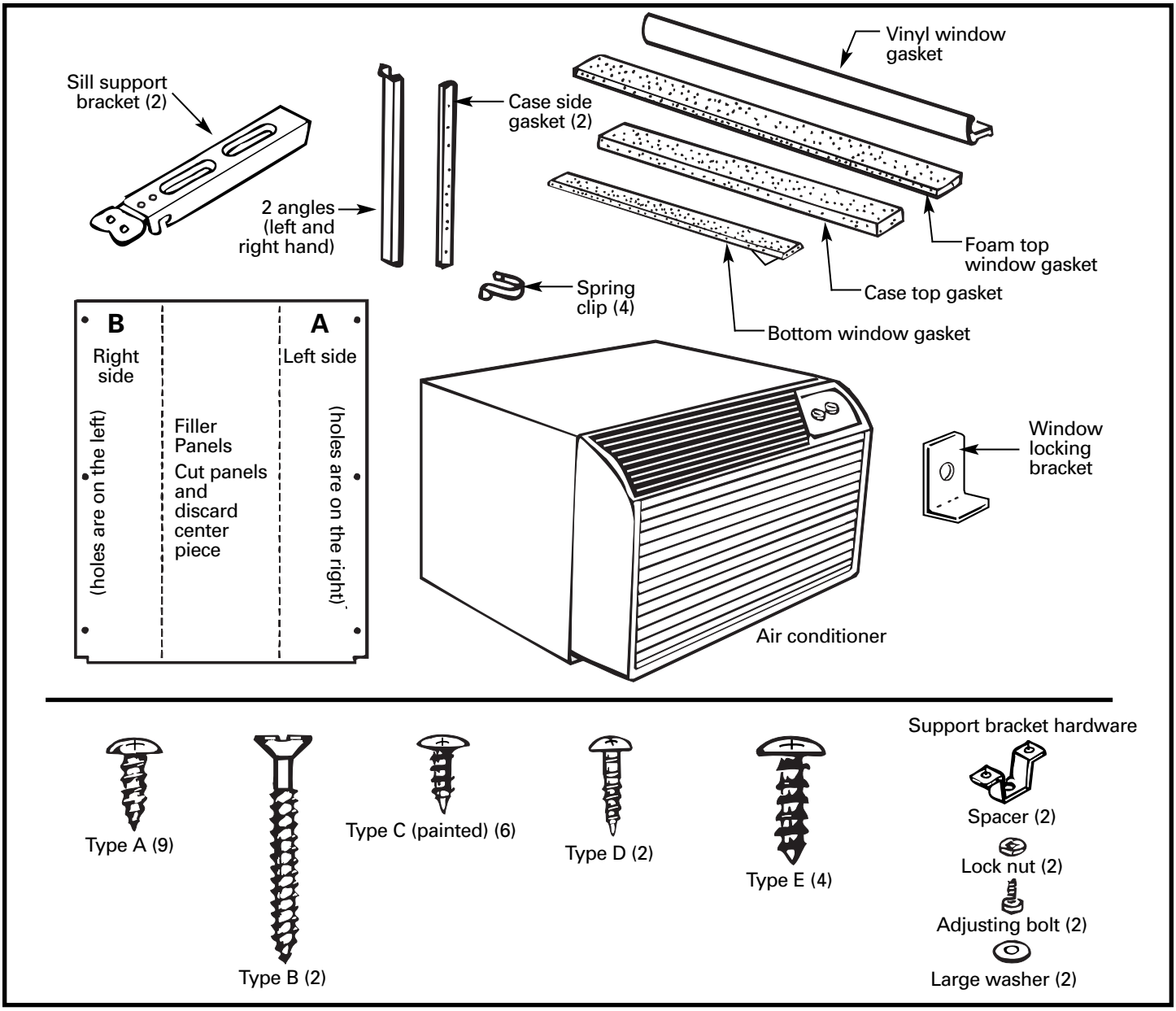

1 WINDOW REQUIREMENTS

- These instructions are for a standard double-hung window. You will need to modify them for other types of windows.
- The air conditioner can be installed without the accordion panels if needed to fit in a narrow window. See the window opening dimensions to the right.
- All supporting parts must be secured to firm wood, masonry or metal.
- The electrical outlet must be within reach of the power cord.

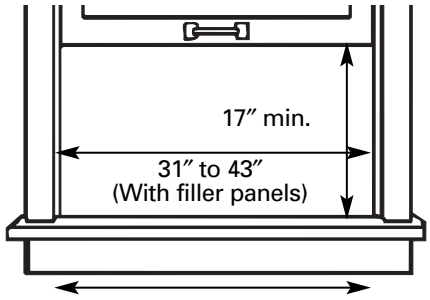

Window opening dimensions are for a standard double-hung window.

2 STORM WINDOW REQUIREMENTS

A storm window frame will not allow the air conditioner to tilt towards the outside and will keep it from draining properly. To adjust for this, attach a piece of wood to the stool.

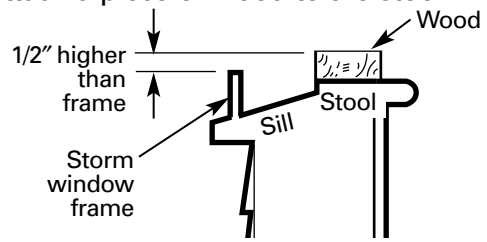

WOOD PIECES:

WIDTH: 2″

LENGTH: Long enough to fit inside the window frame.

THICKNESS: To determine the thickness, place a piece of wood on the stool to make it 1/2″ higher than the top of the storm window frame.

Attach securely with nails or screws provided by the installer.

3 REMOVE AIR CONDITIONER FROM CASE

A Remove the front grille. See the Care and Cleaning section.

B Find the locking plate located on the front left side.

C Remove the screw and the locking plate to unlock the air conditioner.

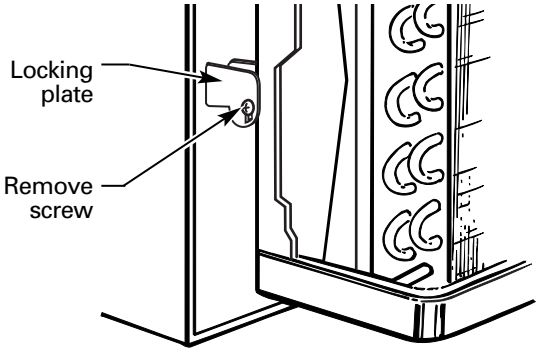

D Remove and discard the shipping screw on the back of the air conditioner to allow removal of the air conditioner from the case.

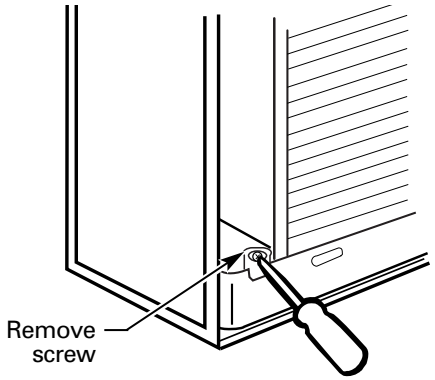

E Pull the bottom corners of the air conditioner and slide it out of the case.

F Remove all shipping pads (if present) inside the air conditioner next to the compressor.

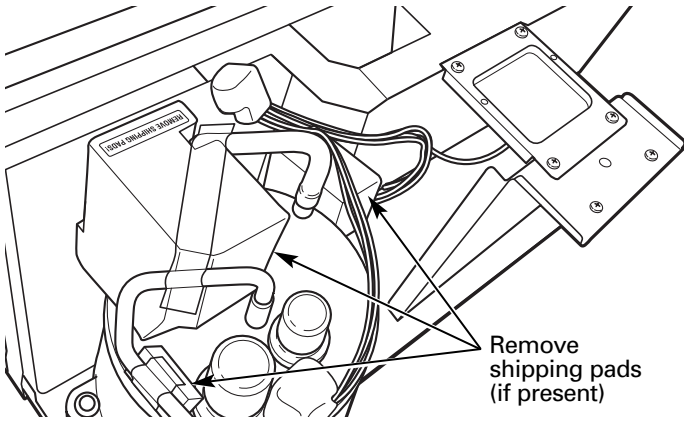

G Remove the rear grille that is taped to the back of the case. Remove the packet of screws taped to the back of the grille. While holding the grille at a 45° angle, insert it into the clips at the top of the case and push the bottom in. Keep slight upward pressure on the grille until it fits flush with the bottom of the case.

If attaching the grille from the outside of the case use the 2 long screws.

If attaching the grille on the inside of the case use the 2 short screws.

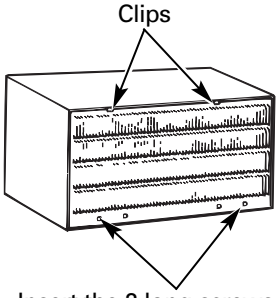

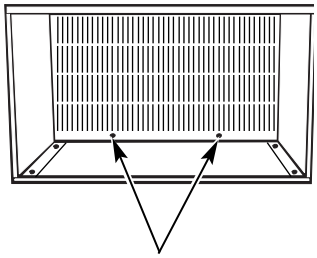

WINDOW INSTALLATION—OPTIONAL (cont.)

4 PREPARE WINDOW

A Mark the centerline of the stool. Measure from the centerline 13⅜″ on both sides for the panel cuts.

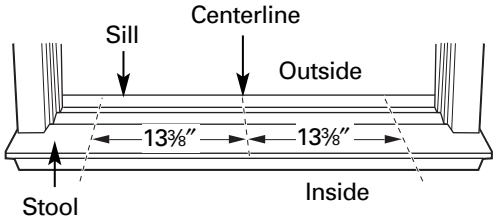

B Measure 12⅜″ from the centerline on both sides for the sill support brackets.

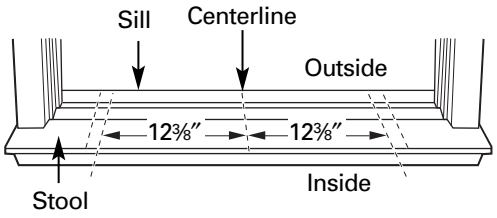

5 INSTALL SILL SUPPORTS

A Assemble the sill supports. Do not fully tighten the spacer mounting screws at this time.

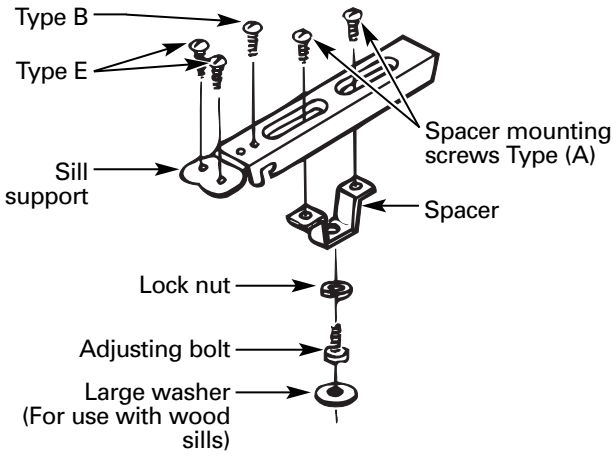

B Before attaching the sill supports, place them on the window stool. Select the spacer position that will place the spacer near the outermost point on the sill. Tighten the spacer mounting screws.

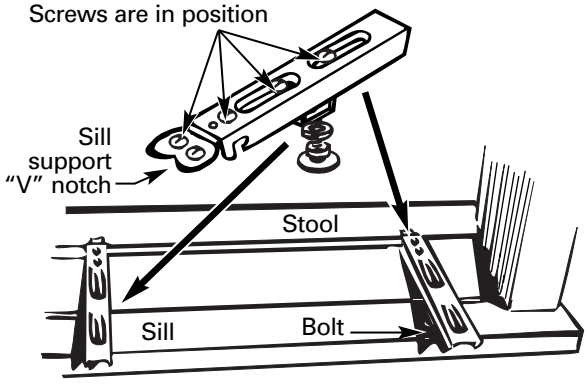

C Turn the bolts and tighten the lock nuts to make the sill supports level or tilt down 1/8″ to the outside. Line up the "V" notch with 12⅜″ marks. Drill pilot holes and attach the sill supports.

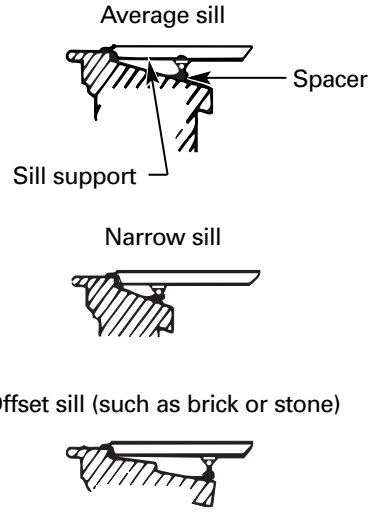

NOTES:

- On narrow sills, there may not be enough room to use the lock nut.
- A deep offset sill may require a longer adjusting bolt than the standard hex head bolt provided.
- On wood sills use the large washer between the bolt head and the sill. This prevents the bolt from digging into the wood.

6 MEASURE, CUT AND INSTALL FILLER PANELS

A Measure from the edge of the panel marks (see Prepare the Window) to the **inside of the window track** on each side. **(A and B)**

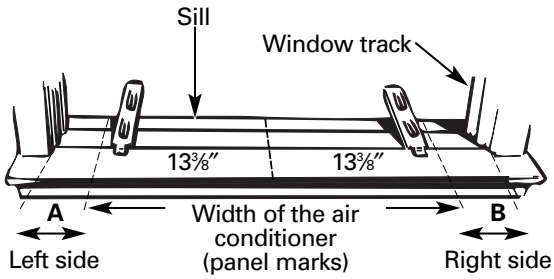

B Mark the **A** and **B** measurements on each side of the filler panel board. Cut the panels and discard the center piece. Note position of the notches.

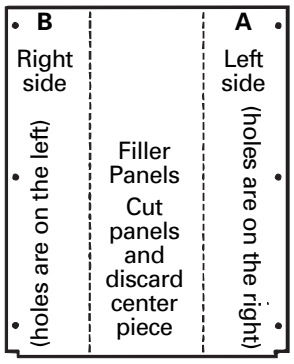

C Put together the panel assemblies. Remove the paper backing from the case side gasket and attach it to the angle. Push a pencil point through the gaskets to locate the holes in the angles.

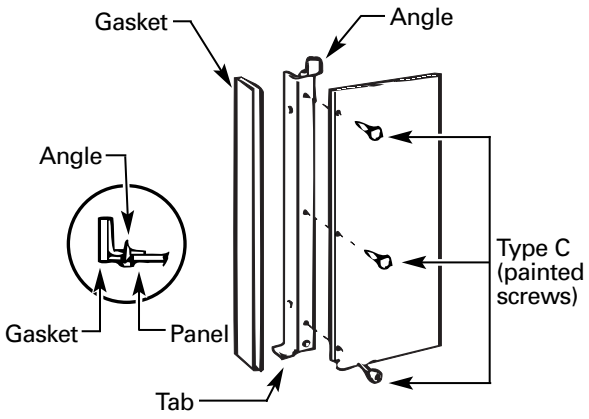

D Install the panels in the window. Place the spring clips 3″ from the top and the bottom. Squeeze and push the clips to fit in the window track and the tab into the sill support.

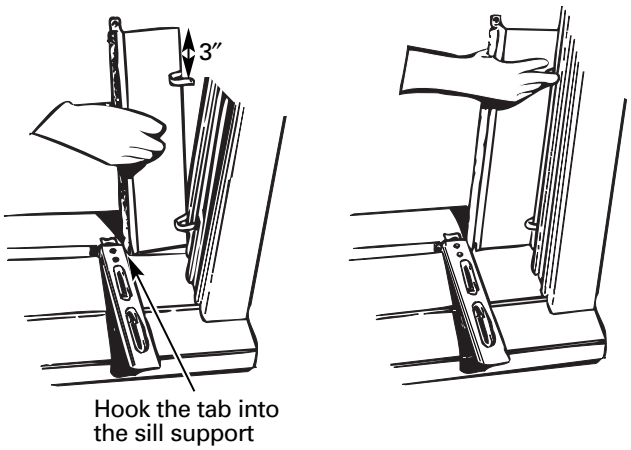

WINDOW INSTALLATION—OPTIONAL (cont.)

7 INSTALL CASE IN WINDOW

A Peel off the backing from the bottom window gasket.

B Place the gasket on the stool and over the brackets, even with the rear edge, sticky side down.

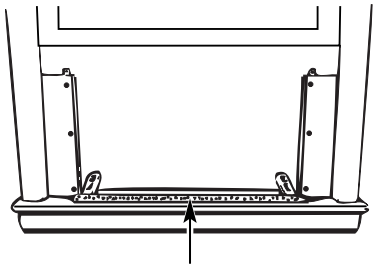

C Carefully slide the empty case into the window until the holes in the case line up with the holes in the panel angles.

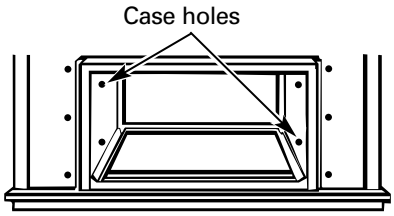

NOTES:

- The case should have a 1/8″ minimum tilt toward the outside.
- Be sure the seal gasket and panel gaskets remain in position and do not roll with the case.

D Lower the window so it fits behind the panel tabs. Insert the 4 type A screws through the holes in the case and into the panel angles, 2 on each side.

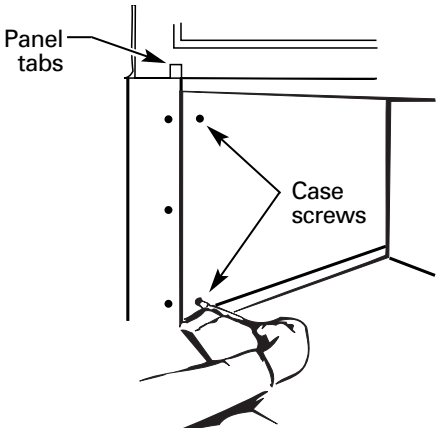

E With the window closed, mark where the window sash meets the case.

F Peel off the backing from the case top gasket.

G Hold on to the case, open the window, and place the gasket along the mark on the case.

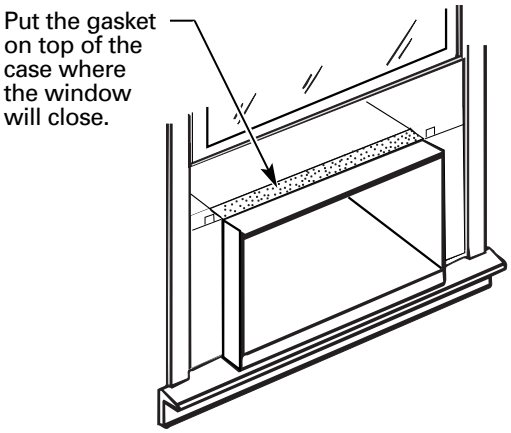

H Place the vinyl window gasket over the case top gasket. Insert the panel tabs through the slits in the gasket. Cut the gasket on each side to the width of the window.

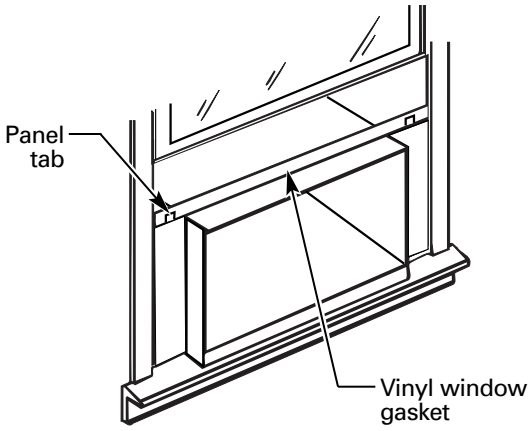

I Close the window tightly on the vinyl gasket. Bend the gasket forward to expose the panel tabs. Drill pilot holes into the window sash.

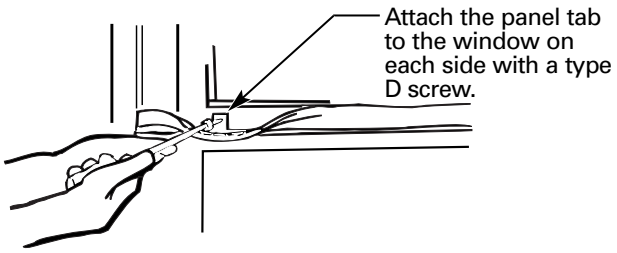

8 INSTALL WINDOW GASKET AND LOCKING BRACKET

A Cut the foam top window gasket to the window width.

B Stuff the foam between the glass and the window to prevent air and insects from getting into the room.

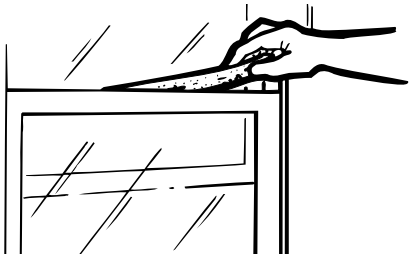

C Attach the window locking bracket with 1 type E screw.

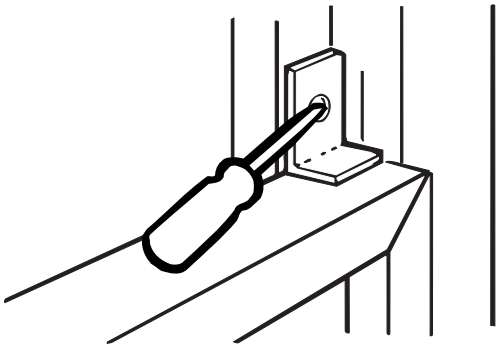

9 REPLACE AIR CONDITIONER IN CASE

A Carefully slide the air conditioner back into the case.

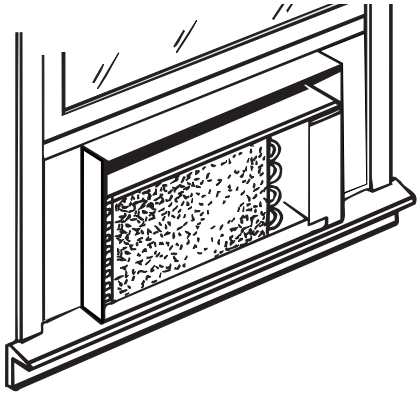

B Attach the power cord to the base pan with the clamp.

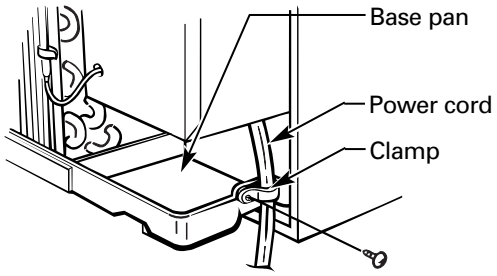

C Reinstall the locking plate with the tab behind the wall case flange. Tighten the screw.

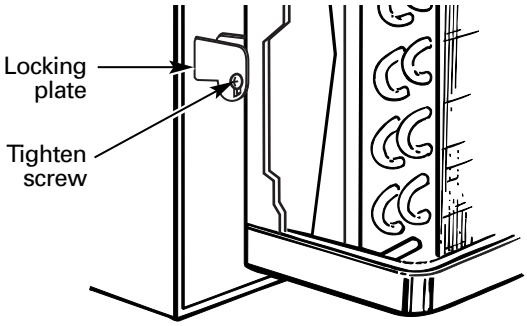

D Reattach the front grille. An opening for the power cord is on the bottom of the front grille.

E Fill holes and cracks with caulking provided by the installer.

Before you call for service…

Troubleshooting Tips: Save time and money! Review the chart below first and you may not need to call for service.

Problem	Possible Causes	What To Do
Air conditioner does not start	**The air conditioner is unplugged.**	• Make sure the air conditioner plug is pushed completely into the outlet.
	The fuse is blown/circuit breaker is tripped.	• Check the house fuse/circuit breaker box and replace the fuse or reset the breaker.
	Power failure.	• If power failure occurs, turn the air conditioner ***OFF***. When power is restored, wait 3 minutes to restart the air conditioner to prevent tripping of the compressor overload.
	The current interrupter device is tripped.	• Press the ***RESET*** button located on the power cord plug. • If the ***RESET*** button will not stay engaged, discontinue use of the air conditioner and contact a qualified service technician.
Air conditioner does not cool as it should	**Airflow is restricted.**	• Make sure there are no curtains, blinds or furniture blocking the front of the air conditioner.
	The temp control may not be set correctly.	• On models with touch pads: In ***COOL*** mode, press the ***DECREASE*** ▼ pad. • On models with control knobs, turn the temperature knob to a higher number.
	The air filter is dirty.	• Clean the filter at least every 30 days. See the *Operating Instructions* section.
	The room may have been hot.	• When the air conditioner is first turned on, you need to allow time for the room to cool down.
	Cold air is escaping.	• Check for open furnace registers and cold air returns. • Set the air conditioner's vent to the closed position.
	Cooling coils have iced up.	• See "***Air conditioner freezing up***" below.
Air conditioner freezing up	**Ice blocks the airflow and stops the air conditioner from cooling the room.**	• On models with control knobs, set the mode control at ***HIGH FAN*** or ***HIGH COOL*** with the temp at ***WARMER***. • On models with touch pads, set the controls at ***HIGH FAN*** or ***HIGH COOL*** and set the thermostat to a higher temperature.
The remote control is not working	**The batteries are inserted incorrectly.**	• Check the position of the batteries. They should be inserted correctly.
	The batteries may be dead.	• Replace the batteries.
Water drips outside	**Hot, humid weather.**	• This is normal.
Water drips indoors	**The air conditioner is not tilted to the outside.**	• For proper water disposal, make sure the air conditioner slants slightly from the case front to the rear.
Water collects in base pan	**Moisture removed from air and drains into base pan.**	• This is normal for a short period in areas with little humidity; normal for a longer period in very humid areas.

Normal Operating Sounds

- You may hear a pinging noise caused by water being picked up and thrown against the condenser on rainy days or when the humidity is high. This design feature helps remove moisture and improve efficiency.
- You may hear the thermostat click when the compressor cycles on and off.
- Water will collect in the base pan during high humidity or on rainy days. The water may overflow and drip from the outdoor side of the unit.
- The fan may run even when the compressor does not.

Air Conditioner Warranty.

All warranty service provided by our Factory Service Centers, or an authorized Customer Care® technician. To schedule service, on-line, 24 hours a day, visit us at ge.com, or call 800.GE.CARES (800.432.2737). For service in Canada, call 1.800.361.3400. Please have serial number and model number available when calling for service.

Staple your receipt here. Proof of the original purchase date is needed to obtain service under the warranty.

For The Period Of:	GE Will Replace:
One Year *From the date of the original purchase*	***Any part*** of the air conditioner which fails due to a defect in materials or workmanship. During this ***limited one-year warranty,*** GE will also provide, ***free of charge,*** all labor and related service to replace the defective part.
Five Years *From the date of the original purchase*	***Any part of the sealed refrigerating system*** (the compressor, condenser, evaporator and all connecting tubing) which fails due to a defect in materials or workmanship. During this ***four-year limited additional warranty,*** GE will also provide, ***free of charge,*** all labor and related service to replace the defective part.

What GE Will Not Cover:

- **Service trips to your home to teach you how to use the product.**
- **Improper installation, delivery or maintenance. If you have an installation problem, or if the air conditioner is of improper cooling capacity for the intended use, contact your dealer or installer. You are responsible for providing adequate electrical connecting facilities.**
- **Failure of the product resulting from modifications to the product or due to unreasonable use including failure to provide reasonable and necessary maintenance.**
- **In commercial locations labor necessary to move the unit to a location where it is accessible for service by an individual technician.**
- **Replacement of house fuses or resetting of circuit breakers.**
- **Failure due to corrosion on models not corrosion-protected.**
- **Damage to the product caused by improper power supply voltage, accident, fire, floods or acts of God.**
- **Incidental or consequential damage caused by possible defects with this air conditioner.**
- **Damage caused after delivery.**
- **Product not accessible to provide required service.**

EXCLUSION OF IMPLIED WARRANTIES—Your sole and exclusive remedy is product repair as provided in this Limited Warranty. Any implied warranties, including the implied warranties of merchantability or fitness for a particular purpose, are limited to one year or the shortest period allowed by law.

This warranty is extended to the original purchaser and any succeeding owner for products purchased for home use within the USA and Canada. If the product is located in an area where service by a GE Authorized Servicer is not available, you may be responsible for a trip charge or you may be required to bring the product to an Authorized GE Service location for service. In Alaska, the warranty excludes the cost of shipping or service calls to your home.

Some states do not allow the exclusion or limitation of incidental or consequential damages. This warranty gives you specific legal rights, and you may also have other rights which vary from state to state. To know what your legal rights are, consult your local or state consumer affairs office or your state's Attorney General.

Warrantor: General Electric Company. Louisville, KY 40225

Consumer Support.

GE Appliances Website

ge.com

Have a question or need assistance with your appliance? Try the GE Appliances Website 24 hours a day, any day of the year! For greater convenience and faster service, you can now download Owner's Manuals, order parts or even schedule service on-line.

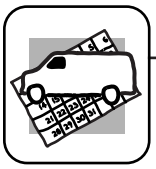

Schedule Service

ge.com

Expert GE repair service is only one step away from your door. Get on-line and schedule your service at your convenience 24 hours any day of the year! Or call 800.GE.CARES (800.432.2737) during normal business hours.

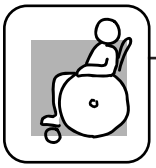

Real Life Design Studio

ge.com

GE supports the Universal Design concept—products, services and environments that can be used by people of all ages, sizes and capabilities. We recognize the need to design for a wide range of physical and mental abilities and impairments. For details of GE's Universal Design applications, including kitchen design ideas for people with disabilities, check out our Website today. For the hearing impaired, please call 800.TDD.GEAC (800.833.4322).

Extended Warranties

ge.com

Purchase a GE extended warranty and learn about special discounts that are available while your warranty is still in effect. You can purchase it on-line anytime, or call 800.626.2224 during normal business hours. GE Consumer Home Services will still be there after your warranty expires.

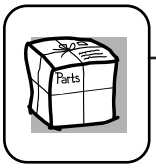

Parts and Accessories

ge.com

Individuals qualified to service their own appliances can have parts or accessories sent directly to their homes (VISA, MasterCard and Discover cards are accepted). Order on-line today, 24 hours every day or by phone at 800.626.2002 during normal business hours.

Instructions contained in this manual cover procedures to be performed by any user. Other servicing generally should be referred to qualified service personnel. Caution must be exercised, since improper servicing may cause unsafe operation.

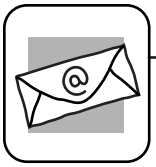

Contact Us

ge.com

If you are not satisfied with the service you receive from GE, contact us on our Website with all the details including your phone number, or write to: General Manager, Customer Relations
GE Appliances, Appliance Park
Louisville, KY 40225

Register Your Appliance

ge.com

Register your new appliance on-line—at your convenience! Timely product registration will allow for enhanced communication and prompt service under the terms of your warranty, should the need arise. You may also mail in the pre-printed registration card included in the packing material.

Printed in China

APPENDIX C

Manufacturer's Information

Geokon 4500HD Heavy Duty Pressure Transducer
Specifications

DRAFT

Model 4500S(H), 4500AL(V) Standard Piezometers

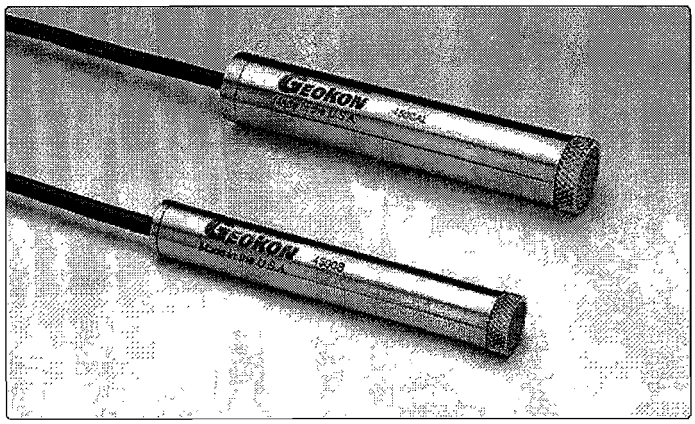

• *Model 4500S (front) and Model 4500AL (rear) Standard Piezometers.*

The Model 4500S Standard Piezometer is designed to measure fluid pressures such as ground water elevations and pore pressures when buried directly in embankments, fills, etc. It is also suitable for installation inside boreholes, observation wells and standard (>19 mm diameter) piezometer riser pipe.

The Model 4500SH is designed with a heavy duty housing for pressures that exceed 3 MPa.

The Model 4500AL is designed for low-pressure ranges. The vented version (Model 4500ALV) provides automatic compensation for barometric pressure changes. Thermistors are included to measure temperatures.

Model 4500B, 4500C Small Diameter Piezometers

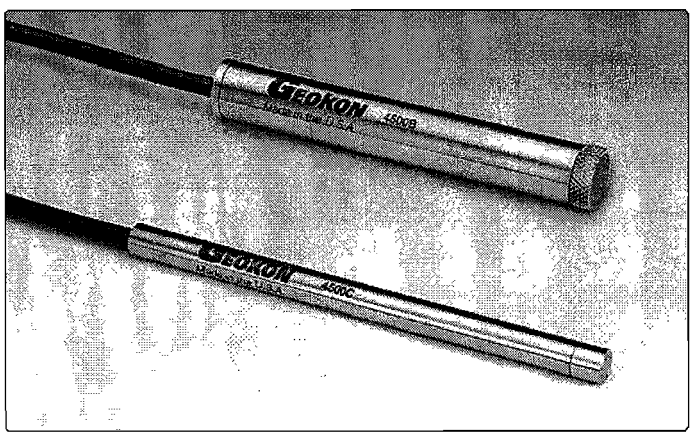

• *Model 4500C (front) and Model 4500B (rear) Small Diameter Piezometers.*

These piezometers are designed to enable the automation of small diameter piezometer standpipes. The 4500B fits inside 19 mm pipe and the 4500C inside 12 mm pipe.

Model 4500DP Drive Point Piezometers

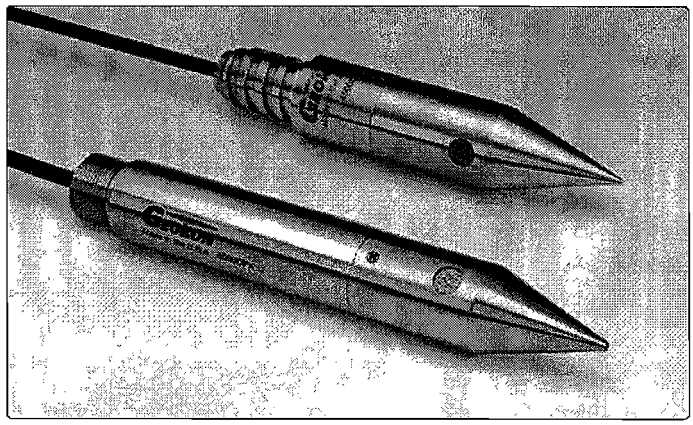

• *Model 4500DP Drive Point Piezometers.*

The Model 4500DP Drive Point Piezometer has the transducer located inside a housing with an EW drill rod thread and removable pointed nose cone. When threaded onto the end of EW drill rods, the unit can be pushed directly into soft ground with the signal cable located inside the drill rod. This model is ideally suited for use in soft clays and landfills. The piezometer may be recovered at the end of the job.

Models are also available that are similar in construction to the 4500DP but which use standard metric threads allowing for installation using cone penetrometer and other drill rods with adapters.

Model 4500HD Heavy Duty Piezometer

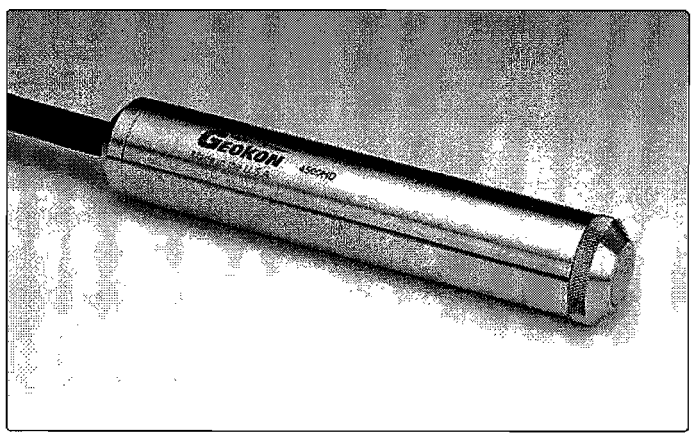

• *Model 4500HD Heavy Duty Piezometer.*

The Model 4500HD Heavy Duty Piezometer is designed for direct burial in fills and dam embankments. The 4500HD is used in conjunction with heavily armored cable to withstand earth movements during construction. Recommended for use in earth dams.

Model 4500H(H) Pressure Transducers

• *Model 4500H Pressure Transducer.*

The Model 4500H and 4500HH Pressure Transducers are supplied with a ¼ -18 NPT male or female pipe thread fitting to permit the transducer to be coupled directly into hydraulic or pneumatic pressure lines. Other pipe thread sizes are also available.

Model 4500Ti Titanium Piezometer

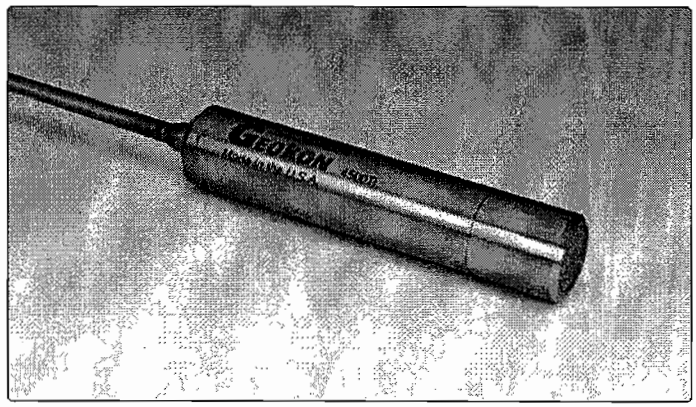

• *Model 4500Ti Titanium Piezometer.*

The Model 4500Ti is designed specifically for use in highly corrosive environments such as landfills and leach fields. Also used in critical areas where long term survivability is essential, for example, as in nuclear waste repositories and aggressive mine tailings. All exterior surfaces are made from titanium.

Model 4500HT High Temperature Piezometer

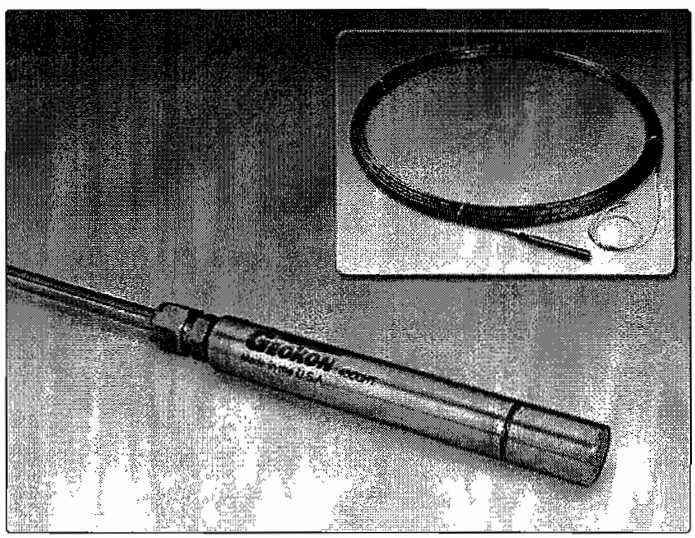

• *Model 4500HT High Temperature Piezometer (shown coiled for shipping (inset)).*

The Model 4500HT High Temperature Piezometer is designed for applications where the temperature may be as high as 230°C. Two versions are available, one for continuous use up to 200°C and one for up to 230°C. Teflon cables inside stainless steel tubing are normally supplied with these sensors.

Model 4580 Pressure Transducer

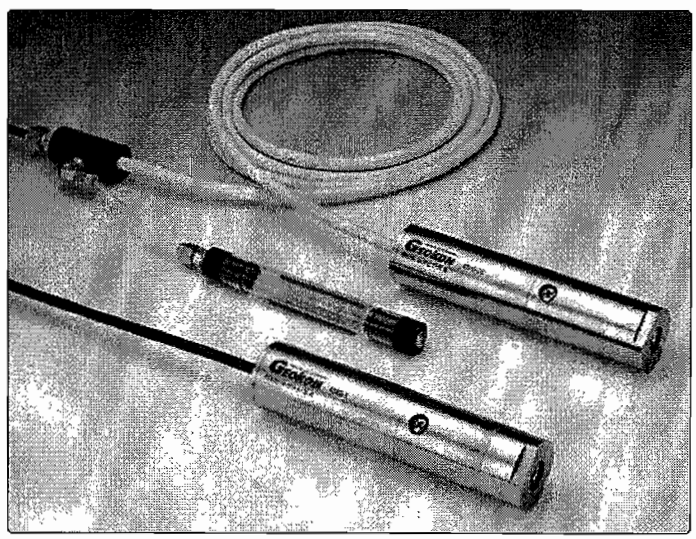

• *Model 4580 Pressure Transducer.*

The Model 4580 Pressure Transducers are designed for very low fluid pressure measurements, such as groundwater elevations in wells, water levels in streams, weirs, flumes, etc. Changes in water levels of as little as 0.2 mm can be measured. Non vented types can be used as a barometer to measure atmospheric pressure changes.

Technical Specifications

Model	Standard Ranges	Over Range	Resolution	Accuracy	Linearity	Temperature Range[1]	Thermal Zero Shift	Diaphragm Displacement	Length x Diameter	Mass
4500S	350, 700 kPa; 1, 2, 3 MPa	2 × rated pressure	0.025% F.S. (minimum)	±0.1% F.S.	< 0.5% F.S. (±0.1% F.S. optional)	–20°C to +80°C	< 0.05% F.S./°C	< 0.001 cm³ at F.S.	133 × 19.1 mm	0.12 kg
4500SH	5, 7.5 MPa	2 × rated pressure	0.025% F.S. (minimum)	±0.1% F.S.	< 0.5% F.S. (±0.1% F.S. optional)	–20°C to +80°C	< 0.05% F.S./°C	< 0.001 cm³ at F.S.	194 × 25.4 mm	0.44 kg
4500AL/ALV	70, 170 kPa	2 × rated pressure	0.025% F.S. (minimum)	±0.1% F.S.	< 0.5% F.S. (±0.1% F.S. optional)	–20°C to +80°C	< 0.05% F.S./°C	< 0.001 cm³ at F.S.	133 × 25.4 mm	0.25 kg
4500B	350, 700 kPa; 1, 2, 3 MPa	2 × rated pressure	0.025% F.S. (minimum)	±0.1% F.S.	< 0.5% F.S. (±0.1% F.S. optional)	–20°C to +80°C	< 0.05% F.S./°C	< 0.001 cm³ at F.S.	133 × 17.5 mm	0.10 kg
4500C	350, 700 kPa	2 × rated pressure	0.05% F.S. (minimum)	±0.1% F.S.	< 0.5% F.S.	–20°C to +80°C	< 0.05% F.S./°C	< 0.001 cm³ at F.S.	165 × 11 mm	0.09 kg
4500DP	70, 170, 350, 700 kPa; 1, 2, 3, 5, 7.5 MPa	2 × rated pressure	0.025% F.S. (minimum)	±0.1% F.S.	< 0.5% F.S. (±0.1% F.S. optional)	–20°C to +80°C	< 0.05% F.S./°C	< 0.001 cm³ at F.S.	187 × 33.3 mm	0.90 kg
4500HD	70, 170, 350, 700 kPa; 1, 2, 3, 5, 7.5 MPa	2 × rated pressure	0.025% F.S. (minimum)	±0.1% F.S.	< 0.5% F.S. (±0.1% F.S. optional)	–20°C to +80°C	< 0.05% F.S./°C	< 0.001 cm³ at F.S.	203 × 38.1 mm	1.50 kg
4500H	70, 170, 350, 700 kPa; 1, 2, 3, 5 MPa	2 × rated pressure	0.025% F.S. (minimum)	±0.1% F.S.	< 0.5% F.S. (±0.1% F.S. optional)	–20°C to +80°C	< 0.05% F.S./°C	< 0.001 cm³ at F.S.	140 × 32 mm[2] 140 × 25.4 mm	0.30 kg
4500HH	7.5, 10, 20, 35, 75, 100 MPa	2 × rated pressure	0.025% F.S. (minimum)	±0.1% F.S.	< 0.5% F.S. (±0.1% F.S. optional)	–20°C to +80°C	< 0.05% F.S./°C	< 0.001 cm³ at F.S.	143 × 25.4 mm	0.30 kg
4500HT	700 kPa; 1, 2, 3, 5, 7.5, 10, 25, 50, 75, 100, 150 MPa	2 × rated pressure	0.025% F.S. (minimum)	±0.1% F.S.	< 0.5% F.S. (±0.1% F.S. optional)	0°C to +200°C 0°C to +230°C	< 0.05% F.S./°C	< 0.001 cm³ at F.S.	133 × 19.1 mm	0.12 kg
4500Ti	350, 700 kPa; 1, 2, 3, 5, 7.5 MPa[1]	2 × rated pressure	0.025% F.S. (minimum)	±0.1% F.S.	< 0.5% F.S. (±0.1% F.S. optional)	–20°C to +80°C	< 0.05% F.S./°C	< 0.001 cm³ at F.S.	125 × 25.4 mm	0.19 kg
4580-1 (Barometer)	200 Mbar[1]	2 × rated pressure	0.025% F.S.[3]	±0.1% F.S.	< 0.5% F.S. (±0.1% F.S. optional)	–20°C to +80°C	< 0.05% F.S./°C	n/a	110 × 63.5 mm	1.18 kg
4580-2/2V	17, 35 kPa	2 × rated pressure	0.025% F.S.[3]	±0.1% F.S.	< 0.5% F.S. (±0.1% F.S. optional)	–20°C to +80°C	< 0.05% F.S./°C	n/a	165 × 38 mm	0.86 kg
4580-3V	7 kPa	2 × rated pressure	0.025% F.S.[3]	±0.1% F.S.	< 0.5% F.S.	–20°C to +80°C	< 0.05% F.S./°C	n/a	165 × 63.5 mm	1.72 kg

Note: PSI = kPa × 0.14503, or MPa × 145.03

[1] *Other ranges available on request.*

[2] *For 70 and 170 kPa range only.*

[3] *Depends on readout system.*

GEOKON

Geokon, Incorporated
48 Spencer Street
Lebanon, NH 03766
USA

1 • 603 • 448 • 1562
1 • 603 • 448 • 3216
geokon@geokon.com
www.geokon.com

The World Leader in Vibrating Wire Technology™

Geokon maintains an ongoing policy of design review and reserves the right to amend products and specifications without notice.

©2007 Geokon, Incorporated. All Rights Reserved | Doc. Rev. I, 07/07

APPENDIX C

Manufacturer's Information

Geomation Measurement and Control Systems
2380 MCU Technical Manual

DRAFT

Geomation
Measurement and Control Systems

2380 MCU
Technical Manual

PROPRIETARY NOTICE:

Information in this document is subject to change without notice and should not be construed as a commitment by Geomation, Inc. Geomation assumes no responsibility for any errors that may be in this document. Organizations, names, and data used in examples herein are fictitious unless otherwise noted.

No part of this document may be reproduced or transmitted in any form or by any means, electronic or mechanical, for any purpose, without the express written permission of Geomation. The availability of this document, and future revisions, if any, over the Internet are restricted to registered licensees of GEONET Suite software. Requests for permission related to the reproduction of this document must be directed to Geomation's Corporate Office:

Geomation, Inc.
25188 Genesee Trail Road, Suite 100
Golden, CO 80401 USA
Attn: Sales & Marketing

Tel: 720-746-0100
Fax: 720-740-1100
E-mail: info@geomation.com
Web Page: http://www.geomation.com

© 1996-2001 Geomation, Inc. All rights reserved.

Trademarks:
Geomation®, and the Geomation logo are registered international trademarks of Geomation, Inc.

GEONET™, GEOLINK™, RAN™, 2380 MCU™, and 2380 IOX™ are trademarks of Geomation, Inc. in the USA and other countries.

Microsoft, Microsoft Access, and Microsoft Office are registered trademarks of Microsoft Corporation. MS-DOS, Windows, Windows NT, Windows 95, Windows 98, VBA and ODBC are trademarks of Microsoft Corporation in the USA and other countries.

All other brand or product names are trademarks or registered trademarks of their respective holders.

Printed in the United States of America.

TABLE OF CONTENTS

1. Introduction 1

2. 2380 Hardware 5
2-1. Physical Structure 5
2-2. Power and Ground Distribution 5
2-3. 2380 Functional Organization 6
2-3.1 Power Conversion and Power Management 6
2-3.1.1 Main Batteries 6
2-3.1.2 Charger System 7
2-3.1.3 Power Supplies 8
2-3.1.4 Power Management 8
2-3.1.5 AC Charging Sources 8
2-3.1.6 Solar Panel Kit (PV20-G) 9
2-3.2 Processor and Memory 9
2-3.2.1 CPU 9
2-3.2.2 Memory 9
2-3.2.3 PC Card Adapter 10
2-3.3 Communication Ports 10
2-3.3.1 EIA1 Serial Port 10
2-3.3.2 RAN1 Wireline Port 11
2-3.3.3 RAN2 Radio Option Interface 12
2-3.3.4 Radio Support Options 13
2-3.3.5 EIA2 Telephone Modem Port 14
2-3.4 Frequency Measurement and Excitation 16
2-3.5 Voltage Measurement System 18
2-3.6 Geobus Control, Excitation, and Modules 19
2-3.6.1 Geobus Structure 19
2-3.6.2 Excitation Sources and Analog Bus Control 20
2-3.6.3 Geobus Channel Types 21
2-3.6.4 Module Types 22
2-4. Model Designations and Packaging 24
2-4.1 MCU Assemblies 24
2-4.2 Mounting Panels 25

3. 2380 Firmware 27
3-1. Firmware Organization 27
3-2. Startup/Shutdown 28

3-3. Measurement and Control Subsystems 28
3-3.1 Network Communications 29
3-3.1.1 Communication Benchmarks 29
3-3.1.2 Test Results 30
3-3.2 Executive Commands 32
3-3.3 PC Card System 35
3-3.3.1 Memory Cards 36
3-3.3.2 Modem Cards 36
3-3.3.3 DIO Cards 36
3-3.3.4 SIO2 Cards 36

4. Power Management 37
4-1. Power Consumption 37
4-2. Energy Budget 38

5. Interface to Devices 43
5-1. Resistance Measurements 43
5-1.1 Two-Wire Resistance Measurements 43
5-1.2 Three-Wire Resistance Measurements 43
5-1.3 Four-Wire Resistance Measurements 44
5-2. Current Transmitters 45
5-3. Resistance Ratios 47
5-4. Potentiometers 47
5-5. Bridges 50
5-6. Vibrating Wire Transducers 51
5-7. Thermocouples 52
5-8. SDI 12 Devices 56

1. INTRODUCTION

Automatic data acquisition and device control in remote environments has always been difficult to accomplish. Usually for such situations, there is a lack of infrastructure regarding protection from environmental extremes and lightning transients, the availability of power, and the availability of communication resources. Equipment designed for plant-site or laboratory environments generally has high power consumption, poor communication capability, minimal transient protection, and environmental limitations (with respect to temperature, humidity, dust, etc).

Greater success has been achieved by those who have applied equipment from the data logger family. Data loggers are typically low-cost instruments designed for remote environments. They collect measurement data onto a local mass storage device from which the data should be extracted every few weeks or so. However, the transport of the data on a timely basis to analysis personnel is severely lacking. Typically communication capability, if provided at all, is minimal. The data logger model assumes manual intervention both in configuring units and in transporting data. Data loggers are good for quick installation for short-term historical studies, but the required manual intervention quickly becomes untenable for large or long-term monitoring projects, or for situations in which nearly real-time data is a requisite.

Introduced in 1986, the Geomation System 2300 provided the first total solution for remote data acquisition and control. Being a complete system designed from the ground up with the special durability and performance requirements of remote monitoring and control in mind, the System 2300 architecture has proven itself to be the solution in hundreds of installations around the world. From simple data acquisition to complex automatic control systems—from one MCU off-line for temporary studies with a few sensors, to complex multi-tiered networks of a hundred MCUs with a thousand sensors, the Geomation System 2300 is a perfect match to your requirements.

The System 2300 architecture defines a data acquisition and control network consisting of physical hardware units of two distinct types—Measurement and Control Units or MCUs, and GEONET WorkStations or GWSs. The architecture defines a connectivity strategy so that messages may freely flow within the network. The network may consist of an arbitrary combination of point-to-point and multipoint connections through media links involving radio, twisted pairs, leased or dial-up telephone lines, microwave channels, cellular telephone, fiber-optics, or satellite channels. MCUs form the heart of the network performing all physical measurements, output control actions, and mathematical transformations without any required external intervention. GWSs, on the other hand, provide user access to the network. GWS units collect data from the MCUs and record it into user-accessible files. In addition, GWSs provide the ability to change the configuration of any MCU on the network. The Geomation System 2300 solves the missing vital link problem in providing the connection between field instrumentation of all kinds (including intelligent sensor networks) and users on enterprise-wide computer networks who must analyze and perhaps modify the behavior of field instrumentation.

The Geomation 2380 Measurement and Control Unit is a third generation MCU designed to the System 2300 specification. The 2380 MCU combines the best features of the earlier 2350 and 2370 products along with new ease-of-use improvements and enhanced data manipulation features.

The table below summarizes specific areas in which the 2380 addresses improvements in performance or feature extensions over previous MCU models.

2380 Enhancements over previous MCU models.

- Ease of installation: The 2380 is a compact unit with packaging designed to imply appropriate installation. Terminals are clearly labeled for functionality, and lights are provided for operational diagnostics. Snap-on covers allow ready access to the internal straps and switches, although the requirement for such access has been minimized. Mounting panels provide ground termination and routing channels for interface cable.
- Lower power consumption: The 2380 consumes less than 1/2 the power of the 2350 MCU during idling and about 1/8 that of the 2350 during analog measurements.
- Modular flexibility: The 2380 GEOBUS II provides enhanced modular expandability similar to the 2350 but with the compactness of the 2370. The 2380 family of products covers a full range of expandability providing economical solutions for single-point applications up to sites with clusters of eighty or more connected devices.
- Greater processing capability: The 2380 processor has about three times the throughput of the 2370 and 12 times the throughput of the 2350. The 2380 has twice the onboard memory of the 2370 and four times the memory of the 2350.
- Support for more configuration channels: The greater onboard memory provides more configuration channel space, and the incorporation of multimeter and frequency meter functions on the base unit allows for more multiplexer channels on the GEOBUS.
- More logged data storage: the expanded memory adds greatly to the logged data storage space. The 2380 will store about five times as many logged data points as the 2370.
- Mass storage: The 2380 provides a socket for pluggable mass storage. Logged data may be directed to the storage card either locally or over the network.
- More flexible sensor excitation: Onboard voltage or current sources may be directed to any multiplexer channel during analog measurements. An expansion module is available to provide longer duration or higher-powered excitation.
- Improved startup and shutdown tracking: Restart counters keep track of reboot statistics while startup messages clearly define the cause of shutdowns and restarts. Hardware is included to allow module initiated restarts.
- Improved handling of MCU setup parameters: Operating and calibration parameters are normally retrieved from user areas of non-volatile flash memory. User parameters or factory setup parameters may be recalled at any time; while user values may be modified at will. Simple analog system calibration procedures are provided.

An understanding of MCU operations requires an overall understanding of the many unique aspects of the System 2300 Architecture. The “GEONET Suite Operation and Reference” manual provides a complete resource for basic information about the architecture of the System 2300, as well as complete documentation of the GEONET Suite software. The manual can be downloaded for free from our website at www.geomation.com, or a printed copy may be purchased from Geomation.

This manual discusses the operation and configuration of the 2380. It is assumed that the reader is familiar with the System 2300 architecture. The reader should be familiar with the physical unit types and the network connectivity options. He should also understand the various system methodologies including evaluation mechanisms, alarm handling, data recording, and configuration processes. The reader should also be familiar with the GEONET Suite software package.

The first section of this manual walks the reader through the hardware features of the 2380 MCU. The intent here is to make the user aware of both the capabilities and limitations of the hardware, to expose the reader to hardware systems that may need periodic adjustment or calibration, and to acquaint the user with internal strap settings. This section should be read by those who will be installing or configuring a 2380 System. Although this section gets into more detail on the 2380 hardware than an introductory reader might wish, the section may still give enough intimation of 2380 features to be of considerable value to those who are contemplating purchase of a system.

The next section discusses the particular implementation of System 2300 features in the 2380 MCU. This section talks about the organization and operating modes of the MCU firmware, and some of the particular executive commands and evaluator Component types implemented in the 2380. The detail presented here should be of value to someone developing a 2380 application.

The section called “Power Management” is included to emphasize the importance of energy conservation in remote applications. It is easy to over-commit the energy budget with seemingly low power consumption devices or operating modes. This section should make the reader aware of the relative sizes of contributions to the energy budget, and to make the reader aware of techniques that can be used to minimize the total energy consumption. This section should assist a system designer in selecting hardware and operating modes for remote sites where energy is truly limited.

The “Interface to Devices” section provides some guidelines to the system designer who must select sensor types and MCU modules to condition the sensors. This section includes diagrams for wiring to sensors.

NOTE:

Before using any of these interface models, you should consult the Geomation website for more current information in Technical Notes or Service Bulletins.

Additional information about installation and start-up configuration of the System 2300 can be found in the “Getting Started” manual, available for download from Geomation’s website at www.geomation.com.

NOTES:

2. 2380 HARDWARE

2-1. PHYSICAL STRUCTURE

The 2380 MCU electronics package is built up from a single system circuit board and two small daughter boards. The system board contains most of the MCU circuitry, while one daughter board carries screw clamp terminals and indicators for base unit connections, and the other carries a dual PC card socket and adapter circuitry. The system board provides connectors and mounting pads for optional equipment including a radio adapter, two slots for optional Geobus instrument modules, and a connection to an optional I/O expansion bus.

The system circuit board with daughter boards attached is mounted to a metal chassis plate. The entire electronics package assembly is then enclosed in a precision-molded, polycarbonate plastic shell. The shell provides mechanical protection as well as clear labeling and easy-access to wiring terminals.

The 2380 electronic system is laid out on a six-layer circuit board. Four wiring layers are used for signal trace routing, one layer is reserved for grounding, and one layer is used for power distribution. To conserve power, the logic system operates from a single 3.3 volt power supply. The system achieves compactness by utilizing high-density, fine-pitched components, and programmable logic devices. Components are placed on both sides of the system board. The electronic design utilizes many low power consumption components that have been developed primarily for the portable computer market.

2-2. POWER AND GROUND DISTRIBUTION

Several steps have been taken to minimize the potential for cross talk between components in this compact design. First, power conversion, logic, and analog circuitry are physically separated as much as possible and located to minimize total trace lengths. Next, power distribution is handled by large areas on the power and ground planes to minimize voltage drops from the power supply to components. Large bypass capacitors (0.22µF) are used to decouple transients from components to the power system. Analog measurement circuitry is powered by dedicated ±5V and ±15V supplies to prevent transient currents of switching logic from affecting analog circuit performance.

A four-fold grounding system has been developed: (1) All logic devices are connected to a logic ground plane which carries switching transients which have not absorbed by the bypass capacitors. (2) All analog measurement circuitry is underlaid by and has ground connections to a dedicated analog ground plane. The analog ground plane is connected to the digital ground at one point. Digital switching ground currents, thus, do not pass through the analog ground. (3) An analog guard ground shields analog measurement traces. No power supply signals are routed through the guard ground. Sensitive analog traces including the analog measurement bus are sandwiched between analog guard ground traces on adjacent board layers. In addition, guard ground traces are placed alongside of and in-between differential analog measurement traces. The guard ground is connected to the analog ground at one location near the

analog front-end amplifiers, which are ground referenced to the guard ground. (4) A separate protective earth ground system is routed through chassis components and circuit board traces to transient protection devices near each MCU input and output terminal. Large transient currents are shunted away from internal components by the protective ground system to the designated earth grounding terminals. The digital circuit ground is connected to the protective ground at one point. An external earth connection to the protective grounding terminal is imperative, as otherwise, large transient currents would be routed through the circuit ground systems causing potential damage to sensitive components. A schematic representation of the grounding and power distribution system is shown in the figure below.

Methods of handling power and ground systems within the 2380.

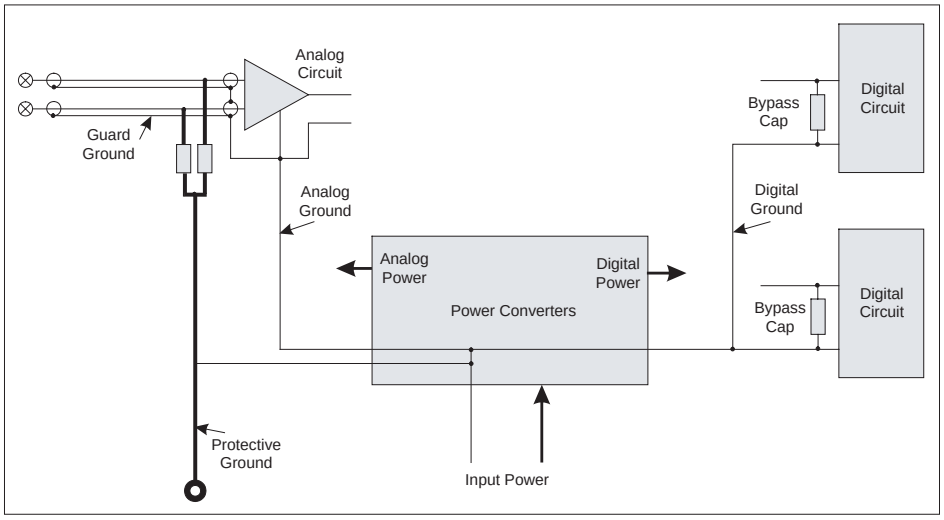

2-3. 2380 FUNCTIONAL ORGANIZATION

The 2380 MCU hardware design is organized into six functional blocks: (1) power conversion and power management, (2) processor and memory, (3) communication ports, (4) Geobus control and sensor excitation, (5) precision frequency measurement and excitation, and (6) precision DC voltage, current, and resistance measurement. A block diagram of the 2380 MCU base unit and optional systems is shown in the figure on the following page. The following sections discuss some of the features designed into each functional block.

2-3.1 Power Conversion and Power Management

Nearly one third of the 2380 system board circuitry is dedicated to power conversion and power management.

2-3.1.1 Main Batteries

The power conversion system is based on a self-contained 12-volt, 2.3 Amp-hour lead-acid storage battery. Terminals are provided to either drive external loads from the battery or to substitute external batteries of up to 10 Amp-hour capacity. If the

battery charging inputs are left disconnected, then external power supplies or primary batteries may be substituted for the internal storage battery. Such external supplies must provide at least 200 mA of current (1 A for radio equipped units) at 12.0 to 16.0 VDC.

2380 MCU functional block diagram

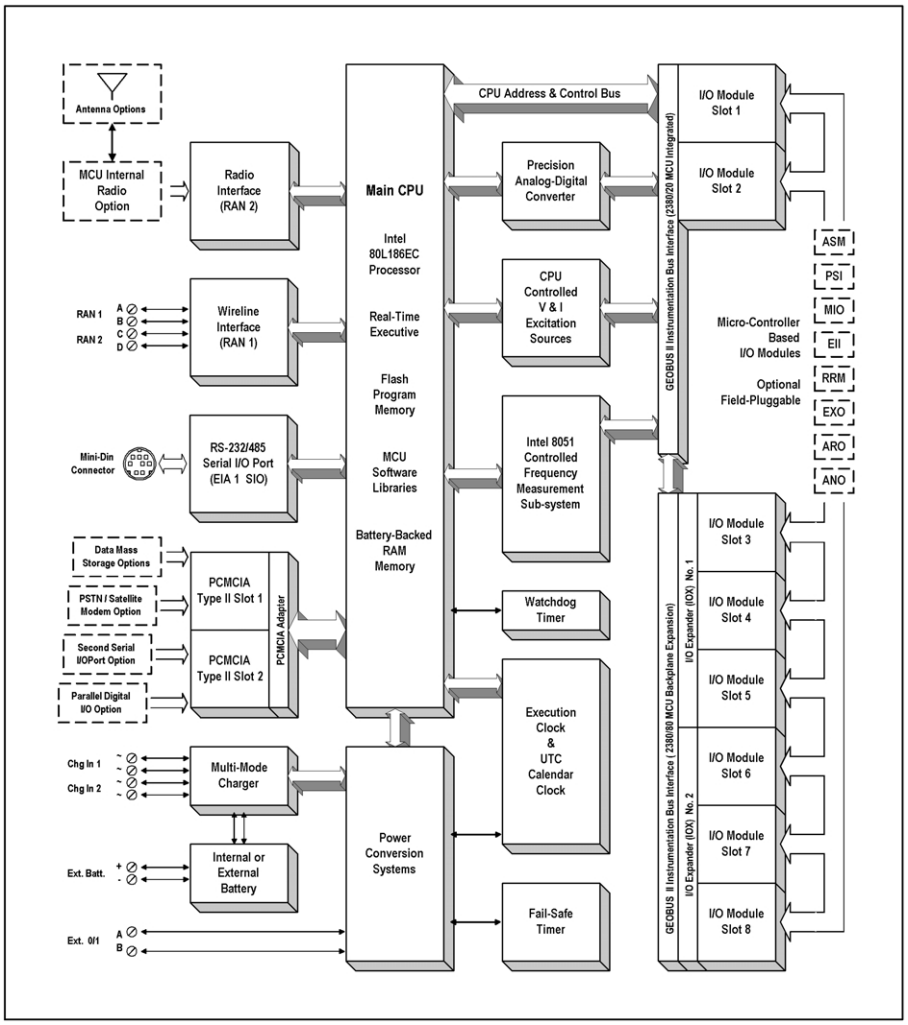

2-3.1.2 Charger System

The battery charge is replenished through an on-board multi-stage charge regulator. The regulator accepts AC or DC inputs on one or two channels. A DC-DC converter efficiently converts the supply voltage to an appropriate battery charging voltage. The charging current is regulated to initially apply a controlled over-charge followed by float-state voltage regulation with thermal compensation. The entire charger circuit is provided with thermal feedback to reduce charging currents with rising temperature. Although the maximum charging current is limited to that recommended for the internal 2.3 Amp-hour battery, external batteries of up to 10 Amp-hours capacity may be efficiently charged.

2-3.1.3 Power Supplies

Multiple independently switched DC-DC converters translate the battery supply voltage to levels needed by the MCU circuits. As long as the main battery supply voltage is above 9V, one converter operates which supplies 3.3V to power management, clock/calendar, and memory backup circuits. If the main battery supply drops below 9V, automatic switches activate an onboard lithium coin cell to maintain clock/calendar and memory backup operations only. Power management circuitry controls the application of the 3.3V supply to the rest of the logic circuits in the MCU including the main processor. When activated, the main processor then controls additional DC-DC converters which generate plus and minus 5V for most of the onboard analog circuits and plus and minus 15V which are used by the voltmeter front-end instrumentation amplifiers. Additional DC-DC converters generate user selectable sensor excitation voltages under processor control.

2-3.1.4 Power Management

When power consumption must be absolutely minimized, the 2380 may be put into a sleep mode in which most of the MCU systems including the main processor are deactivated until later needed. In this state, some low-power dedicated power management circuits must remain active to analyze conditions which should re-activate the main processor. These circuits include an alarm clock, a fail-safe timer, and monitoring circuits which watch for power supply transitions, power switch transitions, and module-originated wakeup requests. Normally, when the main processor allows the MCU to enter the low power sleep mode, it first sets the alarm clock to issue a system wakeup request shortly before the next scheduled MCU operation. When the alarm expires, the power management circuits re-activate the main processor. Should the alarm clock system fail for any reason, a fail-safe timer is also automatically set at the time that the main processor shuts down. If the system is not re-awakened within 25 hours, the fail-safe timer will expire re-awakening the processor. During the sleep state, the power management circuits also will re-activate the main processor if the main supply voltage drops below 9V and subsequently rises above 12V, or if either the system power switch or external power switch is switched to the on position leaving both switches in the on position. The power management circuit also monitors a wakeup line on the Geobus so that some Geobus modules which remain active while the main system shuts down can issue a request to wake up the main processor.

2-3.1.5 AC Charging Sources

Each 2380 MCU is supplied with an AC charging transformer. The transformer is also available as an accessory item (CIT). All units which are to be out of service for longer than about two weeks (both newly-received units and units removed from service) should be connected to an AC charging adapter to activate the charger and maintain the battery charge level.

Spare batteries in storage should be maintained at full charge in order to maximize shelf-life. Non-charged units and spare batteries for which the terminal voltage falls below 10 volts should be replaced. The XBC stand-alone External Battery Charger is available for maintaining charge on stored batteries. The charger has multiple

operating modes to rapidly recharge discharged batteries (at up to 800 mA charging current), and to maintain an optimum charge level on fully charged batteries.

2-3.1.6 Solar Panel Kit (PV20-G)

The PV20-G 20-Watt solar panel kit is available as an option and as service replacements with a universal mounting bracket. The solar charging source can operate in parallel with or in place of the AC charging adapter. The 20-watt panel provides adequate power for typical MCU installations; however, when high measurement rates or radio logging frequencies are programmed, or high sensor or actuator power levels are configured, an MCU energy budget should be calculated as demonstrated later in this document. Ensuring that, under the worst-case conditions, adequate solar power is available to meet the energy consumption requirements is essential to maintain a battery charge level sufficient for normal operations. If the solar power is insufficient to maintain battery charge, the MCU will shut itself down until the battery terminal voltage is restored. The charger circuit in the MCU will operate efficiently with solar panels providing up to 20 watts of power.

2-3.2 Processor and Memory

2-3.2.1 CPU

The processor for the 2380 is an Intel 80C186EC. The 186EC is a third generation 186 processor designed specifically for the embedded systems market. The EC version is the highest integration version in the family providing 14 on-chip peripheral devices in addition to the 16-bit processor. Dramatically reduced power consumption as well as on-chip power management features characterize this processor family, which is typically used in power-critical portable applications such as cellular telephones and personal organizers.

The processor section of the 2380 utilizes on-chip peripherals, external peripheral devices, and high density programmable logic to provide the following functions: (1) power management, (2) 15 channels of interrupt control, (3) three counter/timers, (4) chip select logic, (5) four channels of DMA, (6) four serial communication ports, (7) 58 I/O control lines, (8) tone generator, and (9) 16-bit unit address. The processor operates with a 9.216 MHz instruction cycle frequency.

2-3.2.2 Memory

Low power memory devices completely fill the 186 memory space. The lower 512 Kbytes contains CMOS static RAM memory which is made to be non-volatile by a backup lithium cell and controller. The 2380 MCU utilizes RAM for runtime data in addition to nonvolatile structures which contain MCU configuration data, network topology data, and communication message queues.

The upper 512 Kbytes contains CMOS flash electrically re-programmable read-only memory. The flash memory device is separated into blocks, among which is the uppermost block, called the boot block. In the 2380, the lower blocks contain the application code for the MCU. The boot block contains initialization code and a resident monitor which is capable of loading the lower memory blocks. The boot block is normally protected from erasure or modification by a jumper block located on the

system board. The boot block is initialized and then protected at the factory, and should not require field modification.

2-3.2.3 PC Card Adapter

The processor section includes a dual-slot hardware interface supporting up to two PCMCIA (PC card) optional devices. Software support is provided for particular Geomation selected PCMCIA devices including a mass storage card and a telephone network modem card.

In addition to the memory space devices, the 2380 MCU includes hardware and software which support a mass storage PCMCIA card. The card provides several megabytes of storage in flash memory devices which can be removed and read by PCMCIA-equipped computers. Memory cards installed on 2380 MCUs appear as a network resource. Any unit in a System 2300 network can record data on memory cards by routing messages to the card through the communications network. Memory cards can be removed and transported to PCMCIA-equipped GWSs where the recorded data can be extracted.

WARNING:

The PC Cards are not hot-swappable. The MCU must be powered down before removing a PC Card.

2-3.3 Communication Ports

The 2380 MCU has four internal communication ports and supports additional optional serial ports as PCMCIA card or Geobus module options. Of the four internal ports, two are dedicated to inter-unit communications (RAN1 and RAN2), one is usually used for inter-unit communications and sometimes for communication with intelligent instruments (EIA1), and one is dedicated to internal communication with the Geobus modules.

2-3.3.1 EIA1 Serial Port

The EIA1 serial port is a full duplex port with physical interfaces for both RS-232 and RS-485 signaling. Indicators are provided for transmit line activity, receive line activity, and carrier detect. The port is wired to an eight-pin miniature circular connector. Each pin is protected by a transient absorption diode connected to the earth grounding system. The pinout of the connector is shown in the table below.

EIA1 Electrical pinout.

1	B (RI)	in/out (input)	RS-485 half duplex differential data line. Alternate function is Ring Indicator RS-232 input.
2	CD	input	RS-232 Carrier Detect input.
3	A(DTR)	in/out (input)	RS-485 half duplex differential data line. Alternate function is RS-232 Data Terminal Ready input.
4	Gnd		MCU circuit ground reference.
5	RD	input	RS-232 Receive Data input.

6	TD	output	RS-232 Transmit Data output.
7	CTS	input	RS-232 Clear to Send input.
8	RTS	output	RS-232 Request to Send output.

Normally pins 1 and 3 are connected to the RS-485 half-duplex differential data line. In this case, MCU firmware controls the activation of either the RS-232 or the RS-485 physical interface according to the configured usage of the port. For some RS-232 intelligent instrument applications, the jumpers on the system board at locations JP9 and JP10 may need to be repositioned to enable the alternate RS-232 pin functions thereby disabling the RS-485 interface. Refer to documentation for the specific instrument interface for details.

2-3.3.2 RAN1 Wireline Port

The RAN1 serial port is connected to an on-board modem and interface circuitry for twisted pair wireline communications. The modem conforms to the CCITT recommendation V.23 for 1200 bits per second communication using frequency shift keying.

The digitally synthesized sine wave transmit signal from the modem is coupled to a strappable attenuator at location JP11 and then to a software switched driver amplifier. A 600 Ω telephone line matching transformer couples the driver amplifier to the transmission line. The transmitted signal is available at the A and B terminals of the RAN1 port on the termination board. Transient absorption diodes on the termination board protect the driver from externally applied transients. The table below shows the resulting transmission amplitude into a 600 Ω line for various settings of JP11.

Transmit level for various settings of JP11.

A	+3 dBm
B	0
C	-3
D	-6
E	-12
F	-16

Whenever the transmitter is switched on, the transmission of data is delayed until all units capable of receiving the transmission have had enough time for their receivers to acquire the signal. Typically the receiver acquisition time is on the order of a few milliseconds. For systems with interposing communication equipment such as real-time radio repeaters or microwave adapters, the data transmission delay should be considerably greater. In the 2380, the key-up delay time, called the CTS delay parameter, is a user-modifiable setup constant. The default value of the time delay is 15 milliseconds.

The modem receiver is connected to the wireline through a second 600 Ω telephone line matching transformer to the C and D terminals of the RAN1 port on the termination board. The receiver terminals are also protected by transient absorption diodes on the termination board. The receiver includes a threshold circuit for detecting the presence of a transmission signal. The carrier detect threshold is an internal

potentiometer adjustment at VR1 in the 2380 MCU. During reception the FSK receiver circuit must discriminate between tones of 1300 Hz and 2100 Hz for marking and spacing levels, respectively. A receiver bias level for setting the discrimination is adjustable at VR2 in the 2380.

The availability of separate transmit and receive paths is useful for some types of external analog communication equipment such as fiber-optic line drivers and microwave analog interfaces. Normally though, jumpers on the termination board at locations JP1 and JP2 are installed creating a half-duplex single twisted pair communication interface. In this case, terminals A and C are shorted together and B and D are shorted together.

Indicator lights are provided to show carrier detection and data activity on the transmit and receive circuits.

2-3.3.3 RAN2 Radio Option Interface

FCC regulations state that:

1. The RF power of a radio transmitter shall be no more than that required for satisfactory technical operation considering the area to be covered and local conditions.

2. Frequency and deviation of a transmitter must be checked before it is placed into service and re-checked once each year thereafter.

The FCC designation numbers for the Radio Data Link option transceiver models are:

VHF (136 - 174 MHz)	AZ489FT3763
UHF (403 - 430 MHz) or (450 - 470 MHz)	AZ489FT4774

The RAN2 serial port is internally connected to a modem compliant with the CCITT V.23 recommendation. The modem is connected to interface circuitry and terminated at connector CON11 on the 2380 system board. The radio adaptor board plugs into CON11. The signal interface to the radio consists of separate transmit audio and receive audio lines, a push-to-talk transmitter key-up line, and a squelch or radio frequency carrier detection line.

The RAN2 port has carrier detection and receiver bias adjustments similar to the RAN1 port. Like the wireline port, the RAN2 port also has a key-up delay time parameter called CTS delay. The radio port CTS delay defaults to 75 milliseconds and is also modifiable as an MCU setup parameter. The radio power supply is adjustable on the 2380 system board at VR5. The radio transmit power adjustment feature provides three benefits: first, using the lower transmit power conserves MCU battery power; second, using the lower transmit power allows usage of radio frequencies that are pre-registered with the FCC bypassing the sometimes lengthy radio licensing procedures; and third, use of lower radio transmit power helps to ensure that only nearby units that need to receive the transmission will detect a busy RF channel.

Indicator lights on the termination board show carrier detection and transmit and receive activity.

Optional radio transceiver models are supplied to user specifications according to the operating frequencies licensed by the FCC. If certain additional restrictions are observed, such as a maximum RF transmit power level of two watts, pre-assigned frequencies licensed to Geomation can be used by U. S. Geomation customers bypassing the sometimes lengthy process of obtaining a specific site license from the regulatory bodies. VHF radio transceivers are available covering the 136 to 174 MHz range in four bands; UHF transceivers cover the 403 to 430 MHz range in two bands, and the 450 to 470 MHz band. Transmit power levels can be specified for five watts for VHF units, four watts for UHF units, or two watts for either type of unit. The transceiver units utilize the frequency modulated RF circuitry designed for some models of hand-held "walkie-talkie" radios; the analog circuitry and external interface is custom designed for digital communications applications. The audio transmission and receiver frequency response are flat for digital signaling. Also, the key-up circuit includes a transmitter time-out feature which will automatically shut down the transmitter within less than one minute should the MCU fail in a fashion which would otherwise keep the transmitter keyed.

Radio transceiver internal switch settings.

Switch	*Setting*	*Function*
1	off	not used
2	off	open = enable transmit time-out timer closed = disable transmit time-out timer
3	off	open = flat audio out if sw4 is closed closed = de-emphasis audio if sw4 open
4	on	open = de-emphasis audio if sw3 closed closed = flat audio if sw 3 is open
5	off	open only
6	on	open = pre-emphasis data in closed = flat data in
7	on	open = 5V for carrier detect closed = 0V for carrier detect
8	on	open = 5V PTT to transmit closed = 0V PTT to transmit

2-3.3.4 Radio Support Options

Geomation offers Radio Data Link support options to complete a radio system installation including antennas, mounting hardware, and transmission line. Rugged, spring-type, omni-directional whip antennas are supplied with each radio-equipped 2380 MCU. These antennas provide low cost and reliable service for communication links of up to about two miles. The antennas vary in length from two to 10 inches depending on specified operating frequency and style.

For greater communication distances (up to 15 miles or more) or more difficult to service radio environment installations, Geomation offers high-gain directional Yagi and omni-directional stacked dipole antennas in the UHF bands. The Standard

Omni-directional Antenna (SOA) includes a co-linear array antenna with 6dB of gain for the specified frequency; the Hi-gain Omni-directional Antenna (HOA) is a similar antenna with 10dB of gain; the Yagi Antenna (YDA) is a five-element array antenna providing 10dB of gain for the specified frequency. Standard and low-loss connectorized transmission cable is available in standard two-meter lengths or in user specified lengths. The antennas are rugged and provide high performance and long term reliability, even under severe environmental conditions.

2-3.3.5 EIA2 Telephone Modem Port

The telephone network modem option (TNM) provides an additional GEONET communications interface used to connect from an MCU to the public dial telephone network. With this option installed, an MCU or a cluster of MCUs can establish communication links with other MCUs so equipped or, more commonly, with GWSs which are configured for dial telephone network operation.

The TNM feature utilizes a self-contained, low power, industry standard modem module in the PC card format in compliance with Federal Communications Commission (FCC) Part 68 Rules and Regulations for direct connection to telephone lines. The modem is compatible with Bell 103/212A and CCITT V.34 digital communications standards and operates under an extended industry standard Hayes AT command set. The interface to the telephone network is a standard modular RJ-11C telephone receptacle.

MCU firmware automatically detects the presence of a PCMCIA modem module. The modem port is initialized to automatically answer any incoming telephone calls, and to initialize GEONET Communications Protocol (GCP) connections after doing so. In this automatic mode, the TNM option will answer incoming calls presumably initiated by other MCUs or, more often, by an operator using the dial option at a GWS, and establish communications as dialog is initiated by the calling party. In this mode it is assumed that the calling party has responsibility for limiting the duration of the phone call; the MCU will stay on-line indefinitely until the phone connection is dropped as detected by the loss of a modem carrier signal.

WARNING:

PC Cards and PCMCIA modem modules are not hot-swappable. The MCU must be powered down before installing or removing PC Cards or modem modules.

Using TNM evaluator Components, TNM option-equipped MCUs can also initiate telephone network GCP connections to one or more remote units. In normal operation, the modem is initialized as above to answer any incoming telephone calls. When a TNM Component is triggered for evaluation (either by schedule, within an evaluation tree, or under a flagged alarm state or acknowledgement change), the firmware regains control over the modem by temporarily disabling GCP communications on the port. A telephone call is then placed to the number defined in the TNM Component record. If a valid modem carrier signal is detected within a 30 second time-out limit, GCP operations are re-enabled on the port. Otherwise, an error condition is temporarily flagged and the record evaluation terminates or is scheduled

for re-evaluation according to the redialing parameters configured within the TNM Component. If GCP communications is established, the MCU attempts to initiate dialog with the called party by attempting to transmit any queued messages on the port. In addition, the MCU will send messages to the units defined in the wakeup field of the TNM Component requesting other units to start up communication attempts using the TNM-established internode connection.

It is assumed that TNM-initiated telephone calls should also be terminated under MCU control. During the course of established telephone network communication, the MCU monitors the phone call for disconnection conditions defined in the TNM Component, as well as for remote-end initiated disconnections. Termination conditions include total phone call duration and duration of connection without transfer of GCP message packets. Once the termination process is initiated, the MCU regains control of the modem. The modem is then re-initialized to automatically answer any incoming calls and initiate GCP communications.

Telephone Company Procedures: The goal of the telephone company is to provide you with the best service it can. In order to do this, it may occasionally be necessary for them to make changes in their equipment, operations, or procedures. If these changes might affect your service or the operation of your equipment, the telephone company will give you notice, in writing, to allow you to make any changes necessary to maintain uninterrupted service.

If you have any questions about your telephone line, such as how many pieces of equipment you can connect to it, the telephone company will provide this information upon request.

In certain circumstances, it may be necessary for the telephone company to request information from you concerning the equipment which you have connected to your telephone line.

Upon request of the telephone company, provide the FCC registration number and the ringer equivalence number (REN) of the equipment which is connected to your line; both of these items are listed on the equipment label on the end of the modem module on the TNM card. The sum of all of the RENs on your telephone lines should be less than five in order to assure proper service from the telephone company. In some cases, a sum of five may not be usable on a given line.

If Problems Arise: If any of your telephone equipment is not operating properly, you should immediately remove it from your telephone line, as it may cause harm to the telephone network. If the telephone company notes a problem, they may temporarily discontinue service. When practical, they will notify you in advance of this disconnection. If advance notice is not feasible, you will be notified as soon as possible. When you are notified, you will be given the opportunity to correct the problem and be informed of your right to file a complaint with the FCC.

Any necessary repairs to the Geomation 2380 TNM option should be performed by Geomation, Inc. or an authorized representative of Geomation, Inc. For information contact Geomation, Inc., 25188 Genesee Trail Rd #100, Golden, Colorado, 80401.

2-3.4 Frequency Measurement and Excitation

The frequency measurement system included on the 2380 main system board has been designed to primarily excite and measure a class of sensors called vibrating wire transducers. Although the high gain and limited bandwidth of the input amplifier is designed specifically to meet the requirements of a wide range of vibrating wire transducer types, the frequency measurement system is useful as a general purpose feature with the capability of accurately measuring frequencies of signals as small as 0.1mV amplitude in the range of 450 Hz up to about 5000 Hz. For AC source signals of greater than 100mV amplitude, the frequency measurement system gives accurate measurements from 300 Hz up to 10khz.

The frequency measurement system consists of a high-gain, bandpass limited, AC coupled receiver amplifier utilizing active filters followed by a sensitive digital comparator. The comparator output signal is connected to a counter/timer input channel on a peripheral control microprocessor dedicated to the frequency measurement and excitation function. The amplifier passes signals from 450 Hz up to 5500 Hz with a gain of about 1000. Received signal levels are normally in the range of 0.1 millivolts up to five millivolts peak-to-peak. The input circuit is transformer coupled providing good common mode rejection characteristics even for unshielded twisted pair sensor wiring. For long cable runs, shielded wire should be used in order to minimize any apparent differential mode signal arising from extraneous pickup. The input impedance in receive mode is about 1000 Ω, assisting in the rejection of noise sources coupled by stray capacitance.

The actual measurement is of the period of the oscillatory signal. The processor measures the amount of time for 255 oscillations in the received signal. The processor computes and reports the period of the oscillation. The period measurement operates from a precision crystal oscillator time base running at 5 MHz with a room temperature accuracy better than 0.002% and a change with temperature of no more than 0.01% over the range of -20 C to +55 C. The resolution of the measurement of the period of the vibrating wire transducer is 1/255 μsec or 3.92 nsec.

Vibrating wire transducers consist of a contained fine diameter wire under tension. The wire is normally free to vibrate at its resonant frequencies with very little mechanical loss. The wire attachment mechanism couples the displacement of a sensing diaphragm to the tension in the wire. As the external sensed parameter changes (strain, displacement, pressure, etc.), the tension in the wire and hence its resonant frequencies also change. A measurement consists of detecting the change in one of the resonant frequencies as the coupled external parameter changes.

Two methods are commonly used to detect the resonant frequency of the vibrating wire. In the autoresonant method, two coils and permanent magnets are placed near the wire. One coil is driven by an AC signal which drives the wire at the driven frequency. The second coil generates an output voltage as the wire vibrates near the coil. Since the sensed amplitude increases greatly as the driven frequency approaches the natural resonant frequency of the wire, the resonant frequency is easily detected. An oscillator can be built by connecting a feedback loop from the sensing coil, through an appropriate amplifier, to the driving coil.

In the second method, called the pluck-and-listen method, a single coil and magnet are placed near the wire. The coil is first driven by a short duration plucking signal. The plucking signal stimulates the wire to vibrate at its natural frequencies. Following the pluck, the wire rings at its resonant frequency while decaying over time at a rate determined by the mechanical loss mechanisms. During the decay, a signal is induced in the coil by the vibration of the wire. The resonant frequency can be measured by observing the frequency of the decaying resonance.

The 2380 frequency measurement system is capable of operating with either method. For the autoresonating process, the feedback amplifier must be external (sometimes it is manufactured within the body of the transducer). The 2380 simply measures the autoresonant frequency. For the pluck-and-listen method, the 2380 includes hardware for generating a plucking signal, and includes proper coil switching circuits for measuring the decaying resonance. If the signal strength falls off too rapidly with time, the processor automatically enters a reduced resolution mode that performs the frequency measurement faster but with a somewhat lower resolution of 1/101 microseconds or 9.90 nsec resolution.

The plucking signal is generated by the frequency measurement processor and amplified by an excitation transmitter. The excitation transmitter drives the transducer through multiplexer switches with a square wave signal with 10 volts amplitude and zero DC component. The source impedance is about 100 Ω after passing through the multiplexer switches.

Several forms of excitation signal can be generated under user control to meet the excitation requirements of various transducer types. Most transducer types function well with a single chirp excitation mode in which a swept square wave signal is generated starting at a low frequency (450 Hz) and ending at a programmable limit (from 1 to 5 kHz) after a programmable chirp duration (from 0 to 500 milliseconds). The sweep rate is logarithmic in time increasing in rate at higher frequencies in order to compensate for the generally expected wider (in frequency) resonances of higher frequency transducers. By cutting off the upper frequency limit of the chirp to a value just above the maximum expected resonance frequency, one can avoid the complications that can arise when significant energy is pumped into harmonic resonant modes of the vibrating wire.

In order to allow the transmitter to pump more energy into the fundamental resonance mode of more heavily damped transducers, the narrow chirp mode is provided. In this mode, the user may program both the upper and lower limits of the swept square wave excitation. When this mode is required, it is expected that the user will set the frequency limits to cover only the narrow portion of the total range of the transducer that is anticipated during operation. With these settings, the system will measure signals in the normal operating range with high accuracy and signals outside the range with greater scatter in the readings.

The double chirp mode provides the advantages of narrow chirp mode while maintaining the full range characteristics of the single chirp mode. In the double chirp mode, the system first generates a single wide frequency chirp as described above. Then, after the system measures the ringing signal, it generates a second very narrow band chirp centered around the measured frequency.

Both the narrow band chirp and the double chirp modes are provided to pump a greater amount of energy into the fundamental resonance. For most transducers this is unnecessary and often can cause nonlinearity problems caused by heating from too much energy being pumped into the transducer. It is recommended that any usage of the higher energy chirping modes for normal measurements be considered carefully, and only after testing for nonlinear effects by comparing period measurements in normal and high energy modes. Any of the excitation modes can be selected on a channel-by-channel basis.

2-3.5 Voltage Measurement System

The 2380 MCU analog measurement capability is based on a precision DC voltmeter circuit. Resistances and currents are computed from voltage measurements. The voltmeter consists of an analog-to-digital converter, precision front-end instrumentation amplifiers, gain switching circuitry, and high stability voltage reference sources. The instrumentation amplifiers operate from dual 15-volt power supplies allowing for high common mode voltage levels (about 13 volts) while maintaining a very high input impedance. To measure voltages greater than 13 volts, a dual 1MΩ resistive voltage divider can be switched into the input circuit under software control. This allows the system to measure input voltages with a high common mode potential or a differential value limited only by the input protection circuits at the input terminals.

Four gain ranges are provided by four separate instrumentation amplifiers. Full scale differential input ranges are approximately 0.13V, 1.3V, 13V, and 130V. On the 130V scale, each of the two input voltages is limited to about ±55 volts by the input protection circuits; on the other scales, each input voltage must be limited to less than 13V to prevent the instrumentation amplifier from saturating.

The output from the instrumentation amplifiers is switched into the A/D converter input. The A/D converter is a delta-sigma charge-balance converter with 20 bits of precision. The converter has an on-board microprocessor which controls internal calibration, digital filters, and a serial communication interface. The converter operates from a 32.768 KHz crystal which results in digital filter zeros at 50 Hz and 60 Hz and multiples thereof providing excellent rejection of possible power line pickup components in measurement results. Once triggered, a full precision conversion result is available in 1/20 of a second.

Absolute measurement accuracy is maintained by periodically calibrating the voltmeter system against high stability, low noise, internal voltage references injected into the front-end measurement bus. The 10-volt reference source has a specified thermal coefficient of less than one part-per-million per degree C; the long-term stability is better than six parts-per-million per 1000 hours of operation.

Voltage measurements are made by comparing A/D converter output counts (after correction for zero input values) for an unknown voltage with the recorded counts for known input reference voltages.

2-3.6 Geobus Control, Excitation, and Modules

The Geobus interface and modules provide all of the capability for interfacing between field devices and measurement resources contained on MCU base unit and on Geobus modules. The following sections discuss the Geobus interface, channel types, and implemented Geobus modules.

2-3.6.1 Geobus Structure

The Geobus structure provides two forms of functionality for establishing connections from field devices to MCU resources. First, the bus allows for multiplexing of the base unit analog measurement and excitation resources onto various field devices. And second, the bus provides a digital communication link allowing the addition of external measurement resources contained on Geobus modules.

Communication between the 2380 base unit and the Geobus modules is provided by a high-speed, multidrop, asynchronous serial channel. The protocol is a master-slave implementation with a modified CRC-16 message verification. Standard commands are implemented which allow the base unit processor to identify Geobus module types and their capabilities. Additional commands are implemented which allow the base unit to control additional measurement resources provided by Geobus modules. Request lines are provided for resetting selected modules and for allowing modules to initiate service procedures. The table below summarizes the Geobus signal line definitions.

Geobus II signal line definitions.

Category	*Signal Name*	*Signal Description*	*Bus Lines*
Power	9V-15V battery supply and ground	Non-volatile supply for modules which must mainting operation when MCU sleeps	2
	3.3V digital and ground	Module digital supply—powers down when MCU sleeps	2
	±15V analog and analogpower return	High voltage front-end analog supplies for FET switch multiplexers, etc.	3
Analog	Measurement bus	2-wire differential measurement bus. Guarded by analog reference ground	2
	Excitation bus	2-wire differential excitation bus. Shielded by analog reference ground	2
	Analog guard	Reference guard for analog measurement bus	1
Communication	Module command	Serial command line from base unit	1
	Module response	Serial response line from modules	1
	Request bus	Request for service from modules or request from base unit to reset modules	8
	Request bus control	Base unit control signals to enable module resets or module service requests	2

Module address	Slot dependent module address definition	3
Wake-up request	Asserting this signal allows a module to wake up a sleeping base unit	1

The device interfaces provided by Geobus modules are referred to as channels. Geobus modules typically contain from one to ten interface channels depending on available board space and the number of interface terminals required for each channel. The Geobus channels on an MCU are uniquely identified by two numbers which specify the module address and the channel on the module. Together these numbers form the Geobus Address. The module address is determined by the physical location of the module on the Geobus.

At the base unit, the frequency measurement and voltage measurement systems are connected to the measurement bus. In addition, the voltage excitation, current excitation, and frequency excitation resources are connected to the excitation bus. Multiplexer channels provide the bi-directional, differential connections from the excitation bus to field devices and from field devices to the measurement bus.

2-3.6.2 Excitation Sources and Analog Bus Control

Typical sensor measurement processes involve the application of some form of excitation while performing frequency or voltage measurements at one or more locations in the sensor-excitation circuitry. Under firmware control, the 2380 analog measurement system can activate solid state relays to apply excitation and perform measurements required for all commonly encountered sensor types. In addition, the measurement routines include enough user-configurable versatility to measure many kinds of non-standard sensor types.

This section discusses the hardware resources available for sensor excitation and measurement. Details regarding the usage of the excitation and measurement system for commonly encountered sensor types are discussed in a later section (see the "Interface to Devices" section at the end of this manual).

The two-wire excitation bus is used to apply an excitation voltage or current into an external device connected to the high side terminal on one analog signal channel. Normally, the excitation current returns through the low side terminal on the same analog signal channel. The 2380 base unit allows the firmware to select the high side excitation to be either a voltage source, a current source, or a frequency source. The voltage source can be either +24V, +15V, +10V, or +5V all measured with respect to the MCU ground. The current source has a nominal value of 100µA and has a compliance limit of about 13V relative to MCU ground. The frequency source is a ±5V square wave with respect to MCU ground. The low side current return terminal can be optionally switched directly to ground or ground through high-accuracy reference resistors of either 10 KΩ or 20.0 Ω.

The applied excitation flows through solid state switches having an on-state resistance of about 25 Ω. The excitation current normally returns to MCU ground through the low side channel switches also having about 25 Ω resistance.

Simultaneously with the application of an excitation, the measurement system can be configured to measure the voltage or frequency on a separate analog signal channel or across various points on the excitation circuit. The voltage measurement system can measure the voltage drop across a separate channel from the excitation, across the same channel, or across the selected excitation return reference resistor. The voltage measurement system can also measure the drop across the internal temperature sensor, the MCU battery voltage, the MCU charging voltage, and the backup lithium cell voltage. On a periodic basis, the voltage measurement system also measures the 10V, 1V, and 0.1V reference sources along with a zero voltage short for offset corrections.

2-3.6.3 Geobus Channel Types

Geobus interface channels of many different types are available. The multiplexer channel types consisting of Analog Signal channels and Resistance Ratio channels, provide the interconnections between base unit measurement and excitation resources and physical field devices. Other channel types perform both the device interface and measurement functions for measurement types which cannot be multiplexed onto base unit resources. Among these channel types are pulse counters, excitation power supplies, analog output channels, and relay output channels.

Geobus module channel types.

Type	*Channel Definition*	*Terminals*	*Description*
AS	Analog Signal	H, L	General purpose analog multiplexer channel
RR	Resistance Ratio	I+, A, B, I–	Resistance ration analog multiplexer channel
PS	Pulse/Status Input	A, B	Contact closure or voltage input pulse counting and status
EP	Excitation Power	+, –	Low current switched output power
PO	Power Output	A, B	Switched power output or contact closure
XP	External Power	A, B	Input power for PO channels
AR	Form A Relay Output	A, B	Contact closure controlled output
AN	Analog Output Voltage	H, C	Non-isolated analog voltage output channel
EX	Excitation Pwr Supply Output	+, C, –	Isolated switched dual power supply. Terminals may be duplicated for fan-out requirements. 100mA or less.

The most versatile analog multiplexing channel type is the Analog Signal Channel. An Analog Signal Channel has two interface terminals labeled H for high and L for low. The two terminals can be connected as a pair to either the analog measurement bus or to the analog excitation bus, or to both buses at the same time. Positive voltage measurements indicate that the H terminal is at a higher voltage than the L terminal. Analog Signal Channels can be used for voltage, current, and resistance measurements either singly or in combination with other Analog Signal Channels. Analog Signal Channels are also used to measure vibrating wire transducers, frequency output sensors, bridges, potentiometers, and many other sensor types.

The Resistance Ratio Channel is another analog multiplexing channel type. A Resistance Ratio Channel has four interface terminals labeled I+, A, B, and I- respectively. In operation, a Resistance Ratio Channel applies an excitation to the I+ terminal and supplies an excitation return path through the I- terminal. Internal switches can be separately actuated to connect the measurement bus to the I+ and A terminals, or the A and B terminals, or the B and I- terminals. A Resistance Ratio Channel is normally used to measure a 4-wire Carlson Meter type of strain gage. Resistance Ratio Channels can also be used to measure 3-wire resistance bridges, and 3-terminal or 4-terminal resistance sensors such as RTDs or thermistors.

Other channel types are available which do not use the base unit analog measurement system. These channel types typically require full-time measurement hardware which cannot be multiplexed.

One such non-multiplexing type is the Pulse/Status Input Channel. A Pulse/Status channel has two interface terminals labeled A and B. Each Pulse/Status channel may be configured to detect contact closures or voltage level inputs at the terminals. Associated with each channel is a current status indication as well as a counter indicating the total number of transitions at the A and B terminals. Some Pulse/Status channels can be configured to remain active when the base unit MCU enters the sleep state. In this state the pulse counters remain active and the module can be configured to re-awaken the base MCU if a status transition occurs.

Other non-multiplexing channel types are Excitation Output Channels, Power Output Channels, Relay Output Channels, and Analog Output Channels.

2-3.6.4 Module Types

The various types of modules offered by Geomation contain various combinations of analog multiplexing channel types, other channel types, as well as other types of input and output expansion capabilities. The tables below summarize the available module types and their features.

Geobus module types.

Module	*Description*
ASM	Analog Signal Multiplexer
RRM	Resistance Ratio Multiplexer
MIO	Multifunction I/O
ARO	Form A Relay Output
PSI	Pulse / Status Input
ANO	Analog Output
EXO	Excitation Output
EII	Environmental Instrument Interface

Geobus module feature summary.

Module	*Ch1*	*Ch2*	*Ch3*	*Ch4*	*Ch5*	*Ch6*	*Ch7*	*Ch8*	*Ch9*	*Ch10*	*Other*
ASM	AS	AS	AS	AS	AS	AS	AS	AS	AS	AS	
RRM	RR	RR	RR	RR	RR						

MIO	AS	AS	AS	PS	PS	PS	EP	PO	PO	XP	
ARO	AR	AR	AR	AR	AR	AR	AR	AR	AR	AR	
PSI	PS	PS	PS	PS	PS	PS	PS	PS	PS	PS	
ANO	AN	AN	AN	AN	AN	AN	AN	AN	AN	AN	
EXO	EX	EX	EX								
EII	AS	AS	PS	PS	PS	AR	AR				SDI-12 Interface

2-4. MODEL DESIGNATIONS AND PACKAGING

2-4.1 MCU Assemblies

Model 2380/20 Measurement and Control Unit Assembly. Shown with two example Geobus modules installed.

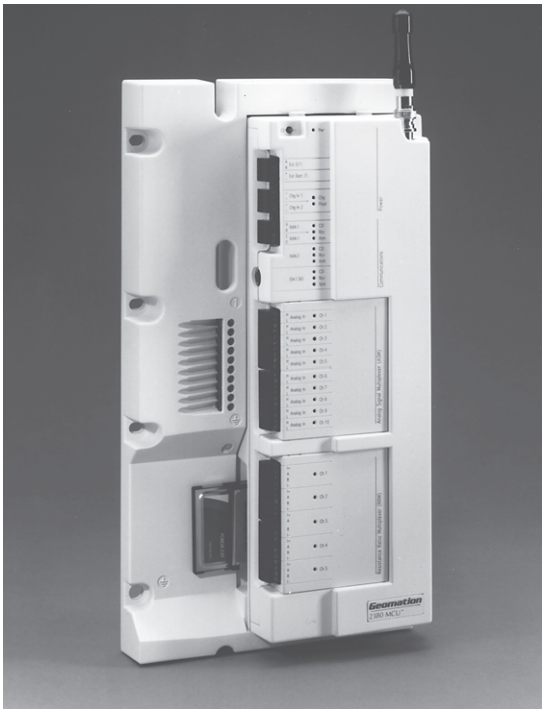

Geomation model 2380/80 Measurement and Control Unit assembly shown with eight example Geobus modules.

2-4.2 Mounting Panels

One position mounting panel model 2380-1MP.

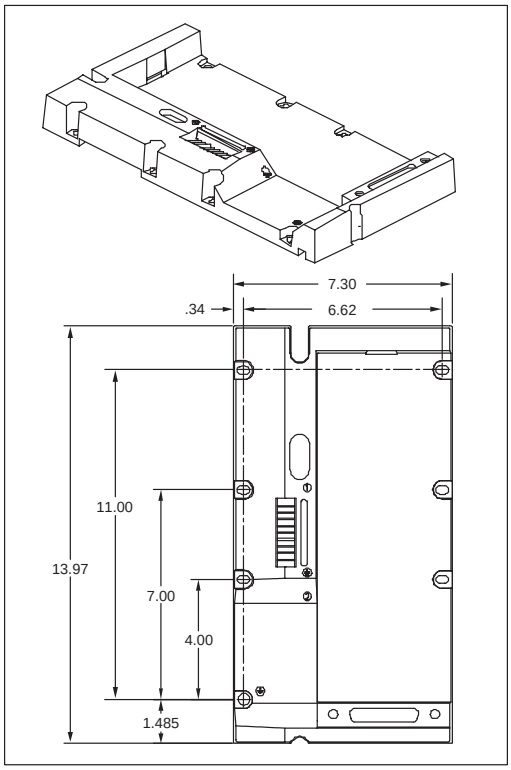

Three position mounting panel model 2380-3MP.

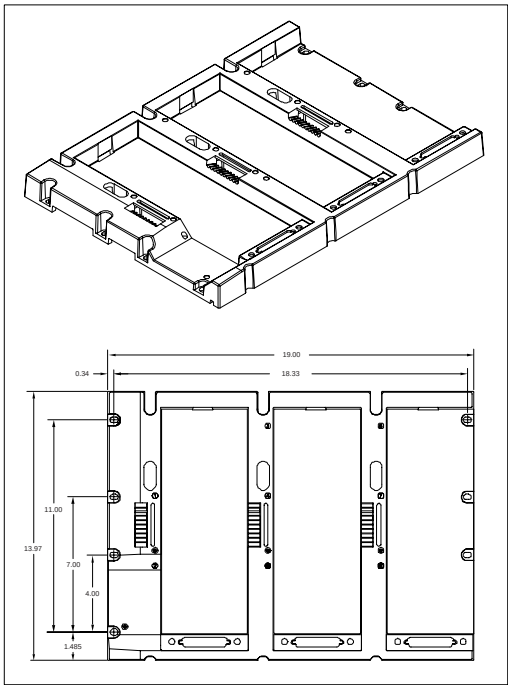

NOTES:

3. 2380 FIRMWARE

3-1. FIRMWARE ORGANIZATION

Firmware for the 2380 MCU is organized into two distinct components. Upon bootup, the 2380 processor begins execution of a resident monitor program. Under user selection, the system will then either jump to the resident MCU Initialization process or execute monitor operations in response to commands received over the EIA1 serial port. Bootup initialization code and the monitor program are resident in a jumper-protected boot block area of the flash EPROM memory chip. These firmware components are factory installed using an external module which contains MCU initialization code. Normally, the boot block code will not require changes over the life of the product.

The resident monitor program contains a routine for downloading all of the MCU Application code into other sections of the flash memory chip. MCUs are shipped from Geomation with the latest version of the application code installed. Older units may be upgraded in the field by connecting a computer to the EIA1 MCU port and running a Geomation program which can interact with the 2380 Monitor program. One must first obtain from Geomation a computer file copy of the Application firmware. Both the download program and the Application firmware are available for download from www.geomation.com.

MCU setup parameters are stored in flash memory. The setup data area contains software switches for runtime features (such as radio transmit power level), and calibration factors for analog measurements. Copies of the setup parameters are maintained in RAM during operation of the application code. At application startup time, the runtime parameter block is initially loaded with system default values including nominal values of calibration factors. The parameter block is then reloaded with values that have been set at the factory (initial calibration values, etc.). Finally, the parameter block is again reloaded with values that the user may have modified and previously saved. The runtime version of MCU setup parameters is thus a combination of nominal values, factory initialized values, and user initialized values.

Major sections of the 2380 MCU firmware and major data structures.

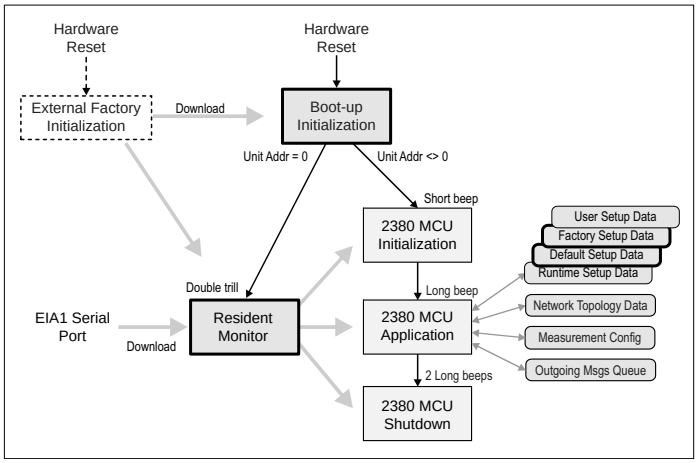

The factory setup values are stored in a protected area of flash memory and cannot be modified by the user. During normal operation, the user may alter the RAM copy of the setup parameters, and subsequently save a copy in a user parameter area of flash memory to be applied to later MCU restarts.

The figure above shows the relationships of the major firmware sections. The thick gray arrows indicate the availability of firmware downloading paths. Boxes with heavy borders are protected from user modification. The dashed box is installed as an option board at the factory for initiation of the code in the protected boxes. Major data structures are also indicated.

3-2. STARTUP/SHUTDOWN

The MCU Application code consists of three distinct sections: (1) an MCU initialization section, (2) the normal run-time data acquisition and control section, and (3) a unit shutdown section. If the unit address setting is non-zero, the bootup module transfers control to the application initialization code. The initialization code first emits a short beep sound and then proceeds with MCU data structure initialization. The initialization process will take from 5 to 15 seconds, during which Geobus modules are scanned, data tables are checked for integrity, any previously untransmitted GEONET messages are restored for later transmission. If the unit firmware has been upgraded to a new version number or the MCU unit address has changed, then all of the topology and measurement configuration data will be cleared and new default measurement components will be created. At the end of the initialization process, the unit issues a single long beep tone to indicate startup of the normal MCU application code.

Under normal operation, the MCU may detect any of a number of events that will set off a shutdown process. At the beginning of the shutdown process, two long audible tones are generated indicating termination of communications and normal data acquisition and control. Then, the MCU prepares the communication data structures for later restoration during startup. Following the scan of the data structures, the unit shuts down its main power supplies. If the shutdown process is disrupted, or if the RAM memory is corrupted following shutdown, then at startup time the communication package will be re-initialized by discarding any outstanding untransmitted messages. Since the shutdown process takes about 5 seconds, the sudden removal of the main battery will probably result in the loss of outstanding communication messages. Topology and measurement configuration data is saved in tables that are not affected by the shutdown and restart processes.

3-3. MEASUREMENT AND CONTROL SUB-SYSTEMS

The 2380 measurement and control application firmware is organized into a set of subsystems which operate with apparent simultaneity under a pre-emptive, real-time, multitasking executive. The major components are: (1) a GCP network communications package, (2) an executive command interpreter, (3) an event scheduler, (4) a measurement evaluation and sequencing package, and (5) a PC Card handling system.

3-3.1 Network Communications

Communication between nodes in a System 2300 Network utilizes the GEONET Communications Protocol (GCP). In the 2380 MCU the protocol is implemented as a collection of firmware tasks that operate as a package under the real-time multi-tasking system.

Messages originating from the application tasks are stored in dynamically allocated memory. The allocated memory is given over to the communications package which first expands any fork destination names into duplicate message copies, and then queues the messages into first-in-first-out (FIFO) queues at the transport level for each destination unit and each priority level. The transport level proceeds to attempt to transmit the messages on a round-robin and communication-time available basis. After the MCU receives an acknowledgement of successful delivery for a given message, the message is removed from the queues and the allocated memory is freed.

If the dynamically allocated memory block fills up with queued messages, then a message culling routine is automatically executed. The culling routine counts the total number of messages queued for all destinations and all priorities. Then the routine selectively deletes 20% of all messages to free up space for new messages. The culling routine starts deleting the oldest messages of the lowest priority. The process continues to higher priority levels until either the freed message count is achieved or until all remaining messages are of the highest priority. If all the messages in the queues are of the highest priority, then no messages are deleted and the newest message is discarded. Clearly, the high priority category should be used sparingly. This culling algorithm allows the user to selectively decide whether the oldest or newest messages should be saved when the memory fills up with messages.

Messages received by the MCU are processed by the communication package transport layer. Messages accepted by the transport layer generate acknowledgement messages that allow the transmitting unit to discard its copy of the message. Accepted messages are then delivered either to the MCU Executive task for further command parsing, or to the MCU Memory Card Task where, if a memory card option is installed and there is space on the card, the messages are transcribed sequentially onto files on the card.

3-3.1.1 Communication Benchmarks

Since GCP is a layered product with quite complex state transition diagrams that are inherently statistical in nature, a complete deterministic set of network performance parameters cannot be expressed. However, as a guide for estimating network performance for future installations, Geomation provides experimentally measured performance figures for typical network configurations and traffic situations.

Communication performance can be characterized by two parameters that are the answers to often-asked communication questions: First, how many measurement results per minute can propagate through the network? And second, when I issue a command to a unit how long does it take for the command to be received by a remote unit, acted upon, and a response returned to the command unit? As performance parameters, these network figures of merit are referred to as network throughput and command response time, respectively. However, both throughput and response time

are complex functions of network topology and network traffic conditions. Also, as for all peer-to-peer communication networks, the performance is statistical in the sense that the time for delivery of individual messages cannot be exactly determined, although the overall average performance can be specified with assurance. For these reasons, network performance is characterized by the throughput and response time measurements for certain well-defined benchmark tests that are intended to be representative of typical network configurations and peak traffic situations.

Since the more typical network traffic situation is for multiple remote MCUs to report the results of measurements to a GWS or for an operator at a GWS to issue a command to a remote MCU, the benchmark tests are designed to measure network throughput and response time from the point of view of the GWS. The results can also be extrapolated to other interunit communications or to communications to other GWSs.

Prototype networks of twenty remote 2380 MCUs are constructed along with one or two 2380 units acting as repeaters and one GWS running GEONET Suite. Throughput tests are performed by forcing one or more remote MCUs to queue measurement results at a faster rate than they can be conveyed to the GWS. The reported throughput figures are the total number of measurement result messages received per minute at the GWS. Response time tests involve issuing commands from the GWS to one or more remote MCUs to evaluate certain channel configurations and noting the time required to receive the responses. Reported response time figures are the averages of five individual tests. Response time tests are performed both on networks that are otherwise quiet and on networks that have lower priority messages streaming in from one or more MCUs. Response time figures are reported both for single command-response sequences and for receiving all responses after queuing ten commands to ten different MCUs.

Three network configurations are constructed for the benchmark tests. In the first and most typical case, the twenty MCUs contend for one communication medium, usually one radio frequency or one multi-drop wireline medium, to get messages to a repeater unit (often referred to as the Gateway) which then forwards the messages to the GWS. In a second case, the effect of adding a second repeater is considered. The second repeater communicates over a dedicated medium, usually wireline or EIA connection, to the first repeater. In the third case, a second repeater is again added, but now the communication between the repeaters uses the same shared medium, usually radio, as that used between the first repeater and the remote MCUs.

3-3.1.2 Test Results

The results of the benchmark tests are shown in the figure on the following page. The table shows the throughput along with response times for a single command/response sequence and for a block of ten commands and ten responses. The upper number is the total number of messages received at the GWS per minute. The lower two numbers are time intervals (minutes:seconds) between issuing one command and receiving a response to it, and issuing ten commands to ten different units and receiving all ten responses. Reported response times are average numbers measured in the face of traffic of lower priority messages flowing in from various numbers of MCUs. The first column shows the results for the more typical network configuration.

With only one unit sending messages, the throughput is 30 messages per minute received at the GWS. The theoretical maximum possible message throughput assuming a 1200 bps medium, 8 bits/character asychronous, 30 characters/message, 20 characters/acknowledgment, and no communication dead time for sharing, acquisition, or port turn-around, would be 144 messages/minute. A limitation of 30 messages per minute per unit is built into the GCP protocol to allow sharing of the communication media in multiple access network topologies.

Network throughput and command response time measurements for typical network configurations and traffic situations.

Number of MCUs streaming messages to GWS: Throughput / Response Time		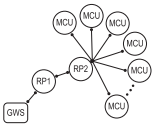	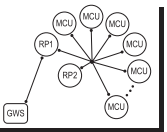
0	0 msgs/minute 0:03 / 0:20	0 0:04 / 0:24	0 0:09 / 1:46
1	30 0:04 / 0:23	30 0:05 / 0:23	5
5	18 0:23 / 1:30	14 0:35 / 2:19	2.3 15:00 / 45:00
20	14 2:48 / 6:44	14 3:16 / 7:45	1.6

As the number of units sending messages increases, the total throughput displays a slow rolloff. This behavior is expected, since as more units contend to get messages through to the GWS, more units begin to retry transmissions as acknowledgements are received more slowly, and units begin to reduce their own transmission attempts in order to share the medium more effectively. The numbers reported in the table reflect the total number of messages received at the GWS over a period of about one hour. An important concern is how fairly the transmitting units share the medium among each other. For each throughput test, the sharing effectiveness was checked by verifying that the total throughput included approximately equal numbers of messages from each transmitting MCU. In all cases, the greatest message count exceeded the least message count by no more than 50%, with 25% being a typical number.

Notice that as the number of units transmitting messages increases, the response time to operator initiated commands also increases. This behavior is expected as the response time involves the individual throughput with respect to a particular MCU which decreases somewhat faster than inversely to total number of transmitting units. In addition, although the MCUs treat command responses with higher priority than routinely logged data, about three lower priority messages may be in the process of transmission before the higher priority response can be transmitted. Notice that the response time for 10 queued commands is considerably less than 10 times the response for one queued command, especially for the more heavily loaded networks.

This behavior might be expected since, for heavily loaded networks, the response to 10 commands is dominated by the amount of time required for individual MCUs to report their responses. This in turn is some small multiple of the individual command response time.

In the middle column of the table, the effect of adding a second repeater unit carrying the composite traffic from all the MCUs is considered. Notice that both the throughput and response time are nearly identical to the single repeater network topology case. This demonstration of the efficiency of the repeater operation is encouraging for the prospect of developing complex network topologies with multiple levels of message repeating. However, one must consider carefully the nature of traffic on the physical links as demonstrated by the numbers for the network in the third column. The network topology in the third column of the table again has an added second repeater. This time, however, the physical medium linking the two repeaters is the same shared medium that also connects the first repeater to all of the remote MCUs. This potential topology might easily be encountered in radio networks. Although GCP can adapt to the topology, the throughput and response time numbers are considerably degraded. The problem here is that the throughput on the link between the repeaters, which is expected to carry all of the composite traffic from the remote MCUs, is greatly reduced by the GCP feature of sharing the medium equally with all of the MCU-to-repeater links. Although GCP adapts to the topology, potential problems such as this should be avoided when maximum throughput or minimum response time is required. The reduced performance in such network topologies can be mitigated by offsetting the evaluation logging times to eliminate contention. This can be accomplished by either staggering the evaluation starting times or by controlling the logging start times.

3-3.2 Executive Commands

The Executive Command Processor, or EXEC, receives and interprets all messages that are accepted over the GCP communications network. The messages that are processed are of many types that allow the unit to build or modify configurations or topology on-the-fly as well as report and maintain other status information such as the date and time and the reset counters. In addition, the EXEC can parse and execute commands that are transmitted in textual form. The following tables categorize the commands according to common usage and describe the functionality of each command.

In general, the executive commands are assumed to be issued by a human operator and therefore textual responses should be generated on a timely basis with sufficient diagnostic detail and returned to the unit issuing the command. Since these commands may also be generated automatically by other MCUs (or the same MCU), responses are differentiated from commands by an initial colon (:) character. Many executive commands which operate on specified GNAs will accept a wildcarded definition. In such cases, any of the card, channel, or suffix fields may be set to an asterisk (*) in specifying a group of components.

A more complete description of executive commands can be found in the Appendices of the GEONET Suite Operation & Reference Manual, available for download from our website at www.geomation.com.

Executive Commands—MCU Setup

Communication Parameters:

SET CTS DELAY <RAN1/RAN2/EIA1/EIA2> msec	Set the Clear-to-send delay time (the time from key-up to data transmission) for the designated port to the given value (the actual value used is rounded to the nearest 1/64 second).
QUERY CTS DELAY	Report the current values of the Clear-to-send delay time for all ports.
SET RADIO 2W	Setup the radio to transmit at 2W (regulated and adjustable).
SET RADIO 4W	Setup the radio to transmit at 4W (actual output may be greater than 4W depending on the battery state).
QUERY RADIO	Report whether the unit has an installed radio and what the current transmit power level setting is.
SET LOG DEST unit	Setup the MCU default logging destination for unsolicited diagnostic messages.
QUERY LOG DEST	Report the current setting of the MCU default logging destination.

MCU Setup Save/Restore:

QUERY SERIAL NO	Report the MCU serial number.
SAVE FACTORY SETUP serial_no	[Factory only] Save current MCU setup data to nonvolatile factory data area and set unit serial number.
SAVE USER SETUP	Save current MCU setup data to nonvolatile user data area.
RESTORE USER SETUP	Retrieve and overwrite current MCU setup data with previously saved user setup data.
RESTORE FACTORY SETUP	Retrieve and overwrite current MCU setup data with previously saved factory setup data.

Analog Calibration:

CALIBRATE value	Calibrate the system used to measure the selected evaluator channel. VM, VWP, etc.
QUERY ANA CAL	Report voltmeter calibration constants and low-level analog to digital converter counts.
SET ANA CAL 10V voltage	Set the voltmeter calibration constant for the 10V scale.
SET ANA CAL 1V voltage	Set the voltmeter calibration constant for the 1V scale.
SET ANA CAL 0.1V voltage	Set the voltmeter calibration constant for the 0.1V scale.
SET ANA CAL 10 KOHM resistance	Set the reference resistance constant for the 10KΩ scale.
SET ANA CAL 20 OHM resistance	Set the reference resistance constant for the 20Ω scale.
SET ANA CAL VW frequency	Set the frequency meter calibration constant.

Executive Commands—MCU Installation and Diagnostics

?, HELP	Generate a list of implemented executive commands.
ECHO string	Repeat the string back to the unit issuing the command.
QUERY GEOBUS	Generate a list of modules connected to the Geobus including the on-board frequency measurement system. Report hardware and firmware version numbers for each module.
SET CLOCK	Set the MCU clock to the date and time of the executive command message.
SET DATE DD-MMM-YY	Set the MCU date to the given date. The format must be exactly as shown. For example, 13-Sep-95.
SET TIME HH:MM:SS	Set the MCU time to the given time. The format must be exactly as shown. For example, 23:15:05.
REBOOT	Queue a request to reboot the MCU within 15 seconds. All outstanding GCP messages will be deleted. All configuration data will be saved.
SLEEP minutes	Queue a request to put the MCU in the sleep state for the requested duration. All GCP messages and configuration data are retained.
UPLOAD	Upload a copy of the configuration for the given Component. Wild card asterisks (*) may be used for card, channel, or suffix.
DELETE	Delete the MCU copy of the given configuration Component. Wild card asterisks (*) may be used for card, channel, or suffix.
CLEAR RESET	Clear the MCU reset counters.
QUERY SDI	Generate a list of devices connected to the SDI-12 interface.
ZAP	Queue a request to completely re-initialize an MCU. Use with caution. The behavior is as if a new version of MCU firmware has been installed.

Executive Commands—Network Communications

FLUSH GCP	Delete any outstanding GCP messages.
FORCE GCP	Force immediate retries on all GCP connections. Used internally whenever new communication links are established.
FORK ADD fork tine	Add to an existing topology fork or create a new fork with the given name and the given destination.
FORK DELETE fork [tine]	Delete all entries defining a fork of the given name or delete a particular destination name from the given fork.
ROUTE unit physad port	Add or modify an existing topology route definition to the given unit using the specified port and physical address.
QUERY TOPO	Report the current topology table route, alias, and fork definitions.

Executive Commands—Field Device Installation and Evaluation Testing

FORCE SUB	For the specified GNA or PIC, force immediate evaluation of the Component and all dependent Components. Log all evaluations and send results to the unit issuing the force command. GNA may be wildcarded.
FORCE	For the specified GNA or PIC, force immediate evaluation of the *ultimate root* Component and all dependent Components. Log all evaluations and send results to the unit issuing the force command. GNA may be wildcarded.
TRIGGER SUB	For the specified GNA or PIC, trigger immediate evaluation of the Component and all dependent Components. Log results according to the configuration-specified frequencies and destinations. GNA may be wildcarded.
TRIGGER	For the specified GNA or PIC, trigger immediate evaluation of the *ultimate root* Component and all dependent Components. Log results according to the configuration-specified frequencies and destinations. GNA may be wildcarded.
RELOG	For the specified GNA or PIC, re-log the results of the last evaluation to the unit issuing the relog command. GNA may be wildcarded.
SET VALUE value	For the specified GNA or PIC, set the current value to the given floating point value. If the GNA is a LSTN Component, then trigger evaluation of the LSTN Component and its dependents. If the specified GNA is not found, create a VALU Component with the given name. GNA may be wildcarded.
QUERY	For the specified GNA or PIC, report current intermediate result values. Data reported depends on the evaluator type.
ALARM ACK	Acknowledge the alarm on the specified GNA or PIC. Update the units contained in the Component destination acknowledgement list with the new alarm Component status. GNA may be wildcarded.
SDI [sdi_command]	Issue the embedded SDI-12 command using the MCU SDI-12 interface hardware. If an SDI-12 response is received within the SDI-12-specified time limit, then report the response to the unit issuing the SDI executive command.

3-3.3 PC Card System

The PC Card system has control of the detection of inserted and removed PCMCIA cards and the activation of proper handler software for dealing with the cards. Recognition of card types is limited to cards offered by Geomation.

WARNING:

PC Cards and PCMCIA modem modules are not hot-swappable. The MCU must be powered down before installing or removing these options.

3-3.3.1 Memory Cards

An inserted flash disk memory card activates the memory card handler. In operation, the memory card handler is treated as a communication port using the GWS topology screens. All messages received by the MCU that are to be routed out through the memory card port are received at transport level and acknowledged by the MCU. The received messages are then given over to the memory card handler which writes the messages sequentially to the memory card. Any MCU may route messages to any memory card in the network by simply logging results to the logical name of a unit defined in the topology as connected via a memory card port.

The topology table for the recipient MCU has entries defining both the MCU name (messages delivered to the MCU executive task) and the units which are attached by the memory card port (messages delivered to the memory card handler). Messages received by the handler are sequentially appended to files on the card.

If no card is inserted or if the currently inserted card is full, then the messages are queued into the MCU's dynamically allocated main memory space. If the main memory space fills with more than 1000 messages, then messages are discarded beginning with the oldest messages of lowest priority.

When the user wishes to remove a card, the MCU should first be powered down. The shutdown processes actuated by turning off the main power switch cause any open memory card files to be updated on the disk card. Also the shutdown process saves any outstanding GCP messages. After the unit powers itself down, the card can be removed and replaced with a new card.

Recorded cards can be read by GEONET Suite software. Data retrieved from the card is handled as if it were received over the communication network. Outgoing messages from the GWS can also be written to memory card files. When the memory card is re-installed in the MCU, messages will be read from the file and forwarded to the GCP communication package.

3-3.3.2 Modem Cards

If a telephone network modem is detected, then the modem handler software is activated.

3-3.3.3 DIO Cards

If a DIO card is detected, the MCU uses the channels as digital inputs and outputs.

3-3.3.4 SIO2 Cards

If an SIO2 card is detected, the MCU uses the serial port on the card (the first port if a dual card) as SIO2.

4. POWER MANAGEMENT

4-1. POWER CONSUMPTION

MCUs in the 2380 series are often installed at locations where power is limited. Alternate power sources such as solar photovoltaic, thermoelectric, and non-rechargeable batteries are usually expensive in terms of physical size and installation difficulty as well as initial cost. For these applications, a detailed examination of the total energy budget for the installed MCU with its associated field devices provides the necessary insight to select and size an alternate energy system, as well as guidance in the selection of sensor types, MCU operating modes, measurement scan rates, and logging rates.

The table below shows the power consumption of the 2380 base unit in various operating modes as well as that for optional subsystems. In typical installations the single largest contribution to total energy consumption results from the continuous quiescent load in the 2380 idle state. The base unit consumes about 20 mA from the nominal 12V power source with some small increase at temperature extremes. To this should be added the continuous power required by any expansion modules or radio receiver as shown in the table. During measurement cycles, the 2380 may activate other power consuming devices (excitation power supplies, radio transmitter, relay or analog outputs, etc.). Even though the active mode current draw may be quite large, the integrated total energy consumption is often low compared to that of the MCU in idle mode. The user should be aware, however, of the relative magnitude of sensor excitation power and should use care in configuring sensor warmup times and sampling rates to conserve energy.

Power Consumption of the 2380 MCU and optional equipment (Load on 12V system battery).

2380 Base Unit:	Active Mode	30 mA
	Idle Mode	20 mA
	Sleep Mode	0.3 mA
	Backup Mode	3 µA typ (Li Cell)
Radio Option:	Standby Mode	13 mA
	Receive Mode	15 mA
	Transmit Mode (2W transmit setting)	400 mA
	Transmit Mode (4W transmit setting)	1200 mA
ASM Option:	Standby Mode	1 mA
	Active Mode	5 mA
RRM Option:	Standby Mode	1 mA
	Active Mode	5 mA

Because the MCU idle mode state is often the biggest factor in energy consumption, care has been taken in the electronic design to minimize its magnitude. Furthermore, hardware and software features have been incorporated to allow the MCU to shut down almost all of its systems and optional subsystems and enter a sleeping state. In the sleep state, the only remaining active systems are the alarm clock, static RAM backup, and the battery monitoring circuitry. Operation of the sleep state is a user

programmable feature. Sleep interval requests can be programmed through utilization of the SLP Component. Such sleep intervals can be triggered by time or under dependency as any other Component. In addition, a so-called miser mode can be enabled, allowing the MCU to enter the sleep state whenever there are no Component scheduled to be triggered within the next two minutes and there are no messages queued for transmission. The condition of queued messages can be overridden if no messages have gotten through within a programmable time interval. Before the MCU enters the sleep state, it sets the alarm clock circuit to wake up the MCU about 15 seconds prior to the next scheduled evaluation. The energy savings in the sleep state is very large. The penalty is that the MCU is essentially off-line for the duration of the sleep intervals and cannot be awakened by outside communication. Often, this is acceptable behavior and 2380 units can operate with modest solar panel requirements for a large portion of a day.

4-2. ENERGY BUDGET

Since the idle mode power consumption is often the largest contributor to the energy budget, and since most systems do not depart significantly from typical operation modes, the typical system installation can utilize the standard preconfigured power systems supplied by Geomation. For unusual excitation requirements, or other than typical operation, a detailed energy budget should be calculated.

The computation of the overall energy balance for the MCU system is strongly dependent on MCU operating modes. In the table below, an energy budget for a possible 2380 measurement system is shown. The example system is fabricated to demonstrate the possible factors in the energy budget, although it does represent figures attainable for low power solar charged installations. The example system definition is included in the table; here, some considerations for the energy budget figures are detailed. For each MCU operating state, current draw figures are extracted from the table on page 39. Daily energy consumption figures for each state are calculated from the current draw and the total daily hours of operation in the given state. (Here, energy figures are given in milliamp hours per day (mA-hr/d) since the battery potential can be assumed constant at 12 volts.)

2380 Energy budget example.

Low power solar charged battery system:

Unit is radio connected to a Network. Transmitter operates in 2W mode. Ten measurements are made and reported every six hours. The unit is programmed with a SLP Component so that it sleeps for five hours and 45 minutes every six hours (presuming that all measurements and communications will be completed in less than 15 minutes). In addition, during the midnight wakeup period, the unit status evaluations and clock synchronization take place. The measurements include 8 channels of 4–20 mA current loop measurements (two seconds warmup on each channel), and two resistance measurements using the internal current sources. The solar panel has a nominal 10W capacity. The system is located in Minneapolis, Minnesota.

State	*Current (mA)*	*Time (hr / day)*	*Energy (mA-hr / day)*
Sleeping	0.3	24 – 4 x 0.25 = 23	6.9
Idle	20	4 x (15min - 2min)	17.3
Radio Standby	13	4 x 15 min	13
Active	30	4 x 2 min	4

Current Loop Excitation	55	4 x 8 x 2 sec = .018hr	1
Radio Transmissions	400	(10x3 + 10) x 4 x .5sec	8.9

Total energy used daily	51.1
Battery self discharge rate	8
Total energy consumption rate	59.1
Total internal battery capacity	2300
Available daily solar energy (10W @17.5V) x 3 ESH/day	1715
Reserve capacity (batt cap/ consumption rate)	38.9 days
Safety margin (available charge / energy used)	29.0

The example system makes use of the sleep state to minimize energy consumption. The MCU is programmed to sleep for 5.75 hours every 6 hours. The unit will be active for no more than 15 minutes for the four times a day that the measurements are taken and results are transmitted. Near midnight, the unit will generate additional network traffic for unit status measurements and clock resynchronization. During the 15 minutes every six hours that the unit is awake, a set of 10 measurements is taken and the results are communicated over a radio communications network to a logging station. The first entry in the energy consumption budget estimates the power consumed during the sleep state. The sleeping interval is assumed to be the complement of the time that the unit will be in the active state.

The active state current draw includes the contributions from the MCU active state, the radio in receiver mode, and Geobus modules in their active states. The idle current draw of any other MCU options or Geobus modules should be included in this figure. Note that even though the total idle current is fairly small, the total energy consumption is dominated by the contribution from this state. This is often the case unless the external instrumentation requires even moderate current draws for long time periods.

The figures for the radio transmission state, here a two watt RF output, reflect the high current draw of the transmitter. The ability of the battery to deliver the transmission current while maintaining its terminal voltage often determines the battery size rather than the total energy capacity. Although the current draw is large, radio transmissions are normally, as in this example, sufficiently short and infrequent to represent a relatively small fraction of the total energy consumption. Typical figures are used here for the number and the duration of transmissions. The number of transmissions is estimated to be three times the number of logged messages to account for acknowledgements and retransmissions plus 10 transmissions for MCU status and link initialization. The average duration of a transmission is about 0.5 seconds.

The remaining contributions to the energy usage come from the sensor excitation power supplied by the MCU. In this example, as in typical cases, the current draw is moderately large compared to that of the idle state. Since the excitation is typically strobed on for only a few seconds at a time, the total energy consumption is fairly small. For those instrumentation systems that must be continuously powered or powered on for long time periods, the total energy consumption figure will often be dominated by this state. The energy figures assume a typical power conversion efficiency for the internal DC-DC converters used for voltage excitation. Note that

the power required for the two resistance measurements in this example is negligibly small as the measurement excitation current is both small and turned on for a very short time interval. The warm up and settling time numbers of one or two seconds are typical for current transmitters.

The final total daily energy consumption figure includes the MCU activity figures plus contributions from an assumed self-discharge rate of the battery (calculated from shelf life data).

The energy supply side of the budget involves the battery and the collected solar energy. The given battery capacity figure includes the manufacturer's figure adjusted upward by 20% because of the very low discharge rates, but reduced by the assumed available capacity of 80% to avoid deep discharge cycles. The reserve capacity is given by the ratio of the battery capacity to the energy consumption rate. For this example, the reserve capacity is 39 days. This should be compared with the reserve capacity for a fully active MCU which is not programmed to enter the deep sleep state. In that case, the reserve capacity is closer to three days for a unit with typically attached instrumentation.

For this solar powered example, the daily collected solar energy in the long-term average must equal the daily energy consumption where the averaging period is given by the reserve capacity. In general, to make up for extended periods of cloudy or unusual weather, it is recommended that the reserve capacity be greater than about 6 days for sites in the 0 to 30 degrees latitude range, 11 days for 30 to 50 degrees latitude, and 15 days for sites located in the 50 to 60 degrees latitude range.

The total available solar energy can be estimated from published data on solar insolation. The map on the next page shows contour lines of average solar insolation available for optimally oriented solar collectors during local wintertime in North America. Insolation maps for other parts of the world are available from online sources such as www.BPSolarex.com. The data is in units of equivalent sun hours per day (ESH). Since equivalent sun intensity is one kilowatt per square meter, the maps also show daily solar insolation in units of kilowatt-hours per square meter. For a given location, the maps indicate the average annual wintertime equivalent number of hours per day of standard solar intensity to be expected. Note that local climatic conditions, such as rainy seasons, may produce periods of lower insolation than the wintertime minimum.

The annual worst-case daily available solar charging power can be estimated from the above solar insolation figure, ESH, and the solar collector performance. Solar panels are usually rated under standard sun conditions (1 kW/m2). The peak panel current figure (or peak power divided by the voltage at peak power) multiplied by the ESH gives the daily available solar charging energy in units of Ampere-hours per day (A-hr/d). For the example system, the available solar power is calculated from the panel power ratings and the ESH figure for Minneapolis. The ratio of the daily available solar energy to the daily energy consumption gives a safety margin figure. A value of 1.5 or more for the safety margin is recommended to accommodate programming or operational modifications and abnormal weather conditions.

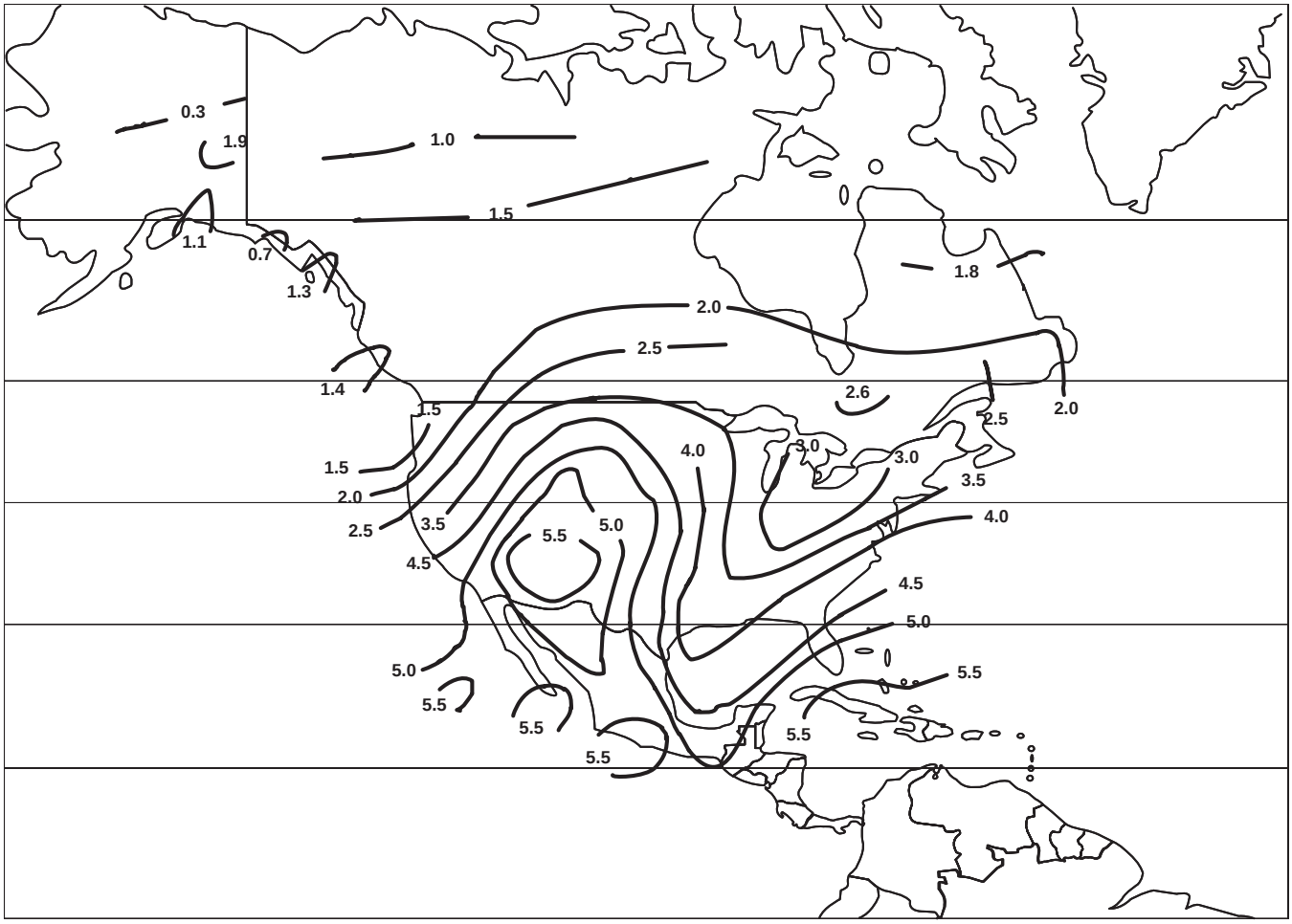

Local wintertime equivalent sun hours (ESH) for North America, assuming a tilt angle of latitude plus 15 degrees [data from BPSolarex Corporation.]

The large numbers for both reserve capacity and safety margin for the example system indicate that both the battery capacity and the solar panel size could be reduced by about a factor of three without significantly degrading system performance. However, the advantage of using standard system components in this case outweighs the potential cost savings and leaves adequate margins for more intensively programmed operations.

NOTES:

5. INTERFACE TO DEVICES

5-1. RESISTANCE MEASUREMENTS

5-1.1 Two-Wire Resistance Measurements

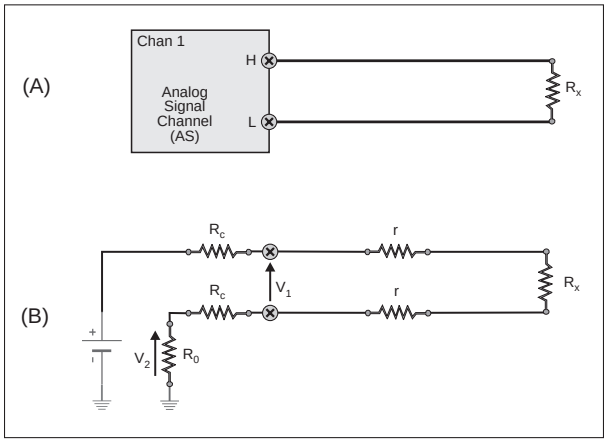

(A) Field wiring for 2-wire resistance measurements. (B) Equivalent circuit during 2-wire resistance measurement.

$$R_x + 2r = R_0 \times (V_1/V_2)$$

5-1.2 Three-Wire Resistance Measurements

$$G_1 = R_x + 2r = R_0 \times (V_1/V_2)$$

$$G_2 = 2r = R_0 \times (V_3/V_4)$$

$$R_x = G_1 - G_2$$

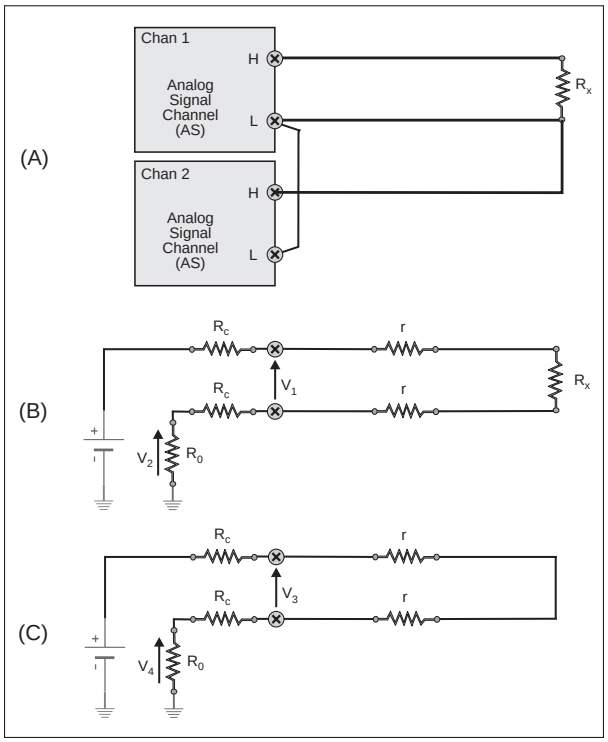

(A) Field wiring for 3-wire resistance measurements using two AS channels. (B) Equivalent circuit during first resistance measurement. (C) Equivalent circuit during second resistance measurement.

(A) Field wiring for 3-terminal resistance measurements using one resistance ratio channel. (B) Equivalent circuit during measurement phases.

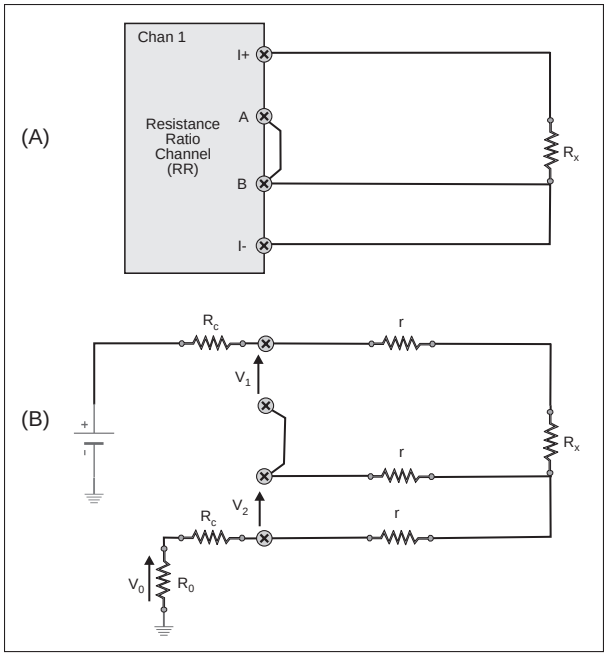

5-1.3 Four-Wire Resistance Measurements

(A) Field wiring for 4-wire resistance measurements using two AS channels. (B) Equivalent circuit during 4-wire resistance measurement.

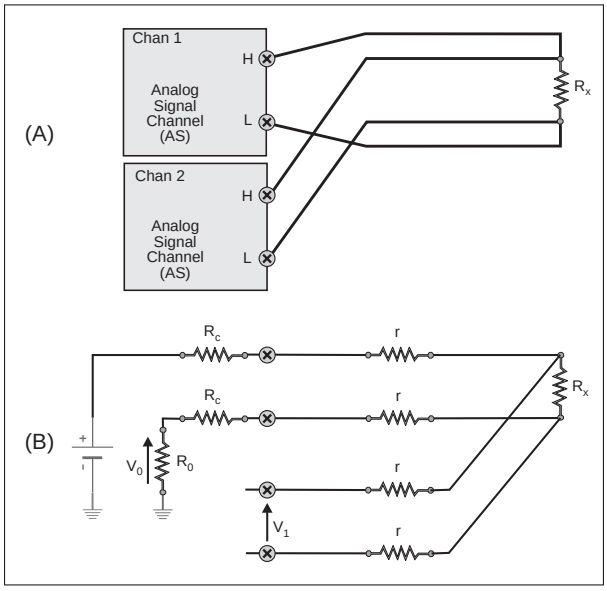

$$R_x = R_0 \times (V_1/V_0)$$

(A) Field wiring for 4-wire resistance measurements using a Resistance Ratio Channel. (B) Equivalent circuit during resistance measurement.

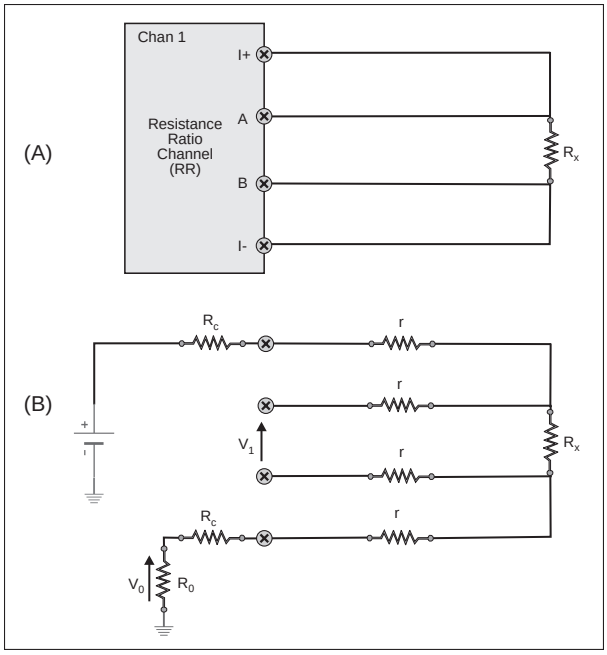

$$R_x = R_0 \times (V_1/V_0)$$

5-2. CURRENT TRANSMITTERS

(A) Field wiring for MCU-excited, isolated current transmitters. (B) Equivalent circuit during current measurement.

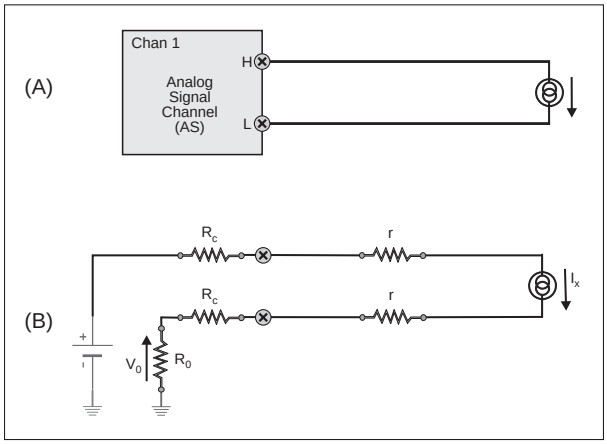

$$I_x = V_0/R_0$$

(A) Field wiring for measurement of externally-powered and measured current loops. (B) Equivalent circuit during measurement.

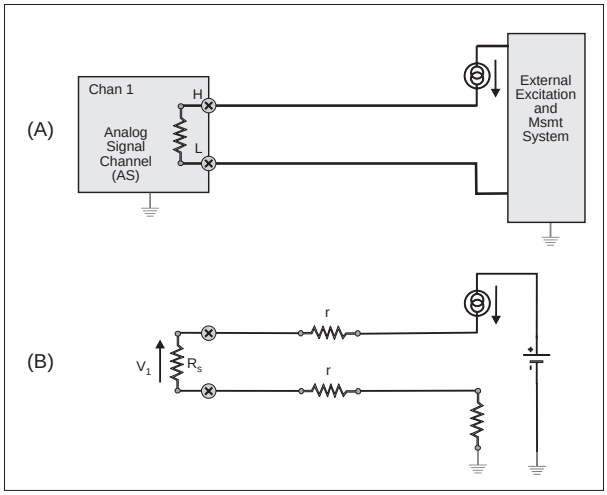

$$I_x = V_1/R_s$$

(A) Field wiring for non-isolated current transmitters. (B) Equivalent circuit during excitation and measurement.

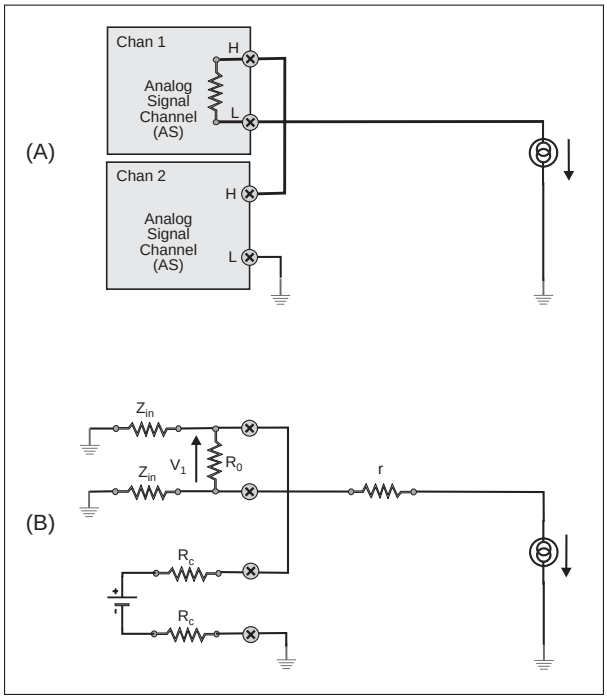

5-3. RESISTANCE RATIOS

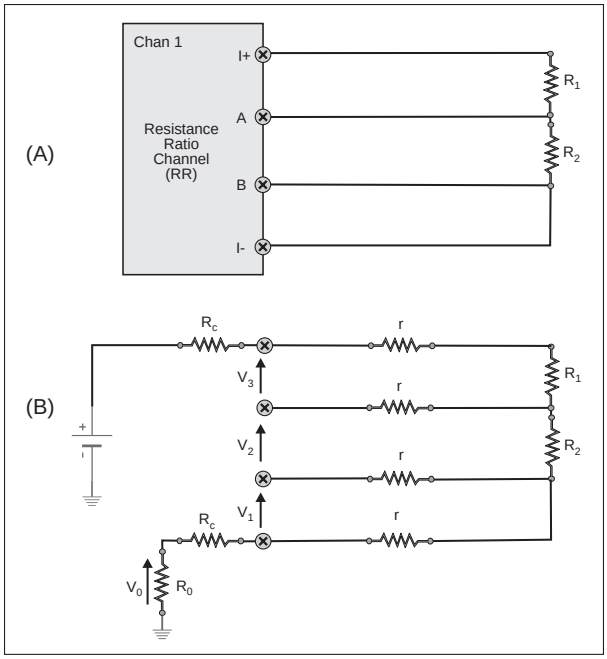

(A) Field wiring for 4-wire resistance ratio measurements using one resistance ratio channel. (B) Equivalent circuit for 4-wire resistance ratio measurements.

For information on wiring of Carlson instruments, refer to the Geomation Technical Note, "Carlson Instrument Measurements."

5-4. POTENTIOMETERS

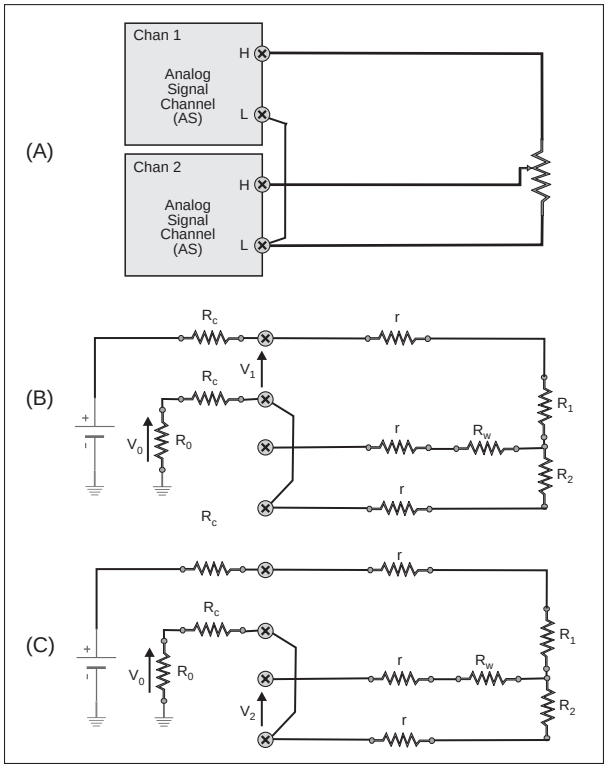

(A) Field wiring for 3-wire potentiometer measurements using two analog signal channels. (B), (C) Equivalent circuit diagrams during two measurement phases.

(A) Field wiring for measuring 4-wire potentiometers using a resistance ratio measurement channel. (B) Equivalent circuit diagram during measurement phases.

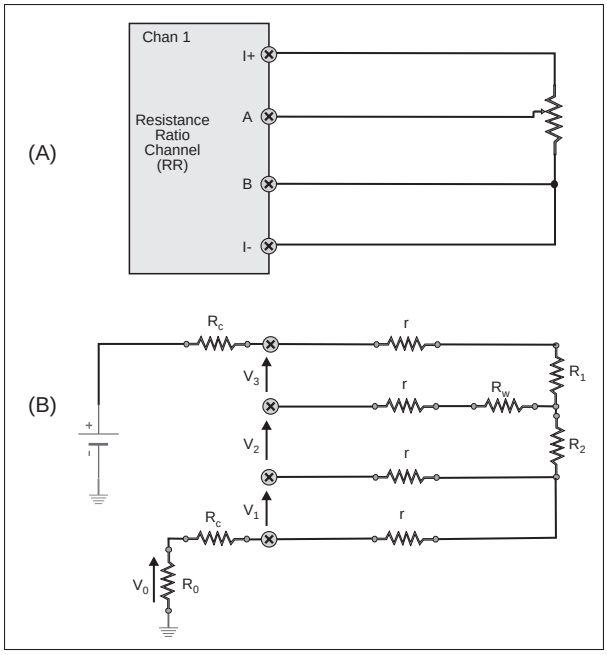

(A) Field wiring for measuring 5-wire potentiometers using three analog signal channels. (B) Equivalent circuit diagram during two measurement phases.

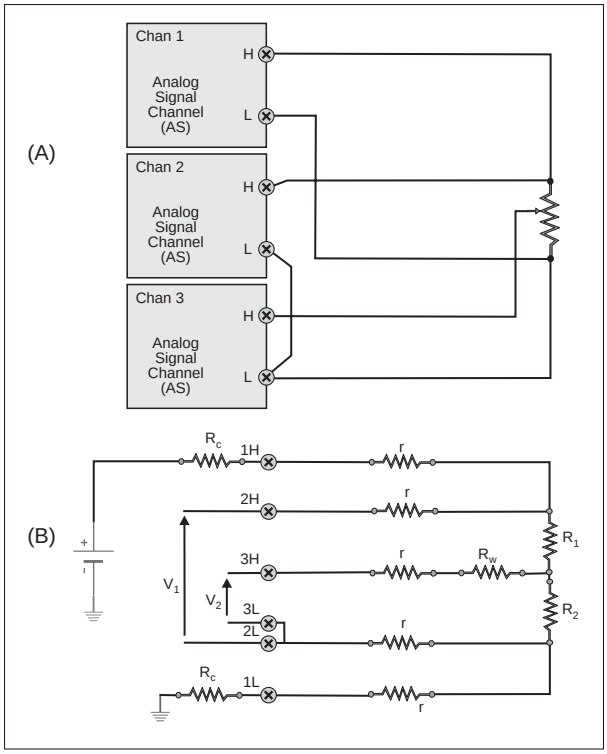

(A) Field wiring for 4-wire potentiometer measurements using three analog signal channels. (B), (C), (D) Equivalent circuit diagrams for three successive measurement phases.

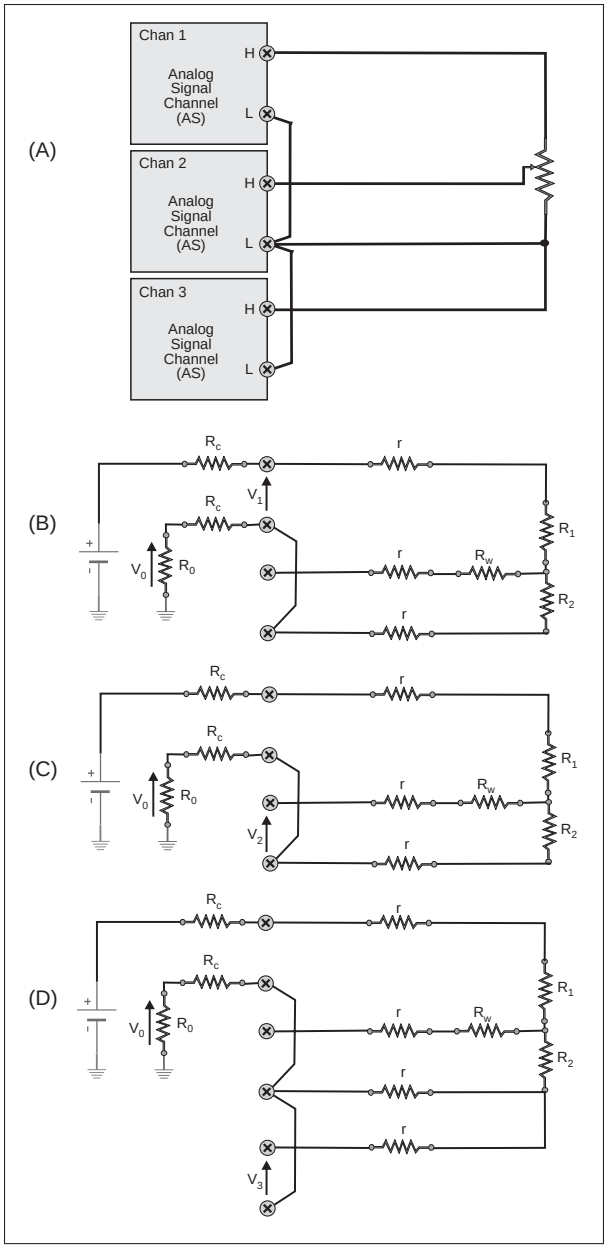

5-5. BRIDGES

(A) Field wiring for measuring 4-wire full bridges using two analog signal channels. (B) Equivalent circuit diagram during two measurement phases.

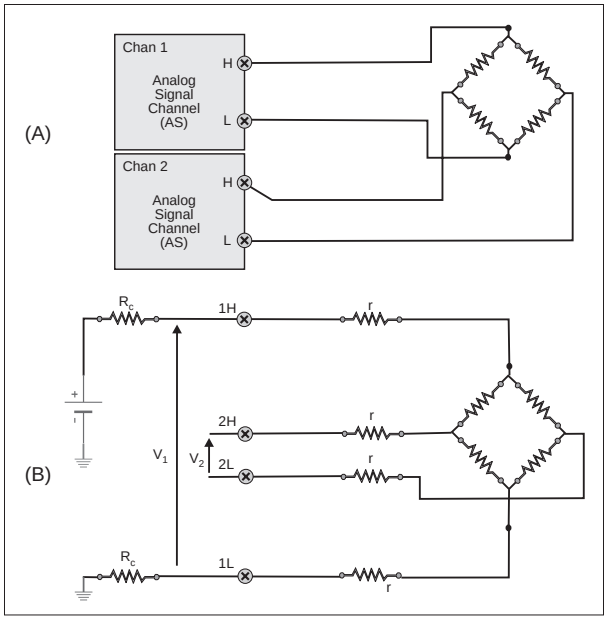

(A) Field wiring for 6-wire full bridge measurements using three analog signal channels. (B) Equivalent circuit diagram for two measurement phases.

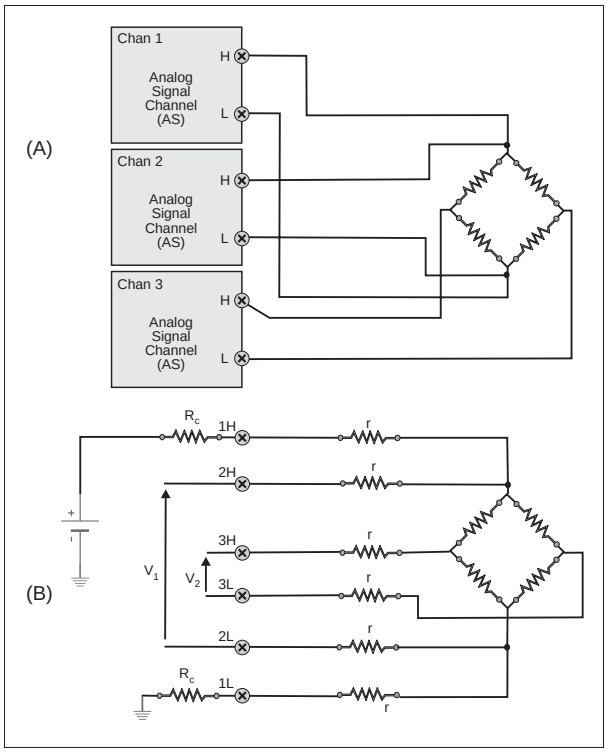

5-6. VIBRATING WIRE TRANSDUCERS

Standard pluck-and-listen vibrating wire sensors can be directly connected to the terminals of a single ASM channel. To minimize the possible pickup of AC power line signals into the low-level measurement circuitry, twisted and shielded two-conductor cable should be used, and neither side of the coil should be connected to earth ground. If this precaution is observed, cable runs of 5000 feet or more are acceptable. Auto-resonating sensor types require an external oscillation amplifier and DC power sources which may be supplied by the MCU.

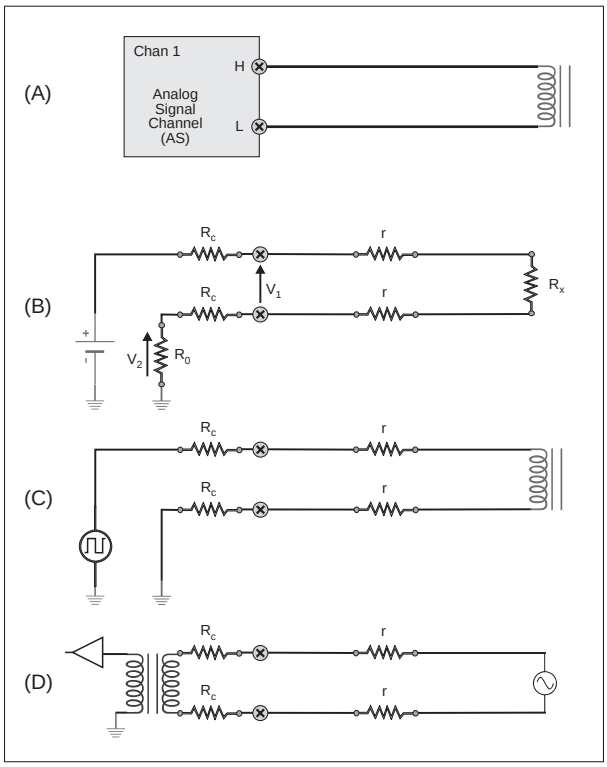

(A) Field wiring vibrating wire transducers operating in the pluck-and-listen mode. (B) Equivalent circuit during coil resistance measurement phase. (C) Equivalent circuit during excitation phase. (D) Equivalent circuit during measurement phase.

Measurements of vibrating wire sensors are handled by VWP Components (Vibrating Wire Period). During a measurement of a vibrating wire sensor, the AC excitation source and the measurement receiver are both connected to the ASM channel terminals. For auto-resonating sensor types, the excitation is disabled by setting the VWP excitation duration parameter to zero. For pluck-and-listen sensors, the measurement system first applies a plucking signal and then measures the period of any signal observed at the receiver. Further details of the vibrating wire excitation including excitation options and measurement process have been discussed earlier in the hardware description of the frequency measurement system found in Section 2-3.4 "Frequency Measurement and Excitation." For almost all transducers the single chirp mode provides good excitation without putting too much energy into the vibrating wire. The chirp duration can usually be set to about 400 milliseconds. The measurement is not very sensitive to this parameter since for longer durations, although more energy is pumped into the oscillation mode, more time passes before the frequency measurement is started allowing the oscillation to decay; and, conversely for shorter

durations. The upper frequency limit should be set to the next higher limiting value beyond the expected operating frequency limit of the vibrating wire. If the limit is set too low, the wire fundamental mode will be only weakly excited (by harmonics of the exciting square wave); if set too high (particularly for transducers with low fundamental mode frequencies below about 2 kHz), then the higher excitation frequencies may excite higher frequency harmonics or other vibrational modes of the transducer.

Since the vibrating wire sensor coil is directly wired to the ASM channel terminals, the coil resistance can be measured by a simple two-wire process. The VWP Component can be configured to perform this measurement and to declare a measurement error if the coil resistance exceeds a configurable preset threshold. Alternatively, the coil resistance can be measured by an RM Component configured for a two-wire measurement. In this case, the coil resistance can be tested by an alarm record for open coil detection, or the value of the resistance can be used to calculate the temperature of the sensor. The coil can be treated as a copper RTD with sensitivity comparable to commercial platinum RTD temperature sensors. For this application, each sensor would have to be calibrated for resistance as a function of temperature.

The VWP Component measures the resonant period of the sensor in microseconds. The VWP Component is normally followed by a VWGC (Vibrating Wire Gage Conversion) algebraic manipulation Component to convert the resonant period measurement to a physical unit according to the calibration parameters for the transducer. The conversion VWGC Component contains the calibration constants supplied by the manufacturer for the individually calibrated transducers. Since there has been little agreement among the transducer manufacturers concerning the exact mathematical form for the units conversion, Geomation offers support for all of the commonly encountered transducer types by allowing selection of the conversion process by manufacturer. Along with the calibration constants, the mathematical form for the conversion is displayed allowing users of nonsupported types to select an appropriate conversion form. Often, the manufacturer's zero point calibration factor is not used as the reference value is calibrated at installation time.

5-7. THERMOCOUPLES

The low-level signal performance of the 2380 analog measurement system allows for the precision measurement of directly connected thermocouples. Thermocouples can be directly wired to the terminals of one channel of an ASM module. For directly connected thermocouples, the terminal block itself forms the reference junction thermocouple. Since the module terminals are held at nearly equal temperatures, the reference junction thermocouples develop a voltage equivalent to that of a single cold junction thermocouple of the sensor thermocouple materials held at the temperature of the module terminal block. The sensor temperature can be calculated from standard thermocouple calibration curves if the measured voltage is first corrected for the voltage developed at the equivalent reference junction thermocouple.

(A) Field wiring for direct connection of a thermocouple to an analog signal channel. (B) Equivalent circuit diagram during thermocouple open circuit detection phase. (C) Equivalent circuit during thermocouple potential measurement phase. (D) Equivalent circuit during reference junction temperature measurement phase.

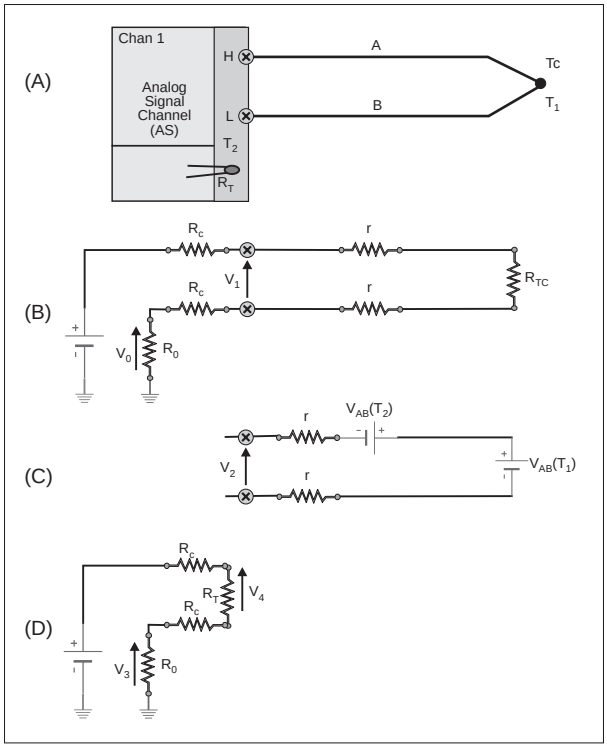

Generated thermocouple potentials as a function of temperature for various standard thermocouple types.

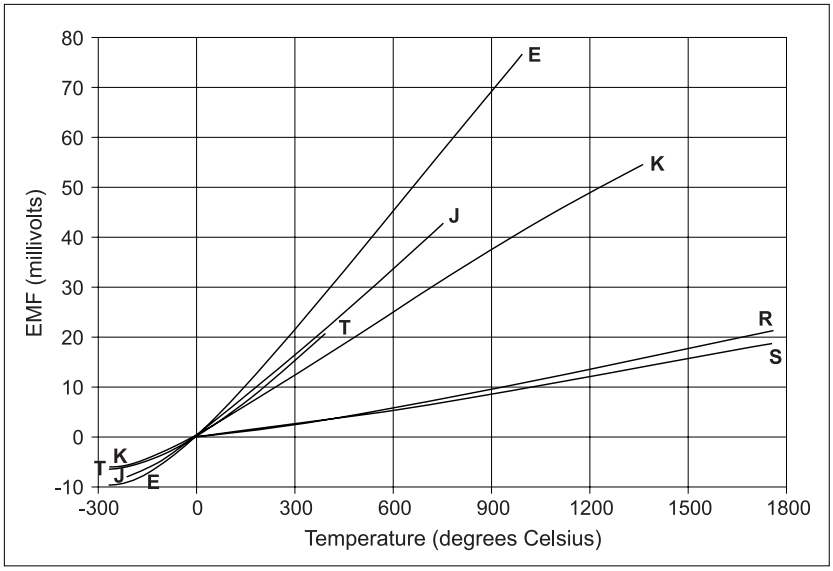

Field connections for supported thermocouple types.

Type	*H-terminal*	*L-terminal*
J	Fe	CO
K	CH	AL
R	Pt	Rh
S	Pt	Rh
T	Cu	CO
E	CH	CO

Alternatively, thermocouples may be wired to remote isothermal blocks, or the reference junction can be held at 0 C. The TC Component can be configured to operate with all commonly encountered standard thermocouple types: J, K, R, S, T, and E. The chart in the figure above shows the developed thermocouple potential as a function of temperature for various standard thermocouple types implemented in the 2380 MCU. The cold junction compensation routines can be bypassed for those applications in which a real ice-temperature reference junction is employed, or in which an electronic ice-point correction circuit is included in the thermocouple wiring system. For systems using remote isothermal blocks, any 2380 supported type of block temperature sensor can be connected to any other 2380 measurement channel and measured using standard 2380 Components.

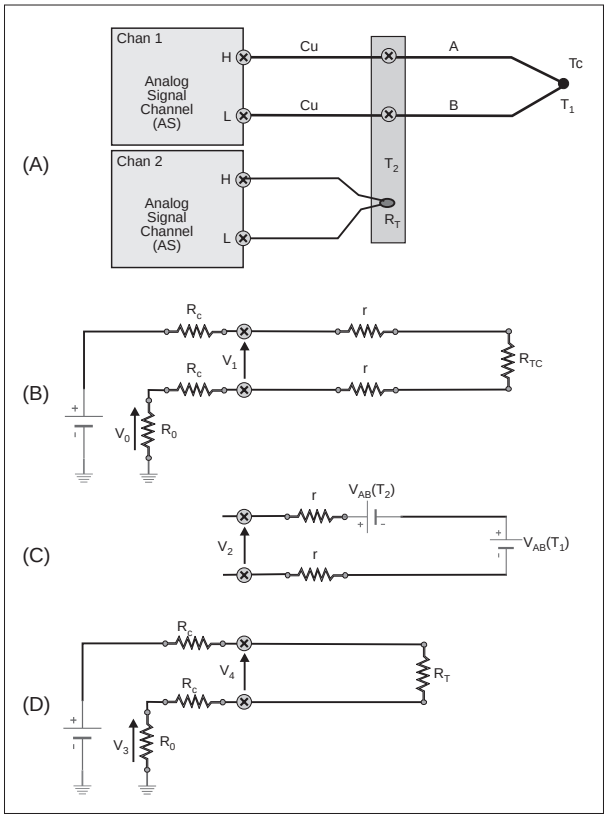

(A) Field wiring for connecting a thermocouple to an analog signal channel using a remote isothermal block. The block temperature is measured by a thermistor connected to a second analog signal channel. (B), (C), and (D) Equivalent circuit diagrams for open circuit detection (B), thermocouple potential measurement (C), and remote block temperature measurement.

TC Components are evaluated in a three phase process involving physical measurements and computations. During the first phase, the thermocouple voltage at the ASM input terminals is measured. The measured voltage represents the thermocouple sensor voltage referenced to voltages developed by reference junction thermocouples created at the ASM module terminals. The created cold junctions consist of thermocouple wire material and the materials contained in the module terminals

During the second phase of the evaluation, the resistance of the on-module thermistor located under the module terminal block is measured. The temperature of the module terminal block is then calculated by referring to a standard thermistor calibration curve. Or, for remote isothermal block applications, the temperature is obtained by internally forcing the specified Components which measure the block temperature.

In the third phase, the equivalent cold junction reference voltage is determined by look-up and interpolation procedures that reference standard thermocouple calibration tables. The measured thermocouple voltage is then corrected by the calculated reference voltage. Finally, an inverse table look-up and interpolation procedure determines the sensor temperature from the cold junction compensated thermocouple sensor voltage.

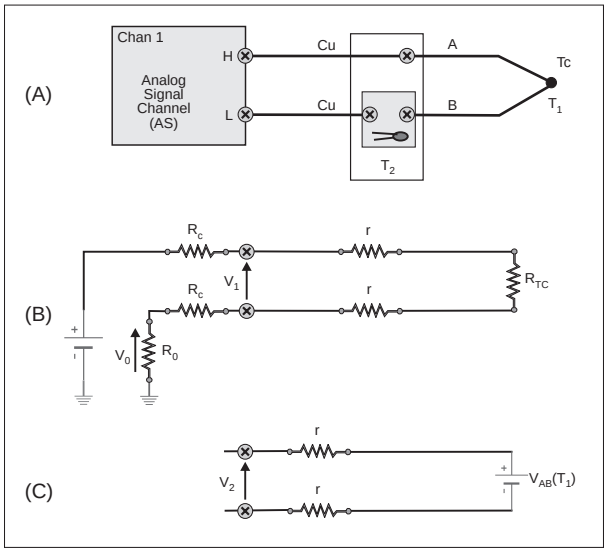

(A) Field wiring for connecting a thermocouple to an analog signal channel using a remote electronic ice point compensation circuit.
(B) Equivalent circuit during open circuit detection phase.
(C) Equivalent circuit during thermocouple potential measurement phase.

For directly-connected thermocouples, the user may configure an additional evaluator Component which performs a simple two-wire resistance measurement on the channel. The result can be used to detect open circuit failures of the thermocouple sensors. Alternatively, the TC Component can be configured to perform a thermocouple resistance measurement and declare a measurement error if the resistance is above a switchable preset threshold.

5-8. SDI 12 DEVICES

SDI-12 is a U. S. Geological Survey-motivated, industry-proposed standard for multidropped low-power serial communication to intelligent instruments in remote environments. SDI-12 as a standard is referred to as "proposed" since it has neither been defined nor adopted by ANSI, ISO, or any other standards organization at the time of this writing. Technically, SDI-12 should really be referred to as a U.S.G.S. Recommendation. The proposed standard includes physical interface definitions, communication protocol specifications, and the definition of a common high level instrument command set. Version 1.0 of the interface standard was released in October, 1988. [The proposed standard is currently maintained by the SDI-12 Support Group c/o Sutron Corporation, 740 East 3900 South, Ste. 107, Salt Lake City, Utah.]

Equivalent circuit for interfacing to the SDI-12 instrumentation port.

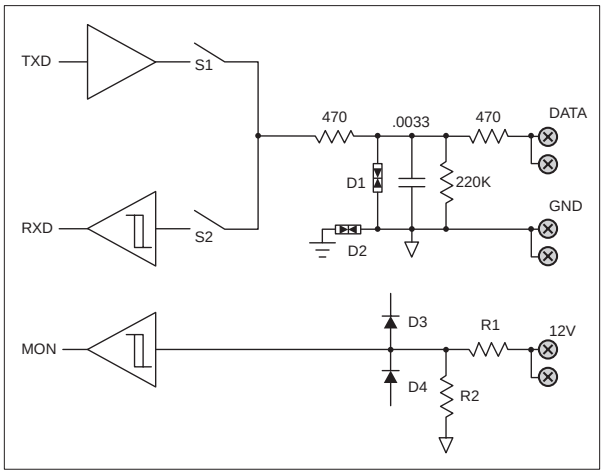

SDI-12 uses a three wire interface: (1) a +12 V nominal power supply (9.6V to 16V, 0.5 ampere max), (2) a signal ground and power return, and (3) a bi-directional data transmission line. The protocol is based on a master/slave design with one master, the data recorder, and up to ten slave intelligent instruments. The communication cable can have a total length of up to 200 feet. All sensors on the network should enter a low power consumption sleep state until activated by signals on the data line. The figure above shows an equivalent circuit for the SDI-12 interface as implemented on the EII Geobus module. Software-controlled solid state relays S1 and S2 ensure that the load impedance on the data line by the SDI option board remains high during receive operation, and also when the MCU is powered off. A resistor/capacitor network and transient suppression diodes protect the transmitter and receiver components from externally induced voltage surges and electrostatic discharges. Use of the power terminals is optional; the MCU interface will operate without any connection to the SDI-12 12V terminals.

The table below summarizes the intelligent sensor command set defined in the SDI-12 standard. All conforming sensors must respond to this basic set of commands which allows a data recorder to implement a generic procedure for initiating measurement cycles and acquiring the results. Each sensor manufacturer may add other commands beyond the basic set to implement sensor specific requirements such as calibration procedures and measurement error processing.

SDI-12 Standard commands and responses. [Portions extracted from the SDI-12 interface standard version 1.0.]

Command	*Description and Response*
"aM!"	Initiate a measurement. The response is "atttn<CR><LF>" where ttt specifies the maximum time required for the sensors to acquire data in seconds, and n is the number of values that will be acquired (from 0 to 9). If n is zero, no data will be available using "D" commands. The values generated by measurements in response to this command are retained in the sensor for subsequent collection using "D" commands. Resulting data will be retained in the sensor until another "M" or "V" command is executed.
"aV!"	Initiate verify sequence. The response is "atttn<CR><LF>". After the verify sequence is completed, a service request is sent to the data recorder (if "ttt" is not "000") and data will be collected using subsequent "D" commands. The result of this command is the same as that for "aM!" except that the data returned is from a verification sequence instead of a measurement. The returned data may include ROM signatures, RAM error codes or other diagnostic test results.
"aD0" — "aD9"	Send data. The response is "a<values><CR><LF>". Values returned by a "D" command will be sent in 33 characters or less. The data buffer in the sensor will not be altered by this command. If the number of values returned by a "aD0" command is less than the number specified by the result of the previous "M" or "V" command, the rest of the data will be collected using "aD1", "aD2", and so on until all values specified have been collected. <values> are reported in the form "pd.dpd.d..." where the polarity sign p is required to delimit values and d can be any number of digits before and after the optional decimal point. The total number of digits for each value must be in the range of 1 to 7.
"aI"	Send identification. The response is "a11ccccccccmmmmmmvvvxxx...xx<CR><LF>". "11" is the SDI-12 level number indicating SDI-12 compatibility. "cccccccc" is an 8 character vendor identification string. "mmmmmm" is a 6 character field specifying the sensor model number. "rrr" is a 3 character field specifying the sensor version number. And, "xxx...xx" is an optional field of up to 13 characters to be used for serial number or other specific sensor information.
"a!"	Acknowledge active. This command returns a "a<CR><LF>" response and would usually only be used to make sure the sensor responds before sending a more lengthy command.
"aM1!" — "aM9!"	Additional measurement commands for individual measurements. Results are the same as for "aM!".
"aAb!"	Change sensor address. This command is not part of the standard SDI-12 command set but is often implemented in this form. The response is "b<CR><LF>". The command changes the address of sensor "a" to "b". The new address "b" can be any number 0 to 9.

The 2380 MCU firmware provides executive (EXEC) commands supporting operator initiated dialog in SDI-12 command language with conforming sensors. The executive commands are provided to assist the user in initial installation and to provide diagnostic tools when a failure occurs. The executive command "QUERY SDI" internally generates a scan of all possible sensor addresses (0-9 standard addresses plus A-Z to support certain manufacturer's extensions) using the basic SDI-12 identification command. Any responses from sensors will be reported to the operator in the SDI-12 standard form. Use of this command provides the operator with information on the current address settings of all attached and responding sensors. The executive command "SDI xxxxxx...xx" may be issued to send the embedded SDI-12 command xxxxx...xx over the SDI-12 port. The command must begin with a one character sensor address and should end with a "!" (although the MCU will supply one if omitted). Any response generated will be passed on to the operator in the form returned by the sensor. Dialog utilizing executive commands to issue SDI-12 commands is useful at installation time to verify sensor operation and to initially set the sensor address to the desired value. (Factory default setting to address zero is specified, and the SDI command "0Aa!" may be used for many sensor models to set the sensor address to "a", a value from 1 to 9.) Other SDI commands may be needed for particular sensor types to initialize parameters such as calibration values and warm up times.

NOTES:

NOTES:

APPENDIX C

Manufacturer's Information

HD Supply Waterworks
Gate Valve Specifications

DRAFT

APPENDIX C Manufacturer's Information

Invensys Action Pak AP4390/AP4391/AP4392

DRAFT

ACTION PAK® AP4390/AP4391/ AP4392

MODEL

DC Input, Dual Channel Isolators

Provides Two Independent, Fully Isolated DC Outputs in Proportion to Two DC Inputs

Benefits

- High Density 2-Channel Package Minimizes Installation Space
- Eliminates Ground Loops with 1500V Input-to-Output, Channel-to-Channel Isolation
- Easy Field Configurable Input Ranges: 10mV to 100V, 1mA to 100mA
- Six (6) Configurable Output Ranges: 0-5V, 0-10V, 0-1mA, 4-20mA, -5 to 5V and -10 to 10V
- Easy Plug-in Installation/ Low Mean-Time-to-Repair
- Selectable 120/240 VAC Power
- Lifetime Warranty

DESCRIPTION

The field configurable AP4390 series dual channel isolators offer wide ranging input and output capability for scaling and transmitting analog DC signals. The AP4390 series will accept input voltage spans from 10mV up to 100 volts, as well as input current spans from 1mA to 100mA. For a full scale output range, the input zero and span potentiometers enable 50% input zero and span adjustability. For example, the 0-10V input range can be elevated to 5-10V or compressed to 0-5V.

The AP4390 series offers six (6) popular ouput ranges which are either positive voltages and currents (e.g. 0-5V, 0-10V, 0-1mA and 4-20mA) or bipolar voltages (-5 to 5V and -10 to 10V). The model number defines the ouput channel ranges as shown in Table 1.

MODEL	CHANNEL	OUTPUT SELECTIONS
AP4390	A	0-5V, 0-10V, 0-1mA, **4-20mA**
	B	0-5V, 0-10V, 0-1mA, **4-20mA**
AP4391	A	0-5V, 0-10V, 0-1mA, **4-20mA**
	B	-5 to 5V, **-10 to 10V**
AP4392	A	-5 to 5V, **-10 to 10V**
	B	-5 to 5V, **-10 to 10V**

*Table 1: AP4390 Series Output Ranges. (**Bold** indicates factory preset ranges.)*

The 4-20mA compliance is a powerful 20VDC per channel. All models in the AP4390 series accept bipolar inputs and each I/O channel offers selectable normal or reverse acting operation (e.g. 4-20mA or 20-4mA).

Each Action Pak in the AP4390 series is a dual, three-port, industrial isolator -- both output channels are optically isolated from their respective input channels up to 1500 VDC. The two

ACTION INSTRUMENTS

Protecting the Integrity of Industrial Process Signals

invensys
An Invensys Company

APPLICATION

The Action Pak AP4390 series of field configurable isolators is useful in eliminating ground loops, converting signal levels and providing signal drive. The AP4390 series' dual channel design conserves installation space in high density applications and offers superior cost-benefit value over single channel isolators. The wide ranging capability of the AP4390s provides universal spare part coverage.

DIAGNOSTIC LED

TThe AP4390 series is equipped with dual function LED signal monitors. The green, top-mounted LED indicates line power and input signal status. Active line power is indicated by an illuminated LED. If the input signal is 10% above the full scale range, the LED will flash at 8Hz. Below 0%, the flash rate is 4Hz.

OPTION

U Urethane coating of internal circuitry for protection from corrosive atmospheres.

CONFIGURATION

Each channel of the AP4390 series can be independently set for a wide variety of input and output ranges.

FACTORY PRESETS

The factory presets all inputs for 4-20mA. The preset for positive based output channels is 4-20mA and -10 to 10VDC for bipolar voltage output channels (as shown in Table 1 and Figures 1 and 2). The supply power is configured for 120 VAC operation. For other I/O ranges, remove the four base screws and case to access the I/O cards.

Refer to figures 1 & 2 for configuration and program the I/O channels as desired.

Replace the cover before applying power.

INPUT

1. Position input jumper "W1" for Current (I) or Voltage (V) input.

2. Set position 5 of the Input Range Selector for Unipolar or Bipolar input operation.

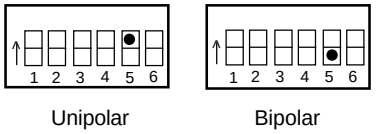

Note: A bipolar range selection will double any range from Table 2 (e.g, 10V span = ±10V bipolar span)

3. Set position 6 of the Input Range Selector for Normal or Reverse operation. Reverse acting produces a decreasing output with an increasing input.

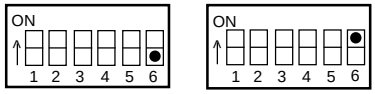

4. Using Table 2, configure positions 1 through 4 of the Input Range Selector for the desired maximum input. Round the desired maximum input value to the next highest range (e.g., 0-70V = 100V range).

WARNING: Do not attempt to change any switch settings with power applied. Severe damage will result.

OUTPUT

1. For the AP4390 channels A and B, and the AP4391 channel B, use Table 3 to configure the output selector switches for one of the four(4) standard output ranges.

2. For the AP4392 channels A and B, and the AP4391 channel B, position output jumper "W2" for -5 to 5V or -10 to 10V.

POWER

1. Configure the AC jumpers for either 120 or 240 VAC operation. See Figure 3.

CALIBRATION

1. Connect the input to a calibrated DC voltage or current source and apply power. Refer to PIN CONNECTIONS. Wait 1 hour for thermal stability before monitoring the voltage/current output.

2. Set the calibrator to the desired minimum input and adjust the Zero potentiometer for the desired minimum output.

3. Set the calibrator to the desired maximum input and adjust the Span potentiometer for the desired maximum output.

4. Repeat steps 2 and 3 for best accuracy.

FACTORY ASSISTANCE

For additional information on calibration, operation and installation please contact Action's Technical Services Group. Call toll-free:

800-767-5726

Table 2: AP4390 Series Input Ranges

Voltage*	Current*	Input Range Selector (SW1)
20mV	2mA	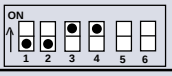
50mV	5mA	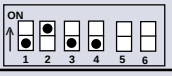
100mV	10mA	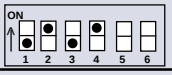
200mV	20mA	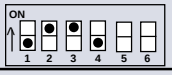
500mV	50mA	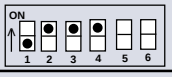
1V	100mA	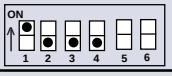
2V		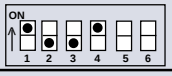
5V		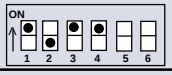
10V		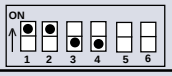
25V		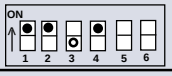
50V		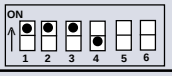
100V		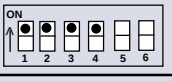

**Note: Use jumper (W1) to configure either voltage or current input.*

Table 3: AP4390 and AP4391 Output Ranges

Range	Output Range Selector (SW2)
0 to 10V	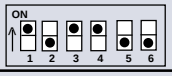
0 to 5V	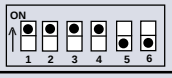
0 to 1mA	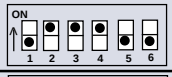
4 to 20mA	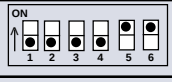

SPECIFICATIONS

Input
Voltage Input (field configurable)
Full Scale Range: 10mV to 100V
Impedance: >100KΩ
Overvoltage: 400 Vrms, max (Intermittent); 264 Vrms, max (Continous)
Current Input (field configurable)
Full Scale Range: 1mA to 100mA
Impedance: 20Ω, typical
Overcurrent: 170mArms, max
Overvoltage: 60VDC
Common Mode (Input to Ground) 1500VDC, max
Zero Turn-Up: 50% of full scale range
Span Turn-Down: 50% of full scale range

Output
Voltage Output
Output: 0-5V, 0-10V, -5 to 5V, -10 to 10V
Drive: 10mA, max. (1KΩ min. load @ 10V)
Current Output
Output: 0-1mA, 4-20mA
Compliance: 0-1mA: 10V, max (10KΩ max load)
4-20mA: 20V, max (1KΩ max load)

LED Indication (green)
Input Range
>110% input: 8Hz flash
<-10% input: 4Hz flash

Accuracy (Including Linearity, Hysteresis) <20mV, <2mA: ±0.35% of full scale, typical, 0.5%, max
>20mV, >2mA: ±0.1% of full scale, typical, 0.2%, max

Response Time (10-90%) 200 mSec., typical

Stability (Temperature) ±0.025% of full scale/°C, typical, ±0.05%/°C, max.

Common Mode Rejection DC to 60Hz: 120dB

Isolation (Input to Output) 1500 VDC between channels, input, output and power

ESD Susceptibility Meets IEC 801-2, Level 2 (4KV)

Humidity (Non-Condensing) Operating: 15 to 95% (@ 45°C)
Soak: 90% for 24 hours (@ 65°C)

Temperature Range Operating: -15 to 60°C (5 to 140°F)
Storage: -25 to 70°C (-13 to 158°F)

Power Consumption: 4W typical, 6W max
Standard: selectable 120/240VAC, ±10%, 50-60Hz

Weight AP4390 0.66lbs
AP4391 0.68lbs
AP4392 0.68lbs

Approvals **CSA** certified per standard C22.2 No. M1982 (File No. LR42272). **UL** recognized per standard UL508 (File No. E150323/E99775).

I/O CARD CONFIGURATION

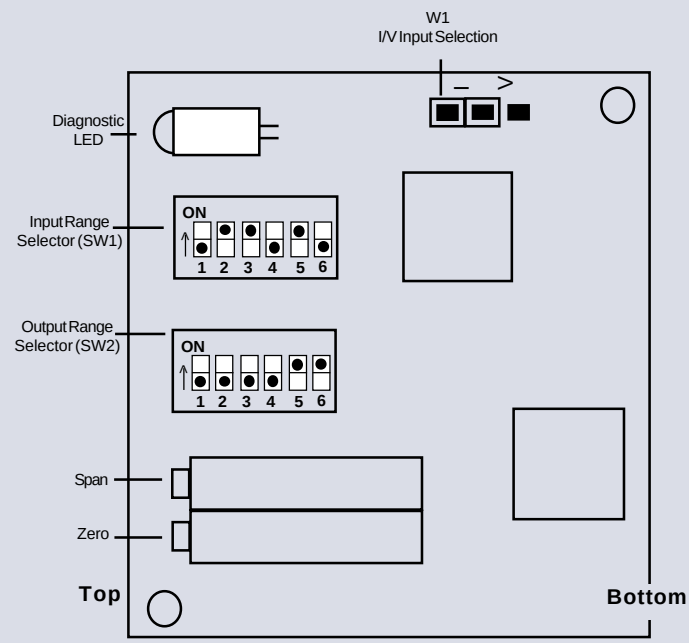

Figure 1: AP4390 and AP4391(A) I/O card factory calibration; 4-20mA input and output (shown sideways to view switches)

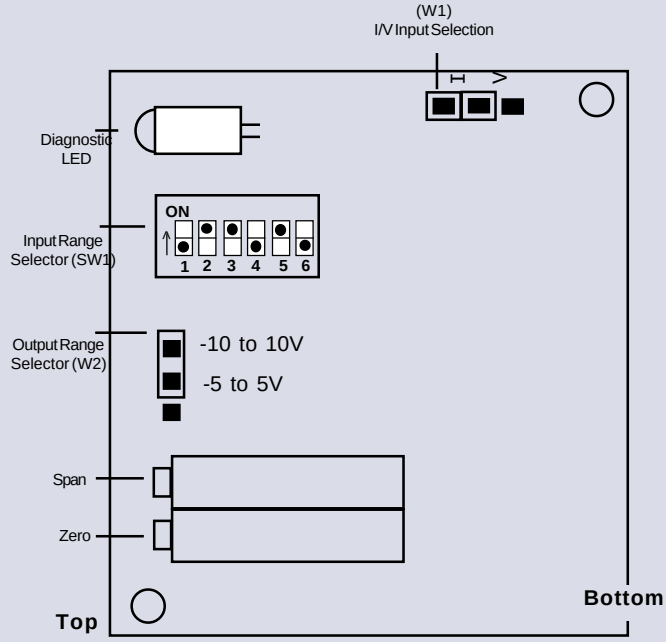

Figure 2: AP4391(B) and AP4392 I/O card factory calibration; 4-20mA input, -10 to10V output (shown sideways to view switches)

WARNING: Do not attempt to change any switch settings with power applied. Severe damage will result!

WARNING: Applying voltage to the input with W2 in current (I) position will result in damage to the unit.

TOP VIEW DIAGRAMS

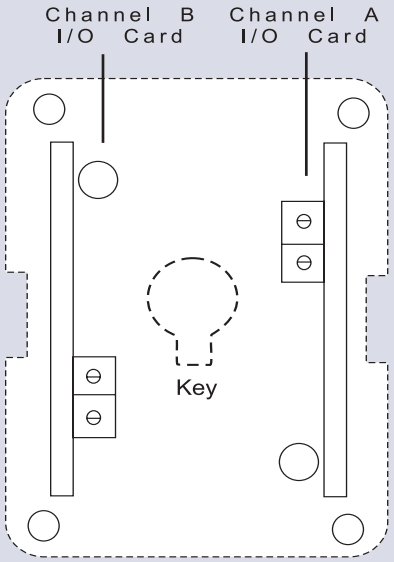

WARNING: Do not change with power connected!

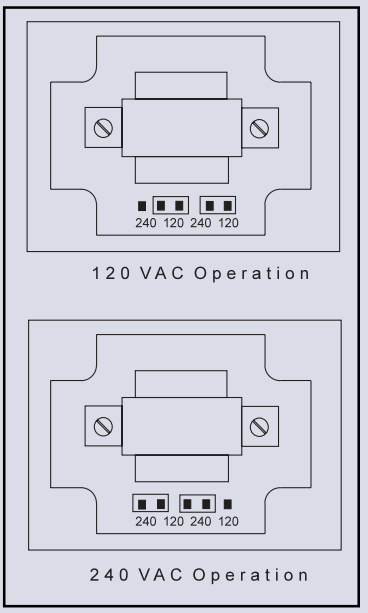

MODELS & ACCESSORIES

Mounting

All Action Paks feature plug-in installation. Models AP4390, AP4391 and AP4392 use an 11-pin base and either molded socket M011 or DIN socket MD11 for mounting.

Ordering Information

Specify:

1. Model: **AP4390**, **AP4391** or **AP4392**
2. Option: U, see text
3. Line Power: 120/240VAC
4. Optional Factory Calibration (C620): specify input range, output range and power.

(All power supplies are transformer-isolated from the internal circuitry.)

Pin Connections

1 Power (Hot)
2 Spare Termination
3 Power (Neu)
4 Output B (+)
5 Input A (+)
6 Input A (-)
7 Output A (+)
8 Output A (-)
9 Output B (-)
10 Input B (+)
11 Input B (-)

DIMENSIONS

Dimensions are in mm (inches)

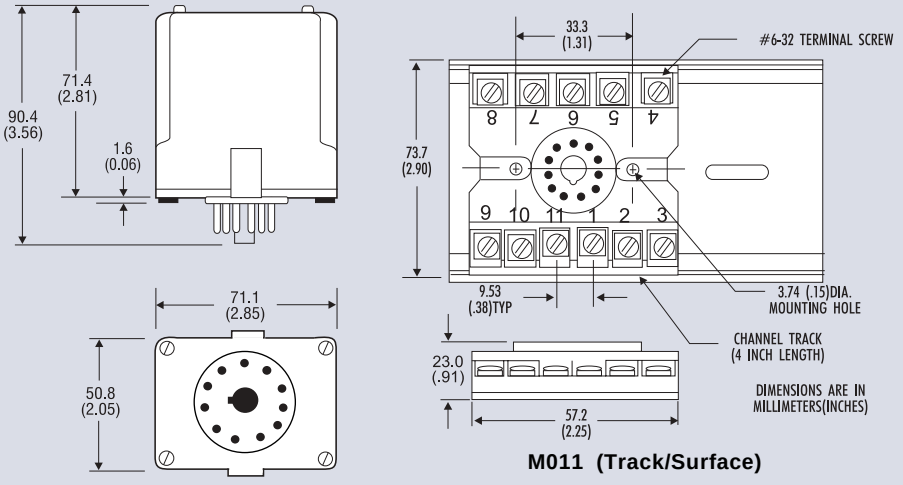

M011 (Track/Surface)

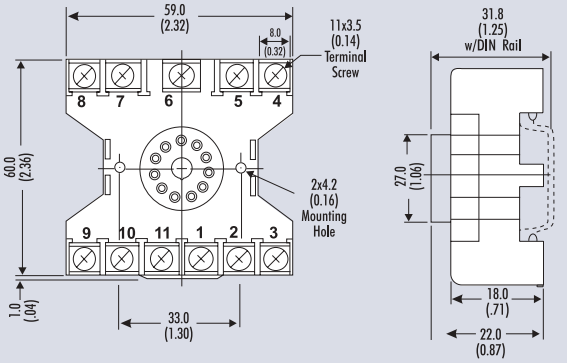

MD11 (DIN/Surface)

Eurotherm Action, Inc. www.eurothermaction.com
Action Instruments www.actionio.com
8601 Aero Drive San Diego, CA 92123
858-279-5726 Service and support: 800-767-5726 FAX: 858-279-6290
sales@actionio.com literature@actionio.com support@actionio.com

721-0527-00-I 11/01

APPENDIX C

Manufacturer's Information

Krohne Installation Instructions,
Aquaflux F Electromagnetic Flowmeters

DRAFT

© KROHNE 01/2003

DIN A4: 7.02137.34.00
US size: 7.02137.74.00

GR

Installation instructions

AQUAFLUX F
010 K, 020 K, 080 K

Electromanetic flowmeters for water and seewage

- **Primary head**
- **Compact flowmeters**

How to use these Instructions

The flowmeters are supplied ready for operation.

The primary head must be installed in the pipeline as described in the installation instructions inside the packing of the primary head.

- Storage and transport — Pages 3+4
- Installation in the pipeline — Pages 4-5/7-8
- Grounding — Page 9

Variable area flowmeters
Vortex flowmeters
Flow controllers
Electromagnetic flowmeters
Ultrasonic flowmeters
Mass flowmeters
Level measuring instruments
Communications technology
Engineering systems & solutions
Switches, counters, displays and recorders
Heat metering
Pressure and temperature

Contents

System description **2**
Product liability and warranty **2**
Standards and approvals **3**
Items included with supply **3**

1 Important information for installation: PLEASE NOTE ! **4**
2 Suggestions for installation **5**
3 Instrument nameplate **6**
4 Flowmeter versions **6**
5 Installation in the pipeline **7**
6 Torques **8**
7 Grounding **9**
8 Replacement of the separate primary head **10**
9 Technical data **11**
10 Dimensions and weights **12**
11 Limits **14**

If you need to return flowmeters for testing or repair to KROHNE **15**

System description

AQUAFLUX electromagnetic flowmeters are precision measuring instruments designed for the linear flow measurement of process liquids.

The process liquids must be electrically conductive: $\geq 20\ \mu S/cm$

The **full-scale range $Q_{100\%}$** can be set as a function of the **meter size**:
AQUAFLUX 010 K / 020 K / 080 K:
DN 10 - 1600 / $^3/_8$" - 64" $Q_{100\%}$ = 0.1 - 86860 m^3/hr = 0.02 - 156 640 US GPM

AQUAFLUX F:
DN 10 - 3000 / $^3/_8$" - 120" $Q_{100\%}$ = 0.1 - 305000 m^3/hr = 0.02 – 1 400 000 US GPM

This is equivalent to a flow velocity of 0.3 - 12 m/s, or 1 - 40 ft/s.

Product liability and warranty

AQUAFLUX electromagnetic flowmeters are designed solely for measuring the volumetric flowrate of electrically conductive, liquid process products.

Flowmeters with AQUAFLUX primary heads are not certified for use in hazardous locations. Other flowmeters series are available for such applications.

Responsibility as to suitability and intended use of these electromagnetic flowmeters rests solely with the operator.

Improper installation and operation of the flowmeters (systems) may lead to loss of warranty.

In addition, the ”General conditions of sale” forming the basis of the purchase contract are applicable.

If AQUAFLUX flowmeters need to be returned to Krohne, please note the information given on the last-but-one page of this manual. Krohne regret that they cannot repair or check your flowmeter(s) unless accompanied by the completed form sheet.

Standards and approvals

Please refer to the installation and operating instructions for the signal converter.

Items included with supply

AQUAFLUX F
primary heads

- Primary head in the size as ordered
- Connecting wires for grounding, refer to Section 7 “Grounding”
- Certificate of calibration data
- Grounding rings (optional), if ordered
- Installation instructions

AQUAFLUX 010 K, 020 K and 080 K
compact flowmeters

- Compact flowmeter in the size as ordered
- Connecting wires for grounding, see Section 7 “Grounding”
- Certificate of calibration data
- Grounding rings (optional), if ordered
- Installation instructions
- Installation and operating instructions for the signal converter

Fitting accessories (stud bolts, nuts, gaskets, etc.) **are not supplied with the flowmeter, to be provided by customer!**

Handling

Do not lift flowmeter by the signal converter housing or the terminal box.

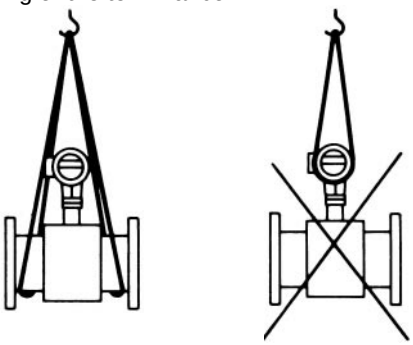

Do not set flowmeter down on signal converter housing or terminal box.

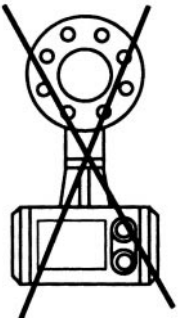

PLEASE NOTE
the temperature limits for storage and transport, see Page 4.

1 Important information for installation: PLEASE NOTE !

- Use only solventless detergents to clean the signal converter housing (polycarbonate).

- **Temperatures**
  Refer to Section 11 “Limits” for operating pressure and vacuum load based on flange standards and type of tube liner.

	Ambient temperature	**Process temperature**
Compact systems	-25 to +**60** °C (-13 to +**140** °F)	-25 to ≤ +**60** °C (-13 to ≤ +**140** °F)
	-25 to +**40** °C (-13 to +**104** °F)	-25 to ≤ +**90** °C (-13 to ≤ +**194** °F)
AQUAFLUX F	-25 to +60 °C (-13 to +140 °F)	-25 to > +**60** °C (-13 to > +**140** °F)
In storage	-**20** to +60 °C (- 4 to +140 °F), kept immobile, avoid moisture and sunlight.	
Transport	- **5** to +**50** °C (- 4 to +**140** °F), avoid moisture and sunlight.	

- **Location and position as required,**
  but electrode axis
  X – • – • – • – X
  must be approximately horizontal in a horizontal pipe run.

  Y terminal box or converter housing

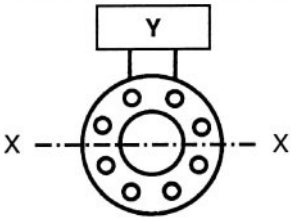

- **Measuring tube must be completetly filled at all times.**

- **Direction of flow is arbitrary.** Arrow on flowmeter can normally be ignored. For exceptions, refer to Section “Factory settings” in the installation and operating instructions for the signal converter.

- **Stud bolts and nuts:** to fit, make sure there is sufficient room next to the pipe flanges.

- **Vibration:** support the pipeline on both sides of the compact flowmeter. Level of vibration in conformity with IEC 068-2-34: below 2.2g for compact flowmeters in the frequency range of 20-50 Hz with the IFC 010 K / IFC 020 K and 20-150 Hz with the IFC 090 K.

- **Do not expose to direct sunlight,** fit a sunshade if necessary, not included with flowmeter, to be provided by customer.

- **Large meter sizes (≥ DN 200 / ≥ 8”),** use adapter pipes to allow axial shifting of the counterflanges and to facilitate installation.

- **Strong electromagnetic fields,** avoid in vicinity of flowmeter

- **Straight inlet run minimum of 5 × DN and outlet run minimum of 2 × DN,**
  (DN = meter size), measured from the electrode axis.

- **Vortex and corkscrew flow:** increase length of inlet and outlet runs or install flow conditioners.
- **Mixing different process liquids:** install flowmeter upstream of mixing point or at an adequate distance downstream (minimum of 30 × DN), otherwise display may be unsteady.
- **Plastic pipes and internally coated metal pipelines:** grounding rings required, see Section 7 “Grounding”.
- **Insulated pipeline:** do not insulate flowmeter.
- **Zero setting not necessary.** To check, it should be possible to set “zero” flow velocity in the completely filled measuring tube. Shutoff valves should therefore be provided either downstream of the flowmeter or upstream and downstream of the flowmeter.

2 Suggestions for installation

To avoid measuring errors due to gas/air inclusion or to pipe running empty, please observe the following:

Highest point of pipe run
(Air bubbles collect in measuring tube - faulty measurements!)

Downpipe over 5 m (16 ft) length
Install air valve ⊗ downstream of flowmeter.

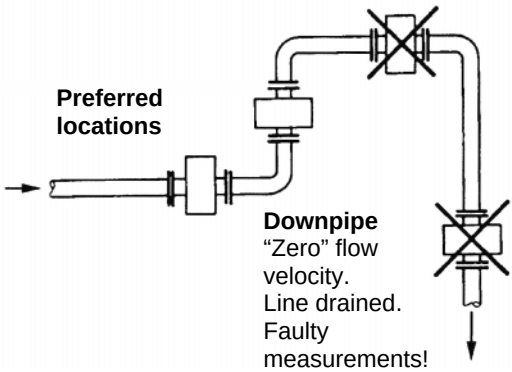

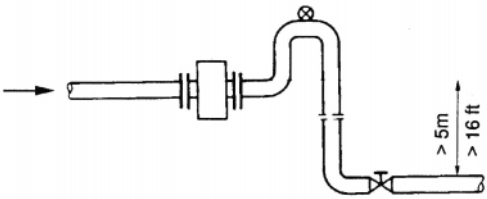

Long pipeline
Always install control and shutoff valves downstream of flowmeter.

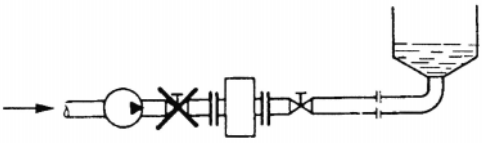

Horizontal pipe run
Install in slightly ascending pipe section. If not possible, assure adequate velocity to prevent air, gas or vapor from collecting in uppper part of flow tube.

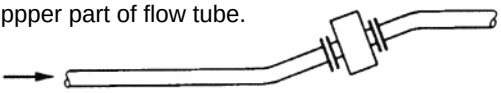

Pumps
Never install flowmeter on pump suction side.

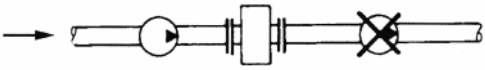

Open feed or discharge
Install meter in low section of pipe.

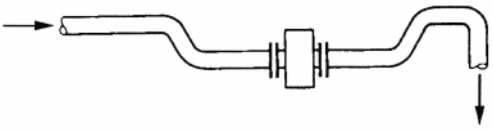

open discharge

3 Instrument nameplate

AQUAFLUX F
separate primary head

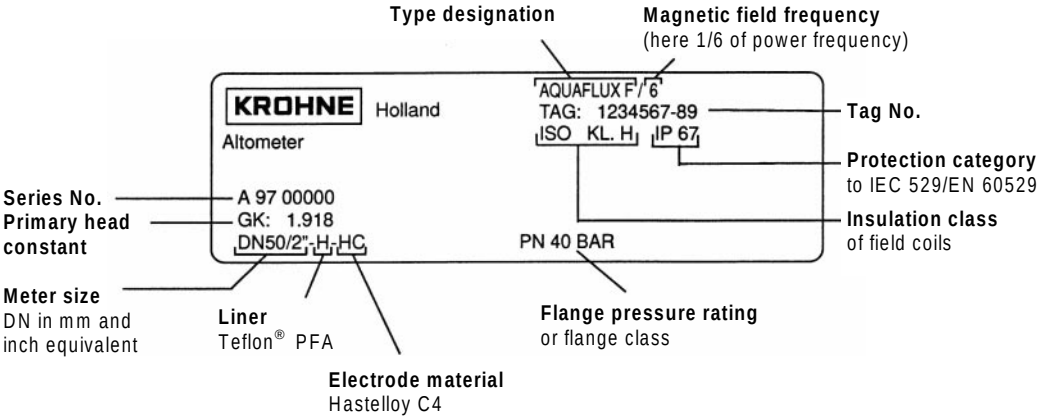

Liner materials	
H	Hard rubber
T	Teflon®-PTFE
Pp	Polypropylene

Electrode materials	
HC	Hastelloy C4
TI	Titanium
V4A	Stainless steel 1.4571 / SS 316-Ti

Teflon® is a registered trademark of Du Pont

Instrument nameplate for compact flowmeters
see installation and operating instructions for the signal converter.

4 Flowmeter versions

AQUAFLUX F — **Separate primary head (F)** electrically connected to the signal converter by signal and field current cables.

AQUAFLUX 010 K, AQUAFLUX 020 K — **Compact flowmeter (K),** IFC 010 K or IFC 020 K signal converter mounted direct on the primary head.

AQUAFLUX 080 K — **Compact flowmeter (K),** IFC 090 K signal converter mounted direct on the primary head.

5 Installation in the pipeline

- **Installation material not included,** to be provided by customer (stud bolts, nuts, gaskets, etc.)
- **Pipe flanges and operating pressure:** refer to tables on “limits” in Section 11.
- **Distance between pipe flanges**
  see **fitting dimension “a”,** in Section 10 “Dimensions and weights”.
- **Position of flanges**
  Install flowmeter in line with the pipe axis.
  Pipe flange faces must be parallel to each other, max. permissible deviation:
  L_{max} - L_{min} ≤ 0.5 mm
  ≤ 0.02”

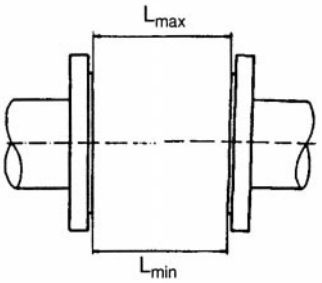

- **Polypropylene and hard rubber liner**
  Please note the table on page 4 for temperature limits of operation, storage and transport.
- **Teflon®-PTFE liner**
  Install at the lowest point of the pipe run to avoid an excessive vacuum condition atthe meter. Do not remove or damage liner, which is formed around the flange edges.
- **Gaskets**
  Use gaskets suitable for the application and appropriate to the liner, not included with flowmeter, to be provided by customer.
- **Grounding rings / protective rings** (option)
  On plastic pipes and internally coated metal pipelines, grounding rings must form the conductive connection with the fluid. Refer to Section 7 “Grounding for electrical connection.

Grounding ring, No. 1

3 mm/0.12” thick

Grounding ring, protective ring No. 2
for flowmeters with Teflon®-PTFE liner, solidly fitted to the flanges, 3 mm/0.12” thick

Grounding ring, protective ring No. 3
with cylindrical neck, to protect the liner particularly at the inlet edge against abrasive products, 3 mm/0.12” thick
Length:
30 mm/1.18”, for ≤ DN 300, ≤ 12“
100 mm/3.94”, for ≥ DN 350, ≥ 14“

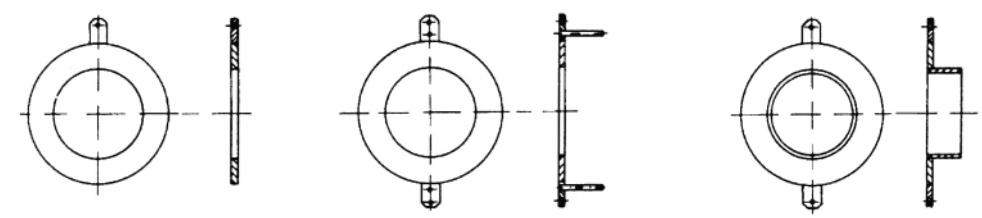

Teflon® is a registered trademark of Du Pont.

6 Torques

- Tighten **stud bolts** uniformly in diagonally opposite sequence, see table for number and type.
- **Column A,** Torques for Teflon®-PTFE liner.
- **Column B**, Torques for liner made of Polypropylene and hard rubber.
- **10 Nm ~ 1.0 kpm ~ 7.23 ft × lbf**

Meter size	Pressure rating	Bolts	Max. torque Nm (ft × lbf)	
			A	B
DN mm	PN			
10	40	4 x M 12	7.6 (5.5)	
15	40	4 x M 12	9.3 (6.7)	
20	40	4 x M 12	16 (11.6)	
25	40	4 x M 12		11 (8.0)
32	40	4 x M 16		19 (13.0)
40	40	4 x M 16		25 (18.1)
50	40	4 x M 16		31 (22.4)
65	16	4 x M 16		42 (30.4)
65	40	8 x M 16		21 (15.2)
80	25	8 x M 16		25 (18.1)
100	16	8 x M 16		30 (21.7)
125	16	8 x M 16		40 (28.9)
150	16	8 x M 20		47 (34.0)
200	10	8 x M 20		68 (49.2)
200	16	12 x M 20		45 (32.5)
250	10	12 x M 20		65 (47.0)
250	16	12 x M 24		78 (56.4)
300	10	12 x M 20		76 (54.9)
300	16	12 x M 24		105 (75.9)
350	10	16 x M 20		75 (54.2)
400	10	16 x M 24		104 (75.2)
450	10	20 x M 24		93 (67.2)
500	10	20 x M 24		107 (77.4)
600	10	20 x M 27		138 (99.8)
700	10	20 x M 27		163 (117.8)
800	10	24 x M 30		219 (158.3)
900	10	28 x M 30		205 (148.2)
1000	10	28 x M 35		261 (188.7)

Meter size	Body pressure rating	Bolts	Max. torque Nm (ft × lbf)	
			A	B
inch	psig			
$^3/_8$	580	4 x $^1/_2$"	3.5 (2.5)	
$^1/_2$	580	4 x $^1/_2$"	3.5 (2.5)	
$^3/_4$	580	4 x $^1/_2$"	4.8 (3.5)	
1	580	4 x $^1/_2$"		4.4 (3.2)
$1^1/_2$	580	4 x $^1/_2$"		12 (8.7)
2	580	4 x $^5/_8$"		23 (16.6)
3	360	4 x $^5/_8$"		39 (28.2)
4	230	8 x $^5/_8$"		31 (22.4)
6	230	8 x $^3/_4$"		51 (36.9)
8	145	8 x $^3/_4$"		69 (49.9)
10	145	12 x $^7/_8$"		79 (57.1)
12	145	12 x $^7/_8$"		104 (75.2)
14	145	12 x 1"		93 (76.2)
16	145	16 x 1"		91 (65.8)
18	145	16 x $1^1/_8$"		143 (103.4)
20	145	20 x $1^1/_8$"		127 (91.8)
24	145	20 x $1^1/_4$"		180 (130.1)
28	145	28 x $1^1/_4$"		161 (116.4)
32	145	28 x $1^1/_2$"		259 (187.3)
36	145	32 x $1^1/_2$"		269 (194.5)
40	145	36 x $1^1/_2$"		269 (194.5)

Note: Process pressure must not exceed ANSI flange rating. Refer to ANSI Standard B 16.5.

Teflon® is registered trademark of Du Pont

7 Grounding

- All flowmeters must be properly grounded to avoid personnel shock hazard.
- The ground conductor should not transmit any interference voltages, therefore do not ground any other electrical devices together with this conductor.

AQUAFLUX F separate primary head with terminal box

- An **FE functional ground** must always be connected.
- **Signal converter with field power supply > 125 mA / 60 V** a **PE protective conductor** must be connected to the primary head, because of the higher field current from the signal converter. See grounding diagrams below.

AQUAFLUX 010 K, 020 K and 080 K compact systems

Supply power > 50 V AC

- Grounding is via the **PE protective ground conductor** incorporated in the power supply cable, see also Section "Connection to power" in the installation and operating instructions for the signal converter.
- **EXCEPTION: Do not connect up the PE protective ground conductor in the terminal box** if e.g. compact units are operated in the proximity of electric furnaces, electrolysis plants, etc., and large potential differences occur in the pipeline system. An FE functional ground must simultaneously take over the function of the protective conductor (combined protective/functional ground). Refer to appropriate national codes for specific requirements for this type of installation, which may require the addition of a ground fault detection circuit interrupter.

Power supply 24 V AC or DC

- Protective separation (PELV) must be ensured (VDE 0100 / VDE 0106 or IEC 364 / IEC 536 or equivalent national regulations).
- An **FE functional ground conductor** must be connected for measurement reasons.

Grounding diagrams

Metal pipelines, not internally coated grounding without grounding rings	**Metal pipelines, with or without internal coating, and plastic pipelines** grounding with grounding rings
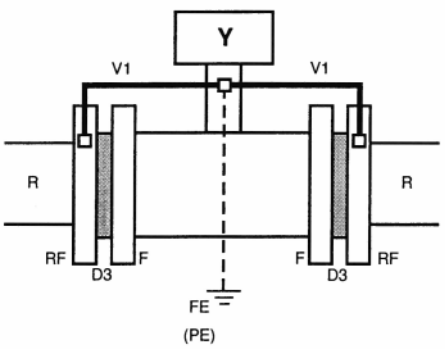	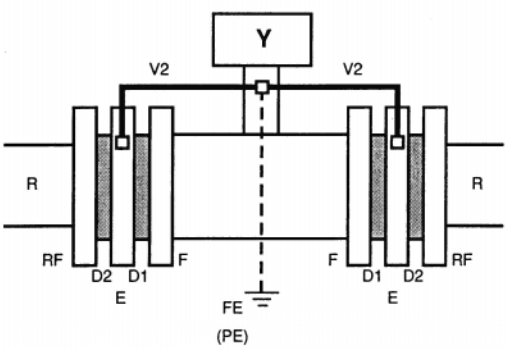

D1, D2, D3	Gaskets, not included with supply, to be provided by customer.
E	Grounding rings (option)
F	Flowmeter flanges
FE	Functional ground, wire ≥ 4 mm² Cu (10 AWG), not included with flowmeter, to be provided by customer
PE	Protective conductor required if the AQUAFLUX F is operated with a signal converter that supplies a field current of **> 125 mA / > 60 V**. Wire ≥ 4 mm² Cu (10 AWG), not included with flowmeter, to be provided by customer.
R	Pipeline
RF	Pipe flanges
V1, V2	Interconnecting wires, included with flowmeter
Y	Terminal box or signal converter

8 Replacement of the separate primary head

Switch off power source before commencing work !

1) Note down terminal assignment before dismantling the “old” primary head.

2) Install the new primary head as described in the supplied installation instructions.

3) Make electrical connection at the signal converter as described in the installation and operating instructions for the signal converter.

4) Specific calibration data are defined during factory calibration for each primary head, which are indicated on the instrument nameplate.
This includes the primary constant GK and the magnetic field frequency.
These data need to be reset in the signal converter.

5) If the size of primary head is also different from the old one, the full-scale range $Q_{100\%}$ and the meter size will need to be reset.

6) After resetting the signal converter, carry out a zero point check.

7) If necessary, reset the internal electronic totalizer of the signal converter.

9 Technical data

Meter sizes		
Compact systems	DN 10 – 1600 and $^3/_8$" – 64"	
AQUAFLUX F (separate)	DN 10 – 3000 and $^3/_8$" – 120"	
Pipe flanges		
to DIN 2501 (= BS 4504)	DN 10 – 50 and DN 80 / PN 40 DN 65 and DN 100 – 150 / PN 16 DN 200 – 1000 / PN 10 DN 1100 – 2000 / PN 6 DN 2200 – 3000 / PN 2.5	
to ANSI B 16.5	$^3/_8$" – 24" / Class 150 lb / RF	
to AWWA	14'' – 120'' / Class B or D / FF	
Electrical conductivity	≥ 20 µS/cm	
Temperatures	Ambient temperature	Process temperature
Compact systems	– 25 to + **60**°C – 13 to + **140**°F	– 5 to ≤ + 60°C – 23 to ≤ + 140°F
	– 25 to + **40**°C – 13 to + **104**°F	– 5 to + 90°C – 23 to ≤ + 194°F
AQUAFLUX F (separate)	– 25 to + 60°C – 13 to + 140°F	– 5 to + 90°C – 23 to + 194°F
Max. allowable operating data	Process temperature, operating pressure and vacuum load for the liner, refer to Sect. 11 "Limits"	
Insulation class of field coils	E	
Electrode design		
DN 10 – 3000 / $^3/_8$" – 120''	flat elliptical electrodes, solidly fitted, surface-polished	
Option DN 350 – 3000 / 14'' – 120''	field-replaceable electrodes WE	
Protection category (EN 60 529 / IEC 529)		
Standard	IP 67 equivalent to NEMA 6 (with field replaceable electrodes WE: IP 65, equivalent to NEMA 4/4X)	
Option	IP 68 equivalent to NEMA 6	
Grounding rings	available as an option	
Materials		
Measuring tube	stainless steel 1.4301 (or higher materials number), equivalent to SS 304	
Liner		
DN 10 – 20 / $^3/_8$" – $^3/_4$"	Teflon®-PTFE	
DN 25 – 150 / 1" – 6"	Polypropylene, hard rubber (option)	
DN 200 – 3000 / 8" – 120"	Hard rubber	
Electrodes		
Standard	Hastelloy C4	
Option	stainless steel 1.4571 or SS 316 Ti, titanium	
Field replaceable WE	stainless steel 1.4571 or SS 316 Ti	
Connecting flanges*		
DIN: DN 10-50, DN 80 ($^3/_8$"-2'', 3'')	steel 1.0402 (C 22) or AISI C 1020	
DN 65, ≥ DN 100 (≥ 4'')	steel 1.0501 (RST 37.2) or AISI C 1035	
ANSI	steel ASTM A 105 N	
Housing*		
DN 10 – 40 / $^3/_8$"–1$^1/_2$"	GTW-S 30 (malleable cast iron)	
≥ DN 50 / ≥ 2''	sheet steel	
Terminal box*		
AQUAFLUX F (separate)	die-cast aluminium	
Grounding rings (option)	stainless steel 1.4571 or SS 316 Ti	

* with polyurethane coating

Teflon® is a registered trademark of Du Pont.

10 Dimensions and weights

PLEASE NOTE !
The **total dimension for the height** is obtained from **dimension b** (see table) **plus the height** of the terminal box or the signal converter, see drawings.
The **total weight** is made up of the weight of the signal converter (see table) plus the weight of the terminal box or signal converter, see below.

Terminal box

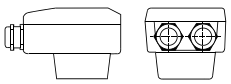

Weight approx.
0.5 kg (1.1 lb)

IFC 010 K and IFC 020 K signal converters

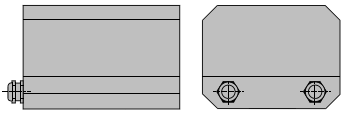

Weight approx.
1.6 kg (3.6 lb)

IFC 090 K signal converter

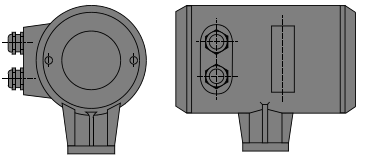

Weight approx.
2.3 kg (5.1 lb)

Flange connections to ...			**Dimensions** in mm (inch)
DIN 2501 (= BS 4504)	DN 10- 300	PN 40, 16, 10	see table
	DN 350-1000	PN 10	see table
	DN 350-1000	PN 25	see table, dimension „$a_{standard}$“ + 200 mm
	≥ DN 1200	PN 6, 2.5	information supplied on request
ANSI B 16.5	$^3/_8$”-24”	150 lb / RF	see table
		≥ 300 lb / RF	dimensions supplied on request
AWWA	≥ 14”	Class B, D / FF	dimensions supplied on request

- **Dimension “a” without flange gaskets:**
  not included with flowmeter, to be provided by customer.
- **Meter size $^3/_8$”:** flange connection $^1/_2$”

Nominal size			**Dimensions** in mm (inch)							**Approx. weight** in kg (lb)	
DIN		ANSI	**a** (fitting length)			**b**	**c**	**dia. D**		with DIN	with ANSI
DN	PN psig	inch	Standard	ISO 13 359	ANSI			DIN, ISO	ANSI	flanges	flanges
10	40 (580)	$^3/_8$	150 (5.91)	–	150 (5.91)	165 (6.50)	121 (4.76)	90 (3.54)	88.9 (3.50)	5 (11.0)	6 (13.2)
15	40 (580)	$^1/_2$	150 (5.91)	200 (7.87)	150 (5.91)	165 (6.50)	121 (4.76)	95 (3.74)	88.9 (3.50)	5 (11.0)	6 (13.2)
20	40 (580)	$^1/_2$	150 (5.91)	200 (7.87)	150 (5.91)	165 (6.50)	121 (4.76)	105 (4.13)	98.6 (3.88)	7 (15.4)	8 (17.6)
25	40 (580)	1	150 (5.91)	200 (7.87)	150 (5.91)	165 (6.50)	121 (4.76)	115 (4.53)	108 (4.25)	7 (15.4)	8 (17.6)
32	40 (580)	–	150 (5.91)	200 (7.87)	–	180 (7.09)	139 (5.47)	140 (5.51)	–	8 (17.6)	–
40	40 (580)	$1^1/_2$	150 (5.91)	200 (7.87)	150 (5.91)	180 (7.09)	139 (5.47)	150 (5.91)	127 (5.00)	8 (17.6)	9 (19.8)
50	40 (580)	2	200 (7.87)	200 (7.87)	200 (7.87)	218 (8.58)	160 (6.30)	165 (6.50)	152 (6.00)	8 (17.6)	8 (17.6)
65	16 (232)	–	200 (7.87)	200 (7.87)	–	228 (8.98)	173 (6.81)	185 (7.28)	–	10 (22)	–
80	40 (580)	3	200 (7.87)	200 (7.87)	200 (7.87)	235 (9.25)	173 (6.81)	200 (7.87)	191 (7.50)	12 (27)	13 (29)
100	16 (232)	4	250 (9.84)	250 (9.84)	250 (9.84)	286 (11.26)	233 (9.17)	220 (8.66)	228 (8.98)	15 (33)	18 (40) *
125	16 (232)	–	250 (9.84)	250 (9.84)	–	297 (11.69)	233 (9.17)	250 (9.84)	–	19 (42)	–
150	16 (232)	6	300 (11.81)	300 (11.81)	300 (11.81)	327 (12.87)	257 (10.12)	285 (11.22)	279 (10.98)	22 (49)	26 (58) *
200	10 (145)	8	350 (13.78)	350 (13.78)	350 (13.78)	385 (15.16)	291 (11.46)	340 (13.39)	343 (13.50)	34 (75)	42 (95) *
250	10 (145)	10	400 (15.75)	400 (15.75)	400 (15.75)	437 (17.20)	331 (13.03)	395 (15.55)	406 (16.00)	48 (107)	64 (140) *
300	10 (145)	12	500 (19.69)	500 (19.69)	500 (19.69)	500 (19.69)	381 (15.00)	445 (17.52)	533 (21.00)	58 (128)	94 (210) *
350	10 (145)	14	500 (19.69)	550 (21.65)	700 (27.56)	548 (21.57)	428 (16.85)	505 (19.88)	597 (23.50)	78 (172)	129 (285) *
400	10 (145)	16	600 (23.62)	600 (23.62)	800 (31.50)	606 (23.86)	483 (19.02)	565 (22.24)	635 (25.00)	98 (217)	165 (365) *
500	10 (145)	20	600 (23.62)	–	800 (31.50)	651 (25.63)	533 (20.98)	670 (26.38)	699 (27.50)	128 (283)	223 (492) *
600	10 (145)	24	600 (23.62)	–	800 (31.50)	820 (32.28)	585 (23.03)	780 (30.71)	813 (32.00)	164 (362)	306 (675) *
700	10 (145)	28	700 (27.56)	–	flanges	937 (36.89)	694 (27.32)	895 (35.24)	flanges	245 (540)	flanges
800	10 (145)	32	800 (31.50)	–	to AWWA,:	1058 (41.65)	922 (36.30)	1015 (39.96)	to AWWA,:	328 (724)	to AWWA:,
900	10 (145)	36	900 (35.43)	–	dimensions	1164 (45.83)	1026 (40.39)	1115 (43.90)	dimensions	42 (1000)	dimensions
1000	10 (145)	40	1000 (39.37)	–	on request	1278 (50.31)	1132 (44.57)	1230 (48.43)	on request	507 (1118)	on request

* weight with DIN-flanges, see column “PN”

DN 10 - 40 / $^3/_8$" - $1^1/_2$"

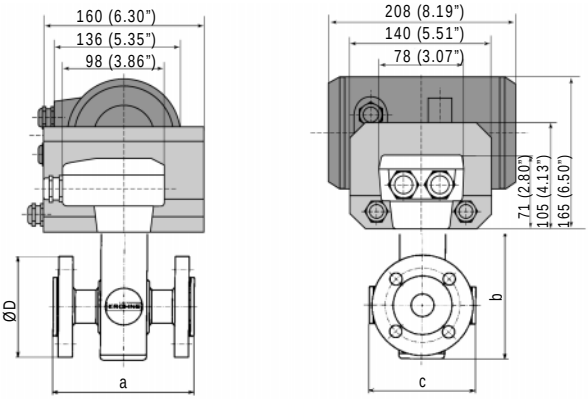

DN 50 - 300 / 2" - 12"

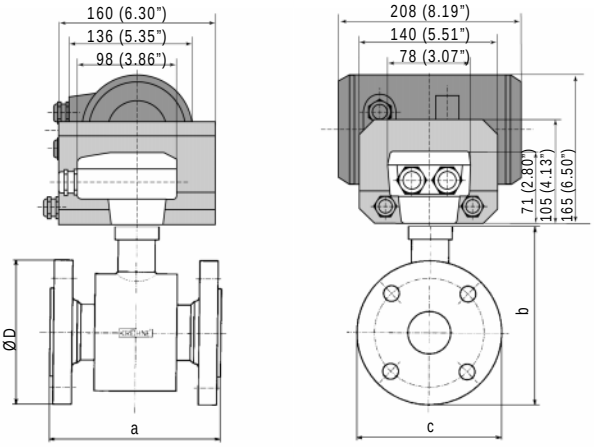

DN 350 - 2000 / 14" - 80"

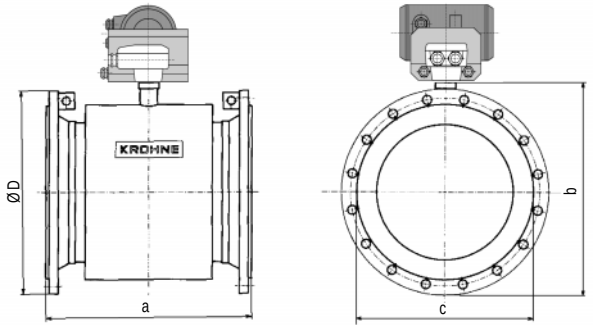

Tolerance details for fitting length dimension "a"

to DIN 2501 and ANSI B 16.5
DN ≤ 300 / ≤ 12": ± 0.5 %,
min. ± 1 mm / ± 0.04"
DN ≥ 350 / ≥ 14": ± 0.5 %

to ISO DIS 13 359
DN ≤ 200 / ≤ 8": +0 / -3
DN ≥ 250 / ≥ 10": +0 / -5

11 Limits

PLEASE NOTE !

- The limits specified in the table for process temperature and operating pressure make allowance for the tube liner and the flange standard. Refer also to the footnotes.

- At **ambient temperatures of +40 to +60 °C or +104 to +140 °F** the **product temperature** may **not be higher than +60 °C or +140 °F.**

Limits for pressure and temperature

Liner	Flange				Max. operating pressure in bar (psig) at a process temperature of ...									
	Standard	Nominal diameter	Pressure rating Classe	S O	≤20°C	(≤68°F)	≤40°C	(≤105°F)	≤60°C	(≤140°F)	≤80°C	(≤176°F)	≤90°C	(≤195°F)
PTFE	DIN 2501	DN 10 – 20	PN 40	S	40	(580)	40	(580)	40	(580)	40	(580)	40	(580)
	ANSI B 16.5	$^3/_8$" – $^3/_4$"	150 lb	S	19.7	(285)	19.6	(284)	19.0	(275)	18.7	(271)	18.1	(262)
			300 lb	O	on request									
Polypropylen	DIN 2501	DN 25 – 50, DN 80	PN 40	S	40	(580)	40	(580)	40	(580)	40	(580)	40	(580)
		DN 65, DN 100 - 150	PN 16	S	16	(230)	16	(230)	16	(230)	16	(230)	16	(230)
	ANSI B 16.5	1" – 6"	150 lb	S	19.7	(285)	19.6	(284)	19.0	(275)	18.7	(271)	18.1	(262)
			300 lb	O	on request									
Hard rubber	DIN 2501	DN 200 – 1000	PN 10	S	10	(150)	10	(150)	10	(150)	10	(150)	-	
			PN 16	O	16	(230)	16	(230)	16	(230)	16	(230)	-	
		≥DN 1200	PN 6 / 2.5	-	on request									
	ANSI B 16.5	8"	150 lb	S	19.7	(285)	19.6	(284)	19.0	(275)	18.7	(271)	-	
			300 lb	O	23.6	(342)	23.6	(342)	23.4	(342)	22.5	(342)	-	
		10"	150 lb	S	19.7	(285)	19.6	(284)	19.0	(275)	18.7	(271)	-	
			300 lb	O	32.1	(465)	32.1	(465)	32.1	(465)	32.1	(465)	-	
		12"	150 / 300 lb	S/O	19.7	(285)	19.6	(284)	19.0	(275)	18.3	(265)	-	
		14"	150 / 300 lb	S/O	17.8	(258)	17.8	(258)	17.6	(255)	16.9	(245)	-	
		16"	150 / 300 lb	S/O	15.6	(226)	15.6	(226)	15.4	(223)	14.8	(214)	-	
		18"	150 / 300 lb	S/O	13.8	(200)	13.8	(200)	13.7	(198)	13.1	(190)	-	
		20"	150 / 300 lb	S/O	12.4	(179)	12.4	(179)	12.3	(178)	11.8	(171)	-	
		22"	150 / 300 lb	S/O	11.2	(162)	11.2	(162)	11.2	(162)	10.7	(155)	-	
		24"	150 / 300 lb	S/O	14.2	(205)	14.2	(205)	14.1	(204)	13.6	(197)	-	
		28" - 40"	-	-	on request									
	AWWA	≥14"	B	S	6	(90)	6	(90)	6	(90)	6	(90)	-	
			D	O	10	(150)	10	(150)	10	(150)	10	(150)	-	

S = Standard
O = Option

Vacuum load

Liner	Meter size		Min. operating pressure in mbar abs. (psia) at product temperature of ...							
	DN mm	inches	≤20°C	(≤68°F)	≤40°C	(≤105°F)	≤60°C	(≤140°F)	≤80°C	(≤176°F)
PTFE	DN 10 – 20	$^3/_8$" – $^3/_4$"	0	(0)	0	(0)	0	(0)	0	(0)
Polypropylene	DN 25 – 150	1" – 6"	250	(3.6)	250	(3.6)	400	(5.8)	400	(5.8)
Hard rubber	DN 200 – 3000	8 – 120	250	(3.6)	250	(3.6)	400	(5.8)	400	(5.8)
	DN 350 – 1000	14 – 40	500	(7.3)	500	(7.3)	600	(8.7)	600	(8.7)
	≥DN 1200	≥48"	on request		on request		on request		on request	

If you need to return flowmeters for testing or repair to KROHNE

Your electromagnetic flowmeter

- has been carefully manufactured and tested by a company with ISO 9001 certification
- and volumetrically calibrated in one of the world's most accurate test rigs.

If installed and operated in accordance with these operating instructions, your flowmeter will rarely present any problems.

Should you nevertheless need to return a flowmeter for checkout or repair, please pay strict attention to the following points:

Due to statutory regulations concerning protection of the environment and the health and safety of our personnel, Krohne may only handle, test and repair returned flowmeters that have been in contact with liquids if it is possible to do so without risk to personnel and environment. This means that Krohne can only service your flowmeter if it is accompanied by a certificate in line with the following model confirming that the flowmeter is safe to handle.

If the flowmeter has been operated with toxic, caustic, flammable or water-endangering liquids, you are kindly requested

- to check and ensure, if necessary by rinsing or neutralizing, that all cavities in the flowmeter are free from suchdangerous substances.
  (Directions on how you can find out whether the primary head has to be opened and then flushed out or neutralized are obtainable from Krohne on request.)
- to enclose a certificate with the flowmeter confirming that the flowmeter is safe to handle and stating the liquid used.

KROHNE regret that they cannot service your flowmeter unless accompanied by such a certificate.

S P E C I M E N certificate

Company: …….. Address: ……

Department: …….. Name: ……

Tel. No.: ……

The enclosed electromagnetic flowmeter

Type: …….. KROHNE Order No. or Series No ……

has been operated with the following liquid: ……..

Because this liquid is
water-endangering * / toxic * / caustic * / flammable *
we have
– checked that all cavities in the flowmeter are free from such substances *
– flushed out and neutralized all cavities in the flowmeter *
(* delete if not applicable)
We confirm that there is no risk to man or environment through any residual liquid contained in this flowmeter.

Date: …….. Signature: ……..

Company stamp:

APPENDIX C Manufacturer's Information

Krohne Signal Converter Data

DRAFT

KROHNE

Anlagen Export GmbH
KANEX

Signal converter IFC 010 and IFC 020

- **For electromagnetic flowmeters**
- **Standard low cost converter for non-hazardous appplications (IFC 010)**
- **Standard converter with HART® and RS 485 interface (IFC 020)**
- **Forward/reverse flow measurement**

The signal converter IFC 010/010 with microprocessor are suitable for Eco-, Aqua-, Alto-, Profi-, Variflux. Functions and data can be set via PC or handheld terminal.

Technical Data

	IFC 010	IFC 020
Version	B - version without display / control unit (basic version) D - version with display / control unit	With display / control unit HART® and RS 485 Interfaces
	Option: - CONFIG-software and RS 232-adapter for control via MS-DOS-PC, connection to IMoCOM interface(010/020) - Hand-Held-Terminal for control of blind versions (010) - Other bus and computer interfaces in preparation (010)	
Current Output		
Function	all operating data settable, galvanically isolated	
Current	0 - 20 mA or 4 - 20 mA	
Active output	load max. 500 ohms	
Passive output	external voltage: 15...20 V DC | 20...32 V DC load: min...max.: 0...500 ohms | 250...750 Ω	
Error identification	0 / 3.6 / 22 mA	
Forward / reverse measurement	direction identified via status output	
Status output (passive)		
Function	settable as indicator for flow direction, errors or trip point	
Connection	external voltage: extern, $U_{ext.} \leq 30$ V DC / ≤ 24 V AC load current: $I_{max} \leq 150$ mA	
Control input (passive) only IFC 020 E		
Function	-	- settable for totalizer reset, set outputs to min. values or hold actual output values - initiate function by “low” or “high” control signals
Control signals	-	U_{max}: 24 V **AC** 32 V **DC** (any polarity) low: ≤ 1,4 V ≤ 2 V high: ≥ 3 V ≥ 4 V
Housing		
Material	polycarbonate (PC)	polycarbonate (PC) and die-cast aluminium
Protection category (IEC 529 / EN 60529)	IP 65 equivalent to NEMA 4 / 4X	IP 65 equivalent to NEMA 4 / 4X

Krohne Messtechnik GmbH & Co. KG
Ludwig-Krohne-Strasse 5
47058 Duisburg
Federal Republic of Germany

Tel: +49 (0) 203 301-0
Fax: +49 (0) 203 301-311
http://www.kanex-krohne.com
Email: info@kanex-krohne.com

Time constant	0.2 to 99.9 seconds, settable in increments of 0.1 second
Low-flow cutoff	cutoff “on” value: 1 to 19%, of Q_{100}, adjustable in 1% increments cutoff “off” value: 2 to 20%, of Q_{100}, adjustable in 1% increments
Pulse Ouput	
Function	- all operating data settable - galvanically isolated - digital pulse division, interpulse period non-uniform, therefore if frequency meters connected allow for minimum counting intervall: gate time, totalizer $\geq \frac{1000}{P_{100\%}[Hz]}$
Pulse rate for Q = 100%	10, 100 or 1000 pulses per second (= Hz), fixed or optionally adjustable in pulse per liter, m^3 or US gallons
Active output:	connection: electronic totalizer (EC) internal voltage: approx. 15 V DC, from current output load rating: I_{max} < 23 mA when operated without current output I_{max} < 3 mA when operated with current output
Passive output:	connection electromechanical (EMC) or electronical (EC) totalizers external voltage: $U_{ext.} \leq 30$ V DC / ≤ 24 V DC load current: $I_{max} \leq 150$ mA
Pulse width	- 50, 100, 200 or 500 ms, selectable with frequencies below 10 Hz
Forward / reverse measurement	direction identified via status indication output

Power supply	**Converter**	**1. AC-Version** Standard	**2. AC-Version** Option	**3. AC-Version** Option (not IFC 020 E)	**DC-Version** Option*
1. Rated voltage tolerance band	IFC 010	230 / 240 V 200 - 260 V	200 V 170 - 220 V	48 V 41 - 43 V	24 V 11 - 32 V
	IFC 020	230 / 240 V 200 - 260 V	200 V 170 - 220 V	48 V 41 - 43 V	-
2. Rated voltage tolerance band	IFC 010 / IFC 020	115 / 120 V 100 - 130 V	100 V 85 - 110 V	24 V 20 - 26 V	- -
Frequency	IFC 010 / IFC 020	48 - 63 Hz			-
Power consumption	IFC 010 / IFC 020	Approx. 5 VA			Approx 4.5 W
	When connetced to a functional extra-low voltage, protective separation (PELV) must be ensured (VDE 0100 / VDE 0106 and IEC 364 / * IVC 020 E in preparing				

Local display (D versions only)	3-line LCD
Display functions	actual flowrate, forward, reverse and sum totalizers (7-digit) or 25-character bar graph with percent display and status messages
Display units: actual flowrate	settable in liter/s, m^3/h, US gallons/min or user-defined unit, e. g. hectoliter/day or US million gallons/day
totalizers	liter, m^3 or US gallons and 1 user-defined unit (e.g. hectoliter), selectable overflow time
Language of plain texts	English, German, French, others on request
Display: 1st (top) line	8-character, 7-segment numeral and sign display, symbols for key acknowledgement
2nd (middle) line	10-character, 14-segment text display
3rd (bottom) line	6 markers ∇ to identify display

Subject to change without notice.
© Copyright Krohne Messtechnik GmbH & Co. KG

Krohne Messtechnik GmbH & Co. KG
Ludwig-Krohne-Strasse 5
47058 Duisburg
Federal Republic of Germany

Tel: +49 (0) 203 301-0
Fax: +49 (0) 203 301-311
http://www.kanex-krohne.com
Email: info@kanex-krohne.com

APPENDIX C Manufacturer's Information

Limitorque LY-MOD 20 Integral Control Diagram Dwg 17-500-0008-3, Rev A.

DRAFT

B-211600-200520 0-73230

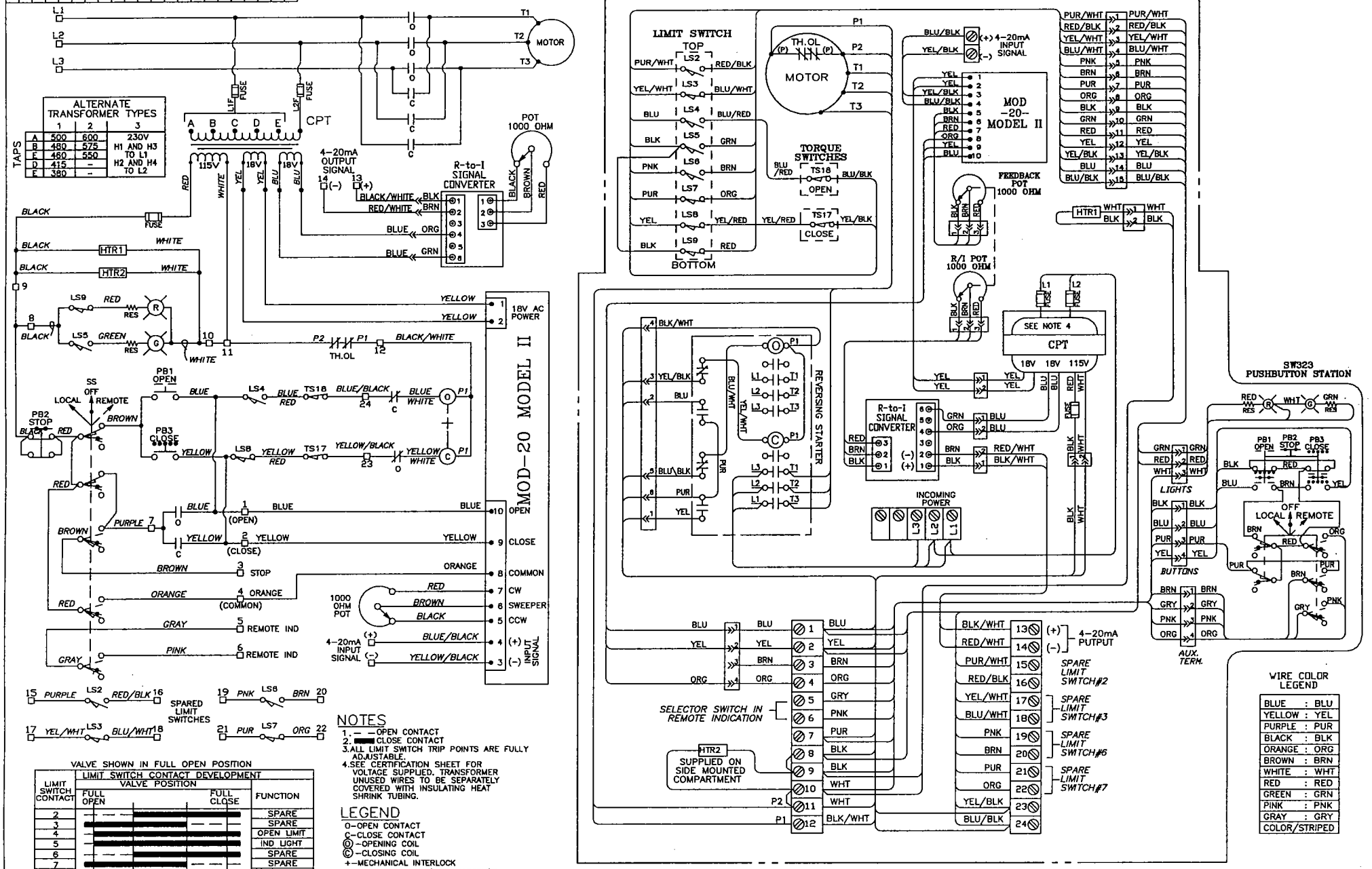

ELECTRICAL COMPARTMENT

VALVE SHOWN IN FULL OPEN POSITION

LIMIT SWITCH CONTACT DEVELOPMENT

LIMIT SWITCH CONTACT	VALVE POSITION FULL OPEN → FULL CLOSE	FUNCTION
2		SPARE
3		SPARE
4		OPEN LIMIT
5		IND LIGHT
6		SPARE
7		SPARE
8		CLOSED LIMIT
9		IND LIGHT

TS17- CLOSING TORQUE SWITCH INTERRUPTS CONTROL CIRCUIT IF MECHANICAL OVERLOAD OCCURS DURING CLOSING CYCLE

TS18- OPENING TORQUE SWITCH INTERRUPTS CONTROL CIRCUIT IF MECHANICAL OVERLOAD OCCURS DURING OPENING CYCLE

NOTES

1. — OPEN CONTACT
2. ▬ CLOSE CONTACT
3. ALL LIMIT SWITCH TRIP POINTS ARE FULLY ADJUSTABLE.
4. SEE CERTIFICATION SHEET FOR VOLTAGE SUPPLIED. TRANSFORMER UNUSED WIRES TO BE SEPARATELY COVERED WITH INSULATING HEAT SHRINK TUBING.

LEGEND

O-OPEN CONTACT
C-CLOSE CONTACT
Ⓞ-OPENING COIL
Ⓒ-CLOSING COIL
+-MECHANICAL INTERLOCK
CPT-CONTROL POWER TRANSFORMER
TH.OL-THERMAL OVERLOAD CONTACTS
SS-SELECTOR SWITCH (LOCAL-OFF-REMOTE)
PB1-OPEN PUSHBUTTON
PB2-STOP PUSHBUTTON
PB3-CLOSE PUSHBUTTON
HTR1-SPACE HEATER
HTR2-SPACE HEATER (SIDE MOUNTED COMPT. ONLY)
POT-SLIDEWIRE TRANSMITTER (OPTIONAL) (SEE CERTIFICATION SHEET IF REQUIRED)
Ⓡ RED INDICATING LIGHT
Ⓖ GREEN INDICATING LIGHT
RES-LAMP RESISTORS

WIRE COLOR LEGEND

BLUE	BLU
YELLOW	YEL
PURPLE	PUR
BLACK	BLK
ORANGE	ORG
BROWN	BRN
WHITE	WHT
RED	RED
GREEN	GRN
PINK	PNK
GRAY	GRY
COLOR/STRIPED	

NO.	DESCRIPTION	DATE
A	CORRECTED COLORS ON S/C PLUG	KEH 2/7/96

REVISION

DRAWN KEH 06/02/95 | CHECKED JD | APPROVED gD 6/5

LIMITORQUE CORPORATION

TITLE: LY MOD-20 BASIC INTEGRAL CONTROL DIAGRAM 3ph MOTOR + SIGNAL CONVERTER + SW323

1ST ORDER NO. STANDARD | DRAWING NO. 17-500-0008-3 | REV A | SHEET 1 OF 1

L-782 REV-A 4/26/93

APPENDIX C

Manufacturer's Information

Limitorque PT20SD Position Transmitter Calibration Instructions

DRAFT

PT20SD

Position Transmitter

Calibration Instructions

For use with non-UEC controls only; to use with UEC-3 controllers, please see bulletin 440-12000, UEC-3 Operation Manual

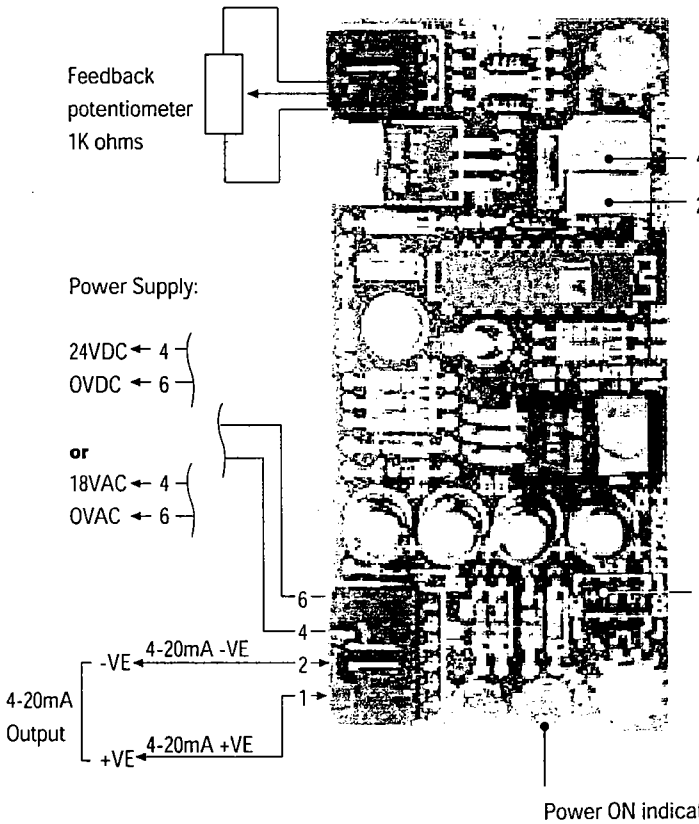

Specification

Output signal
- 4-20mA

Input potentiometer
- 1K (ohms)

Temperature rating
- -40 to +85°C

Linearity error
- ±1% max.

Loop resistance
- 370 (ohms) max.

Power
- 18 VAC or 24 VDC ± 10% (LK2 and LK3 must be set appropriately)

Important note

Analog inputs must not be connected to earth ground on +VE or -VE terminal.

Calibration procedure

1. Position the actuator to mid-travel (valve at 50% Position).
2. Disconnect the potentiometer wiring harness from the PT20SD board and measure the resistance from each End connection to the center connection on the potentiometer.
3. To set the potentiometer to the correct resistance reading, loosen the setscrew that retains the spur gear on the potentiometer shaft and rotate the shaft until a reading of 500(ohms) is acheived.
4. Tighten the setscrew and reconnect the wiring harness to the PT20SD.
5. Run the actuator fully CLOSED.
6. Calibrate ZERO position by adjusting the zero potentiometer until a 4mA output signal is read at terminals +VE and -VE.
7. Run the actuator fully OPEN.
8. Calibrate SPAN position by adjusting the span potentiometer until a 20mA output signal is read at terminals +VE and -VE.
9. Repeat steps 5 to 8 and fine-tune as necessary.

Limitorque

APPENDIX C

Manufacturer's Information

Limitorque (Mead O'Brien, Inc.) Dwg No. I33762 (dimensioned drawing of Milliken 6" valve with Limitorque Actuator)

DRAFT

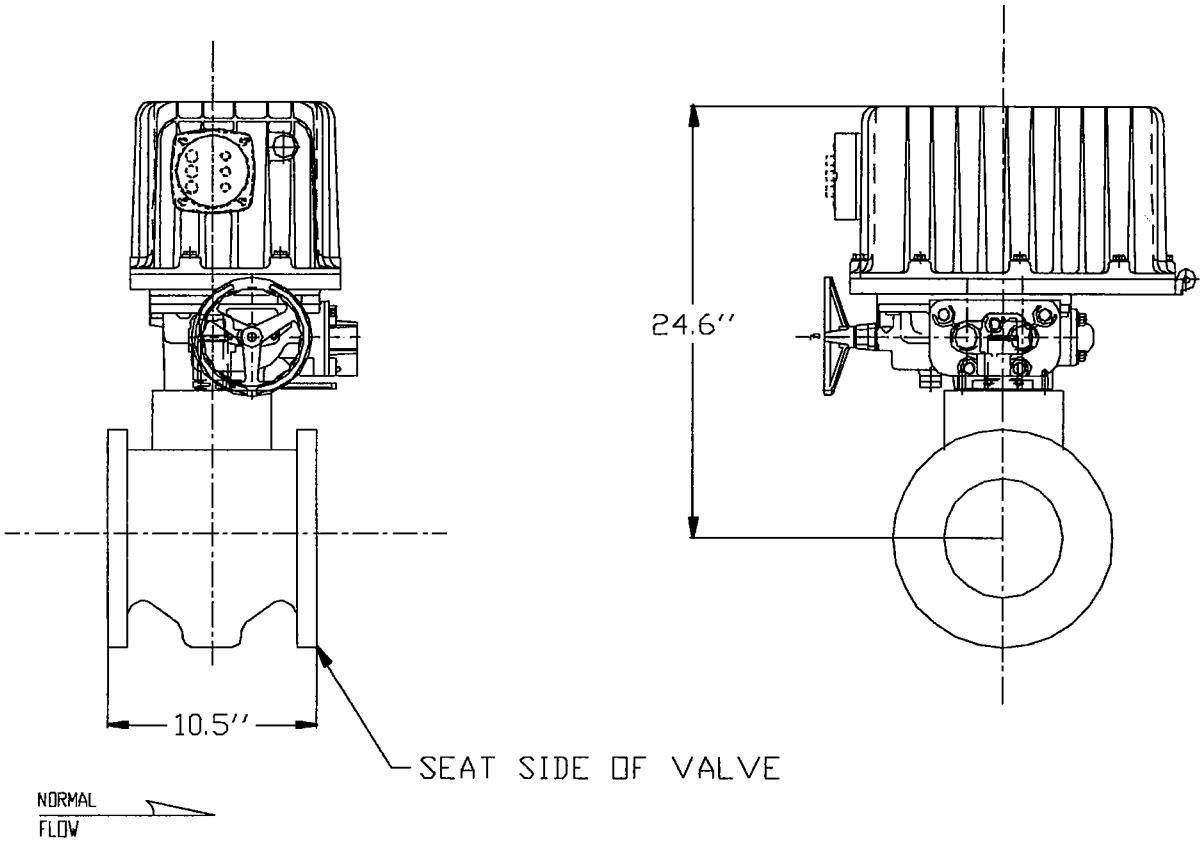

Valve

6" MILLIKEN PLUG VALVE

Actuator Model

LIMITORQUE LY1001 W/BIC

TAG: URS Project 21561391 -
Solutia - P. O. No. 635008OP

Mead O'Brien, Inc. Ulmer Equipment Co., Inc.	
Date: 01/07/05	Rev. No. 1
Ref. No.	133762 ITEM 1
Dwg. No.	133762

DRAWING NOT TO SCALE

APPENDIX C

Manufacturer's Information

Limitorque Dwg 03-459-0077-1, Rev E (1-22-92), LY-1001 Unit with A1 Top Mount Integral Compartment)

DRAFT

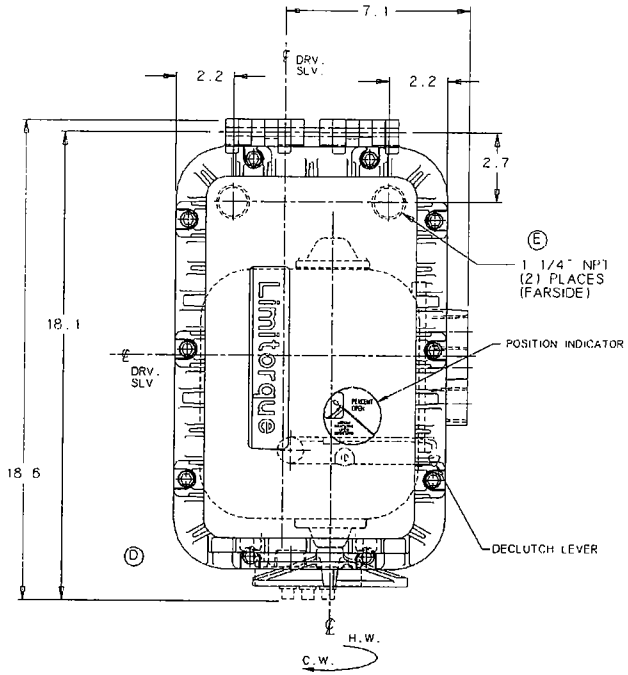

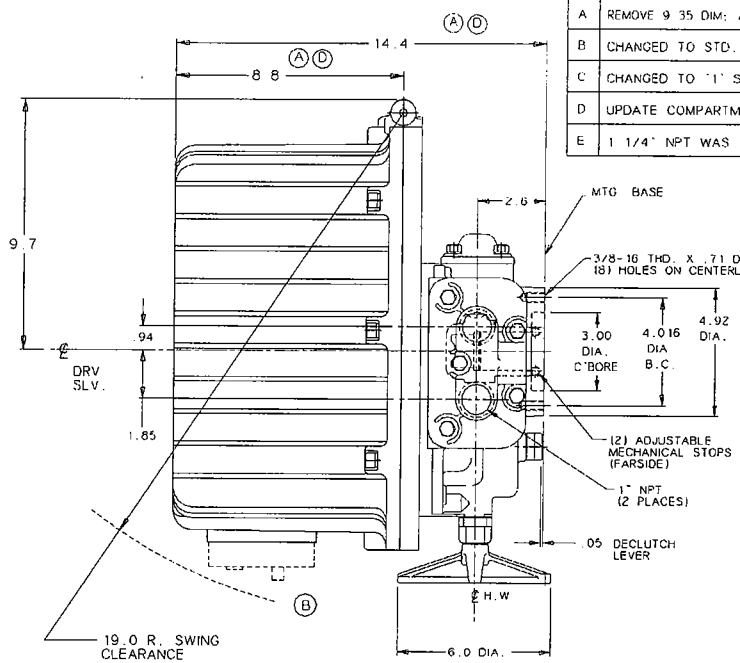

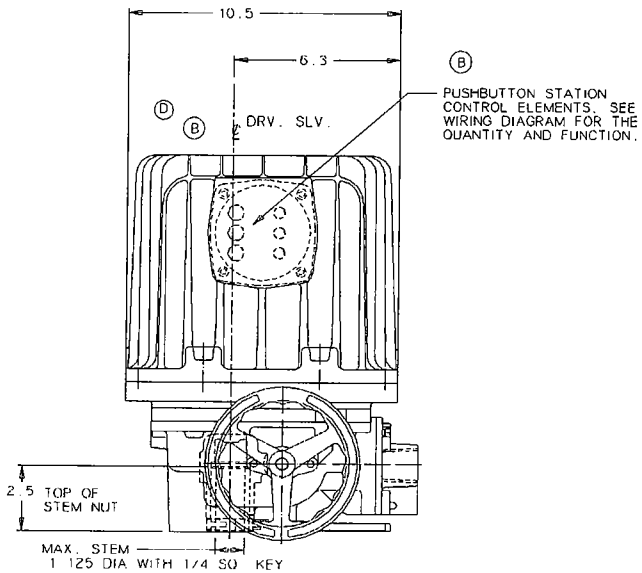

REVISIONS				
REV	DESCRIPTION	BY	DATE	APPVD
A	REMOVE 9.35 DIM; ADD 8.6 DIM ADD 14.2 DIM	CCR	2-92	RGP
B	CHANGED TO STD. 'SW' STATION	CCR	8-92	RGP
C	CHANGED TO '1' SIZE	CCR	9-28 1995	KGR
D	UPDATE COMPARTMENT	CCR	9-22 1997	KGR
E	1 1/4" NPT WAS 1" NPT	CCR	5-3 2000	BB

DRAWN CCR	DATE 1-22-92	LIMITORQUE CORPORATION 5114 WOODALL ROAD, LYNCHBURG, VIRGINIA 24506-1318	
CHECKED RA	DATE 1-22-92	TITLE LY-1001 UNIT WITH: A) TOP MOUNT INTEGRAL COMPARTMENT	
APPROVED RGP	DATE 1-22-92	SIZE A	DWG NO 03-459-0077-1 REV E
[ ] = MILLIMETER VALUE UNLESS OTHERWISE SPECIFIED DIMENSIONS ARE IN INCHES		SCALE NONE	ORDER NO N/A

APPENDIX C

Manufacturer's Information

Limitorque Actuation Systems
Modutronic 20 II
Installation & Maintenance Manual

DRAFT

FLOWSERVE

Limitorque Actuation Systems

401-12000
Rev. B
Feb. 2003

Limitorque®

Modutronic 20 II
Installation & Maintenance Manual

FLOWSERVE

Limitorque Actuation Systems

401-12000
Rev. B
Feb. 2003

Limitorque®

Modutronic 20 II

Installation & Maintenance Manual

Modutronic 20 II Installation & Maintenance Manual

©2003 Copyright Limitorque. All rights reserved.
Printed in the United States of America.

Disclaimer

No part of this book shall be reproduced, stored in a retrieval system, or transmitted by any means, electronic, mechanical, photocopying, recording, or otherwise without written permission from Limitorque. While every precaution has been taken in the preparation of the book, the publisher assumes no responsibility for errors or omissions. Neither is any liability assumed for damages resulting from the use of the information contained herein.

This document is the proprietary information of Limitorque furnished for customer use ONLY. No other uses are authorized without written permission from Limitorque.

Limitorque reserves the right to make changes, without notice, to this document and the products it describes. Limitorque shall not be liable for technical or editorial errors or omissions made herein; nor for incidental or consequential damages resulting from the furnishing, performance, or use of this document.

The choice of system components is the responsibility of the buyer, and how they are used cannot be the liability of Limitorque. However, Limitorque's sales team and application engineers are always available to assist you in making your decision.

This manual contains information that is correct to the best of Limitorque's knowledge. It is intended to be a guide and should not be considered as a sole source of technical instruction, replacing good technical judgment, since all possible situations cannot be anticipated. If there is any doubt as to the exact installation, configuration, and/or use, call Limitorque at (434) 528-4400. The latest revisions to this document are available online at http://www.limitorque.com

Table of Contents

1 Introduction **1-1**
1.1 Safety Information 1-1
1.2 Product Identification 1-2
1.3 Product Description 1-2
1.4 Product Features 1-2
1.5 Product Specifications 1-3

2 Operation **2-1**

3 Definitions **3-1**

4 Initial Checkout & Setup **4-1**
4.1 Verify Correct Motor Rotation (Phasing) & OPEN/CLOSE Pushbutton Operation 4-1
4.2 Verify Limit Switch & Torque Switch Settings 4-3
4.3 Adjusting the Actuator Feedback Potentiometer 4-3
4.4 Connecting the Modutronic 20 II to Customer Command Signal Leads 4-4

5 Modutronic 20 II Presets **5-1**

6 Calibration Procedure **6-1**

7 Troubleshooting **7-1**

8 Wiring Diagram **8-1**

9 Schematic **9-1**

Figures

Figure 1.1 – Modutronic 20 II 1-2
Figure 2.1 – LY with a Modutronic 20 II & Associated Actuator Components 2-1
Figure 3.1 – Calibration Positions 3-1
Figure 4.1 – Standard Motor Rotation & Reverse Motor Rotation Wiring Diagrams for Dual Voltage, Capacitor Start, Induction Run, and Single-Phase Low-Voltage Motors 4-2
Figure 4.2 – Standard Motor Rotation & Reverse Motor Rotation Wiring Diagrams for Dual Voltage, Capacitor Start, Induction Run, and Single-Phase High-Voltage Motors 4-2
Figure 4.3 – Potentiometer Calibration Components Shown on a LY Position Indicator 4-3
Figure 6.1 – Calibration Adjustments for the Modutronic 20 II 6-1
Figure 6.2 – mA Calibrator Typically Connects to an Interconnect Board Terminal Strip or Terminal Strips Located in the Rear of a Panel-Mounted Modutronic 20 II 6-2
Figure 6.3 – Modutronic 20 II Board Component Locations 6-2
Figure 6.4 – FAIL TO Mode JP1 Jumper 6-5
Figure 8.1 – Modutronic 20 II Typical 3-Phase Wiring Diagram 8-2, 8-3
Figure 9.1 – Modutronic 20 II Schematic Diagram 9-2, 9-3

Tables

Table 4.1 – Modutronic 20 II Terminal Connections 4-4
Table 5.1 – ON/OFF Potentiometer Turns for Desired Operating Time 5-1
Table 6.1 – DIP Switch Setting Levels of Deadband Accuracy 6-3

1 Introduction

1.1 Safety Information

This Installation & Maintenance Manual was written for the user who is adding Modutronic 20 II capability to an existing actuator or who wants to adjust and/or troubleshoot a previously installed Modutronic 20 II Controller. These guidelines provide the information that is necessary to correctly install, set up, calibrate, and troubleshoot the Modutronic 20 II Controller.

Your safety and satisfaction are very important to Limitorque. Please follow all instructions carefully and pay special attention to safety.

The following methods will be used to emphasize text throughout this manual:

⚠ WARNING: Refers to personal safety. This alerts the reader to potential danger or harm. Failure to follow the advice in warning notices could result in personal injury or death.

CAUTION: Directs attention to general precautions, which, if not followed, could result in personal injury and/or equipment damage.

NOTE: Highlights information critical to the understanding or use of these products.

Bold text highlights other important information that is critical to system components.

CAPITALIZED text stresses attention to the details of the procedure.

Underlined text emphasizes crucial words in sentences that could be misunderstood if the word is not recognized.

The purpose of these emphasized blocks of text is to alert the reader to possible hazards associated with the equipment and the precautions that can be taken to reduce the risk of personal injury and damage to the equipment.

Read and become familiar with the material in these guidelines before attempting installation, operation, or maintenance of the equipment. Failure to observe precautions could result in serious bodily injury, damage to the equipment, or operational difficulty.

⚠ WARNING: Read this Installation & Maintenance Manual carefully and completely before attempting to install or operate the Modutronic 20 II. Be aware of electrical hazards when installing or performing maintenance on the Modutronic.

1.2 Product Identification

Figure 1.1 – Modutronic 20 II

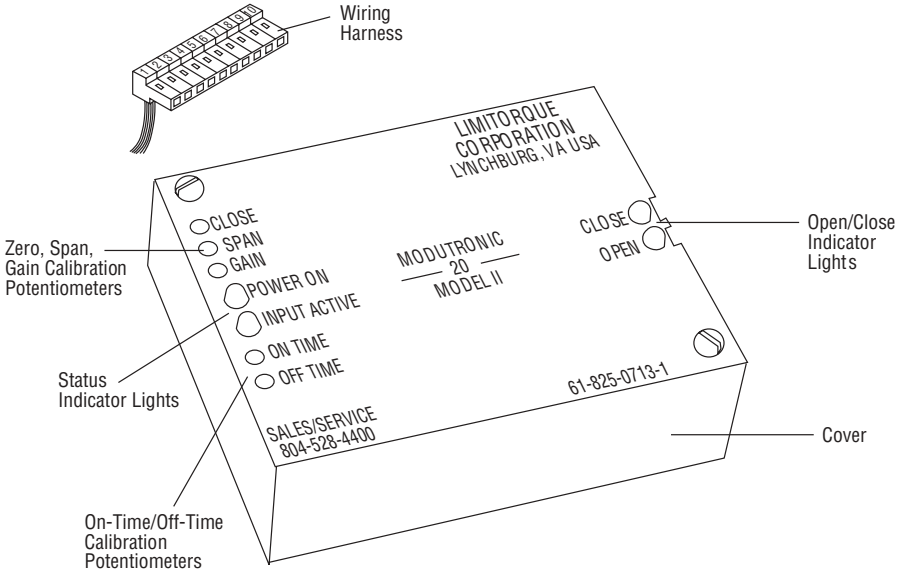

1.3 Product Description

The Modutronic 20 II™ is a solid state-integrated circuit-based controller. It is used to operate electric valve actuators in wastewater, petrochemical, and other industry applications requiring accurate modulation positioning. The standard input consists of a 4-20 mA signal generated by a process controller; the resulting output is used to accurately and repeatably position a valve actuator through conventional or solid state switching of either single or three-phase AC power.

1.4 Product Features

- Accuracy and repeatability of positioning within 1% of full-scale for actuator stroke times > 30 seconds.
- Solid state circuitry for longer life and reliable service.
- 4-20 mA command signal.
- Can be used to control single or three-phase systems.
- Jumper selectable **Lock-in-Last** or **Fail-Closed** configurations if command signal is lost.
- Five parameters available for adjustment allows actuator/application match.
- Adjustable ON and OFF motor control timers.
- LED indicators display signal, power, and control status to simplify calibration and monitor performance.

1.5 Product Specifications

Modutronic 20 II Specifications	
Power Requirements	Derived from actuator supply Board power 18 VAC or 24 VDC (±10%).3VA
Control Signal	4-20 mA
Accuracy	Within ±1% (>30 second stroke)
Loss of Command Signal Selections	Fail-to-last-position Fail-to-minimum-signal-position
Temperature	-40°C to +85°C (operating)
Maximum Starts Per Hour	Solid state reverser–600/hour Electromagnetic contactor–100/hour
Maximum direct output loading	Motor current–4.5 A Inrush, 3 A Holding
Dimensions	Mod 20–1.5"H x 3.25"W x 4"L Separate enclosure 11.7"H x 12.75"W x 17.4"L
Deadband	Adjustable between 1% and 10%
Resolution	1%
Linearity	1%
Humidity	To 95% (non-condensing)

This page is intentionally blank.

2 Operation

The Modutronic 20 II receives an input signal, normally 4-20 mA, from the external process controller. This signal is compared (within the Mod 20 II circuitry) to the present position of the actuator as indicated by the signal from the Feedback Potentiometer attached to the gear train of the actuator. The comparison of these two signals generates an error signal that dictates the direction and distance the actuator needs to be driven.

Upon generation of the error signal, the appropriate output triac is enabled and 115-volt control power is directed to the output contactor (this may be an electro-mechanical contactor or a solid state reverser depending upon the application).

As the actuator drives toward the set-point, it enters a region surrounding the set-point where the control function within the Mod 20 II changes from a continuous power application to a pulsing mode (proportional band). The Mod 20 II continuously compares the valve's actual position to the desired set-point through its circuitry; motor pulsing is continued until the actuator is accurately positioned at the set-point. The point in the valve travel at which the pulsing mode is enabled and spacing/duration of the pulses are all user adjustable on the Mod 20 II.

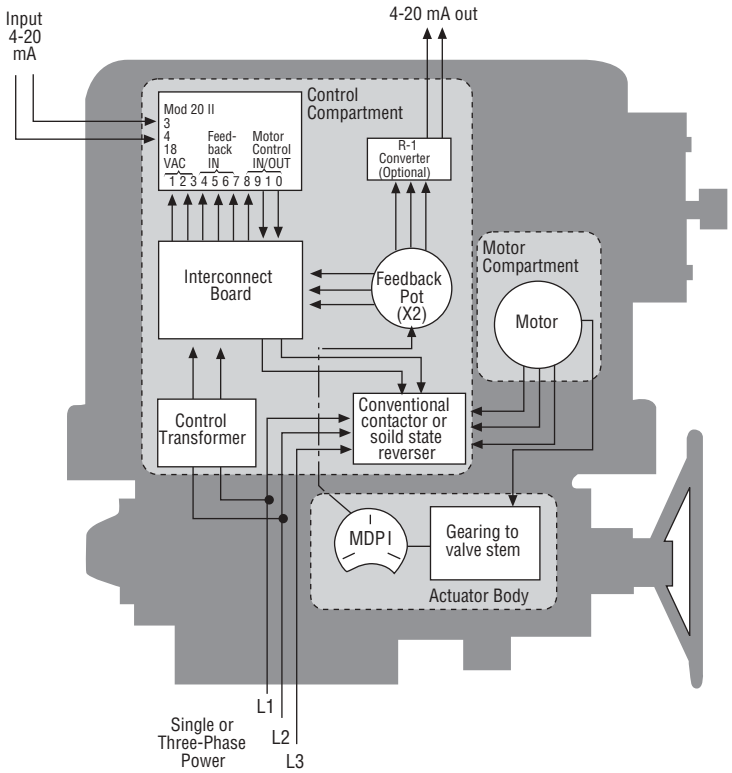

Figure 2.1 – LY with a Modutronic 20 II & Associated Actuator Components

This page is intentionally blank.

3 Definitions

Figure 3.1 – Calibration Positions

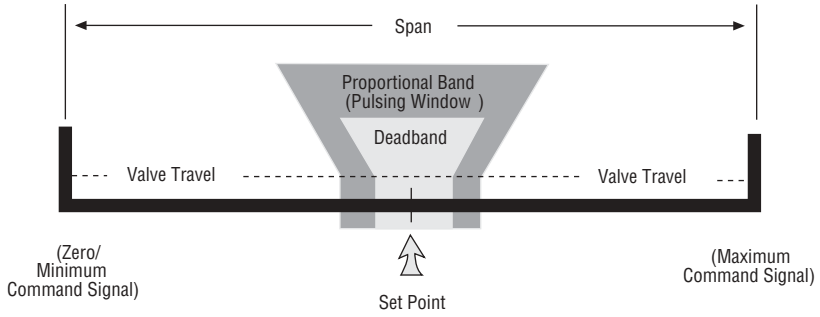

Command Signal Input signal provided by user to assign the desired valve position.

Deadband Adjusts the maximum allowable error signal. (Difference between the Position Command Signal and Position Feedback Potentiometer Signal). Selectable on the Mod 20 II DIP Switch. See **Table 6.1** for DIP Switch setting chart.

Proportional Band (Pulsing Window) controls the point on the scale of valve travel that the motor begins the pulsing mode. (Increasing GAIN decreases the window width).

- Adjusting the GAIN Potentiometer fully CW ↷ (increasing GAIN/decreasing pulsing window), sets the GAIN to its maximum setting causing the motor to run continuously up to the Set-Point before power is turned off from the motor.
- Adjusting the GAIN Potentiometer CCW ↶ (decreasing GAIN/increasing pulsing window), causes the Mod 20 II to begin to "pulse" the motor on and off as it approaches the Set-Point.

On Time Adjusts the time that the electro-mechanical contactors or Solid State Reversers are engaged while in the pulsing window.

Off Time Adjusts the time that the electro-mechanical contactors or Solid State Reversers or Solid State Reversers are disengaged while in the pulsing window.

Set-Point Desired stopping position for Mod 20 II; determined by the Command Signal.

Span Calibrates the Mod 20 II to align the Maximum Command Signal (normally 20 mA) with the Position Feedback Potentiometer at the open position.

Zero Calibrates the Mod 20 II to align the Minimum Command Signal (normally 4 mA) with the Position Feedback Potentiometer at the close position.

This page is intentionally blank.

4 Initial Checkout & Setup

4.1 Verify Correct Motor Rotation (Phasing) & OPEN/CLOSE Pushbutton Operation

It is very important to check for correct motor rotation to insure that serious damage to the valve or other equipment does not occur. If the actuator motor rotates in the wrong direction, over-torque damage could occur to the equipment.

Prior to being shipped from the factory, each actuator is inspected to verify proper operation of the Torque and Position Limit Switch and to ensure that they function correctly (i.e. closes when the CLOSE pushbutton is depressed, opens with the OPEN pushbutton, etc.). These inspections are made with a properly phased power source connected as described in the actuator manual.

CAUTION: To ensure proper operation and to prevent your actuator or other actuated equipment from damage, verify that your unit is properly connected to its power source.

NOTE: Your application may vary from the following standard wiring configurations for three-phase, single-phase, and DC motors. Refer to your actuator wiring diagram for user-specific wiring configuration.

Three-Phase Motor

1. Using the Handwheel, move the valve to a midtravel position (midtravel position allows electrical operation in the valve "safe" area and keeps the OPEN and CLOSED Limit Switches from tripping while testing motor direction).
2. Test motor direction by momentarily pressing the OPEN pushbutton:
   a. If the actuator moves toward CLOSED, immediately turn all power OFF and reverse the motor leads T1 and T3.
      NOTE: Refer to your actuator wiring diagram for user-specific wiring configuration.
   b. If the actuator moves toward OPEN, the motor is wired properly for the application.

Single-Phase Motor

1. Using the Handwheel, move the valve to a midtravel position (midtravel position allows electrical operation in the valve "safe" area and keeps the OPEN and CLOSED limit switches from tripping while testing motor direction).
2. Test motor direction by momentarily pressing the OPEN pushbutton:
   a. If the actuator moves toward CLOSED, immediately turn power OFF and proceed with the following instructions that match your application.
      1. **Permanent Split Capacitor** single phase motors can be connected for opposite rotation by interchanging the leads T1 and T2 coming from the motor to the terminal strip.

2. **Single voltage, capacitor start, induction run, single phase motors** interchange leads T2 and T3 coming from the motor to the terminal strip.
3. **Dual voltage, capacitor start, induction run, single phase motors** can be connected for opposite rotation but the connection depends on whether the motor is operated on low voltage or operated on high voltage.
   - **Low voltage motors** are connected for opposite rotation as shown in the changes between the Standard Rotation configuration and the Reverse Rotation configuration in **Figure 4.1**. This is accomplished by interchanging the two leads T1 and T3 coming from the motor with the two leads T6 and T8 also coming from the motor. No other changes are necessary.

Figure 4.1 – Standard Motor Rotation & Reverse Motor Rotation Wiring Diagrams for Dual Voltage, Capacitor Start, Induction Run, and Single-Phase Low-Voltage Motors

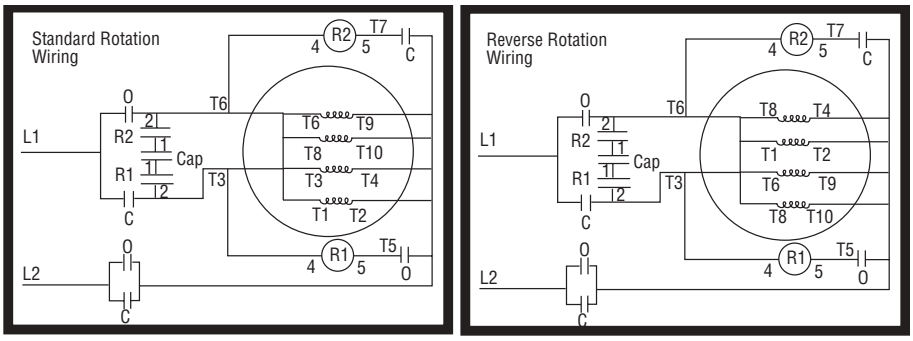

   - **High voltage motors** are connected for opposite rotation as shown in the changes between the Standard Rotation configuration and the Reverse Rotation configuration in **Figure 4.2**. This is accomplished by interchanging two set of leads. First, interchange the leads T1 and T8 coming from the motor. Second, interchange leads T3 and T6 at the starting relays R1 and R2. No other changes are necessary.

Figure 4.2 – Standard Motor Rotation & Reverse Motor Rotation Wiring Diagrams for Dual Voltage, Capacitor Start, Induction Run, and Single-Phase High-Voltage Motors

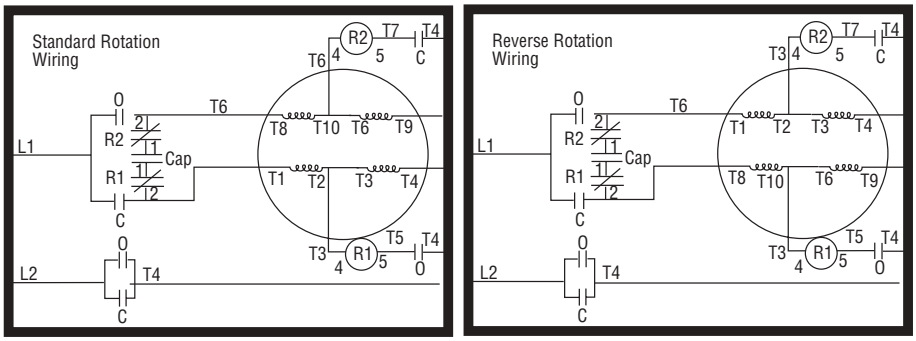

b) Test Motor direction again by momentarily pressing the OPEN pushbutton. If the actuator moves toward OPEN, the motor is wired properly for the application. If not, check the wiring diagram for proper wiring.

4.2 Verify Limit Switch & Torque Switch Settings

Set the OPEN and CLOSE Limit Switch and the Torque Switch according to the instructions in the specific Actuator instruction manual.

4.3 Adjusting the Actuator Feedback Potentiometer

⚠ WARNING: Hazardous Voltage. Turn power OFF before calibrating the Feedback Potentiometer.

1. Shut off all power to the actuator.
2. Using the Handwheel, position the actuator to mid-travel (valve at the 50% position).
3. Disconnect the Potentiometer Wiring Harness from where it is plugged in or connected to a Terminal Strip.
4. Using an Ohm Meter verify that the Potentiometer is in mid-travel position. The resistance from each End Connection to the Center Connection should be half of the full resistance of the Potentiometer. Example: 1000 ohm Potentiometer should read approximately 500 ohms from one of the End Connections to the Center Connection.

Figure 4.3 – Potentiometer Calibration Components Shown on a LY Position Indicator

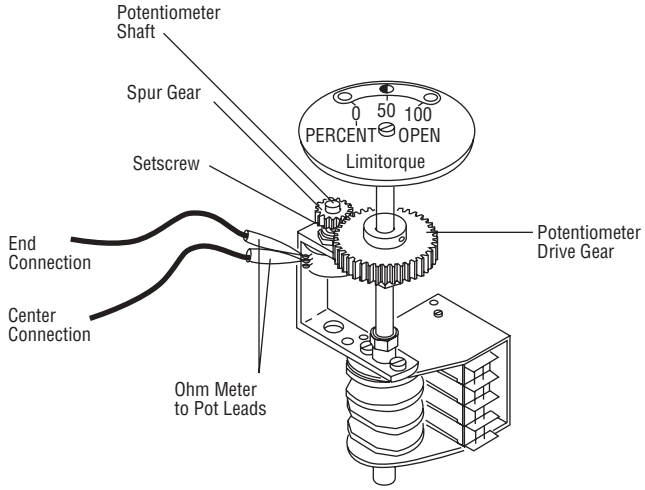

5. If the reading is not correct, proceed to **Step 6**. If the reading is correct proceed to **Step 7**.
6. a. Loosen the small Set Screw that retains the Potentiometer Drive Spur Gear to the Potentiometer Shaft.
   b. Remove the Spur Gear to allow manual rotation of the Potentiometer Shaft.
   c. Rotate the Potentiometer Shaft until the correct readings are obtained as described in **Step 4**.
   d. Reposition the Spur Gear to re-engage with the Gear Train.
   e. Proceed to **Step 7**.
7. Disconnect the Ohm Meter and re-connect the Potentiometer wiring to original connection.

4.4 Connecting the Mod 20 II to Customer Command Signal Leads

⚠ WARNING: Hazardous Voltage. Turn power OFF before removing the actuator cover and connecting the command signal.

If the Mod 20 II was factory installed, the only connection required is the user input command signal leads (normally 4-20mA). These connections should be made at the terminal strip in accordance with the wiring diagram enclosed with the actuator.
NOTE: if the unit does not have Limitorque supplied pushbuttons, refer to your wiring diagram to install a customer supplied pushbutton station.

If retrofitting or adding a Mod 20 II to an existing actuator, use the following connections table and your wiring diagram for wire lead designations.

Table 4.1 – Modutronic 20 II Terminal Connections

		L120 Non-Compact	
Mod 20 II		Integral P.C. Board	
Terminals	Description	(61-825-0337-3)	
P1-1	18 Volt AC	18 Volt AC	See Note
P1-2	18 Volt AC	Power Source	See Note
P1-3	Negative 4-20 mA signal	TB1-5	-4-20 mA
P1-4	Positive 4-20 mA signal	TB1-4	+4-20 mA
P1-5	Potentiometer	TB1-8	
P1-6	Potentiometer (wiper)	TB1-9	
P1-7	Potentiometer	TB1-10	
P1-8	115 Volt AC (output common)	TB2-5	
P1-9	Close Contactor Output	TB2-6	
P1-10	Open Contactor Output	TB2-7	

Note: To Terminal Strip or Control Power Transformer with 18-Volt tap.

5 Mod 20 II Presets

⚠ WARNING: Hazardous Voltage. Turn power OFF before removing the actuator cover and connecting your command signal.

1. Shut off all power to the actuator to avoid equipment damage or personal injury.
2. Rotate the GAIN Potentiometer fully CCW, then 15 turns CW to reach the midpoint of the Potentiometer. (See **Figure 6.3** for Potentiometer locations).

Note: Each 30-turn Potentiometer will faintly 'click' when rotated to either the maximum or minimum position.

3. Rotate the ZERO Potentiometer fully CCW, then 15 turns CW to reach the midpoint of the Potentiometer.
4. Rotate the SPAN Potentiometer fully CCW, then 15 turns CW to reach the midpoint of the Potentiometer.
5. The following initial adjustments to the ON TIME and OFF TIME Potentiometers should be made to establish the proper pulsing sequence and duration for both electro-mechanical and solid state contactors.
   a. Electro-mechanical contactor
      1. Rotate ON TIME and OFF TIME Potentiometers fully CCW, then 15 turns CW to the midpoint of the Potentiometer.
      2. Rotate both the ON TIME and OFF TIME Potentiometers the number of times indicated in the **Table 5.1** to obtain the desired operating time.

Table 5.1 – ON/OFF Potentiometer Turns for Desired Operating Time

Operation		
Time	On Time	Off Time
<60 seconds	11 turns CW	30 turns CW
60-120 seconds	13 turns CW	30 turns CW
120 or > seconds	17 turns CW	25 turns CW

   b. Solid state reversers
      1. Rotate ON TIME and OFF TIME Potentiometers fully CCW.
      2. Rotate ON TIME Potentiometer 6 turns CW.
      3. Rotate OFF TIME Potentiometer 8 turns CW.
      4. This will provide a .04 second ON pulse and a .5 second OFF pulse.

NOTE: a. Rotating the ON TIME Potentiometer CW will increase the ON time.
b. Rotating the OFF TIME Potentiometer CW will increase the OFF time.
c. Adjusting one control (ON or OFF TIME Potentiometer) will affect the adjustment of the other control (ON or OFF Time Potentiometer).

NOTE: a. Electro-mechanical Starters should not exceed 100 total starts per hour.
b. Solid State Reversers should not exceed 600 total starts per hour.

This page is intentionally blank.

6 Calibration Procedure

⚠ WARNING: Hazardous Voltage in Control Compartment. Exercise caution while calibrating the Mod 20 II with the Actuator Control Compartment open and power ON.

The purpose of performing the calibration procedure is to achieve the maximum accuracy obtainable for each particular actuator application while providing stable operation. The actuator gear ratio and many other factors determine the optimum calibration settings.

Four DIP Switches mounted on the Mod 20 II, as well as the ZERO, SPAN, GAIN, ON TIME, and OFF TIME potentiometers, are used to obtain the proper settings for your application. This procedure will proceed from the most accurate settings to the least accurate settings until unit stability is achieved.

Figure 6.1 – Calibration Adjustments for the Modutronic 20 II

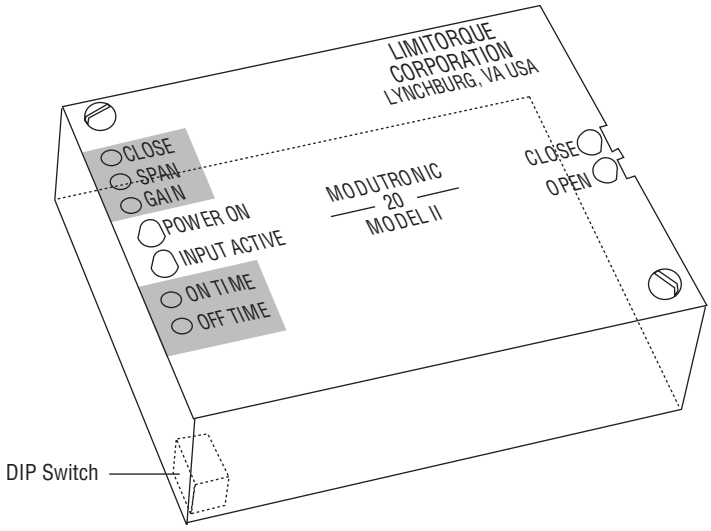

1. Turn all power to the actuator OFF.
2. Verify that the procedures for the Initial Checkout & Setup (**pages 4-1** through **4-4**) and Mod 20 II Presets (**page 5-1**) have been properly completed.
3. To simulate a command signal, connect the mA Calibrator to the Command Input Leads on the Mod 20 II. These terminations are typically connected to the actuator Interconnect Board or if the Mod 20 II is panel mounted, on the Rear Terminal Strip of the panel mount. In either case, these leads are labeled on your wiring diagram and will lead to connections 3 (P1-3[-]) and 4 (P1-4[+]) on the Mod 20 II.

Figure 6.2 – mA Calibrator Typically Connects (suggest Altek Model 334, www.altekcalibrators.com) to an Interconnect Board Terminal Strip or Terminal Strips Located in the Rear of a Panel-Mounted Mod 20 II

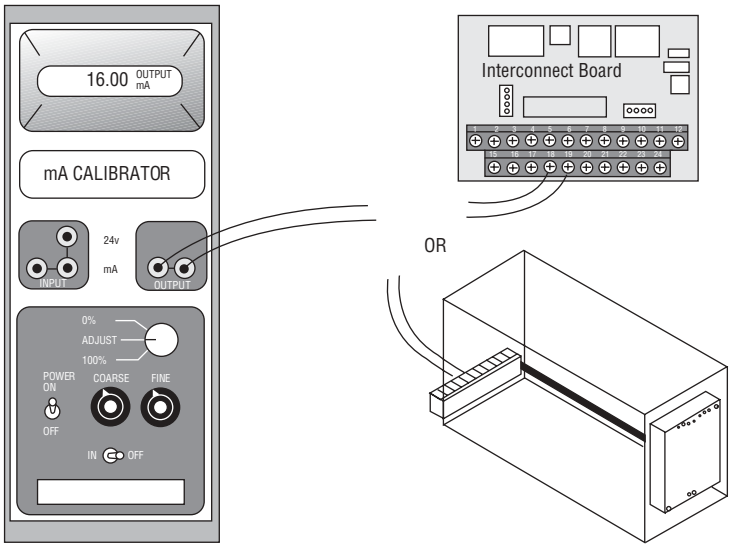

4. Set the Mod 20 II DIP Switch #3 to the ON position and DIP switch #s 1, 2, and 4 to the OFF position. This will set the error margin (DEADBAND) to 1% accuracy.

Figure 6.3 – Modutronic 20 II Board Component Locations

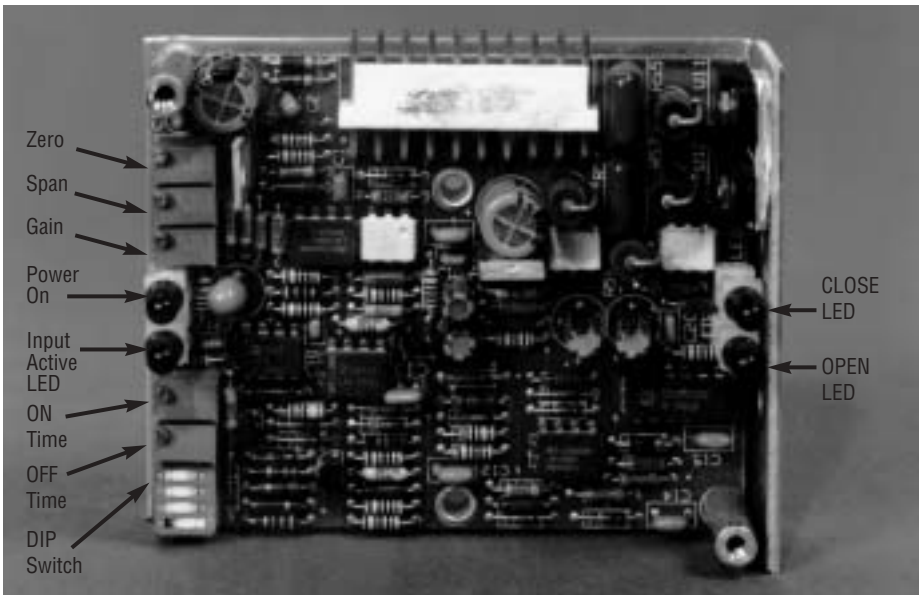

Table 6.1 – DIP Switch Setting Levels of Deadband Accuracy

	Dip Switch Number			
Deadband Percentage	1	2	3	4
± .5%	Off	Off	Off	On
± 1%	Off	Off	On	Off
± 1.5%	Off	Off	On	On
± 2.5%	Off	On	Off	Off
± 3.0%	Off	On	Off	On
± 3.5%	Off	On	On	Off
± 4.0%	Off	On	On	On
± 6.0%	On	Off	Off	Off
± 6.5%	On	Off	Off	On
± 7.0%	On	Off	On	Off
± 7.5%	On	Off	On	On
± 8.5%	On	On	Off	Off
± 9.0%	On	On	Off	Off
± 9.5%	On	On	On	Off
± 10.0%	On	On	On	On

⚠ WARNING: Hazardous Voltage in Control Compartment. Exercise caution while calibrating the Mod 20 II with the Actuator Control Compartment open and power ON.

5. Set the mA Calibrator for the minimum signal level (normally 4 mA). The INPUT ACTIVE LED on the Mod 20 II should be illuminated. If not, reverse the polarity of the mA calibrator connections.
6. If the Actuator is equipped with an AUTO/MANUAL or LOCAL/REMOTE selector switch, turn the selector to the AUTO or REMOTE position.
7. Apply power to the Actuator and the Mod 20 II. The POWER ON LED on the Mod 20 II should be illuminated.
8. The Actuator may run in either direction and then stop;
   a. If the unit stops, proceed to **Step 9**.
   b. If the unit hunts back and forth, decrease the DEADBAND accuracy by changing the DIP Switch setting (refer to **Table 6.1**). Continue to **Step 9**.
   c. If the unit runs all the way to one end of travel and stops, the Potentiometer Leads are probably wired backwards; reverse the Feedback Potentiometer's polarity by reversing the end leads at the Terminal Strip or on the Interconnect Board (if your application uses the Compact Integral Interconnect Board, the Plug-in Harness from the Pot to the Interconnect Board can be rotated 180˚ to reverse the polarity).
9. Adjust the ZERO point. This step calibrates the minimum or zero set-point to correspond to the end-of-travel of the Actuator and of the Feedback Potentiometer. Rotate the ZERO control slowly in the CW ↘ direction. This will cause the Actuator to be driven slowly towards the minimum control position (normally CLOSED). Continue rotating the ZERO control CW ↘ until the minimum (CLOSED) Position Limit Switch trips and the motor stops. The CLOSE LED should illuminate each time the Motor operates.

10. Adjust the control SPAN. This step calibrates the total SPAN of the control function and sets the maximum setting to correspond to the end-of-travel of the Actuator and of the Feedback Potentiometer.
    a. Set the mA Calibrator to the maximum command signal (normally 20 mA).
    b. The unit may:
        1. Run toward the maximum position and stop short of the Position Limit Switch trip point, or
        2. Remain in position.
    c. Rotate the SPAN Potentiometer slowly CW ↷. This will cause the Actuator to move slowly toward the maximum (normally OPEN) position. Continue rotating the SPAN control CW ↷ until the maximum (OPEN) Position Limit Switch trips and the motor stops. The OPEN LED should illuminate each time the Motor operates.
11. After initially setting the ZERO and SPAN setting, use the mA Calibrator to set the Command Signal back to the minimum setting (usually 4 mA); allow the actuator to run until it stops. Now fine-tune the ZERO setting for the position where the Limit Switch just trips.
12. Use the mA Calibrator to set the Command Signal back to the maximum setting (usually 20 mA); allow the actuator to run until it stops. Now fine-tune the SPAN setting for the position where the Limit Switch just trips.

NOTE: If hunting continues during calibration procedure, it may be necessary to temporarily decrease the GAIN setting or increase the DEADBAND setting to get the ZERO and SPAN settings calibrated.

13. Adjust the ON TIME (optional). This step adjusts the period of time the Motor is energized in the pulsing mode when it is approaching the final set-point position.

NOTE: The ON TIME must be adjusted prior to adjusting the OFF TIME. Adjusting the ON TIME after adjusting the OFF TIME will require repeating the OFF TIME adjustment.

The duration of the ON TIME pulse to the Contactor/Solid State Reverser is increased by rotating the ON TIME Potentiometer CW ↷.

14. Adjust the OFF TIME (optional). This step adjusts the period of time the Motor is de-energized in the pulsing mode when it is approaching the final set-point position. This can also be described as the interval between ON TIME pulses. The duration of the OFF TIME pulse to the Contactor/Solid State Reverser is increased by rotating the OFF TIME Potentiometer CW ↷.
15. Adjust the GAIN. This step calibrates the width of the pulsing window around the set-point. This control works in conjunction with the four DIP Switches located on the Mod 20 II circuit board to determine the final accuracy of the unit in regard to set point position. The wider the pulsing window, the greater distance from the set-point the unit enters the pulsing mode. It is desirable to minimize the pulsing window without causing the Actuator to hunt (oscillate uncontrollably around the set-point).
    a. For the initial calibration, ensure that DIP Switch 3 is ON and Dip Switches #s 1, 2, and 4 are OFF. This will provide 1% DEADBAND.

    NOTE: If no DIP Switch is set to the ON position, the actuator will not operate.

    b. Make sure the GAIN Pot is at the midpoint, then rotate the GAIN Potentiometer one turn CW ↷.

c. Start with the mA Calibrator at 4 mA, then make a 5 mA change in the output of the mA Calibrator to provide a significant change of position; now watch the action of the actuator.
   1. If the actuator hunts upon reaching the new set-point, reduce the GAIN control by turning in the CCW ↶ direction until the hunting stops and proceed to **Step e**.
   2. If the unit continues to hunt after the GAIN control adjustment, proceed to **Step d**.

d. Rotate the GAIN control fully CCW ↶ and then 15 turns CW ↷; adjust the DEAD-BAND to a less accurate setting and repeat the GAIN setting procedure starting with **Step a**. For example, if DIP Switch 3 is ON and DIP Switches 1, 2, and 4 are OFF the DEADBAND setting is at 1% accuracy; change the DIP Switch setting to 1-1/2% accuracy and repeat the procedures **13a** through **13e** until the correct DIP Switch and GAIN control eliminates actuator hunting. See **Table 6.1** for DIP Switch setting levels of deadband accuracy.

e. Rotate the GAIN control an extra 1/2 turn CCW ↶ to eliminate the possibility of future actuator hunting.

16. Set desired FAIL TO mode. See **Figure 6.4**.
    a. If LOCK-IN-LAST-POSITION is desired when loss of input signal occurs, install a jumper at JP1 to connect Pin 1 and 2.
    b. If FAIL-TO-4mA-POSITION is desired when loss of input signal occurs, install a jumper at JP1 to connect Pin 2 and 3.

NOTE: Be sure to use one of the two jumper selections discussed above; FAIL-TO operation will be forfeited if JP1 is not used.

Figure 6.4 – FAIL TO Mode JP1 Jumper

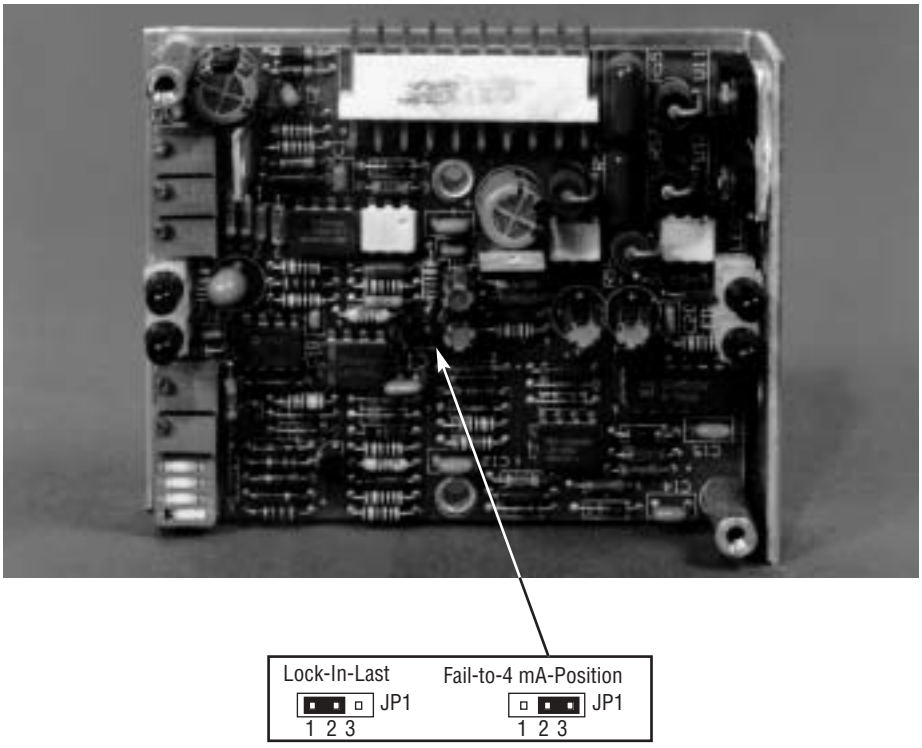

17. Your Mod 20 II should now be properly calibrated.

This page is intentionally blank.

7 Troubleshooting

Symptom	Possible Cause	Corrective Action
Unit will not operate electrically in AUTO or MANUAL	1. No power to unit	1a. Verify Power Supply is electrically correct and present at actuator. 1b. Verify Power Leads are connected in accordance with the applicable wiring diagram. 1c. Inspect for Blown Fuse, tripped Circuit Breaker, or OPEN Disconnect Switch.
	2. Wiring problems	2a. (LYs with internal Mod 20 II board) Check push-on terminal between the Integral PC Board and the Micro Switches. Check for bad Micro Switches on SW Station.
	3. Starter Wires loose	3a. Check all the connections on the Reversing Starter.
	4. Thermal overloads have tripped	4a. Measure continuity in the circuit. If you have an open circuit, wait for the motor to cool, then try to operate actuator. You may need to reduce the number of starts per hour.
Unit will not operate electrically in AUTO	1. No power to Mod 20 II	1a. Verify incoming 18 VAC between terminals P1-1 and P1-2 on Mod 20 II board.
	2. Bad Mod 20 II board	2a. Check board for burnt or broken components. Bypass Mod 20 II board using Pushbuttons to verify proper operation. See your specific wiring diagram for bypassing Mod 20 II board.
	3. Command Signal Leads reversed	3a. (L120 Interconnect PC Board) Check that the Command Signal Leads are wired to terminal TB16(+) and TB17(-).

continued on next page

(continued)

Symptom	Possible Cause	Corrective Action
Unit will not operate electrically in AUTO	4. Bad Potentiometer	4a. Check the Potentiometer with an ohm meter electrically in AUTO. Unplug the Pot from the Integral PC Board and take a meter reading between pins 7-1 and 7-2 or 7-2 and 7-3. The meter should have a steady reading. If the meter reading goes to zero or jumps around, verify that the Pot is centered. Replace the Pot if needed. Check for Cables that may have been pinched between the Housing Cover or Integral Assembly.
	5. All DIP switches turned Off	5a. Check DIP switches. Refer to Calibration Procedure on **page 6-4, Step 15a.**
Units run in one direction only	1. Shorted output	1a. Verify proper MANUAL direction operation. Using ammeter, verify proper command signal, verify all calibrations have been completed properly. If you still have difficulty calibrating the Mod 20 II after verifying the above settings, replace the Mod 20 II.
No LOCK-IN-LAST POSITION	1. Missing JP1 Jumper	1a. Locate JP1 Jumper on the Mod 20 II board and verify connections.
Unit will not follow signal	1. Bad Potentiometer or Potentiometer is not centered	1a. Check Pot as discussed in item #7. If Pot is OK, place the actuator at 50% and check the resistance between terminals 7-1 and 7-2 or 7-2 and 7-3 with an ohm meter. See "Adjusting the Actuator Feedback Potentiometer" procedure on **page 4-3**.
Input signal does not result in full travel of the valve	1. Mod 20 II not calibrated correctly	1a. See **pages 6-1 through 6-5** result to review the calibration procedure for the Mod 20 II.
	2. ZERO and SPAN adjustments incorrect	2a. Recalibrate according to procedure on **pages 6-1 through 6-5**.

(continued)

Symptom	Possible Cause	Corrective Action
Large input signal variations result in little or no actuator movement	1. Improper analog Input Signal value	1a. Check for proper Input Signal value.
	2. Limit Switch	2a. Check for proper setting. (See appropriate actuator manual for setting the Limit Switches.)
	3. DEADBAND adjustment	3a. Check the DIP Switch accuracy adjustments shown in **Table 6.1**.
	4. ZERO and SPAN adjustments	4a. Recalibrate according to procedure in **Section 6**.

This page is intentionally blank.

8 Wiring Diagram

Please see page 8-2 for Modutronic 20 II Typical 3-Phase Wiring Diagram.

Figure 8.1 – Modutronic 20 II Typical 3-Phase Wiring Diagram

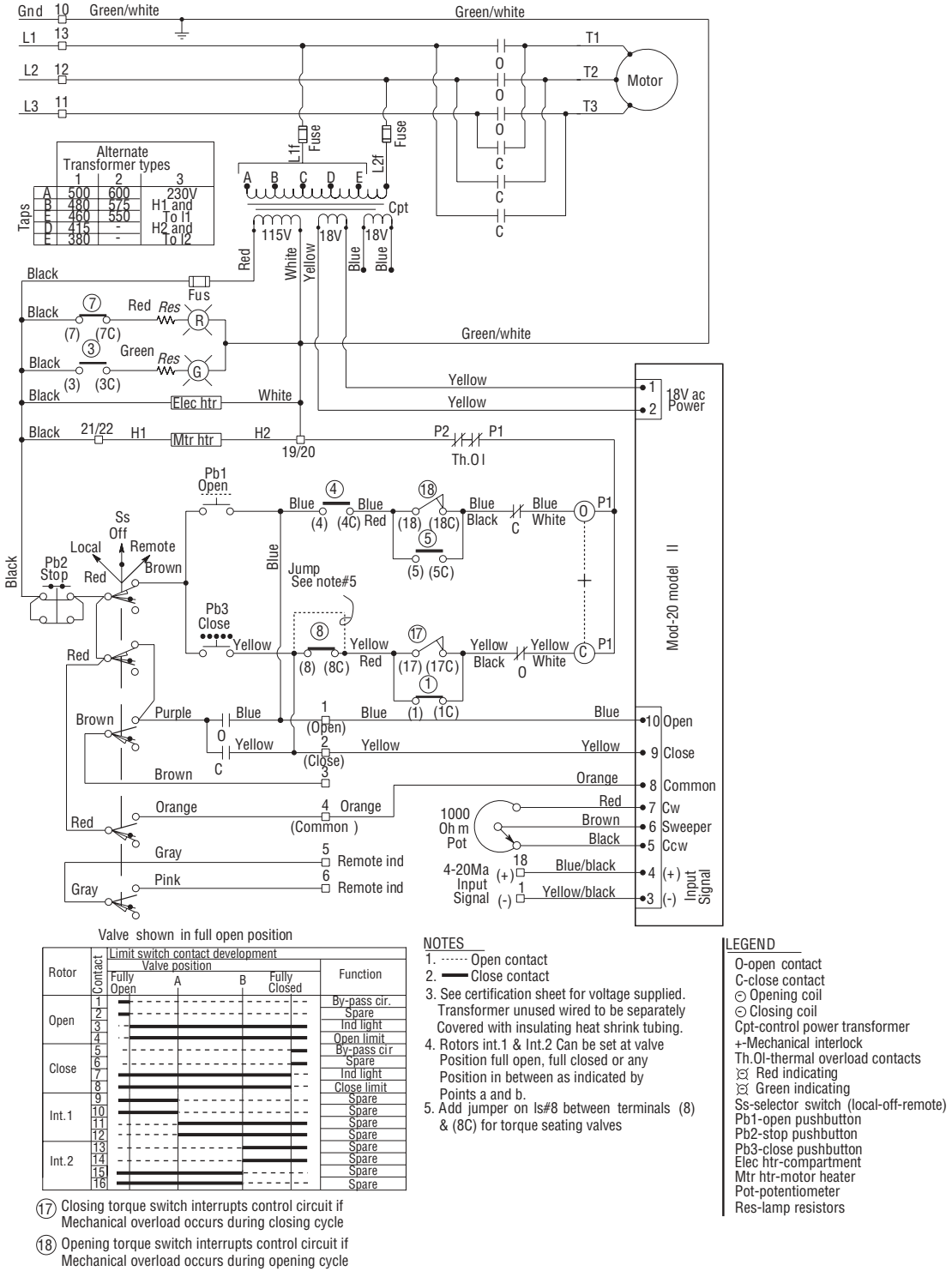

NOTES
1. ····· Open contact
2. ——— Close contact
3. See certification sheet for voltage supplied. Transformer unused wired to be separately Covered with insulating heat shrink tubing.
4. Rotors int.1 & Int.2 Can be set at valve Position full open, full closed or any Position in between as indicated by Points a and b.
5. Add jumper on ls#8 between terminals (8) & (8C) for torque seating valves

LEGEND
O-open contact
C-close contact
⊖ Opening coil
⊖ Closing coil
Cpt-control power transformer
+-Mechanical interlock
Th.Ol-thermal overload contacts
⌑ Red indicating
⌑ Green indicating
Ss-selector switch (local-off-remote)
Pb1-open pushbutton
Pb2-stop pushbutton
Pb3-close pushbutton
Elec htr-compartment
Mtr htr-motor heater
Pot-potentiometer
Res-lamp resistors

⑰ Closing torque switch interrupts control circuit if Mechanical overload occurs during closing cycle

⑱ Opening torque switch interrupts control circuit if Mechanical overload occurs during opening cycle

Drawing No. 17-500-0001-3

Figure 8.1 – Modutronic 20 II Typical 3-Phase Wiring Diagram (continued)

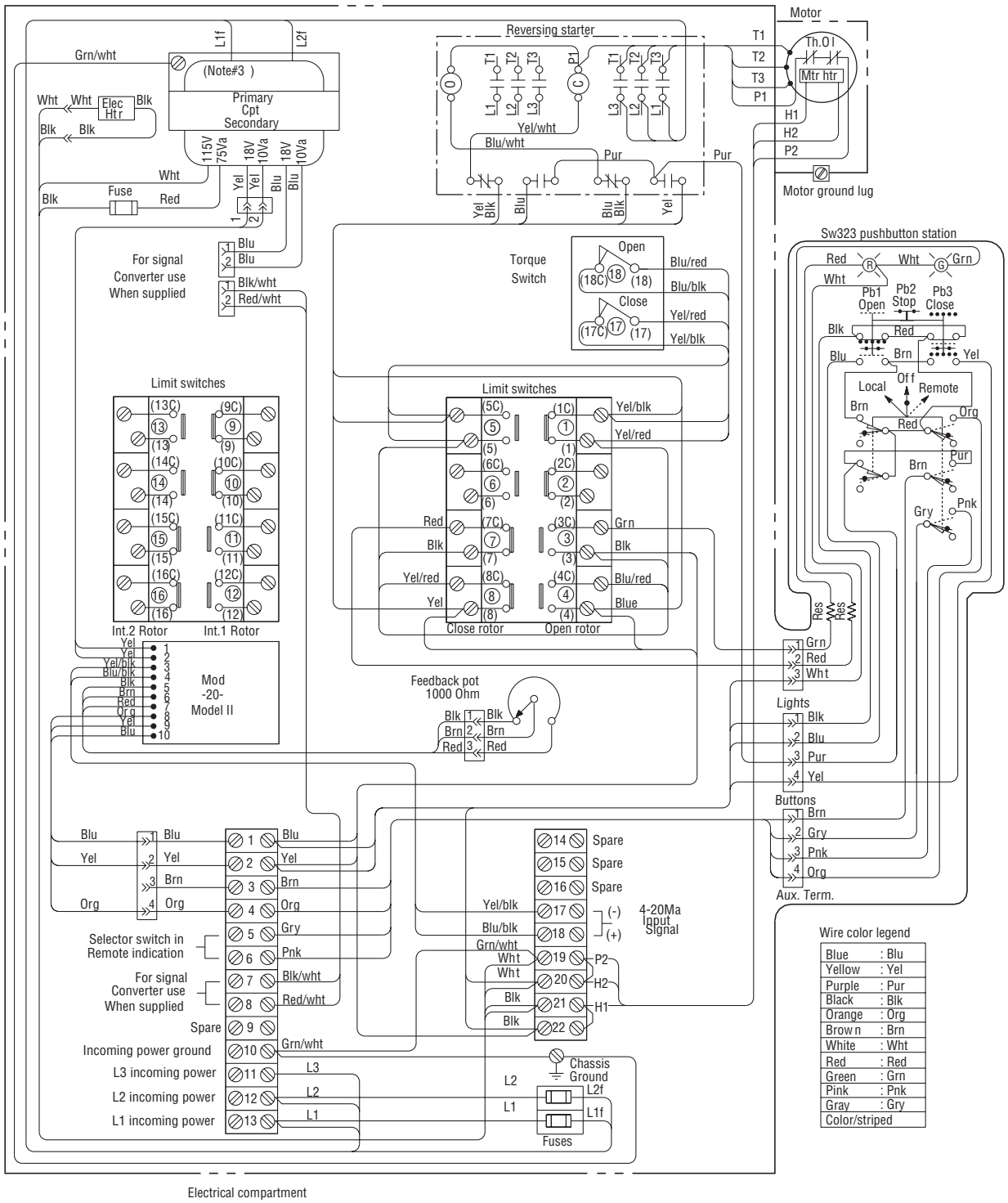

Drawing No. 17-500-0001-3

This page is intentionally blank.

9 Schematic

Please see page 9-2 for Modutronic 20 II Schematic Diagram.

Figure 9.1 – Modutronic 20 II Schematic Diagram

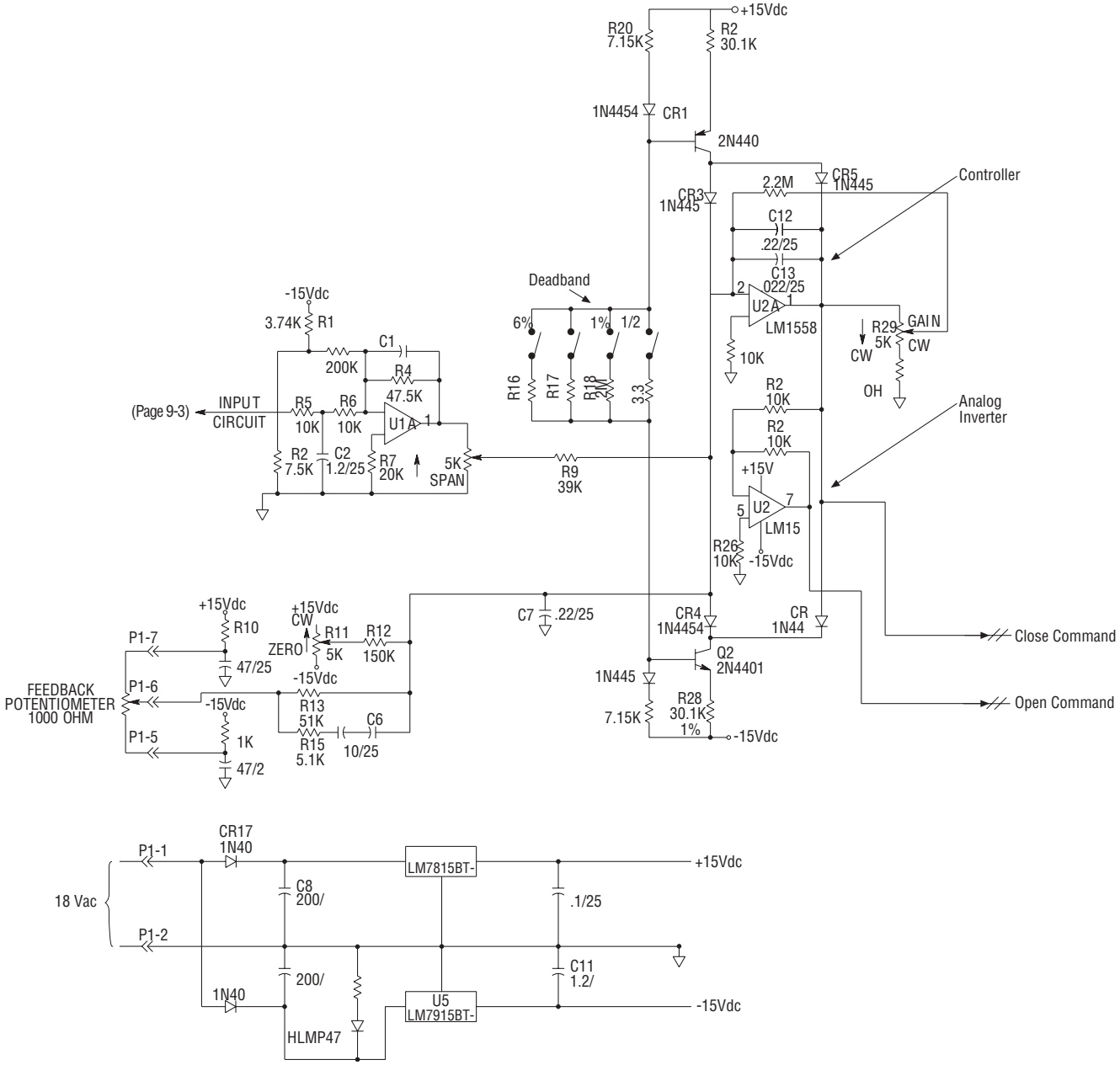

Input Impedance (Zin)

Zin (4mA) = 850Ω

Zin (8mA) = 550Ω

Zin (12mA) = 450Ω

Zin (16mA) = 400Ω

Zin (20mA) = 370Ω

Figure 9.1 – Modutronic 20 II Schematic Diagram (continued)

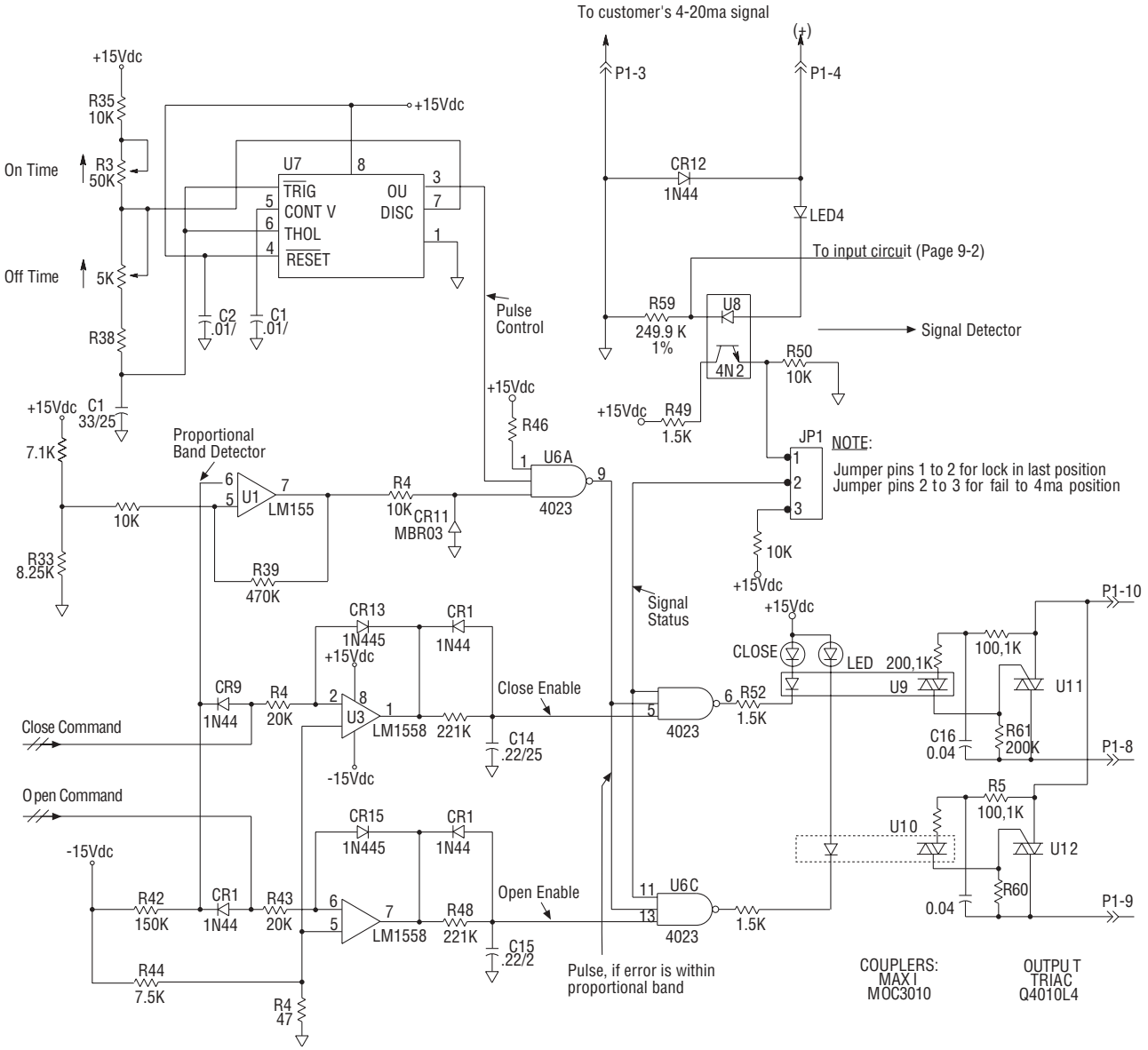

Input Impedance (Zin)

Zin (4mA) = 850Ω

Zin (8mA) = 550Ω

Zin (12mA) = 450Ω

Zin (16mA) = 400Ω

Zin (20mA) = 370Ω

Limitorque
5114 Woodall Road,
P.O. Box 11318
Lynchburg, VA 24506-1318
Phone (434) 528-4400
Facsimile (434) 845-9736
http://www.limitorque.com

Limitorque
Abex Road
Newbury
Berkshire, RG14 5EY
England
Phone 44-1-635-46999
Facsimile 44-1-635-36034

Limitorque Nippon Gear Co., Ltd.
Asahi-Seimei Bldg. 4th Floor
1-11-11 Kita-Saiwai, Nishi-Ku
Yokohama-Shi, (220-0004)
Japan
Phone 81-45-326-2065
Facsimile 81-45-320-5962

Limitorque India, Ltd.
302, Mansarovar
90 Nehru Place
New Delhi - 110019
India
Phone 91-11-6431-748
Facsimile 91-11-6432-749

Flowserve Australia Pty Ltd.
14 Dalemore Drive
Scoresby, Victoria 3179
Australia
Phone 613-9729-2633
Facsimile 613-9729-2644

Limitorque Asia, Pte., Ltd.
48A Loyang Way
Singapore 508741
Phone 65-6-214-2120
Facsimile 65-6-214-2123

Flowserve Corporation has established industry leadership in the design and manufacture of its products. When properly selected, this Flowserve product is designed to perform its intended function safely during its useful life. However, the purchaser or user of Flowserve products should be aware that Flowserve products might be used in numerous applications under a wide variety of industrial service conditions. Although Flowserve can (and often does) provide general guidelines, it cannot provide specific data and warnings for all possible applications. The purchaser/user must therefore assume the ultimate responsibility for the proper sizing and selection, installation, operation, and maintenance of Flowserve products. The purchaser/user should read and understand the Installation and Maintenance (I & M) instructions included with the product, and train its employees and contractors in the safe use of Flowserve products in connection with the specific application.

While the information and specifications contained in this literature are believed to be accurate, they are supplied for informative purposes only and should not be considered certified or as a guarantee of satisfactory results by reliance thereon. Nothing contained herein is to be construed as a warranty or guarantee, express or implied, regarding any matter with respect to this product. Because Flowserve is continually improving and upgrading its product design, the specifications, dimensions and information contained herein are subject to change without notice. Should any question arise concerning these provisions, the purchaser/user should contact Flowserve Corporation at any one of its worldwide operations or offices.

For more information about Flowserve Corporation, contact www.flowserve.com or call USA 1-800-225-6989.

FLOWSERVE CORPORATION
FLOW CONTROL DIVISION
Limitorque Actuation Systems
5114 Woodall Road
P.O. Box 11318
Lynchburg, VA 24506-1318
Phone: 434 528 4400
Facsimile: 434 845 9736
www.limitorque.com

© 2003 Flowserve Corporation, Irving, Texas, USA. Flowserve and Limitorque are registered trademarks of Flowserve Corporation.
401-12000 Rev.B 2/03 Printed in USA

APPENDIX C

Manufacturer's Information

Limitorque LY Series
Installation & Maintenance
for LY 1001, LY 2001, and LY 3001

DRAFT

FLOWSERVE

Limitorque Actuation Systems

LMAIM1501
(Replaces 150-12000)
November 2003

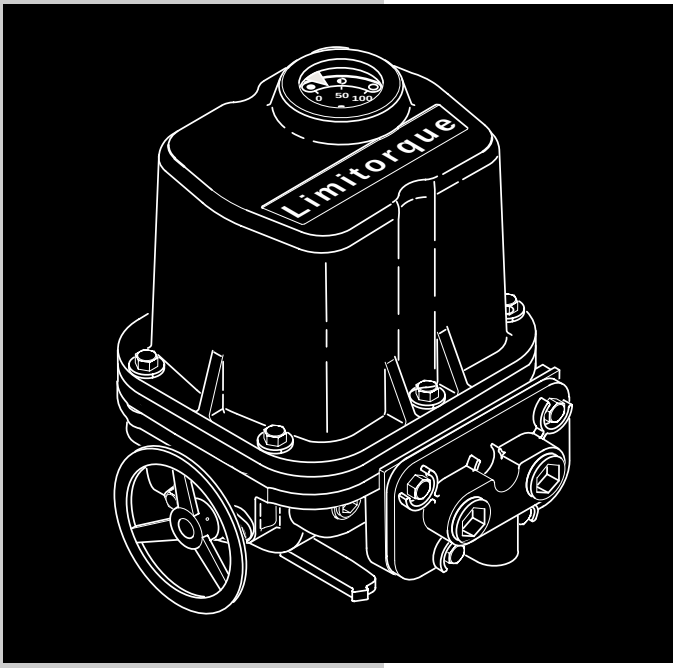

Limitorque® LY Series

Installation and Maintenance for LY 1001, LY 2001 and LY 3001

LY Series Installation and Maintenance for LY 1001, LY 2001, and LY 3001

©2003 Copyright Limitorque. All rights reserved.
Printed in the United States of America.

Disclaimer

No part of this book shall be reproduced, stored in a retrieval system, or transmitted by any means electronic, mechanical, photocopying, recording, or otherwise without the written permission of Limitorque. While every precaution has been taken in the preparation of this book, the publisher assumes no responsibility for errors or omissions. Neither is any liability assumed for damages resulting from the use of the information contained herein.

This document is the proprietary information of Limitorque furnished for customer use ONLY. No other uses are authorized without written permission from Limitorque.

Limitorque reserves the right to make changes, without notice, to this document and the products it describes. Limitorque shall not be liable for technical or editorial errors or omissions made herein, nor for incidental or consequential damages resulting from the furnishing, performance, or use of this document.

The choice of system components is the responsibility of the buyer, and how they are used cannot be the liability of Limitorque. However, Limitorque's sales team and application engineers are always available to assist you in making your decision.

This manual contains information that is correct to the best of Limitorque's knowledge. It is intended to be a guide and should not be considered as a sole source of technical instruction, replacing good technical judgment, since all possible situations cannot be anticipated. If there is any doubt as to exact installation, configuration, and/or use, call Limitorque at (434) 528-4400. The latest revisions to this document are available online at http://www.limitorque.com

Table of Contents

1 Introduction **1-1**
1.1 Purpose 1-1
1.2 User Safety 1-1

2 Product Capabilities and Features **2-1**

3 Initial Inspection and Storage Instructions **3-1**
3.1 Product Identification 3-1
3.2 Inspection and Recording 3-1
3.3 Storage Procedures 3-2
3.3.1 Short-Term Storage (less than 1 year) 3-2
3.3.2 Long-Term Storage (1 to 5 years) 3-2

4 Unit Weights **4-1**

5 Installation Instructions **5-1**
5.1 Safety Precautions 5-1
5.2 Initial Actuator Preparation 5-1
5.3 Installation Overview 5-2
5.4 Torque Switch Settings 5-6
5.5 Rewiring the Torque Switch for Non-Standard Drive Sleeve Rotation 5-6
5.6 Limit Switch and Mechanical Stop Settings 5-7
5.7 Setting the Limit Switches 5-7
5.7.1 Setting the CLOSED Limit Switch 5-7
5.7.2 Setting the OPEN Limit Switch 5-9
5.8 Mechanical Stops 5-10
5.8.1 Setting the CLOSED Mechanical Stop on the LY 1001 5-10
5.8.2 Setting the CLOSED Mechanical Stop on the LY 2001/3001 5-10
5.8.3 Setting the OPEN Mechanical Stop on the LY 1001 5-11
5.8.4 Setting the OPEN Mechanical Stop on the LY 2001/3001 5-11
5.9 Setting the MDPI (Mechanical Dial Position Indicator) 5-12
5.9.1 Setting the Potentiometer 5-13

6 Operation **6-1**
6.1 Typical LY 1001 Operation 6-1
6.2 Verify Correct Motor Rotation (Phasing) and OPEN/CLOSE Pushbutton Operation 6-1
6.2.1 Three-Phase Motor 6-1
6.2.2 Single-Phase Motor 6-5
6.2.3 DC Motor 6-8
6.3 Electrical Startup 6-8
6.4 Manual Operation 6-8
6.5 Motor Operation 6-9

7 Maintenance **7-1**
7.1 Lubrication 7-1
7.1.1 Lubrication Inspection 7-1
7.1.2 Factory Lubricant 7-1
7.2 Minimum Lubricant Qualities Required 7-1
7.3 Disassembly and Reassembly 7-2
7.3.1 LY 1001 Disassembly 7-2
7.3.2 LY 1001 Reassembly 7-3
7.3.3 LY 2001/3001 Disassembly 7-5
7.3.4 LY 2001/3001 Reassembly 7-7
7.4 Troubleshooting 7-9

8 Parts Lists **8-1**

9 How to Order Parts **9-1**

10 Regulatory Information **10-1**

Figures

Figure 2.1 – LY Actuator 2-1
Figure 3.1 – LY Nameplate 3-1
Figure 5.1 – Torque Nut and Retaining Drive Ring Removal from an LY 1001 5-1
Figure 5.2 – LY Keyway Locations 5-2
Figure 5.3 – LY 1001, 2001, and 3001 Torque Drive Nut Orientation 5-3
Figure 5.4 – Removing Control Cover and Conduit Pipe Plugs 5-4
Figure 5.5 – Grounding Lug Location 5-5
Figure 5.6 – Reversing Torque Switch Wiring 5-7
Figure 5.7 – Limit Switch Setting Nut 5-8
Figure 5.8 – Setting CLOSE Limit Cam 5-9
Figure 5.9 – Setting OPEN Limit Cam 5-10
Figure 5.10 – Mechanical Stop Set Screw Adjusted to Torque Drive Nut Contact Point on LY 1001 5-11
Figure 5.11 – Mechanical Stop Screw Adjustment on LY 2001 and 3001 5-12
Figure 5.12 – Aligning MDPI (Mechanical Dial Position Indicator) 5-13
Figure 5.13 – Potentiometer Calibration Components 5-14
Figure 6.1 – Standard Actuator/Three-Phase 6-2
Figure 6.2 – Three-Phase with Control Package 6-3
Figure 6.3 – Standard Actuator/Single-Phase 6-5
Figure 6.4 – Single-Phase with Control Package 6-6
Figure 6.5 – LY 1001 Cover and Associated Parts 6-7
Figure 6.6 – LY 1001 Top Plate and Associated Parts 6-9
Figure 6.7 – LY 1001 Housing and Associated Parts 6-10
Figure 6.8 – LY 2001/3001 Cover and Associated Parts 6-11

Figure 6.9 – LY 2001/3001 Top Plate and Associated Parts 6-12
Figure 6.10 – LY 2001/3001 Housing and Associated Parts 6-13
Figure 6.11 – LY 3001 Handwheel Assembly 6-14
Figure 6.12 – LY 1001 Declutch Return Spring Installation Position 7-4
Figure 6.13 – LY 2001/3001 Declutch Return Spring Installation Position 7-8

Tables

Table 4.1 – Unit Weights 4-1
Table 5.1 – Torque Drive Nut Custom Bore and Keyway Sizes 5-2
Table 5.2 – LY Actuator/Mounting Base Tap Sizes 5-4
Table 5.3 – Control Cover and Conduit Pipe Plug Hardware 5-5
Table 5.4 – LY Control Cover and Integral Control Cover Bolt Sizes 5-5
Table 5.5 – Mechanical Stop Set Screws 5-10
Table 5.6 – Mechanical Stop and Locknut Screw Sizes 5-11
Table 8.1 – LY 1001 Parts List 8-1
Table 8.2 – LY 2001/3001 Parts List 8-2

This page is intentionally blank.

1 Introduction

1.1 Purpose

This Installation and Maintenance Manual explains how to install and maintain LY actuators. Information on installation, disassembly, lubrication, and parts is provided.

1.2 User Safety

Safety notices in this manual detail precautions the user must take to reduce the risk of personal injury and damage to the equipment. The user must read and be familiar with these instructions before attempting installation, operation, or maintenance. Failure to observe these precautions could result in serious bodily injury, damage to the equipment, void of warranty, or operational difficulty.

Safety notices are presented in this manual in three forms:

⚠ DANGER: Refers to personal safety. Alerts the user to danger or harm. The hazard or unsafe practice will result in severe injury or death.

⚠ WARNING: Refers to personal safety. Alerts the user to potential danger. Failure to follow warning notices could result in personal injury or death.

CAUTION: Directs the user's attention to general precautions that, if not followed, could result in personal injury and/or equipment damage.

NOTE: Highlights information critical to the user's understanding of the actuator's installation and operation.

This page is intentionally blank.

2 Product Capabilities and Features

The LY actuator controls the opening and closing travel of the valve and limits torque through the torque switches provided. As a result, all valve-operating parts are protected from overload, improper seating, and foreign obstructions.

LY actuators may be mounted on any size valve in almost any position or location.

Microprocessor-based control and monitoring devices are available for installation on your actuator. Contact your local Limitorque distributor or Limitorque sales office for further information.

Figure 2.1 – LY Actuator (LY 1001 shown)

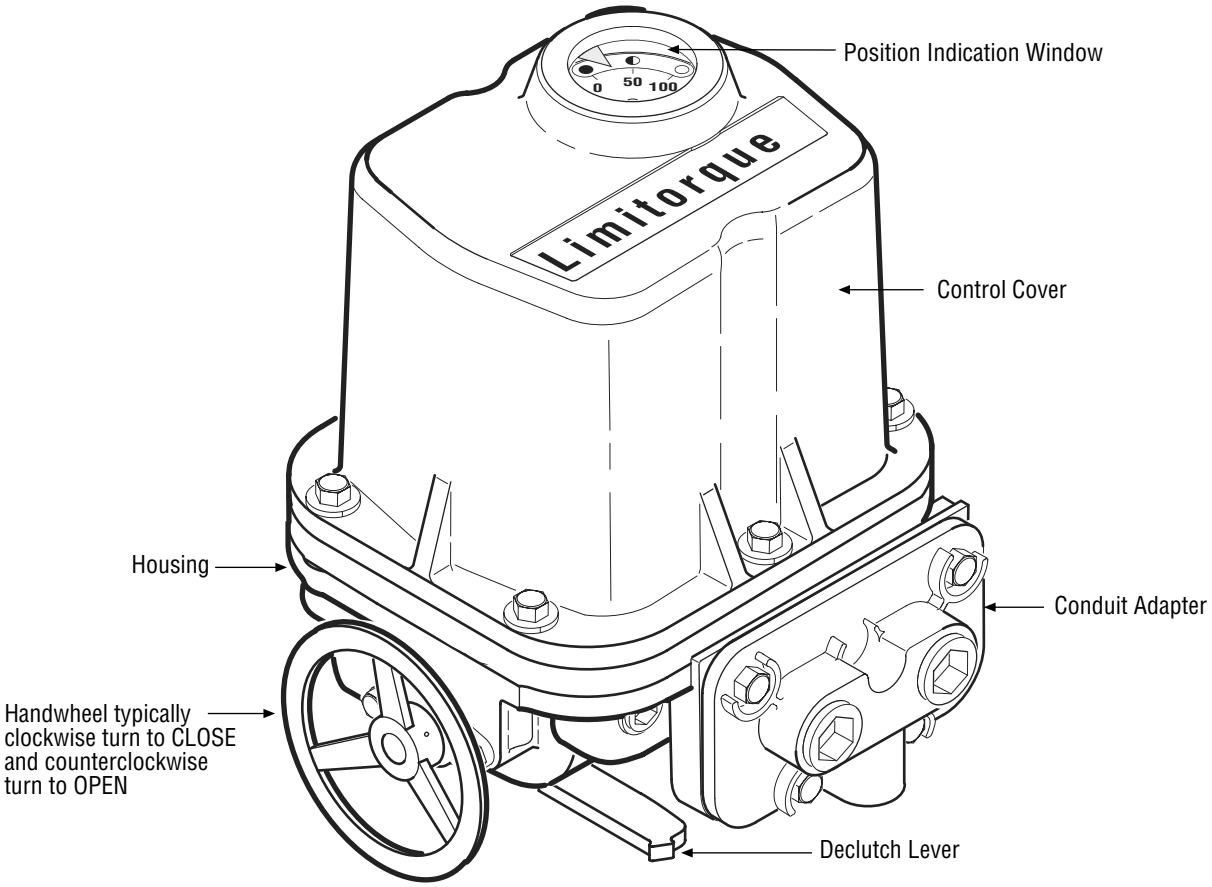

This page is intentionally blank.

3 Initial Inspection and Storage Instructions

⚠ WARNING: Read this Installation and Maintenance Manual carefully and completely before attempting to store the actuator. Be aware of electrical hazards within the actuator and high-pressure hazards of the attached valve or other actuated device when installing or performing maintenance on your LY actuator.

3.1 Product Identification

The actuator unit nameplate is located on the side of the unit opposite the conduit entry. The nameplate contains the following information:

- Limitorque name
- Point of Manufacture
- Unit Size
- Serial Number
- Order Number
- Electrical Power Supply
- Operating Time (seconds)
- Motor Full Load Amperage

Figure 3.1 – LY Nameplate (Reference Drawing 61-682-0108)

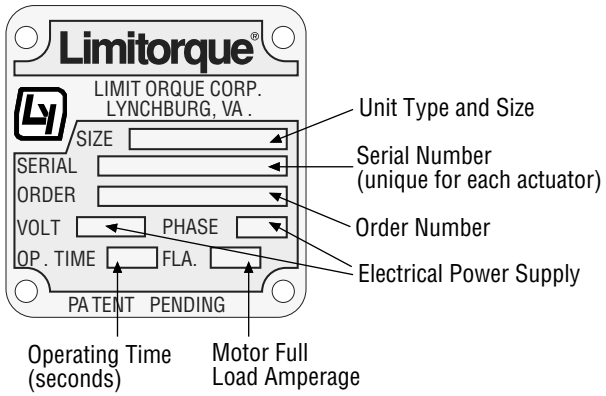

3.2 Inspection and Recording

Upon receipt of the actuator, inspect the condition of the equipment and record nameplate information as follows:

1. Carefully remove actuator from shipping carton or skid. Thoroughly examine the equipment for any physical damage that may have occurred during shipment. If damaged, immediately report the damage to the transport company.
2. Record the unit nameplate information for future reference, i.e., ordering parts, and obtaining further information.

3.3 Storage Procedures

NOTE: The following are Flowserve's recommended storage procedures to retain maximum product integrity during short-term and long-term storage. Failure to comply with recommended procedures will void the warranty.

3.3.1 Short-Term Storage (less than 1 year)

Actuators should be stored in a clean, dry, protected warehouse, free from excessive vibration and rapid temperature changes.

Preparation

1. Connect internal heaters, if supplied.
2. Replace all plastic caps or plugs with metal pipe plugs.
3. Ensure all covers are tight.

Outdoor Storage

If actuators must be stored outdoors, they must be stored off the ground, high enough to prevent being immersed in water or buried in snow.

LY Storage Orientation

Store with the Control Compartment Cover (Limit Switch compartment) facing upward.
Do not store units on their side.

3.3.2 Long-Term Storage (1 to 5 years)

Actuators should be stored in a clean, dry, protected warehouse, free from excessive vibration and rapid temperature changes.

NOTE: During long-term storage, the maximum source of equipment deterioration anticipated is from possible condensation within the actuator enclosure. This condensation may occur with rapid temperature changes in the storage environment. If reliable means are not available to prevent rapid temperature changes, a heat source should be added in the electrical enclosure during storage. Consult the Limitorque Customer Service Department for further information.

Preparation

1. Connect internal heaters, if supplied.
2. Replace all plastic caps or plugs with metal pipe plugs.
3. Ensure all covers are tight.

LY Storage Orientation

1. Store with the Control Compartment Cover (Limit Switch compartment) facing upward. Do not store units on their side.
2. Store off the floor on suitable skids and cover with an unsealed dust cover leaving the bottom open and air holes in the side.

Storage Inspection and Correction

1. Perform a semi-annual visual inspection. A minimum inspection should include checking the following:
   - Packaging
   - Covers
   - Cleanliness
   - Plugs
   - Dryness
   - Heat source (if used) for proper functioning
2. Record and correct deficiencies noted during inspection.

4 Unit Weights

The approximate LY actuator weights are provided below.

Table 4.1 – Unit Weights

Unit Size	Control	lb.	kg
LY 1001	NCU	40	20
	BIC	75	34
	UEC	90	41
LY 2001	NCU	100	45
	BIC	110	50
	UEC	144	65
LY 3001	NCU	105	48
	BIC	130	59
	UEC	149	68

This page is intentionally blank.

5 Installation Instructions

5.1 Safety Precautions

▲ WARNING: Read this Installation and Maintenance Manual carefully and completely before attempting to install, operate, or troubleshoot the Limitorque LY actuator.

5.2 Initial Actuator Preparation

Piece numbers refer to Figure 5.1.

1. Remove the Retaining Drive Ring (piece #165 or #109) and Torque Nut (piece #32) from actuator.

Figure 5.1 – Torque Nut and Retaining Drive Ring Removal from an LY 1001

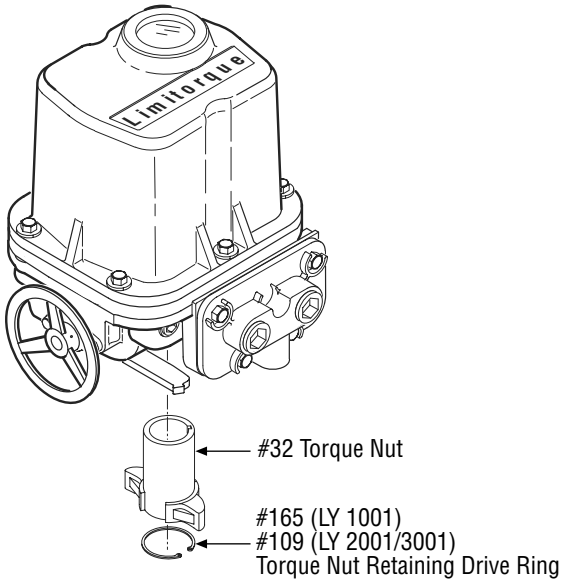

2. If Torque Nut has been bored and keywayed by Limitorque, verify dimensions and keyway location for proper compatibility with the valve stem.
3. If Torque Nut has not been bored and keywayed by Limitorque, it is provided solid (blank) to allow customer to custom key and bore up to the maximum permissible sizes as listed in Table 5.1.

Table 5.1 – Torque Drive Nut Custom Bore and Keyway Sizes

Unit Type and Size	Maximum Bore inch (mm)	Maximum Keyway inch (mm)
LY 1001	1⅛ dia (28 dia)	¼ x ⅛ (6 x 3)
LY 2001/3001	2⅜ dia (60 dia)	⅝ x 5⁄16 (15 x 7.5)

NOTE: Before keywaying, match the Torque Nut with the Valve Stem to ensure proper keyway location. Use the Keyway Index Mark (LY 1001 only) for locating appropriate keyway location.

Figure 5.2 – LY Keyway Locations

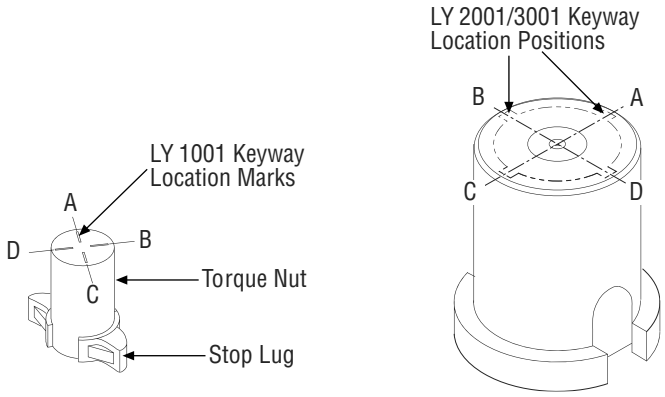

5.3 Installation Overview

CAUTION: Be sure to complete each step of the installation overview before electrically operating your actuator. If the actuator is already mounted to a valve from the manufacturer, verify that the actuator is mounted according to the following overview. Failure to follow the installation procedures could result in personal injury and/or improper operation and could cause damage to the equipment.

1. Mount Torque Nut (piece #32) in the actuator as shown in Figure 5.3 with the following alignment:
   A. For LY 1001 – Stop Lugs facing the Actuator Mounting Adapter with index lines positioned to face the Mechanical Stop Screws.
   B. For LY 2001/3001 – Torque Nut axially aligned on the Drive Sleeve so that the bottom of the nut is positioned inside the Actuator Mounting Base.

Figure 5.3 – LY 1001, 2001, and 3001 Torque Drive Nut Orientation

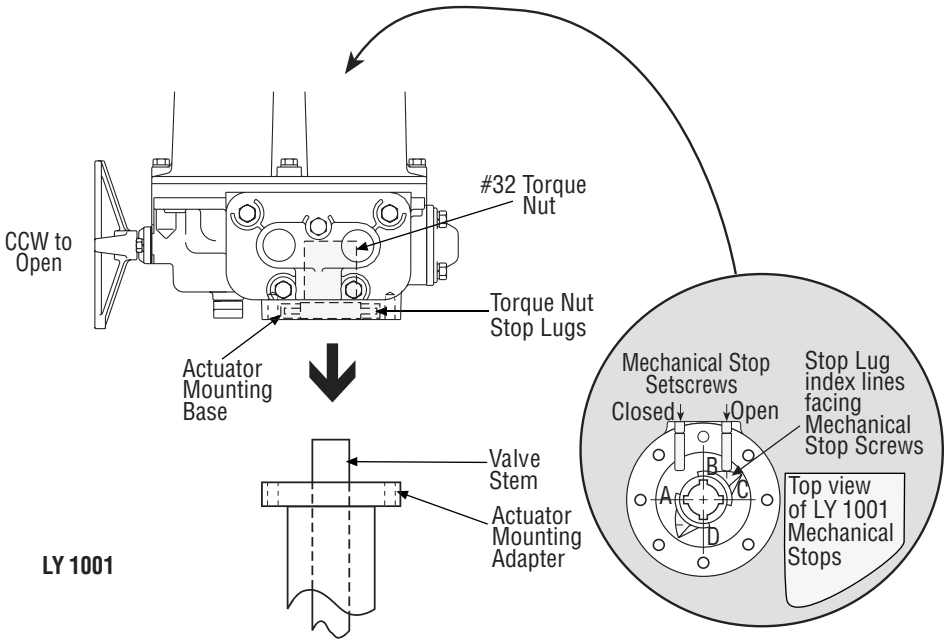

LY 1001

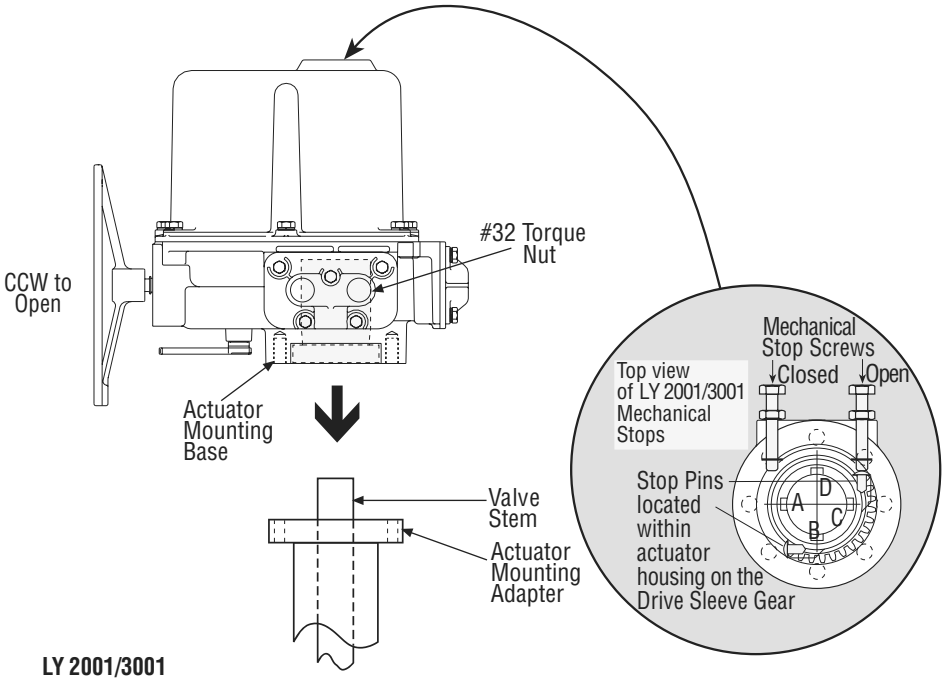

LY 2001/3001

2. Insert the Retaining Drive Ring (piece #165 for LY 1001, piece #109 for LY 2001/3001) on the Torque Nut (piece #32) to hold the Torque Nut in place in the actuator.
3. Mount the LY actuator on the mounting flange of the valve or other actuated equipment. High-strength (minimum SAE-Grade 5 120,000 psi tensile strength) hex head or socket head cap screws with lockwashers are recommended. The actuator mounting tap quantities and thread sizes are detailed in Table 5.2.

Table 5.2 – LY Actuator/Mounting Base Tap Sizes

Unit Type and Size	Quantity	Tap Size English	Tap Size Metric
LY 1001	8	3/8-16 x 0.71 deep	M10 x 1.5 mm x 25 mm deep (Complies with F10 ISO mounting flange criteria)
LY 2001/3001	8	5/8-11 x 1.26 deep	M16 x 2 mm x 35 mm deep (Complies with F14 ISO mounting flange criteria)

NOTE: Flowserve has supplied eight taps for the LY 1001, LY 2001, and LY 3001 in English/Metric units to provide flexibility in mounting arrangements. A minimum of four securing bolts is required to properly secure and retain torque reaction on these units.

⚠ DANGER: HAZARDOUS VOLTAGE. No electrical power should be connected until all wiring and limit switch adjustments have been completed. Once power is supplied to unit, exercise caution if cover is not installed.

4. Remove the Control Cover (piece #3) and Conduit Pipe Plugs (piece #144).

Figure 5.4 – Removing Control Cover and Conduit Pipe Plugs

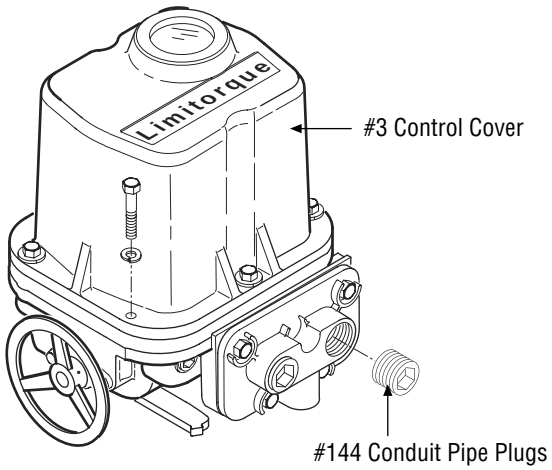

Table 5.3 – Control Cover and Conduit Pipe Plug Hardware

Unit Type	Control Cover		Conduit Pipe Plug	
	Quantity	Size	Quantity	Size
LY 1001 (WP & XP)	6	M8 x 40 mm	2	1" NPT Socket Hex Head
LY 2001/3001	8	M12 x 50 mm (WP) M12 x 55 mm (XP)	2	1" NPT Socket Hex Head

5. Adjust the Limit Switches, Mechanical Stops, and Position Indication Dial following the procedures detailed in Section 5.6, Limit Switch and Mechanical Stop Settings.
6. Connect the wiring to the terminal strips provided on the actuator. Refer to the wiring diagram supplied with the actuator. "Fork-type" terminal connections are recommended.
7. Insert a Conduit Pipe Plug in the unused conduit entrance if the wiring that enters the actuator uses only one conduit entrance.

NOTE:

A. Explosionproof actuators require approved "sealing fittings" installed in accordance with the National Electric Code.
B. Submersible actuators require an approved "sealing fitting" in order to keep water from entering the actuator.

8. Attach grounding wire to Grounding Lug (piece #141).
9. Verify motor rotation direction to ensure that the limit switch is wired properly for intended operation. (See Section 6.2, Verify Correct Motor Rotation (Phasing) and OPEN/CLOSE Pushbutton Operation.)

Figure 5.5 – Grounding Lug Location

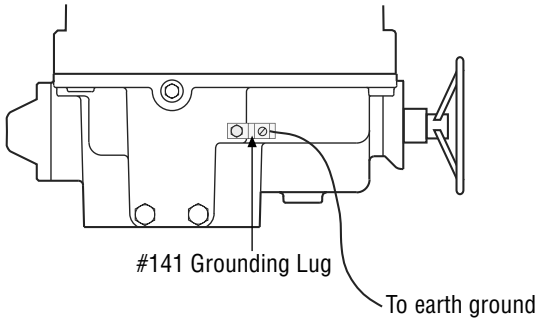

10. Reinstall Control Cover (piece #3).

NOTE: Submersible actuators require tightening the Control Cover Bolts and Integral Control Cover Bolts to a specified torque in order to maintain submersibility. (See Table 5.4 for specific torque settings.)

Table 5.4 – LY Control Cover and Integral Control Cover Bolt Sizes and Torques

Unit Type	Control Cover	Integral Compartment
LY 1001	M8 - 10 to 15 ft-lb	M10 - 15 to 20 ft-lb
LY 2001/3001	M12 - 20 to 25 ft-lb	M10 - 15 to 20 ft-lb

Unit is now ready for electrical operation.

5.4 Torque Switch Settings

⚠ DANGER: HAZARDOUS VOLTAGE. Turn power OFF before opening the Electrical Compartment Cover or making any adjustments to the Torque Switch.

CAUTION: Installing or adjusting the Torque Switch with the actuator in a loaded condition will result in loss of torque protection. Before adjusting or installing the Torque Switch, place the actuator in MANUAL mode and turn the Handwheel in the direction necessary to release the torque load on the Wormshaft Assembly.

NOTE: Removal or modification of the Torque Switch Limiter Plate will void the actuator warranty. Do not exceed the torque setting indicated by the Torque Switch Limiter Plate without contacting the Limitorque Service Department.

The LY unit is equipped with a do W to MEDIUM or HIGH by adjusting the Torque Switch Adjustment Screw unless it is limited by the Limiter Plate. (See Figure 5.6 for Torque Switch Adjustment Screw location.)

5.5 Rewiring the Torque Switch for Non-Standard Drive Sleeve Rotation

CAUTION: Double-check the wiring diagram to verify that the Torque Switch is wired appropriately for the application. The Torque Switch will not protect the valve from over-torque if the Torque Switch is not wired properly for the application.

LY series actuators are typically supplied with a CCW Drive Sleeve rotation to open a valve. The Torque Switch is marked OPEN (CCW) and CLOSE (CW) based upon CW Drive Sleeve rotation to close the valve. The Mechanical Dial Position Indicator (MDPI) is typically mounted for CW rotation to indicate the CLOSED position. If opposite Drive Sleeve rotation is required (CCW to close a valve), the following Torque Switch modifications are required.

1. Turn all power to the actuator OFF.
2. Reverse the ID Limiter Plate.
3. Interchange OPEN Torque Switch wires 18 and 18C with CLOSED wires 17 and 17C. (Refer to the wiring diagram for other Torque Switch wiring configurations.)

Figure 5.6 – Reversing Torque Switch Wiring

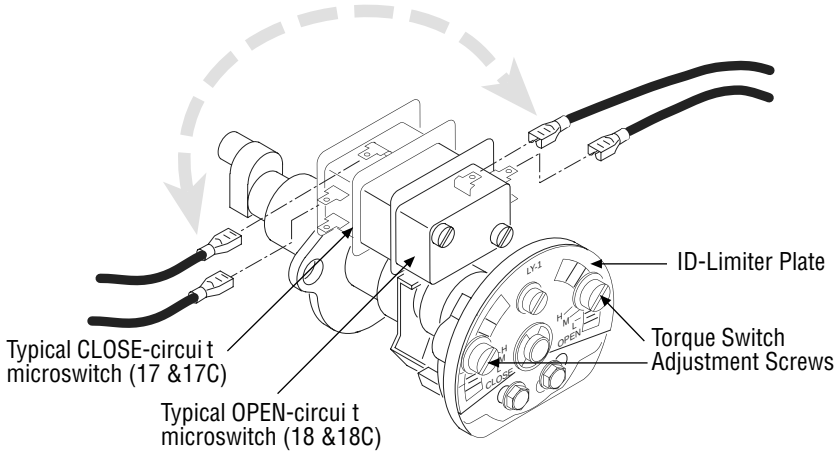

4. Remove the MDPI Plate and flip over for indication of CCW rotation to the valve's closed position. (See Figure 5.12 for MDPI Dial Plate.)

5.6 Limit Switch and Mechanical Stop Settings

The Limit Switch and Mechanical Stops are not preset at the factory, but must be set after mounting on the associated equipment. If the actuator has been shipped already installed on a valve, the actuator should have the Limit Switch and Mechanical Stops set for your application. If the actuator is not already installed on a valve or needs resetting, use the following instructions to make the appropriate settings.

The following instructions for setting the Limit Switches and Mechanical Stops are based on the typical orientation for most actuator applications. Consult the applicable wiring diagram located in the Control Compartment for the specific Limit Switch development.

NOTE: While making Limit Switch settings, remember that the Limit Cams rotate in the same direction as the valve stem.

5.7 Setting the Limit Switches

⚠ WARNING: Do not manually operate actuator with devices other than installed Handwheel and Declutch Lever. Using additive force devices (cheater bars, wheel wrenches, pipe wrenches or other devices of this nature) on the actuator Handwheel or Declutch Lever may cause serious personal injury and/or damage to the actuator or valve.

⚠ DANGER: HAZARDOUS VOLTAGE. Make sure all power is disconnected before making the following settings.

5.7.1 Setting the CLOSED Limit Switch

1. Put the actuator in MANUAL operation: move the Declutch Lever in the direction of the arrow on the lever until the Declutch Lever locks in place. If Declutch Lever is difficult to move, see Section 6.4, Manual Operation for instructions to release the Declutch Lever.
2. Turn the Handwheel CW to move the valve to the full CLOSE position.

   NOTE: Most applications require turning the Handwheel CW to obtain the full CLOSE position and CCW to obtain full OPEN position. The Drive Sleeves and Limit Cams also rotate in CW rotation to the CLOSE position and CCW to the OPEN position. If the application is configured differently, the descriptions in this manual will describe rotation directions opposite your application.

3. Loosen Setting Nut (piece #7-10) located at the top of the switch bracket approximately 3/4 turn.

   NOTE: When setting the Limit Cams by rotating to the trip point as described in Step 4, be careful not to move more than one cam at a time. Limit Cams that have already been set are not secure until Setting Nut (piece #7-10) is retightened.

Figure 5.7 – Limit Switch Setting Nut

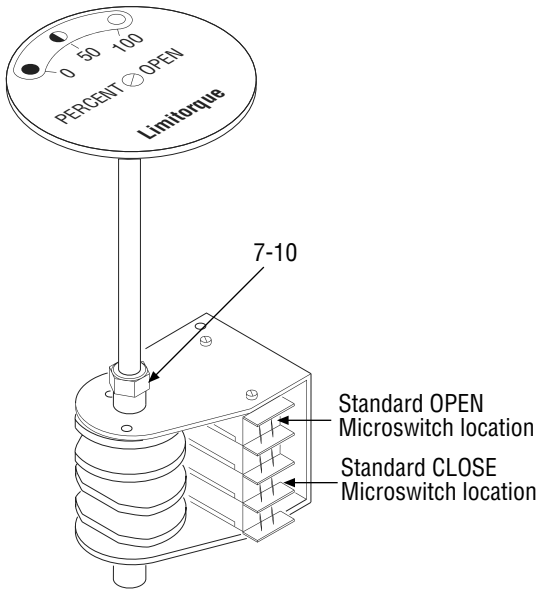

4. Rotate the CLOSE Limit Cam CW through the high side to the trip point until the Switch Plunger is released. This causes the N.O. (normally open) contact to open.

   NOTE: There will be no electrical continuity at the trip point when measuring with an ohmmeter between the common lead and the N.O. lead. You may also hear a faint “click” at the trip point.

   NOTE: During actuator operation, when the Switch Plunger trips, the N.O. contact is released, causing the Limit Switch to stop the actuator in the CLOSED position.

Figure 5.8 – Setting CLOSE Limit Cam

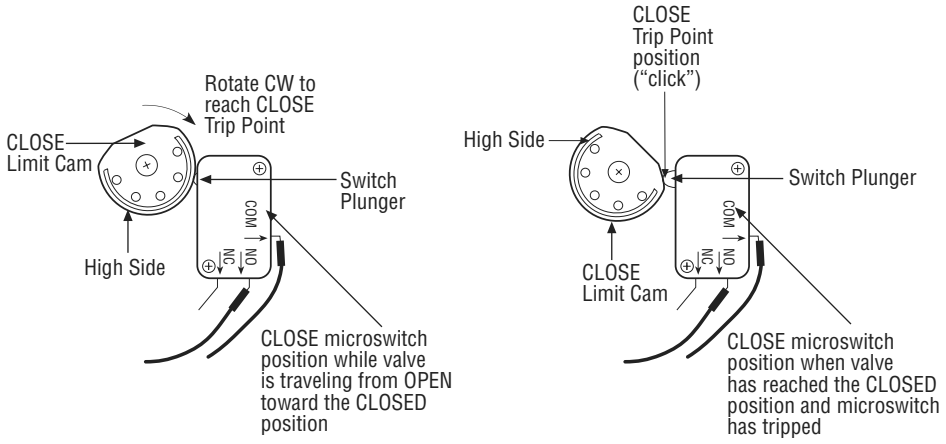

5. Retighten Setting Nut (piece #7-10).

5.7.2 Setting the OPEN Limit Switch

NOTE: When setting the OPEN Limit Switch, be careful not to rotate the CLOSE Limit Cam; rotating it will change the adjustments you previously made on the CLOSE Limit Switch.

1. Put the actuator into MANUAL operation by moving the Declutch Lever in the direction of the arrow on the lever until the Declutch Lever locks in place. If Declutch Lever is difficult to move, see Section 6.4, Manual Operation for instructions to release the Declutch Lever.
2. Turn the Handwheel to move the valve to the full OPEN position.

   NOTE: Most applications require turning the Handwheel CCW to obtain the full OPEN position. The Drive Sleeve and Limit Cams also rotate in CCW rotation to the OPEN position. If your application is configured differently, keep in mind the descriptions in this manual will describe rotation directions opposite of your application.

3. Loosen Setting Nut (piece #7-10) located at the top of the switch bracket. (See Figure 5.7.)
4. Rotate the OPEN Limit Cam CCW through the high side to the trip point until the Switch Plunger is released. This causes the N.O. contact to open. There will be no electrical continuity at the trip point when measuring with an ohmmeter between the common lead and the N.O. lead; you may also hear a faint “click” at the trip point.

   NOTE: During actuator operation, when the Switch Plunger trips, the N.O. contact is released, causing the Limit Switch to stop the actuator in the OPEN position.

Figure 5.9 – Setting OPEN Limit Cam

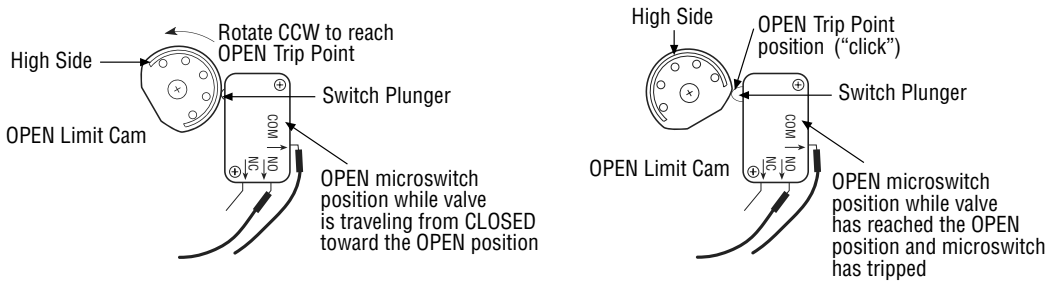

5. Retighten Setting Nut (piece #7-10).

5.8 Mechanical Stops

5.8.1 Setting the CLOSED Mechanical Stop on the LY 1001

Table 5.5 – Mechanical Stop Set Screws

Unit Type	Mechanical Stop Set Screw Size	Set Screw Size
LY 1001	3/8-16 x 1.25”	3/8-16 x 0.375"

Piece numbers refer to Figure 5.10.

1. Set CLOSE Mechanical Stop Set Screw (piece #58) by removing the Set Screw (piece #59).
2. Using the Handwheel, turn the valve to the CLOSE position. Make sure the valve is fully seated before setting the mechanical stop.
3. Rotate Mechanical Stop Set Screw (piece #58) in the CW direction until contact with the Torque Nut (piece #32) occurs. (See Figure 5.9.)
4. Back-off Mechanical Stop Set Screw (CCW direction) approximately 1-1/2 turns.
5. Reinstall Set Screw (piece #59).
6. Manually operate the actuator through the close limit to assure setting is correct.

   NOTE: The Mechanical Stops are intended to protect the equipment from overtravel if a Limit Switch fails. The valve should not torque-out against the Mechanical Stop Set Screw during normal OPEN/CLOSE cycles.

Figure 5.10 – Mechanical Stop Set Screw Adjusted to Torque Nut Contact Point on LY 1001

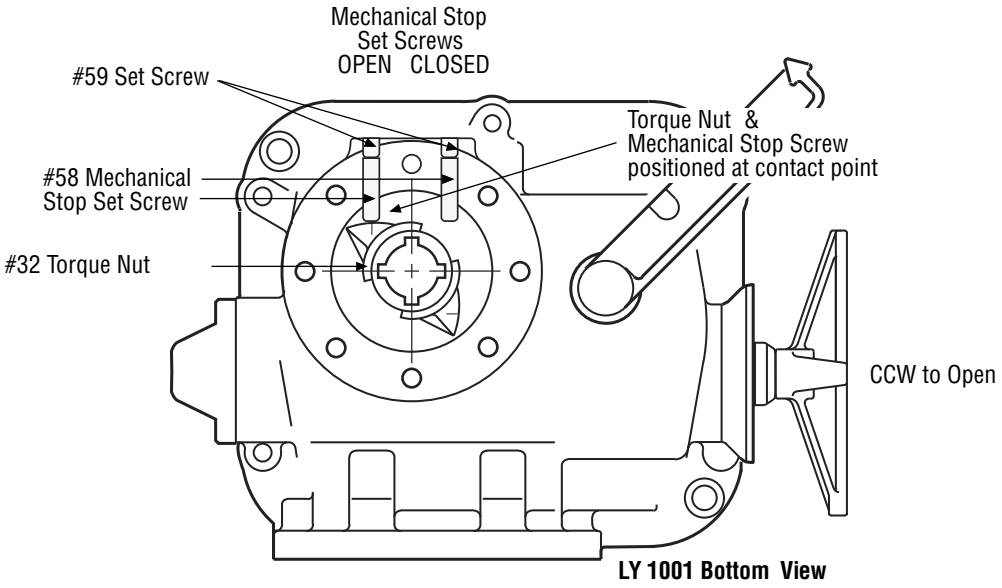

5.8.2 Setting the CLOSED Mechanical Stop on the LY 2001/3001

Table 5.6 – Mechanical Stop and Locknut Screw Sizes

Unit Type	Stop Screw Size	Locking Nut Size
LY 2001/3001	⅝-16 x 3”	⅝-11

All piece numbers refer to Figure 5.11.

1. Set CLOSE Mechanical Stop Screws (piece #58) (Hex Head Cap Screw) by loosening Locking Nut (piece #59) (Hex Head Nut).
2. Using the Handwheel, turn the valve to the CLOSE position. Make sure the valve is fully seated before setting the mechanical stop.
3. Rotate Mechanical Stop Screw (piece #58) in the CW direction until contact with the Stop Pin (piece #28) occurs.
4. Back-off Mechanical Stop Screw (CCW direction) approximately 1½ turns.
5. Retighten Locking Nut.
6. Manually operate the actuator through the close limit to assure setting is correct.

   NOTE: The Mechanical Stops are intended to protect the equipment from overtravel if a Limit Switch fails. The valve should not torque-out against the Mechanical Stop Screw during normal OPEN/CLOSE cycles.

Figure 5.11 – Mechanical Stop Set Screw Adjusted to Torque Drive Nut Contact Point on LY 2001 and 3001

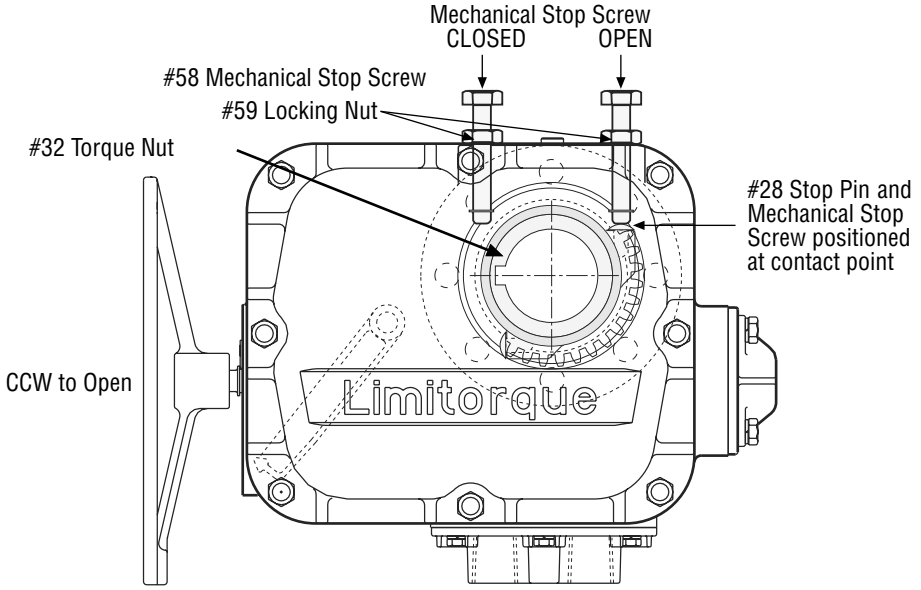

LY 2001/3001 Top View

5.8.3 Setting the OPEN Mechanical Stop on the LY 1001

Piece numbers refer to Figure 5.10.

1. With the valve in the full OPEN position, set OPEN Mechanical Stop Set Screw (piece #58) by removing the Set Screw (piece #59). (See Figure 5.9 for orientation.)
2. Using the Handwheel, turn the valve to the OPEN position. Verify the valve is fully open before setting the Mechanical Stop Set Screw.
3. Rotate Mechanical Stop Set Screw (piece #58) in the CW direction until contact with the Torque Nut (piece #32) occurs.
4. Back-off Mechanical Stop Set Screw (CCW direction) approximately 1½ turns.
5. Reinstall Set Screw (piece #59).
6. Manually operate the actuator through the open limit to assure setting is correct.

5.8.4 Setting the OPEN Mechanical Stop on the LY 2001/3001

Piece numbers refer to Figure 5.11.

1. With the valve in the full OPEN position, set OPEN Mechanical Stop Screws (piece #58) (Hex Head Cap Screw) by loosening Locking Nut (piece #59) (Hex Head Nut). (See Figure 5.10 for orientation.)
2. Using the Handwheel, turn the valve to the OPEN position. Make sure the valve is fully open before setting the Mechanical Stop.
3. Rotate Mechanical Stop Screw (piece #58) in the CW direction until contact with the Stop Pin (piece #28) occurs.
4. Back-off Mechanical Stop Screw (CCW direction) approximately 1½ turns.
5. Retighten Locking Nut.
6. Manually operate the actuator through the open limit to assure setting is correct.

   NOTE: The Mechanical Stops are intended to protect the equipment from overtravel if a Limit Switch fails. The valve should not torque-out against the Mechanical Stop Screw during normal OPEN/CLOSE cycles.

5.9 Setting the MDPI (Mechanical Dial Position Indicator)

Piece numbers refer to Figure 5.12.

1. After setting the Limit Switch and Mechanical Stop Settings, manually position the valve in the fully CLOSED position.
2. Loosen Screw (piece #147) on MDPI.
3. Make sure the MDPI Dial Plate (piece #146) is aligned properly with the Dial Window Retaining Plate Arrow (piece #108), usually 0% (CLOSED) should align with the arrow. (See Figure 5.12.)

   NOTE: If your application uses CW handwheel rotation to OPEN, flip the MDPI Plate over to properly orient the OPEN and CLOSED position on the MDPI Plate.

4. Retighten the Screw (piece #147) on the MDPI Dial Plate (piece #146).

Figure 5.12 – Aligning MDPI with Dial Window Retaining Plate

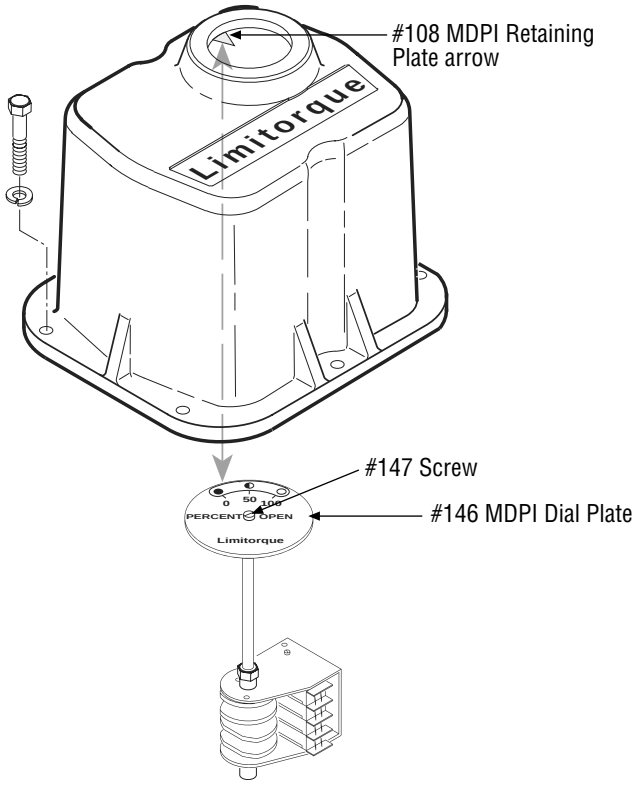

5.9.1 Setting the Potentiometer

If the LY actuator includes a Feedback Potentiometer used for remote valve position indication, use an ohmmeter to calibrate the position of the potentiometer.

⚠ DANGER: HAZARDOUS VOLTAGE. Turn power off before calibrating the Feedback Potentiometer.

1. Using the Handwheel, position the actuator to mid-travel (valve at the 50% position).
2. Disconnect the Potentiometer Wiring Harness from where it is plugged in or connected to a Terminal Strip.
3. Using an ohmmeter, verify that the potentiometer is in mid-travel. The resistance from each End Connection to the Center Connection should be half of the full resistance of the Potentiometer. Example: 1000 ohm potentiometer should read approximately 500 ohms from one of the End Connections to the Center Connection.

Figure 5.13 – Potentiometer Calibration Components

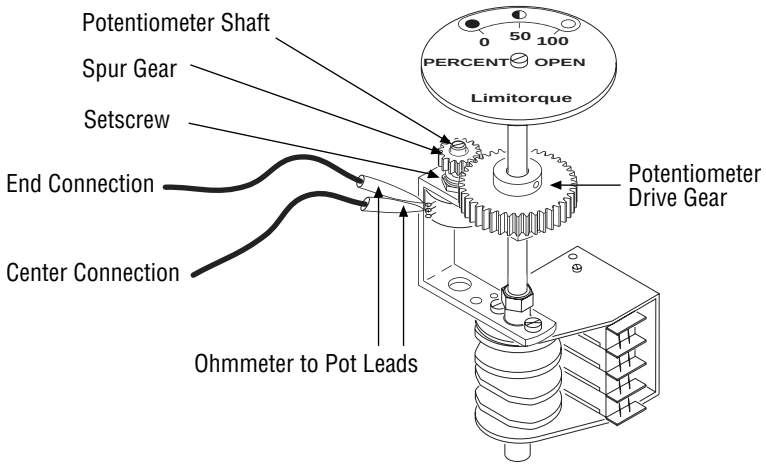

4. If the reading is not correct, proceed to Step 5. If the reading is correct, proceed to Step 6.
5. a. Loosen the small Set Screw that retains the Spur Gear to the Potentiometer Shaft.
   b. Using a small flat-tipped screwdriver in the slotted Potentiometer Shaft, rotate the Shaft until the correct reading is obtained as described in Step 3.
   c. Retighten the Set Screw.
6. Disconnect the ohmmeter and reconnect the Potentiometer wiring to the original connection.

6 Operation

6.1 Typical LY 1001 Operation

LY actuators are always available for motor operation when the motor is energized.

NOTE: Applied voltage rating = voltage rating of actuator ±10%

⚠ WARNING: Do not manually operate the actuator with devices other than installed Handwheel and Declutch Lever. Using force beyond the ratings of the unit and/or using additive force devices such as cheater bars, wheel wrenches, pipe wrenches, or other devices on the actuator Handwheel or Declutch Lever may cause serious personal injury and/or damage to the actuator or valve.

CAUTION: Do not motor-operate the valve without first setting or checking the limit switch setting, motor direction, and mechanical stops. Do not force the Declutch Lever into the motor operation position. The Declutch Lever returns to motor-operation position automatically when the motor is energized.

6.2 Verify Correct Motor Rotation (Phasing) and OPEN/CLOSE Pushbutton Operation

Correct motor rotation must be verified to prevent serious damage to valve or other equipment. If the actuator motor rotates in the wrong direction, damage could occur by over-torquing equipment into a seated position.

Prior to being shipped from the factory, each actuator is inspected to verify proper operation of the Torque and Position Limit Switches and to ensure that they function correctly, i.e., closes when the CLOSE pushbutton is depressed, opens with the OPEN pushbutton, etc. These inspections are made with a properly phased power source connected as described in the actuator manual.

CAUTION: To ensure proper operation and to prevent your actuator or other actuated equipment from damage, verify that your unit is properly connected to its power source.

6.2.1 Three-Phase Motor

NOTE: Your application may vary from the standard wiring configuration for three-phase shown in Figures 6.1 and 6.2. Refer to the specific actuator wiring diagram for wiring configuration.

1. Using the Handwheel, move the valve to a midtravel position. Midtravel position allows brief electrical operation in the valve “safe” area and keeps the OPEN and CLOSED Limit Switches from tripping while testing motor direction.
2. Test motor direction by momentarily pressing the OPEN pushbutton:
   a. If the actuator moves toward CLOSED, immediately turn all power OFF and reverse the motor leads T1 and T3 on terminal strip.

b. If the actuator moves toward OPEN, the motor is wired properly for the application.

Figure 6.1 – Standard Actuator/Three-Phase

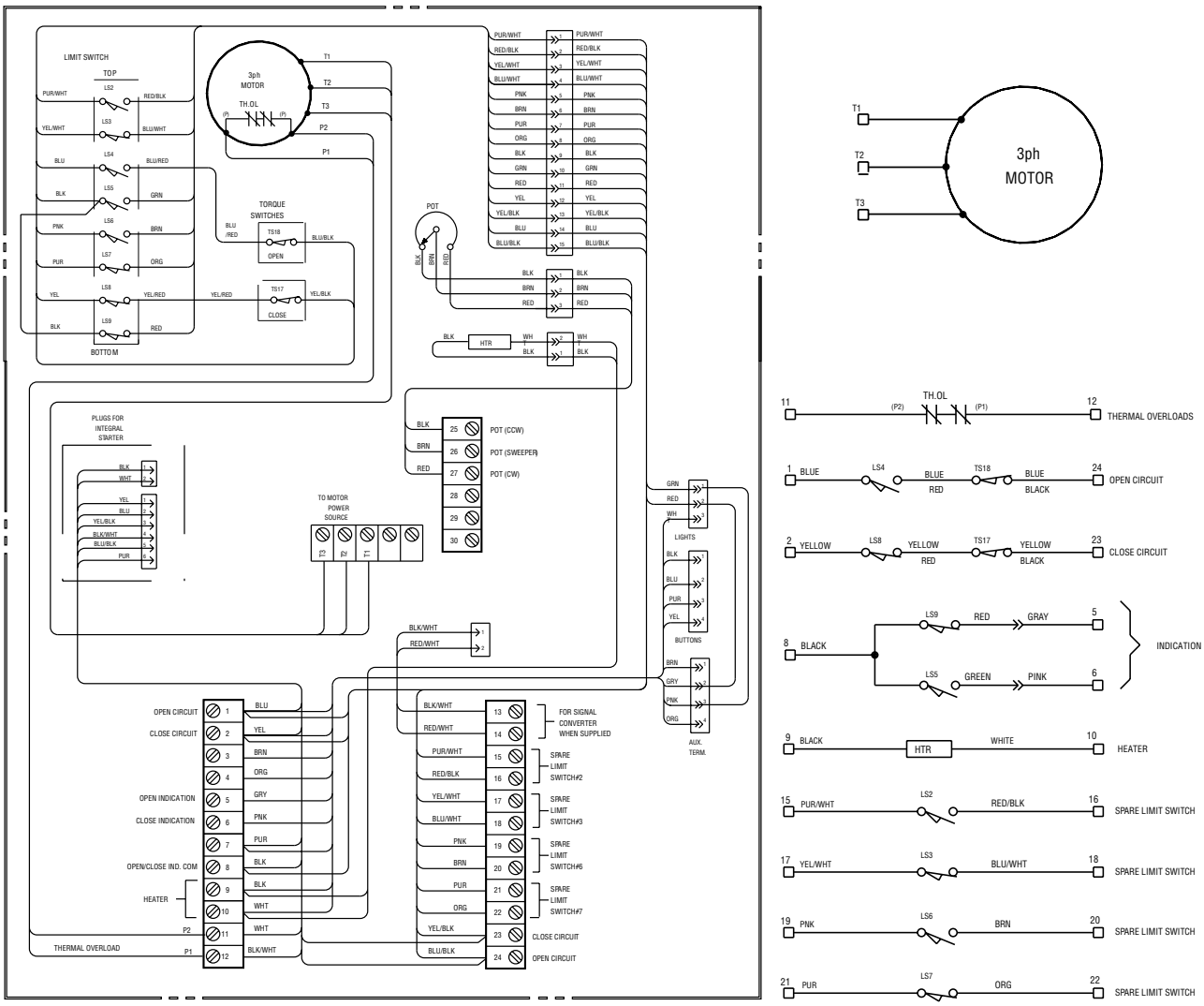

Valve shown in full open position

Limit Switch Contact Development

LIMIT SWITCH CONTACT	VALVE POSITION FULL OPEN – FULL CLOSE	FUNCTION
2	----------▮	SPARE
3	▮----------	SPARE
4	–▮▮▮▮▮▮▮▮▮	OPEN LIMIT
5	–▮▮▮▮▮▮▮▮▮	IND LIGHT
6	------▮▮▮▮▮	INDICATION
7	▮▮▮▮▮------	INDICATION
8	▮▮▮▮▮▮▮▮--	CLOSED LIMIT
9	▮▮▮▮▮▮▮▮--	IND LIGHT

TS17 —Closing torque switch interrupts control circuit if mechanical overload occurs during closing cycle.

TS18 —Opening torque switch interrupts control circuit if mechanical overload occurs during opening cycle.

NOTES

1. ----- Open contact
2. ▮▮▮ Close contact
3. All limit switch trip points are fully adjustable.

LEGEND

TH. OL -Thermal Overload Contacts
HTR - Space Heater
Pot - Slider wire transmitter

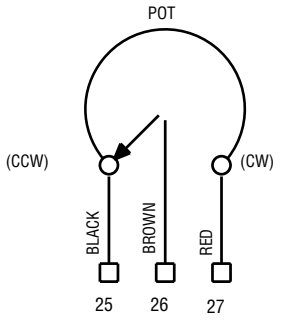

Figure 6.2 – Three-Phase with Control Package

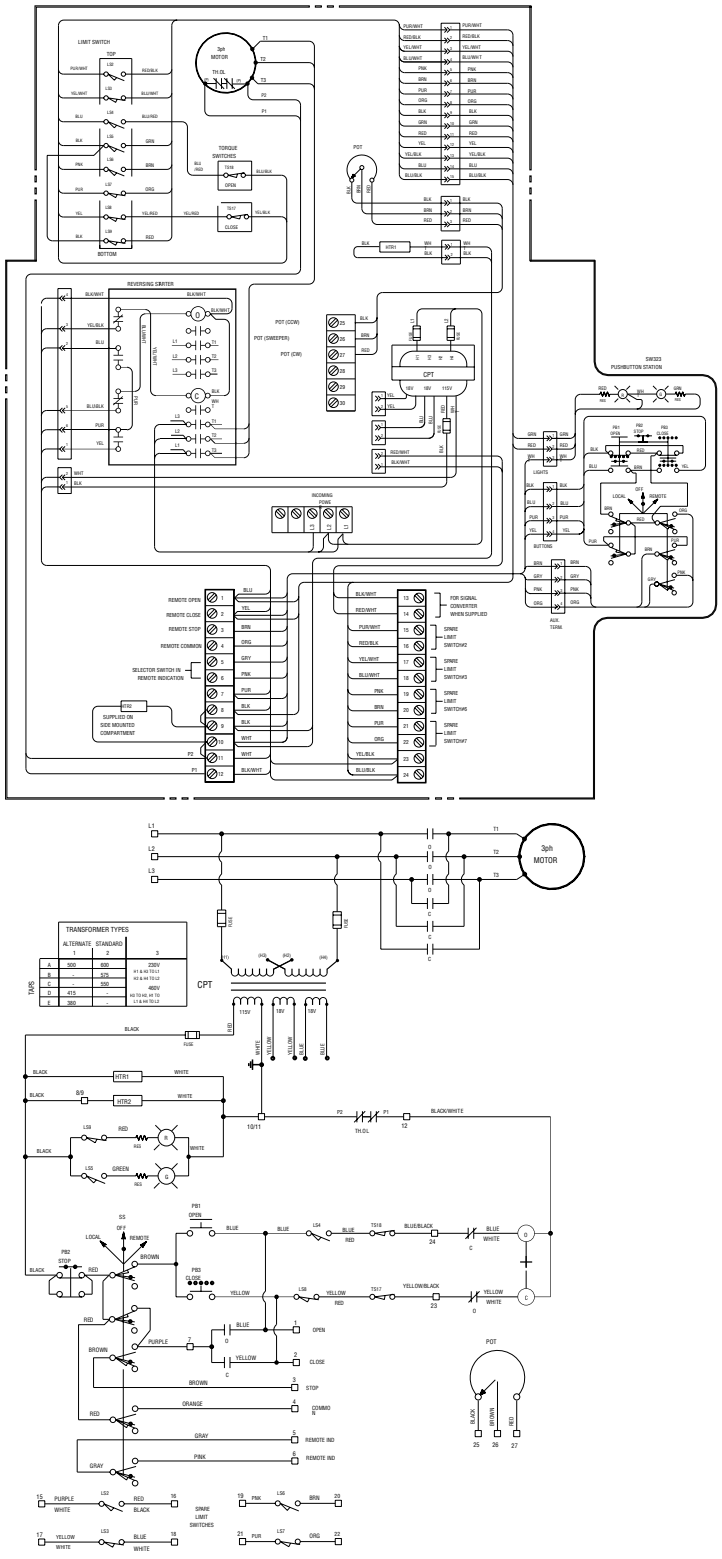

Valve shown in full open position

Limit Switch Contact Development		
LIMIT SWITCH CONTACT	VALVE POSITION FULL OPEN / FULL CLOSE	FUNCTION
2		SPARE
3		SPARE
4		OPEN LIMIT
5		IND LIGHT
6		INDICATION
7		INDICATION
8		CLOSED LIMIT
9		IND LIGHT

TS17 —Closing torque switch interrupts control circuit if mechanical overload occurs during closing cycle.

TS18 —Opening torque switch interrupts control circuit if mechanical overload occurs during opening cycle.

NOTES

1. - - - - - Open contact
2. ▬ Close contact
3. All limit switch trip points are fully adjustable.

LEGEND

O — *Open contact*
C — Close contact
Ⓞ — Opening coil
Ⓒ — Closing coil
CPT — Control Power Transformer
+ — Mechanical interlock
TH. OL — Thermal overload contacts
SS — Selector switch (local-remote)
PB1 — Open pushbutton
PB2 — Stop pushbutton
PB3 — Close pushbutton
HTR1 — Space heater
HTR2 — Space heater (Side mounted compt. only)
POT — Slidewire transmitter
Ⓡ — Red indicating light
Ⓖ — Green indicating light
RES — Lamp Resistors

6.2.2 Single-Phase Motor

NOTE: Your application may vary from the standard wiring configuration for the single-phase motor shown in Figures 6.3 and 6.4. Refer to the specific actuator wiring diagram for wiring configuration.

1. Using the Handwheel, move the valve to a midtravel position. Midtravel position allows electrical operation in the valve "safe" area and keeps the OPEN and CLOSED limit switches from tripping while testing motor direction.
2. Momentarily press the OPEN pushbutton to test motor direction. If the actuator moves toward CLOSED, immediately turn power OFF and proceed with the instructions that match your application. Permanent Split Capacitor single-phase motors can be connected for opposite rotation by interchanging the leads T1 and T2 coming from the motor to the terminal strip.

Figure 6.3 – Standard Actuator/Single-Phase

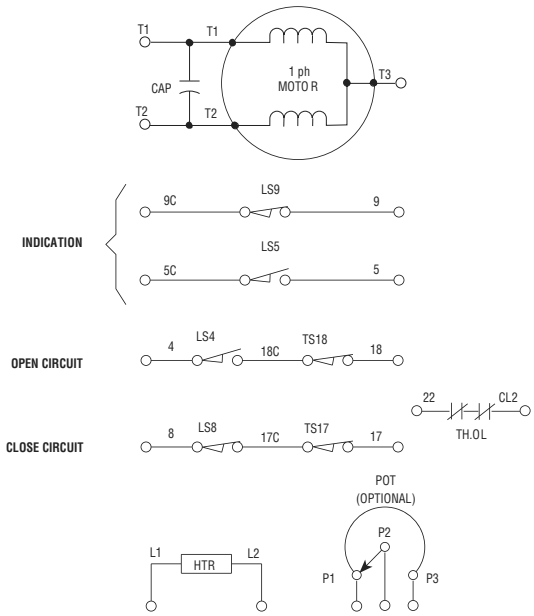

Valve shown in full open position

Limit Switch Contact Development		
LIMIT SWITCH CONTACT	VALVE POSITION FULL OPEN — FULL CLOSE	FUNCTION
4	–	OPEN LIMIT
5	–	INDICATION
8	- -	CLOSED LIMIT
9	- -	INDICATION

TS17 —Closing torque switch interrupts control circuit if mechanical overload occurs during closing cycle.

TS18 —Opening torque switch interrupts control circuit if mechanical overload occurs during opening cycle.

NOTES
1. - - - - Open contact
2. ■ Close contact
3. All limit switch trip points are fully adjustable.

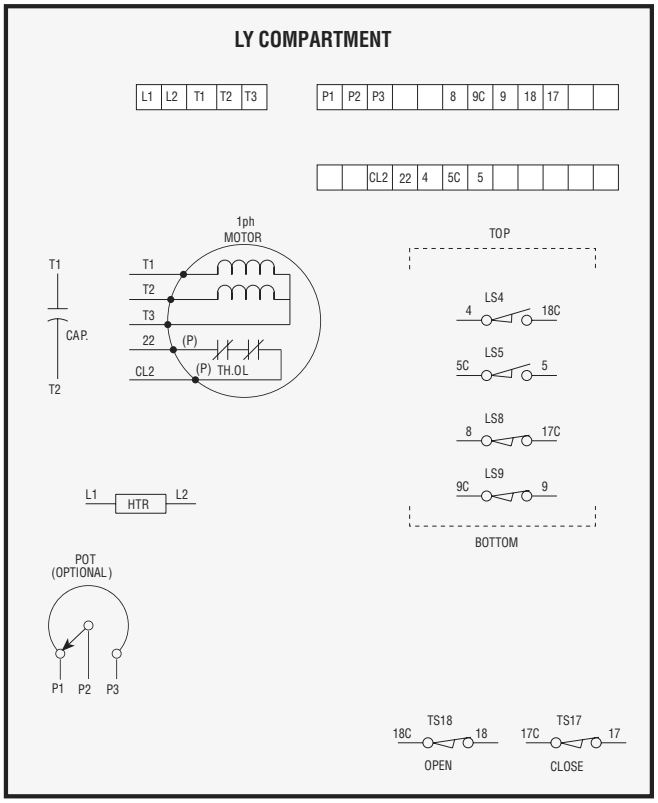

LEGEND
HTR —Space heater (LY COMPT.)
POT —Slidewire transmitter (optional)
(See certification sheet if supplied)
TH. OL —Thermal overload (internal)

Note: Refer to certified data for construction purposes 16-476-1630-2C.

Figure 6.4 – Single-Phase with Control Package

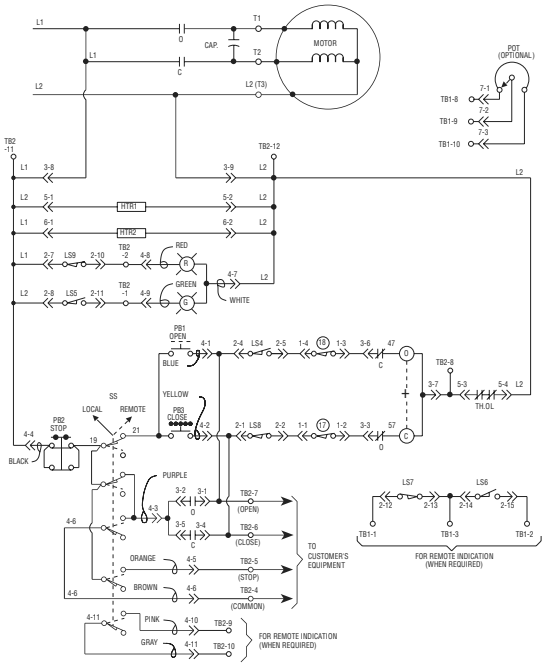

Valve shown in full open position

Limit Switch Contact Development			
LIMIT SWITCH CONTACT	VALVE POSITION FULL OPEN	FULL CLOSE	FUNCTION
2	– – –	■■■	SPARE
3	■■■	– – –	SPARE
4	■■■		OPEN LIMIT
5	■■■		IND LIGHT
6	– – –	■■■	INDICATION
7	■■■	– – –	INDICATION
8	■■■	– –	CLOSED LIMIT
9	■■■	– –	IND LIGHT

TS17 — Closing torque switch interrupts control circuit if mechanical overload occurs during closing cycle.

TS18 — Opening torque switch interrupts control circuit if mechanical overload occurs during opening cycle.

NOTES
1. - - - - Open contact
2. ■■■ Close contact
3. All limit switch trip points are fully adjustable.

CONTROL COMPARTMENT **LY COMPARTMENT**

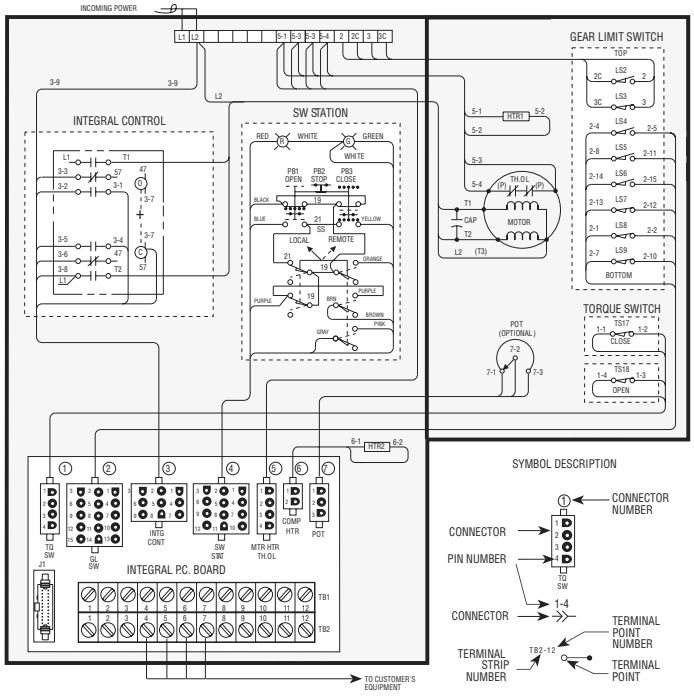

LEGEND
O — Open contact
C — Close contact
Ⓞ — Opening coil
Ⓒ — Closing coil
CAP — Motor capacitor
+ — Mechanical interlock
TH. OL — Thermal overload contacts
SS — Selector switch (local-remote)
PB1 — Open pushbutton
PB2 — Stop pushbutton
PB3 — Close pushbutton
HTR1 — Space heater (LY Compt.)
HTR2 — Space heater (Control Compt.)
POT — Slidewire transmitter (optional) (See certification sheet if supplied.)
J1 — Connector for Modutronic 20 units
Ⓡ — Red indicating light
Ⓖ — Green indicating light

Note: Refer to certified data for construction purposes 16-476-1633-3D.

6.2.3 DC Motor

NOTE: Your application may vary from the standard wiring configuration for the DC motor. Refer to the specific actuator wiring diagram for wiring configuration.

1. Using the Handwheel, move the valve to a midtravel position. Midtravel position allows electrical operation in the valve "safe" area and keeps the OPEN and CLOSED limit switches from tripping while testing motor direction.
2. Test motor direction by momentarily pressing the OPEN pushbutton:
   A. If the actuator moves toward CLOSED, immediately turn all power OFF and reverse the motor leads A1 and A2 on the terminal strip.
   B. If the actuator moves toward OPEN, the motor is wired properly for the application.

6.3 Electrical Startup

1. Confirm that the actuator has been correctly lubricated. This is particularly important if the actuator has been in long-term storage.
2. Ensure that the Torque Switch and Limit Switch have been properly set per Section 5.4, Torque Switch Settings and Section 5.7, Setting the Limit Switches respectively.
3. Engage MANUAL operation and hand-crank valve well away from the OPEN or CLOSED end-of-travel.
4. Turn power ON and push the OPEN button to electrically operate the actuator.
5. Verify output rotation:
   - If Motor rotation (phase) is correct, the valve will begin to open.
   - If the valve begins to CLOSE — STOP IMMEDIATELY.

   Refer to Section 6.2, Verify Correct Motor Rotation (Phasing) and OPEN/CLOSE Pushbutton Operation to correct the motor rotation, if necessary.
6. If the actuator configuration has a control package, see the specific control package Instruction and Maintenance Manual for proper setup and calibration.
   The actuator should operate correctly and will stop at the end-of-travel by the Torque and Limit Switch functions.

6.4 Manual Operation

⚠ WARNING: Do not manually operate actuator with devices other than installed Handwheel and Declutch Lever. Using additive force devices (cheater bars, wheel wrenches, pipe wrenches, or other devices of this nature) on the actuator handwheel or declutch lever may cause serious personal injury and/or damage to the actuator or valve.

Piece numbers refer to Figures 6.5, 6.6, and 6.7 for LY 1001 and Figure 6.8, 6.9, 6.10, and 6.11 for LY 2001/3001.

The LY actuator has a Handwheel for manual operation. The unit can be manually operated any time the motor is not energized.

1. To manually operate the actuator, push the Declutch Lever (piece #45) clockwise approximately 20° until it latches.
2. If the Declutch Lever will not turn 20° or it does not latch, DO NOT FORCE. Rotate the Handwheel (piece #41) slightly (in either direction) while continuing to push the Declutch Lever in the clockwise direction; the Declutch Lever will latch in place. When the Declutch Lever is latched in place, the Clutch (piece #13) is moved until its lugs engage with the lugs on the Handwheel Clutch (piece #16). This position is maintained indefinitely by the Declutch Fork Assembly (piece #46). When the motor is energized, a flat on the Input Worm Gear (piece #18) releases the Declutch Fork Assembly, pushing the Clutch into motor operation by the Declutch Return Spring (piece #47).

6.5 Motor Operation

CAUTION: Do not force the Declutch Lever into motor operation. Lever will automatically return to motor operation when the motor is energized.

Piece numbers refer to Figures 6.5, 6.6, and 6.7 for LY 1001, and Figures 6.8, 6.9, 6.10, and 6.11 for LY 2001/3001.

The Motor Pinion Gear (piece #54) turns the Worm Shaft Pinion Gear (piece #53), which is part of the Input Worm Shaft (piece #31). The Input Worm Shaft drives the Input Worm Gear (piece #18) that is lugged to the Clutch Sleeve (piece #13). The Input Worm Gear drives the Worm Shaft Assembly through the lugs and splines on the Clutch Sleeve. The Output Worm (piece #15) on the Worm Shaft Assembly turns the Drive Sleeve (piece #10). The Drive Sleeve accepts the Torque Nut (piece #32) that is bored and keyed to fit and turn the particular valve stem.

Figure 6.5 – LY 1001 Cover and Associated Parts

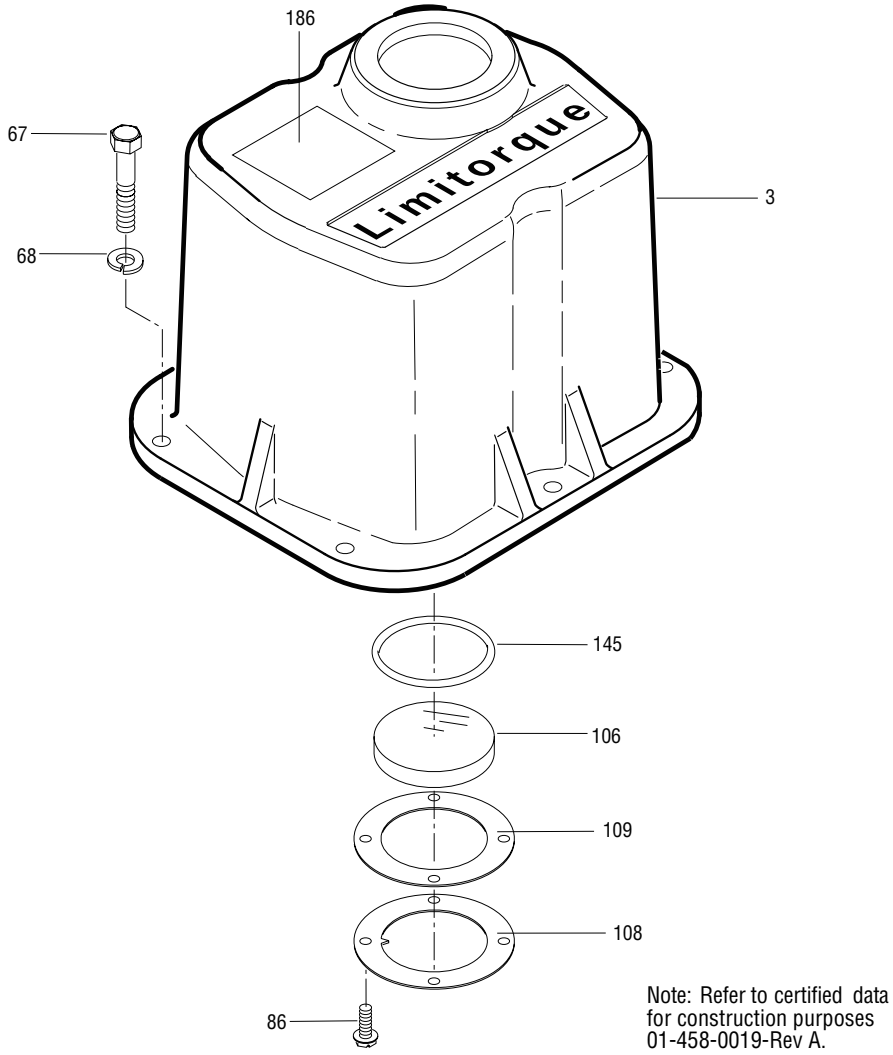

Figure 6.6 – LY 1001 Top Plate and Associated Parts

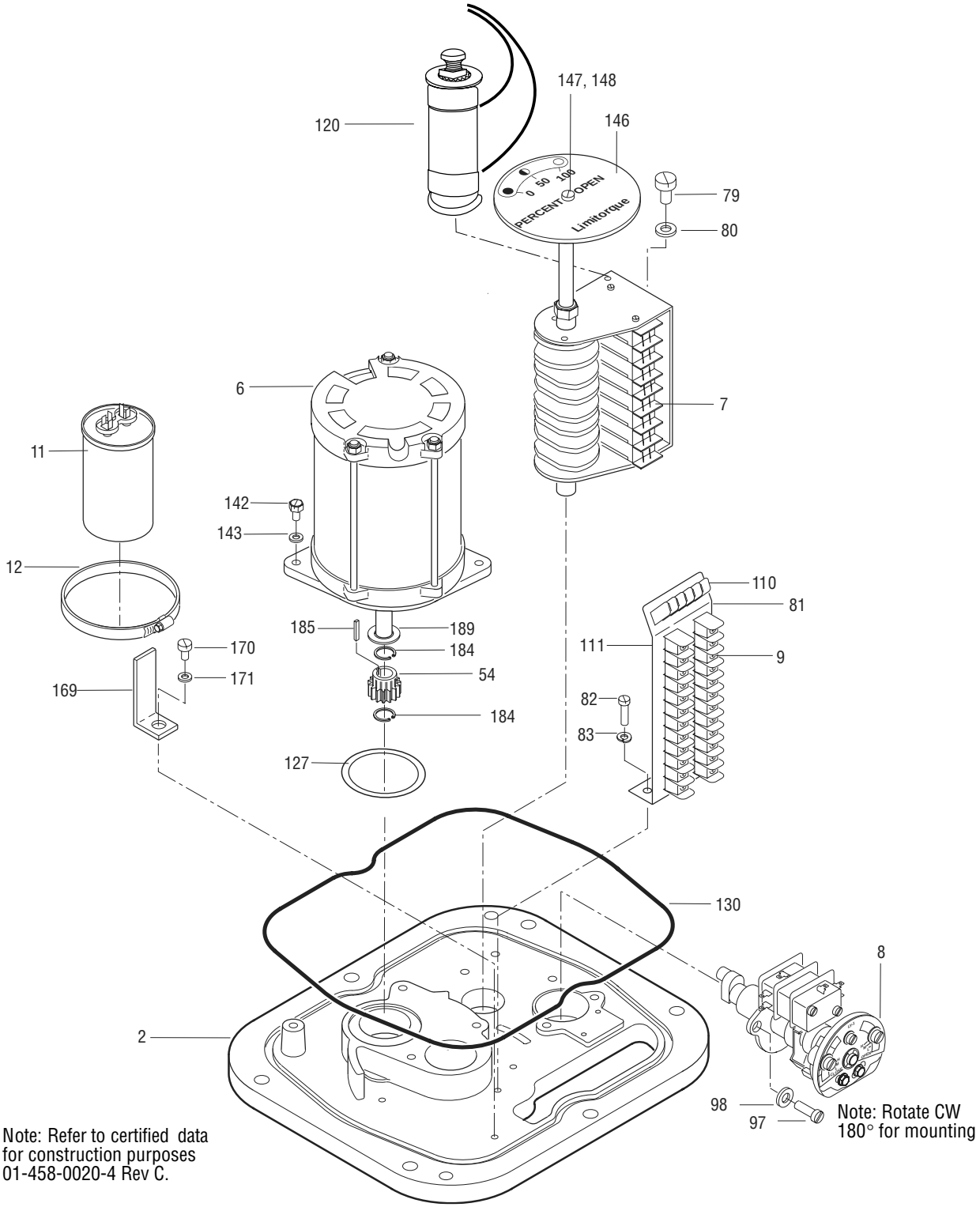

Figure 6.7 – LY 1001 Housing and Associated Parts

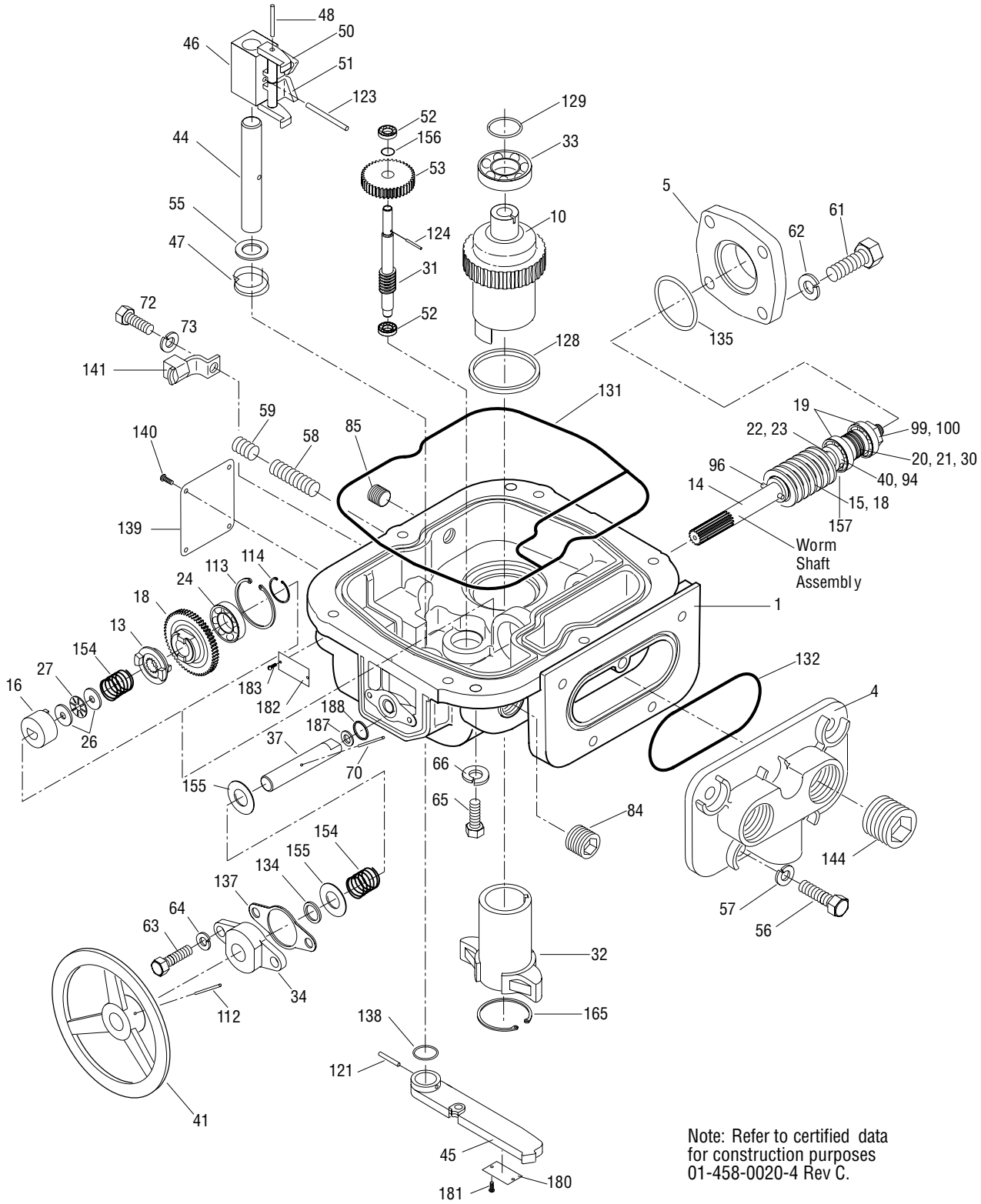

Figure 6.8 – LY 2001/3001 Cover and Associated Parts

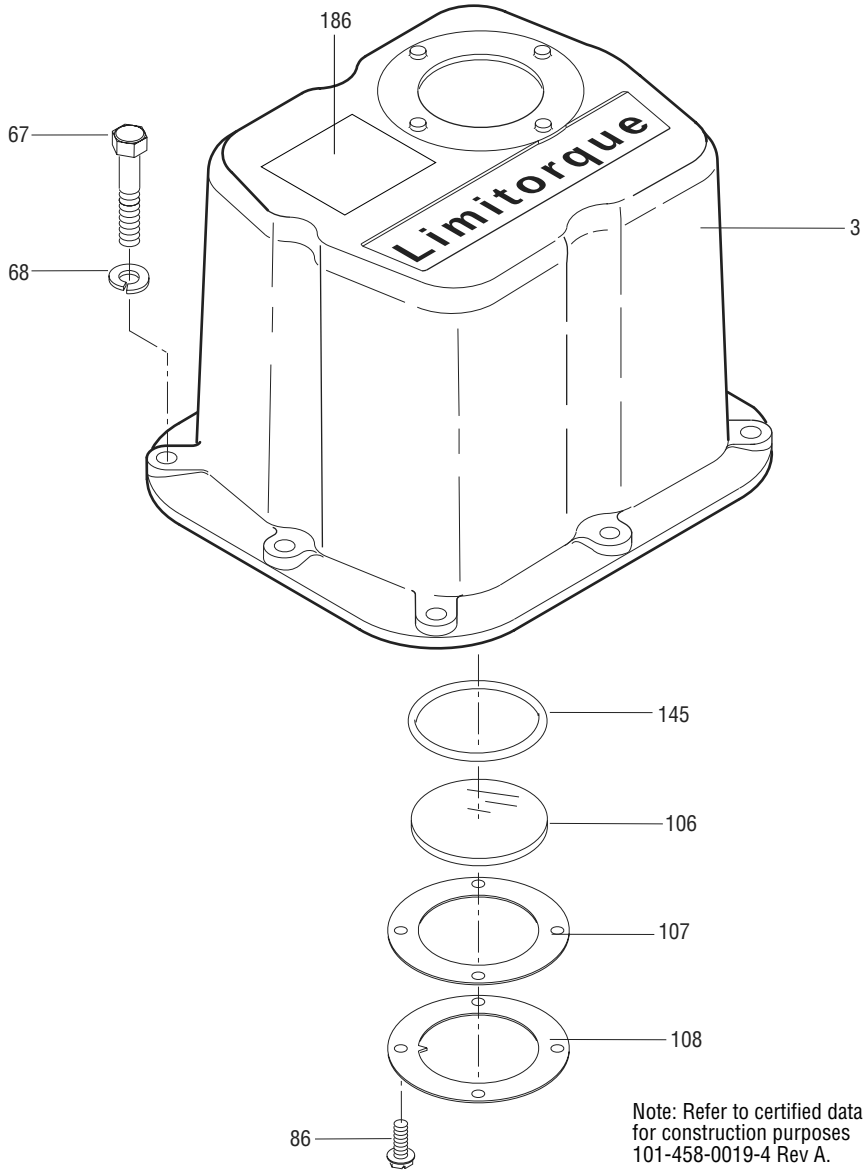

Figure 6.9 – LY 2001/3001 Top Plate and Associated Parts

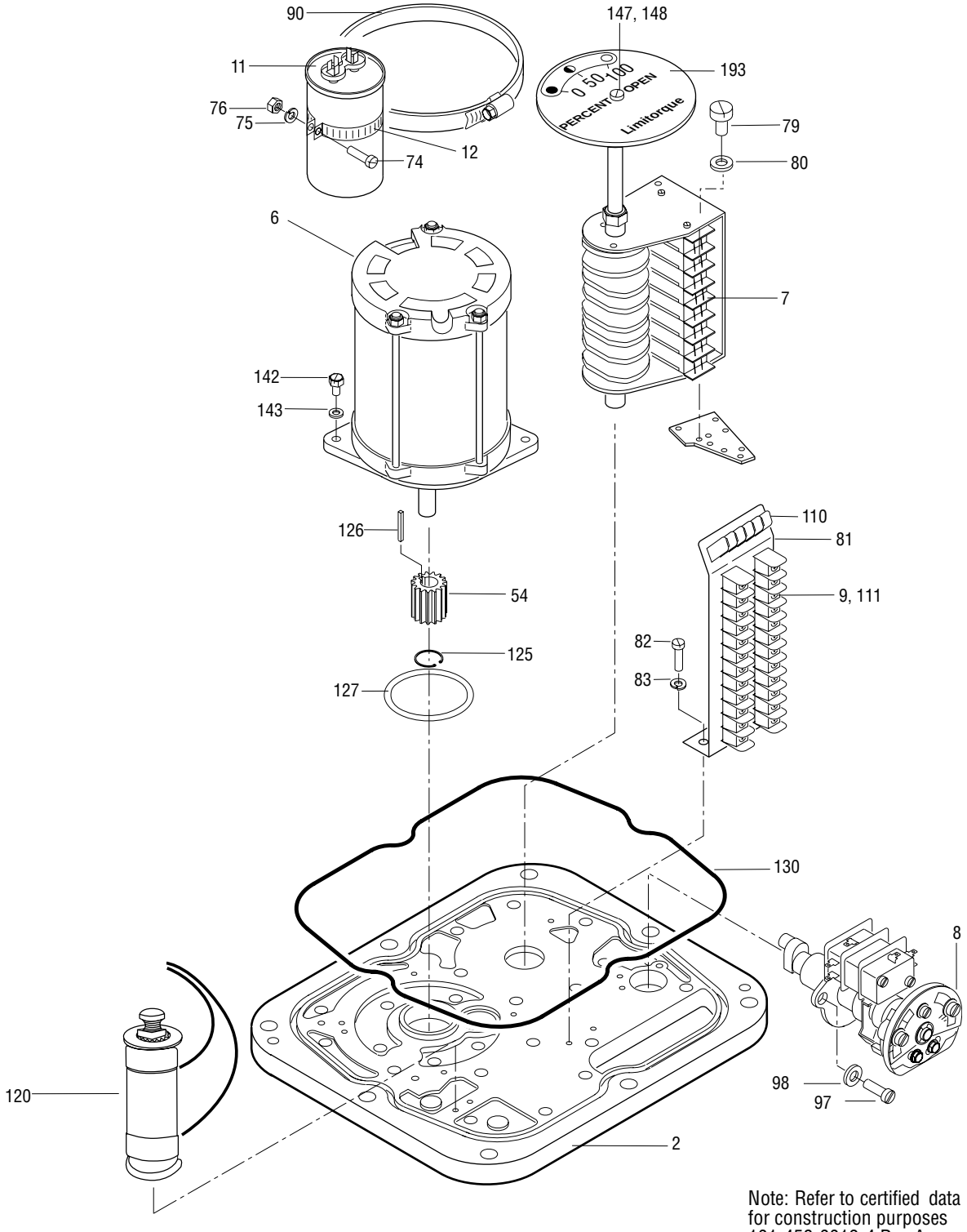

Note: Refer to certified data for construction purposes 101-458-0019-4 Rev A.

Figure 6.10 – LY 2001/3001 Housing and Associated Parts

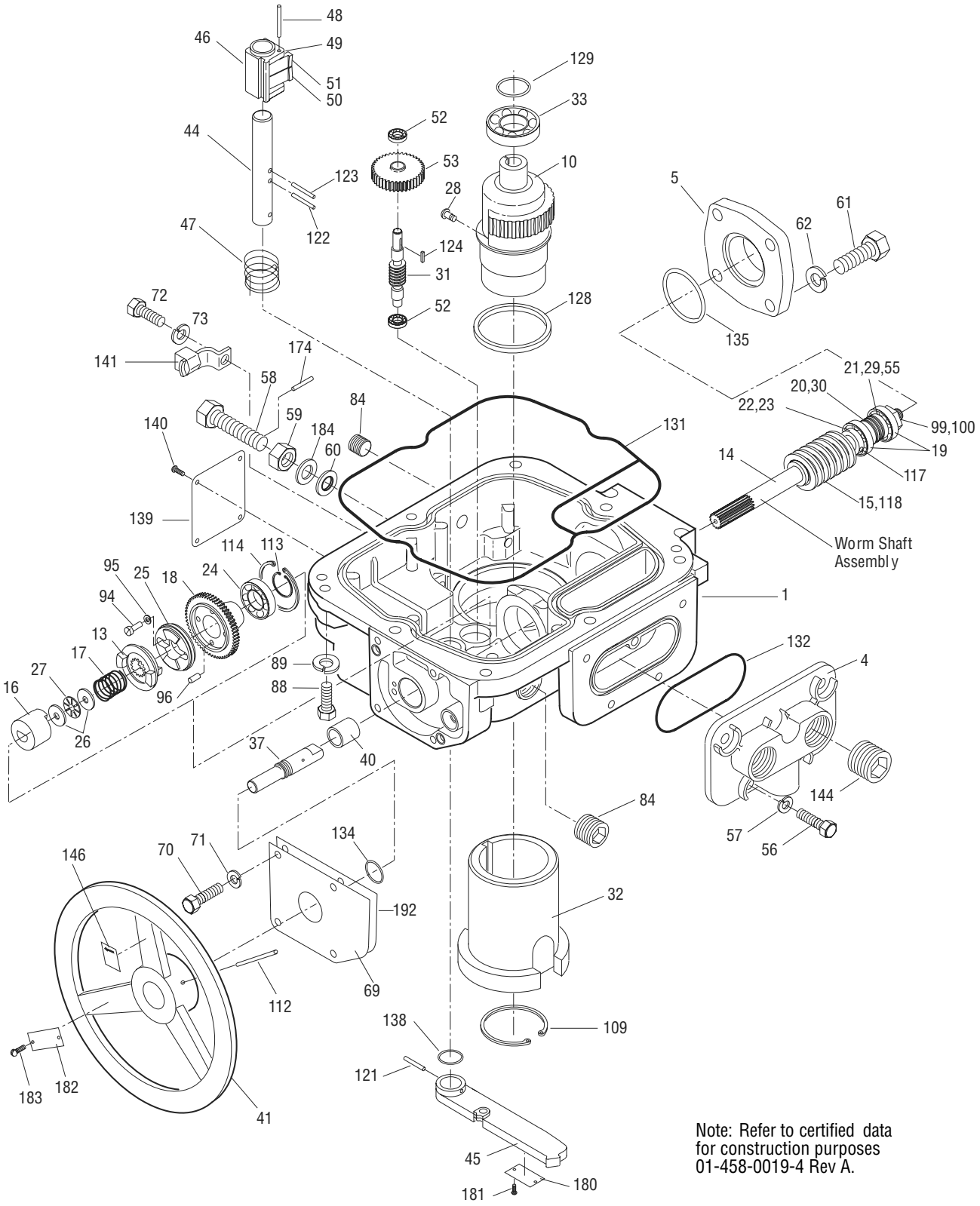

Figure 6.11 – LY 3001 Handwheel Assembly

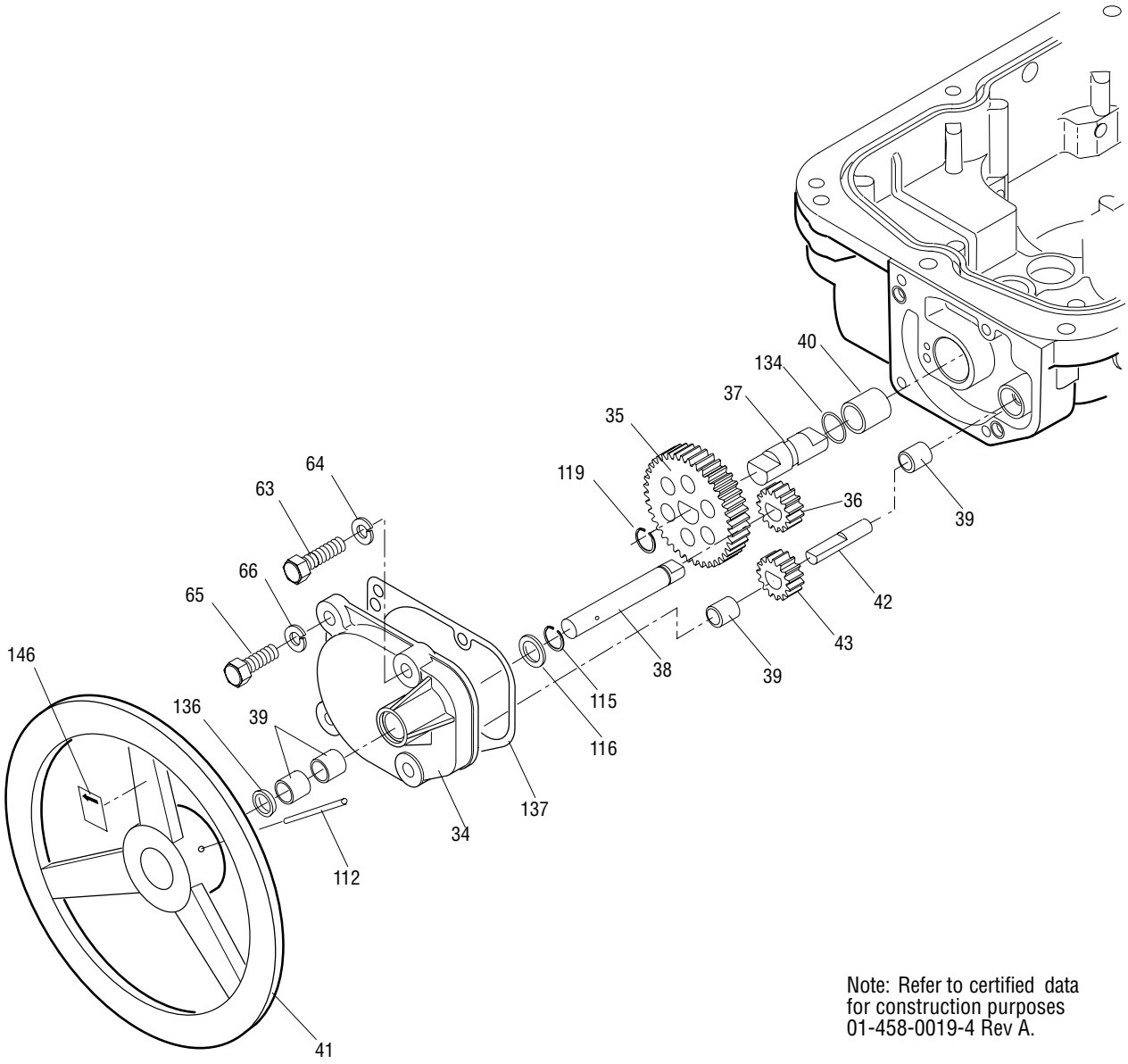

Note: Refer to certified data for construction purposes 01-458-0019-4 Rev A.

7 Maintenance

7.1 Lubrication

No seal can remain absolutely tight at all times. Therefore, it is not unusual to find a very small amount of weeping around shaft seals—especially during long periods of idleness such as storage. Using grease minimizes this condition as much as possible. If a small amount is weeping at startup, remove it with a clean cloth. Once the equipment is operating on a regular basis, the weeping should stop.

7.1.1 Lubrication Inspection

Inspect Limitorque LY series actuators for correct lubrication prior to operating—particularly following a long storage period.

Each application has its own effect on the actuator and the frequency of these inspections should be based on the application and the operating experience. The following lubrication inspection schedule is recommended until operating experience indicates otherwise.

For Gear Case, inspect lubrication every 18 months or 500 cycles, whichever occurs first.

During an inspection, consider the following:

- **Quantity** – LY operators are built to operate on the immersion principle. Ensure there is enough lubricant so that the Worm is totally immersed in grease regardless of the position.
- **Quality** – Inspect lubricant for dirt, water, or other foreign matter. If any one of these is found:
  1. Flush the actuator with a commercial degreaser/cleaner such as Exxon Varsol #18. This degreaser/cleaner is not corrosive and does not affect the seal materials.
  2. Repack the actuator with fresh lubricant, allowing room for grease thermal expansion.
- **Consistency** – Ensure the lubricant is fluid approximating a standard NLGI-0 grade consistency or less. Thinners such as Amoco WAYTAC #31 oil may be added provided the volume of thinner does not exceed 20% of the total lubricant.

7.1.2 Factory Lubricant

The LY actuator gear case is factory-lubricated with an NLGI Grade 0 or 00 lithium-base grease suitable for temperatures from -20°F (-29°C) to 150°F (66°C). For temperatures above or below this range, consult the factory.

7.2 Minimum Lubricant Qualities Required

The standard lubricants used by Flowserve have been proven to be extremely reliable over years of service. Flowserve does not recommend a particular lubricant substitute for the standard lubricants; however, Flowserve does require the following lubricant qualities as a minimum.

CAUTION: Do not mix lubricants of a different base chemical. Mixing lubricant bases may cause lubricant properties to be ineffective.

The lubricant must

- have “EP” properties.
- be suitable for the temperature range intended.
- be water and heat-resistant and non-separating.
- not create more than 8% swell in Buna N or Viton.
- not contain any grit, abrasive, or fillers.
- slump NLGI 0 or 00.
- not be corrosive to steel gears, ball, or roller bearings.
- have a dropping point above 316°F (158°C) for temperature ranges of -20°F (-9°C) to +150°F (+66°C).

7.3 Disassembly and Reassembly

CAUTION: Turn off all power services before attempting to perform service on the actuator. POTENTIAL HIGH-PRESSURE VESSEL. Before removing or disassembling your actuator, ensure that the valve or other actuated device is isolated and not under pressure.

7.3.1 LY 1001 Disassembly

Unless otherwise noted, piece numbers refer to the Illustrated Parts Breakdown of Figures 6.5, 6.6, and 6.7.

⚠ DANGER: HAZARDOUS VOLTAGE. Turn off all power before disassembling your LY actuator.

⚠ DANGER: POTENTIAL HIGH-PRESSURE VESSEL. Before disassembling your actuator, ensure that the valve or other actuated device is isolated and is not under pressure.

Remove Cover and Top Plate

1. Turn off all power to the actuator.
2. Remove the Control Cover (piece #3).
3. Disconnect all electrical leads from the Torque Switch (piece #8) and Limit Switch (piece #7). Make sure all wire leads are properly marked for reassembly.
4. Remove all external wires to the Terminal Strips (pieces #9 and 110).
5. If unit has an Integral Assembly, remove all wires from the Integral Assembly to the Terminal Strip (pieces #9 and 110).
6. Remove Screws/Lockwashers (pieces #77, 78, 79, and 80) that are holding the Limit Switch (piece #7) and Heater Assembly (piece #120). Remove the Limit Switch and Heater Assembly.
7. Remove two Screws (piece #97) and two Lockwashers (piece #98) that are holding the Torque Switch (piece #8). Remove the Torque Switch.
8. Remove two Screws (piece #65) and two Lockwashers (piece #66) to remove the Top Plate (piece #2).
9. Lift Top Plate (piece #2) off the LY Housing (piece #1). The Motor (piece #6) can be left attached to the Top Plate when the Top Plate is removed.

Remove Input Worm Motor Pinion Assembly

10. Remove Input Worm Motor Pinion Assembly (pieces #52, 156, 53, 124, and 31).

Remove Worm Shaft Assembly

11. Remove four Screws (piece #61) and four Lockwashers (piece #62) to remove Disc Spring Cap (piece #5).
12. Remove Disc Spring Cap (piece #5) and O-Ring (piece #135).
13. Rotate Worm Shaft Assembly CCW. The Worm Shaft Assembly should travel out of the Housing. Once it has reached the end-of-travel, pull the remaining Worm Shaft Assembly out; Clutch Sleeve (piece #13) will slip off the Worm Shaft Assembly. In the event that the Worm is stripped, the Worm Shaft Assembly will need to be completely replaced.

    NOTE: If Light Spring Pack or Heavy Spring Pack replacement is necessary, contact your Limitorque authorized dealer or the Limitorque Service Department for a complete Worm Shaft Assembly replacement.

Remove Handwheel Assembly

14. Remove the Handwheel Clutch (piece #16), Compression Spring (piece #154), Clutch Sleeve (piece #13), Thrust Washer (piece #26 [2 pcs]), and Thrust Bearing (piece #27).
15. Remove two Screws (piece #63) and two Lockwashers (piece #64) from the Handwheel Cap (piece #34).
16. Remove the Handwheel Assembly as one piece, (piece #41, 112, 34, 137, 134, 155 [2 pcs], 154, 70, and 37).

Remove Drive Sleeve

17. Remove O-Ring (piece #129) and Bearing (piece #33) from the top of the Drive Sleeve (piece #10).
18. Remove the Drive Sleeve (piece #10).

Remove Declutch Assembly

19. Remove Roll Pin (piece #121) and remove Declutch Lever (piece #45).
20. Push the Declutch Assembly (piece #46, 123, 44, and 55 [2 pcs]) up through the Housing and remove. Remove the Declutch Return Spring (piece #47).
21. Remove O-Ring (piece #138) from the Housing.

Remove Input Worm Gear

22. Remove the Retaining Drive Ring (piece #114).
23. Remove Input Worm Gear (piece #18) from the Ball Bearing (piece #24).

7.3.2 LY 1001 Reassembly

⚠ DANGER: HAZARDOUS VOLTAGE. Turn off all power before reassembling your LY actuator.

All piece numbers refer to Figures 6.5, 6.6, and 6.7.

Install Input Worm Gear

1. Install Input Worm Gear (piece #18).
2. Install External Retaining Drive Ring (piece #114) on Input Worm Gear.

Install Declutch Assembly

3. Install Declutch Return Spring (piece #47), making sure one end of Spring is secured behind the Rib of the actuator housing and the other end is secured behind the bottom Declutch Fork of the Declutch Fork Assembly.

Figure 7.1 – LY 1001 Declutch Return Spring Installation Position

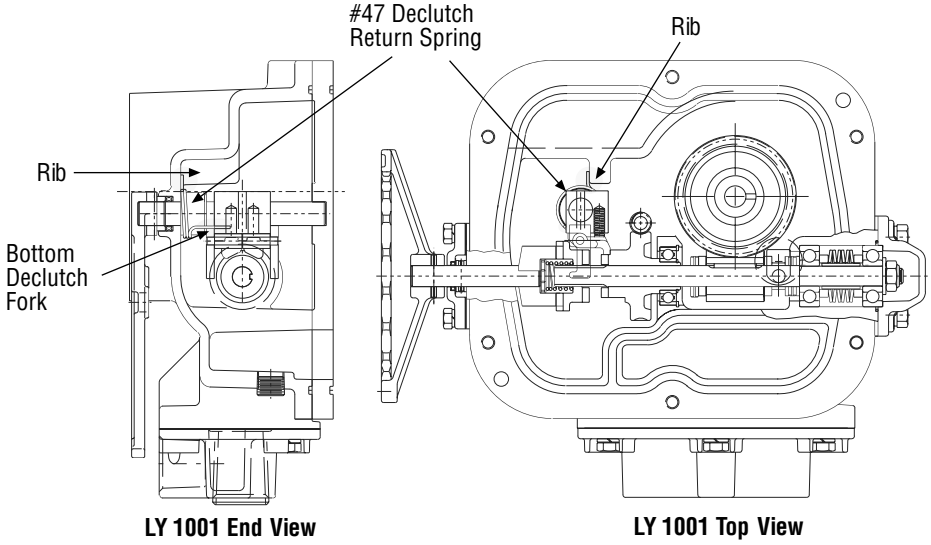

4. Install Declutch Assembly (piece #46, 123, 44, and 55).
5. Install O-Ring (piece #138) over Declutch Shaft (piece #44).
6. Install Declutch Lever (piece #45) and Roll Pin (piece #121).

Install Drive Sleeve

7. Install Drive Sleeve (piece #10).
8. Install Ball Bearing (piece #33) and O-Ring (piece #129) on the Drive Sleeve.

Install Worm Shaft Assembly

9. Install Worm Shaft Assembly.

   NOTE: Push the Worm Shaft Assembly through to about 1/2" past the Input Worm Gear for installing the Clutch Sleeve (piece #13).

Install Handwheel Assembly

10. Install the Clutch Sleeve (piece #13), ensuring the Declutch Fork Assembly (piece #46) is between the Input Worm Gear (piece #18) and the Clutch Sleeve (piece #13).
11. Install Thrust Washer (piece #26), Thrust Bearing (piece #27), and second Thrust Washer (piece #26) into the Handwheel Clutch (piece #16).
12. Put a light coat of grease on the Thrust Bearing. Install Spring (piece #154) into the Handwheel Clutch.
13. Install Handwheel Clutch Assembly (pieces #16, 154, 26 [2 pcs], and 27) into the Housing. Push remaining Worm Shaft Assembly into the Handwheel Clutch of the Handwheel Clutch Assembly.
14. Install O-Ring (piece #135) over the Worm Shaft Assembly Bearing.
15. Install Disc Spring Cap (piece #5) and Hardware (pieces #61 and 62).
16. Install Handwheel Cap Gasket (piece #137) and Handwheel Assembly (pieces #41, 112, 34, 137, 134, 155 [2 pcs], 154, 70, and 37).
17. Install Hex Head Cap Screw and Lockwasher (pieces #63 and 64).

Install Input Worm Motor Pinion Assembly

18. Install Input Worm Motor Pinion Assembly (pieces #52, 156, 53, 124, and 31) into the Housing.
19. Install Housing Seal (O-Ring) (pieces #131).

Grease Unit

20. Grease unit with the properly recommended grease. (See Section 7.1, Lubrication.)

Install Top Plate

21. Install Top Plate (piece #2) and Hardware (pieces #65 and 66).

    NOTE: If Top Plate will not fit properly, check Ball Bearing (piece #33) and Declutch Shaft (piece #44) for proper alignment into Top Plate molding.

Install Torque Switch Assembly, Motor Assembly, and Limit Assembly

22. Install Torque Switch Assembly (piece #8) with Gasket and Hardware (piece #98 and 97).
23. Install Limit Switch Assembly (piece #7) and Heater Assembly (piece #120) with Hardware (piece #77, 78, 79, and 80).
24. Reconnect Limit Switch, Torque Switch, and Terminal Strip. (See the wiring diagram included with the actuator for proper wiring configuration.)

Install Control Cover

NOTE: Before installing the Control Cover, reset the Limit Switches and Mechanical Stops. Recheck motor for proper rotation.

25. Install Cover Seal O-Ring (piece #130).
26. Install Control Cover (piece #3) with Hardware (piece #67 and 68).

7.3.3 LY 2001/3001 Disassembly

⚠ DANGER: HAZARDOUS VOLTAGE. Turn off all power before disassembling your LY actuator.

⚠ DANGER: POTENTIAL HIGH-PRESSURE VESSEL. Before disassembling your actuator, ensure that the valve or other actuated device is isolated and is not under pressure.

Piece numbers refer to Figures 6.8, 6.9, 6.10, and 6.11.

Remove Cover and Top Plate

1. Shut off all power to the actuator.
2. Remove the Control Cover (piece #3).
3. Disconnect all electrical leads from the Torque Switch (piece #8) and Limit Switch (piece #7). Make sure all wire leads are properly marked for reassembly.
4. Remove all external wires to the Terminal Strips (piece #9, 110, and 111).
5. If unit has an Integral Assembly, remove all wires from the Integral Assembly to the Terminal Strip (piece #9, 110, and 111).
6. Remove Screws/Lockwashers (piece #79 and 80) that are holding the Limit Switch (piece #7). Remove the Limit Switch.
7. Remove two Screws (piece #97) and two Lockwashers (piece #98) that are holding the Torque Switch (piece #8). Remove the Torque Switch.
8. Remove two Screws (piece #88) and two Lockwashers (piece #89) to remove the Top Plate (piece #2).
9. Lift Top Plate (piece #2) off the LY Housing (piece #1). The Motor (piece #6) can be left attached to the Top Plate when the Top Plate is removed.

Remove Input Worm Motor Pinion Assembly

10. Remove Input Worm Motor Pinion Assembly (piece #52, 53, 124, and 31).

Remove Worm Shaft Assembly

11. Remove four Screws (piece #61) and four Lockwashers (piece #62) to remove Bearing Cap (piece #5).
12. Remove Bearing Cap (piece #5) and O-Ring (piece #135).
13. Rotate Worm Shaft Assembly counterclockwise. The Worm Shaft Assembly should travel out of the Housing. Once it has reached the end-of-travel, pull the remaining Worm Shaft Assembly out; Clutch Sleeve (piece #13) will slip off the Worm Shaft Assembly. In the event that the Worm is stripped, the Worm Shaft Assembly will need to be completely replaced.

    NOTE: If Light Spring Pack or Heavy Spring Pack replacement is necessary, contact your Limitorque authorized dealer or the Limitorque Service Department for a complete Worm Shaft Assembly replacement.

Remove Handwheel Assembly (LY 2001)

14. Remove the Handwheel Clutch (piece #16), Compression Spring (piece #17), Clutch Sleeve (piece #13), Thrust Washer (piece #26 [2 pcs]), and Thrust Bearing (piece #27).
15. Remove four Screws (piece #70) and four Lockwashers (piece #71) from the Handwheel Cap Plate (piece #69).
16. Remove the Handwheel Assembly as one piece (pieces #146, 41, 112, 69, 192, 134, and 37).
17. Go to Step 19.

Remove Handwheel Assembly (LY 3001)

14. Remove the Handwheel Clutch (piece #16), Compression Spring (piece #17), Clutch Sleeve (piece #13) and Thrust Washer (piece #26 [2 pcs]), and Thrust Bearing (piece #27).
15. Remove Screws (pieces #63 and 65) and Lockwashers (piece #64 and 66) from the Spur Gear Cover (piece #34) of the Handwheel Assembly.
16. Remove the Handwheel Assembly as one piece (pieces #146, 41, 112, 136, 39 [2 pcs], 34, 137, 116, 115, 38, and 36).
17. Remove the Handwheel Pinion and Idler (piece #43) and Idler Shaft (piece #42).
18. Remove the Handwheel Gear Assembly (pieces #119, 35, and 37).

Remove Drive Sleeve

19. Remove the Roll Pins (piece #174) located in the end of the Mechanical Stop Screws (piece #58).
20. Remove the Mechanical Stop Screws (piece #58), Locking Nut (piece #59), Thread-Seal (piece #60), and Retaining Washer (piece #184).
21. Remove O-Ring (piece #129) and Bearing (piece #33) from the top of the Drive Sleeve (piece #10).
22. Remove the Drive Sleeve (piece #10).

Remove Declutch Assembly

23. Remove Roll Pin (piece #121) and remove Declutch Lever (piece #45).
24. Push the Declutch Assembly (pieces #46, 48, 123, 122, and 44) up through the Housing and remove. Then remove Declutch Return Spring (piece #47).
25. Remove O-Ring (piece #138) from the Housing.

Remove Input Worm Gear

26. Remove the Retaining Drive Ring (piece #113).
27. Remove Input Worm Gear (piece #18) and Lug Adapter (piece #25) as an assembly from the Ball Bearing (piece #24).

7.3.4 LY 2001/3001 Reassembly

⚠ DANGER: HAZARDOUS VOLTAGE. Turn off all power before assembling the LY actuator.

Piece numbers refer to Figures 6.8, 6.9, 6.10, and 6.11.

Install Input Worm Gear

1. Install Input Worm Gear (piece #18).
2. Install External Retaining Drive Ring (piece #113) on Input Worm Gear.

Install Declutch Assembly

3. Install Declutch Return Spring (piece #47), making sure one end of Spring is secured in the Spring Seat Hole of the actuator housing and the other end is secured around the Roll Pin (piece #122) on the Declutch Fork Assembly.

Figure 7.2 – LY 2001/3001 Declutch Return Spring Installation Position

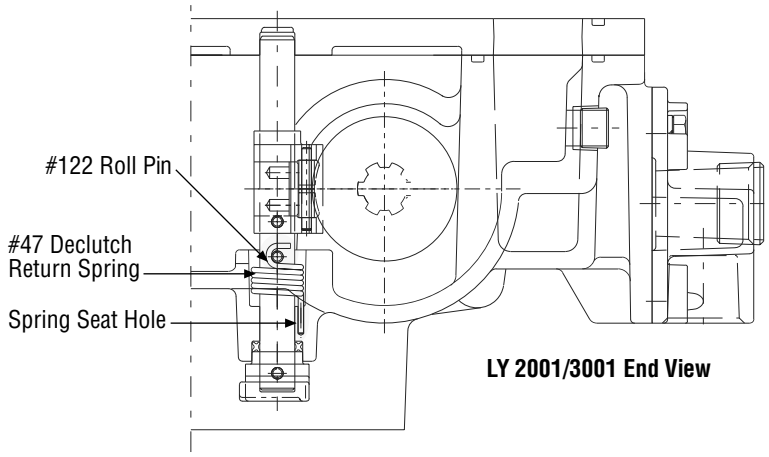

4. Install Declutch Assembly (piece #46, 48, 123, 122, and 44).
5. Install O-Ring (piece #138) over Declutch Shaft (piece #44).
6. Install Declutch Lever (piece #45) and Roll Pin (piece #121).

Install Drive Sleeve

7. Install Drive Sleeve (piece #10).
8. Install Bearing (piece #33) and O-Ring (piece #129) on the Drive Sleeve.
9. Install the Mechanical Stop Screws (piece #58), Locking Nut (piece #59), Thread-Seal (piece #60), and Retaining Washer (piece #184).
10. Install the Roll Pins (piece #174) located in the end of the Mechanical Stop Screws (piece #58).

Install Worm Shaft Assembly

11. Install Worm Shaft Assembly. Push the Worm Shaft Assembly through to about 1/2" past the Input Worm Gear. This allows installation of the Clutch Sleeve (piece #13).

Install Handwheel Assembly

12. Install the Clutch Sleeve (piece #13), ensuring the Declutch Fork Assembly (piece #46) is between the Input Worm Gear (piece #18) and the Clutch Sleeve (piece #13).
13. Install Thrust Washer (piece #26), Thrust Bearing (piece #27) and second Thrust Washer (piece #26) into the Handwheel Clutch (piece #16).
14. Put a light coat of grease on the Thrust Bearing. Install Spring (piece #17) into the Handwheel Clutch.
15. Install Handwheel Clutch Assembly (pieces #16, 17, 26 [2 pcs], and 27) into the Housing. Push remaining Worm Shaft Assembly into the Handwheel Clutch of the Handwheel Clutch Assembly.
16. Install O-Ring (piece #135) over the Worm Shaft Assembly Bearing.
17. Install Bearing Cap (piece #5) and Hardware (pieces #61 and 62).

LY 2001 Handwheel Assembly

18. Install Handwheel Assembly (pieces #146, 41, 112, 69, 192, 134, and 37).
19. Install Hardware (pieces #70 and 71).
20. Go to Step 22.

LY 3001 Handwheel Assembly

18. Install the Handwheel Gear Assembly (pieces #119, 35, and 37).
19. Install the Handwheel Pinion and Idler (piece #43) and Idler Shaft (piece #42).
20. Install the Handwheel Assembly (pieces #146, 41, 112, 136, 39, 34, 137, 116, 115, 38, and 36).
21. Install Screws (pieces #63 and 65) and Lockwashers (pieces #64 and 66) to secure the Handwheel Assembly onto the housing.

Install Input Worm Motor Pinion Assembly

22. Install Input Worm Motor Pinion Assembly (piece #52, 53, 124, and 31) into the Housing.
23. Install Housing Seal (O-Ring) (piece #131).

Grease Unit

24. Grease unit with the properly recommended grease. (See Section 7.1, Lubrication.)

Install Top Plate

25. Install Top Plate (piece #2) and Hardware (piece #88 and 89).

    NOTE: If Top Plate will not fit properly, check Bearing (piece #33) and Declutch Shaft (piece #44) for proper alignment into Top Plate molding.

Install Torque Switch Assembly, Motor Assembly, and Limit Assembly

26. Install Torque Switch Assembly with Gasket (piece #8) and Hardware (piece #97 and 98).
27. Install Limit Switch (piece #7) with Hardware (piece #79 and 80).
28. Reconnect Limit Switch, Torque Switch, and Terminal Strip. Refer to the actuator wiring diagram for proper wiring configuration.

Install Control Cover

NOTE: Before installing the Control Cover, reset the Limit Switches and Mechanical Stops. Recheck motor for proper rotation.

29. Install Cover O-Ring (piece #130).
30. Install Control Cover (piece #3) with Hardware (piece #67 and 68).

7.4 Troubleshooting

⚠ WARNING: Be aware of electrical hazards within the actuator and high-pressure hazards of the attached valve or other actuated device when installing or performing maintenance on the LY actuator.

Symptom	Possible Cause	Corrective Action
Unit will not operate electrically	No power to unit	a. Verify power supply is electrically correct and present at actuator. b. Verify power leads are connected in accordance with the applicable wiring diagram. c. Inspect for blown fuse, tripped circuit breaker or overload or open disconnect switch.
	Loose or incorrect wiring	Check wiring for proper wiring connection in accordance with the applicable wiring diagram. Check also for tight connections.
	Limit Switches not set or incorrectly set	Check Limit Switch development for agreement with the applicable wiring diagram. If not set properly, follow instructions in Section 5.6, Limit Switch and Mechanical Stop Settings.
	Foreign material on switch contacts preventing good electrical contact.	Check continuity of microswitch with an ohmmeter.
Motor runs, but no output from unit	Actuator not coupled properly to output	Inspect Torque Nut and Valve Shaft to verify key is in place and properly staked.
	Worm gear worn out	Remove Worm Shaft Assembly in accordance with Section 7.3.1, Disassemble Unit LY 1001 or Section 7.3.3, Disassemble Unit LY 2001/3001 as applicable. Inspect worm gear for unusual wear. If excessive wear has occurred, replace the Worm Shaft Assembly.
	Torque Nut disengaged from Drive Sleeve	Verify Torque Nut properly installed in accordance with Section 5.3, Installation Overview Step No. 1.

(continued)

Symptom	Possible Cause	Corrective Action
Motor runs, but no output from unit	Damaged gearing	Disassemble actuator in accordance with Section 7.3.1, Disassemble Unit LY 1001 or Section 7.3.3, Disassemble Unit LY 2001/3001 as applicable. Inspect gearing for rough or damaged spots. Replace as required. Most often, damaged spots are seen in motor gear set.
Unit operation is noisy quality or not enough)	Inadequate lubrication (poor	Inspect quality and quantity of lubrication in accordance with Section 7.1, Lubrication.
	Gearing misaligned	Inspect gearing for uneven wear pattern and replace gearing as needed. Most wear is seen in the motor gear set.
	Worn or damaged bearings	Disassemble unit and replace worn bearings, seals, and lubricant.
Fuse blown	Incorrect fuse size	Verify fuses are sized correctly.
	Pinched wire	Inspect control compartment to ensure Control Cover is not pinching or making contact with wiring when installed.
	Power surges	Investigate control circuit for surges.
Premature Torque Switch trip	Torque Switch setting too low	Increase Torque Switch setting as required, up to but not exceeding maximum setting established by the Torque Switch Limiter Plate.
	Valve packing too tight	Inspect valve packing for excessive tightness. Repair valve by replacing packing as required. Refer to your valve manufacturer for specific instructions.
	Unit is not properly aligned with valve	Take bolts off between the unit and the valve. Check for proper unit alignment.
	Valve needs lubrication	Check valve lubrication using grease fitting on bottom of valve.
Torque Switch fails to stop actuator	Output rotation not in agreement with unit wiring	Consult Flowserve to verify design rotation. If actual rotation is opposite to design rotation, the Torque Switch needs to have contact wiring reversed.
	Inadequate voltage going to unit	Check incoming voltage supply.
Reversing Starter failure	Starter undersized	Verify starter is sized correctly for application. Consult factory to evaluate.

(continued)

Symptom	Possible Cause	Corrective Action
Reversing Starter failure	Excessive cycling (too frequent operation)	Review application to determine number of starts per hour and review with factory if more than 100 per hour.
Excessive current draw	Valve running loads higher that expected	Inspect valve for possible causes of high running load. In particular, check for excessive tightness of valve packing and for proper lubrication of valve. Consult Flowserve for review of application.
Motor overload tripping	Excessive current draw	Inspect valve for possible causes of high running load. In particular, check for excessive tightness of valve packing and for proper lubrication of valve. Consult Flowserve for review of application.
	Incorrect overloads	Verify proper overloads selected for motor rating.
Excessive gear wear	Excessive loads	Verify actual loads are in accordance with both start and run capabilities of your actuator.
	Inadequate lubrication	Inspect quality and quantity of lubrication in accordance with Section 7.1, Lubrication.
	Improper alignment	Inspect worn gears for evidence of uneven wear pattern.
Excessive torque required to turn handwheel	Valve running loads higher than expected	Inspect valve for possible cause of high running loads. In particular, check for excessive tightness of valve packing, proper lubrication of valve stem, bent or damaged valve, tight Stem/Torque Nut fit, worm, or damaged Stem Nut.
	Unit is not properly aligned with valve	Take bolts off between the unit and the valve and check for proper unit alignment.
Oil leaking from unit	Infrequent operation of actuator resulting in grease separation	Institute periodic operation of unit into a maintenance program to keep grease mixed. If not possible, schedule more frequent lubrication to ensure adequate lubrication of gearbox.
	Damaged or worn seals	Replace seals.
Valve is closed, but flow is not cut off CAUTION: Most quarter-turn valves are position-seated, not torque-seated. Applying additional torque to the hand-wheel and/or repeated electrical bumping at the full closed position may damage the valve and/or the actuator.	Valve mechanical stops not set correctly	a. Do not set Torque Switch higher than maximum setting defined by Torque Limiter Plate. Inspect valve seat and repair as required. b. Check setting of Closed Mechanical Stop.

This page is intentionally blank.

8 Parts Lists

Table 8.1 – LY 1001 Parts List (Refer to Figures 6.5, 6.6 and 6.7)

Piece #	Description	Qty	Piece #	Description	Qty
1	LY 1001 Housing	1	55	Retaining Washer	
2	Top Plate	1	56	Hex Head Cap Screw	4
3	Control Cover	1	57	Lockwasher	4
4	Conduit Adapter	1	58	Mechanical Stop (Set Screw)	2
5	Disc Spring Cap	1	59	Set Screw	2
6	Motor	1	61	Hex Head Cap Screw	4
7	Limit Switch Assembly	4	62	Lockwasher	4
8	Torque Switch Assembly	1	63	Hex Head Cap Screw	2
9	Terminal Strip	2	64	Lockwasher	2
10	Drive Sleeve	1	65	Hex Head Cap Screw	2
11	Capacitor	Varies	66	Lockwasher	2
12	Capacitor Clamp	1	67	Hex Head Cap Screw	6
13	Clutch Sleeve	1	68	Lockwasher	6
14	Worm Shaft*	1	70	Roll Pin – HW Input Shaft	1
15	Worm*	1	72	Hex Head Cap Screw	1
16	Handwheel Clutch	1	73	Lockwasher	1
18	Input Worm Gear	1	79	Fillister HD Machine Screw	1
19	Ball Bearing*	2	80	Lockwasher	2
20	Disc Spring*	6	81	Terminal Bracket	1
21	Spring Spacer*	2	82	Fillister HD Machine Screw	2
22	Torque Switch Spacer*	1	83	Lockwasher Internal Tooth	2
23	Worm Spacer*	2	84	Pipe Plug	1
24	Ball Bearing	1	85	Pipe Plug	1
26	Thrust Washer	2	86	Hex Head Screw	4
27	Thrust Bearing	1	94	Roll Pin*	1
30	Spring Sleeve*	1	96	Groove Pin*	1
31	Input Worm Shaft	1	97	Fillister HD Machine Screw.	2
32	Torque Nut	1	98	Lockwasher Internal Tooth	2
33	Ball Bearing	1	99	Flat Washer*	1
34	Handwheel Cap	1	100	Flexloc Nut*	1
37	Handwheel Input Shaft	1	106	Dial Window	1
40	Bearing Stop*	1	108	Dial Window Retaining Plate	1
41	Handwheel	1	109	Dial Window Gasket	1
44	Declutch Shaft	1	110	Terminal Strip	1
45	Declutch Lever	1	111	Press-on Retaining Clip	15
46	Declutch Fork Assembly	1	112	Roll Pin - Handwheel	1
47	Declutch Return Spring	1	113	Retaining Ring	1
48	Dowel Pin	1	114	Retaining Ring	1
50	Declutch Latch – Right	1	118	Key*	1
51	Declutch Latch – Left	1	120	Heater	1
52	Ball Bearing	2	121	Roll Pin – Declutch Handle	1
53	Pinion Gear	1	123	Roll Pin – Declutch Shaft	1
54	Motor Pinion Gear	1	124	Roll Pin – Input Shaft	1

Table 8.1 – LY 1001 Parts List (continued)

Piece #	Description	Qty	Piece #	Description	Qty
126	Roll Pin	1	153	Spring Spacer*	1
127	O-Ring – Motor	1	154	Compression Spring	2
128	Quad Ring	1	155	Handwheel Washer	2
129	O-Ring (3 mm) – Drive Sleeve	1	156	Spacer – Worm Shaft	1
130	Cover Seal	1	157	Washer*	1
131	Housing Seal	1	165	Retaining Ring – Torque Nut	1
132	O-Ring – Conduit Adapter	1	169	Capacitor Bracket	1
134	Quad Ring – Handwheel Shaft	1	170	Fillister HD Machine Screw	1
135	O-Ring – Disc Spring Cap	1	171	Lockwasher Internal Tooth	1
137	Handwheel Cap Gasket	1	180	Declutch Lever Plate	1
138	O-Ring – Declutch Handle	1	181	Drive Screws - Handle	2
139	Unit Nameplate	1	182	Cheater Bar Warning Label	1
140	Drive Screw – Nameplate	4	183	Drive Screws	2
141	Grounding Lug	1	184	Retaining Drive Rings	2
142	Hex Head Cap Screw	2	185	Key	1
143	Lockwasher	2	186	Warning Label – Cover	1
144	Pipe Plug	2	187	Washer	1
145	O-Ring – Window	1	188	Quad ring – Handwheel Shaft	1
146	Dial	1	189	Oil Seal – Motor Shaft	1
147	Fillister HD Machine Screw	1			
148	Lockwasher Internal Tooth	1			

* Worm Shaft Assembly Component

Table 8.2 – LY 2001/3001 Parts List

Piece #	Description	Qty	Piece #	Description	Qty
1	Housing	1	24	Ball Bearing - Input	1
2	Top Plate	1	25	Lug Adapter	1
3	Control Cover	1	26	Thrust Washer	2
4	Conduit Adapter	1	27	Thrust Bearing	2
5	Bearing Cap	1	28	Stop Pin	2
6	Motor	1	29	Spring Pack Shim*	1
7	Limit Switch Assembly	1	30	Limit Sleeve*	1
8	Torque Switch Assembly	1	31	Input Worm Shaft	1
9	Terminal Strip	2	32	Torque Nut	1
10	Drive Sleeve and Gear	1	33	Ball Bearing	1
11	Capacitor	Varies	34	Spur Gear Cover	1
12	Capacitor Bracket	1	35	Handwheel Gear	1
13	Clutch Sleeve	1	36	Handwheel Pinion and Idler	1
14	Worm Shaft*	1	37	Handwheel Input Shaft	1
15	Worm*	1	38	Handwheel Input Shaft	1
16	Handwheel Clutch (Lug Adapter)	1	39	Bushing	3
17	Compression Spring	1	40	Bushing	1
18	Input Worm Gear	1	41	Handwheel	1
19	Ball Bearing*	2	42	Idler Shaft	1
20	Disc Spring*	6	43	Handwheel Pinion and Idler	1
21	Spring Washer*	1	44	Declutch Shaft	1
22	Bearing Spacer*	1	45	Declutch Lever	1
23	Worm Spacer*	1	46	Declutch Fork Assembly	1

Table 8.2 – LY 2001/3001 Parts List (continued)

Piece #	Description	Qty	Piece #	Description	Qty
47	Declutch Lever Return Spring	1	90	Worm Drive Clamp	Varies
48	Dowel Pin	1	94	Socket Head Cap Screw	2
49	Compression Spring	2	95	Lockwasher	2
50	Declutch Latch – Right	1	96	Input Gear – Dowel Pin	2
51	Declutch Latch – Left	1	97	Fillister HD Machine Screw	2
52	Ball Bearing	2	98	Lockwasher Internal Tooth	2
53	Worm Shaft Gear	1	99	Bearing Locknut*	1
54	Motor Pinion Gear	1	100	Stop Window*	1
55	Spring Sleeve*	2	106	Dial Window	1
56	Hex Head Cap Screw	4	107	Dial Window Gasket	1
57	Lockwasher	4	108	Dial Window Retaining Plate	1
58	Full-Threaded Hex Head Cap Screw	2	109	Retaining Drive Ring Internal	1
59	Locking Nut (Jam Nut)	2	110	Terminal Strip	1
60	Thread-Seal	2	111	Press-on Retaining Clip	15
61	Hex Head Cap Screw	4	112	Roll Pin – Handwheel	1
62	Lockwasher	4	113	Retaining Ring	1
63	Hex Head Cap Screw	2	114	Retaining Ring	1
64	Lockwasher	2	115	Retaining Ring	1
65	Hex Head Cap Screw	2	116	Retainer Washer	1
66	Lockwasher	2	117	Roll Pin (Spring)*	1
67	Hex Head Cap Screw	8	118	Key*	1
68	Lockwasher	8	119	Retaining Ring	1
69	Handwheel Cap Plate	1	120	Heater Bracket Assembly	1
70	Fillister HD Machine Screw	1	121	Roll Pin – Declutch Lever	1
71	Lockwasher	1	122	Roll Pin – Declutch Shaft	1
72	Hex Head Cap Screw	1	123	Roll Pin – Declutch Shaft	1
73	Lockwasher	1	124	Key – Input Shaft	1
74	Fillister HD Machine Screw	Varies	125	Retaining Ring – Motor Pinion	1
75	Lockwasher	Varies	126	Key – Motor Pinion	1
76	Hex Nut	Varies	127	O-Ring – Motor	1
77	Fillister HD Machine Screw	Varies	128	Quad Ring – Drive Sleeve	1
78	Lockwasher Internal Tooth	1	129	O-Ring – Drive Sleeve	1
79	Fillister HD Machine Screw	2	130	Cover Seal	1
80	Lockwasher Internal Tooth	2	131	Housing Seal	1
81	Terminal Bracket	1	132	O-Ring – Conduit Adapter	1
82	Fillister HD Machine Screw	2	134	O-Ring – Handwheel Shaft	1
83	Lockwasher Internal Tooth	2	135	O-Ring – Bearing Cap	1
84	Pipe Plug	2	136	Lip Seal	1
86	Hex Head Cap Screw	4	137	Gear Cover Gasket	1
88	Hex Head Cap Screw	2	138	O-Ring – Declutch	1
89	Lockwasher	2	139	Unit Nameplate	1

* Worm Shaft Assembly Component

Table 8.2 – LY 2001/3001 Parts List (continued)

Piece #	Description	Qty	Piece #	Description	Qty
140	Drive Screw	4	174	Roll Pin	2
141	Grounding Lug	1	180	Declutch Lever Plate	1
142	Hex Head Cap Screw	2	181	Drive Screw	2
143	Lockwasher	2	182	Cheater Bar Warning Label	1
144	Pipe Plug	2	183	Drive Screw	2
145	O-Ring – Window	1	184	Retaining Washer	1
146	Handwheel Label	1	186	Warning Label	1
147	Fillister HD Machine Screw	1	192	Gear Cover Gasket	1
148	Lockwasher Internal Tooth	1	193	Dial	1
157	Spacer	4			

* Worm Shaft Assembly Component

9 How to Order Parts

To order parts or obtain further information for your Limitorque LY valve actuators, contact your local Limitorque distributor sales office, or:

Limitorque

5114 Woodall Road

P.O. Box 11318

Lynchburg, VA 24506-1318

Telephone (434) 528-4400

FAX (434) 845-9736

All inquiries or orders must be accompanied by the following information:

1. Unit Size

2. Limitorque Order Number

This page is intentionally blank.

10 Regulatory Information

Declaration of Conformity

Application of Council Directive(s)
89/336/EEC; EMC Directive
98/37/EEC; Machinery Directive

Standard(s) to which Conformity is Declared
Machinery; EN 60204 EMC

- Emissions; EN 50081-1and 2, EN 55011, CFR 47
- Immunity; EN 50082-1and 2, IEC 801-3 and IEC 801-6 ESD; IEC 801-2
- EFT/Bursts; IEC 801-4
- Surge Immunity; IEC 801-5, ANSI/IEEE C62.41 Mains (power)
- Harmonics; MIL-STD-462, Method CSO1 and CSO2

Manufacturer's Name
Limitorque, a Flowserve Company
Manufacturer's Address
5114 Woodall Road
Lynchburg, VA 24502
Importer's Name
Limitorque, a Flowserve Company
Importer's Address
Abex Road
Newbury
Berkshire, RG14 5EY
England
Type and Description of Equipment
Valve Actuators
Model Number
LY Series
Note
Tested with Limitorque products only
I, the undersigned, hereby declare that the equipment specified above conforms to the above Directive(s) and Standard(s). List as follows:

(Signature)
Barry Morse
(Full Name)
Internal Sales Manager
(Title)
Newbury, England
Place
November 1, 1999
Date

This page is intentionally blank.

Limitorque
5114 Woodall Road
P.O. Box 11318
Lynchburg, VA 24506-1318
Phone (434) 528-4400, Fax (434) 845-9736
http://www.limitorque.com

Limitorque
Abex Road
Newbury
Berkshire, RG14 5EY
England
Phone 44-1-635-46999
Fax 44-1-635-36034

Limitorque Nippon Gear Co., Ltd.
Asahi-Seimei Bldg. 4th Floor
1-11-11 Kita-Saiwai, Nishi-Ku
Yokohama-Shi, (220-0004)
Japan
Phone 81-45-326-2065
Fax 81-45-320-5962

Limitorque India, Ltd.
15/4, Mile Stone
Mathura Road
Faridabad - 121002
India
Phone 91-129-2276586, 2276836
Fax 91-129-2277135

Flowserve Australia, Pty. Ltd.
14 Dalmore Drive
Scoresby, Victoria 3179
Australia
Phone: 613-9729-2633
Facsimile: 613-9729-2644

Limitorque Asia, Pte., Ltd.
12, Tuas Avenue 20
Singapore 638824
Phone 65-6868-4628
Fax 65-6862-4940

Flowserve Corporation has established industry leadership in the design and manufacture of its products. When properly selected, this Flowserve product is designed to perform its intended function safely during its useful life. However, the purchaser or user of Flowserve products should be aware that Flowserve products might be used in numerous applications under a wide variety of industrial service conditions. Although Flowserve can (and often does) provide general guidelines, it cannot provide specific data and warnings for all possible applications. The purchaser/user must therefore assume the ultimate responsibility for the proper sizing and selection, installation, operation, and maintenance of Flowserve products. The purchaser/user should read and understand the Installation Operation Maintenance (IOM) instructions included with the product, and train its employees and contractors in the safe use of Flowserve products in connection with the specific application.

While the information and specifications contained in this literature are believed to be accurate, they are supplied for informative purposes only and should not be considered certified or as a guarantee of satisfactory results by reliance thereon. Nothing contained herein is to be construed as a warranty or guarantee, express or implied, regarding any matter with respect to this product. Because Flowserve is continually improving and upgrading its product design, the specifications, dimensions and information contained herein are subject to change without notice. Should any question arise concerning these provisions, the purchaser/user should contact Flowserve Corporation at any one of its worldwide operations or offices.

For more information about Flowserve Corporation, contact www.flowserve.com or call USA 1-800-225-6989.

FLOWSERVE CORPORATION
FLOW CONTROL DIVISION
Limitorque Actuation Systems
5114 Woodall Road
P.O. Box 11318
Lynchburg, VA 24506-1318
Phone: 434 528 4400
Facsimile: 434 845 9736
www.limitorque.com

© 2003 Flowserve Corporation, Irving, Texas, USA. Flowserve and Limitorque are registered trademarks of Flowserve Corporation.

(Replaces 150-12000)
LMAIM1501 Nov. 2003 Printed in USA

APPENDIX C

Manufacturer's Information

Milliken Valve Co. Dwg. S 49071, 3-89, Dimensions of Millcentric Plug Valves

DRAFT

VALVE SIZE	A	B	C	D	E	F	G	H	J	K	L
2 1/2	9 1/2	6 3/16	3 1/2	2 1/2	5 7/8	7 1/2	7/8	6	—	—	1 1/16
3	11 1/8	6 3/16	3 3/4	3	6 5/8	8 1/4	7/8	8	—	—	1 1/8
4	12	7 1/4	4 1/2	4	7 7/8	10	7/8	6	3/4	2	1 1/4
5	15	8 3/8	5 3/4	5	9 1/4	11	7/8	6	3/4	2	1 3/8
6	15 7/8	8 3/8	5 3/4	6	10 5/8	12 1/2	7/8	10	3/4	2	1 7/16
8	16 1/2	10 11/16	7 5/8	8	13	15	1	10	7/8	2	1 5/8

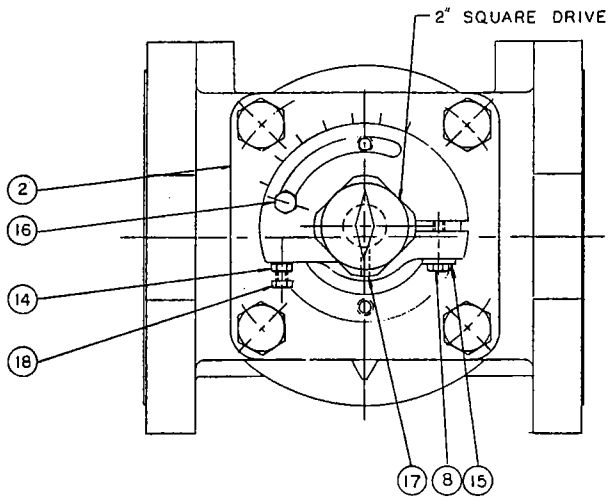

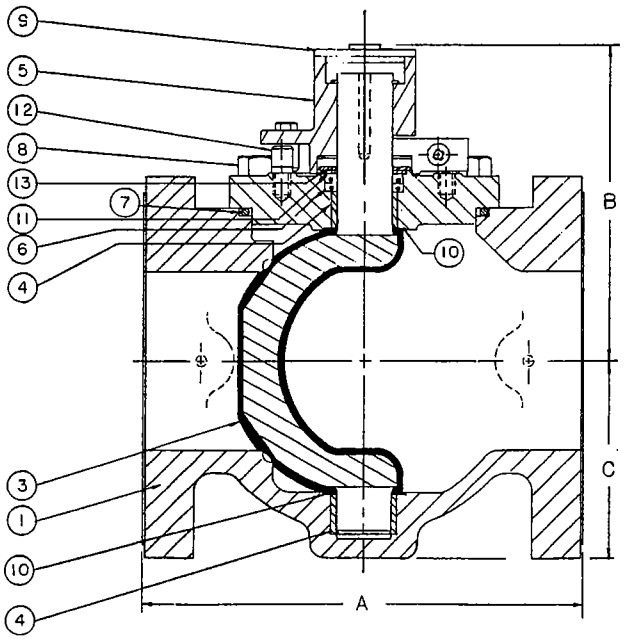

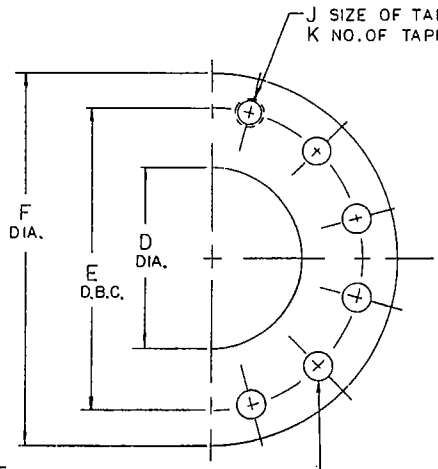

NOTE
1. 'A' DIM. INCLUDES 1/16" RAISED FACES

ITEM	QTY.	DESCRIPTIONS	MATERIALS
18	1	CAP SCREW	STL./ZINC
17	1	SETSCREW	STL.
16	1	ADJ. STOP BOLT	STL./ZINC
15	1	COLLAR BUSH	BRASS
14	1	NUT	STL./ZINC
13	1	RETAINING RING	SPRING STL.
12	2	TRAVEL STOP	STL./BRZ.
11	1	WASHER	BRZ.
10	2	WASHER	P.T.F.E.
9	1	INDICATOR CAP	PLASTIC
8	AR	CAP SCREW	STEEL / ZINC
7	1	'O' RING	ELAST. AS SPECIFIED
6	2	'U' CUP SEALS	ELAST. AS SPECIFIED
5	1	TORQUE COLLAR	DUCTILE IRON
4	2	SLEEVE BEARING	316 STN. STL.
3	1	PLUG (ELAS. AS SPEC.)	DUCTLE IRON
2	1	CAP	A126 CL B
1	1	BODY	A126 CL B

BILL OF MATERIALS

MILLIKEN VALVE CO

BY: J.D | DATE: 3-89 | SCALE: NONE
CHKD: RJ

TITLE: 2½" - 8" MILLCENTRIC PLUG VALVE CLASS 250 WRENCH OPER.

DWG. NO. S 49071

7/95

APPENDIX C

Manufacturer's Information

Milliken Eccentric Plug Valve
Product Data

DRAFT

JULY 1999

MILLIKEN

MILLCENTRIC

ECCENTRIC PLUG VALVE

MILLIKEN

MILLCENTRIC

ECCENTRIC PLUG VALVE

The Milliken criteria of quality, reliability, safety and value are embodied in the MILLCENTRIC Eccentric valve, setting higher standards for dependable performance with excellent features achieved by the utilization of the very latest design and manufacturing techniques.

BODY

Conforming to AWWA C504 wall thickness, the Millcentric valve body casting is in ASTM A126 CL B cast iron using high pressure molding techniques. Alternative flanged, grooved or mechanical joint ends are available.
Flange diameter, thickness and drilling conform to ANSI B16.1 Class 125 or 250.
Grooved ends meet AWWA C-606 for ductile or steel pipe. Mechanical joints to AWWA C111 (ANSI A21.11).

SEAT

The Millcentric valve incorporates as standard, on 3" and larger, a welded nickel seat for corrosion and erosion resistance specially profiled for low torque and extended seat life.
An alternative corrosion resistant epoxy seat is available for general service duties.

STEM SEAL

High integrity sealing by combining the advantages of a resilient and abrasion resistant U-Cup seal. From vacuum to high pressure, the self-adjusting sealing system (per AWWA C504) gives positive, trouble-free service and is retained independently of the plug stem or external torque device.

BEARINGS

The plug rotates in permanently lubricated 316 grade stainless steel bearings located in the body and bonnet, along with upper and lower PTFE thrust washers, which ensure consistently low operating torque.

- Computer Aided Design
- High integrity casting
- CNC manufacturing delivers consistent sizes on all components

All complemented by rigorous Quality Control System

PLUG

Supported on integral trunnions, the plug face is covered with a elastomer that is molded 2 1/2" - 12" and vulcanized on 14" and larger to the casting providing tight shut off even under vacuum conditions. High integrity corrosion-free sealing is achieved by a variety of abrasion resistant elastomers which protect the plug right up to the trunnions. When assembled, the light compression of the elastomers onto PTFE thrust washers, prevents entry of abrasive materials into the bearings.

BONNET SEAL

Superior "O" ring sealing with metal/metal contact means lower bolting stresses compared with compression gaskets.

FLOW

The port design (round on 2 1/2" - 12" and rectangular on 14" and larger) with streamlined internal contours gives high capacity straight through flow in the full open position, reducing turbulence and pressure drop and the effect of erosive media. Handling of sludges and slurries is therefore enhanced.

INTERCHANGEABLE

Because of common face to face dimensions with wedge gate valves (3" - 12"), fitting the tight shut-off rotary MILLCENTRIC valve into existing systems is accomplished without pipeline modifications.

TRAVEL STOPS

Adjustable open and closed travel stops are fitted as standard on both wrench and gear operated Millcentric valves.

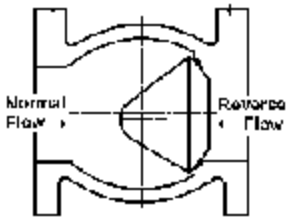

- Valve in closed position for bubble tight shut-off.
- Normal flow direction gives pressure assisted sealing.
- Torques are low even in reverse flow.

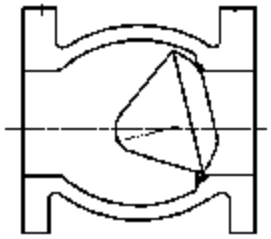

- Plug rotates away from the seat for instant opening.
- Seat wear and operating torque reduced.
- No further seat contact until valve is closed again.

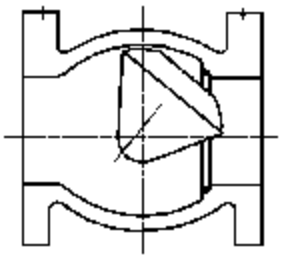

- Design of MILLCENTRIC valve allows modulating control over the full 90° travel.
- Ideally suited for balancing service.
- Standard MILLCENTRIC rotary valve provides control and tight shut-off in one valve.

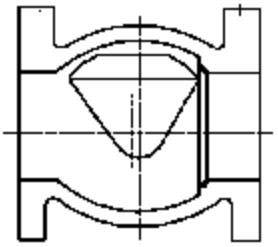

- Plug is out of the flow path when fully open.
- Straight through, uninterrupted smooth flow.
- Round port reduces turbulence and erosion, lowers pumping costs and can be "pigged" to clean the pipeline.

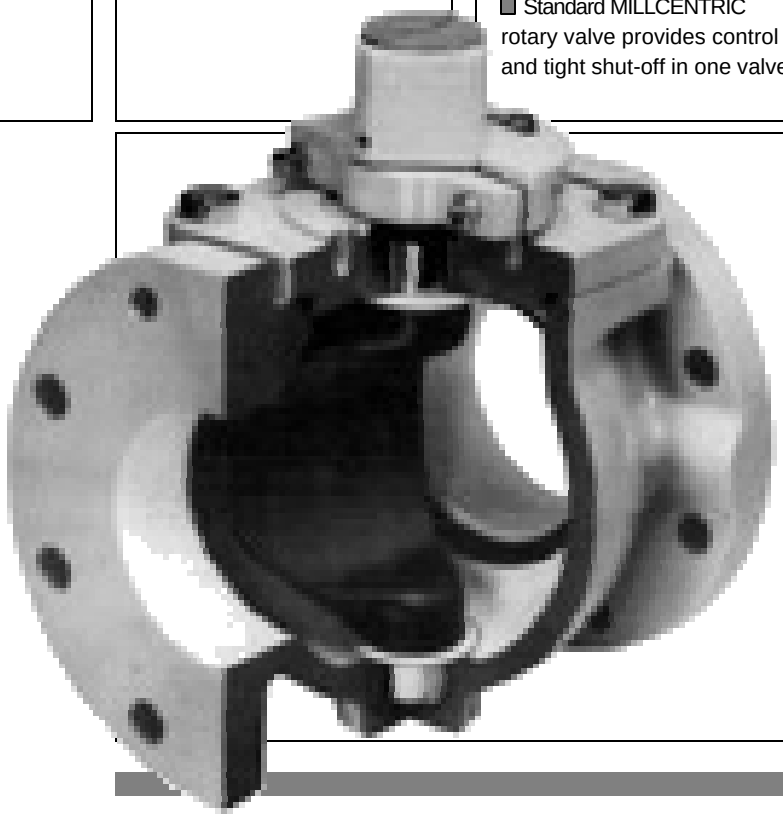

INSTALLATION

The Millcentric valve is suitable for flow and shut -off in either direction. Seat end downstream is the preferred orientation and any reverse flow requirement should be stated at time of order. For use on fluids with suspended solids, installation with the seat upstream and the valve stem horizontal may be preferable; plug rotation to the top of the valve will ensure smooth operation.

IN-LINE MAINTENANCE

In the unlikely event of gland leakage, the stem seals can be easily replaced without removing the bonnet. Access to the body for cleaning or inspection does not require removal from the line.

MODULAR CONSTRUCTION

Design of the bonnet and stem allows for on-site adaptation of gear operators, power actuators, or extension devices on to standard valves. Conversion can be easily undertaken without removing the valve bonnet, thereby minimizing downtime.

POWER OPERATION

Pneumatic, electric or hydraulic operation is available, complete with accessories such as limit switches, solenoid valves and positioners when required.

MATERIALS OF CONSTRUCTION

Item	Component	Material	Specification	Item	Component	Material	Specification
1	Indicator Cap	Plastic		12	Snap Ring	Spring Steel	
2	Star Nut	Steel		13	Washer	Brass	ASTM B-138-675
3	Open Stop	Steel		14	U-Cup Seal	Elastomer	Same as Plug
4	Washer	Steel		15	Capscrew	Steel	
5	Nut	Steel		16	Bonnet	Cast Iron	ASTM A-126 Class B
6	Torque Collar	Ductile Iron	ASTM A-536	17	"O" Ring	Elastomer	Same as Plug
7	Lock Nut	Steel		18	Journal Bearing	Stainless Steel	ANSI 316
8	Torque Bolt	Steel		19	Thrust Washer	PTFE	
9	Lock Nut	Steel		20	Plug	Ductile Iron	ASTM A-536 Grade 65-45-12
10	Closed Stop	Steel		21	Plug Coating	Elastomer	As Specified
11	Travel Stop	Steel		22	Body	Cast Iron	ASTM A-126 Class B

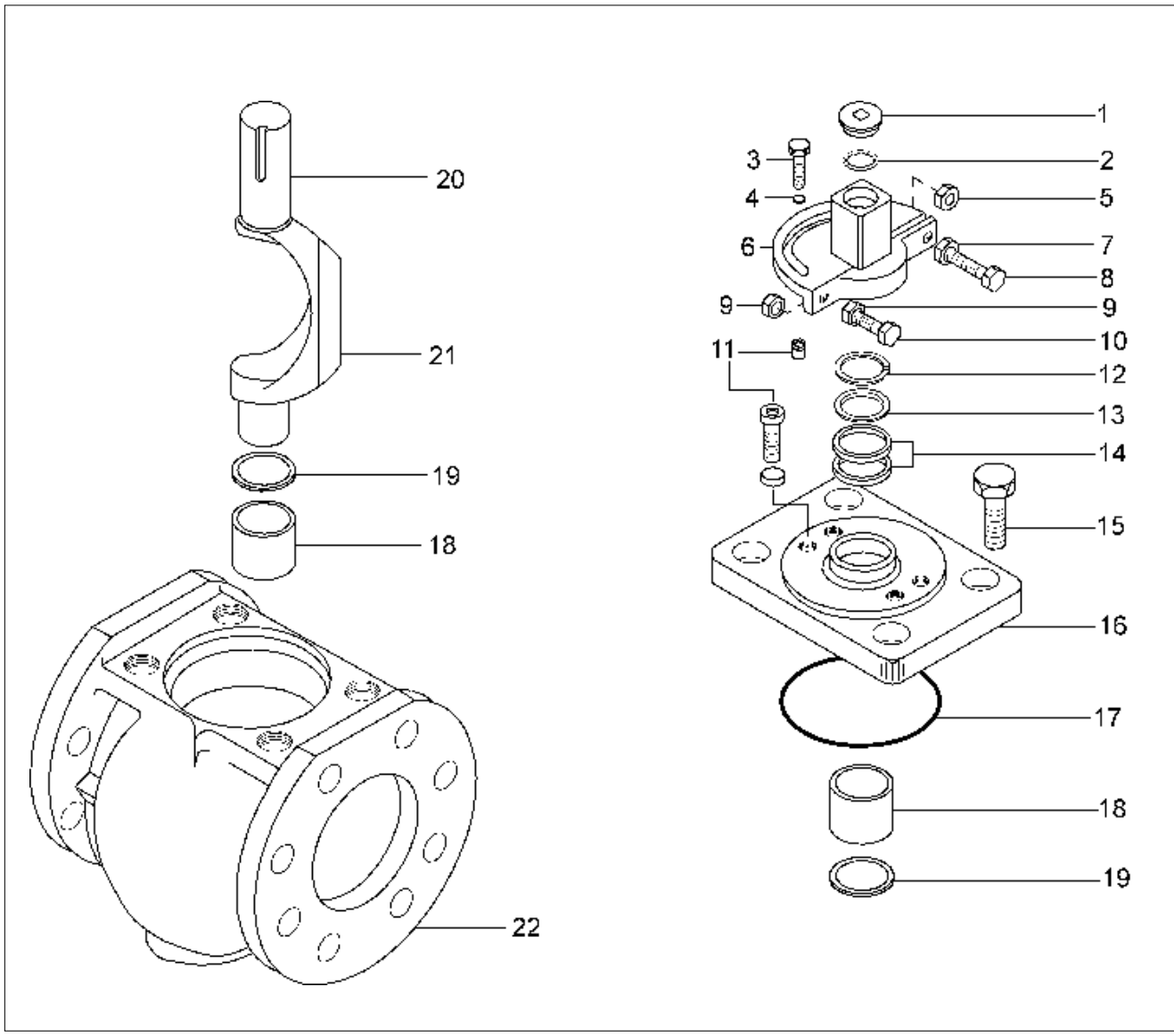

ELASTOMERS AVAILABLE FOR MILLCENTRIC VALVE
Natural rubber is also available.

Nitrile

A general purpose material sometimes referred to as BUNA-N or HYCAR with a -20ºF to 225ºF temperature range. Used on sewage, water, hydrocarbon and mineral oils.

EPDM

An excellent polymer for use on chilled water through to LP steam applications having a temperature range of -35ºF to 250ºF. Resistance to many acids, alkalies, detergents, phosphate esters, alcohols and glychols is an added benefit.

Neoprene

This versatile material shows outstanding resistance to abrasion and ozone. Chemical resistance to a wide range of petroleum based products and dilute acids and alkalies. Temperature range -20ºF to 225ºF.

Viton

Retention of mechanical properties at high temperature is an important feature of this elastomer- temperature range is -10ºF to 400ºF. It also has excellent resistance to oils, fuels, lubricants and most mineral acids and aromatic hydrocarbons.

PRESSURE RATING

12" and smaller	ANSI 125	175 psi
14"-36"	ANSI 125	150 psi
42" and larger	ANSI 125	125 psi
12" and smaller	ANSI 250	400 psi
14"-36"	ANSI 250	300 psi

Body Hydrotest = 200% of rated pressure
Seat Test = 120% of rated pressure

MILLCENTRIC VALVE - SERIES 600

ORDERING INFORMATION

Valve Types	**Designation**
Mechanical Joint	600
ANSI 125 Flanged	601
ANSI 250 Flanged	602
ANSI 125 Grooved End for Steel Pipe	606S
ANSI 125 Grooved End for Ductile Iron Pipe	606D
Seat	
Nickel	N
Epoxy	E
ElastomerTrim	
EPDM	0
Nitrile (Buna)	1
Viton	2
Neoprene	3
Natural	4
Gear Operators	
Buried Gear with 2" nut	BG
Above Ground Gear with Indicator and Handwheel	AG
Memory Stop Gearbox with Handwheel	MG

Example: 4" 601 N3AG
4" ANSI 125 Flanged with Nickel Seat, Neoprene Elastomer and Above Ground Gear with Indicator and Handwheel

VALVES ARE ONLY SUPPLIED FOR BI-DIRECTIONAL SHUT-OFF IF SPECIFIED AT TIME OF ORDER.

ELASTOMER SELECTION CHART

The chart below is to assist in the selection of elastomers for some common fluids. It doesn't mean other elastomers are not suitable within varying limits. Temperature, concentration, and mixture all affect chemical attack. If there is any doubt regarding compatibility, specific conditions should be referred to engineering for recommendations. The chart below is to serve as a guide only.

Service	Elastomer	Average Uselul Temp. Range
Acetone	EPDM	-35˚F to 250˚F
Air	EPDM	-35˚F to 250˚F
Air w/oil	Nitrile	0˚F to 212˚F
Alcohol, Amyl	EPDM	-35˚F to 250˚F
Alcohol, Aromatic	Viton	10˚F to 250˚F
Alcohol, Butyl	Neoprene	-20˚F to 225˚F
Alcohol, Denatured	Nitrile	0˚F to 212˚F
Alcohol, Ethyl	EPDM	-35˚F to 250˚F
Alcohol, Grain	Nitrile	0˚F to 212˚F
Alcohol, Isosproply	Neoprene	-20˚F to 225˚F
Alcohol, Methyl	EPDM	-35˚F to 250˚F
Ammonia, Anhydrous	Neoprene	-20˚F to 225˚F
Arnmonium Nitrate	EPDM	-35˚F to 250˚F
Ammonia, Water	EPDM	-35˚F to 250˚F
Animal Fats	Nitrile	0˚F to 212˚F
Black Liquor	EPDM	-35˚F to 250˚F
Blast Furnace Gas	Neoprene	-20˚F to 225˚F
Butane	Nitrile	0˚F to 212˚F
Bunker Oil "C"	Nitrile	0˚F to 212˚F
Calcium Chloride	EPDM	-35˚F to 250˚F
Carbon Dioxide.	EPDM	-35˚F to 250˚F
Carbon Monoxide (Cold)	Neoprene	-20˚F to 225˚F
Carbon Monoxide (Hot)	Viton	10˚F to 250˚F
Carbon Tetrachloride	Viton	10˚F to 250˚F
Caustic Soda	EPDM	-35˚F to 250˚F
Cement Sluriy	EPDM	-35˚F to 250˚F
Copper Sulphate	EPDM	-35˚F to 250˚F
Creasote (Coal)	Nitrile	0˚F to 212˚F
Coal Slurry	Nitrile	0˚F to 212˚F
Diesel Fuel No 1	Nitrile	0˚F to 212˚F
Diethylene Glycol	EPDM	-35˚F to 250˚F
Ethylene Glycol	EPDM	-35˚F to 250˚F
Fatty Acid	Nitrile	0˚F to 212˚F
Fuel Oil No 2	Nitrile	0˚F to 212˚F
Fertilizer Liquid (H_4N_2,O_2)	EPDM	-35˚F to 250˚F
Gasoline, Keg	Nitrile	0˚F to 212˚F
Gas, Natural	Nitrile	0˚F to 212˚F
Glue, Animal	Nitrile	0˚F to 212˚F
Green Liquor	EPDM	-35˚F to 250˚F
Hydraulic Oil (Petro)	Nitrile	0˚F to 212˚F
Hydrogen	Nitrile	0˚F to 212˚F
JP4, JP5	Viton	10˚F' to 250˚F
Kerosene	Nitrile	0˚F to 212˚F
Ketone	EPDM	-35˚F to 250˚F
Lime Slurry	EPDM	-35˚F to 250˚F
Methane	Nitrile	0˚F to 212˚F
Methyl Ethy Ketone	EPDM	-35˚F to 250˚F
Naptha (Berzin)	Nitrile	0˚F to 212˚F
Oil, Animal	Nitrile	0˚F to 212˚F
Oil, Mobil Therm Light	Viton	10˚F to 250˚F
Oil, Mobil Therm 600	Viton	10˚F to 250˚F
Oil, Mobil Therm 603	Nitrile	0˚F to 212˚F
Oil, Lubricating	Nitrile	0˚F to 212˚F
Oil, Vegetable	Nitrile	0˚F to 212˚F
Paint, Latex	Nitrile	0˚F to 212˚F
Phosphate Ester	EPDM	-35˚F to 250˚F
Propane	Nitrile	0˚F to 212˚F
Rape Seed Oil	EPDM	-35˚F to 250˚F
Sewage (w/oils)	Nitrile	0˚F to 212˚F
Sodium Hydroxide 20%	EPDM	-35˚F to 250˚F
Starch	EPDM	-35˚F to 250˚F
Steam to 300˚F	EPDM	-35˚F to 250˚F
Sloddard Solvent	Nitrile	0˚F to 212˚F
Sulphuric Acid 10%-50%	Neoprene	-20˚F to 225˚F
Sulphuric Acid 100%	Viton	10˚F to 250˚F
Trichloroethylene Dry	Viton	10˚F to 250˚F
Triethanol Amine	EPDM	-35˚F to 250˚F
Varnish	Viton	10˚F to 250˚F
Water, Fresh	EPDM	-35˚F to 250˚F
Water, Salt	EPDM	-35˚F to 250˚F
Xylene	Viton	10˚F to 250˚F

FLANGED END *FIG.601* *175 PSI*

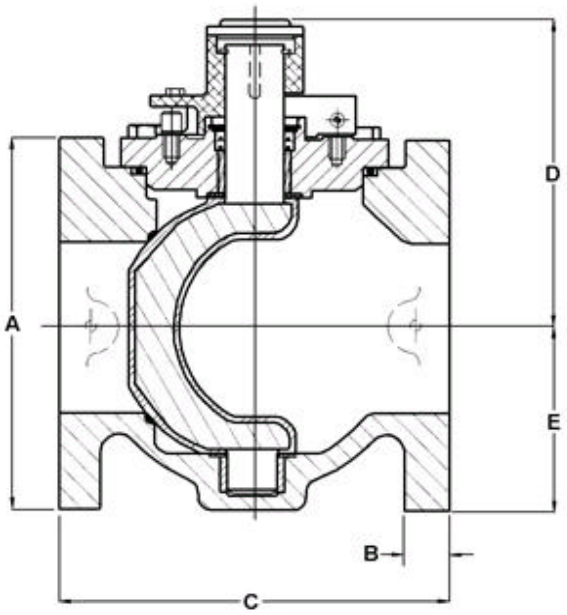

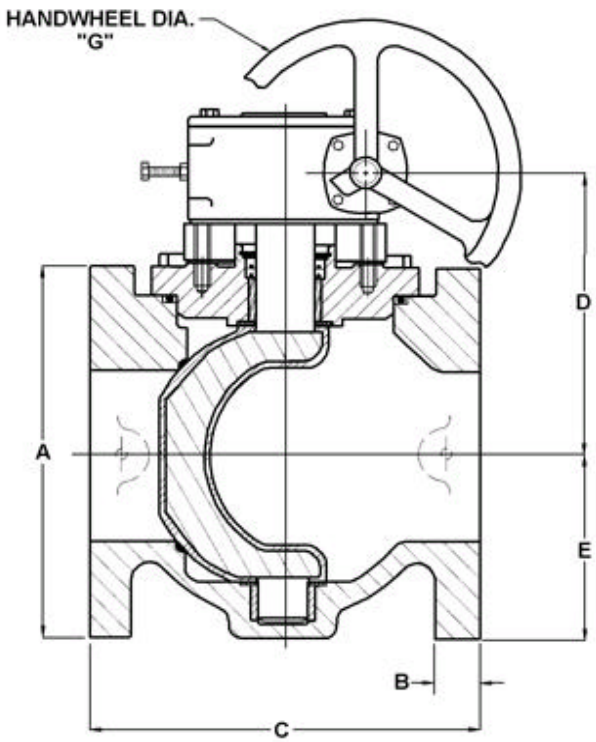

FLANGED END - ANSI 125									
Size	2.5	3	4	5	6	8	10	12	14
A	7	7.5	9	10	11	13.5	16	19	21
B	0.68	0.75	0.93	0.93	1	1.12	1.18	1.25	1.38
C	7.5	8	9	10	10.5	11.5	13	14	17
D	6.18	6.18	7.25	8.38	8.38	10.68	- -	- -	- -
E	3..5	3.75	4.5	5.75	5.75	7.62	8.88	10	13
F	5.38	5.59	6.31	7.56	7.56	9.63	11.63	13.31	13.31
G	6	6	6	6	6	12	12	12	12
Weight (approx.)	*30*	*40*	*70*	*105*	*115*	*190*	** *345*	** *440*	** *510*

*10" & above have gear operators as standard

** Weight includes gear operator

NOTE: Drawings are for information purposes only; please request certified drawings before preparing piping diagrams

MECHANICAL JOINT END FIG.600 175 PSI

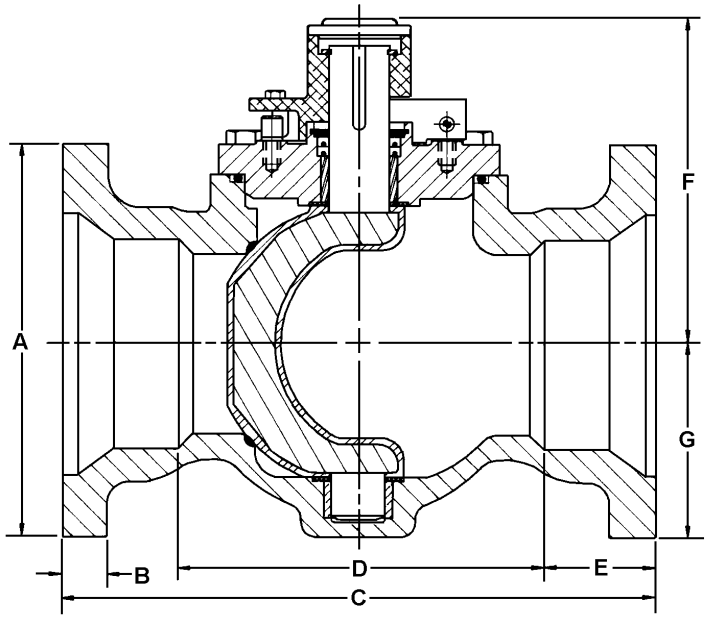

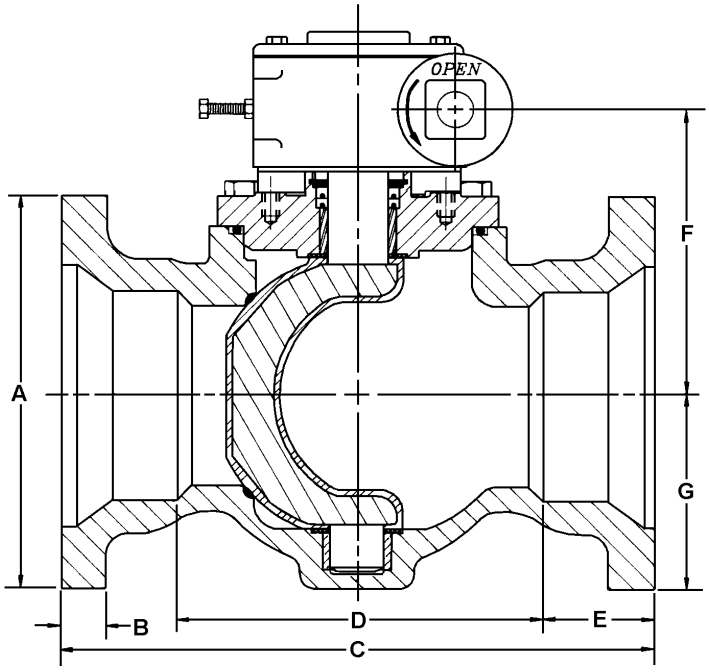

MECHANICAL JOINT END							
Size	**3**	**4**	**6**	**8**	**10***	**12***	**14***
A	7.68	9.0	11.12	13.38	15.62	17.93	20.31
B	0.93	1.0	1.06	1.12	1.18	1.38	1.31
C	11.5	14.25	15.75	17.38	19.38	20.75	24.50
D	6.5	9.25	10.75	12.38	14.38	15.75	17.50
E	2.5	2.5	2.5	2.5	2.5	2.5	3.5
F	6.18	7.25	8.38	10.68	- -	- -	- -
G	3.84	4.5	5.75	7.62	8.88	10.0	13.00
H	5.62	6.31	7.56	10.12	11.62	13.31	13.31
WT (approx.)	50	80	125	200	** 360	** 480	** 575

*10” & above have gear operators as standard
** Weight includes gear operator

NOTE: Drawings are for information purposes only; please request certified drawings before preparing piping diagrams

FLANGED END

FIG. 601

14" - 36" 150PSI
42" and larger 125 PSI

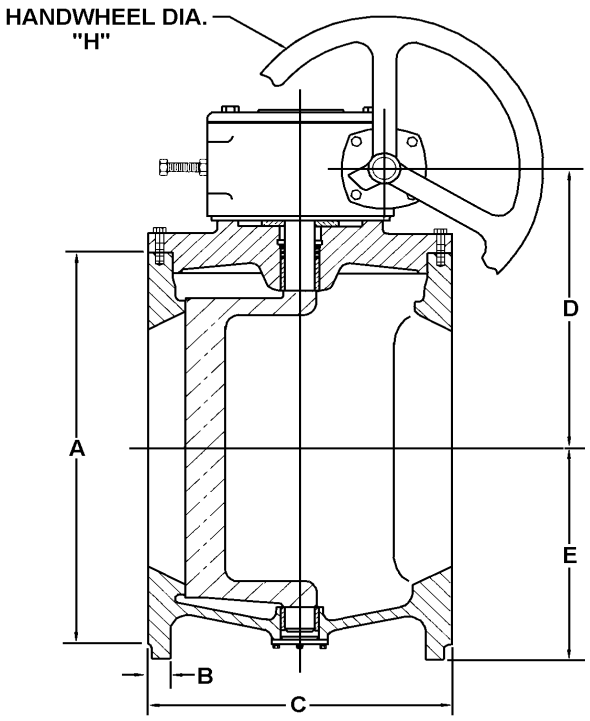

MECHANICAL JOINT END

FIG. 600

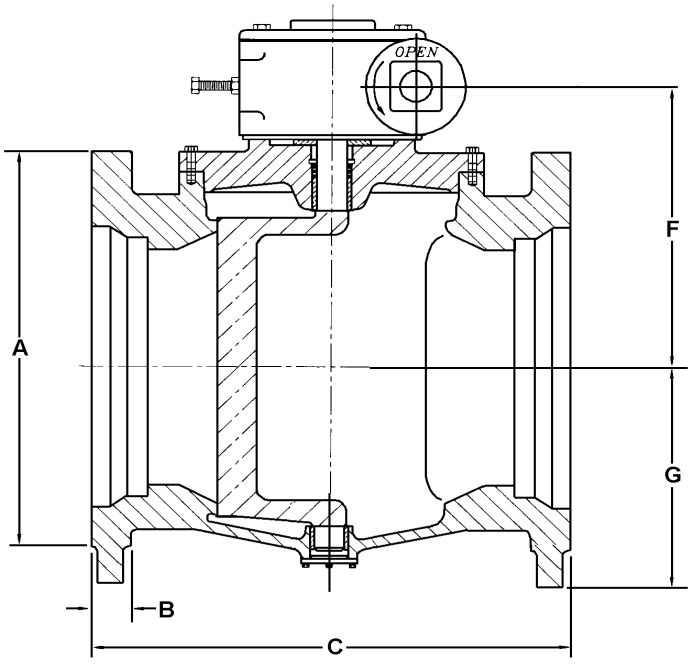

FLANGED END - ANSI 125 / 150										
Size	14	16	18	20	24	30	36	42	48	54
A	21.0	23.25	25.0	27.5	32.0	38.75	46.0	53.0	59.5	66.25
B	1.38	1.43	1.56	1.68	1.88	2.12	2.38	2.62	2.75	3.0
C	17.0	17.75	21.5	23.5	42.0	51.0	60.0	72.0	84.0	96.0
D	15.06	15.81	17.0	20.43	22.88	27.59	33.0	37.62	37.62	37.62
E	13.0	14.0	15.0	16.0	21.62	24.75	29.0	29.0	36.0	36.0
H	18.0	18.0	18.0	18.0	24.0	24.0	24.0	30.0	30.0	30.0
Weight (approx.)	905	1030	1355	1880	3800	5200	6950	10160	13350	15100

Flanged valves meet ANSI B16.1

MECHANICAL JOINT END									
Size	14	16	18	20	24	30	36	42	48
A	20.31	22.56	24.84	27.0	31.5	39.12	46.0	53.0	60.0
B	1.31	1.38	1.43	1.50	1.62	1.68	2.0	2.0	2.0
C	24.5	27.25	29.25	31.0	42.0	51.0	60.0	72.0	84.0
F	15.06	15.81	17.0	20.43	22.88	26.93	33.0	37.62	37.62
G	13.0	14.0	15.0	16.0	21.62	24.75	29.0	29.0	36.0
Weight (approx.)	905	1030	1355	1880	3800	5200	6950	10160	13350

M.J. valves meet ANSI 21.11 & AWWA C-111

Weight includes gear operator
NOTE: Drawings are for information purposes only; please request certified drawings before preparing piping diagrams

NOTE: Dimensions on 60" and larger available upon request.

FLANGED END *FIG.602* *2 1/2" -12" 400 PSI*
14" -16" 300 PSI

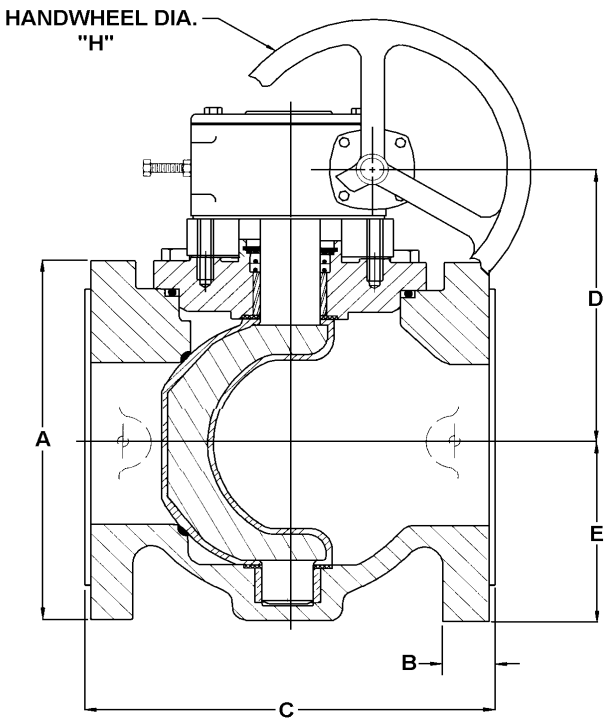

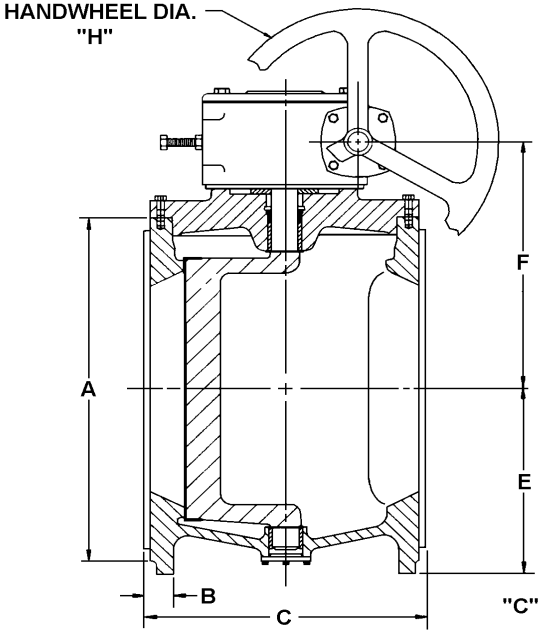

"C" Dimen. includes 1/16" raised face

FLANGED END - CLASS 250															
Size	2.5	3	4	5	6	8	10	12	14	16	18	20	24	30	36
A	7.50	8.25	10.00	11.00	12.50	15.00	17.50	20.50	23.00	25.50	28.00	30.50	36.00	43.00	50.00
B	1.06	1.12	1.25	1.38	1.43	1.62	1.88	2.00	2.12	2.25	2.38	2.50	2.75	3.00	3.38
C	9.50	11.12	12.00	15.00	15.88	16.50	18.00	19.75	18.50	19.38	23.12	25.00	42.88	51.88	61.00
E	3.50	3.75	4.50	5.75	5.75	8.25	8.88	10.00	13.00	14.00	15.00	16.00	21.62	24.75	29.00
F	6.00	6.09	7.06	8.31	8.31	10.13	13.88	14.75	15.60	15.81	17.00	20.43	22.88	27.59	33.00
H	6.00	6.00	6.00	6.00	6.00	12.00	12.00	12.00	18.00	18.00	18.00	18.00	24.00	24.00	24.00
Weight (approx.)	40	80	120	162	170	275	398	590	980	1125	1830	2060	4160	5700	7670

All above have gear operators as standard
Weight includes gear operator

NOTE: Drawings are for information purposes only; please request certified drawings before preparing piping diagrams

FLANGED END *FIG.601RL*

2 1/2" -12" 175 PSI
14" -16" 150 PSI
42" and larger 125 PSI

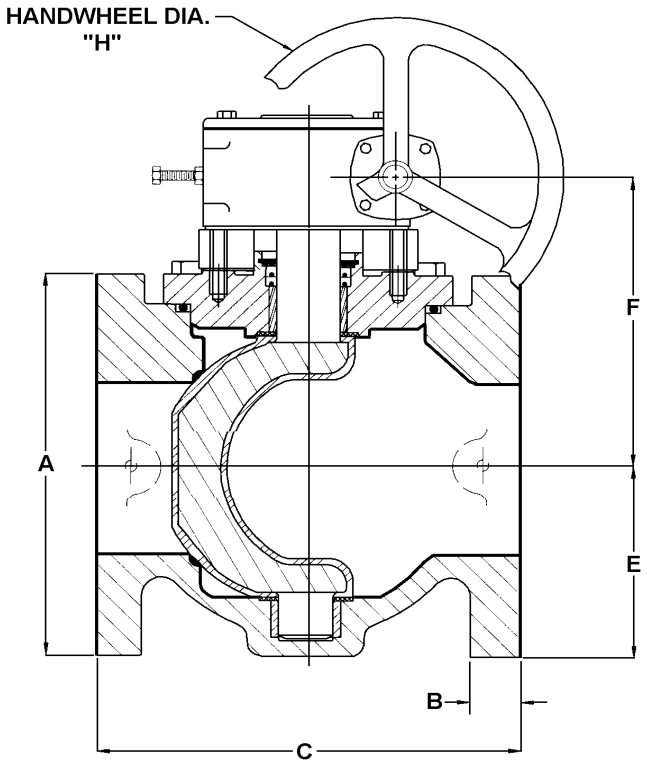

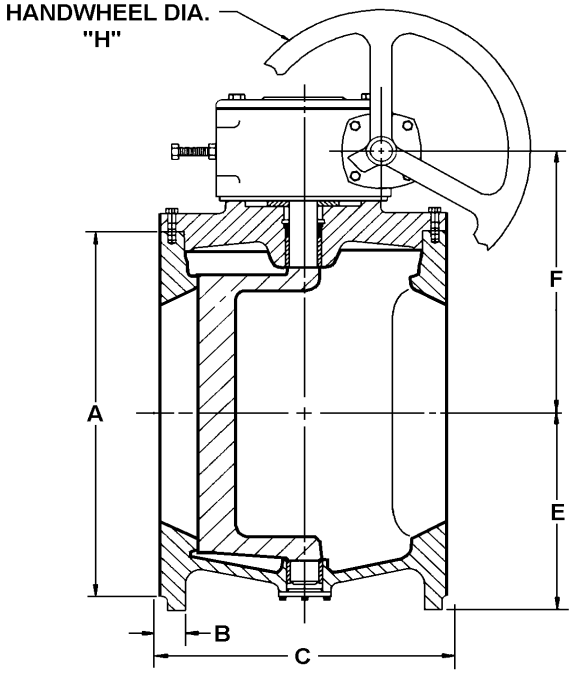

FLANGED END - ANSI 125 RUBBER LINED

Size	2.5	3	4	5	6	8	10	12	14	16	18	20	24	30	36	42
A	7.00	7.50	9.00	10.00	11.00	13.50	16.00	19.00	21.00	23.25	25.00	27.50	32.00	38.75	46.00	53.00
B	0.80	0.88	1.05	1.05	1.12	1.25	1.30	1.38	1.50	1.55	1.68	1.80	2.00	2.25	2.50	2.93
C	7.75	8.25	9.25	10.25	10.75	11.75	13.25	14.25	17.25	18.00	21.75	23.75	42.25	51.25	60.25	72.25
E	3.50	3.75	4.50	5.75	5.75	7.62	8.88	10.00	13.00	14.00	15.00	16.00	21.62	24.75	29.00	31.25
F	6.00	6.09	7.06	8.31	8.31	10.13	15.50	17.19	15.06	15.81	17.00	20.43	22.88	27.59	33.00	37.62
H	6.00	6.00	6.00	6.00	6.00	12.00	12.00	12.00	18.00	18.00	18.00	18.00	24.00	24.00	30.00	30.00
Weight (approx.)	30	70	100	135	145	240	345	440	905	1030	1355	1880	3800	5200	6950	10160

All above have gear operators as standard
Weight includes gear operator
NOTE: Drawings are for information purposes only; please request certified drawings before preparing piping diagrams

GROOVED END *FIG.606* *175 PSI*

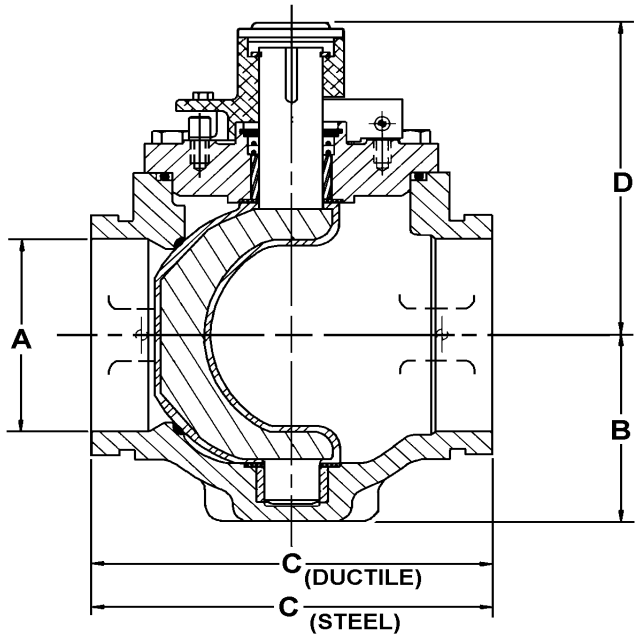

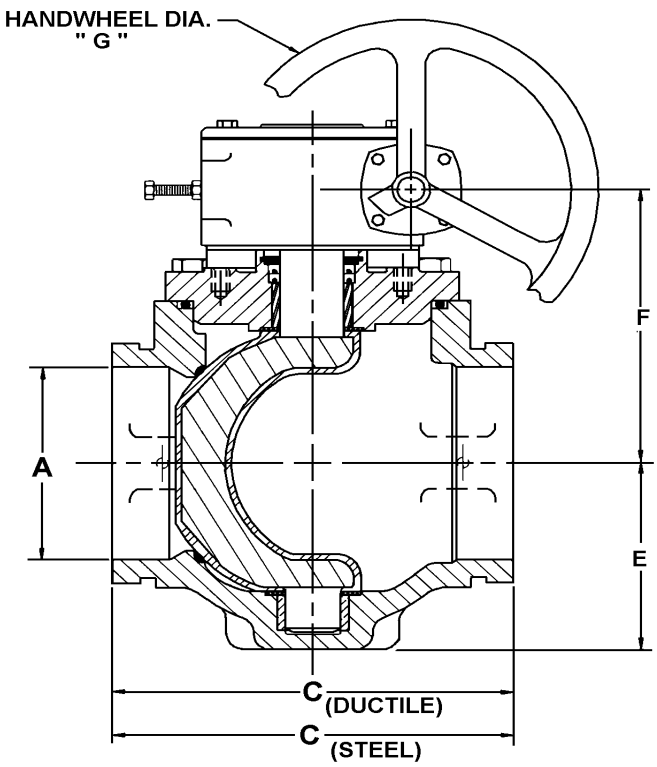

GROOVED END - AWWA 606									
Size	2.5	3	4	5	6	8	10*	12*	14*
A	2.50	3.00	4.00	5.00	6.00	8.00	10.00	12.00	14.00
C - DUCT.	N/A	N/A	10.25	N/A	12.50	14.00	16.56	18.00	21.63
C - STEEL	8.50	8.50	10.13	12.38	12.38	13.88	16.44	18.00	21.50
D	6.18	6.18	7.25	8.38	8.38	10.68	- -	- -	- -
E	3.50	3.75	4.50	5.75	5.75	7.62	8.88	10.00	10.00
F	5.38	5.59	6.31	7.56	7.56	9.63	11.63	13.31	13.31
G	6.00	6.00	6.00	6.00	6.00	12.00	12.00	12.00	18.00
Weight (approx.)	20	30	50	70	80	145	** 325	** 420	** 460

* 10" & above have gear operators as standard

** Weight includes gear operator

NOTE: Drawings are for information purposes only; please request certified drawings before preparing piping diagrams

ADAPTATION

A range of extended stems & floor mounted stands for remote operation, particularly in buried service, are available.

Chainwheel operation & locking devices are redily incorporated onto the MILLCENTRIC valve.

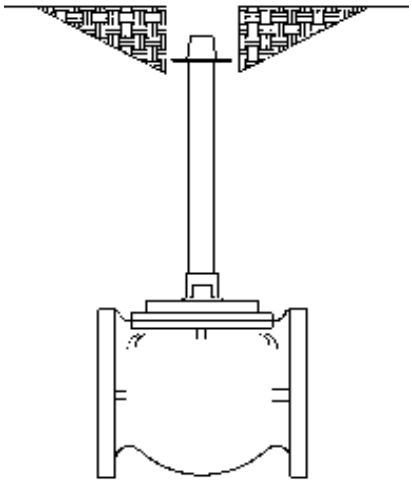

Valve with Extended Stem

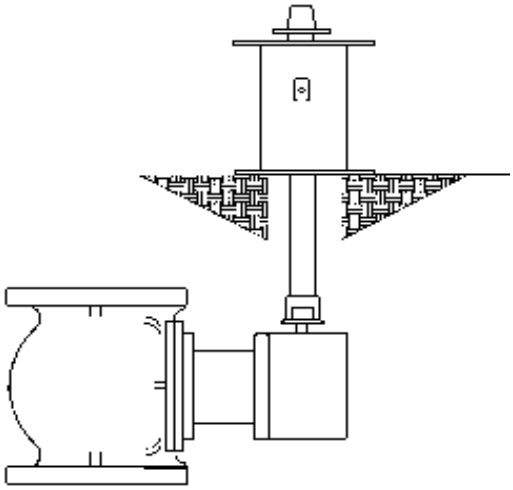

Valve with indicating floorstand

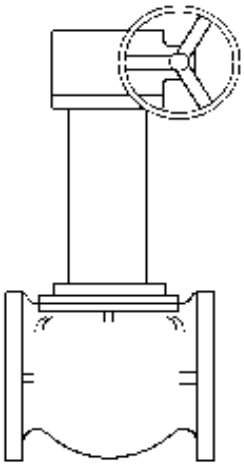

Valve with extended bonnet

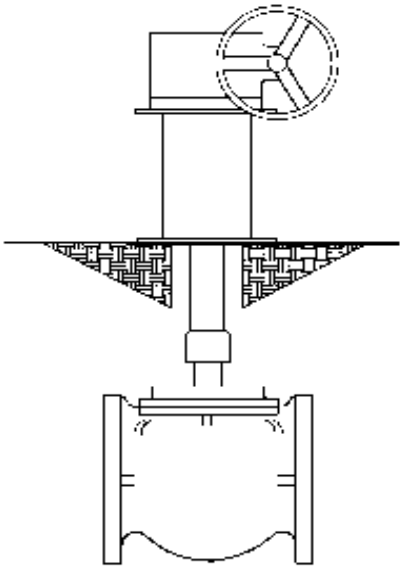

Valve with non-indicating floorstand

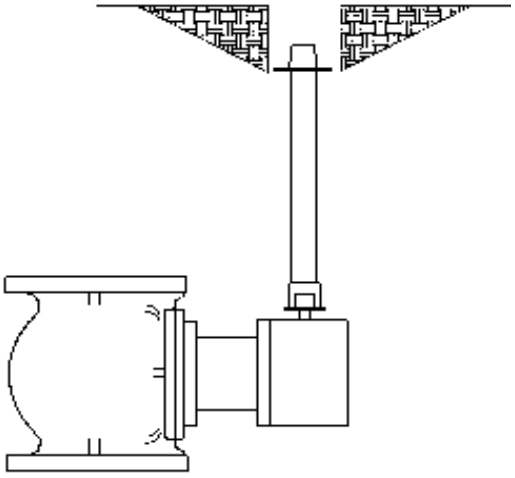

Valve with extended stem & buried gear

PROPOSED
TECHNICAL SPECIFICATION
Eccentric Plug Valves 3"- 72"

Valves shall be of the non-lubricated, eccentric type. Flanged valves shall be manufactured in accordance with **ANSI B16.1, Class 125/150**, *including* flange thickness as required by **AWWA C504-00, Table 2** and comply with MSS-SP-108 (Eccentric Plug Valves) in all respects. Mechanical joint ends shall be in compliance with **AWWA/ANSI C-111-92.**

Valves shall be designed and manufactured to have a minimum wall thickness compliant to **AWWA C504-00.** Plug shall be round thru 12" and rectangular for sizes 14" and larger. Lay lengths shall be compliant to MSS-SP-108 for all valve sizes.

Valve bodies shall be of **ASTM A-126, Class B** cast iron in accordance with **AWWA C-504-00, Sec. 4.4.2.1. or ASTM A-536 ductile iron**. Valves 3" and larger shall he furnished with a welded-in overlay seat of not less than 90% nickel in accordance with **AWWA C-507-85, Sec. 3.2.3.5.** Nickel thickness shall be not less than .125". Sprayed, plated screwed-in seats are not acceptable.

Plugs shall be of **ASTM A-536, Grade 65-45-12** high strength ductile iron in conformance with **AWWA C-504-00, Sec. 4.4.2.2.** or solid one piece cast iron. Two piece plugs or plugs with internal cavities are not acceptable. The plug shall be of one piece solid construction with PTFE thrust bearings on the upper and lower bearing journals to reduce torque and prevent dirt and grit from entering the bearing and seal area. Valves that do not isolate the bearing area from debris are not acceptable. Valves shall be furnished with replaceable sleeve type bearings conforming to **AWWA C-504-00, Sec. 4.5.6.4** and **AWWA C507-85, Sec. 3.2.4.** Bearings shall be of sintered, oil impregnated type 316 stainless steel **ASTM A-743, Grade CF8M**.

Part areas shall provide for the following minimum flow coefficients or be a minimum of 100% port.

Valve Size	Cv(GPM)	Valve Size	Cv(GPM)
3"	500	14"	6,000
4"	1,000	16"	9,000
5"	2,000	18"	11,000
6"	2,000	20"	13,000
8"	3,000	24"	21,000
10"	6,000	30"	36,000
12"	7,000	36"	47,000

All plug valves, for whatever service, shall he capable of passing "pigging" cleaning equipment in either direction and manufacturer shall so certify that this may he done without the use of special equipment.
Valve Shaft seals shall be of the dual "U" cup type in accordance with **AWWA C-504-00, Sec. 4.5.7.1.** Seals shall be self adjusting and repackable without removing the bonnet from the valve. Packing adjustment shall not result in an increase in plug friction or resulting torque. Packing replacement shall be achieved without need to cut packing during reinstallation and not require cap removal. Single piece packing arrangements are not acceptable.

Wrench operated valves 2 ½"- 8" shall be capable of being converted to worm gear or automated operation without removal of the bonnet or plug from the valve. All wrench operated valves shall be equipped with a 2" square nut for use with removable levers or extended "T" handles. Worm gear operators, where required, shall be of heavy-duty ductile iron construction with ductile iron quadrant supported on top and bottom by oil impregnated bronze bearings. The worm gear and shaft shall be manufactured of hardened steel and run on high efficiency roller bearings. Gear shall have both open and closed stops, shall he flush-mounted to the valve exposing no portion of the plug stem and shall be rated for the valves design pressure rating for bi-directional shut off. Buried service gears shall be designed and certified to withstand input loads of up to 300 ft. lbs. minimum without damage.

Valves shall be designed and manufactured to shut off bubble tight at 175 psi for valves 2 ½" through 12" and at 150 psi for valves 14" through 36". Valves 42" and larger shall be certified bubble tight at 125 psi. Each valve shall be given a bi-directional hydrostatic seat test with the test results being certified by the manufacturer when required. All actuation shall he supplied and full warranted by the plug valve manufacturer.

Certified copies of Proof-of-Design test reports shall be furnished as outlined in **AWWA C-504-00, Section 5,2.4.**

Plug valves shall be **Millcentric Series 601 / 600** as manufactured by **Milliken Valve Company of Bethlehem, PA.**

MILLIKEN
VALVE COMPANY, INC.
1995 Highland Ave. Suite 500, Bethlehem, PA 18020-9081
Phone: 610-861-8803 FAX: 610-861-8094

APPENDIX C

Manufacturer's Information

Millcentric (Plug Valves) Operations and Maintenance Manual, Series 600

DRAFT

FEBRUARY 2000

MILLCENTRIC

OPERATION & MAINTENANCE

MANUAL

SERIES 600

MILLIKEN VALVE COMPANY
1995 HIGLAND AVENUE, SUITE 500
BETHLEHEM PA 18020
PHONE: (610) 861-8803
FAX: (610) 861-8094

OPERATIONS & MAINTENANCE

OPERATING INSTRUCTIONS

WRENCH OPERATED MILLCENTRIC

Wrench operated Millcentric valves close by turning the valve 90 degrees clockwise.

TORQUE COLLAR

All wrench operated Millcentric valves are equiped with a multifunction device referred to here as a torque collar. This device serves as:

1. Wrench Adapter-2" square
2. Position Indicator
3. Open Memory Stop
4. Closed Memory Stop
5. Running Torque Adjustment

Position Indicator

The top of the plug has an indicator plate to show the approximate plug position. Cast onto the torque collar is an indicator mark which corresponds to a graduated scale cast on the bonnet of the valve. This scale is divided into 15 degree lines and indicates the exact valve opening from full open to full closed.

Open Memory Stop

The torque collar also incorporates an open memory stop feature. The plug can be set by tightening bolt 2 after the correct flow is achieved. The valve can then be closed for mainteneance and reopened to the proper position with out recheck the flow.

Closed Memory Stop

The closed memory stop is provided to allow for discrepancies in the molded elastomer and to allow for wear of either the plug coating or the seat. The closed stop is pre-set at the factory and should not require readjustment unless substantial wear occurs.

To adjust the plug for excess plug or seat wear simply rotate the closed stop two turns clockwise then rotate the plug (clockwise) futher into the seat and check the flow. Shold this movement fail to shut off the flow repeat the above step. Afterward re-set the lock nut to prevent the position from being altered.

OPERATIONS & MAINTENANCE

Running Torque Adjustment

The nature of eccentric plug valves "camming" action eliminates the majority of the torque prior to seating- in the running stage. To prevent the plug from creeping open
or slammming closed the torque collar maintains a constant drag on the shoulder of the valve bonnet. This adjustment is also factory set and should only be tightend if the valve exhibits the above mentioned creeping or slamming conditions.

To prevent the plug from unnecessary movement rotate the hex head bolt clockwise until the is a substanitial drag on the plug but not so much as to prevent the movement of the plug with the supplied wrench.

Wrench Operated Valve With Torque Collar

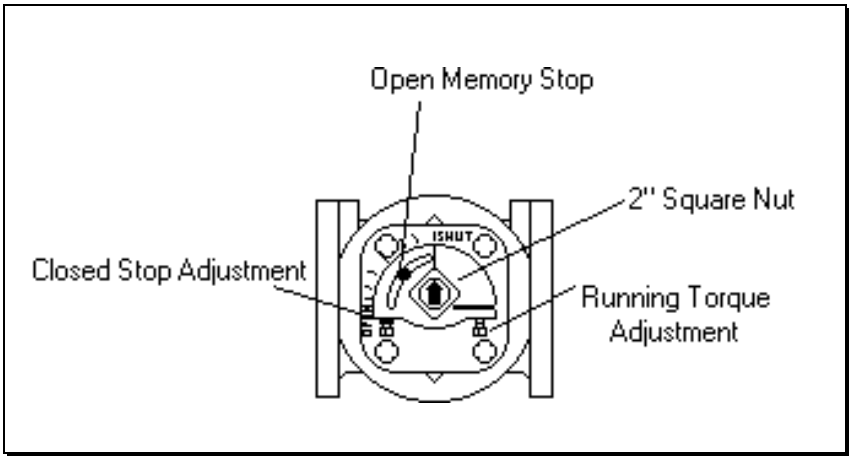

OPERATING INSTRUCTIONS

GEAR OPERATED MILLCENTRIC

Gear operated Millcentric valves close by tuning the gear input shaft clockwise until closed. Please see specific valve drawing for the exact number of turns to close.

Position Indicator

(Above ground units only)

The top of the gear operator has an indicator plate to show the plug position. This scale, cast onto the gear housing, is divided into 15 degree lines and indicates the exact valve opening from full open to full closed. Buried service units are totally enclosed and sealed for use below grade.

Open and Closed Memory Stops

The closed memory stop is provided to allow for discrepancies in the molded elastomer and to allow for wear of either the plug coating or the seat. The closed stop is pre-set at the factory and should not require readjustment unless substantial wear occurs.

To adjust the plug for excess plug or seat wear simply rotate the closed stop two turns clockwise then rotate the handwheel or nut (clockwise) to move the plug futher into the seat and check the flow. Should this movement fail to shut off the flow repeat the above step. Afterward re-set the lock nut to prevent the position from being altered.

Gear Operated Valve

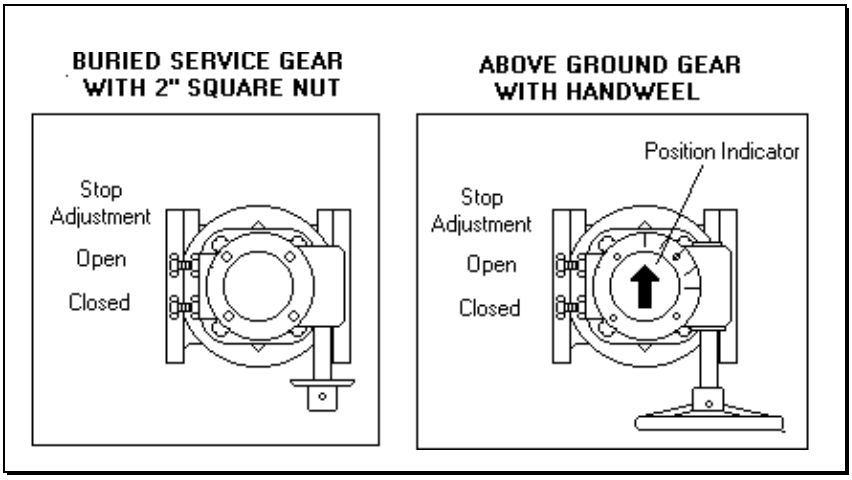

OPERATIONS & MAINTENANCE

==========

MAINTENANCE INSTRUCTIONS

GEAR OPERATED VALVE

The Millcentric is designed and manufactured to be a long life valve under normal circumstances. It does not require any routine maintenance. Cycling the valve from full open to full closed on an annual basis will increase the life of the valve and operator components.

However, if maintenance is required, due to unusual wear or service conditions the following procedure should be followed:

DISASSEMBLY PROCEDURE

BODY

The Millcentric is a top entry valve; therefore the body can remain in line during this operation. Remove the bolts holding the gear operator cap in place. Remove the cap and remove the internal bolts fastening the gear operator to the valve body. Remove the gear operator and set aside. With the valve de-pressurized, remove the hexagonal head cap screws that hold the bonnet to the valve body. Remove the bonnet, leaving the plug in the body. At this point the plug, PTFE thrust washers, journal bearings and bonnet "O" ring are accessible and can be removed and replaced.

Care should be taken not to damage the plug elastomer or bonnet "O" rings upon reassembly.

Reverse the above process for reassembling the Millcentric.

STEM SEALS

Remove the bolts holding the gear operator cap in place. Remove the cap and remove the internal bolts fastening the gear operator to the valve body. Remove the gear operator and set aside.

With the valve de-pressurized, using internal snap ring pliers, remove the snap ring and thrust washer. The "U" cup seals can now be pried out of the seal cavity. To replace reverse the above process.

OPERATIONS & MAINTENANCE

==========

MAINTENANCE INSTRUCTIONS

WRENCH OPERATED VALVE
2-1/2"- 8"

The Millcentric is designed and manufactured to be a long life valve under normal circumstances. It does not require any routine maintenance..

However if maintenance is required , due to unusual wear or service conditions the following procedure should be followed:

DISASSEMBLY PROCEDURE

BODY

The Millcentric is a top entry valve; therefore the body can remain in line during this operation. Remove the socket head capscrew fastening the torque collar to the plug stem. Remove the torque collar and set aside. With the valve de-pressurized, remove the hexagonal head cap screws that hold the bonnet to the valve body. Remove the bonnet, leaving the plug in the body. At this point the plug, PTFE thrust washers, journal bearings and bonnet "O" ring are accessible and can be removed and replaced.

Care should be taken not to damage the plug elastomer or bonnet "O" rings upon reassembly.

Reverse the above process for reassembling the Millcentric.

STEM SEALS

Remove the socket head capscrew fastening the torque collar to the plug stem. Remove the torque collar and set aside.

With the valve de-pressurized, using internal snap ring pliers, remove the snap ring and thrust washer. The "U" cup seals can now be pried out of the seal cavity. To replace reverse the above process.

OPERATIONS & MAINTENANCE

==========

MAINTENANCE INSTRUCTIONS

THREADED WRENCH OPERATED VALVE
1/2"- 2"

The Millcentric is designed and manufactured to be a long life valve under normal circumstances. It does not require any routine maintenance..

However if maintenance is required , due to unusual wear or service conditions the following procedure should be followed:

DISASSEMBLY PROCEDURE

BODY

The Millcentric is a top entry valve; therefore the body can remain in line during this operation. Remove the spring pin fastening the torque collar to the plug stem. Remove the torque collar and set aside. With the valve de-pressurized, rotate the bonnet counterclockwise to loosen the bonnet from the valve body. Remove the bonnet, leaving the plug in the body. At this point the plug, journal bearings and bonnet "O" ring are accessible and can be removed and replaced.

Care should be taken not to damage the plug elastomer or bonnet "O" rings upon reassembly.

Reverse the above process for reassembling the Millcentric.

STEM SEALS

Remove the spring pin fastening the torque collar to the plug stem. Remove the torque collar and set aside. With the valve de-pressurized, rotate the bonnet counterclockwise to loosen the bonnet from the valve body. Remove the bonnet, leaving the plug in the body. At this point the stem "O" rings are accessible and can be removed and replaced.

Reverse the above process for reassembling the Millcentric.

OPERATIONS & MAINTENANCE

ACTUATED VALVES

The Millcentric is designed and manufactured to be a long life valve under normal circumstances. It does not require any routine maintenance. Cycling the valve from full open to full closed on an annual basis will increase the life of the valve and operator components.

However, if maintenance is required, due to unusual wear or service conditions, the following procedure should be followed:

DISASSEMBLY PROCEDURE

BODY

The Millcentric is a top entry valve; therefore, the body can remain in line during this operation. Remove the bolts holding the actuator bracket to the valve cap. You can then remove the actuator from the valve. With the valve de-pressurized, remove the hexagonal head cap screws that hold the bonnet to the valve body. Remove the bonnet, leaving the plug in the body. At this point the plug, PTFE thrust washers, journal bearings, and bonnet "O" ring are accessible and can be removed and replaced.

Care should be taken not to damage the plug elastomer or bonnet "O" rings upon reassembly.

Reverse the above process for reassembling the Millcentric.

STEM SEALS

With the valve de-pressurized, using internal snap ring pliers, remove the snap ring and thrust washer. The "U" cup seals can now be pried out of the seal cavity. To replace, reverse the above process.

MAINTENANCE INSTRUCTIONS
ACTUATED VALVES
TO REPLACE "U" CUP SEALS

The Millcentric is designed and manufactured to be a long life valve under normal operating conditions. It does not require any routine maintenance. Cycling the valve from full open to full closed on an annual basis will increase the life of the valve and actuator components.

However, if maintenance is required, due to unusual wear or service conditions, the following procedure should be followed:

To replace "U" cup seals on actuated Millcentric valves, remove the actuator; remove the internal bolts fastening the actuator to the valve body. Remove the actuator and set aside. Remove the external snap ring and support collar.

Remove the internal snap ring using snap ring pliers. Remove thrust washer. The "U" cup seals are now visible. Using a screwdriver, pry out the old seals.

Apply a small amount of silicone or grease to the new "U" cup seals. This will help them slide in the packing cavity. Put a piece of shim stock into the cavity and put the "U" cup over it. Slide the "U" cup over the stem with shim stock against the stem. This will let any trapped air out of the packing cavity. Now, using two screwdrivers, coax the outer lip of the "U" cup into the cavity while pressing down on the top of the "U" cup with the other screwdriver (see attachment). Continue to do this all the way around until the "U" cup is at the bottom of the packing cavity.

Repeat the procedure with the second "U" cup, and replace the thrust washer and snap ring. Now you can remount the actuator on the valve.

OPERATION & MAINTENANCE

INSTALLATION

When installing the valves, the seat end should be noted. The seat end of the valve is cast in raised letters on the appropriate flange of the valve. Generally, straightway valves should be installed with the highest pressure applied from the opposite end from the seat. This will tend to push the plug into the seat.

In cases where shut-off is required in both directions, the valve should be installed so that the highest differential pressure at shut-off is opposite the seat end.

When the service is of a clogging type likely to build up in the valve body, it is recommended that the valve be installed with the media entering the seat end first. In extreme cases, the valve should be installed with the plug horizontal and rotating upward into the top portion of the valve body cavity to open.

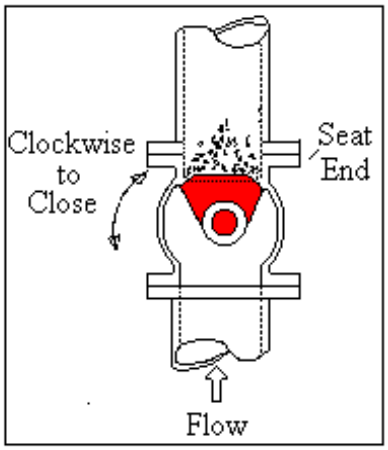

Vertical Pipeline

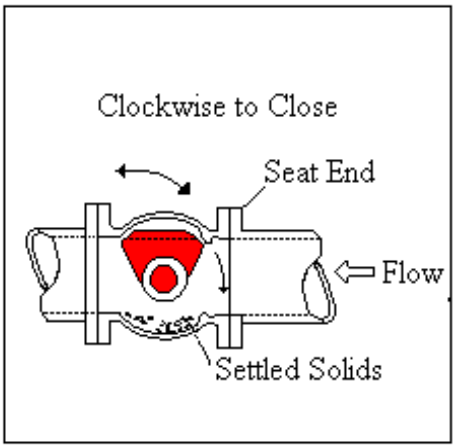

Horizontal Pipeline

Flanged end valves have ANSI B16.1 flat faced 125/150 flanges. Standard ANSI B16.21 flanges and gaskets should be used to install the valves in the pipeline. Certain size valves utilize tapped holes at valve trunnions where a backing nut is not possible. Please check specific drawings for detailed information on sizes and quantities of hexagon head screws required on these valves.

Prior to installing valve, especially ones that are buried, they should be cycled open and closed several times to ensure they are in good working order and have not been damaged during shipment or storage.

OPERATIONS & MAINTENANCE

==========

FUNCTION

The Millcentric valve is a non-lubricated eccentric plug valve designed for use in water and waste water applications, and HVAC systems.

TEMPERATURE LIMITS

The operating temperature is controlled by the elastomer specified and are as follows:

Elastomer	High Temp	Low Temp
Buna N	225 F	-20 F
EPDM	250 F	-35 F
Neoprene	225 F	-20 F
Viton	400 F	-10 F

PRESSURE LIMITS

The operating pressure differs with the valve size range and configuration, and are as follows:

FIGURE 600/601 - ANSI Class 125

Size Range	Rated Pressure*	Shell Hydro	Seat Test
1/2"- 12"	175 psi	350 psi	210 psi
14"- 36"	150 psi	300 psi	180 psi
42"- 54"	125 psi	250 psi	150 psi

* Pressure Ratings are given at ambient temperatures.

OPERATION & MANTENANCE

SPARE PARTS LIST

COMPONENT	NUMBER PER VALVE
Journal Bearings	2
PTFE Thrust Washers	2
"U" Cup Seals	2
Elastomer Coated Plug	1
Bonnet "O" Ring Seal	1

If required these parts can be ordered from:

Milliken Valve Company, Inc.
1995 Highland Avenue Suite 500
Bethlehem, PA 18020

Tel: (610) 861-8803
Fax : (610) 861-8094

When ordering please furnish the size, figure number and component name:

For example: 6" Figure 601N1AG- Journal Bearing

TROUBLE SHOOTING

Gear Operated Valves

SYMPTOM	POSSIBLE CAUSE	ACTION
Valve Will Not Open.		
	Bent Input Shaft	Replace Worm Shaft
	Obstruction in Line	Remove Obstruction
	Excessive Line Pressure	Reduce Pressure
	Elastomer Damage	Replace Plug
Valve Will Not Close.		
	Bent Input Shaft	Replace Worm Shaft
	Obstruction in Line	Remove Obstruction
	Excessive Line Pressure	Reduce Pressure
	Elastomer Damage	Replace Plug
Valve Will Not Shutoff Flow		
	Improper Stop Adjustment	Adjust Closed Stop
	Obstruction in Line	Remove Obstruction
	Excessive Line Pressure	Reduce Pressure
	Elastomer Damage	Replace Plug
Valve Leaks at Plug Stem		
	Damaged "U" Cup Seal	Replace "U" Cups

OPERATIONS & MAINTENANCE

TROUBLE SHOOTING

Wrench Operated Valves

SYMPTOM	POSSIBLE CAUSE	ACTION
Valve Will Not Open.		
	Broken or Misadjusted Torque Collar	Adjust or Replace Torque Collar
	Obstruction in Line	Remove Obstruction
	Excessive Line Pressure	Reduce Pressure
	Elastomer Damage	Replace Plug
Valve Will Not Close.		
	Broker or Misadjusted Torque Collar	Adjust or Replace Torque Collar
	Obstruction in Line	Remove Obstruction
	Excessive Line Pressure	Reduce Pressure
	Elastomer Damage	Replace Plug
Valve Will Not Shutoff Flow.		
	Improper Stop Adjustment	Adjust Closed Stop
	Obstruction in Line	Remove Obstruction
	Excessive Line Pressure	Reduce Pressure
	Elastomer Damage	Replace Plug
Valve Leaks at Plug Stem		
	Damaged "U" Cup Seal	Replace "U" Cups

OPERATIONS & MAINTENANCE

==========

STORAGE PROCEDURE

Milliken valves are shipped with the plugs in the open position. Care should be taken to maintain this position while the valves are in storage prior to installation in the pipeline.

Flanged valve end protectors (if supplied) should be kept on the valves until they are ready for installation. Special care should be given to mechanical joint valves to prevent damage to the internal pipe seating area.

Valves should be stored where internal contamination due to sand and mud can be kept to a minimum. Care should be taken to avoid direct sunlight on the plug elastomer during storage.

Electric, hydraulic and pneumatic valve actuators should be cared for in accordance with the storage instructions of the actuator manufacturer.

OPERATION & MANTENANCE

LUBRICATION SCHEDULE

The Millcentric is a low maintenance non-lubricated eccentric plug valve. As such there is no required lubrication of the valve itself.

The manual worm gear operators where applicable are also sealed grease lubricated units and should not require any type of periodic lubrication. Should the unit need to have lubricant replaced it is recommended that **Shell "Alvania" #2.**

APPENDIX C Manufacturer's Information

ProAir Air Conditioner Manufacturer's Data (VFD)

DRAFT

OUTDOOR/CORROSIVE/STAINLESS STEEL

1600-8500 BTU/HR.
469-2490 WATTS

PROAIR™
The Ultimate Protection

FEATURES

- Constructed of high-grade 16-gauge type 304 stainless steel for increased protection in corrosive and outdoor applications.
- The Corrosive Environment and Outdoor Option Packages can be ordered separately or together to provide optimum defense against especially harsh conditions. The Corrosive Environment Package protects components exposed to the corrosive environment on the ambient side of the air conditioner. The Outdoor Package includes low temperature controls for operating down to -40°F.
- The ProAir™ Series combines state-of-the-art design with pleasing aesthetics. This highly efficient series offers a broad range of sizes and performance capacities.
- For more sophisticated requirements we offer Levels II and III Smart Control. This microprocessor-based option provides programmable temperature management, digital display of enclosure temperature, as well as remote alarm capabilities.
- Maintenance is made easy by front cover hinging open for quick access to all components.
- The Flip Filter design on the CR23 and CR29 uses only 50% of the filter surface so filter can be inverted to double operating time between cleanings/replacements.
- EZ Mount flanges simplify installation to a two-step, one-person job.
- Filterless operation possible in many applications.
- Unique condensate management system evaporates moisture from enclosure and eliminates drain tubes, buckets and wet floors.
- High performance fans and blowers are ideal for densely packed enclosures.
- 100% functionally tested.
- Mounting hardware, gaskets, drawings, mounting template and instruction manual furnished.
- All units use a CFC-free or environmentally safe refrigerant that is universally accepted.

UL cUL CE **NEMA 12** **NEMA 4X**

Most models available with UL and CUL listing. CE available upon request. Please contact the factory. (UL File SA6453) NEMA 12 per UL 50 Type 12 approval on all models. NEMA 4X per UL 50 Type 4X optional.

OTHER UNITS TO CONSIDER

CR23 Stainless Steel: CR23, pg. 16; Genesis™ 17, pg. 20
CR29 Stainless Steel: CR29, pg. 16; Genesis™ 28, pg. 24
CR43 Stainless Steel: CR43, pg. 16

OPTIONS (SEE PGS. 80-81)

	CR23	CR29	CR43
Smart Control Package	✔	✔	✔
Thermostat Package	✔	✔	✔
Thermostat/Malfunction Package	✔	✔	✔
Special Voltage Package	✔	✔	✔
Outdoor Package*	✔	✔	✔
Corrosive Environment Package*	✔	✔	✔
Heater Package	✔	✔	✔
NEMA 4X Package (see note on pg. 37)	✔	✔	✔

** Must be ordered separately to achieve desired protection.*

ProAir™ Stainless Steel CR23

1600 BTU/Hr. (469 Watts) — **H x W x D: 23" (584) x 10" (254) x 8.75" (222)**

Model	Voltage	Hz	Phase	BTU/Hr @ 131°F/131°F*	Amps @ 131°F/131°F	BTU/Hr @ 95°F/95°F*	Amps @ 95°F/95°F	Max Amb Temp °F/°C	Shipping Weight Lbs/Kgs
CR23-0216-G0ST	115	50/60	1	1400/1600	4.1/4.5	1500/1700	3.8/3.6	131/55	57/26
CR23-0226-G0ST	230	50/60	1	1400/1600	2.2/2.2	1500/1700	2.1/1.8	131/55	57/26

-0ST will be replaced with a two-digit number designating all desired options. Consult the factory for specific model numbers.
* Two cooling capacities are listed to demonstrate the consistent performance throughout the typical operating range.

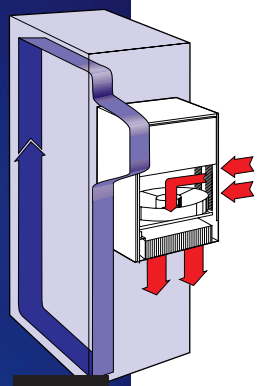

ProAir™ Stainless Steel CR29

2000-4000 BTU/Hr. (586-1172 Watts) — **H x W x D: 29.50" (749) x 15.75" (400) x 8.63" (219)**

Model	Voltage	Hz	Phase	BTU/Hr @ 131°F/131°F*	Amps @ 131°F/131°F	BTU/Hr @ 95°F/95°F*	Amps @ 95°F/95°F	Max Amb Temp °F/°C	Shipping Weight Lbs/Kgs
CR29-0216-G0ST	115	50/60	1	2000/2200	7.4/7.4	1700/2000	7.0/6.0	131/55	98/44
CR29-0226-G0ST	230	50/60	1	2500/2700	4.6/3.9	1900/2300	4.4/3.3	131/55	98/44
CR29-0416-G0ST	115	50/60	1	3500/4000	13.5/13.5	2400/2800	10.7/9.6	131/55	118/54
CR29-0426-G0ST	230	50/60	1	3500/4000	6.7/6.6	2400/2800	5.9/5.3	131/55	118/54

-0ST will be replaced with a two-digit number designating all desired options. Consult the factory for specific model numbers.
*Because air conditioners provide less cooling at lower operating temperatures, two cooling capacity ratings are listed for each ProAir™ air conditioner to assist you in your selection.

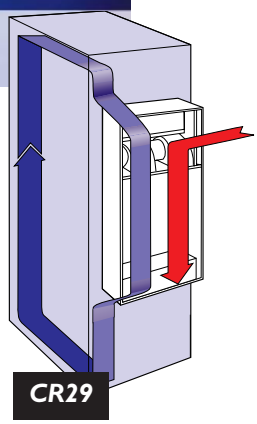

ProAir™ Stainless Steel CR43

6000-8500 BTU/Hr. (1758-2490 Watts) — **H x W x D: 43.31" (1100) x 15.75" (400) x 10.25" (260)**

Model	Voltage	Hz	Phase	BTU/Hr @ 131°F/131°F*	Amps @ 131°F/131°F	BTU/Hr @ 95°F/95°F*	Amps @ 95°F/95°F	Max Amb Temp °F/°C	Shipping Weight Lbs/Kgs
CR43-0615-0ST	115	50/60	1	5800/6000	14.6/13.7	4800/5100	12.5/11.0	131/55	131/59
CR43-0616-0ST	115	60	1	6000	13.7	5100	11.0	131/55	131/59
CR43-0625-0ST	230	50	1	6000	6.8	5100	5.3	131/55	131/59
CR43-0626-0ST	230	60	1	6000	6.9	5100	5.5	131/55	131/59
CR43-0815-0ST	115	50/60	1	7500/8500	15.0/16.0	6700/7500	13.5/12.9	131/55	138/63
CR43-0816-0ST	115	60	1	8500	16.0	7500	12.9	131/55	138/63
CR43-0825-0ST	230	50	1	7500	8.0	7000	6.1	131/55	138/63
CR43-0826-0ST	230	60	1	8500	8.2	7500	6.3	131/55	138/63

-0ST will be replaced with a two-digit number designating all desired options. Consult the factory for specific model numbers.
*Because air conditioners provide less cooling at lower operating temperatures, two cooling capacity ratings are listed for each ProAir™ air conditioner to assist you in your selection.

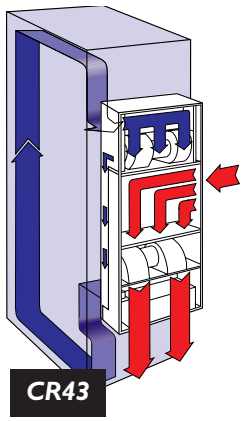

McLEAN MIDWEST CLOSED-LOOP COOLING

Within the air conditioner, the recirculated clean enclosure air is kept separate from the ambient airflow system. This protects the electronic controls and prevents shutdowns caused by heat, humidity, dust and other contaminants.

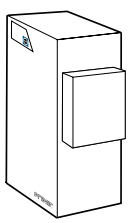

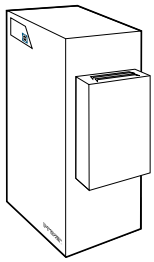

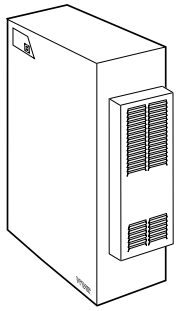

NEMA 4X

The protective shields illustrated here are required to achieve NEMA 4X. Shield protrudes approximately 2" from the air conditioner. Contact factory for details.

PROAIR™ Stainless Steel CR23

CUT-OUT NOTES

1. Dash lines represent air conditioner.
2. Cut-out dimensions for standard product only.
3. Full-size mounting template provided.

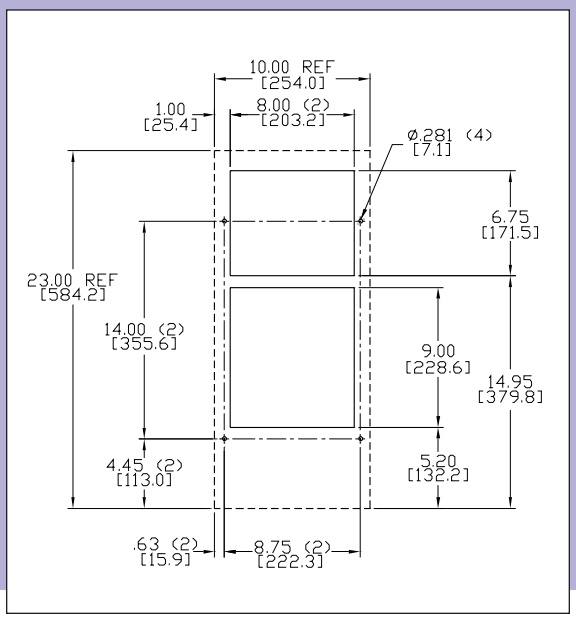

SIDE MOUNT TO ENCLOSURE

For NEMA type 12 enclosure, interfacing air-out and air-in openings are required in the enclosure wall.

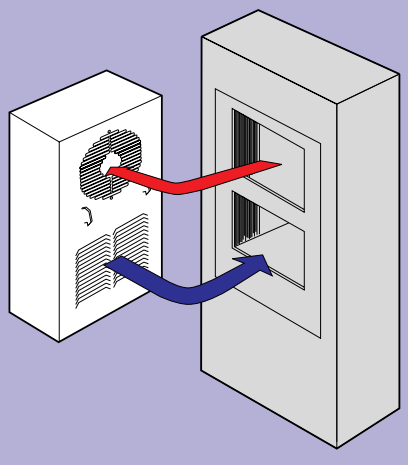

PROAIR™ Stainless Steel CR29

CUT-OUT NOTES

1. Dash lines represent air conditioner.
2. Cut-out dimensions for standard product only.
3. Full-size mounting template provided.

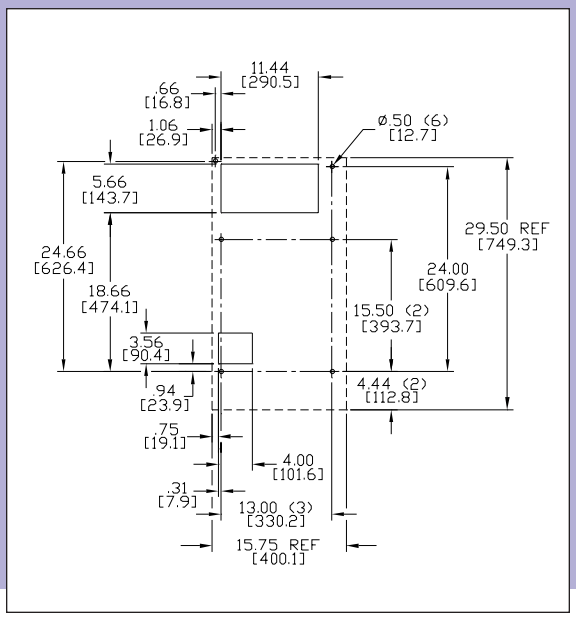

SIDE MOUNT TO ENCLOSURE

For NEMA type 12 enclosure, interfacing air-out and air-in openings are required in the enclosure wall.

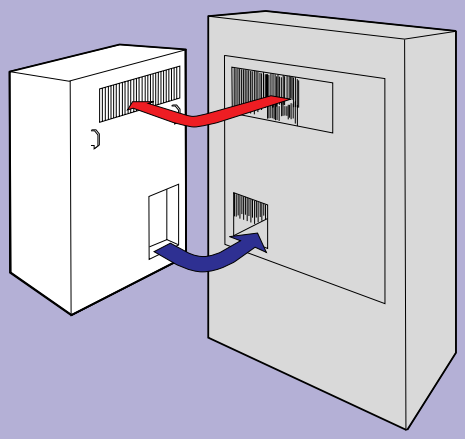

PROAIR™ Stainless Steel CR43

CUT-OUT NOTES

1. Dash lines represent air conditioner.
2. Cut-out dimensions for standard product only.
3. Full-size mounting template provided.

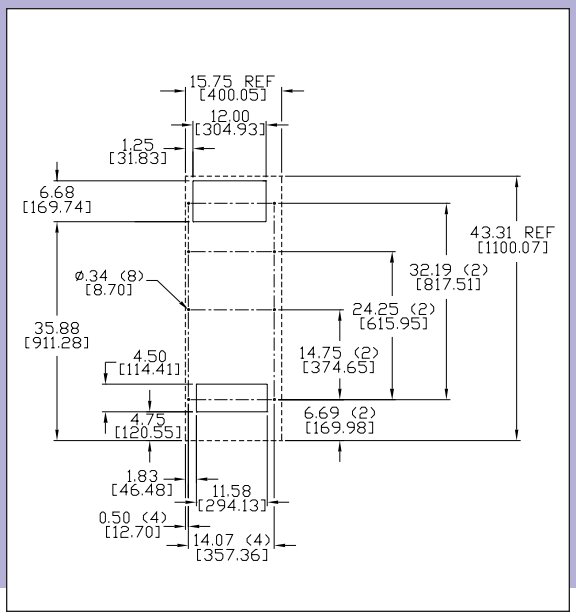

SIDE MOUNT TO ENCLOSURE

For NEMA type 12 enclosure, interfacing air-out and air-in openings are required in the enclosure wall.

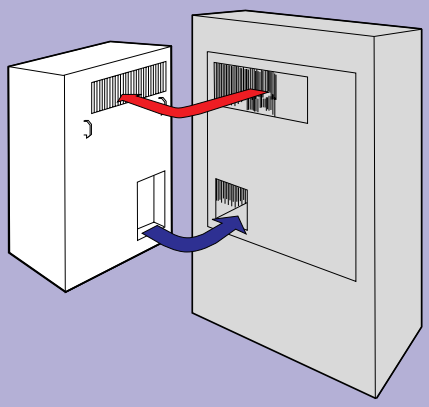

DESIGN NOTES

1. Gasket kit for mounting to enclosure included.

2. Service cord terminated with appropriate plug cap.

4. Dashed lines indicate optional shroud used, along with other special construction features, for NEMA 4X. Please contact factory for details.

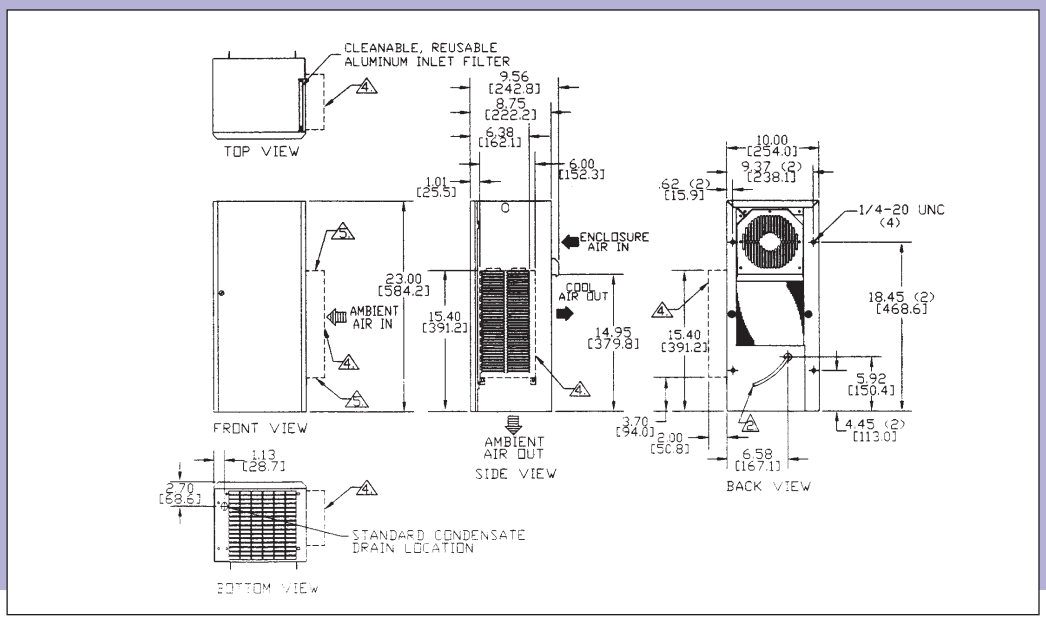

DESIGN NOTES

1. Gasket kit for mounting to enclosure included.

2. Service cord terminated with appropriate plug cap.

4. Dashed lines indicate optional shroud used, along with other special construction features, for NEMA 4X. Please contact factory for details.

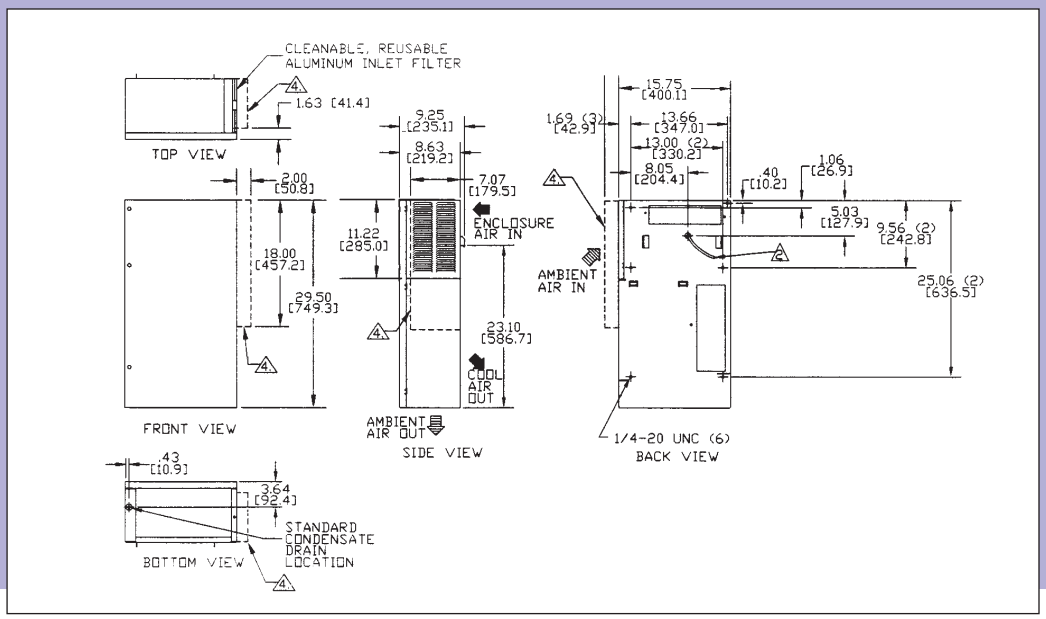

DESIGN NOTES

1. Gasket kit for mounting to enclosure included.

2. Service cord terminated with appropriate plug cap.

4. Dashed lines indicate optional shroud used, along with other special construction features, for NEMA 4X. Please contact factory for details.

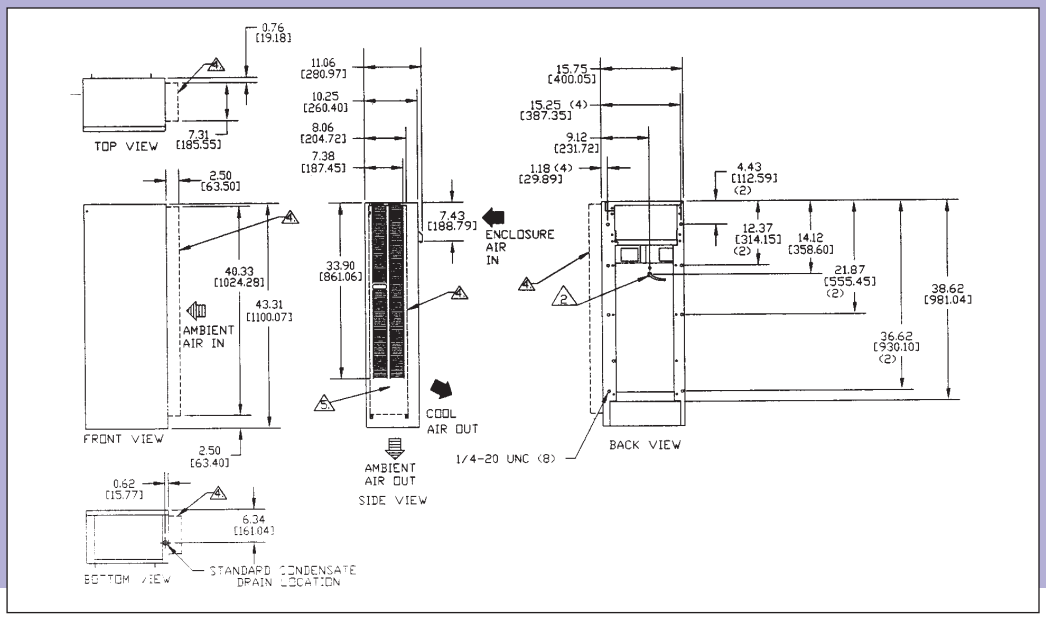

APPENDIX C

Manufacturer's Information

Raychem Industrial Heat-Tracing Installation
and Maintenance Manual

DRAFT

Raychem®

Industrial Heat-Tracing Installation and Maintenance Manual

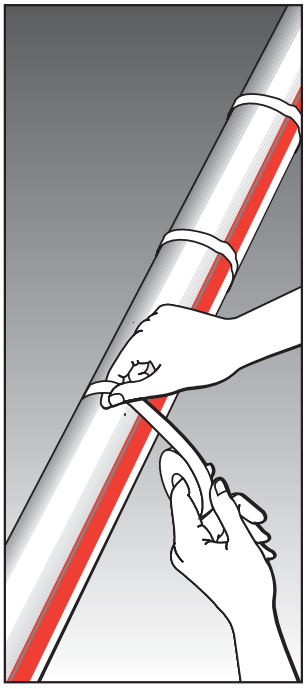

Self-Regulating
and Power-Limiting
Heating Cable Systems

Tyco Thermal Controls

⚠ WARNING: Fire and shock hazard.

Raychem® heat-tracing systems must be installed correctly to ensure proper operation and to prevent shock and fire. Read these important warnings and carefully follow all the installation instructions.

- **To minimize the danger of fire from sustained electrical arcing if the heating cable is damaged or improperly installed, and to comply with Tyco Thermal Controls requirements, agency certifications, and the national electrical codes, ground-fault equipment protection must be used on each heating-cable branch circuit. Arcing may not be stopped by conventional circuit breakers.**
- **Approvals and performance of the heat-tracing systems are based on the use of Tyco Thermal Controls specified parts only. Do not substitute parts or use vinyl electrical tape.**
- **Bus wires will short if they contact each other. Keep bus wires separated.**
- **Components and cable ends must be kept dry before and during installation.**
- **The black heating-cable core and fibers are conductive and can short. They must be properly insulated and kept dry.**
- **Damaged bus wires can overheat or short. Do not break bus wire strands when preparing the cable for connection.**
- **Damaged heating cable can cause electrical arcing or fire. Do not use metal attachments such as pipe straps or tie wire. Use only Raychem approved tapes and cable ties to secure the cable to the pipe.**
- **Do not attempt to repair or energize damaged cable. Remove damaged cable at once and replace with a new length using the appropriate Raychem splice kit. Replace damaged components.**
- **Re-use of the grommets, or use of the wrong grommet, can cause leaks, cracked components, shock, or fire. Be sure the type of grommet is correct for the heating cable being installed. Use a new grommet whenever the cable has been pulled out of the component.**
- **Use only fire-resistant insulation which is compatible with the application and the maximum exposure temperature of the system to be traced.**
- **To prevent fire or explosion in hazardous locations, verify that the maximum sheath temperature of the heating cable is below the auto-ignition temperature of the gases in the area. For further information, see the design documentation.**
- **Material Safety Data Sheets (MSDSs) are available from the Tyco Thermal Controls Customer Service Center.**

Table of Contents

1	General Information	1
2	Heating Cable Selection	3
3	Heating Cable Installation	4
4	Heating Cable Components	16
5	Control and Monitoring	18
6	Thermal Insulation	19
7	Power Supply and Electrical Protection	20
8	Commissioning and Preventive Maintenance	21
9	Test Procedures	23
10	Troubleshooting Guide	32
11	Installation and Inspection Records	36

1 General Information

1.1 Use of the Manual

This installation and maintenance manual is for Raychem Self-Regulating and Power-Limiting heat-tracing systems on thermally insulated pipes and vessels only. This includes Raychem BTV, QTVR, XTV, and VPL heating cables and the appropriate Raychem components.

For information regarding other applications, design assistance or technical support, contact your Tyco Thermal Controls representative or Tyco Thermal Controls directly.

Tyco Thermal Controls
300 Constitution Drive
Menlo Park, CA 94025-1164
USA
Tel (800) 545-6258
Fax (800) 527-5703
Technical Support (650) 474-7709
info@tycothermal.com
www.tycothermal.com

Important: For the Tyco Thermal Controls warranty and agency approvals to apply, the instructions that are included in this manual and product packages must be followed.

1.2 Safety Guidelines

The safety and reliability of any heat-tracing system depends on proper design, installation and maintenance. Incorrect handling, installation, or maintenance of any of the system components can cause underheating or overheating of the pipe or damage to the heating-cable system and may result in system failure, electric shock or fire.

1.3 Electrical Codes

Sections 427 (pipelines and vessels) and 500 (classified locations) of the National Electrical Code (NEC), and Part 1 of the Canadian Electrical Code, Sections 18 (hazardous locations) and 62 (Fixed Electric Space and Surface Heating), govern the installation of electrical heat-tracing systems. All heat-tracing-system installations must be in compliance with these and any other applicable national or local codes.

1 General Information

1.4 Warranty and Approvals

Raychem heating cables and components are approved for use in hazardous and non-hazardous locations. Refer to the specific product data sheets for details.

1.5 General Installation Notes

These notes are provided to assist the installer throughout the installation process and should be reviewed before the installation begins.

- Read all instruction sheets to familiarize yourself with the products.
- Select the heating-cable type and rating in accordance with the Industrial Product Selection and Design Guide (Tyco Thermal Controls literature #H56550), or TraceCalc® Pro software, or the website design software.
- Ensure all pipes, tanks, etc., have been released by the client for tracing prior to installation of the heating cables.
- Typically, heating cables are installed at the 4 and 8 o'clock positions on a pipe.
- All heat-traced pipes, tanks, vessels and equipment must be thermally insulated.
- Do not install heating cables on equipment operating above the heating cable's maximum rated temperature.
- The minimum bending radius for VPL Power-Limiting cables is 3/4 inch (19 mm). The minimum bending radius for Self-Regulating cables is 1/2 inch (13 mm).
- Never install heating cables over expansion joints without leaving slack in the cable.
- Do not energize cable when it is coiled or on the reel.
- Never use tie wire or pipe straps to secure heating cables.
- The minimum installation temperature for heating cables is –40°F (–40°C).

2 Heating Cable Selection

Check the design specification to make sure the proper heating cable is installed on each pipe or vessel. Refer to the Industrial Product Selection and Design Guide, TraceCalc Pro or the Tyco Thermal Controls web site, www.tycothermal.com, to select the proper heating cable for your application.

3 Heating Cable Installation

3.1 Heating Cable Storage

- Store the heating cable in a clean, dry place. Temperature range: –40°F (–40°C) to 140°F (60°C).
- Protect the heating cable from mechanical damage.

3.2 Pre-Installation Checks

Check materials received:

- Review the heating cable design and compare the list of materials to the catalog numbers of heating cables and components received to confirm that proper materials are on site. The heating cable type and voltage is printed on its jacket.
- Ensure that the heating cable voltage rating is suitable for the service voltage available.
- Inspect the heating cable and components for in-transit damage.
- Verify that there are no holes in the heating cable jackets by conducting the insulation resistance test (refer to Section 9) on each reel of cable.

Check piping to be traced:

- Make sure all mechanical pipe testing (i.e. hydrostatic testing/purging) is complete and the system has been cleared by the client for tracing.
- Walk the system and plan the routing of the heating cable on the pipe.
- Inspect the piping for burrs, rough surfaces or sharp edges. Remove if necessary.
- Verify that any surface coatings are dry to the touch.

3 Heating Cable Installation

3.3 Installation

Paying out the cable

Pay out the heating cable, loosely stringing it along the pipe, making sure that the cable is always next to the pipe when crossing obstacles. If the cable is on the wrong side of an obstacle such as a crossing pipe or I-beam, you will need to reinstall it or cut and splice it.

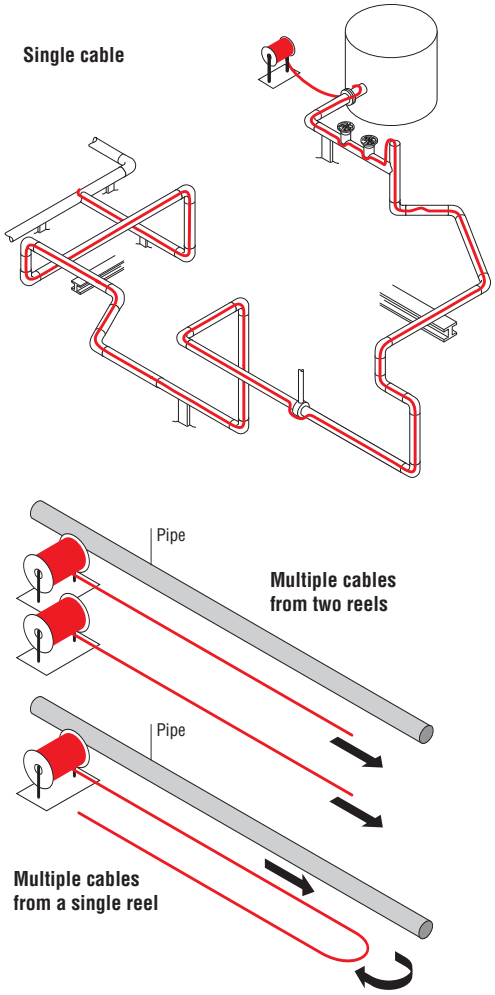

3 Heating Cable Installation

Heating cable paying out tips:

- Use a reel holder that pays out smoothly with little tension. If heating cable snags, stop pulling.
- Keep the heating cable strung loosely but close to the pipe being traced to avoid interference with supports and equipment.
- Meter marks on the heating cable can be used to determine heater length.
- Protect all heating cable ends from moisture, contamination and mechanical damage.

When paying out the heating cable, AVOID:

- Sharp edges
- Excessive pulling force or jerking
- Kinking and crushing
- Walking on it, or running over it with equipment

⚠ WARNING: Fire and shock hazard. Do not install damaged cable. Components and cable ends must be kept dry before and during installation.

Positioning heating cables

If possible, position the heating cable on the lower section of the pipe, at the 4 and 8 o'clock positions, as shown below, to protect it from damage.

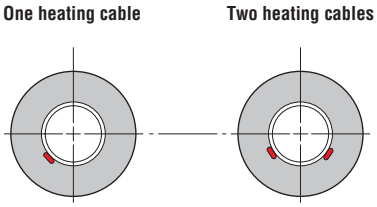

3 Heating Cable Installation

Attachment tapes

Use one of the following Raychem attachment tapes to secure the heating cable on the the pipe: GT-66 or GS-54 fiberglass tape, or AT-180 aluminum tape.

GT-66 fiberglass tape

- General purpose tape for installation at 40°F (5°C) and above.
- Use in applications below 266°F (130°C).

GS-54 fiberglass tape

- Special application tape for stainless steel pipes.
- For installations at –40°F (–40°C) and above.
- Use in applications below 356°F (180°C).

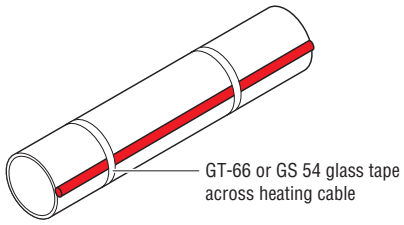

AT-180 aluminum tape

- Heat-transfer tape for plastic pipes, pump bodies, and odd-shaped equipment.
- Install above 32°F (0°C).
- Use in applications below 300°F (150°C).
- Tape lengthwise over the heating cable as required by the design.

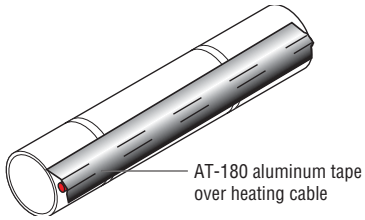

⚠ WARNING: Do not use metal attachments such as pipe straps or tie wire. Do not use vinyl-based electrical or duct tape. Use only Raychem approved tapes.

3 Heating Cable Installation

Attaching the heating cable

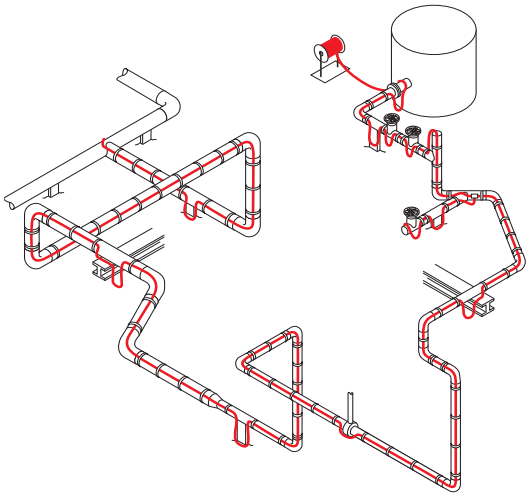

Starting from the end opposite the reel, tape the heating cable on the pipe at every foot, as shown in the figure above. If aluminum tape is used, apply it over the entire length of the heating cable after the cable has been secured with glass tape. Work back to the reel. Leave extra heating cable at the power connection, at all sides of splices and tees and at the end seal to allow for future servicing.

Allow a loop of extra cable for each heat sink, such as pipe supports, valves, flanges, and instruments, as detailed by the design. Refer to “Typical Installation Examples” for attaching heating cable to heat sinks.

- Install heating cable components immediately after attaching the heating cable. If immediate installation is not possible, protect the heating cable ends from moisture.

3 Heating Cable Installation

Multiple cables and spiraling

There are two situations where multiple heating cable runs may be required:

- **Redundant heat-tracing runs** are used in situations where a backup is required. Each run should be installed per the design specifications.
- **Double or multiple heat-tracing runs** are used when a single heat-tracing run alone cannot compensate for larger heat losses. Double heat-tracing runs should have extra heating cable installed at heat sinks, as called out in the design. It is recommended to supply the extra heating cable at heat sinks alternately from both runs in order to balance out both circuit lengths.

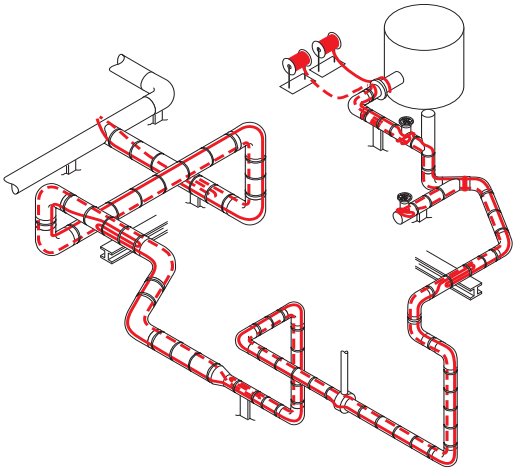

3 Heating Cable Installation

Spiral tracing

When the design calls for spiralling, begin by suspending a loop at every 10-foot pipe section. To determine the loop length, obtain a spiral factor from the design and multiply by 10. For example if the spiral factor of 1.3 is called for, leave a 13-foot loop of heating cable at every 10-foot section of pipe. Attach the loop to the pipe at each interval using the appropriate Raychem attachment tape.

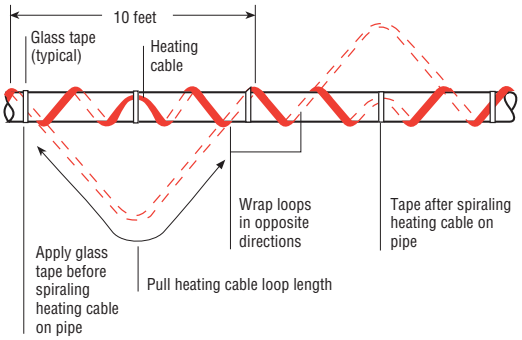

Bending the cable

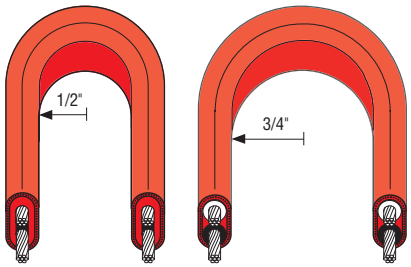

Self-Regulating minimum bend radius **Power-Limiting minimum bend radius**

When positioning the heating cable on the pipe, do not bend tighter than 1/2" for Self-Regulating cables and 3/4" for Power-Limiting cables.

3 Heating Cable Installation

The heating cable does not bend easily in the flat plane. Do not force such a bend, as the heating cable may be damaged.

Crossing the cable

Self-Regulating cables, BTV, QTVR, XTV, allow for multiple overlapping of the heating cable.

Power-Limiting cable, VPL, allows for a single overlap of the heating cable per zone.

For VPL heating cable only:

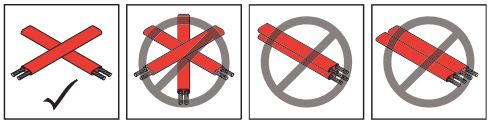

Cutting the cable

Cut the heating cable to length after it is attached to the pipe.

Heating cable can be cut to length without affecting the heat output per foot.

Typical installation examples

Wrap pipe fittings, equipment, and supports as shown in the following examples to properly compensate for higher heat-loss at heat sinks and to allow easy access for maintenance. The exact amount of heating cable needed is determined in the design.

Valve

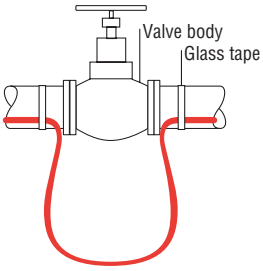

Note: Cable loop length varies depending on heat loss.

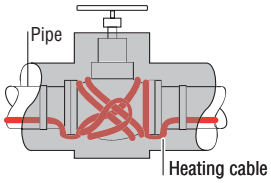

Multiple cross-overs allowed for Self-Regulating cables

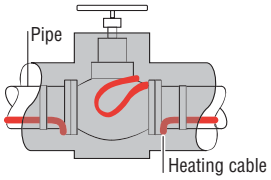

Single cross-over only, allowed for Power-Limiting cables

Flange

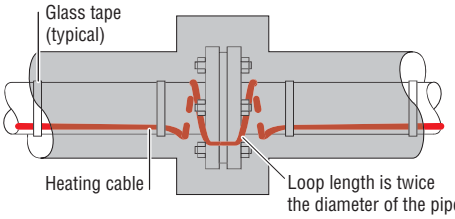

Pipe support shoe

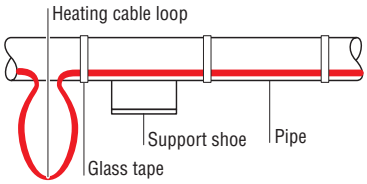

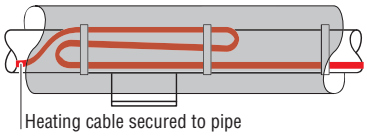

Elbow

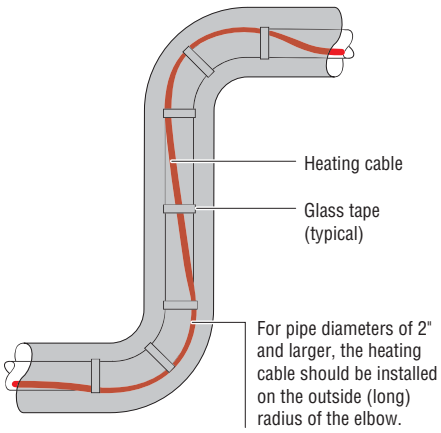

Pressure gauge

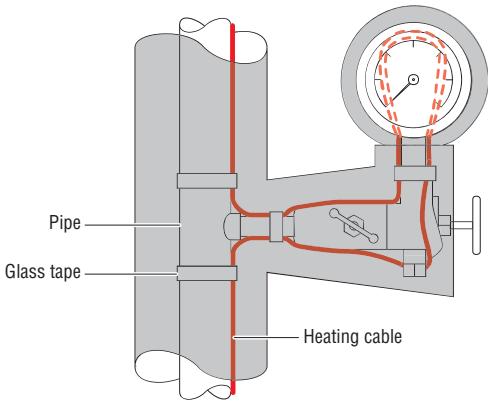

Split case centrifugal pump

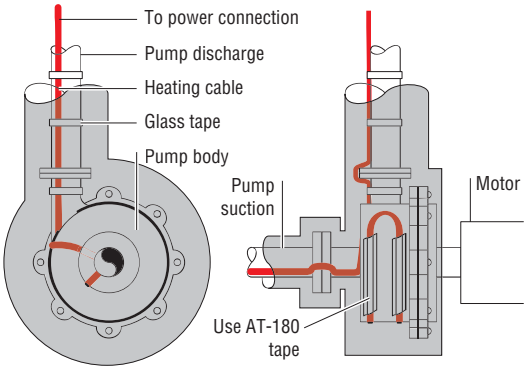

3 Heating Cable Installation

Pipe hanger

No additional heating cable is required for pipe hangers unless called for in the design specification, then use loop length specified.

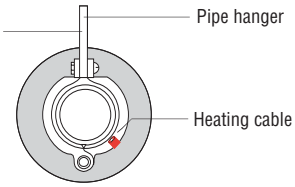

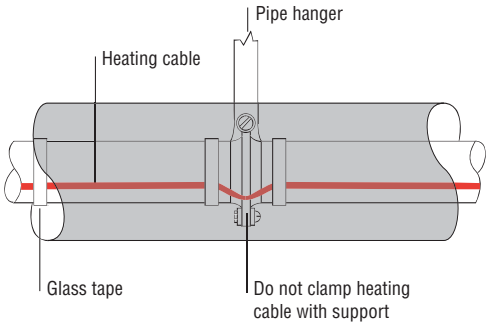

4 Heating Cable Components

4.1 General Component Information

Raychem components must be used with Raychem Self-Regulating and Power-Limiting heating cables. A complete circuit requires a power connection and an end seal. Splices and tees are used as needed.

Use the Industrial Product Selection and Design Guide or TraceCalc Pro to select appropriate components.

Installation instructions are included with the component kit. Steps for preparing the heating cable and connecting to components must be followed.

Raychem Self-Regulating and Power-Limiting heating cables are parallel circuit design. Do not twist the conductors together as this will result in a short circuit.

Component Installation Tips

- Connection kits should be mounted on top of the pipe when practical. Electrical conduit leading to power connection kits should have low-point drains to keep condensation from accumulating in the conduit. All heating cable connections must be mounted above grade level.
- Special adapters are available for mounting on small pipes. Be sure to use these adapters if installing cables on pipes of 1 inch O.D. or less.
- Be sure to leave a service loop at all components for future maintenance, except when temperature-sensitive fluids are involved or when the pipe is smaller than 1 inch.
- Locate junction boxes for easy access but not where they may be exposed to mechanical abuse.
- Heating cables must be installed over, not under, pipe straps used to secure components.
- For VPL, cut cable 12" (30 cm) from last active node (indentation) to be sure an inactive zone is used to enter the component. Refer to component installation instructions.
- All power connections, splices, tees, and end seals in a Division 1 location must use the HAK-C-100 connection kit and an HAK-JB3-100 or a Division 1 Nationally Recognized Testing Lab (NRTL) approved junction box.

⚠ WARNING: The black heating-cable core and fibers are electrically conductive and can short. They must be properly insulated and kept dry.

Damaged bus wires can overheat or short. Do not break bus wire strands when stripping the heating cable

4 Heating Cable Components

Raychem components for Nonhazardous and CID2, CIZ1, & CIZ2 Hazardous Locations.

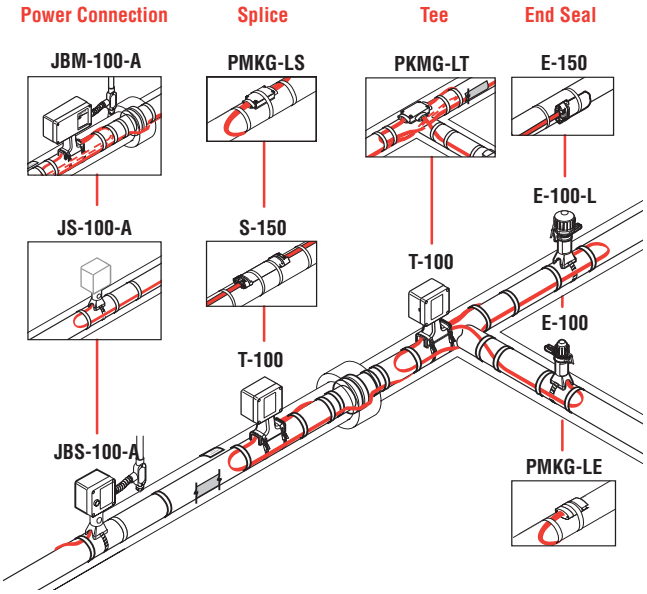

Raychem Components for CID1 Hazardous Locations.

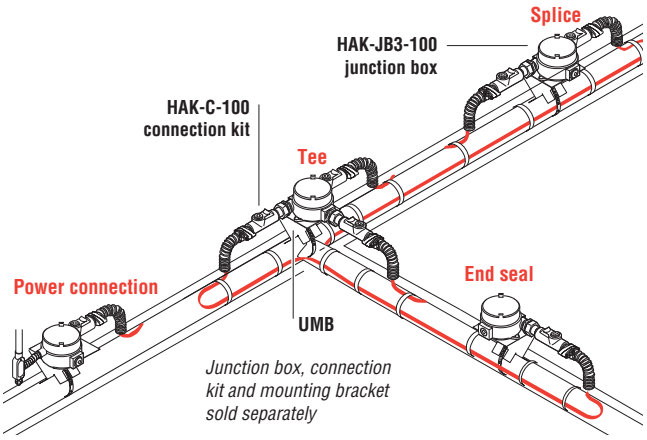

⚠ WARNING: Fire and shock hazard. Raychem brand specified components must be used. Do not substitute parts or use vinyl electrical tape.

5 Control and Monitoring

Tyco Thermal Controls DigiTrace® control and monitoring products are designed for use with Self-Regulating and Power-Limiting heat-tracing systems. Thermostats, controllers and control and monitoring systems are available. Compare features of these products in the table below. For additional information on each product, refer to the Industrial Product Selection and Design Guide or contact your Tyco Thermal Controls representative.

Refer to the installation instructions supplied with control and monitoring products. Control and Monitoring systems may require installation by a certified electrician.

Tyco Thermal Controls Control and Monitoring Products

	Thermostats		Controllers			
		AMC-F5 AMC-1B AMC-2B-2 E507S-LS E507S-2LS-2 Raystat-EX03-A	DigiTrace Series*			
	AMC-F5 AMC-1A AMC-1H		910	920	200N	T2000
Control						
Ambient-sensing	■		●	●	●	●
Line-sensing		■	●	●	●	●
PASC			●	●	●	●
Monitoring						
Ambient temperature			●	●	●	●
Pipe temperature			●	●	●	●
Ground fault			●	●	●	●
Continuity					●	
Current			●	●	●	●
Location						
Local	■	■	●	●		●
Remote			●	●	●	●
Hazardous	AMC-1H	E507S	●	●		●
Communication						
Local display			●	●	●	●
Remote display			●	●	●	●
Network to DCS			●	●	●	●

*DigiTrace controllers used in CID1 areas require the use of appropriate hazardous area enclosures or Z-purge systems.

6 Thermal Insulation

6.1 Pre-Insulation Checks

Visually inspect the heating cable and components for correct installation and damage. Damaged cable must be replaced.

Perform insulation resistance testing known as a Megger™ test, (refer to Section 9) prior to covering the pipe with thermal insulation.

6.2 Insulation Installation Hints

- Insulation must be properly installed and kept dry.
- Check insulation type and thickness against the design specification.
- To minimize potential heating cable damage, insulate as soon as possible after tracing.
- Check that pipe fittings, wall penetrations and other irregular areas, have been completely insulated.
- When installing cladding, be sure drills, screws and sharp edges do not damage the heating cable.
- To weatherproof the insulation, seal around all fixtures that extend through the cladding. Check around valve stems, support brackets, and thermostat capillaries.

6.3 Marking

Apply "Electric Traced" labels on outside of the cladding at 10-foot intervals on alternate sides to indicate presence of electric cables.

Other labels, which identify the location of splices, tees and end connections installed beneath the thermal insulation, are supplied with those components and must also be used.

6.4 Post-Insulation Testing

After the insulation is complete, perform an insulation resistance test on each circuit to confirm that the cable has not been damaged (refer to Section 9).

⚠ WARNING: Use only fire-resistant insulation, such as fiberglass, mineral wool or calcium silicate.

7 Power Supply and Electrical Protection

7.1 Voltage Rating

Verify that the source voltage corresponds to the heating-cable rating printed on the cable jacket and specified by the design.

7.2 Electrical Loading

Overcurrent devices are selected according to the heating-cable type, source voltage, and circuit length to allow start-up at the designed ambient temperatures. The design specifies the size and type of overcurrent device.

7.3 Ground-Fault Protection

If the heating cable is improperly installed, or physically damaged to the point that water contacts the bus wires, sustained arcing or fire could result. If arcing does occur, the fault current may be too low to trip conventional circuit breakers.

Tyco Thermal Controls, the U.S. National Electrical Code, and the Canadian Electrical Code require both ground-fault protection of equipment and a grounded metallic covering on all heating cables. All Raychem products meet the metallic covering requirement. Following are some of the ground fault breakers that satisfy this equipment protection requirement: Square D Type GFPD EHB-EPD (277 Vac); Cutler Hammer (Westinghouse) Type QBGFEP.

⚠ WARNING: To minimize the danger of fire from sustained electrical arcing if the heating cable is damaged or improperly installed, and to comply with Tyco Thermal Controls requirements, agency certifications, and national electrical codes, ground-fault equipment protection must be used on each heating-cable branch circuit. Arcing may not be stopped by conventional circuit breakers.

⚠ WARNING: Disconnect all power before making connections to the heating cable.

8 Commissioning and Preventative Maintenance

Tyco Thermal Controls requires a series of tests be performed on the heat-tracing system upon commissioning. These tests are also recommended at regular intervals for preventive maintenance. Results must be recorded and maintained for the life of the system, utilizing the "Installation and Inspection Record" (refer to Section 11).

8.1 Tests

A brief description of each test is found below. Detailed test procedures are found in Section 9.

Visual inspection

Visually inspect the pipe, insulation, and connections to the heating cable for physical damage. Check that no moisture is present, electrical connections are tight and grounded, insulation is dry and sealed, and control and monitoring systems are operational and properly set. Damaged heating cable must be replaced.

Insulation Resistance

Insulation Resistance (IR) testing is used to verify the integrity of the heating-cable inner and outer jackets. IR testing is analogous to pressure testing a pipe and detects if a hole exists in the jacket. IR testing can also be used to isolate the damage to a single run of heating cable. Fault location can be used to further locate damage.

Power check

The heating-cable power per foot (meter) is calculated by dividing the total wattage by the total length of a circuit. The current, voltage, operation temperature and length must be known. Circuit length can be determined from "as built" drawings, meter marks on cable or the capacitance test.

$$\text{Power (w/ft or m)} = \frac{\text{Volts (Vac) x Current (Amps)}}{\text{Length (ft or m)}}$$

The watts per foot (meter) can be compared to the heaing-cable output indicated on the product data sheet at the temperature of operation. This gives a good indication of heating-cable performance.

Ground-fault test

Test all ground-fault breakers per manufacturer's instructions.

8 Commissioning and Preventative Maintenance

8.2 Preventative Maintenance

Recommended maintenance for Tyco Thermal Controls heat-tracing systems consists of performing the commissioning tests on a regular basis. Procedures for these tests are described in Section 9. Systems should be checked before each winter.

If the heat-tracing system fails any of the tests, refer to Section 10 for trouble shooting assistance. Make the necessary repairs and replace any damaged cable immediately.

De-energize all circuits that may be affected by maintenance.

Protect the heating cable from mechanical or thermal damage during maintenance work.

The recommended cable installation methods allow for extra cable at all pipe fixtures (such as valves, pumps, and pressure gauges) that are likely to incur maintenance work.

Maintenance records

The "Installation and Inspection Record," (refer to Section 11), should be filled out during all maintenance and repair work, and kept for future reference.

Repairs

Use only Raychem cable, and components when replacing any damaged heating cable. Replace the thermal insulation to original condition or replace with new insulation, if damaged.

Retest the system after repairs.

⚠ WARNING: Damage to cables or components can cause sustained electrical arcing or fire. Do not attempt to repair damaged heating cable. Do not energize cables that have been damaged by fire. Replace damaged cable at once by removing the entire damaged section and splicing in a new length using the appropriate Raychem splice kits. Do not reuse grommets. Use new grommets whenever the heating cable has been pulled out of the components.

9 Test Procedures

9.1 Visual Inspection

- Check inside heating cable components for proper installation, overheating, corrosion, moisture, and loose connections.
- Check the electrical connections to ensure that ground and bus wires are insulated over their full length.
- Check for damaged or wet thermal insulation; damaged, missing or cracked lagging and weather-proofing.
- Check that end seals, splices, and tees are properly labeled on insulation cladding.
- Check Control and Monitoring system for moisture, corrosion, set point, switch operation and capillary damage.

9.2 Insulation Resistance (Megger™) Test

Frequency

Insulation resistance testing is recommended at five stages during the installation process and as part of regularly scheduled maintenance.

- Before installing the cable
- Before installing components
- Before installing the thermal insulation
- After installing the thermal insulation
- Prior to initial start-up (commissioning)
- As part of the regular system inspection
- After any maintenance or repair work

Procedure

Insulation resistance testing (using a megohmmeter) should be conducted at three voltages; 500, 1000, and 2500 Vdc. Significant problems may not be detected if testing is done only at 500 and 1000 volts.

First measure the resistance between the heating cable bus wires and the braid (Test A) then measure the insulation resistance between the braid and the metal pipe (Test B). Do not allow test leads to touch junction box, which can cause inaccurate readings.

9 Test Procedures

1. De-e nergize the circuit.
2. Disconnect the thermostat or controller if installed.
3. Disconnect bus wires from terminal block, if installed.
4. Set test voltage at 0 Vdc.
5. Connect the negative (–) lead to the heating-cable metallic braid.
6. Connect the positive (+) lead to both heating-cable bus wires simultaneously.
7. Turn on the megohmmeter and set the voltage to 500 Vdc; apply the voltage for 1 minute. Meter needle should stop moving. Rapid deflection indicates a short. Record the insulation resistance value in the Inspection Record.
8. Repeat Steps 4-7 at 1000 and 2500 Vdc.
9. Turn off the megohmmeter.
10. If the megohmmeter does not self-discharge, discharge phase connection to ground with a suitable grounding rod. Disconnect the megohmmeter.
11. Repeat this test between braid and pipe.
12. Reconnect bus wires to terminal block.
13. Reconnect the thermostat.

Note: *System checkout and regular maintenance procedures require that Megger™ testing be performed from the distribution panel unless a control and monitoring system is in use. If no control system is being used, remove both power feed wires from the breaker and proceed as if testing heating-cable bus wires. If a control and monitoring system is being used, remove the control equipment from the circuit and conduct the test directly from the heating cable.*

⚠ WARNING: Fire hazard in hazardous locations. Megger™ test can produce sparks. Be sure there are no flammable vapors in the area before performing this test.

Insulation resistance criteria

A clean, dry, properly installed circuit should measure thousands of megohms, regardless of the heating-cable length or measuring voltage (0–2500 Vdc). The following criteria are provided to assist in determining the acceptability of an installation where optimum conditions may not apply.

9 Test Procedures

- All insulation resistance values should be greater than 1000 megohms. If the reading is lower, consult Section 10, Troubleshooting Guide.

Note: *Insulation resistance values for Test A and B; for any particular circuit, should not vary more than 25 percent as a function of measuring voltage. Greater variances may indicate a problem with your heat-tracing system, confirm proper installation and/or contact Tyco Thermal Controls for assistance.*

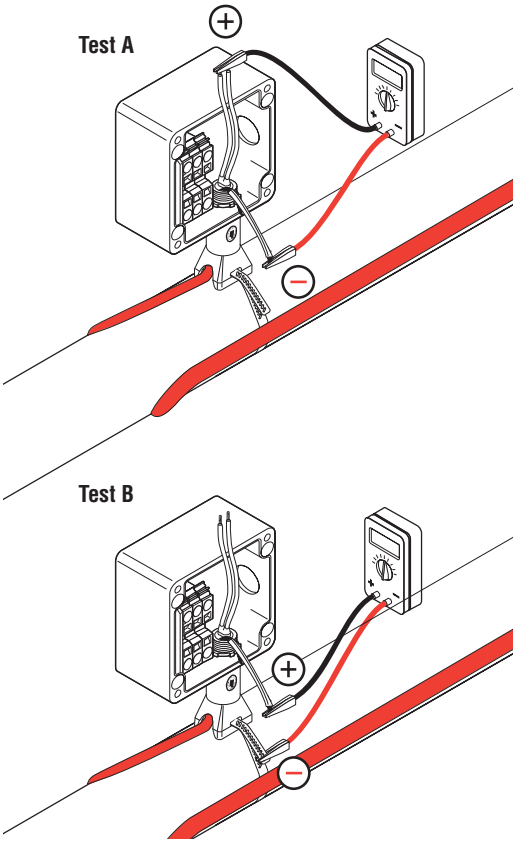

9.3 Power Check

The power output of Self-Regulating and Power-Limiting cable is temperature-sensitive and requires the following special procedure to determine its value:

1. Power the heating cable and allow it to stabilize for 10 minutes, then measure current and voltage at the junction box. If a thermostat or controller is used, refer to details below.
2. Check the pipe temperature under the thermal insulation at several locations.
3. Calculate the power (watts/ft) of the heating cable by multiplying the current by the input voltage and dividing by the actual circuit length.

$$\text{Power (w/ft or m)} = \frac{\text{Volts (Vac) x Current (Amps)}}{\text{Length (ft or m)}}$$

Ambient-sensing controlled systems

If the actual ambient temperature is higher than the desired thermostat setting, turn the thermostat setting up high enough to turn on the system, or (with some models) manually set the selector switch to the ON position.

- Turn on the main circuit breaker.
- Turn on the branch circuit breakers.
- After a minimum of ten minutes, measure the voltage, amperage, ambient temperature, and pipe temperature for each circuit and record the values in the "Installation and Inspection Record" (refer to Section 11). This information is needed for future maintenance and troubleshooting.
- When the system is completely checked out, reset the thermostat to the proper temperature.

Line-sensing controlled systems

Set the thermostat to the desired control temperature, or to a setting high enough to turn the circuit on if the pipe temperature is above the control temperature.

- Turn on the main circuit breaker.
- Turn on the branch circuit breakers.
- Allow the system to reach the control point. This may take up to four hours for most circuits. Large, liquid-filled pipes may take longer.

- Measure the voltage, amperage, and pipe temperature for each circuit and record the values in the "Installation and Inspection Record" (refer to Section 11). This information is needed for future maintenance and troubleshooting.
- When the system is completely checked out, reset the thermostat to the proper temperature.

Control and monitoring systems

Refer to the installation instructions supplied with the product for commissioning tests and records.

9.4 Fault Location Tests

Fault location

There are three methods used for finding a fault within a section of heating cable: the ratio method, 1/R method and the capacitance method. The capacitance method can also be used to determine total heating-cable length.

Ratio test method

The ratio method uses resistance measurements taken at each end of the heating cable to approximate the location of a **bus wire short**. A shorted heating cable could result in a tripped circuit breaker or a cold section of pipe. If the resistance can be read on a standard ohm meter this method can also be used to find a fault from a bus wire to the ground braid. This type of short would trip a GFPD and show a failed Megger™ reading.

Measure the bus-to-bus heating-cable resistance from the front end (measurement A) and the back end (measurement B) of the suspected section.

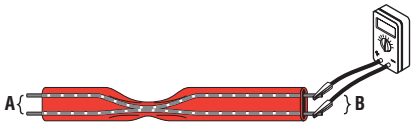

The approximate location of the bus wire short, expressed as a percentage of the heating-cable length from the front end is:

Fault location: $D = \frac{A}{(A + B)} \times 100$

Example: A = 1.2 ohms
B = 1.8 ohms

Fault location: D = 1.2 / (1.2 + 1.8) x 100
= 40%

The fault is located 40% into the circuit as measured from the front end.

To locate a low resistance ground fault, measure between bus and braid.

The approximate location of the fault, expressed as a percentage of the heating-cable length from the front end is:

Fault location: $D = \frac{A}{(A + B)} \times 100$

Example: A = 1.2 ohms
B = 1.8 ohms

Fault location: D = 1.2 / (1.2 + 1.8) x 100
= 40%

The fault is located 40% into the circuit as measured from the front end.

1/R method

The I/R method uses the core resistance of the heating cable to approximate the location of a fault when the heating cable has been severed and the bus wires have not been shorted together. A severed cable may result in a cold section of pipe and many not trip the circuit breaker.

Measure the bus-to-bus heating cable resistance from the front end (measurement A) and the back end (measurement B) of the suspect section. Since self-regulating cables are a parallel resistance, the ratio calculations must be made using the conductance (1/R) of the cable

The approximate location of the fault, expressed as a percentage of the heating cable length from the front end, is:

Fault location: $D = \frac{1/A}{(1/A + 1/B)} \times 100$

Example: A = 100 ohms
B = 25 ohms

Fault location: D = (1/100) / (1/100 + 1/25) x 100
= 20%

The fault is located 20% from the front end of the cicruit.

Capacitance test method

This method uses capacitance measurement (nF) to approximate the location of a fault where the **heating cable has been severed**. It also gives an estimate of total heating-cable length in a non-severed circuit. This reading must be taken at the power connection and will only work when the heating cable has passed IR testing. This information is used to calculate the heating-cable output per linear foot or to determine if the maximum length has been exceeded.

Record the capacitance reading from one end of the heating cable. The capacitance reading should be measured between both bus wires twisted together (positive lead) and the braid (negative lead).

Multiply the measured capacitance with the heating-cable's capacitance factor as listed in the following table.

Example:

20XTV2-CT

Recorded capacitance	= 16.2 nF
Capacitance factor	= 10.1 ft/nF
Fault location	= 16.2 x 10.1 nF
	= 164 ft (50 m) from reading location

As an alternative, capacitance values from both the front and back end can be used. The ratio of one capacitance value taken from one end (A) divided by the sum of both A and B (A + B) and then multiplied by 100 yields the distance from the first end, expressed as a percentage of the heating circuit length.

Heating-cable capacitance factors

Cable Catalog No.	Capacitance Factor
3BTV1-CR	7.5
3BTV2-CT	
3BTV1-CR	
3BTV2-CT	
5BTV1-CR	7.5
5BTV2-CT	
5BTV1-CR	
5BTV2-CT	
8BTV1-CR	5.5
8TV2-CT	
8BTV1-CR	
8BTV2-CT	
10BTV1-CR	5.5
10BTV2-CT	
10BTV1-CR	
10BTV2-CT	
10QTVR1-CT	4.7
10QTVR2-CT	
15QTVR2-CT	

Cable Catalog No.	Capacitance Factor
15QTVR1-CT	3.3
20QTVR1-CT	
20QTVR2-CT	
5XTV1-CT-T3	10.8
5XTV2-CT-T3	11.1
10XTV1-CT-T3	10.3
10XTV2-CT-T3	10.7
15XTV1-CT-T3	9.7
15XTV2-CT-T3	9.9
20XTV1-CT-T2	9.3
20XTV2-CT-T2	10.1
5VPL1-CT	9.4
10VPL1-CT	
15VPL1-CT	
20VPL1-CT	
5VPL2-CT	
10VPL2-CT	
15VPL2-CT	
20VPL2-CT	

10 Troubleshooting Guide

Symptom	Probable Causes	Corrective Action
Low or inconsistent insulation resistance	Nicks or cuts in the heating cable.	Check power, splice, tee, and end connections for cuts, improper stripping distances, and signs of moisture. If heating cable is not yet insulated, visually inspect the entire length for damage, especially at elbows and flanges and around valves. If the system is insulated, disconnect heating cable section between power kits, splices, etc., and test again to isolate damaged section.
	Short between the braid and heating-cable core or the braid and pipe.	
	Arcing due to damaged heating-cable insulation.	Replace damaged heating-cable sections and restrip any improper or damaged connections.
	Moisture present in the components.	If moisture is present, dry out the connections and retest. Be sure all conduit entries are sealed, and that condensate in conduit cannot enter power connection boxes. If heating-cable core or bus wires are exposed to large quantities of water, replace the heating cable. (Drying the heating cable is not sufficient, as the power output of the heating cable can be significantly reduced.)
	Test leads touching the junction box.	Clear the test leads from junction box and restart.
	High pipe temperature may cause low IR reading.	Retest at ambient, if necessary.
	Reference tests:	**Insulation Resistance Test, Visual Inspection**

Symptom	Probable Causes	Corrective Action
Circuit breaker trips	Circuit breaker is undersized.	Recheck the design for startup temperature and current loads. Do not exceed the maximum circuit length for heating cable used. Check to see if existing power wire sizing is compatible with circuit breaker. Replace the circuit breaker, if defective or improperly sized. Visually inspect the power connections, splices, and end seals for proper installation; correct as necessary.
	Start-up at too low a temperature.	
	Connections and/or splices are shorting out.	
	Physical damage to heating cable is causing a direct short.	Check for visual indications of damage around the valves, pump, and any area where there may have been maintenance work. Look for crushed or damaged insulation lagging along the pipe. Replace damaged sections of heating cable.
	Bus wires are connected at the end.	Check the end seal to ensure that bus wires are properly terminated per installation instructions. If a dead short is found, the heating cable may have been permanently damaged by excessive current and may need to be replaced.
	Nick or cut exists in heating cable or power feed wire with moisture present or moisture in connections.	Replace the heating cable, as necessary. Dry out and reseal the connections and splices. Using a megohmmeter, retest insulation resistance.
	GFPD is undersized (5mA used instead of 30mA) or miswired.	Replace undersized GFPD with 30mA GFPD. Check the GFPD wiring instructions.
	Reference tests:	**Insulation Resistance Test, Fault Location Test, Visual Inspection**

10 Troubleshooting Guide

Symptom	Probable Causes	Corrective Action
Low pipe temperature	Insulation is wet, or missing.	Remove wet insulation and replace with dry insulation, and secure it with proper weatherproofing.
	Insufficient heating cable was used on valves, supports, and other heat sinks.	Splice in additional heating cable but do not exceed maximum circuit length.
	Thermostat was set incorrectly.	Reset the thermostat.
	Improper thermal design used.	Contact your Tyco Thermal Controls representative to confirm the design and modify as recommended.
	Improper voltage applied.	
	Thermocouple is not in contact with pipe.	Reinstall the thermocouple on the pipe.
	Reference tests:	**Power Check, Visual Inspection**

Symptom	Probable Causes	Corrective Action
Low or no power output	Low or no input voltage applied.	Repair the electrical supply lines and equipment.
	The circuit is shorter than the design shows, due to splices or tees not being connected, or the heating cable having been severed.	Check the routing and length of heating cable (use “as built” drawings to reference actual pipe layout). Connect all splices or tees. Locate and replace any damaged heating cables. Then recheck the power output.
	Improper component connection causing a high-resistance connection.	Check for loose wiring connections and rewire if necessary.
	Control thermostat is wired in normally open position.	Rewire the thermostat in the normally closed position.
	Pipe is at an elevated temperature.	Check the pipe temperature. Verify heater selection. Check the power output of the heating cable per the design vs. actual. Reduce pipe temperature if possible or contact your Tyco Thermal Controls representative to confirm design.
	The heating cable has been exposed to excessive temperature, moisture or chemicals.	Replace damaged heating cable. Check the pipe temperature. Check the power output of heating cable.
	Reference tests:	**Power Check, Fault Location, Visual Inspection**

11 Installation and Inspection Records

Tyco Thermal Controls Industrial Heat-Tracing

Installation and Inspection Record

Facility: _____

Circuit number: _____

Heating-cable type: _____

Circuit length: _____

		Commission				
Inspection date:						
Visual Inspection						
Visual inspection inside connection boxes for signs of overheating, corrosion, moisture, loose connections and other problems.						
Proper electrical connection, ground, and bus wires insulated over full length.						
Damaged or wet thermal insulation; damaged, missing, cracked lagging or weather-proofing; gaps in caulking.						
Covered end seals, splices, and tees properly labeled on insulation cladding.						
Control and Monitoring system checked for moisture, corrosion, set point, switch operation, capillary damage, and protection.						
Insulation resistance (Megger™) test		**Ohms**	**Ohms**	**Ohms**	**Ohms**	**Ohms**
Test A	500 Vdc					
(bus to braid)	1000 Vdc					
	2500 Vdc					
Test B	500 Vdc					
(braid to pipe)	1000 Vdc					
	2500 Vdc					
Power check						
Circuit voltage						
Panel	(Vac)					
Circuit end*	(Vac)					
Circuit amps after 10 min.	(Amps)					
Pipe temperature	(°F)					
Power = Volts x amps/ft	(watts/ft)					

* Commissioning only

FM Required Installation Record for Class I, Division 1, Hazardous Locations

To complete the FM approval process, this complete form must be returned to the Tyco Thermal Controls Customer Service Center (fax number (800) 527-5703).

Company name _____ **Purchase order no.** _____

Circuit ID no. _____ **Ref drawing(s)** _____

Area

Autoignition temp. (AIT): _____ Group classification: _____

Heater circuit

Heater type: _____
Supply voltage: _____ Circuit length: _____
Maximum pipe temp: _____ Temp ID (T-rating): _____

Components

Power connection: _____ Splice: _____
Tee: _____ End seal: _____

Ground-fault equipment

Make and model: _____ Device trip level: _____

Installation Instructions

Correct components per manufacturer's specification: _____
Seal fittings opened and inspected (properly poured): _____
Ground-leakage device tested: _____

Insulation resistance testing

Use 2500 Vdc for Self-Regulating and Power-Limiting cables

Instrument used: _____ Calibration date: _____

As measured on the pipe before insulation installed*	**Test value**	**Date**	**Initials**
Insulation resistance between conductor and braid (Test A)			
Insulation resistance between braid and pipe (Test B)			

As measured after insulation installed*	**Test value**	**Date**	**Initials**
Insulation resistance between conductor and braid (Test A)			
Insulation resistance between braid and pipe (Test B)			

* minimum insulation resistance must be 1000MΩ

Circuit ready to commission

Prepared by _____ Company _____ Date _____

Approved by _____ Company _____ Date _____

Tyco Thermal Controls

Tyco, DigiTrace, Raychem and TraceCalc Pro are trademarks of
Tyco Thermal Controls LLC or its affiliates.
Megger is a trademark of Megger Limited

Important: *All information, including illustrations, is believed to be reliable. Users, however, should independently evaluate the suitability of each product for their particular application. Tyco Thermal Controls makes no warranties as to the accuracy or completeness of the information, and disclaims any liability regarding its use. Tyco Thermal Controls' only obligations are those in the Tyco Thermal Controls Standard Terms and Conditions of Sale for this product, and in no case will Tyco Thermal Controls or its distributors be liable for any incidental, indirect, or consequential damages arising from the sale, resale, use, or misuse of the product. Specifications are subject to change without notice. In addition, Tyco Thermal Controls reserves the right to make changes—without notification to Buyer—to processing or materials that do not affect compliance with any applicable specification.*

© 2002, 2003 Tyco Thermal Controls LLC Printed in USA H57274 04/03

tyco
Flow Control

Worldwide Headquarters
Tyco Thermal Controls
300 Constitution Drive
Menlo Park, CA 94025-1164
USA
Tel (800) 545-6258
Fax (800) 527-5703
info@tycothermal.com
www.tycothermal.com

Canada
Tyco Thermal Controls
250 West St.
Trenton, Ontario
Canada K8V 5S2
Tel (800) 545-6258
Fax (800) 527-5703

APPENDIX C

Manufacturer's Information

Rockwell Automation (Reliance Electric/Allen Bradley)
SP600 AC Drive User Manual,
Version 1.0, 6SB401 Series,
460 VAC (20 HP to 100 HP),
Instruction Manual D2-3501-1

DRAFT

RELIANCE ELECTRIC

SP600 AC Drive
User Manual
Version 1.0

6SB401 Series

460 VAC
20 HP to 100 HP

Instruction Manual D2-3501-1

Rockwell Automation

The information in this manual is subject to change without notice.

Throughout this manual, the following notes are used to alert you to safety considerations:

ATTENTION: Identifies information about practices or circumstances that can lead to personal injury or death, property damage, or economic loss.

Important: Identifies information that is critical for successful application and understanding of the product.

The thick black bar shown on the outside margin of this page will be used throughout this instruction manual to signify new or revised text or figures.

ATTENTION: Only qualified personnel familiar with the construction and operation of this equipment and the hazards involved should install, adjust, operate, or service this equipment. Read and understand this document in its entirety before proceeding. Failure to observe this precaution could result in severe bodily injury or loss of life.

ATTENTION: DC bus capacitors retain hazardous voltages after input power has been removed. After disconnecting input power, wait five minutes for the DC bus capacitors to discharge and then check the voltage with a voltmeter to ensure the DC bus capacitors are discharged before touching any internal components. Failure to observe this precaution could result in severe bodily injury or loss of life.

ATTENTION: The drive can operate at and maintain zero speed. The user is responsible for assuring safe conditions for operating personnel by providing suitable guards, audible or visual alarms, or other devices to indicate that the drive is operating, or may operate, at or near zero speed. Failure to observe this precaution could result in severe bodily injury or loss or life.

ATTENTION: The drive contains ESD- (Electrostatic Discharge) sensitive parts and assemblies. Static control precautions are required when installing, testing, servicing, or repairing the drive. Erratic machine operation and damage to, or destruction of, equipment can result if this procedure is not followed. Failure to observe this precaution can result in bodily injury.

ATTENTION: The user must provide an external, hardwired emergency stop circuit outside of the drive circuitry. This circuitry must disable the system in case of improper operation. Uncontrolled machine operation may result if this procedure is not followed. Failure to observe this precaution could result in bodily injury.

ATTENTION: The user is responsible for conforming with all applicable local and national codes. Failure to observe this precaution could result in damage to, or destruction of, the equipment.

ControlNet is a trademark of ControlNet International Ltd.
DeviceNet is a trademark of Open DeviceNet Vendor Association.
SP600, VS Utilities, and Reliance are trademarks of Rockwell Automation.

©2002 Rockwell Automation. All rights reserved.

CONTENTS

Chapter 1 **Introduction**

1.1 Getting Assistance from Reliance Electric 1-1

Chapter 2 **About the Drive**

2.1 Identifying the Drive by Model Number 2-1
2.2 Power and NEMA Enclosure Ratings 2-2
2.3 Overview of SP600 Features 2-3
2.3.1 Analog Inputs 2-3
2.3.2 Analog Output 2-3
2.3.3 Auto/Manual Selection 2-3
2.3.4 Auto Restart (Reset/Run) 2-4
2.3.5 Autotune 2-4
2.3.6 Motor Cable Lengths 2-5
2.3.7 Drive Protection Current Limit 2-5
2.3.8 Drive Overload Protection 2-6
2.3.9 Network Data Transfer via Datalinks 2-6
2.3.10 Digital Outputs 2-7
2.3.11 DPI Interface 2-7
2.3.12 Economizer Mode 2-7
2.3.13 Fan Curve 2-7
2.3.14 Flying Start 2-8
2.3.15 MOP 2-8
2.3.16 Motor Overload 2-9
2.3.17 Parameter Access Level 2-9
2.3.18 Preset Frequency 2-9
2.3.19 Process PI Loop 2-10
2.3.20 S Curve 2-10
2.3.21 Shear Pin Fault 2-10
2.3.22 Skip Bands 2-11
2.3.23 Speed Control 2-11
2.3.24 Stop Modes 2-11
2.3.25 User Sets 2-12
2.3.26 Voltage Class 2-12
2.4 CE Filters 2-13
2.4.1 Essential Requirements for CE Compliance 2-14
2.5 Drive Connections 2-15
2.6 Drive Communication Options 2-16
2.7 Remote Operator Interface 2-16
2.8 PC-Based Utility 2-16

Chapter 3 **Mounting the Drive**
3.1 General Requirements for the Installation Site 3-2
3.1.1 Verifying Power Module AC Input Ratings Match Available Power 3-2
3.1.1.1 Unbalanced or Ungrounded Distribution Systems3 ..... -2
3.1.1.2 Input Power Conditioning 3-3
3.1.1.3 AC Input Phase Selection (Frame 5 Only) 3-4
3.1.1.4 Selecting/Verifying Fan Voltage (Frame 5 Only) 3-4
3.1.2 Making Sure Environmental Conditions are Met . 3-4
3.1.3 Verifying the Site Provides for Recommended Air Flow Clearances 3-5
3.1.4 Determining the Total Area Required for the Drive 3-6
3.2 Mounting the Drive 3-7
3.2.1 Verifying the Drive's Watts Loss Rating 3-7

Chapter 4 **Wiring Requirements for the Drive**
4.1 Meeting Terminal Block Input and Output Specifications 4-1
4.2 Determining Wire Size Requirements 4-1
4.2.1 Power Wiring 4-2
4.2.2 Power Wire Sizes 4-3
4.2.3 Recommended Control and Signal Wire Sizes 4-4
4.2.4 Recommended Motor Lead Lengths 4-4
4.2.5 Reflected Wave Compensation 4-5
4.3 Verifying Power Module Output Current Rating is Greater than Motor Full Load Amps 4-8
4.4 Selecting Input Line Branch Circuit Protection 4-8

Chapter 5 **Finding Wire-Routing Locations and Grounding**
5.1 Routing Input, Motor Output, Ground, and Control Wiring for the Drive 5-1
5.2 Grounding the Drive 5-4

Chapter 6 **Installing Power Wiring**
6.1 Opening the Cover 6-1
6.2 Installing Output Power Wiring 6-2
6.3 Installing Input Wiring 6-3
6.3.1 Installing an Optional Transformer and Reactor .. 6-3
6.3.2 Installing Fuses for Branch Circuit Protection 6-4
6.3.3 Installing the Required Input Disconnect 6-4
6.3.4 Installing Power Wiring from the AC Input Line to the Drive's Power Terminals 6-4

Chapter 7 **Installing Control Wiring**
7.1 Stop Circuit Requirements 7-1
7.1.1 User-Initiated Stopping 7-2
7.2 Control and Signal Inputs 7-2
7.3 Removing the I/O Terminal Block 7-2
7.4 Wiring the Signal and Control I/O 7-3
7.5 I/O Wiring Examples 7-6
7.6 Wiring Diagram - Control and Motor 7-7
7.7 Speed Reference Control 7-10
7.7.1 Auto Reference Sources 7-10
7.7.2 Manual Reference Sources 7-10
7.7.3 Changing Reference Sources 7-11
7.7.4 Auto/Manual Control 7-11
7.8 Remote OIM Configuration 7-12

Chapter 8 **Completing the Installation**
8.1 Checking the Installation 8-1
8.2 Powering Up after Installation is Complete 8-2

Chapter 9 **Using the Start-Up Routines on the LCD OIM**
9.1 Preparing for Start-Up 9-1
9.2 Running the Start-Up Routines 9-2
9.2.1 Sensorless Vector Performance 9-4
9.2.2 High Speed Operation (>120 Hz) 9-5
9.3 Start/Stop Control 9-5
9.4 Speed Reference 9-6

Chapter 10 **Programming Basics**
10.1 About Parameters 10-1
10.2 How Parameters are Organized 10-2
10.3 Accessing the Parameters 10-3
10.3.1 Selecting the Parameter Access Level 10-4
10.3.2 Restricting Access to Other Parameter Levels 10-5
10.4 Ensuring Program Security 10-6

Chapter 11 **Parameter Descriptions**

Chapter 12 **Troubleshooting the Drive**
12.1 Verifying that DC Bus Capacitors are Discharged Before Servicing the Drive 12-1
12.2 Determining Precharge Board Status Using the LED Indicators (Frame 5 Only) 12-3
12.3 Determining Drive Status Using the Ready LED 12-4
12.4 About Alarms 12-5
12.4.1 About the Alarm Queue 12-5
12.4.2 Alarm Descriptions 12-6
12.5 About Faults 12-9

12.5.1 About the Fault Queue 12-10
12.5.2 Clearing Faults 12-11
12.5.3 Fault Descriptions and Corrective Actions 12-12
12.6 Common Symptoms and Corrective Actions 12-19
12.7 Replacement Parts 12-23
12.8 Troubleshooting the Drive Using the LCD OIM 12-23
12.8.1 Accessing the Fault Queue 12-24
12.8.2 Accessing the Fault Parameters 12-25
12.8.3 Accessing the Drive Status Parameters 12-25
12.8.4 Determining the Product Version 12-26
12.8.5 Contacting Tech Support for Assistance 12-28

Appendix A Technical Specifications A-1

Appendix B Using the LCD OIM B-1

Appendix C Parameters Cross-Referenced by Name C-1

Appendix D Analog Input Selection Path D-1

Appendix E Process PI Block Diagram E-1

Appendix F Record of User Settings: Advanced Access Level F-1

Index Index-1

List of Figures

Figure 2.1 – Identifying the Drive by Model Number 2-1
Figure 2.2 – Drive Connections 2-15

Figure 3.1 – Typical Jumper Locations 3-3
Figure 3.2 – Selecting Input Phase and Fan Voltage (Frame 5 Only) 3-4
Figure 3.3 – Minimum Mounting Clearances 3-5
Figure 3.4 – Panel-Mount Drive Dimensions - Frames 2 and 3 3-6
Figure 3.5 – Panel-Mount Drive Dimensions - Frame 5 3-7

Figure 4.1 – How to Calculate Typical Motor Lead Lengths 4-5
Figure 4.2 – Inverter and Motor Line-to-line Voltages 4-6
Figure 4.3 – Motor Overvoltage as a Function of Cable Length 4-7

Figure 5.1 – Wire Routing and Terminal Block Locations (Frame 2 Shown) 5-2
Figure 5.2 – Wire Routing and Terminal Block Locations (Frame 5 Shown) 5-3
Figure 5.3 – Typical Grounding 5-4
Figure 5.4 – Single-Point Grounding/Panel Layout 5-5

Figure 6.1 – Opening the Drive Cover 6-1
Figure 6.2 – Power Terminal Block 6-5

Figure 7.1 – Typical Wiring Diagram 7-7
Figure 7.2 – Wiring Diagram - Default Drive Configuration 7-9
Figure 7.3 – Speed Reference Control Flowchart 7-11

Figure 9.1 – Accessing the Start-Up Routines 9-2
Figure 9.2 – Start-Up Menu 9-2
Figure 9.3 – Start/Stop Control using the Local OIM 9-5
Figure 9.4 – Two-Wire and Three-Wire Start/Stop Control 9-5
Figure 9.5 – Analog Speed Reference 9-6

Figure 10.1 – Example of Parameter Organization 10-2
Figure 10.2 – Accessing the Parameters Using the LCD OIM 10-3
Figure 10.3 – Selecting the Parameter Access Level 10-4
Figure 10.4 – Setting the Access Level Password 10-5
Figure 10.5 – Setting the Write-Protect Password 10-6

Figure 11.1 – Custom V/Hz Curve 11-12
Figure 11.2 – Fan/Pump Curve 11-12
Figure 11.3 – Speed Limits 11-13
Figure 11.4 – Compensation (56) 11-14
Figure 11.5 – Speed Control Method 11-19

Figure 11.6 – Speed Limits 11-20
Figure 11.7 – Trim Input Select 11-26
Figure 11.8 – Trim Out Select (118) 11-27
Figure 11.9 – PI Configuration (124) 11-29
Figure 11.10 – PI Control (125) 11-31
Figure 11.11 – PI Preload Value 11-34
Figure 11.12 – PI Status (134) 11-35
Figure 11.13 – Save OIM Ref (192) 11-50
Figure 11.14 – Save MOP Ref (194) 11-51
Figure 11.15 – Drive Status 1 (209) 11-55
Figure 11.16 – Drive Status 2 (210) 11-56
Figure 11.17 – Drive Alarm 1 (211) 11-57
Figure 11.18 – Drive Alarm 2 (212) 11-57
Figure 11.19 – Start Inhibits (214) 11-58
Figure 11.20 – Dig In Status (216) 11-59
Figure 11.21 – Dig Out Status (217) 11-60
Figure 11.22 – Status 1 @ Fault (227) 11-62
Figure 11.23 – Status 2 @ Fault (228) 11-62
Figure 11.24 – Alarm 1 @ Fault (229) 11-63
Figure 11.25 – Alarm 2 @ Fault (230) 11-63
Figure 11.26 – Fault Config 1 (238) 11-65
Figure 11.27 – Alarm Config 1 (259) 11-66
Figure 11.28 – Drive Logic Rslt (271) 11-67
Figure 11.29 – Manual Mask (286) 11-68
Figure 11.30 – Stop Owner 11-69
Figure 11.31 – Manual Owner 11-69
Figure 11.32 – Anlg In Config (320) 11-73
Figure 11.33 – Anlg In Sqr Root (321) 11-73
Figure 11.34 – Analog Out Config 11-77
Figure 11.35 – Anlg Out Absolute (341) 11-77

Figure 12.1 – Location of DC Bus Voltage Measuring Points 12-2
Figure 12.2 – Location of Precharge Status LED 12-3
Figure 12.3 – Location of the Ready LED 12-4
Figure 12.4 – Sample Fault Screen on the LCD OIM 12-10
Figure 12.5 – Accessing the Fault Queue 12-24
Figure 12.6 – Sample Fault Queue Entry 12-24
Figure 12.7 – Accesing the Fault Parameters 12-25
Figure 12.8 – Accessing the Drive Status Parameters 12-25
Figure 12.9 – Accessing the Device Version Information 12-26
Figure 12.10 – Device Version Screens at Product and Component Levels 12-26
Figure 12.11 – Accessing the OIM Version Information 12-27
Figure 12.12 – OIM Version Screens at the Product and Component Levels 12-27
Figure 12.13 – Accessing the Device Item Information 12-27

List of Tables

Table 2.1 – Power and NEMA Enclosure Ratings 2-2
Table 2.2 – SP600 AC Drive EN1800-3 EMC Compatibility 2-14
Table 2.3 – Standard Kits and Options 2-16
Table 2.4 – Remote OIM 2-16
Table 2.5 – PC-Based Utility 2-16

Table 4.1 – Recommended Shielded Wire 4-3
Table 4.2 – Power Terminal Block Specifications 4-3
Table 4.3 – Recommended Signal and Control Wire 4-4
Table 4.4 – AC Line Input Fuse Selection Values 4-9

Table 6.1 – Terminal Tightening Torques 6-2
Table 6.2 – AC Line Reactors 6-3
Table 6.3 – Power Terminal Descriptions 6-5

Table 7.1 – Wiring Signal and Control I/O to the Terminal Block 7-3
Table 7.2 – Parameter Configuration for Figure 7.1 Wiring Example 7-8

Table 9.1 – Quickstart Parameters 9-3

Table 11.1 – Parameter List 11-2
Table 11.2 – Default Values for Preset Speeds 1-7 11-25
Table 11.3 – Sleep-Wake Mode 11-46
Table 11.4 – Analog Output Scaling 11-79
Table 11.5 – Speed Select Inputs 11-81
Table 11.6 – Default Values for Parameters 361-366 11-81
Table 11.7 – Drive Response to Jog Forward and Jog Reverse Inputs . 11-83
Table 11.8 – Effect of Speed Select Input State on Selected Reference 11-85

Table 12.1 – Precharge Board LED Indicators 12-3
Table 12.2 – Ready LED Status Definitions 12-4
Table 12.3 – Types of Alarms 12-5
Table 12.4 – Alarm Descriptions 12-6
Table 12.5 – Alarm Names Cross-Referenced by Alarm Numbers 12-8
Table 12.6 – Fault Types 12-9
Table 12.7 – Fault Descriptions and Corrective Actions 12-12
Table 12.8 – Fault Names Cross-Referenced by Fault Number 12-18
Table 12.9 – Drive Does Not Start From Terminal Block Logic 12-19
Table 12.10 – Drive Does Not Start From OIM 12-20
Table 12.11 – Drive Does Not Respond to Changes in Speed Command 12-21
Table 12.12 – Motor and/or Drive Will Not Accelerate to Commanded Speed 12-22
Table 12.13 – Motor Operation is Unstable 12-22
Table 12.14 – Stopping the Drive Results in a Decel Inhibit Fault 12-23
Table 12.15 – OIM Cables 12-23
Table 12.16 – Drive Unit 12-23

CHAPTER 1
Introduction

This manual is intended for qualified electrical personnel familiar with installing, programming, and maintaining AC drives.

This manual contains information on:

- Installing and wiring the SP600 drive
- Programming the drive
- Troubleshooting the drive

The latest version of this manual is available from http://www.theautomationbookstore.com or http://www.reliance.com/docs_onl/online_stdrv.htm.

1.1 Getting Assistance from Reliance Electric

If you have any questions or problems with the products described in this instruction manual, contact your local Reliance Electric sales office.

For technical assistance, call 1-800-726-8112. Before calling, please review the troubleshooting section of this manual and check the standard drives website for additional information. When you call this number, you will be asked for the drive model number and this instruction manual number. Also, please have your product version number ready (refer to chapter 12).

CHAPTER 2

About the Drive

The SP600 AC drive is a pulse-width-modulated (PWM) drive that provides general purpose (sensorless vector or volts/hertz) regulation for a broad range of applications requiring adjustable speed control of motors.

This chapter provides information about the SP600 AC drive, including:

- Information on identifying the drive
- Descriptions of NEMA ratings
- Features
- A description of drive conections and communication options

2.1 Identifying the Drive by Model Number

Each SP600 AC drive can be identified by its model number, as shown in figure 2.1. The model number is on the shipping label and the drive nameplate. The model number includes the drive and any factory-installed options. Model numbers and drive power ratings are provided in table 2.1.

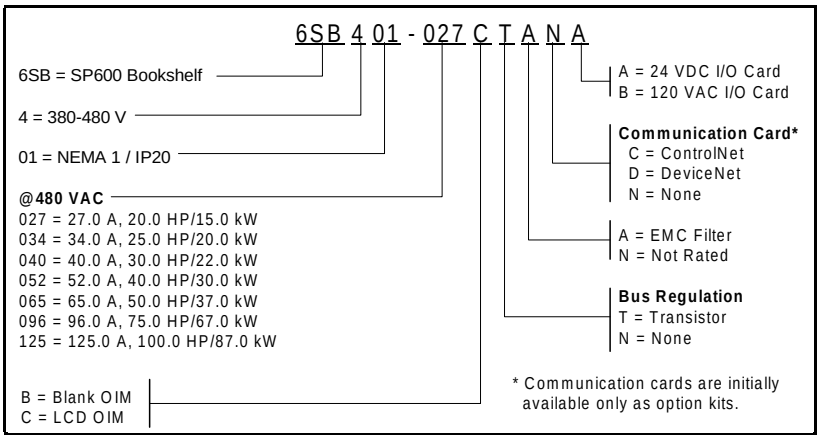

Figure 2.1 – Identifying the Drive by Model Number

2.2 Power and NEMA Enclosure Ratings

Each of the SP600 AC drives has one of these NEMA ratings:

- NEMA 1: Vented. Intended for general-purpose indoor applications.

Table 2.1 is a listing of the drives and their NEMA ratings.

Table 2.1 – Power and NEMA Enclosure Ratings

Model Number	Frame	Output Amps						Nominal Power Ratings				NEMA Rating	Input KVA	Input Amps	Watts Loss @ 4 kHz
		480 VAC			400 VAC			110% OL Duty		150% OL Duty					
		Cont	1 Min	3 Sec	Cont	1 Min	3 Sec	kW	HP	kW	HP				
-027xxxx	2	27	33	44	30	33	45	15	20	11	15	1	20.6	24.8	393
-034xxxx	2	34	40.5	54	37	45	60	18.5	25	15	20	1	25.9	31.2	440
-040xxxx	3	40	51	68	43	56	74	22	30	18.5	25	1	30.5	36.7	458
-052xxxx	3	52	60	80	56	64	86	30	40	22	30	1	39.7	47.7	609
-065xxxx	3	65	78	104	72	n/a	n/a	37	50	30	40	1	49.6	59.6	716
-096xxxx	5	96	106	144	-	-	-	66	75	45	60	1	74.9	90.1	1142
		-	-	-	105	116	158	-	-	-	-	1	-	-	-
-125xxxx	5	125	138	163	-	-	-	75	100	66	75	1	97.6	117	1470
		-	-	-	96	144	168	-	-	-	-	1	-	-	-

Refer to Appendix A for drive technical specifications.

2.3 Overview of SP600 Features

This section provides an overview of the features in the SP600 AC drive.

2.3.1 Analog Inputs

There are two general-purpose analog inputs that can be configured either as voltage (±10 VDC or current (4-20 mA) inputs. These inputs are configured via parameters to provide some flexibility.

The analog inputs provide input signals that can be used for the following purposes:

- Provide a value to Speed Ref A (91)
- Provide a trim signal to Speed Ref A
- Provide a reference when the terminal block has assumed manual control of the reference (TB Man Ref Sel (96))
- Provide the reference and feedback for the process PI loop (PI Ref Sel (126) and PI Feedback Sel (128))
- Provide an external value for the current limit and DC braking level (Current Limit Sel (147) and DC Bake Lvl Sel (157))
- Enter and exit sleep mode (178 to 183))

2.3.2 Analog Output

The drive has one analog output that can be used as a voltage or current (4-20 mA) signal to annunciate a wide variety of drive operating conditions and values. Select the source for the analog output by setting Analog Out1 Sel (342). The analog output can be configured as a ±10 VDC or 4-20 mA output signal.

2.3.3 Auto/Manual Selection

The Manual mode selection allows you to override the selected reference (referred to as the "auto" reference) by either toggling a button on the programming terminal (OIM), or asserting a digital input (Digital Inx Sel (361 to 366) that is configured for Auto/Manual. This provides a source for local speed reference control, even if a process input signal is the primary speed reference source.

2.3.4 Auto Restart (Reset/Run)

The Auto Restart feature (see parameters 174 and 185) provides the ability for the drive to automatically perform a fault reset followed by a start attempt without user or application intervention. This allows for automatic restart in applications where the drive is used in remote or "unattended" operation.

Only certain faults are allowed to be auto reset. Faults that indicate possible drive malfunction are not resettable. Caution should be used when enabling this feature, since the drive will attempt to issue its own start command based on user-selected programming.

2.3.5 Autotune

The Autotune feature (see parameter 61) identifies the motor flux current and stator resistance for use in Sensorless Vector Control and Economizer modes (see parameter 53). The result of the flux current test procedure is stored in the Flux Current parameter and the product of Flux Current Ref (63) and stator resistance is stored in IR Voltage Drop (62).

There are three options for autotuning:

- Static - the motor shaft will not rotate during this test.
- Dynamic - the motor shaft will rotate during this test.
- Calculate - tuning data is selected based on the motor nameplate data entered.

The static test determines only stator resistance, while the dynamic Autotune procedure determines both the stator resistance and motor flux current.

IR Voltage Drop is used by the IR Compensation procedure to provide additional voltage at all frequencies to offset the voltage drop developed across the stator resistance. An accurate calculation of the IR Voltage Drop will ensure higher starting torque and better performance at low speed operation.

If it is not possible or desirable to run the Autotune tests, there are two other methods for the drive to determine the IR Voltage Drop and Flux Current parameters. One method retrieves the default parameters stored in the power EEPROM, and the other method calculates them from the user-entered motor nameplate data parameters.

If the stator resistance and flux current of the motor are known, you can calculate the voltage drop across the stator resistance and directly enter these values into the Flux Current and IR Voltage Drop parameters.

You must enter the following motor nameplate data into the following parameters for the Autotune procedure to obtain accurate results:

- Motor NP Volts (41)
- Motor NP Hertz (48)
- Motor NP Power (45)

When the drive is initially powered up, the Autotune (61) parameter is defaulted to Calculate. With this setting, any changes made by the user to Motor Nameplate Power, Motor NP Volts, or Motor NP Hertz activates a new calculation, which will update the IR Voltage Drop (62) and Flux Current (5) parameters. This calculation is based on a typical motor with those nameplate values. The Autotune parameter will not be reset to zero after this calculation is performed; calculations will continue to be performed every time motor nameplate values are changed.

2.3.6 Motor Cable Lengths

The length of cable between the drive and motor may be limited for various application reasons. The primary areas of concern are :

- Reflected wave
- Cable charging

The reflected wave phenomenon, also known as transmission line effect, produces very high peak voltages on the motor due to voltage reflection. While Reliance Electric drives have patented software that limits the voltage peak to 2 times the DC bus voltage and reduce the number of occurrences, many motors have inadequate insulation systems to tolerate these peaks.

Caution should be taken to understand the effects and restrictions when applying the drive to extended motor lead length applications. Proper cable type, motor and drive selection is required to minimize the potential risks.

2.3.7 Drive Protection Current Limit

There are six ways that the drive protects itself from overcurrent or overload situations:

- Instantaneous overcurrent trip
- Software Instantaneous trip
- Software current limit
- Heatsink temperature protection

- Overload protection IT(see Drive Overload Protection, section 2.3.9)
- Thermal manager

2.3.8 Drive Overload Protection

The drive thermal overload will protect the drive power stage while maintaining performance as long the drive temperature and current ratings are not exceeded.

The drive will monitor the temperature of the power module based on a measured temperature and a thermal model of the IGBT. As the temperature rises, the drive may lower the PWM frequency to decrease the switching losses in the IGBT. If the temperature continues to rise, the drive may reduce current limit to try to decrease the load on the drive. If the drive temperature becomes critical, the drive will generate a fault.

If the drive is operated in a low ambient condition, the drive may exceed rated levels of current before the monitored temperature becomes critical. To guard against this situation, the drive thermal overload also includes an inverse time algorithm. When this scheme detects operation beyond rated levels, current limit may be reduced or a fault may be generated.

2.3.9 Network Data Transfer via Datalinks

A Datalink (see parameters 300 to 317) is one of the mechanisms used by SP600 drives to transfer data to and from a programmable controller via the optional network interface modules (DeviceNet or ControlNet). In the case of ControlNet, Datalinks allow a parameter value to be changed without using an Explicit Message or Block Transfer.

Each Datalinik (A, B, C or D) transfers two 16-bit values (A1, A2). If a 32-bit value needs to be transferred, each of the the two 16-bit Datalinks must be set to the same parameter. One Datalink transfers the lower 16 bits; the other, the upper 16 bits.

For example, to set up the drive to receive accel and decel times from the connected PLC you would make the the following parameter settings:

Data In A1 (300) = 140 (the parameter number of Accel Time 1)
Data In A2 (301) = 142 (the parameter number of Decel Time 1)

2.3.10 Digital Outputs

The SP600 drive provides two relay outputs for external annunciation of a variety of drive conditions (see parameters 380 and 384). Each relay is a Form C (1 N.O. - 1 N.C. with shared common) device whose contacts and associated terminals are rated for a maximum of 250 VAC or 220 VDC.

2.3.11 DPI Interface

SP600 drives support Drive Peripheral Interface (DPI) communication protocols for the primary interface and drive control. The DPI interface is an enhanced serial communications protocol that provides high functionality and high performance.

The DPI serial interface is the connection interface for all peripheral devices such as OIMs, PC interface tool (VS Utilities), and network interface modules.

2.3.12 Economizer Mode

Economize mode consists of operating the drive in sensorless vector control mode with an energy saving function (E-SVC). When the drive is in this mode and operating at steady state output frequency, the output voltage is automatically adjusted as the load is increased or decreased. This is done so that minimum current is supplied to the motor thereby optimizing its efficiency. By adjusting the output voltage, the flux producing current is reduced, but only if the total drive output current does not exceed 75% of motor rated current. In this mode the flux current is not allowed to be less than 50% of the selected flux current parameter value.

2.3.13 Fan Curve

When Torque Perf Mode (53) is set to Fan/Pump V/Hz the relationship between frequency and voltage is a square function where the voltage is proportional to frequency. The fan curve provides the option to generate voltage that is a function of the stator frequency squared up to the motor nameplate frequency. Above base frequency, the voltage is a linear function of frequency. At low speed, the fan curve can be offset by the Run Boost (70) parameter to provide necessary starting torque.

2.3.14 Flying Start

The flying start feature (see parameter 169) is used to start into a rotating motor as rapidly as possible and resume normal operation with a minimal impact on load or speed. This action will prevent an overcurrent trip and significantly reduce the time for the motor to reach its desired frequency. Since the motor is "picked up" smoothly at its rotating speed and ramped to the proper speed, little or no mechanical stress is present.

Normally, when a drive is started in its normal mode, it initially applies a frequency of 0 Hz and ramps to the desired frequency. If the drive is started into an already spinning motor in this manner, without Flying Start enabled, large currents will be generated and an overcurrent trip may result.

In Flying Start mode, the drive's response to a start command will be to identify the motor's speed and apply a voltage that is synchronized in frequency, amplitude and phase to the counter emf of the spinning motor. The motor will then accelerate to the desired frequency.

2.3.15 MOP

The Motor-Operated Pot (MOP) function is one of the sources for the frequency reference (see parameter 90). The MOP function uses digital inputs to increment or decrement the speed reference at a programmed rate.

The MOP has these components:

- MOP Rate parameter (195)
- Save MOP Ref parameter (194)
- MOP Frequency parameter (11)
- MOP increment input (parameters 361 to 366)
- MOP decrement input (parameters 361 to 366)

2.3.16 Motor Overload

The motor thermal overload function uses an IT algorithm to model the temperature of the motor. This curve is modeled after a Class 10 protection thermal overload relay that produces a theoretical trip at 600% motor current in ten (10) seconds and continuously operates at full motor current.

Motor NP FLA (42) is used to set the overload feature. This parameter, set in the start-up procedure, is adjustable from 0 - 200% of drive rating and should be set for the actual motor FLA rating.

Since the motor thermal overload cannot distinguish individual currents in a multimotor application, it is suggested that it be disabled in these cases. This can be done by setting the correct bit in Fault Config (238) to zero to disable the motor thermal overload.

The operation of the overload is actually based on three parameters: 1) Motor NP FLA (42), 2) Motor OL Factor (48), and 3) Motor OL Hertz (47). The motor nameplate full load amps is then multiplied by the motor overload factor to allow you to re-define the continuous level of current allowed by the motor thermal overload.

Motor Overload Hz is used to allow you to adjust the response of the motor thermal overload to lower motor speeds (lower output frequencies) where a higher degree of protection may be required due to decreased motor cooling.

2.3.17 Parameter Access Level

The SP600 drive allows the user to limit the number of parameters that are viewable on the LCD OIM. By limiting the parameter view to the most commonly adjusted set, additional features that may make the drive seem more complicated are hidden.

If you are trying to gain access to a particular parameter and the OIM skips over it, you must change the parameter view from "Basic" to "Advanced." This can be accomplished by reprogramming Param Access Lvl (196) to "Advanced". See section 10.3.1 for instructions.

2.3.18 Preset Frequency

There are seven preset frequency parameters (101 to 107) that are used to store a discrete frequency value. This value can be used for a speed reference or process PI Reference. When used as a speed reference, they are selected via the digital inputs or the DPI reference command.

2.3.19 Process PI Loop

The internal process PI function (see parameters 124 to 138) provides closed-loop process control with proportional and integral control action. The PI function reads a process variable input to the drive and compares it to a desired setpoint stored in the drive. The algorithm will then adjust the output of the process PI regulator thereby changing drive output frequency to try to make the process variable equal the setpoint.

Proportional control (P) adjusts the output based on the size of the error (larger error = proportionally larger correction). If the error is doubled, then the output of the proportional control is doubled; and, conversely, if the error is cut in half, then the output of the proportional output will be cut in half. With proportional control only, there is always an error, so the feedback and the reference are never equal.

Integral control (I) adjusts the output based on the duration of the error. The longer the error is present, the larger the correction output value will become. The integral control by itself is a ramped output correction and typically gives a smooth output correction and will continue to integrate until zero error is achieved. By itself, integral control is slower than many applications require and therefore is combined with proportional control (PI). It also contributes to overshoot of the correction value.

2.3.20 S Curve

The S Curve function (parameter 146) of SP600 drives allows control of the "jerk" component of acceleration and deceleration through user adjustment of the S Curve parameter (146). Jerk is defined as the rate of change of acceleration and or deceleration. By adjusting the percentage of S Curve applied to the normal accel/decel ramps, the ramp takes the shape of an "S" allowing a smoother transition that produces less mechanical stress and smoother control for light loads.

2.3.21 Shear Pin Fault

This feature allows you to select programming that will fault the drive if the drive output current exceeds the programmed current limit (see parameter 238). As a default, exceeding the set current limit is not a fault condition. However, if you want to stop the process in the event of excess current, the Shear Pin feature can be activated. By programming the drive current limit value and enabling the electronic shear pin, the drive will fault if excess current is demanded by the motor.

2.3.22 Skip Bands

The skip band function (se parameters 84 to 87) provides three skip bands that the drive will ramp through but will not continuously run within. You can set the skip frequency (center frequency) for each band and the skip band centered on the skip frequency. The skip band applies to all three skip frequencies.This is used to avoid resonance operating frequency setpoints.

2.3.23 Speed Control

The purpose of speed regulation is to allow the drive to adjust to certain operating conditions, such as load change, and compensate for these changes in an attempt to maintain motor shaft speed within the specified regulation percentage.

The Speed Mode parameter (80) selects the speed regulation method for the drive, and can be set to one of 3 choices

- Open Loop - No speed control is offered
- Slip Comp - Slip Compensation is active
- Process PI - The PI Loop sets the actual speed based on process variables

2.3.24 Stop Modes

There are several stop methods that can be selected in the SP600 drive.

1. Coast to Stop - When Stop Mode A (155) is set to Coast to Stop , the drive acknowledges the Stop command by shutting off the output transistors and releasing control of the motor. The load/motor will coast or free spin until the mechanical energy is dissipated.
2. Dynamic Braking - This method uses an internal or external DB braking resistor to dissipate stopping energy.
3. Brake to Stop - This method is selected by setting Stop Mode A (155) to DC Brake. You can also select the amount of time the braking will be applied and the magnitude of the current used for braking with DC Brake Time (159) and DC Brake Level (158). This method of braking will generate up to 40% of rated motor torque for braking and is typically used for low inertia loads.

   When Brake to Stop is selected, the drive acknowledges the Stop command by immediately stopping the output and then applying a programmable DC voltage (DC Brake Level (158)) to one phase of the motor.

This DC braking voltage is removed by the following events:

- Opening an Enable digital input
- Reissuing the Start command
- DC brake time expires

Caution must be used when setting DC Brake Level. Excess motor current could damage the motor. Caution must also be observed, since motor voltage will exist even while stopped.

2.3.25 User Sets

After a drive has been configured for a given application, you can store a copy of all of the parameter settings in a specific EEPROM area known as a user set. Up to three user sets can be stored in the drive's memory to be used for backup, batch switching or other needs. All parameter information is stored. You can then recall this data to the active drive operating memory as needed. Each user set can also be identified with a programmable, user-selected name.

There are two operations to manage the operation of user sets, Save To User Set and Restore From User Set. You select 1, 2, or 3 as the area in which to store data. After data is successfully transferred, Save User Set returns to a value of 0. To copy a given area back into the active EEprom memory, the user selects Set 1, 2, or 3 for Restore User Set. After data is successfully transferred, Restore User Set returns to a value of 0. When shipped from the factory, all user sets have the same factory default values. Resetting the drive to defaults does not affect the contents of user sets.

See B.7.2 for more information.

2.3.26 Voltage Class

Important: The 6SB401 series of the SP600 AC driv is currently available only as a 400 volt class product.

The voltage class (see parameter 202) identifies the general input voltage to the drive. This general voltage includes a range of actual operating voltages. A 400 volt class drive will have an acceptable input voltage range of 380 to 480 VAC. There are also the 200 volt class drives with a range of 200 to 240 volts operation.

While the hardware remains the same for each class, other variables, such as factory defaults and power unit ratings, will change. In most cases, all drives within a voltage class can be reprogrammed to accommodate a motor within its voltage class. This can be done by by resetting the Voltage Class parameter to a different setup within the voltage class.

As an example, consider a 480 volt drive. This drive comes with factory default values for 480 V, 60 Hz, with motor data defaulted for U.S. motors (HP rated, 1750 RPM, etc.) By setting the Voltage Class parameter to "low voltage" (this represents 400 V in this case) the defaults are changed to 400 V, 50 Hz settings with motor data for European motors (kW rated, 1500 RPM, etc).

2.4 CE Filters

Conformity with the Low Voltage (LV) Directive and Electromagnetic Compatibility (EMC) Directive has been demonstrated using harmonized European Norm (EN) standards published in the Official Journal of the European Communities. The SP600 AC drive complies with the EN standards listed below when installed according to this User Manual.

CE Declarations of Conformity are available online at: **http://www.reliance.com/certification**.

Low Voltage Directive (73/23/EEC)

- EN50178 Electronic equipment for use in power installations
- EN60204-1 Safety of machinery – Electrical equipment of machines

EMC Directive (89/336/EEC)

- EN61800-3 (Second Environment) Adjustable-speed electrical power drive systems Part 3: EMC product standard including specific test methods

General Notes

To be CE-compliant, the motor cable should be kept as short as possible in order to avoid electromagnetic emission as well as capacitive currents.

AC drives may cause radio interference. The user is required to take measures to prevent interference.

If the adhesive label is removed from the top of the drive, the drive must be mounted in a cabinet with side openings less than 12.5 mm (0.5 in) and top openings less than 1.0 mm (0.04 in) to maintain compliance with the Low Directive.

Conformity with CE EMC requirements does not guarantee that the entire machine or installation will comply with the requirements.

Use of line filters in ungrounded systems is not recommended.

2.4.1 Essential Requirements for CE Compliance

All conditions listed below must be satisfied for SP600 drives to meet the requirements of EN61800-3 for the Second Environment (Industrial).

- Standard SP600 CE-compatible drive.
- Grounding as described in section 5.3 if this manual.
- Output power, control (I/O) and signal wiring must be braided, shielded cable with a coverage of 75% or better, metal conduit or equivalent attenuation.
- Cable length restrictions, common mode cores and filters per table 2.2.

Table 2.2 – SP600 AC Drive EN1800-3 EMC Compatibility

Frame	Drive Description	Second Environment	First Environment Restricted Distribution
2	Drive with any options	Restrict Motor Cable to 30 m (98 ft)	- Restrict Motor Cable to 150 m (492 ft) - Install external filter[1]
3	Drive with any options		
5	Drive with any options	(not available)	(not available)

[1] Select the Roxburgh filter (or equivalent) that meets your specifications from the list below.

Filter Part No.	Current	Filter Part No.	Current
MIF306	6 A	MIF350	50 A
MIF310	10 A	MIF375	75 A
MIF316	16 A	MIF3100	100 A
MIF323	23 A	MIF3150	150 A
MIF330	30 A		

2.5 Drive Connections

Figure 2.2 shows the locations of the drive terminal blocks and connectors used to set up and operate the drive.

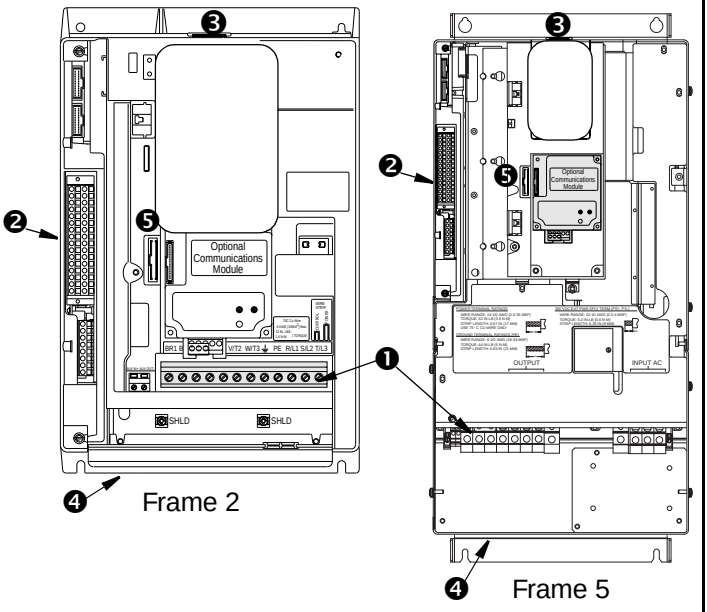

No.	Connector	Description
❶	Power Terminal Block	Connections for input and output power wiring.
❷	Signal and I/O Terminal Block	Connections for signal and I/O wiring. **Important:** The I/O board may be 24 VDC or 115 VAC. Check the model number on the drive nameplate.
❸	DPI Port 1	OIM connection.
❹	DPI Port 2	Connection for remote OIM or RECOMM-232 serial interface.
❺	DPI Port 5	Connection for optional communications module.

Figure 2.2 – Drive Connections

2.6 Drive Communication Options

The flat-ribbon cable connector (labeled ❺ in figure 2.2) is a parallel bus connection port that provides a means of attaching optional communication modules such as the DeviceNet Communication module to the SP600 AC drive.

Refer to the appropriate board instruction manual for more information. See table 2.3 for a list of available communication options.

Table 2.3 – Standard Kits and Options

Description	Model Number	Instruction Manual
DeviceNet Communication module	RECOMM-DNET	D2-3478
Profibus Communication module	RECOMM-PBUS	D2-3479
Interbus Communication module	RECOMM-IBUS	D2-3480
ControlNet Communication module	RECOMM-CNET	D2-3497

2.7 Remote Operator Interface

The SP600 drive can be controlled and monitored using a remote LCD OIM (Operator Interface Module). The remote OIM connects to DPI port 2 at the bottom of the drive frame (labeled ❹ in figure 2.2.) Note that you must change the appropriate parameters (89 and 90) to enable control from the remote keypad.

Table 2.4 – Remote OIM

Description	Model Number	Instruction Manual
Remote NEMA 4X LCD OIM	RE4LCD-PNL	D2-3490

2.8 PC-Based Utility

The SP600 drive can be configured using a PC-based software utility such as VS Utilities. This program enables you to upload and download parameter configurations.

Table 2.5 – PC-Based Utility

Description	Model Number	Instruction Manual
VS Utilities	RECOMM-VSU232	n/a
Serial Converter for DPI Drives	RECOMM-232	D2-3477

CHAPTER 3

Mounting the Drive

This chapter provides information that must be considered when planning a SP600 AC drive installation and provides drive mounting information. Installation site requirements, drive requirements, and wiring requirements are presented.

ATTENTION: Only qualified electrical personnel familiar with the construction and operation of this equipment and the hazards involved should install, adjust, operate, or service this equipment. Read and understand this manual and other applicable manuals in their entirety before proceeding. Failure to observe this precaution could result in severe bodily injury or loss of life.

ATTENTION: Use of power correction capacitors on the output of the drive can result in erratic operation of the motor, nuisance tripping, and/or permanent damage to the drive. Remove power correction capacitors before proceeding. Failure to observe this precaution could result in damage to, or destruction of, the equipment.

ATTENTION: The user is responsible for conforming with all applicable local, national, and international codes. Failure to observe this precaution could result in damage to, or destruction of, the equipment.

3.1 General Requirements for the Installation Site

It is important to properly plan before installing a SP600 AC drive to ensure that the drive's environment and operating conditions are satisfactory.

Note that no devices are to be mounted behind the drive. If air-cooled devices are mounted near the drive, the hot air exhaust may raise the ambient temperature level above what is allowed for safe operation of the drive.

The area behind the drive must be kept clear of all control and power wiring. Power connections may create electromagnetic fields which may interfere with control wiring or components when run in cose proximity to the drive.

Read the recommendations in the following sections before continuing with drive installation.

3.1.1 Verifying Power Module AC Input Ratings Match Available Power

SP600 drives are suitable for use on a circuit capable of delivering up to a maximum of 200,000 rms symmetrical amperes, and a maximum of 600 volts (nominal).

ATTENTION: To guard against personal injury and/or equipment damage caused by improper fusing or circuit breaker selection, use only the recommended line fuses/circuit breakers specified in section 4.4.

3.1.1.1 Unbalanced or Ungrounded Distribution Systems

ATTENTION: SP600 drives contain protective MOVs and common mode capacitors that are referenced to ground. These devices should be disconnected if the drive is installed on an ungrounded distribution system. Failure to observe this precaution could result in damage to, or destruction of, the equipment.

For ungrounded distribution systems, disconnect the MOVs and common mode capacitors by removing or disconnecting the jumper(s) shown in figure 3.1.

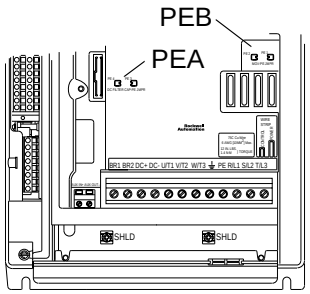

Frames 2 and 3

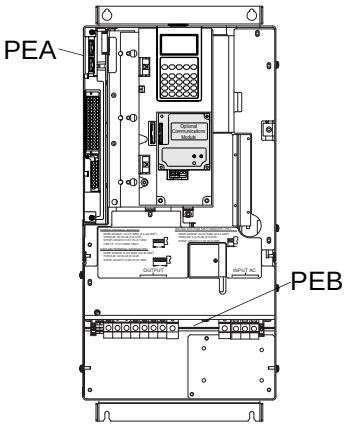

Frame 5

Jumper	Component	Frames	Action
PEA	Common Mode Capacitors	2, 3	Remove jumper
		5	Remove the I/O Cassette. The green/yellow jumper is located on the back of chassis in the area shown. Disconnect, insulate and secure the wire to guard against unintentional contact with chassis or components.
PEB	MOVs	2, 3	Remove jumper
		5	Note location of green/yellow jumper wire. Disconnect, insulate and secure the wire guard against unintentional contact with chassis or components.

Figure 3.1 – Typical Jumper Locations

3.1.1.2 Input Power Conditioning

If any of the following conditions exist, the use of a line reactor or isolation transformer is recommended.

- Frequent power outages
- Ungrounded AC supply source
- Facility has power factor correction capacitors
- Input voltage variations exceed drive operating specifications

3.1.1.3 AC Input Phase Selection (Frame 5 Only)

Move the “Line Type” jumper as shown in figure 3.2 to select single or three-phase operation.

3.1.1.4 Selecting/Verifying Fan Voltage (Frame 5 Only)

Frame 5 drives use a transformer to match the input line voltage to the internal fan voltage. If your line voltage is different than the voltage class specified on the drive nameplate, it will be necessary to change transformer tap as shown in figure 3.2 .

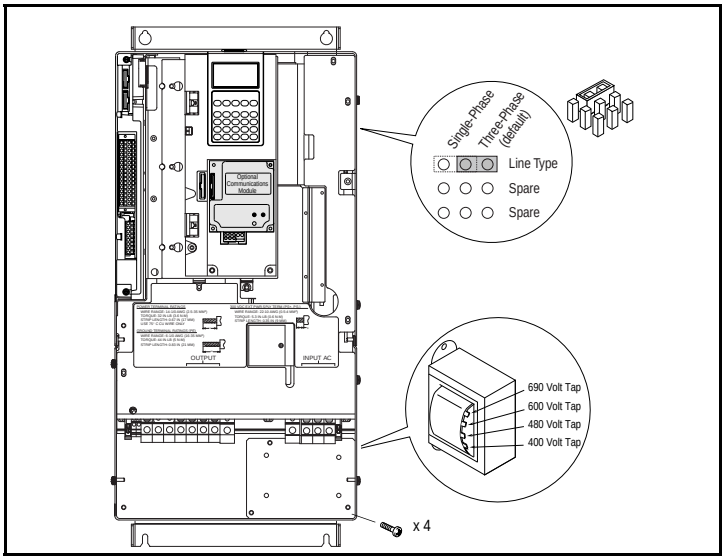

Figure 3.2 – Selecting Input Phase and Fan Voltage (Frame 5 Only)

3.1.2 Making Sure Environmental Conditions are Met

Before deciding on an installation site, consider the following guidelines:

- Verify that NEMA 1 drives can be kept clean, cool, and dry.
- The area chosen should allow the space required for proper air flow as defined in section 3.1.3.
- Be sure that NEMA 1 drives are away from oil, coolants, or other airborne contaminants.
- Do not install the drive more than 3300 feet above sea level without derating output power. For every 300 feet above 3300 feet, derate the output current 1%.
- Verify that the drive location will meet the environmental conditions in Appendix A.

3.1.3 Verifying the Site Provides for Recommended Air Flow Clearances

Be sure there is adequate clearance for air circulation around the drive. For best air movement, do not mount SP600 AC drives directly above each other. Note that no devices are to be mounted behind the drive. This area must be kept clear of all control and power wiring. See figure 3.3 for recommended air flow clearances.

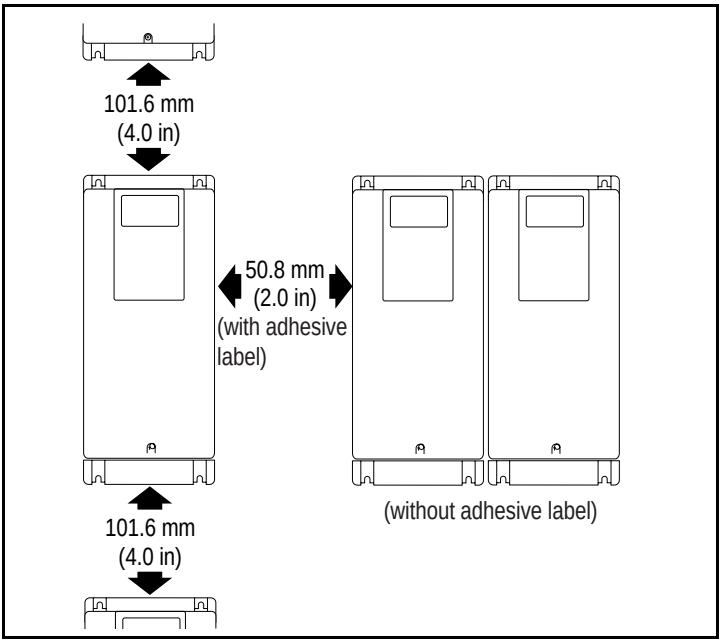

Figure 3.3 – Minimum Mounting Clearances

3.1.4 Determining the Total Area Required for the Drive

Overall dimensions and weights are illustrated in figures 3.4 and 3.5 as an aid to calculating the total area required by the SP600 AC drive.

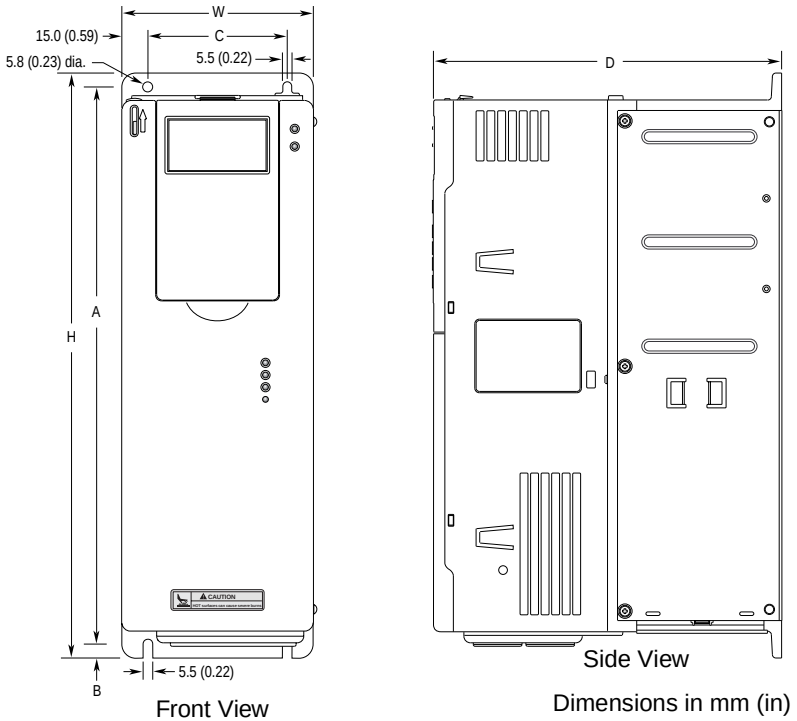

Dimensions in mm (in)
Weight in kg (lb)

Frame	HP	H	W	D	A	C	Weight
2	20 to 25 @ 460 VAC	342.5 (13.48)	222.0 (8.74)	200.0 (7.87)	192.0 (7.56)	320 (12.6)	12.52 (27.6)
3	30 to 50 @ 460 VAC	517.5 (20.37)	222.0 (8.74)	200.0 (7.87)	192.0 (7.56)	500 (19.7)	18.55 (40.9)

Figure 3.4 – Panel-Mount Drive Dimensions - Frames 2 and 3

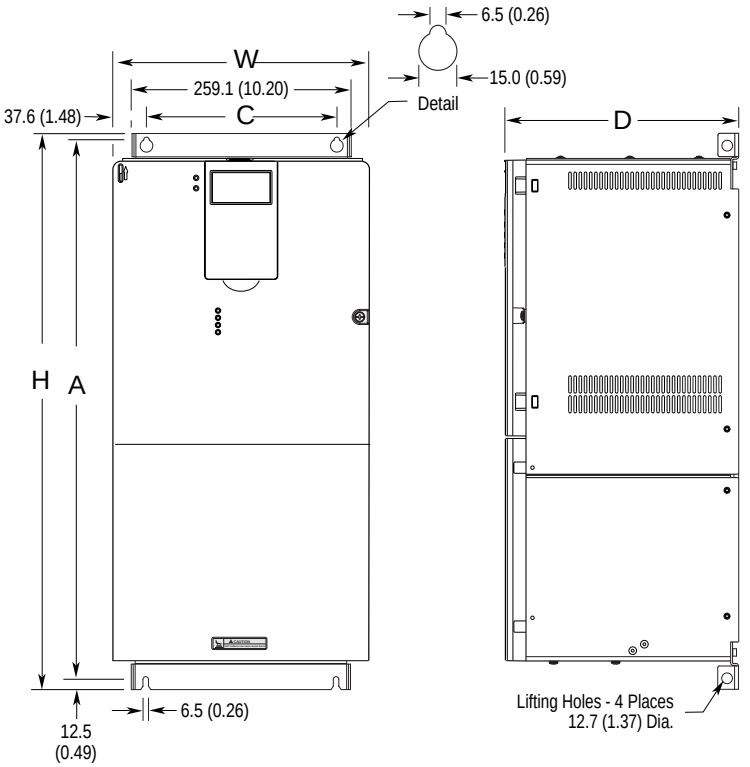

Frame	HP	H	W	D	A	C	Weight
5	60 to 100 HP @ 460 VAC	644.5 (25.37)	308.9 (12.16)	275.4 (10.84)	625.0 (24.61)	225.0 (8.86)	37.19 (82.0)

Figure 3.5 – Panel-Mount Drive Dimensions - Frame 5

3.2 Mounting the Drive

Refer to figures 3.4 and 3.5 for drive mounting dimensions.

Attach the drive to the vertical surface using the mounting holes provided. Frame size 2 and 3 drives should be mounted using 5/16" (M8) bolts. Frame size 5 drives should be mounted using 1/4" (M6) bolts.

3.2.1 Verifying the Drive's Watts Loss Rating

When mounting the drive inside another enclosure, determine the watts loss rating of the drive from table 2.1. This table lists the typical full load power loss watts value at a carrier frequency of 4 kHz. Ensure that the enclosure is adequately ventilated with 0° to 40° C (32° to 104° F) ambient air.

CHAPTER 4

Wiring Requirements for the Drive

ATTENTION: The user is responsible for conforming with all applicable local, national, and international codes. Failure to observe this precaution could result in damage to, or destruction of, the equipment.

Evaluate wire sizes, branch circuit protection, and E-stop wiring (see section 7.1) before continuing with the drive installation.

4.1 Meeting Terminal Block Input and Output Specifications

ATTENTION: Verify the voltage rating of the I/O interface board before wiring any user devices. Failure to observe this precaution could result in damage to, or destruction of, the equipment.

The terminal block on the SP600 I/O interface board provides terminals for 24 V or 115 VAC power for the control inputs, depending on the I/O card installed in the drive. See figure 2.2 for the location of the I/O terminal block. Refer to 4.3 for control input and output wire specifications.

4.2 Determining Wire Size Requirements

Wire size should be determined based on the size of conduit openings, and applicable local, national, and international codes, such as NEC/CEC.

4.2.1 Power Wiring

ATTENTION: National Codes and standards (NEC, VDE, BSI etc.) and local codes outline provisions for safely installing electrical equipment. Installation must comply with specifications regarding wire types, conductor sizes, branch circuit protection and disconnect devices. Failure to do so may result in personal injury and/or equipment damage.

Cable Types Acceptable for 200-600 Volt Installations

General

A variety of cable types are acceptable for drive installations. For many installations, unshielded cable is adequate, provided it can be separated from sensitive circuits. As an approximate guide, allow a spacing of 0.3 meters (1 foot) for every 10 meters (32.8 feet) of length. In all cases, long parallel runs must be avoided. Do not use cable with an insulation thickness less than or equal to 15 mils (0.4mm/0.015 in.). See table 4.1.

Unshielded

THHN, THWN or similar wire is acceptable for drive installation in dry environments provided adequate free air space and/or conduit fill rates limits are provided. Do not use THHN or similarly coated wire in wet areas. Any wire chosen must have a minimum insulation thickness of 15 mils and should not have large variations in insulation concentricity.

Shielded/Armored Cable

Shielded cable is recommended if sensitive circuits or devices are connected or mounted to the machinery driven by the motor.

Table 4.1 – Recommended Shielded Wire

Location	Rating/Type	Description
Standard (Option 1)	600V, 90°C (194°F) XHHW2/RHW-2 Anixter B209500-B209507, Belden 29501-29507, or equivalent	• Four tinned copper conductors with XLP insulation. • Copper braid/aluminum foil combination shield and tinned copper drain wire. • PVC jacket.
Standard (Option 2)	Tray rated 600V, 90° C (194° F) RHH/RHW-2 Anixter OLF-7xxxxx or equivalent	• Three tinned copper conductors with XLPE insulation. • 5 mil single helical copper tape (25% overlap min.) with three bare copper grounds in contact with shield. • PVC jacket.
Class I & II; Division I & II	Tray rated 600V, 90° C (194° F) RHH/RHW-2 Anixter 7V-7xxxx-3G or equivalent	• Three bare copper conductors with XLPE insulation and impervious corrugated continuously welded aluminum armor. • Black sunlight resistant PVC jacket overall. • Three copper grounds on #10 AWG and smaller.

4.2.2 Power Wire Sizes

Input power wiring should be sized according to applicable codes to handle the drive's continuous-rated input current. Output wiring should be sized according to applicable codes to handle the drive's continuous-rated output current. See table 4.2 for the range of power wire sizes that the terminals can accomodate.

Table 4.2 – Power Terminal Block Specifications

Frame	Wire Size Range[1]		Torque
	Maximum	Minimum	
2	6 AWG	18 AWG	1.4 to 1.8 N-m (12 to 15 in-lb)
3	3 AWG	14 AWG	1.9 to 3.8 N-m (16 to 32 in-lb)
5 (60 to 75 HP)	1/0 AWG	14 AWG	3.6 N-m (32 in-lb)
5 (100 HP)	3/0 AWG	4 AWG	15 N-m (133 in-lb)

[1] Maximum/minimum sizes that the terminal block will accept. These are not recommendations.

4.2.3 Recommended Control and Signal Wire Sizes

The terminal block on the I/O interface board provides terminals for 24 V or 115 VAC power for the control inputs, depending on the I/O card installed in the drive. Refer to 4.3 for signal and control wiring specifications.

Table 4.3 – Recommended Signal and Control Wire

Signal Type	Wire Type(s)	Description	Minimum Insulation Rating
Analog I/O	Belden 8760/ 9460 (or equiv.)	18 AWG, twisted pair, 100% shield with drain[1].	300V, 60°C (140°F)
	Belden 8770 (or equiv.)	18 AWG, 3-conductor, shielded for remote pot only.	
Unshielded Control	Per NEC or applicable local code		300V, 60°C (140°F)
Shielded Control	Multi-conductor cable such as Belden 8770 (or equiv.)	100% shield coverage copper, color-coded and jacketed.	300V, 60°C (140°F)

[1] If the wires are short and contained within a cabinet which has no sensitive circuits, the use of shielded wire may not be necessary, but is always recommended.

4.2.4 Recommended Motor Lead Lengths

Typically, motor lead lengths less than 91 m (300 ft) are acceptable. The primary concerns regarding cable length are cable charging and reflected wave (see section 4.2.4).

When total lead length exceeds 300 feet, nuisance trips can occur caused by capacitive current flow to ground. Note that these capacitively-coupled currents should be taken into consideration when working in areas where drives are running. If the motor lead length must exceed these limits, the addition of output line reactors (see section 6.3.1) or other steps must be taken to avoid problems.

Your application may be restricted to a shorter lead length due to:

- the type of wire
- the placement of wire (for example, in conduit or a cable tray)
- the type of line reactor
- the type of motor.

Figure 4.1 illustrates how to calculate motor lead lengths. The examples shown assume a maximum lead length of 300 feet.

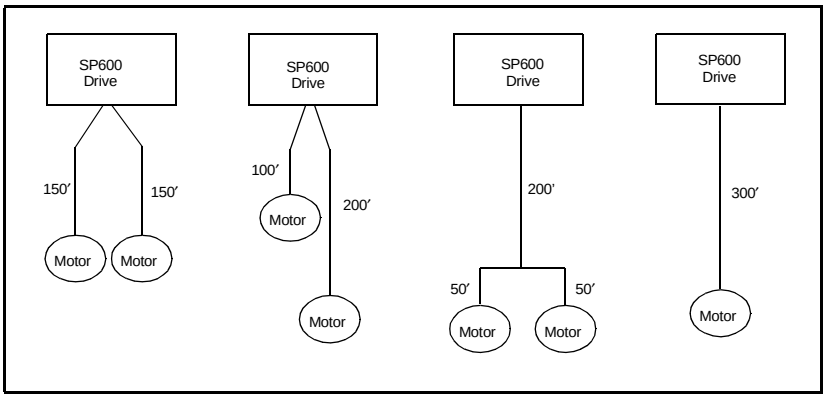

Figure 4.1 – How to Calculate Typical Motor Lead Lengths

4.2.5 Reflected Wave Compensation

The pulses from a pulse width modulation (PWM) inverter using IGBTs are very short in duration (50 nanoseconds to 1 millisecond). These short pulse times, combined with the fast rise times (50 to 400 nanoseconds) of the IGBT, will result in excessive overvoltage transients at the motor.

Voltages in excess of twice the DC bus voltage, (650 V DC nominal @480 V input) result at the motor and can cause motor winding failure.

The patented reflected wave correction software in the SP600 AC drive reduces these overvoltage transients from the drive to the motor. The correction software modifies the PWM modulator to prevent PWM pulses less than a minimum time from being applied to the motor. The minimum time between PWM pulses is 10 microseconds. The modifications to the PWM modulator limit the overvoltage transient to 2.25 per unit volts line-to-line peak at 600 feet of cable.

400 V Line = 540 V DC bus (max) x 2.25 = 1200 V
480 V Line = 715 V DC bus (max) x 2.25 = 1600 V
600 V Line = 891 V DC bus (max) x 2.25 = 2000 V

The software is standard and requires no special parameters or settings.

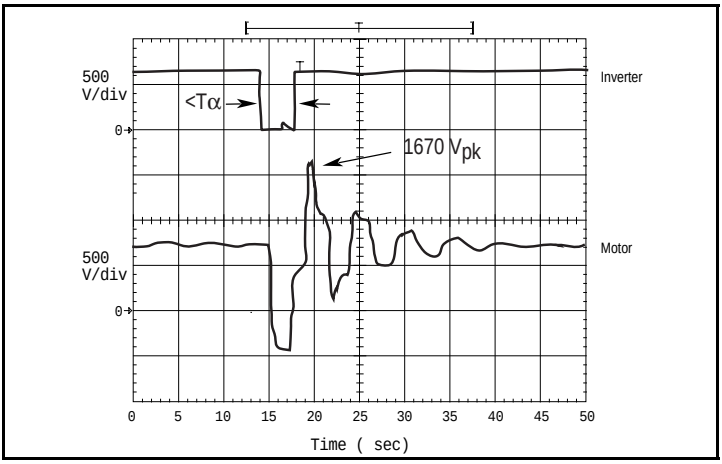

Figure 4.2 – Inverter and Motor Line-to-line Voltages

Figure 4.2 shows the inverter line-to-line output voltage (top trace) and the motor line-to-line voltage (bottom trace) for a 10 HP, 460 V AC inverter, and an unloaded 10 HP AC induction motor at 60 Hz operation. 500 ft. of #12 AWG PVC cable connects the drive to the motor.

Initially, the cable is in a fully charged condition. A transient disturbance occurs by discharging the cable for approximately 4 ms. The propagation delay between the inverter terminals and motor terminals is approximately 1 ms. The small time between pulses of 4 ms does not provide sufficient time to allow the decay of the cable transient. Thus, the second pulse arrives at a point in the motor terminal voltage's natural response and excites a motor overvoltage transient greater than 2 pu.

The amplitude of the double pulsed motor over-voltage is determined by a number of variables. These include the damping characteristics of the cable, bus voltage, and the time between pulses, the carrier frequency, modulation technique, and duty cycle.

Figure 4.3 shows the per-unit motor overvoltage as a function of cable length. This is for no correction versus the modulation correction code for varied lengths of #12 AWG PVC cable to 600 feet for a 4 kHz and 8 kHz carrier frequencies. The output line-to-line voltage was measured at the motor terminals in 100 feet increments.

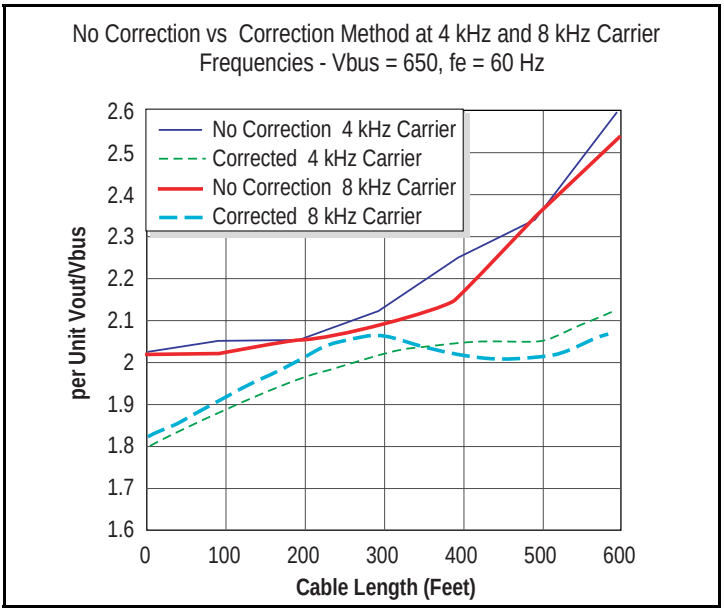

Figure 4.3 – Motor Overvoltage as a Function of Cable Length

Without the correction, the overvoltage increases to unsafe levels with increasing cable length for both carrier frequencies.

The patented modulation correction code reduces the overvoltage for both carrier frequencies and maintains a relatively flat overvoltage level for increasing cable lengths beyond 300 feet.

4.3 Verifying Power Module Output Current Rating is Greater than Motor Full Load Amps

Verify that the SP600 AC drive output current rating is greater than the motor's full load current (amps). Table 2.1 lists the output current values.

4.4 Selecting Input Line Branch Circuit Protection

ATTENTION: Most codes require that upstream branch circuit protection be provided to protect input power wiring. Install the fuses or circuit breakers recommended in table 4.4. Do not exceed the fuse ratings. Failure to observe this precaution could result in damage to, or destruction of, the equipment.

Input line branch circuit protection fuses must be used to protect the input power lines. Table 4.4 provides drive ratings (including continuous, 1 minute and 3 second) and recommended AC line input fuse and circuit breaker information. Both types of short circuit protection are acceptable for UL and IEC requirements. Sizes listed are the recommended sizes based on 40 degree C and the U.S. N.E.C. Other country, state or local codes may require different ratings.

Fusing

If fuses are chosen as the desired protection method, refer to the recommended types listed below. If available amp ratings do not match the tables provided, the closest fuse rating that exceeds the drive rating should be chosen.

IEC – BS88 (British Standard) Parts 1 & 2 , EN60269-1, Parts 1 & 2, type gG or equivalent should be used.

UL – UL Class CC, T, RK1 or J must be used.

Circuit Breakers

The "non-fuse" listings in the following table includes circuit breakers (inverse time or instantaneous trip). If a circuit breaker is chosen as the desired protection method, the following requirements apply.

IEC and UL – devices are acceptable for IEC and UL installations.

Table 4.4 – AC Line Input Fuse Selection Values

Model Number	Frame	Output Amps						Nominal Power Ratings				Dual Element Time Delay Fuse				Non-Time Delay Fuse				Circuit Breaker	
		480 VAC			400 VAC			100% OL Duty		150% OL Duty		480 VAC		400 VAC		480 VAC		400 VAC		480 VAC	400 VAC
		Cont	1 Min	3 Sec	Cont	1 Min	3 Sec	kW	HP	kW	HP	Min	Max	Min	Max	Min	Max	Min	Max	A	A
-027xxxx	2	27	33	44	30	33	45	15	20	11	15	35	60	35	60	35	100	35	120	100	120
-034xxxx	2	34	40.5	54	37	45	60	18.5	25	15	20	40	70	45	80	40	125	45	125	125	125
-040xxxx	3	40	51	68	43	56	74	22	30	18.5	25	50	90	60	90	50	150	60	150	150	150
-052xxxx	3	52	60	80	56	64	86	30	40	22	30	60	110	70	125	60	200	70	200	200	200
-065xxxx	3	65	78	104	72	n/a	n/a	37	50	30	40	75	125	90	150	75	250	90	250	250	250
-077xxxx	5	77	116	154	85	128	170	45	60	37	50	100	170	110	150	100	300	110	300	300	300
-096xxxx	5	96	106	144	105	116	158	66	75	45	60	125	200	125	225	125	350	125	400	350	400
-125xxxx	5	125	138	163	125	138	163	75	100	66	75	150	250	150	275	150	500	150	500	500	500

CHAPTER 5

Finding Wire-Routing Locations and Grounding

This chapter shows entry areas where wiring is to be routed in and out of the drive and how to properly ground it.

5.1 Routing Input, Motor Output, Ground, and Control Wiring for the Drive

All wiring must be installed in conformance with applicable local, national, and international codes, such as NEC/CEC. Signal wiring, control wiring, and power wiring must be routed in separate conduits to prevent interference with drive operation.

Note that no wires are to be routed behind the drive. Use grommets, when hubs are not provided, to guard against wire chafing.

Figure 5.1 shows the wire routing, grounding terminal, and power terminal blocks of the SP600 AC drive.

ATTENTION: Do not route signal and control wiring with power wiring in the same conduit. This can cause interference with drive operation. Failure to observe this precaution could result in damage to, or destruction of, the equipment.

Do not route more than three sets of motor leads through a single conduit. This will minimize cross-talk that could reduce the effectiveness of noise reduction methods. If more than three drive/motor connections per conduit are required, shielded cable must be used. If possible, each conduit should contain only one set of motor leads.

ATTENTION: Unused wires in conduit must be grounded at both ends to avoid a possible shock hazard caused by induced voltages. Also, if a drive sharing a conduit is being serviced or installed, all drives using this conduit should be disabled to eliminate the possible shock hazard from cross-coupled motor leads. Failure to observe these precautions could result in bodily injury.

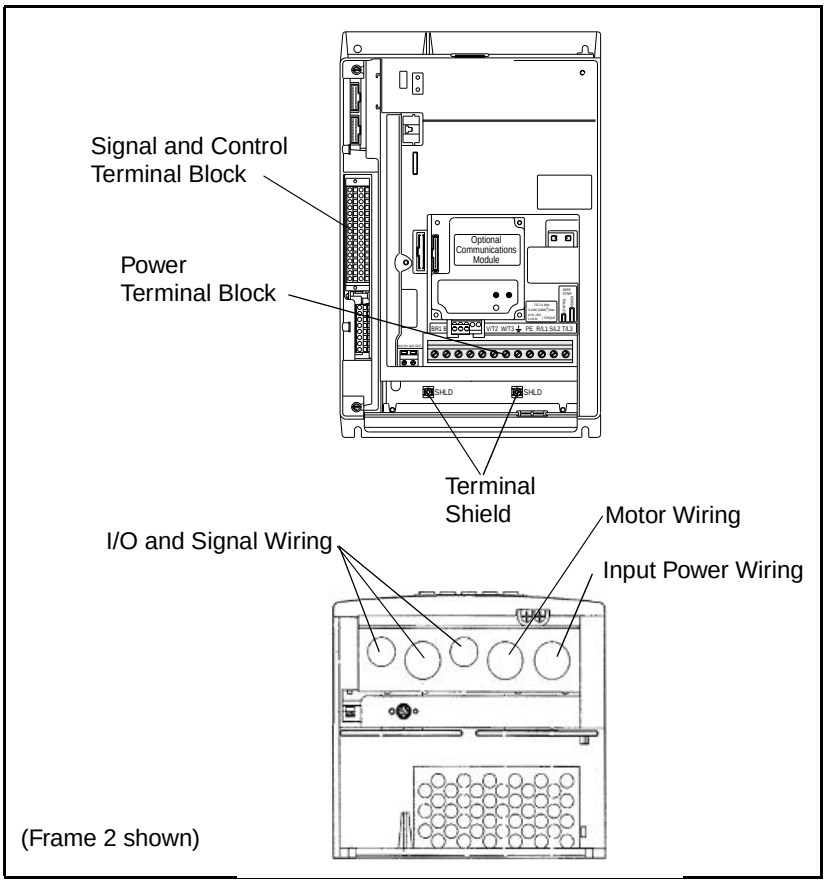

Figure 5.1 – Wire Routing and Terminal Block Locations (Frame 2 Shown)

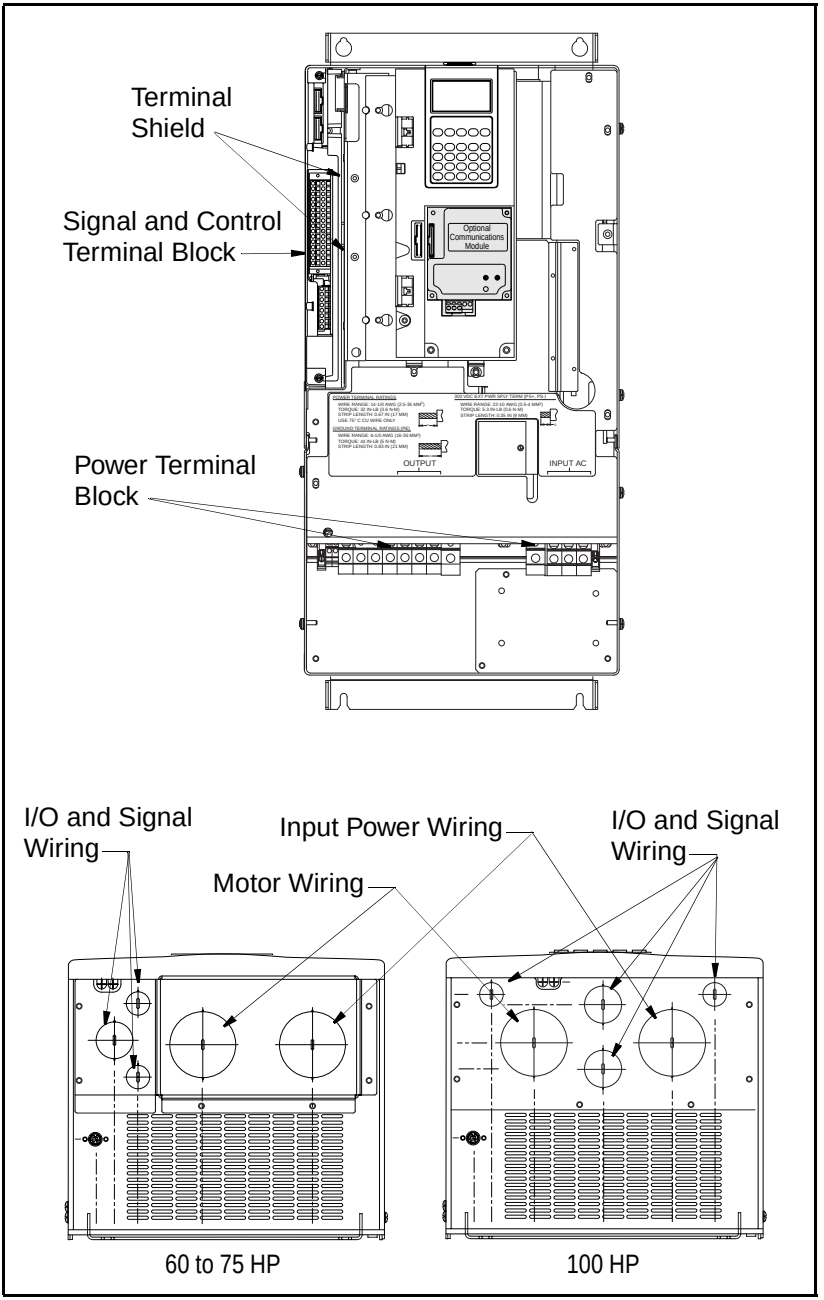

Figure 5.2 – Wire Routing and Terminal Block Locations (Frame 5 Shown)

5.2 Grounding the Drive

ATTENTION: The user is responsible for conforming with all applicable local, national, and international codes. Failure to observe this precaution could result in damage to, or destruction of, the equipment.

If the supply system is grounded, the drive Safety Ground - PE terminal must be connected to system ground. Ground impedance must conform to the requirements of national and local industrial safety regulations and/or electrical codes. The integrity of all ground connections should be periodically checked.

For installations within a cabinet, a single safety ground point or ground bus bar connected directly to building steel should be used. All circuits including the AC input ground conductor should be grounded independently and directly to this point/bar.

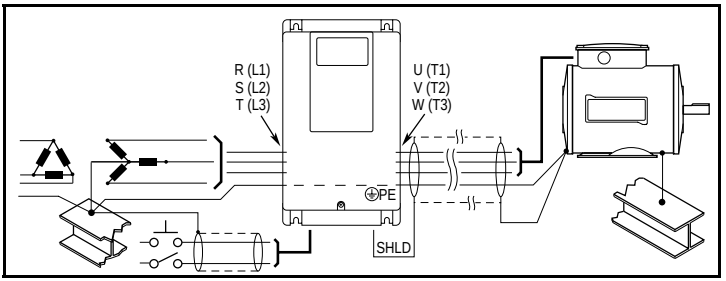

Figure 5.3 – Typical Grounding

Safety Ground - PE

This is the safety ground for the drive that is required by code. This point must be connected to adjacent building steel (girder, joist), a floor ground rod or bus bar (see figure 5.3 and figure 5.4). Grounding points must comply with national and local industrial safety regulations and/or electrical codes.

Shield Termination - SHLD

The SHLD terminal located on the Cable Entry Plate provides a grounding point for the motor cable shield. Refer to figure 5.1 or figure 5.2 for location.

The motor cable shield connected to this terminal on the Cable Entry Plate (drive end) should also be connected to the motor frame (motor end). Use a shield-terminating or EMI clamp to connect shield to this terminal.

When shielded cable is used for control and signal wiring, the shield should be grounded at the source end only, not at the drive end.

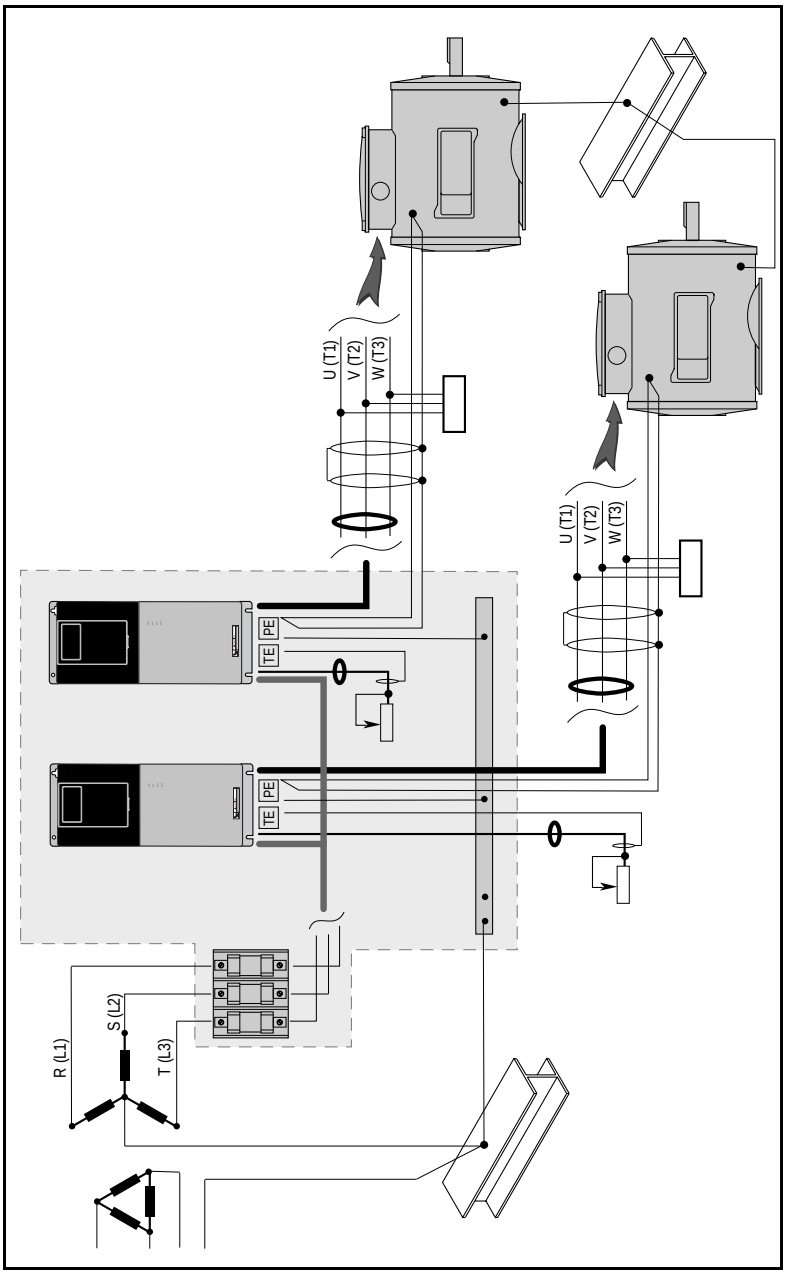

Figure 5.4 – Single-Point Grounding/Panel Layout

CHAPTER 6

Installing Power Wiring

ATTENTION: The user is responsible for conforming with all applicable local and national codes. Failure to observe this precaution could result in damage to, or destruction of, the equipment.

This chapter provides instructions on output wiring to the motor and installing AC input power wiring. Refer to figure 6.2 at the end of this chapter for a description of the power terminal block.

6.1 Opening the Cover

ATTENTION: DC bus capacitors retain hazardous voltages after input power has been removed. After disconnecting input power, wait five minutes for the DC bus capacitors to discharge and then check the voltage with a voltmeter to ensure the DC bus capacitors are discharged before touching any internal components. Failure to observe this precaution could result in severe bodily injury or loss of life.

Follow these steps to open the drive cover.

Step 4. Locate the slot in the upper left hand corner of the drive (see figure 6.1).

Step 5. Slide the locking tab up and swing the door open.

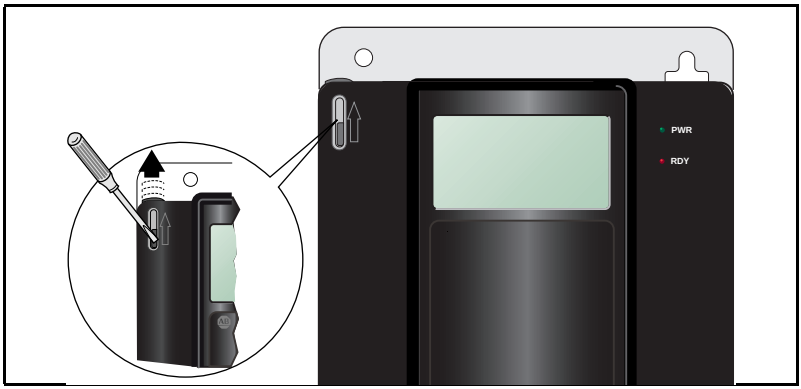

Figure 6.1 – Opening the Drive Cover

6.2 Installing Output Power Wiring

ATTENTION: Do not route signal and control wiring with power wiring in the same conduit. This can cause interference with drive operation. Failure to observe these precautions could result in damage to, or destruction of, the equipment

ATTENTION: Unused wires in conduit must be grounded at both ends to avoid a possible shock hazard caused by induced voltages. Also, if a drive sharing a conduit is being serviced or installed, all drives using this conduit should be disabled to eliminate the possible shock hazard from cross-coupled motor leads. Failure to observe these precautions could result in bodily injury.

To connect the AC output power wiring from the drive to the motor:

Step 1. Wire the three-phase AC output power motor leads by routing them according to drive type. See figure 5.1 to for wire routing locations. Maximum power wiring sizes are shown in table 4.1.

Do not route more than three sets of motor leads through a single conduit. This will minimize cross-talk that could reduce the effectiveness of noise reduction methods. If more than three drive/motor connections per conduit are required, shielded cable must be used. If possible, each conduit should contain only one set of motor leads.

Step 2. Connect the three-phase AC output power motor leads to terminals U/T1, V/T2, and W/T3 on the power terminal block. See figure 6.2.

Step 3. Tighten the three-phase AC output power terminals to the proper torque according to drive type as shown in table 6.1.

Table 6.1 – Terminal Tightening Torques

Frame	Maximum Tightening Torque
2	1.7 N-m (15 in-lb)
3	3.6 N-m (32 in-lb)
5	15 N-m (133 in-lb)

6.3 Installing Input Wiring

Sections 6.3.1 to 6.3.4 describe incoming line components and how to install them.

6.3.1 Installing an Optional Transformer and Reactor

Input isolation transformers might be needed to help eliminate:

- Damaging AC line voltage transients from reaching the drive.
- Line noise from the drive back to the incoming power source.
- Damaging currents that could develop if a point inside the drive becomes grounded.

Observe these guidelines when installing an isolation transformer:

- A power disconnecting device must be installed between the power line and the primary of the transformer.
- If the user-installed power disconnecting device is a circuit breaker, the circuit breaker trip rating must be coordinated with the in-rush current (10 to 12 times full load current) of the transformer.
- Do not use an input isolation transformer rated more than 1000 KVA for 480 VAC with less than 5% impedance directly ahead of the drive without additional impedance between the drive and the transformer.

Table 6.2 shows recommended inductance and line reactor ratings.

Table 6.2 – AC Line Reactors

Drive (HP)	Line Reactor Inductance (±10%)	Reactor Rating (kVAr)
20	0.8 mH	1.04
25	0.8 mH	1.04
30	0.7 mH	1.04
40	0.5 mH	1.43
50	0.4 mH	1.90
75	not available	not available
100	not available	not available

6.3.2 Installing Fuses for Branch Circuit Protection

Install the required branch circuit protection fuses according to the applicable local, national, and international codes (such as NEC/CEC). The fuses or approved circuit breaker must be installed in the line before the drive input terminals. Fuse values are provided in table 4.3.

ATTENTION: Most codes require that upstream branch protection be provided to protect input power wiring. Failure to observe this precaution could result in severe bodily injury or loss of life.

6.3.3 Installing the Required Input Disconnect

An input disconnect must be installed in the line before the drive input terminals in accordance with local, national, and international codes, such as NEC/CEC. The disconnect should be sized according to the in-rush current as well as any additional loads the disconnect might supply. The trip rating for the in-rush current (10 to 12 times full load current) should be coordinated with that of the input isolation transformer, if used.

6.3.4 Installing Power Wiring from the AC Input Line to the Drive's Power Terminals

ATTENTION: Protect the contents of the cabinet from metal chips and other debris while drilling the conduit openings. Failure to observe this precaution could result in damage to, or destruction of, the equipment.

ATTENTION: Do not route signal and control wiring with power wiring in the same conduit. This can cause interference with drive operation. Failure to observe this precaution could result in damage to, or destruction of, the equipment.

To connect AC input power to the drive:

Step 1. Wire the AC input power leads by routing them according to drive type. Refer to figure 5.1. Maximum power wiring sizes are listed in table 4.1.

Step 2. Connect the three-phase AC input power leads to the appropriate terminals. Connect the AC input power leads to terminals R/L1, S/L2, T/L3 on the power terminal block (see figure 6.2).

Step 3. Tighten the AC input power terminals to the proper torque as shown in table 6.1.

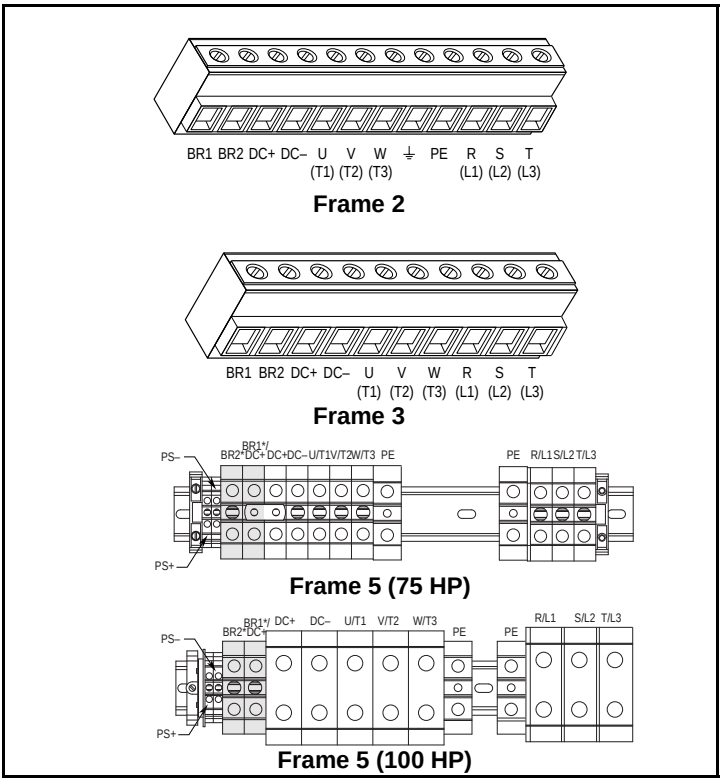

Figure 6.2 – Power Terminal Block

Table 6.3 – Power Terminal Descriptions

Terminal	Description	Notes
BR1	DC Brake	Dynamic brake resistor connection (+)
BR2	DC Brake	Dynamic brake resistor connection (–)
DC+	DC Bus (+)	DC bus test point (+)
DC–	DC Bus (–)	DC bus test point (–)
U	U (T1)	Output to Motor
V	V (T2)	Output to Motor
W	W (T3)	Output to Motor
⏚ [1]	Ground	
PE[1]	PE Ground	Earth Ground
R	R (L1)	AC line input power
S	S (L2)	AC line input power
T	T (L3)	AC line input power

[1] Frame 2 only.

CHAPTER 7

Installing Control Wiring

This chapter describes how to wire the signal and I/O terminal strip for stop, speed feedback, and remote control signals. Wiring of the terminal block is detailed in table 7.1.

7.1 Stop Circuit Requirements

ATTENTION: You must provide an external, hardwired emergency stop circuit outside of the drive circuitry. This circuit must disable the system in case of improper operation. Uncontrolled machine operation can result if this procedure is not followed. Failure to observe this precaution could result in bodily injury.

Depending upon the requirements of the application, the SP600 AC drive can be configured to provide either a coast-to-rest or a ramp-to-rest operational stop without physical separation of the power source from the motor. A coast-to-rest stop turns off the transistor power device drivers. A ramp-to-rest stop fires the transistor power device drivers until the motor comes to a stop, and then turns off the power devices.

In addition to the operational stop, you must provide a hardwired emergency stop external to the drive. The emergency stop circuit must contain only hardwired electromechanical components. Operation of the emergency stop must not depend on electronic logic (hardware or software) or on the communication of commands over an electronic network or link.

Note that the hardwired emergency stop you install can be used at any time to stop the drive.

7.1.1 User-Initiated Stopping

ATTENTION: Note the following about stop commands:

- A stop command from any attached OIM will always be enabled regardless of the value of Logic Source Sel (parameter 89).
- Network stop commands are effective only when Logic Source Sel is set to Network or All Ports.
- Terminal block stop commands are effective only when Logic Source Sel is set to Terminal Blk or All Ports.

Failure to observe these precautions could result in severe bodily injury or loss of life.

The terminal block Drive Enable input and the Function Loss input, if configured, are always active. This is independent of the Logic Source Select setting. The terminal block Stop input must be closed only when the terminal block is the logic source. See figure 7.1.

7.2 Control and Signal Inputs

The drive has six logic inputs that are configurable using parameters 361 to 366. The logic inputs can be 24 V or 115 VAC, depending on the interface board installed in the drive.

There are two relay outputs that are configurable using parameters 380 to 387, two analog inputs, and one analog output.

7.3 Removing the I/O Terminal Block

Step 1. Open the drive cover.

Step 2. Grip the I/O terminal at the top and bottom, and pull straight out.

Step 3. After wiring the terminal block, align the pins and press the terminal block back into place.

7.4 Wiring the Signal and Control I/O

Important: Two I/O boards are available: 24V AC/DC logic and 115 VAC logic. Verify which board is used in your drive before wiring the signal and control I/O terminal block.

Wire the drive's signal and control I/O to the terminal block as shown in table 7.1.

Table 7.1 – Wiring Signal and Control I/O to the Terminal Block

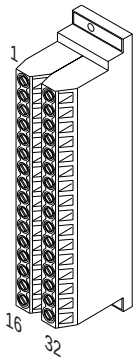

No.	Signal	Factory Default	Description	Related Param.
Analog Inputs				
1	Anlg Volts In 1 (–)	1	Isolated[2], bipolar, differential, ±10 V, 11 bit & sign, 100k ohm input impedance.	320 - 329
2	Anlg Volts In 1 (+)			
3	Anlg Volts In 2 (–)	1	Isolated[3], bipolar, differential, ±10 V, 11 bit & sign, 100k ohm input impedance.	
4	Anlg Volts In 2 (+)			
5	Potentiometer Common	–	For (+) and (–) 10 V pot references.	
Analog Output				
6	Anlg Volts Out 1 (–)	Output Freq[1]	Bipolar, differential, ±10 V, 11 bit & sign, 2k ohm minimum load.	340 - 344
7	Anlg Volts Out 1 (+)			
8	Anlg Current Out 1 (–)	1	4-20 mA, 11 bit & sign, 400 ohm maximum load.	
9	Anlg Current Out 1 (+)			

Table 7.1 – Wiring Signal and Control I/O to the Terminal Block

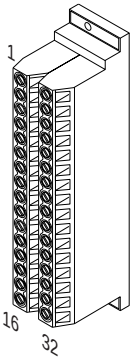

No.	Signal	Factory Default	Description	Related Param.
10	Reserved			
	Digital Outputs			
11	Digital Out 1 – N.C.	Fault	Resistive Load Rating: 2 A at 250 V AC/30 V DC Min. Load: 10 mA Inductive Load Rating: 2 A at 250 V AC/30 V DC Min. Load: 10 mA	380 - 387
12	Digital Out 1 Common			
13	Digital Out 1 – N.O.			
14	Digital Out 2 – N.C.	Running		
15	Digital Out 2 Common			
16	Digital Out 2 – N.O.			
	Analog Inputs			
17	Anlg Current In 1 (–)	[1]	Isolated[2], 4-20 mA, 11 bit & sign, 124 ohm input impedance.	320 - 329
18	Anlg Current In 1 (+)			
19	Anlg Current In 2 (–)	[1]	Isolated[2], 4-20 mA, 11 bit & sign, 124 ohm input impedance.	
20	Anlg Current In 2 (+)			
	Voltage Reference Supplies			
21	–10V Pot Reference	n/a	2k ohm minimum, 15 mA maximum load.	
22	+10V Pot Reference	n/a		
23	Reserved			
24	+24VDC	n/a	Drive supplied power for logic inputs. 150 mA maximum Load.	

Table 7.1 – Wiring Signal and Control I/O to the Terminal Block

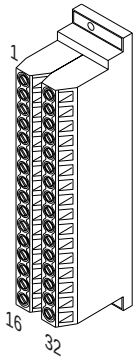

No.	Signal	Factory Default	Description	Related Param.
Voltage Reference Supplies (cont.)				
25	Digital In Common	n/a		
26	24V Power Supply Common (internal)	n/a	Drive supplied power for logic inputs. 150 mA maximum Load.	
Digital Inputs				
27	Digital In1	Stop/CF	24V AC/DC I/O Board Opto isolated (250 V) Low state: less than 5 V AC High State: greater than 10 V AC 115 VAC I/O Board Opto isolated (250 V) Low state: less than 10 V AC High State: greater than 100 V AC	361 - 366
28	Digital In2	Start		
29	Digital In3	Function Loss		
30	Digital In4	Jog		
31	Digital In5	Auto/ Manual		
32	Digital In6	Speed Select		

[1] These inputs/outputs are dependent on a number of parameters. See “Related Parameters” column.

[2] Differential Isolation - External source must be maintained at less than 160 V with respect to PE. Input provides high common mode immunity.

[3] Differential Isolation - External source must be less than 10 V with respect to PE.

7.5 I/O Wiring Examples

ATTENTION: Noise and drift in sensitive bipolar input circuits can cause unpredictable changes in motor speed and direction. Use speed command parameters to help reduce input source sensitivity.

<table>
<tr><th>Input/Output</th><th colspan="3">Connection Example</th></tr>
<tr><td rowspan="2">Unipolar[1]
10k Ohm Pot. Recommended (2k Ohm Minimum)
Bipolar[1]
±10V Input</td><td>Potentiometer</td><td colspan="2">Joystick</td></tr>
<tr><td> 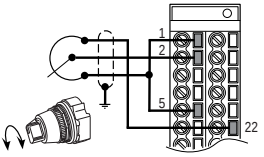 </td><td colspan="2"> 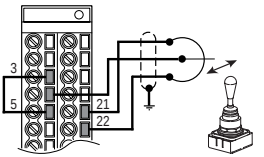 </td></tr>
<tr><td rowspan="2">Analog Input
±10V Input - 100k ohm input impedance.
4-20 mA Input - 100 ohm input impedance</td><td>Voltage - Bipolar[1]</td><td colspan="2">Current - Unipolar</td></tr>
<tr><td> 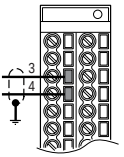 </td><td colspan="2"> 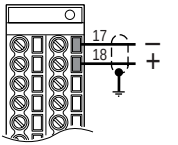 </td></tr>
<tr><td rowspan="2">Analog/Digital Output
±10V Output - Can drive a 10k ohm load (25 mA short circuit current limit).</td><td>Voltage</td><td>Current</td><td>Logic</td></tr>
<tr><td> 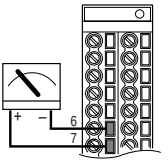 </td><td> 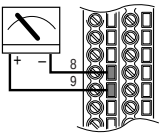 </td><td> 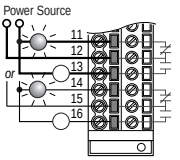 </td></tr>
<tr><td rowspan="2">2 Wire Control[2] - Non-Reversing
Requires 2-wire functions only (Digital In1 Sel). Using 3-wire selections will cause a type 2 alarm.</td><td>24VDC Internal Supply</td><td>24VDC External Supply</td><td>115V External Source</td></tr>
<tr><td> 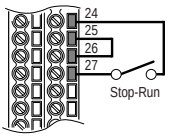 </td><td> 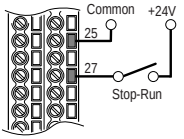 </td><td> 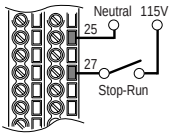 </td></tr>
<tr><td rowspan="2">3 Wire Control
Requires only 3-wire functions (Digital In1 Sel). Including 2-wire selections will cause a type 2 alarm.</td><td>24VDC Internal Supply</td><td>24VDC External Supply</td><td>115V External Source</td></tr>
<tr><td> 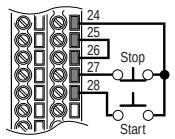 </td><td> 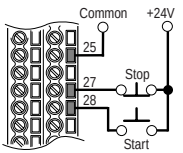 </td><td> 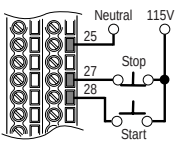 </td></tr>
</table>

[1] Refer to the Attention statement at the top of this page for important bipolar wiring information.

[2] **Important:** Programming inputs for 2-wire control deactivates all OIM Start buttons.

7.6 Wiring Diagram - Control and Motor

ATTENTION: Opening the Function Loss input (3, 9) will stop the drive. You must ensure that all terminal strip inputs are wired properly for your drive configuration. Failure to observe this precaution could result in severe bodily injury or loss of life.

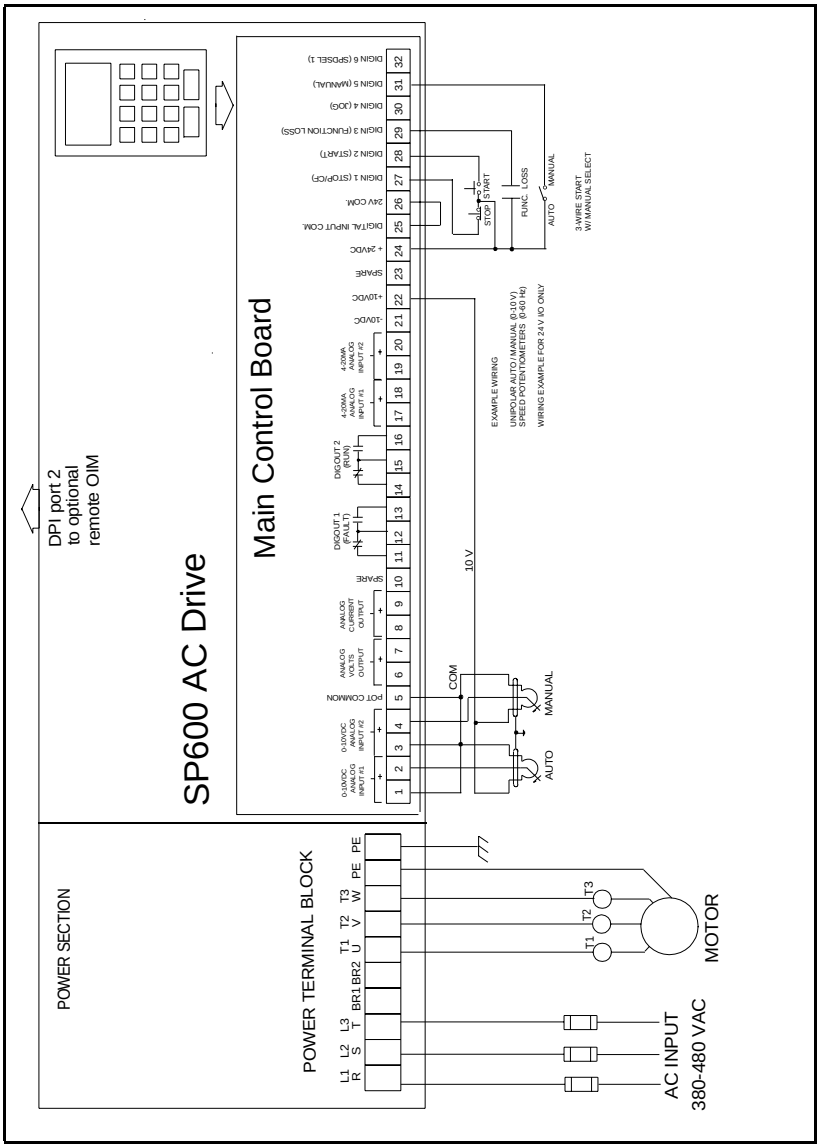

Figure 7.1 – Typical Wiring Diagram

Table 7.2 – Parameter Configuration for Figure 7.1 Wiring Example

Param. Number	Description	Value	Param. Number	Description	Value
90	Spd Ref A	Anlg #1	325	Anlg In 2 Hi	10 V
91	Spd Ref A Hi	60 Hz	326	Anlg In 2 Lo	0 V
92	Spd Ref A Lo	0 Hz	361	Dig In 1 Sel	Stop
96	TB Man Ref	Anlg #2	362	Dig In 2 Sel	Start
97	TB Man Ref Hi	60 Hz	363	Dig In 3 Sel	Func. Loss
98	TB Man Ref Lo	0 Hz	364	Dig In 4 Sel	
320	Analog Conf	xxx.xx00	365	Dig In 5 Sel	Manual
322	Anlg In 1 Hi	10 V	366	Dig In 6 Sel	
323	Anlg In 1 Lo	0 V			

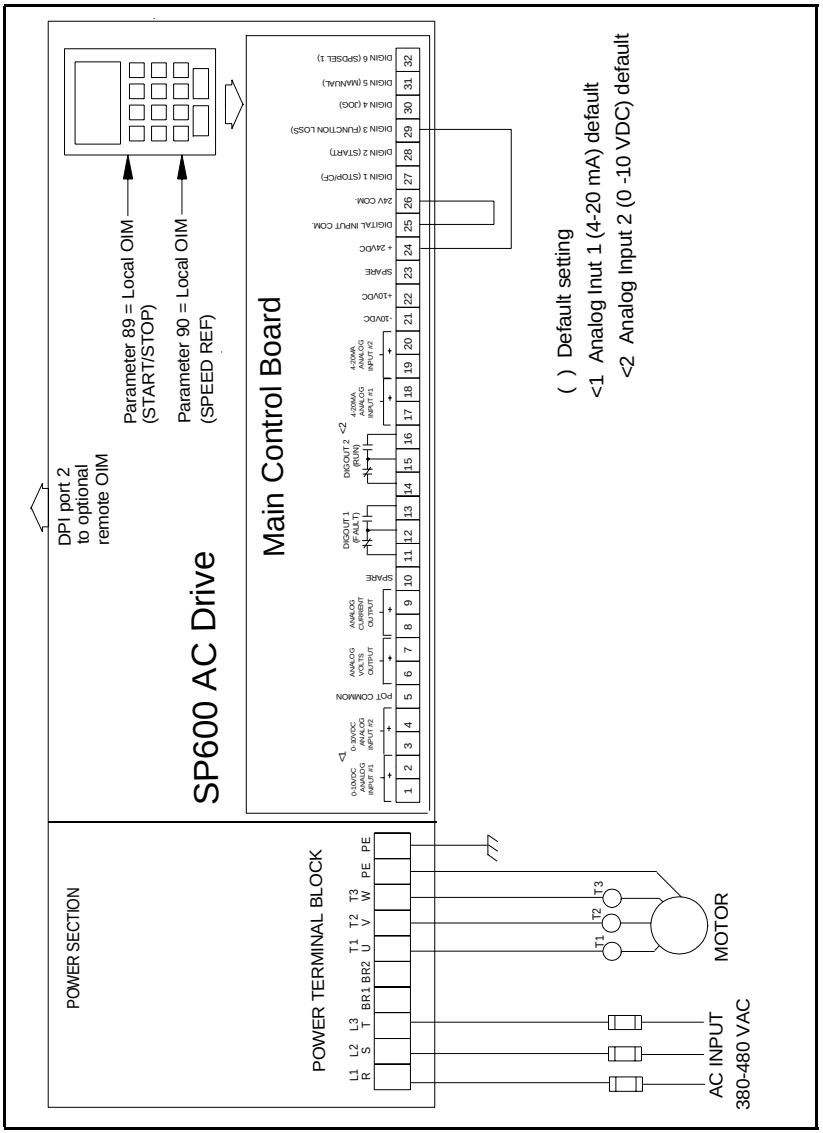

Figure 7.2 – Wiring Diagram - Default Drive Configuration

7.7 Speed Reference Control

The following sections describe methods of obtaining the drive speed reference.

7.7.1 Auto Reference Sources

The drive speed reference can be obtained from a number of different sources. The source is determined by drive programming and the condition of the Speed Select Digital Inputs or reference select bits of a drive command word.

The default source for a speed reference is the selection programmed in Speed Ref A Sel (parameter 90). If Speed Select digital inputs are defined on the terminal block, the drive could use other parameters as the speed reference source.

7.7.2 Manual Reference Sources

The manual reference source can be provided by:

- the terminal block
- an OIM connected to the local port
- remote OIM (port 2 or 3)
- the network port.

Manual reference overrides any auto reference selected. By configuring the LCD OIM's function keys, an LCD OIM can provide a reference from preset speeds 1-7 or from DPI reference ports.

For a terminal block to select a manual source (TB Man Ref Sel (096)), one of its six digital inputs must be configured as "AUTO/ MAN" and must be closed. (See figure 7.4)

7.7.3 Changing Reference Sources

The selection of the active Speed Reference can be made through digital inputs, DPI command, Jog key, or Auto/Manual OIM operation. See figures 7.3 and 7.4.

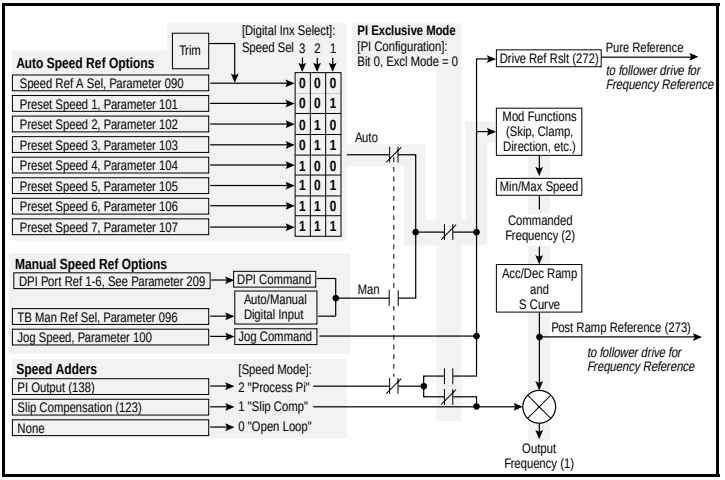

Figure 7.3 – Speed Reference Control Flowchart

7.7.4 Auto/Manual Control

The Auto/Manual input is not part of the logic commands controlled by parameter 89 (Logic Source Sel). The Auto/Manual input affects the speed reference source only.

In Auto reference mode, the reference source is determined by terminal block inputs (if configured) or a parameter (Speed Ref A Sel). Only one port at a time can control (own) the reference source.

In Manual reference mode, the reference source for the drive is based on the port that commanded it most recently. The last source that commands Manual reference mode will determine the reference used by the drive.

The Auto/Manual function is available through the terminal block (edge sensitive) and LCD OIM function keys. If configured on the terminal block, it is possible to have the digital input in the "Manual" position but have the Manual reference being controlled from another port. Because it is an edge-sensitive signal, the digital input would have to be switched to "Auto" and then back to "Manual" to re-acquire Manual reference control.

The Jog reference will bypass the Auto/Manual reference while it is asserted from the control source. When the Jog reference is released, the control source reverts to source that was in effect before the Jog reference was asserted.

7.8 Remote OIM Configuration

If a remote OIM is connected as the user interface for speed reference or logic control, Logic Source Sel (89) and Speed Ref A Select (90) must be configured for the connection port to which the remote OIM is attached. Typically, a remote OIM is connected to port 2 or port 3.

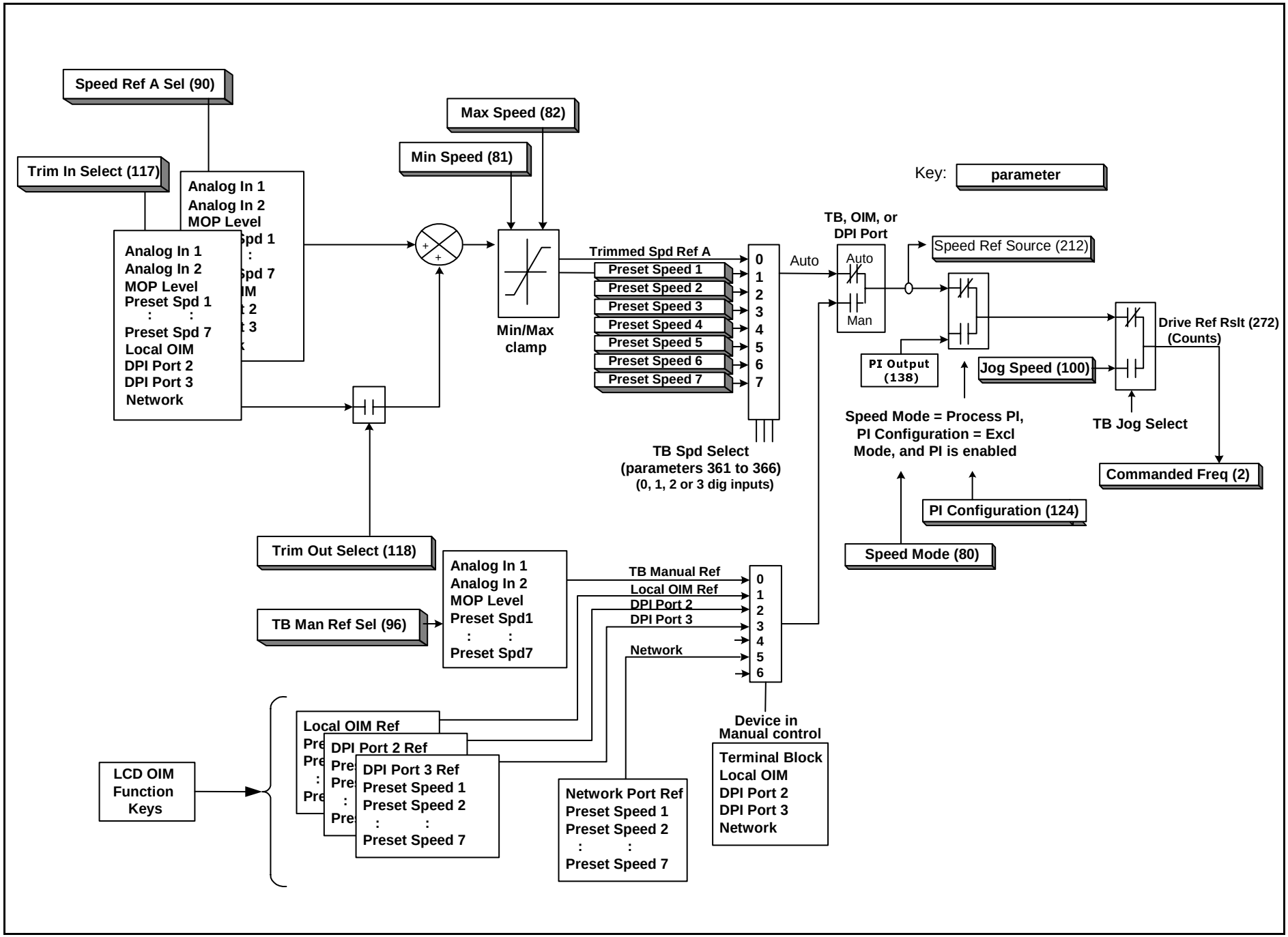

Figure 7.4– Speed Reference Selection

CHAPTER 8

Completing the Installation

This chapter provides instructions on how to perform a final check of the installation before power is applied to the drive.

ATTENTION: Only qualified electrical personnel familiar with the construction and operation of this equipment and the hazards involved should start and adjust it. Read and understand this manual in its entirety before proceeding. Failure to observe this precaution could result in severe bodily injury or loss of life.

8.1 Checking the Installation

ATTENTION: DC bus capacitors retain hazardous voltages after input power has been disconnected. After disconnecting input power, wait five minutes for the DC bus capacitors to discharge and then check the voltage with a voltmeter to ensure the DC bus capacitors are discharged before touching any internal components. Failure to observe this precaution could result in severe bodily injury or loss of life.

ATTENTION: You must provide an external, hardwired emergency stop circuit outside of the drive circuitry. This circuit must disable the system in case of improper operation. Uncontrolled machine operation can result if this procedure is not followed. Failure to observe this precaution could result in bodily injury.

To verify the condition of the installation:

Step 1. Turn off, lock out, and tag the input power to the drive. Wait five minutes.

Step 2. Verify that the DC bus voltage is zero. See section 12.1.

Step 3. If a function loss coast-stop pushbutton has been installed, verify that it has been wired correctly.

Step 4. Remove any debris, such as metal shavings, from around the drive.

Step 5. Check that there is adequate clearance around the drive.

Step 6. Verify that there is nothing mounted behind the drive.

Step 7. Verify that the wiring to the terminal strip and the power terminals is correct.

Step 8. Check that the wire size is within terminal specification and that the terminals are tightened properly.

Step 9. Check that user-supplied branch circuit protection is installed and correctly rated.

Step 10. Check that the incoming power is rated correctly.

Step 11. Check the motor installation and length of motor leads.

Step 12. Disconnect any power correction capacitors connected between the drive and the motor.

Step 13. Check that the rating of the transformer (if used) matches the drive requirements and is connected properly.

Step 14. Verify that a properly-sized ground wire is installed and a suitable earth ground is used. Check for and eliminate any grounds between the motor frame and the motor power leads. Verify that all ground leads are unbroken.

Step 15. Uncouple the motor from any driven machinery.

8.2 Powering Up after Installation is Complete

To verify that the drive is installed correctly and is receiving the proper line voltage:

Step 1. Turn the drive's input power disconnect to the On position.

Step 2. Apply power to the drive.

Step 3. Follow the start-up procedure in chapter 9.

CHAPTER 9

Using the Start-Up Routines on the LCD OIM

ATTENTION: Only qualified electrical personnel familiar with the construction and operation of this equipment and the hazards involved should install, adjust, operate, or service this equipment. Read and understand this chapter in its entirety before proceeding. Failure to observe this precaution could result in severe bodily injury or loss of life.

ATTENTION: Incorrect values for some of the parameters in the Start-Up routines can cause the drive to operate improperly. Verify that the values of these parameters are appropriate for your application. Failure to observe this precaution could result in bodily injury.

For standard applications, the Start-Up routines on the LCD OIM enable you to configure the most commonly used parameters through a series of steps. This helps you set up the drive as quickly as possible.

For advanced applications, you may need to adjust additional parameters in the parameter list using either the LCD OIM or VS Utilities™ software.

9.1 Preparing for Start-Up

Before performing Start-Up, you must:

- be qualified to configure the drive and be familiar with the operation of AC drives.
- be familiar with the operation of the LCD OIM.
- have completed all hardware installation as described in chapters 3 through 8 of this manual.
- properly connect the drive to the motor.

9.2 Running the Start-Up Routines

To access the Start-Up routines, select the Start-Up icon from the main menu as shown in figure 9.1.

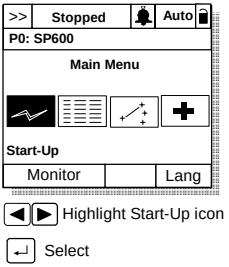

Figure 9.1 – Accessing the Start-Up Routines

The Start-Up menu screen contains 8 selections. The first 7 menu items contain the most commonly used parameters associated with each function. See figure 9.2.

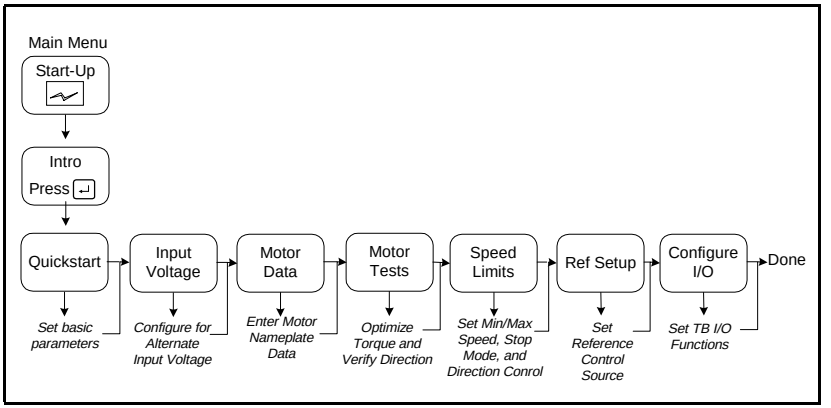

Figure 9.2 – Start-Up Menu

The Start-Up routine automates the process of entering values of selected parameters by taking you to the next parameter after you accept a parameter value. As each item in the list is completed, you are automatically advanced to the next step.

Important: Parameter values are saved as they are changed.

Pressing ESC/PROG or aborting the Start-Up routine will not undo the changes.

You do not have to configure all of the parameters in all 7 menus. The first menu selection, Quickstart, contains the minimum basic parameters that must be configured before running the drive. These parameters are listed in table 9.1.

The drive's default configuration assumes the following:

- US voltage class (202) = High voltage
- Motor nameplate base frequency (43) = 60 Hz
- Control mode (53) = Sensorless Vector
- Logic and Reference Source Select (89, 90) = Local OIM

Quickstart

Table 9.1 – Quickstart Parameters

Parameter No.	Parameter Name	Default
155	Stop Mode A	Ramp
42	Motor NP FLA	Drive-dependent
81	Minimum Speed	0.0 Hz
82	Maximum Speed	60.0 Hz
140	Accel Time 1	10.0 sec
142	Decel Time 1	10.0 sec
90	Speed Ref A Sel	OIM
362	Digital In2 Sel	Start

If your application requires adjustment to parameters beyond those listed in table 9.1, you can adjust the parameters in any or all of the next 6 selections in the Start-Up menu, or you can adjust parameters individually through the Parameters menu (see section 10.3).

Input Voltages

- 400/480 V

Motor Nameplate Data

- Motor Power Units
- Motor Power
- Motor FLA
- Motor Volts
- Motor Hertz
- Motor RPM

Motor Tests

- Direction
- Autotune

ATTENTION: Rotation of the motor in an indesired direction can occur during the Autotune procedure (Autotune (61) = Rotate Tune (2)). Disconnect the motor before proceeding. Failure to observe this precaution can result in damage to, or destruction of, the equipment.

Speed Limits

- Minimum, Maximum
- Direction Limit
- Stop Mode

Reference Setup

- OIM, Terminal Block, Network, Other

Configure I/O

- Digital Inputs/Outputs
- Two/Three Wire Start
- Analog Outputs

As you adjust the parameters in the Start-Up routines, record them in Appendix F.

When you have completed adjusting all of the parameters in the Start-Up routines that your application requires, select the last item in the menu, Done.

Exiting Before Completing the Start-Up Routines

To exit the Start-Up routines, press the F4 key (Exit). When you select the Start-Up icon from the main menu again, you will be prompted to either continue or restart the Start-Up routines. If you select “continue,” you will be returned to the point at which you exited.

9.2.1 Sensorless Vector Performance

If sensorless vector operation is required, Torque Performance (53) must be set to SVC operation. Autotune (61) must be reviewed to determine the appropriate method of autotuning.

9.2.2 High Speed Operation (>120 Hz)

The SP600 drive can operate at output frequencies of up to 400 Hz. In this case, autotuning may not be able to accurately tune the drive's current regulator. Hardware overcurrent faults may occur, and manual tuning using VS Utilities may be necessary. Consult technical support if this occurs.

9.3 Start/Stop Control

The default configuration is for keypad control. You can start and stop the drive from the local OIM.

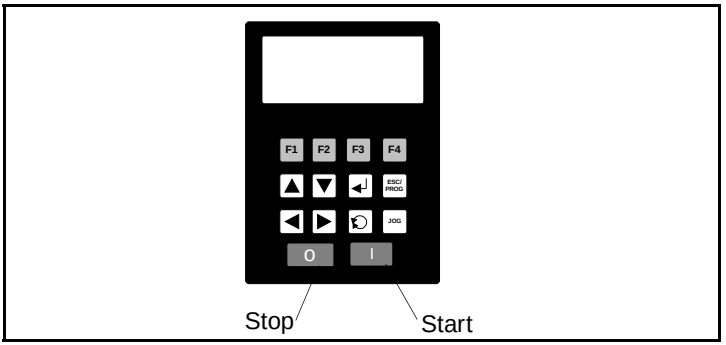

Figure 9.3 – Start/Stop Control using the Local OIM

To configure the drive for two-wire or three-wire Start/Stop control, you must set a terminal block input to either the Run function (2-wire) or Start function (3-wire). See section 7.5 for I/O wiring examples.

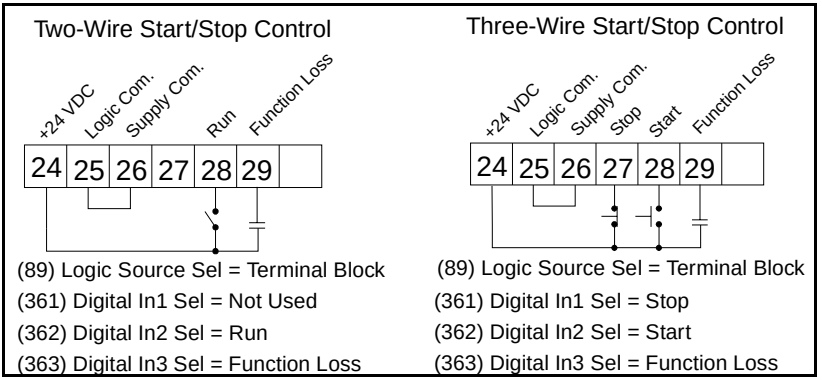

Figure 9.4 – Two-Wire and Three-Wire Start/Stop Control

9.4 Speed Reference

The default configuration is for keypad reference source. If you want to use an analog reference input for control, you must configure the analog reference inputs. The example below shows speed reference from an analog voltage input. Analog inputs can also be configured for 4 to 20 mA.

Analog Reference Wiring (Voltage)

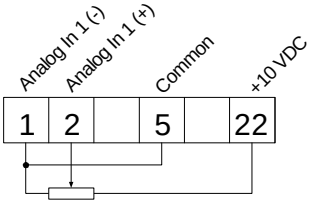

(90) Speed Ref A Sel = Analog In1
(91) Speed Ref Hi = 60 Hz
(92) Speed Ref Lo = 0 Hz
(P320) Analog In Config = ..xx00
(P322) Analog In Hi = 10.0 V
(P323) Analog In Lo = 0.0 V

Figure 9.5 – Analog Speed Reference

CHAPTER 10

Programming Basics

To program the drive for a specific application, you adjust the appropriate parameters. The parameters are used to define characteristics of the drive.

This chapter provides an overview of parameter types and how they are organized. Parameter descriptions are provided in chapter 11.

10.1 About Parameters

There are three types of parameters:

- **Numbered List Parameters**
  Numbered list parameters allow a selection from two or more options. The LCD OIM displays a text message for each item.
  Example: Speed Ref A Sel (90)
- **Bit Parameters**
  Bit parameters have individual bits associated with features or conditions. If the bit is 0, the feature is off or the condition is false. If the bit is 1, the feature is on or the condition is true.
  Example: Drive Status 1 (209)
- **Numeric Parameters**
  These parameters have a single numerical value (for example, 0.1 volts).
  Example: Maximum Freq (55)

Parameters are also either configurable or tunable, or read-only.

Configurable parameters can be adjusted or changed only while the drive is stopped.

Tunable parameters can be adjusted or changed while the drive is running or stopped.

Read-only parameters cannot be adjusted.

10.2 How Parameters are Organized

Parameters are organized into seven files:

- Monitor
- Motor Control
- Speed Command
- Dynamic Control
- Utility
- Communication
- Inputs & Outputs

Each file contains parameters that are grouped by their function. A file can contain several groups of parameters. See figure 10.1.

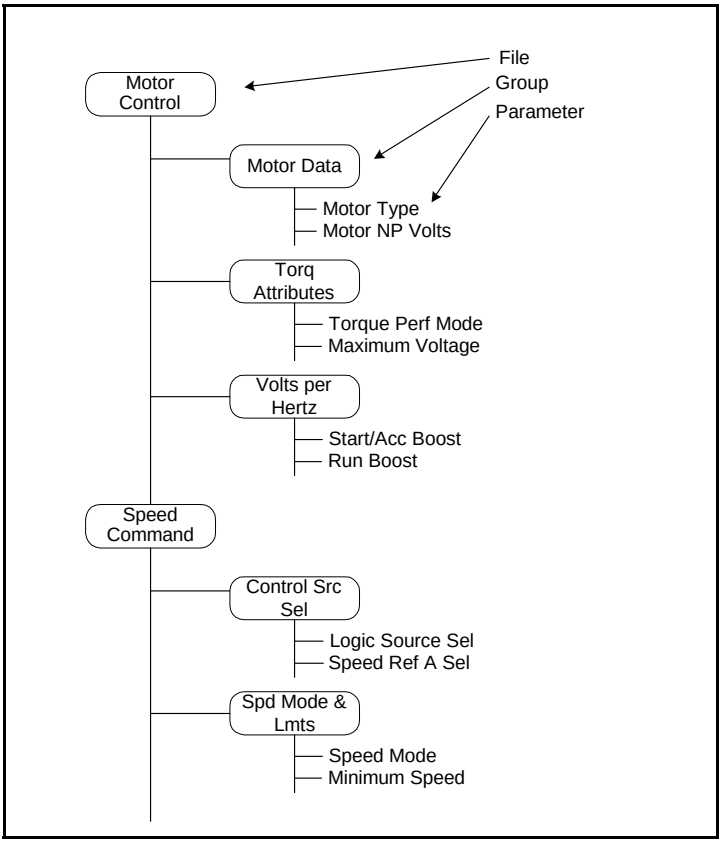

Figure 10.1 – Example of Parameter Organization

10.3 Accessing the Parameters

Parameters are programmed and viewed using the LCD OIM or VS Utilities software.

The LCD OIM displays parameters by group, by individual parameter number, and parameters that have changed from their default value.

To access parameters using the LCD OIM, select the Parameters icon from the main screen. See figure 10.2.

See Appendix B for information on modifying parameters using the LCD OIM.

See instruction manual D2-3488 for information on accessing and modifying parameters using VS Utilities software.

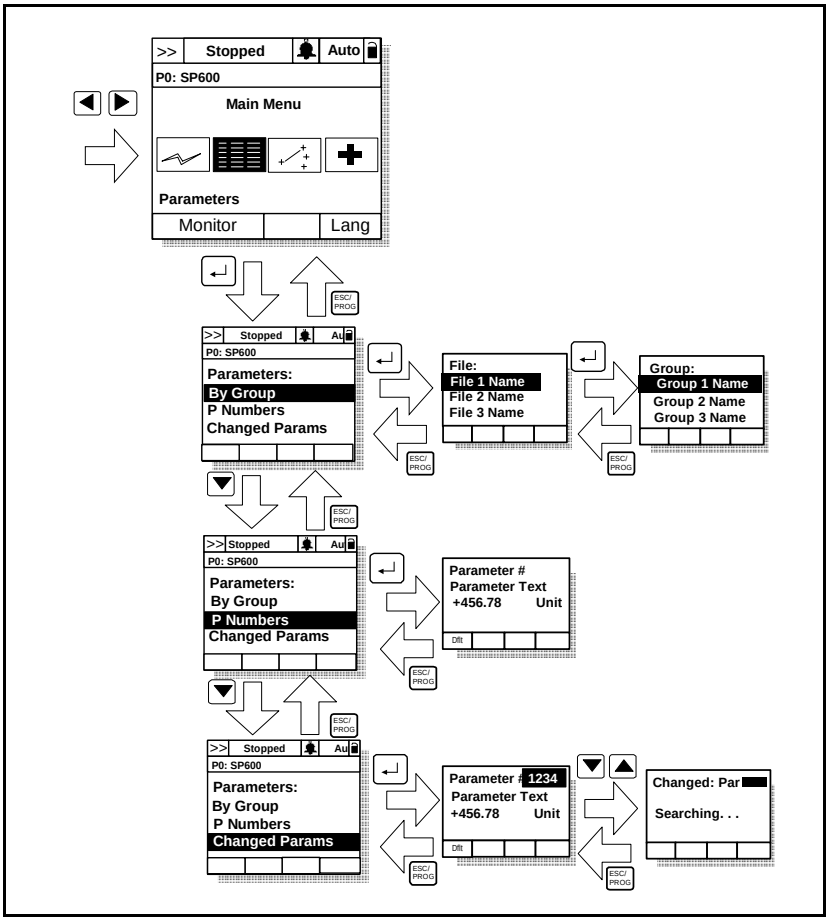

Figure 10.2 – Accessing the Parameters Using the LCD OIM

10.3.1 Selecting the Parameter Access Level

The SP600 AC drive provides three levels of access to the parameters: Basic (0), Standard (1), and Advanced (2).

The Advanced level allows access to all of the parameters.

The Standard level allows access to a subset of the Advanced level and is used for more sophisticated applications than the Basic level.

The Basic level allows access to a subset of the Standard level and contains only the most commonly used parameters.

The active access level is displayed in Parameter Access Level (196).

To select the parameter access level using the LCD OIM, select the Password icon from the main menu. See figure 10.3.

This option is not supported in the VS Utilities software.

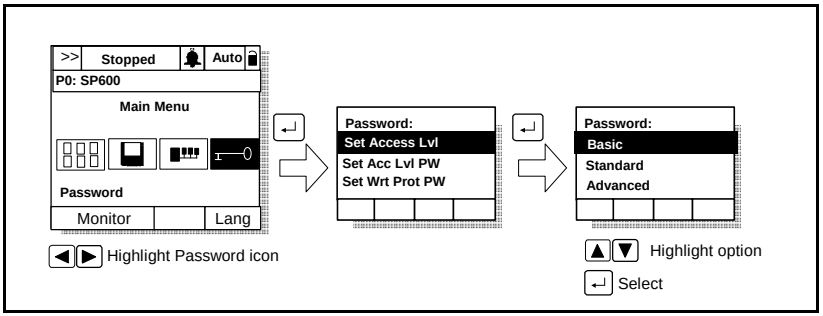

Figure 10.3 – Selecting the Parameter Access Level

10.3.2 Restricting Access to Other Parameter Levels

ATTENTION: It is the user's responsibility to determine how to distribute the access level password. Reliance Electric is not responsible for unauthorized access violations within the user's organization. Failure to observe this precaution could result in bodily injury.

The LCD OIM provides the option to restrict access to other parameter levels. This feature requires the use of a user-defined password when an attempt to change the access level is made.

To set the access level password, select the Password icon from the main menu. See figure 10.4. The password value can range from 1 to 9999. A value of 0 disables the password (factory default). You must either select Logout or return to the process display screen to activate the password.

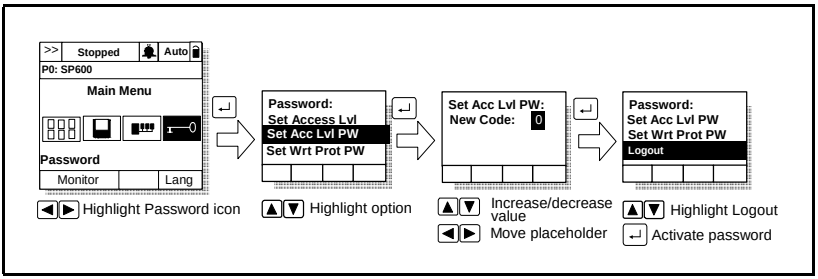

Figure 10.4 – Setting the Access Level Password

When you enter the password, you can change access levels until you select Logout or return to the process display screen, which re-activates the password. Refer to section B.8 in Appendix B for information about the process display screen.

Note that once the password is enabled, you will also be prompted to enter the password to access the Set Acc Lvl PW option.

This option is not supported in the VS Utilities software.

If There is More Than One OIM Connected to the Drive

Note that setting or changing the access level password on one OIM will set or change the access level password for all OIMs connected to the drive.

10.4 Ensuring Program Security

ATTENTION: It is the user's responsibility to determine how to distribute the write-protect password. Reliance Electric is not responsible for unauthorized access violations within the user's organization. Failure to observe this precaution could result in bodily injury.

Parameter values can be password-protected using the LCD OIM. When the password is enabled, parameter values can be displayed. However, if there is an attempt to change a parameter value, a password pop-up box will appear on the OIM screen to prompt for the user-defined password.

To set the write-protect password, select the Password icon from the main menu. See figure 10.5. The password value can range from 1 to 9999. A value of 0 disables the password (factory default).

When the password is enabled, the lock symbol on the screen changes from 🔓 to 🔒.

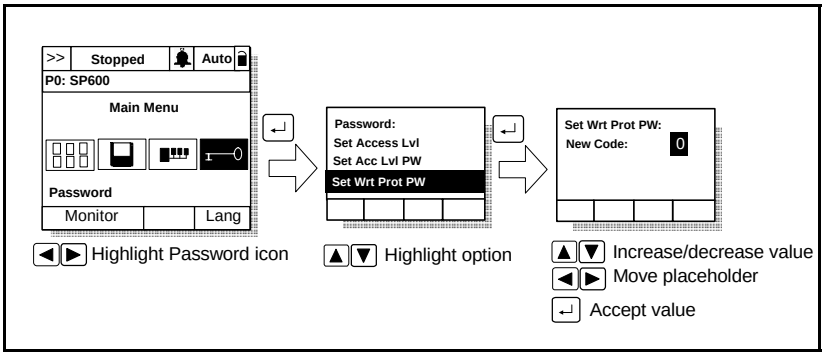

Figure 10.5 – Setting the Write-Protect Password

When you enter the password, you can adjust parameters until you select Logout or return to the process display screen, which re-activates the password. Refer to section B.8 in Appendix B for information about the process display screen.

This option is not supported in the VS Utilities software.

If There is More Than One OIM Connected to the Drive

Important: Setting the write-protect password value to zero on one OIM will disable the write-protect password on all connected OIMs.

Setting the write-protect password in one OIM will not affect any other OIM connected to the drive unless a write-protect password

has also been set in the other OIMs. In this case, the last password value entered becomes the password value for all password-protected OIMs. (Each OIM cannot have a different password value.)

For example, if the write-protect password has been set to 5555 for the local OIM, someone using a remote OIM with no write-protect password set can still program all of the parameters. If the write-protect password is then set to 6666 on the remote OIM, you will be required to enter 6666 on the local OIM to program the parameters.

CHAPTER 11

Parameter Descriptions

The following information is provided for each parameter along with its description:

Parameter Number:	Unique number assigned to each parameter.
Parameter Name:	Unique name assigned to each parameter.
Range:	Predefined parameter limits or selections. Note that a negative Hz value indicates reverse rotation.
Default:	Factory default setting.
Access:	Parameter access level. 0 = Basic (reduced parameter set) 1 = Standard (reduced parameter set) 2 = Advanced (full parameter set)
Path:	Menu selections to reach specified parameter. The path is indicated in this manner: File>Group
See also:	Associated parameters that may provide additional or related information.

What the Symbols Mean

Symbol	Meaning
	32-bit parameter
	Drive must be stopped before changing parameter value.

The parameters are presented in numerical order. Appendix C contains a list of parameters by name cross-referenced to parameter number.

Table 11.1 – Parameter List

No.	Parameter Name	Access Level	No.	Parameter Name	Access Level
1	Output Freq	0	63	Flux Current Ref	1
2	Commanded Freq	0	64	Ixo Voltage Drop	2
3	Output Current	0	69	Start/Acc Boost	2
4	Torque Current	1	70	Run Boost	2
5	Flux Current	1	71	Break Voltage	2
6	Output Voltage	0	72	Break Frequency	2
7	Output Power	0	80	Speed Mode	2
8	Output Power Fctr	2	81	Minimum Speed	0
9	Elapsed MWh	2	82	Maximum Speed	0
10	Elapsed Run Time	1	83	Overspeed Limit	2
11	MOP Frequency	1	84	Skip Frequency 1	2
12	DC Bus Voltage	1	85	Skip Frequency 2	2
13	DC Bus Memory	2	86	Skip Frequency 3	2
16	Analog In1 Value	1	87	Skip Freq Band	2
17	Analog In2 Value	1	89	Logic Source Sel	0
26	Rated kW	0	90	Speed Ref A Sel	0
27	Rated Volts	0	91	Speed Ref A Hi	1
28	Rated Amps	0	92	Speed Ref A Lo	1
29	Control SW Ver	0	96	TB Man Ref Sel	1
40	Motor Type	2	97	TB Man Ref Hi	1
41	Motor NP Volts	1	98	TB Man Ref Lo	1
42	Motor NP FLA	1	100	Jog Speed	0
43	Motor NP Hertz	1	101	Preset Speed 1	2
44	Motor NP RPM	1	102	Preset Speed 2	2
45	Motor NP Power	1	103	Preset Speed 3	2
46	Mtr NP Pwr Units	2	104	Preset Speed 4	2
47	Motor OL Hertz	2	105	Preset Speed 5	2
48	Motor OL Factor	2	106	Preset Speed 6	2
53	Torque Perf Mode	2	107	Preset Speed 7	2
54	Maximum Voltage	2	117	Trim In Select	2
55	Maximum Freq	2	118	Trim Out Select	2
56	Compensation	2	119	Trim Hi	2
57	Flux Up Mode	2	120	Trim Lo	2
58	Flux Up Time	2	121	Slip RPM @ FLA	2
59	SV Boost Filter	2	122	Slip Comp Gain	2
61	Autotune	0	123	Slip RPM Meter	2
62	IR Voltage Drop	1	124	PI Configuration	2

Read Only Parameter

Table 11.1 – Parameter List

No.	Parameter Name	Access Level	No.	Parameter Name	Access Level
125	PI Control	2	170	Flying StartGain	2
126	PI Reference Sel	2	174	Auto Rstrt Tries	1
127	PI Setpoint	2	175	Auto Rstrt Delay	1
128	PI Feedback Sel	2	178	Sleep-Wake Mode	2
129	PI Integral Time	2	179	Sleep-Wake Ref	2
130	PI Prop Gain	2	180	Wake Level	2
131	PI Lower Limit	2	181	Wake Time	2
132	PI Upper Limit	2	182	Sleep Level	2
133	PI Preload	2	183	Sleep Time	2
134	PI Status	2	184	Power Loss Mode	1
135	PI Ref Meter	2	185	Power Loss Time	1
136	PI Fdback Meter	2	186	Power Loss Level	2
137	PI Error Meter	2	190	Direction Mode	0
138	PI Output Meter	2	192	Save OIM Ref	2
140	Accel Time 1	0	193	Man Ref Preload	2
141	Accel Time 2	2	194	Save MOP Ref	2
142	Decel Time 1	0	195	MOP Rate	2
143	Decel Time 2	2	196	Param Access Lvl	0
146	S Curve %	0	197	Reset To Defalts	0
147	Current Lmt Sel	2	198	Load Frm Usr Set	1
148	Current Lmt Val	0	199	Save To User Set	1
149	Current Lmt Gain	2	200	Reset Meters	1
150	Drive OL Mode	1	201	Language	2
151	CarrierFrequency	0	202	Voltage Class	2
155	Stop Mode A	1	203	Drive Checksum	2
156	Stop Mode B	1	209	Drive Status 1	2
157	DC Brake Lvl Sel	1	210	Drive Status 2	2
158	DC Brake Level	1	211	Drive Alarm 1	1
159	DC Brake Time	1	212	Drive Alarm 2	1
160	Bus Reg Gain	2	213	Speed Ref Source	2
161	Bus Reg Mode A	2	214	Start Inhibits	2
162	Bus Reg Mode B	2	215	Last Stop Source	2
163	DB Resistor Type	1	216	Dig In Status	2
164	Bus Reg Kp	2	217	Dig Out Status	
165	Bus Reg Kd	2	218	Drive Temp	
168	LevelSense Start	2	219	Drive OL Count	
169	Flying Start En	2	220	Motor OL Count	

Table 11.1 – Parameter List

No.	Parameter Name	Access Level	No.	Parameter Name	Access Level
224	Fault Frequency	2	313	Data Out B2 - Link B Word 2	2
225	Fault Amps	2	314	Data Out C1 - Link C Word 1	2
226	Fault Bus Volts	2	315	Data Out C2 - Link C Word 2	2
227	Status 1 @Fault	2	316	Data Out D1 - Link D Word 1	2
228	Status 2 @ Fault	2	317	Data Out D2 - Link D Word 2	2
229	Alarm 1 @Fault	1	320	Anlg In Config	0
230	Alarm 2 @ Fault	1	321	Anlg In Sqr Root	2
234	Testpoint 1 Sel	2	322	Analog In 1 Hi	0
235	Testpoint 1 Data	2	323	Analog In 1 Lo	0
236	Testpoint 2 Sel	2	324	Analog In 1 Loss	2
237	Testpoint 2 Data	2	325	Analog In 2 Hi	2
238	Fault Config 1	2	326	Analog In 2 Lo	2
240	Fault Clear	2	327	Analog In 2 Loss	2
241	Fault Clear Mode	2	340	Anlg Out Config	1
242	Power Up Marker	2	341	Anlg Out Absolut	2
259	Alarm Config 1	2	342	Analog Out1 Sel	1
271	Drive Logic Rslt	2	343	Analog Out1 Hi	1
272	Drive Ref Result	2	344	Analog Out1 Lo	1
273	Drive Ramp Result	2	361	Digital In1 Sel	1
286	Manual Mask	2	362	Digital In2 Sel	1
288	Stop Owner	2	363	Digital In3 Sel	1
298	Manual Owner	2	364	Digital In4 Sel	1
300	Data In A1 - Link A Word 1	2	365	Digital In5 Sel	1
301	Data In A2 - Link A Word 2	2	366	Digital In6 Sel	1
302	Data In B1 - Link B Word 1	2	380	Digital Out1 Sel	1
303	Data In B2 - Link B Word 2	2	381	Dig Out1 Level	1
304	Data In C1 - Link C Word 1	2	382	Dig Out1 OnTime	2
305	Data In C2 - Link C Word 2	2	383	Dig Out1 OffTime	2
306	Data In D1 - Link D Word 1	2	384	Digital Out2 Sel	1
307	Data In D2 - Link D Word 2	2	385	Dig Out2 Level	1
310	Data Out A1 - Link A Word 1	2	386	Dig Out2 OnTime	2
311	Data Out A2 - Link A Word 2	2	387	Dig Out2 OffTime	2
312	Data Out B1 - Link B Word 1	2			

1 Output Freq

Range: +/-400.0 Hz [0.1 Hz]

Default: Read Only

Access: 0 **Path:** Monitor>Metering

See also:

The output frequency present at T1, T2, and T3 (U, V, and W). This value includes reference, slip comp, and IR compensation.

2 Commanded Freq

Range: +/- 400.0 Hz [0.1 Hz]

Default: Read Only

Access: 0 **Path:** Monitor>Metering

See also:

The value of the active pre-ramp reference frequency command.

3 Output Current

Range: 0.0 to Drive Rated Amps x 2 [0.1 Amps]

Default: Read Only

Access: 0 **Path:** Monitor>Metering

See also:

The total output current present at T1, T2, and T3 (U, V, and W), which includes torque and flux components.

4 Torque Current

Range: Drive Rating x -2 to +2 [0.1 Amps]

Default: Read Only

Access: 1 **Path:** Monitor>Metering

See also:

The amount of current that is in phase with the fundamental voltage component. This is the torque-producing component of the output current.

5 Flux Current

Range: Drive Rating x -2 to +2 [0.1 Amps]
Default: Read Only
Access: 1 **Path:** Monitor>Metering
See also:

The amount of current that is out of phase with the fundamental voltage component. This is the magnetizing component of the output current.

6 Output Voltage

Range: 0.0 to Drive Rated Volts [0.1 VAC]
Default: Read Only
Access: 0 **Path:** Monitor>Metering
See also:

The output voltage present at T1, T2, and T3 (U, V, and W).

7 Output Power

Range: 0.0 to Drive Rated kW x 2 [0.1 kW]
Default: Read Only
Access: 0 **Path:** Monitor>Metering
See also:

The output power present at T1, T2, and T3 (U, V, and W).

8 Output Powr Fctr

Range: 0.00 to 1.00 [0.01]
Default: Read Only
Access: 2 **Path:** Monitor>Metering
See also:

The output power factor.

9 Elapsed MWh

Range: 0.0 to 429,496,729.5 MWh [0.1 MWh]
Default: Read Only
Access: 2 **Path:** Monitor>Metering
See also:

The accumulated output energy of the drive.

10 Elapsed Run Time

32

Range: 0.0 to 429,496,729.5 Hr [0.1 Hr]
Default: Read Only
Access: 1 **Path:** Monitor>Metering
See also: 194,195

The accumulated time the drive has been outputting power.

11 MOP Frequency

Range: +/- 400.0 [0.1 Hz]
Default: Read Only
Access: 1 **Path:** Monitor>Metering
See also:

The setpoint value of the MOP (Motor-Operated Potentiometer) function.

12 DC Bus Voltage

Range: 0.0 to 460 / 920 VDC[1] [0.1 VDC]
Default: Read Only
Access: 1 **Path:** Monitor>Metering
See also:

[1]200% of bus voltage limit.

The present DC bus voltage level.

13 DC Bus Memory

Range: 0.0 to 460 / 920 VDC[1] [0.1 VDC]
Default: Read Only
Access: 2 **Path:** Monitor>Metering
See also:

[1]200% of bus voltage limit.

A six-minute average of the DC bus voltage level.

16 Analog In1 Value
17 Analog In2 Value

Range: 4.000 to 20.000 mA [0.001 mA]
-/+10.0 V [0.1 V]

Default: Read Only

Access: 16=1 **Path:** Monitor>Metering
17=1

See also: 320

The value of the signal at the analog inputs. This value does not include scaling information programmed by the user (for example, Analog In1 Hi). The terminals monitored depend on the setting of Anlg In Config (320). The inputs can be configured as voltage or current.

26 Rated kW

Range: 0.37 to 87.0 kW [0.1 kW]

Default: Read Only

Access: 0 **Path:** Monitor>Drive Data

See also:

The drive power rating.

27 Rated Volts

Range: 208 to 600 V [0.1 VAC]

Default: Read Only

Access: 0 **Path:** Monitor>Drive Data

See also:

The drive input voltage class (208, 240, 400, etc.).

28 Rated Amps

Range: 1.1 to 125.0 Amps [0.1 Amps]

Default: Read Only

Access: 0 **Path:** Monitor>Drive Data

See also:

The drive rated output current.

29 Control SW Ver

Range: 0.000 to 65.256 [0.001]

Default: Read Only

Access: 0 **Path:** Monitor>Drive Data

See also: 196

The Main Control board software version.

40 Motor Type

Range: 0 = Induction
1 = Synchr Reluc
2 = Synchr PM

Default: 0 = Induction

Access: 2 **Path:** Motor Control>Motor Data

See also:

Set to match the type of motor connected.

41 Motor NP Volts

Range: 0.0 to Drive Rated Volts [0.1 VAC]

Default: Based on Drive Type

Access: 1 **Path:** Motor Control>Motor Data

See also:

Set to the motor nameplate rated volts. The motor nameplate base voltage defines the output voltage when operating at rated current, rated speed, and rated temperature.

42 Motor NP FLA

Range: 0.0 to Rated Amps x 2 [0.1 Amps]

Default: Based on Drive Type

Access: 1 **Path:** Motor Control>Motor Data

See also: 47, 48

Set to the motor nameplate rated full load amps. The motor nameplate FLA defines the output amps when operating at rated voltage, rated speed, and rated temperature. It is used in the motor thermal overload and in the calculation of slip.

43 Motor NP Hertz

Range: 5.0 to 400.0 Hz [0.1 Hz]
Default: Based on Drive Type
Access: 1 **Path:** Motor Control>Motor Data
See also:

Set to the motor nameplate rated frequency. The motor nameplate base frequency defines the output frequency when operating at rated voltage, rated current, rated speed, and rated temperature.

44 Motor NP RPM

Range: 60 to 24000 RPM [1 RPM]
Default: 1750 RPM
Access: 1 **Path:** Motor Control>Motor Data
See also:

Set to the motor nameplate rated RPM. The motor nameplate RPM defines the rated speed when operating at motor nameplate base frequency, rated current, base voltage, and rated temperature. This is used to calculate slip.

45 Motor NP Power

Range: 0.00 to 5000.00 [0.01]
Default: Based on Drive Type
Access: 1 **Path:** Motor Control>Motor Data
See also: 46

Set to the motor nameplate rated power. The motor nameplate power is used with the other nameplate values to calculate default values for motor parameters to assist the commissioning process. This may be entered in horsepower or in kilowatts as selected in parameter 46.

46 Mtr NP Pwr Units

Range: 0 = Horsepower
1 = kiloWatts
Default: Based on Drive Type
Access: 2 **Path:** Motor Control>Motor Data
See also:

Set to the power units shown on the motor nameplate. This parameter determines the units for parameter 45.

47 Motor OL Hertz

Range: 0.0 to 400.0 Hz [0.1 Hz]
Default: Motor NP Hz / 3
Access: 2 **Path:** Motor Control>Motor Data
See also: 42, 220

Selects the output frequency below which the motor operating current is derated. The motor thermal overload could generate a fault at below rated current. For all settings of overload Hz other than zero, the overload capacity is reduced to 70% when output frequency is zero.

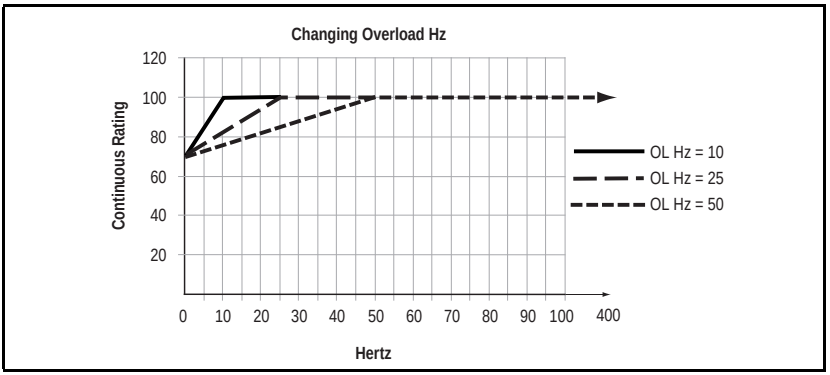

48 Motor OL Factor

Range: 0.20 to 2.00 [0.01]
Default: 1.00
Access: 2 **Path:** Motor Control>Motor Data
See also: 42, 220

Sets the continuous current operating level for the motor.

This parameter can be used to raise the level of current that will cause the motor thermal overload to trip. The effective overload factor is a combination of parameters 47 and 48.

Motor FLA x OL Factor = Operating Level (continuous)

53 Torque Perf Mode

Range:	0 = Sensrls Vect 1 = SV Economize 2 = Custom V/Hz 3 = Fan/Pmp V/Hz
Default:	0 = Sensrls Vect
Access:	2 **Path:** Motor Control>Torq Attributes
See also:	62, 63, 69, 70

Sets the method of motor torque production.

- Sensrls Vect maintains consistent magnetizing current up to base speed, and voltage increases as a function of load.
- SV Economize allows the drive to automatically adjust output voltage as the load changes to minimize current suplied to the motor. The voltage is adjusted by means of flux current adaption.
- Custom V/Hz allows for tailoring the volts/hertz curve by adjusting parameters 54, 55, 70, 71 and 72.

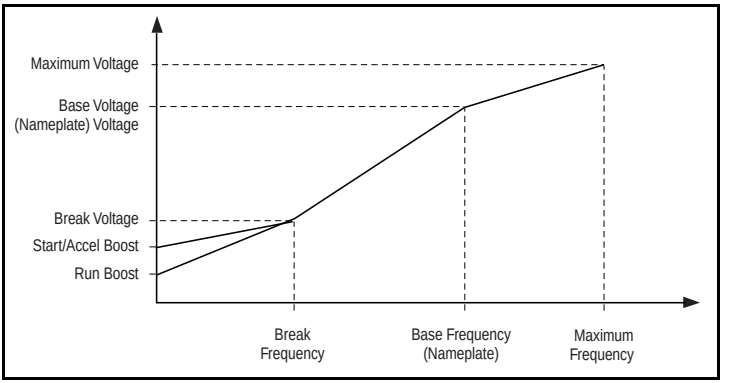

Figure 11.1 – Custom V/Hz Curve

- Fan/Pmp V/Hz mode sets a fan load volts per hertz curve profile exponential to base frequency and linear from base to maximum frequency). Run boost can offset the low speed curve point.

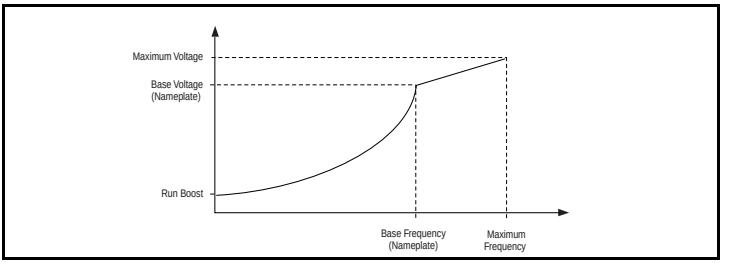

Figure 11.2 – Fan/Pump Curve

54 Maximum Voltage

Range: (Rated Volts x 0.25) to Rated Volts [0.1 VAC]

Default: Drive Rated Volts

Access: 2 **Path:** Motor Control>Torq Attributes

See also:

Sets the highest voltage the drive will output

55 Maximum Freq

Range: 5.0 to 400.0 Hz [0.1 Hz]

Default: 130.0 Hz

Access: 2 **Path:** Motor Control>Torq Attributes

See also: 82, 83

Sets the maximum allowable frequency the drive will output. Note that this is not maximum speed, which is set in parameter 82. Refer to figure 11.3.

Maximum Speed (82) + Overspeed Limit (83) must be ≤ to Maximum Freq (55).

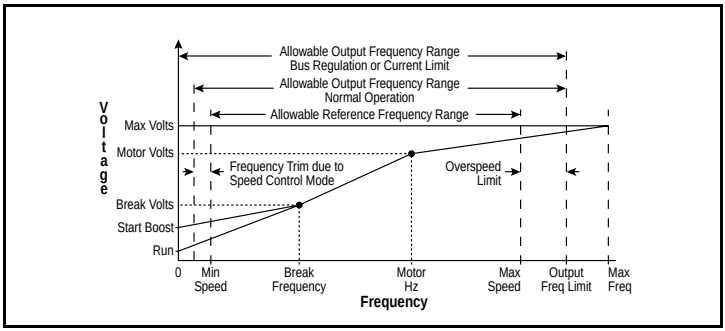

Figure 11.3 – Speed Limits

56 Compensation

Range: See figure 11.4

Default: See figure 11.4

Access: 2 **Path:** Motor Control>Torq Attributes

See also:

Enables/disables the compensation correction options.

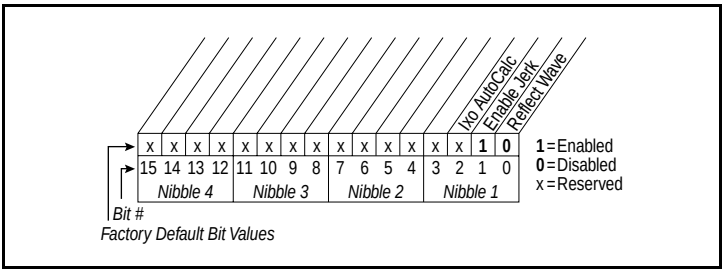

Figure 11.4 – Compensation (56)

Bit 0 - Reflect Wave

- Enables/disables reflected wave correction software, which reduces overvoltage transients from the drive to the motor. For lead lenghts beyond 300 feet, enable this feature.

Bit 1 - Enable Jerk

- Enables/disables the jerk limit in the current limiter that helps to eliminate overcurrent trips on fast accelerations. Disable this feature if your application requires the actual acceleration of the motor to be faster than .25 sec.

Bit 2 - Ixo AutoCalc

- Calculates voltage drop due to leakage inductance (see parameter 64).

57 Flux Up Mode

Range: 0 = Manual
1 = Automatic

Default: 0 = Manual

Access: 2 **Path:** Motor Control>Torq Attributes

See also: 53, 58

Flux-up curent is the amount of DC current equal to current limit, so full flux can be established in the motor before acceleration.

Manual (0): Flux is established for Flux Up Time (58) before acceleration

Auto (1): Flux is established for a calculated time period based on motor nameplate data. Flux Up Time (58) is not used.

58 Flux Up Time

Range: 0.00 to 5.00 Sec [0.01 Sec]

Default: 0.0 Sec

Access: 2 **Path:** Motor Control>Torq Attributes

See also: 53, 58

Sets the amount of time the drive will use to try to achieve full motor stator flux. When a start command is issued, DC current at current limit level is used to build stator flux before accelerating.

59 SV Boost Filter

Range: 0 to 32767

Default: 500

Access: 2 **Path:** Motor Control>Torq Attributes

See also:

Sets the amount of filtering used to boost voltage during Sensorless Vector operation.

61 Autotune

Range:	0 = Ready 1 = Static Tune 2 = Rotate Tune 3 = Calculate
Default:	3 = Calculate
Access:	0 **Path:** Motor Control>Torq Attributes
See also:	53, 62, 63

Provides a manual or automatic method for setting IR Voltage Drop (62) and Flux Current Ref (63). These values affect sensorless vector performance. Valid only when Torque Perf Mode (53) is set to Sensrls Vect or SV Economize.

Ready (0) = Parameter returns to this setting following a Static Tune or Rotate Tune. It also permits manually setting IR Voltage Drop (62) and Flux Current Ref (63).

Static Tune (1) = A temporary command that initiates a non-rotational motor stator resistance test for the best possible automatic setting of IR Voltage Drop. A start command is required following the initiation of this setting. The parameter returns to Ready (0) following the test, at which time another start transition is required to operate the drive in normal mode. Used when the motor cannot be uncoupled from the load.

Rotate Tune (2) = A temporary command that initiates a Static Tune followed by a rotational test for the best possible automatic setting of Flux Current Ref. A start command is required following initiation of this setting. The parameter returns to Ready (0) following the test, at which time another start transition is required to operate the drive in normal mode.

ATTENTION: Rotation of the motor in an undesired direction can occur during this procedure (Autotune (61) = Rotate Tune (2)). To guard against possible injury and/or equipment damage, it is recommended that the motor be disconnected from the load before proceeding.

Important: Rotate Tune (2) is used when motor is uncoupled from the load. Results may not be valid if a load is coupled to the motor during this procedure.

Calculate (3) = This setting uses motor nameplate data to automatically set IR Voltage Drop and Flux Current Ref.

62 IR Voltage Drop

Range: 0.0 to Motor NP Volts x 0.25 [0.1 VAC]

Default: Motor NP Volts x 0.25

Access: 1 **Path:** Motor Control>Torq Attributes

See also: 53

Value of volts dropped across the resistance of the motor stator. Used only when Torque Perf Mode (53) is set to Sensrls Vect or SV Economize. This value can be set by the Autotune procedure.

63 Flux Current Ref

Range: 0.00 to Motor NP FLA [0.01 Amps]

Default: Based on Drive Rating

Access: 1 **Path:** Motor Control>Torq Attributes

See also: 53

Value of amps for full motor flux. Used only when Torque Perf Mode (53) is set to Sensrls Vect or SV Economize. This value can be set by the Autotune procedure.

64 Ixo Voltage Drop

Range: 0.0 to Motor NP Volts [0.1 VAC]

Default: Based on Drive Rating

Access: 2 **Path:** Motor Control>Torq Attributes

See also:

Sets the value of the voltage drop due to leakage inductance of the motor. Used only when Torque Perf Mode (53) is set to Sensrls Vect or SV Economize.

69 Start/Acc Boost

Range: 0.0 to Motor NP Volts x 0.25 [0.1 VAC]

Default: Motor NP Volts x 0.25

Access: 2 **Path:** Motor Control>Volts per Hertz

See also: 53, 70, 83

Sets the voltage boost level for starting and acceleration when Custom V/Hz mode is selected in Torque Perf Mode (53).

After acceleration has stopped, the output volts per hertz is set by the steady state operating curve.

70 Run Boost

Range: 0.0 to Motor NP Volts x 0.25 [0.1 VAC]

Default: Motor HP Volts x 0.25

Access: 2 **Path:** Motor Control>Volts per Hertz

See also: 53, 69, 83

Sets the boost level for steady state or deceleration when Fan/Pmp V/Hz or Custom V/Hz modes are selected in Torque Perf Mode (53).

This boost level applies in the range from zero to break frequency (Hz).

71 Break Voltage

Range: 0.0 to Motor NP Volts [0.1 VAC]

Default: Motor NP Volts x 0.25

Access: 2 **Path:** Motor Control>Volts per Hertz

See also: 53, 72, 83

Sets the voltage the drive will output at Break Frequency (72).

Defines the volts per hertz ratio at break frequency. Applies only in Fan/Pmp V/Hz or Custom V/Hz modes.

72 Break Frequency

Range: 0.0 to 400.0 [0.1 Hz]

Default: Motor NP Freq x 0.25

Access: 2 **Path:** Motor Control>Volts per Hertz

See also: 53, 71, 83

Sets the frequency at which Run Boost volts per hertz adaption ends. Applies only in Fan/Pmp V/Hz or Custom V/Hz modes.

80 Speed Mode

Range: 0 = Open Loop
1 = Slip Comp
2 = Process PI

Default: 0 = Open Loop

Access: 2 **Path:** Speed Command>Spd Mode & Limits

See also: 124 -138

Sets the method of speed regulation.

- Open Loop provides no speed compensation due to load variations. This is strict volts per hertz output as a function of the speed reference.

- Slip Comp provides for frequency output adjustment as a function of load. The amount of compensation is defined by the value of Slip RPM @ FLA.
- Process PI allows for the output motor speed (frequency) to be adjusted based on the outer control loop regulator.

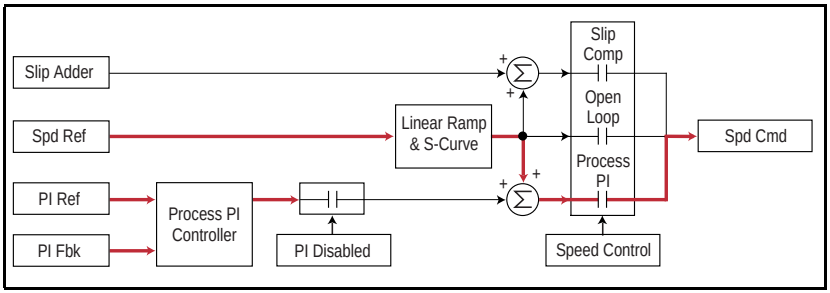

Figure 11.5 – Speed Control Method

81 Minimum Speed

Range: 0.0 to Maximum Speed [0.1 Hz]

Default: 0.0 Hz

Access: 0 **Path:** Speed Command>Spd Mode & Limits

See also: 83, 92, 95

Sets the low limit for the speed reference after scaling is applied.

ATTENTION: The drive can operate at and maintain zero speed. The user is responsible for assuring safe conditions for operating personnel by providing suitable guards, audible or visual alarms, or other devices to indicate that the drive is operating or may operate at or near zero speed. Failure to observe this precaution could result in severe bodily injury or loss of life.

82 Maximum Speed

Range: 5.0 to 400.0 Hz [0.0 Hz]
Default: 50.0 or 60.0 Hz (dependent on voltage class)
Access: 0 **Path:** Speed Command>Spd Mode & Limits
See also: 55, 83, 91, 94, 202

Sets the high limit for the speed reference after scaling is applied.

Maximum Speed (82) + Overspeed Limit (83) must be ≤ to Maximum Freq (55).

ATTENTION: The user is responsible for ensuring that driven machinery, all drive-train mechanisms, and application material are capable of safe operation at the maximum operating speed of the drive. Overspeed detection in the drive determines when the drive shuts down. See figure 11.6**.** Failure to observe this precaution could result in bodily injury.

83 Overspeed Limit

Range: 0.0 to 20.0 Hz [0.1 Hz]
Default: 10.0 Hz
Access: 2 **Path:** Speed Command>Spd Mode & Limits
See also: 55, 82

Sets the incremental amount of the output frequency (above Maximum Speed) allowable for functions such as slip compensation. See figure 11.6.

Maximum Speed (82) + Overspeed Limit (83) must be ≤ to Maximum Freq (55).

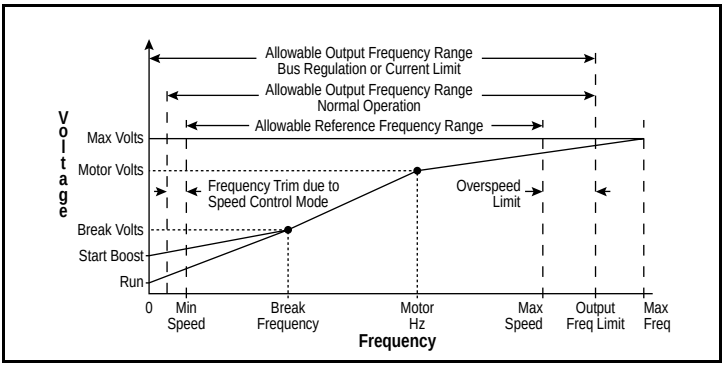

Figure 11.6 – Speed Limits

84 Skip Frequency 1
85 Skip Frequency 2
86 Skip Frequency 3

Range: -/+400.0 [0.1 Hz]

Default: 0.0 Hz

Access: 84=2 **Path:** Speed Command>Spd Mode & Limits
85=2
86=2

See also: 87

Sets the center of a frequency band at which the drive will not operate continuously (also called an **avoidance frequency**). Requires that both a Skip Frequency and Skip Frequency Band (87) be set to a value other than 0.

87 Skip Freq Band

Range: 0.0 to 30.0 Hz [0.1 Hz]

Default: 0.0 Hz

Access: 2 **Path:** Speed Command>Spd Mode & Limits

See also: 84, 85, 86

Determines the bandwidth around a skip frequency (half the band above and half the band below the skip frequency).

89 Logic Source Sel

Range: 0 = Terminal Blk
1 = Local OIM
2 = DPI Port 2
3 = DPI Port 3
4 = Reserved
5 = Network
6 = Reserved
7 = All Ports

Default: 1 = Local OIM

Access: 0 **Path:** Speed Command>Control Src Select

See also: 90

Important: The drive is shipped with a default configuration of control from the Local OIM (keypad). For drive control from the terminal block inputs, Logic Source Sel (89), must be set to 0.

- Terminal Blk = Hardwired I/O
- Local OIM = Drive-mounted OIM
- DPI Port 2 = DIN connector DPi port
- DPI Port 3 = DIN port 2 split with option cable
- Network = Communication interface
- All Ports = All control sources active

ATTENTION: Changing parameter 89 to Terminal Blk or Network while LevelSense Start is enabled may start the drive if a start command is on from the newly selected logic source.

When LevelSense Start is enabled, the user must ensure that automatic start up of the driven equipment will not cause injury to operating personnel or damage to the driven equipment. In addition, the user is responsible for providing suitable audible or visual alarms or other devices to indicate that this function is enabled and the drive may start at any moment. Failure to observe this precaution could result in severe bodily injury or loss of life.

ATTENTION: Removing and replacing the LCD OIM while the drive is running may cause an abrupt speed change if the LCD OIM is the selected reference source, but is not the selected control source. The drive will ramp to the reference level provided by the OIM at the rate specified in Accel Time 1 (140), Accel Time 2 (141), Decel Time 1 (142) and Decel Time 2 (143). Be aware that an abrupt speed change may occur depending upon the new reference level and the rate specified in these parameters. Failure to observe this precaution could result in bodily injury.

Logic Source Sel (89) selects the control source for the following logic commands:

- Start
- Clear Faults
- Stop
- Jog
- Direction
- Run

The All Ports selection allows all ports to control the logic command simultaneously.

ATTENTION: Note the following about stop commands:

- A stop command from any attached OIM will always be enabled regardless of the value of Logic Source Sel.
- Network stop commands are effective only when Logic Source Sel is set to Network or All Ports.
- Terminal block stop commands are effective only when Logic Source Sel is set to Terminal Blk or All Ports.

Failure to observe these precautions could result in severe bodily injury or loss of life.

Important: Asserting the terminal block input assigned to OIM control will override parameter 89.

90 Speed Ref A Sel

Range:	1 = Analog In 1 2 = Analog In 2 3-8 = Reserved 9 = MOP Level 10 = Reserved 11 = Preset Spd 1 12 = Preset Spd 2 13 = Preset Spd 3 14 = Preset Spd 4 15 = Preset Spd 5 16 = Preset Spd 6 17 = Preset Spd 7 18 = Local OIM 19 = DPI Port 2 20 = DPI Port 3 21 = Reserved 22 = Network 23 = Reserved
Default:	18 = Local OIM
Access:	0 **Path:** Speed Command>Speed References Speed Command>Control Src Select
See also:	2, 91-92, 101-107, 117-120, 192-194, 213, 272, 273, 320-327, 361-366

Selects the source of the speed reference to the drive unless Preset Speed 1-7 (101-107) is selected.

Note that the manual reference command and inputs OIM Control can override the reference control source.

ATTENTION: Removing and replacing the LCD OIM while the drive is running may cause an abrupt speed change if the LCD OIM is the selected reference source, but is not the selected control source. The drive will ramp to the reference level provided by the OIM at the rate specified in Accel Time 1 (140), Accel Time 2 (141), Decel Time 1 (142) and Decel Time 2 (143). Be aware that an abrupt speed change may occur depending upon the new reference level and the rate specified in these parameters. Failure to observe this precaution could result in bodily injury.

91 Speed Ref A Hi

Range: -/+ Maximum Speed [0.1 Hz]

Default: Maximum Speed

Access: 1 **Path:** Speed Command>Speed References

See also: 82, 322, 324

Scales the upper value of the Speed Ref Sel (90) selection when the source is an analog input. This value corresponds to the value entered in parameter 322 or 324.

92 Speed Ref A Lo

Range: -/+ Maximum Speed [0.1 Hz]

Default: 0.0 Hz

Access: 1 **Path:** Speed Command>Speed References

See also: 81, 323, 325

Scales the lower value of the Speed Ref A Sel (90) selection when the source is an analog input. This value corresponds to the value entered in parameter 323 or 325.

96 TB Man Ref Sel

Range: 1 = Analog In 1
2 = Analog In 2
3-8 = Reserved
9 = MOP Level

Default: 2 = Analog In 2

Access: 1 **Path:** Speed Command>Speed References

See also: 97, 98

Specifies the manual speed reference source when a digital input is configured for manual selection. See parameters 361 to 366.

97 TB Man Ref Hi

Range: -/+Maximum Speed [0.1 Hz]

Default: Maximum Speed

Access: 1 **Path:** Speed Command>Speed References

See also: 96, 322, 324

Scales the upper value of the TB Man Ref Sel selection when the source is an analog input. This parameter should be set in conjunction with parameter 322 or 325, depending on the analog input being used.

98 TB Man Ref Lo

Range: -/+Maximum Speed [0.1 Hz]
Default: 0.0 Hz
Access: 1 Path: Speed Command>Speed References
See also: 96, 323, 325

Scales the lower value of the TB Man Ref Sel selection when the source is an analog input. This parameter should be set in conjunction with parameter 323 or 326, depending on the analog input being used.

100 Jog Speed

Range: 0 to Maximum Speed [0.1 Hz]
Default: 10.0 Hz
Access: 0 Path: Speed Command>Discrete Speeds
See also:

Sets the output frequency when a jog command is issued. The jog function can be activiated using the OIM or terminal block assignments.

101 Preset Speed 1
102 Preset Speed 2
103 Preset Speed 3
104 Preset Speed 4
105 Preset Speed 5
106 Preset Speed 6
107 Preset Speed 7

Range: -/+ Maximum Speed [0.1 Hz]
Default: See table 11.2
Access: 2 **Path:** Speed Command>Discrete Speeds
See also: 90, 93

Provides an internal fixed speed command value when Speed Ref A = Preset Spd 1-7. The preset speed is selected by the configuration of the Dig In # speed select functions.

Table 11.2 – Default Values for Preset Speeds 1-7

Parameter No.	Parameter Name	Default
101	Preset Speed 1	5.0 Hz
102	Preset Speed 2	10.0 Hz
103	Preset Speed 3	20.0 Hz
104	Preset Speed 4	30.0 Hz
105	Preset Speed 5	40.0 Hz
106	Preset Speed 6	50.0 Hz
107	Preset Speed 7	60.0 Hz

117 Trim In Select

Range: 1 = Analog In 1
2 = Analog In 2
3-8 = Reserved
9 = MOP Level
10 = Reserved
11 = Preset Spd 1
12 = Preset Spd 2
13 = Preset Spd 3
14 = Preset Spd 4
15 = Preset Spd 5
16 = Preset Spd 6
17 = Preset Spd 7
18 = Local OIM
19 = DPI Port 2
20 = DPI Port 3
21 = Reserved
22 = Network
23 = Reserved

Default: 2 = Analog In 2

Access: 2 **Path:** Speed Command>Speed Trim

See also: 90, 93

Specifies which signal source is being used as a trim input. The trim is an input signal which is added to the reference A signal. If an analog input is used as the trim signal, two scaling parameters are provided.

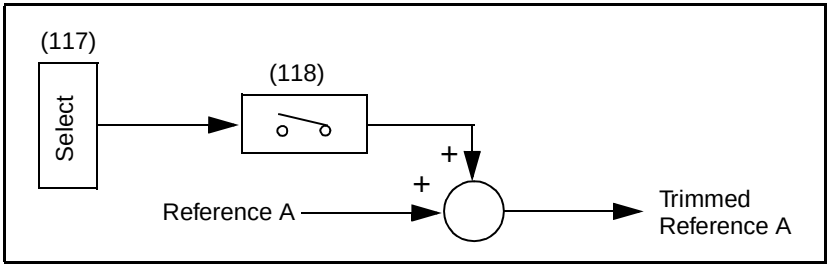

Figure 11.7 – Trim Input Select

118 Trim Out Select

Range: See figure 11.8

Default: See figure 11.8

Access: 2 **Path:** Speed Command>Speed Trim

See also: 117, 119, 120

Specifies if Ref A speed reference is to be trimmed.

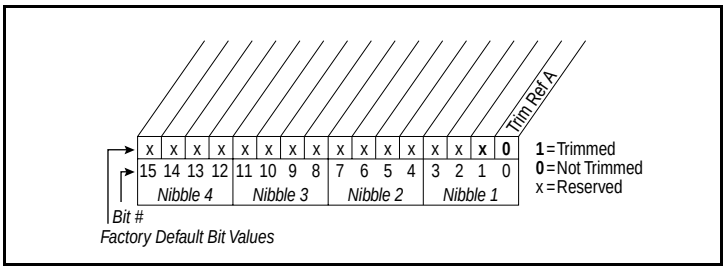

Figure 11.8 – Trim Out Select (118)

119 Trim Hi

Range: -/+ Maximum Speed [0.1 Hz]

Default: 60.0 Hz

Access: 2 **Path:** Speed Command>Speed Trim

See also: 82, 117, 322, 324

Scales the upper value of the Trim In Select (117) selection when the source is an analog input. This parameter should be set in conjunction with parameter 322 or 325.

120 Trim Lo

Range: -/+ Maximum Speed [0.1 Hz]

Default: 0.0 Hz

Access: 2 **Path:** Speed Command>Speed Trim

See also: 117, 323, 325

Scales the lower value of the Trim In Select (117) selection when the source is an analog input. This parameter should be set in conjunction with parameter 323 or 326.

121 Slip RPM @ FLA

Range:	0.0 to 1200.0 RPM
Default:	Based on Motor NP RPM
Access:	2 **Path:** Speed Command>Slip Comp
See also:	61, 80, 122, 123

Sets the amount of compensation to drive output at motor FLA. If parameter 61 (Autotune) = 3 (Calculate), changes made to this parameter will not be accepted.

Important: Parameters in the Slip Comp Group (121-123) are used to enable and tune the slip compensation regulator. To allow the slip compensation regulator to control drive operation, Speed Mode (80) must be set to 1 (Slip Comp).

122 Slip Comp Gain

Range:	1.0 to 100.0 [0.1]
Default:	40.0
Access:	2 **Path:** Speed Command>Slip Comp
See also:	80, 121, 122

Sets the response time of slip compensation. Increasing the value will increase the slip compensation response.

123 Slip RPM Meter

Range:	0.0 to 300.0 RPM
Default:	Read Only
Access:	2 **Path:** Speed Command>Slip Comp
See also:	80, 121, 122

Displays the present amount of slip adjustment being added to the motor command frequency.

124 PI Configuration

Range: See figure 11.9

Default: See figure 11.9

Access: 2 **Path:** Speed Command>Process PI

See also: 80, 125-138

Selects specific features of the PI regulator (see appendix E.)

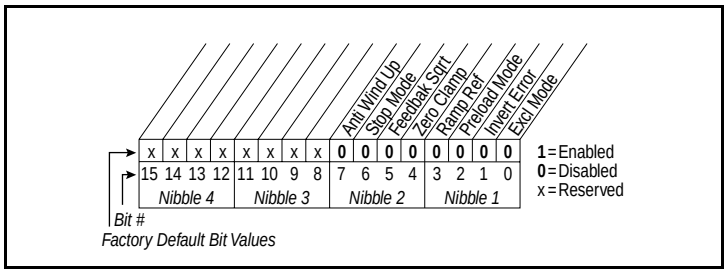

Figure 11.9 – PI Configuration (124)

Bit 0 - Excl Mode (Exclusive Mode)

- Enabled = Selects speed regulation (PI output used as speed command).
- Disabled = Selects trim regulation (PI output summed with speed command).

Bit 1 - Invert Error

- Enables/disables the option to invert the sign of the PI error signal. Enabling this feature creates a decrease in output for an increasing error and an increase in output for a decreasing error.

Bit 2 - Preload Mode

- Enabled = Initializes the PI integrator to the commanded speed while the PI is disabled.
- Disabled = The PI integrator is loaded with the PI Pre-load (133) while the PI is disabled.

Bit 3 - Ramp Ref

- Enables/disables ramping the PI reference using PI Feedback as the starting point and ramping to the selected PI Reference after PI is enabled. The active accel time is used for the PI ramp reference slew rate. The ramping is bypassed when the reference equals the setpoint. The ramp used is set by the active ramps (parameters 140 to 143).

Bit 4 - Zero Clamp

- Enables/disables option to limit operation so that the output frequency at the PI regulator always has the same sign as the master speed reference. This limits the possible drive

action to one direction only. Output from the drive will be from zero to maximum frequency forward or zero to maximum frequency reverse.

Bit 5 - Feedback Sqrt (Square Root Feedback)

- Enables/disables the option of using the square root of the feedback signal as the PI feedback. This is used for pressure control because fans and pumps vary pressure with the square of the speed.

Bit 6 - Stop Mode

- When enabled, and a stop command is issued to the drive, the PI loop will continue to operate during the decel ramp.

  When disabled, the drive will perform a normal stop.

Bit 7 - Anti Wind Up

- When enabled, the PI loop will automatically prevent the integrator from creating an excessive error that could cause instability. The integrator will be controlled without the need for PI Reset or PI Hold inputs.

125 PI Control

Range:	See figure 11.10
Default:	See figure 11.10
Access:	2 **Path:** Speed Command>Process PI
See also:	80, 124-138

Controls the PI regulator. You can use a Datalink parameter or an assigned digital input to write to this parameter.

PI control allows the drive to take a reference signal (setpoint) and an actual signal (feedback) and automatically adjust the speed of the drive to match the actual signal to the reference.

Proportional control (P) adjusts the output based on the size of the error (larger error = proportionally larger correction).

Integral control (I) adjusts the output based on the duration of the error. The integral control by itself is a ramp output correction. This type of control gives a smoothing effect to the output and will continue to integrate until zero error is achieved.

By itself, integral control is slower than many applications require, and, therefore, is combined with proportional control (PI).

The purpose of the PI regulator is to regulate a process variable such as position, pressure, temperature, or flow rate, by controlling speed.

There are two ways the PI regulator can be configured to operate (see parameter 124):

- Process trim, which takes the output of the PI regulator and sums it with a master speed reference to control the process.
- Process control, which takes the output of the PI regulator as the speed command. No master speed reference exists, and the PI output directly controls the drive output.

Note that Speed Mode (80) must be set to Process PI (2).

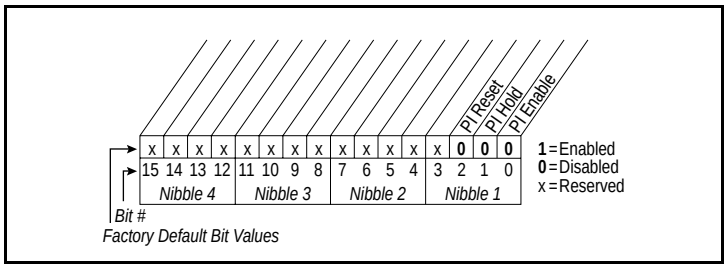

Figure 11.10 – PI Control (125)

Bit 0 - PI Enable

- Enables/disables the operation of the PI loop.

Bit 1 - PI Hold

- Enabled = The integrator for the outer control loop is held at the current level; that is, it will not increase.
- Disabled = The integrator for the outer PI control loop is allowed to increase.

Bit 2 - PI Reset

- Enabled = The integrator for the outer PI control loop is reset to zero.
- Disabled = The integrator for the outer PI control loop integrates normally.

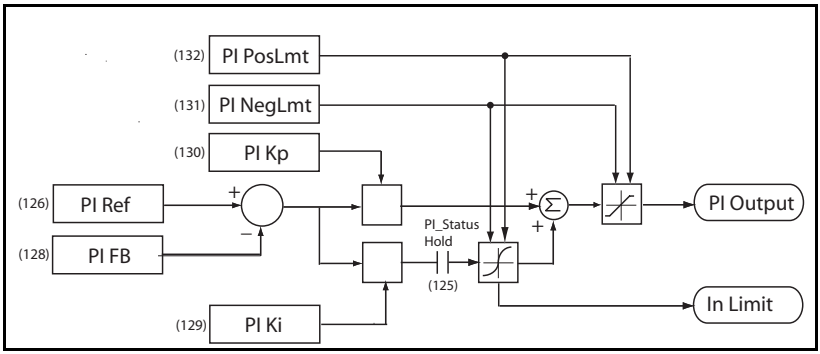

126 PI Reference Sel

Range:	0 = PI Setpoint 1 = Analog In 1 2 = Analog In 2 3-8 = Reserved 9 = MOP Level 10 = Master Ref 11 = Preset Spd 1 12 = Preset Spd 2 13 = Preset Spd 3 14 = Preset Spd 4 15 = Preset Spd 5 16 = Preset Spd 6 17 = Preset Spd 7 18 = Local OIM 19 = DPI Port 2 20 = DPI Port 3 21 = Reserved 22 = Network 23 = Reserved
Default:	0 = PI Setpoint
Access:	2 **Path:** Speed Command>Process PI
See also:	80, 124-138

Selects the source of the outer control loop process PI reference signal.

127 PI Setpoint

Range:	-/+100.00% of Maximum Process Value [0.01%]
Default:	50.00%
Access:	2 **Path:** Speed Command>Process PI
See also:	80, 124-138

Provides an internal register value for the process setpoint when PI Reference Sel (126) is set to PI Setpoint.

128 PI Feedback Sel

Range: 0 = PI Setpoint
1 = Analog In 1
2 = Analog In 2
3-8 = Reserved
9 = MOP Level
10 = Master Ref
11 = Preset Spd 1
12 = Preset Spd 2
13 = Preset Spd 3
14 = Preset Spd 4
15 = Preset Spd 5
16 = Preset Spd 6
17 = Preset Spd 7
18 = Local OIM
19 = DPI Port 2
20 = DPI Port 3
21 = Reserved
22 = Network
23 = Reserved

Default: 2 = Analog In 2

Access: 2 **Path:** Speed Command>Process PI

See also: 80, 124-138

Selects the source of the outer control loop process PI feedback signal.

129 PI Integral Time

Range: 0.00 to 100.00 Sec [0.01 Sec]

Default: 2.00 Sec

Access: 2 **Path:** Speed Command>Process PI

See also: 80, 124-138

Specifies the time required for the integral component of the PI regulator to reach 100% output. The shorter the integral time, the faster the integrator will read the process error.

130 PI Prop Gain

Range: 0.00 to 100.00 [0.01]

Default: 1.00

Access: 2 **Path:** Speed Command>Process PI

See also: 80, 124-138

Sets the value for the proportional component of the PI regulator. The PI Hold bit of PI Control (125) must equal Enabled (1) for the PI regulator to be active.

PI Error x PI Prop Gain = PI Output

131 PI Lower Limit

Range: -/+Maximum Freq [0.1 Hz]

Default: -Maximum Freq

Access: 2 **Path:** Speed Command>Process PI

See also: 80, 124-138

Sets the lower limit of the PI output. This value must be less than the value set in PI Upper Limit (132).

132 PI Upper Limit

Range: -/+Maximum Freq [0.1 Hz]

Default: +Maximum Freq

Access: 2 **Path:** Speed Command>Process PI

See also: 80, 124-138

Sets the upper limit of the PI output. This value must be greater than the value set in PI Lower Limit (131).

133 PI Preload

Range: -/+Maximum Freq [0.1 Hz]

Default: 0.0 Hz

Access: 2 **Path:** Speed Command>Process PI

See also: 80, 124-138

Sets the value used to load into the PI Integrator while the PI regulator is disabled. This allows better dynamic performance when the regulator is enabled.

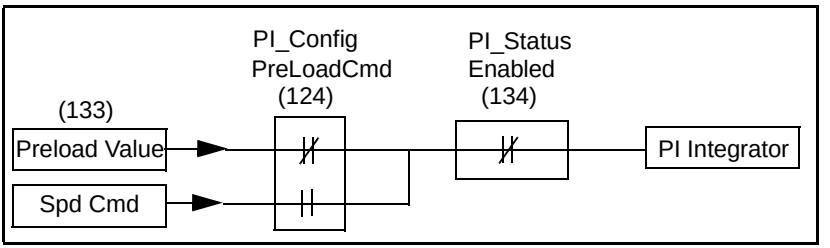

Figure 11.11 – PI Preload Value

134 PI Status

Range:	See figure 11.12
Default:	Read Only
Access:	2 **Path:** Speed Command>Process PI
See also:	80, 124-138

The present state of the process PI regulator.

See parameter 125 for control of the PI functions.

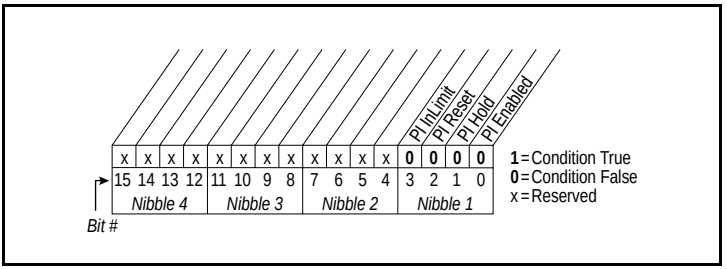

Figure 11.12 – PI Status (134)

Bit 0 - PI Enabled

- Indicates whether or not the process PI loop is enabled.

Bit 1 - PI Hold

- Is set to 1 to indicate when a digital input is configured for PI Hold and is turned on, or the PI Hold bit is set in PI Control (125).

Bit 2 - PI Reset

- Is set to 1 to indicate when the PI Integrator is being reset to zero.

Bit 3 - PI InLimit

- Is set to 1 to indicate when the PI output equals positive limit or negative limit.

135 PI Ref Meter

Range:	-/+100.00% [0.01%]
Default:	Read Only
Access:	2 **Path:** Speed Command>Process PI
See also:	80, 124 - 138

Present value of the process PI reference signal.

136 PI Fdback Meter

Range:	-/+100.00% [0.01%]
Default:	Read Only
Access:	2 **Path:** Speed Command>Process PI
See also:	80, 124 - 138

Present value of the process PI feedback signal.

137 PI Error Meter

Range:	-/+100.00% [0.01%]
Default:	Read Only
Access:	2 **Path:** Speed Command>Process PI
See also:	80, 124 - 138

Present value of the process PI error signal.

138 PI Output Meter

Range:	-/+Maximum Freq [0.1 Hz]
Default:	Read Only
Access:	2 **Path:** Speed Command>Process PI
See also:	80, 124 - 138

Present value of the process PI output signal.

$$\text{PI Output} \cong \text{PI Error} \times \text{PI Prop Gain} + \frac{\text{PI Error}}{\text{PI Integral Time}}$$

140 Accel Time 1
141 Accel Time 2

Range:	0.1 to 3600.0 sec [0.1 sec]
Default:	10.0 sec
Access:	140=0 **Path:** Dynamic Control>Ramp Rates 141=2
See also:	56, 142, 143, 146, 361-366

The Accel Time parameters set the rate at which the drive ramps to its output frequency after a start command or during an increase in command frequency (speed change). The rate established is the result of the following equation:

Maximum Frequency - Minimum Frequency / Accel Time = Accel Rate

Two accel times exist to enable acceleration rate changes “on the fly” using a building automation system command, digital input, or F-Key, if configured (see Appendix B).

142 Decel Time 1
143 Decel Time 2

Range: 0.1 to 3600.0 Sec [0.1 sec]

Default: 10.0 sec

Access: 142=0 **Path:** Dynamic Control>Ramp Rates
143=2

See also: 142, 143, 146, 361-366

Sets the rate of deceleration for all speed decreases.

Max Speed / Decel Time = Decel Rate

Two decel times exist to enable deceleration rate changes “on the fly” using a building automation system command, digital input, or F-Key, if configured (see Appendix B).

146 S Curve %

Range: 0 to 100% [1%]

Default: 0%

Access: 0 **Path:** Dynamic Control>Ramp Rates

See also: 140 - 143

Sets the percentage of acceleration or deceleration time that is applied to the ramp as S Curve. Time is entered as a percentage of accel or decel time and ramp times are extended, 1/2 at the beginning and 1/2 at the end of the ramp.

For example: Accel = 10 sec
S-Curve % = 25%

2.5 sec will be added to the accel time, 1.25 sec of rounding at each end of the ramp.

147 Current Lmt Sel

Range: 0 = Curr Lim Val
1 = Analog In 1
2 = Analog In 2

Default: 0 = Cur Lim Val

Access: 2 **Path:** Dynamic Control>Load Limits

See also: 148, 149, 322, 323, 325, 326

Selects the source for the adjustment of current limit (i.e., parameter, analog input, etc.). This parameter allows you to set current limit using an external analog signal.

If an analog input is selected (1, 2), Analog In*x* Lo = 0% limit (A), Analog In*x* Hi= 150% limit (A).

148 Current Lmt Val

Range: Based on Drive Type [0.1 Amps]

Default: Based on Drive Type (approx. 150% of Rated Amps)

Access: 0 **Path:** Dynamic Control>Load Limits

See also: 147, 149

Defines the current limit value when Current Lmt Sel (147) = Cur Lim Val.

149 Current Lmt Gain

Range: 0 to 5000 [1]

Default: 250

Access: 2 **Path:** Dynamic Control>Load Limits

See also: 147, 148

Sets the responsiveness of the current limit.

150 Drive OL Mode

Range:
0 = Disabled
1 = Reduce CLim
2 = Reduce PWM
3 = Both-PWM 1st

Default: 0 = Disabled

Access: 1 **Path:** Dynamic Control>Load Limits

See also: 219

Selects the drive's response to increasing drive temperature. The drive could reduce current limit, PWM carrier, or both. A fault or alarm will be activated if an overload is detected.

151 CarrierFrequency

Range: 2 - 10 kHz [1 kHz]

Default: 4 kHz

Access: 0 **Path:** Dynamic Control>Load Limits

See also: 146, 149

Sets the carrier frequency for the PWM output. Drive derating may occur at higher carrier frequencies. For derating information, refer to Appendix A.

155 Stop Mode A
156 Stop Mode B

Range: 0 = Coast
1 = Ramp
2 = Ramp to Hold
3 = DC Brake

Default: 155: 1 = Ramp
156: 0 = Coast

Access: 1 **Path:** Dynamic Control>Stop/Brake Modes

See also: 157-159, 361-366

Active stop mode. Stop Mode A is active unless Stop Mode B is selected by a digital input. This function allows you to switch between two stop modes using an external logic input.

ATTENTION: The user must provide an external, hardwired emergency stop circuit outside of the drive circuitry. This circuit must disable the system in case of improper operation. Uncontrolled machine operation may result if this procedure is not followed. Failure to observe this precaution could result in bodily injury.

157 DC Brake Lvl Sel

Range: 0 = DC Brake Lvl
1 = Analog In 1
2 = Analog In 2

Default: 0 = DC Brake Lvl

Access: 1 **Path:** Dynamic Control>Stop/Brake Modes

See also: 155, 156, 158, 159

Selects the source for DC Brake Level (158).

You can also select the amount of time that braking will be applied and the magnitude of current sed for braking. This mode of braking will generate up to 40% of the rated motor torque for braking. It is typically used for low inertia loads.

158 DC Brake Level

Range:	0 to (Rated Amps x 1.5) [0.1 Amps]
Default:	Rated Amps
Access:	1 **Path:** Dynamic Control>Stop/Brake Modes
See also:	157-159

Defines the maximum DC brake current in percentage of drive rated current.

The DC braking voltage used in this function is created by a PWM algorithm and may not generate the smooth holding force needed for some applications.

ATTENTION: If a hazard of injury due to movement of equipment or material exists, an auxiliary mechanical braking device must be used to stop the motor. Failure to observe this precaution could result in severe bodily injury or loss of life.

ATTENTION: This feature should not be used with synchronous or permanent magnet motors. Motors may be demagnetized during braking. Failure to observe this precaution could result in damage to, or destruction of, equipment.

159 DC Brake Time

Range:	0.0 to 90.0 Sec [0.1 Sec]
Default:	0.0 Sec
Access:	1 **Path:** Dynamic Control>Stop/Brake Modes
See also:	155 - 158

Sets the amount of time DC brake current is “injected” into the motor.

160 Bus Reg Ki

Range:	0 to 5000 [1]
Default:	450
Access:	2 **Path:** Dynamic Control>Stop/Brake Modes
See also:	161, 162

Sets the responsiveness of the bus regulator. Adjust the value to improve the performance of the bus regulator to prevent nuisance overvoltage faults.

161 Bus Reg Mode A
162 Bus Reg Mode B

Range:	0 = Disabled 1 = Adjust Freq 2 = Dynamic Brak 3 = Both - DB 1st 4 = Both - Frq 1st
Default:	Mode A: 0 = Disabled Mode B: 0 = Disabled
Access:	2 **Path:** Dynamic Control>Stop/Brake Modes
See also:	160, 163, 361-366

Sets the method and sequence of the DC bus regulator voltage control. Choices are dynamic brake, frequency adjust, or both.

The user can select separate modes of control for Mode A and Mode B through a configured logic input. When Both (3 or 4) is selected, the bus controller will attempt to regulate the bus voltage using the selected technique first and then swith to the secondary method.

If a dynamic brake resistor is connected to the drive, Bus Reg Mode A and Bus Reg Mode B must be set to option 2, 3, or 4.

ATTENTION: The adjust freq portion of the bus regulator function is extremely useful for preventing nuisance overvoltage faults resulting from aggressive decelerations, overhauling loads, and eccentric loads. It forces the output frequency to be greater than commanded frequency while the drive's bus voltage is increasing towards levels that would otherwise cause a fault. However, it can also cause either of the following two conditions to occur:

- Fast positive changes in input voltage (more than a 10% increase within 6 minutes) can cause uncommanded positive speed changes; however, an OverSpeed Limit fault will occur if the speed reaches Max Speed + Overspeed Limit. If this condition is unacceptable, action should be taken to 1) limit supply voltages within the specification of the drive, and 2) limit fast positive input voltage changes to less than 10%. Without taking such actions, if this operation is unacceptable, the adjust freq portion of the bus regulator function must be disabled (see parameters 161 and 162).
- Actual deceleration times can be longer than commanded deceleration times; however, a Decel Inhibit fault is generated if the drive stops decelerating altogether. If this condition is unacceptable, the adjust freq portion of the bus regulator must be disabled (see parameters 161 and 162). In addition, installing a properly sized dynamic brake resistor will provide equal or better performance in most cases.

Note that these faults are not instantaneous. Test results have shown that it takes between 2 and 12 seconds foir a fault to occur.

163 DB Resistor Type

Range:	0 = Internal Res 1 = External Res 2 = None
Default:	0 = Internal Res
Access:	1 **Path:** Dynamic Control>Stop/Brake Modes
See also:	161, 162

Selects whether the internal or an external DB resistor option will be used. An internal DB resistor is one that can be mounted inside the footprint of the drive. External DB resistors are panel mounted separately.

ATTENTION: AC drives do not offer protection for externally mounted brake resistors. A risk of fire exists if external braking resistors are not protected. External resistor packages must be self-protected from overtemperature or the protective circuit shown below, or equivalent, must be supplied.

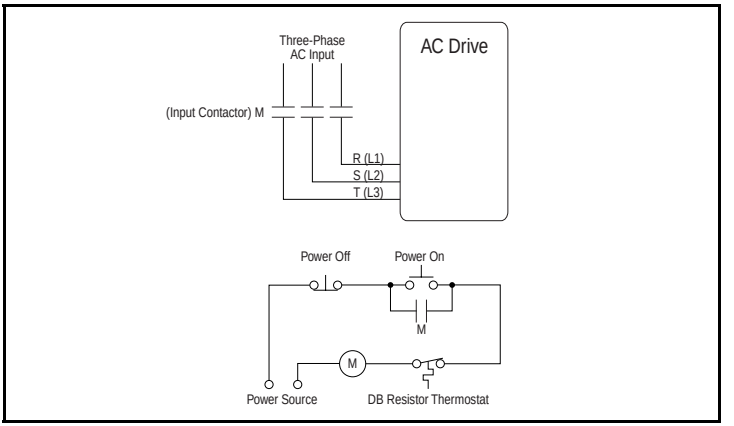

164 Bus Reg Kp

Range:	0 to 10000
Default:	500
Access:	2 **Path:** Dynamic Control>Stop/Brake Modes
See also:	

Proportional gain for the bus regulator. Used to adjust regulator response.

165 Bus Reg Kd

Range: 0 to 10000

Default: 1000

Access: 2 **Path:** Dynamic Control>Stop/Brake Modes

See also:

Derivative gain for the bus regulator. Used to control regulator overshoot.

168 LevelSense Start

Range: 0 = Disabled
1 = Enabled

Default: 0 = Disabled

Access: 2 **Path:** Dynamic Control>Stop/Restart Modes

See also: 160, 163

ATTENTION: Be aware of the following:

- Setting parameter 168 to 1 (Enabled) immediately applies output power to the motor when all start conditions are met.
- If the drive is running from the terminal block, LevelSense Start is enabled, and a fault occurs, the drive coasts to rest and generates a fault. In this case, resetting and clearing the fault immediately restarts the drive without any change to the start or stop input states.

When this function is enabled, the user must ensure that automatic start up of the driven equipment will not cause injury to operating personnel or damage to the driven equipment. In addition, the user is responsible for providing suitable audible or visual alarms or other devices to indicate that this function is enabled and the drive may start at any moment. Failure to observe this precaution could result in severe bodily injury or loss of life.

Enables/disables a feature to issue a start or run command and automatically run at the commanded speed when drive input power is applied.

Disabled: The drive starts on the open-to-closed transition of the control source start input when no start inhibit conditions are present (edge-sensitive detection).

Enabled: The drive starts when the control source start input is closed, no start inhibit conditions are present, and power is applied (level-sensitive detection).

Note that this feature (LevelSense Start) requires a digital input configured for run or start and a valid start contact.

169 Flying Start En

Range: 0 = Disabled
1 = Enabled

Default: 0 = Disabled

Access: 2 **Path:** Dynamic Control>Stop/Restart Modes

See also: 170

Enables/disables the function which allows the drive to start a spinning motor at actual RPM when a start command is issued.

170 Flying StartGain

Range: 20 to 32767 [1]

Default: 4000

Access: 2 **Path:** Dynamic Control>Stop/Restart Modes

See also: 169

Adjusts the responsiveness of the flying start function. Increasing the value in this parameter increases the responsiveness of the flying start function.

174 Auto Rstrt Tries

Range: 0 to 9 [1]

Default: 0 (Disabled)

Access: 1 **Path:** Dynamic Control>Stop/Restart Modes

See also: 175, table 12.6 for auto-resettable faults

ATTENTION: Equipment damage and/or personal injury may result if parameter 174 is used in an inappropriate application. Do not use this function without considering applicable local, national, and international codes, standards, regulations, or industry guidelines.

ATTENTION: The drive may start immediately after a fault is auto-reset when LevelSense Start (168) is set to Enabled.

When LevelSense Start is enabled, the user must ensure that automatic start up of the driven equipment will not cause injury to operating personnel or damage to the driven equipment. In addition, the user is responsible for providing suitable audible or visual alarms or other devices to indicate that this function is enabled and the drive may start at any moment. Failure to observe this precaution could result in severe bodily injury or loss of life.

Important: The drive will re-start after a reset if the start input is still asserted.

Specifies the maximum number of times the drive attempts to reset a fault and restart when the auto restart feature is enabled.

The auto restart feature provides the ability for the drive to automatically perform a fault reset followed by a start attempt without user or application intervention. Only certain faults are permitted to be reset, see chapter 12 for more information.

When the auto restart feature is enabled (that is, Auto Rstrt Tries is set to a value greater than zero), and an auto-resettable fault occurs, the drive will stop. After the number of seconds in Auto Restrt Delay (175) has elapsed, the drive will automatically reset the faulted condition. The drive will then issue an internal start command to start the drive.

If another auto-resettable fault occurs, the cycle will repeat up to the number of attempts specified in Auto Rstrt Tries.

If the drive faults repeatedly for more than the number of attempts specified in Auto Rstrt Tries with less than five minutes between each fault, the drive will remain in the faulted state. The fault Auto Rstrt Tries will be logged in the fault queue.

The auto restart feature is disabled when the drive is stopping and during autotuning. Note that a DC Hold state is considered stopping.

The following conditions will abort the reset/run process:

- Issuing a stop command from any control source. (Note that removal of a 2-wire run-fwd or run-rev command is considered a stop command.)
- Issuing a fault reset command from any active source.
- Removing the enable input signal.
- Setting Auto Restrt Tries to zero.
- Occurrence of a fault that is not auto-resettable.
- Removing power from the drive.
- Exhausting an auto-reset/run cycle.

175 Auto Rstrt Delay

Range: 0.5 to 30.0 Sec [0.1 Sec]
Default: 1.0 Sec
Access: 1 **Path:** Dynamic Control>Stop/Restart Modes
See also: 174

Sets the time between restart attempts when the auto restart feature is enabled. Refer to Auto Rstrt Tries (174) for more information about the auto restart feature.

178 Sleep-Wake Mode

Range: 0 = Disabled
1 = Direct
Default: 0 = Disabled
Access: 2 **Path:** Dynamic Control>Restart Modes
See also:

Enables the Sleep-Wake function.

ATTENTION: Enabling the Sleep-Wake function can cause unexpected machine motion during the Wake mode. Do not use this function without considering the information in the table below. Failure to observe this procaution could result in personal injury ot damage to equipment.

Important: When this function is enabled, the following conditions must be met:
- A proper minimum value must be set for Sleep Level (182).
- At least one of the following must be programmed in Digital Inx Sel (361 to 366): Enable, Stop=CF, Run, Run Forward, Run Reverse.

Table 11.3 – Sleep-Wake Mode

	Start Requirements When Sleep-Wake Mode is Enabled			
Configured Digital inputs	**At Power Up**	**After Fault Reset**		**After Stop**
		Stop-CF (OIM or TB)	Clear Faults (TB or VS Utilities)	OIM, TB, or Network Stop
Stop	Stop Closed Wake Signal	Stop Closed Wake Signal Start/Run Signal	Stop Closed Wake Signal	Stop Closed Wake Signal Start/Run Signal
Enable	Enable Closed Wake Signal	Enable Closed Wake Signal Start/Run Signal	Enable Closed Wake Signal	Enable Closed Wake Signal Start/Run Signal
Run Run Forward Run Reverse	Wake Signal Run Closed	Wake Signal Run Signal	Wake Signal Run Closed	Wake Signal Run Signal

Sleep-Wake Operation

The basic operation of this function is to start (wake) the drive when an analog signal is greater than or equal to a user-specified wake level and stop the drive when an analog signal is less than or equal to a user-specified sleep level.

Assuming all drive permissive conditions are met, the drive will start when Sleep-Wake Mode (178) is enabled (= Direct) and the absolute value of the Sleep-Wake Ref (179) is greater than the programmed Wake Level (180) for longer than the programmed Wake Time (181).

The drive will stop when the absolute value of the Sleep-Wake Ref (179) is less than the programmed Sleep Level (182) for longer than the programmed Sleep Time (183).

While the drive is measuring the time above Wake Level (180), it will indicate a "Waking" alarm. If Sleep-Wake Ref (179) goes above Sleep Level (182) or below Wake Level (180) the corresponding timer is reset (Wake timer and Sleep timer, respectively).

While the drive is "awake", all other active stop commands will be honored immediately (i.e. no Sleep timer). However, after a stop is commanded, a new start command while Sleep-Wake Ref (179) is above Sleep Level (182) will be required to reset the sleep-wake controller. Similarly, while the drive is “asleep”, the selected logic control source can still start the drive. In this case, the sleep-wake controller must also be reset (stop, then restart with analog input above sleep level).

If Logic Source Sel (089) is set to All Ports, the drive can only be started when Sleep-Wake Ref (179) is greater than Sleep Level (182). Here the sleep-wake controller remains active and does not need to be reset. If no Start signal has been configured to reset the sleep-wake controller, drive power can be cycled to provide the reset function.

Sleep Level (182) and Wake Level (180) are adjustable while the drive is "awake". If these levels are set incorrectly, the "Sleep Config" alarm is set. If the current configuration is not corrected, the drive will stop after the programmed Sleep Time (183).

Even though the Sleep-Wake feature is enabled, the operation of other start modes is unchanged (e.g. if Level Sense Start is set to Enabled, Logic Source Select is set to All Ports, and a start command is asserted, the drive will start immediately after Sleep-Wake Ref (179) reaches the sleep level).

The Sleep-Wake feature can be overridden in additional ways:

- The OIM Control digital input allows an attached OIM to start the drive by overriding the Sleep-Wake Sleep signal (i.e. the analog input is below the Sleep level). Once overridden by the OIM, the Sleep-Wake analog input will no longer be able to start or stop the drive until it is restarted while the analog input is above the Sleep level.

- Jog (from an active logic source only) will override Sleep-Wake. While Jog is active, the Sleep-Wake analog input will not be able to Start or Stop the drive.

179 Sleep-Wake Ref

Range:	1 = Analog In 1 2 = Analog In 2
Default:	2 = Analog In 2
Access:	2 **Path:** Dynamic Control>Restart Modes
See also:	178 - 183

Selects the source of the analog input controlling the Sleep-Wake function.

180 Wake Level

Range:	Sleep Level to 20.000 mA, 10.000 V [0.001 mA, 0.001 V, based on Anlg In Config [320]]
Default:	6.000 mA, 6.000 V
Access:	2 **Path:** Dynamic Control>Restart Modes
See also:	178 - 183

Defines the analog input signal level that will start the drive.

181 Wake Time

Range:	0.0 to 30.0 sec [0.1 sec]
Default:	1.0 sec
Access:	2 **Path:** Dynamic Control>Restart Modes
See also:	178 - 183

Defines the amount of time at or above Wake Level before a start command is issued.

182 Sleep Level

Range:	4.000 mA, 0.000 V to Wake Level [0.001 mA or 0.001 V, based on Anlg In Config [320]]
Default:	5.000 mA, 5.000 V
Access:	2 Path: Dynamic Control>Restart Modes
See also:	178 - 183

Defines the analog input signal level that will stop the drive.

183 Sleep Time

Range: 0.0 to 30.0 sec [0.1 sec]

Default: 1.0 sec

Access: 2 Path: Dynamic Control>Restart Modes

See also: 178 - 182

Defines the amount of time at or below Sleep Level before a stop command is issued.

184 Power Loss Mode

Range: 0 = Coast
1 = Decel
2 = Continue
3 = Coast input
4 = Decel input

Default: 0 = Coast

Access: 1 **Path:** Dynamic Control>Stop/Power Loss

See also: 184

Sets the reaction to a loss of input power. Power loss is recognized when:

DC bus voltage is ≤ 73% of DC Bus Memory and Power Loss Mode is set to Coast.

DC bus voltage is ≤ 82% of DC Bus Memory and Power Loss Mode is set to Decel.

185 Power Loss Time

Range: 0.0 to 60.0 Sec [0.1 Sec]

Default: 0.5 Sec

Access: 1 **Path:** Dynamic Control>Stop/Power Loss

See also: 184

Sets the time that the drive will remain in power loss mode before a fault is issued.

186 Power Loss Level

Range: 0.0 to 999.9 V [0.1 V]

Default: 0.0 V

Access: 2 Path: Dynamic Control>Power Loss

See also: 184

Sets the level at which the Power Loss Mode (184) selection will occur.

190 Direction Mode

Range: 0 = Unipolar
1 = Bipolar
2 = Reverse Dis

Default: 0 = Unipolar

Access: 0 **Path:** Utility>Direction Config

See also: 320 - 327, 361 - 366

Selects the method for control of drive direction.

ATTENTION: Setting parameter 190 to 0 or 1 may cause unwanted motor direction. Verify driven machinery cannot be damaged by reverse rotation before changing the setting of this parameter to 0 or 1. Failure to observe this precaution could result in damage to, or destruction of, equipment.

Unipolar = Drive receives unsigned reference signal and a separate direction command (from a logic source such as digital inputs or a DPI port).

Bipolar = Drive receives signed reference.

Reverse Disable = Drive receives signed reference; however, regardless of the reference, the drive is not permitted to reverse.

192 Save OIM Ref

Range: See figure 11.13

Default: See figure 11.13

Access: 2 **Path:** Utility>OIM Ref Config

See also:

Enables a feature to save the present frequency reference value issued by the OIM to drive memory on power loss. Value is restored to the OIM on power up.

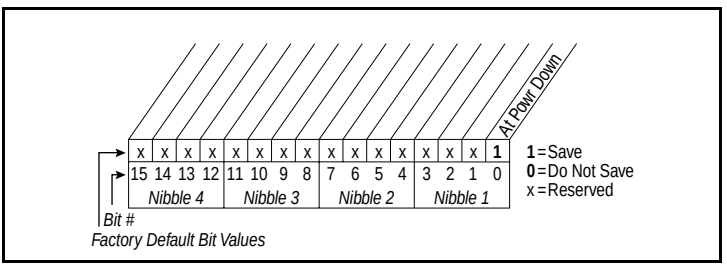

Figure 11.13 – Save OIM Ref (192)

193 Man Ref Preload

Range: 0 = Disabled
1 = Enabled

Default: 1 = Enabled

Access: 2 **Path:** Utility>OIM Ref Config

See also: 320 - 327, 361 - 366

Enables/disables a feature to automatically load the present auto frequency reference value into the OIM when Manual is selected. Allows smooth speed transition from Auto to Manual mode. You can adjust the manual speed setpoint from the OIM.

194 Save MOP Ref

Range: See figure 11.14

Default: At Pwrdown

Access: 2 **Path:** Utility>MOP Config

See also:

Enables/disables the feature that saves the present MOP (motor-operated potentiometer) frequency reference at power down or at stop.

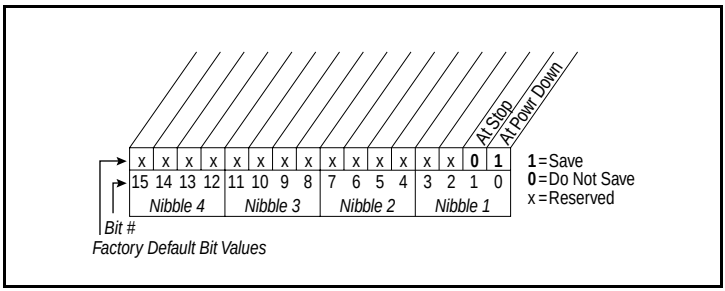

Figure 11.14 – Save MOP Ref (194)

195 MOP Rate

Range: 0.2 to Maximum Freq [0.1 Hz/sec]

Default: 1.0 Hz/sec

Access: 2 **Path:** Utility>MOP Config

See also:

Sets the rate of change of the MOP reference in response to a MOP inputs.

196 Param Access Lvl

Range: 0 = Basic
1 = Standard
2 = Advanced

Default: Read Only

Access: 0 **Path:** Utility>Drive Memory

See also:

Displays the present parameter access level. Refer to chapter 10 for more information about parameter access levels.

197 Reset To Defalts

Range: 0 = Ready
1 = Factory
2 = Low Voltage
3 = High Voltage

Default: 0 = Ready

Access: 0 **Path:** Utility>Drive Memory

See also:

Resets all parameter values to defaults. Option 1 resets the drive to factory settings. Options 2 and 3 resets the drive to alternate voltage and current rating.

Important: On frame 5 drives, the internal fan voltage may have to be changed when using options 2 or 3. See section 3.1.1.4.

Low Voltage = 400 V class defaults.
HIgh Voltage = 480 V class defaults.

198 Load Frm Usr Set

Range: 0 = Ready
1 = User Set 1
2 = User Set 2
3 = User Set 3

Default: 0 = Ready

Access: 1 **Path:** Utility>Drive Memory

See also: 199

Loads a previously saved set of parameter values from a selected user set location in drive non-volatile memory to active drive memory.

An F-Key on the LCD OIM can be configured for this function. Refer to Appendix B.

199 Save To User Set

Range: 0 = Ready
1 = User Set 1
2 = User Set 2
3 = User Set 3

Default: 0 = Ready

Access: 1 **Path:** Utility>Drive Memory

See also: 198

Saves the parameter values in active drive memory to a user set in drive non-volatile memory.

An F-Key on the LCD OIM can be configured for this function. Refer to Appendix B.

200 Reset Meters

Range: 0 = Ready
1 = MWh
2 = Elapsed Time

Default: 0 = Ready

Access: 1 **Path:** Utility>Drive Memory

See also:

Resets selected meters to zero.

201 Language

Range: 0 = Not Selected
1 = English
2 = French
3 = Spanish
4 = Italian
5 = German
6 = Reserved
7 = Portuguese

Default: 0 = Not Selected

Access: 2 **Path:** Utility>Drive Memory

See also:

Selects the display language when using an LCD OIM.

202 Voltage Class

Range:	2 = Low Voltage (400 V) 3 = High Voltage (480 V)
Default:	Based on Drive Type
Access:	2 **Path:** Utility>Drive Memory
See also:	55

Resets selected parameters that change the drive voltage rating, current rating, scaling, and motor data. Maximum Frequency (55) will be affected by changing this parameter.

Important: On frame 5 drives, the internal fan voltage may have to be changed when using options 2 or 3. See section 3.1.1.4.

203 Drive Checksum

Range:	0 to 65535 [1]
Default:	Read Only
Access:	2 **Path:** Utility>Drive Memory
See also:	

Provides a checksum value that indicates whether or not a change in drive programming has occurred (data values only).

209 Drive Status 1

Range: See figure 11.15

Default: Read Only

Access: 2 **Path:** Utility>Diagnostics

See also: 210

Present operating status of the drive.

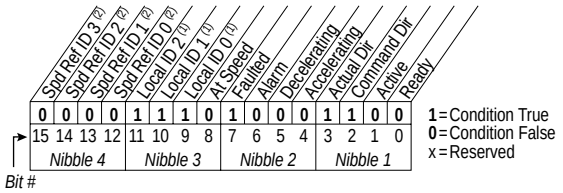

Bits (2)					Bits (1)			
15	14	13	12	Description	11	10	9	Description
0	0	0	0	Ref A Auto				
0	0	0	1	Preset 1 Auto				
0	0	1	0	Preset 2 Auto				
0	0	1	1	Preset 3 Auto				
0	1	0	0	Preset 4 Auto				
0	1	0	1	Preset 5 Auto				
0	1	1	0	Preset 6 Auto				
0	1	1	1	Preset 7 Auto	0	0	0	Port 0 (TB)
1	0	0	0	TB Manual	0	0	1	Port 1
1	0	0	1	Port 1 Manual	0	1	0	Port 2
1	0	1	0	Port 2 Manual	0	1	1	Port 3
1	0	1	1	Port 3 Manual	1	0	0	Port 4
1	1	0	0	Port 4 Manual	1	0	1	Port 5
1	1	0	1	Port 5 Manual	1	1	0	Port 6
1	1	1	0	Port 6 Manual	1	1	1	No Local Control

Figure 11.15 – Drive Status 1 (209)

Bit	Function	Description
0	Ready	Drive ready; no faults or inhibits.
1	Active	Drive outputting voltage.
2	Commanded Dir	
3	Active Dir	Motor direction = setpoint direction.
4	Accelerating	Motor accelerating.
5	Decelerating	Motor decelerating.
6	Alarm	Alarm active.
7	Faulted	Drive faulted.
8	At Speed	Output frequency = Setpoint frequency.

210 Drive Status 2

Range: See figure 11.16

Default: Read Only

Access: 2 **Path:** Utility>Diagnostics

See also: 209

Present operating condition of the drive.

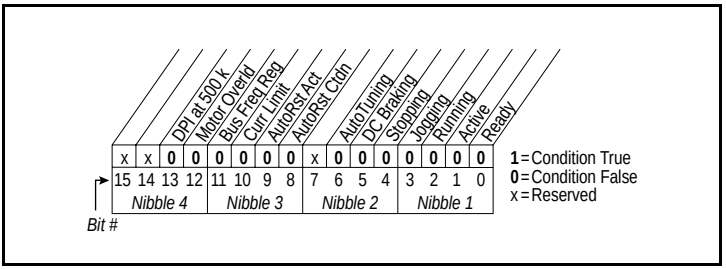

Figure 11.16 – Drive Status 2 (210)

Bit	Name	Description
0	Ready	No start inhibits are active.
1	Active	Drive is generating output voltage to the motor.
2	Running	Drive is generating output voltage to the motor, run has been selected.
3	Jogging	Drive is in jog mode.
4	Stopping	Drive is stopping.
5	DC Braking	DC braking is active.
6	Auto Tuning	Tuning function is active.
8	AutoRst Ctdn:	Auto Restart Countdown. Refer to parameter 174.
9	AutoRst Ac:	Auto Restart Active. Refer to parameter 174.
10	Curr Limit:	Drive is in current limit.
11	Bus Freq Reg:	Drive is regulating bus frequency.
12	Motor Overld:	Motor overload is active.
13	DPI @ 500 K	DPI communications is operating at 500 kbaud (1), 125 kbaud (0)

211 Drive Alarm 1

Range: See figure 11.17

Default: Read Only

Access: 1 **Path:** Utility>Diagnostics
Utility>Alarms

See also: 212, 259

Indicates Type 1 alarm conditions that currently exist in the drive. Note that for alarm conditions not configured in Alarm Config 1 (259), the status indicated will be a zero.

Refer to chapter 12, Troubleshooting the Drive, for more information about alarms.

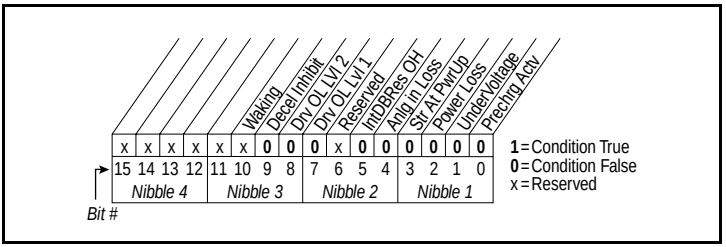

Figure 11.17 – Drive Alarm 1 (211)

212 Drive Alarm 2

Range: See figure 11.18

Default: Read Only

Access: 1 **Path:** Utility>Diagnostics
Utility>Alarms

See also: 211

Indicates Type 2 alarm conditions that currently exist in the drive. Refer to chapter 12, Troubleshooting the Drive, for more information about alarms.

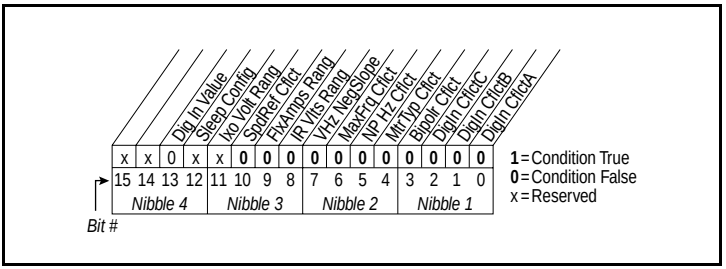

Figure 11.18 – Drive Alarm 2 (212)

213 Speed Ref Source

Range: 0 = PI Output
1 = Analog In 1
2 = Analog In 2
3-8 = Reserved
9 = MOP Level
10 = Jog Speed
11 = Preset Spd 1
12 = Preset Spd 2
13 = Preset Spd 3
14 = Preset Spd 4
15 = Preset Spd 5
16 = Preset Spd 6
17 = Preset Spd 7
18 = Local OIM
19 = DPI Port 2
20 = DPI Port 3
21 = Reserved
22 = Network
23 = Reserved

Default: Read Only

Access: 2 **Path:** Utility>Diagnostics

See also: 90, 93, 96, 101

Displays the source of the speed reference of the drive.

214 Start Inhibits

Range: See figure 11.19

Default: Read Only

Access: 2 **Path:** Utility>Diagnostics

See also:

Displays the source input currently preventing the drive from starting.

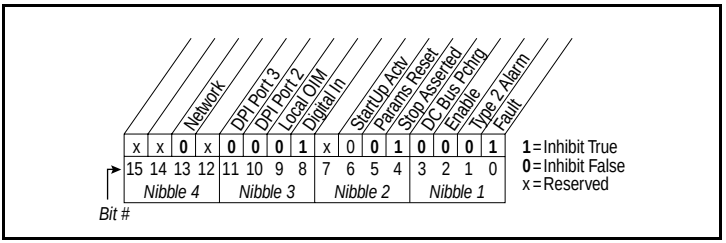

Figure 11.19 – Start Inhibits (214)

215 Last Stop Source

Range: 0 = Pwr Removed
1 = Local OIM
2 = DPI Port 2
3 = DPI Port 3
4 = Reserved
5 = Network
6 = Reserved
7 = Digital In
8 = Fault
9 = Not Enabled
10 = Sleep
11 = Jog

Default: Read Only

Access: 2 **Path:** Utility>Diagnostics

See also:

Displays the source that initiated the most recent stop command. It will be cleared (set to 0) during the next start sequence.

216 Dig In Status

Range: See figure 11.20

Default: Read Only

Access: 2 **Path:** Utility>Diagnostics
Inputs & Outputs>Digital Inputs

See also: 361-366

Current state of the digital inputs on the terminal block.

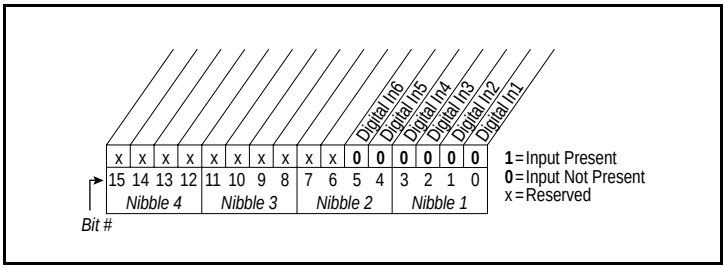

Figure 11.20 – Dig In Status (216)

217 Dig Out Status

Range: See figure 11.21

Default: Read Only

Access: 2 **Path:** Utility>Diagnostics
Inputs & Outputs>Digital Outputs

See also: 380-384

Current state of the digital outputs.

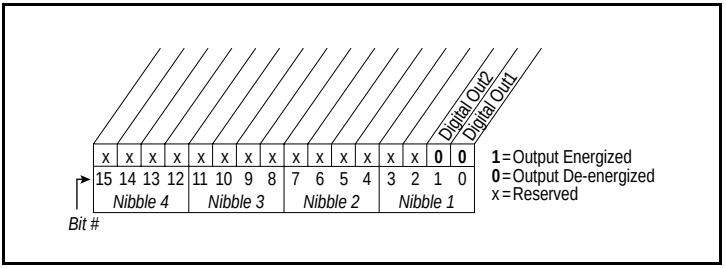

Figure 11.21 – Dig Out Status (217)

218 Drive Temp

Range: -/+100 degC [0.1 degC]

Default: Read Only

Access: 2 **Path:** Utility>Diagnostics

See also:

Present operating temperature of the drive power section.

219 Drive OL Count

Range: 0.0 to 100.0% [0.1%]

Default: Read Only

Access: 2 **Path:** Utility>Diagnostics

See also: 150

Accumulated percentage of drive overload. Continuously operating the drive over 100% of its rating will increase this value to 100% and cause a drive fault.

220 Motor OL Count

Range: 0.0 to 100.0 % [1.0%]

Default: Read Only

Access: 2 **Path:** Utility>Diagnostics

See also: 47, 48

Accumulated percentage of motor overload. Continuously operating the motor over 100% of the motor overload setting will increase this value to 100% and cause a drive fault.

224 Fault Frequency

Range: 0.0 to +/-400.0 Hz [0.1 Hz]

Default: Read Only

Access: 2 **Path:** Utility>Diagnostics

See also: 225-230

Captures and displays the output frequency of the drive at the time of the last fault.

225 Fault Amps

Range: 0.0 to Rated Amps x 2 [0.1 Amps]

Default: Read Only

Access: 2 **Path:** Utility>Diagnostics

See also: 224-230

Captures and displays motor amps at the time of the last fault.

226 Fault Bus Volts

Range: 0.0 to Max Bus Volts [0.1 VDC]

Default: Read Only

Access: 2 **Path:** Utility>Diagnostics

See also: 224-230

Captures and displays the DC bus voltage of the drive at the time of the last fault.

227 Status 1 @ Fault

Range:	See figure 11.22
Default:	Read Only
Access:	2 **Path:** Utility>Diagnostics
See also:	209, 224-230

Captures and displays Drive Status bit pattern at the time of the last fault.

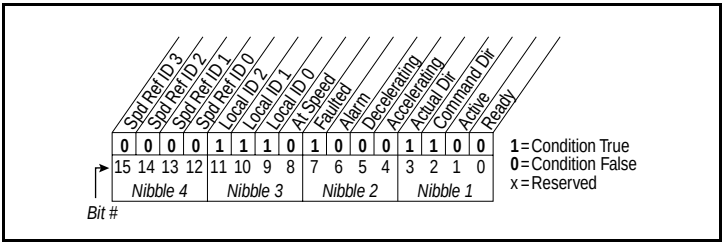

Figure 11.22 – Status 1 @ Fault (227)

See parameter 209 for bit descriptions.

228 Status 2 @ Fault

Range:	See figure 11.23
Default:	Read Only
Access:	2 **Path:** Utility>Diagnostics
See also:	210, 224-230

Captures and displays Drive Status bit pattern at the time of last fault.

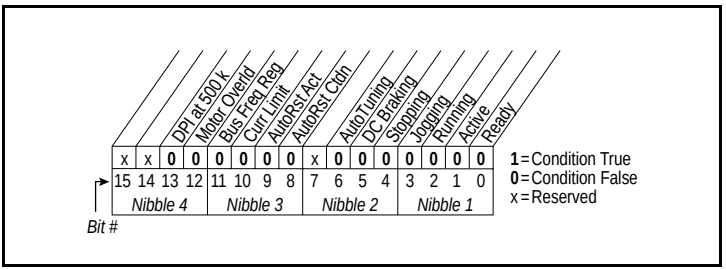

Figure 11.23 – Status 2 @ Fault (228)

See parameter 210 for bit descriptions.

229 Alarm 1 @ Fault

Range: See figure 11.24

Default: Read Only

Access: 1 **Path:** Utility>Diagnostics

See also: 211, 224-230

Captures and displays Drive Alarm status at the time of the last fault.

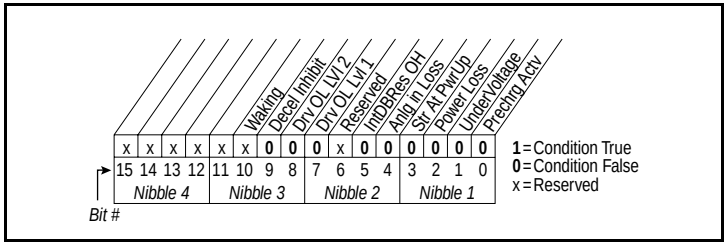

Figure 11.24 – Alarm 1 @ Fault (229)

See parameter 211 for bit descriptions.

230 Alarm 2 @ Fault

Range: See figure 11.25

Default: Read Only

Access: 1 **Path:** Utility>Diagnostics

See also: 211, 221-230

Captures and displays Drive Alarm status bit pattern at the time of last fault.

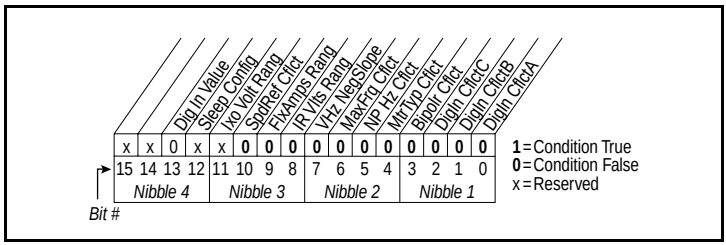

Figure 11.25 – Alarm 2 @ Fault (230)

See parameter 212 for bit descriptions.

234 Testpoint 1 Sel

Range: 0 to 65535 [1]
Default: 499
Access: 2 **Path:** Utility>Diagnostics
See also: 235

Selects the function whose value is displayed in Testpoint 1 Data (235). These are internal values that are not accessible through parameters.

Factory diagnostic function.

235 Testpoint 1 Data

Range: 0 to 4,294,697,295 [1]
Default: 0
Access: 2 **Path:** Utility>Diagnostics
See also: 234

The present value of the function selected in Testpoint 1 Sel (234).

Factory diagnostic function.

236 Testpoint 2 Sel

Range: 0 to 65535 [1]
Default: 499
Access: 2 **Path:** Utility>Diagnostics
See also: 237

Selects the function whose value is displayed in Testpoint 2 Data (237). These are internal values that are not accessible through parameters.

Factory diagnostic function.

237 Testpoint 2 Data

Range: 0 to 4,294,967,295 [1]
Default: 0
Access: 2 **Path:** Utility>Diagnostics
See also: 236

The present value of the function selected in Testpoint 2 Sel (236).

Factory diagnostic function.

238 Fault Config 1

Range: See figure 11.26

Default: See figure 11.26

Access: 2 **Path:** Utility>Faults

See also:

Enables/disables annunciation of the faults shown in figure 11.26.

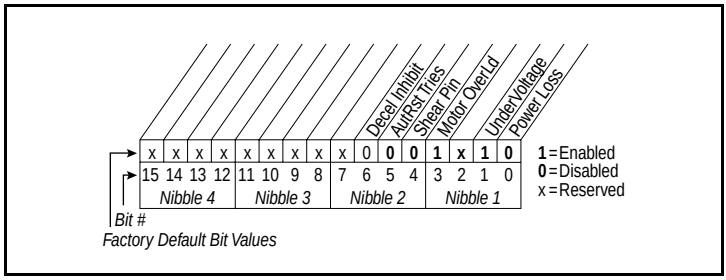

Figure 11.26 – Fault Config 1 (238)

240 Fault Clear

Range: 0 = Ready
1 = Clear Faults
2 = Clr Flt Que

Default: 0 = Ready

Access: 2 **Path:** Utility>Faults

See also: 241

Resets a fault and clears the fault queue.

241 Fault Clear Mode

Range: 0 = Disabled
1 = Enabled

Default: 1 = Enabled

Access: 2 **Path:** Utility>Faults

See also: 240

Enables/disables a fault reset (clear faults) attempt from any source. This does not apply to fault codes stored in the fault queue, which are cleared indirectly via other actions.

242 Power Up Marker

32

Range: 0.0000 to 4,294,967.2925 Hr [0.0001 Hr]

Default: Read Only

Access: 2 **Path:** Utility>Faults

See also: 244, 246, 248, 250

Elapsed hours since drive power up. This value will rollover to 0 after the drive has been powered on for more than the maximum value shown.

259 Alarm Config 1

Range: See figure 11.27

Default: See figure 11.27

Access: 2 **Path:** Utility>Alarms

See also:

Selects conditions that will initiate a drive alarm.

Refer to chapter 12, Troubleshooting the Drive, for alarm definitions.

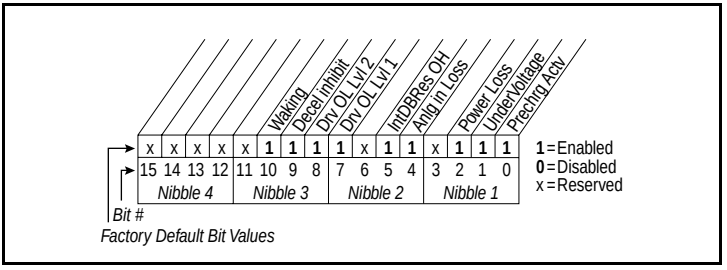

Figure 11.27 – Alarm Config 1 (259)

271 Drive Logic Rslt

Range: See figure 11.28

Default: Read Only

Access: 2 **Path:** Communication>Comm Control

See also:

The output of the logic function control block resulting from the combination of all port requests and masking functions. Each bit or set of bits represent a command to the drive.

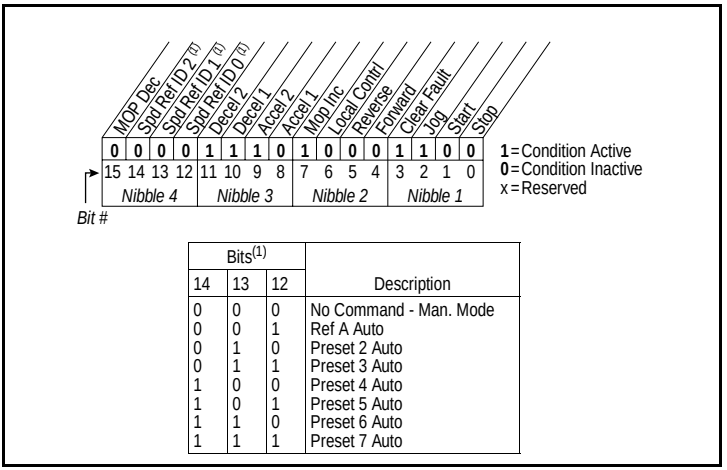

Bits(1)			
14	13	12	Description
0	0	0	No Command - Man. Mode
0	0	1	Ref A Auto
0	1	0	Preset 2 Auto
0	1	1	Preset 3 Auto
1	0	0	Preset 4 Auto
1	0	1	Preset 5 Auto
1	1	0	Preset 6 Auto
1	1	1	Preset 7 Auto

Figure 11.28 – Drive Logic Rslt (271)

272 Drive Ref Rslt

Range: 0 to 32767 [1]

Default: Read Only

Access: 2 **Path:** Communication>Comm Control

See also:

Present frequency reference scaled as a DPI reference for peer-to-peer communications. The value shown is the output prior to the accel/decel ramp and any corrections supplied by slip comp, PI, etc.

273 Drive Ramp Rslt

Range: 0 to 32767 [1]

Default: Read Only

Access: 2 **Path:** Communication>Comm Control

See also:

Present frequency reference scaled as a DPI reference for peer-to-peer communications. The value shown is the value after the accel/decel ramp but prior to any corrections supplied by slip comp, PI, etc.

286 Manual Mask

Range: See figure 11.29

Default: 0x2F

Access: 2 **Path:** Communication>Masks & Owners

See also:

Disables manual mode activation from the port corresponding to bit number.

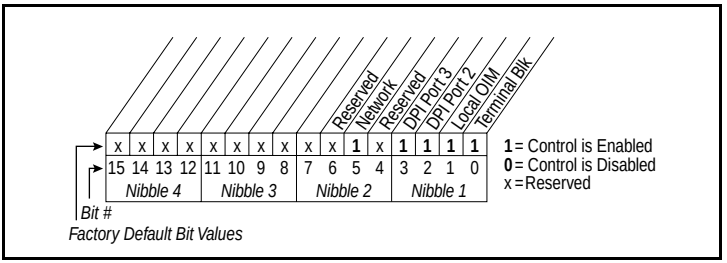

Figure 11.29 – Manual Mask (286)

Example:

Bit 0 = 0 Terminal block disabled
Bit 1 = 1 Local OIM enabled

In this example, manual mode can be selected by the OIM but not by terminal block inputs.

288 Stop Owner

Range: See figure 11.30

Default: Read Only

Access: 2 **Path:** Communication>Masks & Owners

See also: 276 - 285

Inputs that are presently issuing a valid stop command.

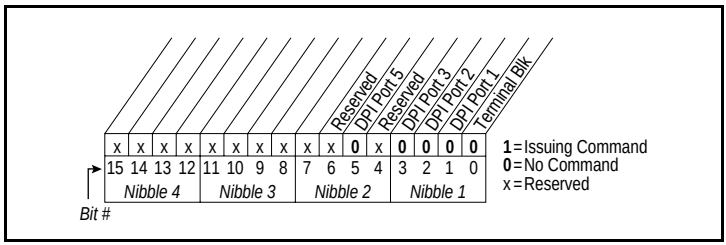

Figure 11.30 – Stop Owner

Source	Location
Terminal Block	Logic I/O
DPI Port 1	Local OIM
DPI Port 2	DIN port at base of drive
DPI Port 3	Split DIN port
DPI Port 5 (Network)	Network option

298 Manual Owner

Range: See figure 11.31

Default: Read Only

Access: 2 **Path:** Communication>Masks & Owners

See also:

Indicates the source providing manual control and reference.

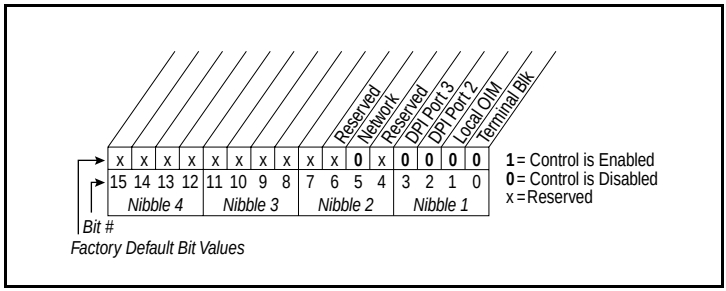

Figure 11.31 – Manual Owner

300 **Data In A1** - Link A Word 1
301 **Data In A2** - Link A Word 2

Range: 0 to 387 [1]
Default: 0 (Disabled)
Access: 2 **Path:** Communication>Datalinks
See also:

Parameter number whose value will be written from a network communications device data table.

Parameters that can only be changed while the drive is stopped cannot be used as Datalink inputs. Entering a parameter of this type will disable the link.

Refer to the appropriate communications option board manual for Datalink information.

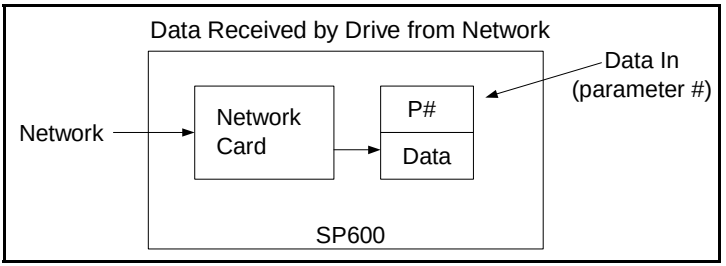

302 **Data In B1** - Link B Word 1
303 **Data In B2** - Link B Word 2

Range: 0 to 387 [1]
Default: 0 (Disabled)
Access: 2 **Path:** Communication>Datalinks
See also:

Parameter number whose value will be written from a communications device data table.

Parameters that can only be changed while the drive is stopped cannot be used as Datalink inputs. Entering a parameter of this type will disable the link.

Refer to the appropriate communications option board manual for Datalink information.

304 **Data In C1** - Link C Word 1
305 **Data In C2** - Link C Word 2

Range: 0 to 387 [1]
Default: 0 (Disabled)
Access: 2 **Path:** Communication>Datalinks
See also:

Parameter number whose value will be written from a network communications device data table.

Parameters that can only be changed while the drive is stopped cannot be used as Datalink inputs. Entering a parameter of this type will disable the link.

Refer to the appropriate communications option board manual for Datalink information.

306 **Data In D1** - Link D Word 1
307 **Data In D2** - Link D Word 2

Range: 0 to 387 [1]
Default: 0 (Disabled)
Access: 2 **Path:** Communication>Datalinks
See also:

Parameter number whose value will be written from a network communications device data table.

Parameters that can only be changed while the drive is stopped cannot be used as Datalink inputs. Entering a parameter of this type will disable the link.

Refer to the appropriate communications option board manual for Datalink information.

310 **Data Out A1**- Link A Word 1
311 **Data Out A2** - Link A Word 2

Range: 0 to 387 [1]
Default: 0 (Disabled)
Access: 2 **Path:** Communication>Datalinks
See also:

Parameter number whose value will be written to a communications device data table.

312 **Data Out B1**- Link B Word 1
313 **Data Out B2** - Link B Word 2

Range: 0 to 387 [1]
Default: 0 (Disabled)
Access: 2 **Path:** Communication>Datalinks
See also:

Parameter number whose value will be written to a network communications device data table.

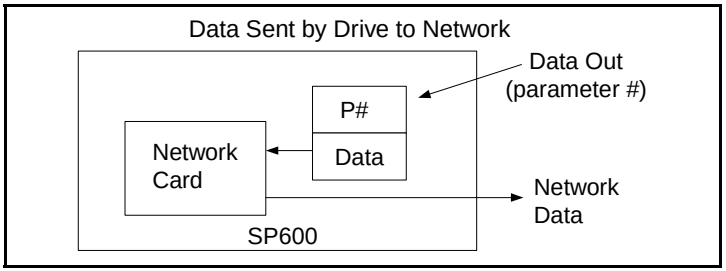

314 **Data Out C1**- Link C Word 1
315 **Data Out C2** - Link C Word 2

Range: 0 to 387 [1]
Default: 0 (Disabled)
Access: 2 **Path:** Communication>Datalinks
See also:

Parameter number whose value will be written to a network communications device data table.

316 **Data Out D1**- Link D Word 1
317 **Data Out D2** - Link D Word 2

Range: 0 to 387 [1]
Default: 0 (Disabled)
Access: 2 **Path:** Communication>Datalinks
See also:

Parameter number whose value will be written to a network communications device data table.

320 **Anlg In Config**

Range: See figure 11.32
Default: See figure 11.32
Access: 0 **Path:** Inputs & Outputs>Analog Inputs
See also: 322, 323, 325, 326

Selects the type of input signal being used for analog input 1 and 2. These inputs can be configured as 0 to 10 VDC or 4 to 20 mA inputs.

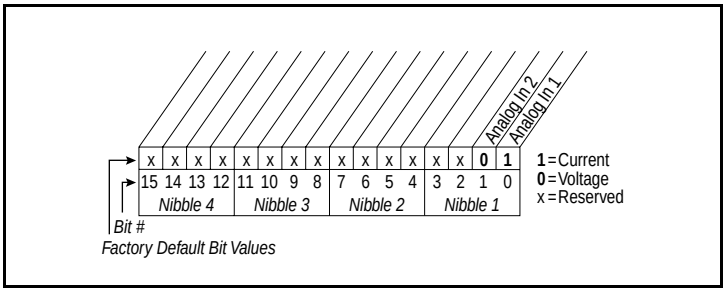

Figure 11.32 – Anlg In Config (320)

321 Anlg In Sqr Root

Range: See figure 11.33
Default: See figure 11.33
Access: 2 **Path:** Inputs & Outputs>Analog Inputs
See also:

Enables/disables the square root function for each analog input.

This function should be enabled if the input signal being monitored varies with the square of the quantity. The square root function is scaled such that the input range is the same as the output range. For example, if the input is set up as a unipolar voltage input, then the input and output ranges of the square root function will be 0 to 10 volts.

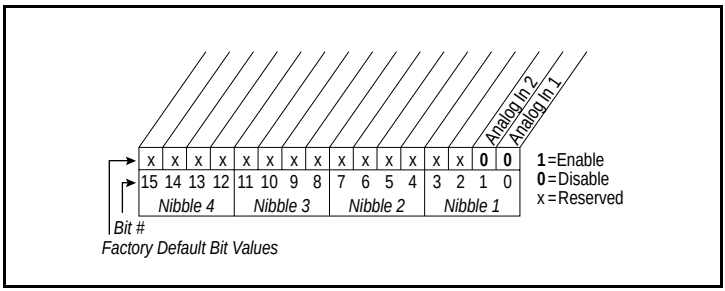

Figure 11.33 – Anlg In Sqr Root (321)

322 Analog In 1 Hi

Range:	4.000 to 20.000 mA [0.001 mA] -/+10.0 V [0.1 V] 0.0 to 10.0 V [0.1 V]
Default:	20.000 mA
Access:	0 **Path:** Inputs & Outputs>Analog Inputs
See also:	91, 92

The drive scales the value read from the analog input and converts it to units usable for the application. The user controls the scaling by setting parameters that associate a low and high point in the input range with a low and high point in the target range.

Analog In 1 Hi sets the highest input value to the analog input 1 scaling block.

Analog Input Scaling Example

Speed Ref A Sel = Analog In 1

Ref. Lo (92) = 10 Hz

Ref. Hi (91) = 60 Hz

Analog In 1 Lo (323) = 0.0 V

Analog In 1 Hi (322) = 10.0 V

This is the default setting, where minimum input (0 V) represents Ref. Lo and maximum input (10 V) represents Ref. Hi.

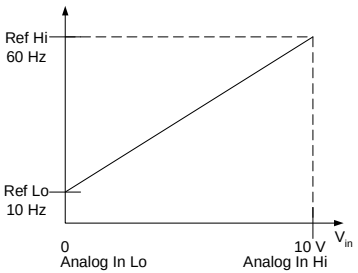

323 Analog In 1 Lo

Range:	4.000 to 20.000 mA [0.001 mA] -/+10.0 V [0.1 V] 0.0 to 10.0 V [0.1 V]
Default:	4.000 mA
Access:	0 **Path:** Inputs & Outputs>Analog Inputs
See also:	91, 92

Sets the lowest input value to the analog input 1 scaling block. Refer to Analog In 1 Hi (322) for more information.

324 Analog In 1 Loss

Range:	0 = Disabled 1 = Fault 2 = Hold Input (use last frequency command) 3 = Set Input Lo (use Minimum Speed as frequency command) 4 = Set Input Hi (use Maximum Speed as frequency command) 5 = Goto Preset1 (use Preset 1 as frequency command) 6 = Hold OutFreq (maintain last output frequency)
Default:	0 = Disabled
Access:	2 **Path:** Inputs & Outputs>Analog Inputs
See also:	91, 92

Selects drive response when an analog signal loss is detected. (1.6V = signal loss, 1.9V = end of signal loss; 3.2 mA = signal loss, 3.8 mA = end of signal loss.)

One of the selections (1=Fault) stops the drive on signal loss. All other choices make it possible for the input signal to return to a usable level while the drive is still running.

ATTENTION: Setting parameter 324 to a value other than 1 allows the drive to continue running or resume running if a signal loss occurs. If a lost analog signal is restored while the drive is running, the drive will ramp to the restored reference level at the rate specified in Accel Time 1 (140), Accel Time 2 (141), Decel Time 1 (142), and Decel Time 2 (143). Be aware that an abrupt speed change may occur depending upon the new reference level and the rate specified in these parameters. Failure to observe this precaution could result in bodily injury.

Important: Note that there is no signal loss detection while the input is in bipolar voltage mode.

325 Analog In 2 Hi

Range:	4.000 to 20.000 mA [0.001 mA] -/+10.0 V [0.1 V] 0.0 to 10.0 V [0.1 V]
Default:	10 V
Access:	2 **Path:** Inputs & Outputs>Analog Inputs
See also:	91, 92

Sets the highest input value to the analog input 2 scaling block. See parameter 322 for an example.

326 Analog In 2 Lo

Range:	4.000 to 20.000 mA [0.001 mA] -/+10.0 V [0.1 V] 0.0 to 10.0 V [0.1 V]
Default:	0.000 V
Access:	2 **Path:** Inputs & Outputs>Analog Inputs
See also:	91, 92

Sets the lowest input value to the analog input 2 scaling block.

327 Analog In 2 Loss

Range:	0 = Disabled 1 = Fault 2 = Hold Input (use last frequency command) 3 = Set Input Lo (use Minimum Speed as frequency command) 4 = Set Input Hi (use Maximum Speed as frequency command) 5 = Goto Preset1 (use Preset1 as frequency command) 6 = Hold OutFreq (maintain last output frequency)
Default:	0 = Disabled
Access:	2 **Path:** Inputs & Outputs>Analog Inputs
See also:	91, 92

Selects drive action when an analog signal loss is detected. (1.6V = signal loss, 1.9 = end of signal loss; 3.2 mA = signal loss, 3.8 mA = end of signal loss.)

One of the selections (1=Fault) stops the drive on signal loss. All other choices make it possible for the input signal to return to a usable level while the drive is still running.

ATTENTION: Setting parameter 327 to a value other than 1 allows the drive to continue running or resume running if a signal loss occurs. If a lost analog signal is restored while the drive is running, the drive will ramp to the restored reference level at the rate specified in Accel Time 1 (140), Accel Time 2 (141), Decel Time 1 (142), and Decel Time 2 (143). Be aware that an abrupt speed change may occur depending upon the new reference level and the rate specified in these parameters. Failure to observe this precaution could result in bodily injury.

Important: Note that there is no signal loss detection while the input is in bipolar voltage mode.

340 Anlg Out Config

Range: See figure 11.29
Default: 0
Access: 1 **Path:** Inputs & Outputs>Analog Outputs
See also:

Selects the mode for the analog output.

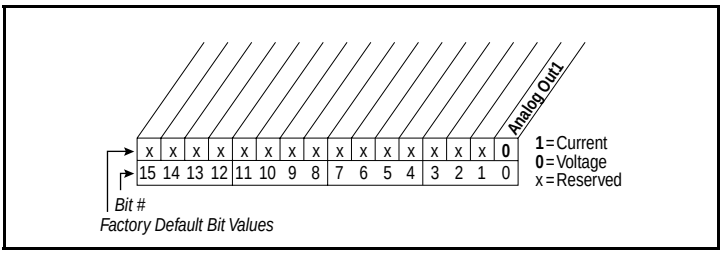

Figure 11.34 – Analog Out Config

341 Anlg Out Absolut

Range: See figure 11.35
Default: See figure 11.35
Access: 2 **Path:** Inputs & Outputs>Analog Outputs
See also: 342

Selects whether the signed value or absolute value of a parameter is used before being scaled to drive the analog output.

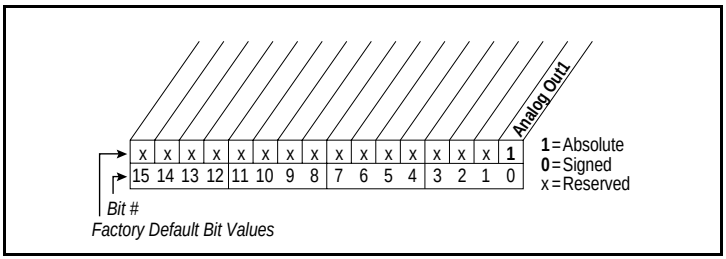

Figure 11.35 – Anlg Out Absolute (341)

Bit	Signal Level	Output Volts
0	-100%	0 V
	0%	5 V
	100%	10 V
1	-100%	10 V
	0%	0 V
	100%	10 V

342 Analog Out1 Sel

Range:	0 = Output Freq: Output frequency (see figure 7.3 - Speed Reference Control Flowchart) 1 = Command Freq: Commanded frequency setpoint (see figure 7.3 - Speed Reference Control Flowchart) 2 = Output Amps: Total output current 3 = Torque Amps: Torque current 4 = Flux Amps: Flux current 5 = Output Power: Output power 6 = Output Volts: Output voltage 7 = DC Bus Volts: DC Bus voltage 8 = PI Reference: PI setpoint value 9 = PI Feedback: PI feedback value 10 = PI Error: Difference between PI Reference & PI Feedback (reference - feedback) 11 = PI Output: PI output value 12 = % Motor OL: Motor overload percentage 13 = % Drive OL: Drive overload percentage 14 = Post Rmp Ref: Post Ramp Reference value (see figure 7.3 - Speed Reference Control Flowchart)
Default:	0 = Output Freq
Access:	1 **Path:** Inputs & Outputs>Analog Outputs
See also:	1 - 7, 12, 135 - 138, 219, 220

Selects the source of the value that drives the analog output. Refer to table 11.3.

343 Analog Out1 Hi

Range:	±10.000 V / 4 - 20 mA [0.001 V / .001 mA]
Default:	10.000 V / 20.000 mA
Access:	1 **Path:** Inputs & Outputs>Analog Outputs
See also:	342

Sets the analog output value when the source value is at maximum.

Scaling the Analog Output

The user defines the scaling for the analog output by entering analog output voltages into Analog Out1 Lo and Analog Out1 Hi. These two output voltages correspond to the bottom and top of the possible range covered by the quantity being output. The output voltage will vary linearly with the quantity being output. The analog output voltage will not go outside the limits defined by Analog Out1 Lo and Analog Out 1 Hi. See table 11.4.

Table 11.4 – Analog Output Scaling

Options:		Analog Out1 Lo (344) Value Corresponds to:		Analog Out1 Hi (343) Value Corresponds to:
		Analog Out Absolut (341) = Disabled	*Analog Out Absolut (341) = Enabled*	
0	Output Freq	–[Maximum Speed]	0 Hz	+[Maximum Speed]
1	Commanded Freq	–[Maximum Speed]	0 Hz	+[Maximum Speed]
2	Output Amps	0 Amps	0 Amps	200% Rated
3	Torque Amps	–200% Rated	0 Amps	200% Rated
4	Flux Amps	0 Amps	0 Amps	200% Rated
5	Output Power	0 kW	0 kW	200% Rated
6	Output Volts	0 Volts	0 Volts	120% Rated
7	DC Bus Volts	0 Volts	0 Volts	200% Rated
8	PI Reference	–100%	0%	100%
9	PI Feedback	–100%	0%	100%
10	PI Error	–100%	0%	100%
11	PI Output	–100%	0%	100%
12	%Motor OL	0%	0%	100%
13	%Drive OL	0%	0%	100%
14	Post Ramp Ref	–[Maximum Speed]	0 Hz	+[Maximum Speed]

344 Analog Out1 Lo

Range: ±10.000 V / 4 - 20 mA [0.001 V / .001 mA]

Default: 0.000 V / 4.000 mA

Access: 1 **Path:** Inputs & Outputs>Analog Outputs

See also: 342, 343

Sets the analog output value when the source value is at minimum.

Refer to Analog Out1 Hi (343) for more information.

361 Digital In1 Sel
362 Digital In2 Sel
363 Digital In3 Sel
364 Digital In4 Sel
365 Digital In5 Sel
366 Digital In6 Sel

Range:
0 = Not Used
1 = Enable
2 = Clear Faults[1]
3 = Function Loss
4 = Stop - CF[2]
5 = Start
6 = Fwd/Reverse[2]
7 = Run[3]
8 = Run Forward[3]
9 = Run Reverse[3]
10 = Jog
11 = Jog Forward
12 = Jog Reverse
13 = Stop Mode B
14 = Bus Reg Md B
15 = Speed Sel 1[4]
16 = Speed Sel2[4]
17 = Speed Sel 3[4]
18 = Manual
19 = Reserved
20 = Acc2 & Dec2
21 = Accel 2
22 = Decel 2
23 = MOP Inc
24 = MOP Dec
25 = OIM Control
26 = PI Enable
27 = PI Hold
28 = PI Reset
29 = Pwr Loss Lvl
30 = Precharge En

Default: See table 11.6

Access: 1 **Path:** Inputs & Outpust>Digital Inputs

See also: 96, 100, 124, 140, 156, 162, 194, 380

[1]When Digital In"x" Sel is set to option 2 (Clear Faults), the stop key cannot be used to clear a fault condition.

[2]Typical 3-Wire Inputs. These require that only 3-wire functions are chosen. Including 2-wire selections will cause a type 2 alarm.

[3]Typical 2-Wire Inputs. These require that only 2-wire functions are chosen. Including 3-wire selections will cause a type 2 alarm.

[4]To access Preset Speed 1, set Speed Ref A Sel to Preset Speed 1. See table 11.3.

Table 11.5 – Speed Select Inputs

Speed Select Inputs			Reference Source
3	2	1	
0	0	0	Speed Ref A Sel (90)
0	0	1	Preset Speed 1 (101)
0	1	0	Preset Speed 2 (102)
0	1	1	Preset Speed 3 (103)
1	0	0	Preset Speed 4 (104)
1	0	1	Preset Speed 5 (105)
1	1	0	Preset Speed 6 (106)
1	1	1	Preset Speed 7 (107)

Assigns an input function to the drive's digital inputs.

Table 11.6 – Default Values for Parameters 361-366

Parameter No.	Default Value
361	4 = Stop - CF
362	5 = Start
363	3 = Function Loss
364	10 = Jog
365	18 = Auto/Man
366	15 = Speed Sel 1

1 = Enable: If the input is closed, the drive can run (start permissive). If the input is open, the drive will not start.

If the drive is already running when this input is opened, the drive will coast and indicate "not enabled" on the OIM (if present). This is not considered a fault condition, and no fault will be generated.

If multiple enable inputs are configured, the drive will not run if any of them are open.

2 = Clear Faults: This function allows an external device to reset drive faults through the terminal block if Logic Source Sel (89) is set to Terminal Blk or All Ports. An open-to-closed transition on this input will reset the current fault (if any).

If this input is configured at the same time as Stop-Clear Faults, then only the Clear Faults input can actually cause faults to be reset.

3 = Function Loss: If the function loss input is open, a fault is generated. The function loss input is active at all times regardless of the selected logic control source.

Important: The function loss input is not intended for a fast output power kill. The drive will not fault until the software detects the change of state of this input. If this input function is not configured, the fault will not occur.

4 = Stop - CF (Stop - Clear Faults): An open input will assert a stop command if the terminal block is the control source. While the stop is asserted, the drive ready status will be off. A closed input will allow the drive to start. An open-to-closed transition is interpreted as a clear faults request. The drive will clear any existing faults.

If Start is configured, then Stop-Clear Faults must also be configured to prevent a digital input configuration alarm condition. Stop-Clear Faults is optional in all other circumstances.

5 = Start: An open-to-closed transition generates a run command if the terminal block is the control source.

If Start is configured, then Stop-Clear Faults must also be configured to prevent a digital input configuration alarm condition.

6 = Fwd/Reverse (Forward/Reverse): An open input sets the direction to forward if the terminal block is the control source. A closed input sets the direction to reverse. If the state of the input changes and the drive is running or jogging, the drive will change direction.

If the Fwd/Rev input function is assigned to more than one physical digital input at a time, a digital input configuration alarm will be asserted.

7 = Run: An open-to-closed transition on this input generates a a run command if the terminal block is the control source. If the input is open, the drive will stop.

The purpose of this input function is to allow a 2-wire start while the direction is being controlled by some other function.

8 and **9 = Run Forward** and **Run Reverse:** If the terminal block is the control source, an open-to-closed transition on one or both inputs while the drive is stopped will cause the drive to run unless the Stop - Clear Faults input function is configured and open.

If one or both of these input functions are assigned to more than one physical digital input at a time, a digital input configuration alarm will be asserted.

10 = Jog: An open-to-closed transition on this input while the drive is stopped causes the drive to start (jog) in the current direction. When the input opens while the drive is running (jogging), the drive will stop.

ATTENTION: If a normal drive start command is received while the drive is jogging, the drive will switch from jog mode to run mode. The drive will not stop, but may change speed and/or change direction. Failure to observe this precaution could result in severe bodily injury or loss of life.

The drive will not jog while running or while the Stop - Clear Faults input is open. Start has precedence over jog.

11 and **12** = **Jog Forward** and **Jog Reverse:** An open-to-closed transition on one or both inputs while the drive is stopped will cause the drive to jog unless the Stop - Clear Faults input function is configured and open. Table 11.7 describes the actions taken by the drive in response to various states of these input functions.

Table 11.7 – Drive Response to Jog Forward and Jog Reverse Inputs

Jog Forward	Jog Reverse	Drive Response
Open	Open	Drive will stop if already jogging, but can be started by other means.
Open	Closed	Drive jogs in reverse direction.
Closed	Open	Drive jogs in forward direction.
Closed	Closed	Drive continues to jog in current direction.

ATTENTION: If a normal drive start command is received while the drive is jogging, the drive will switch from jog mode to run mode. The drive will not stop, but may change speed and/or change direction. Failure to observe this precaution could result in severe bodily injury or loss of life.

The drive will not jog while running or while the Stop - Clear Faults input is open. Start has precedence over jog.

If one of these input functions is configured and the other one is not, table 11.7 still applies, but the unconfigured input function should be considered permanently open.

13 = Stop Mode B: This digital input selects between two different drive stop modes.

If the input is open, then Stop Mode A selects which stop mode to use. If the input is closed, the Stop Mode B selects which stop mode to use. If this input function is not configured, then Stop Mode A selects which stop mode to use.

14 = Bus Regulation Mode B: This digital input function selects how the drive will regulate excess voltage on the DC bus.

If the input is open, then Bus Reg Mode A selects which bus regulation mode to use. If the input is closed, then Bus Reg Mode B selects which bus regulation mode to use. If this input function is not configured, then Bus Reg Mode A selects which bus regulation mode to use.

15-17 = Speed Select 1, 2, 3: One, two, or three digital input functions can be used to select the speed reference used by the drive, and they are called the Speed Select input functions. The current open/closed state of all Speed Select input functions combine to select which source is the current speed reference.

There are 7 possible combinations of open/closed states for the three input functions, and thus 7 possible parameters can be selected. The 7 parameters are: Speed Ref A Sel and Preset Speed 2 through Preset Speed 7.

If the Speed Select input functions select Speed Ref A Sel , then the value of that parameter further selects a reference source. There are a large number of possible selections, including all 6 presets.

If the input functions directly select one of the preset speed parameters, then the parameter contains a frequency that is to be used as the reference.

The Speed Select input function configuration process involves assigning the functionality of the three possible Speed Select input functions to physical digital inputs. The three Speed Select inputs functions are called Speed Select 1, Speed Select 2, and Speed Select 3, and they are assigned to physical inputs using the Digital In”x” Sel parameters.

Table 11.8 describes the various reference sources that can be selected using all three of the Speed Select input functions. If any of the three Reference Select input functions are not configured, then the software will still follow the table, but will treat the unconfigured inputs as if they are permanently open.

Table 11.8 – Effect of Speed Select Input State on Selected Reference

Speed Select 3	Speed Select 2	Speed Select 1	Parameter that determines reference:
Open	Open	Open	Speed Ref A Sel
Open	Open	Closed	Preset Speed 1
Open	Closed	Open	Preset Speed 2
Open	Closed	Closed	Preset Speed 3
Closed	Open	Open	Preset Speed 4
Closed	Open	Closed	Preset Speed 5
Closed	Closed	Open	Preset Speed 6
Closed	Closed	Closed	Preset Speed 7

18 = Manual: The Manual function allows a single control device to assume exclusive control of the manual reference. The most recent peripheral (OIM or terminal block) that makes a manual reference request will be given control of the manual reference setpoint.

If the Manual input function is closed, then the drive will use one of the analog inputs (defined by TB Man Ref Sel) as the reference. If an OIM subsequently requests manual control (that is, Auto/Man F-Key is pressed) and then gives control up (presses Auto/Man F-Key again), then the Auto/Manual digital input must be opened and closed again to regain control of the manual reference.

If this input is open, then the terminal block does not request manual control of the reference. If no control device (including the terminal block) is current requesting manual control of the reference, then the drive will use the normal reference selection mechanisms.

19 = Reserved

20 = Acc2 & Dec2: A single input function is used to select between Accel Time 1/Decel Time 1 and Accel Time 2/Decel Time2.

If the function is open, the drive will use Accel Time 1 as the acceleration rate and Decel Time 1 as the deceleration rate. If the function is closed, the drive will use Accel Time 2 as the acceleration rate and Decel Time 2 as the deceleration rate.

21, 22 = Accel 2, Decel 2: One input function (called Accel 2) selects between Accel Time 1 and Accel Time 2, and another input function (called Decel 2) selects between Decel Time 1 and Decel Time 2. The open state of the function selects Accel Time 1 or Decel Time 1, and the closed state selects Accel Time 2 or Decel Time 2.

23, 24 = MOP Increment, MOP Decrement: The MOP is a reference setpoint (called the MOP Value) that can be incremented and decremented by external devices. These inputs are used to increment and decrement the Motor Operated Potentiometer (MOP) value inside the drive. The MOP value will be retained through a power cycle.

While the MOP Increment input is closed, the MOP value will increase at rate contained in MOP Rate. Units for rate are Hz per second.

While the MOP Decrement input is closed, MOP value will decrease at rate contained in MOP Rate. Units for rate are Hz per second.

If both the MOP Increment and MOP Decrement inputs are closed, the MOP value will stay the same.

In order for the drive to use the MOP value as the current speed reference, either Speed Ref A Sel must be set to MOP.

25 = OIM Control: This input provides a mean to override the logic control source selection and can be used to override control from any port, including the All Ports selection.

An open-to-closed transition of this input sets the control source to the local OIM. If no local OIM is present, the control source is set to the remote OIM. If no OIM is present at all, the drive stops.

When control is set to the OIM, the OIM is granted manual reference (the Man Ref Preload (193) configuration is enforced). Subsequent Auto/Manual commands will toggle the OIM in and out of manual mode. The drive's active or stopped state is not affected unless no OIM is present.

On a closed-to-open transition, manual control is released if active, and the selected auto reference is used. The logic source select override is removed. The edge/level-sense start configuration is imposed (LevelSense Start).

26 = PI Enable: If this input function is closed, the operation of the Process PI loop will be enabled.

If this input function is open, the operation of the Process PI loop will be disabled.

27 = PI Hold: If this input function is closed, the integrator for the Process PI loop will be held at the current value; that is, it will not increase.

If this input function is open, the integrator for the Process PI loop will be allowed to increase.

28 = PI Reset: If this input function is closed, the integrator for the Process PI loop will be reset to 0.

If this input function is open, the integrator for the Process PI loop will integrate normally.

29 = Pwr Loss Lvl: When the DC bus level in the drive falls below a certain level, a “powerloss” condition is created in the drive logic. This input allows the user to select between two different “power loss” detection levels dynamically. If the physical input is closed, then the drive will take its power loss level from a parameter. If the physical input is open (de-energized), then the drive will use a power loss level designated by internal drive memory, typically 82% of nominal. If the input function is not configured, then the drive always uses the internal power loss level.

30 = Prechange En: This input function is used to manage disconnection from a common DC bus.

If the physical input is closed, this indicates that the drive is connected to common DC bus and normal precharge handling can occur, and that the drive can run (start permissive). If the physical input is open, this indicates that the drive is disconnected from the common DC bus, and thus the drive should enter the precharge state (precharge relay open) and initiate a coast stop immediately in order to prepare for reconnection to the bus.

If this input function is not configured, then the drive assumes that it is always connected to the DC bus, and no special precharge handling will be done.

Type 2 Alarms

Some digital input programming may cause conflicts that result in a Type 2 alarm. For example, Digital In1 Sel set to 5 (Start) in 3-wire control, and Digital In2 Sel set to 7 (Run) in 2-wire control. Refer to chapter 12 for more information about these alarms. Note that Type 2 alarms will prevent the drive from starting.

Dig In Status (116) indicates the current state of the digital inputs.

380 Digital Out1 Sel

Range

1 = Fault - A fault has occurred and stopped the drive
2 = Alarm - A Type 1 or Type 2 alarm condition exists
3 = Ready - The drive is powered, Enabled and no start inhibits exist. It is “ready” to run
4 = Run - The drive is outputting voltage and frequency to the motor (indicates 3–wire control, either direction)
5 = Forward Run - The drive is outputting voltage and frequency to the motor (indicates 2–wire control in forward)
6 = Reverse Run - The drive is outputting voltage and frequency to the motor (indicates 2–wire control in reverse)
7 = Auto Restart - The drive is currently executing the Auto Restart or “Run at Power Up” function
8 = Reserved
9 = At Speed - The commanded speed equals or exceeds the programmed limit
10 = At Freq - The drive output frequency equals or exceeds the programmed limit
11 = At Current - The drive total output current exceeds the programmed limit
12 = At Torque - The drive output torque current component exceeds the programmed limit
13 = At Temp - The drive operating temperature exceeds the programmed limit
14 = At Bus Volts - The drive bus voltage exceeds the programmed limit
15 = At PI Error - The drive Process PI Loop error exceeds the programmed limit
16 = DC Braking - The drive is currently executing either a “DC Brake” or a “Ramp to Hold” stop command and the DC braking voltage is still being applied to the motor.
17 = Curr Limit - The drive is currently limiting output current
18 = Economize - The drive is currently reducing the output voltage to the motor to attempt to reduce energy costs during a lightly loaded situation.
19 = Motor Overld - The drive is currently reducing the output voltage to the motor to attempt to reduce energy costs during a lightly loaded situation.
20 = Power Loss - The drive has monitored DC bus voltage and sensed a loss of input AC power that caused the DC bus voltage to fall below the fixed monitoring value (82% of[DC bus Memory (13)
21 = Input 1 Link - The digital input value is output on Dig Out1
22 = Input 2 Link
23 = Input 3 Link
24 = Input 4 Link
25 = Input 5 Link
26 = Input 6 Link
27 = TB in Manual - The terminal block has manual reference control

Default: 1 = Fault

Access: 1 **Path:** Inputs & Outputs>Digital Outputs

See also: 1-4, 12, 48, 53, 137, 147, 157, 184, 218, 381-383, 385, 386

Selects the drive signal that will energize an output relay.

381 Dig Out1 Level

Range: 0.0 to 819.2 [0.1]

Default: 0.0

Access: 1 **Path:** Inputs & Outputs>Digital Outputs

See also: 380

Sets the relay activation level for options 10-15 in Digital Out1 Sel (380). Units are assumed to match the above selection (i.e., At Freq = Hz, At Torque = Amps).

382 Dig Out1 OnTime

Range: 0.00 to 600.00 Sec [0.01 Sec]

Default: 0.00 Sec

Access: 2 **Path:** Inputs & Outputs>Digital Outputs

See also: 380

Sets the on delay time for the digital outputs. This is the time between the occurrence of a condition and activation of the relay.

383 Dig Out1 OffTime

Range: 0.00 to 600.00 Sec [0.01 Sec]

Default: 0.00 Sec

Access: 2 **Path:** Inputs & Outputs>Digital Outputs

See also: 380

Sets the off delay time for the digital outputs. This is the time between the disappearance of a condition and de-activation of the relay.

384 Digital Out2 Sel

Range:
1 = Fault - A fault has occurred and stopped the drive
2 = Alarm - A Type 1 or Type 2 alarm condition exists
3 = Ready - The drive is powered, Enabled and no start inhibits exist. It is “ready” to run
4 = Run - The drive is outputting voltage and frequency to the motor (indicates 3–wire control, either direction)
5 = Forward Run - The drive is outputting voltage and frequency to the motor (indicates 2–wire control in forward)
6 = Reverse Run - The drive is outputting voltage and frequency to the motor (indicates 2–wire control in reverse)
7 = Auto Restart - The drive is currently executing the Auto Restart or “Run at Power Up” function
8 = Reserved
9 = At Speed - The commanded speed equals or exceeds the programmed limit
10 = At Freq - The drive output frequency equals or exceeds the programmed limit
11 = At Current - The drive total output current exceeds the programmed limit
12 = At Torque - The drive output torque current component exceeds the programmed limit
13 = At Temp - The drive operating temperature exceeds the programmed limit
14 = At Bus Volts - The drive bus voltage exceeds the programmed limit
15 = At PI Error - The drive Process PI Loop error exceeds the programmed limit
16 = DC Braking - The drive is currently executing either a “DC Brake” or a “Ramp to Hold” stop command and the DC braking voltage is still being applied to the motor.
17 = Curr Limit - The drive is currently limiting output current
18 = Economize - The drive is currently reducing the output voltage to the motor to attempt to reduce energy costs during a lightly loaded situation.
19 = Motor Overld - The drive is currently reducing the output voltage to the motor to attempt to reduce energy costs during a lightly loaded situation.
20 = Power Loss - The drive has monitored DC bus voltage and sensed a loss of input AC power that caused the DC bus voltage to fall below the fixed monitoring value (82% of[DC bus Memory (13)
21 = Input 1 Link - The digital input value is output on Dig Out1
22 = Input 2 Link
23 = Input 3 Link
24 = Input 4 Link
25 = Input 5 Link
26 = Input 6 Link
27 = TB in Manual - The terminal block has manual reference control

Default: 4 = Run

Access: 1 **Path:** Inputs & Output>Digital Outputs

See also: 1 - 4, 12, 48, 53, 137, 147, 157, 184, 218, 381-383, 385, 386

Selects the drive status that will energize an output relay.

385 Dig Out2 Level

Range: 0.0 to 819.2 [0.1]

Default: 0.0

Access: 1 **Path:** Inputs & Output>Digital Outputs

See also: 380

Sets the relay activation level for options 10-15 in Digital Out2 Sel (384). Units are assumed to match the above selection (i.e., At Freq = Hz, At Torque = Amps).

386 Dig Out2 OnTime

Range: 0.00 to 600.00 Sec [0.01 Sec]

Default: 0.00 Sec

Access: 2 **Path:** Inputs & Output>Digital Outputs

See also: 380

Sets the on delay time for the digital outputs. This is the time between the occurrence of a condition and activation of the relay.

387 Dig Out2 OffTime

Range: 0.00 to 600.00 Sec [0.01 Sec]

Default: 0.00 Sec

Access: 2 **Path:** Inputs & Output>Digital Outputs

See also: 380

Sets the off delay time for the digital outputs. This is the time between the disappearance of a condition and de-activation of the relay.

CHAPTER 12

Troubleshooting the Drive

ATTENTION: Only qualified electrical personnel familiar with the construction and operation of this equipment and the hazards involved should install, adjust, operate, or service this equipment. Read and understand this manual and other applicable manuals in their entirety before proceeding. Failure to observe this precaution could result in severe bodily injury or loss of life.

The SP600 drive provides the following ways to determine the status of the drive and to troubleshoot problems that may occur:

- Ready LED on the drive cover
- User-configurable and non-configurable alarms
- User-configurable and non-configurable faults
- Entries in the fault queue
- Drive status parameters

12.1 Verifying that DC Bus Capacitors are Discharged Before Servicing the Drive

ATTENTION: DC bus capacitors retain hazardous voltages after input power has been disconnected. After disconnecting input power, wait five (5) minutes for the DC bus capacitors to discharge and then check the voltage with a voltmeter to ensure the DC bus capacitors are discharged before touching any internal components. Failure to observe this precaution could result in severe bodily injury or loss of life.

The drive's DC bus capacitors retain hazardous voltages after input power has been disconnected. Perform the following steps before touching any internal components.

Step 1. Turn off and lock out input power. Wait 5 minutes.

Step 2. Open the drive's cover.

Step 3. Verify that there is no voltage at the drive's input power terminals.

Step 4. Measure the DC bus potential with a voltmeter while standing on a non-conductive surface and wearing insulated gloves. Refer to figure 12.1.

Step 5. Once the drive has been serviced, reattach the drive's cover.

Step 6. Reapply input power.

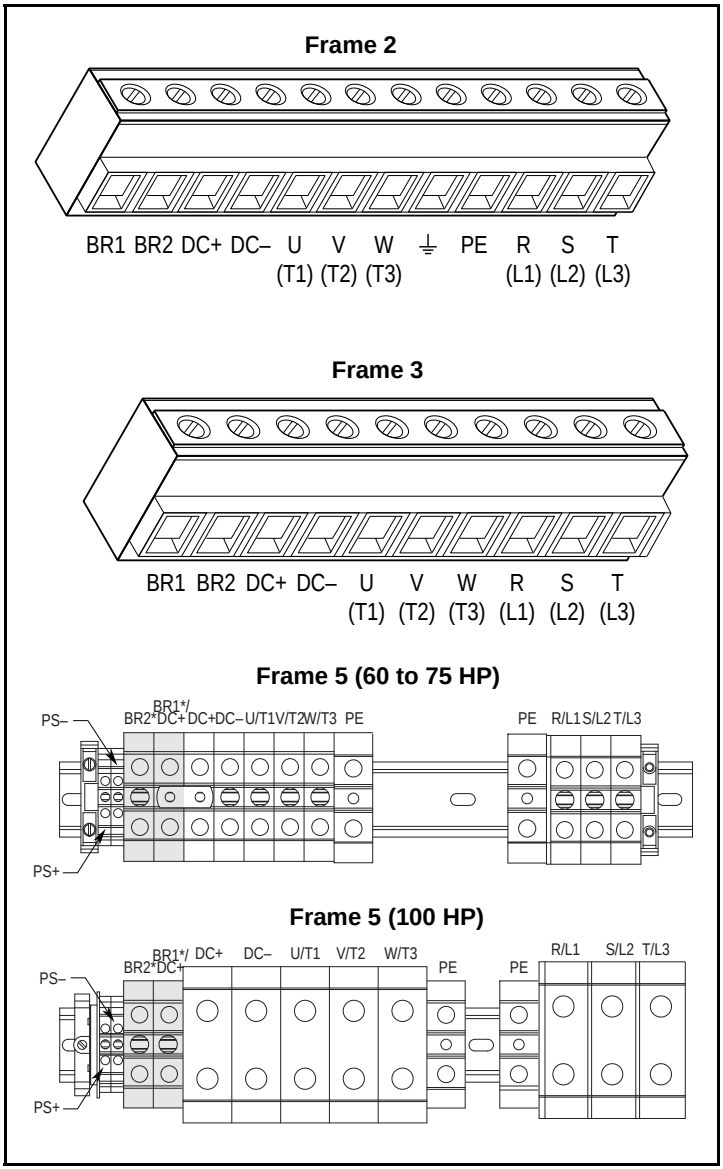

Figure 12.1 – Location of DC Bus Voltage Measuring Points

12.2 Determining Precharge Board Status Using the LED Indicators (Frame 5 Only)

The precharge board LEDs are located above the Line Type jumper shown in figure 12.2.

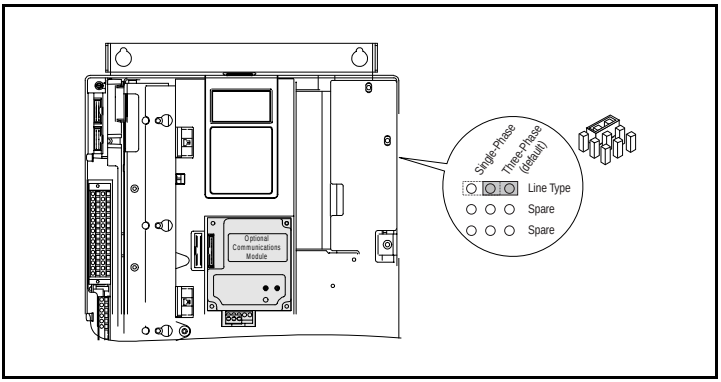

Figure 12.2 – Location of Precharge Status LED

Table 12.1 – Precharge Board LED Indicators

Name	Color	State	Description
Power ON	Green	Steady	Indicates when pre-charge board power supply is operational
Alarm	Yellow	Steady	Indicates one of the following alarms occurred causing the pre-charge to momentarily stop firing: • Line Loss • Low Phase (single-phase dropped below 80% of line voltage) • Input frequency out of range (momentarily) **Note**: An alarm condition automatically resets when the condition no longer exists
Fault	Red	Steady	Indicates one of the following faults: • DC Bus short • DC Bus not charged • Input frequency out of range • Overtemperature **Note**: A fault indicates a malfunction that needs to be corrected prior to restarting. A fault condition is only reset after cycling power.

12.3 Determining Drive Status Using the Ready LED

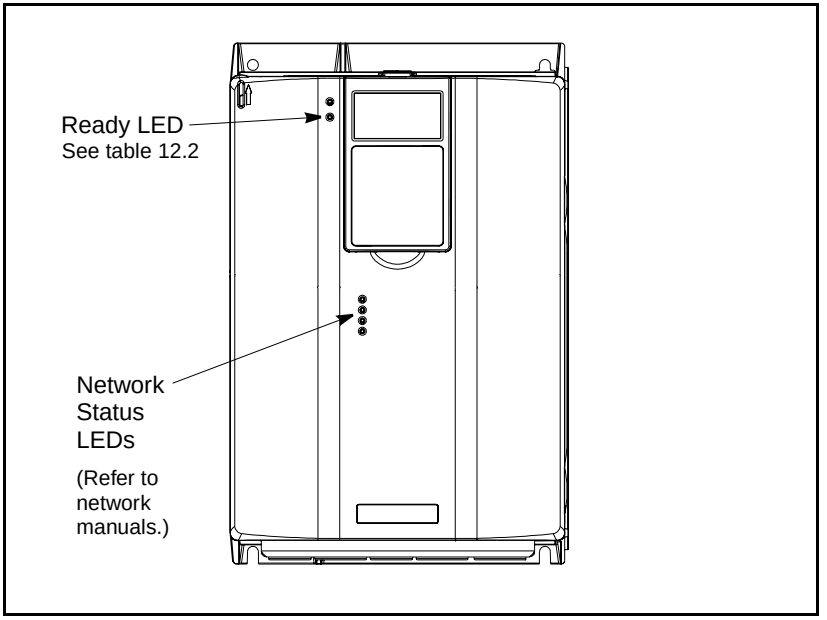

Figure 12.3 – Location of the Ready LED

Table 12.2 – Ready LED Status Definitions

Color	State	Description
Green	Flashing	Drive ready, but not running and no faults are present.
	Steady	Drive running, no faults are present.
Yellow See section 12.4.	Flashing	The drive is not ready. Check parameter 214 (Start Inhibits).
	Steady	An alarm condition exists. Check parameters 211 (Drive Alarm 1) and 212 (Drive Alarm 2).
Red See section 12.5.	Flashing	A fault has occurred.
	Steady	A non-resettable fault has occurred.

12.4 About Alarms

Alarms indicate conditions that may affect drive operation or application performance.

There are two alarm types, as described in table 12.3.

Table 12.3 – Types of Alarms

Type	Alarm Description	
①	User-Configurable	These alarms alert the operator of conditions that, if left untreated, may lead to a fault condition. The drive continues to operate during the alarm condition. The alarms are enabled or disabled using Alarm Config 1 (259). The status of these alarms is shown in Drive Alarm 1 (211).
②	Non-Configurable	These alarms alert the operator of conditions caused by improper programming and prevent the drive from starting until the problem is resolved. These alarms are always enabled. The status of these alarms is shown in Drive Alarm 2 (212).

The drive indicates alarm conditions in the following ways:

- Ready LED on the drive cover (see table 12.2).
- Alarm name and bell graphic on the LCD OIM (see Appendix B). The alarm is displayed as long as the conditon exists. The drive automatically clears the alarm when the condition causing it is removed.
- Alarm status parameters. Two 16-bit parameters, Drive Alarm 1 (211) and Drive Alarm 2 (212), indicate the status of type 1 and type 2 alarms, respectively. Refer to chapter 11 for the parameter descriptions.

12.4.1 About the Alarm Queue

The drive automatically retains a history of alarms that have occurred in the alarm queue. The alarm queue is accessed using the OIM or PC software.

The alarm queue holds the eight most recent alarms. The last alarm to occur is indicated in queue entry #1. As new alarms are logged into the queue, existing alarm entries are shifted (for example, entry #1 will move to entry #2). Once the queue is full, older alarms are discarded from the queue as new alarmts occur.

All entries in the alarm queue are retained if power is lost. Alarms are automatically cleared when the alarm condition goes away.

The alarm queue can be cleared using the OIM by selecting “Clr Alarm Queue”, or by using a PC software tool.

12.4.2 Alarm Descriptions

Table 12.4 – Alarm Descriptions

<table>
<tr><th>Alarm</th><th>Type</th><th>Description</th></tr>
<tr><td>Analog In Loss</td><td>①</td><td>An analog input is configured for alarm on signal loss and signal loss has occurred.</td></tr>
<tr><td>Bipolar Conflict</td><td>②</td><td>Parameter 190 (Direction Mode) is set to Bipolar or Reverse Dis and one of more of the following digital input functions is configured: Fwd/Rev or Run Fwd. Note that the default is Reverse Dis.</td></tr>
<tr><td>Decel Inhibit</td><td></td><td>The drive is being inhibited from decelerating.</td></tr>
<tr><td>Dig In ConflictA</td><td>②</td><td>Digital input functions are in conflict. Combinations marked with a ▪ will cause an alarm.
<table>
<tr><th></th><th>Acc2 / Dec2</th><th>Accel 2</th><th>Decel 2</th><th>Fwd / Rev</th></tr>
<tr><td>Acc2 / Dec2</td><td></td><td>▪</td><td>▪</td><td></td></tr>
<tr><td>Accel 2</td><td>▪</td><td></td><td></td><td></td></tr>
<tr><td>Decel 2</td><td>▪</td><td></td><td></td><td></td></tr>
<tr><td>Fwd / Rev</td><td></td><td></td><td></td><td></td></tr>
</table></td></tr>
<tr><td>Dig In ConflictB</td><td>②</td><td>Digital input functions are in conflict. Combinations marked with a ▪ will cause an alarm.
<table>
<tr><th></th><th>Start</th><th>Stop–CF</th><th>Run</th><th>Run Fwd</th><th>Fwd/Rev</th></tr>
<tr><td>Start</td><td></td><td></td><td>▪</td><td>▪</td><td></td></tr>
<tr><td>Stop–CF</td><td></td><td></td><td></td><td></td><td></td></tr>
<tr><td>Run</td><td>▪</td><td></td><td></td><td>▪</td><td></td></tr>
<tr><td>Run Fwd</td><td>▪</td><td></td><td>▪</td><td></td><td>▪</td></tr>
<tr><td>Fwd / Rev</td><td></td><td></td><td></td><td>▪</td><td></td></tr>
</table></td></tr>
<tr><td>Dig In ConflictC</td><td>②</td><td>More than one physical input has been configured to the same input function. Multiple configurations are not allowed for the following input functions:

Forward/Reverse
Speed Select 1
Speed Select 2
Speed Select 3
Run Forward
Run
Stop Mode B
OIM Control
Stop Mode B
Bus Regulation Mode B
Acc2 / Dec2
Accel 2
Decel 2</td></tr>
<tr><td>DigIn Bad Value</td><td>②</td><td>Unsupported function selected in Digital In”x” Sel parameters (361-366).</td></tr>
</table>

Table 12.4 – Alarm Descriptions (Continued)

Alarm	Type	Description
Drive OL Level 1	①	The calculated IGBT temperature requires a reduction in PWM carrier frequency. If Drive OL Mode (150) is disabled and the load is not reduced, an overload fault will eventually occur.
Drive OL Level 2	①	The calculated IGBT temperature requires a reduction in Current Limit. If Drive OL Mode (150) is disabled and the load is not reduced, an overload fault will eventually occur.
Flux Amps Ref Rang	②	Result of autotune procedure (61).
IntDBRes OvrHeat	①	The drive has temporarily disabled the dynamic braking regulator because the resistor temperature has exceeded a predetermined value.
IR Volts Range	②	The drive autotuning default is Calculate and the value calculated for IR Drop Volts is not in the range of acceptable values. This alarm should clear when all motor nameplate data is properly entered.
Ixo Vlt Rang		Motor leakage inductance is out of range.
MaxFreq Conflict	②	The sum of Maximum Speed (82) and Overspeed Limit (83) exceeds Maximum Freq (55). Raise Maximum Freq (55) or lower Maximum Speed (82) and/or Overspeed Limit (83) so that the sum is less than or equal to Maximum Freq (55).
Motor Type Cflct	②	Motor Type (40) has been set to Sync Prm Mag or Sync Reluc, and one or more DC functions (for example, DC Boost, DC Brake, etc.) have been activated. DC injection functions are imcompatible with synchronous motors and may demagnetize them.
NP Hz Conflict	②	Fan/pump mode is selected in Torq Perf Mode (53), and the ratio of Motor NP Hertz (43) to Maximum Freq (55) is greater than 26.
Power Loss	①	Drive has sensed a power line loss.
Prechrg Actv	①	Drive is in the initial DC bus precharge state.
Sleep Config		Sleep/Wake configuration error. When Sleep-Wake Mode [178] = Direct, possible causes include: - Drive is stopped and Wake Level [180] < Sleep Level [182] - Digital Inx Sel [361 to 366] is not set to one of the following: Stop=CF, Run, Run Forward, or Run Reverse.
Speed Ref Cflct	②	Speed Ref A Sel (90) or PI Reference Sel (126) is set to Reserved.

Table 12.4 – Alarm Descriptions (Continued)

Alarm	Type	Description
Under-Voltage	①	The bus voltage has dropped below a predetermined value.
VHz Neg Slope	②	Custom V/Hz mode has been selected in Torq Perf Mode (53) and the V/Hz slope is negative.
Waking		The wake timer is counting toward a value that will start the drive.

Table 12.5 – Alarm Names Cross-Referenced by Alarm Numbers

No.[1]	Alarm		No.[1]	Alarm
1	Precharge Active		20	Bipolar Conflict
2	UnderVoltage		21	Motor Type Conflict
3	Power Loss		22	NP Hz Conflict
5	Analog In Loss		23	MaxFreq Conflict
6	IntDBRes OvrHeat		24	VHz Neg Slope
8	Drive OL Level 1		25	IR Volts Range
9	Drive OL Level 2		26	FluxAmps Ref Rang
10	Decel Inhibit		27	Speed Ref Cflct
11	Waking		28	Ixo Vlt Rang
17	Dig In ConflictA		29	Sleep Config
18	Dig In ConflictB		30	DigIn Bad Value
19	Dig In ConflictC			

[1] Alarm numbers not listed are reserved for future use.

12.5 About Faults

Faults indicate conditions within the drive that require immediate attention. The drive responds to a fault by initiating a coast-to-stop sequence and turning off output power to the motor.

In addition, some faults are auto-resettable, non-resettable, and/or user-configurable as described in table 12.6.

Table 12.6 – Fault Types

Type	Fault Description	
①	Auto-Reset/Run	If the drive is running when this type of fault occurs, and Auto Rstrt Tries (174) is set to a value greater than 0, a user-configurable timer, Auto Rstrt Delay (175) begins. When the timer reaches zero, the drive attempts to automatically reset the fault. If the condition that caused the fault is no longer present, the fault will be reset and the drive will be restarted.
②	Non-Resettable	This type of fault normally requires drive or motor repair. The cause of the fault must be corrected before the fault can be cleared. The fault will be reset on power up after repair.
③	User-Configurable	These faults can be enabled/disabled to either annunciate or ignore a fault condition using Fault Config 1 (238).

The drive indicates faults in the following ways:

- Ready LED on the drive cover (see section 12.3).
- Drive status parameters Drive Status 1 (209) and Drive Status 2 (210).
- Entries in the fault queue (see section 12.5.1).
- Pop-up screen on the LCD OIM. See figure 12.4. The screen displays:
  - Fault number
  - Fault name
  - Time that has elapsed since fault occurred.

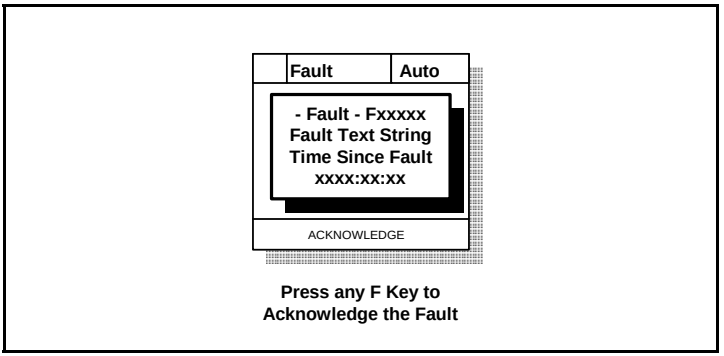

Figure 12.4 – Sample Fault Screen on the LCD OIM

The fault screen is displayed until it is acknowledged by pressing any F-key or cleared in the drive by other means.

12.5.1 About the Fault Queue

The drive automatically retains a history of faults that have occurred in the fault queue. The fault queue is accessed using the OIM or VS Utilties software.

The fault queue holds the eight most recent faults. The last fault to occur is indicated in queue entry #1. As new faults are logged into the queue, existing fault entries are shifted (for example, entry #1 will move to entry #2). Once the queue is full, older faults are discarded from the queue as new faults occur.

All entries in the fault queue are retained if power is lost.

The Time Stamp

For each entry in the fault queue, the system also displays a fault code and time stamp value. The time stamp value is the value of an internal drive-under-power timer at the time of the fault. The value of this timer is copied to PowerUp Marker (242) when the drive powers up. The fault queue time stamp can then be compared to the value in PowerUp Marker to determine when the fault occurred relative to the last drive power up.

The time stamp is cleared when the fault queue is cleared.

Refer to section 12.8.1 for information on accessing the fault queue using the LCD OIM.

12.5.2 Clearing Faults

A fault condition can be cleared by the following:

Step 1. Press ESC/PROG or any F-Key to acknowledge the fault and remove the fault pop-up from the LCD OIM screen.

Step 2. Address the condition that caused the fault. The cause must be corrected before the fault can be cleared.

Step 3. After corrective action has been taken, clear the fault using one of the following:

- Setting Fault Clear (240) to Clear Faults (1).
- Press F1 (Cflt) from the fault queue screen.
- Issuing a Stop-Clear Faults command from the control source.

Resetting faults will clear the faulted status indication. If any fault condition still exists, the fault will be latched, and another entry made in the fault queue.

Note that performing a fault reset does not clear the fault queue. Clearing the fault queue is a separate action. See the Fault Clear (240) parameter description.

12.5.3 Fault Descriptions and Corrective Actions

Table 12.7 describes drive faults and corrective actions. It also indicates if the fault is

① Auto-resettable

② Non-resettable

③ User-configurable

Table 12.7 – Fault Descriptions and Corrective Actions

Fault	No.	Type	Description	Action
Analog In Loss	29	① ③	An analog input is configured to fault on signal loss. A signal loss has occurred. Configure with Anlg In 1, 2 Loss (324, 327).	1. Check parameters. 2. Check for broken/loose connections at inputs.
Anlg Cal Chksum	108	②	The checksum read from the analog calibration data does not match the checksum calculated.	Replace drive.
Auto Rstrt Tries	33	③	Drive unsuccessfully attempted to reset a fault and resume running for the programmed number of Auto Rstrt Tries (174). Enable/disable with Fault Config 1 (238).	Correct the cause of the fault and manually clear.
AutoTune Aborted	80		The autotune procedure was canceled by the user.	Restart procedure.
DB Resistance	69		Resistance of the internal DB resistor is out of range.	Replace resistor.

Table 12.7 – Fault Descriptions and Corrective Actions (Continued)

Fault	No.	Type	Description	Action
Decel Inhibit	24	③	The drive is not following a commanded deceleration because it is attempting to limit bus voltage.	1. Verify input voltage is within drive specified limits. 2. Verify system ground impedance follows proper grounding techniques. 3. Disable bus regulation and/or add dynamic brake resistor and/or extend deceleration time.
Drive OverLoad	64		Drive rating of 110% for 1 minute or 150% for 3 seconds has been exceeded.	Reduce load or extend Accel Time (140).
Excessive Load	79		Motor did not come up to speed in the allotted time.	1. Uncouple load from motor. 2. Repeat Autotune (61).
FluxAmpsRef Rang	78		The value for flux amps determined by the autotune procedure exceeds the programmed Motor NP FLA (42).	1. Reprogram Motor NP FLA (42) with the correct motor nameplate value. 2. Repeat Autotune (61).
Function Loss	2	①	Function loss input is open.	Check remote wiring.
Ground Fault	13	①	A current path to earth ground in excess of 2A has been detected at one or more of the drive output terminals.	Check the motor and external wiring to the drive output terminals for a grounded condition.
Heatsink OvrTemp	8	①	Heatsink temperature exceeds a predefined value of 90°C (195°F).	1. Check for blocked or dirty heat sink fins. Verify that ambient temperature has not exceeded 40°C (104°F) NEMA Type 1 installations or 50°C (122°F) for Open type installations. 2. Check fan.

Table 12.7 – Fault Descriptions and Corrective Actions (Continued)

Fault	No.	Type	Description	Action
HW OverCurrent	12	①	The drive output current has exceeded the hardware current limit.	Check programming. Check for excess load, improper DC boost setting, DC brake volts set too high or other causes of excess current. Motor dynamics cannot be accommodated by autotuning. Manual tuning of the current loop required. Consult technical support.
Incompat MCB-PB	106	②	Drive rating information stored on the power board is incompatible with the Main Control board.	Load compatible version files into drive.
I/O Comm Loss	121	②	Loss of communication to I/O board.	Cycle power.
I/O Board Fail	122		Board failure.	1. Cycle power. 2. If fault repeats, replace I/O board
I/O Mismatch	120		Incorrect I/O board identified.	Restore I/O board to original configuration, or If new configuration is desired, reset fault.
IR Volts Range	77		The drive autotuning default is Calculate and the value calculated for IR Drop Volts is not in the range of acceptable values.	Re-enter motor nameplate data.
Motor Overload	7	① ③	Internal electronic overload trip. Enable/disable with Fault Config 1 (238).	An excessive motor load exists. Reduce load so drive output current does not exceed the current set by Motor NP FLA (42).

Table 12.7 – Fault Descriptions and Corrective Actions (Continued)

Fault	No.	Type	Description	Action
OverSpeed Limit	25	①	Functions such as slip compensation or bus regulation have attempted to add an output frequency adjustment greater than that programmed in Overspeed Limit (83).	Remove excessive load or overhauling conditions or increase Overspeed Limit (83).
OverVoltage	5	①	DC bus voltage exceeded maximum value.	Monitor the AC line for high line voltage or transient conditions. Bus overvoltage can also be caused by motor regeneration. Extend the decel time or install dynamic brake option.
Parameter Chksum	100	②	The checksum read from the board does not match the checksum calculated.	1. Restore defaults. 2. Reload user set if used.
Params Defaulted	48		The drive was commanded to write default values to EEPROM.	1. Clear the fault or cycle power to the drive. 2. Program the drive parameters as needed.
Phase Imbalance	37		Phase current displayed in Imbalance Display (221) > percentage set in Imbalance Limit (49) for time set in Imbalance Time (50).	Clear fault.
Phase U to Grnd	38		A phase-to-ground fault has been detected between the drive and motor in this phase.	1. Check the wiring between the drive and motor. 2. Check motor for grounded phase. 3. Replace drive.
Phase V to Grnd	39			
Phase W to Grnd	40			
Phase UV Short	41		Excessive current has been detected between these two output terminals.	1. Check the motor and drive output terminal wiring for a shorted condition. 2. Replace drive.
Phase VW Short	42			
Phase UW Short	43			

Table 12.7 – Fault Descriptions and Corrective Actions (Continued)

Fault	No.	Type	Description	Action
Port 1-6 DPI Loss	81-86		DPI port stopped communicating. An attached peripheral with control capabilities via Logic Source Sel (89) (or OIM control) was removed. The fault code indicates the offending port number (81 = port 1, etc.)	1. If adapter was not intentionally disconnected, check wiring to the port. Replace wiring, port expander, adapters, Main Control board or complete drive as required. 2. Check OIM connection.
Port 1-6 Net Loss	71-76		The network card connected to DPI port stopped communicating. The fault code indicates the offending port number (71 = port 1, etc.)	1. Check communication adapter board for proper connection to external network. 2. Check external wiring to adapter on port. 3. Verify external network fault.
Power Loss	3	① ③	DC bus voltage remained below 85% of nominal for longer than Power Loss Time (185). Enable/disable with Fault Config 1 (238).	Monitor the incoming AC line for low voltage or line power interruption.
Power Unit	70		One or more of the output transistors were operating in the active region instead of desaturation. This can be caused by excessive transistor current or insufficient base drive voltage.	1. Check for damaged output transistors. 2. Replace drive.
Pwr Brd Chksum1	104		The checksum read from the EEPROM does not match the checksum calculated from the EEPROM data.	Clear the fault or cycle power to the drive.
Pwr Brd Chksum2	105	②	The checksum read from the board does not match the checksum calculated.	1. Cycle power to the drive. 2. If problem persists, replace drive.

Table 12.7 – Fault Descriptions and Corrective Actions (Continued)

Fault	No.	Type	Description	Action
Replaced MCB-PB	107	②	Main Control board was replaced and parameters were not programmed.	1. Restore defaults. 2. Reprogram parameters.
Shear Pin	63	③	Programmed Current Lmt Val (148) has been exceeded. Enabled/disable with Fault Config 1 (238).	Check load requirements and Current Lmt Val (148) setting.
SW OverCurrent	36	①	The drive output current has exceeded the software current.	Check for excess load, improper DC boost setting. DC brake volts set too high.
Trnsistr OvrTemp	9	①	Output transistors have exceeded their maximum operating temperature.	1. Check for blocked or dirty heat sink fins. Verify that ambient temperature has not exceeded 40°C (104°F) for NEMA Type 1 installations or 50°C (122°F) for Open type installations. 2. Check fan.
UnderVoltage	4	① ③	DC bus voltage fell below the minimum value of 160V DC at 200/240V input, 300V DC at 400/480V input or 375V DC at 575V input. Enable/disable with Fault Config 1(233).	Monitor the incoming AC line for low voltage or power interruption.
UserSet1 Chksum	101	②	The checksum read from the user set does not match the checksum calculated.	Re-save user set.
UserSet2 Chksum	102	②		
UserSet3 Chksum	103	②		

Table 12.8 – Fault Names Cross-Referenced by Fault Number

No.[1]	Fault	No.[1]	Fault	No.[1]	Fault
2	Function Loss	38	Phase U to Grnd	80	AutoTune Aborted
3	Power Loss	39	Phase V to Grnd	81-86	Port 1-6 DPI Loss
4	UnderVoltage	40	Phase W to Grnd	100	Parameter Chksum
5	OverVoltage	41	Phase UV Short	101	UserSet1 Chksum
7	Motor Overload	42	Phase VW Short	102	UserSet2 Chksum
8	Heatsink OvrTemp	43	Phase UW Short	103	UserSet3 Chksum
9	Trnsistr OvrTemp	48	Params Defaulted	104	Pwr Brd Chksum1
12	HW OverCurrent	63	Shear Pin	105	Pwr Brd Chksum2
13	Ground Fault	64	Drive Overload	106	Incompat MCB-PB
24	Decel Inhibit	69	DB Resistance	107	Replaced MCB-PB
25	OverSpeed Limit	70	Power Unit	108	Anlg Cal Chksum
29	Analog In Loss	71-76	Port 1-6 Net Loss	120	I/O Board Mismatch
33	Auto Rstrt Tries	77	IR Volts Range	121	I/O Board Comm Loss
36	SW OverCurrent	78	FluxAmpsRef Rang	122	I/O Board Fail
		79	Excessive Load		

[1] Fault numbers not listed are reserved for future use.

12.6 Common Symptoms and Corrective Actions

Table 12.9 – Drive Does Not Start From Terminal Block Logic

Indication(s)	Cause(s)	Corrective Action
Flashing red Ready LED.	Drive is faulted.	Clear fault: • Press OIM stop key if that OIM is control source. • Cycle power. • Set Fault Clear (240) to 1. • Toggle terminal block stop or terminal block reset digital input if terminal block is the control source.
Incorrect operation from the terminal block.	Incorrect input wiring. • 2-wire control requires Run, Run Forward, or Run Reverse input(s). • 3-wire control requires Start and Stop inputs • Jumper from terminal 7 to 8 is required.	Wire inputs correctly and/or install jumper.
	Incorrect digital input programming. • Mutually exclusive choices have been made. • 2-wire and 3-wire programming may be conflicting. • Exclusive functions (i.e, direction control) may have multiple inputs configured. • Stop if factory default and is not wired or is open. • Start or Run programming may be missing.	Program Digital In”x” Sel (361-366) for correct inputs.
	Logic Source Sel is not set to Terminal Blk.	Set Logic Source Sel to Terminal Blk.

Table 12.9 – Drive Does Not Start From Terminal Block Logic

Indication(s)	Cause(s)	Corrective Action
Flashing yellow Ready LED and DigIn CflctB indication on LCD OIM. Drive Status 2 (210) shows type 2 alarm(s).	Incorrect digital input programming. • Mutually exclusive choices have been made. • 2-wire and 3-wire programming may be conflicting. • Exclusive functions (i.e, direction control) may have multiple inputs configured. • Stop if factory default and is not wired or is open. • Start or Run programming may be missing.	Program Digital In"x" Sel (361-366) to resolve conflicts. Remove multiple selections for the same function. Install stop button to apply a signal at stop terminal.

Table 12.10 – Drive Does Not Start From OIM

Indication	Cause(s)	Corrective Action
None	Drive is programmed for 2-wire control and Logic Source Sel (89) = All Ports. OIM start and network start are disabled for 2-wire control.	If 2-wire control is required, no action is necessary. If 3-wire control is required, program Digital Inx Sel (361-366) for correct inputs.
Flashing or steady red Ready LED.	Active fault.	Reset fault.
Flashing yellow Ready LED.	Enable input is open.	Close terminal block enable input.
	The terminal block stop input is open and control source is set to All Ports.	Close terminal block stop input.
	Start inhibit bits are set.	Check status in Start Inhibits (214).

Table 12.10 – Drive Does Not Start From OIM (Continued)

Indication	Cause(s)	Corrective Action
Drive Status 1 (209) indicates logic control source.	Logic Source Sel (89) is not equal to the desired OIM (Local OIM, DPI Port 2, or DPI Port 3). DPI Port 2 is required for remote OIM.	Verify setting of Logic Source Sel (89). The OIM Control digital input effectively sets the control source to the lowest attached OIM port.

Table 12.11 – Drive Does Not Respond to Changes in Speed Command

Indication	Cause(s)	Corrective Action
LCD OIM Status Line indicates “At Speed” and output is 0 Hz.	No value is coming from the source of the command.	1. If the source is an analog input, check wiring and use a meter to check for presence of signal. 2. Check Commanded Freq (2) for correct source.
None	Incorrect reference source has been programmed.	1. Check Speed Ref Source (213) for the source of the speed reference. 2. Reprogram Speed Ref A Sel (90) for correct source.
None	Incorrect reference source is being selected via remote device or digital inputs.	1. Check Drive Status 1 (209), bits 12 - 15 for unexpected source selections. 2. Check Dig In Status (216) to see if inputs are selecting an alternate source. 3. Reprogram digital inputs to correct Speed Sel x option.
Speed reference from analog input	Improper reference common signal wiring.	1. Verify that common is properly connected to AnlgIn(-) terminal.

Table 12.12 – Motor and/or Drive Will Not Accelerate to Commanded Speed

Indication	Cause(s)	Corrective Action
Acceleration time is excessive.	Incorrect value in Accel Time “x” (140, 141).	Reprogram Accel Time “x” (140, 141).
Drive is forced into current limit, slowing or stopping acceleration.	Excess load or short acceleration time.	Check Drive Status 2 (210), bit 10 to see if the drive is in current limit. Remove excess load or reprogram Accel Time “x” (140, 141).
Speed command source or value is not as expected.	Improper speed command.	Check for the proper speed command using steps 1 through 7 in table 12.11.
Programming is preventing the drive output from exceeding limiting values.	Incorrect programming.	Check Maximum Speed (82) and Maximum Freq (55) to insure that speed is not limited by programming.

Table 12.13 – Motor Operation is Unstable

Indication	Cause(s)	Corrective Action
None	Motor data was incorrectly entered or autotune was not performed.	1. Correctly enter motor nameplate data. 2. Perform static or rotate autotune procedure (61).

Table 12.14 – Stopping the Drive Results in a Decel Inhibit Fault

Indication	Cause(s)	Corrective Action
Decel Inhibit fault screen. LCD status line indicates Faulted.	The bus regulation feature is enabled and is halting deceleration due to excessive bus voltage. Excess bus voltage is normally due to excessive regenerated energy or unstable AC line input voltages. Internal timer has halted drive operation.	1. Reprogram bus regulation (parameters 161 and 162) to eliminate any Adjust Freq selection. 2. Disable bus regulation (parameters 161 and 162) and add a dynamic brake. 3. Correct AC input line instability or add an isolation transformer. 4. Reset drive.

12.7 Replacement Parts

Table 12.15 – OIM Cables

Description	Part Number
LCD OIM Cable for remote use	RECBL-LCD
LCD OIM Extender Cable (0.3 meter)	RECBL-F03
LCD OIM Extender Cable (1 meter)	RECBL-F10
LCD OIM Extender Cable (3 meters)	RECBL-F30
LCD OIM Extender Cable (9 meters)	RECBL-F90

Table 12.16 – Drive Unit

Description	Part Number
Controller Board	313876-K01
24 V I/O Board	195239
120 V I/O Board	195238

12.8 Troubleshooting the Drive Using the LCD OIM

The LCD OIM provides immediate visual notification of alarm or fault conditions as well as the following diagnostic information:

- Entries in the fault queue
- Fault parameters
- Drive status parameters
- Selected device version and status information
- OIM version information

12.8.1 Accessing the Fault Queue

As described in section 12.5.1, the drive automatically retains a history of the last eight faults that have occurred in the fault queue.

To access the fault queue, press the F4 key at the process display screen, or see figure 12.5 to access the fault queue from the Main Menu.

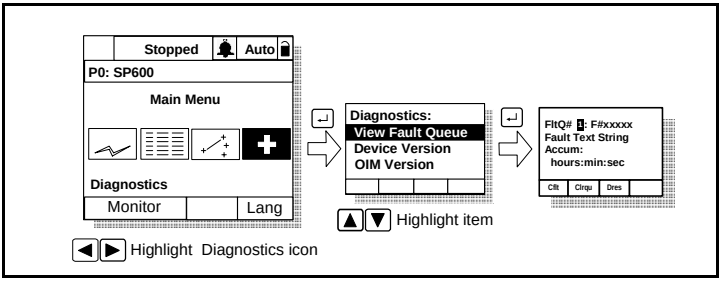

Figure 12.5 – Accessing the Fault Queue

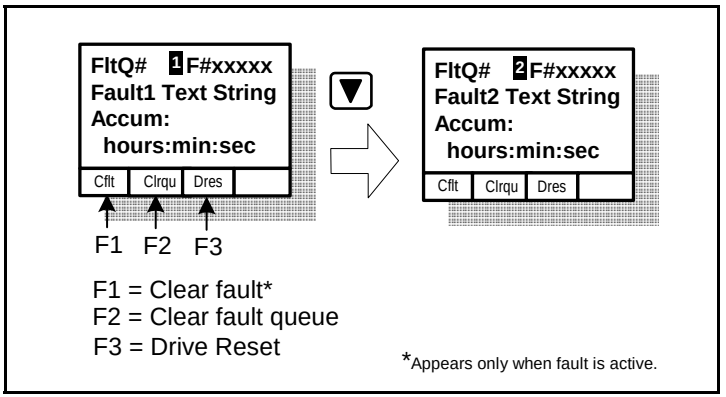

Figure 12.6 – Sample Fault Queue Entry

The drive can be reset (as if the power were cycled) by pressing the F3 (Dres) function key while in the "View Fault Queue" screens. The reset function is active only while the drive is stopped. During a reset, drive communication with peripheral devices will stop until the reset function completes.

ATTENTION: Pressing F3 (Dres) will immediately cause the drive to be reset. This may result in communication errors in other devices attached to the drive which could result in machine damage.

12.8.2 Accessing the Fault Parameters

The LCD OIM provides quick access to the drive's fault parameters by grouping them in the Fault Info submenu. To access these parameters, see figure 12.7.

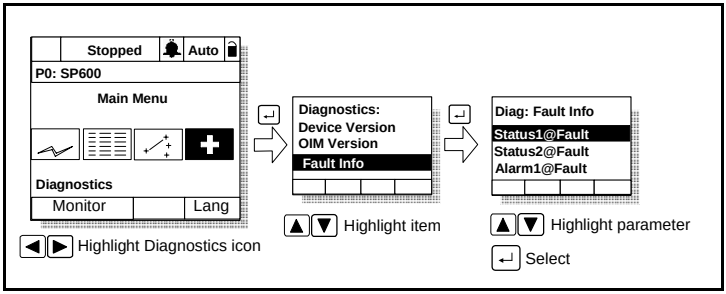

Figure 12.7 – Accesing the Fault Parameters

12.8.3 Accessing the Drive Status Parameters

The LCD OIM provides quick access to the drive status parameters by grouping them in the Status Info submenu. To access these parameters, see figure 12.8.

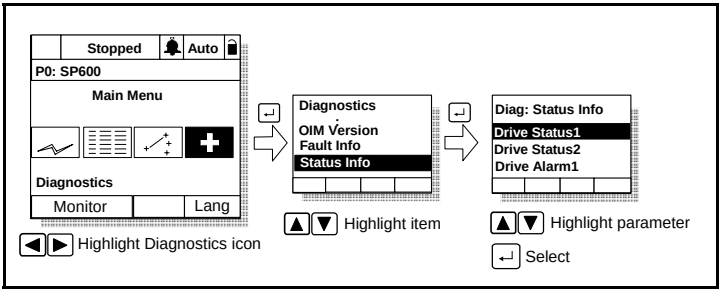

Figure 12.8 – Accessing the Drive Status Parameters

12.8.4 Determining the Product Version

The LCD OIM provides hardware and firmware version information for connected devices, including the OIM, down to the component level.

Device Version

To access the device version information, refer to figures 12.9 and 12.10.

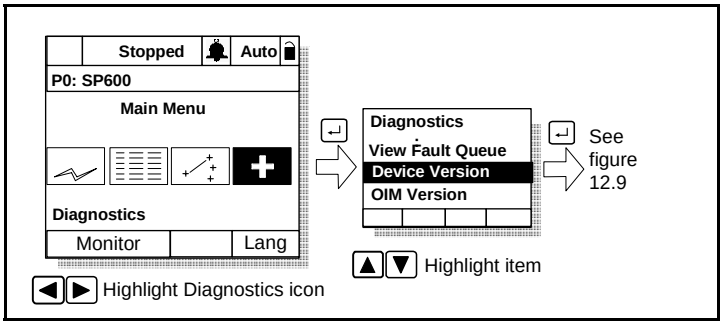

Figure 12.9 – Accessing the Device Version Information

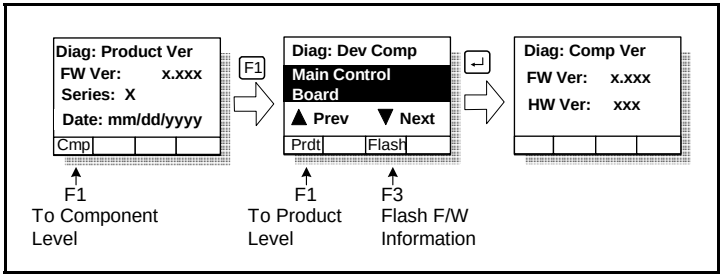

Figure 12.10 – Device Version Screens at Product and Component Levels

OIM Version

The OIM Version selection provides information on the OIM you are using to access this data. See figures 12.11 and 12.12.

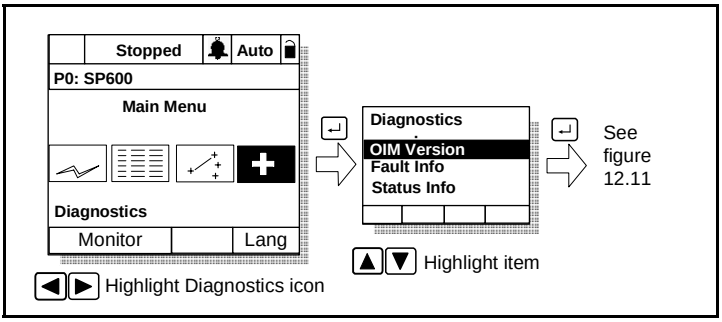

Figure 12.11 – Accessing the OIM Version Information

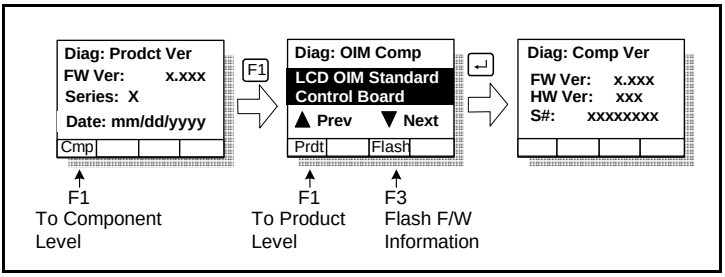

Figure 12.12 – OIM Version Screens at the Product and Component Levels

Device Items

The Device Items selection provides access to a list of diagnostic parameters. These parameters should be adjusted by qualified personnel only. See figure 12.13.

ATTENTION: The parameters in the Device Items menu must be set by a qualified person who understands the significance of setting them accurately. Failure to observe this precaution could result in bodily injury.

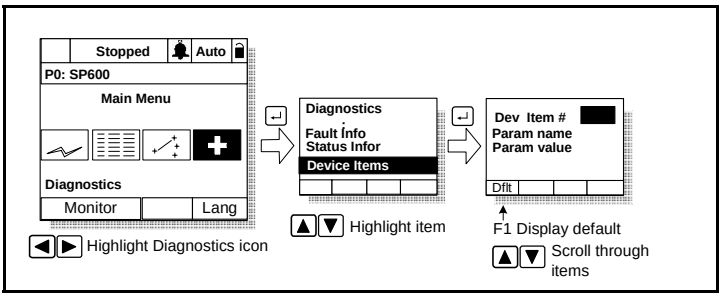

Figure 12.13 – Accessing the Device Item Information

12.8.5 Contacting Tech Support for Assistance

The Tech Support option in the Diagnostics menu provides information regarding technical support.

APPENDIX A

Technical Specifications

Table A.1 – Drive Monitoring and Limits

AC Input Overvoltage Trip	570 VAC
AC Input Undervoltage Trip	280 VAC
Bus Overvoltage Trip	810 VDC
Bus Undervoltage Trip	300 VDC
Nominal Bus Voltage	648 VDC
All Drives	
Heat Sink Thermistor	Monitored by microprocessor overtemp trip
Drive Overcurrent Trip Software Current Limit Hardware Current Limit Instantaneous Current Limit	 20-150% of rated current 200% of rated current (typical) 220-300% of rated current (dependent on drive rating)
Line Transients	up to 6000 volts peak per IEEE C62.41-1991
Control Logic Noise Immunity	Showering arc transients up to 1500V peak
Power Ride-Thru	15 milliseconds at full load
Logic Control Ride-Thru	0.5 seconds minimum, 2 seconds typical
Ground Fault Trip	Phase-to-ground on drive output
Short Circuit Trip	Phase-to-phase on drive output
Intermittent Overload	110% overload capability for up to 1 minute. 150% overload capability for up to 3 seconds.
Current Limit Capability	Proactive Current Limit programmable from 20 to 150% of rated output current. Independently programmable proportional and integral gain.
Electronic Motor Overload Protection	Class 10 protection with speed sensitive response. Investigated by U.L. to comply with N.E.C. Article 430. U.L. File E59272, volume 12.

Table A.2 – Certifications

The drive is designed to meet the following specifications: NFPA 70 - US National Electrical Code NEMA ICS 3.1 - Safety standards for Construction and Guide for Selection, Installation and Operation of Adjustable Speed Drive Systems. NEMA 250 - Enclosures for Electrical Equipment IEC 146 - International Electrical Code.	
UL, cUL	UL and cUL Listed to UL508C and CAN/CSA-C2.2 No. 14-M91
CE	Marked for all applicable Europeon Directives EMC Directive (89/336/EEC) Emissions EN 61800-3 Adjustable Speed electrical power drive systems Part 3 Immunity EN 61800-3 Second Environment, Restricted Distribution Low Voltage Directive (73/23/EEC) EN 60204-1 Safety of Machinery – Electrical Equipment of Machines EN 50178 Electronic Equipment for use in Power Installations

Important: SP600 AC drives rated for 575 VAC input do not comply with CE standards.

Table A.3 – Environment

Altitude	1000 m (3300 ft) max. without derating
Ambient Operating Temperature without derating: **NEMA Type 1 / IP20 (20-50 HP)** **NEMA Open Type / IP20** 20-40 HP 50 HP **NEMA Open Type / IP00 (50 HP)**	 –10 to 40°C (14 to 104°F)[1] –10 to 50°C (14 to 122°F) –10 to 45°C (14 to 113°F)[2] –10 to 50°C (14 to 122°F)[3]
Storage Temperature (all const.)	–40 to 70°C (–40 to 158°F)
Relative Humidity	5 to 95% non-condensing
Shock	15G peak for 11ms duration (±1.0 ms)
Vibration	0.152 mm (0.006 in.) displacement, 1G peak

[1] To operate the drive between 40°C to 50°C (105°F to 122°F) ambient, remove the adhesive label fixed to the top of the drive enclosure.

[2] To operate the drive between 40°C to 45°C (105°F to 113°F) ambient, remove the adhesive label fixed to the top of the drive enclosure.

[3] To operate the drive between 45°C to 50°C (113°F to 122°F) ambient, remove the adhesive label fixed to the top of the drive enclosure and the drive enclosure bottom plate.

Important: Removing the adhesive label from the drive changes the enclosure rating from Type 1 Enclosed to Open Type.

Table A.4 – Voltage Ratings

Voltage Tolerance	–10% of minimum, +10% of maximum.
Frequency Tolerance	47-63 Hz
Input Phases	Three-phase input provides full rating for all drives. Single-phase operation provides 50% of rated current.
Displacement Power Factor	Range between 1.0 nd 0.95 lagging over entire speed range
Efficiency	97.5% at rated amps, nominal line volts.
Max. Short Circuit Current Rating Using Recommended Fuse or Circuit Breaker Type	Maximum short circuit current rating to match specified fuse/circuit breaker capability.

Table A.5 – Control Specifications

Method	Sine coded PWM with programmable carrier frequency. Ratings apply to all drives . The drive can be supplied as 6-pulse or 12-pulse in a configured package.
Carrier Frequency	2-10 kHz. Drive rating based on 4 kHz.
Output Voltage Range	0 to rated motor voltage
Output Frequency Range	0 to 400 Hz.
Frequency Accuracy Digital Input Analog Input	 Within ±0.01% of set output frequency. Within ±0.4% of maximum output frequency.
Speed Regulation Open Loop with Slip Compensation	±0.5% of base speed across 40:1 speed range
Selectable Motor Control	Sensorless Vector with full tuning. Standard V/Hz with full custom capability.
Stop Modes	Multiple programmable stop modes including Ramp, Coast, DC-Brake, Ramp-to-Hold and S-curve.
Accel/Decel	Two independently programmable accel and decel times. Each time may be programmed from 0 - 3600 seconds in 0.1 second increments.

Table A.6 – Analog Interface Specifications

Analog Input 1, **Differential Voltage Input**	
Signal level	-10V to +10V
Differential Input resistance	100kΩ
Isolation	160V
Resolution	11 bits plus sign
Input processing period	5ms
Analog Input 1, **Differential Current Input**	
Signal level	0(4) to 20mA
Differential Input resistance	124Ω
Resolution	11 bits plus sign
Input processing period	5ms
Analog Input 2, **Differential Voltage Input**	
Signal level	-10V to +10V
Differential Input resistance	100kΩ
Initial accuracy (@25°C)	160V
Resolution	11 bits plus sign
Input processing period	5ms
Analog Input 2, **Differential Current Input**	
Signal level	0(4) to 20mA
Differential Input resistance	124Ω
Resolution	11 bits plus sign
Input processing period	5ms
Analog Output	
Analog output voltage range	-10V to +10V
Loading impedance	2kΩ minimum
Resolution	11 bits plus sign
Output processing period	5ms
Reference Power Supply	
Output Voltage	±10V
Potentiometer resistance range	2kΩ to 10kΩ (15 mA max. load)

Table A.7 – Logic Interface Specifications

24V Power Supply	
Output Voltage	24V to 28V
Output Current	150mA maximum
Six Digital Inputs	**24V I/O board only**
Input voltage	24V (nominal)
Logic thresholds	logic 0: V_{in} < 3.2V; logic 1: V_{in} > 19.2V
Input resistance	2kΩ
Isolation	±25V
Assertion response (hardware only)	9ms maximum
Negation response (hardware only)	1ms maximum
Two Form C Relay Outputs	
Maximum Contact Voltage	250VAC, 220VDC
Contact rating for resistive load	2 A at 250 VAC / 30 VDC
Contact rating for inductive loads	2 A at 250 VAC / 30 VDC

APPENDIX B

Using the LCD OIM

The LCD Operator Interface Module (OIM) is a keypad/display that enables you to program, monitor, and control the drive.

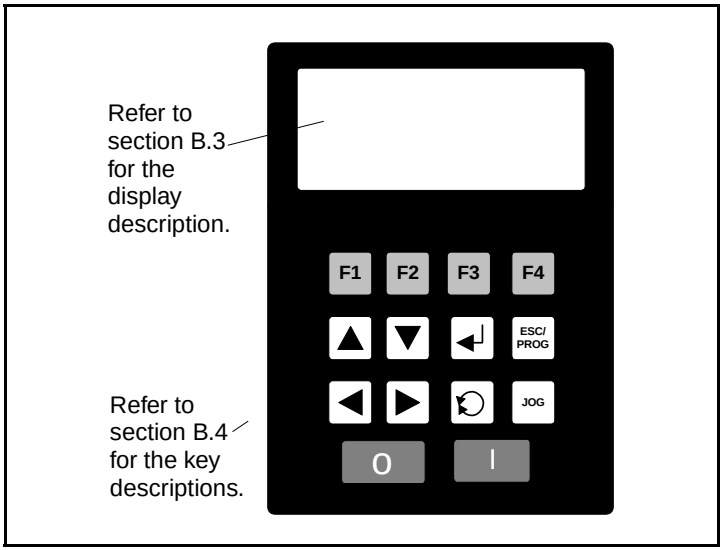

Figure B.1 – SP600 LCD OIM

B.1 Connections

The LCD OIM can be used in the following ways:

Drive mounted - The OIM connects directly to the drive using DPI port 1.

Hand-held - A cable (RECBL-LCD) must be used to convert the OIM for hand-held use. The maximum cable length is 32 feet using extender cables. Connect the cable to either DPI port 2 or 3.

Remote mounted - A NEMA 4 remote mount OIM is available. The maximum cable length is 32 feet using extender cables. Connect the cable to either DPI port 2 or 3.

See figure 2.2 in chapter 2 for the connection points on the drive.

B.2 Installing and Removing the Local LCD OIM

To **install** the local LCD OIM, slide the OIM into the slot on the front of the drive until it clicks into place.

To **remove** the local LCD OIM, press the tab at the top of the drive to release the OIM while pushing the OIM from the bottom to slide it out of the drive.

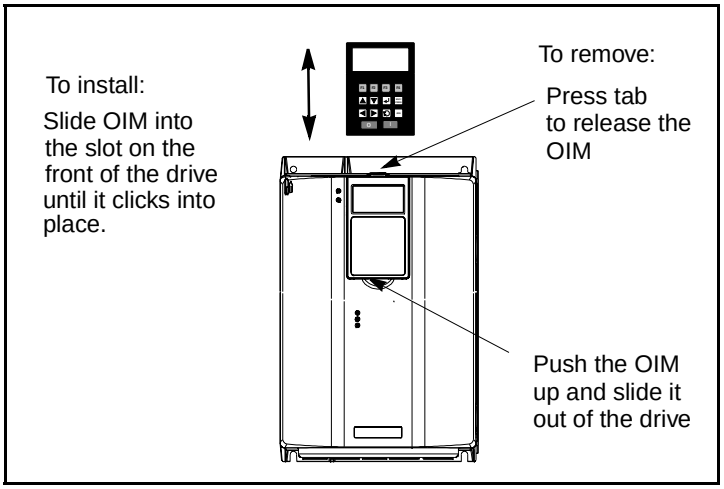

Figure B.2 – Installing and Removing the Local LCD OIM

B.2.1 Removing the Local LCD OIM While the Drive is Powered

If the local LCD OIM is the selected control source, removing the OIM while the drive is powered will cause a drive fault.

If the local LCD OIM is not the selected control source, but is the reference source, removing the OIM while the drive is powered will result in a zero reference value. When the OIM is replaced, the drive will ramp to the reference level supplied by the OIM.

ATTENTION: Removing and replacing the LCD OIM while the drive is running may cause an abrupt speed change if the LCD OIM is the selected reference source, but is not the selected control source. The drive will ramp to the reference level provided by the OIM at the rate specified in Accel Time 1 (140), Accel Time 2 (141), Decel Time 1 (142) and Decel Time 2 (143). Be aware that an abrupt speed change may occur depending upon the new reference level and the rate specified in these parameters. Failure to observe this precaution could result in bodily injury.

If the local LCD OIM is not the selected control source or reference source, removing the OIM while the drive is powered will have no effect on drive operation.

B.3 Display Description

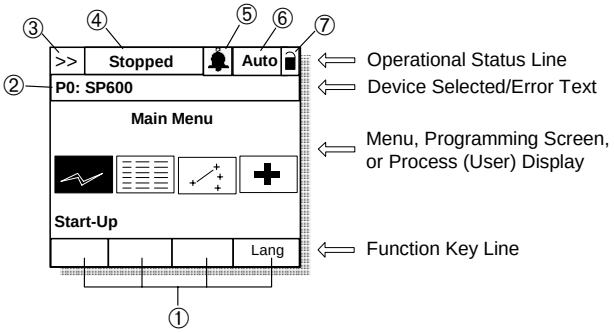

①	Function Key (F1, F2, F3, F4) definitions
②	Port/peripheral identification. Identifies port or peripheral on DPI about which the OIM is displaying information. See section B.6.
③	Direction indicator. Indicates actual motor direction.

Command Direction	Actual Direction	Indicator
Fwd	Fwd	>>
Rev	Fwd	>> (flashing)
Fwd	Rev	<< (flashing)
Rev	Rev	<<

④	Operating status (for example, Running, Stopped, etc.)
⑤	Alarm annunciation. = Alarm has occurred.
⑥	Auto/Manual mode status.
⑦	Write-protect password status: (unlocked) = password disabled; (locked) = password enabled. See section 10.4

Figure B.3 – The Display (Main Menu Shown)

B.3.1 Key Descriptions

Table B.1 – Key Functions

Key	Function
	Scroll through options or user function keys, move cursor to the left.
	Scroll through options or user functions keys, move cursor to the right.
	Scroll through options, increase a value, or toggle a bit.
	Scroll through options, decrease a value, or toggle a bit.
	Exit a menu, cancel a change to a parameter, or toggle between program and process (user) display screens.
	Enter a menu, select an option, or save changes to parameter value
	Change motor direction if the OIM is the control source.
	Jog the drive if the OIM is the control source.
	Stop the drive. Clear a fault if the OIM is the control source.
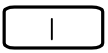	Start the drive if the OIM is the control source.
	F1 though F4: Predefined or user-configured functions. The definition of each key is shown directly above the key on the display. See item ① in figure B.3.

B.4 LCD OIM Menu Structure

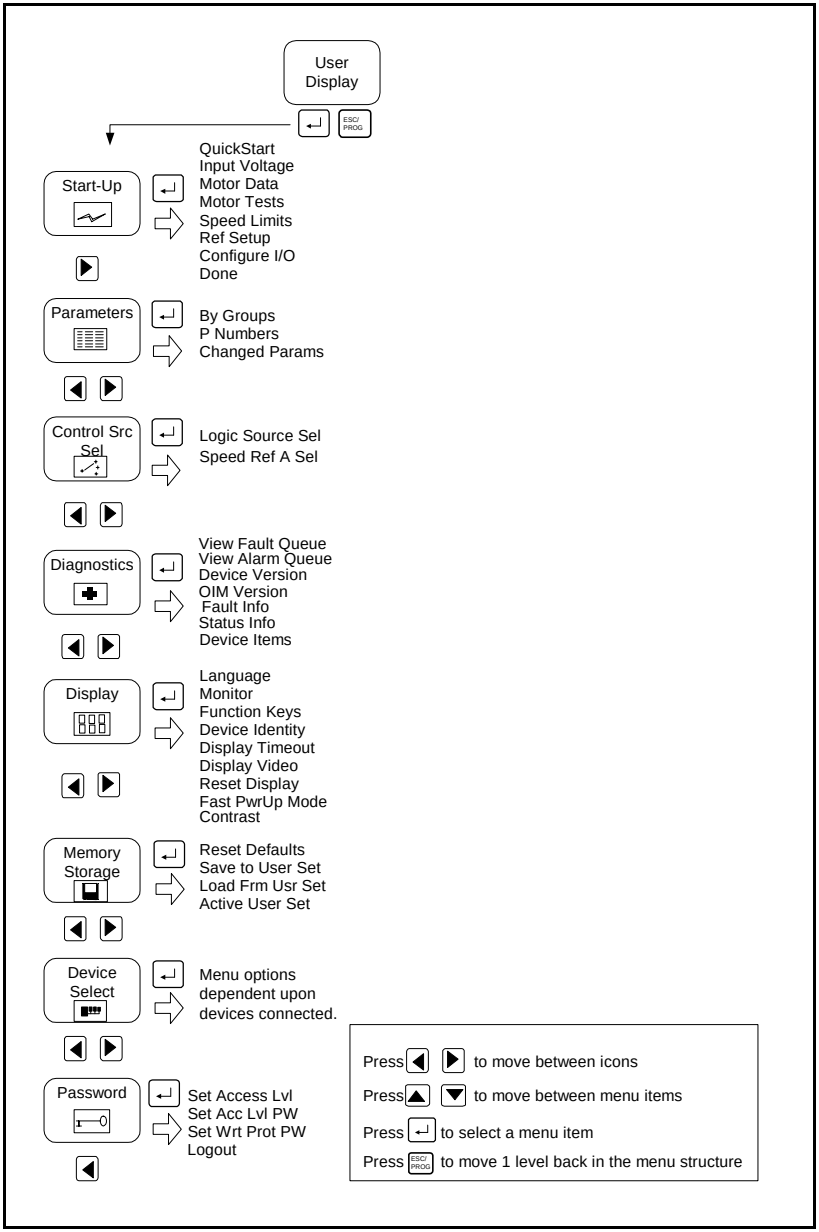

Figure B.4 – LCD OIM Menu Structure

B.5 Powering Up and Adjusting the LCD OIM

The first time the LCD OIM is powered up, you will be prompted to select a language for the display text. If the Start-Up routine has not been completed, the Start-Up menu is displayed immediately following the language selection screen.

On subsequent power ups, if both of these requirements have been met, the Main Menu is displayed after the initialization screen.

B.5.1 Selecting the Fast Power Up Feature

The fast power up feature bypasses the initialization screen at power up, and the Main Menu is displayed immediately. To select this feature, select Fast PwrUp Mode from the Display menu.

B.5.2 Adjusting the Screen Contrast

To adjust the screen contrast, select Contrast from the Display menu.

B.5.3 Resetting the Display

To return all the options for the display to factory-default values, select Reset Display from the Display menu.

B.6 Selecting a Device in the System

The LCD OIM can access and display data from any active drive or peripheral device on the network. The drive (port 0) is the default device selected.

To select a device, select the Device Select icon from the Main Menu. The options listed depend on what is connected to the network.

The name and DPI port number of the device being accessed is shown on the OIM's display (see figure B.3).

B.7 Using the LCD OIM to Program the Drive

The LCD OIM enables you to view and adjust parameters in the drive or in peripheral devices connected to the drive. The parameters available for viewing or adjustment depend on the device selected. See section B.6 for information about selecting a device.

The method of viewing and adjusting parameters is the same regardless of the device selected.

B.7.1 Viewing and Adjusting Parameters

Refer to chapter 10 for information on how to access the parameters in the drive.

Each parameter screen contains the following information:

- Parameter number
- Parameter name
- Current parameter value and units
- Parameter range
- **F1 key defined as a toggle to enable you to view the parameter's current value and the factory-default value**

See figure B.5 and table B.2 for instructions on how to adjust the parameter values.

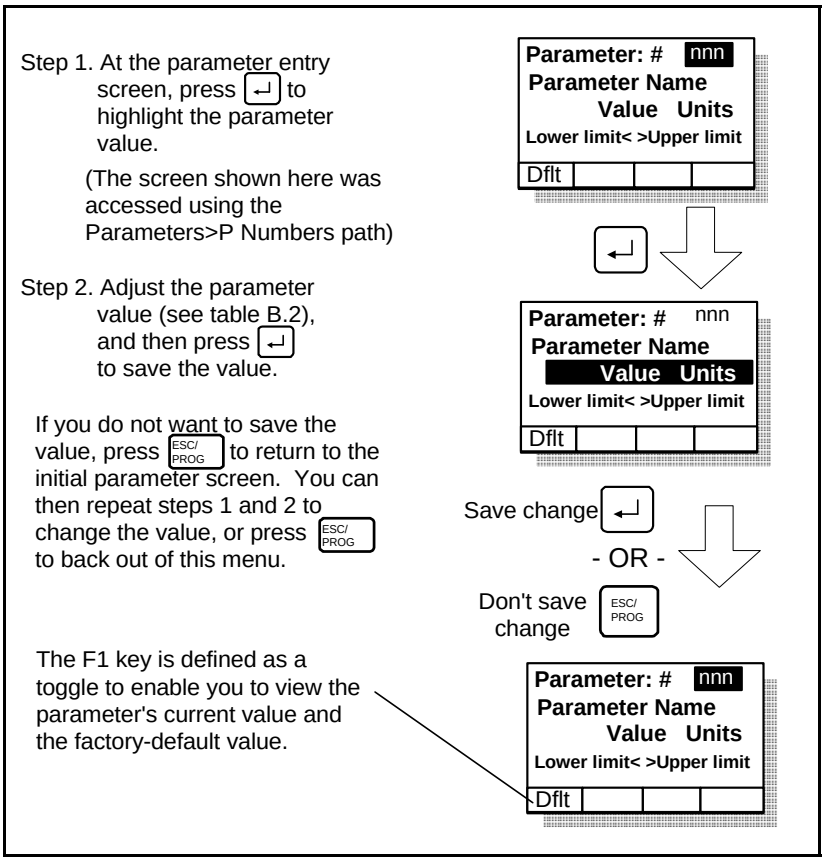

Figure B.5 – Adjusting Parameters

Table B.2 – How to Adjust Each Parameter Type

Parameter Type	How to Adjust
Numbered List	Use up/down arrow keys to advance through the list of options.
Bit	Use ◀ ▶ to move the cursor to the bit location you want to change. Use ▲ ▼ to change the value of the bit.
Numeric	Use ▲ ▼ to increase or decrease the value. - Or - Use ◀ ▶ to move the cursor from digit to digit, and use ▲ ▼ to increase or decrease the value of the digit.

To restore all parameters to their factory-default values, select Reset Defaults from the Memory Storage menu.

Note that the parameter values are retained through a line dip or power shutdown.

B.7.2 Loading and Saving User Sets

Drive configurations, called user sets, can be saved and recalled for use at any time. Up to three user sets can be saved in the SP600 drive.

To **save** the current drive configuration, select Save to User Set from the Memory Storage menu.

To recall, or **load**, a user set, select Load Frm Usr Set from the Memory Storage menu.

To **identify** which user set is active, select Active User Set from the Memory Storage menu. The name of the last user set to be loaded into the drive will be displayed. “Active Set” means factory defaults have been restored.

B.8 Monitoring the Drive Using the Process Display Screen on the LCD OIM

The process display screen enables you to monitor up to three process variables (six on frames 2 and 3. Use a function key programmed as Next to toggle bwtween the process display variables). You can select the display, parameter, scale, and text for each process variable being displayed.

The ESC/PROG key toggles between the programming screen and the process display screen. From the Main Menu screen, press F1 or F2 to select the process display screen. In addition, the process display screen becomes active if no keys have been pressed before the display timeout period expires. See section B.8.4 for information about setting the display timeout period.

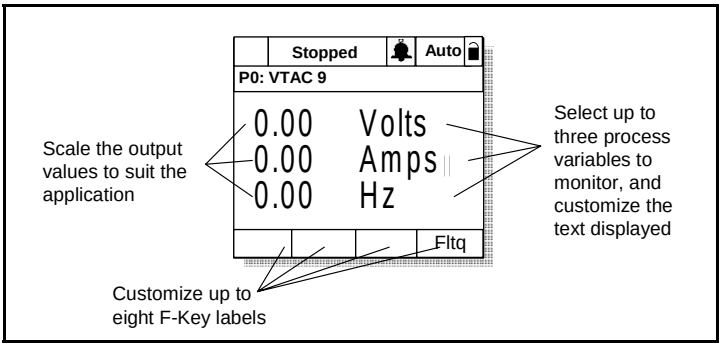

Figure B.6 – Process (User) Display Screen

B.8.1 Displaying and Changing the OIM Reference

You can display the reference value that the OIM is sending to the drive by pressing the up or down arrow key once when the process display screen is active. See figure B.7. The OIM reference can be used for the speed reference, PI reference, or trim reference.

To change the displayed reference, press and hold down either the up or down arrow key until the desired value is displayed. Release the key to return to the process display screen.

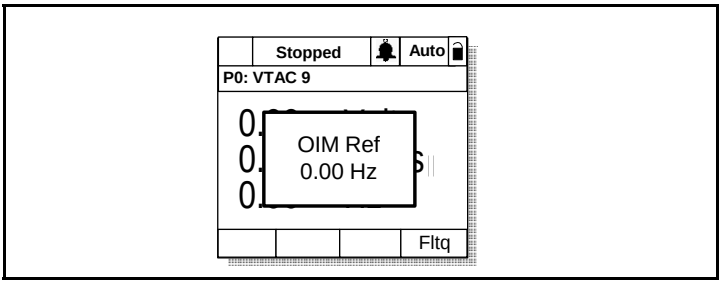

Figure B.7 – OIM Reference Displayed

Note that changing the value of the OIM reference does not affect the value of any other port reference.

The value of the OIM reference is saved through a power cycle if parameter 192 (Save OIM Ref) is set to save at power down.

B.8.2 Customizing the Process Display Screen

To customize the process display screen, select Monitor from the Display menu. See figure B.8.

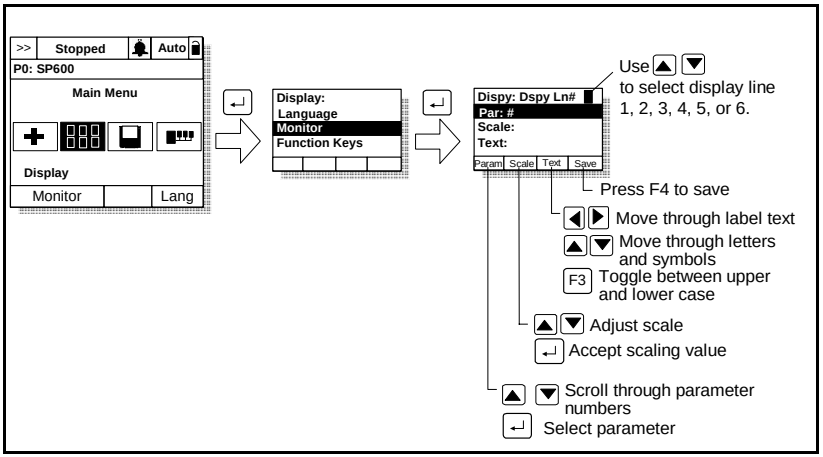

Figure B.8 – Customizing the Process Display Screen

B.8.3 Customizing the Function Keys

The function keys (F1, F2, F3, and F4, also called F-Keys) on the OIM can be customized to perform several pre-configured functions when the process display screen is active.

Up to eight function keys can be configured. Pressing ◀ ▶ while the display screen is active toggles between each set of four functions.

As shipped from the factory, the F1 key is configured for the Auto/Manual selection function and the F4 key is configured for the Clear Fault Queue function.

To assign a function to an F-Key, select the Display icon from the Main Menu as shown in figures B.9 and B.10.

The F-Key definitions are the same for all OIMs connected to the drive, regardless of the port used.

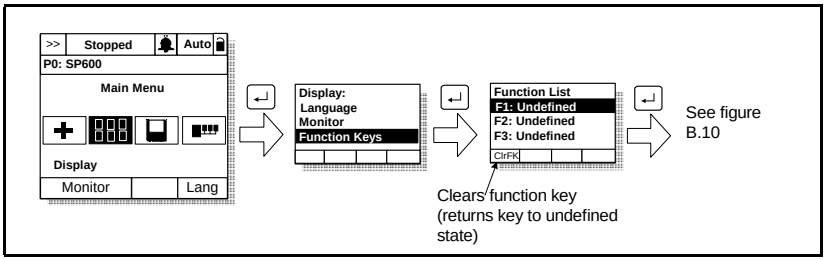

Figure B.9 – Accessing the Function Key Configuration Screens

Select from the list of preconfigured functions:

Undefined (default)

Load User Set 1-3: Loads the specified user set into active drive memory. The drive responds as if a value had been entered in Load Frm User Set (198), or Load Frm Usr Set was selected from the OIM's Memory Storage menu.

ATTENTION: Loading a user set with LevelSense Start (168) set to Enable can result in the drive starting immediately when all start conditions are met.

When this function is enabled, the user must ensure that automatic start up of the driven equipment will not cause injury to operating personnel or damage to the driven equipment. In addition, the user is responsible for providing suitable audible or visual alarms or other devices to indicate that this function is enabled and the drive may start at any moment. Failure to observe this precaution could result in severe bodily injury or loss of life.

Save User Set 1-3: Saves the active configuration to drive memory. The drive responds as if a value had been entered in Save to User Set (199) or Save to User Set was selected from the OIM's Memory Storage menu.

Acc/Dec Change: Toggles between the display of Acc/Dec rate 1 and Acc/Dec rate 2 (The value the drive is configured to go to, not the current value being used by the drive). This selection is based on the active value of the rate parameters (140-143). Therefore, when any of these parameters change, the actual acc/dec rates will dynamically change.

Preset Speed 1-6: Toggles the selected preset speed on and off and grants Manual reference control. Returns to Auto reference when the function is toggled.

Auto/Manual: Toggles between Auto and Manual reference control. The text above the function key will change to indicate the command that will be issued when the key is pressed.

ATTENTION: When switching from Auto to Manual or Manual to Auto, the drive will ramp to the reference level provided by the new source at the rate specified in Accel Time 1 (140), Decel Time 1 (142), Accel Time 2 (141), or Decel Time 2 (143). Be aware that an abrupt speed change may occur depending upon the new reference level and rate specified in these parameters. Failure to observe this precaution could result in bodily injury.

View Fault Queue: Displays the Fault Queue screen (see chapter 12). Press ESC/PROG to return to the process display screen.

Next: Toggles to next set of three process display variables.

B.8.3.1 Customizing the Function Key Label Text

You can customize the text for each function key label (up to five characters). See figure B.10.

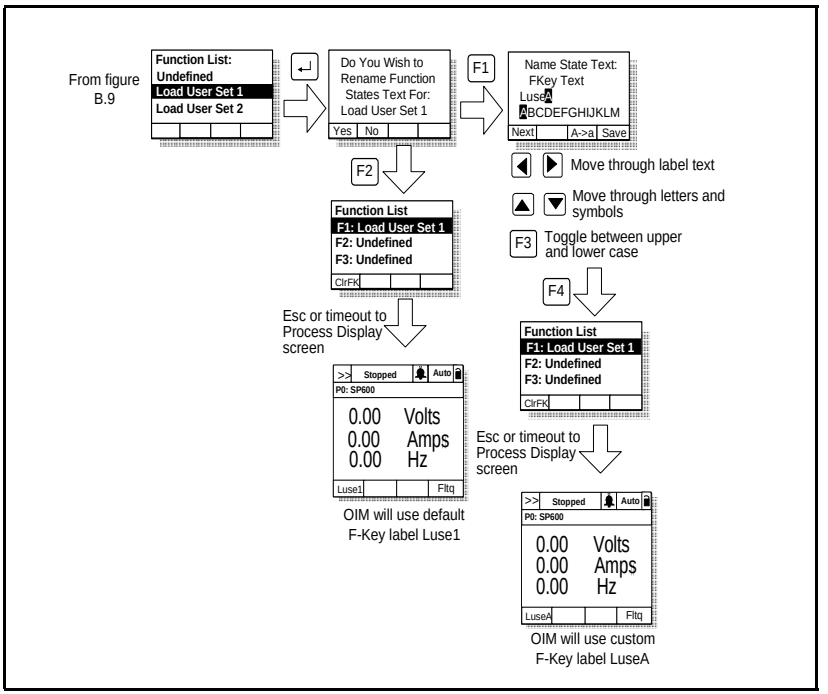

Figure B.10 – Customizing the Function Key Label Text

B.8.4 Setting the Display Timeout Period

When the OIM is inactive (that is, no keys have been pressed) for a user-specified period of time, the process display screen becomes active. To return to the previously active screen, press any key. To return to the Main Menu, press ESC/PROG.

To set the display timeout period, select Display Timeout from the Display menu. The timeout period can range from 10 to 1200 seconds (20 minutes).

This feature can also be disabled by pressing the F1 key while in the display time screen.

Note that each OIM connected to the drive can have a different timeout period.

B.8.5 Using Reverse Video for the Process Display Screen

To select normal or reverse video for the process display screen, select Display Video from the Display menu. See figure B.11 for sample screens.

Note that each OIM connected to the drive can have a different display mode.

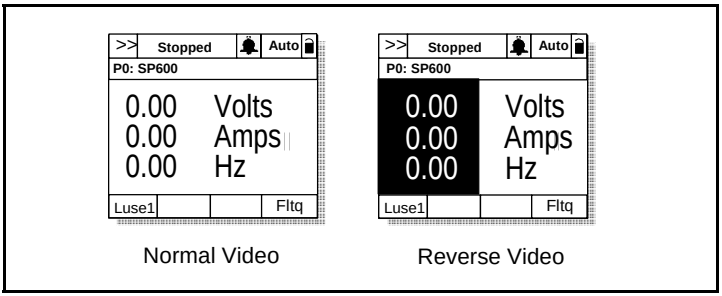

Figure B.11 – Selecting Reverse Video for the Process Display Screen

B.9 Controlling the Drive From the LCD OIM

When the OIM is the selected control source, it can be used to control the drive:

- Start (Run)
- Stop
- Clear Faults
- Jog
- Select direction

Note that pressing two OIM keys at the same time will cause no command to be sent to the drive. For example, attempting to

change direction while jogging from the same OIM will cause the drive to stop.

B.9.1 Selecting the Logic and Reference Source

Parameters 89 (Logic Source Sel) and 90 (Ref Source Sel) are used to select the drive control and speed reference sources. These parameters are grouped in the Control Src Select menu. See figure B.12.

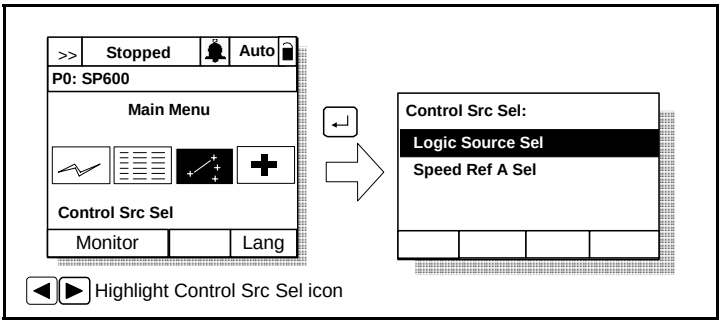

Figure B.12 – Selecting the Control and Reference Source

ATTENTION: Removing and replacing the LCD OIM while the drive is running may cause an abrupt speed change if the LCD OIM is the selected reference source, but is not the selected control source. The drive will ramp to the reference level provided by the OIM at the rate specified in Accel Time 1 (140), Accel Time 2 (141), Decel Time 1 (142) and Decel Time 2 (143). Be aware that an abrupt speed change may occur depending upon the new reference level and the rate specified in these parameters. Failure to observe this precaution could result in bodily injury.

Both of these parameters can also be accessed individually through the Parameters menu.

Refer to chapter 12 for a description of the parameters.

B.9.2 Starting the Drive

When the OIM is the selected control source, pressing [I] issues a start command to the drive.

B.9.3 Stopping the Drive

Pressing [O] will issue a stop command to the drive.

Important: Stop commands from any attached OIM will always be enabled.

B.9.4 Changing Motor Direction

When the OIM is the selected control source, pressing toggles motor direction.

When is pressed, the motor ramps down to 0 Hz and then ramps up to the set speed in the opposite direction.

If the drive is running when the direction is changed, the reference to the motor changes based on Accel/Decel time.

B.9.5 Jogging the Drive

When the OIM is the selected control source, pressing

sends a jog command to the motor as long as the key is pressed.

APPENDIX C

Parameters Cross-Referenced by Name

The following table lists the complete set of SP600 parameters in alphabetical order.

Parameter Name	No.	Path (File>Group)	Page No.
Accel Time 1	140	Dynamic Control>Ramp Rates	11-36
Accel Time 2	141	Dynamic Control>Ramp Rates	11-36
Alarm 1 @ Fault	229	Utility>Diagnostics	11-63
Alarm 2 @ Fault	230	Utility>Diagnostics	11-63
Alarm Config 1	259	Utility>Alarms	11-66
Analog In 1 Hi	322	Inputs & Outputs>Analog Inputs	11-74
Analog In 1 Lo	323	Inputs & Outputs>Analog Inputs	11-74
Analog In 1 Loss	324	Inputs & Outputs>Analog Inputs	11-75
Analog In 2 Hi	325	Inputs & Outputs>Analog Inputs	11-75
Analog In 2 Lo	326	Inputs & Outputs>Analog Inputs	11-76
Analog In 2 Loss	327	Inputs & Outputs>Analog Inputs	11-76
Analog In1 Value	16	Monitor>Metering	11-8
Analog In2 Value	17	Monitor>Metering	11-8
Analog Out1 Hi	343	Inputs & Outputs>Analog Outputs	11-78
Analog Out1 Lo	344	Inputs & Outputs>Analog Outputs	11-79
Analog Out1 Sel	342	Inputs & Outputs>Analog Outputs	11-78
Anlg In Config	320	Inputs & Outputs>Analog Inputs	11-72
Anlg In Sqr Root	321	Inputs & Outputs>Analog Inputs	11-73
Anlg Out Absolut	341	Inputs & Outputs>Analog Outputs	11-77
Anlg Out Config	340	Inputs & Outputs>Analog Outputs	11-77
Auto Rstrt Delay	175	Dynamic Control>Stop/Restart Modes	11-46
Auto Rstrt Tries	174	Dynamic Control>Stop/Restart Modes	11-44

Parameter Name	No.	Path (File>Group)	Page No.
Autotune	61	Motor Control>Torq Attributes	11-16
Break Frequency	72	Motor Control>Volts per Hertz	11-18
Break Voltage	71	Motor Control>Volts per Hertz	11-18
Bus Reg Kd	165	Dynamic Control>Stop/Brake Modes	11-43
Bus Reg Ki	160	Dynamic Control>Stop/Brake Modes	11-40
Bus Reg Kp	164	Dynamic Control>Stop/Brake Modes	11-42
Bus Reg Mode A	161	Dynamic Control>Stop/Brake Modes	11-41
Bus Reg Mode B	162	Dynamic Control>Stop/Brake Modes	11-41
CarrierFrequency	151	Dynamic Control>Load Limits	11-38
Commanded Freq	2	Monitor>Metering	11-5
Compensation	56	Motor Control>Torq Attributes	11-14
Control SW Ver	29	Monitor>Drive Data	11-9
Current Lmt Gain	149	Dynamic Control>Load Limits	11-38
Current Lmt Sel	147	Dynamic Control>Ramp Rates	11-37
Current Lmt Val	148	Dynamic Control>Load Limits	11-38
Data In A1 - Link A Word 1	300	Communication>Datalinks	11-70
Data In A2 - Link A Word 2	301	Communication>Datalinks	11-70
Data In B1 - Link B Word 1	302	Communication>Datalinks	11-70
Data In B2 - Link B Word 2	303	Communication>Datalinks	11-70
Data In C1 - Link C Word 1	304	Communication>Datalinks	11-71
Data In C2 - Link C Word 2	305	Communication>Datalinks	11-71
Data In D1 - Link D Word 1	306	Communication>Datalinks	11-71
Data In D2 - Link D Word 2	307	Communication>Datalinks	11-72
Data Out A1 - Link A Word 1	310	Communication>Datalinks	11-71
Data Out A2 - Link A Word 2	311	Communication>Datalinks	11-71
Data Out B1 - Link B Word 1	312	Communication>Datalinks	11-72
Data Out B2 - Link B Word 2	313	Communication>Datalinks	11-72
Data Out C1 - Link C Word 1	314	Communication>Datalinks	11-72
Data Out C2 - Link C Word 2	315	Communication>Datalinks	11-72
Data Out D1 - Link D Word 1	316	Communication>Datalinks	11-71
Data Out D2 - Link D Word 2	317	Communication>Datalinks	11-72
DB Resistor Type	163	Dynamic Control>Stop/Brake Modes	11-42
DC Brake Level	158	Dynamic Control>Stop/Brake Modes	11-40
DC Brake Lvl Sel	157	Dynamic Control>Stop/Brake Modes	11-39
DC Brake Time	159	Dynamic Control>Stop/Brake Modes	11-40
DC Bus Memory	13	Monitor>Metering	11-7

Parameter Name	No.	Path (File>Group)	Page No.
DC Bus Voltage	12	Monitor>Metering	11-7
Decel Time 1	142	Dynamic Control>Ramp Rates	11-37
Decel Time 2	143	Dynamic Control>Ramp Rates	11-37
Dig In Status	216	Utility>Diagnostics Inputs & Outputs>Digital Inputs	11-59
Dig Out Status	217	Utility>Diagnostics Inputs & Outputs>Digital Outputs	11-60
Dig Out1 Level	381	Inputs & Outputs>Digital Outputs	11-89
Dig Out1 OffTime	383	Inputs & Outputs>Digital Outputs	11-89
Dig Out1 OnTime	382	Inputs & Outputs>Digital Outputs	11-89
Dig Out2 Level	385	Inputs & Outputs>Digital Outputs	11-91
Dig Out2 OffTime	387	Inputs & Outputs>Digital Outputs	11-91
Dig Out2 OnTime	386	Inputs & Outputs>Digital Outputs	11-91
Digital In1 Sel	361	Inputs & Outputs>Digital Inputs	11-80
Digital In2 Sel	362	Inputs & Outputs>Digital Inputs	11-80
Digital In3 Sel	363	Inputs & Outputs>Digital Inputs	11-80
Digital In4 Sel	364	Inputs & Outputs>Digital Inputs	11-80
Digital In5 Sel	365	Inputs & Outputs>Digital Inputs	11-80
Digital In6 Sel	366	Inputs & Outputs>Digital Inputs	11-80
Digital Out1 Sel	380	Inputs & Outputs>Digital Outputs	11-88
Digital Out2 Sel	384	Inputs & Outputs>Digital Outputs	11-90
Direction Mode	190	Utility>Direction Config	11-50
Drive Alarm 1	211	Utility>Diagnostics Utility>Alarms	11-57
Drive Alarm 2	212	Utility>Diagnostics Utility>Alarms	11-57
Drive Checksum	203	Utility>Drive Memory	11-54
Drive Logic Rslt	271	Communication>Comm Control	11-67
Drive OL Count	219	Utility>Diagnostics	11-60
Drive OL Mode	150	Dynamic Control>Load Limits	11-38
Drive Ramp Rslt	273	Communication>Comm Control	11-68
Drive Ref Rslt	272	Communication>Comm Control	11-67
Drive Status 1	209	Utility>Diagnostics	11-55
Drive Status 2	210	Utility>Diagnostics	11-56
Drive Temp	218	Utility>Diagnostics	11-60
Elapsed MWh	9	Monitor>Metering	11-6
Elapsed Run Time	10	Monitor>Metering	11-7

Parameter Name	No.	Path (File>Group)	Page No.
Fault Amps	225	Utility>Diagnostics	11-61
Fault Bus Volts	226	Utility>Diagnostics	11-61
Fault Clear	240	Utility>Faults	11-65
Fault Clear Mode	241	Utility>Faults	11-65
Fault Config 1	238	Utility>Faults	11-65
Fault Frequency	224	Utility>Diagnostics	11-61
Flux Current	5	Monitor>Metering	11-6
Flux Current Ref	63	Motor Control>Torq Attributes	11-17
Flux Up Mode	57	Motor Control>Torq Attributes	11-15
Flux Up Time	58	Motor Control>Torq Attributes	11-15
Flying Start En	169	Dynamic Control>Stop/Restart Modes	11-44
Flying StartGain	170	Dynamic Control>Stop/Restart Modes	11-44
IR Voltage Drop	62	Motor Control>Torq Attributes	11-17
Ixo Voltage Drop	64	Motor Control>Torq Attributes	11-17
Jog Speed	100	Speed Command>Discrete Speeds	11-25
Language	201	Utility>Drive Memory	11-53
Last Stop Source	215	Utility>Diagnostics	11-59
LevelSense Start	168	Dynamic Control>Stop/Restart Modes	11-43
Load Frm Usr Set	198	Utility>Drive Memory	11-52
Logic Source Sel	89	Speed Command>Control Src Select	11-21
Man Ref Preload	193	Utility>OIM Ref Config	11-51
Manual Mask	286	Communication>Masks & Owners	11-68
Manual Owner	298	Communication>Masks & Owners	11-69
Maximum Freq	55	Motor Control>Torq Attributes	11-13
Maximum Speed	82	Speed Command>Spd Mode & Limits	11-20
Maximum Voltage	54	Motor Control>Torq Attributes	11-13
Minimum Speed	81	Speed Command>Spd Mode & Limits	11-19
MOP Frequency	11	Monitor>Metering	11-7
MOP Rate	195	Utility>MOP Config	11-51
Motor NP FLA	42	Motor Control>Motor Data	11-9
Motor NP Hertz	43	Motor Control>Motor Data	11-10
Motor NP Power	45	Motor Control>Motor Data	11-10
Motor NP RPM	44	Motor Control>Motor Data	11-10
Motor NP Volts	41	Motor Control>Motor Data	11-9
Motor OL Count	220	Utility>Diagnostics	11-61
Motor OL Factor	48	Motor Control>Motor Data	11-11

Parameter Name	No.	Path (File>Group)	Page No.
Motor OL Hertz	47	Motor Control>Motor Data	11-11
Motor Type	40	Motor Control>Motor Data	11-9
Mtr NP Pwr Units	46	Motor Control>Motor Data	11-10
Output Current	3	Monitor>Metering	11-5
Output Freq	1	Monitor>Metering	11-5
Output Power	7	Monitor>Metering	11-6
Output Powr Fctr	8	Monitor>Metering	11-6
Output Voltage	6	Monitor>Metering	11-6
Overspeed Limit	83	Speed Command>Spd Mode & Limits	11-20
Param Access Lvl	196	Utility>Drive Memory	
PI Configuration	124	Speed Command>Process PI	11-29
PI Control	125	Speed Command>Process PI	11-30
PI Error Meter	137	Speed Command>Process PI	11-36
PI Fdback Meter	136	Speed Command>Process PI	11-36
PI Feedback Sel	128	Speed Command>Process PI	11-33
PI Integral Time	129	Speed Command>Process PI	11-33
PI Lower Limit	131	Speed Command>Process PI	11-34
PI Output Meter	138	Speed Command>Process PI	11-36
PI Preload	133	Speed Command>Process PI	11-34
PI Prop Gain	130	Speed Command>Process PI	11-33
PI Ref Meter	135	Speed Command>Process PI	11-35
PI Reference Sel	126	Speed Command>Process PI	11-32
PI Setpoint	127	Speed Command>Process PI	11-32
PI Status	134	Speed Command>Process PI	11-35
PI Upper Limit	132	Speed Command>Process PI	11-34
Power Loss Level	186	Dynamic Control>Power Loss	11-49
Power Loss Mode	184	Dynamic Control>Stop/Power Loss	11-49
Power Loss Time	185	Dynamic Control>Stop/Power Loss	11-49
Power Up Marker	242	Utility>Faults	11-66
Preset Speed 1	101	Speed Command>Discrete Speeds	11-25
Preset Speed 2	102	Speed Command>Discrete Speeds	11-25
Preset Speed 3	103	Speed Command>Discrete Speeds	11-25
Preset Speed 4	104	Speed Command>Discrete Speeds	11-25
Preset Speed 5	105	Speed Command>Discrete Speeds	11-25
Preset Speed 6	106	Speed Command>Discrete Speeds	11-25
Preset Speed 7	107	Speed Command>Discrete Speeds	11-25

Parameter Name	No.	Path (File>Group)	Page No.
Rated Amps	28	Monitor>Drive Data	11-8
Rated kW	26	Monitor>Drive Data	11-8
Rated Volts	27	Monitor>Drive Data	11-8
Reset Meters	200	Utility>Drive Memory	11-53
Reset To Defalts	197	Utility>Drive Memory	11-52
Run Boost	70	Motor Control>Volts per Hertz	11-18
S Curve %	146	Dynamic Control>Ramp Rates	11-37
Save MOP Ref	194	Utility>MOP Config	11-51
Save OIM Ref	192	Utility>OIM Ref Config	11-50
Save To User Set	199	Utility>Drive Memory	11-53
Skip Freq Band	87	Speed Command>Spd Mode & Limits	11-21
Skip Frequency 1	84	Speed Command>Spd Mode & Limits	11-21
Skip Frequency 2	85	Speed Command>Spd Mode & Limits	11-21
Skip Frequency 3	86	Speed Command>Spd Mode & Limits	11-21
Sleep Level	182	Dynamic Control>Restart Modes	11-48
Sleep Time	183	Dynamic Control>Restart Modes	11-49
Sleep-Wake Mode	178	Dynamic Control>Stop/Restart Modes	11-46
Sleep-Wake Ref	179	Dynamic Control>Restart Modes	11-48
Slip Comp Gain	122	Speed Command>Slip Comp	11-28
Slip RPM @ FLA	121	Speed Command>Slip Comp	11-28
Slip RPM Meter	123	Speed Command>Slip Comp	11-28
Speed Mode	80	Speed Command>Spd Mode & Limits	11-18
Speed Ref A Hi	91	Speed Command>Speed References	11-24
Speed Ref A Lo	92	Speed Command>Speed References	11-24
Speed Ref A Sel	90	Speed Command>Control Src Select Speed Command>Speed References	11-23
Speed Ref Source	213	Utility>Diagnostics	11-58
Start Inhibits	214	Utility>Diagnostics	11-58
Start/Acc Boost	69	Motor Control>Volts per Hertz	11-17
Status 1 @ Fault	227	Utility>Diagnostics	11-62
Status 2 @ Fault	228	Utility>Diagnostics	11-62
Stop Mode A	155	Dynamic Control>Stop/Brake Modes	11-39
Stop Mode B	156	Dynamic Control>Stop/Brake Modes	11-39
Stop Owner	288	Communication>Masks & Owners	11-69
SV Boost Filter	59	Motor Control>Torq Attributes	11-15
TB Man Ref Hi	97	Speed Command>Speed References	11-24

Parameter Name	No.	Path (File>Group)	Page No.
TB Man Ref Lo	98	Speed Command>Speed References	11-25
TB Man Ref Sel	96	Speed Command>Speed References	11-24
Testpoint 1 Data	235	Utility>Diagnostics	11-64
Testpoint 1 Sel	234	Utility>Diagnostics	11-64
Testpoint 2 Data	237	Utility>Diagnostics	11-64
Testpoint 2 Sel	236	Utility>Diagnostics	11-64
Torque Current	4	Monitor>Metering	11-5
Torque Perf Mode	53	Motor Control>Torq Attributes	11-12
Trim Hi	119	Speed Command>Speed Trim	11-27
Trim In Select	117	Speed Commands>Speed Trim	11-26
Trim Lo	120	Speed Command>Speed Trim	11-27
Trim Out Select	118	Speed Command>Speed Trim	11-27
Wake Level	180	Dynamic Control>Restart Modes	11-48
Wake Time	181	Dynamic Control>Restart Modes	11-48
Voltage Class	202	Utility>Drive Memory	11-54

APPENDIX D

Analog Input Selection Path

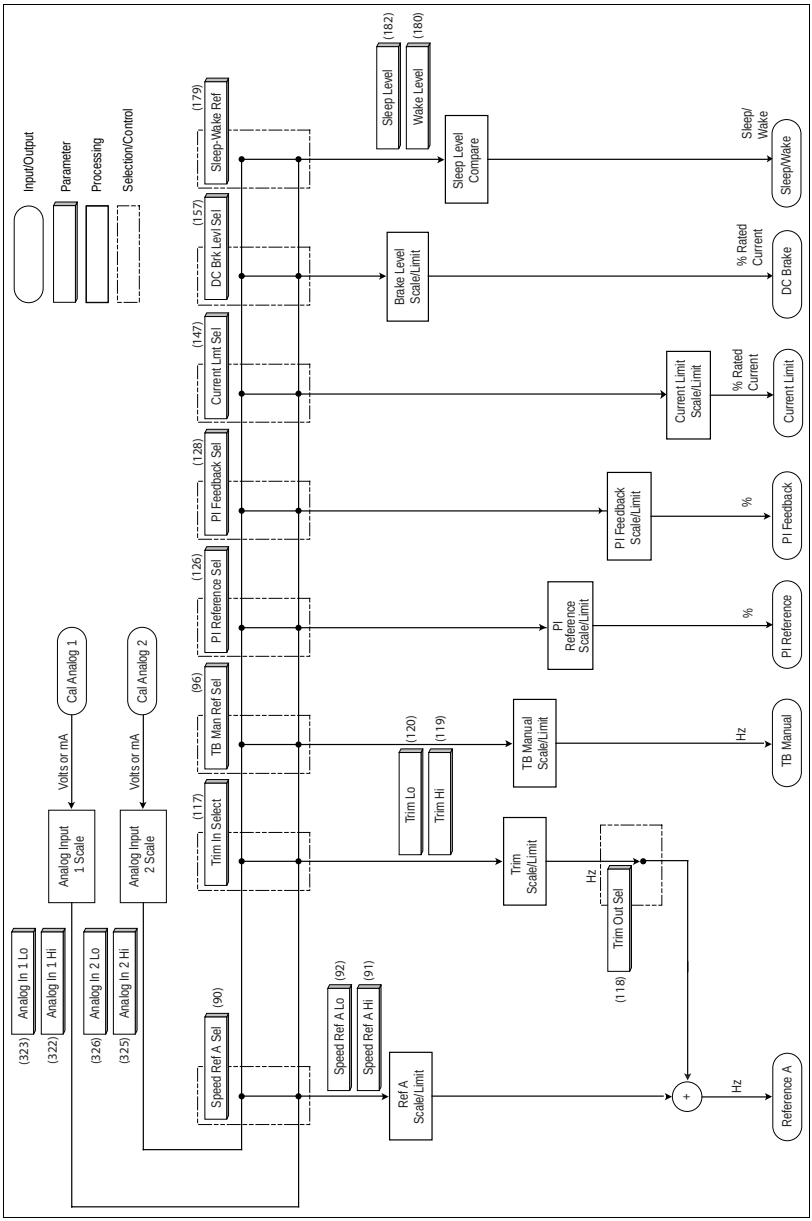

APPENDIX E

Process PI Block Diagram

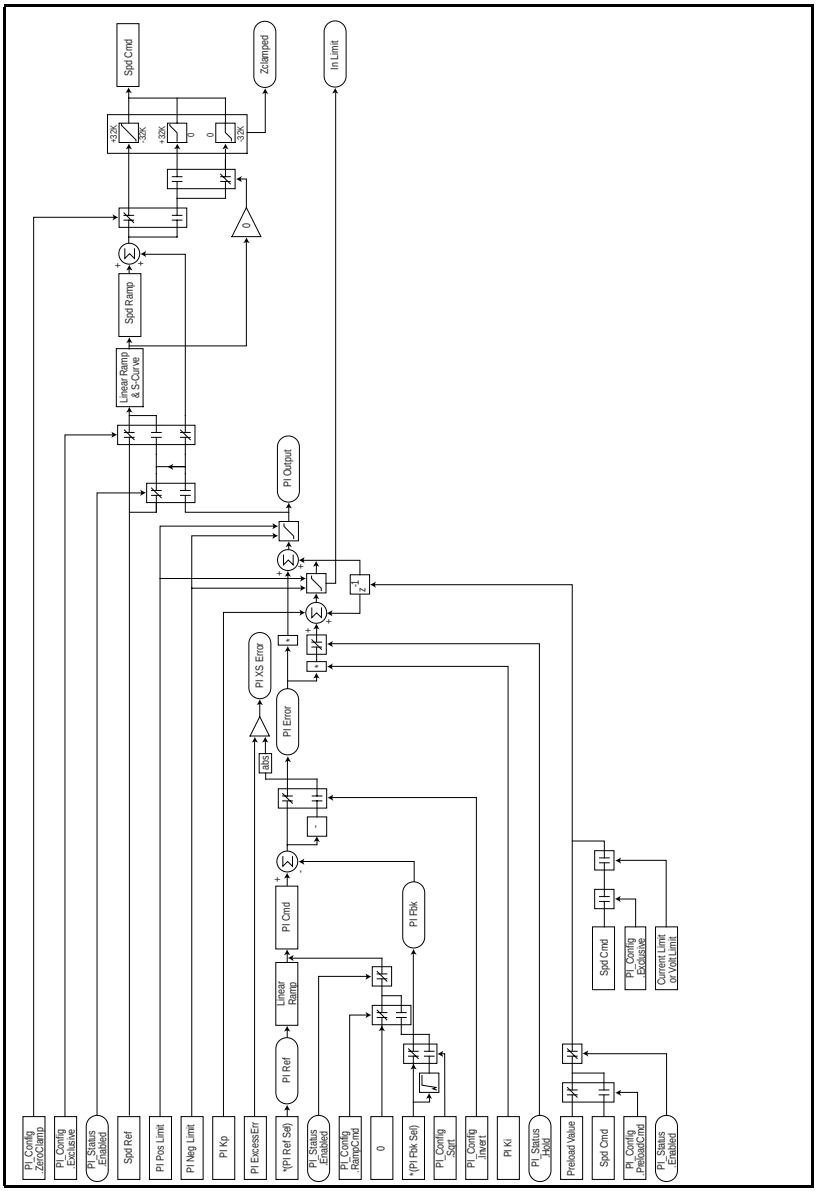

APPENDIX F

Record of User Settings: Advanced Access Level

No.	Parameter Name	Path (File>Group)	Setting
40	Motor Type	Motor Control>Motor Data	
41	Motor NP Volts	Motor Control>Motor Data	
42	Motor NP FLA	Motor Control>Motor Data	
43	Motor NP Hertz	Motor Control>Motor Data	
44	Motor NP RPM	Motor Control>Motor Data	
45	Motor NP Power	Motor Control>Motor Data	
46	Mtr NP Pwr Units	Motor Control>Motor Data	
47	Motor OL Hertz	Motor Control>Motor Data	
48	Motor OL Factor	Motor Control>Motor Data	
53	Torque Perf Mode	Motor Control>Torq Attributes	
54	Maximum Voltage	Motor Control>Torq Attributes	
55	Maximum Freq	Motor Control>Torq Attributes	
56	Compensation	Motor Control>Torq Attributes	
57	Flux Up Mode	Motor Control>Torq Attributes	
58	Flux Up Time	Motor Control>Torq Attributes	
59	SV Boost Filter	Motor Control>Torq Attributes	
61	Autotune	Motor Control>Torq Attributes	
62	IR Voltage Drop	Motor Control>Torq Attributes	
63	Flux Current Ref	Motor Control>Torq Attributes	
64	Ixo Voltage Drop	Motor Control>Torq Attributes	
69	Start/Acc Boost	Motor Control>Volts per Hertz	
70	Run Boost	Motor Control>Volts per Hertz	
71	Break Voltage	Motor Control>Volts per Hertz	
72	Break Frequency	Motor Control>Volts per Hertz	
80	Speed Mode	Speed Command>Spd Mode & Limits	

No.	Parameter Name	Path (File>Group)	Setting
81	Minimum Speed	Speed Command>Spd Mode & Limits	
82	Maximum Speed	Speed Command>Spd Mode & Limits	
83	Overspeed Limit	Speed Command>Spd Mode & Limits	
84	Skip Frequency 1	Speed Command>Spd Mode & Limits	
85	Skip Frequency 2	Speed Command>Spd Mode & Limits	
86	Skip Frequency 3	Speed Command>Spd Mode & Limits	
87	Skip Freq Band	Speed Command>Spd Mode & Limits	
89	Logic Source Sel	Speed Command>Control Src Select	
90	Speed Ref A Sel	Speed Command>Control Src Select Speed Command>Speed References	
91	Speed Ref A Hi	Speed Command>Speed References	
92	Speed Ref A Lo	Speed Command>Speed References	
96	TB Man Ref Sel	Speed Command>Speed References	
97	TB Man Ref Hi	Speed Command>Speed References	
98	TB Man Ref Lo	Speed Command>Speed References	
100	Jog Speed	Speed Command>Discrete Speeds	
101	Preset Speed 1	Speed Command>Discrete Speeds	
102	Preset Speed 2	Speed Command>Discrete Speeds	
103	Preset Speed 3	Speed Command>Discrete Speeds	
104	Preset Speed 4	Speed Command>Discrete Speeds	
105	Preset Speed 5	Speed Command>Discrete Speeds	
106	Preset Speed 6	Speed Command>Discrete Speeds	
107	Preset Speed 7	Speed Command>Discrete Speeds	
117	Trim In Select	Speed Commands>Speed Trim	
118	Trim Out Select	Speed Command>Speed Trim	
119	Trim Hi	Speed Command>Speed Trim	
120	Trim Lo	Speed Command>Speed Trim	
121	Slip RPM @ FLA	Speed Command>Slip Comp	
122	Slip Comp Gain	Speed Command>Slip Comp	
123	Slip RPM Meter	Speed Command>Slip Comp	
124	PI Configuration	Speed Command>Process PI	
125	PI Control	Speed Command>Process PI	
126	PI Reference Sel	Speed Command>Process PI	
127	PI Setpoint	Speed Command>Process PI	
128	PI Feedback Sel	Speed Command>Process PI	
129	PI Integral Time	Speed Command>Process PI	
130	PI Prop Gain	Speed Command>Process PI	

No.	Parameter Name	Path (File>Group)	Setting
131	PI Lower Limit	Speed Command>Process PI	
132	PI Upper Limit	Speed Command>Process PI	
133	PI Preload	Speed Command>Process PI	
140	Accel Time 1	Dynamic Control>Ramp Rates	
141	Accel Time 2	Dynamic Control>Ramp Rates	
142	Decel Time 1	Dynamic Control>Ramp Rates	
143	Decel Time 2	Dynamic Control>Ramp Rates	
146	S Curve %	Dynamic Control>Ramp Rates	
147	Current Lmt Sel	Dynamic Control>Ramp Rates	
148	Current Lmt Val	Dynamic Control>Load Limits	
149	Current Lmt Gain	Dynamic Control>Load Limits	
150	Drive OL Mode	Dynamic Control>Load Limits	
151	CarrierFrequency	Dynamic Control>Load Limits	
155	Stop Mode A	Dynamic Control>Stop/Brake Modes	
156	Stop Mode B	Dynamic Control>Stop/Brake Modes	
157	DC Brake Lvl Sel	Dynamic Control>Stop/Brake Modes	
158	DC Brake Level	Dynamic Control>Stop/Brake Modes	
159	DC Brake Time	Dynamic Control>Stop/Brake Modes	
160	Bus Reg Gain	Dynamic Control>Stop/Brake Modes	
161	Bus Reg Mode A	Dynamic Control>Stop/Brake Modes	
162	Bus Reg Mode B	Dynamic Control>Stop/Brake Modes	
163	DB Resistor Type	Dynamic Control>Stop/Brake Modes	
164	Bus Reg Kp	Dynamic Control>Stop/Brake Modes	
165	Bus Reg Kd	Dynamic Control>Stop/Brake Modes	
168	LevelSense Start	Dynamic Control>Stop/Restart Modes	
169	Flying Start En	Dynamic Control>Stop/Restart Modes	
170	Flying StartGain	Dynamic Control>Stop/Restart Modes	
174	Auto Rstrt Tries	Dynamic Control>Stop/Restart Modes	
175	Auto Rstrt Delay	Dynamic Control>Stop/Restart Modes	
178	Sleep-Wake Mode	Dynamic Control>Stop/Restart Modes	
179	Sleep-Wake Ref	Dynamic Control>Restart Modes	
180	Wake Level	Dynamic Control>Restart Modes	
181	Wake Time	Dynamic Control>Restart Modes	
182	Sleep Level	Dynamic Control>Restart Modes	
183	Sleep Time	Dynamic Control>Restart Modes	
184	Power Loss Mode	Dynamic Control>Stop/Power Loss	

No.	Parameter Name	Path (File>Group)	Setting
185	Power Loss Time	Dynamic Control>Stop/Power Loss	
186	Power Loss Level	Dynamic Control>Power Loss	
190	Direction Mode	Utility>Direction Config	
192	Save OIM Ref	Utility>OIM Ref Config	
193	Man Ref Preload	Utility>OIM Ref Config	
194	Save MOP Ref	Utility>MOP Config	
195	MOP Rate	Utility>MOP Config	
196	Param Access Lvl	Utility>Drive Memory	
197	Reset To Defalts	Utility>Drive Memory	
198	Load Frm Usr Set	Utility>Drive Memory	
199	Save To User Set	Utility>Drive Memory	
200	Reset Meters	Utility>Drive Memory	
201	Language	Utility>Drive Memory	
202	Voltage Class	Utility>Drive Memory	
234	Testpoint 1 Sel	Utility>Diagnostics	
235	Testpoint 1 Data	Utility>Diagnostics	
236	Testpoint 2 Sel	Utility>Diagnostics	
237	Testpoint 2 Data	Utility>Diagnostics	
238	Fault Config 1	Utility>Faults	
240	Fault Clear	Utility>Faults	
241	Fault Clear Mode	Utility>Faults	
259	Alarm Config 1	Utility>Alarms	
286	Manual Mask	Communication>Masks & Owners	
300	Data In A1 - Link A Word 1	Communication>Datalinks	
301	Data In A2 - Link A Word 2	Communication>Datalinks	
302	Data In B1 - Link B Word 1	Communication>Datalinks	
303	Data In B2 - Link B Word 2	Communication>Datalinks	
304	Data In C1 - Link C Word 1	Communication>Datalinks	
305	Data In C2 - Link C Word 2	Communication>Datalinks	
306	Data In D1 - Link D Word 1	Communication>Datalinks	
307	Data In D2 - Link D Word 2	Communication>Datalinks	
310	Data Out A1 - Link A Word 1	Communication>Datalinks	
311	Data Out A2 - Link A Word 2	Communication>Datalinks	
312	Data Out B1 - Link B Word 1	Communication>Datalinks	
313	Data Out B2 - Link B Word 2	Communication>Datalinks	
314	Data Out C1 - Link C Word 1	Communication>Datalinks	

No.	Parameter Name	Path (File>Group)	Setting
315	Data Out C2 - Link C Word 2	Communication>Datalinks	
316	Data Out D1 - Link D Word 1	Communication>Datalinks	
317	Data Out D2 - Link D Word 2	Communication>Datalinks	
320	Anlg In Config	Inputs & Outputs>Analog Inputs	
321	Anlg In Sqr Root	Inputs & Outputs>Analog Inputs	
322	Analog In 1 Hi	Inputs & Outputs>Analog Inputs	
323	Analog In 1 Lo	Inputs & Outputs>Analog Inputs	
324	Analog In 1 Loss	Inputs & Outputs>Analog Inputs	
325	Analog In 2 Hi	Inputs & Outputs>Analog Inputs	
326	Analog In 2 Lo	Inputs & Outputs>Analog Inputs	
327	Analog In 2 Loss	Inputs & Outputs>Analog Inputs	
340	Anlg Out Config	Inputs & Outputs>Analog Outputs	
341	Anlg Out Absolut	Inputs & Outputs>Analog Outputs	
342	Analog Out1 Sel	Inputs & Outputs>Analog Outputs	
343	Analog Out1 Hi	Inputs & Outputs>Analog Outputs	
344	Analog Out1 Lo	Inputs & Outputs>Analog Outputs	
361	Digital In1 Sel	Inputs & Outputs>Digital Inputs	
362	Digital In2 Sel	Inputs & Outputs>Digital Inputs	
363	Digital In3 Sel	Inputs & Outputs>Digital Inputs	
364	Digital In4 Sel	Inputs & Outputs>Digital Inputs	
365	Digital In5 Sel	Inputs & Outputs>Digital Inputs	
366	Digital In6 Sel	Inputs & Outputs>Digital Inputs	
380	Digital Out1 Sel	Inputs & Outputs>Digital Outputs	
381	Dig Out1 Level	Inputs & Outputs>Digital Outputs	
382	Dig Out1 OnTime	Inputs & Outputs>Digital Outputs	
383	Dig Out1 OffTime	Inputs & Outputs>Digital Outputs	
384	Digital Out2 Sel	Inputs & Outputs>Digital Outputs	
385	Dig Out2 Level	Inputs & Outputs>Digital Outputs	
386	Dig Out2 OnTime	Inputs & Outputs>Digital Outputs	
387	Dig Out2 OffTime	Inputs & Outputs>Digital Outputs	

A

AC line input fuses, 4-9
Accel Time 1 (140), 11-36
Accel Time 2 (141), 11-36
Access levels, parameter, 10-4
Air flow, required, 3-5
Alarm 1 @ Fault (229), 11-63
Alarm 2 @ Fault (230), 11-63
Alarm Config 1 (259), 11-66
Alarm Queue, 12-5
Alarms
  about, 12-5
  descriptions, 12-6
  names cross-referenced to numbers, 12-8
Analog In 1 Hi (322), 11-74
Analog In 1 Lo (323), 11-74
Analog In 1 Loss (324), 11-75
Analog In 2 Hi (325), 11-75
Analog In 2 Lo (326), 11-76
Analog In 2 Loss (327), 11-76
Analog In1 Value (16), 11-8
Analog In2 Value (17), 11-8
Analog input selection path, D-1
Analog inputs, 2-3
Analog Out1 Hi (343), 11-78
Analog Out1 Lo (344), 11-79
Analog Out1 Set (342), 11-78
Analog outputs, 2-3
Anlg In Config (320), 11-72
Anlg In Sqr Root (321), 11-73
Anlg Out Absolute (341), 11-77
Anlg Out Config (340), 11-77
Auto reference sources, 7-10
Auto restart, 2-4
Auto Rstrt Delay (175), 11-46
Auto Rstrt Tries (174), 11-44
Auto/Manual control, 7-11
Auto/Manual selection, 2-3
Autotune, 2-4
Autotune (61), 11-16
Avoidance frequency, *see* Skip Frequency

B

Basic access level parameters, D-1 to ??
Branch circuit protection, 6-4
Break Frequency (72), 11-18
Break Voltage (71), 11-18
Bus Reg Kd (165), 11-43
Bus Reg Ki (160), 11-40, 11-42
Bus Reg Kp (164), 11-42
Bus Reg Mode A (161), 11-41
Bus Reg Mode B (162), 11-41

C

Carrier Frequency (151), 11-38
CE filters, 2-13
Checking installation, 8-1 to 8-2
Commanded Freq (2), 11-5
Communication options, 2-16
Compensation (56), 11-14
Control and motor wiring diagram, 7-7
Control and signal inputs, 7-2
Control and signal wire sizes, 4-4
Control SW Ver (29), 11-9
Control terminal block, 7-3 to 7-5
ControlNet, 2-16
Cover, removing, 6-1
Current limit, 2-5
Current Lmt Gain (149), 11-38
Current Lmt Sel (147), 11-37
Current Lmt Val (148), 11-38

D

Data In A1 - Link A Word 1 (300), 11-70
Data In A2 - Link A Word 2 (301), 11-70
Data In B1 - Link B Word 1 (302), 11-70
Data In B2 - Link B Word 2 (303), 11-70
Data In C1 - Link C Word 1 (304), 11-71
Data In C2 - Link C Word 2 (305), 11-71
Data In D1 - Link D Word 1 (306), 11-71
Data In D2 - Link D Word 2 (307), 11-71
Data Out A1- Link A Word 1 (310), 11-71
Data Out A2 - Link A Word 2 (311), 11-71

Data Out B1- Link B Word 1 (312), 11-72
Data Out B2 - Link B Word 2 (313), 11-72
Data Out C1- Link C Word 1 (314), 11-72
Data Out C2 - Link C Word 2 (315), 11-72
Data Out D1- Link D Word 1 (316), 11-72
Data Out D2 - Link D Word 2 (317), 11-72
DB Resistor Type (163), 11-42
DC Brake Level (158), 11-40
DC Brake Lvl Sel (157), 11-39
DC Brake Time (159), 11-40
DC Bus Memory (13), 11-7
DC Bus Voltage (12), 11-7
DC bus voltage measuring points, 12-1, 12-2
DC bus, verifying capacitor voltage, 12-1
Decel Time 1 (142), 11-37
Decel Time 2 (143), 11-37
Device items, how to select, 12-27
Device version, how to determine, 12-26
DeviceNet, 2-16
Dig In Status (216), 11-59
Dig Out Status (217), 11-60
Dig Out1 Level (381), 11-89
Dig Out1 OffTime (383), 11-89
Dig Out1 OnTime (382), 11-89
Dig Out2 Level (385), 11-91
Dig Out2 OffTime (387), 11-91
Dig Out2 OnTime (386), 11-91
Digital In1 Sel (361), 11-80
Digital In2 Sel (362), 11-80
Digital In3 Sel (363), 11-80
Digital In4 Sel (364), 11-80
Digital In5 Sel (365), 11-80
Digital In6 Sel (366), 11-80
Digital Out1 Sel (380), 11-88
Digital Out2 Sel (384), 11-90
Digital outputs, 2-7
Dimensions, drive, 3-6
Direction Mode (190), 11-50
Display timeout period, setting, B-13
DPI interface, 2-7
DPI ports, 2-15
Drive Alarm 1 (211), 11-57
Drive Alarm 2 (212), 11-57
Drive Checksum (203), 11-54
Drive connections, 2-15
  terminal blocks, 2-15
Drive Logic Rslt (271), 11-67
Drive OL Count (219), 11-60
Drive OL Mode (150), 11-38
Drive Ramp Rslt (273), 11-68
Drive Ref Rslt (272), 11-67
Drive Status 1 (209), 11-55
Drive Status 2 (210), 11-56
Drive status parameters, accessing using LCD OIM, 12-25
Drive Temp (218), 11-60

E

Economizer mode, 2-7
Elapsed MWh (9), 11-6
Elapsed Run Time (10), 11-7
enclosure ratings,NEMA, 2-2
Environmental conditions, meeting, 3-4
External input disconnect, 6-4

F

Fan curve, 2-7
Fault Amps (225), 11-61
Fault Bus Volts (226), 11-61
Fault Clear (240), 11-65
Fault Clear Mode (241), 11-65
Fault Config 1 (238), 11-65
Fault Frequency (224), 11-61
Fault queue
  accessing using LCD OIM, 12-24
  time stamp, 12-10
Faults
  about, 12-9
  clearing, 12-11
  descriptions and corrective actions, 12-12
  fault parameters, accessing using LCD OIM, 12-25
  fault queue, 12-10
  names cross-referenced by numbers, 12-18
  types, 12-9
Features, overview of, 2-3 to 2-13
F-Keys, customizing, B-10
Flux Current (5), 11-6
Flux Current Ref (63), 11-17
Flux Up Mode (57), 11-15
Flux Up Time (58), 11-15
Flying start, 2-8
Flying Start En (169), 11-44
Flying StartGain (170), 11-44
Function keys, *see* F-Keys
Fuses, input line, 4-9

G

Grounding, 5-4

I

I/O terminal block, removing, 7-2
Input fuses, 4-9
Input Potentiometer, 7-6
Input power conditioning, 3-3
Input wiring, installing
  branch circuit protection, 6-4
  input disconnect, 6-4
  isolation transformer, 6-3
  line reactor, 6-3
  procedure, 6-4
Interbus-S, 2-16
IR Voltage Drop (62), 11-17
Ixo Voltage Drop (64), 11-17

J

Jog Speed (100), 11-25
Jumper locations, 3-3

K

Key descriptions, LCD OIM, B-4
Kits and options, communication, 2-16

L

Language (201), 11-53
Last Stop Source (215), 11-59
LCD OIM, *see* OIM, LCD
LEDs
  Network status, 12-4
  Ready, 12-4
LevelSense Start (168), 11-43
Line fuses, 4-9
Line reactor, 6-3
Load Frm Usr Set (198), 11-52
Logic Source Sel (89), 11-21

M

Man Ref Preload (193), 11-51
Manual Mask (286), 11-68
Manual Owner (298), 11-69
Manual reference sources, 7-10
Maximum Freq (55), 11-13
Maximum Speed (82), 11-20
Maximum Voltage (54), 11-13
Minimum Speed (81), 11-19
Model numbers, 2-1
MOP Frequency (11), 11-7
MOP Rate (195), 11-51
Motor cable lengths, 2-5
Motor lead lengths, 4-4
Motor NP FLA (42), 11-9
Motor NP Hertz (43), 11-10
Motor NP Power (45), 11-10
Motor NP RPM (44), 11-10
Motor NP Volts (41), 11-9
Motor OL Count (220), 11-61
Motor OL Factor (48), 11-11
Motor OL Hertz (47), 11-11
Motor thermal overload protection, 2-9
Motor Type (40), 11-9
Motor-operated pot (MOP), 2-8
Mounting clearances, 3-5
Mounting, drive
  air flow, required, 3-5
  area required, 3-6
  bolt sizes, 3-7
  installation site requirements, 3-4
  matching input power, 3-3
  unbalanced distribution systems, 3-2
  ungrounded distribution systems, 3-2
MOV removal, 3-3
Mtr NP Pwr Units (46), 11-10

N

NEMA enclosure ratings, 2-2
Network data transfer, 2-6
Network status LEDs, 12-4

O

OIM reference, displaying and changing, B-9
OIM, LCD
  cables, B-1
  connections, B-1
  display description, B-3
  display timeout period, setting, B-13
  drive status parameters, accessing, 12-25
  fast power up, B-6
  fault parameters, accessing, 12-25
  fault queue, accessing, 12-24
  F-Keys, customizing, B-10
  installing and removing, B-2

key descriptions, B-4
loading and saving user sets, B-8
logic and reference source, selecting, B-14
menu structure, B-5
monitoring the drive, B-9
parameter access level, selecting, 10-4
parameters, accessing, 10-3
parameters, viewing and adjusting, B-7
process display screen, B-9
product version, determining, 12-26
program protection, selecting, 10-6
resetting the display, B-6
reverse video, selecting, B-13
screen contrast, adjusting, B-6
selecting a device, B-6
starting the drive, B-14
start-up routines on, 9-1
stopping the drive, B-14
troubleshooting the drive, 12-23
version, how to determine, 12-26
viewing and adjusting parameters, B-7
Operator interface, remote, 2-16
Options, communication, 2-16
Output Current (3), 11-5
Output Freq (1), 11-5
Output Power (7), 11-6
Output Powr Fctr (8), 11-6
Output Voltage (6), 11-6
Output wiring, installing, 6-2
Overspeed Limit (83), 11-20

P

Param Access Lvl (196), 11-52
Parameter access level, 2-9
Parameters
access levels, 10-4
accessing using LCD OIM, 10-3
accessing using V*S Utilities, 10-3
Basic access level, D-1 to ??
cross-referenced by name, C-1 to C-7
descriptions, 11-1 to 11-91
organization, 10-2
Quickstart, 9-3
record of user settings, Advanced access level, F-1 to F-5
Standard access level, E-1 to ??
types, 10-1
viewing and adjusting using LCD OIM, B-7
Password
access level, 10-5
write-protect, 10-6
PE ground, 5-4
PI Configuration (124), 11-29
PI Control (125), 11-30
PI Error Meter (137), 11-36
PI Fdback Meter (136), 11-36
PI Feedback Sel (128), 11-33
PI Integral Time (129), 11-33
PI Lower Limit (131), 11-34
PI Output Meter (138), 11-36
PI Preload (133), 11-34
PI Prop Gain (130), 11-33
PI Ref Meter (135), 11-35
PI Reference Sel (126), 11-32
PI Setpoint (127), 11-32
PI Status (134), 11-35
PI Upper Limit (132), 11-34
Potentiometer, Wiring, 7-6
Power Loss Level (186), 11-49
Power Loss Mode (184), 11-49
Power Loss Time (185), 11-49
power ratings, 2-2
Power terminal block, 2-15, 6-5
Power Up Marker (242), 11-66
Power wire sizes, 4-3
Preset frequency, 2-9
Preset Speed 1 (101), 11-25
Preset Speed 2 (102), 11-25
Preset Speed 3 (103), 11-25
Preset Speed 4 (104), 11-25
Preset Speed 5 (105), 11-25
Preset Speed 6 (106), 11-25
Process display screen, LCD OIM, B-9
Process PI block diagram, E-1
Process PI loop, 2-10
Product version, how to determine, 12-26
Profibus, 2-16
Program protection, 10-6
Programming basics, 10-1

Q

Quickstart parameters, 9-3

R

Rated Amps (28), 11-8
Rated kW (26), 11-8

Rated Volts (27), 11-8
Ready LED, 12-4
Record of user settings
  Advanced access level, F-1 to F-5
Reference sources
  auto, 7-10
  changing, 7-11
  manual, 7-10
Reflected wave compensation, 4-5
Reliance, contacting, 1-1
Replacement parts, 12-23
Reset Meters (200), 11-53
Reset To Defalts (197), 11-52
Run Boost (70), 11-18

S

S curve, 2-10
S Curve % (146), 11-37
Safety ground, 5-4
Save MOP Ref (194), 11-51
Save OIM Ref (192), 11-50
Save To User Set (199), 11-53
Shear pin fault, 2-10
Shield termination, 5-4
SHLD terminal, 5-4
Signal terminal block, 7-3 to 7-5
Signal wire sizes, 4-4
Site requirements, 3-2
Skip bands, 2-11
Skip Freq Band (87), 11-21
Skip Frequency 1 (84), 11-21
Skip Frequency 2 (85), 11-21
Skip Frequency 3 (86), 11-21
Sleep Level (182), 11-48
Sleep Time (183), 11-49
Sleep-Wake Mode (178), 11-46
Sleep-Wake Operation, 11-47
Sleep-Wake Ref (179), 11-48
Slip Comp Gain (122), 11-28
Slip RPM @ FLA (121), 11-28
Slip RPM Meter (123), 11-28
Speed control, 2-11
Speed Mode (80), 11-18
Speed Pot, 7-6
Speed Ref A Hi (91), 11-24
Speed Ref A Lo (92), 11-24
Speed Ref A Sel (90), 11-23
Speed Ref Source (213), 11-58
Speed reference control, 7-10
Standard access level parameters, E-1 to ??
Start Inhibits (214), 11-58
Start/Acc Boost (69), 11-17
Starting the drive using the LCD OIM, B-14
Start-Up menu, 9-2
Start-Up routines, 9-1
Status 1 @ Fault (227), 11-62
Status 2 @ Fault (228), 11-62
Stop circuit requirements, 7-1
Stop Mode A (155), 11-39
Stop Mode B (156), 11-39
Stop modes, 2-11
Stop Owner (288), 11-69
Stopping the drive using the LCD OIM, B-14
Stopping, user-initiated, 7-2
SV Boost Filter (59), 11-15

T

TB Man Ref Hi (97), 11-24
TB Man Ref Lo (98), 11-25
TB Man Ref Sel (96), 11-24
Testpoint 1 Data (235), 11-64
Testpoint 1 Sel (234), 11-64
Testpoint 2 Data (237), 11-64
Testpoint 2 Sel (236), 11-64
Thermal overload protection, 2-6
Time stamp, fault queue, 12-10
Torque Current (4), 11-5
Torque Perf Mode (53), 11-12
Torques, power terminal, 6-2
Trim Hi (119), 11-27
Trim In Select (117), 11-26
Trim Lo (120), 11-27
Trim Out Select (118), 11-27
Troubleshooting
  common symptoms and corrective actions, 12-19
  using the LCD OIM, 12-23

U

Unbalanced distribution systems, 3-2
Ungrounded distribution systems, 3-2
User sets, 2-12
User sets, loading and saving using LCD OIM, B-8

V

Voltage class, 2-12
Voltage Class (202), 11-54

VS Utilities, 2-16

W

Wake Level (180), 11-48
Wake Time (181), 11-48
Watts loss ratings, 2-2
Wire routing, 5-1 to 5-2
Wire sizes, 4-3
Wiring
  Potentiometer, 7-6
wiring
  power, 4-3
  size, power, 4-3
Wiring diagram, control and motor, 7-7

DIF

Documentation Improvement Form

Use this form to give us your comments concerning this publication or to report an error that you have found. For convenience, you may attach copies of the pages with your comments. After you have completed this form, please return it to:

Rockwell Automation / Reliance Electric Drives
Technical Documentation
P.O. Box 248019
Mayfield Hts., OH 44124-8019
Fax: 440-646-7317

Publication Name: **SP600 AC Drive User Manual**	
Publication Number: **D2-3501-1**	Publication Date: **July 2002**

Comments:

Your Name:	Date:
Company Name:	Phone: ( )
Address:	

Thank you for your comments.

Technical Writing Internal Use	
Date:	DIF Number:
Follow-Up Action:	

Rockwell Automation

This document, as well as more information about Reliance Electric products, can be found at **www.reliance.com/drives**.

www.rockwellautomation.com

Corporate Headquarters
Rockwell Automation, 777 East Wisconsin Avenue, Suite 1400, Milwaukee, WI, 53202-5302 USA, Tel: (1) 414.212.5200, Fax: (1) 414.212.5201

Headquarters for Dodge and Reliance Electric Products
Americas: Rockwell Automation, 6040 Ponders Court, Greenville, SC 29615-4617 USA, Tel: (1) 864.297.4800, Fax: (1) 864.281.2433
Europe: Rockwell Automation, Brühlstraße 22, D-74834 Elztal-Dallau, Germany, Tel: (49) 6261 9410, Fax: (49) 6261 1774
Asia Pacific: Rockwell Automation, 55 Newton Road, #11-01/02 Revenue House, Singapore 307987, Tel: (65) 351 6723, Fax: (65) 355 1733

Reliance Electric Standard Drives Business, P.O. Box 248019, Mayfield Heights, OH 44124-8019 USA. Tel: (1) 888.374.8370, Fax: 440.646.7317

Publication D2-3501-1 - July 2002
© 2002 Rockwell Automation. All rights reserved. Printed in USA.

APPENDIX C

Manufacturer's Information

Sensaphone 2000 Engineering Specifications

DRAFT

ENGINEERING SPECIFICATIONS
SENSAPHONE 2000

I. General

The automatic dialer shall be a self-contained microprocessor controlled system capable of monitoring 8 input channels. The system shall be integrated in construction and shall be installed and configured for operation by the user via Microsoft Windows® compatible software provided at no charge. In addition, the software shall provide the ability to produce an internet web page and function as an e-mail server for the system. Voice message recording shall be accomplished via local or remote touch-tone phone. Input channels shall be capable of monitoring analog or digital signals utilizing 10-bit resolution.

Upon detection of any alarm or status change, the system shall commence dialing telephone numbers from a list associated with the particular alarm condition(s) or combination thereof, and deliver the alarm message via a custom voice message, fax, e-mail, modem, numeric pager or alphanumeric pager. The voice alarm message shall be delivered in digitized human voice using messages recorded by the user. The system will continue to call telephone numbers in succession until a positive acknowledgment of the alarm message is received. Acknowledgment can be accomplished from a voice phone call, a modem phone call, or by a callback from either a telephone or a computer with modem. Upon answering, the system shall attempt a data connection. If a connection is made the system shall allow remote access to programming and operation. If a data connection is not made, the system shall recite a voice status report and allow access to remote voice message programming.

The system shall be FCC registered for direct connection to the telephone network. The system shall have a one year warranty from the manufacturer. The system shall be a Sensaphone 2000 by Phonetics, Inc.

II. I/O Channel Attributes and Features

A. Inputs

The system shall come standard with 8 universal input channels. The input resolution shall be 10-bit with scalable lookup tables. All analog input values shall read to one decimal place. All input channels shall be user-configurable as:

1. NO or NC digital dry contact, using 0.5mA loop current
2. 4–20mA analog, using custom look up table
3. 0–5V analog, using custom look up table
4. Temperature from thermistor, using 2.8K or 10K devices
5. Run time accumulator
6. Pulse count

The system shall have the following built-in monitoring features:

1. AC power failure detection
2. Low battery detection

All monitored channels, including built-in monitoring features, shall allow local and remote data programming of pertinent operational data including, but not limited to:

1. Input type (NO/NC, 4–20mA and 0–5V analog, thermistor, run time, pulse count)
2. Units of measure (degrees F, degrees C, inches, feet, psi, volts, amps, pounds, gallons)
3. High and Low limits (-99,999.9 to +99,999.9)
4. Input recognition time (0 seconds to 270 minutes)
5. Alarm reset time (0 seconds to 270 minutes)
6. Alarm call list for each channel
7. Enable/Disable for each channel to dialout for alarm

III. Communications Features

A. Communication Methods

The system shall be able to communicate alarms and other status information using the following methods.

1. Programmable voice
2. Fax
3. Modem
4. Numeric pager
5. Alphanumeric pager
6. Internet E-mail

B. Telephone Specifications

The system shall connect to a standard 2-wire telephone line using pulse or tone dialing methods, with loop start only. The system shall recognize ringer frequencies from 16 to 60 Hz. No leased or dedicated lines shall be required. Call progress detection shall ensure that the alarm dialout is not hindered by no-answers or busy signals.

C. Line Seizure Feature

The system automatically seizes control of the phone line to make an alarm phone call when the alarm occurs. All other calls, including current calls, will disconnect and all extensions will be disabled. Extensions will remain cut off until the alarm is acknowledged.

D. Communications Interface

The system shall have a built-in 14,400 bps modem to allow remote data communication and programming via computer. The system shall have a built-in RS232 serial port for the purpose of local communication and programming via computer. Both communication interfaces shall accept standard Modbus protocol.

E. Destinations (Telephone Numbers and Email Addresses)

The system shall be capable of contacting up to 32 destinations (36 digit telephone numbers /64 character E-mail addresses). There shall be a capability to group the destinations into multiple lists to create calling schedules based on weekdays, weeknights and weekends. In addition, individual input alarms may be programmed to contact specific destinations.

F. Voice Messages

The system shall have the ability to record, store and reproduce voice messages and to use those messages to articulate the location and status of the monitored channels. In absence of user-recorded voice messages, the system shall articulate channel status using the internally resident vocabulary. All digitized speech message data shall be stored in nonvolatile memory. Such nonvolatile memory shall be capable of protecting speech memory for at least 10 years of complete power outage.

There shall be one recorded identification message for the system, and one recorded alarm message for each input channel. Message length shall be 4 seconds per input and 6 seconds for system identification.

G. E-Mail Server Programming

The software shall be capable of functioning as an e-mail server for the purpose of receiving e-mail calls via telephone and forwarding e-mail messages via the internet, from one or more units. The host PC shall be required to have internet access through a dialup connection or continuous service via cable modem, DSL, T1, etc.

H. Web Status Programming

The software shall be capable of polling units via telephone or serial port to automatically retrieve the input values and alarm status, and create a web page for each unit. The software shall automatically upload the web page to an internet server immediately following each poll. The software shall allow

scheduled polling times to be programmed for each unit. The host PC shall be required to have internet access through a dialup connection or continuous service via cable modem, DSL, T1, etc. Storage space on a web server that supports FTP shall also be required.

IV. Programming

A. Local Programming

The system shall have a built-in RS232 port for the purpose of locally programming all system data using an IBM® PC or compatible with Windows® 3.1 or greater, and Sensaphone 2000 programming software (included). All operational data, system setup and configuration data, and all information regarding the status of monitored input channels shall be accessible. In addition, voice messages may be recorded and reviewed using a standard touch-tone telephone.

B. Remote Programming

The system shall have a built-in 14,400 bps modem for the purpose of remotely programming and communicating all system, configuration, and input data using an IBM® PC or compatible with modem, Windows® 3.1 or greater, and Sensaphone 2000 programming software (included). A user-programmable security password shall protect the system from unauthorized tampering. Voice messages may be recorded or reviewed via a phone call using a standard touch-tone telephone.

V. System Features

A. Power

The system shall be provided with a UL/CSA listed 8VAC 1.25A power transformer that the user may plug into a 115V AC outlet, ±10%, 60Hz. Typical power consumption shall be 10 Watts.

B. Battery Backup

The system shall have a battery compartment (batteries not included) to hold 6 “C-cell” Ni-Cad rechargeable batteries (2.2AH recommended). The batteries shall support approximately 8-10 hours of continued system operation in the absence of AC power. (Actual battery backup performance is dependent upon the Amp-Hour rating, age of the batteries, ambient temperature, and the charge condition.) The unit shall include an integrated battery charging circuit. The battery charging shall be intelligent with microprocessor guided precision voltage control, which will activate only when batteries are installed.

C. Local Visual Indication

Each input shall have a corresponding LED that will indicate the alarm and acknowledgment status of each input. The system shall also have LEDs to indicate System On, Battery Condition and Phone Line status.

D. Data Log

The system shall be capable of logging the values of all input channels, the battery voltage and the AC power status. Items to be stored shall be selectable to maximize memory usage. Up to 32,000 total samples can be stored in the unit’s nonvolatile memory. The time between logs shall be user-programmable. The system shall have the capability to send the datalog information via fax or e-mail on a time-programmable basis. Datalog information may also be retrieved via computer and modem, by using the polling option of the Sensaphone 2000 Windows® software.

E. Security

The system shall allow the user to program a data password to prevent unauthorized local or remote access to programming.

VI. Remote Operation Features

A. Status Report

The system shall allow the user to call into the unit at any time using any standard telephone to obtain a full status report of all monitored channels. The status report shall be articulated using the resident voice-synthesized English vocabulary, in combination with digitized user-recorded voice messages.

B. Data Status Report

The system shall allow the user to call into the unit with a computer, modem and the Sensaphone 2000 software package. The system shall allow interrogation and programming access to system parameters and status. The real time input status can also be displayed graphically. Real time status snap shots can also be automatically transmitted to E-mail or Fax destinations on a time schedule.

C. Voice Acknowledgment

An alarm on any monitored channel may be acknowledged remotely by pressing tones on a touch-tone telephone keypad or by calling the system back within a specified time period.

D. Data Acknowledgment

An alarm on any monitored channel may be acknowledged remotely by the user via a computer, modem and the Sensaphone 2000 software. Alarms may be acknowledged manually by calling into the unit or they may be acknowledged automatically using the alarm-answer mode of the Sensaphone 2000 software package.

VII. Enclosure and Environmental

A. Enclosure

The system shall be housed in a durable aluminum enclosure with integral mounting brackets for wall or panel mounting. The dimensions shall be 12.1"W x 7.2"H x 1.6"D. The weight shall be 3 lbs.

B. Electrical Protection

Power and telephone connections shall have internal spike and surge protection using metal oxide varistors. All input channels shall have fault protected input circuits.

C. Additional Electrical Surge Protection

Additional Power and Telephone line surge protection shall be available from the manufacturer. When so installed, the system shall be fully warranted against any damage caused by transient surges entering the system through Power or Telephone lines.

D. Environmental

The system shall function over an operating temperature range of 32°F–122°F at up to 0–90% RH, non-condensing. The system may be stored within the temperature range of 0°–130°F.

E. Maintenance

The system manufacturer shall have in-house service facilities and technical assistance available during normal business hours, Monday–Friday 8AM–5PM(EST).

Specifications subject to change without notice.

© 1998 Phonetics, Inc.

Phonetics, Inc.
901 Tryens Road
Aston, PA 19014
Phone: (610)558-2700
FAX: (610)558-0222

2000 engin specs.p65 3.2.2001

APPENDIX C

Manufacturer's Information

Val-Matic Wastewater Air/Vacuum Valve
Drawing No. VM-302A

DRAFT

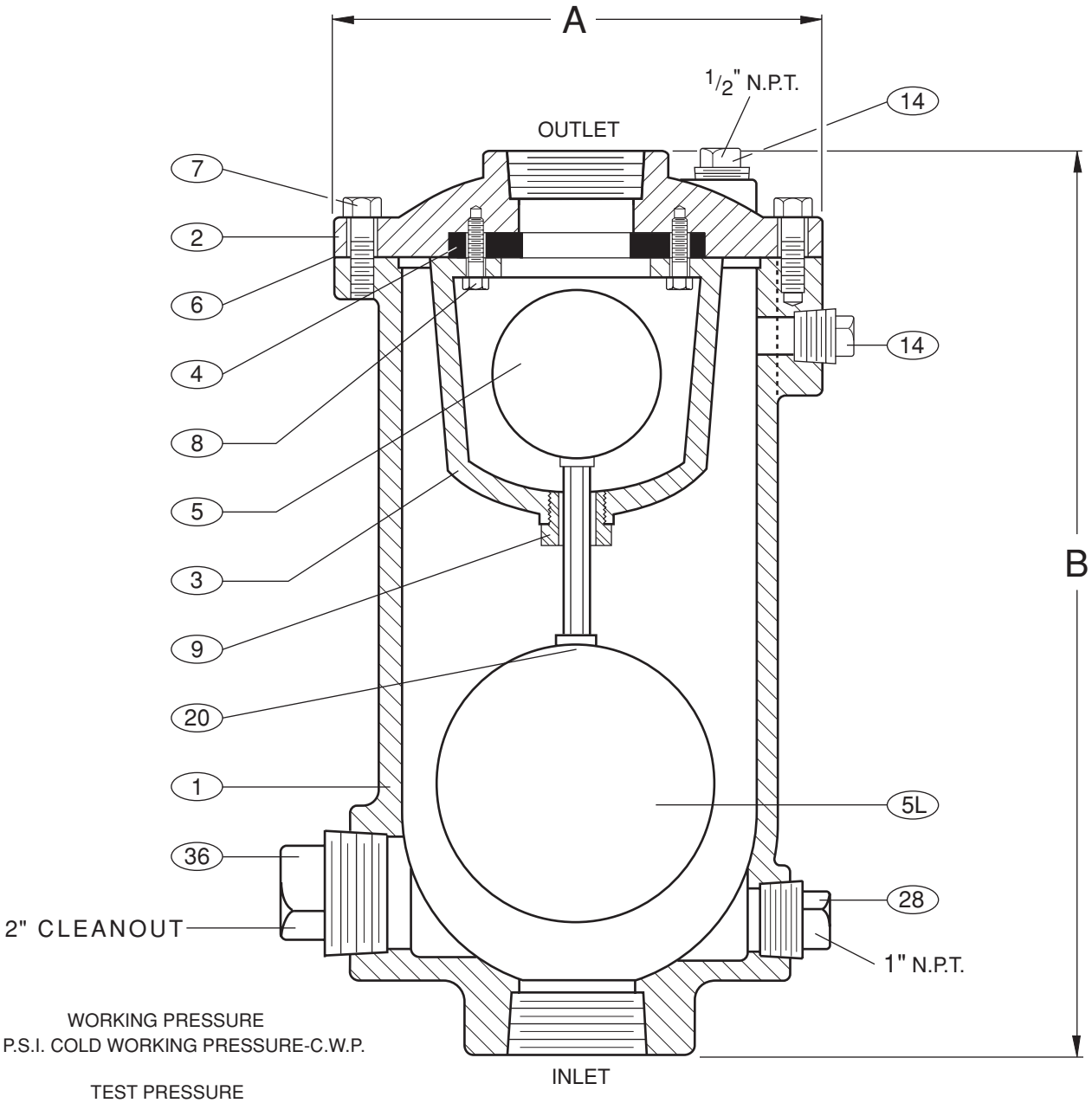

WORKING PRESSURE
150 P.S.I. COLD WORKING PRESSURE-C.W.P.

TEST PRESSURE
1.5 TIMES COLD WORKING PRESSURE-C.W.P.

	MODEL NO.	
	302A	303A
A	9 1/2"	9 1/2"
B	17 7/16"	17 7/16"
INLET	2"	3"
OUTLET	2"	3"

1	BODY	7	COVER BOLT
2	COVER	8	RETAINING SCREW
3	BAFFLE	9	GUIDE BUSHING
4	SEAT	14	PIPE PLUG
5	FLOAT	20	GUIDE SHAFT
5L	LOWER FLOAT	28	PIPE PLUG
6	GASKET	36	PIPE PLUG

SEE DRAWING NO. VM-301A-M FOR STANDARD MATERIALS OF CONSTRUCTION.

WASTEWATER AIR/VACUUM VALVE

DATE 3-23-00

VAL-MATIC® VALVE AND MANUFACTURING CORP.

DRWG. NO. VM-302A

APPENDIX C

Manufacturer's Information

Val-Matic Wastewater Air/Vacuum Valve with Backwash Accessories
Drawing No. VM-302ABW

DRAFT

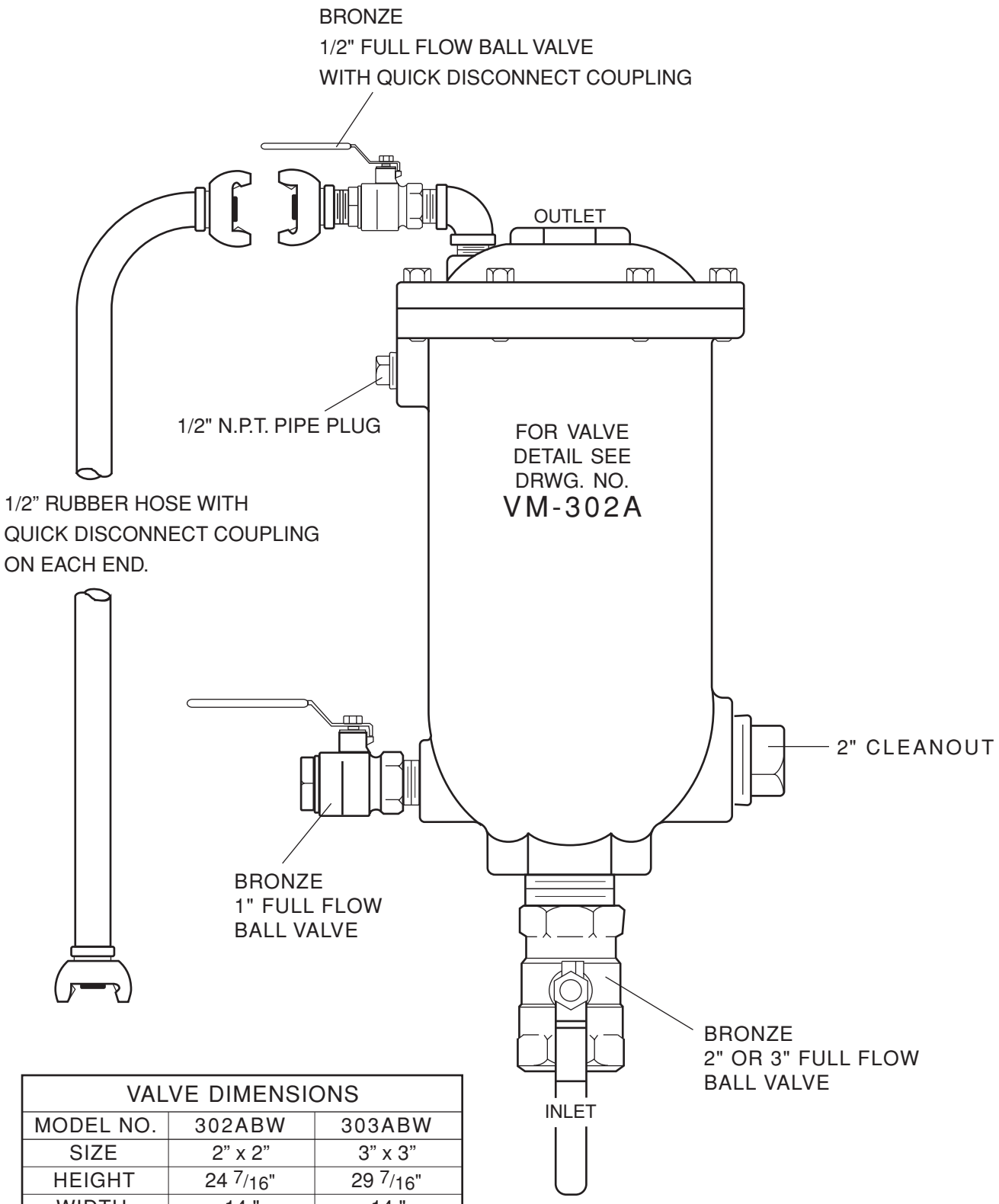

VALVE DIMENSIONS		
MODEL NO.	302ABW	303ABW
SIZE	2" x 2"	3" x 3"
HEIGHT	24 7/16"	29 7/16"
WIDTH	14 "	14 "
DEPTH	9 1/2"	9 1/2"
BWA KIT	SPK-301ABW	SPK-303ABW

WASTEWATER AIR/VACUUM VALVE w/ BACKWASH ACCESSORIES

DATE 3-24-00

VAL-MATIC® VALVE AND MANUFACTURING CORP.

DRWG. NO.

VM-302ABW

APPENDIX C

Manufacturer's Information

Val-Matic Wastewater Air/Vacuum Valve
Operation, Maintenance and Installation Manual,

DRAFT

Manual No.
WA/VV-OM1

Wastewater Air/Vacuum Valve

Operation, Maintenance and Installation Manual

INTRODUCTION 1
RECEIVING AND STORAGE 1
DESCRIPTION OF OPERATION 1
INSTALLATION 2
VALVE CONSTRUCTION 2
MAINTENANCE 3
TROUBLESHOOTING 4
DISASSEMBLY 4
REASSEMBLY 5
PARTS AND SERVICE 5
WARRANTY 6

VAL-MATIC®

VAL-MATIC® VALVE AND MANUFACTURING CORP.
905 RIVERSIDE DR. ELMHURST, IL. 60126
TEL. 630/941-7600 FAX. 630/941-8042

VAL-MATIC'S WASTEWATER AIR/VACUUM VALVE OPERATION, MAINTENANCE AND INSTALLATION

INTRODUCTION

This manual will provide you with the information to properly install and maintain the valve to ensure a long service life. The Wastewater Air/Vacuum Valve has been designed with stainless steel trim to give years of trouble-free operation but regular maintenance is recommended for valves subject to fluids containing suspended solids or greases/oils.

The Wastewater Air/Vacuum Valve is typically mounted at the high points in a force main to automatically exhaust large volumes of air during filling and allow air to re-enter during draining. The valve is furnished in sizes 1" through 8" sizes and is often used in combination with an Air Release Valve to release air while the force main is under pressure.

CAUTION:	**This valve is not intended for flammable liquids service.**

The valve is a float-operated, resilient-seated valve designed to handle waste fluids. The valve may be equipped with backwash accessories. The Size, Maximum Working Pressure and Model No. are stamped on the nameplate for reference.

RECEIVING AND STORAGE

Inspect valves upon receipt for damage in shipment. Handle all valves carefully without dropping. Valves should remain boxed, clean and dry until installed to prevent weather related damage. For long term storage greater than six months, the valve must remain in the box and stored indoors. Do not expose valve to sunlight or ozone for any extended period.

DESCRIPTION OF OPERATION

The Wastewater Air/Vacuum Valve, as shipped, is a normally open valve and will rapidly vent air through the top opening. As fluid enters the bottom of the valve, the float assembly will rise, pressing the upper float against the seat. The valve will remain closed until system pressure drops to near zero pressure. It will open during draining or when a vacuum condition occurs. The valve can be equipped with external valves and hose connections for backwashing.

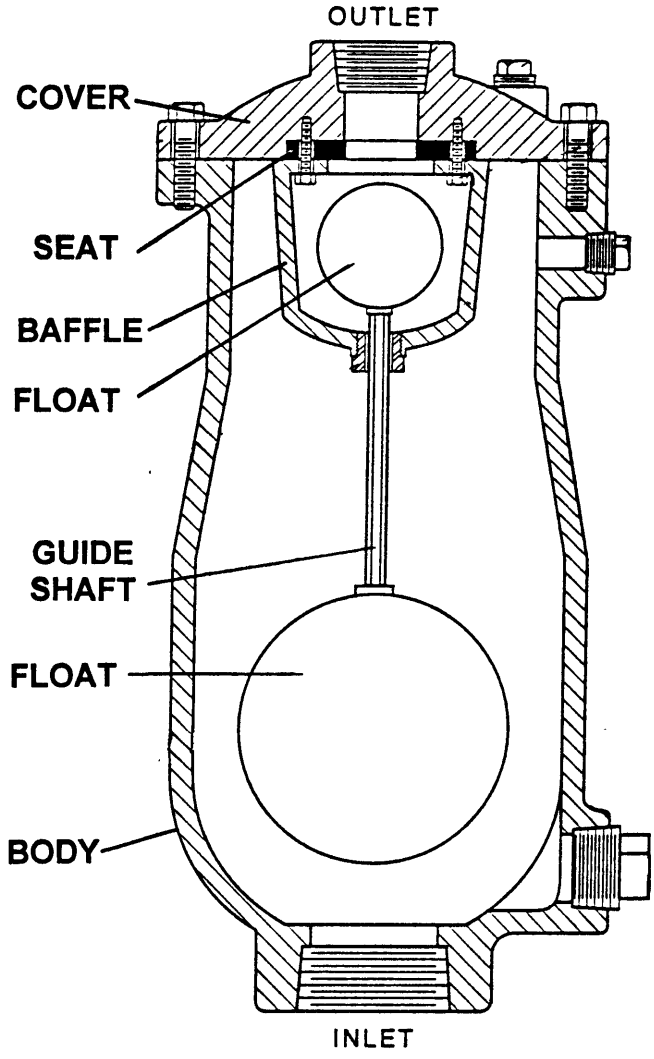

FIGURE 1. WASTEWATER AIR/VACUUM VALVE

The lower float provides buoyancy to seal the top float and prevent sewage from fouling the seat. The only moving parts in the valve are the float and float guide shaft. The guide shaft assures that the float enters the seat at the optimum angle and prevents float contact with any surface other than the resilient seat. Additional ports are provided for flushing, testing and draining purposes.

INSTALLATION

The installation of the valve is important for its proper operation. Valves must be installed at the system high points in the vertical position with the inlet down. For pipeline service, a vault with freeze protection, adequate screened venting, and drainage should be provided. During closure, some fluid discharge will occur so vent lines should extend to an open drain area in plant service. A shut-off valve should be installed below the valve to allow regular maintenance.

CAUTION:	**Install valve with "INLET" port down or leakage will occur.**

VALVE CONSTRUCTION

The standard Wastewater Air/Vacuum Valve body and cover are cast iron. See the specific Materials List submitted for the order if other than standard cast iron construction. All internal components are stainless steel with the exception of the seat which is resilient. The general details of construction for 1" through 3" valves are illustrated in Figure 2. The general details of construction for 4" through 8" valves are illustrated in Figure 2.

The body (1) is threaded or flanged for connection to the pipeline.

ITEM	DESCRIPTION	MATERIAL
1	Body	Cast Iron
2	Cover	Cast Iron
4	Seat*	Buna-N
5	Float*	Stainless Steel
6	Gasket*	Non-Asbestos
7	Cover Bolt	Alloy Steel
8	Retaining Screw*	Stainless Steel
9	Guide Bushing*	Stainless Steel
15	Cushion*	Buna-N
20	Guide Shaft*	Stainless Steel
26	Seat Ret. Sleeve*	Stainless Steel
27	Washer*	Stainless Steel
28	Body Pipe Plug	Steel

*RECOMMENDED REPAIR PART KIT

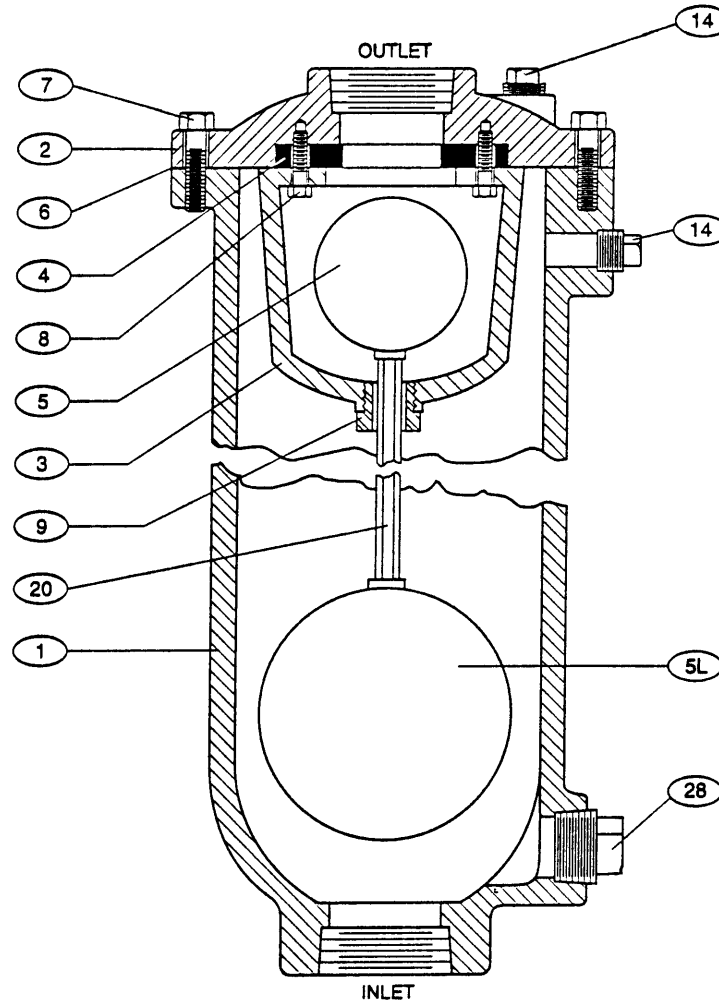

FIGURE 2. 1"-3" WASTEWATER AIR/VACUUM VALVE

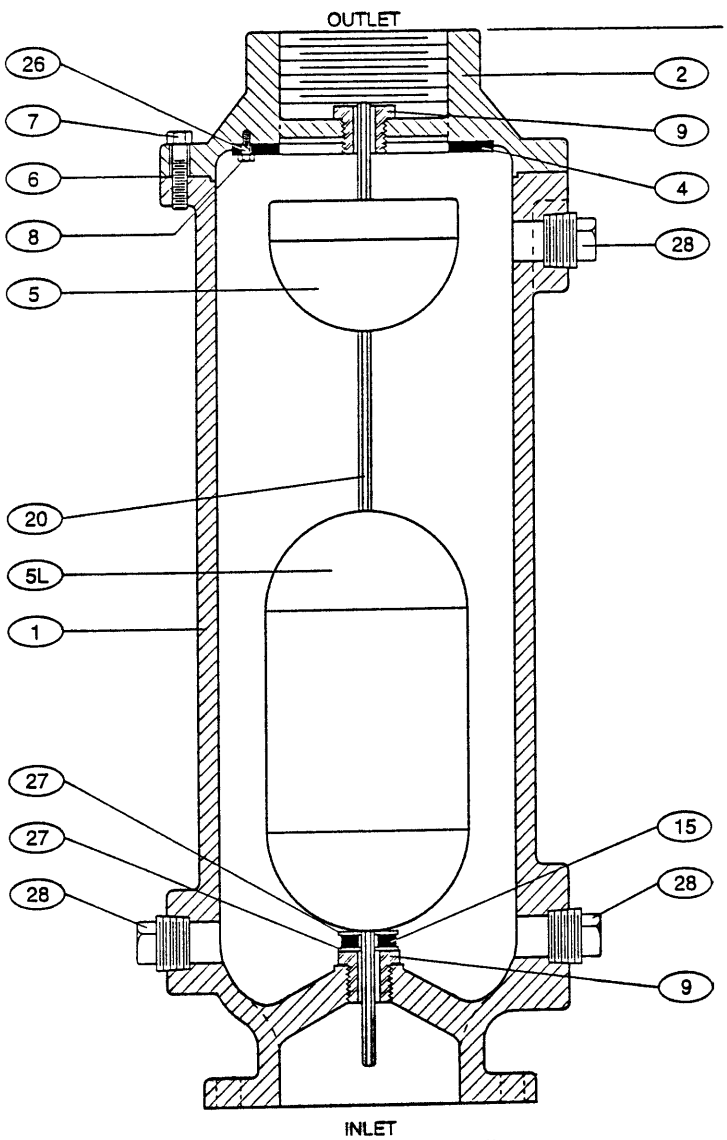

FIGURE 3. 4"-8" WASTEWATER AIR/VACUUM VALVE

MAINTENANCE

The Wastewater Air/Vacuum Valve should be scheduled for regular inspection and backwash on a monthly basis. Based on experience in service, a more frequent backwash regimen may be desirable to minimize leakage.

WARNING: Wear safety glasses to look into the valve outlet after installation. Released fluid can cause injury.

INSPECTION: Periodic inspection to verify operation can be performed. The valve should not leak fluid at any connection or through the outlet. If there is leakage through the outlet, perform a backwash procedure on the valve.

LUBRICATION: The Wastewater Air/Vacuum valve is a self-contained automatic valve and does not require and lubrication to enhance its operation.

TOOLS: No special tools are needed to maintain or repair the valve. The valve should be equipped with backwash valves and hoses for ease of backwashing.

BACKWASH PROCEDURE: In order to properly backwash the valve, a 1" clean water supply of at least 30 psi is needed. This supply should be connected to the top of the valve with the rubber hose with quick disconnect couplings as provided and shown in Figure 4. NOTE: quick disconnect hose fittings provided with valve are "Air King" rated for 110 psi from Dixon Valve, Chestertown, MD.

1. Pipe valve B to a drain prior to backwashing.
2. Close inlet valve A.
3. Open valve B.
4. Connect water supply to C, open valve D, and supply water for 3 minutes to flush seat and mechanism area. Close valves D and B. This will wash the body area.
5. Additional washing of seat area can be accomplished by placing the water supply over the discharge port with valve C closed.
6. Slowly open valve A to place unit back in service.

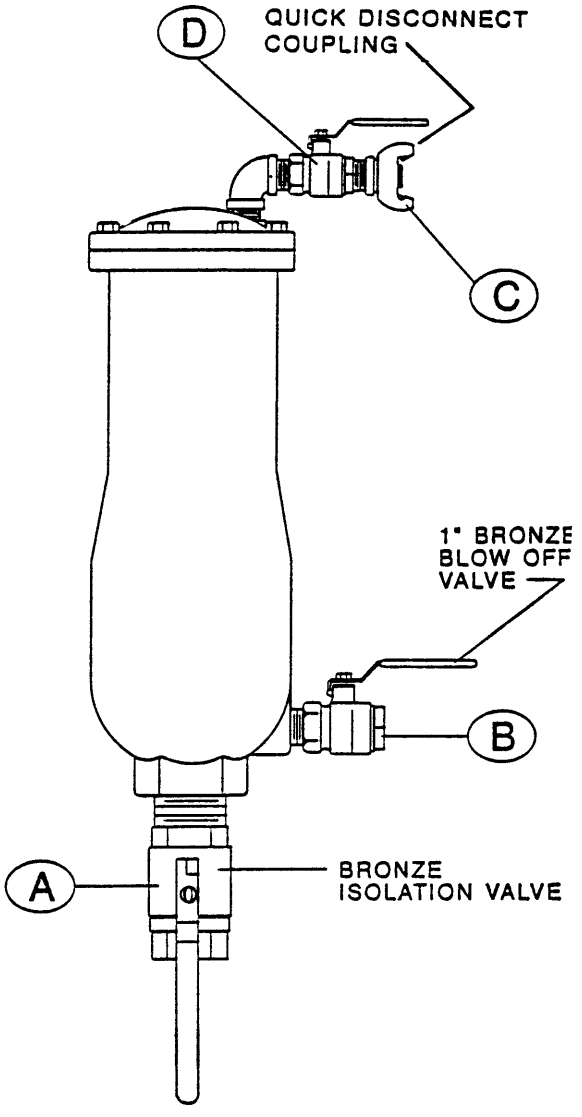

FIGURE 3. BACKWASH PIPING

TROUBLESHOOTING

Several problems and solutions are presented below to assist you in troubleshooting the valve assembly in an efficient manner.

•Leakage at Bottom Connection: Tighten valve threaded connection. If leak persists, remove valve and seal threads with thread sealant or tape.

•Leakage at Cover: Tighten bolts in a cross-over pattern per Table 2, replace gasket.

•Valve Leaks when Closed: Backwash valve to remove debris. Disassemble and inspect seat and float for damage. NOTE: Many floats contain sand for weight but if water is detected, replace float.

DISASSEMBLY

The valve can be disassembled without removing it from the pipeline. Or for convenience, the valve can be removed from the line. All work on the valve should be performed by a skilled mechanic with proper tools. No special tools are required.

WARNING:	**The valve must be drained before removing the cover or pressure may be released causing injury.**

1. Close inlet shut-off valve (A). Open drain valve (B) or remove drain plug. Remove the cover bolts (7) on the top cover.

2. Pry cover (2) loose and lift off valve body. On models with 2" inlets, the float assembly will be connected to the cover.

3. Remove the retainer screws (8) and inspect the seat for cracks in the rubber or wear in the sealing surface.

4. On 3" and larger valves, lift the float (5) out of the body.

5. Turn guide bushing (9) to remove it from the baffle (3) [or body (1) on 4" and larger flanged valves].

6. Clean and inspect parts. Note: some floats contain sand for extra weight; if water is detected, replace float. Replace worn parts as necessary.

REASSEMBLY

All parts must be cleaned and gasket surfaces should be cleaned with a stiff wire brush in the direction of the serrations or machine marks. Worn parts, gaskets and seals should be replaced during reassembly. Refer to Figures 2 and 3.

1. Apply Loctite 680 thread sealant to guide bushing threads (9) and thread bushing into baffle (3) [or body (1) on 4" and larger flanged valves].

2. Lay seat (4) and baffle over inverted cover and fasten with screws (8) with maximum torque of 10 ft-lbs; DO NOT OVER-TORQUE. [4" and larger flanged valves will not have a baffle.

3. Assemble float (5) with Loctite 680 on the threaded connections.

4. On 4" and larger valves, carefully lower the float assembly into the body so that the cushion (15) and washer (27) are over the guide bushing (9).

5. Lay cover gasket (6) over body flange and secure with lubricated bolts (7) to the torque shown in Table 2.

6. Place valve back in service. Refer to the Installation instructions on page 2. Slowly open inlet isolation valve.

BOLT SIZE	MAX TORQUE (FT-LBS)
1/4"	9
5/16"	18
3/8"	31
7/16"	50
1/2"	75
5/8"	150
3/4	250

TABLE 2. VALVE COVER BOLT TORQUES

PARTS AND SERVICE

Parts and service are available from your local representative or the factory. Make note of the valve Model No and Working Pressure located on the valve nameplate and contact:

Val-Matic Valve and Mfg. Corp.
905 Riverside Drive
Elmhurst, IL 60126
PH: 630/941-7600
FAX: 630/941-8042

A sales representative will quote prices for parts or arrange for service as needed.

LIMITED WARRANTY

All products are warranted to be free of defects in material and workmanship for a period of one year from the date of shipment, subject to the limitations below.

If the purchaser believes a product is defective, the purchaser shall: (a) Notify the manufacturer, state the alleged defect and request permission to return the product; (b) if permission is given, return the product with transportation prepaid. If the product is accepted for return and found to be defective, the manufacturer will, at his discretion, either repair or replace the product, f.o.b. factory, within 60 days of receipt, or refund the purchase price. Other than to repair, replace or refund as described above, purchaser agrees that manufacturer shall not be liable for any loss, costs, expenses or damages of any kind arising out of the product, its use, installation or replacement, labeling, instructions, information or technical data of any kind, description of product use, sample or model, warnings or lack of any of the foregoing. NO OTHER WARRANTIES, WRITTEN OR ORAL, EXPRESS OR IMPLIED, INCLUDING THE WARRANTIES OF FITNESS FOR A PARTICULAR PURPOSE AND MERCHANTABILITY, ARE MADE OR AUTHORIZED. NO AFFIRMATION OF FACT, PROMISE, DESCRIPTION OF PRODUCT OF USE OR SAMPLE OR MODEL SHALL CREATE ANY WARRANTY FROM MANUFACTURER, UNLESS SIGNED BY THE PRESIDENT OF THE MANUFACTURER. These products are not manufactured, sold or intended for personal, family or household purposes.

VAL-MATIC®

VAL-MATIC® VALVE AND MANUFACTURING CORP.

905 RIVERSIDE DR. ELMHURST, IL. 60126
TEL. 630/941-7600 FAX. 630/941-8042

APPENDIX C

Manufacturer's Information

Val-Matic Wastewater Air/Vacuum Valve
Specification

DRAFT

WASTEWATER AIR/VACUUM VALVE
Val-Matic Specification

1 Scope
1.1 This specification is intended to cover the design, manufacture, and testing of 1 in. (25 mm) through 8 in. (200 mm) Wastewater Air/Vacuum Valves suitable for pressures up to 150 psig (1000 kPa).
1.2 Wastewater Air/Vacuum valves shall be fully automatic float operated valves designed to exhaust large quantities of air during the filling of a piping system and close upon liquid entry. The valve shall re-open during draining or if a negative pressure occurs. [NOTE: See Wastewater Air Release Valves for releasing air during system operation and Wastewater Combination Air Valves for both air release and air/vacuum functions.]

2 Standards, Approvals and Verification
2.1 Valves shall be manufactured and tested in accordance with American Water Works Association (AWWA) Standard C512.
2.2 Manufacturer shall have a quality management system that is certified to ISO 9001:2000 by an accredited, certifying body.

3 Connections
3.1 Valve sizes 3 in.(75 mm) and smaller shall have full size NPT inlets and outlets equal to the nominal valve size with a 2 in. (50 mm) inlet on 1 in. (25 mm) valves. The body inlet connection shall be hexagonal for a wrench connection. The valve body shall have 2" NPT cleanout and 1" NPT drain connections on the side of the casting.
3.2 Valve sizes 4 in. (100 mm) and larger shall have bolted flange inlets with NPT outlets. Flanges shall be in accordance with ANSI B16.1 for Class 125 iron flanges.
3.3 The valve shall have three additional NPT connections for the addition of backwash accessories.

4 Design
4.1 The extended valve body shall provide a through flow area equal to the nominal valve size. A bolted cover with alloy screws and flat gasket shall be provided to allow for maintenance and repair.
4.2 Tandem floats shall be unconditionally guaranteed against failure including pressure surges. The float assembly shall have a hexagonal guide shaft supported in the body by circular bushings to prevent binding from debris. The upper float shall be protected against direct water impact by an internal baffle.
4.3 The resilient seat shall provide drop tight shut off to the full valve pressure rating. The seat shall be a minimum of .5 in. (12 mm) thick on 2 in. (50 mm) and larger valves and secured in such a manner as to prevent distortion.
4.4 On valve sizes 4 in. (100 mm) and larger, the cover shall be fitted to the valve body by means of a machined register to maintain concentricity between the top and bottom guide bushings at all times. The tandem float shall be double guided with a guide shaft extending through the float. A resilient bumper shall be provided to cushion the float during sudden opening conditions.

5 Materials
5.1 The valve body, cover, and baffle shall be constructed of ASTM A126 Class B cast iron.
5.2 The float, guide shafts, and bushings shall be constructed of Type 316 stainless steel. Non-metallic guides and bushings are not acceptable. Resilient seats shall be Buna-N.

6 Options
6.1 A flanged or screwed outlet connection shall be provided when specified for vault piping.
6.2 An optional Regulated Exhaust Device shall be provided when specified to reduce pressure surges due to column separation or rapid changes in velocity and pressure in the pipeline.
6.2.1 The Regulated Exhaust Device shall be mounted on the outlet of the Wastewater Air/Vacuum Valve, allow free air flow in and out of the valve, close upon rapid air exhaust, and control the air exhaust rate to reduce pressure surges.
6.2.2 The device shall have a threaded or flanged globe-style body with a center guided disc and seat assembly. The disc shall have threaded holes to provide adjustment of the air exhaust rate thuough the valve. The holes shall provide for a flow area of 5% of the nominal valve size.
6.2.3 The material of the body shall be consistent with the Air Valve. The seat and disc shall be ASTM A351 Grade CF8M stainless steel.
6.3 Backwash accessories shall be furnished when specified and shall consist of an inlet shut-off valve, a blow-off valve, a clean water inlet valve, rubber supply hose, and quick disconnect couplings. Accessory valves shall be quarter-turn, full ported bronze ball valves.
6.4 Optional body materials include ASTM A536 Grade 65-45-12 ductile iron, ASTM A351 Grade CF8M stainless steel, and ASTM B584 Alloy C83600 cast bronze.

7 Manufacture
7.1 The manufacturer shall demonstrate a minimum of five (5) years experience in the manufacture of wastewater air valves. When requested, the manufacturer shall provide test certificates, dimensional drawings, parts list drawings, and operation and maintenance manuals.
7.2 The exterior of the valve shall be coated with a universal alkyd primer.
7.3 Wastewater Air/Vacuum Valves shall be Series 300 as manufactured by Val-Matic and Manufacturing Corporation, Elmhurst, Il, USA or approved equal.

GROUNDWATER MIGRATION CONTROL SYSTEM SAUGET AREA 2 SUPERFUND SITE

Volume 1
Prefinal Design Submittal
Attachment 3-1
Geotechnical Data

Prepared for

Solutia Inc.
575 Maryville Centre Drive
St. Louis, MO 63141

December 6, 2002

URS

URS Corporation
2318 Millpark Drive
Maryland Heights, MO 63043
(314) 429-0100
Project #21561192.00001

ATTACHMENT3-1 Geotechnical Data

Geotechnical data was developed during the course of several investigations. In 2001, an investigation consisting of 25 explorations was performed. Two of the explorations were conventional borings (SB-1 and SB-2) with the others being CPT soundings (CPT-1 through CPT-23). In the Spring of 2002, five sonic borings were drilled (Sonic-1 through Sonic-5) to obtain data from the ground surface to bedrock along the proposed barrier wall alignment. In the Fall of 2002, ten additional conventional borings (SB-3 through SB-12) were planned to assess the subsurface statigraphy near the bedrock. The drilling of these additional borings is nearing completion at the time of the submittal of this Pre-final Report. Concrete cores were also drilled in Riverview Avenue to evaluate the pavement condition.

SURVEYING

For the locations of the explorations, a mobile GPS unit was used to obtain Northing and Easting coordinates. These coordinates were then used to locate the borings on an existing topographic map provided by Solutia to determine the elevation of the ground surface at the explorations.

CPT Soundings

The objective of the CPT program was to extend each push to 100 feet below ground surface (bgs) or to refusal, whichever occurred first. A 25-ton CPT rig advanced the tool to depths ranging from 36.8 feet to 101 feet bgs by hydraulically pushing a cone, equipped with a pore pressure transducer, through the soil at consistent rate of 2 cm/sec. The cone has a tip cross sectional area of 15 cm^2 and the friction sleeve area of 200 cm^2. Measurements were collected for resistance to penetration, sleeve friction and pore pressure once per second during advancement of each push. These measurements provided soil property data, which were converted to a stratigraphic profile for each boring. The CPT logs are provided in a subsequent appendix.

Sonic Borings

In May of 2002, five sonic borings were performed. Sonic borings are advanced using high speed counter balanced weights to produce resonance energy waves to advance a drill pipe. The procedure produces almost continuous sampling of the subsurface for the full depth of the boring. Boring logs are provided in a subsequent appendix.

Conventional Borings

The two 2001 soil borings (SB-1 and SB-2) were advanced to 101 feet bgs (the desired depth) at the location of two proposed extraction wells. Hollow-stem augers were advanced to 14 feet bgs in both borings to act as a casing for the mud rotary drilling, which was then used to reach the total depth of each boring. Soil samples were collected every five feet and retained for geotechnical analysis.

The drilling of the next round of borings (SB-3 through SB-12) is nearing completion. The borings are being made to assess the stratigraphy near the bedrock. The borings were advanced to approximately 70 feet bgs where sampling began. Borings were sampled on a 5-foot depth interval using the Standard Penetration Test (ASTM D 1586). When clay was encountered, a 2-inch diameter Shelby tube sample was collected if possible. Once bedrock was encountered, an NX size core barrel was used for at least 5 feet to sample the bedrock. Currently, SB-3 through SB-10 have been drilled.

Boring logs are provided in a subsequent appendix. All soil cuttings from the borings were containerized in 55-gallon drums and stored on site for proper future disposal.

Concrete Cores – Riverview Avenue

Concrete cores were drilled in Riverview Avenue in the Fall of 2002 to evaluate pavement type, thickness, and reinforcement. Data from the core holes are as follows:

At Boring SB-4:	8 inch thick concrete Welded wire fabric in concrete 12 inches of base rock
100 ft east of SB-4:	8 inch thick concrete No reinforcement observed in concrete 8 inches of base rock
250 ft west of SB-4:	7 inch thick concrete No reinforcement observed in concrete 15 inches of base rock

Geotechnical Laboratory Testing

Selected sand samples in Borings SB-1 and SB-2 were analyzed for grain-size analysis, water content, and pH. One clay sample in Boring SB-1 was analyzed for water content, Atterberg limits, percent passing the size 200 sieve, hydrometer, organic content, pH, and specific gravity. Clay samples collected in Borings SB-3 through SB-12 are to be tested for water content, Atterberg limits, hydrometer, and constant head permeability. The constant head permeability tests were performed using a confining stress similar to the effective in-situ vertical stress and the test results measure the vertical permeability only. Geotechnical laboratory test results are included in a subsequent appendix.

River Stage Data

River stage data were obtained from the United States Army Corps of Engineers. The Corps of Engineers along with the U.S. Geologic Survey maintain a gauge at the Eads Bridge. The Eads Bridge crosses the Mississippi River at downtown St Louis about 2.0 miles upstream from Site R.

In general, the river surface elevation drops about 0.5 to 1 ft per mile depending on the river stage. Therefore the elevation of the Mississippi River at Site R should be approximately 1 to 2 feet below that indicated on the graphs.

The data collected is from the past 20 years, 1982 to 2002. Gage Zero represents elevation 379.94 feet, NGVD. The plots, which are included, indicate the maximum and minimum river stage along with the river stage for each individual year. The river stage data is collected once a day at 8 am.

Piezometers

There are some existing piezometers on site where the well construction logs are not available. The known well construction logs are included in a subsequent appendix along with piezometer readings.

For the current phase of exploration, piezometers are being installed where the clay was encountered near the bedrock. The piezometers were planned to be screened within that lower

clay unit so that slug tests could be performed to assess the permeability. Installation logs of those piezometers installed to date are included.

Slug Tests

As part of the investigation in the borings currently being completed, slug tests are being performed on the piezometers to help assess the permeability of the clay unit near the bedrock. The slug test is performed by placing the slug in the piezometer and monitoring the water level using an Insitu mini troll. The data collected was then analyzed using the software AQTESOLV to estimate the permeability of the formation. Since slug testing takes time, some testing is in progress and is not included herein.

FUGRO GEOSCIENCES, INC.

6105 Rookin
Houston, TX 77074
Phone: 713-346-4000
Fax: 713-346-4002

August 9, 2001
Report Number 0305-0489

URS Corporation
2318 Millpark Drive
Maryland Heights, MO 63043

Attention: Mr. Bob Veenstra

REPORT FOR
PIEZOCONE PENETRATION TESTING
AND RELATED SERVICES
ST. LOUIS, MISSOURI
PROJECT #23-20010085.00

Dear Mr. Veenstra:

Please find enclosed herewith the final results of the cone penetration tests conducted at the above referenced location.

For your information, the soil stratigraphy was identified using Campanella and Robertson's Simplified Soil Behavior Chart. Please note that because of the empirical nature of the soil behavior chart, the soil identification should be verified locally.

Fugro Geosciences, Inc. appreciates the opportunity to be of service to your organization. If you should have any questions, or if we can be of further assistance, please do not hesitate to contact us. We look forward to working with you in the future.

Very truly yours,
FUGRO GEOSCIENCES, INC.

for Recep Yilmaz
President

RY/jm

1 Diskette Enclosed

KEY TO SOIL BEHAVIOR TYPE

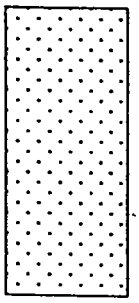

SAND AND SANDY SOIL

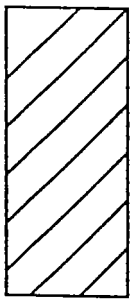

CLAY AND CLAYEY SOIL

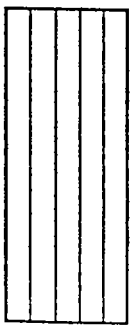

SILT AND SILTY SOIL

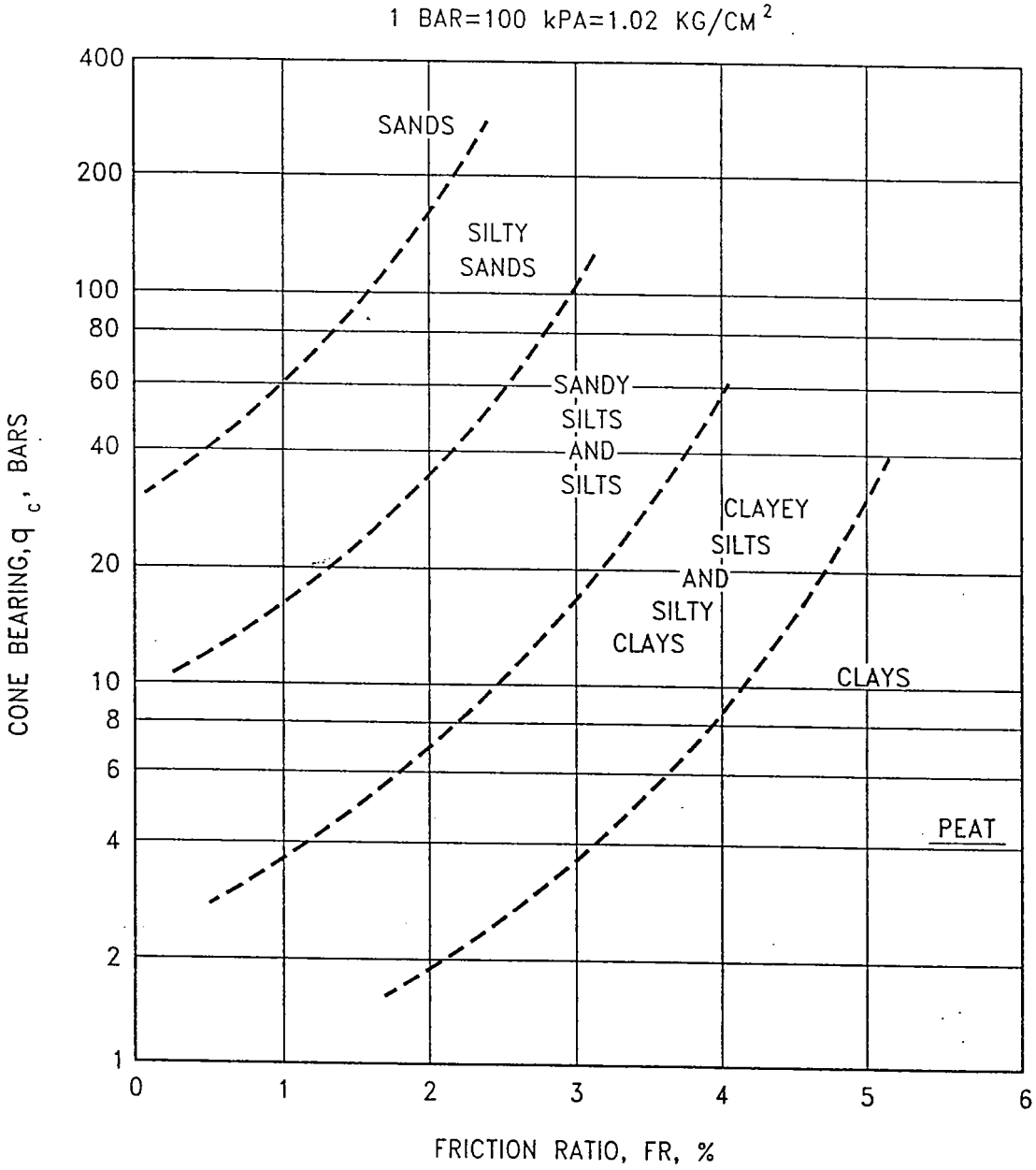

CAMPANELLA AND ROBERTSON SOIL BEHAVIOR CHART (1983)

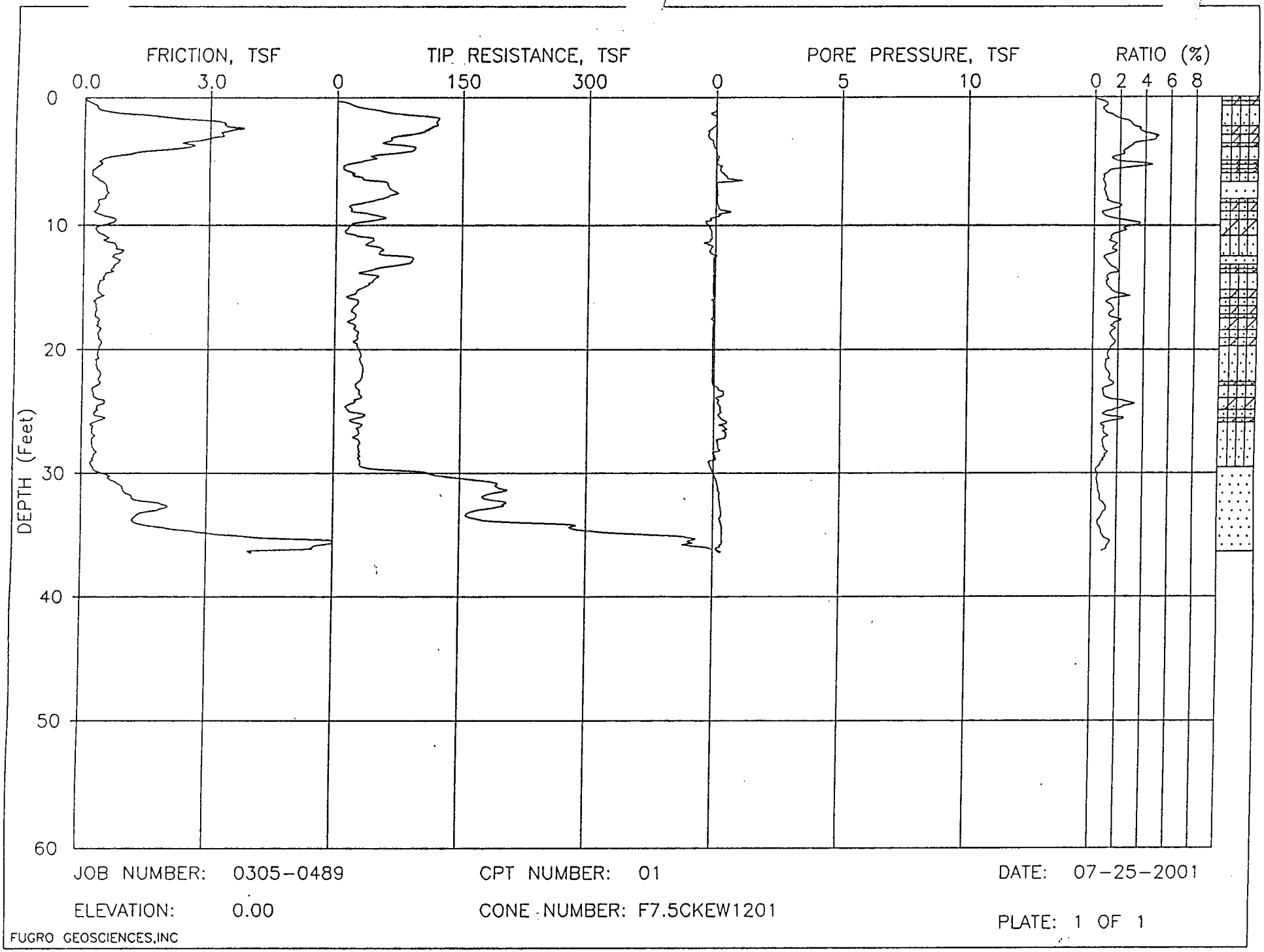

JOB NUMBER: 0305-0489 CPT NUMBER: 01 DATE: 07-25-2001

ELEVATION: 0.00 CONE NUMBER: F7.5CKEW1201 PLATE: 1 OF 1

FUGRO GEOSCIENCES,INC

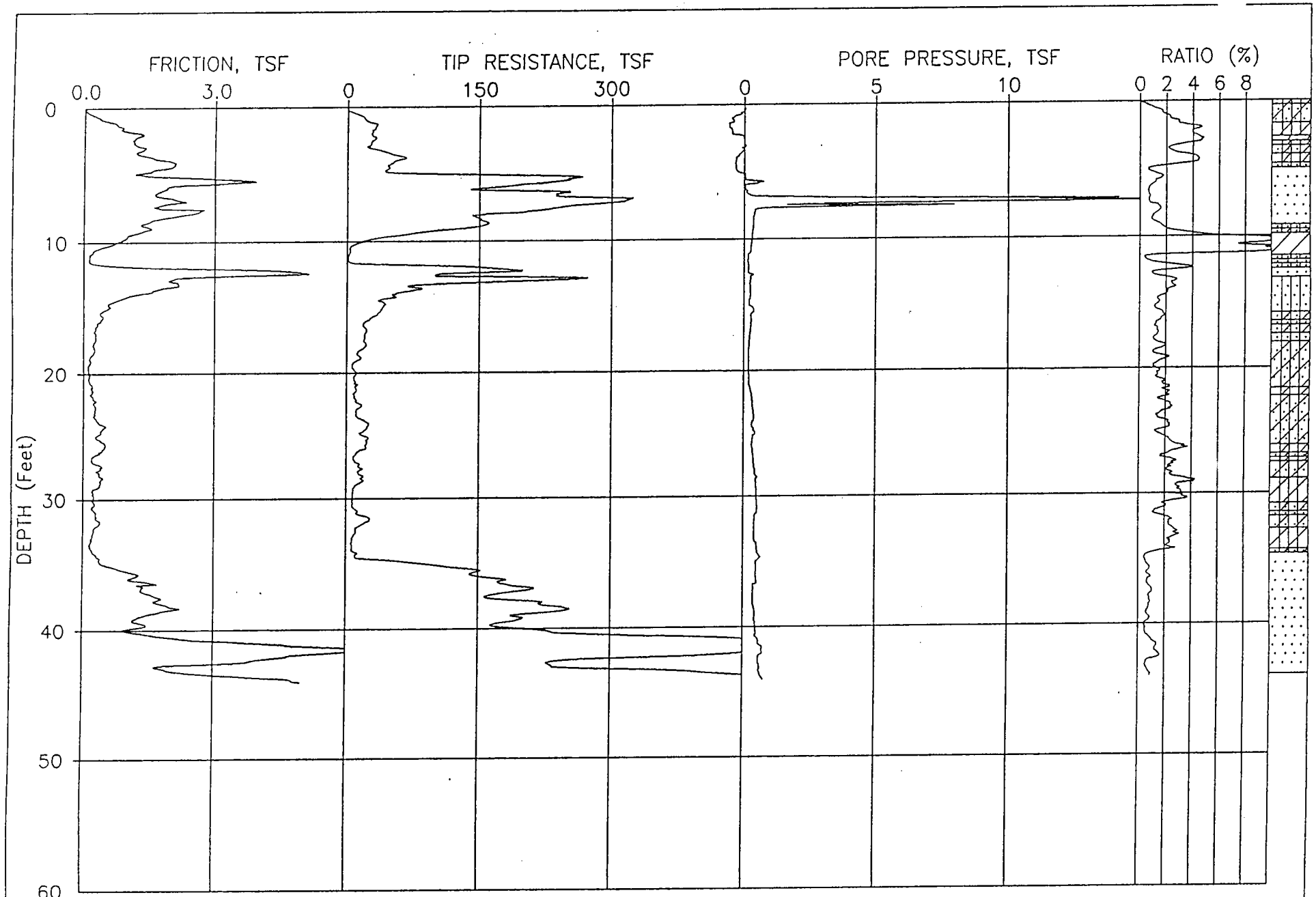

JOB NUMBER: 0305-0489

CPT NUMBER: 02

DATE: 07-25-2001

ELEVATION: 0.00

CONE NUMBER: F7.5CKEW1201

PLATE: 1 OF 1

FUGRO GEOSCIENCES,INC

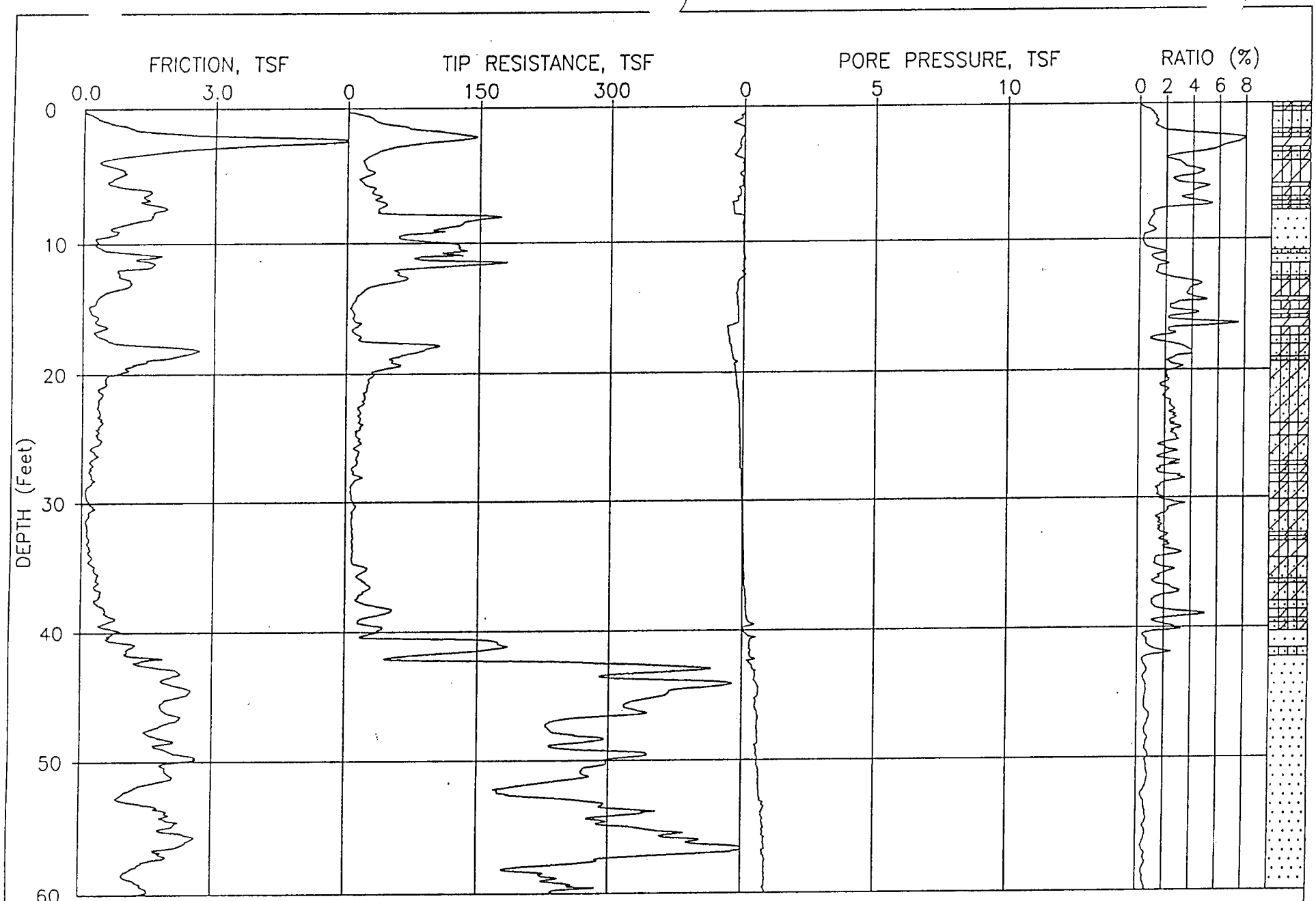

JOB NUMBER: 0305-0489

ELEVATION: 0.00

CPT NUMBER: 03

CONE NUMBER: F7.5CKEW1201

DATE: 07-25-2001

PLATE: 1 OF 2

FUGRO GEOSCIENCES,INC

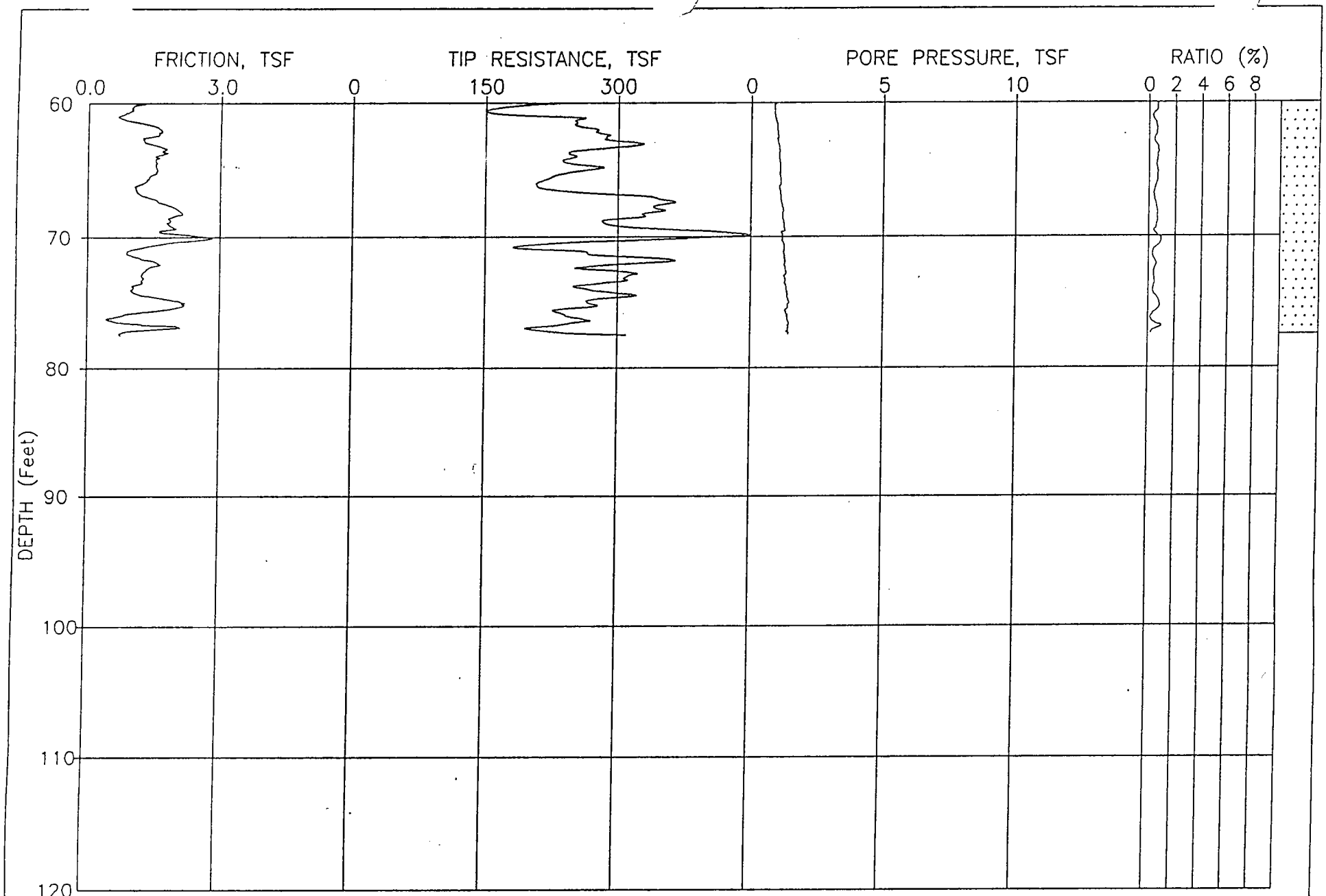

JOB NUMBER: 0305-0489

CPT NUMBER: 03

DATE: 07-25-2001

ELEVATION: 0.00

CONE NUMBER: F7.5CKEW1201

PLATE: 2 OF 2

FUGRO GEOSCIENCES,INC

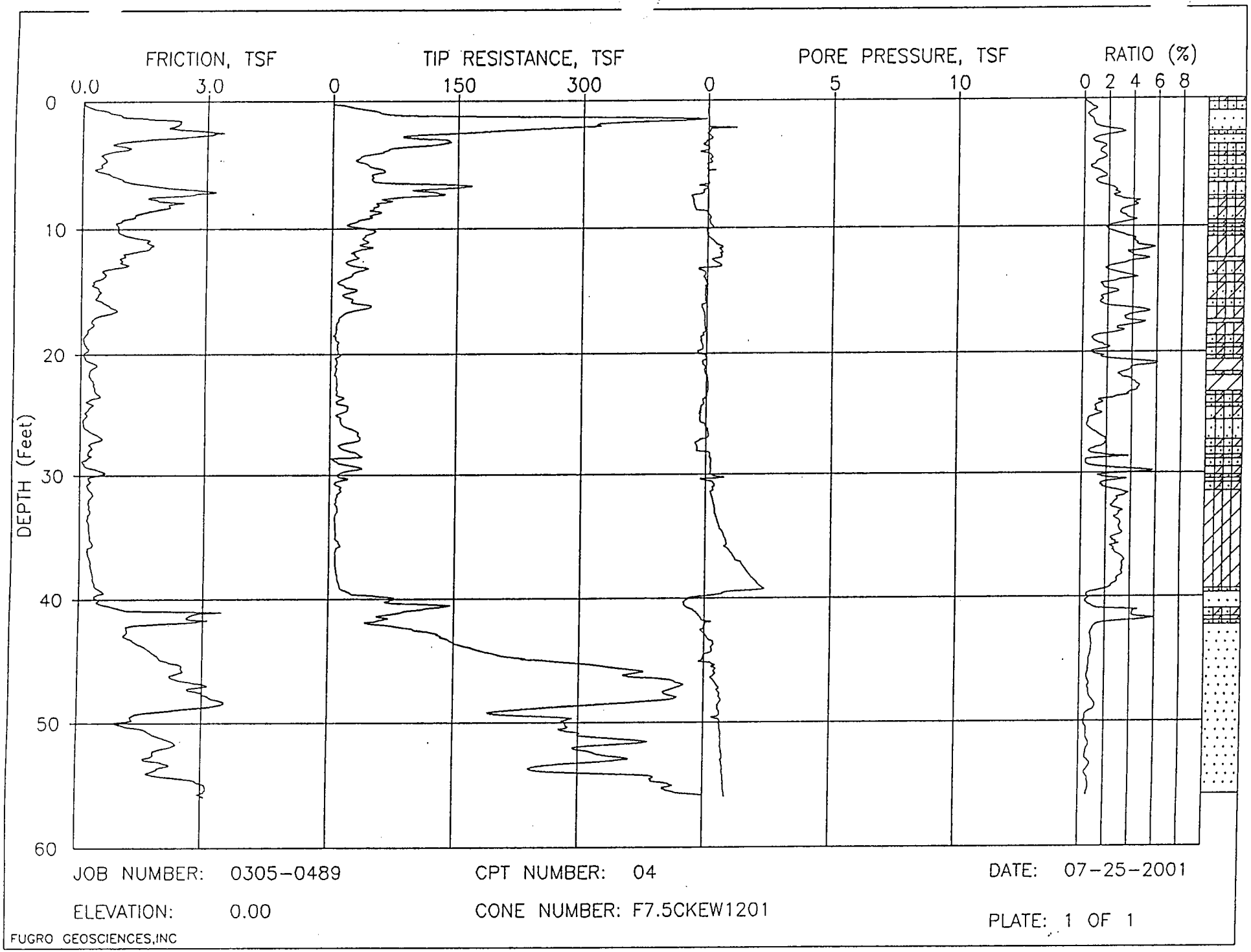

JOB NUMBER: 0305-0489 CPT NUMBER: 04 DATE: 07-25-2001

ELEVATION: 0.00 CONE NUMBER: F7.5CKEW1201 PLATE: 1 OF 1

FUGRO GEOSCIENCES,INC

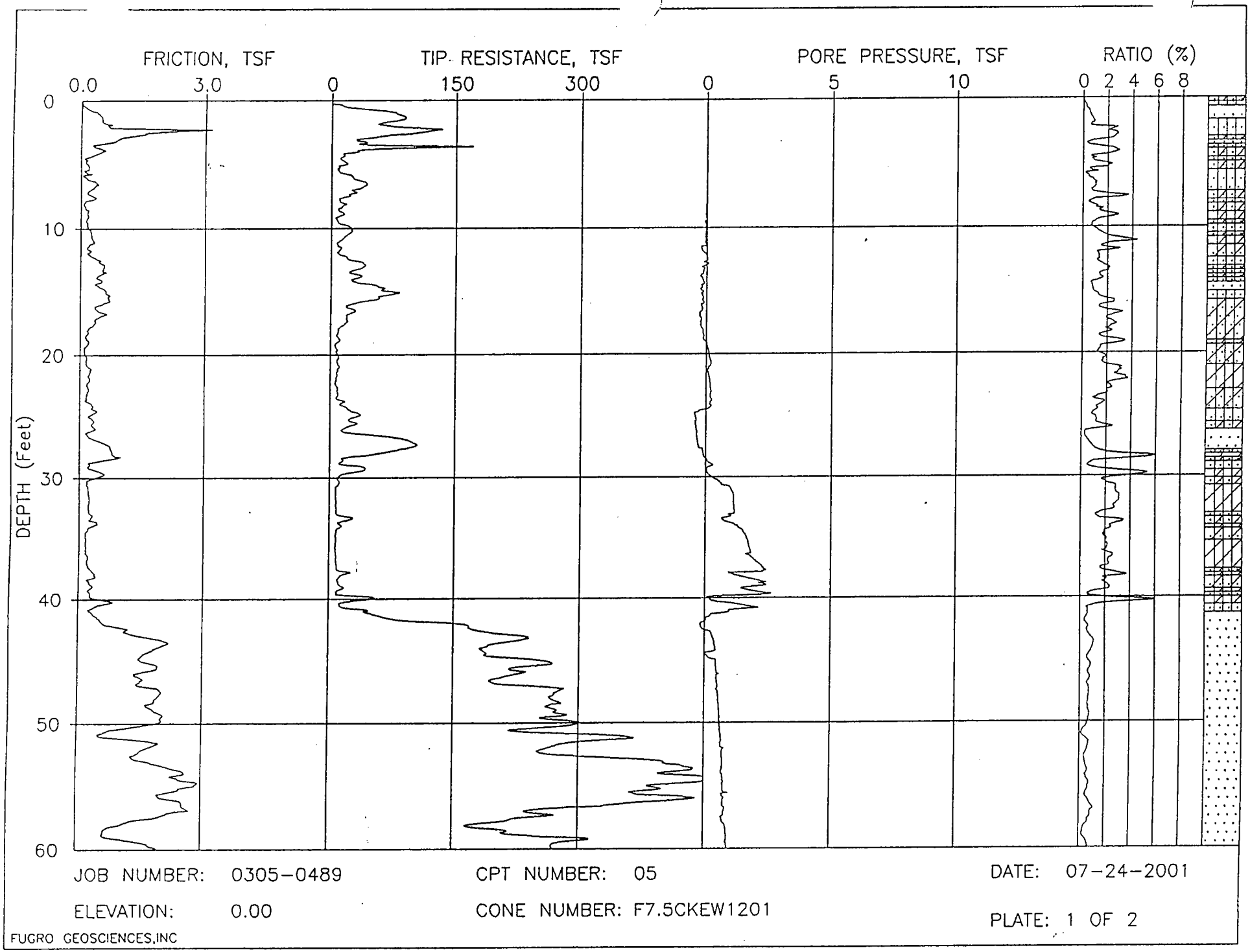

JOB NUMBER: 0305-0489

CPT NUMBER: 05

DATE: 07-24-2001

ELEVATION: 0.00

CONE NUMBER: F7.5CKEW1201

PLATE: 1 OF 2

FUGRO GEOSCIENCES,INC

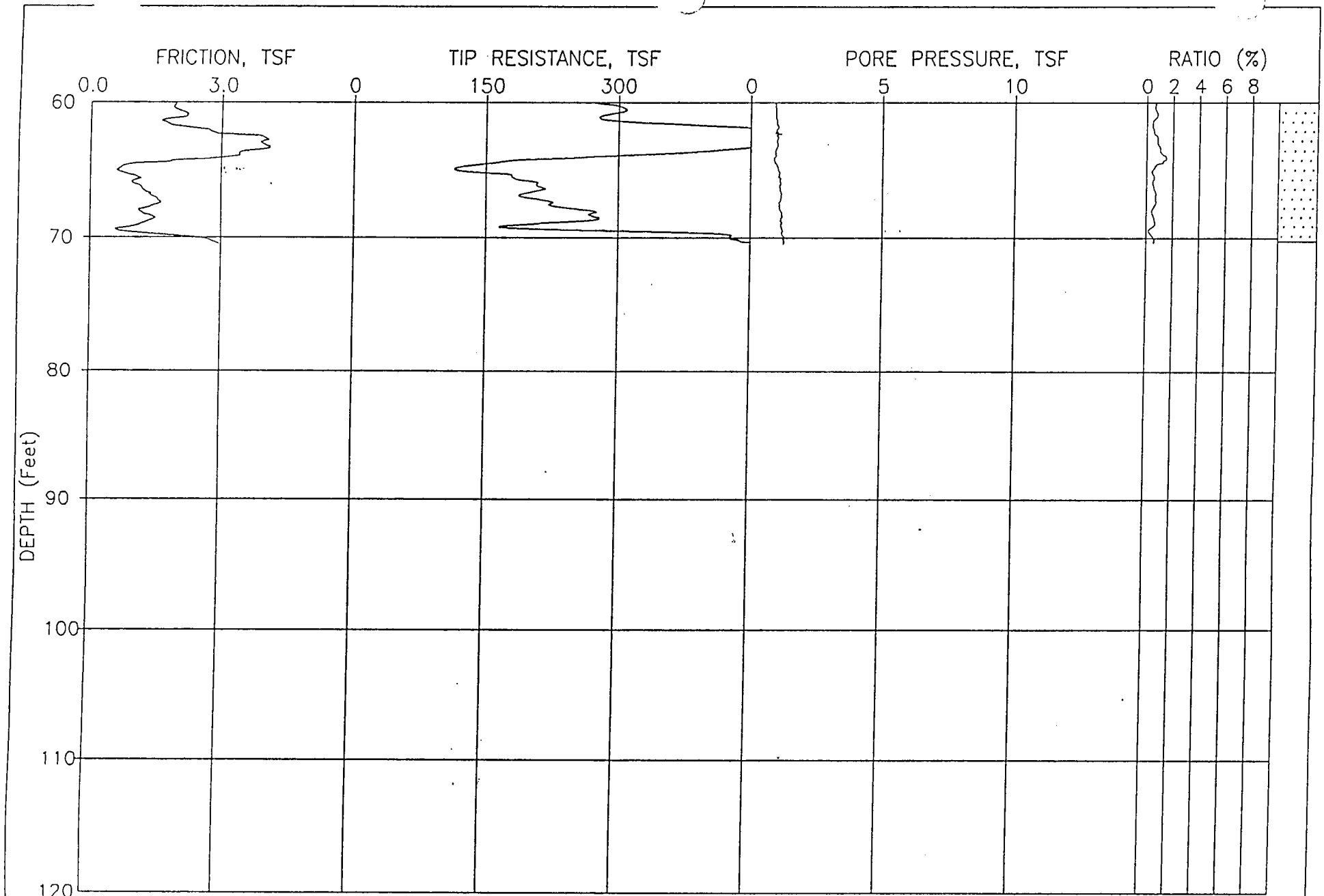

JOB NUMBER: 0305-0489

CPT NUMBER: 05

DATE: 07-24-2001

ELEVATION: 0.00

CONE NUMBER: F7.5CKEW1201

PLATE: 2 OF 2

FUGRO GEOSCIENCES,INC

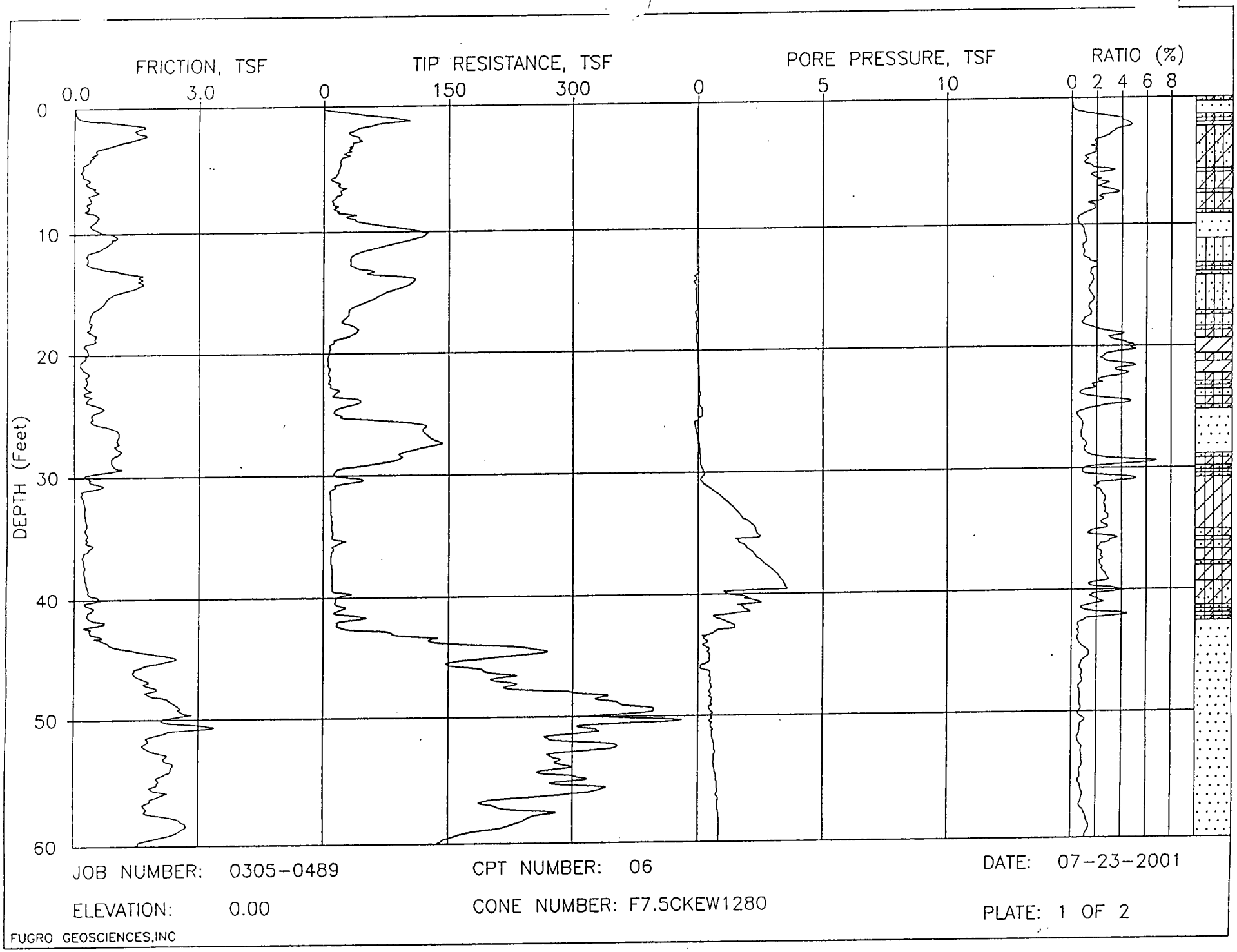

JOB NUMBER: 0305-0489

ELEVATION: 0.00

CPT NUMBER: 06

CONE NUMBER: F7.5CKEW1280

DATE: 07-23-2001

PLATE: 1 OF 2

FUGRO GEOSCIENCES,INC

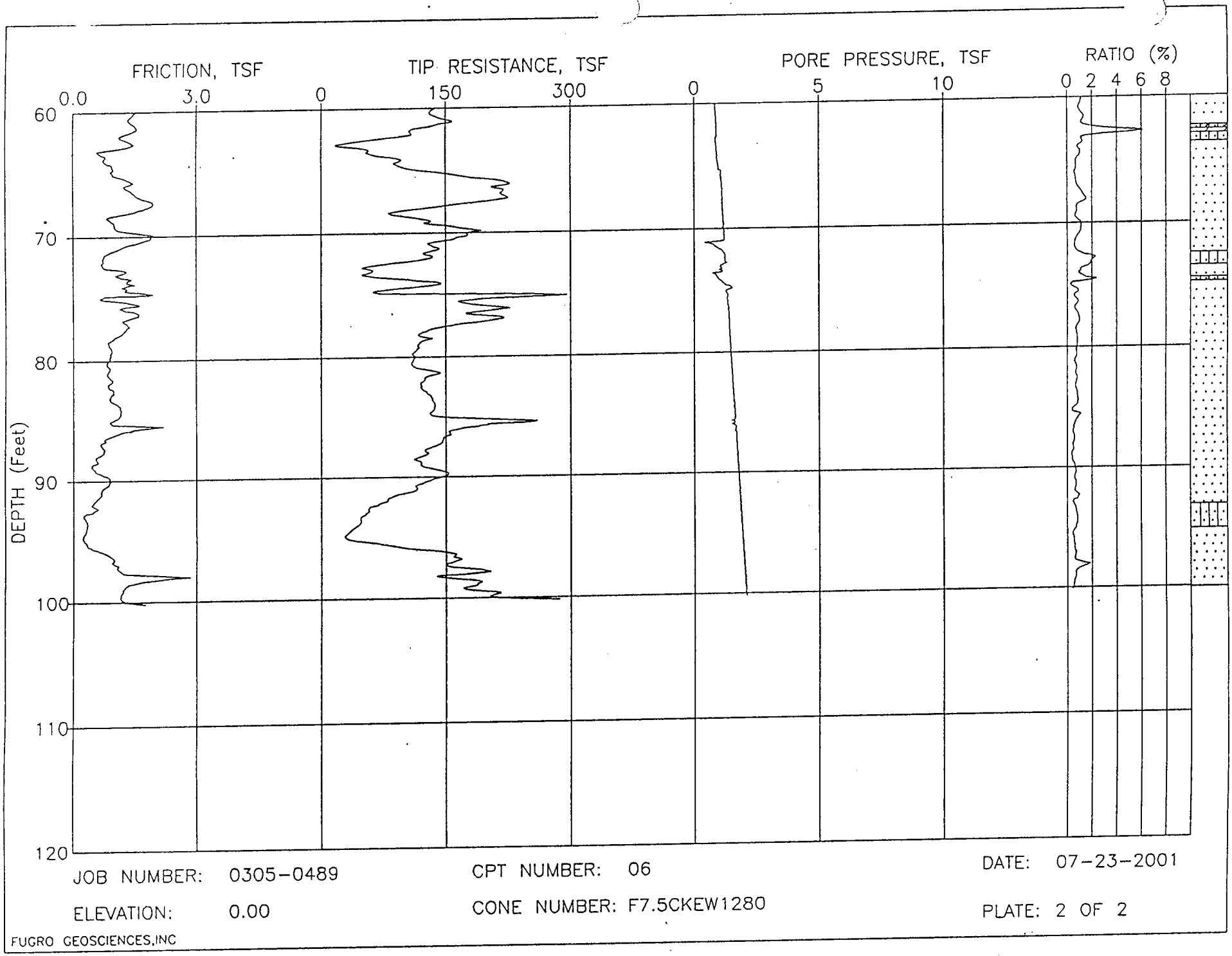

JOB NUMBER: 0305-0489

ELEVATION: 0.00

CPT NUMBER: 06

CONE NUMBER: F7.5CKEW1280

DATE: 07-23-2001

PLATE: 2 OF 2

FUGRO GEOSCIENCES,INC

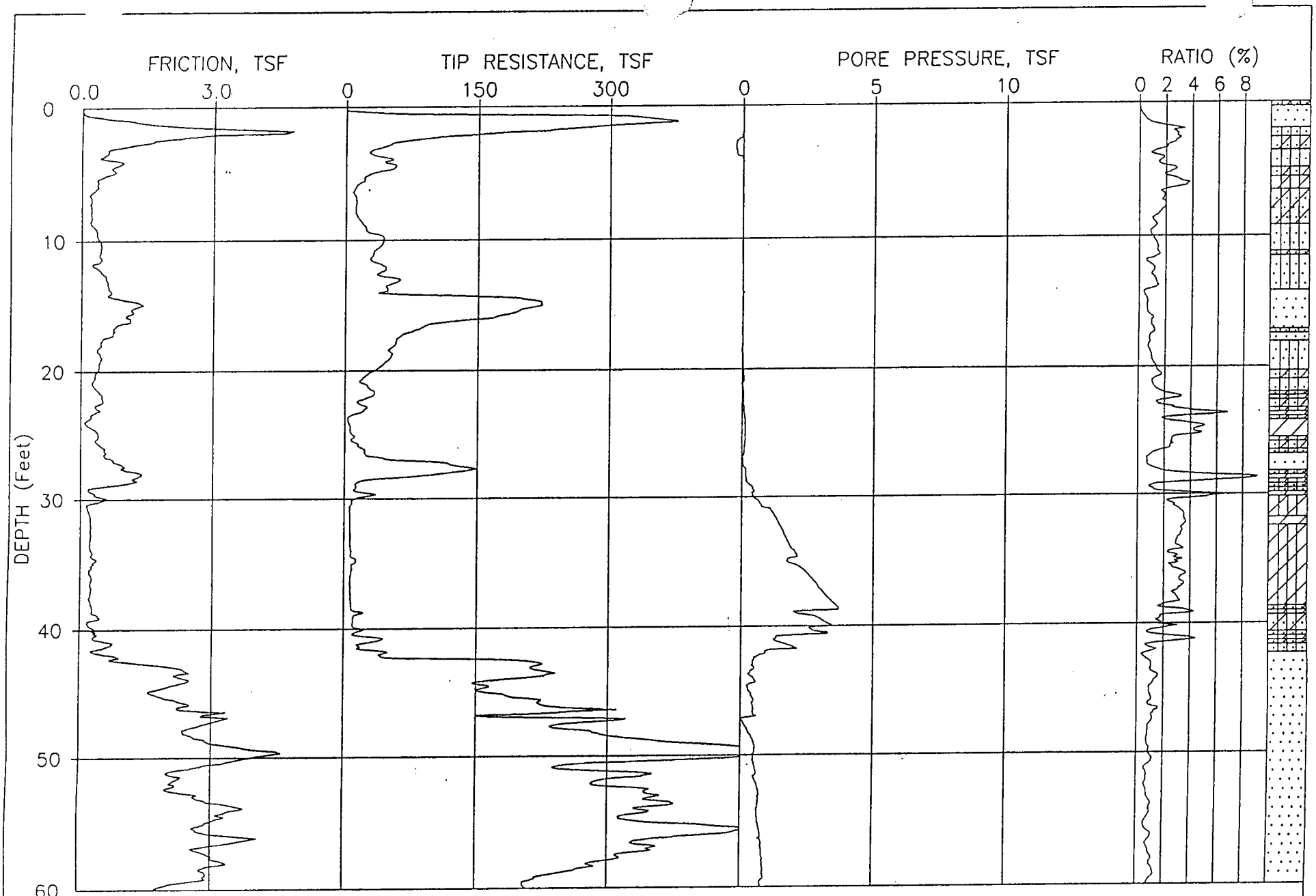

JOB NUMBER: 0305-0489

CPT NUMBER: 07

DATE: 07-23-2001

ELEVATION: 0.00

CONE NUMBER: F7.5CKEW1280

PLATE: 1 OF 2

FUGRO GEOSCIENCES,INC

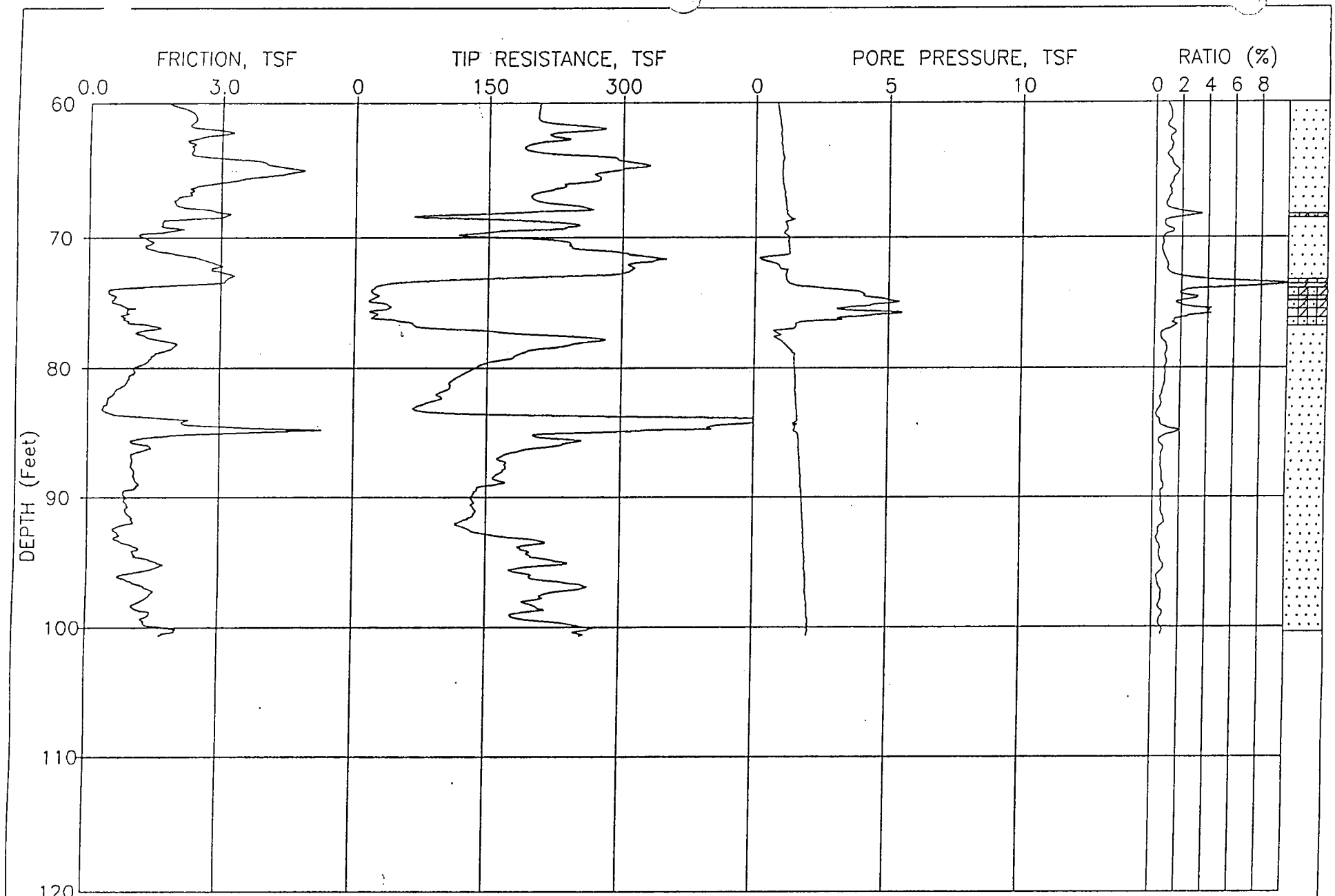

JOB NUMBER: 0305-0489 CPT NUMBER: 07 DATE: 07-23-2001

ELEVATION: 0.00 CONE NUMBER: F7.5CKEW1280 PLATE: 2 OF 2

FUGRO GEOSCIENCES,INC

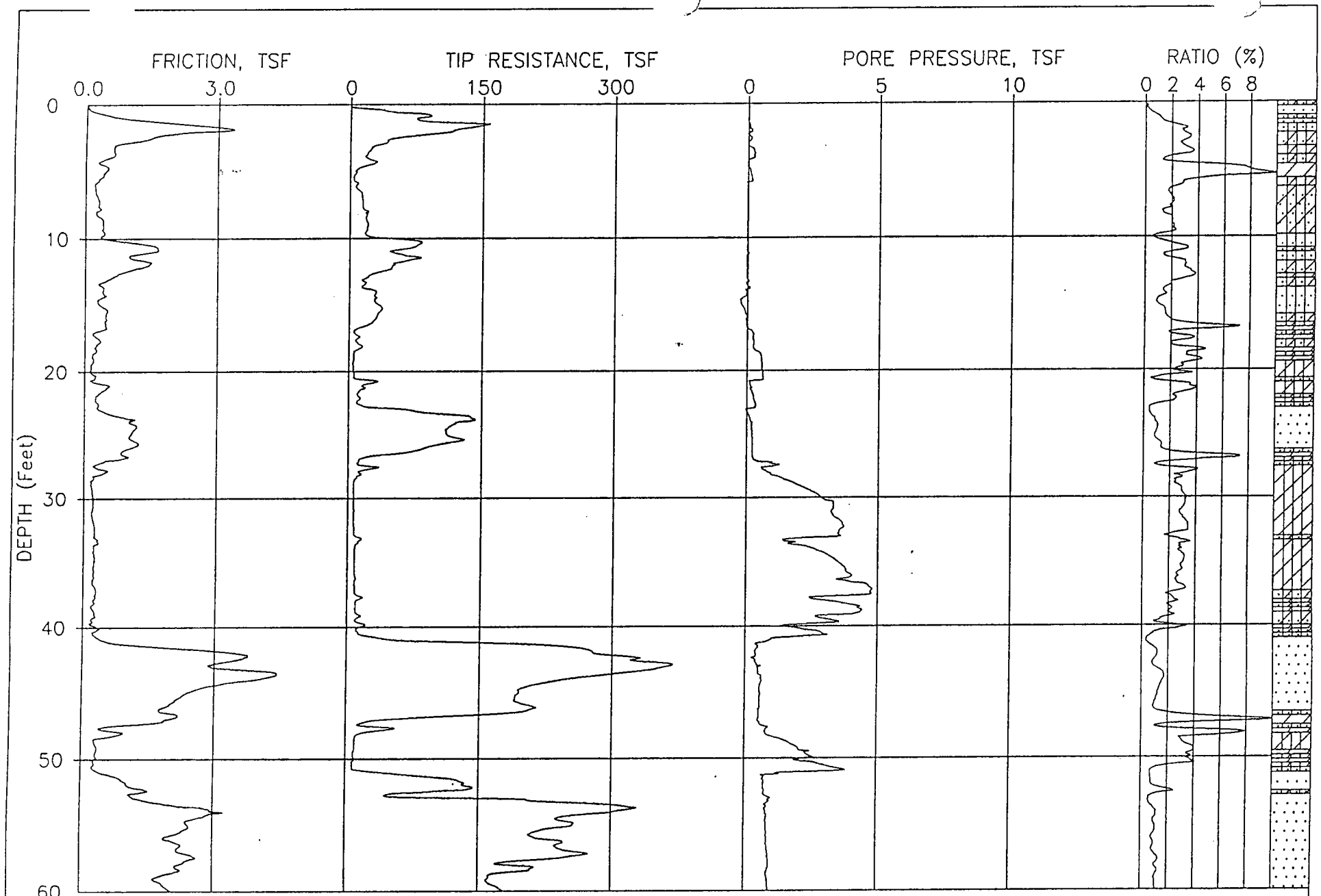

JOB NUMBER: 0305-0489 CPT NUMBER: 08 DATE: 07-23-2001

ELEVATION: 0.00 CONE NUMBER: F7.5CKEW1280

PLATE: 1 OF 2

FUGRO GEOSCIENCES,INC

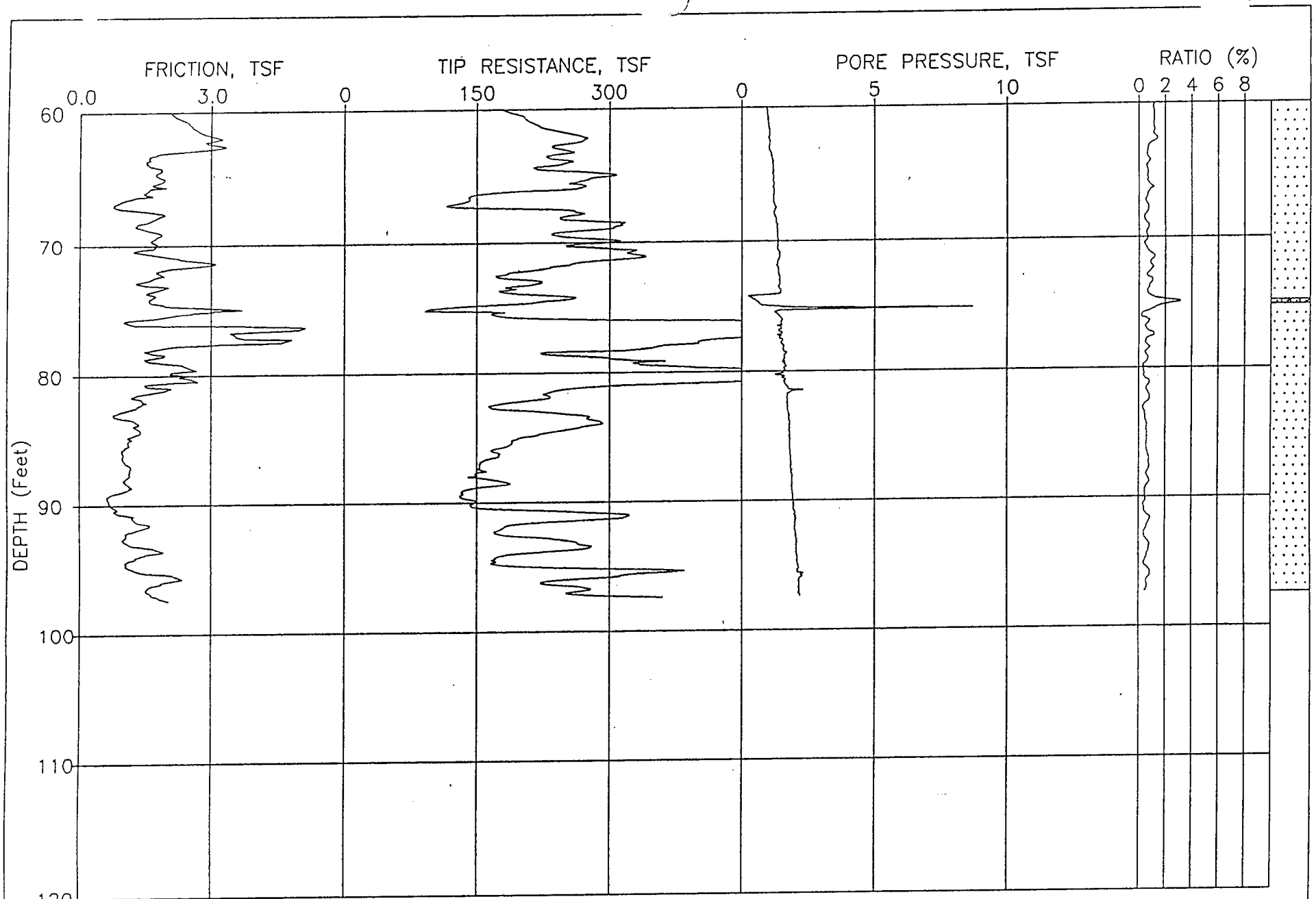

JOB NUMBER: 0305-0489

ELEVATION: 0.00

CPT NUMBER: 08

CONE NUMBER: F7.5CKEW1280

DATE: 07-23-2001

PLATE: 2 OF 2

FUGRO GEOSCIENCES,INC

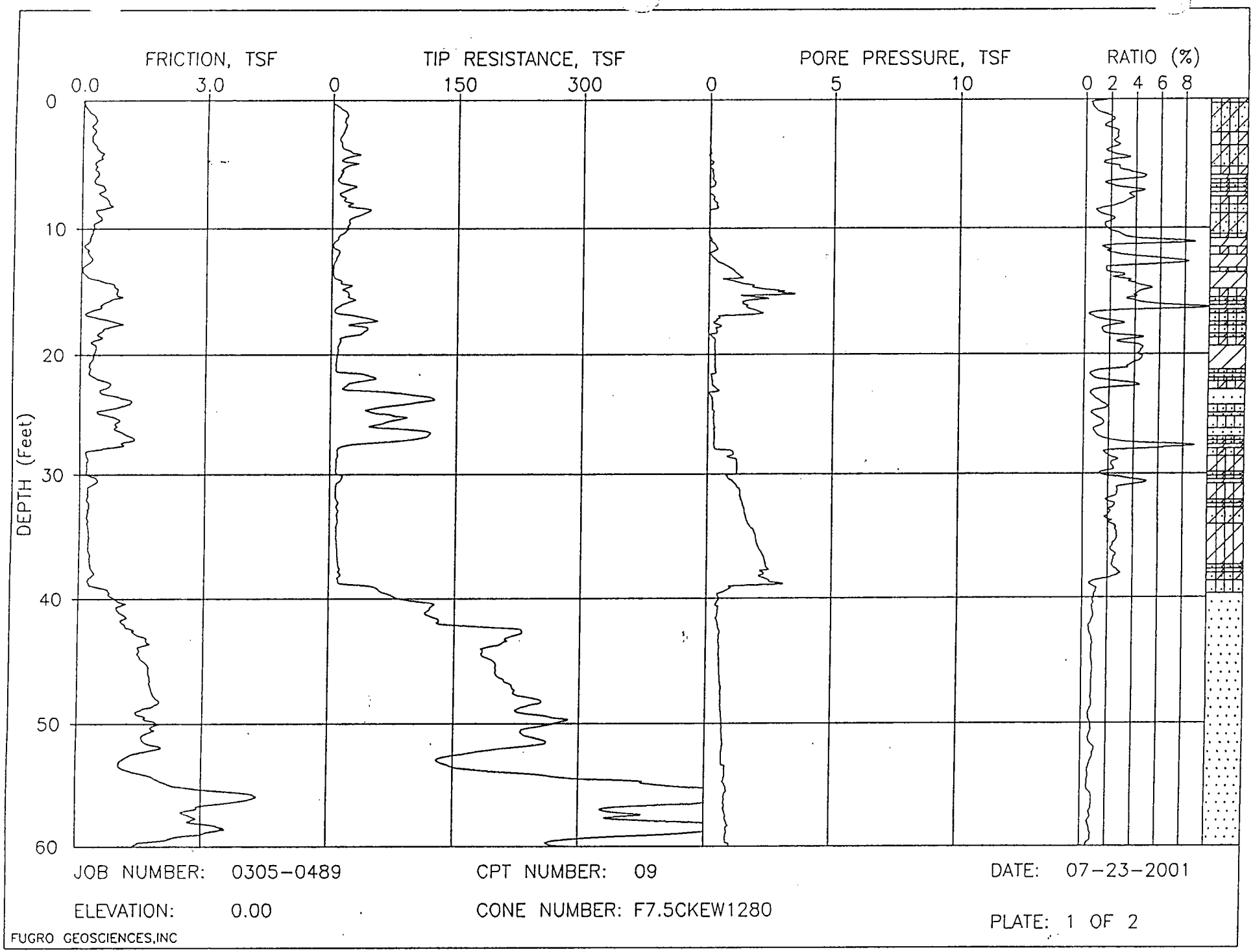

JOB NUMBER: 0305-0489

CPT NUMBER: 09

DATE: 07-23-2001

ELEVATION: 0.00

CONE NUMBER: F7.5CKEW1280

PLATE: 1 OF 2

FUGRO GEOSCIENCES,INC

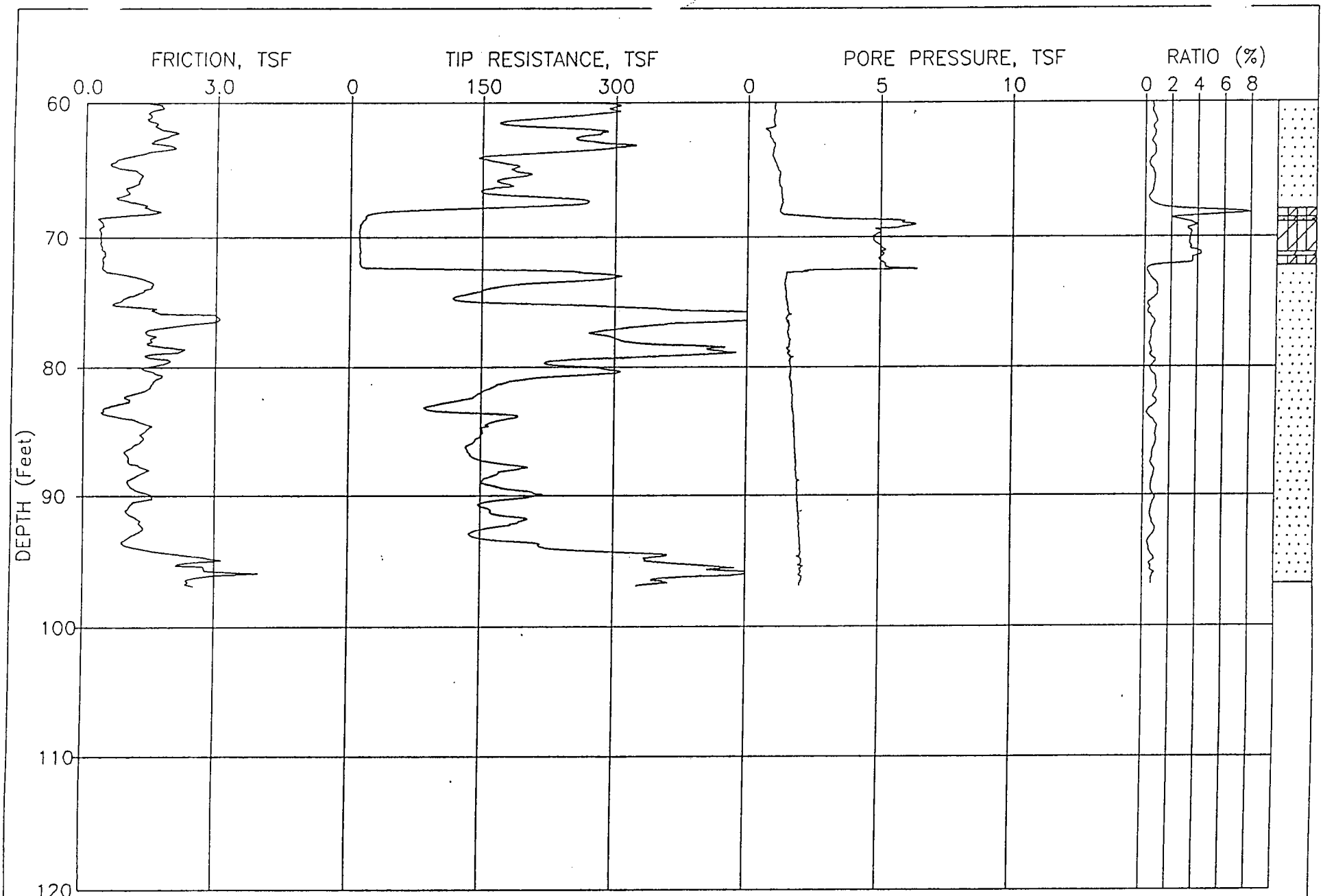

JOB NUMBER: 0305-0489

CPT NUMBER: 09

DATE: 07-23-2001

ELEVATION: 0.00

CONE NUMBER: F7.5CKEW1280

PLATE: 2 OF 2

FUGRO GEOSCIENCES,INC

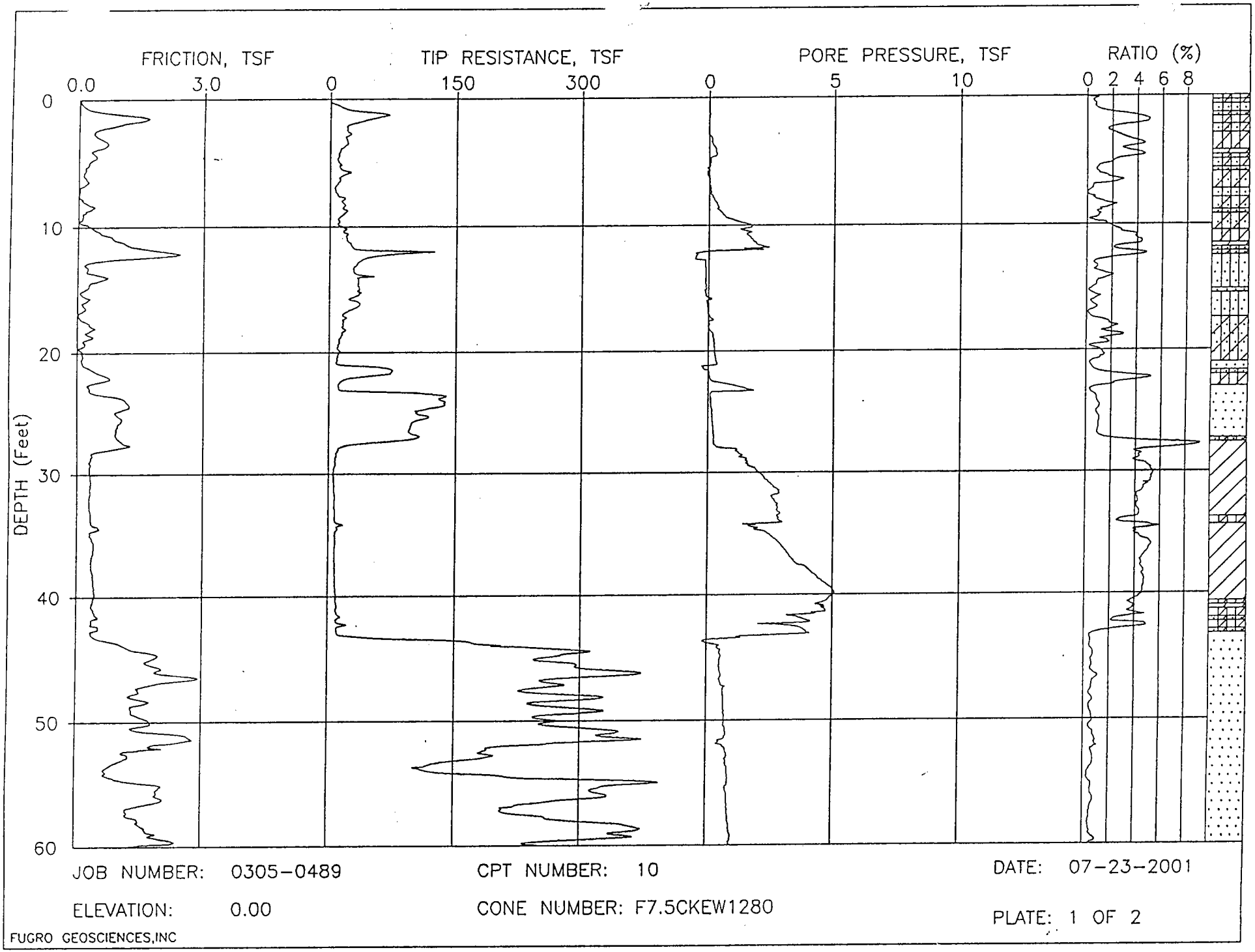

JOB NUMBER: 0305-0489

CPT NUMBER: 10

DATE: 07-23-2001

ELEVATION: 0.00

CONE NUMBER: F7.5CKEW1280

PLATE: 1 OF 2

FUGRO GEOSCIENCES,INC

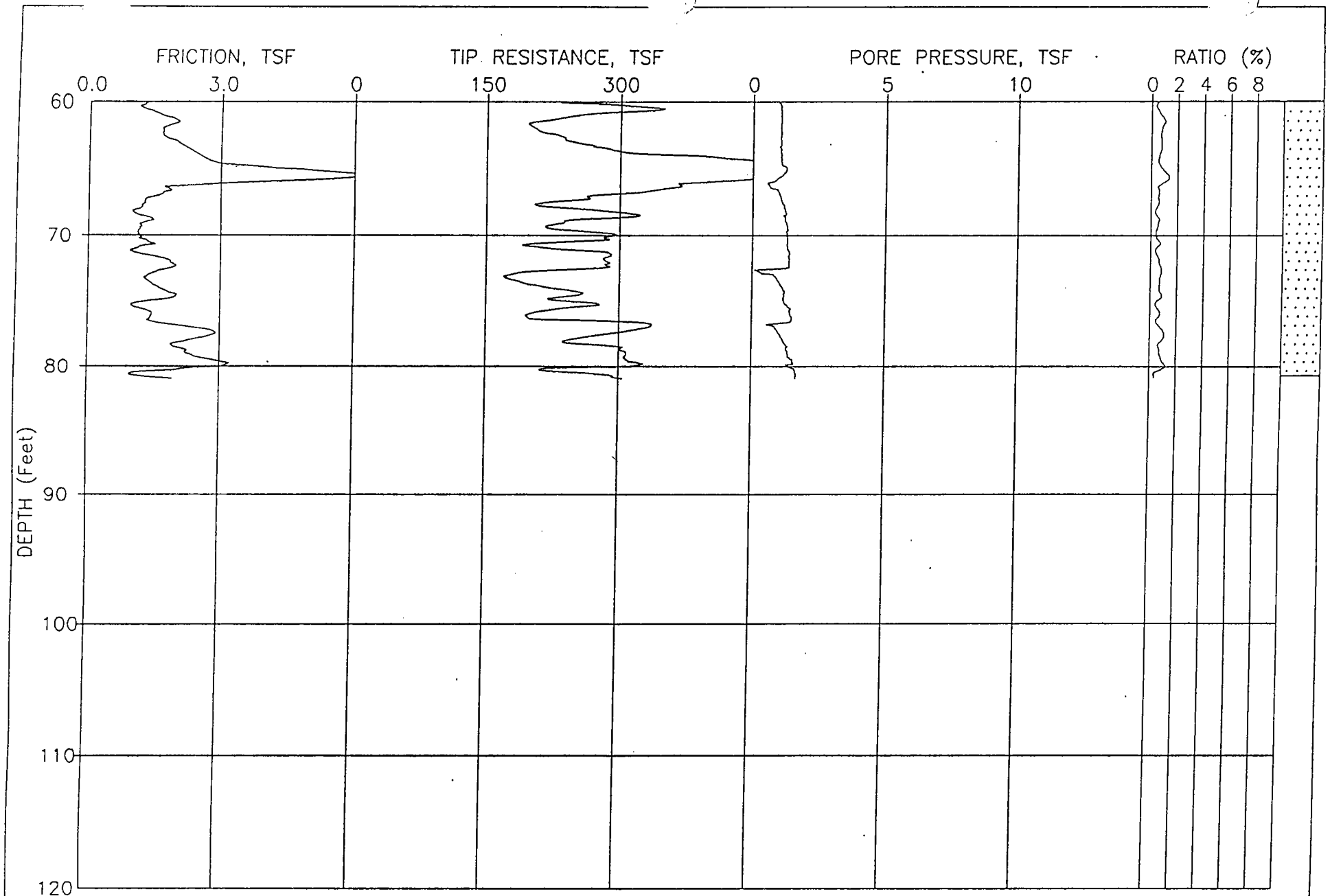

JOB NUMBER: 0305-0489

CPT NUMBER: 10

DATE: 07-23-2001

ELEVATION: 0.00

CONE NUMBER: F7.5CKEW1280

PLATE: 2 OF 2

FUGRO GEOSCIENCES,INC

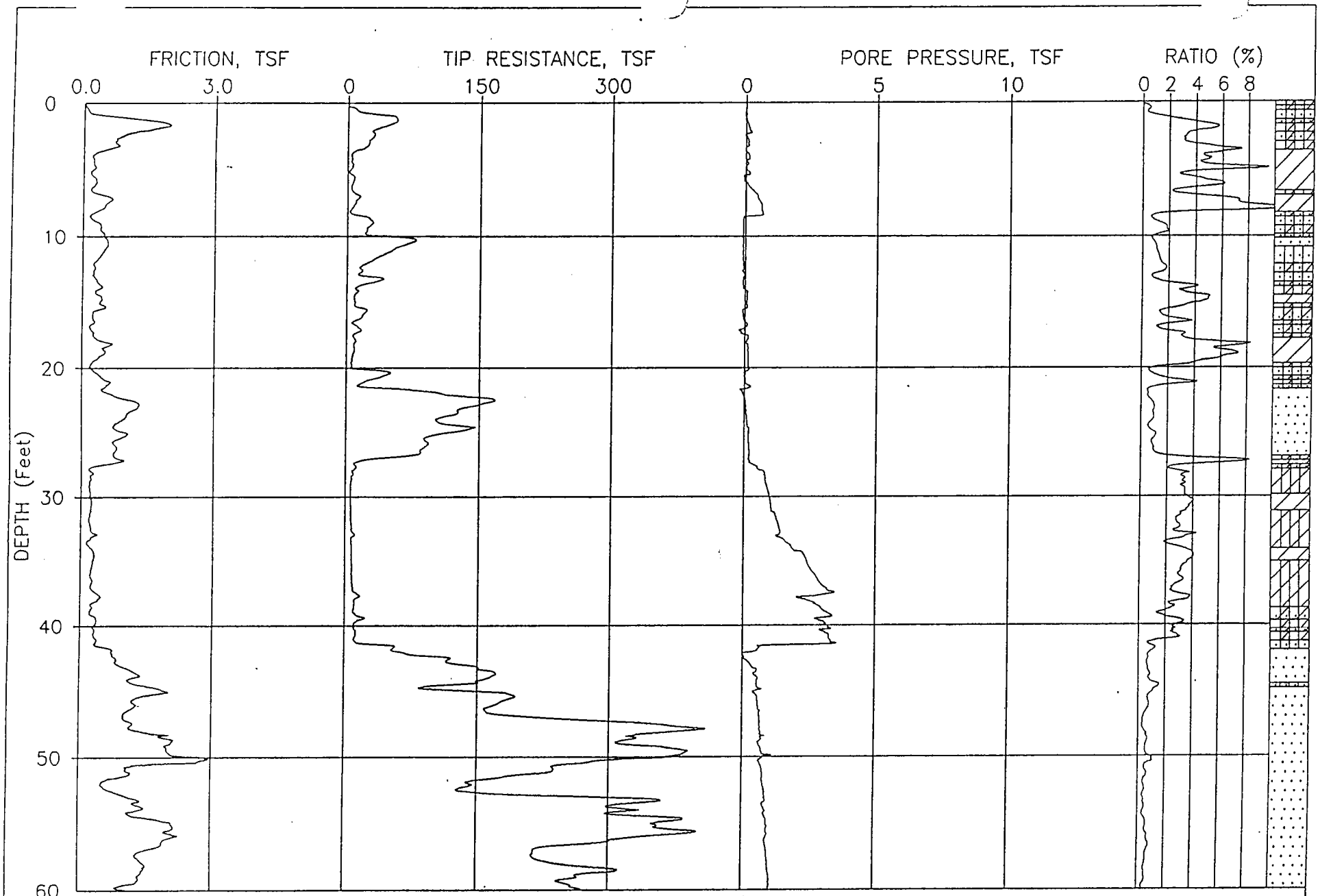

JOB NUMBER: 0305-0489

CPT NUMBER: 11

DATE: 07-24-2001

ELEVATION: 0.00

CONE NUMBER: F7.5CKEW1201

PLATE: 1 OF 2

FUGRO GEOSCIENCES,INC

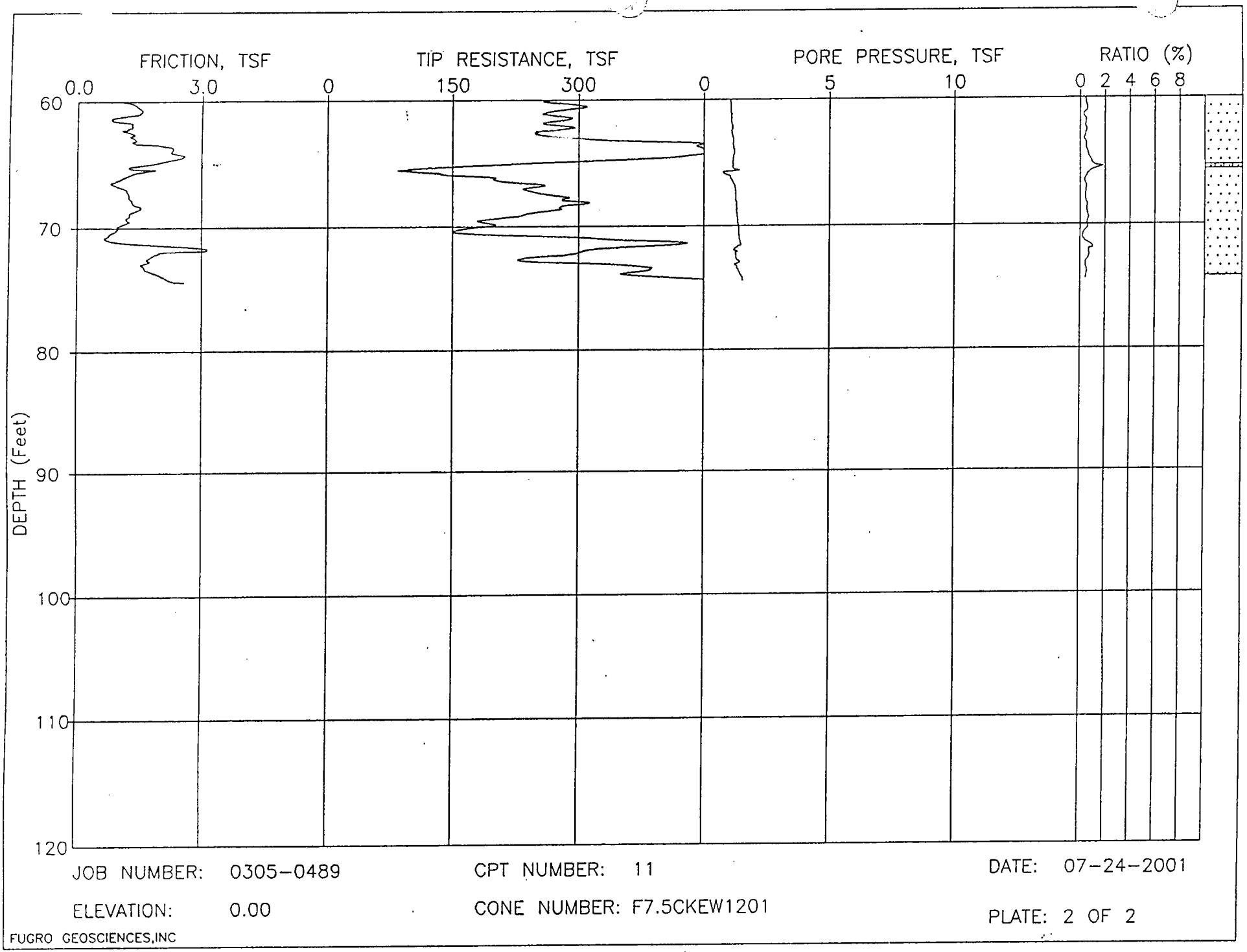

JOB NUMBER: 0305-0489

ELEVATION: 0.00

CPT NUMBER: 11

CONE NUMBER: F7.5CKEW1201

DATE: 07-24-2001

PLATE: 2 OF 2

FUGRO GEOSCIENCES,INC

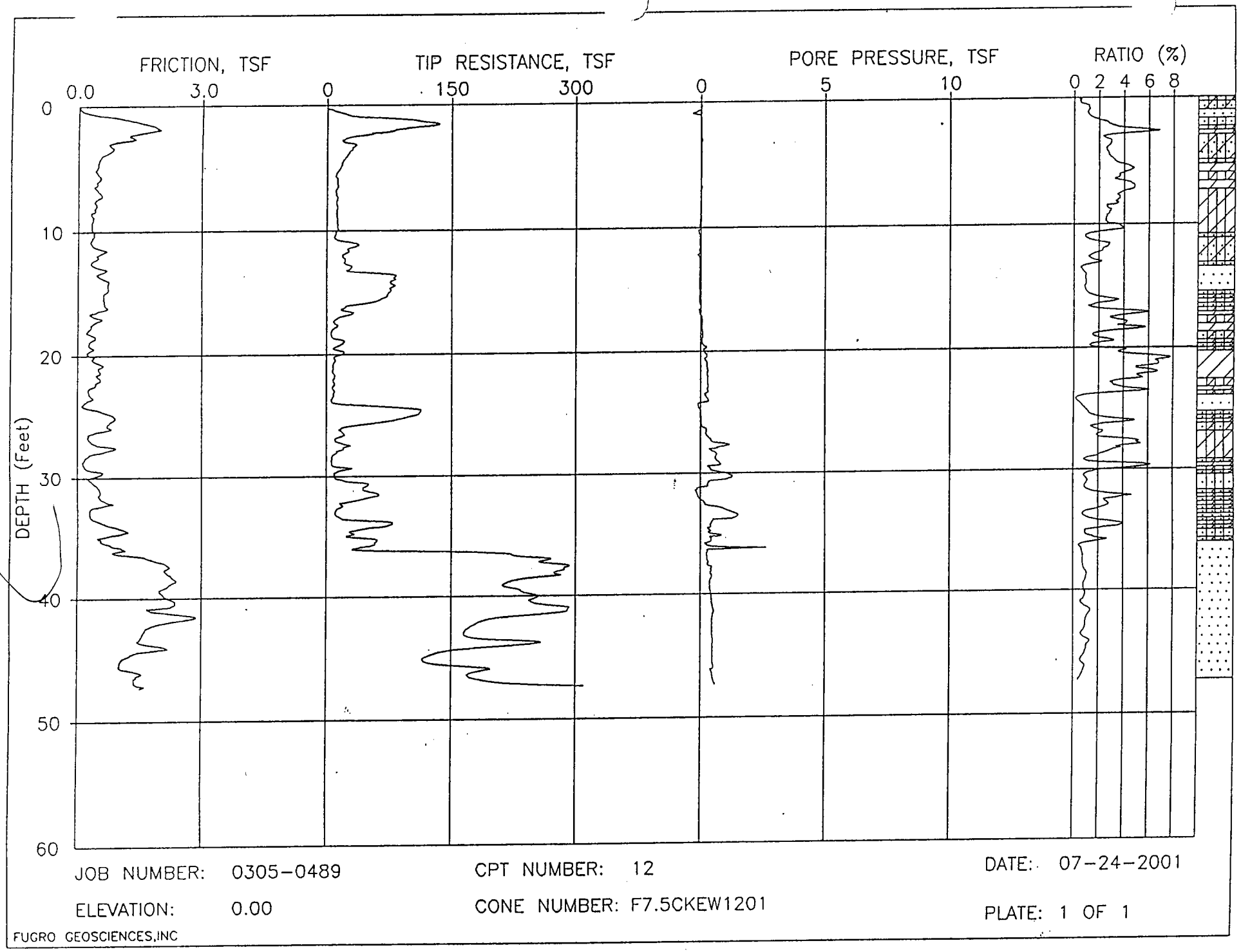

JOB NUMBER: 0305-0489

CPT NUMBER: 12

DATE: 07-24-2001

ELEVATION: 0.00

CONE NUMBER: F7.5CKEW1201

PLATE: 1 OF 1

FUGRO GEOSCIENCES,INC

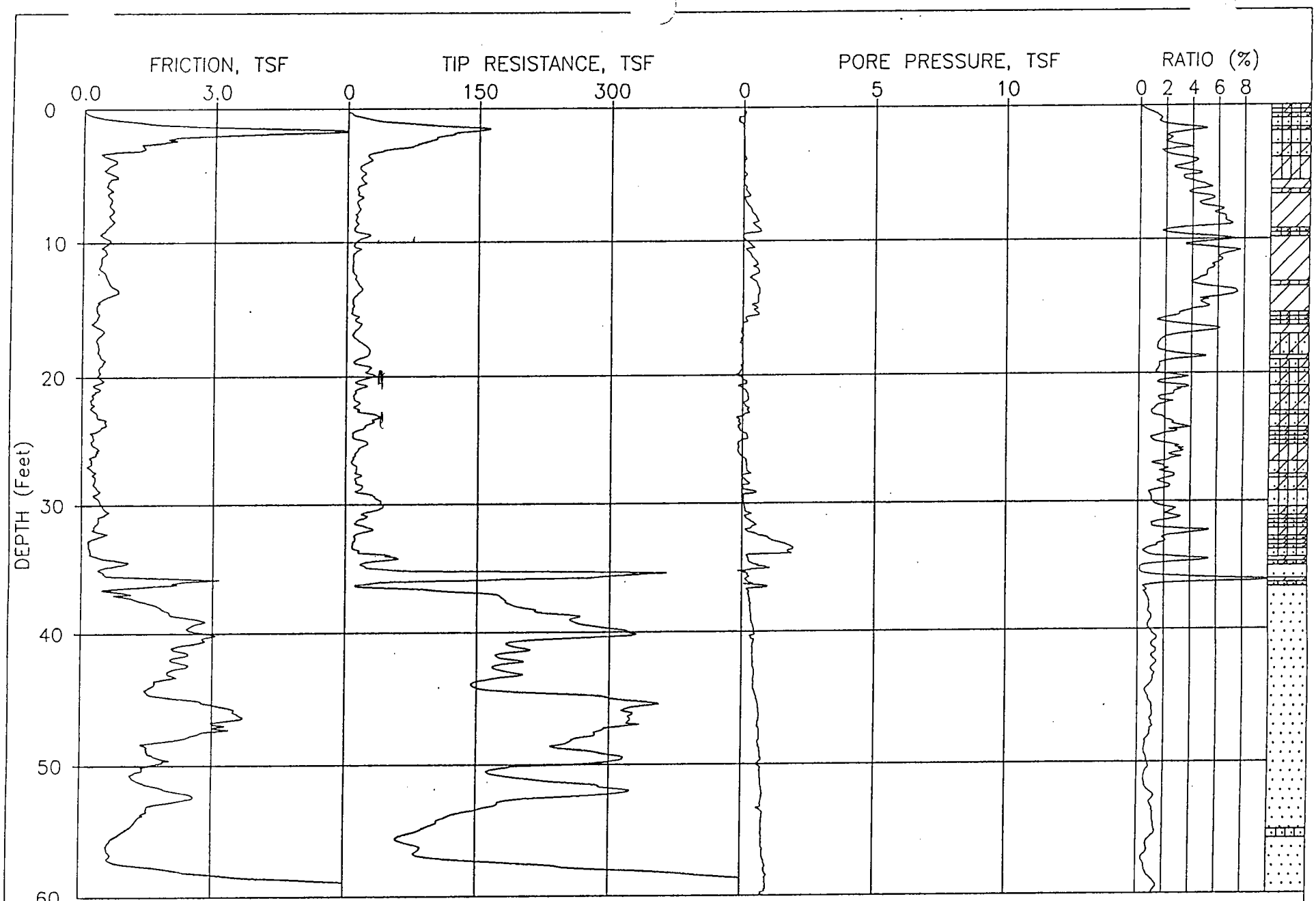

JOB NUMBER: 0305-0489

CPT NUMBER: 12A

DATE: 07-24-2001

ELEVATION: 0.00

CONE NUMBER: F7.5CKEW1280

PLATE: 1 OF 2

FUGRO GEOSCIENCES,INC

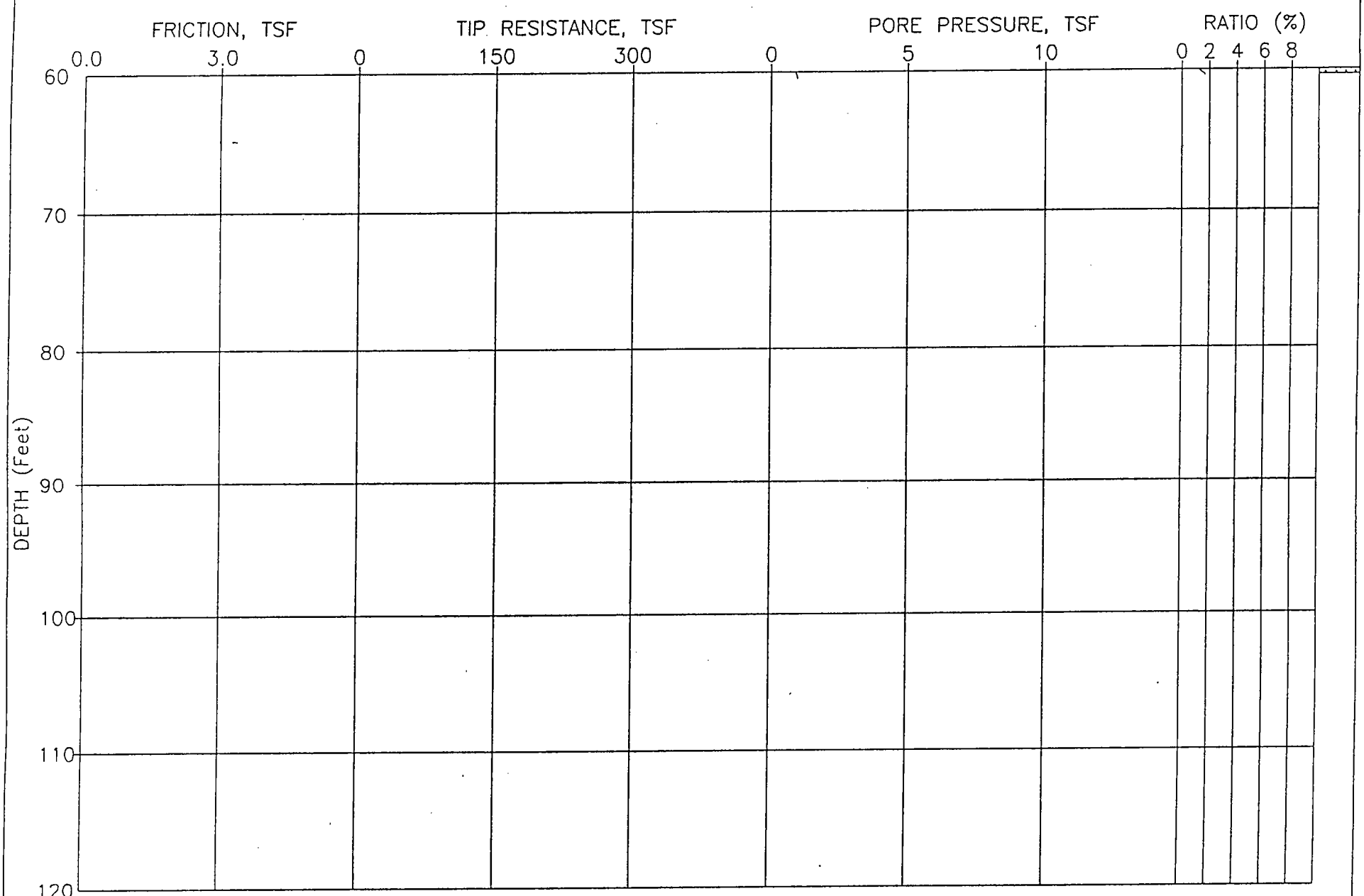

JOB NUMBER: 0305-0489

CPT NUMBER: 12A

DATE: 07-24-2001

ELEVATION: 0.00

CONE NUMBER: F7.5CKEW1280

PLATE: 2 OF 2

FUGRO GEOSCIENCES,INC

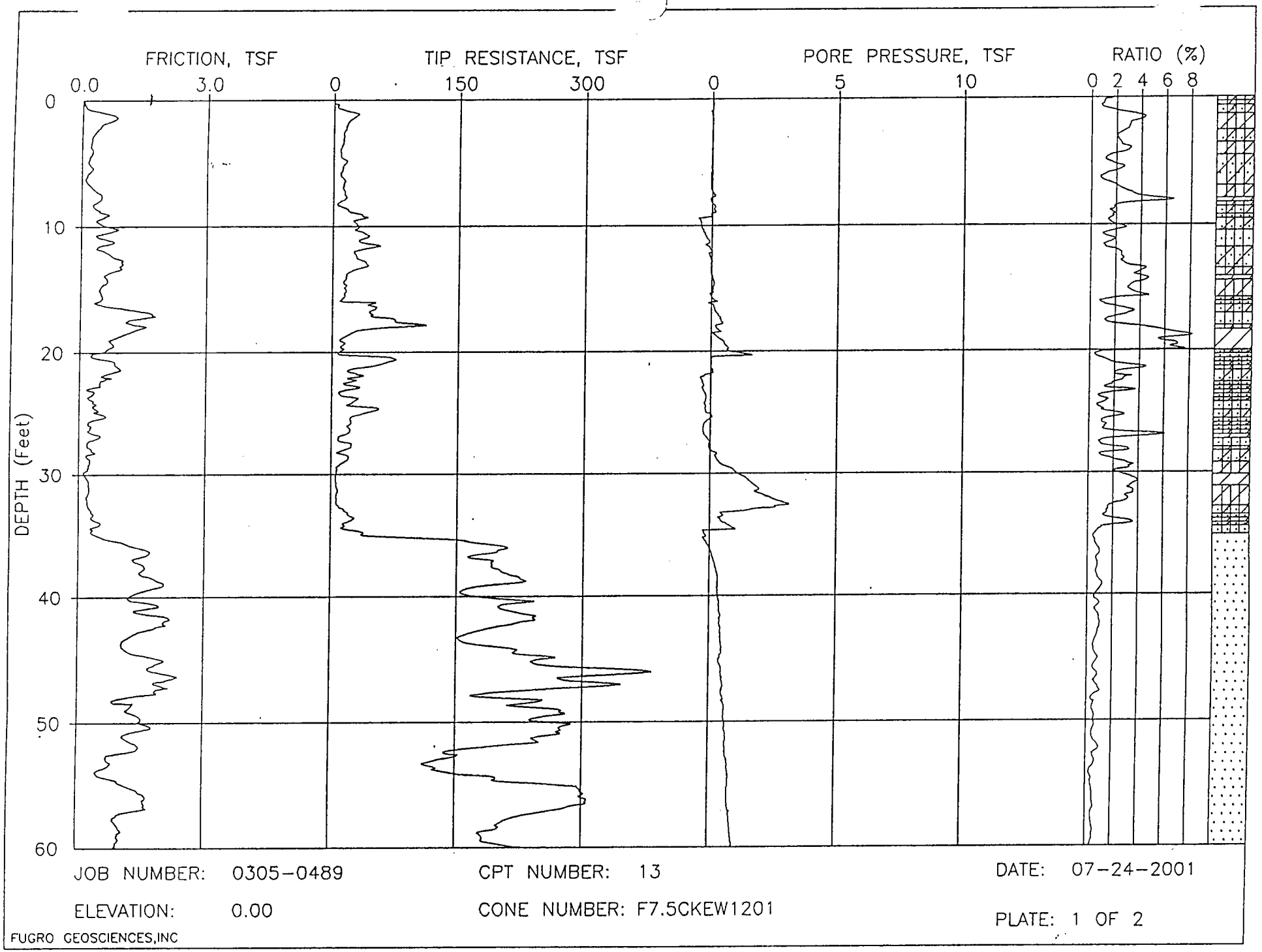

JOB NUMBER: 0305-0489

CPT NUMBER: 13

DATE: 07-24-2001

ELEVATION: 0.00

CONE NUMBER: F7.5CKEW1201

PLATE: 1 OF 2

FUGRO GEOSCIENCES,INC

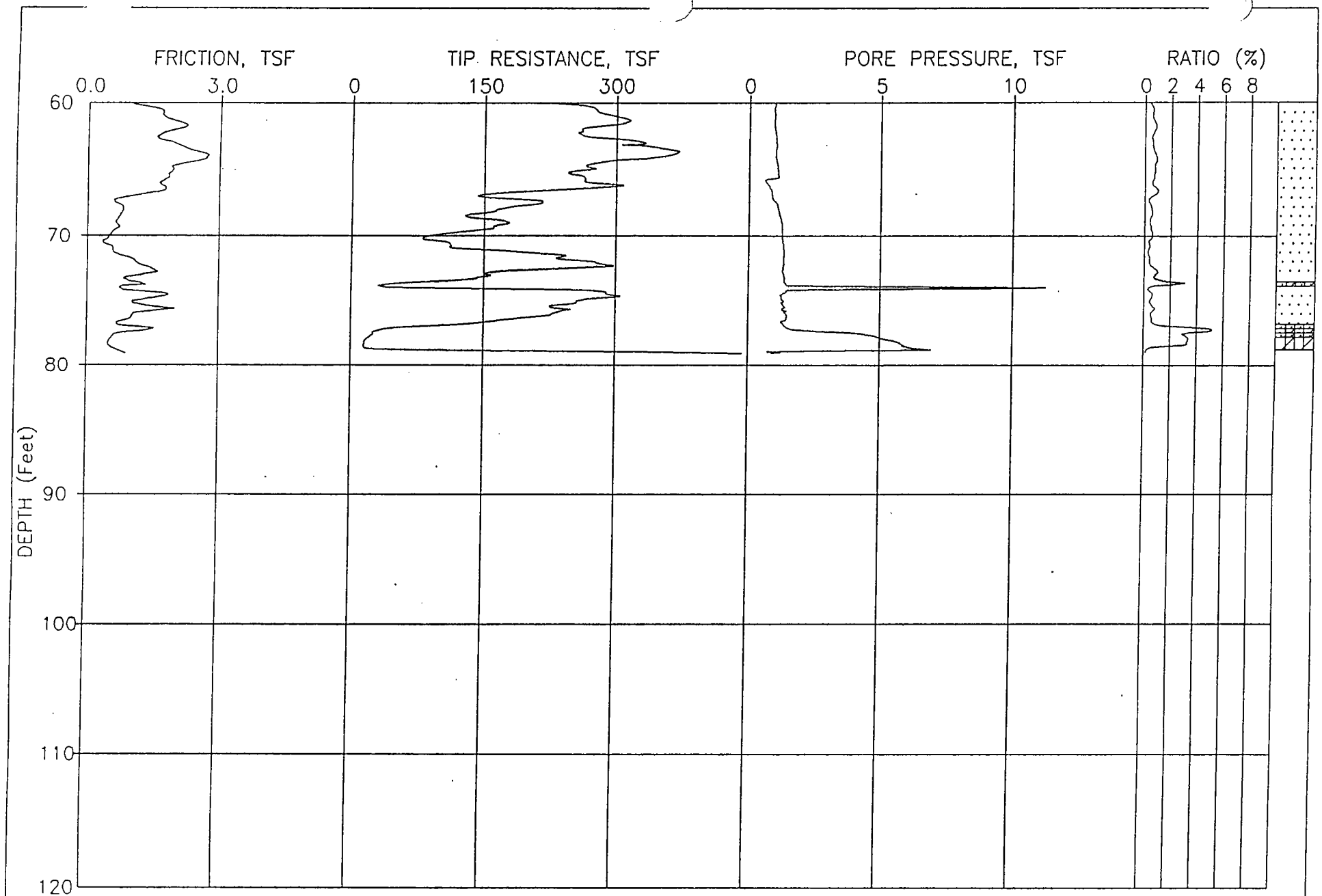

JOB NUMBER: 0305-0489

CPT NUMBER: 13

DATE: 07-24-2001

ELEVATION: 0.00

CONE NUMBER: F7.5CKEW1201

PLATE: 2 OF 2

FUGRO GEOSCIENCES,INC

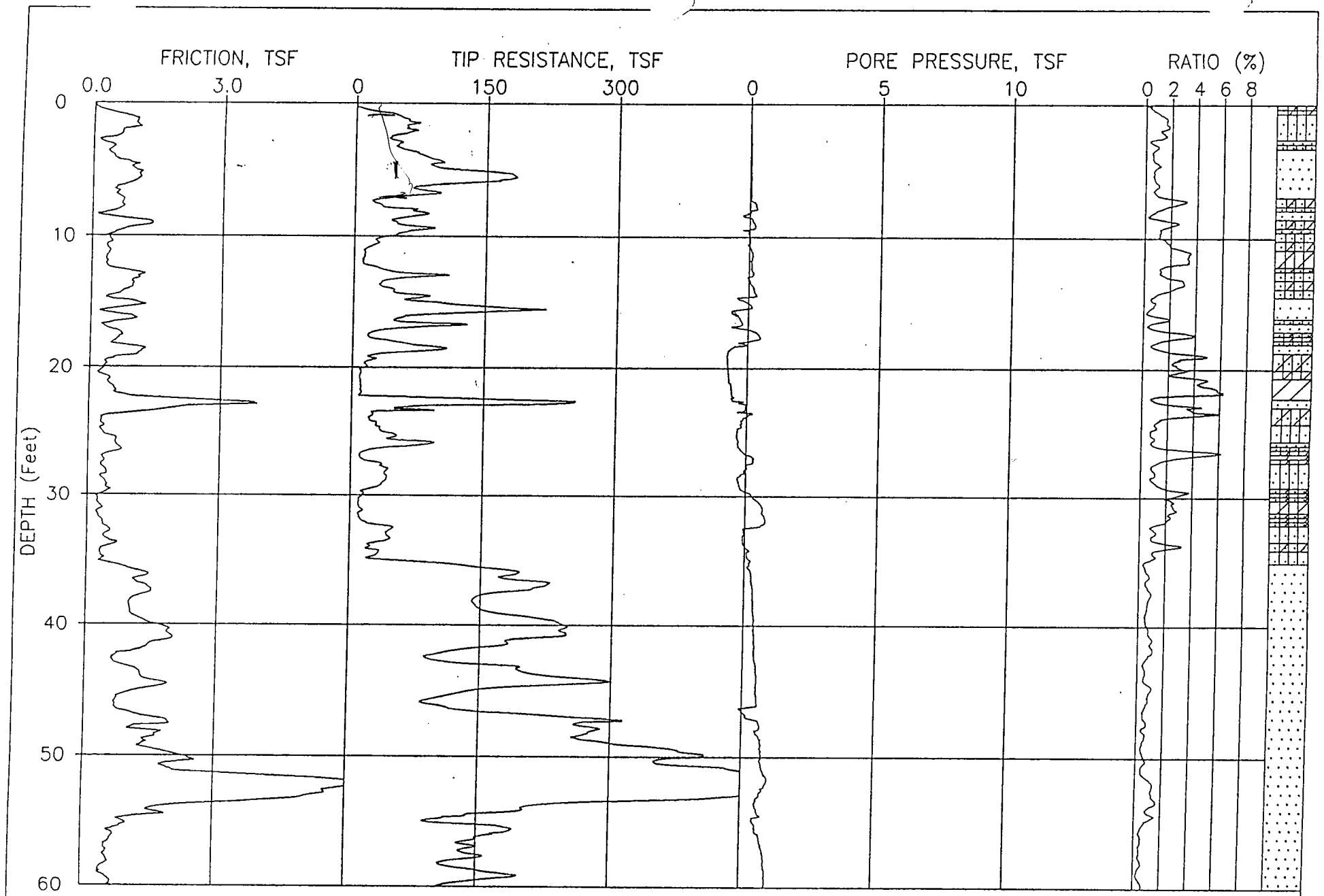

JOB NUMBER: 0305-0489

CPT NUMBER: 14

DATE: 07-24-2001

ELEVATION: 0.00

CONE NUMBER: F7.5CKEW1201

PLATE: 1 OF 2

FUGRO GEOSCIENCES,INC

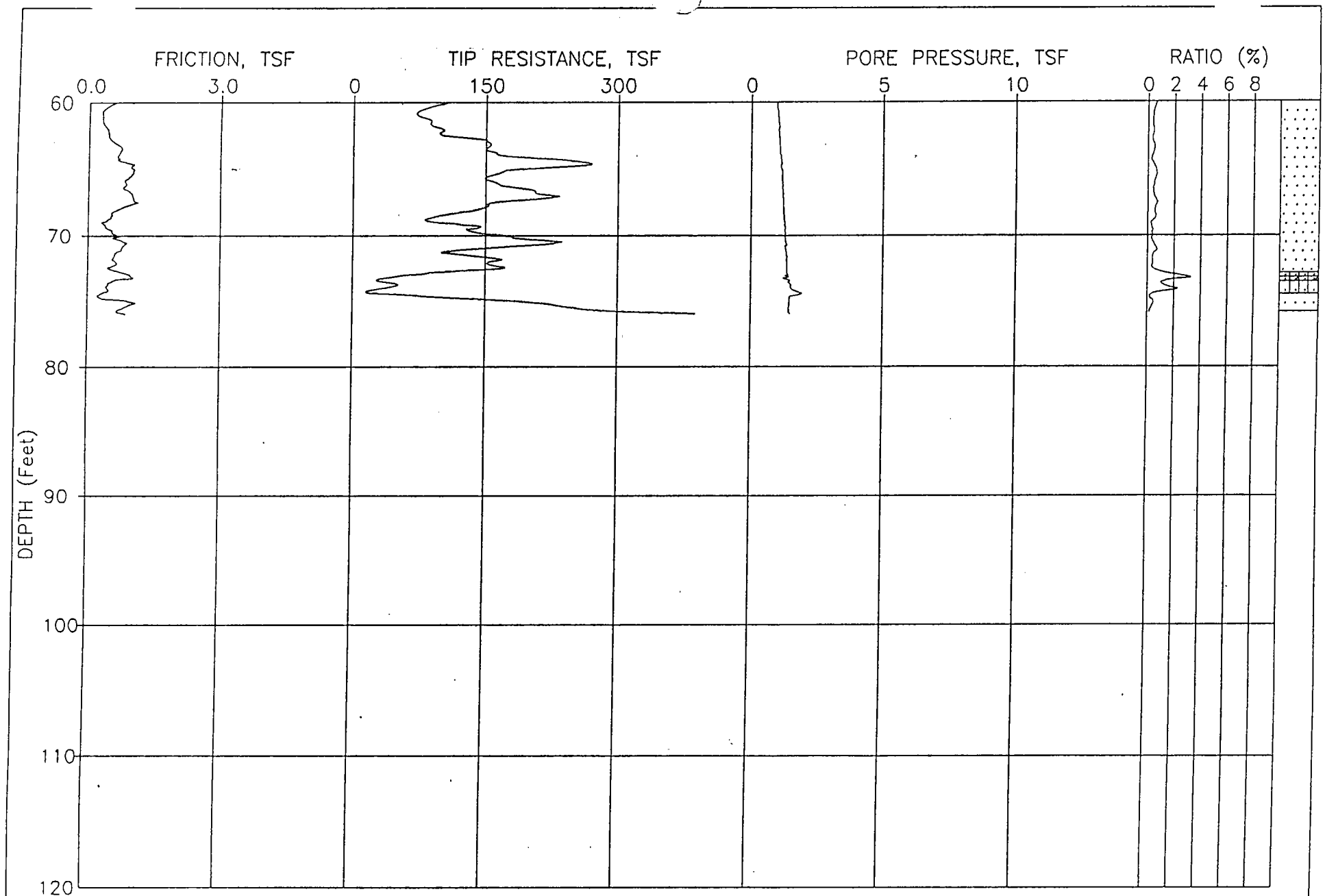

JOB NUMBER: 0305-0489

CPT NUMBER: 14

DATE: 07-24-2001

ELEVATION: 0.00

CONE NUMBER: F7.5CKEW1201

PLATE: 2 OF 2

FUGRO GEOSCIENCES,INC

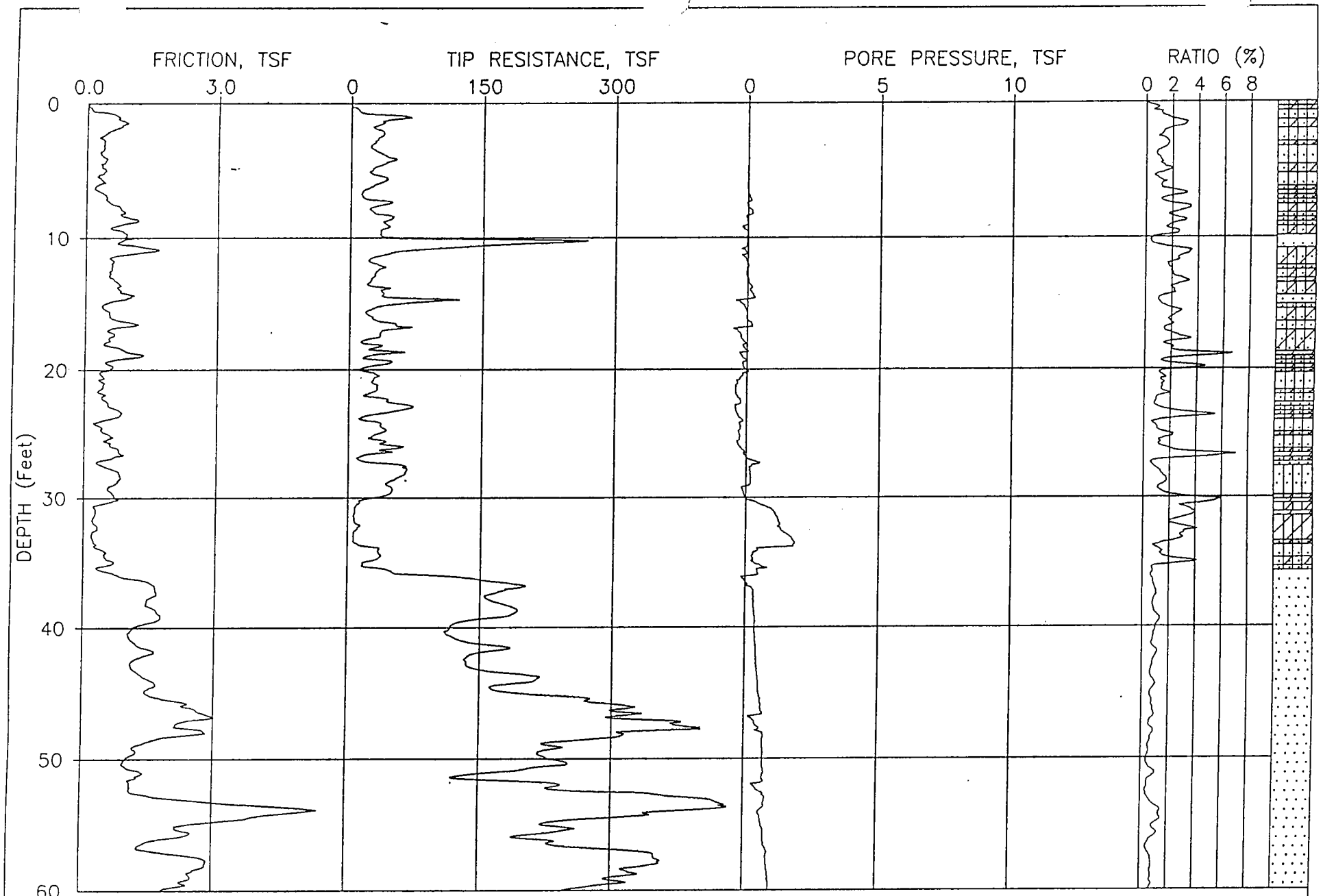

JOB NUMBER: 0305-0489

CPT NUMBER: 15

DATE: 07-26-2001

ELEVATION: 0.00

CONE NUMBER: F7.5CKEW1201

PLATE: 1 OF 2

FUGRO GEOSCIENCES,INC

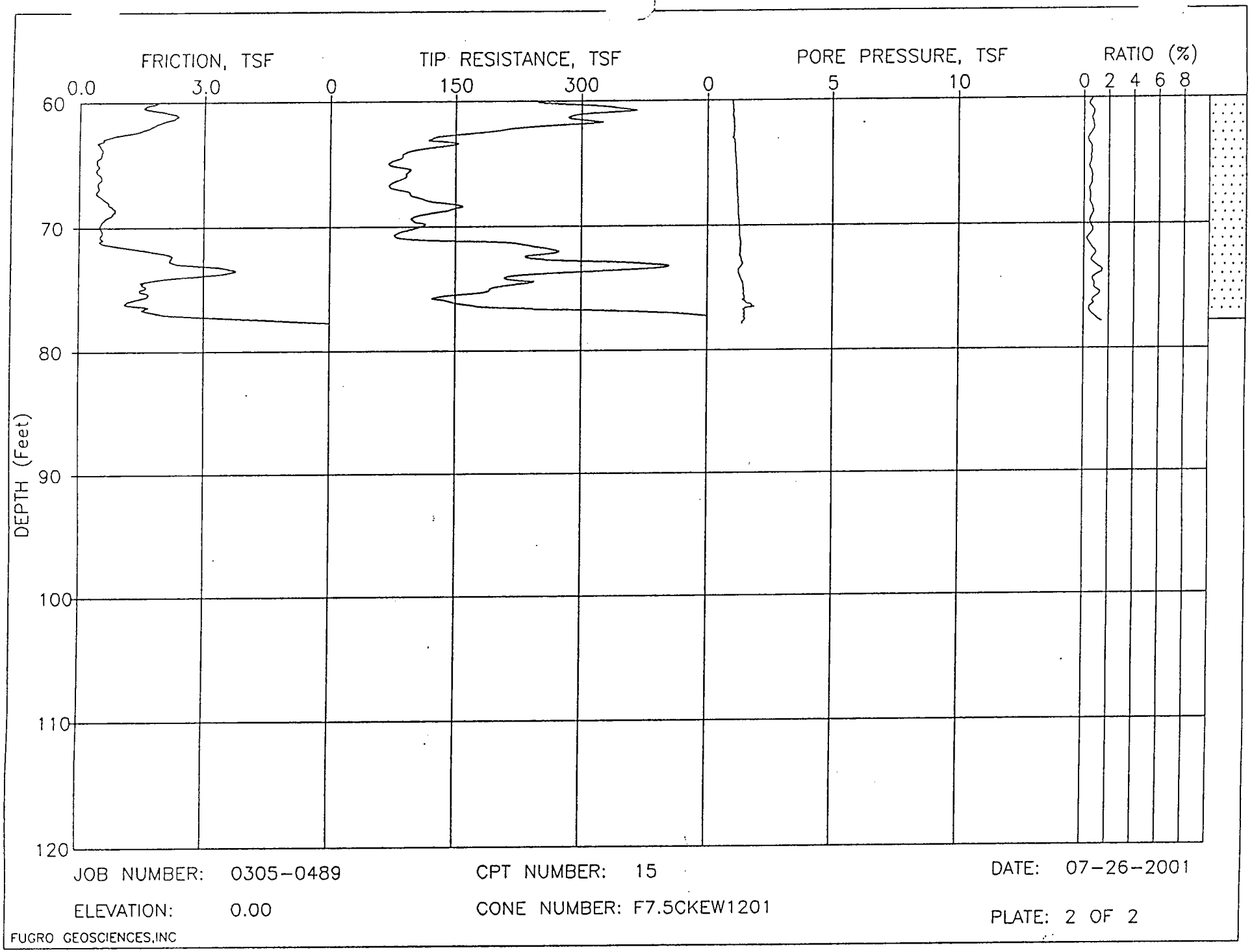

JOB NUMBER: 0305-0489

ELEVATION: 0.00

CPT NUMBER: 15

CONE NUMBER: F7.5CKEW1201

DATE: 07-26-2001

PLATE: 2 OF 2

FUGRO GEOSCIENCES,INC

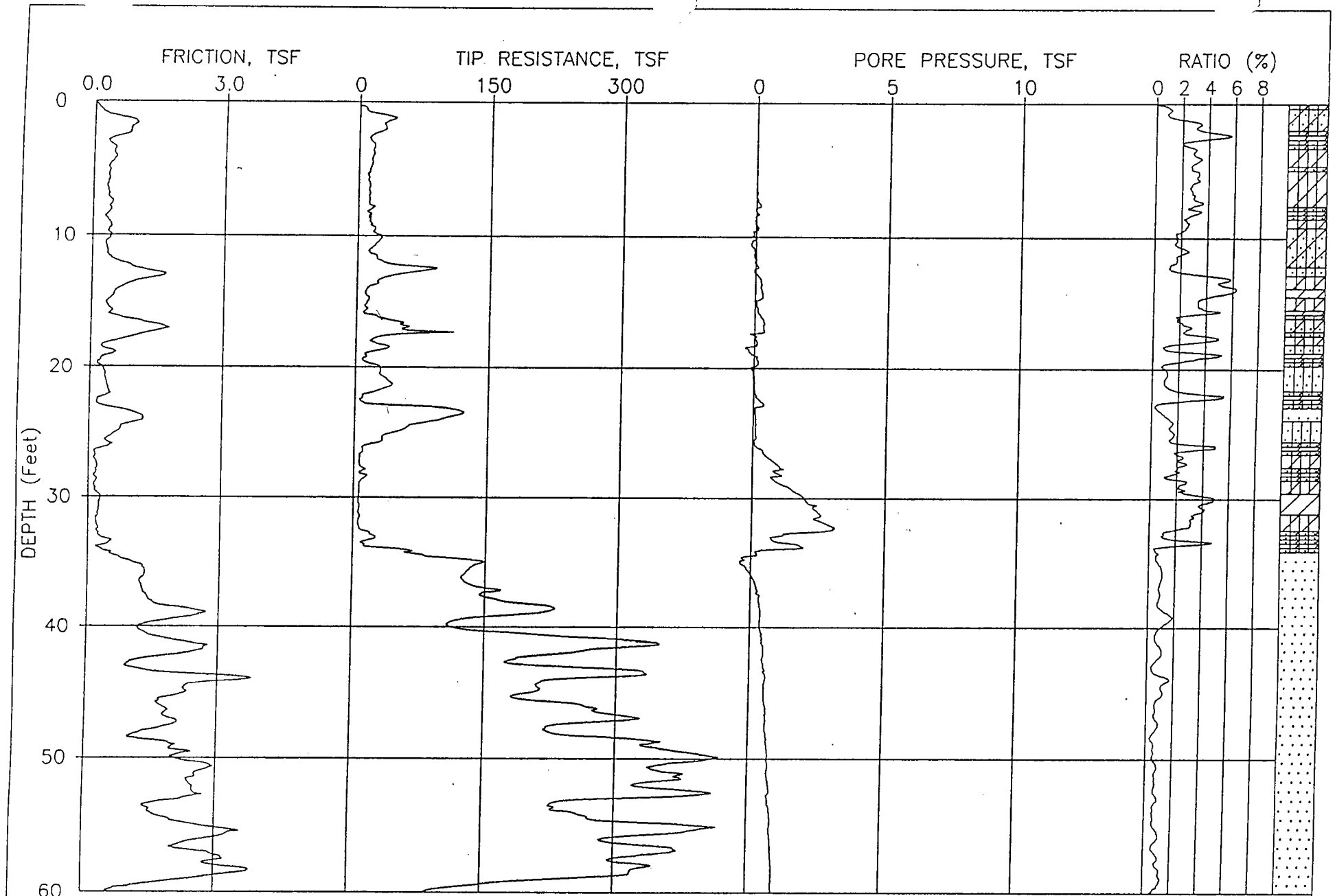

JOB NUMBER: 0305-0489

CPT NUMBER: 16

DATE: 07-26-2001

ELEVATION: 0.00

CONE NUMBER: F7.5CKEW1201

PLATE: 1 OF 2

FUGRO GEOSCIENCES,INC

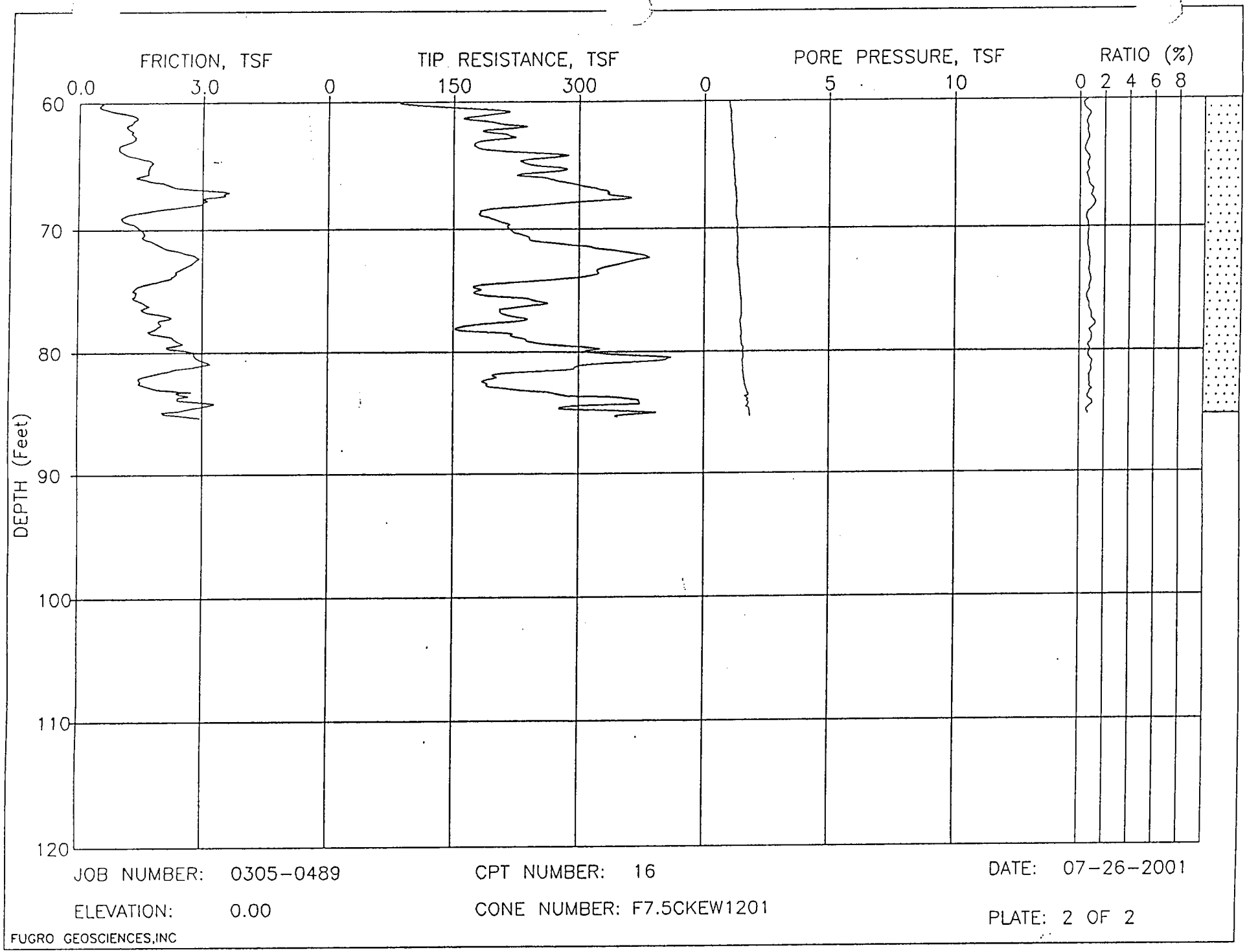

JOB NUMBER: 0305-0489

ELEVATION: 0.00

CPT NUMBER: 16

CONE NUMBER: F7.5CKEW1201

DATE: 07-26-2001

PLATE: 2 OF 2

FUGRO GEOSCIENCES,INC

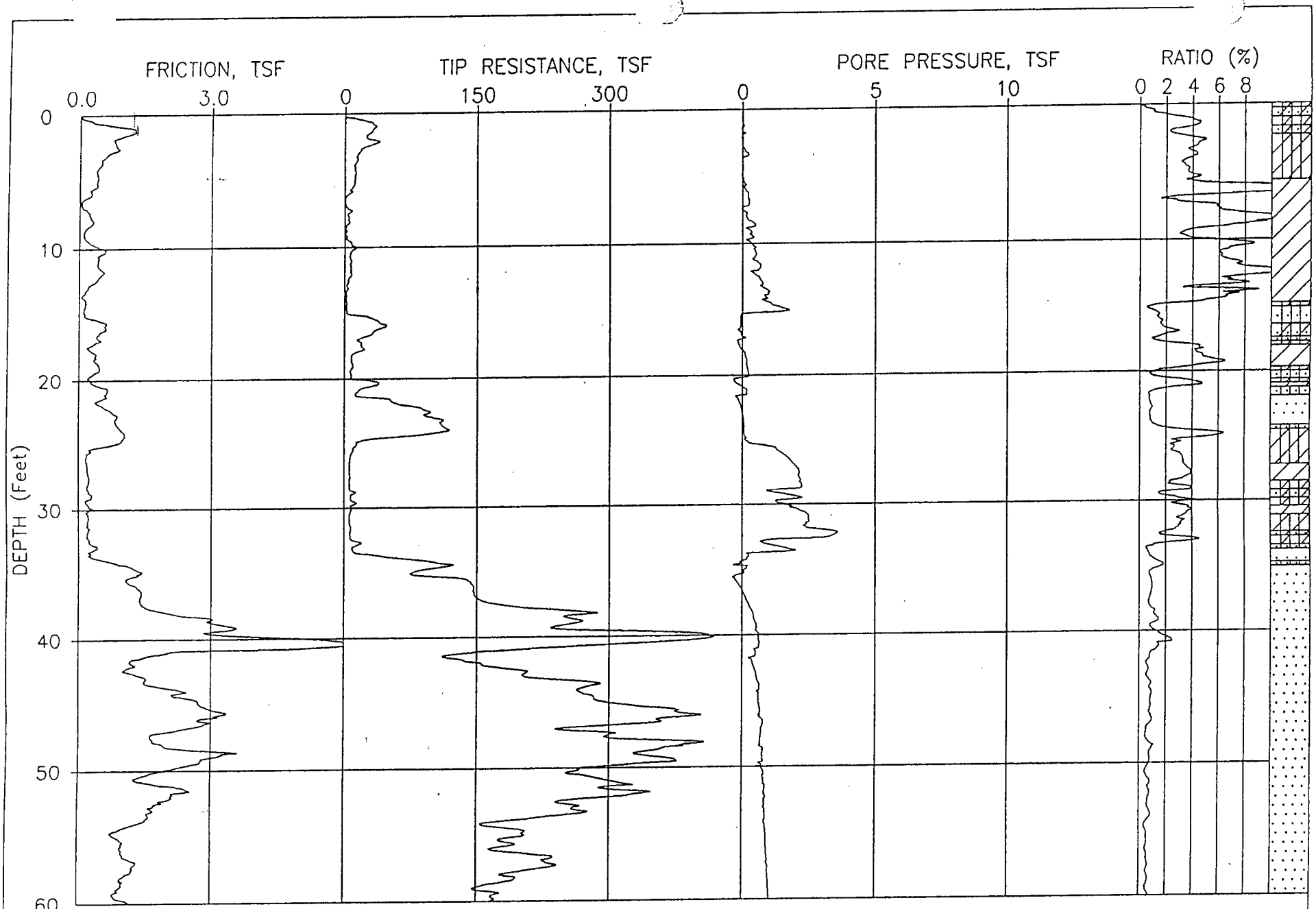

JOB NUMBER: 0305-0489

CPT NUMBER: 17

DATE: 07-26-2001

ELEVATION: 0.00

CONE NUMBER: F7.5CKEW1201

PLATE: 1 OF 2

FUGRO GEOSCIENCES,INC

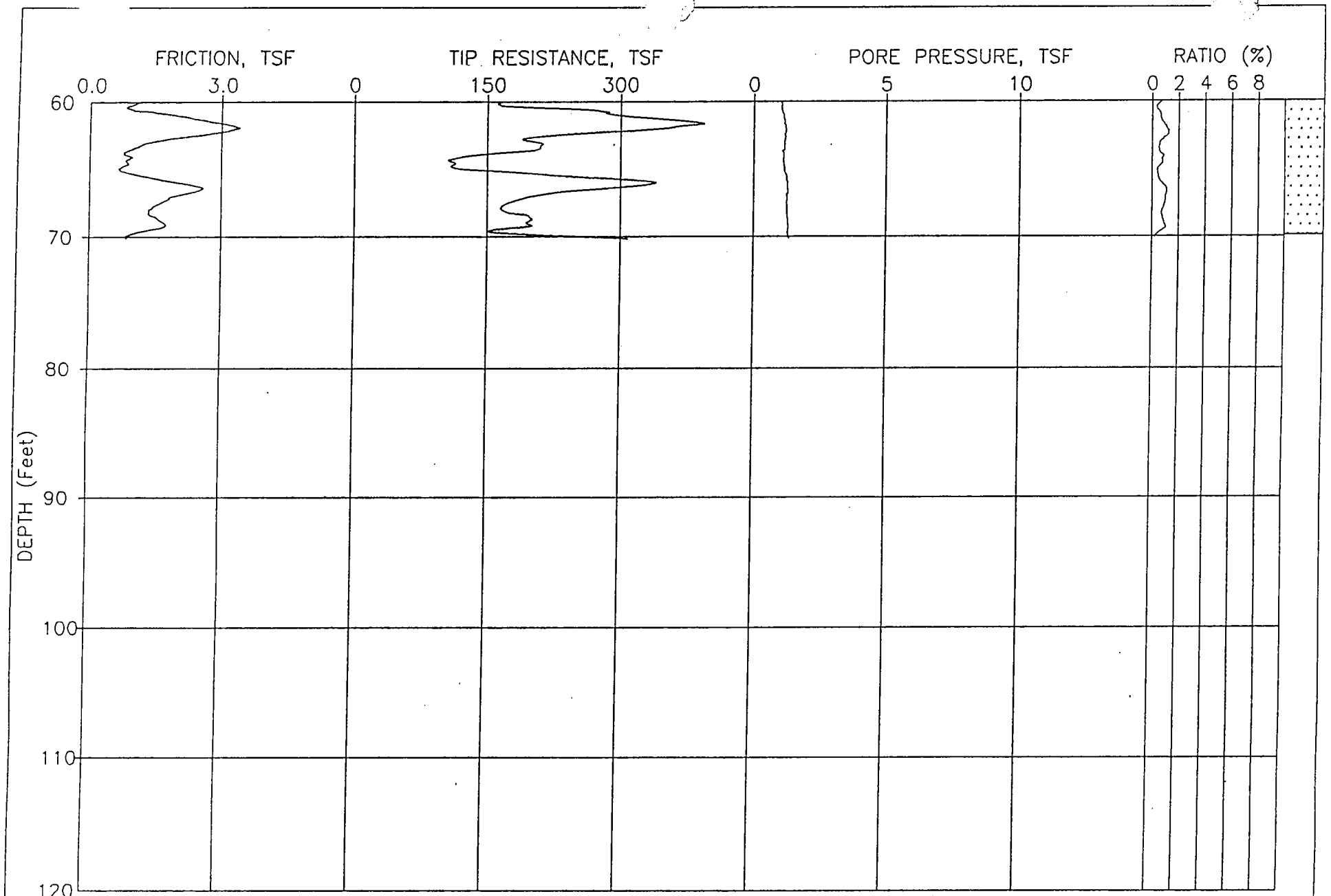

JOB NUMBER: 0305-0489 CPT NUMBER: 17 DATE: 07-26-2001

ELEVATION: 0.00 CONE NUMBER: F7.5CKEW1201 PLATE: 2 OF 2

FUGRO GEOSCIENCES,INC

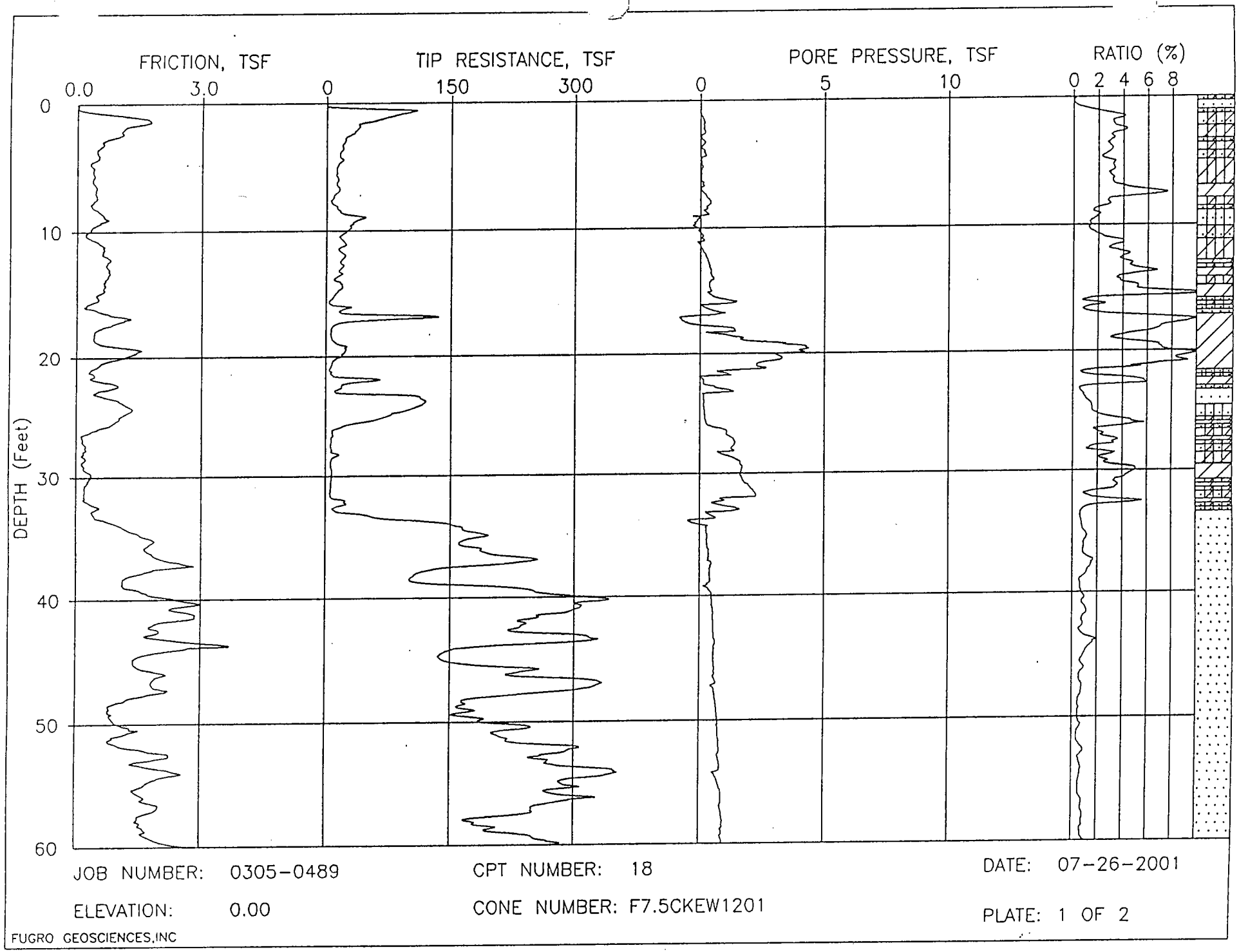

JOB NUMBER: 0305-0489

ELEVATION: 0.00

CPT NUMBER: 18

CONE NUMBER: F7.5CKEW1201

DATE: 07-26-2001

PLATE: 1 OF 2

FUGRO GEOSCIENCES,INC

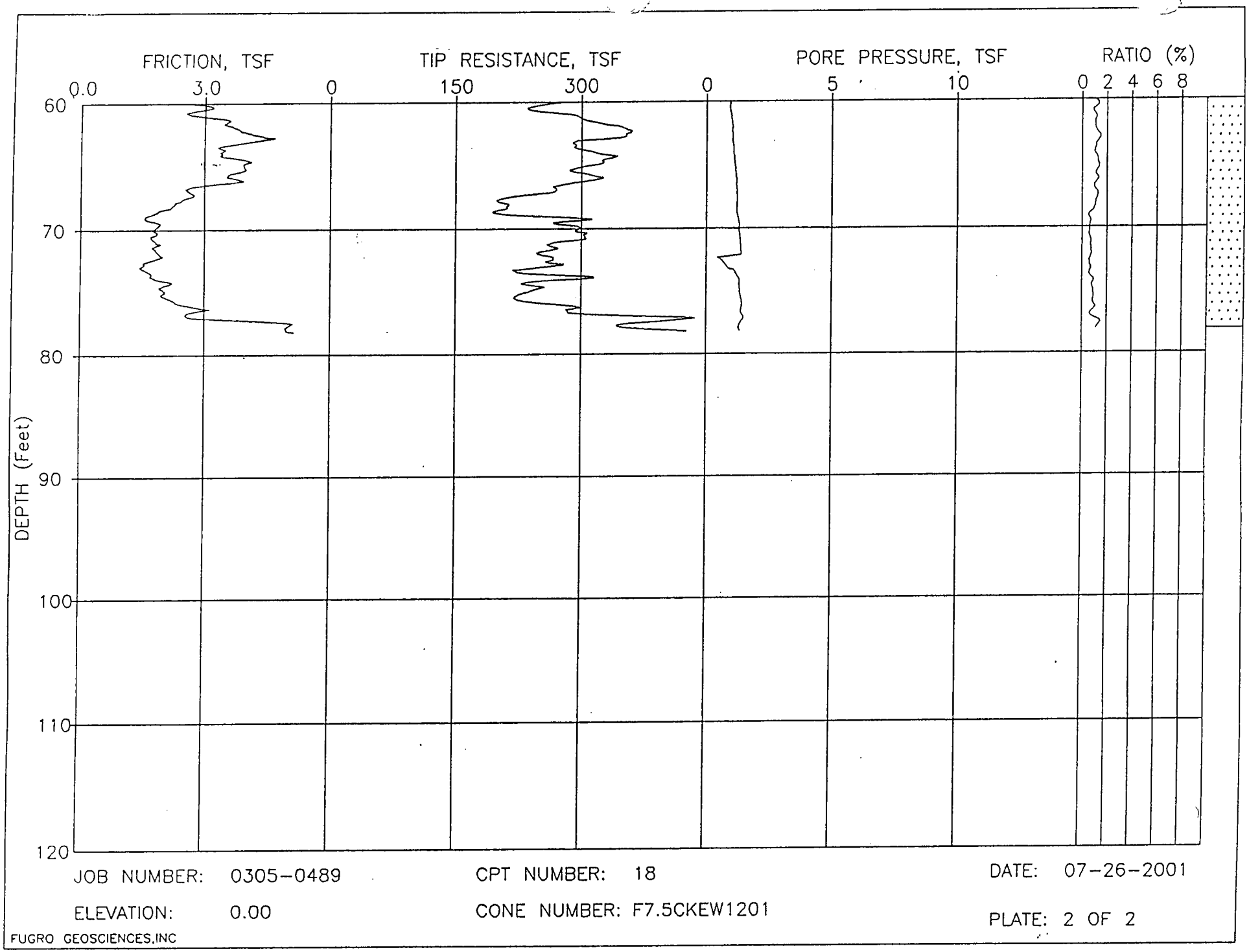

JOB NUMBER: 0305-0489

CPT NUMBER: 18

DATE: 07-26-2001

ELEVATION: 0.00

CONE NUMBER: F7.5CKEW1201

PLATE: 2 OF 2

FUGRO GEOSCIENCES,INC

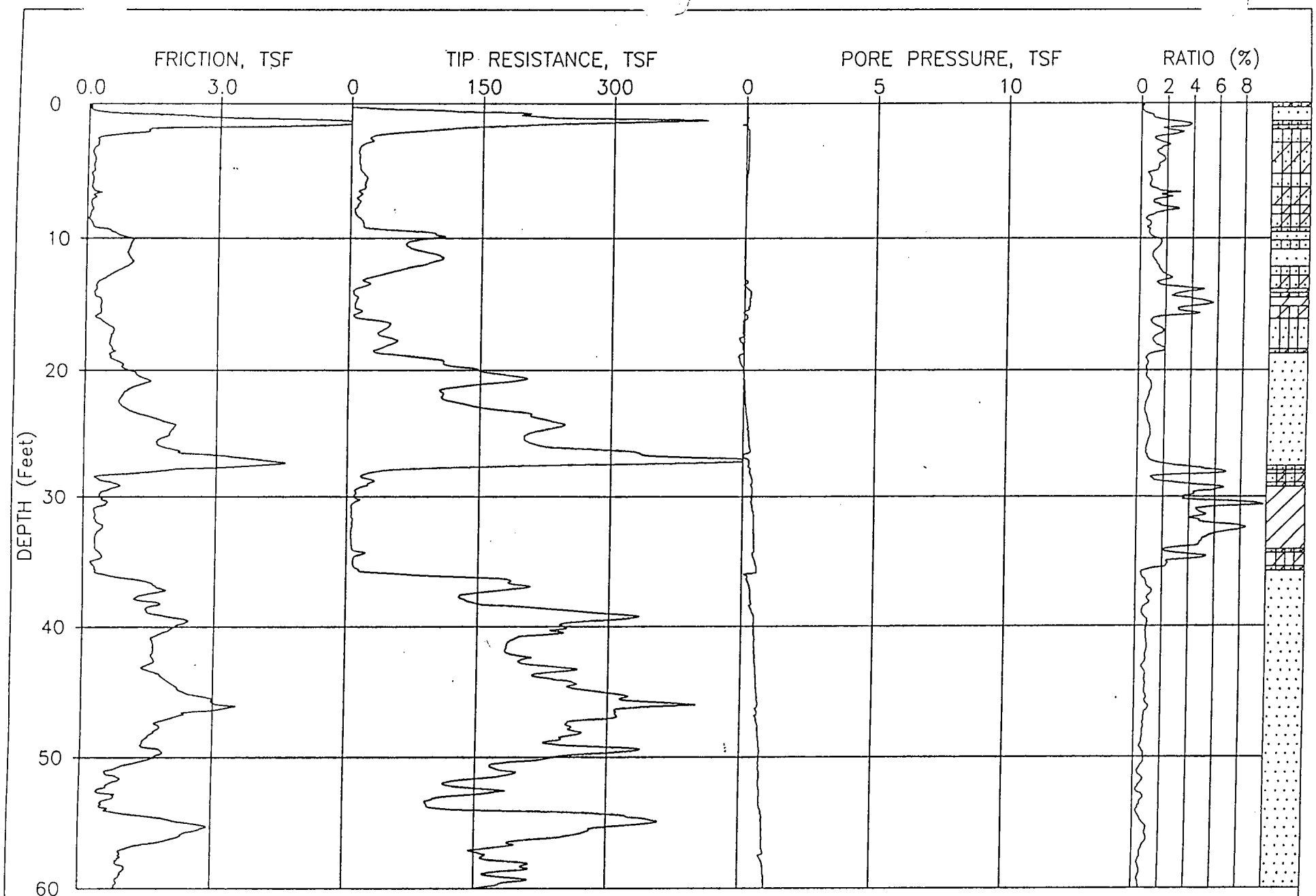

JOB NUMBER: 0305-0489

CPT NUMBER: 19

DATE: 07-26-2001

ELEVATION: 0.00

CONE NUMBER: F7.5CKEW1201

PLATE: 1 OF 2

FUGRO GEOSCIENCES,INC

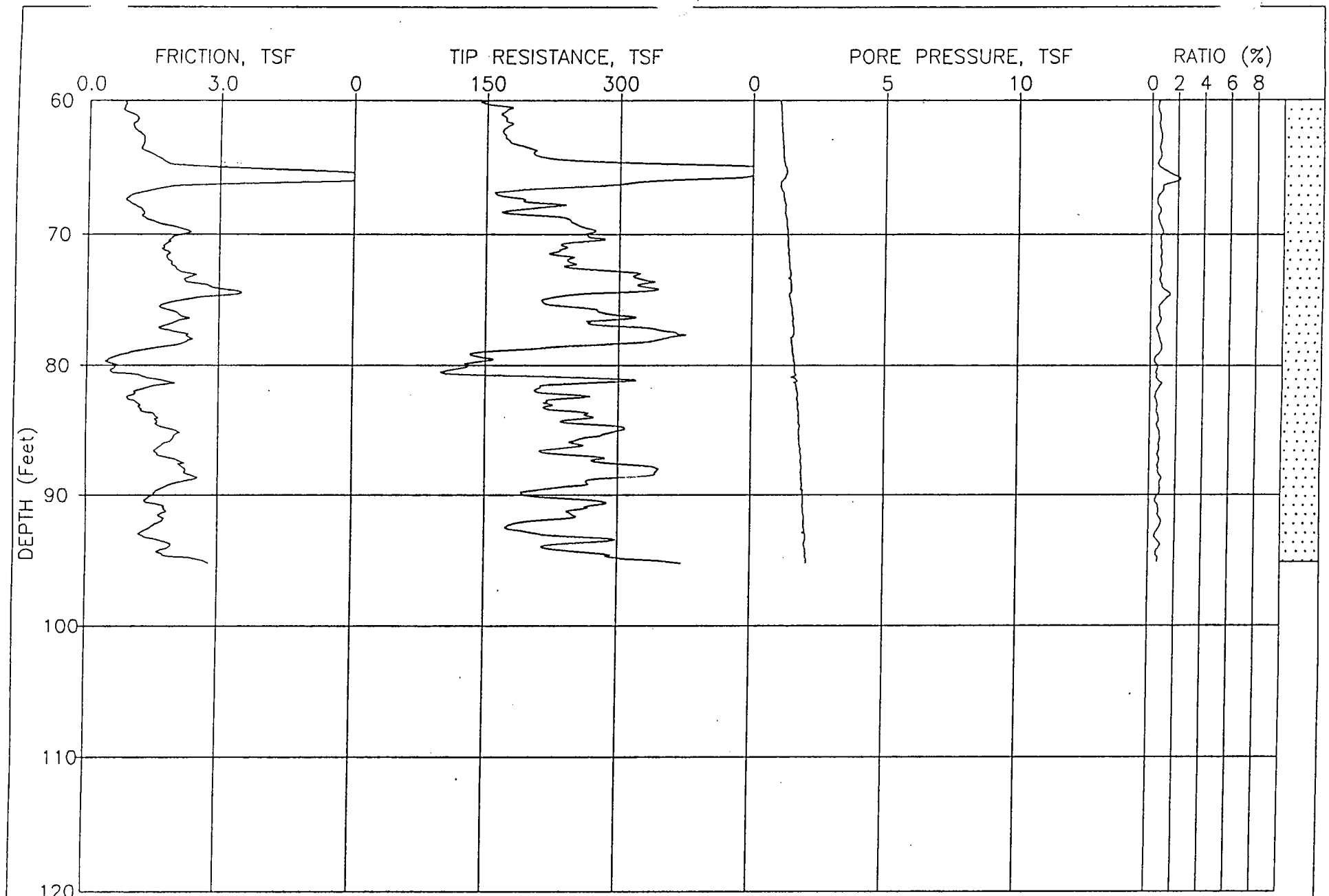

JOB NUMBER: 0305-0489

CPT NUMBER: 19

DATE: 07-26-2001

ELEVATION: 0.00

CONE NUMBER: F7.5CKEW1201

PLATE: 2 OF 2

FUGRO GEOSCIENCES,INC

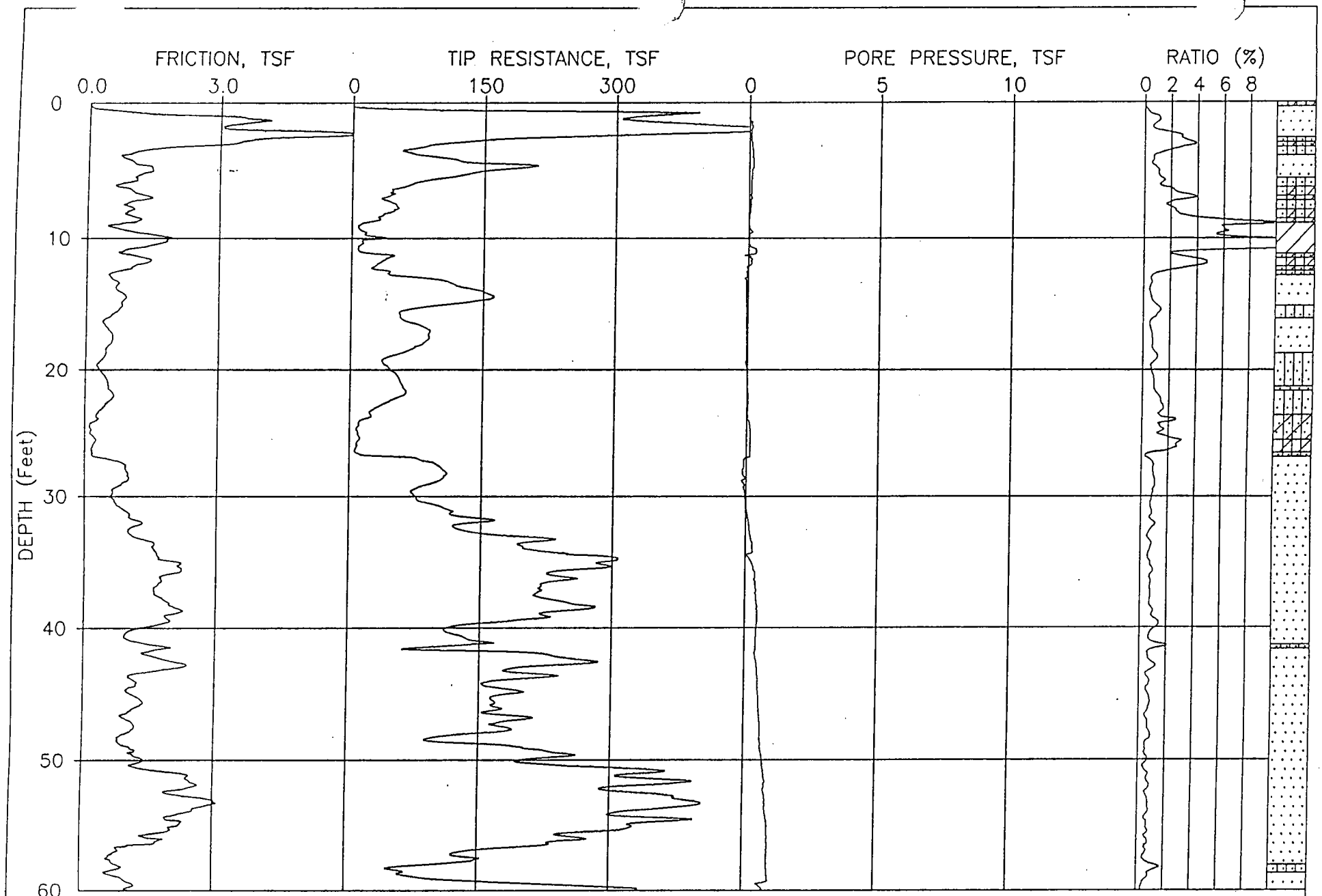

JOB NUMBER: 03050-0489

CPT NUMBER: 20

DATE: 07-26-2001

ELEVATION: 0.00

CONE NUMBER: F7.5CKEW1201

PLATE: 1 OF 2

FUGRO GEOSCIENCES,INC

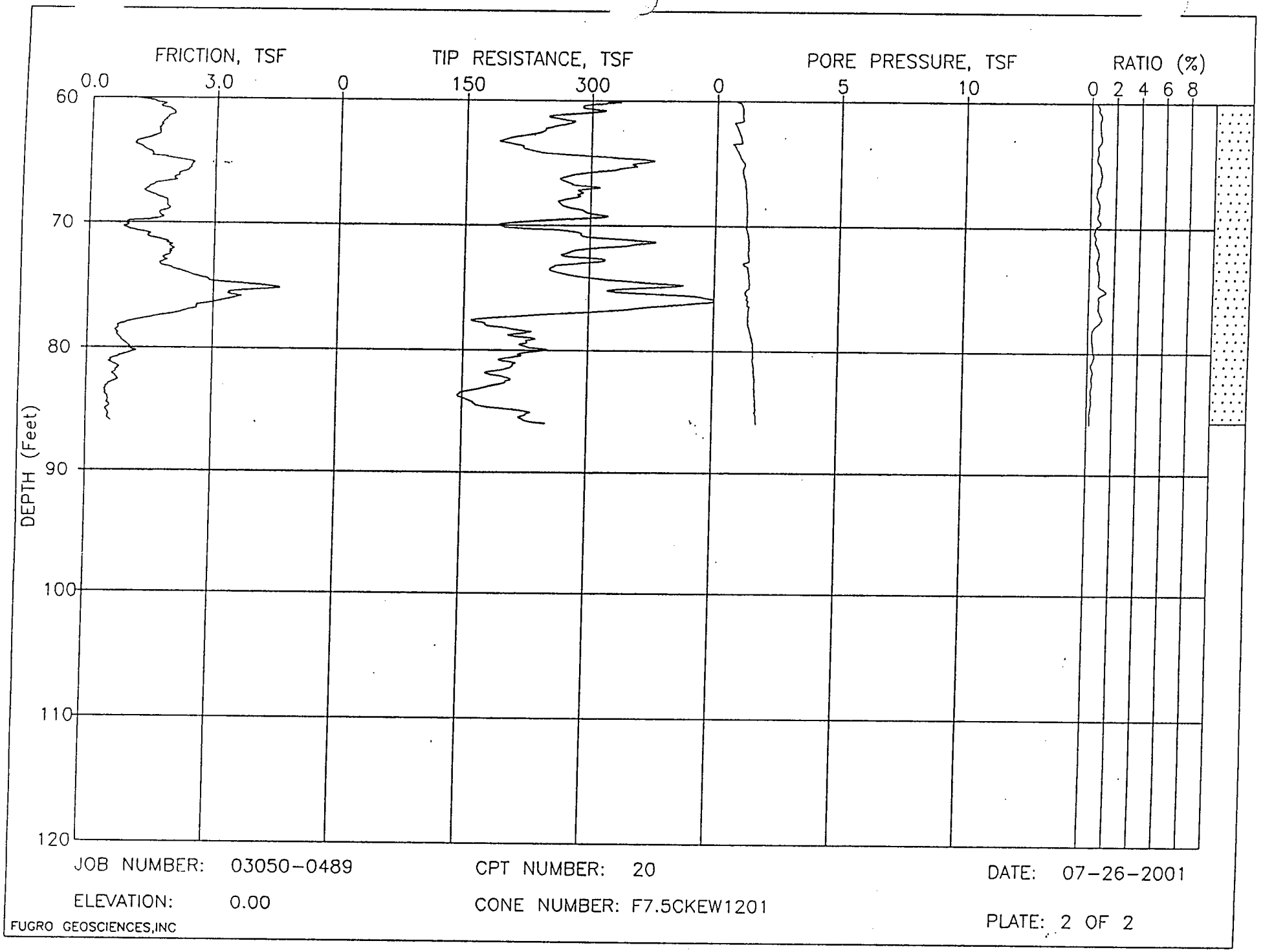

JOB NUMBER: 03050-0489

ELEVATION: 0.00

CPT NUMBER: 20

CONE NUMBER: F7.5CKEW1201

DATE: 07-26-2001

PLATE: 2 OF 2

FUGRO GEOSCIENCES,INC

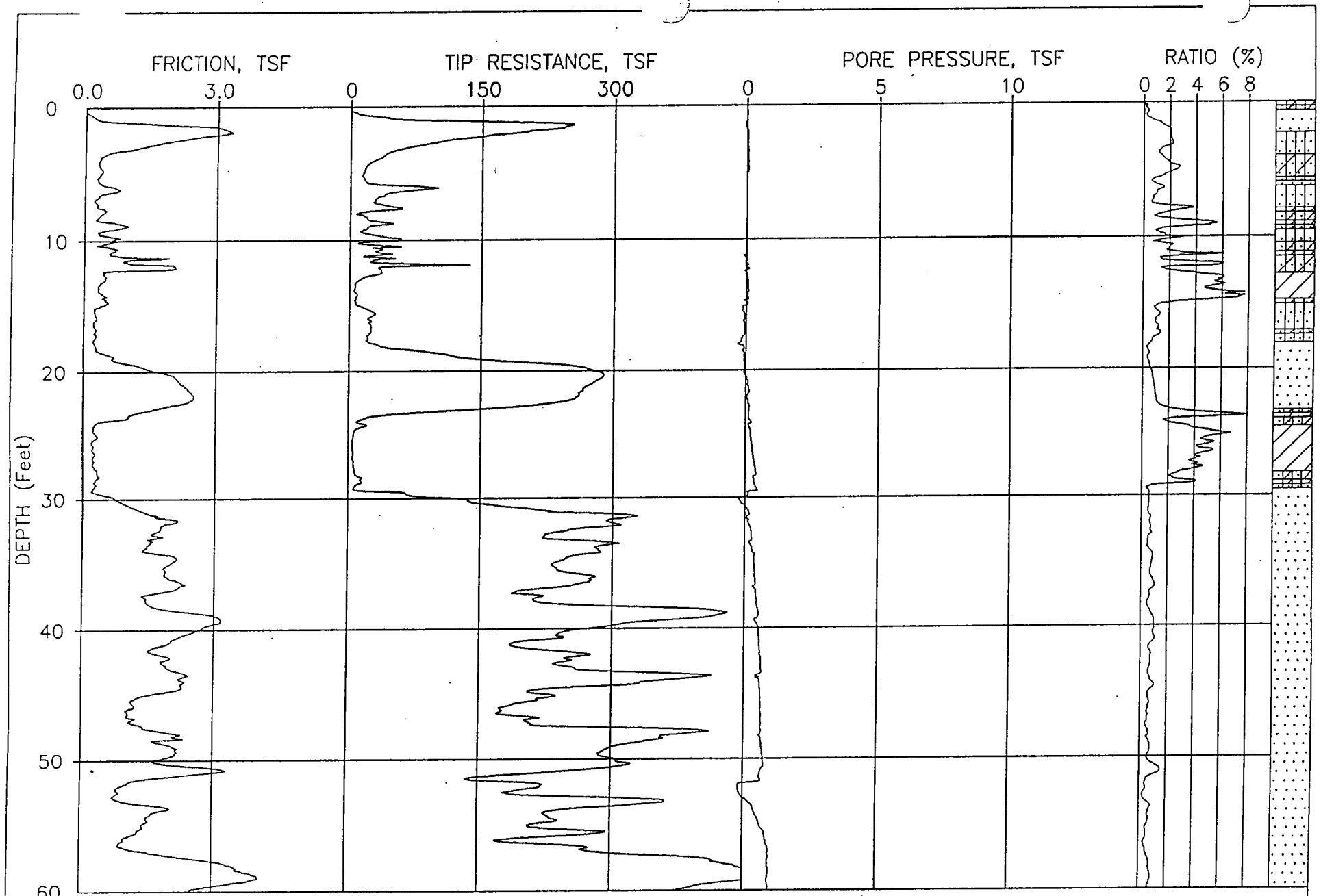

JOB NUMBER: 0305-0489

CPT NUMBER: 21

DATE: 07-26-2001

ELEVATION: 0.00

CONE NUMBER: F7.5CKEW1201

PLATE: 1 OF 2

FUGRO GEOSCIENCES,INC

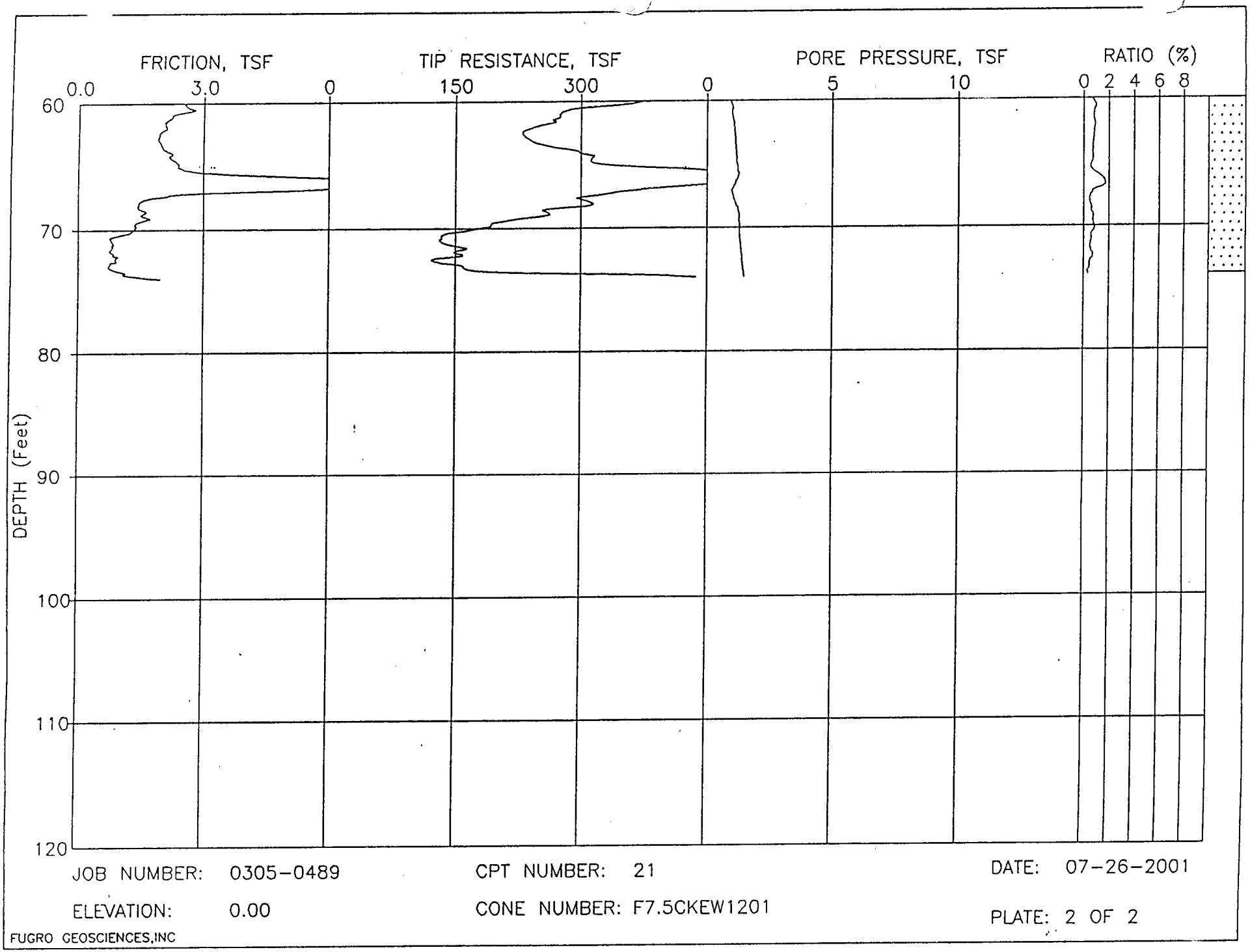

JOB NUMBER: 0305-0489

CPT NUMBER: 21

DATE: 07-26-2001

ELEVATION: 0.00

CONE NUMBER: F7.5CKEW1201

PLATE: 2 OF 2

FUGRO GEOSCIENCES,INC

LOG of BORING No. SONIC #1

DATE 5/7/02 SURFACE ELEVATION, FT 419.0 DATUM _____ LOCATION See Figure 2-05

DEPTH, ft.	SAMPLES	SAMPLING RESISTANCE	RECOVERY, %	DESCRIPTION	STRATUM EL / DEPTH	SYMBOL	PP, TSF	PID, ppm	FIELD Qu, KSF	NMC, %	LL	PI	Qu, KSF	NOTES
0			75	Concrete with base rock (FILL)	417.5		2.50	0.0						Boring advanced using 3.875" tricone bit
				Stiff, moist, brown, silty, low plasticity CLAY (CL); with some fine sand	1.5 415.0									
5				Medium stiff, moist, brown, clayey, low plasticity SILT (ML); with some fine sand	4.0		3.50							
			100				4.00	0.0						
10				Grades gray										
15														
			80					0.0						
					400.0									
				Gray, fine to medium SAND (SP)	19.0 399.0									
20				Wet, sandy, non-plastic SILT (ML)	20.0									

Completion Depth: 148.0 Ft.
Project No.: 21561192
Project Name: Solutia Barrier Wall
Drilling Contractor: Prosonic

Water Depth: _____ ft., After _____ hrs.
_____ ft., After _____ hrs.
_____ ft., After _____ hrs.
Logged by: S. Shroff

12/4/02 WCCXS 21561192.GPJ

URS

LOG of BORING No. SONIC #1

DATE 5/7/02 SURFACE ELEVATION, FT 419.0 DATUM _____ LOCATION See Figure 2-05

DEPTH, ft.	SAMPLES	SAMPLING RESISTANCE	RECOVERY, %	DESCRIPTION	STRATUM EL / DEPTH	SYMBOL	PP, TSF	PID, ppm	FIELD Qu, KSF	NMC, %	LL	PI	Qu, KSF	NOTES
25				Wet, gray, fine, silty SAND (SM)	394.0 25.0									
			70					0.0						
					389.0									
30				Wet, gray, fine to medium SAND (SP)	30.0									Slight odor
35														
			100					0.0						
40														
45														
			70					0.0						

Completion Depth: 148.0 Ft.
Project No.: 21561192
Project Name: Solutia Barrier Wall
Drilling Contractor: Prosonic

Water Depth: _____ ft., After _____ hrs.
_____ ft., After _____ hrs.
_____ ft., After _____ hrs.
Logged by: S. Shroff

URS

LOG of BORING No. SONIC #1

DATE 5/7/02 SURFACE ELEVATION, FT 419.0 DATUM _____ LOCATION See Figure 2-05

DEPTH, ft.	SAMPLES	SAMPLING RESISTANCE	RECOVERY, %	DESCRIPTION	STRATUM EL / DEPTH	SYMBOL	PP, TSF	PID, ppm	FIELD Qu, KSF	NMC, %	LL	PI	Qu, KSF	NOTES
50				SAME AS ABOVE: Wet, gray, fine to medium SAND (SP)										
55			100					0.0						
60				Grades some gravel										
65			100					0.0						
70														

Completion Depth: 148.0 Ft.
Project No.: 21561192
Project Name: Solutia Barrier Wall
Drilling Contractor: Prosonic

Water Depth: _____ ft., After _____ hrs.
_____ ft., After _____ hrs.
_____ ft., After _____ hrs.
Logged by: S. Shroff

URS

LOG of BORING No. SONIC #1

DATE 5/7/02 SURFACE ELEVATION, FT 419.0 DATUM _____ LOCATION See Figure 2-05

DEPTH, ft.	SAMPLES	SAMPLING RESISTANCE	RECOVERY, %	DESCRIPTION	STRATUM EL / DEPTH	SYMBOL	PP, TSF	PID, ppm	FIELD Qu, KSF	NMC, %	LL	PI	Qu, KSF	NOTES
75				SAME AS ABOVE: Wet, gray, fine to medium SAND (SM)										
			90					0.0						
80				Gravel grades out										
			80					0.0						
90														
95				Grades some gravel										
			100					0.0						

Completion Depth: 148.0 Ft.
Project No.: 21561192
Project Name: Solutia Barrier Wall
Drilling Contractor: Prosonic

Water Depth: _____ ft., After _____ hrs.
_____ ft., After _____ hrs.
_____ ft., After _____ hrs.
Logged by: S. Shroff

URS

LOG of BORING No. SONIC #1

DATE 5/7/02 SURFACE ELEVATION, FT 419.0 DATUM _____ LOCATION See Figure 2-05

DEPTH, ft.	SAMPLES	SAMPLING RESISTANCE	RECOVERY, %	DESCRIPTION	STRATUM EL / DEPTH	SYMBOL	PP, TSF	PID, ppm	FIELD Qu, KSF	NMC, %	LL	PI	Qu, KSF	NOTES
100				SAME AS ABOVE: Wet, gray, fine to medium SAND (SP); with some gravel										
105														
			100					0.0						
110														
115														
			100					0.0						
120				Becoming brown, fine to coarse sand with gravel										

Completion Depth: 148.0 Ft.
Project No.: 21561192
Project Name: Solutia Barrier Wall
Drilling Contractor: Prosonic

Water Depth: _____ ft., After _____ hrs.
_____ ft., After _____ hrs.
_____ ft., After _____ hrs.
Logged by: S. Shroff

URS

LOG of BORING No. SONIC #1

DATE 5/7/02 SURFACE ELEVATION, FT 419.0 DATUM _____ LOCATION See Figure 2-05

DEPTH, ft.	SAMPLES	SAMPLING RESISTANCE	RECOVERY, %	DESCRIPTION	STRATUM EL / DEPTH	SYMBOL	PP, TSF	PID, ppm	FIELD Qu, KSF	NMC, %	LL	PI	Qu, KSF	NOTES
125				SAME AS ABOVE: Wet, brown, fine to coarse SAND (SW); with some gravel										
			100					0.0						
130														
135														
			100					0.0						
					279.5									
140				Gravel and cobbles	139.5									
					278.5									
				Wet, gray, fine, Silty SAND (SM)	140.5									
					277.0									
			100	Fractured LIMESTONE	142.0			0.0						Driller stated "something hard" at 142' bgs
			100					0.0						
145														
					271.0									
				Bottom of boring @ 148'	148.0									

Completion Depth: 148.0 Ft.
Project No.: 21561192
Project Name: Solutia Barrier Wall
Drilling Contractor: Prosonic

Water Depth: _____ ft., After _____ hrs.
_____ ft., After _____ hrs.
_____ ft., After _____ hrs.
Logged by: S. Shroff

12/4/02 WCCXS 21561192.GPJ

URS

Figure No.

LOG of BORING No. SONIC #2

Sheet 1 of 6

DATE 5/6/02 SURFACE ELEVATION, FT 423.0 DATUM _____ LOCATION See Figure 2-05

DEPTH, ft.	SAMPLES	SAMPLING RESISTANCE	RECOVERY, %	DESCRIPTION	STRATUM EL / DEPTH	SYMBOL	PP, TSF	PID, ppm	FIELD Qu, KSF	NMC, %	LL	PI	Qu, KSF	NOTES
0			89	Concrete with base rock (FILL)	421.5			0.0						Boring advanced using 3.875" tricone bit
				Medium stiff, moist, brown, clayey SILT (ML)	1.5									
				Becoming gray, sandy										
5														
			56					0.0						
10														
														Very soft, steel advanced by self weight
15														
20														
			100	Becoming wet, very soft			<0.5	0.0						

Completion Depth: 148.0 Ft.
Project No.: 21561192
Project Name: Solutia Barrier Wall
Drilling Contractor: Prosonic

Water Depth: _____ ft., After _____ hrs.
_____ ft., After _____ hrs.
_____ ft., After _____ hrs.
Logged by: S. Shroff

12/4/02 WCCXS 21561192.GPJ

URS

LOG of BORING No. SONIC #2

DATE 5/6/02 SURFACE ELEVATION, FT 423.0 DATUM _____ LOCATION See Figure 2-05

DEPTH, ft.	SAMPLES	SAMPLING RESISTANCE	RECOVERY, %	DESCRIPTION	STRATUM EL / DEPTH	SYMBOL	PP, TSF	PID, ppm	FIELD Qu, KSF	NMC, %	LL	PI	Qu, KSF	NOTES
25			80	Becomes moist, gray, Clayey SILT (ML)			<0.5	0.0						
30														
35														
			90				<0.5	0.0						
40														
45				Grades with sand			0.50	0.0						An odor was observed
					377.0									
				Wet, dark gray, fine to medium SAND (SP)	46.0									
			90					0.0						

Completion Depth: 148.0 Ft.
Project No.: 21561192
Project Name: Solutia Barrier Wall
Drilling Contractor: Prosonic

Water Depth: _____ ft., After _____ hrs.
_____ ft., After _____ hrs.
_____ ft., After _____ hrs.
Logged by: S. Shroff

URS

LOG of BORING No. SONIC #2

DATE 5/6/02 SURFACE ELEVATION, FT 423.0 DATUM _____ LOCATION See Figure 2-05

DEPTH, ft.	SAMPLES	SAMPLING RESISTANCE	RECOVERY, %	DESCRIPTION	STRATUM EL / DEPTH	SYMBOL	PP, TSF	PID, ppm	FIELD Qu, KSF	NMC, %	LL	PI	Qu, KSF	NOTES
50				SAME AS ABOVE: Wet, dark gray, fine to medium SAND (SP)										
55			100	Becoming fine to coarse SAND (SW); with trace fine gravel				0.0						
60														
65			50					0.0						
70					352.0									
				Gray, fine to medium SAND (SP); with an odor	71.0 351.0									
				Gray, fine to coarse SAND (SW); with trace fine gravel	72.0									

Completion Depth: 148.0 Ft.
Project No.: 21561192
Project Name: Solutia Barrier Wall
Drilling Contractor: Prosonic

Water Depth: _____ ft., After _____ hrs.
_____ ft., After _____ hrs.
_____ ft., After _____ hrs.
Logged by: S. Shroff

URS

LOG of BORING No. SONIC #2

DATE 5/6/02 SURFACE ELEVATION, FT 423.0 DATUM _____ LOCATION See Figure 2-05

DEPTH, ft.	SAMPLES	SAMPLING RESISTANCE	RECOVERY, %	DESCRIPTION	STRATUM EL / DEPTH	SYMBOL	PP, TSF	PID, ppm	FIELD Qu, KSF	NMC, %	LL	PI	Qu, KSF	NOTES
75				SAME AS ABOVE: Gray, fine to coarse SAND (SW); with trace fine gravel										
			100					0.0						
80														
85														
			100					0.0						
90														
95														
			100					0.0						

Completion Depth: 148.0 Ft. Water Depth: _____ ft., After _____ hrs.

Project No.: 21561192 _____ ft., After _____ hrs.

Project Name: Solutia Barrier Wall _____ ft., After _____ hrs.

Drilling Contractor: Prosonic Logged by: S. Shroff

12/4/02 WCCXS 21561192.GPJ

URS

LOG of BORING No. SONIC #2

DATE 5/6/02 SURFACE ELEVATION, FT 423.0 DATUM _____ LOCATION See Figure 2-05

DEPTH, ft.	SAMPLES	SAMPLING RESISTANCE	RECOVERY, %	DESCRIPTION	STRATUM EL / DEPTH	SYMBOL	PP, TSF	PID, ppm	FIELD Qu, KSF	NMC, %	LL	PI	Qu, KSF	NOTES
100				SAME AS ABOVE: Gray, fine to coarse SAND (SW); with trace fine gravel										
105														
			100					0.0						
110														
					308.5									
				Fine to coarse GRAVEL (GP)	114.5									
115				Very stiff, moist, gray, high plasticity CLAY (CH); with some fine gravel	308.0 / 115.0		3.00							
			70					0.0						
120														

Completion Depth: 148.0 Ft.
Project No.: 21561192
Project Name: Solutia Barrier Wall
Drilling Contractor: Prosonic

Water Depth: _____ ft., After _____ hrs.
_____ ft., After _____ hrs.
_____ ft., After _____ hrs.
Logged by: S. Shroff

URS

LOG of BORING No. SONIC #2

DATE 5/6/02 SURFACE ELEVATION, FT 423.0 DATUM _____ LOCATION See Figure 2-05

DEPTH, ft.	SAMPLES	SAMPLING RESISTANCE	RECOVERY, %	DESCRIPTION	STRATUM EL / DEPTH	SYMBOL	PP, TSF	PID, ppm	FIELD Qu, KSF	NMC, %	LL	PI	Qu, KSF	NOTES
125				Gravel and cobbles	298.0 125.0									
			70					0.0						
130					292.5									
				Very stiff, moist, gray, high plasticity CLAY (CH); with sand and gravel	130.5									
							3.50 2.50							
135				Grades more gravel										
			100											
140					281.5									
				Weathered LIMESTONE	141.5									
					279.0									
			75	Fractured LIMESTONE	144.0									
145														
					275.0									
				Bottom of boring @ 148'	148.0									

Completion Depth: 148.0 Ft.
Project No.: 21561192
Project Name: Solutia Barrier Wall
Drilling Contractor: Prosonic

Water Depth: _____ ft., After _____ hrs.
_____ ft., After _____ hrs.
_____ ft., After _____ hrs.
Logged by: S. Shroff

12/4/02 WCCXS 21561192.GPJ

URS

Figure No.

LOG of BORING No. SONIC #3

Sheet 1 of 7

DATE 5/2/02 SURFACE ELEVATION, FT 420.0 DATUM _____ LOCATION See Figure 2-05

DEPTH, ft.	SAMPLES	SAMPLING RESISTANCE	RECOVERY, %	DESCRIPTION	STRATUM EL / DEPTH	SYMBOL	PP, TSF	PID, ppm	FIELD Qu, KSF	NMC, %	LL	PI	Qu, KSF	NOTES
0			86	Soft, moist, dark gray, low plastic SILT (ML)			0.50	0.0						Boring advanced using 3.875" tricone bit
							0.50	0.0						
				With some very fine sand										
5				With no sand										
							0.25	0.0						
			60	Becoming very soft, wet, with some very fine sand ▼	409.0									
10				Loose to medium dense, wet, gray, fine to very fine SAND (SP); with some silt	11.0									
				Silt grades out										No recovery from 13' to 17'
15					404.0									
			80	Stiff, moist, dark gray, medium plastic, silty CLAY (CL)	16.0		1.25							
20					400.0									
				Medium stiff, moist, dark gray, very fine to fine sandy SILT (ML)	20.0									
					398.0									
				Medium dense, wet, dark gray, very fine to fine SAND (SP); with some silt and some odor	22.0									

Completion Depth: 160.0 Ft. Water Depth: 7 ft., After ATD hrs.

Project No.: 21561192 _____ ft., After _____ hrs.

Project Name: Solutia Barrier Wall _____ ft., After _____ hrs.

Drilling Contractor: Prosonic Logged by: M. Felton

12/4/02 WCCXS 21561192.GPJ

URS

Figure No.

LOG of BORING No. SONIC #3

Sheet 2 of 7

DATE 5/2/02 SURFACE ELEVATION, FT 420.0 DATUM _____ LOCATION See Figure 2-05

DEPTH, ft.	SAMPLES	SAMPLING RESISTANCE	RECOVERY, %	DESCRIPTION	STRATUM EL / DEPTH	SYMBOL	PP, TSF	PID, ppm	FIELD Qu, KSF	NMC, %	LL	PI	Qu, KSF	NOTES
25					393.0									No recovery from 25' to 27'
			100	Soft, moist, brownish gray, low plastic, very silty CLAY (CL); with strong odor	27.0		0.25	0.0						
30							0.25	0.0						
							0.25	0.0						
35							0.50	0.0						
			80		382.0									
				Soft, moist, dark gray, low plastic clayey SILT (ML); with strong odor	38.0		0.50							
40				With some thin sand layers (< 0.2")				8.0						
					377.0									
				Medium dense, wet, gray, very fine to fine SAND (SP); with strong odor	43.0			30.0						
45								65.0						
								87.0						
			90					88.0						
								19.0						

Completion Depth: 160.0 Ft.
Project No.: 21561192
Project Name: Solutia Barrier Wall
Drilling Contractor: Prosonic

Water Depth: 7 ft., After ATD hrs.
_____ ft., After _____ hrs.
_____ ft., After _____ hrs.
Logged by: M. Felton

12/4/02 WCCXS 21561192.GPJ

URS

Figure No.

LOG of BORING No. SONIC #3

Sheet 3 of 7

DATE 5/2/02 SURFACE ELEVATION, FT 420.0 DATUM _____ LOCATION See Figure 2-05

DEPTH, ft.	SAMPLES	SAMPLING RESISTANCE	RECOVERY, %	DESCRIPTION	STRATUM EL / DEPTH	SYMBOL	PP, TSF	PID, ppm	FIELD Qu, KSF	NMC, %	LL	PI	Qu, KSF	NOTES
50				SAME AS ABOVE: Medium dense, wet, gray, very fine to fine SAND (SP); with strong odor				31.0						
								40.0						
55				With some coarse sand										
				With trace fine gravel and some NAPL				293.0						Note: NAPL is somewhat oily in appearance and may have a slightly phenolic odor to it. It is relatively clear in appearance.
			100											
				With no visible NAPL and trace coarse sand and fine gravel				179.0						
60								23.0						
								43.0						
				With trace medium gravel and still strong odor				48.0						
65														
								56.0						
			60					99.0						
				With no medium gravel and only a slight trace of fine gravel				10.0						
								14.0						
70														
								21.0						
								8.0						
								9.0						No recovery from 73' to 77'

Completion Depth: 160.0 Ft. Water Depth: 7 ft., After ATD hrs.

Project No.: 21561192 _____ ft., After _____ hrs.

Project Name: Solutia Barrier Wall _____ ft., After _____ hrs.

Drilling Contractor: Prosonic Logged by: M. Felton

12/4/02 WCCXS 21561192.GPJ

URS

LOG of BORING No. SONIC #3

DATE 5/2/02 SURFACE ELEVATION, FT 420.0 DATUM _____ LOCATION See Figure 2-05

DEPTH, ft.	SAMPLES	SAMPLING RESISTANCE	RECOVERY, %	DESCRIPTION	STRATUM EL / DEPTH	SYMBOL	PP, TSF	PID, ppm	FIELD Qu, KSF	NMC, %	LL	PI	Qu, KSF	NOTES
75				SAME AS ABOVE: Medium dense, wet, fine to coarse SAND (SP); with trace fine gravel and strong odor										
			100					6.0						
								8.4						
80								11.0						
								18.0						
85				6" thick sandy, fine to coarse gravel layer										
				4" thick fine to coarse sandy gravel layer				10.0						
			90					0.0						
				Becoming mostly coarse sand and fine gravel with some fine to medium sand and coarse gravel				0.0						
90														
				Grades trace coarse sand and fine gravel				0.0						
								4.0						
95								12.0						
			90	Becoming mostly coarse sand with some fine to medium sand and some fine to coarse gravel				7.0						
								4.0						

Completion Depth: 160.0 Ft.
Project No.: 21561192
Project Name: Solutia Barrier Wall
Drilling Contractor: Prosonic

Water Depth: 7 ft., After ATD hrs.
_____ ft., After _____ hrs.
_____ ft., After _____ hrs.
Logged by: M. Felton

URS

LOG of BORING No. SONIC #3

DATE 5/2/02 SURFACE ELEVATION, FT 420.0 DATUM _____ LOCATION See Figure 2-05

DEPTH, ft.	SAMPLES	SAMPLING RESISTANCE	RECOVERY, %	DESCRIPTION	STRATUM EL / DEPTH	SYMBOL	PP, TSF	PID, ppm	FIELD Qu, KSF	NMC, %	LL	PI	Qu, KSF	NOTES
100				Becomes fine to medium SAND (SP) With some silty clay				3.0 15.0						
								14.0						
105								10.0						
								12.0						No recovery from 106' to 107'
			90	Silty clay grades out				7.0						
								14.0						
110								8.0						
				With some fine to coarse gravel				11.0						
115					304.5			5.0						
				Very stiff, moist, gray, low plastic silty CLAY (CL); with some fine sand and trace fine gravel Becoming hard, with odor	115.5			0.0						
				4" thick gravelly layer - wet, coarse gravel with silty clay										
120				3" thick gravelly layer - wet, coarse				0.0						
								0.0						
					296.0			0.0						
				Medium dense, wet, gray, fine to coarse	124.0									

Completion Depth: 160.0 Ft.
Project No.: 21561192
Project Name: Solutia Barrier Wall
Drilling Contractor: Prosonic

Water Depth: 7 ft., After ATD hrs.
_____ ft., After _____ hrs.
_____ ft., After _____ hrs.
Logged by: M. Felton

URS

LOG of BORING No. SONIC #3

DATE 5/2/02 SURFACE ELEVATION, FT 420.0 DATUM _____ LOCATION See Figure 2-05

DEPTH, ft.	SAMPLES	SAMPLING RESISTANCE	RECOVERY, %	DESCRIPTION	STRATUM EL / DEPTH	SYMBOL	PP, TSF	PID, ppm	FIELD Qu, KSF	NMC, %	LL	PI	Qu, KSF	NOTES
125				GRAVEL (GP); with some sand and silty clay with odor	295.0 125.0									
				Hard, moist, gray, low plastic silty CLAY (CL); with trace fine gravel and wood fragments, with odor	293.0 127.0			0.0						
			50	Medium dense, wet, gray, fine to medium SAND (SP); with some coarse limestone. gravel fragments	292.0 128.0									
130				LIMESTONE: Light gray, weathered with limestone fragments and cobbles				0.0						Recovered from 131' to 133.5' to get evidence of bedrock. We did not get conclusive evidence of bedrock so we continued drilling. Lost 8' of recovery during run from 133' to 143'
			20											
135														
140				LIMESTONE: Light gray, weathered with limestone fragments and cobbles (2 pieces approximately 4" long - do not fit together through)										
			40											
145														
			33											

Completion Depth: 160.0 Ft.
Project No.: 21561192
Project Name: Solutia Barrier Wall
Drilling Contractor: Prosonic

Water Depth: 7 ft., After ATD hrs.
_____ ft., After _____ hrs.
_____ ft., After _____ hrs.
Logged by: M. Felton

URS

LOG of BORING No. SONIC #3

DATE 5/2/02 SURFACE ELEVATION, FT 420.0 DATUM _____ LOCATION See Figure 2-05

DEPTH, ft.	SAMPLES	SAMPLING RESISTANCE	RECOVERY, %	DESCRIPTION	STRATUM EL / DEPTH	SYMBOL	PP, TSF	PID, ppm	FIELD Qu, KSF	NMC, %	LL	PI	Qu, KSF	NOTES
150				SAME AS ABOVE: light gray, weathered LIMESTONE										
155														
					260.0									
160				Bottom of boring @ 160'	160.0									
165														
170														

Completion Depth: 160.0 Ft.
Project No.: 21561192
Project Name: Solutia Barrier Wall
Drilling Contractor: Prosonic

Water Depth: 7 ft., After ATD hrs.
_____ ft., After _____ hrs.
_____ ft., After _____ hrs.
Logged by: M. Felton

12/4/02 WCCXS 21561192.GPJ

URS

Figure No.

LOG of BORING No. SONIC #4

Sheet 1 of 6

DATE 5/8/02 SURFACE ELEVATION, FT 421.0 DATUM _____ LOCATION See Figure 2-05

DEPTH, ft.	SAMPLES	SAMPLING RESISTANCE	RECOVERY, %	DESCRIPTION	STRATUM EL / DEPTH	SYMBOL	PP, TSF	PID, ppm	FIELD Qu, KSF	NMC, %	LL	PI	Qu, KSF	NOTES
0			100	Sand and cinders (FILL)	419.3									Boring advanced using 3.875" tricone bit
				Medium stiff, moist, gray, low plasticity clayey SILT (FILL)	1.8									
5				Fine sand layer										
				Fine sand layer										
			100					0.0						
10				Becoming sandy, wet, and clay grades out	411.0 10.0									
				Medium dense, wet, gray, Sandy SILT (ML)										
15														
			100	Becoming moist										
20														

Completion Depth: 138.0 Ft. Water Depth: _____ ft., After _____ hrs.

Project No.: 21561192 _____ ft., After _____ hrs.

Project Name: Solutia Barrier Wall _____ ft., After _____ hrs.

Drilling Contractor: Prosonic Logged by: S. Shroff

12/4/02 WCCXS 21561192.GPJ

URS

LOG of BORING No. SONIC #4

DATE 5/8/02 SURFACE ELEVATION, FT 421.0 DATUM _____ LOCATION See Figure 2-05

DEPTH, ft.	SAMPLES	SAMPLING RESISTANCE	RECOVERY, %	DESCRIPTION	STRATUM EL / DEPTH	SYMBOL	PP, TSF	PID, ppm	FIELD Qu, KSF	NMC, %	LL	PI	Qu, KSF	NOTES
25				9" sand lense										
				SAME AS ABOVE: Medium dense, wet, gray, Sandy SILT (ML)										
			100											Sampler sank to 30', therefore, no recovery from 28' to 30'
30					387.0									
				Wet, gray, fine to medium SAND (SP)	34.0									
35														
			100											
40				Becoming fine to coarse SAND (SW)										
45														
			0											Sample from 48' to 58' feet washed out

Completion Depth: 138.0 Ft.
Project No.: 21561192
Project Name: Solutia Barrier Wall
Drilling Contractor: Prosonic

Water Depth: _____ ft., After _____ hrs.
_____ ft., After _____ hrs.
_____ ft., After _____ hrs.
Logged by: S. Shroff

12/4/02 WCCXS 21561192.GPJ

URS

LOG of BORING No. SONIC #4

DATE 5/8/02 SURFACE ELEVATION, FT 421.0 DATUM _____ LOCATION See Figure 2-05

DEPTH, ft.	SAMPLES	SAMPLING RESISTANCE	RECOVERY, %	DESCRIPTION	STRATUM EL / DEPTH	SYMBOL	PP, TSF	PID, ppm	FIELD Qu, KSF	NMC, %	LL	PI	Qu, KSF	NOTES
50														
55			100	SAME AS ABOVE: Wet, gray, fine to coarse SAND (SW)										
60				Becoming fine to medium SAND (SP)										
65			80											
70														

Completion Depth: 138.0 Ft. Water Depth: _____ ft., After _____ hrs.

Project No.: 21561192 _____ ft., After _____ hrs.

Project Name: Solutia Barrier Wall _____ ft., After _____ hrs.

Drilling Contractor: Prosonic Logged by: S. Shroff

URS

LOG of BORING No. SONIC #4

DATE 5/8/02 SURFACE ELEVATION, FT 421.0 DATUM _____ LOCATION See Figure 2-05

DEPTH, ft.	SAMPLES	SAMPLING RESISTANCE	RECOVERY, %	DESCRIPTION	STRATUM EL / DEPTH	SYMBOL	PP, TSF	PID, ppm	FIELD Qu, KSF	NMC, %	LL	PI	Qu, KSF	NOTES
75				SAME AS ABOVE: Wet, gray, fine to medium SAND (SP)										
			100											
80				Becoming fine to coarse SAND (SW)										
85				Grades with fine to coarse gravel										
			20											
90														
95														
			100											

Completion Depth: 138.0 Ft.
Project No.: 21561192
Project Name: Solutia Barrier Wall
Drilling Contractor: Prosonic
Logged by: S. Shroff

Water Depth: _____ ft., After _____ hrs.
_____ ft., After _____ hrs.
_____ ft., After _____ hrs.

URS

LOG of BORING No. SONIC #4

DATE 5/8/02 SURFACE ELEVATION, FT 421.0 DATUM _____ LOCATION See Figure 2-05

DEPTH, ft.	SAMPLES	SAMPLING RESISTANCE	RECOVERY, %	DESCRIPTION	STRATUM EL / DEPTH	SYMBOL	PP, TSF	PID, ppm	FIELD Qu, KSF	NMC, %	LL	PI	Qu, KSF	NOTES
100				SAME AS ABOVE: Wet, gray, fine to coarse SAND (SW); with fine to coarse gravel										
105			100											
110														
					307.0									
115				Hard, moist, gray, high plasticity CLAY (CH); with some sand and fine to coarse gravel	114.0									Sampler sank from 118' to 121'
120					300.5									
			0	SAND (SP); unknown but appears to be fine to coarse grained	120.5									Sample from 121' to 128' fell out of the core barrel except for some of the coarser sand. The remainder is still in the hole and washed away.

Completion Depth: 138.0 Ft.
Project No.: 21561192
Project Name: Solutia Barrier Wall
Drilling Contractor: Prosonic

Water Depth: _____ ft., After _____ hrs.
_____ ft., After _____ hrs.
_____ ft., After _____ hrs.
Logged by: S. Shroff

12/4/02 WCCXS 21561192.GPJ

URS

LOG of BORING No. SONIC #4

DATE 5/8/02 SURFACE ELEVATION, FT 421.0 DATUM _____ LOCATION See Figure 2-05

DEPTH, ft.	SAMPLES	SAMPLING RESISTANCE	RECOVERY, %	DESCRIPTION	STRATUM EL / DEPTH	SYMBOL	PP, TSF	PID, ppm	FIELD Qu, KSF	NMC, %	LL	PI	Qu, KSF	NOTES
125				SAME AS ABOVE: SAND (unknown but appears to be fine to coarse grained)										
			100	Gravel/cobble zone (<6")	291.0									
130				Weathered LIMESTONE	130.0									
			100											Driller reported hard drilling
135				Fractured LIMESTONE	283.0									
				Bottom of boring @ 138'	138.0									
140														
145														

Completion Depth: 138.0 Ft.
Project No.: 21561192
Project Name: Solutia Barrier Wall
Drilling Contractor: Prosonic

Water Depth: _____ ft., After _____ hrs.
_____ ft., After _____ hrs.
_____ ft., After _____ hrs.
Logged by: S. Shroff

URS

Figure No.

LOG of BORING No. SONIC #5

Sheet 1 of 6

DATE 5/3/02 SURFACE ELEVATION, FT 421.0 DATUM _____ LOCATION See Figure 2-05

DEPTH, ft.	SAMPLES	SAMPLING RESISTANCE	RECOVERY, %	DESCRIPTION	STRATUM EL / DEPTH	SYMBOL	PP, TSF	PID, ppm	FIELD Qu, KSF	NMC, %	LL	PI	Qu, KSF	NOTES
0			86	Gravel, cinders (FILL)				0.0						Boring advanced using 3.875" tricone bit
				Loose cinders with clay										
5			64		413.0		0.80	0.0						
				Moist, dark gray, CLAY (CL); with fine sand	8.0									
10					410.0									
				Alternating moist, gray, firm SAND (SP); and moist, gray, silty CLAY (CL); with fine sand	11.0									
15														
			80					0.0						
20					399.0									
				Very soft, gray, low plastic, clayey SILT (ML)	22.0									
							0.50							

Completion Depth: 141.0 Ft.

Project No.: 21561192

Project Name: Solutia Barrier Wall

Drilling Contractor: Prosonic

Logged by: S. Shroff

Water Depth: _____ ft., After _____ hrs.

_____ ft., After _____ hrs.

_____ ft., After _____ hrs.

12/4/02 WCCXS 21561192.GPJ

URS

LOG of BORING No. SONIC #5

DATE 5/3/02 SURFACE ELEVATION, FT 421.0 DATUM _____ LOCATION See Figure 2-05

DEPTH, ft.	SAMPLES	SAMPLING RESISTANCE	RECOVERY, %	DESCRIPTION	STRATUM EL / DEPTH	SYMBOL	PP, TSF	PID, ppm	FIELD Qu, KSF	NMC, %	LL	PI	Qu, KSF	NOTES
25			90	SAME AS ABOVE: Very soft, gray, low plastic, Clayey SILT (ML)	392.0			0.0						
				Loose, moist, gray, fine to medium SAND (SP)	29.0									
30				Becoming wet										
35			90					0.0						
40														
45			60	Becoming dark gray with coarse SAND (SW)				0.0						

Completion Depth: 141.0 Ft.
Project No.: 21561192
Project Name: Solutia Barrier Wall
Drilling Contractor: Prosonic

Water Depth: _____ ft., After _____ hrs.
_____ ft., After _____ hrs.
_____ ft., After _____ hrs.
Logged by: S. Shroff

URS

LOG of BORING No. SONIC #5

DATE 5/3/02 SURFACE ELEVATION, FT 421.0 DATUM _____ LOCATION See Figure 2-05

DEPTH, ft.	SAMPLES	SAMPLING RESISTANCE	RECOVERY, %	DESCRIPTION	STRATUM EL / DEPTH	SYMBOL	PP, TSF	PID, ppm	FIELD Qu, KSF	NMC, %	LL	PI	Qu, KSF	NOTES
50				SAME AS ABOVE: Wet, dark, gray, fine to coarse SAND (SW)										
55			100	Becoming gray				0.0						
60														
65														
			100					0.0						
70														

Completion Depth: 141.0 Ft.
Project No.: 21561192
Project Name: Solutia Barrier Wall
Drilling Contractor: Prosonic

Water Depth: _____ ft., After _____ hrs.
_____ ft., After _____ hrs.
_____ ft., After _____ hrs.
Logged by: S. Shroff

URS

LOG of BORING No. SONIC #5

DATE 5/3/02 SURFACE ELEVATION, FT 421.0 DATUM _____ LOCATION See Figure 2-05

DEPTH, ft.	SAMPLES	SAMPLING RESISTANCE	RECOVERY, %	DESCRIPTION	STRATUM EL / DEPTH	SYMBOL	PP, TSF	PID, ppm	FIELD Qu, KSF	NMC, %	LL	PI	Qu, KSF	NOTES
75				SAME AS ABOVE: Gray, fine to coarse SAND (SW)										
			80					0.0						
80														
85														
			100					0.0						
90				Grades to medium to coarse SAND (SP)										
95														
			100					0.0						

Completion Depth: 141.0 Ft.
Project No.: 21561192
Project Name: Solutia Barrier Wall
Drilling Contractor: Prosonic

Water Depth: _____ ft., After _____ hrs.
_____ ft., After _____ hrs.
_____ ft., After _____ hrs.
Logged by: S. Shroff

URS

Figure No.

LOG of BORING No. SONIC #5

Sheet 5 of 6

DATE 5/3/02 SURFACE ELEVATION, FT 421.0 DATUM _____ LOCATION See Figure 2-05

DEPTH, ft.	SAMPLES	SAMPLING RESISTANCE	RECOVERY, %	DESCRIPTION	STRATUM EL / DEPTH	SYMBOL	PP, TSF	PID, ppm	FIELD Qu, KSF	NMC, %	LL	PI	Qu, KSF	NOTES
100				SAME AS ABOVE: Grray, medium to coarse SAND (SP)										
				Grades with fine gravel										
105			100					0.0						
				Grades with coarse gravel										
110														
115			80					0.0						
120														

Completion Depth: 141.0 Ft.
Project No.: 21561192
Project Name: Solutia Barrier Wall
Drilling Contractor: Prosonic

Water Depth: _____ ft., After _____ hrs.
_____ ft., After _____ hrs.
_____ ft., After _____ hrs.
Logged by: S. Shroff

12/4/02 WCCXS 21561192.GPJ

URS

LOG of BORING No. SONIC #5

DATE 5/3/02 SURFACE ELEVATION, FT 421.0 DATUM _____ LOCATION See Figure 2-05

DEPTH, ft.	SAMPLES	SAMPLING RESISTANCE	RECOVERY, %	DESCRIPTION	STRATUM EL / DEPTH	SYMBOL	PP, TSF	PID, ppm	FIELD Qu, KSF	NMC, %	LL	PI	Qu, KSF	NOTES
125				SAME AS ABOVE: Gray, medium to coarse SAND (SP); with gravel										
			100					0.0						
					291.0									
130				Gray sand and river gravel, wet with clay and silt, (non-plastic)	130.0									
135														
			100	Cobbles				428.0						Greenish-yellow free product in the sample from 138' to 141'
					281.0									
140				Cobbles/bedrock (Limestone)	140.0									
					280.0									
				Bottom of boring @ 141'	141.0									
145														

Completion Depth: 141.0 Ft.
Project No.: 21561192
Project Name: Solutia Barrier Wall
Drilling Contractor: Prosonic

Water Depth: _____ ft., After _____ hrs.
_____ ft., After _____ hrs.
_____ ft., After _____ hrs.
Logged by: S. Shroff

URS

Figure No.

LOG of BORING No. SB-1

Sheet 1 of 5

DATE 7/26/01 SURFACE ELEVATION, FT 421 est DATUM _____ LOCATION See Figure 2-05

DEPTH, ft.	SAMPLES	SAMPLING RESISTANCE	RECOVERY, %	DESCRIPTION	STRATUM EL / DEPTH	SYMBOL	PP, TSF	PID, ppm	FIELD Qu, KSF	NMC, %	LL	PI	Qu, KSF	NOTES
0				Very soft, moist, grey, layered, sandy clayey SILT (ML)										Boring advanced with HSA to 14'
5		3 3 2 2	100				0.50							
				Very loose, moist, black silty SAND (SM)	6.0		0.50							
10		3 3 2 2	100				0.50							
				Very soft, moist, black, sandy, clayey SILT (ML)	10.8					35				
15		2 2 3 6	100	Grades wet with thin bed of SILTSTONE at 15.5' ▽			0.25							Began mud rotary drilling
20		4 5 5 6	100	Grades dark grey			0.50							
				Soft, wet, black and grey mottled CLAY (CL)	20.0		1.25							
		5	75	With trace silt			0.75							

Completion Depth: 101.0 Ft. Water Depth: 14 ft., After _____ hrs.

Project No.: 23-20010085.00 00001 _____ ft., After _____ hrs.

Project Name: Solutia (Site R) _____ ft., After _____ hrs.

Drilling Contractor: REDI Logged by: Foresman

12/4/02 WCCXS 23210085.GPJ

URS

LOG of BORING No. SB-1

DATE 7/26/01 SURFACE ELEVATION, FT 421 est DATUM _____ LOCATION See Figure 2-05

DEPTH, ft.	SAMPLES	SAMPLING RESISTANCE	RECOVERY, %	DESCRIPTION	STRATUM EL / DEPTH	SYMBOL	PP, TSF	PID, ppm	FIELD Qu, KSF	NMC, %	LL	PI	Qu, KSF	NOTES
25		12		Medium dense, black, fine to coarse										Sweet odor
		14		grained SAND (SP)	25.0									
		13		Very soft,wet, grey and black mottled silty CLAY (CL) with trace sand	26.0									
		3	100				0.00							Sheen, product, sweet
30		3												odor
		4												
		4					1.25							
		2	100				0.00							Sweet odor
35		4												
		4												
		4												
		3	75	Grades to grey and light grey mottled			0.25							Sweet odor
40		4												
		6												
		12												
				Medium dense, wet, grey, fine to coarse grained SAND (SP) with trace gravel, with black, red, tan, orange, yellow, and clear grains	41.0									
		14	50											Sweet odor
45		22												
		26												
		27												
		10	50											Sweet odor

Completion Depth: 101.0 Ft. Water Depth: 14 ft., After _____ hrs.

Project No.: 23-20010085.00 00001 _____ ft., After _____ hrs.

Project Name: Solutia (Site R) _____ ft., After _____ hrs.

Drilling Contractor: REDI Logged by: Foresman

12/4/02 WCCXS 23210085.GPJ

URS

LOG of BORING No. SB-1

DATE 7/26/01 SURFACE ELEVATION, FT 421 est DATUM _____ LOCATION See Figure 2-05

DEPTH, ft.	SAMPLES	SAMPLING RESISTANCE	RECOVERY, %	DESCRIPTION	STRATUM EL / DEPTH	SYMBOL	PP, TSF	PID, ppm	FIELD Qu, KSF	NMC, %	LL	PI	Qu, KSF	NOTES
50		14 18 30												
55		39 50/4"	60	Grades very dense										Sweet odor
60		15 28 50/4"	75							14				Sweet odor
65		20 31 44 41	75	Grades dense						14				Sweet odor
				Medium dense, wet, brown, clayey SAND (SC)	68.0									
		25	50							14				Sweet odor
70		25 21 19		Medium dense, wet, grey, fine to coarse grained SAND (SP) with trace gravel with black, red, tan, orange, yellow, and clear grains	69.5									
				Soft, moist, grey CLAY (CL) with trace silt and sand	71.0									
		4	100							36	40	21		Sweet odor

Completion Depth: 101.0 Ft.
Water Depth: 14 ft., After _____ hrs.
Project No.: 23-20010085.00 00001 _____ ft., After _____ hrs.
Project Name: Solutia (Site R) _____ ft., After _____ hrs.
Drilling Contractor: REDI Logged by: Foresman

URS

LOG of BORING No. SB-1

DATE 7/26/01 SURFACE ELEVATION, FT 421 est DATUM _____ LOCATION See Figure 2-05

DEPTH, ft.	SAMPLES	SAMPLING RESISTANCE	RECOVERY, %	DESCRIPTION	STRATUM EL / DEPTH	SYMBOL	PP, TSF	PID, ppm	FIELD Qu, KSF	NMC, %	LL	PI	Qu, KSF	NOTES
75		4												
		20												
		22		Medium dense to dense, wet, brown, fine to coarse grained SAND (SP) with black, red, tan, orange, yellow and clear grains, trace pebbles	76.0									
		18	50											Sweet odor
80		22												
		33												
		47												
		9	50	Grades dense										Sweet odor
85		13								16				
		18												
		17												
		10	50	Grades with trace Chert						18				Sweet odor
90		18												
		21												
		19												
		13	50											Strong, sweet odor, sheen and product
95		14								18				
		21												
		27												
		50/2"		No sample	99.0									

Completion Depth: 101.0 Ft.
Project No.: 23-20010085.00 00001
Project Name: Solutia (Site R)
Drilling Contractor: REDI

Water Depth: 14 ft., After _____ hrs.
_____ ft., After _____ hrs.
_____ ft., After _____ hrs.
Logged by: Foresman

URS

LOG of BORING No. SB-1

DATE 7/26/01 SURFACE ELEVATION, FT 421 est DATUM _____ LOCATION See Figure 2-05

DEPTH, ft.	SAMPLES	SAMPLING RESISTANCE	RECOVERY, %	DESCRIPTION	STRATUM EL / DEPTH	SYMBOL	PP, TSF	PID, ppm	FIELD Qu, KSF	NMC, %	LL	PI	Qu, KSF	NOTES
100														
				Boring terminated at 101 feet bgs. The hole was backfilled with bentonite/cement grout	101.0									
105														
110														
115														
120														

Completion Depth: 101.0 Ft.
Water Depth: 14 ft., After _____ hrs.
Project No.: 23-20010085.00 00001 _____ ft., After _____ hrs.
Project Name: Solutia (Site R) _____ ft., After _____ hrs.
Drilling Contractor: REDI Logged by: Foresman

URS

Figure No.

LOG of BORING No. SB-2

Sheet 1 of 5

DATE 7/24/01 SURFACE ELEVATION, FT 421 est DATUM _____ LOCATION See Figure 2-05

DEPTH, ft.	SAMPLES	SAMPLING RESISTANCE	RECOVERY, %	DESCRIPTION	STRATUM EL / DEPTH	SYMBOL	PP, TSF	PID, ppm	FIELD Qu, KSF	NMC, %	LL	PI	Qu, KSF	NOTES
0				Brown and black, mottled, firm, dry, SILT (ML) with trace sand and clay										Boring advanced with HSA to 14'
5		3 3 4 7	75				3.00							
10		3 3 5 7	50											
				Loose, moist, black silty SAND (SM)	13.0									
15		4 3 7 5	100	Loose, moist, black, grey to dark grey, and light grey layered SILT (ML) with a thin bed of siltstone at 15.5'	14.5					32				Began mud rotary drilling
20		2 2 6 10	75	Soft, moist, dark grey, sandy, clayey SILT (ML) ▽ Loose, wet, yellowish geen, fine to coarse grained SAND (SP) Becomes wet	20.0 20.5		1.00							
				Soft, moist, grey, sandy, clayey SILT (ML) with thin layer of grey CLAY at 20.5'										
		6	75	Soft, wet, grey, sandy, clayey SILT(ML)			1.00							

Completion Depth: 101.0 Ft.
Water Depth: 20 ft., After _____ hrs.
Project No.: 23-20010085.00 00001 _____ ft., After _____ hrs.
Project Name: Solutia (Site R) _____ ft., After _____ hrs.
Drilling Contractor: REDI Logged by: Foresman

12/4/02 WCCXS 23210085.GPJ

URS

LOG of BORING No. SB-2

DATE 7/24/01 SURFACE ELEVATION, FT 421 est DATUM _____ LOCATION See Figure 2-05

DEPTH, ft.	SAMPLES	SAMPLING RESISTANCE	RECOVERY, %	DESCRIPTION	STRATUM EL / DEPTH	SYMBOL	PP, TSF	PID, ppm	FIELD Qu, KSF	NMC, %	LL	PI	Qu, KSF	NOTES
25		7		Loose, wet, grey, silty SAND (SM)										
		4		Soft, moist, grey, silty CLAY (CL)	25.0		2.00							
		8		Loose, wet, black, grey and tan layered silty SAND (SM)	25.5 26.0									
		8	100											
		6		Grades black and tan layered										
30		5												
		4		Grades with grey										Oil sheen
		6	75	Soft, wet, grey CLAY (CL)	34.0		2.00			22				
		7												Slight hydrocarbon odor oily sheen
35		7												
		8												
				Medium dense, wet, dark grey, fine to coarse grained SAND (SP)	38.0									
		12	75											Solvent odor
		13												
40		13												
		13		Grades grey										
		16	75											Solvent odor
		16												
45		15												
		19		Grades medium to coarse grained SAND (SP) with trace gravel, with black, tan, red, and yellow and clear grains										
		17	50											Solvent odor and sheen

Completion Depth: 101.0 Ft. Water Depth: 20 ft., After _____ hrs.

Project No.: 23-20010085.00 00001 _____ ft., After _____ hrs.

Project Name: Solutia (Site R) _____ ft., After _____ hrs.

Drilling Contractor: REDI Logged by: Foresman

URS

LOG of BORING No. SB-2

DATE 7/24/01 SURFACE ELEVATION, FT 421 est DATUM _____ LOCATION See Figure 2-05

DEPTH, ft.	SAMPLES	SAMPLING RESISTANCE	RECOVERY, %	DESCRIPTION	STRATUM EL / DEPTH	SYMBOL	PP, TSF	PID, ppm	FIELD Qu, KSF	NMC, %	LL	PI	Qu, KSF	NOTES
50		16 16 23												
		15 17	50											Solvent odor
55		16 20		Grades fine to medium										
		25 42	50	Medium dense to very dense, wet, grey,										Solvent odor
60		50/5"		fine to coarse grained SAND (SP) Grades very dense										
		9 7	38	Grades loose with trace gravel						14				Solvent odor
65		5 5												
		8 7	50							14				Solvent odor and sheen
70		7 6												
		13	100	Grades medium dense						22				Solvent odor

Completion Depth: 101.0 Ft. Water Depth: 20 ft., After _____ hrs.

Project No.: 23-20010085.00 00001 _____ ft., After _____ hrs.

Project Name: Solutia (Site R) _____ ft., After _____ hrs.

Drilling Contractor: REDI Logged by: Foresman

URS

LOG of BORING No. SB-2

DATE 7/24/01 SURFACE ELEVATION, FT 421 est DATUM _____ LOCATION See Figure 2-05

DEPTH, ft.	SAMPLES	SAMPLING RESISTANCE	RECOVERY, %	DESCRIPTION	STRATUM EL / DEPTH	SYMBOL	PP, TSF	PID, ppm	FIELD Qu, KSF	NMC, %	LL	PI	Qu, KSF	NOTES
75		25 29 20		Medium dense, wet, fine to coarse grained SAND (SP)										
		30 21	63											Solvent odor
80		22 37		Grades medium dense to dense						26				
		19 13	38	Grades medium dense						7				Solvent odor
85		12 13												
		16 20	50											Solvent odor
90		22 27												
		21 16	50							15				Solvent odor
95		17 21												
		24	38	Grades medium dense to very dense						16				Solvent odor

Completion Depth: 101.0 Ft. Water Depth: 20 ft., After _____ hrs.

Project No.: 23-20010085.00 00001 _____ ft., After _____ hrs.

Project Name: Solutia (Site R) _____ ft., After _____ hrs.

Drilling Contractor: REDI Logged by: Foresman

12/4/02 WCCXS 23210085.GPJ

URS

LOG of BORING No. SB-2

DATE 7/24/01 SURFACE ELEVATION, FT 421 est DATUM _____ LOCATION See Figure 2-05

DEPTH, ft.	SAMPLES	SAMPLING RESISTANCE	RECOVERY, %	DESCRIPTION	STRATUM EL / DEPTH	SYMBOL	PP, TSF	PID, ppm	FIELD Qu, KSF	NMC, %	LL	PI	Qu, KSF	NOTES
100		35 50/5"		Boring teminated at 101 feet bgs. The hole was backfilled with bentonite/cement grout.	101.0									
105														
110														
115														
120														

Completion Depth: 101.0 Ft.
Water Depth: 20 ft., After _____ hrs.
Project No.: 23-20010085.00 00001 _____ ft., After _____ hrs.
Project Name: Solutia (Site R) _____ ft., After _____ hrs.
Drilling Contractor: REDI Logged by: Foresman

URS

LOG of BORING No. SB-3

DATE 11/4/02 SURFACE ELEVATION, FT 419 est DATUM _____ LOCATION See Figure 2-05

DEPTH, ft.	SAMPLES	SAMPLING RESISTANCE	RECOVERY, %	DESCRIPTION	STRATUM EL / DEPTH	SYMBOL	PP, TSF	PID, ppm	FIELD Qu, KSF	NMC, %	LL	PI	Qu, KSF	NOTES
0				Boring was not logged until 68.5'										Boring advanced using 3.875" tricone bit
15														Yellowish water in drilling fluid

Completion Depth: 144.5 Ft.
Project No.: 21561192
Project Name: Solutia Barrier Wall
Drilling Contractor: Roberts Environmental Drilling

Water Depth: _____ ft., After _____ hrs.
_____ ft., After _____ hrs.
_____ ft., After _____ hrs.
Logged by: E. Fritsch

URS

LOG of BORING No. SB-3

DATE 11/4/02 SURFACE ELEVATION, FT 419 est DATUM _____ LOCATION See Figure 2-05

DEPTH, ft.	SAMPLES	SAMPLING RESISTANCE	RECOVERY, %	DESCRIPTION	STRATUM EL / DEPTH	SYMBOL	PP, TSF	PID, ppm	FIELD Qu, KSF	NMC, %	LL	PI	Qu, KSF	NOTES
25				Boring was not logged until 68.5'										
30														
35														
40														
45														Drill rattling and shaking

Completion Depth: 144.5 Ft.
Project No.: 21561192
Project Name: Solutia Barrier Wall
Drilling Contractor: Roberts Environmental Drilling

Water Depth: _____ ft., After _____ hrs.
_____ ft., After _____ hrs.
_____ ft., After _____ hrs.
Logged by: E. Fritsch

URS

LOG of BORING No. SB-3

DATE 11/4/02 SURFACE ELEVATION, FT 419 est DATUM _____ LOCATION See Figure 2-05

DEPTH, ft.	SAMPLES	SAMPLING RESISTANCE	RECOVERY, %	DESCRIPTION	STRATUM EL / DEPTH	SYMBOL	PP, TSF	PID, ppm	FIELD Qu, KSF	NMC, %	LL	PI	Qu, KSF	NOTES
50				Boring was not logged until 68.5'										
55														
60														
65														
70		16 20 18 16	63	Dense, wet, dark gray, well graded, subrounded grained SAND (SW); with trace fine gravels	68.5			0.0						Driller reported sand and gravel
		16 20	63					0.0						

Completion Depth: 144.5 Ft.
Project No.: 21561192
Project Name: Solutia Barrier Wall
Drilling Contractor: Roberts Environmental Drilling

Water Depth: _____ ft., After _____ hrs.
_____ ft., After _____ hrs.
_____ ft., After _____ hrs.
Logged by: E. Fritsch

URS

LOG of BORING No. SB-3

DATE 11/4/02 SURFACE ELEVATION, FT 419 est DATUM _____ LOCATION See Figure 2-05

DEPTH, ft.	SAMPLES	SAMPLING RESISTANCE	RECOVERY, %	DESCRIPTION	STRATUM EL / DEPTH	SYMBOL	PP, TSF	PID, ppm	FIELD Qu, KSF	NMC, %	LL	PI	Qu, KSF	NOTES
75		23 30		SAME: Dense, wet, dark gray, well graded, subrounded grained SAND (SW); with trace fine gravels Increasing amount of gravel										Very rough drilling; rig vibrating
		18 30 27 27	67	Becomes very dense				0.0						
80														
		20 15 14 18	50	Becomes, gray, well graded, fine to medium (subrounded) grained SAND; with fine gravel				0.0						
85														
		36 50/5"	55	Becomes very dense										Fractured limestone rock in shoe
90														
		28 50/4"	60	Grades gray to brown Cobbles/gravels 94.5-96.0'				0.0						Fractured limestone rock in shoe Very rough drilling from 94.5-96.6'
95														
		22 22	50	Becomes, brown, well graded, fine to medium (subrounded) grained SAND				0.0						

Completion Depth: 144.5 Ft. Water Depth: _____ ft., After _____ hrs.

Project No.: 21561192 _____ ft., After _____ hrs.

Project Name: Solutia Barrier Wall _____ ft., After _____ hrs.

Drilling Contractor: Roberts Environmental Drilling Logged by: E. Fritsch

URS

LOG of BORING No. SB-3

DATE 11/4/02 SURFACE ELEVATION, FT 419 est DATUM _____ LOCATION See Figure 2-05

DEPTH, ft.	SAMPLES	SAMPLING RESISTANCE	RECOVERY, %	DESCRIPTION	STRATUM EL / DEPTH	SYMBOL	PP, TSF	PID, ppm	FIELD Qu, KSF	NMC, %	LL	PI	Qu, KSF	NOTES
100		18 12		(SW); with course grains and fine gravel										
		15 13 16 19	63	Becomes dense, brown, well graded, fine to coarse (subrounded) grained SAND				0.0						
105														
		18 20 13 13	50	Becomes, brown, well graded, medium to coarse grained SAND with fine gravel				0.0						
110														
		18 23 25 26	50	Dense, brown, well graded, fine to medium (subrounded) grained SAND with trace fine gravel				0.0						
115														
		20 27 21 20	46	Sand grades medium to coarse				0.0						
120														
		46 50	75	Becomes dense, brown to reddish brown, well graded, fine to medium (subrounded)				0.0						

Completion Depth: 144.5 Ft. Water Depth: _____ ft., After _____ hrs.

Project No.: 21561192 _____ ft., After _____ hrs.

Project Name: Solutia Barrier Wall _____ ft., After _____ hrs.

Drilling Contractor: Roberts Environmental Drilling Logged by: E. Fritsch

URS

LOG of BORING No. SB-3

DATE 11/4/02 SURFACE ELEVATION, FT 419 est DATUM _____ LOCATION See Figure 2-05

DEPTH, ft.	SAMPLES	SAMPLING RESISTANCE	RECOVERY, %	DESCRIPTION	STRATUM EL / DEPTH	SYMBOL	PP, TSF	PID, ppm	FIELD Qu, KSF	NMC, %	LL	PI	Qu, KSF	NOTES
125		38 29		grained SAND (SW); with fractured limestone and medium gravel; (granite or gneiss in shoe)										
		44 50/2"	75	Granite/gneiss grades out				0.0						
130				Cobbles, gravel, coarse sand										Very rough drilling
		41 44 40 48	63	Becomes dense, gray, well graded, medium to coarse (subrounded) SAND (SW); with fine to medium gravel				0.0						
135														Trace limestone fragments in drilling mud
		13 29	67	Stiff, gray, moist, Silty CLAY (CL); with fine gravel	~~138.5~~ ~~138.8~~			0.0						
140		50/3" RQD 53	93	Fine to medium SAND (SP) LIMESTONE: Dense, light gray, smooth textured Few vertical fractures and solution seams	139.3									Tri-cone refusal at 139.5'
145				Bottom of boring @ 144.5'	144.5									Grout hole with high solids grout.

Completion Depth: 144.5 Ft.
Project No.: 21561192
Project Name: Solutia Barrier Wall
Drilling Contractor: Roberts Environmental Drilling

Water Depth: _____ ft., After _____ hrs.
_____ ft., After _____ hrs.
_____ ft., After _____ hrs.
Logged by: E. Fritsch

URS

Figure No.

LOG of BORING No. SB-4

Sheet 1 of 6

DATE 11/25/02 SURFACE ELEVATION, FT 426 est DATUM _____ LOCATION See Figure 2-05

DEPTH, ft. / SAMPLES	SAMPLING RESISTANCE	RECOVERY, %	DESCRIPTION	STRATUM EL / DEPTH	SYMBOL	PP, TSF	PID, ppm	FIELD Qu, KSF	NMC, %	LL	PI	Qu, KSF	NOTES
0			Concrete (FILL) at surface. Boring not logged until 68.5'.										Boring advanced using 3.875" tricone bit
5													
10													
15													
20													

Completion Depth: 149.5 Ft.
Water Depth: _____ ft., After _____ hrs.

Project No.: 21561192
_____ ft., After _____ hrs.

Project Name: Solutia Barrier Wall
_____ ft., After _____ hrs.

Drilling Contractor: Roberts Environmental Drilling
Logged by: B. Higgins/M. Foresman

12/4/02 WCCXS 21561192.GPJ

URS

LOG of BORING No. SB-4

DATE 11/25/02 SURFACE ELEVATION, FT 426 est DATUM _____ LOCATION See Figure 2-05

DEPTH, ft.	SAMPLES	SAMPLING RESISTANCE	RECOVERY, %	DESCRIPTION	STRATUM EL / DEPTH	SYMBOL	PP, TSF	PID, ppm	FIELD Qu, KSF	NMC, %	LL	PI	Qu, KSF	NOTES
25				Boring not logged until 68.5'										
30														
35														
40														
45														

Completion Depth: 149.5 Ft.

Project No.: 21561192

Project Name: Solutia Barrier Wall

Drilling Contractor: Roberts Environmental Drilling

Water Depth: _____ ft., After _____ hrs.

_____ ft., After _____ hrs.

_____ ft., After _____ hrs.

Logged by: B. Higgins/M. Foresman

URS

LOG of BORING No. SB-4

DATE 11/25/02 SURFACE ELEVATION, FT 426 est DATUM _____ LOCATION See Figure 2-05

DEPTH, ft.	SAMPLES	SAMPLING RESISTANCE	RECOVERY, %	DESCRIPTION	STRATUM EL / DEPTH	SYMBOL	PP, TSF	PID, ppm	FIELD Qu, KSF	NMC, %	LL	PI	Qu, KSF	NOTES
50				Boring not logged until 68.5'										
55														
60														
65														
70		29 30 45 48	88	Very dense, wet, gray, poorly graded, fine grained SAND (SP)	68.5			0.0						
		16 14	50	Becomes dense				2.0						

Completion Depth: 149.5 Ft.

Project No.: 21561192

Project Name: Solutia Barrier Wall

Drilling Contractor: Roberts Environmental Drilling

Water Depth: _____ ft., After _____ hrs.

_____ ft., After _____ hrs.

_____ ft., After _____ hrs.

Logged by: B. Higgins/M. Foresman

URS

LOG of BORING No. SB-4

DATE 11/25/02 SURFACE ELEVATION, FT 426 est DATUM _____ LOCATION See Figure 2-05

DEPTH, ft.	SAMPLES	SAMPLING RESISTANCE	RECOVERY, %	DESCRIPTION	STRATUM EL / DEPTH	SYMBOL	PP, TSF	PID, ppm	FIELD Qu, KSF	NMC, %	LL	PI	Qu, KSF	NOTES
75		22 30												
		40 50/5"	91	Very dense, wet, gray, fine grained SAND (SP)				0.0						
80														
		3 17 23 20	42	Becomes dense with wood fragments				2.1						
85														
		19 21 26 19	42	Becomes medium grained sand with gravel										
90														
		20 30 21 23	54	Becomes brown				0.0						
95														
		30 21	54					0.0						

Completion Depth: 149.5 Ft.
Project No.: 21561192
Project Name: Solutia Barrier Wall
Drilling Contractor: Roberts Environmental Drilling
Logged by: B. Higgins/M. Foresman

Water Depth: _____ ft., After _____ hrs.
_____ ft., After _____ hrs.
_____ ft., After _____ hrs.

URS

LOG of BORING No. SB-4

DATE 11/25/02 SURFACE ELEVATION, FT 426 est DATUM _____ LOCATION See Figure 2-05

DEPTH, ft.	SAMPLES	SAMPLING RESISTANCE	RECOVERY, %	DESCRIPTION	STRATUM EL / DEPTH	SYMBOL	PP, TSF	PID, ppm	FIELD Qu, KSF	NMC, %	LL	PI	Qu, KSF	NOTES
100		23 27												
		42 50/3"	67	Becomes very dense, wet, brown, fine grained SAND (SP)				0.0						
105														
		17 13	42	Becomes dense, medium to coarse grained sand				0.0						
110		21 21												
		16 18	54					0.0						
115		21 20												
		46 50/5"	91	Becomes very dense				0.0						
120														
		40 39	59	Grades fine to medium grained sand				0.0						

Completion Depth: 149.5 Ft. Water Depth: _____ ft., After _____ hrs.

Project No.: 21561192 _____ ft., After _____ hrs.

Project Name: Solutia Barrier Wall _____ ft., After _____ hrs.

Drilling Contractor: Roberts Environmental Drilling Logged by: B. Higgins/M. Foresman

URS

LOG of BORING No. SB-4

DATE 11/25/02 SURFACE ELEVATION, FT 426 est DATUM _____ LOCATION See Figure 2-05

DEPTH, ft.	SAMPLES	SAMPLING RESISTANCE	RECOVERY, %	DESCRIPTION	STRATUM EL / DEPTH	SYMBOL	PP, TSF	PID, ppm	FIELD Qu, KSF	NMC, %	LL	PI	Qu, KSF	NOTES
125		50/5"												
		44	36	Very dense, wet, brown, fine grained SAND (SP)				0.0						
		50/5"												
130														
		30	50	Becomes very dense, wet, gray, medium to coarse grained sand; with trace fine grained sand				0.0						
		30												
135		31												
		36												
		50	50					0.0						
		36												
140		36												
		36												
		25	82	Grades trace gravel				0.0						
		50/5"												
		RQD	100	LIMESTONE: light gray, solid, smooth	144.5									Rough drilling Refusal with Tricone at 144.5 feet bgs Smooth coring. Appears to be fractured based on drilling
145		93												
				Dark gray fissile layer										
				Bottom of boring @ 149.5'										
					149.5									

Completion Depth: 149.5 Ft.
Project No.: 21561192
Project Name: Solutia Barrier Wall
Drilling Contractor: Roberts Environmental Drilling

Water Depth: _____ ft., After _____ hrs.
_____ ft., After _____ hrs.
_____ ft., After _____ hrs.
Logged by: B. Higgins/M. Foresman

URS

LOG of BORING No. SB-5

DATE 11/1/02 SURFACE ELEVATION, FT 423 est DATUM _____ LOCATION See Figure 2-05

DEPTH, ft.	SAMPLES	SAMPLING RESISTANCE	RECOVERY, %	DESCRIPTION	STRATUM EL / DEPTH	SYMBOL	PP, TSF	PID, ppm	FIELD Qu, KSF	NMC, %	LL	PI	Qu, KSF	NOTES
0				Black ash-like substance at surface (unknown depth). Boring not logged until 71 feet below ground surface.										Boring advanced using 3.875" tricone bit
5														
10														
15														
20														

Completion Depth: 142.0 Ft.
Project No.: 21561192
Project Name: Solutia Barrier Wall
Drilling Contractor: Roberts Environmental Drilling

Water Depth: _____ ft., After _____ hrs.
_____ ft., After _____ hrs.
_____ ft., After _____ hrs.
Logged by: M. Felton

URS

LOG of BORING No. SB-5

DATE 11/1/02 SURFACE ELEVATION, FT 423 est DATUM _____ LOCATION See Figure 2-05

DEPTH, ft.	SAMPLES	SAMPLING RESISTANCE	RECOVERY, %	DESCRIPTION	STRATUM EL / DEPTH	SYMBOL	PP, TSF	PID, ppm	FIELD Qu, KSF	NMC, %	LL	PI	Qu, KSF	NOTES
25				Boring not logged until 71' below ground surface.										
30														
35														
40														
45														

Completion Depth: 142.0 Ft.
Project No.: 21561192
Project Name: Solutia Barrier Wall
Drilling Contractor: Roberts Environmental Drilling

Water Depth: _____ ft., After _____ hrs.
_____ ft., After _____ hrs.
_____ ft., After _____ hrs.
Logged by: M. Felton

URS

LOG of BORING No. SB-5

DATE 11/1/02 SURFACE ELEVATION, FT 423 est DATUM _____ LOCATION See Figure 2-05

DEPTH, ft.	SAMPLES	SAMPLING RESISTANCE	RECOVERY, %	DESCRIPTION	STRATUM EL / DEPTH	SYMBOL	PP, TSF	PID, ppm	FIELD Qu, KSF	NMC, %	LL	PI	Qu, KSF	NOTES
50				Boring not logged until 71' below ground surface.										
55														
60														
65														
70														
		22 32 18 14	50	Very dense, wet, gray, fine to medium grained SAND (SP); with trace coarse grained sand	71.0			0.0						

Completion Depth: 142.0 Ft.

Project No.: 21561192

Project Name: Solutia Barrier Wall

Drilling Contractor: Roberts Environmental Drilling

Water Depth: _____ ft., After _____ hrs.

_____ ft., After _____ hrs.

_____ ft., After _____ hrs.

Logged by: M. Felton

12/4/02 WCCXS 21561192.GPJ

URS

LOG of BORING No. SB-5

DATE 11/1/02 SURFACE ELEVATION, FT 423 est DATUM _____ LOCATION See Figure 2-05

DEPTH, ft.	SAMPLES	SAMPLING RESISTANCE	RECOVERY, %	DESCRIPTION	STRATUM EL / DEPTH	SYMBOL	PP, TSF	PID, ppm	FIELD Qu, KSF	NMC, %	LL	PI	Qu, KSF	NOTES
75				Grades to very dense, wet, gray, fine to medium grained SAND (SP)										
		23 26 28 33	75	With trace coarse sand and fine grained gravel				0.0						
80														
		11 12 14 18	50	Becoming medium dense with no fine gravel				0.0						
85														
		12 12 16 23	50	Grades trace fine gravel Becoming dense				0.0						
90														
		19 18 20 16	50	Coarse sand or fine gravel, grades out				0.0						
95														
		18 24 16 19	50	Grades trace coarse sand and fine gravel				0.0						

Completion Depth: 142.0 Ft. Water Depth: _____ ft., After _____ hrs.

Project No.: 21561192 _____ ft., After _____ hrs.

Project Name: Solutia Barrier Wall _____ ft., After _____ hrs.

Drilling Contractor: Roberts Environmental Drilling Logged by: M. Felton

URS

LOG of BORING No. SB-5

DATE 11/1/02 SURFACE ELEVATION, FT 423 est DATUM _____ LOCATION See Figure 2-05

DEPTH, ft.	SAMPLES	SAMPLING RESISTANCE	RECOVERY, %	DESCRIPTION	STRATUM EL / DEPTH	SYMBOL	PP, TSF	PID, ppm	FIELD Qu, KSF	NMC, %	LL	PI	Qu, KSF	NOTES
100														
		50 50/5"	46	Becomes very dense, wet, gray, fine to coarse grained SAND (SW); with some medium to coarse (angular) gravel				0.0						Gravel piece stuck in shoe of split spoon
105														
		30 50/4"	60	Grades very fine to fine grained SAND (SP); with some fine to coarse gravel				0.0						Refusal due to large piece of gravel in shoe
110														No sample attempted at 111 feet. Drilling through rock. (At least 2 feet of rock at this depth according to drillers.) Note: Mud loss is higher than anticipated for this boring.
115				Hard, wet, gray, low plastic, gravelly, silty CLAY (CL); with some medium to coarse sand	115.0									
		15 16 20 21 P	50 100	With some gravelly layers (approximately 3" to 4" thick)				0.0 0.0		14	26	13		No pocket pen due to large amount of gravel.
120														
		18 33 21	67	Very dense, wet, gray, medium to coarse SAND (SP); and fine to coarse GRAVEL (GP) layers	120.5		>4.5	0.0						
		25 P	0	Hard, moist, gray, low plastic, silty CLAY (CL); with trace coarse sand to fine (rounded) gravel Gravel or rock layer (123.0-124.0')	122.4									Driller reported softer drilling

Completion Depth: 142.0 Ft.
Project No.: 21561192
Project Name: Solutia Barrier Wall
Drilling Contractor: Roberts Environmental Drilling

Water Depth: _____ ft., After _____ hrs.
_____ ft., After _____ hrs.
_____ ft., After _____ hrs.
Logged by: M. Felton

URS

LOG of BORING No. SB-5

DATE 11/1/02 SURFACE ELEVATION, FT 423 est DATUM _____ LOCATION See Figure 2-05

DEPTH, ft.	SAMPLES	SAMPLING RESISTANCE	RECOVERY, %	DESCRIPTION	STRATUM EL / DEPTH	SYMBOL	PP, TSF	PID, ppm	FIELD Qu, KSF	NMC, %	LL	PI	Qu, KSF	NOTES
125		P	83	Hard, moist, gray, low plastic, silty CLAY (CL) Becomes gravelly (fine to coarse)				0.0		13	24	12		Less mud return
				Gravel/cobble zone	127.0									Lost circulation @ 127' bgs - lost entire tube of mud within a foot of drilling.
130														No samples collected through this zone because split spoon cannot get through cobbles
135		RQD 74	90	LIMESTONE: Hard, gray, mostly unweathered 2" gray clay (high plastic)	137.0									
140		RQD 100	100											
				Bottom of boring @ 142' below ground surface	142.0									
145														

Completion Depth: 142.0 Ft.
Project No.: 21561192
Project Name: Solutia Barrier Wall
Drilling Contractor: Roberts Environmental Drilling

Water Depth: _____ ft., After _____ hrs.
_____ ft., After _____ hrs.
_____ ft., After _____ hrs.
Logged by: M. Felton

URS

Figure No.

LOG of BORING No. SB-6

Sheet 1 of 6

DATE 11/7/02 SURFACE ELEVATION, FT 423 est DATUM _____ LOCATION See Figure 2-05

DEPTH, ft.	SAMPLES	SAMPLING RESISTANCE	RECOVERY, %	DESCRIPTION	STRATUM EL / DEPTH	SYMBOL	PP, TSF	PID, ppm	FIELD Qu, KSF	NMC, %	LL	PI	Qu, KSF	NOTES
0				Boring not logged until 70' below ground surface										Boring advanced using 3.875" tricone bit
5														
10														
15														
20														

Completion Depth: 140.0 Ft.
Project No.: 21561192
Project Name: Solutia Barrier Wall
Drilling Contractor: Roberts Environmental Drilling

Water Depth: _____ ft., After _____ hrs.
_____ ft., After _____ hrs.
_____ ft., After _____ hrs.
Logged by: M. Felton

12/4/02 WCCXS 21561192.GPJ

URS

LOG of BORING No. SB-6

DATE 11/7/02 SURFACE ELEVATION, FT 423 est DATUM _____ LOCATION See Figure 2-05

DEPTH, ft.	SAMPLES	SAMPLING RESISTANCE	RECOVERY, %	DESCRIPTION	STRATUM EL / DEPTH	SYMBOL	PP, TSF	PID, ppm	FIELD Qu, KSF	NMC, %	LL	PI	Qu, KSF	NOTES
25				Boring not logged until 70' below ground surface										
30														
35														
40														
45														

Completion Depth: 140.0 Ft.
Project No.: 21561192
Project Name: Solutia Barrier Wall
Drilling Contractor: Roberts Environmental Drilling

Water Depth: _____ ft., After _____ hrs.
_____ ft., After _____ hrs.
_____ ft., After _____ hrs.
Logged by: M. Felton

URS

LOG of BORING No. SB-6

DATE 11/7/02 SURFACE ELEVATION, FT 423 est DATUM _____ LOCATION See Figure 2-05

DEPTH, ft.	SAMPLES	SAMPLING RESISTANCE	RECOVERY, %	DESCRIPTION	STRATUM EL / DEPTH	SYMBOL	PP, TSF	PID, ppm	FIELD Qu, KSF	NMC, %	LL	PI	Qu, KSF	NOTES
50				Boring not logged until 70' below ground surface										
55														
60														Drill reported note approximately 1' of gravel at this depth
65														
70		12 14 16 12	50	Medium dense, wet, gray, fine to medium SAND (SP); with trace coarse sand with strong odor	70.0			20.7						Note: PID reading is likely low due to sample sitting for 40 minutes prior to being analyzed

Completion Depth: 140.0 Ft.
Project No.: 21561192
Project Name: Solutia Barrier Wall
Drilling Contractor: Roberts Environmental Drilling

Water Depth: _____ ft., After _____ hrs.
_____ ft., After _____ hrs.
_____ ft., After _____ hrs.
Logged by: M. Felton

URS

LOG of BORING No. SB-6

DATE 11/7/02 SURFACE ELEVATION, FT 423 est DATUM _____ LOCATION See Figure 2-05

DEPTH, ft.	SAMPLES	SAMPLING RESISTANCE	RECOVERY, %	DESCRIPTION	STRATUM EL / DEPTH	SYMBOL	PP, TSF	PID, ppm	FIELD Qu, KSF	NMC, %	LL	PI	Qu, KSF	NOTES
75		9	67	With some silt				0.0						
		12												
		16		Dense, wet, gray, fine to coarse SAND (SW)										
		18												
80		12	50	Becomes medium dense, wet, gray, fine to medium grained SAND (SP); with strong odor				0.0						
		12												
		13												
		14												
85		15	50					0.0						
		13												
		11		Grades some fine to medium, rounded to angular gravel										
		12												
90		10	34	Grades some coarse sand				0.0						
		11												
		12		Gravel grades out										
		12												
95		13												
		16		Grades trace fine rounded gravel (still has strong odor)										
		14												
		13												

Completion Depth: 140.0 Ft.
Project No.: 21561192
Project Name: Solutia Barrier Wall
Drilling Contractor: Roberts Environmental Drilling

Water Depth: _____ ft., After _____ hrs.
_____ ft., After _____ hrs.
_____ ft., After _____ hrs.
Logged by: M. Felton

URS

LOG of BORING No. SB-6

DATE 11/7/02 SURFACE ELEVATION, FT 423 est DATUM _____ LOCATION See Figure 2-05

DEPTH, ft.	SAMPLES	SAMPLING RESISTANCE	RECOVERY, %	DESCRIPTION	STRATUM EL / DEPTH	SYMBOL	PP, TSF	PID, ppm	FIELD Qu, KSF	NMC, %	LL	PI	Qu, KSF	NOTES
100		16	17	Becomes dense, wet, gray, SAND (SW);				0.0						Piece of gravel stuck in
		18		with some gravel										shoe of spoon
		25												
		23												Several areas of rough drilling from 102' to 105' below ground surface; also odor coming up from hole in this zone (does not register on PID)
105		15	67	Becomes black, gravel grades out (still strong odor)				0.0						
		24												
		22												
		25												
110		36	65	Becomes very dense				0.0						
		41												
		45												
		50/5"												
				Very dense, wet, gray, fine to coarse sandy GRAVEL (GP); with strong odor	112.3									Driller reported rough drilling
115		15	67	Becomes dense				0.0						
		18												
		22												
		26												
120		16	42				>4.5	0.0						
		31												
		15		Hard, moist, gray, low plastic silty CLAY (CL); with some coarse sand to fine gravel (strong odor)	121.0									
		19												
		P	100	Grading more fine to coarse gravel										4.25" I.D. casing driven to 122' prior to collection of shelby tube sample (also switched from bentonite to revert)
		P	100	With only trace fine gravel and coarse sand; with little odor						13	29	16		

Completion Depth: 140.0 Ft. Water Depth: _____ ft., After _____ hrs.

Project No.: 21561192 _____ ft., After _____ hrs.

Project Name: Solutia Barrier Wall _____ ft., After _____ hrs.

Drilling Contractor: Roberts Environmental Drilling Logged by: M. Felton

URS

LOG of BORING No. SB-6

DATE 11/7/02 SURFACE ELEVATION, FT 423 est DATUM _____ LOCATION See Figure 2-05

DEPTH, ft.	SAMPLES	SAMPLING RESISTANCE	RECOVERY, %	DESCRIPTION	STRATUM EL / DEPTH	SYMBOL	PP, TSF	PID, ppm	FIELD Qu, KSF	NMC, %	LL	PI	Qu, KSF	NOTES
125				Becoming gravelly										
		RQD 40	100	Hard, gray, unweathered LIMESTONE; (probable cobble)	126.0									
				Gray, low plastic, silty CLAY (CL)	126.8									
		RQD 40	24	Hard, gray LIMESTONE rock or boulders; Rock pieces max of 6" thick	127.8									
				2"-3" clay layer (reported by driller); may be thicker because not much recovery										
130				2" clay layer (reported by driller); may be thicker because not much recovery	130.3									
			56	Hard, moist, gray, low plastic silty CLAY (CL); with some fine gravel and coarse sand										
		RQD 83	100	Rock cobble (limestone) Partial piece of limestone cobble With no limestone cobbles										
135				With some coarse gravel	135.0									
				Gray, hard, weathered LIMESTONE										
		RQD 100	100											
140				Bottom of boring @ 140'	140.0									
145														

Completion Depth: 140.0 Ft.

Project No.: 21561192

Project Name: Solutia Barrier Wall

Drilling Contractor: Roberts Environmental Drilling

Water Depth: _____ ft., After _____ hrs.

_____ ft., After _____ hrs.

_____ ft., After _____ hrs.

Logged by: M. Felton

URS

Figure No.

LOG of BORING No. SB-7

Sheet 1 of 6

DATE 11/6/02 SURFACE ELEVATION, FT 421 est DATUM _____ LOCATION See Figure 2-05

DEPTH, ft.	SAMPLES	SAMPLING RESISTANCE	RECOVERY, %	DESCRIPTION	STRATUM EL / DEPTH	SYMBOL	PP, TSF	PID, ppm	FIELD Qu, KSF	NMC, %	LL	PI	Qu, KSF	NOTES
0				Boring not logged until 68.5'										Boring advanced using 3.875" tricone bit
5														
10														
15														
20														

Completion Depth: 139.0 Ft.

Project No.: 21561192

Project Name: Solutia Barrier Wall

Drilling Contractor: Roberts Environmental Drilling

Water Depth: _____ ft., After _____ hrs.

_____ ft., After _____ hrs.

_____ ft., After _____ hrs.

Logged by: E. Fritsch

12/4/02 WCCXS 21561192.GPJ

URS

LOG of BORING No. SB-7

DATE 11/6/02 SURFACE ELEVATION, FT 421 est DATUM _____ LOCATION See Figure 2-05

DEPTH, ft.	SAMPLES	SAMPLING RESISTANCE	RECOVERY, %	DESCRIPTION	STRATUM EL / DEPTH	SYMBOL	PP, TSF	PID, ppm	FIELD Qu, KSF	NMC, %	LL	PI	Qu, KSF	NOTES
25				Boring not logged until 68.5'										
30														
35														
40														
45														

Completion Depth: 139.0 Ft.

Project No.: 21561192

Project Name: Solutia Barrier Wall

Drilling Contractor: Roberts Environmental Drilling

Water Depth: _____ ft., After _____ hrs.

_____ ft., After _____ hrs.

_____ ft., After _____ hrs.

Logged by: E. Fritsch

URS

LOG of BORING No. SB-7

DATE 11/6/02 SURFACE ELEVATION, FT 421 est DATUM _____ LOCATION See Figure 2-05

DEPTH, ft.	SAMPLES	SAMPLING RESISTANCE	RECOVERY, %	DESCRIPTION	STRATUM EL / DEPTH	SYMBOL	PP, TSF	PID, ppm	FIELD Qu, KSF	NMC, %	LL	PI	Qu, KSF	NOTES
50				Boring not logged until 68.5'										
55														
60														
65														
70		12 17 10 10	63	Medium dense, brown, well graded, fine to coarse grained SAND (SW); with fine gravel, (sub-rounded grains)	68.5			1.9						
		21 16	63	Becomes medium dense, gray, poorly graded, fine grained SAND (SP)				1.6						

Completion Depth: 139.0 Ft. Water Depth: _____ ft., After _____ hrs.

Project No.: 21561192 _____ ft., After _____ hrs.

Project Name: Solutia Barrier Wall _____ ft., After _____ hrs.

Drilling Contractor: Roberts Environmental Drilling Logged by: E. Fritsch

URS

LOG of BORING No. SB-7

DATE 11/6/02 SURFACE ELEVATION, FT 421 est DATUM _____ LOCATION See Figure 2-05

DEPTH, ft.	SAMPLES	SAMPLING RESISTANCE	RECOVERY, %	DESCRIPTION	STRATUM EL / DEPTH	SYMBOL	PP, TSF	PID, ppm	FIELD Qu, KSF	NMC, %	LL	PI	Qu, KSF	NOTES
75		13 20		SAME: Medium dense, gray, poorly graded, fine grained SAND (SP)										
		16 39	71	Becomes very dense				2.2						
80		40 30												
		12 13	50	Becomes medium dense, gray to brown, well graded, fine to coarse grained SAND (SW); sub-rounded grains				2.1						
85		14 14												
		12 16	58	Becomes dense				1.9						
90		18 22												
		17 21	50					2.0						
95		13 17												
		20 50/5"	91	Very dense, brown, well graded, fine to medium grained SAND, sub-rounded										Fractured chert in shoe of samples

Completion Depth: 139.0 Ft.
Project No.: 21561192
Project Name: Solutia Barrier Wall
Drilling Contractor: Roberts Environmental Drilling

Water Depth: _____ ft., After _____ hrs.
_____ ft., After _____ hrs.
_____ ft., After _____ hrs.
Logged by: E. Fritsch

URS

LOG of BORING No. SB-7

DATE 11/6/02 SURFACE ELEVATION, FT 421 est DATUM _____ LOCATION See Figure 2-05

DEPTH, ft.	SAMPLES	SAMPLING RESISTANCE	RECOVERY, %	DESCRIPTION	STRATUM EL / DEPTH	SYMBOL	PP, TSF	PID, ppm	FIELD Qu, KSF	NMC, %	LL	PI	Qu, KSF	NOTES
100														
		17	67	Becomes dense, brown to reddish brown, well graded, fine to medium grained SAND (SW); with trace fine gravel, sub-rounded grains				0.1						
		20												
105		35												
		40												
		22	54					0.1						
		30												
110		29												
		30												
		21	54	Becomes dense, brown to gray				0.3						
		19												
115		13												
		14		Gravel, cobbles, coarse sand										Very rough drilling
				Silty CLAY (CL) with gravel becoming sand with gravel; fractured rock	117.5									Smoother drilling, little clay in circulation water
		73	79					0.0						
		46												
120		50/2"		Rock, cobbles	119.5									Extremely rough drilling
				Hard, moist, light gray, silty CLAY (CL) (2" thick); with gravel, cobbles, and fractured rock (4" thick); fractured rock in shoe	122.0									Drilled like clay, however, no return of clay in circulation water
		16	25				3.50	0.0						
		23												

Completion Depth: 139.0 Ft.
Project No.: 21561192
Project Name: Solutia Barrier Wall
Drilling Contractor: Roberts Environmental Drilling

Water Depth: _____ ft., After _____ hrs.
_____ ft., After _____ hrs.
_____ ft., After _____ hrs.
Logged by: E. Fritsch

URS

LOG of BORING No. SB-7

DATE 11/6/02 SURFACE ELEVATION, FT 421 est DATUM _____ LOCATION See Figure 2-05

DEPTH, ft.	SAMPLES	SAMPLING RESISTANCE	RECOVERY, %	DESCRIPTION	STRATUM EL / DEPTH	SYMBOL	PP, TSF	PID, ppm	FIELD Qu, KSF	NMC, %	LL	PI	Qu, KSF	NOTES
125		38 43		Gravel, sand, and fractured rock	126.0									Based on drilling and cutting in circulation water
		16 27	92	Hard, moist, gray to dark gray, silty CLAY (CL); with trace, coarse sand	128.5		>4.5	0.0						
130		36 49												
		P	100											At 130.5' pushed Shelby tube 7". Casing broke off. Offset hole 10' to NW. Began Shelby sampling in off-set hole at 128' feet. Took Shelby samples from 128' to 129.5' and sample from 130' to 131'.
		RQD 86	70	LIMESTONE; hard, light gray, smooth textured	134.0									
135				Bottom of boring @ 139'	139.0									
140														
145														

Completion Depth: 139.0 Ft.
Project No.: 21561192
Project Name: Solutia Barrier Wall
Drilling Contractor: Roberts Environmental Drilling

Water Depth: _____ ft., After _____ hrs.
_____ ft., After _____ hrs.
_____ ft., After _____ hrs.
Logged by: E. Fritsch

URS

LOG of BORING No. SB-8

DATE 11/21/02 SURFACE ELEVATION, FT 420 est DATUM _____ LOCATION See Figure 2-05

DEPTH, ft.	SAMPLES	SAMPLING RESISTANCE	RECOVERY, %	DESCRIPTION	STRATUM EL / DEPTH	SYMBOL	PP, TSF	PID, ppm	FIELD Qu, KSF	NMC, %	LL	PI	Qu, KSF	NOTES
0				Boring not logged until 70.0'. Driller noted as much as 13 feet of black ashy/silty material at the surface of this location.										
5														
10														
15														
20														

Completion Depth: 136.0 Ft.

Project No.: 21561192

Project Name: Solutia Barrier Wall

Drilling Contractor: Roberts Environmental Drilling

Water Depth: _____ ft., After _____ hrs.

_____ ft., After _____ hrs.

_____ ft., After _____ hrs.

Logged by: M. Felton

URS

LOG of BORING No. SB-8

DATE 11/21/02 SURFACE ELEVATION, FT 420 est DATUM _____ LOCATION See Figure 2-05

DEPTH, ft.	SAMPLES	SAMPLING RESISTANCE	RECOVERY, %	DESCRIPTION	STRATUM EL / DEPTH	SYMBOL	PP, TSF	PID, ppm	FIELD Qu, KSF	NMC, %	LL	PI	Qu, KSF	NOTES
25				Boring not logged until 70.0'										
30														
35														
40														
45														

Completion Depth: 136.0 Ft.

Water Depth: _____ ft., After _____ hrs.

Project No.: 21561192

_____ ft., After _____ hrs.

Project Name: Solutia Barrier Wall

_____ ft., After _____ hrs.

Drilling Contractor: Roberts Environmental Drilling

Logged by: M. Felton

12/4/02 WCCXS 21561192.GPJ

URS

LOG of BORING No. SB-8

DATE 11/21/02 SURFACE ELEVATION, FT 420 est DATUM _____ LOCATION See Figure 2-05

DEPTH, ft.	SAMPLES	SAMPLING RESISTANCE	RECOVERY, %	DESCRIPTION	STRATUM EL / DEPTH	SYMBOL	PP, TSF	PID, ppm	FIELD Qu, KSF	NMC, %	LL	PI	Qu, KSF	NOTES
50				Boring not logged until 70.0'										
55														
60														
65														
70		12 10 11 17	50	Medium dense, wet, gray, medium to coarse grained SAND (SP): with trace gravel, with odor	70.0			0.0						

Completion Depth: 136.0 Ft.

Project No.: 21561192

Project Name: Solutia Barrier Wall

Drilling Contractor: Roberts Environmental Drilling

Water Depth: _____ ft., After _____ hrs.

_____ ft., After _____ hrs.

_____ ft., After _____ hrs.

Logged by: M. Felton

12/4/02 WCCXS 21561192.GPJ

URS

LOG of BORING No. SB-8

DATE 11/21/02 SURFACE ELEVATION, FT 420 est DATUM _____ LOCATION See Figure 2-05

DEPTH, ft.	SAMPLES	SAMPLING RESISTANCE	RECOVERY, %	DESCRIPTION	STRATUM EL / DEPTH	SYMBOL	PP, TSF	PID, ppm	FIELD Qu, KSF	NMC, %	LL	PI	Qu, KSF	NOTES
75		11 14 21 23	50	SAME AS ABOVE: Medium dense, wet, gray, medium to coarse grained SAND (SP): with trace gravel, with odor Becomming dense				0.0						
80		10 11 14 13	50	Becomes medium dense, wet, gray, fine to medium grained SAND (SP); with trace coarse sand and fine gravel, with odor				0.0						
85		12 14 14 13	42					0.0						
90		11 15 15 16	42					0.0						
95		24 40 50/4"	75	Becomming very dense with some fine to coarse gravel				0.0						Some mud loss so far (1/2 tub) Rough drilling (likely gravel and cobbles)

Completion Depth: 136.0 Ft.
Project No.: 21561192
Project Name: Solutia Barrier Wall
Drilling Contractor: Roberts Environmental Drilling

Water Depth: _____ ft., After _____ hrs.
_____ ft., After _____ hrs.
_____ ft., After _____ hrs.
Logged by: M. Felton

URS

LOG of BORING No. SB-8

DATE 11/21/02 SURFACE ELEVATION, FT 420 est DATUM _____ LOCATION See Figure 2-05

DEPTH, ft.	SAMPLES	SAMPLING RESISTANCE	RECOVERY, %	DESCRIPTION	STRATUM EL / DEPTH	SYMBOL	PP, TSF	PID, ppm	FIELD Qu, KSF	NMC, %	LL	PI	Qu, KSF	NOTES
100		18 16 16 24	42	Dense, wet, gray, very fine to medium grained SAND (SP); with some odor and with no coarse sand or gravel				0.0						
105		19 25 33 34	50	Becomes very dense with trace coarse sand to fine gravel				0.0						
				Very dense, wet, gray, fine to coarse sandy GRAVEL (GP); with strong odor	109.0									
110		48 46 50 28	50	With some clay	111.8									Drive casing to 112 ft, switch to revert mud.
				Very stiff, moist, gray, low plastic, silty CLAY (CL); with some fine gravel	112.1									
				Gravel/cobble (GP) with several clay layers (1 to 4 inches thick); clay layers hard, moist, gray, low plastic sitly CLAY (CL)										From just below 112' to 114' was gravel/cobbles according to driller; losing much mud to this formation
115		16 39 27 23	25											Driller reports same rocky/clayey matrix as found above; rough drilling; still losing a lot of mud during drilling
120		9 12 16 17	100	Very stiff, moist, gray, low plastic silty CLAY (CL); with some fine to coarse gravel, with slight odor	120.0		3.75	0.0						
		P	67	3" sandy, gravelly seam coarse sand to coarse gravel; with much gravel and sand										
				2" inch sandy, gravelly seam	122.5									
				Alternating clay and gravel layers 122.5' to 130.0'										Losing a lot of mud during drilling

Completion Depth: 136.0 Ft.
Project No.: 21561192
Project Name: Solutia Barrier Wall
Drilling Contractor: Roberts Environmental Drilling

Water Depth: _____ ft., After _____ hrs.
_____ ft., After _____ hrs.
_____ ft., After _____ hrs.
Logged by: M. Felton

URS

LOG of BORING No. SB-8

DATE 11/21/02 SURFACE ELEVATION, FT 420 est DATUM _____ LOCATION See Figure 2-05

DEPTH, ft.	SAMPLES	SAMPLING RESISTANCE	RECOVERY, %	DESCRIPTION	STRATUM EL / DEPTH	SYMBOL	PP, TSF	PID, ppm	FIELD Qu, KSF	NMC, %	LL	PI	Qu, KSF	NOTES
125		p	100	With some sand also										
130		RQD 46	58	LIMESTONE: Gray, hard, unweathered 4" void at 130.6'	130.0									RUN #1 Start: 130.5 Stop: 132.5 Recovery: 58% Water loss: 50% RUN #2 Start: 132.5 Stop: 136.0 Water loss: 50%
135				Bottom of boring@ 136.0'	136.0									Unable to install piezometer due to hole collapse, bridging, and tape break in borehole
140														
145														

Completion Depth: 136.0 Ft.
Water Depth: _____ ft., After _____ hrs.

Project No.: 21561192
_____ ft., After _____ hrs.

Project Name: Solutia Barrier Wall
_____ ft., After _____ hrs.

Drilling Contractor: Roberts Environmental Drilling
Logged by: M. Felton

12/4/02 WCCXS 21561192.GPJ

URS

Figure No.

LOG of BORING No. SB-9

Sheet 1 of 6

DATE 11/14/02 SURFACE ELEVATION, FT 421 est DATUM _____ LOCATION See Figure 2-05

DEPTH, ft.	SAMPLES	SAMPLING RESISTANCE	RECOVERY, %	DESCRIPTION	STRATUM EL / DEPTH	SYMBOL	PP, TSF	PID, ppm	FIELD Qu, KSF	NMC, %	LL	PI	Qu, KSF	NOTES
0				Boring not logged until 71.0'										Boring advanced using 3.875" tricone bit
5														
10														
15														
20														

Completion Depth: 139.0 Ft.
Project No.: 21561192
Project Name: Solutia Barrier Wall
Drilling Contractor: Roberts Environmental Drilling
Logged by: M. Felton

Water Depth: _____ ft., After _____ hrs.
_____ ft., After _____ hrs.
_____ ft., After _____ hrs.

12/4/02 WCCXS 21561192.GPJ

URS

LOG of BORING No. SB-9

DATE 11/14/02 SURFACE ELEVATION, FT 421 est DATUM _____ LOCATION See Figure 2-05

DEPTH, ft.	SAMPLES	SAMPLING RESISTANCE	RECOVERY, %	DESCRIPTION	STRATUM EL / DEPTH	SYMBOL	PP, TSF	PID, ppm	FIELD Qu, KSF	NMC, %	LL	PI	Qu, KSF	NOTES
25				Boring not logged until 71.0'										
30														
35														
40														
45														

Completion Depth: 139.0 Ft.
Project No.: 21561192
Project Name: Solutia Barrier Wall
Drilling Contractor: Roberts Environmental Drilling

Water Depth: _____ ft., After _____ hrs.
_____ ft., After _____ hrs.
_____ ft., After _____ hrs.
Logged by: M. Felton

URS

LOG of BORING No. SB-9

DATE 11/14/02 SURFACE ELEVATION, FT 421 est DATUM _____ LOCATION See Figure 2-05

DEPTH, ft.	SAMPLES	SAMPLING RESISTANCE	RECOVERY, %	DESCRIPTION	STRATUM EL / DEPTH	SYMBOL	PP, TSF	PID, ppm	FIELD Qu, KSF	NMC, %	LL	PI	Qu, KSF	NOTES
50				Boring not logged until 71.0'										
55														
60														
65														
70														
		36 32 30 18	83	Very dense, wet, gray, fine to medium grained SAND (SP); with some coarse grained sand and coarse gravel	71.0			0.0						

Completion Depth: 139.0 Ft.

Project No.: 21561192

Project Name: Solutia Barrier Wall

Drilling Contractor: Roberts Environmental Drilling

Water Depth: _____ ft., After _____ hrs.

_____ ft., After _____ hrs.

_____ ft., After _____ hrs.

Logged by: M. Felton

12/4/02 WCCXS 21561192.GPJ

URS

LOG of BORING No. SB-9

DATE 11/14/02 SURFACE ELEVATION, FT 421 est DATUM _____ LOCATION See Figure 2-05

DEPTH, ft.	SAMPLES	SAMPLING RESISTANCE	RECOVERY, %	DESCRIPTION	STRATUM EL / DEPTH	SYMBOL	PP, TSF	PID, ppm	FIELD Qu, KSF	NMC, %	LL	PI	Qu, KSF	NOTES
75														
		31 30 26 26	100	Very dense, wet, gray, fine to coarse SAND (SW); with trace fine gravel and some odor				0.0						Rougher drilling
80														
		14 13 12 14	100	Becoming medium dense				0.0						
85														
		9 10 13 15	42	Gravel grades out				0.0						
90														
		17 18 19 19	42	Becomes dense				0.0						
95														
		12 15 19 26						0.0						

Completion Depth: 139.0 Ft.

Project No.: 21561192

Project Name: Solutia Barrier Wall

Drilling Contractor: Roberts Environmental Drilling

Logged by: M. Felton

Water Depth: _____ ft., After _____ hrs.

_____ ft., After _____ hrs.

_____ ft., After _____ hrs.

12/4/02 WCCXS 21561192.GPJ

URS

LOG of BORING No. SB-9

DATE 11/14/02 SURFACE ELEVATION, FT 421 est DATUM _____ LOCATION See Figure 2-05

DEPTH, ft.	SAMPLES	SAMPLING RESISTANCE	RECOVERY, %	DESCRIPTION	STRATUM EL / DEPTH	SYMBOL	PP, TSF	PID, ppm	FIELD Qu, KSF	NMC, %	LL	PI	Qu, KSF	NOTES
100				Same as above: Dense, wet, gray, fine to medium grained										
		15	67	SAND (SP); with some coarse sand				0.0						
		22												
		31		Becoming very dense with thin, black										
		33		laminations (coal-like substance)										Hard drilling
105		21	75	Becoming dense, fine to coarse SAND with trace fine to medium gravel										
		21												
		23												
		30												
				Cobble, gravel zone	108.5									Hard drilling
		P	100											Softer drilling
				Hard, moist, gray, low plastic, silty CLAY	109.5					15				
110				(CL); with trace sand to fine gravel										
		4	100				3.50	0.0						
		11		Becoming stiff										
		13												
		20		Becoming hard										
		9	100				>4.5	0.0						
		13												
		22												
115		50/5"	100	Very dense, wet, gray, clayey fine to coarse	115.0			0.0						
		30		grained SAND (SC)										
		50/3"												
				Very dense, wet, gray, medium to coarse	117.0									
				grained SAND (SP); with some silty clay										
				and some fine to medium gravel										
120		34	75					0.0						
		40												
		30												
		25												

Completion Depth: 139.0 Ft. Water Depth: _____ ft., After _____ hrs.

Project No.: 21561192 _____ ft., After _____ hrs.

Project Name: Solutia Barrier Wall _____ ft., After _____ hrs.

Drilling Contractor: Roberts Environmental Drilling Logged by: M. Felton

URS

Figure No.

LOG of BORING No. SB-9

Sheet 6 of 6

DATE 11/14/02 SURFACE ELEVATION, FT 421 est DATUM _____ LOCATION See Figure 2-05

DEPTH, ft.	SAMPLES	SAMPLING RESISTANCE	RECOVERY, %	DESCRIPTION	STRATUM EL / DEPTH	SYMBOL	PP, TSF	PID, ppm	FIELD Qu, KSF	NMC, %	LL	PI	Qu, KSF	NOTES
125		50/4"	25	SAME: Very dense, wet, gray, medium to coarse grained SAND (SP); with some silty clay and some fine to medium gravel				0.0						
130		31 50/5"	36	Grades only trace gravel										
		RQD 75	100	Hard, gray, mostly unweathered LIMESTONE	134.0									
135				Slightly more weathered zone (4")										Lost all water return @ 137' bgs during coring
				Bottom of boring @ 139'	139.0									
140														
145														

Completion Depth: 139.0 Ft.

Project No.: 21561192

Project Name: Solutia Barrier Wall

Drilling Contractor: Roberts Environmental Drilling

Logged by: M. Felton

Water Depth: _____ ft., After _____ hrs.

_____ ft., After _____ hrs.

_____ ft., After _____ hrs.

12/4/02 WCCXS 21561192.GPJ

URS

Figure No.

LOG of BORING No. SB-10

Sheet 1 of 6

DATE 11/13/02 SURFACE ELEVATION, FT 421 est DATUM _____ LOCATION See Figure 2-05

DEPTH, ft.	SAMPLES	SAMPLING RESISTANCE	RECOVERY, %	DESCRIPTION	STRATUM EL / DEPTH	SYMBOL	PP, TSF	PID, ppm	FIELD Qu, KSF	NMC, %	LL	PI	Qu, KSF	NOTES
0				Boring was not logged until 68.5'										Boring advanced using 3.875" tricone bit
5														
10														
15														
20														

Completion Depth: 137.9 Ft.
Project No.: 21561192
Project Name: Solutia Barrier Wall
Drilling Contractor: Roberts Environmental Drilling

Water Depth: _____ ft., After _____ hrs.
_____ ft., After _____ hrs.
_____ ft., After _____ hrs.
Logged by: B. Higgins

12/4/02 WCCXS 21561192.GPJ

URS

LOG of BORING No. SB-10

DATE 11/13/02 SURFACE ELEVATION, FT 421 est DATUM _____ LOCATION See Figure 2-05

DEPTH, ft.	SAMPLES	SAMPLING RESISTANCE	RECOVERY, %	DESCRIPTION	STRATUM EL / DEPTH	SYMBOL	PP, TSF	PID, ppm	FIELD Qu, KSF	NMC, %	LL	PI	Qu, KSF	NOTES
25				Boring was not logged until 68.5'										
30														
35														
40														
45														Hard drilling

Completion Depth: 137.9 Ft.

Project No.: 21561192

Project Name: Solutia Barrier Wall

Drilling Contractor: Roberts Environmental Drilling

Water Depth: _____ ft., After _____ hrs.

_____ ft., After _____ hrs.

_____ ft., After _____ hrs.

Logged by: B. Higgins

URS

LOG of BORING No. SB-10

DATE 11/13/02 SURFACE ELEVATION, FT 421 est DATUM _____ LOCATION See Figure 2-05

DEPTH, ft.	SAMPLES	SAMPLING RESISTANCE	RECOVERY, %	DESCRIPTION	STRATUM EL / DEPTH	SYMBOL	PP, TSF	PID, ppm	FIELD Qu, KSF	NMC, %	LL	PI	Qu, KSF	NOTES
50				Boring was not logged until 68.5'										
55														
60														
65														
		9	67	Medium dense, gray, medium grained	68.5									
		7		SAND (SP); poorly graded										
70		8												
		9												
		14	54	Becomes dense, fine to medium grained										
		16												

Completion Depth: 137.9 Ft.
Project No.: 21561192
Project Name: Solutia Barrier Wall
Drilling Contractor: Roberts Environmental Drilling

Water Depth: _____ ft., After _____ hrs.
_____ ft., After _____ hrs.
_____ ft., After _____ hrs.
Logged by: B. Higgins

URS

LOG of BORING No. SB-10

DATE 11/13/02 SURFACE ELEVATION, FT 421 est DATUM _____ LOCATION See Figure 2-05

DEPTH, ft.	SAMPLES	SAMPLING RESISTANCE	RECOVERY, %	DESCRIPTION	STRATUM EL / DEPTH	SYMBOL	PP, TSF	PID, ppm	FIELD Qu, KSF	NMC, %	LL	PI	Qu, KSF	NOTES
75		25 32		SAME: Dense, gray, fine to medium SAND (SP)										
				Stiff, moist, gray, Silty CLAY (CL) with trace sand	77.0									
		3 5 7 12	96				2.50		0.0					
80		P	96											
		5 8 43 43	79	Very dense, gray, poorly graded Clayey SAND (SC)	82.5				0.0					
85														
		7 10 10 14	58	Medium dense, brown, wet, poorly graded, medium grained SAND (SP); with gravel	88.5									
90														
		14 14 14 16	67	Grades to fine										
95														
		25 26 50/5"	88	Becomes very dense										

Completion Depth: 137.9 Ft.
Project No.: 21561192
Project Name: Solutia Barrier Wall
Drilling Contractor: Roberts Environmental Drilling

Water Depth: _____ ft., After _____ hrs.
_____ ft., After _____ hrs.
_____ ft., After _____ hrs.
Logged by: B. Higgins

12/4/02 WCCXS 21561192.GPJ

URS

LOG of BORING No. SB-10

DATE 11/13/02 SURFACE ELEVATION, FT 421 est DATUM _____ LOCATION See Figure 2-05

DEPTH, ft.	SAMPLES	SAMPLING RESISTANCE	RECOVERY, %	DESCRIPTION	STRATUM EL / DEPTH	SYMBOL	PP, TSF	PID, ppm	FIELD Qu, KSF	NMC, %	LL	PI	Qu, KSF	NOTES
100				SAME: Very dense, brown, wet, fine SAND (SP); with gravel										
		15	67											
		18												
105		28												
		40												
		50/3"	100											
110														
		27	71											
		27												
115		24												
		31												
		30	29											
		24												
		18												
120		19		Very stiff, gray, moist, silty CLAY (CL) with trace sand	120.0									
		P	100											
				Very dense, gray, wet, poorly graded, medium to course grained SAND (SP); with gravel	121.5					12				
		34	71											
		45												

Completion Depth: 137.9 Ft.
Project No.: 21561192
Project Name: Solutia Barrier Wall
Drilling Contractor: Roberts Environmental Drilling

Water Depth: _____ ft., After _____ hrs.
_____ ft., After _____ hrs.
_____ ft., After _____ hrs.
Logged by: B. Higgins

URS

LOG of BORING No. SB-10

DATE 11/13/02 SURFACE ELEVATION, FT 421 est DATUM _____ LOCATION See Figure 2-05

DEPTH, ft.	SAMPLES	SAMPLING RESISTANCE	RECOVERY, %	DESCRIPTION	STRATUM EL / DEPTH	SYMBOL	PP, TSF	PID, ppm	FIELD Qu, KSF	NMC, %	LL	PI	Qu, KSF	NOTES
125		46 43		SAME: Very dense, gray, wet, medium to coarse grained SAND (SP); with gravel										
		44 40	79											
130		36 48		Becomes fine										
		RQD 78	97	LIMESTONE	132.5									
135														
				Bottom of boring at 137.9'	137.9									
140														
145														

Completion Depth: 137.9 Ft.

Project No.: 21561192

Project Name: Solutia Barrier Wall

Drilling Contractor: Roberts Environmental Drilling

Water Depth: _____ ft., After _____ hrs.

_____ ft., After _____ hrs.

_____ ft., After _____ hrs.

Logged by: B. Higgins

URS

LOG of BORING No. SB-11

DATE 12/2/02 SURFACE ELEVATION, FT 420 est DATUM _____ LOCATION See Figure 2-05

DEPTH, ft.	SAMPLES	SAMPLING RESISTANCE	RECOVERY, %	DESCRIPTION	STRATUM EL / DEPTH	SYMBOL	PP, TSF	PID, ppm	FIELD Qu, KSF	NMC, %	LL	PI	Qu, KSF	NOTES
0				Boring was not logged until 68'										Boring advanced using 4.125" tricone bit
5														
10														
15														
20														

Completion Depth: 136.5 Ft.

Project No.: 21561192

Project Name: Solutia Barrier Wall

Drilling Contractor: Roberts Environmental Drilling

Water Depth: _____ ft., After _____ hrs.

_____ ft., After _____ hrs.

_____ ft., After _____ hrs.

Logged by: M. Felton/B. Higgins

1/6/03 WCCXS 21561192.GPJ

URS

LOG of BORING No. SB-11

DATE 12/2/02 SURFACE ELEVATION, FT 420 est DATUM _____ LOCATION See Figure 2-05

DEPTH, ft.	SAMPLES	SAMPLING RESISTANCE	RECOVERY, %	DESCRIPTION	STRATUM EL / DEPTH	SYMBOL	PP, TSF	PID, ppm	FIELD Qu, KSF	NMC, %	LL	PI	Qu, KSF	NOTES
25				Boring was not logged until 68'										
30														
35														
40														
45														

Completion Depth: 136.5 Ft.

Project No.: 21561192

Project Name: Solutia Barrier Wall

Drilling Contractor: Roberts Environmental Drilling

Water Depth: _____ ft., After _____ hrs.

_____ ft., After _____ hrs.

_____ ft., After _____ hrs.

Logged by: M. Felton/B. Higgins

1/6/03 WCCXS 21561192.GPJ

URS

LOG of BORING No. SB-11

DATE 12/2/02 SURFACE ELEVATION, FT 420 est DATUM _____ LOCATION See Figure 2-05

DEPTH, ft.	SAMPLES	SAMPLING RESISTANCE	RECOVERY, %	DESCRIPTION	STRATUM EL / DEPTH	SYMBOL	PP, TSF	PID, ppm	FIELD Qu, KSF	NMC, %	LL	PI	Qu, KSF	NOTES
50				Boring was not logged until 68'										
55														
60														
65														
		16 19 19	67	Dense, wet, very fine to fine, gray grained SAND (SP); with odor	68.0			0.0						
70		21		1" zone with coarser sand										
		16 20 26	100	Becoming very fine to medium grained and very dense				0.0						

Completion Depth: 136.5 Ft.
Project No.: 21561192
Project Name: Solutia Barrier Wall
Drilling Contractor: Roberts Environmental Drilling

Water Depth: _____ ft., After _____ hrs.
_____ ft., After _____ hrs.
_____ ft., After _____ hrs.
Logged by: M. Felton/B. Higgins

1/6/03 WCCXS 21561192.GPJ

URS

LOG of BORING No. SB-11

DATE 12/2/02 SURFACE ELEVATION, FT 420 est DATUM _____ LOCATION See Figure 2-05

DEPTH, ft.	SAMPLES	SAMPLING RESISTANCE	RECOVERY, %	DESCRIPTION	STRATUM EL / DEPTH	SYMBOL	PP, TSF	PID, ppm	FIELD Qu, KSF	NMC, %	LL	PI	Qu, KSF	NOTES
75		24												
		6 9 9 9	75	Becoming medium dense, fine to coarse SAND (SP); with some fine gravel				0.0						
80				With some odor and medium coarse gravel										Rough drilling from 81 to 88'
		20 48 50/5"	47	Becomes very dense				0.0						
85				Grades only trace fine gravel and no medium to coarse gravel										
		31 18 20 21	75	Becomes dense				0.0						
90														
		16 19 15 17	54	Grades to medium grained sand				1.6						
95														
		12 16 20	63					0.0						

Completion Depth: 136.5 Ft.
Project No.: 21561192
Project Name: Solutia Barrier Wall
Drilling Contractor: Roberts Environmental Drilling

Water Depth: _____ ft., After _____ hrs.
_____ ft., After _____ hrs.
_____ ft., After _____ hrs.
Logged by: M. Felton/B. Higgins

1/6/03 WCCXS 21561192.GPJ

URS

LOG of BORING No. SB-11

DATE 12/2/02 SURFACE ELEVATION, FT 420 est DATUM _____ LOCATION See Figure 2-05

DEPTH, ft.	SAMPLES	SAMPLING RESISTANCE	RECOVERY, %	DESCRIPTION	STRATUM EL / DEPTH	SYMBOL	PP, TSF	PID, ppm	FIELD Qu, KSF	NMC, %	LL	PI	Qu, KSF	NOTES
100		24		Same as above: Dense, gray, wet, medium grained SAND (SP); with gravel										
		24	79	Grades fine to medium				0.0						
		30												
		27		Becomes very dense										
105		38												
		31	63					0.0						
		27												
		25												
110		50/5"												
				Very stiff, gray, moist, Silty CLAY (CL); with trace fine sand	112.0									
		19	92				3.5	35.0						
		21												
		29												
115		32												
				Very dense, gray, wet, medium grained SAND (SP)	116.5									
		50/5"	80					0.0						
120														
		50/5"	36	Grading coarser				0.0						

Completion Depth: 136.5 Ft.
Project No.: 21561192
Project Name: Solutia Barrier Wall
Drilling Contractor: Roberts Environmental Drilling

Water Depth: _____ ft., After _____ hrs.
_____ ft., After _____ hrs.
_____ ft., After _____ hrs.
Logged by: M. Felton/B. Higgins

1/6/03 WCCXS 21561192.GPJ

URS

Figure No.

LOG of BORING No. SB-11

Sheet 6 of 6

DATE 12/2/02 SURFACE ELEVATION, FT 420 est DATUM _____ LOCATION See Figure 2-05

DEPTH, ft.	SAMPLES	SAMPLING RESISTANCE	RECOVERY, %	DESCRIPTION	STRATUM EL / DEPTH	SYMBOL	PP, TSF	PID, ppm	FIELD Qu, KSF	NMC, %	LL	PI	Qu, KSF	NOTES
125														
		36 30 31 50/5"	65	Medium to coarse										
130														
		RQD 24	86	LIMESTONE: smooth, dense, light gray	133.0									
135														Smooth drilling
				Bottom of boring at 136.5'	136.5									
140														
145														

Completion Depth: 136.5 Ft.

Project No.: 21561192

Project Name: Solutia Barrier Wall

Drilling Contractor: Roberts Environmental Drilling

Water Depth: _____ ft., After _____ hrs.

_____ ft., After _____ hrs.

_____ ft., After _____ hrs.

Logged by: M. Felton/B. Higgins

1/6/03 WCCXS 21561192.GPJ

URS

LOG of BORING No. SB-12

DATE 12/9/02 SURFACE ELEVATION, FT 420 est DATUM _____ LOCATION See Figure 2-05

DEPTH, ft.	SAMPLES	SAMPLING RESISTANCE	RECOVERY, %	DESCRIPTION	STRATUM EL / DEPTH	SYMBOL	PP, TSF	PID, ppm	FIELD Qu, KSF	NMC, %	LL	PI	Qu, KSF	NOTES
0				Boring was not logged until 67.5'										Boring advanced using 4.125" tricone bit
5														
10														
15														
20														

Completion Depth: 140.2 Ft.

Project No.: 21561192

Project Name: Solutia Barrier Wall

Drilling Contractor: Roberts Environmental Drilling

Water Depth: _____ ft., After _____ hrs.

_____ ft., After _____ hrs.

_____ ft., After _____ hrs.

Logged by: B. Higgins

1/6/03 WCCXS 21561192.GPJ

URS

LOG of BORING No. SB-12

DATE 12/9/02 SURFACE ELEVATION, FT 420 est DATUM _____ LOCATION See Figure 2-05

DEPTH, ft.	SAMPLES	SAMPLING RESISTANCE	RECOVERY, %	DESCRIPTION	STRATUM EL / DEPTH	SYMBOL	PP, TSF	PID, ppm	FIELD Qu, KSF	NMC, %	LL	PI	Qu, KSF	NOTES
25				Boring was not logged until 67.5'										
30														
35														
40														
45														

Completion Depth: 140.2 Ft.

Project No.: 21561192

Project Name: Solutia Barrier Wall

Drilling Contractor: Roberts Environmental Drilling

Water Depth: _____ ft., After _____ hrs.

_____ ft., After _____ hrs.

_____ ft., After _____ hrs.

Logged by: B. Higgins

URS

LOG of BORING No. SB-12

DATE 12/9/02 SURFACE ELEVATION, FT 420 est DATUM _____ LOCATION See Figure 2-05

DEPTH, ft.	SAMPLES	SAMPLING RESISTANCE	RECOVERY, %	DESCRIPTION	STRATUM EL / DEPTH	SYMBOL	PP, TSF	PID, ppm	FIELD Qu, KSF	NMC, %	LL	PI	Qu, KSF	NOTES
50				Boring was not logged until 67.5'										
55														
60														
65														
		16	54	Very dense, brown, moist, fine to medium	67.5			0.0						
		32		SAND (SP)										
		26												
		28												
70														
		14	67	Grades finer				0.0						
		25		Becomes dense										
		16												
		37												

Completion Depth: 140.2 Ft.
Project No.: 21561192
Project Name: Solutia Barrier Wall
Drilling Contractor: Roberts Environmental Drilling

Water Depth: _____ ft., After _____ hrs.
_____ ft., After _____ hrs.
_____ ft., After _____ hrs.

Logged by: B. Higgins

1/6/03 WCCXS 21561192.GPJ

URS

LOG of BORING No. SB-12

DATE 12/9/02 SURFACE ELEVATION, FT 420 est DATUM _____ LOCATION See Figure 2-05

DEPTH, ft.	SAMPLES	SAMPLING RESISTANCE	RECOVERY, %	DESCRIPTION	STRATUM EL / DEPTH	SYMBOL	PP, TSF	PID, ppm	FIELD Qu, KSF	NMC, %	LL	PI	Qu, KSF	NOTES
75				Same as above: Dense, brown, moist, fine SAND (SP)										
		15	54					0.0						
		20												
		24												
		26												
80														
		16	58	Becomes dense, wet, gray, medium grained SAND with gravel				0.0						
		19												
		21												
		24												
85														
		13	58	Grades fine to medium				0.0						
		19												
		25												
		24												
90														
		18	61	Becomes very dense with trace gravel				0.0						
		28												
		32												
		50/5"												
95														
		20	83					0.0						
		29												
		30												
		32												

Completion Depth: 140.2 Ft.
Project No.: 21561192
Project Name: Solutia Barrier Wall
Drilling Contractor: Roberts Environmental Drilling

Water Depth: _____ ft., After _____ hrs.
_____ ft., After _____ hrs.
_____ ft., After _____ hrs.
Logged by: B. Higgins

URS

LOG of BORING No. SB-12

DATE 12/9/02 SURFACE ELEVATION, FT 420 est DATUM _____ LOCATION See Figure 2-05

DEPTH, ft.	SAMPLES	SAMPLING RESISTANCE	RECOVERY, %	DESCRIPTION	STRATUM EL / DEPTH	SYMBOL	PP, TSF	PID, ppm	FIELD Qu, KSF	NMC, %	LL	PI	Qu, KSF	NOTES
100				Same as above: Very dense, gray, wet, fine to medium grained SAND (SP); with trace gravel										
		12	58					0.0						
		29												
		39												
		38												
105														
		21	54					0.0						
		24												
		31												
		36												
110														
		50/5"	80	Grades medium to coarse grained sand				0.0						
115														
		50/5"	0					0.0						
120														
		13	100	Grading some weathered limestone				0.0						
		15												
		20												
		22												

Completion Depth: 140.2 Ft.
Project No.: 21561192
Project Name: Solutia Barrier Wall
Drilling Contractor: Roberts Environmental Drilling

Water Depth: _____ ft., After _____ hrs.
_____ ft., After _____ hrs.
_____ ft., After _____ hrs.
Logged by: B. Higgins

1/6/03 WCCXS 21561192.GPJ

URS

LOG of BORING No. SB-12

DATE 12/9/02 SURFACE ELEVATION, FT 420 est DATUM _____ LOCATION See Figure 2-05

DEPTH, ft.	SAMPLES	SAMPLING RESISTANCE	RECOVERY, %	DESCRIPTION	STRATUM EL / DEPTH	SYMBOL	PP, TSF	PID, ppm	FIELD Qu, KSF	NMC, %	LL	PI	Qu, KSF	NOTES
125														
		52 18 20 22	50	Sand, gravel, and weathered limestone				0.0						
130														
		50/1"	100											
135														
			82	LIMESTONE	136.5									
140				Bottom of boring at 140.2'	140.2									Borehole sealed using bentonite cement grout (Tremie method)
145														

Completion Depth: 140.2 Ft.
Project No.: 21561192
Project Name: Solutia Barrier Wall
Drilling Contractor: Roberts Environmental Drilling

Water Depth: _____ ft., After _____ hrs.
_____ ft., After _____ hrs.
_____ ft., After _____ hrs.
Logged by: B. Higgins

1/6/03 WCCXS 21561192.GPJ

URS

Project No.: 21561192.00001 File: Indx1.xls

Solutia
LABORATORY TESTING DATA SUMMARY

BORING NO.	SAMPLE NO.	DEPTH (ft)	IDENTIFICATION TESTS										PERMEABILITY	REMARKS
			WATER CONTENT (%)	LIQUID LIMIT	PLASTIC LIMIT	PLAS. IND.	USCS SYMB. (1)	SIEVE MINUS NO. 200 (%)	HYDROMETER % MINUS 2 μm (%)	TOTAL UNIT WEIGHT (pcf)	DRY UNIT WEIGHT (pcf)	SPECIFIC GRAVITY	(cm/sec)	
SB-5		118-118.6								137.8				
SB-5	A	118.25	13.8	26	13	13	SC	20.3	7	142.4	125.1		5.2E-8	P6548
SB-5		125-126								140.6				
SB-5	A	125.25	12.5	24	12	12	CL	59.6	17	141.1	125.4	2.701	9.1E-9	P6549
SB-6		123.5-124.1								141.5				
SB-6	A	123.75	13.2	29	13	16	CL	71.0	20	140.5	124.1		3.0E-9	P6547
SB-7		128-129.5								128.1				Disturbed
SB-7		130.5-131.1								162.2				
SB-7	A	131.69					CL	57.9	18					
SB-9		109-111								142.1				
SB-9		109.55	11.3											
SB-9		110.1	14.7											
SB-9		110.65	14.4											
SB-9	D	110.9	15.3				CL			138.9	120.5		5.9E-9	P6553
SB-10		80.5-82.5								124.5				
SB-10		80.75	32.4											
SB-10		81.3	31.1											
SB-10		81.85	30.2											
SB-10		82.1	28.5	46	17	29	CL					2.688		
SB-10		120.5-121.5								133.0				
SB-10		121.05	11.0											
SB-10		121.6	10.3											
SB-10		122.15	12.7											
SB-10	D	122.4	11.9				CL			141.1	126.1		1.5E-8	P6554

Note: (1) Plasticity of fines for USCS symbol based on visual observation and Sieve and Atterberg limits reported.

Prepared by: RV Reviewed by: _____ Date: 11/26/2002

Project No.: 21561192.00001 File: Prmsum1.xls

Solutia

SUMMARY OF LABORATORY PERMEABILITY TESTS PERFORMED ON THIN-WALLED TUBE SAMPLES

BORING NO.	SAMPLE NO.	DEPTH	LIMITS		WATER CONTENTS	TOTAL UNIT WGTS	DRY UNIT WGTS	STRESSES	DURING CONSOL.	DURING TEST	COEFFICIENT OF PERM. K, (@ 20 C)	REMARKS
			LIQUID	PLAS. INDEX	INITIAL	INITIAL	INITIAL	EFFECTIVE	TIME	PERMEANT		
			PLASTIC	USCS SYMBOL	PRE-TEST	PRE-TEST	PRE-TEST	BACK PRESSURE	VOLUMETRIC STRAIN	INITIAL GRADIENT		
		(ft)			(%)	(pcf)	(pcf)	(psi)	(days, %)		(cm/sec)	
SB-5	A	118.25	26	13	13.8	142.4	125.1	66.0	overnight	tap water	5.2E-8	P6548
			13	CL	10.1	148.7	135.0	50.0	7.3	23		
SB-5	A	125.25	24	12	12.5	141.1	125.4	69.0	overnight	tap water	9.1E-9	P6549
			12	CL	11.3	148.4	133.3	50.0	5.9	28		
SB-6	A	123.75	29	16	13.2	140.5	124.1	68.0	overnight	tap water	3.0E-9	P6547
			13	CL	12.4	145.0	129.0	50.0	3.8	25		
SB-9	D	110.9			15.3	138.9	120.5	62.0	overnight	tap water	5.9E-9	P6553
				CL	14.6	141.5	123.5	50.0	2.4	25		
SB-10	D	122.4			11.9	141.1	126.1	67.0	overnight	tap water	1.5E-8	P6554
				CL	11.2	145.1	130.4	50.0	3.3	23		

Prepared by: RV . Reviewed by: _____ Date: 11/26/2002

COBBLES	GRAVEL		SAND			SILT OR CLAY
	COARSE	FINE	COARSE	MEDIUM	FINE	

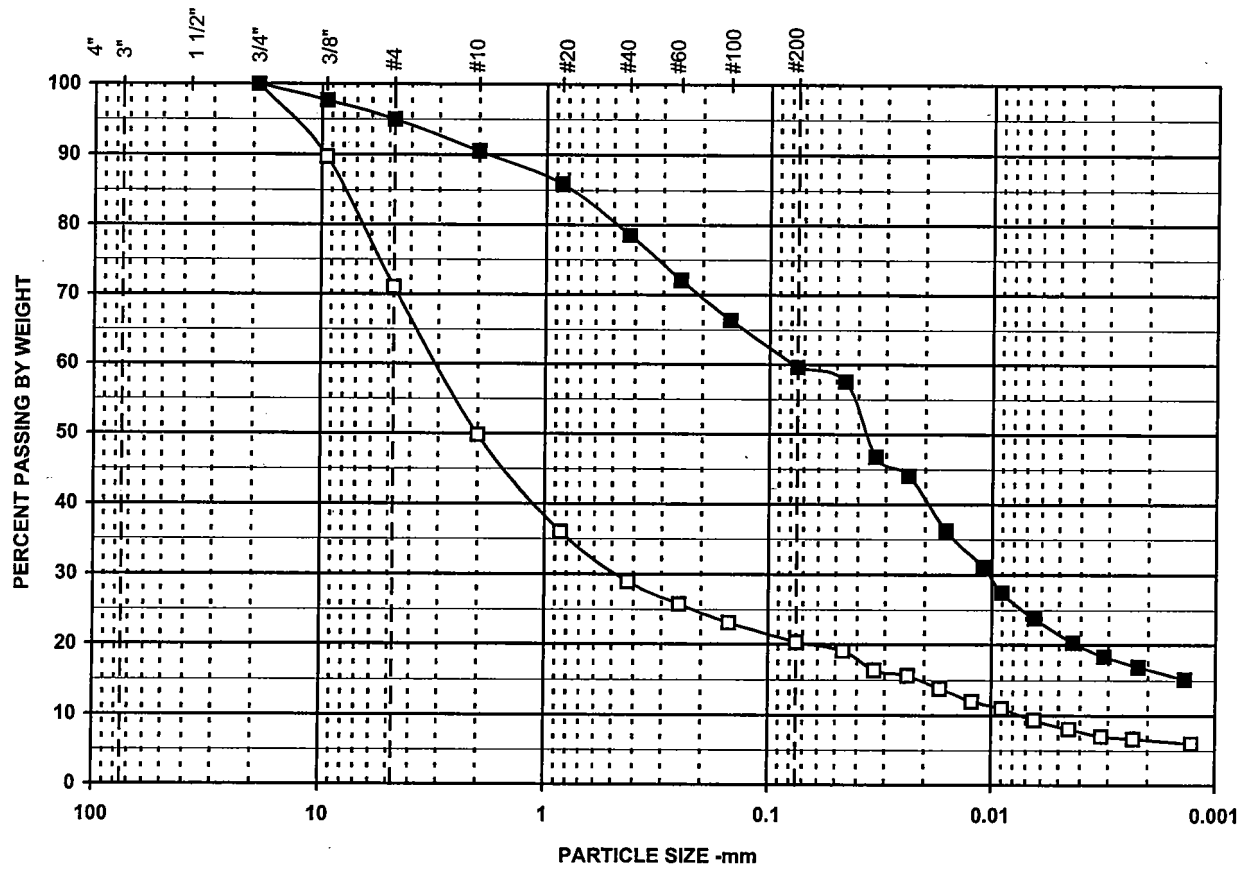

SYMBOL	DESCRIPTION AND REMARKS
□	gray c-f SAND, some f. gravel, silt.
■	gray c-f sandy silty CLAY, trace f. gravel.
○	

Symbol	□	■	○
Boring	SB-5	SB-5	
Sample	A	A	
Spec			
Depth	118.25	125.25	
% +3"			
% Gravel	29.0	5.0	
% SAND	50.7	35.4	
% FINES	20.3	59.6	
% -2μ	7	17	
Cc			
Cu			
LL	26	24	
PL	13	12	
PI	13	12	
USCS	SC	CL	
w (%)			

Particle Size	PERCENT FINER		
(Sieve #)	□	■	○
4"			
3"			
1 1/2"			
3/4"	100.0	100.0	
3/8"	89.7	97.7	
4	71.0	95.0	
10	49.8	90.5	
20	36.0	85.8	
40	29.0	78.6	
60	25.8	72.1	
100	23.1	66.4	
200	20.3	59.6	

PARTICLE SIZE DISTRIBUTION

Solutia

Project No.		
21561192	November 2002	Figure

URS Corporation

COBBLES	GRAVEL		SAND			SILT OR CLAY
	COARSE	FINE	COARSE	MEDIUM	FINE	

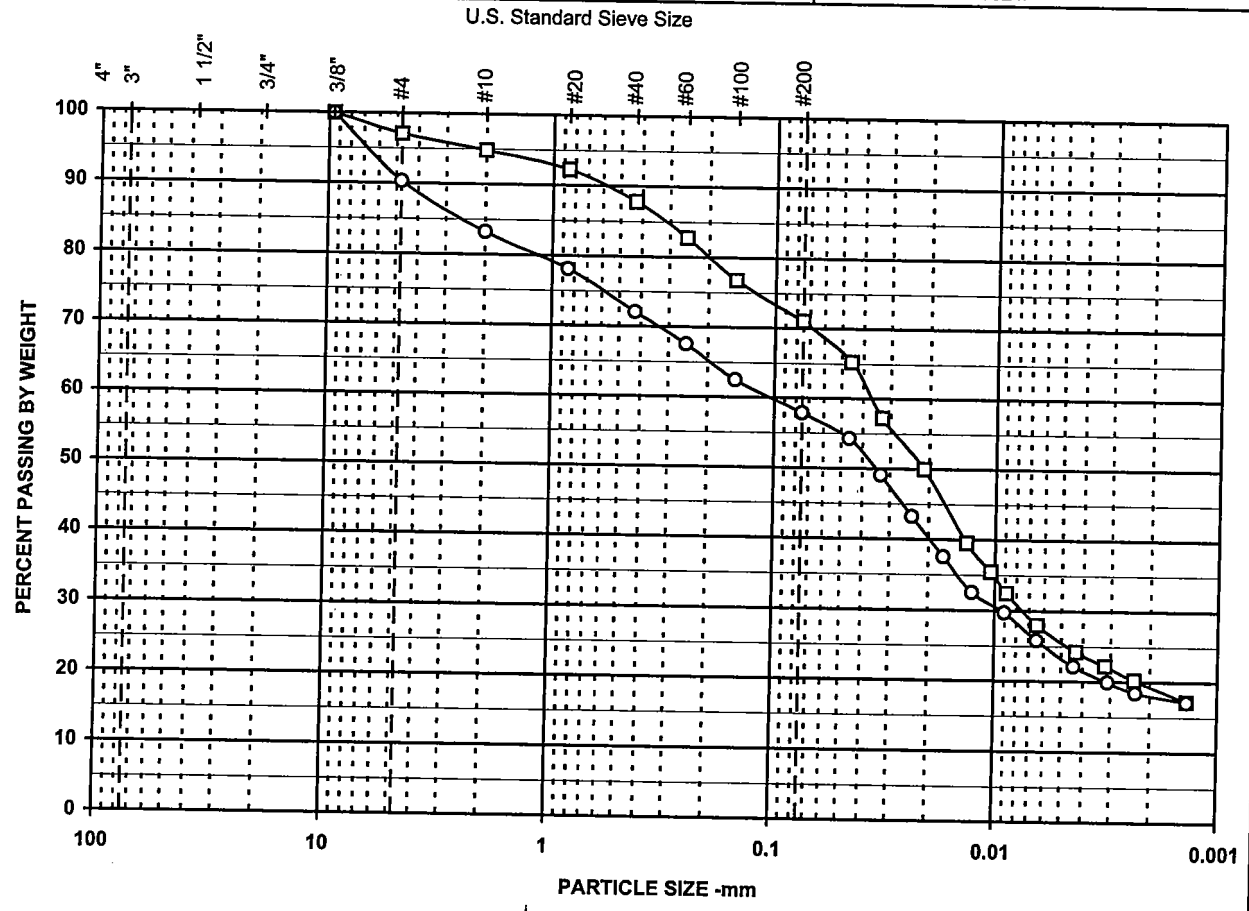

SYMBOL	DESCRIPTION AND REMARKS
□	gray silty CLAY, some c-f sand, trace f. gravel.
■	
○	light gray c-f sandy silty CLAY, trace f. gravel.

Symbol	□	■	○
Boring	SB-6		SB-7
Sample	A		A
Spec			
Depth	123.75		131.69
% +3"			
% Gravel	2.9		9.7
% SAND	26.1		32.4
% FINES	71.0		57.9
% -2μ	19		18
Cc			
Cu			
LL	29		
PL	13		
PI	16		
USCS	CL		CL
w (%)			

Particle Size	PERCENT FINER		
(Sieve #)	□	■	○
4"			
3"			
1 1/2"			
3/4"			
3/8"	100.0		100.0
4	97.1		90.3
10	94.8		83.3
20	92.2		78.1
40	87.8		72.1
60	82.8		67.6
100	76.8		62.5
200	71.0		57.9

PARTICLE SIZE DISTRIBUTION

Solutia

Project No.		
21561192	November 2002	Figure

URS Corporation

Project No.: 21560888 - 04001 File: Indx1.xls

Sauget Area 2
LABORATORY TESTING DATA SUMMARY

BORING NO.	SAMPLE NO.	DEPTH (ft)	IDENTIFICATION TESTS												REMARKS
			WATER CONTENT (1) (%)	USCS SYMB. (2)	SIEVE MINUS NO. 200 (%)	ORGANIC CONTENT (burnoff) (%)	pH		TOTAL UNIT WEIGHT (pcf)	DRY UNIT WEIGHT (pcf)	SPECIFIC GRAVITY	TOTAL SOIL (1) POROSITY (%)	WATER-FILLED SOIL (1) POROSITY (%)	AIR-FILLED SOIL (1) POROSITY (%)	
							Distilled Water	0.01 M CaCl Solution							
PIEZ-4		47-52	(7.5)			0.2			137.1	(127.5)		(22.8)	(16.6)	(6.2)	(tube average)
PIEZ-4		47.56	5.6												
PIEZ-4		48.06	7.2												
PIEZ-4	C	48.31	8.0	SP	0.8		6.4	6.2			2.651				
PIEZ-4		48.56	9.2												
PIEZ-4		82-87	(13.0)						131.5	(116.3)		(29.8)	(25.7)	(4.1)	(tube average)
PIEZ-4		84.95	14.9												
PIEZ-4		85.5	14.4			0.2									
PIEZ-4	C	85.75	11.5	SP	0.7		8.4	7.5			2.659				
PIEZ-4		86.05	11.3												
PIEZ-4		123-128	(8.0)			0.2			135.5	(125.4)		(23.9)	(17.5)	(6.4)	(tube average)
PIEZ-4		126.35	7.6												
PIEZ-4		126.95	8.8												
PIEZ-4	C	127.2	7.6	SW	4.5		8.7	7.5			2.645				
PIEZ-4		127.45	8.0												

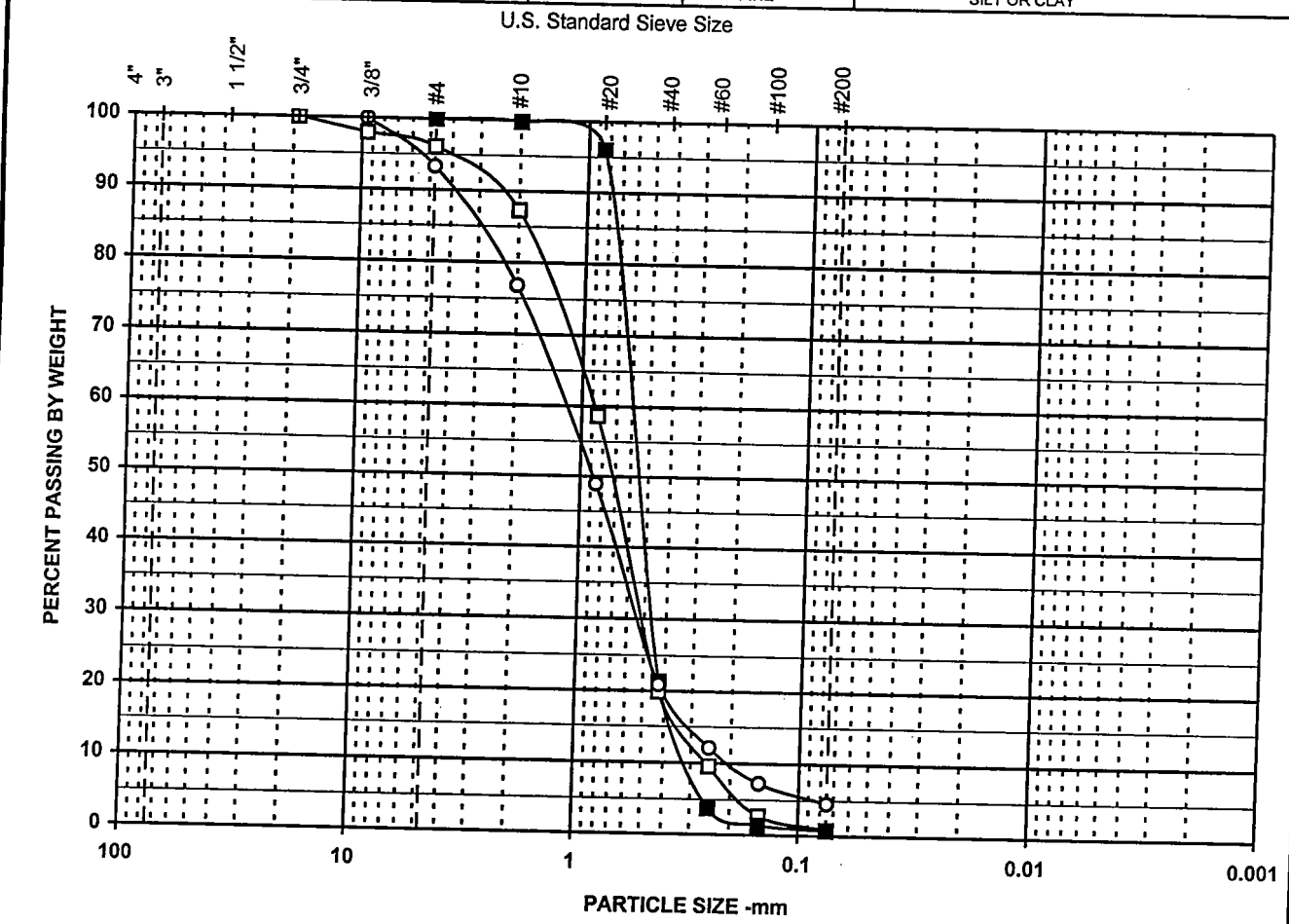

SYMBOL	DESCRIPTION AND REMARKS
□	gray c-f SAND, trace f. gravel.
■	light gray m-f SAND.
○	light gray c-f SAND, trace f. gravel, silt.

Symbol	□	■	○
Boring	PZ-4	PZ-4	PZ-4
Sample	C	C	C
Spec			
Depth	48.31	85.75	127.2
% +3"			
% Gravel	3.9		6.7
% SAND	95.3	99.3	88.8
% FINES	0.8	0.7	4.5
% -2μ			
Cc	1.2	1.1	1.2
Cu	3.5	2.1	6.3
LL			
PL			
PI			
USCS	SP	SP	SW
w (%)	8.0	11.5	7.6

Particle Size	PERCENT FINER		
(Sieve #)	□	■	○
4"			
3"			
1 1/2"			
3/4"	100.0		
3/8"	98.0		100.0
4	96.1	100.0	93.3
10	87.3	99.8	76.8
20	58.7	96.1	48.9
40	19.9	21.4	20.9
60	9.6	3.7	12.1
100	2.7	1.4	7.3
200	0.8	0.7	4.5

PARTICLE SIZE DISTRIBUTION

Sauget Area 2

Project No.		
21560888	September 2002	Figure

URS Corporation

Project No.: 23-20010085 File: Indxsum.xls

Solutia Site R Investigation
Sauget, I.L.
LABORATORY TESTING DATA SUMMARY

BORING NO.	DEPTH (ft)	IDENTIFICATION TESTS											REMARKS
		WATER CONTENT (%)	LIQUID LIMIT	PLASTIC LIMIT	PLAS. IND.	USCS SYMB. (1)	SIEVE MINUS NO. 200 (%)	HYDROMETER % MINUS 2 μm (%)	ORGANIC CONTENT (burnoff) (%)	pH D4972A Distilled Water	pH D4972A 0.01M CaCl Solution	SPECIFIC GRAVITY	
SB-1	59-61	13.5				SP-SM	5.4			8.4	7.9	2.643	
SB-1	64-66	14.0				SP-SM	5.1			8.6	7.9	2.645	
SB-1	69-71	13.9				SW-SM	10.7			8.8	7.9	2.654	
SB-1	74-76	36.2	40	19	21	CL	99.4	27	2.6	7.7	7.5	2.626	
SB-1	84-86	16.3				SP	3.6			8.5	7.8	2.650	
SB-1	89-91	17.6				SP	2.8			8.7	8.0	2.660	
SB-1	94-96	18.4				SP	3.2		0.2	8.7	7.8	2.655	
SB-2	64-66	14.4				SP	2.4			7.9	7.5	2.637	
SB-2	69-71	13.5*				SP	3.3					2.643	*broken jar
SB-2	74-76	21.5				SP-SM	6.0			7.9	7.7	2.634	
SB-2	79-81	26.3				SP-SM	8.2			7.7	7.5	2.637	
SB-2	84-86	7.2				SP	2.3			7.9	7.6	2.669	
SB-2	94-96	15.0				SP	4.3		0.2	9.0	8.1	2.680	
SB-2	99-101	15.8				SP	4.4		0.3	8.7	8.0	2.641	

Note: (1) Plasticity for USCS classification based on visual estimate if Atterberg Limits not performed.

Prepared by: RR Reviewed by: _____ Date: 11/21/2002

Solutia
LABORATORY TESTING DATA SUMMARY

BORING NO.	DEPTH (ft)	IDENTIFICATION TESTS			VISUAL DESCRIPTION
		WATER CONTENT (%)	USCS SYMB. (1)	SIEVE MINUS NO. 200 (%)	
SB-1	10-12	34.9	ML		gray s.p. clayey SILT, trace f. sand
SB-2	14-16	31.8	SP-SM	6.6	
SB-2	34-36	22.1	SP-SM	5.5	

Note: (1) Plasticity of fines for USCS symbol based on visual observation.

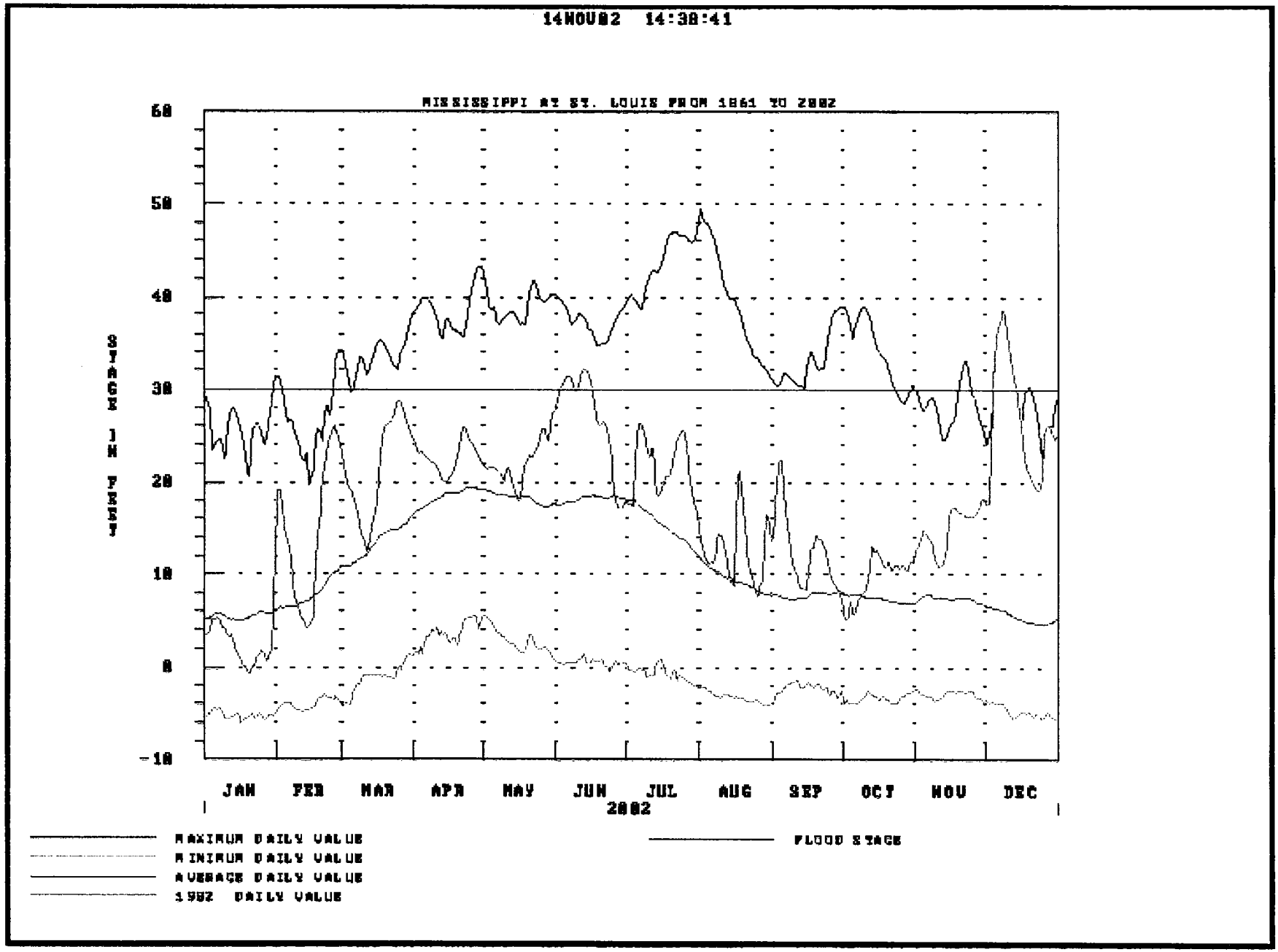
14NOV02 14:38:41
MISSISSIPPI AT ST. LOUIS FROM 1861 TO 2002
60
50
40
30
20
10
0
-10
STAGE IN FEET
JAN
FEB
MAR
APR
MAY
JUN
JUL
AUG
SEP
OCT
NOV
DEC
2002
MAXIMUM DAILY VALUE
MINIMUM DAILY VALUE
AVERAGE DAILY VALUE
2002 DAILY VALUE
FLOOD STAGE

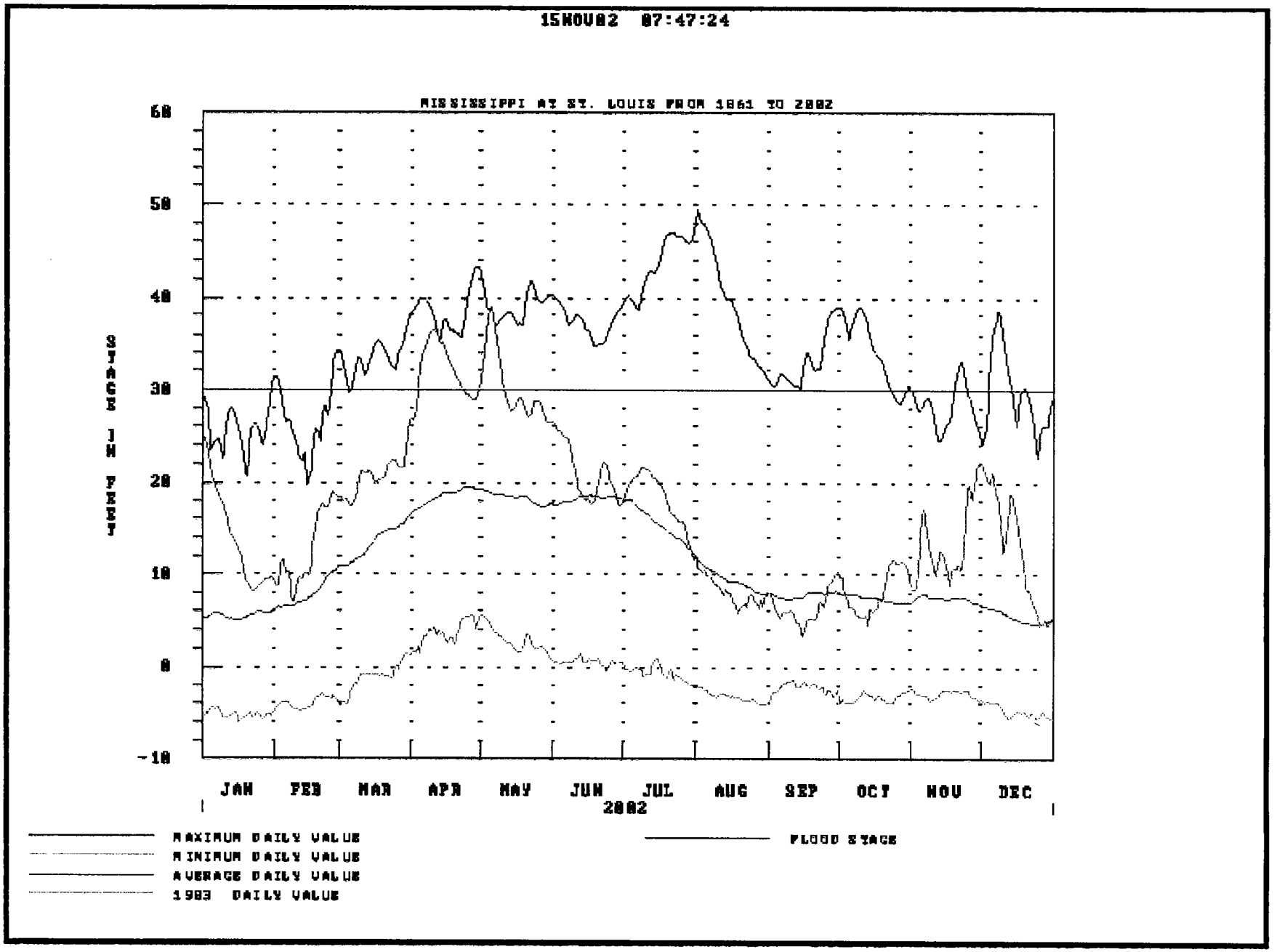
15NOV02 07:47:24
MISSISSIPPI AT ST. LOUIS FROM 1861 TO 2002
STAGE IN FEET
60
50
40
30
20
10
0
-10
JAN
FEB
MAR
APR
MAY
JUN
JUL
AUG
SEP
OCT
NOV
DEC
2002
MAXIMUM DAILY VALUE
MINIMUM DAILY VALUE
AVERAGE DAILY VALUE
1993 DAILY VALUE
FLOOD STAGE

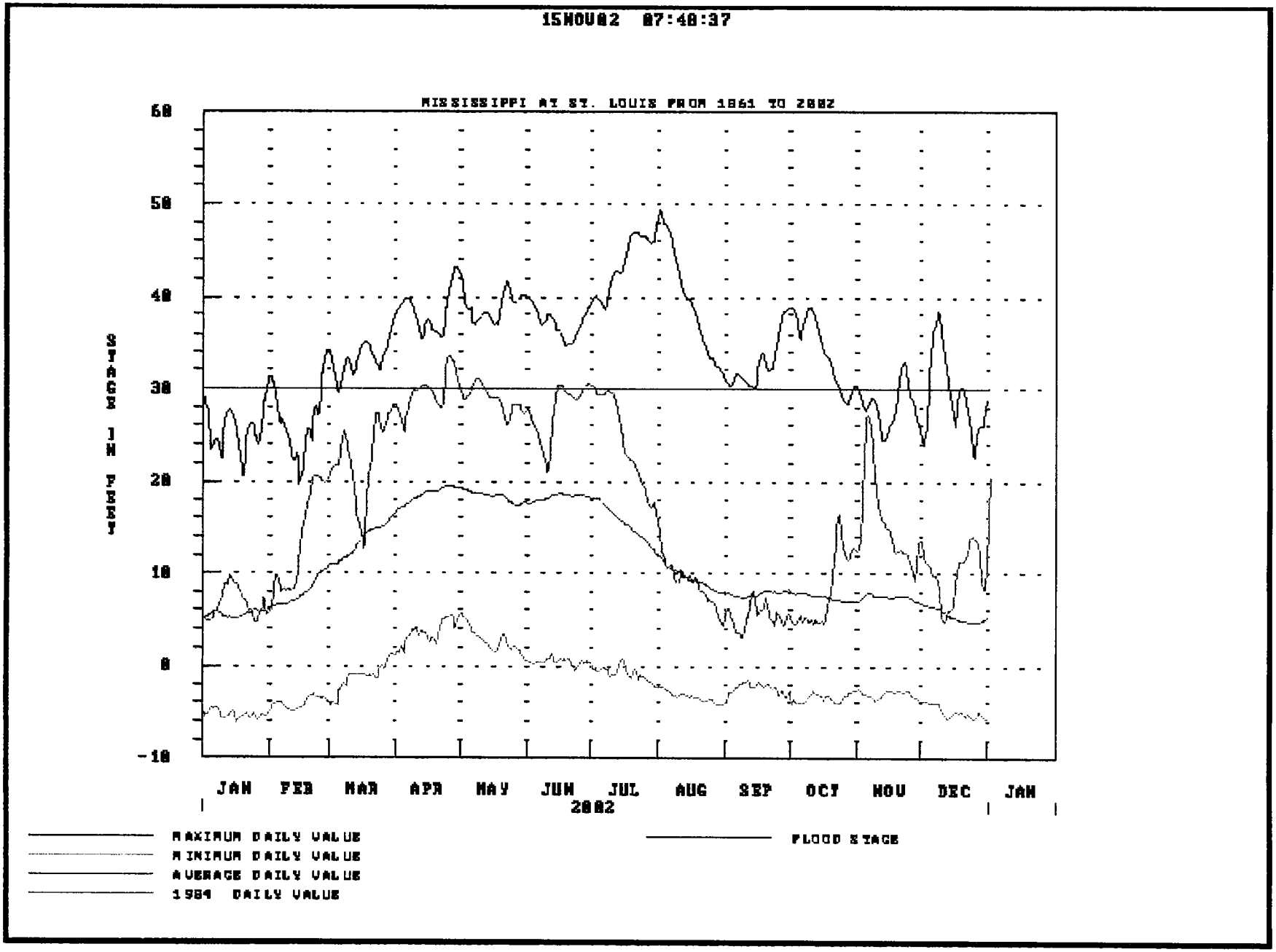
15NOV02 07:48:37
MISSISSIPPI AT ST. LOUIS FROM 1861 TO 2002
STAGE IN FEET
60
50
40
30
20
10
0
-10
JAN
FEB
MAR
APR
MAY
JUN
JUL
AUG
SEP
OCT
NOV
DEC
JAN
2002
MAXIMUM DAILY VALUE
MINIMUM DAILY VALUE
AVERAGE DAILY VALUE
1984 DAILY VALUE
FLOOD STAGE

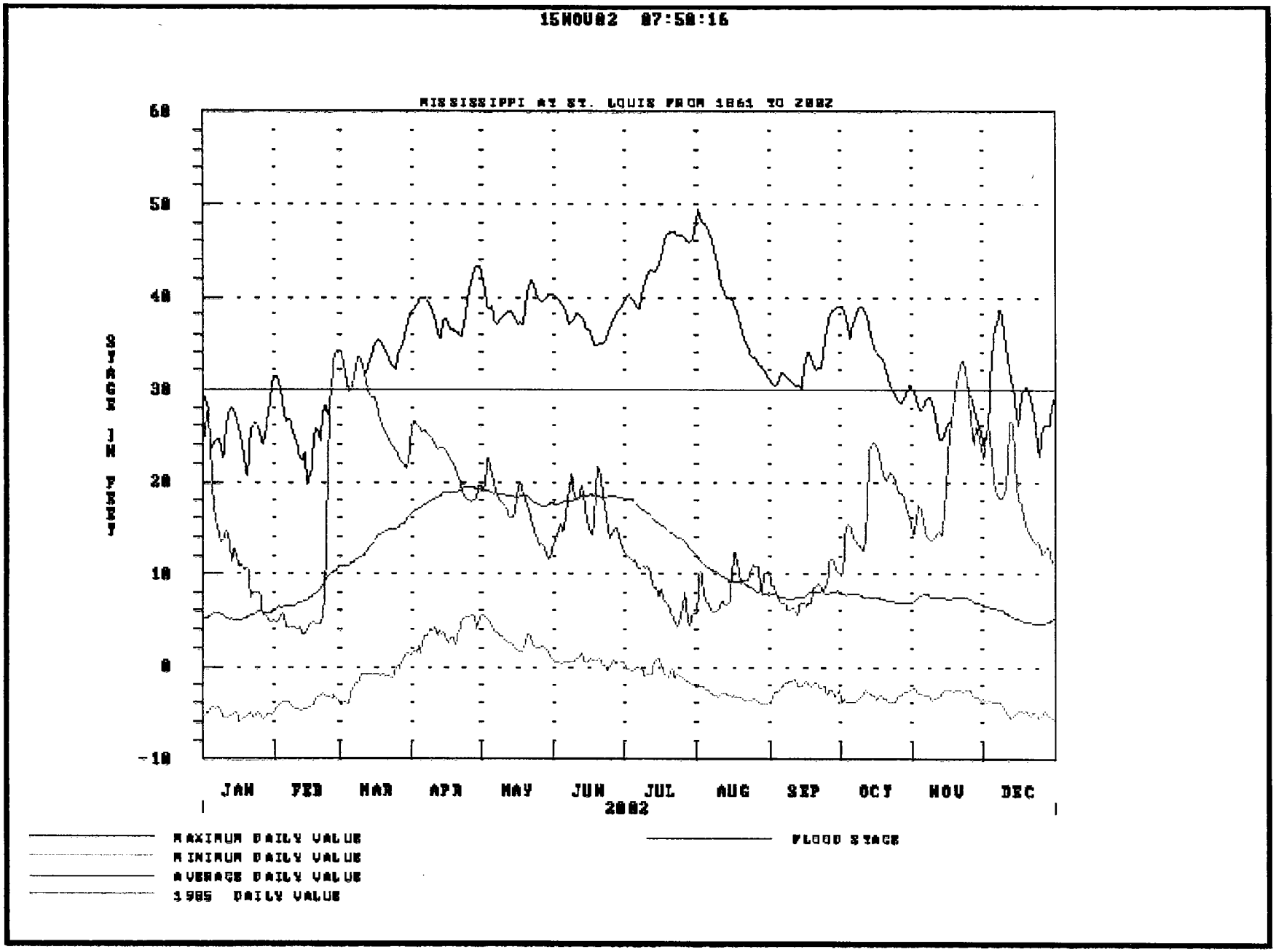
15NOV02 07:58:16
MISSISSIPPI AT ST. LOUIS FROM 1861 TO 2002
60
50
40
30
20
10
0
-10
STAGE IN FEET
JAN
FEB
MAR
APR
MAY
JUN
JUL
AUG
SEP
OCT
NOV
DEC
2002
MAXIMUM DAILY VALUE
MINIMUM DAILY VALUE
AVERAGE DAILY VALUE
1985 DAILY VALUE
FLOOD STAGE

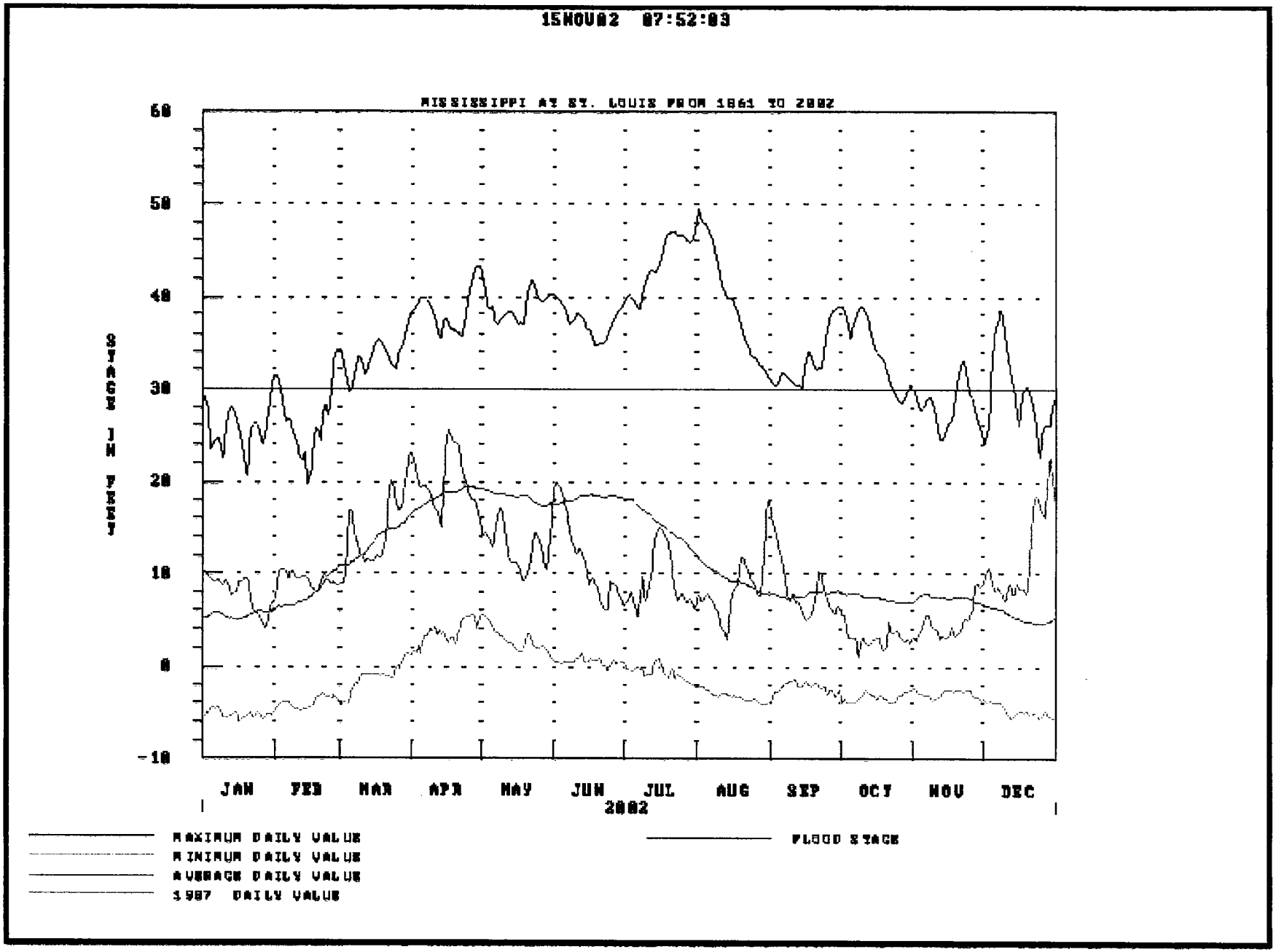
15NOV02 07:52:03
MISSISSIPPI AT ST. LOUIS FROM 1861 TO 2002
STAGE IN FEET
60
50
40
30
20
10
0
-10
JAN
FEB
MAR
APR
MAY
JUN
JUL
AUG
SEP
OCT
NOV
DEC
2002
MAXIMUM DAILY VALUE
MINIMUM DAILY VALUE
AVERAGE DAILY VALUE
1987 DAILY VALUE
FLOOD STAGE

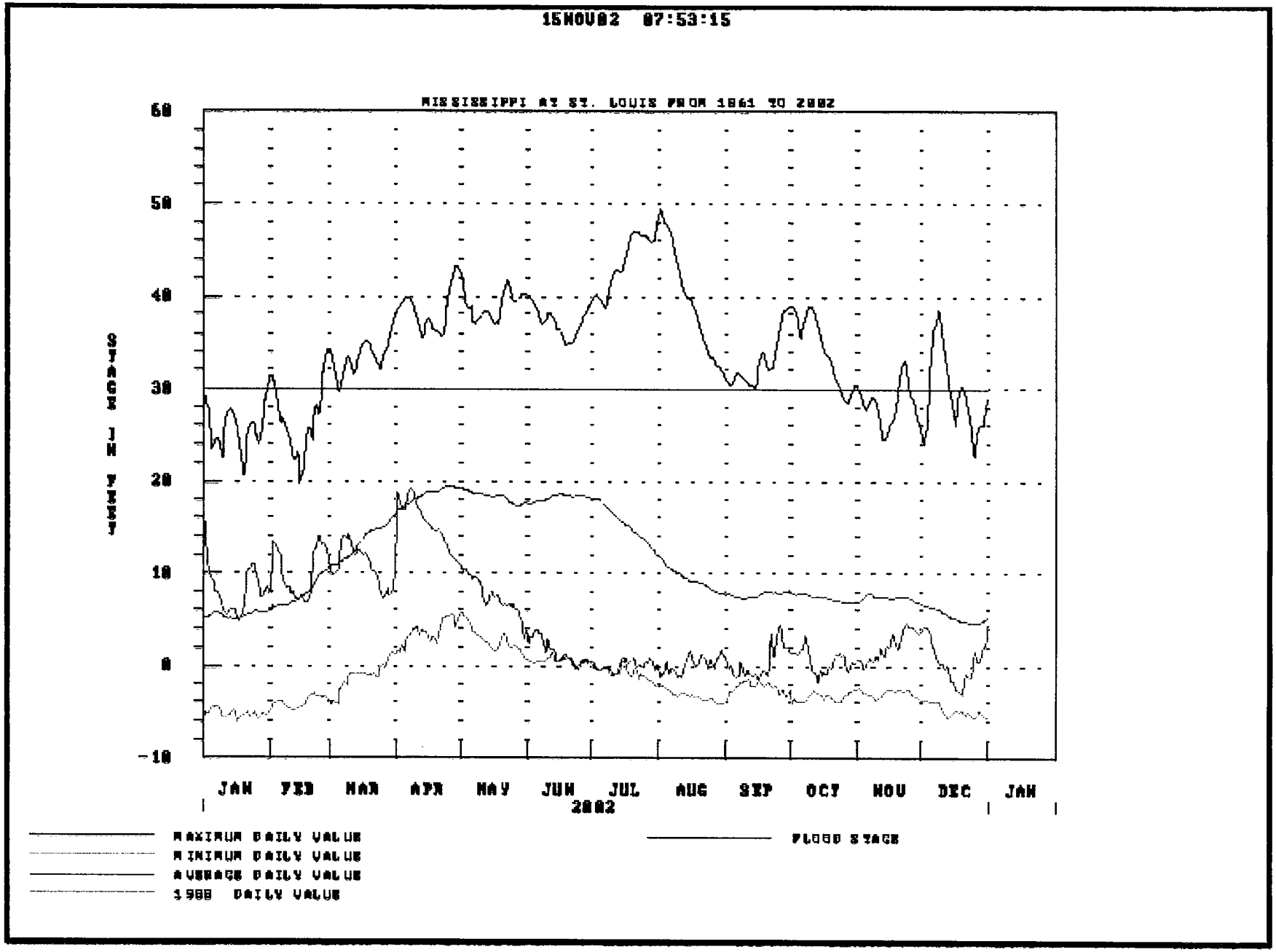
15NOV02 07:53:15
MISSISSIPPI AT ST. LOUIS FROM 1861 TO 2002
STAGE IN FEET
60
50
40
30
20
10
0
-10
JAN
FEB
MAR
APR
MAY
JUN
JUL
AUG
SEP
OCT
NOV
DEC
JAN
2002
MAXIMUM DAILY VALUE
MINIMUM DAILY VALUE
AVERAGE DAILY VALUE
1988 DAILY VALUE
FLOOD STAGE

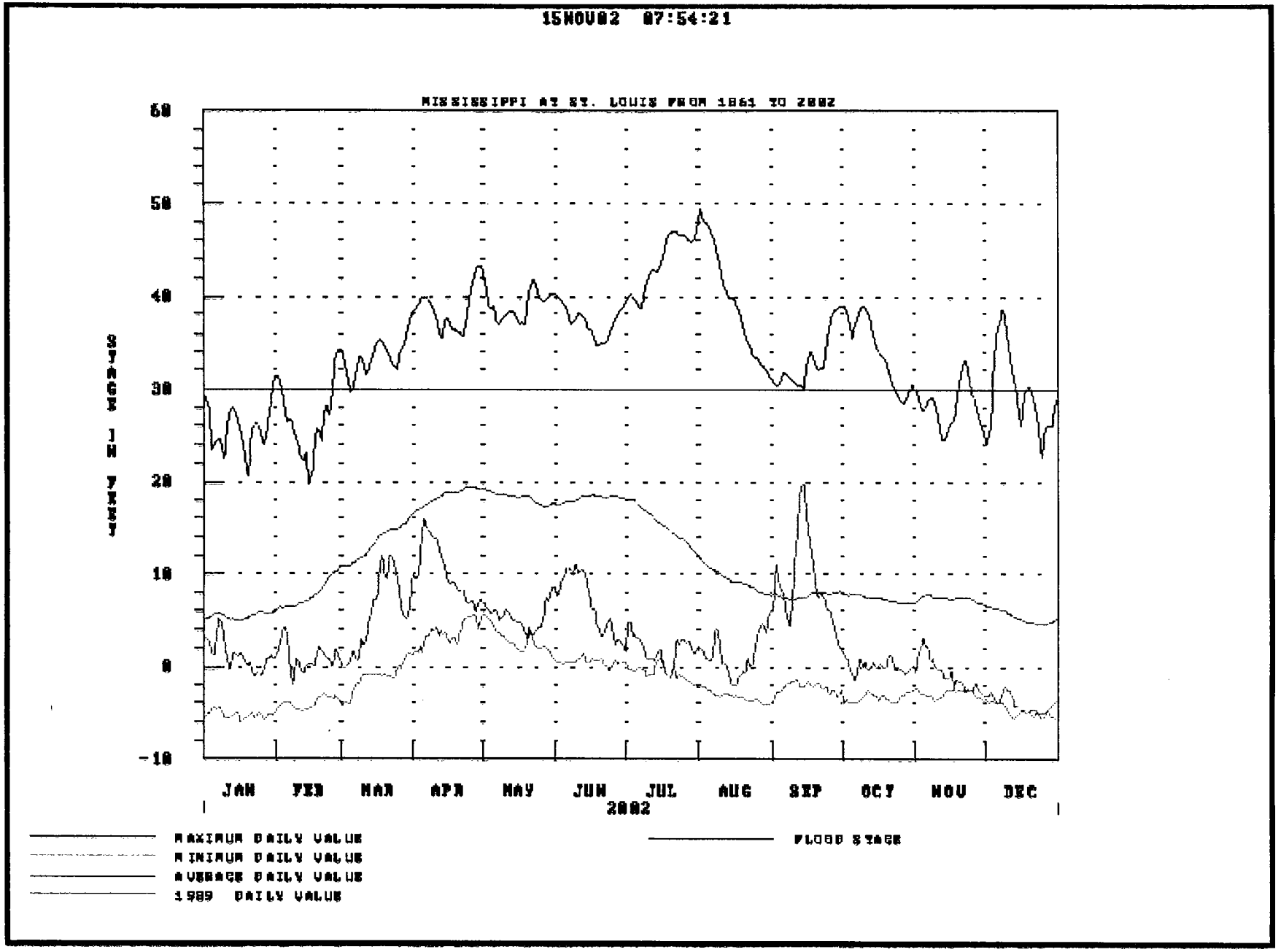
15NOV02 07:54:21
MISSISSIPPI AT ST. LOUIS FROM 1861 TO 2002
STAGE IN FEET
60
50
40
30
20
10
0
-10
JAN
FEB
MAR
APR
MAY
JUN
JUL
AUG
SEP
OCT
NOV
DEC
2002
MAXIMUM DAILY VALUE
MINIMUM DAILY VALUE
AVERAGE DAILY VALUE
1989 DAILY VALUE
FLOOD STAGE

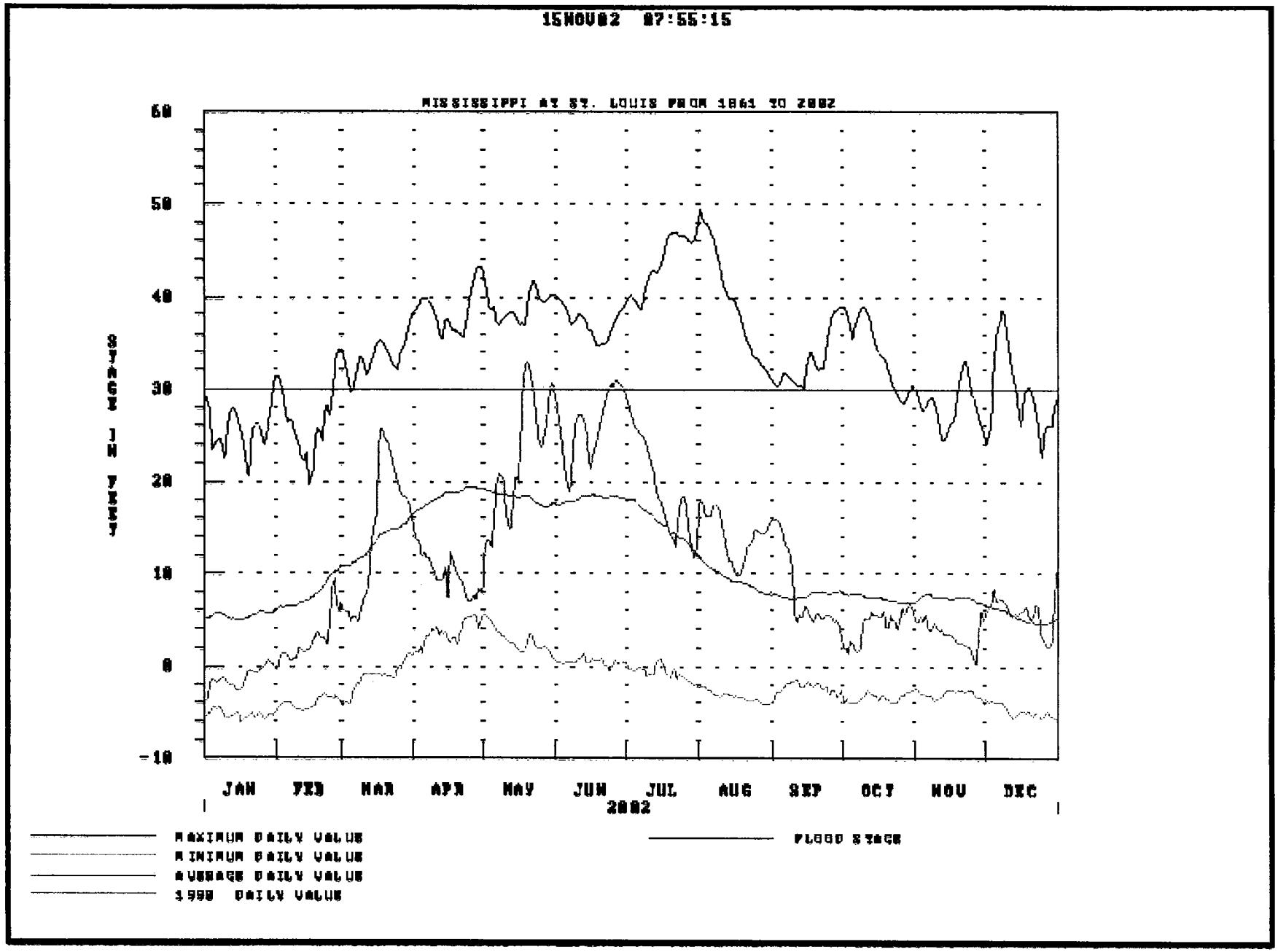
15NOV02 07:55:15
MISSISSIPPI AT ST. LOUIS FROM 1861 TO 2002
STAGE IN FEET
60
50
40
30
20
10
0
-10
JAN
FEB
MAR
APR
MAY
JUN
JUL
AUG
SEP
OCT
NOV
DEC
2002
MAXIMUM DAILY VALUE
MINIMUM DAILY VALUE
AVERAGE DAILY VALUE
1998 DAILY VALUE
FLOOD STAGE

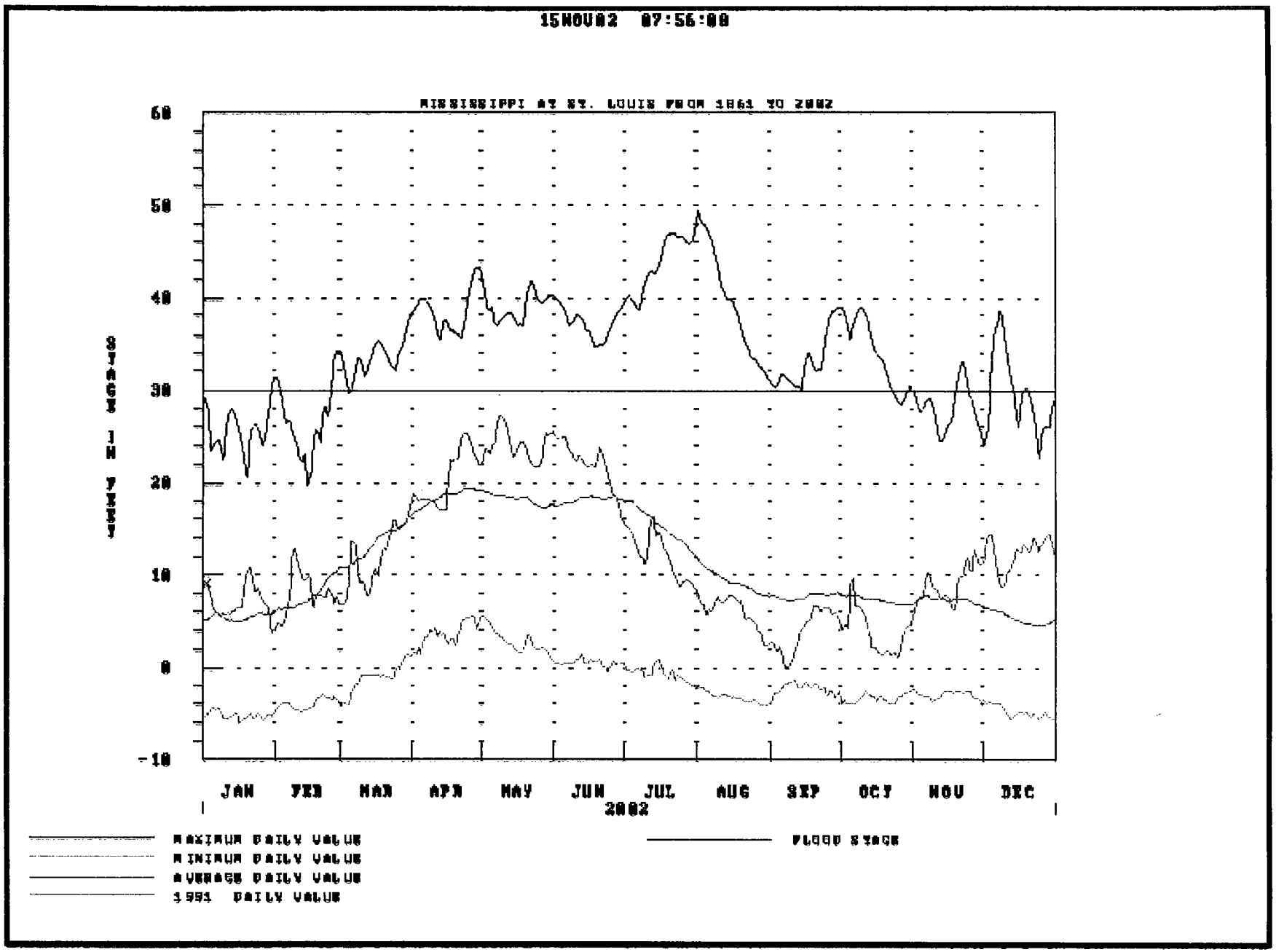
15NOV02 07:56:08
MISSISSIPPI AT ST. LOUIS FROM 1861 TO 2002
STAGE IN FEET
60
50
40
30
20
10
0
-10
JAN
FEB
MAR
APR
MAY
JUN
JUL
AUG
SEP
OCT
NOV
DEC
2002
MAXIMUM DAILY VALUE
MINIMUM DAILY VALUE
AVERAGE DAILY VALUE
1993 DAILY VALUE
FLOOD STAGE

15NOV02 08:36:34

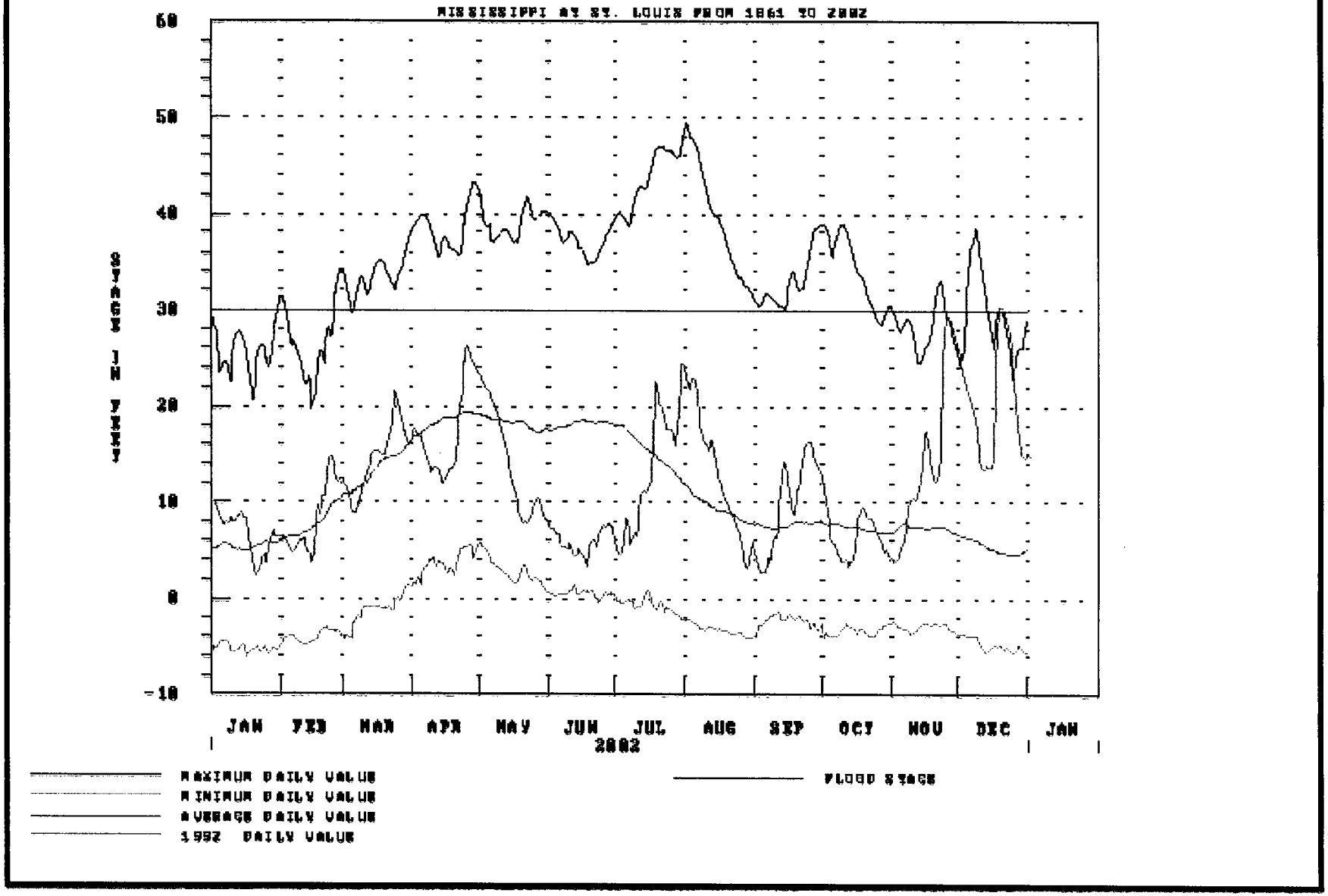

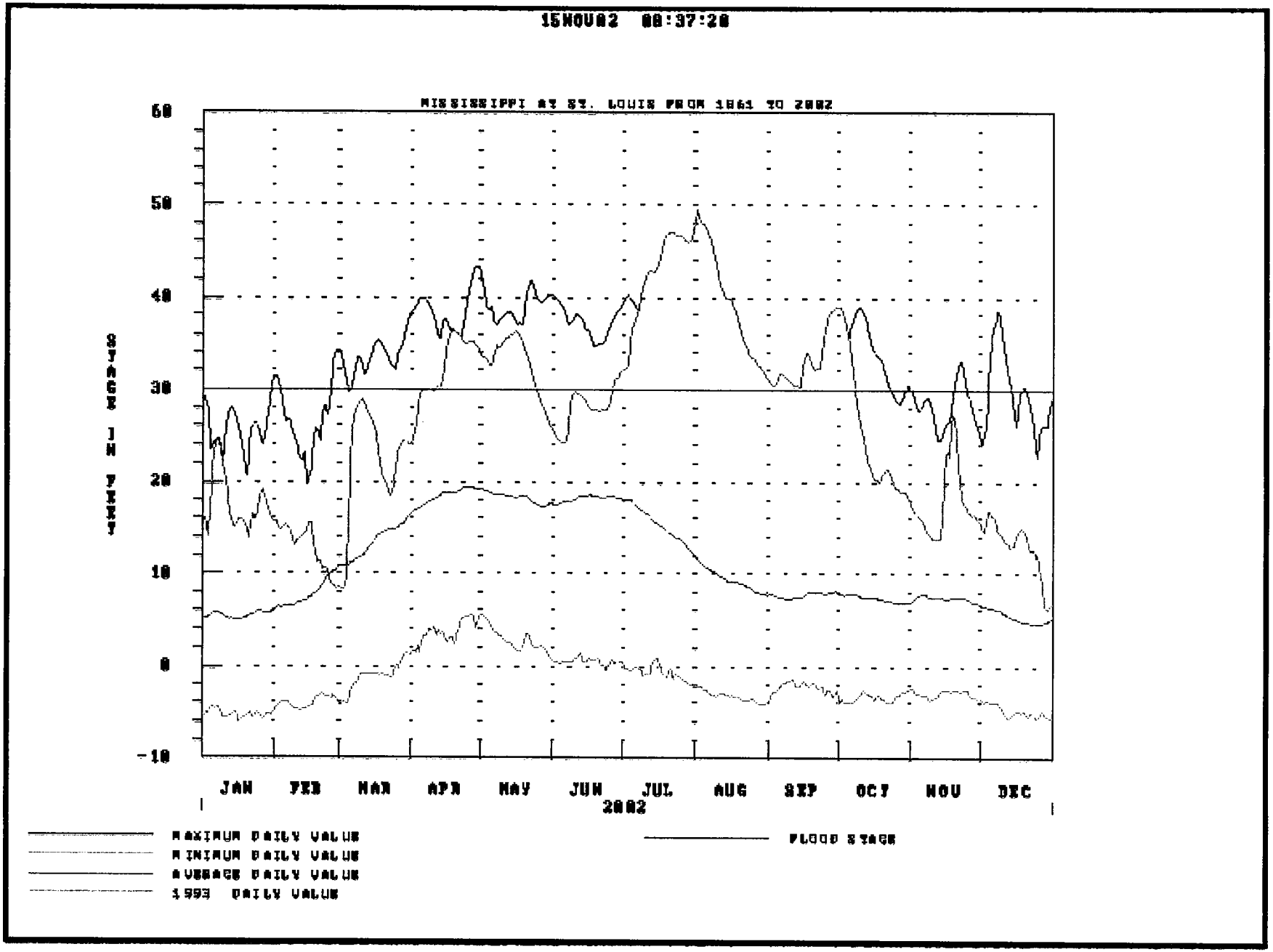
15NOV02 08:37:28
MISSISSIPPI AT ST. LOUIS FROM 1861 TO 2002
STAGE IN FEET
60
50
40
30
20
10
0
-10
JAN
FEB
MAR
APR
MAY
JUN
JUL
AUG
SEP
OCT
NOV
DEC
2002
MAXIMUM DAILY VALUE
MINIMUM DAILY VALUE
AVERAGE DAILY VALUE
1993 DAILY VALUE
FLOOD STAGE

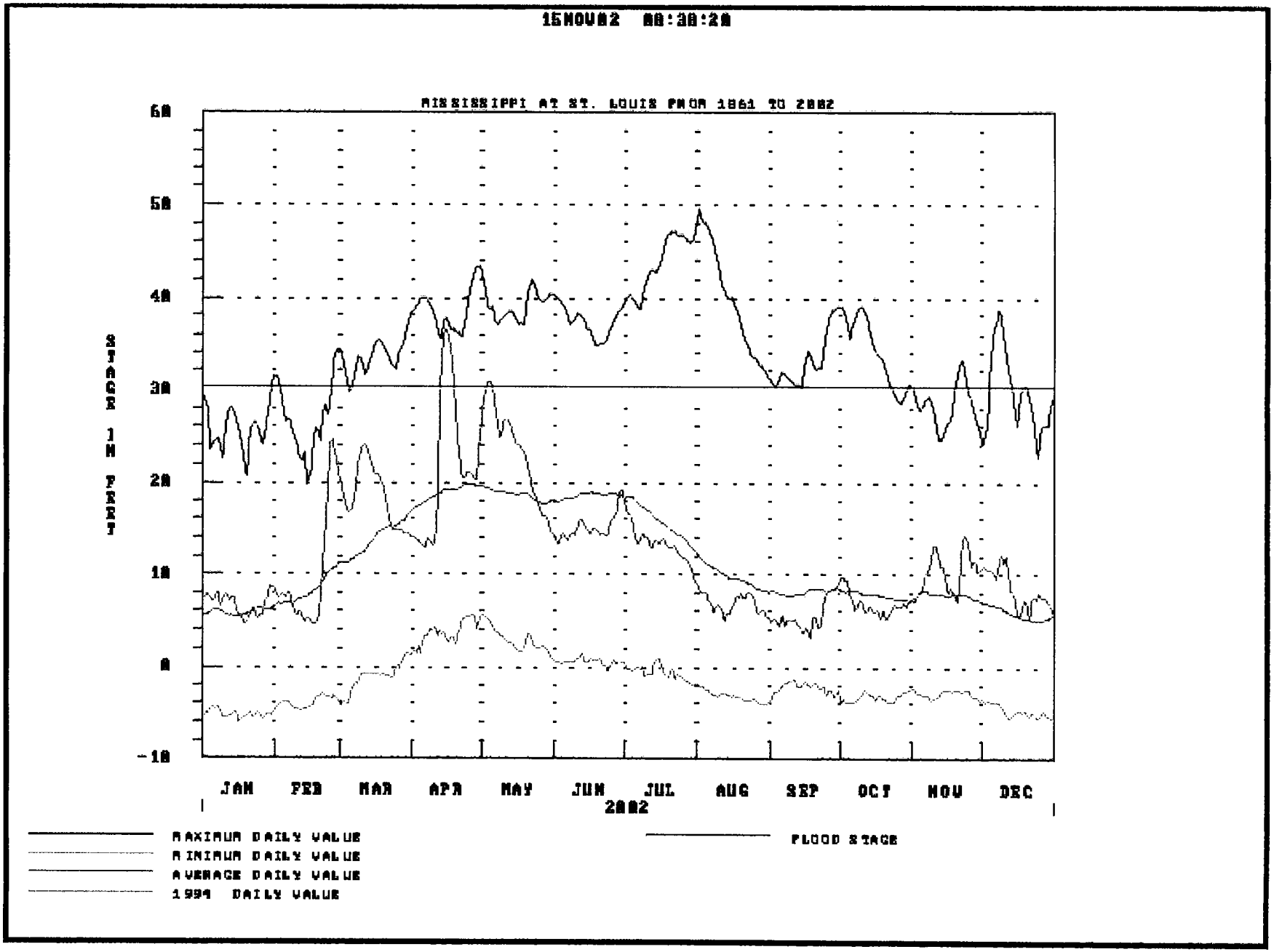
15NOV02 08:38:28
MISSISSIPPI AT ST. LOUIS FROM 1861 TO 2002
60
50
40
30
20
10
0
-10
STAGE IN FEET
JAN
FEB
MAR
APR
MAY
JUN
JUL
AUG
SEP
OCT
NOV
DEC
2002
MAXIMUM DAILY VALUE
MINIMUM DAILY VALUE
AVERAGE DAILY VALUE
1999 DAILY VALUE
FLOOD STAGE

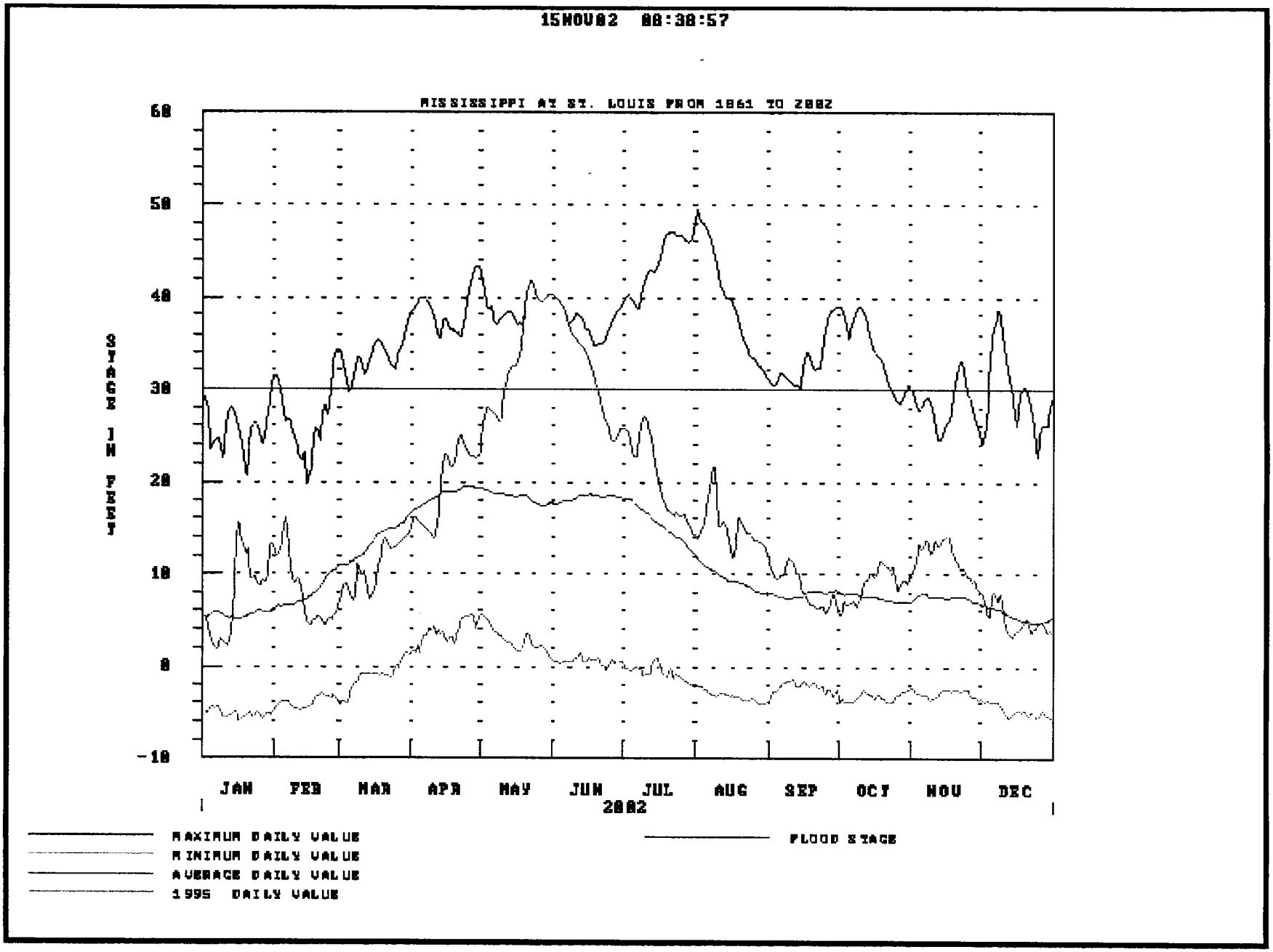
15NOV02 08:38:57
MISSISSIPPI AT ST. LOUIS FROM 1861 TO 2002
STAGE IN FEET
60
50
40
30
20
10
0
-10
JAN
FEB
MAR
APR
MAY
JUN
JUL
AUG
SEP
OCT
NOV
DEC
2002
MAXIMUM DAILY VALUE
MINIMUM DAILY VALUE
AVERAGE DAILY VALUE
1995 DAILY VALUE
FLOOD STAGE

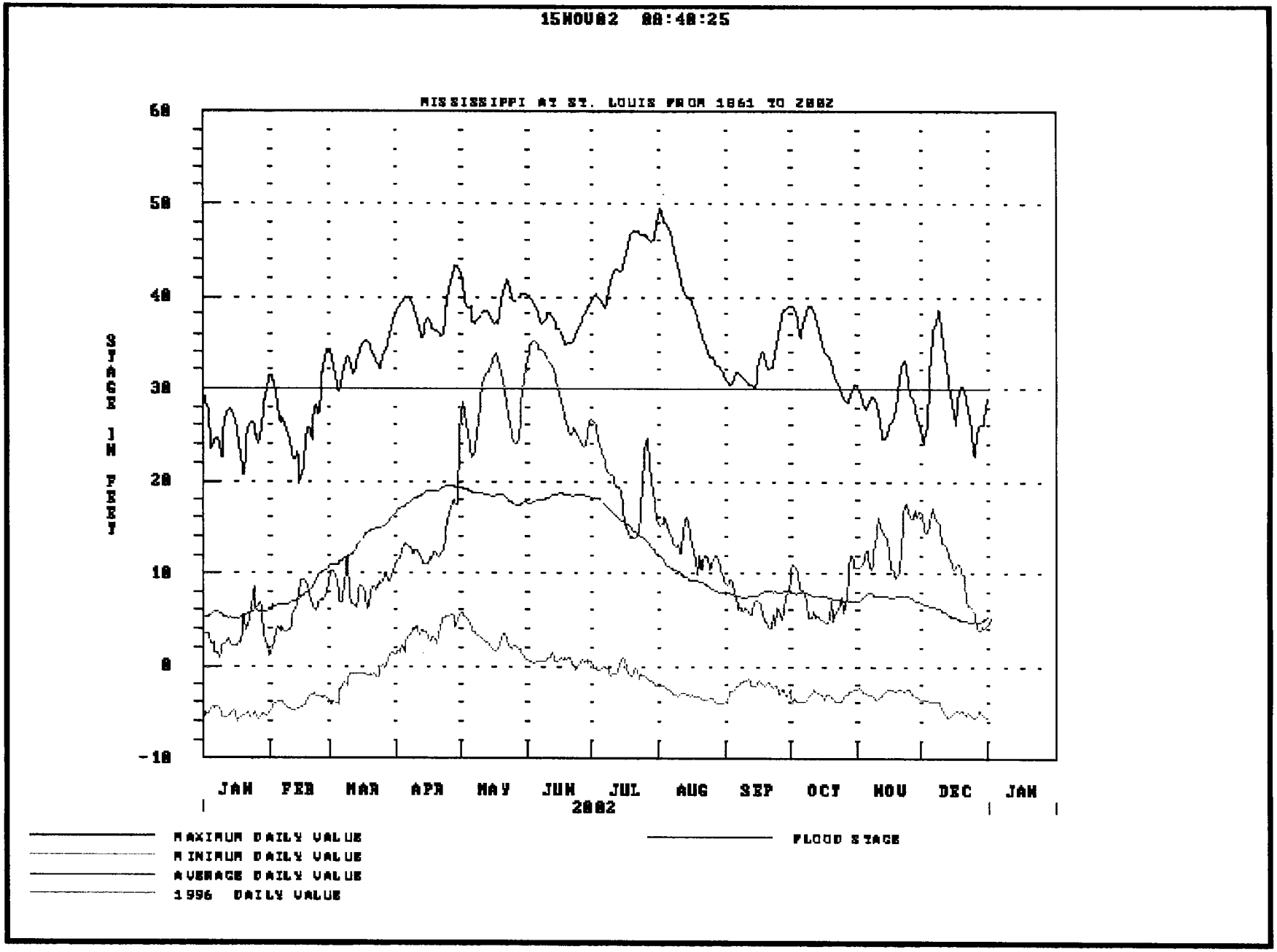
15NOV02 08:48:25
MISSISSIPPI AT ST. LOUIS FROM 1861 TO 2002
STAGE IN FEET
60
50
40
30
20
10
0
-10
JAN
FEB
MAR
APR
MAY
JUN
JUL
AUG
SEP
OCT
NOV
DEC
JAN
2002
MAXIMUM DAILY VALUE
MINIMUM DAILY VALUE
AVERAGE DAILY VALUE
1996 DAILY VALUE
FLOOD STAGE

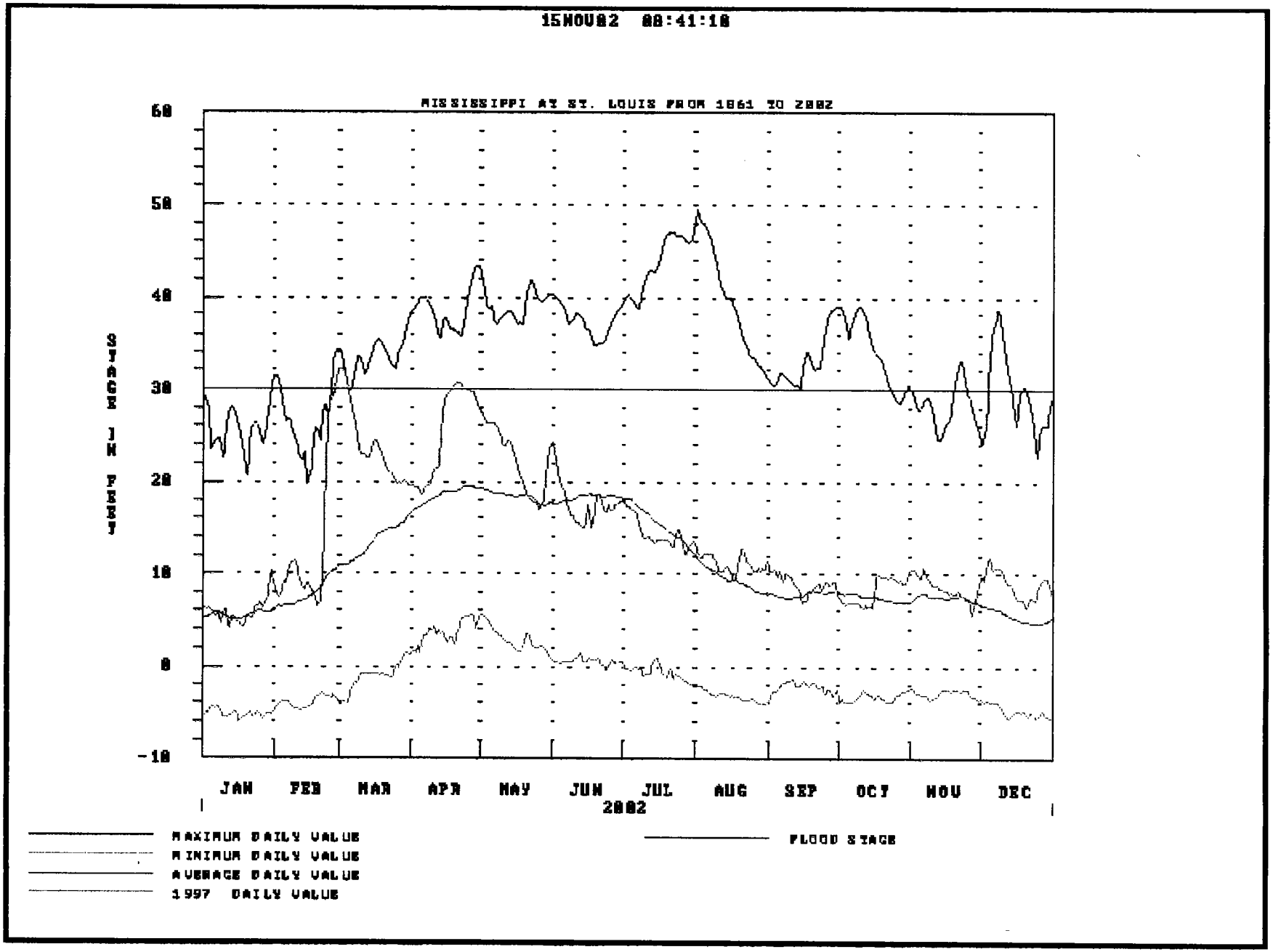
15NOV02 08:41:18
MISSISSIPPI AT ST. LOUIS FROM 1861 TO 2002
STAGE IN FEET
60
50
40
30
20
10
0
-10
JAN
FEB
MAR
APR
MAY
JUN
JUL
AUG
SEP
OCT
NOV
DEC
2002
MAXIMUM DAILY VALUE
MINIMUM DAILY VALUE
AVERAGE DAILY VALUE
1997 DAILY VALUE
FLOOD STAGE

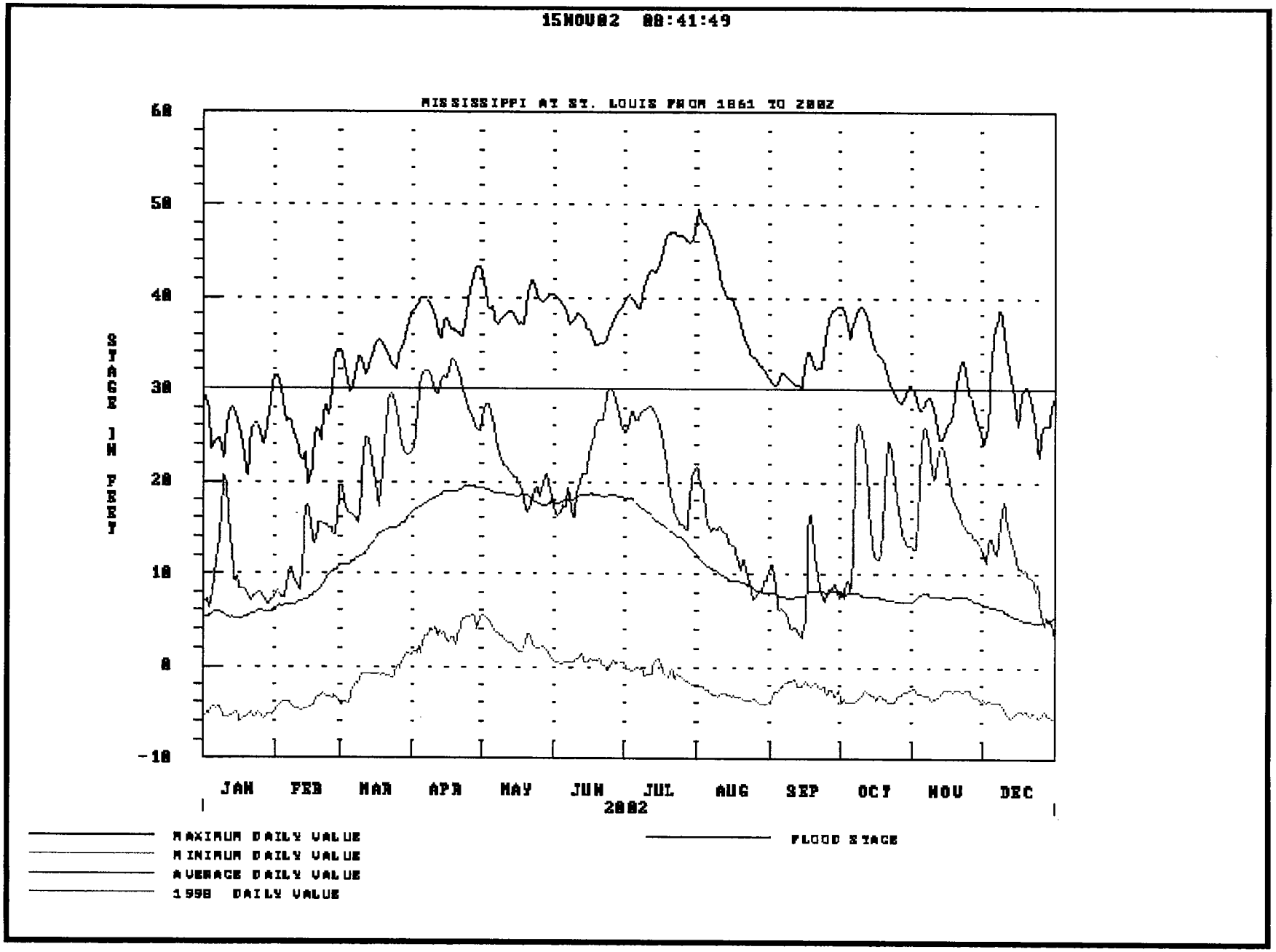
15NOV02 08:41:49
MISSISSIPPI AT ST. LOUIS FROM 1861 TO 2002
STAGE IN FEET
60
50
40
30
20
10
0
-10
JAN
FEB
MAR
APR
MAY
JUN
JUL
AUG
SEP
OCT
NOV
DEC
2002
MAXIMUM DAILY VALUE
MINIMUM DAILY VALUE
AVERAGE DAILY VALUE
1998 DAILY VALUE
FLOOD STAGE

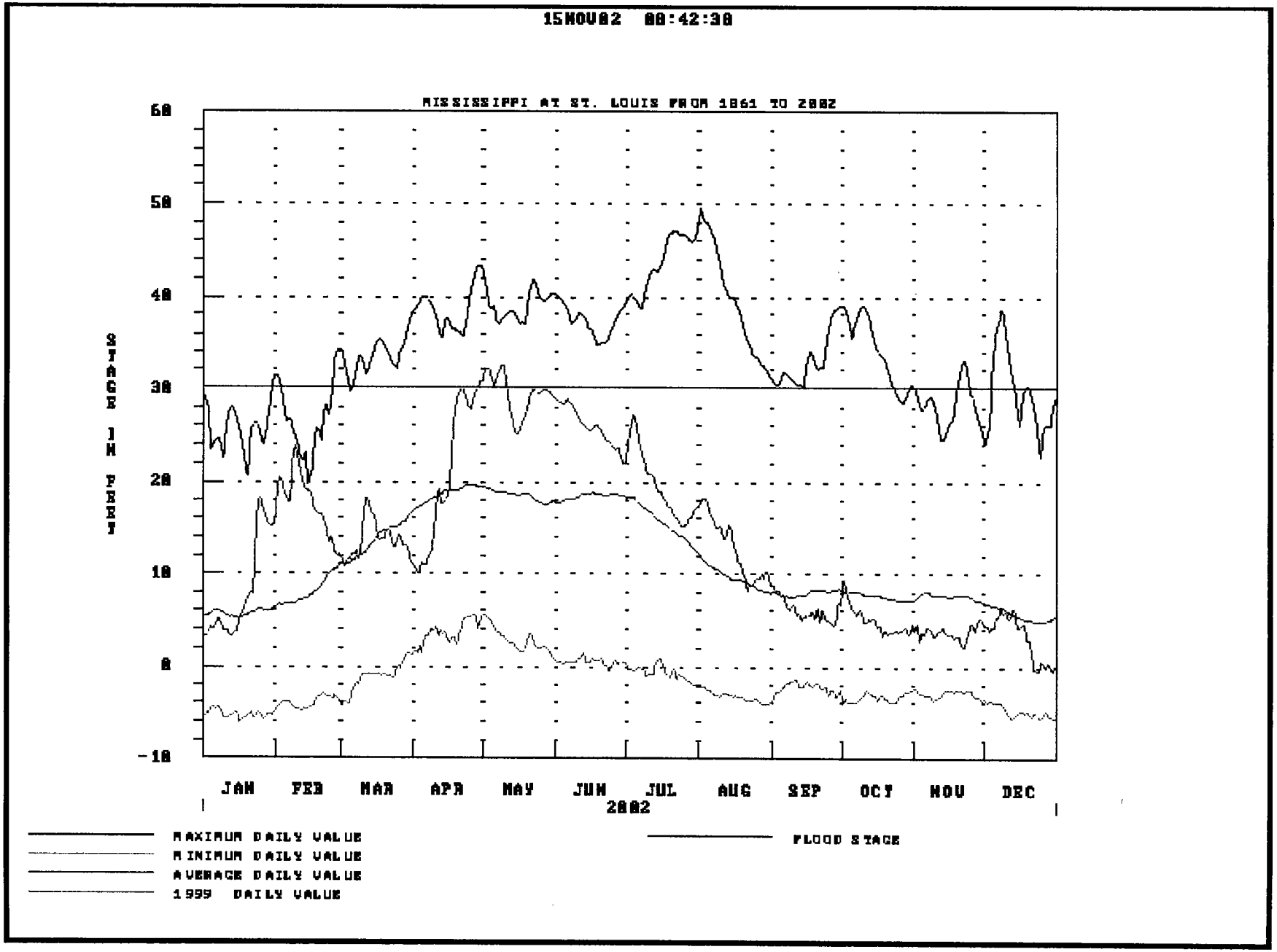
15NOV02 08:42:38
MISSISSIPPI AT ST. LOUIS FROM 1861 TO 2002
STAGE IN FEET
60
50
40
30
20
10
0
-10
JAN
FEB
MAR
APR
MAY
JUN
JUL
AUG
SEP
OCT
NOV
DEC
2002
MAXIMUM DAILY VALUE
MINIMUM DAILY VALUE
AVERAGE DAILY VALUE
1999 DAILY VALUE
FLOOD STAGE

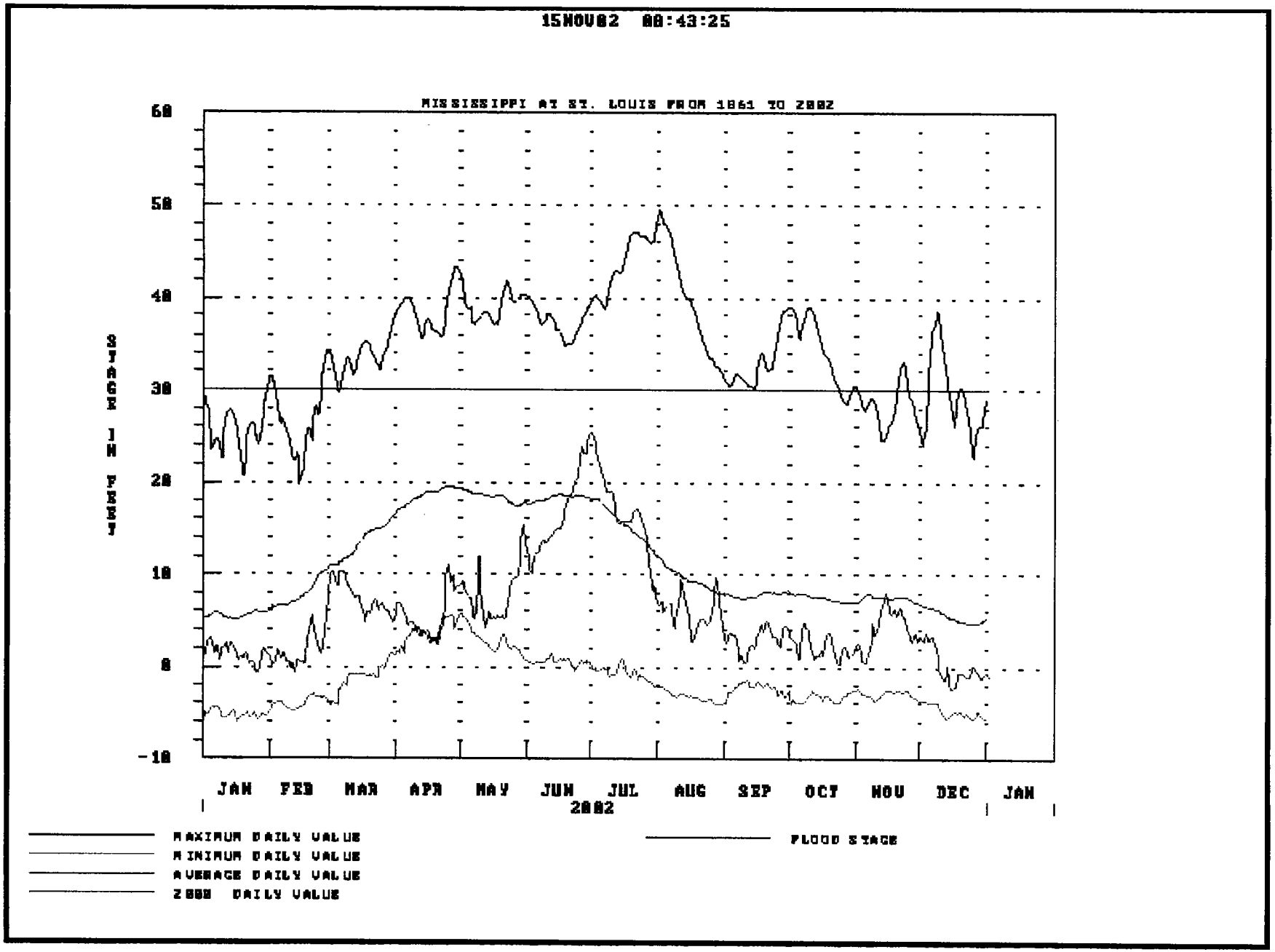
15NOV02 08:43:25
MISSISSIPPI AT ST. LOUIS FROM 1861 TO 2002
STAGE IN FEET
60
50
40
30
20
10
0
-10
JAN
FEB
MAR
APR
MAY
JUN
JUL
AUG
SEP
OCT
NOV
DEC
JAN
2002
MAXIMUM DAILY VALUE
MINIMUM DAILY VALUE
AVERAGE DAILY VALUE
2002 DAILY VALUE
FLOOD STAGE

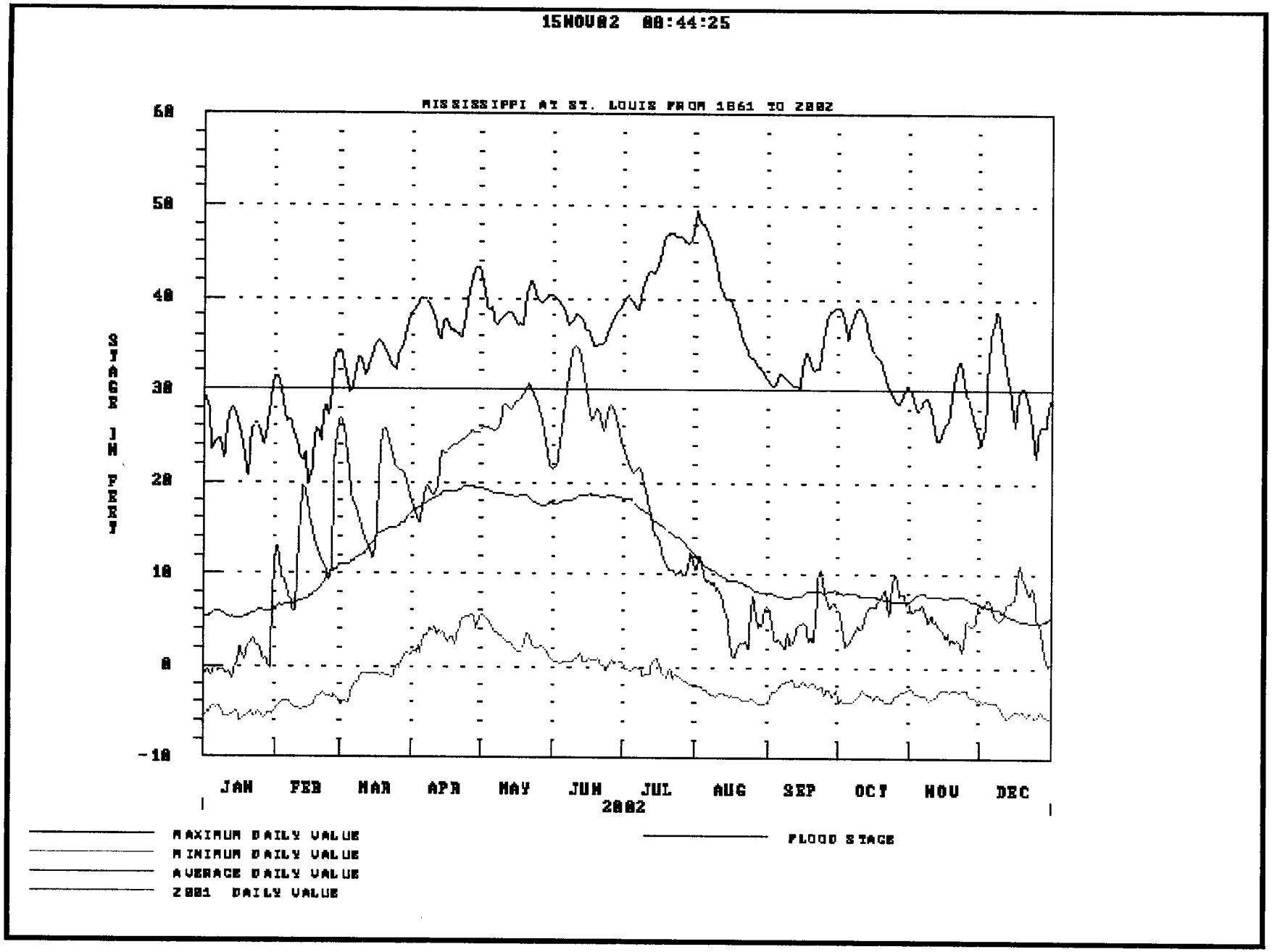
15NOV02 08:44:25
MISSISSIPPI AT ST. LOUIS FROM 1861 TO 2002
STAGE IN FEET
60
50
40
30
20
10
0
-10
JAN
FEB
MAR
APR
MAY
JUN
JUL
AUG
SEP
OCT
NOV
DEC
2002
MAXIMUM DAILY VALUE
MINIMUM DAILY VALUE
AVERAGE DAILY VALUE
2001 DAILY VALUE
FLOOD STAGE

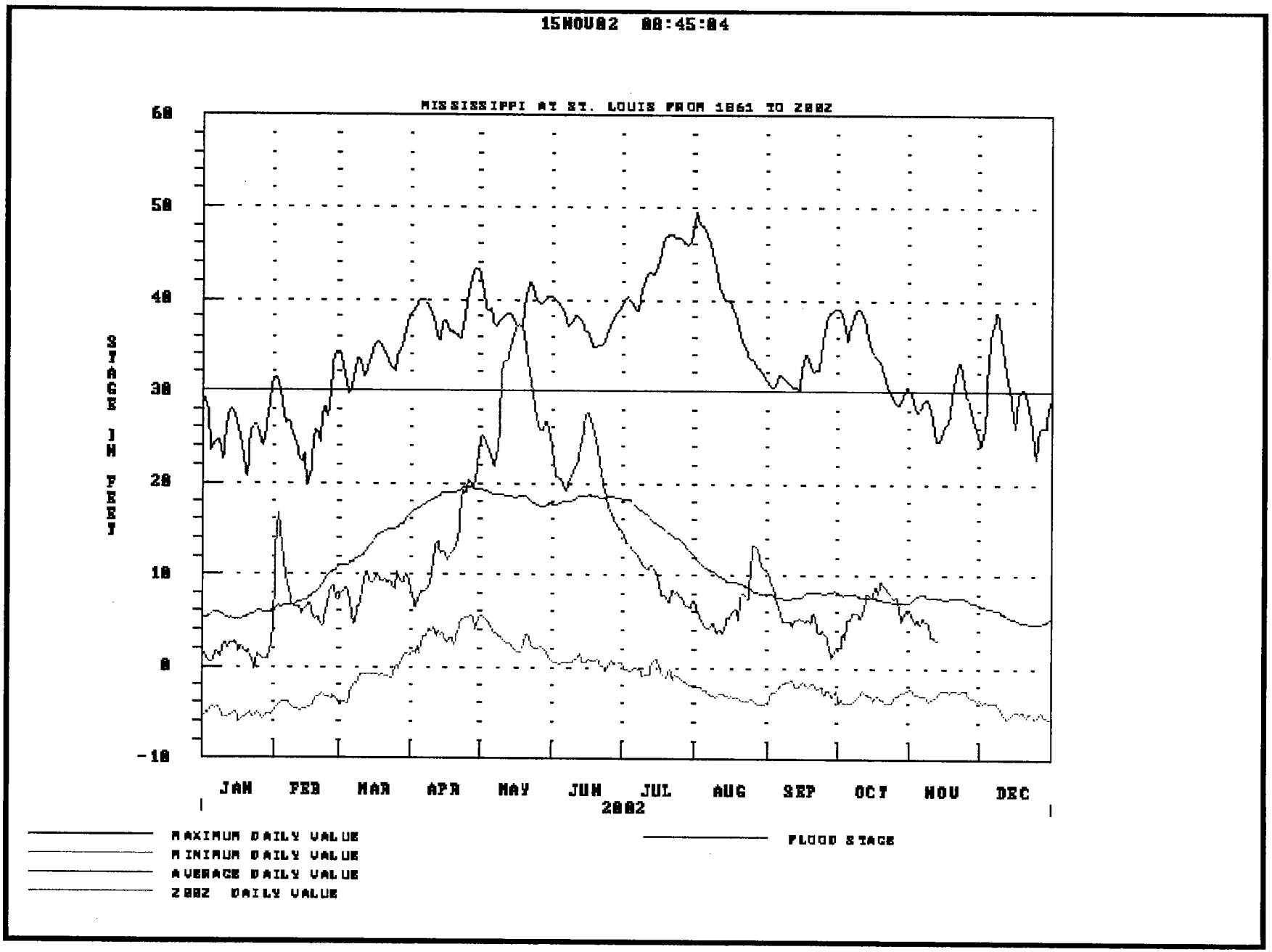
15NOV02 08:45:04
MISSISSIPPI AT ST. LOUIS FROM 1861 TO 2002
STAGE IN FEET
60
50
40
30
20
10
0
-10
JAN
FEB
MAR
APR
MAY
JUN
JUL
AUG
SEP
OCT
NOV
DEC
2002
MAXIMUM DAILY VALUE
MINIMUM DAILY VALUE
AVERAGE DAILY VALUE
2002 DAILY VALUE
FLOOD STAGE

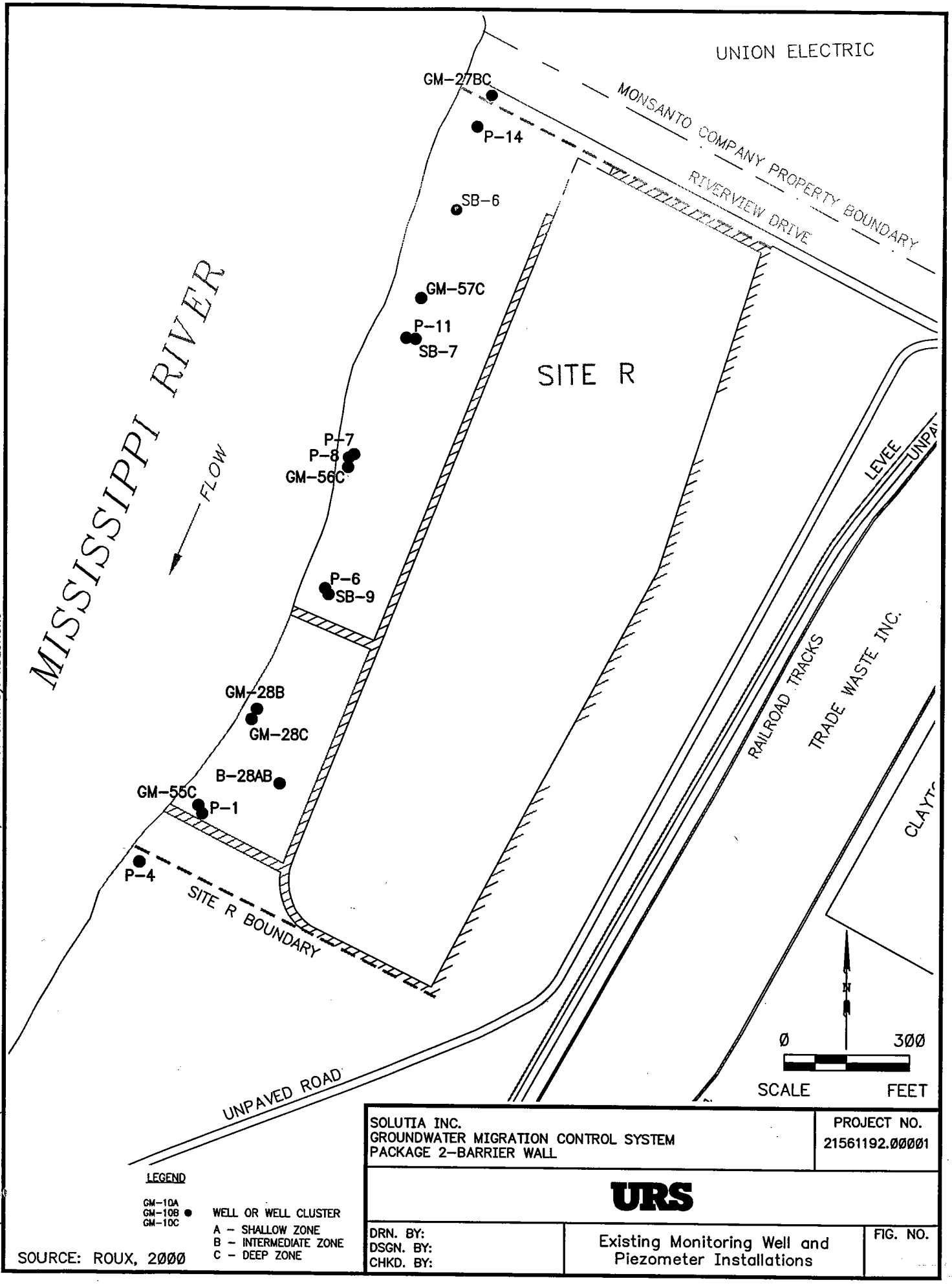

File: E:\21561192.00001\MON WELL INSTALL.DWG Last edited: DEC. 05, 02 @ 07:07 a.m. by: WDLONGXO

Water Levels For Shallow Wells

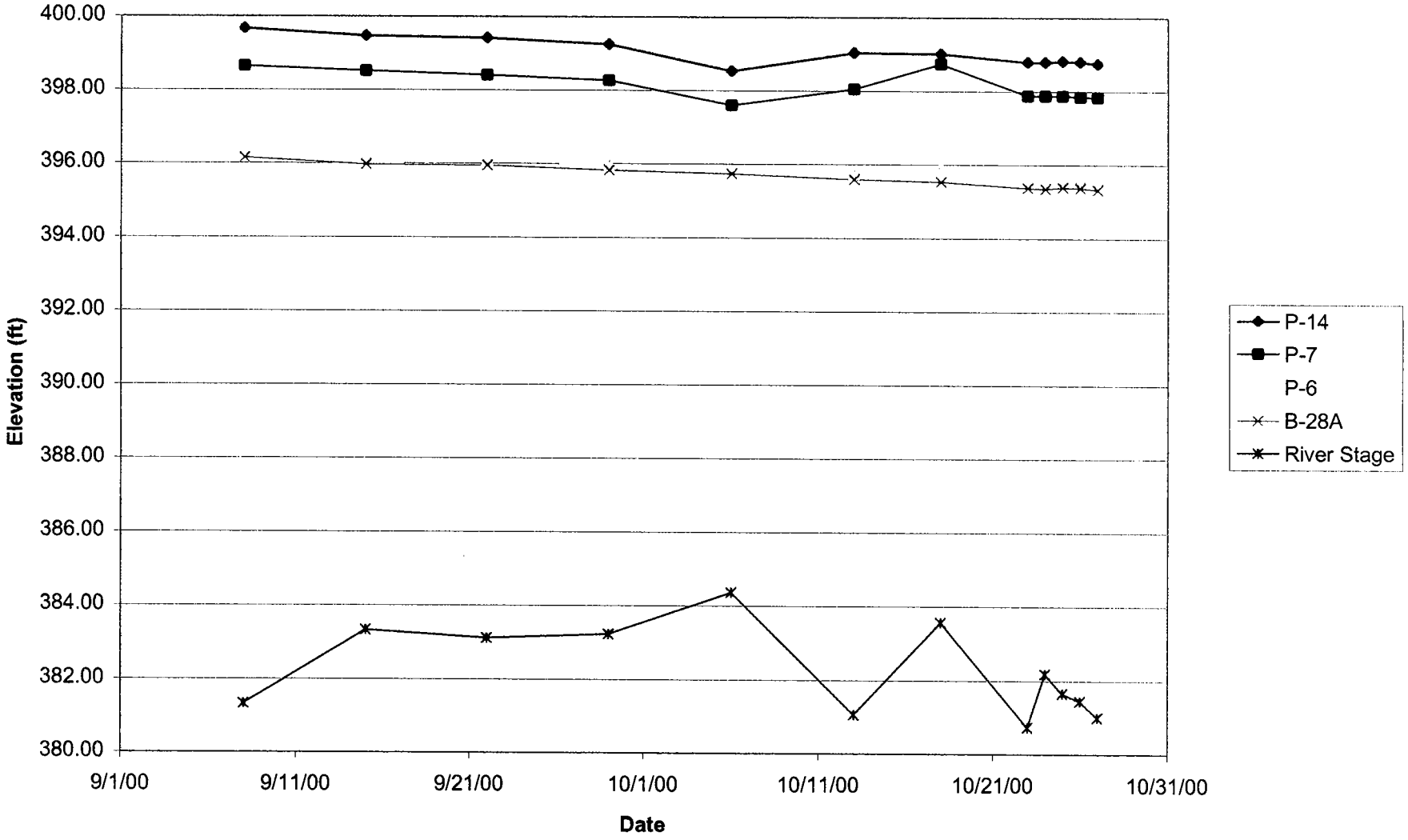

Water Levels For Mid-Range Wells

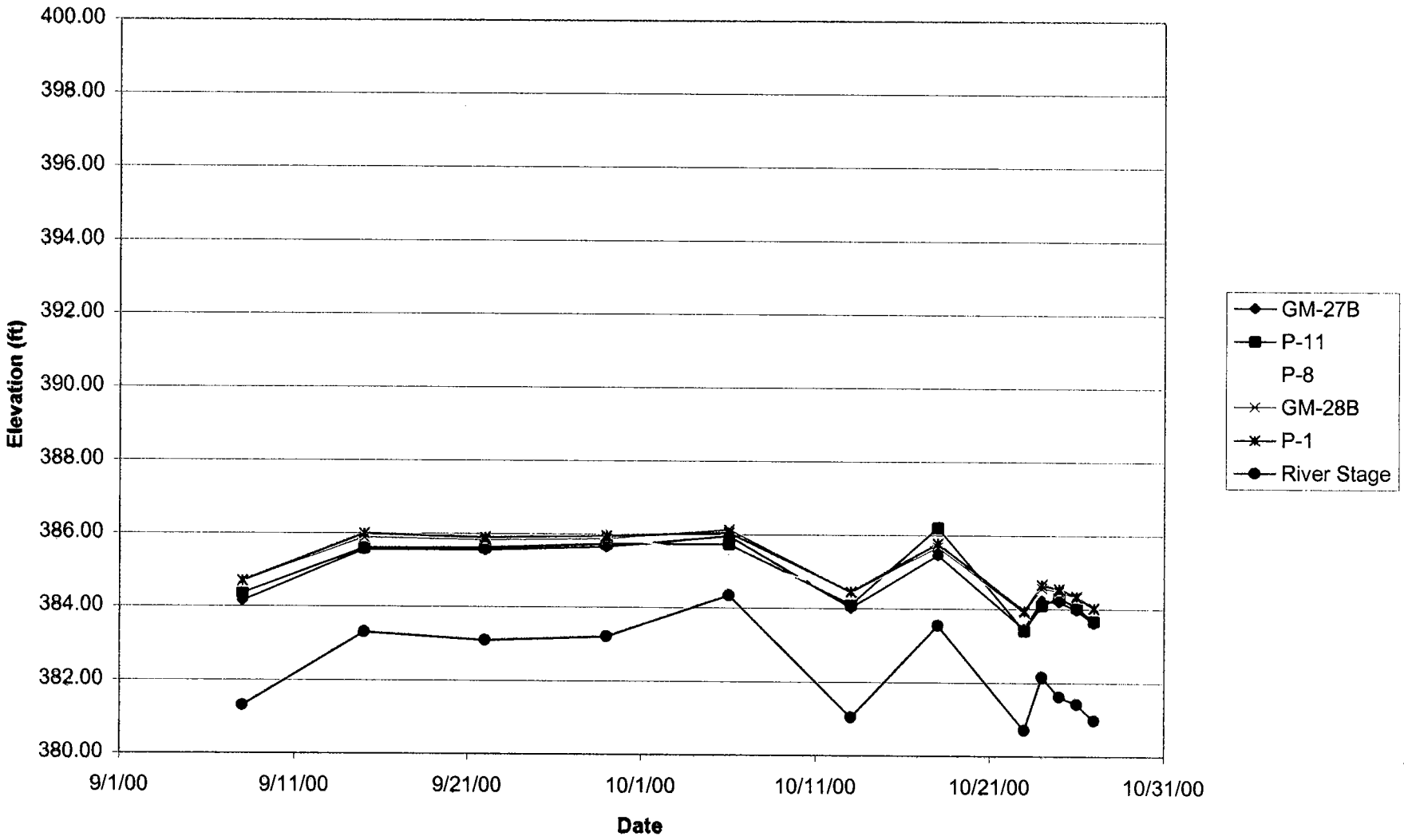

Water Levels For Deep Wells

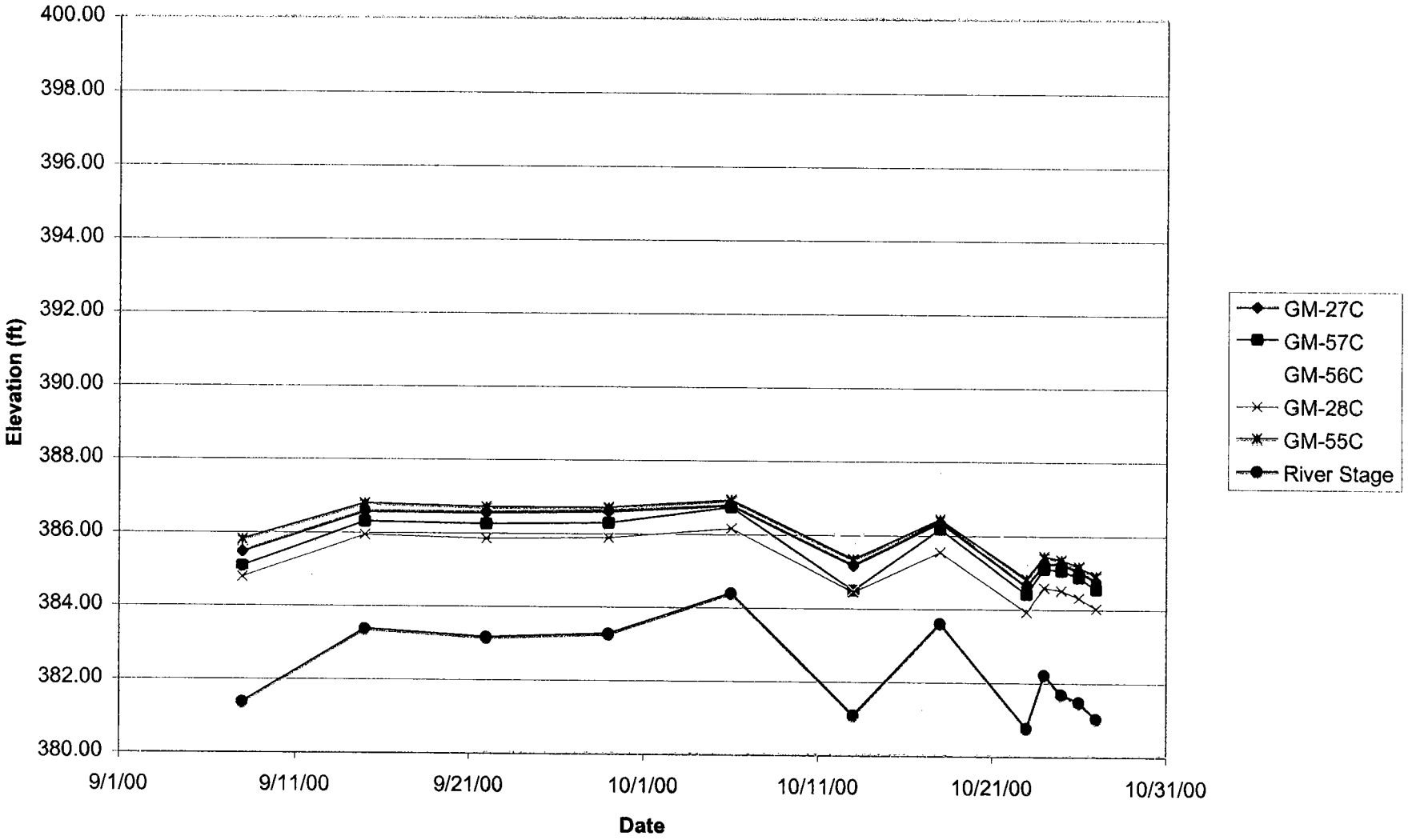

Project: Solutia Barrier Wall
Project Location: Site R - Sauget, Illinois
Project Number: 21561192

PIEZOMETER WELL CONSTRUCTION LOG FOR WELL SB-6

Well Location	SB-6			Date(s) Installed	11/07/02 Time
Installed By	REDI	Observed By	M. Felton	Total Depth	140.0 feet
Method of Installation	Tremie pipe				
Screened Interval	128.0 - 133.8	Completion Zone	127.5 - 134.5		
Remarks					

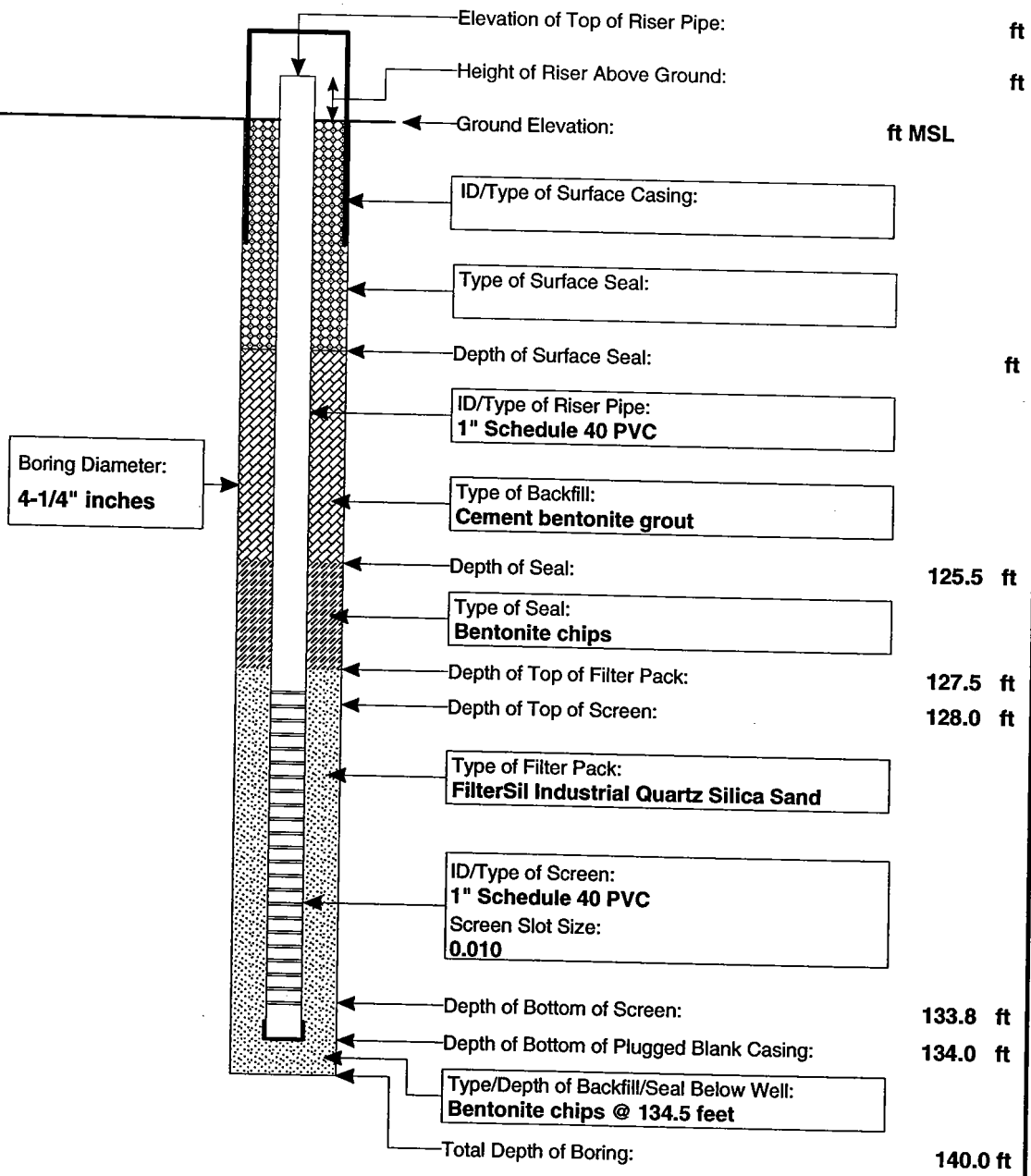

NOTE: DIAGRAM IS NOT TO SCALE

ENV_WELL_CONSTR_ABOVE_GROUND_PIEZ WELL1192.GPJ URSSTLEV.GDT 12/2/02

Project: Solutia Barrier Wall
Project Location: Site R - Sauget, Illinois
Project Number: 21561192

PIEZOMETER WELL CONSTRUCTION LOG FOR WELL SB-7

Well Location	SB-7			Date(s) Installed 11/12/02	Time
Installed By	REDI	Observed By	B. Higgins	Total Depth	139.0 feet
Method of Installation	Tremie pipe				
Screened Interval	124.5 - 130.3	Completion Zone	124.0 - 130.5		
Remarks					

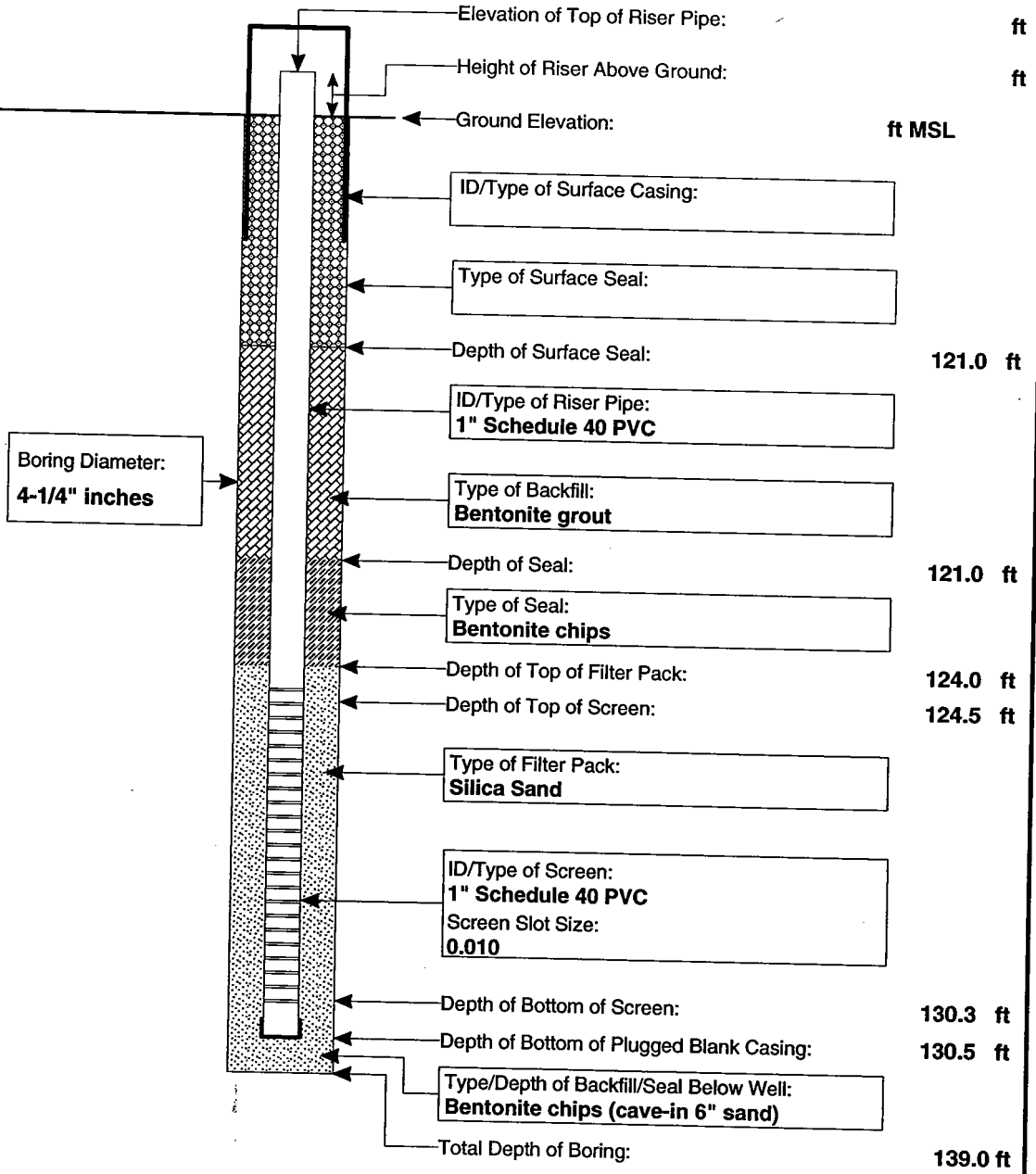

NOTE: DIAGRAM IS NOT TO SCALE

ENV_WELL_CONSTR_ABOVE_GROUND_PIEZ WELL1192.GPJ URSSTLEV.GDT 12/2/02

Project: Solutia Barrier Wall Project Location: Site R - Sauget, Illinois Project Number: 21561192	PIEZOMETER WELL CONSTRUCTION LOG FOR WELL SB-9

Well Location	SB-9			Date(s) Installed 11/15/02	Time
Installed By	REDI	Observed By	M. Felton	Total Depth	139.0 feet
Method of Installation					
Screened Interval	110.0 - 113.8	Completion Zone	109.5 - 114.5		
Remarks					

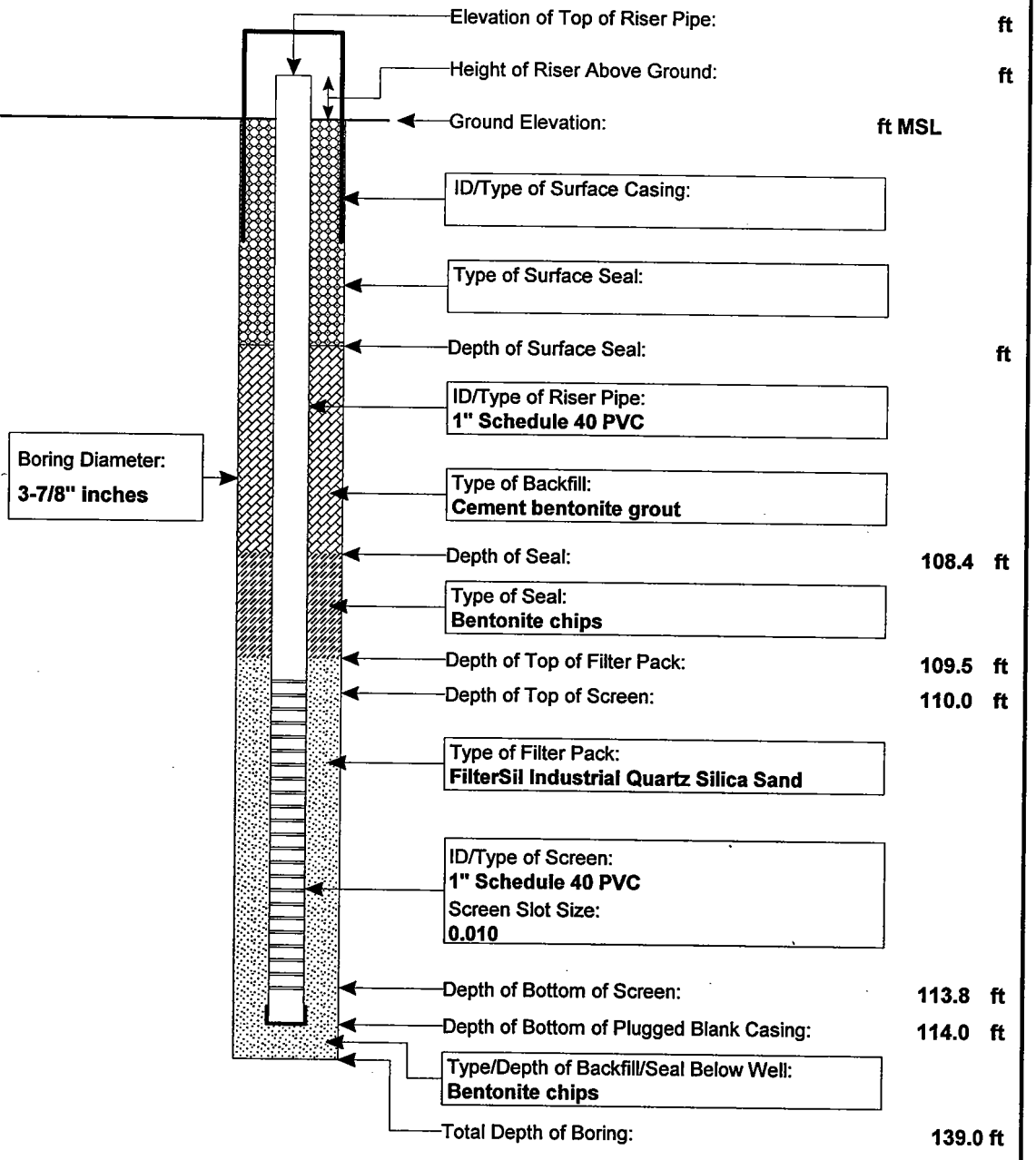

NOTE: DIAGRAM IS NOT TO SCALE

ONSTR_ABOVE_GROUND_PIEZ WELL1192.GPJ URSSTLEV.GDT 12/4/02

ENV_V

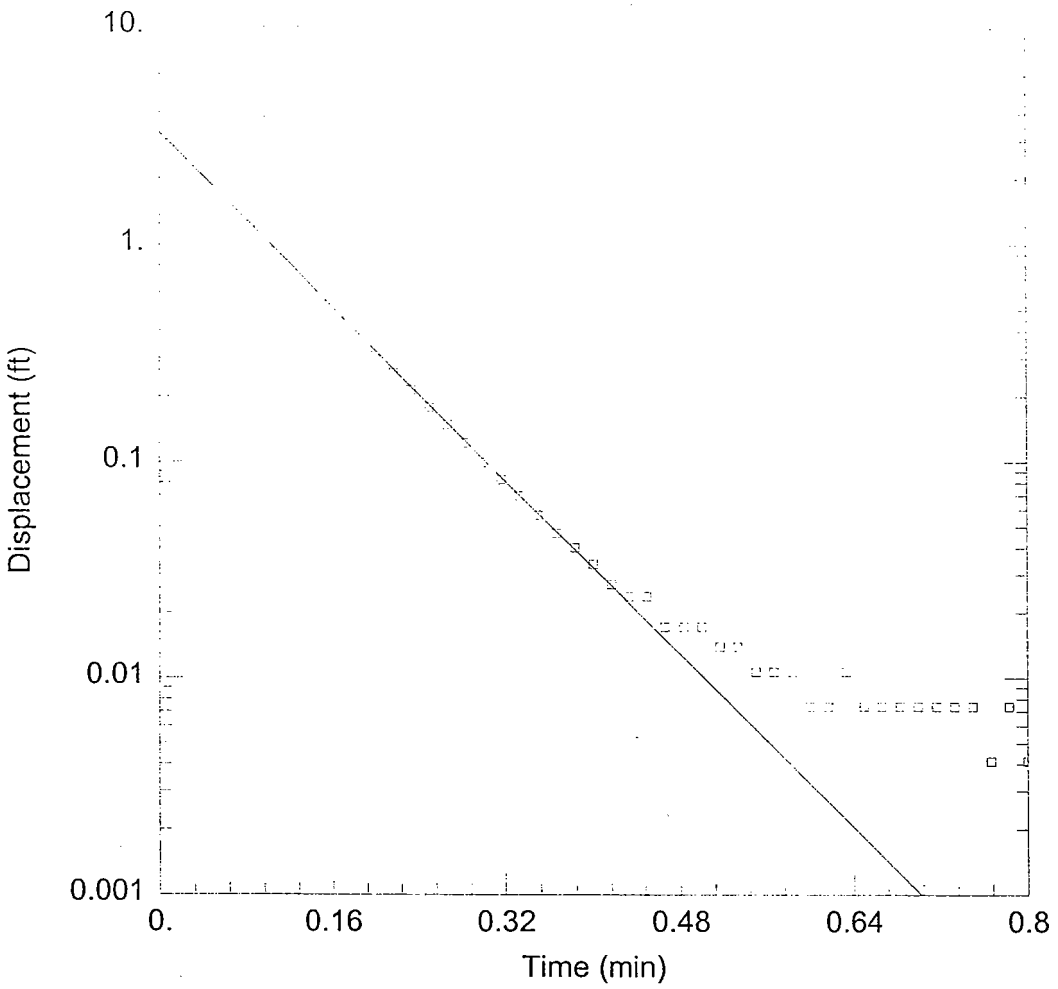

WELL TEST ANALYSIS

Data Set: C:\My Documents\Solutia Slug Tests\Aqtesolv\PZ-6 (11_19_02).aqt
Date: 11/27/02 Time: 14:27:47

PROJECT INFORMATION

Client: Solutia
Project: 21561192
Test Location: Sauget, IL
Test Well: PZ-6
Test Date: 11/19/02

AQUIFER DATA

Saturated Thickness: 9. ft
Anisotropy Ratio (Kz/Kr): 0.5

WELL DATA (PZ-6)

Initial Displacement: 1.3 ft
Casing Radius: 0.083 ft
Screen Length: 6. ft
Water Column Height: 95.56 ft
Wellbore Radius: 0.417 ft
Gravel Pack Porosity: 0.25

SOLUTION

Aquifer Model: Unconfined
Solution Method: Bouwer-Rice

AQTESOLV for Windows

Data Set: C:\My Documents\Solutia Slug Tests\Aqtesolv\PZ-6 (11_19_02).aqt
Date: 11/27/02
Time: 14:27:56

PROJECT INFORMATION

Client: Solutia
Project: 21561192
Location: Sauget, IL
Test Date: 11/19/02
Test Well: PZ-6

AQUIFER DATA

Saturated Thickness: 9. ft
Anisotropy Ratio (Kz/Kr): 0.5

OBSERVATION WELL DATA

Number of observation wells: 1

Observation Well No. 1: PZ-6

X Location: 0. ft
Y Location: 0. ft

No. of observations: 48

Observation Data

Time (min)	Displacement (ft)	Time (min)	Displacement (ft)	Time (min)	Displacement (ft)
0.0166	0.4569	0.2833	0.1222	0.55	0.01068
0.0333	0.8637	0.3	0.09927	0.5666	0.01068
0.05	1.605	0.3166	0.08286	0.5833	0.01068
0.0666	1.1	0.3333	0.06974	0.6	0.007403
0.0833	1.221	0.35	0.05662	0.6166	0.007403
0.1	0.9293	0.3666	0.04677	0.6333	0.01068
0.1166	0.7259	0.3833	0.04021	0.65	0.007403
0.1333	0.6209	0.4	0.03365	0.6666	0.007403
0.15	0.5258	0.4166	0.02709	0.6833	0.007403
0.1666	0.4405	0.4333	0.02381	0.7	0.007403
0.1833	0.5422	0.45	0.02381	0.7166	0.007403
0.2	0.3092	0.4666	0.01725	0.7333	0.007403
0.2166	0.2567	0.4833	0.01725	0.75	0.007403
0.2333	0.2141	0.5	0.01725	0.7666	0.004122
0.25	0.178	0.5166	0.01396	0.7833	0.007403
0.2666	0.1485	0.5333	0.01396	0.8	0.004122

SOLUTION

AQTESOLV for Windows

Aquifer Model: Unconfined
Solution Method: Bouwer-Rice

VISUAL ESTIMATION RESULTS

Estimated Parameters

Parameter	Estimate		
K	0.1713	ft/min	$\approx 8.7 \times 10^{-2}$ cm/sec
y0	3.259	ft	

1.

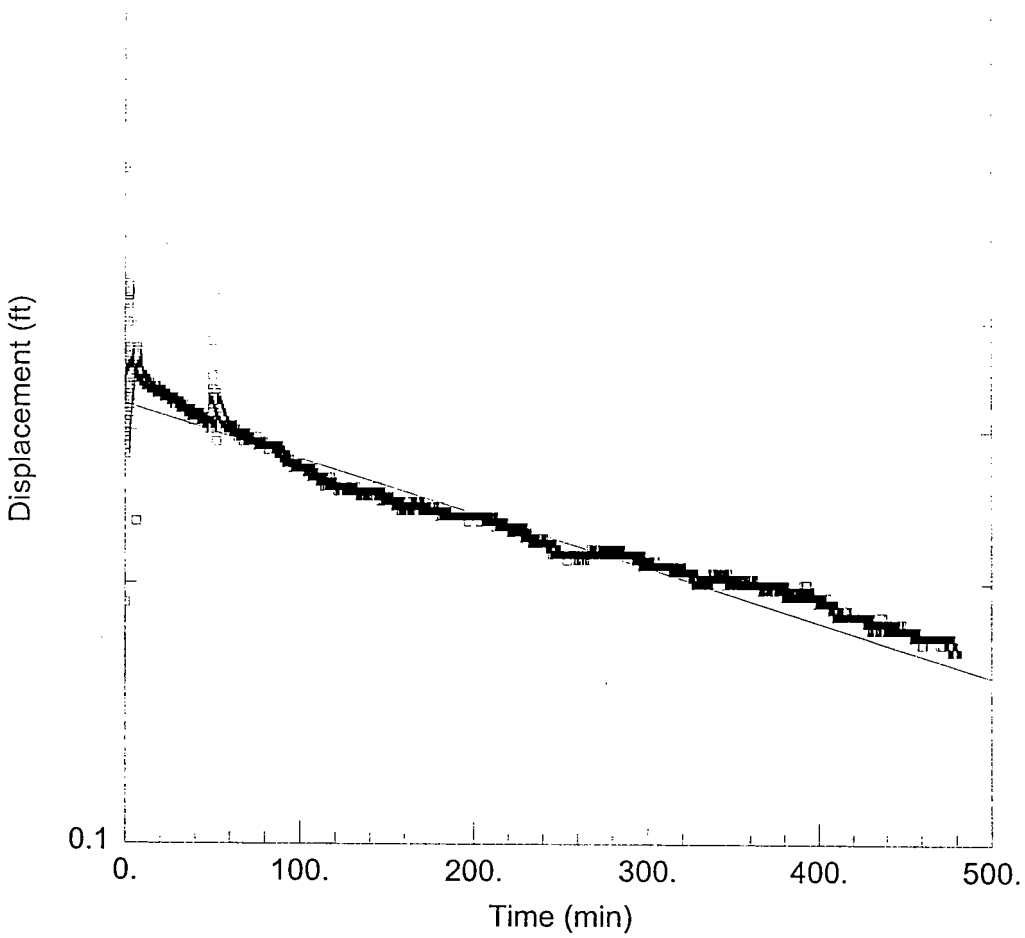

WELL TEST ANALYSIS

Data Set: C:\My Documents\Solutia Slug Tests\Aqtesolv\PZ-7 partial test (11_19_02).aqt
Date: 11/27/02 Time: 14:24:04

PROJECT INFORMATION

Client: Solutia
Project: 21561192
Test Location: Sauget, IL
Test Date: 11/19/02

AQUIFER DATA

Saturated Thickness: 13. ft
Anisotropy Ratio (Kz/Kr): 0.5

WELL DATA (PZ-7)

Initial Displacement: 0.6 ft
Casing Radius: 0.083 ft
Screen Length: 6. ft
Water Column Height: 95.19 ft
Wellbore Radius: 0.417 ft
Gravel Pack Porosity: 0.25

SOLUTION

Aquifer Model: Unconfined
Solution Method: Bouwer-Rice
K = 2.163E-05 ft/min
y0 = 0.3225 ft

AQTESOLV for Windows

Data Set: C:\My Documents\Solutia Slug Tests\Aqtesolv\PZ-7 partial test (11_19_02).aqt
Date: 11/27/02
Time: 14:24:28

PROJECT INFORMATION

Client: Solutia
Project: 21561192
Location: Sauget, IL
Test Date: 11/19/02

AQUIFER DATA

Saturated Thickness: 13. ft
Anisotropy Ratio (Kz/Kr): 0.5

OBSERVATION WELL DATA

Number of observation wells: 1

Observation Well No. 1: PZ-7

X Location: 0. ft
Y Location: 0. ft

No. of observations: 28839

Observation Data

Time (min)	Displacement (ft)	Time (min)	Displacement (ft)	Time (min)	Displacement (ft)
0.0166	0.1897	160.2	0.2454	320.4	0.2061
0.0333	0.3078	160.3	0.2454	320.5	0.2061
0.05	0.3012	160.3	0.2454	320.5	0.2061
0.0666	0.2979	160.3	0.2454	320.5	0.2061
0.0833	0.2946	160.3	0.2454	320.5	0.2061
0.1	0.2914	160.3	0.2454	320.5	0.2061
0.1166	0.2881	160.3	0.2454	320.6	0.2061
0.1333	0.2881	160.3	0.2454	320.6	0.2061
0.15	0.2881	160.4	0.2454	320.6	0.2061
0.1666	0.2848	160.4	0.2454	320.6	0.2061
0.1833	0.2848	160.4	0.2454	320.6	0.2061
0.2	0.2815	160.4	0.2422	320.6	0.2061
0.2166	0.2815	160.4	0.2454	320.6	0.2061
0.2333	0.2848	160.4	0.2422	320.7	0.2061
0.25	0.2848	160.5	0.2454	320.7	0.2061
0.2666	0.2848	160.5	0.2454	320.7	0.2061
0.2833	0.2848	160.5	0.2454	320.7	0.2061
0.3	0.2848	160.5	0.2422	320.7	0.2061
0.3166	0.2848	160.5	0.2454	320.8	0.2061
0.3333	0.2848	160.6	0.2454	320.8	0.2061

AQTESOLV for Windows - [PZ-7 partial test (11_19_02).aqt]

File Edit View Format Solution Match Window Help

report

Time (min)	Displacement (ft)	Time (min)	Displacement (ft)	Time (min)	Displacement (ft)
159.8	0.2454	320.1	0.2061	480.3	0.1667
159.9	0.2422	320.1	0.2061	480.3	0.1667
159.9	0.2422	320.1	0.2061	480.3	0.1667
159.9	0.2454	320.1	0.2061	480.3	0.1667
159.9	0.2422	320.1	0.2061	480.4	0.1667
159.9	0.2454	320.1	0.2061	480.4	0.1667
159.9	0.2454	320.2	0.2061	480.4	0.1667
160.	0.2454	320.2	0.2061	480.4	0.1667
160.	0.2454	320.2	0.2061	480.4	0.1667
160.	0.2422	320.2	0.2061	480.4	0.1667
160.	0.2454	320.2	0.2061	480.4	0.1667
160.	0.2454	320.3	0.2061	480.5	0.1667
160.1	0.2454	320.3	0.2061	480.5	0.1667
160.1	0.2422	320.3	0.2061	480.5	0.1667
160.1	0.2454	320.3	0.2061	480.5	0.1667
160.1	0.2454	320.3	0.2061	480.5	0.1667
160.1	0.2454	320.3	0.2061	480.6	0.1667
160.1	0.2454	320.4	0.2061	480.6	0.1667
160.2	0.2454	320.4	0.2061	480.6	0.1667
160.2	0.2454	320.4	0.2061	480.6	0.1667
160.2	0.2454	320.4	0.2061	480.6	0.1667
160.2	0.2454	320.4	0.2061	480.6	0.1667
160.2	0.2454	320.4	0.2061	480.6	0.1667

SOLUTION

Aquifer Model: Unconfined
Solution Method: Bouwer-Rice

VISUAL ESTIMATION RESULTS

Estimated Parameters

Parameter	Estimate	
K	2.163E-05	ft/min
y0	0.3225	ft

$= 1.099 \times 10^{-5}$ cm/sec

For Help, press F1

Slug Test | Bouwer-Rice

Start | PowerDesk - C:\My Doc... | AQTESOLV for Wind... | 2:25 PM

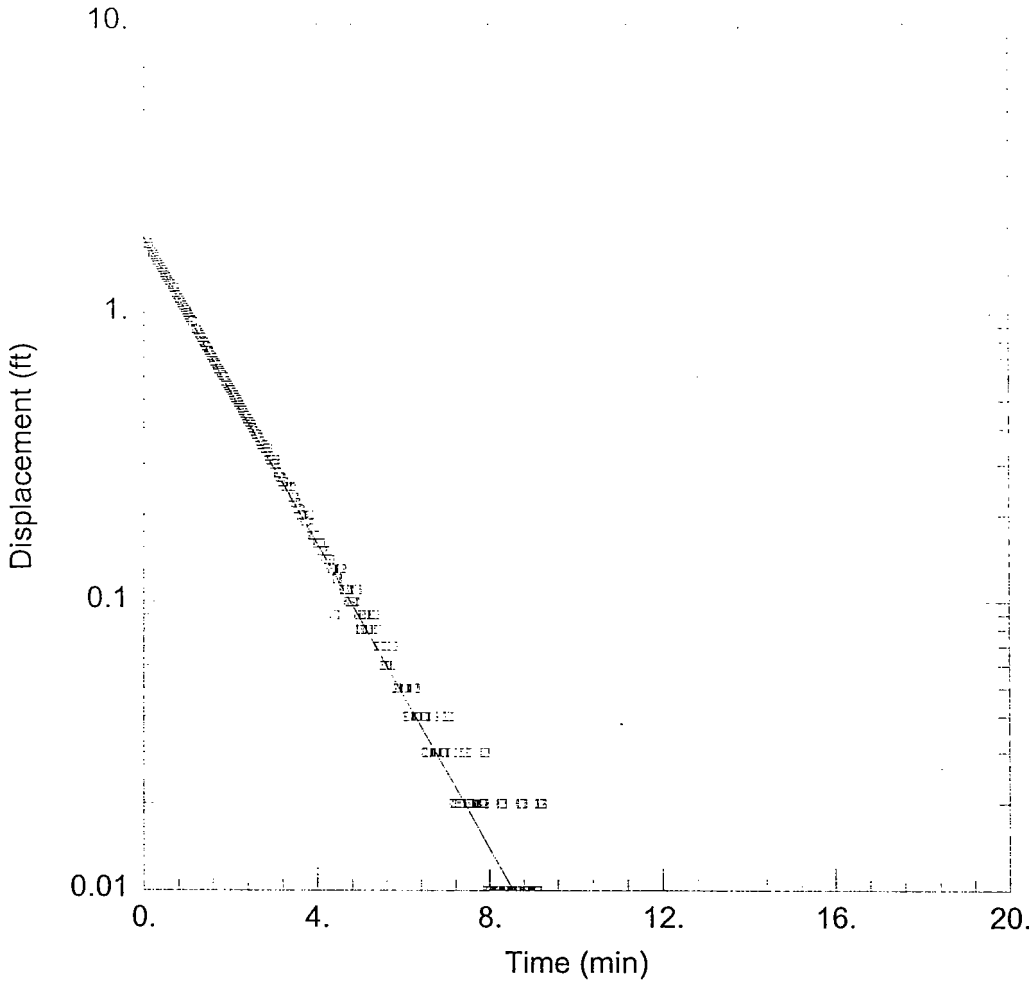

WELL TEST ANALYSIS

Data Set: C:\My Documents\Solutia Slug Tests\Aqtesolv\PZ-9 with a slug (11_25_02 IN).aqt
Date: 11/27/02 Time: 14:13:51

PROJECT INFORMATION

Client: Solutia
Project: 21561192
Test Location: Sauget, IL
Test Date: 11/19/02

AQUIFER DATA

Saturated Thickness: 5.5 ft
Anisotropy Ratio (Kz/Kr): 0.5

WELL DATA (PZ-9)

Initial Displacement: 2.27 ft
Water Column Height: 74.18 ft
Casing Radius: 0.083 ft
Wellbore Radius: 0.417 ft
Screen Length: 3.5 ft
Gravel Pack Porosity: 0.25

SOLUTION

Aquifer Model: Unconfined
Solution Method: Bouwer-Rice
K = 0.01343 ft/min
y0 = 1.827 ft

AQTESOLV for Windows

Data Set: C:\My Documents\Solutia Slug Tests\Aqtesolv\PZ-9 with a slug (11_25_02 IN).aqt
Date: 11/27/02
Time: 14:14:05

PROJECT INFORMATION

Client: Solutia
Project: 21561192
Location: Sauget, IL
Test Date: 11/19/02

AQUIFER DATA

Saturated Thickness: 5.5 ft
Anisotropy Ratio (Kz/Kr): 0.5

OBSERVATION WELL DATA

Number of observation wells: 1

Observation Well No. 1: PZ-9

X Location: 0. ft
Y Location: 0. ft

No. of observations: 277

Observation Data

Time (min)	Displacement (ft)	Time (min)	Displacement (ft)	Time (min)	Displacement (ft)
0.0333	1.61	3.133	0.27	6.233	0.05
0.0667	1.8	3.167	0.27	6.267	0.05
0.1	1.73	3.2	0.26	6.3	0.04
0.1333	1.68	3.233	0.26	6.333	0.04
0.1667	1.64	3.267	0.25	6.367	0.04
0.2	1.61	3.3	0.25	6.4	0.04
0.2333	1.58	3.333	0.25	6.433	0.04
0.2667	1.55	3.367	0.25	6.467	0.04
0.3	1.51	3.4	0.25	6.5	0.04
0.3333	1.48	3.433	0.23	6.533	0.03
0.3667	1.46	3.467	0.23	6.567	0.03
0.4	1.43	3.5	0.22	6.6	0.03
0.4333	1.4	3.533	0.22	6.633	0.03
0.4667	1.37	3.567	0.21	6.667	0.04
0.5	1.34	3.6	0.21	6.7	0.04
0.5333	1.32	3.633	0.2	6.733	0.03
0.5667	1.29	3.667	0.2	6.767	0.03
0.6	1.27	3.7	0.2	6.8	0.03
0.6333	1.25	3.733	0.19	6.833	0.03
0.6667	1.22	3.767	0.19	6.867	0.03

Time (min)	Displacement (ft)	Time (min)	Displacement (ft)	Time (min)	Displacement (ft)
0.7	1.22	3.8	0.2	6.9	0.03
0.7333	1.17	3.833	0.2	6.933	0.03
0.7667	1.15	3.867	0.18	6.967	0.03
0.8	1.12	3.9	0.17	7.	0.04
0.8333	1.1	3.933	0.17	7.033	0.04
0.8667	1.08	3.967	0.17	7.067	0.04
0.9	1.06	4.	0.16	7.1	0.03
0.9333	1.04	4.033	0.16	7.133	0.03
0.9667	1.02	4.067	0.16	7.167	0.02
1.	1.	4.1	0.15	7.2	0.02
1.033	0.98	4.133	0.15	7.233	0.02
1.067	0.96	4.167	0.15	7.267	0.02
1.1	0.94	4.2	0.14	7.3	0.02
1.133	0.93	4.233	0.15	7.333	0.02
1.167	1.01	4.267	0.14	7.367	0.03
1.2	0.88	4.3	0.14	7.4	0.03
1.233	0.87	4.333	0.13	7.433	0.03
1.267	0.85	4.367	0.13	7.467	0.03
1.3	0.84	4.4	0.09	7.5	0.02
1.333	0.82	4.433	0.12	7.533	0.02
1.367	0.8	4.467	0.12	7.567	0.02
1.4	0.79	4.5	0.13	7.6	0.02
1.433	0.77	4.533	0.13	7.633	0.02
1.467	0.76	4.567	0.13	7.667	0.02
1.5	0.74	4.6	0.11	7.7	0.02
1.533	0.73	4.633	0.11	7.733	0.02
1.567	0.71	4.667	0.11	7.767	0.02
1.6	0.7	4.7	0.11	7.8	0.02
1.633	0.68	4.733	0.1	7.833	0.02
1.667	0.67	4.767	0.1	7.867	0.02
1.7	0.66	4.8	0.1	7.9	0.03
1.733	0.64	4.833	0.1	7.933	0.01
1.767	0.63	4.867	0.1	7.967	0.01
1.8	0.62	4.9	0.11	8.	0.01
1.833	0.61	4.933	0.11	8.033	0.01
1.867	0.6	4.967	0.09	8.067	0.01
1.9	0.58	5.	0.08	8.1	0.01
1.933	0.57	5.033	0.08	8.133	0.01
1.967	0.56	5.067	0.09	8.167	0.01
2.	0.55	5.1	0.09	8.2	0.01
2.033	0.54	5.133	0.08	8.233	0.01
2.067	0.53	5.167	0.08	8.267	0.02
2.1	0.52	5.2	0.09	8.3	0.02
2.133	0.51	5.233	0.08	8.333	0.01
2.167	0.5	5.267	0.08	8.367	0.01
2.2	0.49	5.3	0.09	8.4	0.01
2.233	0.48	5.333	0.09	8.433	0.01
2.267	0.47	5.367	0.08	8.467	0.01

Time (min)	Displacement (ft)	Time (min)	Displacement (ft)	Time (min)	Displacement (ft)
2.3	0.46	5.4	0.07	8.5	0.01
2.333	0.45	5.433	0.07	8.533	0.01
2.367	0.44	5.467	0.07	8.567	0.01
2.4	0.43	5.5	0.07	8.6	0.01
2.433	0.42	5.533	0.06	8.633	0.01
2.467	0.42	5.567	0.06	8.667	0.01
2.5	0.41	5.6	0.06	8.7	0.01
2.533	0.4	5.633	0.06	8.733	0.02
2.567	0.39	5.667	0.06	8.767	0.02
2.6	0.38	5.7	0.06	8.8	0.01
2.633	0.38	5.733	0.07	8.833	0.01
2.667	0.37	5.767	0.07	8.867	0.01
2.7	0.36	5.8	0.06	8.9	0.01
2.733	0.35	5.833	0.05	8.933	0.01
2.767	0.35	5.867	0.05	8.967	0.01
2.8	0.34	5.9	0.05	9.	0.01
2.833	0.33	5.933	0.05	9.033	0.01
2.867	0.34	5.967	0.05	9.067	0.01
2.9	0.32	6.	0.05	9.1	0.01
2.933	0.31	6.033	0.05	9.133	0.01
2.967	0.31	6.067	0.05	9.167	0.02
3.	0.3	6.1	0.04	9.2	0.02
3.033	0.31	6.133	0.04	9.233	0.02
3.067	0.3	6.167	0.04		
3.1	0.28	6.2	0.05		

SOLUTION

Aquifer Model: Unconfined
Solution Method: Bouwer-Rice

VISUAL ESTIMATION RESULTS

Estimated Parameters

Parameter	Estimate		
K	0.01343	ft/min	$= 6.82 \times 10^{-3}$ cm/sec
y0	1.827	ft	

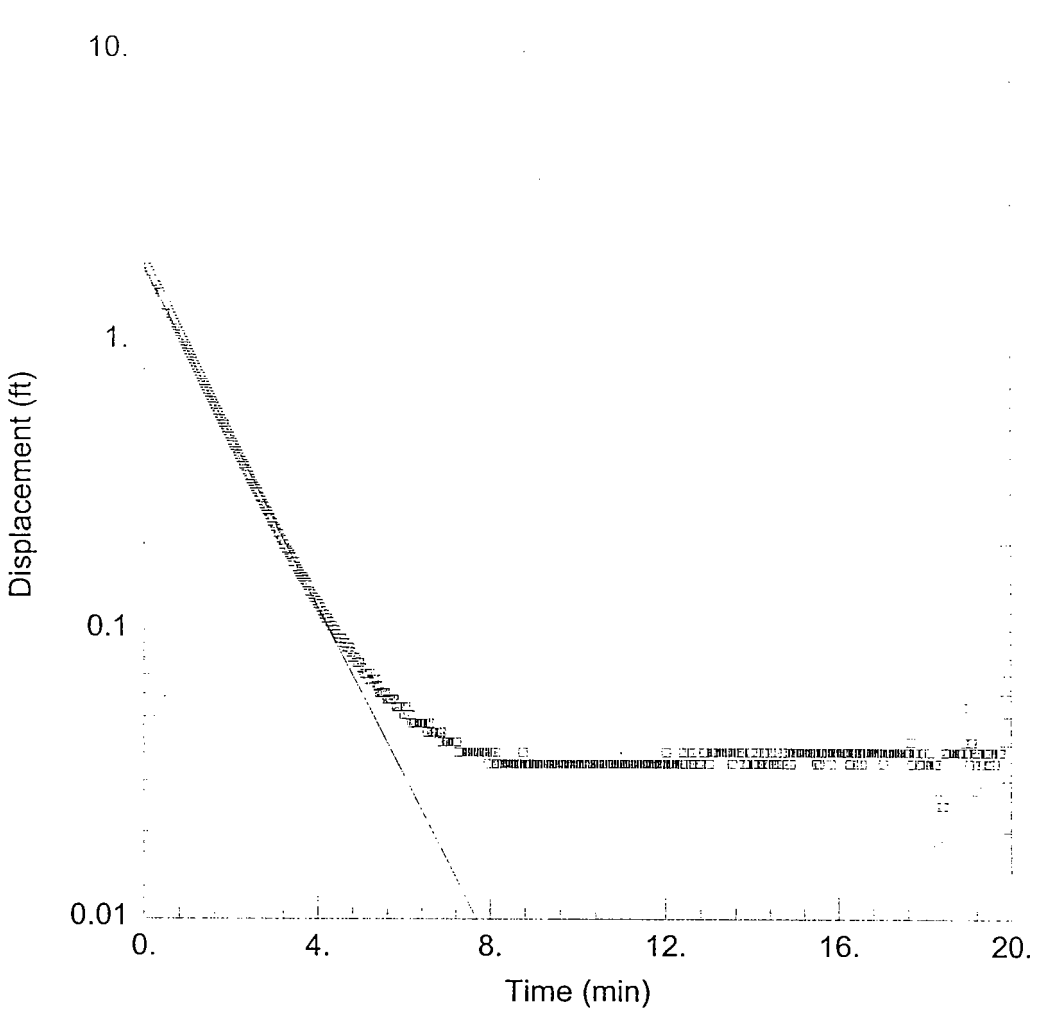

WELL TEST ANALYSIS

Data Set: C:\My Documents\Solutia Slug Tests\Aqtesolv\PZ-9 with a slug (11_25_02 OUT).aqt
Date: 11/27/02 Time: 14:12:31

PROJECT INFORMATION

Client: Solutia
Project: 21561192
Test Location: Sauget, IL
Test Date: 11/19/02

AQUIFER DATA

Saturated Thickness: 5.5 ft
Anisotropy Ratio (Kz/Kr): 0.5

WELL DATA (PZ-9)

Initial Displacement: 2.27 ft
Water Column Height: 74.18 ft
Casing Radius: 0.083 ft
Wellbore Radius: 0.417 ft
Screen Length: 3.5 ft
Gravel Pack Porosity: 0.25

SOLUTION

Aquifer Model: Unconfined
Solution Method: Bouwer-Rice
K = 0.01489 ft/min
y0 = 1.796 ft

AQTESOLV for Windows

Data Set: C:\My Documents\Solutia Slug Tests\Aqtesolv\PZ-9 with a slug (11_25_02 OUT).aqt
Date: 11/27/02
Time: 14:13:01

PROJECT INFORMATION

Client: Solutia
Project: 21561192
Location: Sauget, IL
Test Date: 11/19/02

AQUIFER DATA

Saturated Thickness: 5.5 ft
Anisotropy Ratio (Kz/Kr): 0.5

OBSERVATION WELL DATA

Number of observation wells: 1

Observation Well No. 1: PZ-9

X Location: 0. ft
Y Location: 0. ft

No. of observations: 593

Observation Data

Time (min)	Displacement (ft)	Time (min)	Displacement (ft)	Time (min)	Displacement (ft)
0.0334	1.891	6.633	0.0443	13.23	0.03774
0.0667	1.839	6.667	0.0443	13.27	0.03774
0.1	1.786	6.7	0.0443	13.3	0.03774
0.1334	1.737	6.733	0.0443	13.33	0.03774
0.1667	1.691	6.767	0.0443	13.37	0.03774
0.2	1.498	6.8	0.04102	13.4	0.03774
0.2334	1.626	6.833	0.0443	13.43	0.03774
0.2667	1.557	6.867	0.0443	13.47	0.03774
0.3	1.544	6.9	0.04102	13.5	0.03774
0.3334	1.504	6.933	0.04102	13.53	0.03446
0.3667	1.465	6.967	0.04102	13.57	0.03774
0.4	1.432	7.	0.04102	13.6	0.03774
0.4334	1.432	7.033	0.04102	13.63	0.03774
0.4667	1.242	7.067	0.04102	13.67	0.03774
0.5	1.33	7.1	0.04102	13.7	0.03774
0.5334	1.317	7.133	0.04102	13.73	0.03774
0.5667	1.275	7.167	0.04102	13.77	0.03774
0.6	1.245	7.2	0.04102	13.8	0.03446
0.6334	1.212	7.233	0.04102	13.83	0.03446
0.6667	1.183	7.267	0.03774	13.87	0.03446

Time (min)	Displacement (ft)	Time (min)	Displacement (ft)	Time (min)	Displacement (ft)
0.7	1.153	7.3	0.03774	13.9	0.03446
0.7334	1.127	7.333	0.03774	13.93	0.03774
0.7667	1.101	7.367	0.03774	13.97	0.03774
0.8	1.074	7.4	0.03774	14.	0.03774
0.8334	1.048	7.433	0.03774	14.03	0.03446
0.8667	1.022	7.467	0.03774	14.07	0.03446
0.9	0.999	7.5	0.03774	14.1	0.03774
0.9334	0.9728	7.533	0.03774	14.13	0.03446
0.9667	0.9531	7.567	0.03774	14.17	0.03446
1.	0.9301	7.6	0.03774	14.2	0.03446
1.033	0.9072	7.633	0.03774	14.23	0.03446
1.067	0.8875	7.667	0.03774	14.27	0.03774
1.1	0.8645	7.7	0.03774	14.3	0.03446
1.133	0.8448	7.733	0.03774	14.33	0.03774
1.167	0.8251	7.767	0.03774	14.37	0.03446
1.2	0.8055	7.8	0.03774	14.4	0.03774
1.233	0.7858	7.833	0.03774	14.43	0.03774
1.267	0.7661	7.867	0.03774	14.47	0.03774
1.3	0.7497	7.9	0.03774	14.5	0.03446
1.333	0.73	7.933	0.03774	14.53	0.03446
1.367	0.7136	7.967	0.03446	14.57	0.03446
1.4	0.6972	8.	0.03774	14.6	0.03446
1.433	0.6808	8.033	0.03774	14.63	0.03446
1.467	0.6644	8.067	0.03774	14.67	0.03446
1.5	0.648	8.1	0.03446	14.7	0.03774
1.533	0.6349	8.133	0.03774	14.73	0.03774
1.567	0.6185	8.167	0.03446	14.77	0.03774
1.6	0.6053	8.2	0.03446	14.8	0.03446
1.633	0.5922	8.233	0.03446	14.83	0.03774
1.667	0.5758	8.267	0.03446	14.87	0.03774
1.7	0.5627	8.3	0.03446	14.9	0.03446
1.733	0.5496	8.333	0.03446	14.93	0.03774
1.767	0.5364	8.367	0.03446	14.97	0.03774
1.8	0.5233	8.4	0.03446	15.	0.03774
1.833	0.5135	8.433	0.03446	15.03	0.03774
1.867	0.5003	8.467	0.03446	15.07	0.03774
1.9	0.4905	8.5	0.03446	15.1	0.03774
1.933	0.4774	8.533	0.03446	15.13	0.03774
1.967	0.4675	8.567	0.03446	15.17	0.03774
2.	0.4544	8.6	0.03446	15.2	0.03774
2.033	0.4446	8.633	0.03446	15.23	0.03774
2.067	0.4347	8.667	0.03446	15.27	0.03774
2.1	0.4249	8.7	0.03446	15.3	0.03774
2.133	0.415	8.733	0.03446	15.33	0.03774
2.167	0.4052	8.767	0.03774	15.37	0.03774
2.2	0.3954	8.8	0.03446	15.4	0.03774
2.233	0.3855	8.833	0.03446	15.43	0.03774
2.267	0.3757	8.867	0.03446	15.47	0.03774

Time (min)	Displacement (ft)	Time (min)	Displacement (ft)	Time (min)	Displacement (ft)
2.3	0.3691	8.9	0.03446	15.5	0.03446
2.333	0.3593	8.933	0.03446	15.53	0.03774
2.367	0.3527	8.967	0.03446	15.57	0.03446
2.4	0.3429	9.	0.03446	15.6	0.03774
2.433	0.333	9.033	0.03446	15.63	0.03774
2.467	0.3265	9.067	0.03446	15.67	0.03774
2.5	0.3199	9.1	0.03446	15.7	0.03774
2.533	0.3133	9.133	0.03446	15.73	0.03774
2.567	0.3068	9.167	0.03446	15.77	0.03774
2.6	0.3002	9.2	0.03446	15.8	0.03774
2.633	0.2904	9.233	0.03446	15.83	0.03446
2.667	0.2871	9.267	0.03446	15.87	0.03774
2.7	0.2805	9.3	0.03446	15.9	0.03774
2.733	0.274	9.333	0.03446	15.93	0.03774
2.767	0.2674	9.367	0.03446	15.97	0.03774
2.8	0.2608	9.4	0.03446	16.	0.03774
2.833	0.2576	9.433	0.03446	16.03	0.03774
2.867	0.251	9.467	0.03446	16.07	0.03774
2.9	0.2444	9.5	0.03446	16.1	0.03774
2.933	0.2379	9.533	0.03446	16.13	0.03774
2.967	0.2346	9.567	0.03446	16.17	0.03774
3.	0.228	9.6	0.03446	16.2	0.03774
3.033	0.2247	9.633	0.03446	16.23	0.03774
3.067	0.2182	9.667	0.03446	16.27	0.03446
3.1	0.2149	9.7	0.03446	16.3	0.03774
3.133	0.2083	9.733	0.03446	16.33	0.03774
3.167	0.2051	9.767	0.03446	16.37	0.03774
3.2	0.1985	9.8	0.03446	16.4	0.03774
3.233	0.1985	9.833	0.03446	16.43	0.03446
3.267	0.1919	9.867	0.03446	16.47	0.03774
3.3	0.1887	9.9	0.03446	16.5	0.03774
3.333	0.1854	9.933	0.03446	16.53	0.03446
3.367	0.1821	9.967	0.03446	16.57	0.03774
3.4	0.1788	10.	0.03446	16.6	0.03774
3.433	0.1723	10.03	0.03446	16.63	0.03774
3.467	0.1723	10.07	0.03446	16.67	0.03774
3.5	0.1657	10.1	0.03446	16.7	0.03774
3.533	0.1624	10.13	0.03446	16.73	0.03774
3.567	0.1591	10.17	0.03446	16.77	0.03774
3.6	0.1559	10.2	0.03446	16.8	0.03774
3.633	0.1526	10.23	0.03446	16.83	0.03774
3.667	0.1526	10.27	0.03446	16.87	0.03774
3.7	0.1493	10.3	0.03446	16.9	0.03774
3.733	0.146	10.33	0.03446	16.93	0.03774
3.767	0.1427	10.37	0.03446	16.97	0.03774
3.8	0.1362	10.4	0.03446	17.	0.03774
3.833	0.1362	10.43	0.03446	17.03	0.03446
3.867	0.1329	10.47	0.03446	17.07	0.03774

Time (min)	Displacement (ft)	Time (min)	Displacement (ft)	Time (min)	Displacement (ft)
3.9	0.1296	10.5	0.03446	17.1	0.03774
3.933	0.1296	10.53	0.03446	17.13	0.03774
3.967	0.1263	10.57	0.03446	17.17	0.03774
4.	0.123	10.6	0.03446	17.2	0.03774
4.033	0.123	10.63	0.03446	17.23	0.03774
4.067	0.1198	10.67	0.03446	17.27	0.03774
4.1	0.1165	10.7	0.03446	17.3	0.03774
4.133	0.1132	10.73	0.03446	17.33	0.03774
4.167	0.1132	10.77	0.03446	17.37	0.03774
4.2	0.1099	10.8	0.03446	17.4	0.03774
4.233	0.1099	10.83	0.03446	17.43	0.03774
4.267	0.1066	10.87	0.03446	17.47	0.03774
4.3	0.1034	10.9	0.03446	17.5	0.03774
4.333	0.1034	10.93	0.03446	17.53	0.03774
4.367	0.1001	10.97	0.03446	17.57	0.03774
4.4	0.1001	11.	0.03446	17.6	0.03774
4.433	0.0968	11.03	0.03446	17.63	0.03774
4.467	0.09352	11.07	0.03446	17.67	0.04102
4.5	0.09352	11.1	0.03446	17.7	0.03446
4.533	0.09352	11.13	0.03446	17.73	0.03774
4.567	0.09352	11.17	0.03446	17.77	0.03774
4.6	0.09023	11.2	0.03446	17.8	0.03774
4.633	0.09023	11.23	0.03446	17.83	0.03774
4.667	0.08695	11.27	0.03446	17.87	0.03446
4.7	0.08695	11.3	0.03446	17.9	0.03774
4.733	0.08695	11.33	0.03446	17.93	0.03446
4.767	0.08367	11.37	0.03446	17.97	0.03774
4.8	0.08039	11.4	0.03446	18.	0.03446
4.833	0.08039	11.43	0.03446	18.03	0.03446
4.867	0.08039	11.47	0.03446	18.07	0.03446
4.9	0.07711	11.5	0.03446	18.1	0.03774
4.933	0.07711	11.53	0.03446	18.13	0.03446
4.967	0.07711	11.57	0.03446	18.17	0.03446
5.	0.07383	11.6	0.03446	18.2	0.03446
5.033	0.07383	11.63	0.03446	18.23	0.03446
5.067	0.07055	11.67	0.03446	18.27	0.03446
5.1	0.07055	11.7	0.03446	18.3	0.01806
5.133	0.07055	11.73	0.03446	18.33	0.0279
5.167	0.06727	11.77	0.03446	18.37	0.02462
5.2	0.07055	11.8	0.03446	18.4	0.02462
5.233	0.06727	11.83	0.03446	18.43	0.02462
5.267	0.06727	11.87	0.03446	18.47	0.03774
5.3	0.06727	11.9	0.03446	18.5	0.03774
5.333	0.06727	11.93	0.03446	18.53	0.03774
5.367	0.06399	11.97	0.03446	18.57	0.03774
5.4	0.06399	12.	0.03446	18.6	0.03774
5.433	0.06071	12.03	0.03774	18.63	0.03774
5.467	0.06071	12.07	0.03446	18.67	0.03774

Time (min)	Displacement (ft)	Time (min)	Displacement (ft)	Time (min)	Displacement (ft)
5.5	0.06071	12.1	0.03446	18.7	0.03774
5.533	0.06071	12.13	0.03446	18.73	0.03774
5.567	0.06071	12.17	0.03446	18.77	0.03774
5.6	0.05743	12.2	0.03446	18.8	0.03774
5.633	0.05743	12.23	0.03446	18.83	0.03774
5.667	0.05743	12.27	0.03446	18.87	0.03774
5.7	0.05743	12.3	0.03446	18.9	0.05415
5.733	0.05743	12.33	0.03446	18.93	0.04102
5.767	0.05743	12.37	0.03446	18.97	0.03774
5.8	0.05415	12.4	0.03446	19.	0.03774
5.833	0.05415	12.43	0.03774	19.03	0.03446
5.867	0.05415	12.47	0.03446	19.07	0.04102
5.9	0.05415	12.5	0.03774	19.1	0.04102
5.933	0.05415	12.53	0.03774	19.13	0.03774
5.967	0.05415	12.57	0.03774	19.17	0.03774
6.	0.05086	12.6	0.03446	19.2	0.0279
6.033	0.05415	12.63	0.03774	19.23	0.03774
6.067	0.05086	12.67	0.03446	19.27	0.03774
6.1	0.05086	12.7	0.03446	19.3	0.03446
6.133	0.05086	12.73	0.03446	19.33	0.03446
6.167	0.04758	12.77	0.03446	19.37	0.03446
6.2	0.04758	12.8	0.03446	19.4	0.03774
6.233	0.04758	12.83	0.03446	19.43	0.03774
6.267	0.04758	12.87	0.03774	19.47	0.03774
6.3	0.04758	12.9	0.03774	19.5	0.03446
6.333	0.04758	12.93	0.03774	19.53	0.03774
6.367	0.04758	12.97	0.03774	19.57	0.03774
6.4	0.04758	13.	0.03446	19.6	0.03446
6.433	0.04758	13.03	0.03774	19.63	0.03446
6.467	0.04758	13.07	0.03774	19.67	0.03774
6.5	0.04758	13.1	0.03774	19.7	0.03774
6.533	0.0443	13.13	0.03774	19.73	0.03774
6.567	0.04758	13.17	0.03774	19.77	0.03774
6.6	0.04758	13.2	0.03774		

SOLUTION

Aquifer Model: Unconfined
Solution Method: Bouwer-Rice

VISUAL ESTIMATION RESULTS

Estimated Parameters

Parameter	Estimate	
K	0.01489	ft/min = 7.56×10^{-3} cm/sec
y0	1.796	ft

DEEP SOIL-BENTONITE BARRIER

SOLUTIA, INC.
SAUGET, ILLINOIS

Inquip Associates, Inc.

SOLUTIA™
Applied Chemistry, Creative Solutions

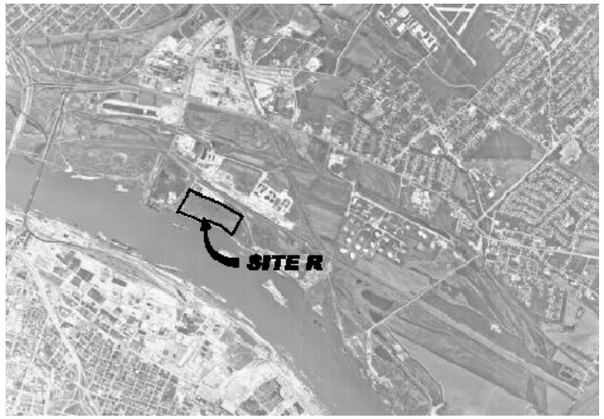

CONTRACT DRAWINGS

DRAWING NO.	FILE NAME	TITLE
1	1	TITLE SHEET
2	2	KEY PLAN
3	3	BARRIER PLAN AND PROFILE, STA. 5+00 TO STA. 11+27.5
4	4	BARRIER PLAN AND PROFILE, STA. 11+27.5 TO STA. 18+00
5	5	BARRIER PLAN AND PROFILE, STA. 18+00 TO STA. 25+00
6	6	BARRIER PLAN AND PROFILE, STA. 25+00 TO STA. 31+8.78
7	7	BARRIER PLAN AND PROFILE, STA. 31+8.78 TO STA. 37+96.51
8	8	CONTROL POINTS
9	9	CAP DETAILS
10	10	BACKFILL SETTLEMENT MONITORING

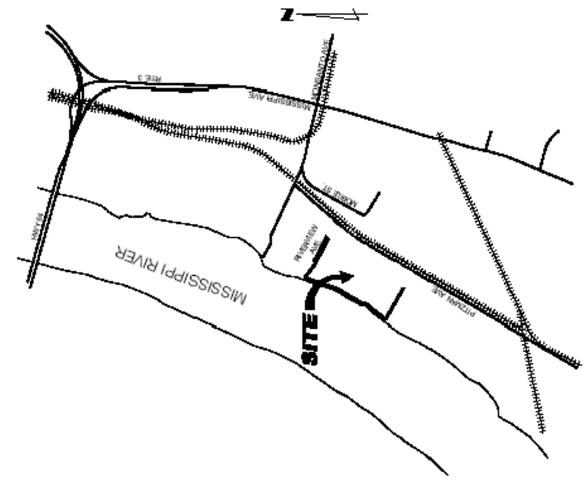

LOCATION MAP

SOLUTIA, INC
SITE R
SAUGET ILLINOIS

INQUIP ASSOCIATES, INC
McLEAN VIRGINA

MUESER RUTLEDGE CONSULTING ENGINEERS
14 PENN PLAZA – 225 W. 34TH STREET, NY, NY 10122

SCALE	MADE BY E.C. DATE 08-14-03	FILE NO.
N.T.S.	CH'KD BY K.R. DATE 08-14-03	10060

TITLE SHEET — DRAWING NO. 1

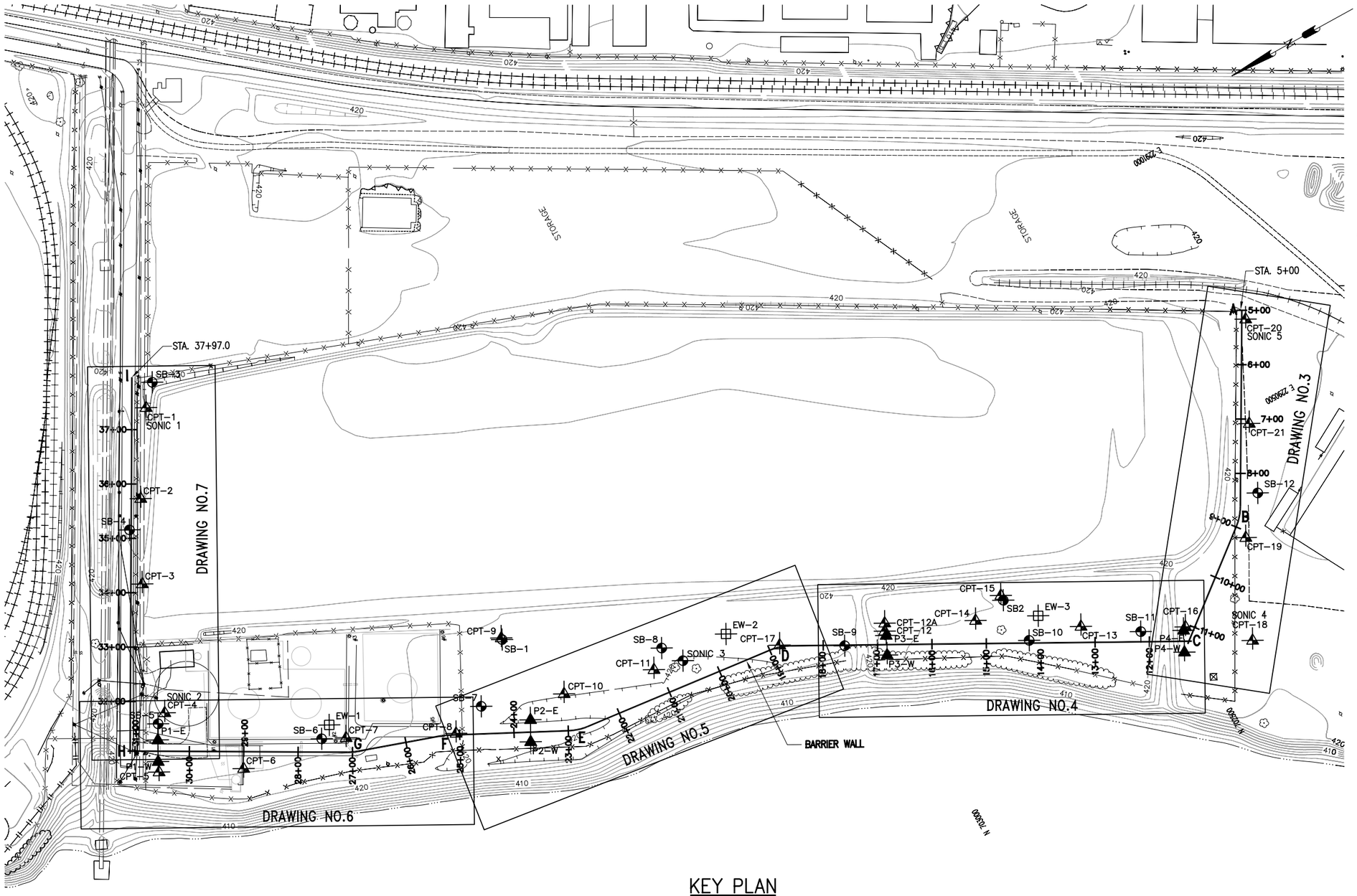

KEY PLAN

GRAPHIC SCALE

100' 50' 0 100' 200'

LEGEND

- CPT – CONE PENETROMETER LOCATION (2001)
- SONIC – SONIC BORING LOCATION (2002)
- SB – STANDARD PENETRATION TEST BORING (2001 AND 2002)

NOTES:

1. Base plan and graphic boring logs were taken from July 03, 2003 AutoCAD files provided by URS.
2. Graphic logs depict generalized soil conditions. Refer to individual boring log records for details.
3. Borings are projected to section. Actual elevation of the bedrock surface may vary.
4. Overhead and subsurface obstructions are not shown.
5. Lead–in slope to be located by the contractor. Lead–in slope shall be 1V:1H or flatter.
6. Overlap closures shall extend 10 ft beyond the toe of the lead–in slope at the bottom of the trench.
7. Cross–cut closures shall extend 5 ft beyond the outside edge of the cutoff at the bottom of the trench.
8. Contractor shall construct the final barrier alignment within 2 ft of the centerline given by the Control Points provided on Drawing 8.
9. Contractor's Surveyor shall establish the construction stations shown with stakes at 10 ft intervals. Construction station markers shall remain in place at 10 ft intervals throughout construction. Construction station markers shall remain in place at 100 ft intervals after cap construction.
10. Contractor's Surveyor shall establish reference elevations for trench depth measurements at each 10 ft construction station.
11. Control Points A through I provided on Drawing 8 shall be identified in the field. Other control points may be required.
12. The contractor is responsible for maintaining trench stability and construction quality.
13. Work platform surface elevation grades may change + 1% within 200 ft distance, but must not drop more than –0.1% over 1400 ft.
14. Typical freeboard (slurry level to work platform surface) shall be 1 ft or less. Maximum freeboard permitted is 2 ft.
15. Contractor shall mark and protect wells and piezometers.
16. See URS Drawing No.s 2–06, 2–07, and 2–08 for utilities.

SOLUTIA, INC
SITE R
SAUGET ILLINOIS

INQUIP ASSOCIATES, INC
McLEAN VIRGINA

MUESER RUTLEDGE CONSULTING ENGINEERS
14 PENN PLAZA – 225 W. 34TH STREET, NY, NY 10122

SCALE	MADE BY E.C	DATE 8–11–03	FILE NO.
AS NOTED	CH'KD BY K.R.	DATE 8–11–03	10060

KEY PLAN — DRAWING NO. 2

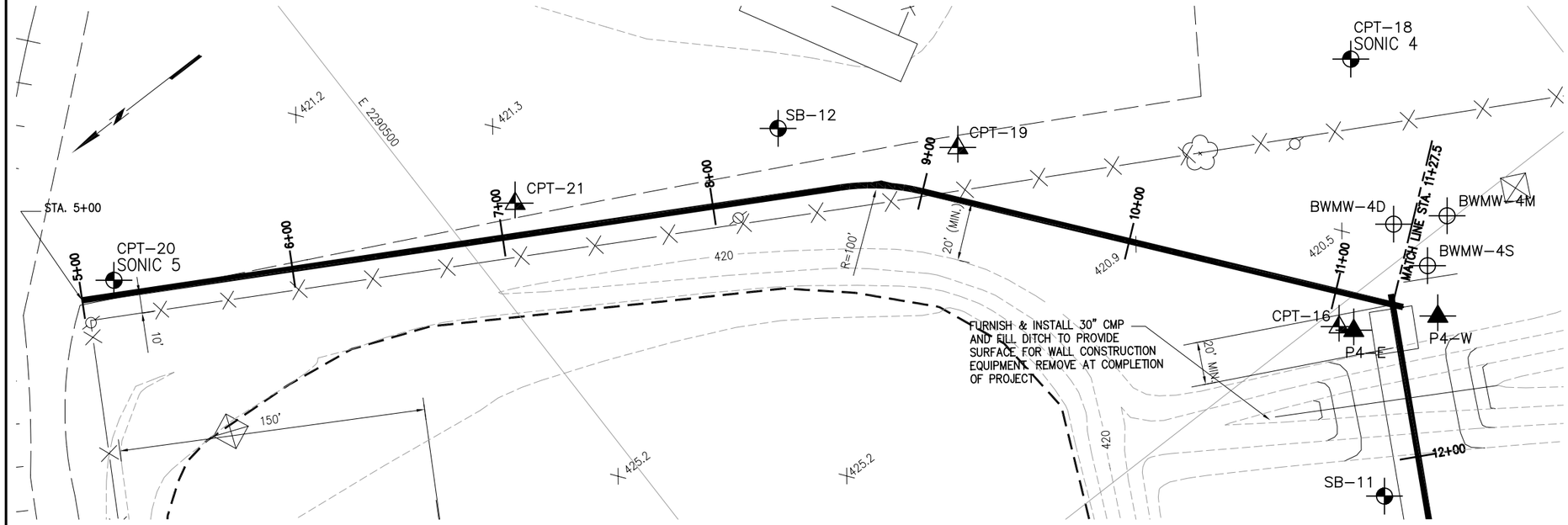

GRAPHIC SCALE

30' 20' 10' 0 30' 60'

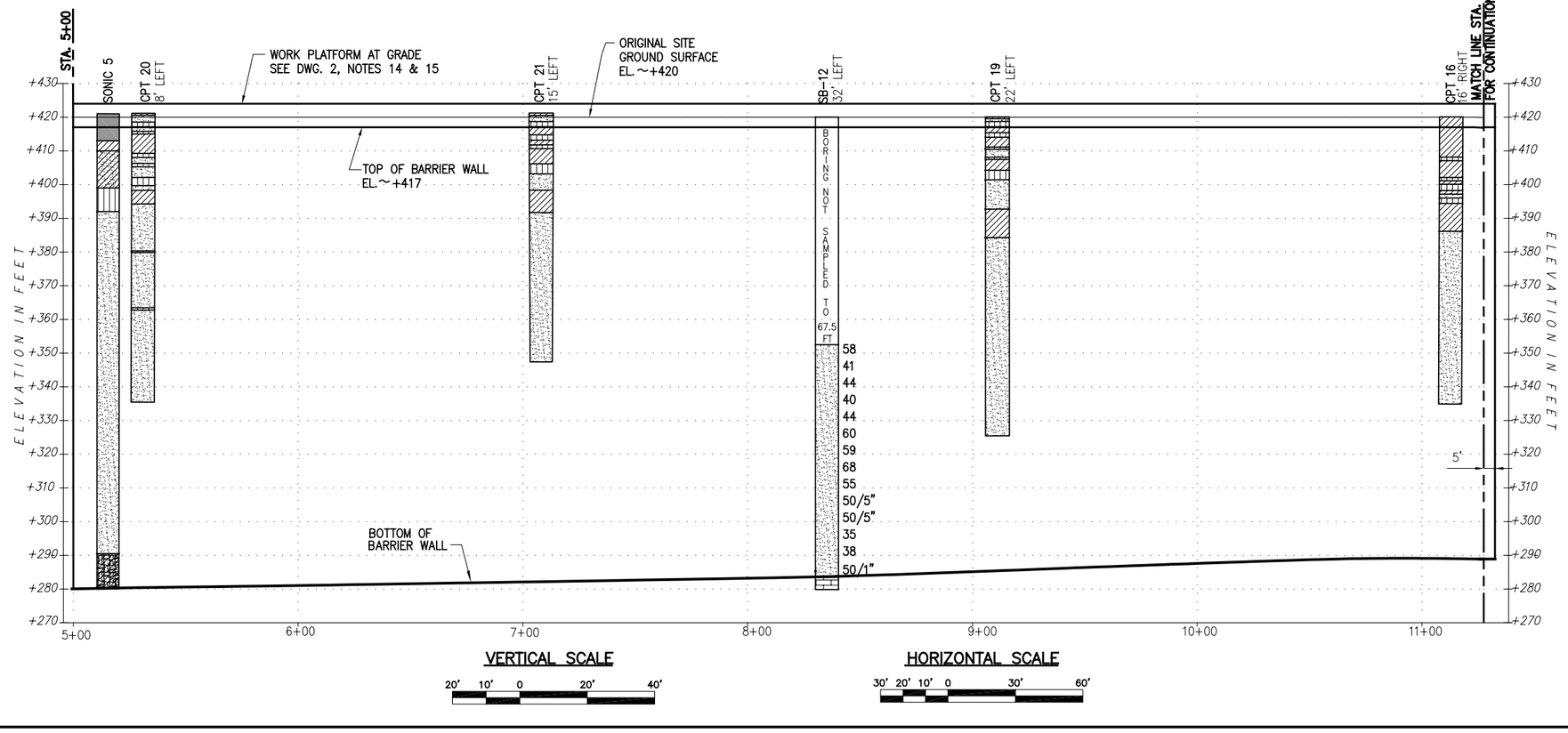

VERTICAL SCALE

20' 10' 0 20' 40'

HORIZONTAL SCALE

30' 20' 10' 0 30' 60'

PLAN LEGEND

62	STANDARD PENETRATION TEST BLOW COUNT (N). BLOWS /12" PENETRATION OF SAMPLER UNLESS INDICATED OTHERWISE
P	HYDRAULICALLY PUSHED SAMPLE
10+00	WALL STATION AT CENTERLINE OF BARRIER WALL
CPT-1	CONE PENETROMETER TEST NUMBER (2001)
SONIC 1	SONIC BORING NUMBER (2002)
SB-1	SOIL BORING NUMBER (2002)

PROFILE LEGEND

- CLAY (CL OR CH)
- SILT (ML)
- CLAYEY SAND (SC)
- SAND (SP OR SW)
- GRAVEL AND/OR COBBLES
- LIMESTONE
- PROPOSED SCREENED INTERVAL OF EXTRACTION WELL OR PIEZOMETER

NOTES:

1. FOR NOTES, SEE DRAWING NO. 2.

SOLUTIA BARRIER

SAUGET ILLINOIS

INQUIP ASSOCIATES, INC.

McLEAN VIRGINIA

MUESER RUTLEDGE CONSULTING ENGINEERS

14 PENN PLAZA – 225 W. 34TH STREET, NY, NY 10122

SCALE	MADE BY E.C.	DATE 8-07-03	FILE NO.
AS NOTED	CH'KD BY K.R.	DATE 8-07-03	10060

BARRIER PLAN AND PROFILE, STA. 5+00 TO 11+27.5

DRAWING NO. 3

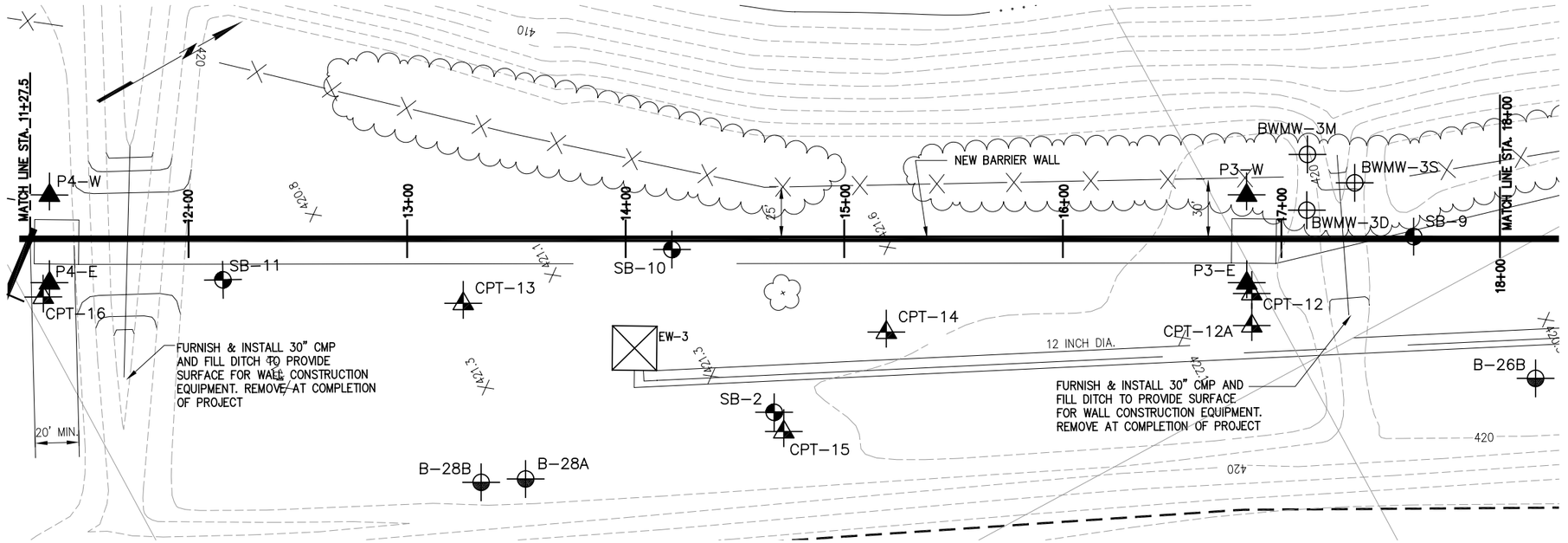

GRAPHIC SCALE

30' 20' 10' 0 30' 60'

VERTICAL SCALE

20' 10' 0 20' 40'

HORIZONTAL SCALE

30' 20' 10' 0 30' 60'

PLAN LEGEND

62	STANDARD PENETRATION TEST BLOW COUNT (N). BLOWS /12" PENETRATION OF SAMPLER UNLESS INDICATED OTHERWISE
P	HYDRAULICALLY PUSHED SAMPLE
10+00	WALL STATION AT CENTERLINE OF BARRIER WALL
CPT-1	CONE PENETROMETER TEST NUMBER (2001)
SONIC 1	SONIC BORING NUMBER (2002)
SB-1	SOIL BORING NUMBER (2002)

PROFILE LEGEND

- CLAY (CL OR CH)
- SILT (ML)
- CLAYEY SAND (SC)
- SAND (SP OR SW)
- GRAVEL AND/OR COBBLES
- LIMESTONE
- PROPOSED SCREENED INTERVAL OF EXTRACTION WELL OR PIEZOMETER

NOTES:

1. FOR NOTES, SEE DRAWING NO. 2.

SOLUTIA BARRIER

SAUGET ILLINOIS

INQUIP ASSOCIATES, INC.

McLEAN VIRGINIA

MUESER RUTLEDGE CONSULTING ENGINEERS

14 PENN PLAZA – 225 W. 34TH STREET, NY, NY 10122

SCALE	MADE BY E.C.	DATE 8-07-03	FILE NO.
AS NOTED	CH'KD BY K.R.	DATE 8-07-03	10060

BARRIER PLAN AND PROFILE, STA. 11+27.5 TO STA. 18+00

DRAWING NO. 4

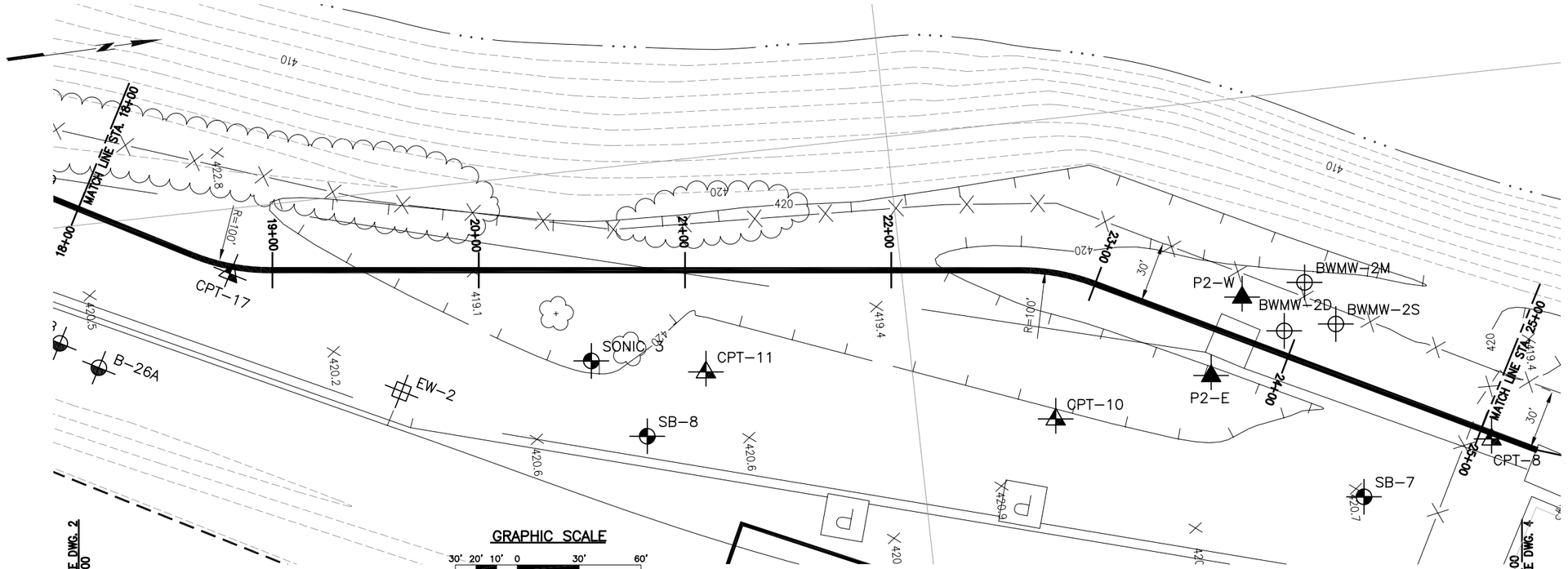

PLAN LEGEND

62	STANDARD PENETRATION TEST BLOW COUNT (N). BLOWS /12" PENETRATION OF SAMPLER UNLESS INDICATED OTHERWISE
P	HYDRAULICALLY PUSHED SAMPLE
10+00	WALL STATION AT CENTERLINE OF BARRIER WALL
CPT-1	CONE PENETROMETER TEST NUMBER (2001)
SONIC 1	SONIC BORING NUMBER (2002)
SB-1	SOIL BORING NUMBER (2002)

PROFILE LEGEND

- CLAY (CL OR CH)
- SILT (ML)
- CLAYEY SAND (SC)
- SAND (SP OR SW)
- GRAVEL AND/OR COBBLES
- LIMESTONE
- PROPOSED SCREENED INTERVAL OF EXTRACTION WELL OR PIEZOMETER

NOTES:

1. FOR NOTES, SEE DRAWING NO. 2.

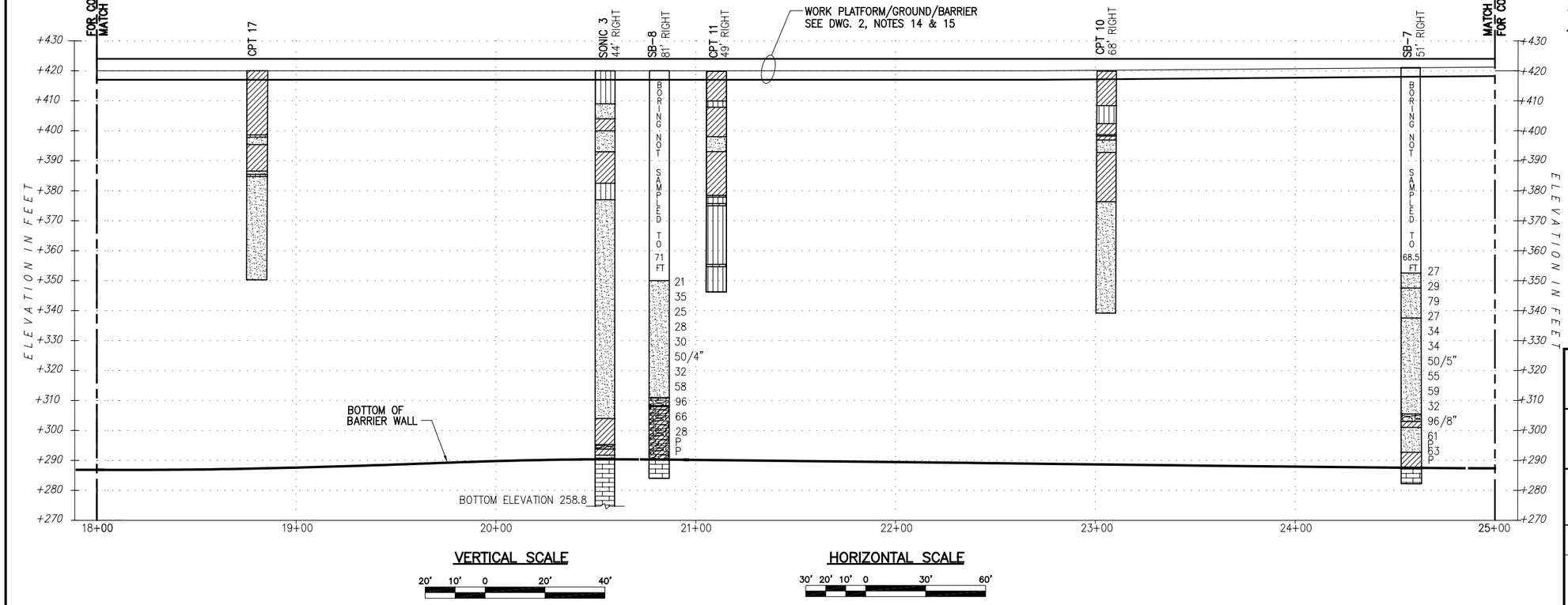

SOLUTIA BARRIER

SAUGET ILLINOIS

INQUIP ASSOCIATES, INC.

McLEAN VIRGINIA

MUESER RUTLEDGE CONSULTING ENGINEERS

14 PENN PLAZA – 225 W. 34TH STREET, NY, NY 10122

SCALE	MADE BY	DATE	FILE NO.
AS NOTED	E.C.	8-07-03	10060
	CH'KD BY K.R.	DATE 8-07-03	DRAWING NO.

BARRIER PLAN AND PROFILE, STA. 18+00 TO STA. 25+00

5

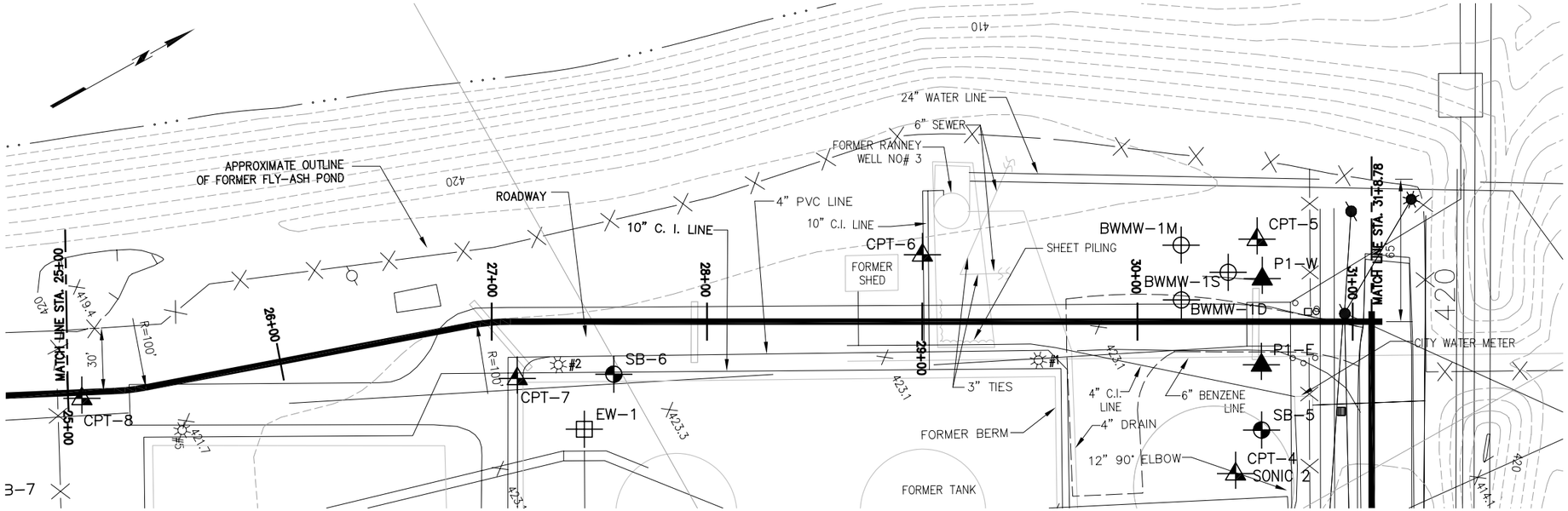

PLAN LEGEND

62	STANDARD PENETRATION TEST BLOW COUNT (N). BLOWS /12" PENETRATION OF SAMPLER UNLESS INDICATED OTHERWISE
P	HYDRAULICALLY PUSHED SAMPLE
10+00	WALL STATION AT CENTERLINE OF BARRIER WALL
CPT-1	CONE PENETROMETER TEST NUMBER (2001)
SONIC 1	SONIC BORING NUMBER (2002)
SB-1	SOIL BORING NUMBER (2002)

PROFILE LEGEND

- CLAY (CL OR CH)
- SILT (ML)
- CLAYEY SAND (SC)
- SAND (SP OR SW)
- GRAVEL AND/OR COBBLES
- LIMESTONE
- PROPOSED SCREENED INTERVAL OF EXTRACTION WELL OR PIEZOMETER

GRAPHIC SCALE

30' 20' 10' 0 30' 60'

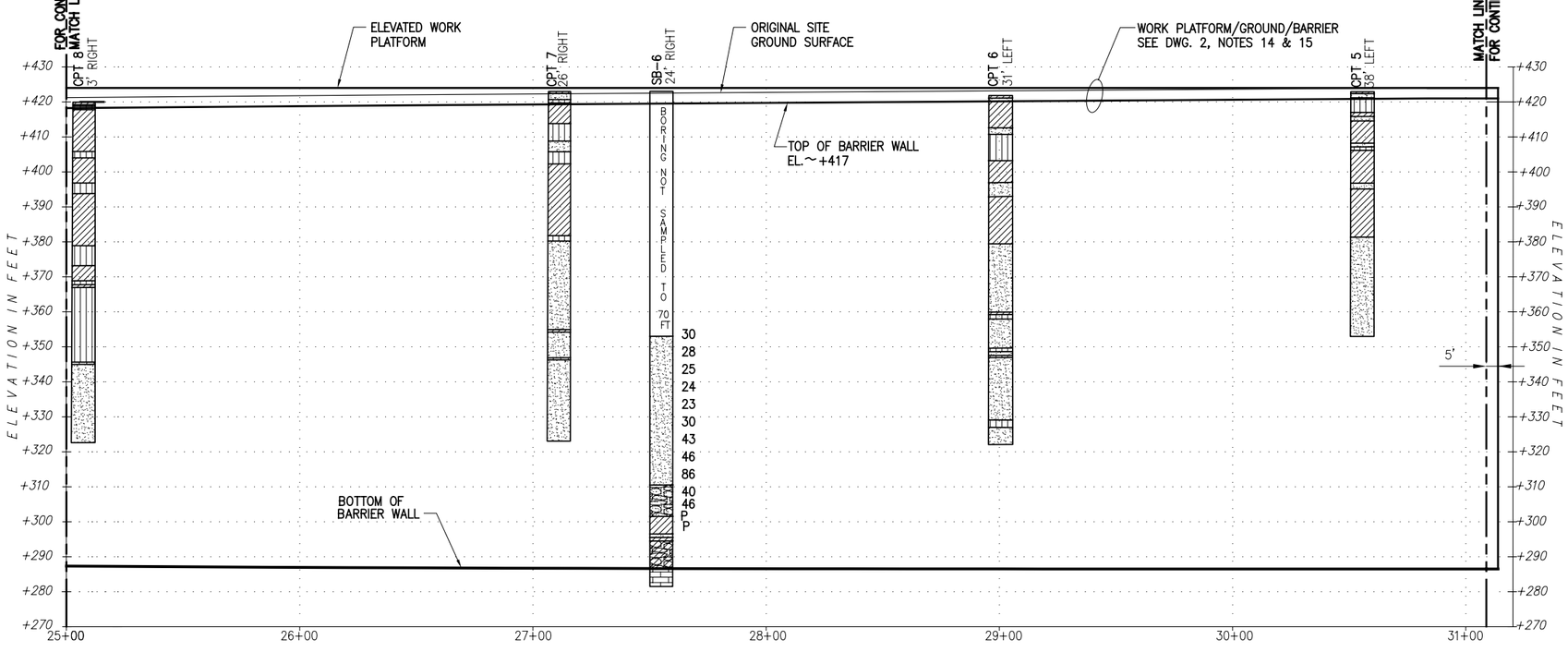

VERTICAL SCALE

20' 10' 0 20' 40'

HORIZONTAL SCALE

30' 20' 10' 0 30' 60'

NOTES:

1. FOR NOTES, SEE DRAWING NO. 2.

SOLUTIA BARRIER

SAUGET ILLINOIS

INQUIP ASSOCIATES, INC.

McLEAN VIRGINIA

MUESER RUTLEDGE CONSULTING ENGINEERS

14 PENN PLAZA – 225 W. 34TH STREET, NY, NY 10122

SCALE	MADE BY	DATE	FILE NO.
AS NOTED	E.C.	8-07-03	10060
	CH'KD BY K.R.	DATE 8-07-03	DRAWING NO.

BARRIER PLAN AND PROFILE, STA. 25+00 TO STA. 31+8.78

6

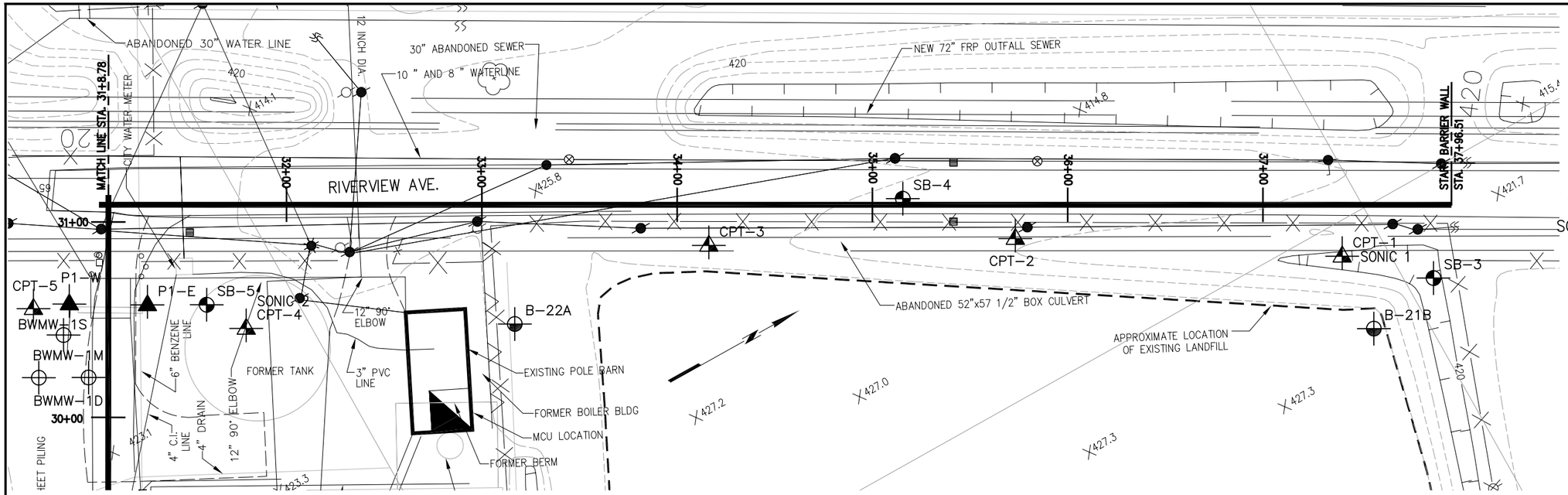

GRAPHIC SCALE

30' 20' 10' 0 30' 60'

PLAN LEGEND

62	STANDARD PENETRATION TEST BLOW COUNT (N). BLOWS /12" PENETRATION OF SAMPLER UNLESS INDICATED OTHERWISE
P	HYDRAULICALLY PUSHED SAMPLE
10+00	WALL STATION AT CENTERLINE OF BARRIER WALL
CPT-1	CONE PENETROMETER TEST NUMBER (2001)
SONIC 1	SONIC BORING NUMBER (2002)
SB-1	SOIL BORING NUMBER (2002)

PROFILE LEGEND

- CLAY (CL OR CH)
- SILT (ML)
- CLAYEY SAND (SC)
- SAND (SP OR SW)
- GRAVEL AND/OR COBBLES
- LIMESTONE
- PROPOSED SCREENED INTERVAL OF EXTRACTION WELL OR PIEZOMETER

NOTES:

1. FOR NOTES, SEE DRAWING NO. 2.

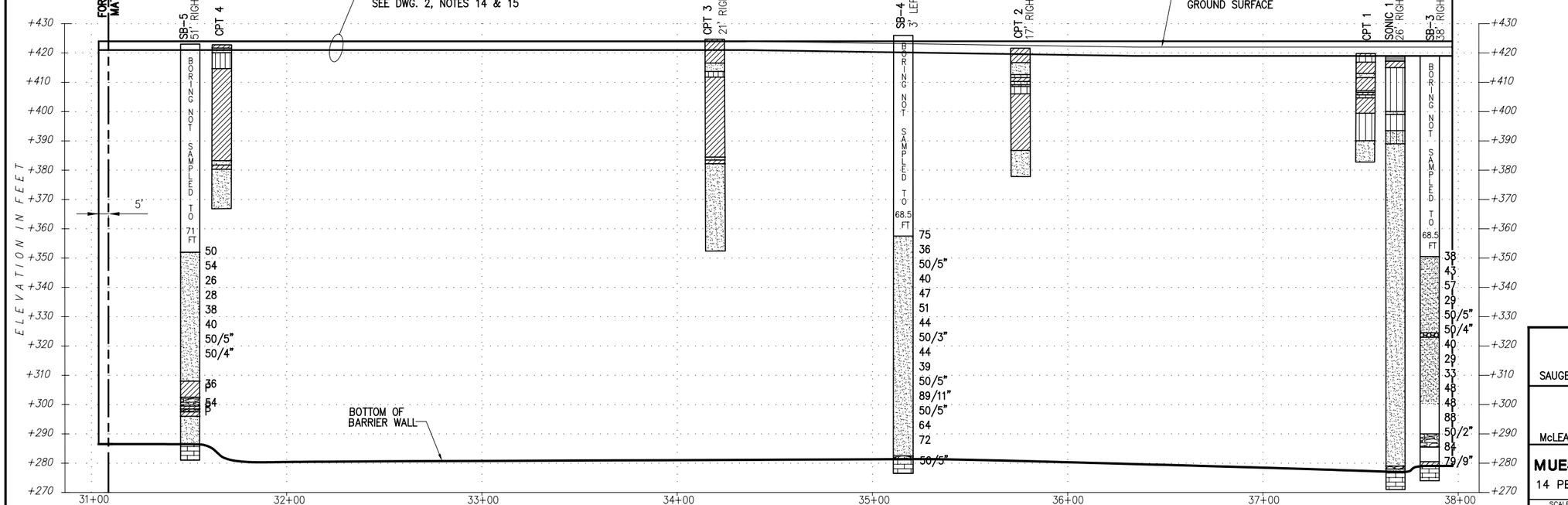

VERTICAL SCALE

20' 10' 0 20' 40'

HORIZONTAL SCALE

30' 20' 10' 0 30' 60'

SOLUTIA BARRIER

SAUGET ILLINOIS

INQUIP ASSOCIATES, INC.

McLEAN VIRGINIA

MUESER RUTLEDGE CONSULTING ENGINEERS

14 PENN PLAZA – 225 W. 34TH STREET, NY, NY 10122

SCALE	MADE BY E.C.	DATE 8-07-03	FILE NO.
AS NOTED	CH'KD BY K.R.	DATE 8-07-03	10060

BARRIER PLAN AND PROFILE, STA. 31+8.78 TO STA. 37+96.51

DRAWING NO. 7

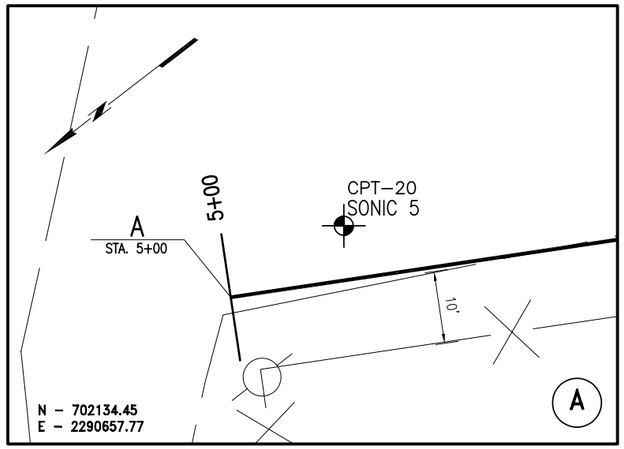

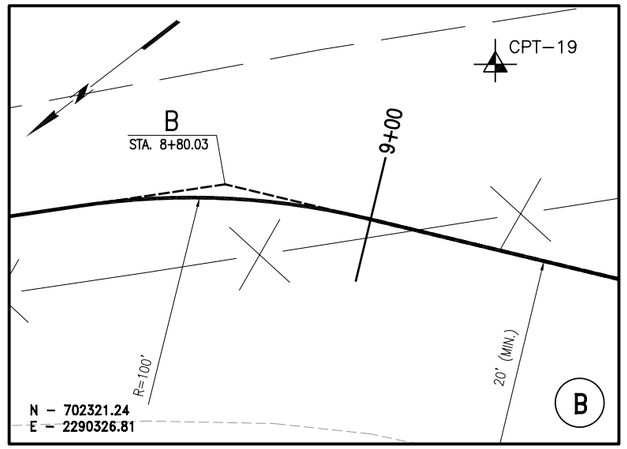

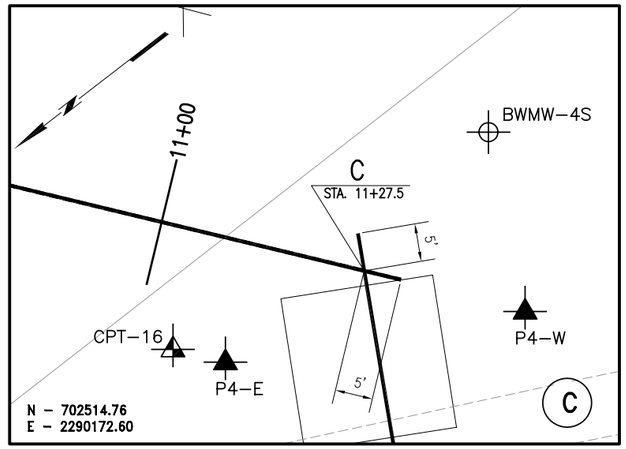

NOTE:

Stations shown are at barrier centerline.

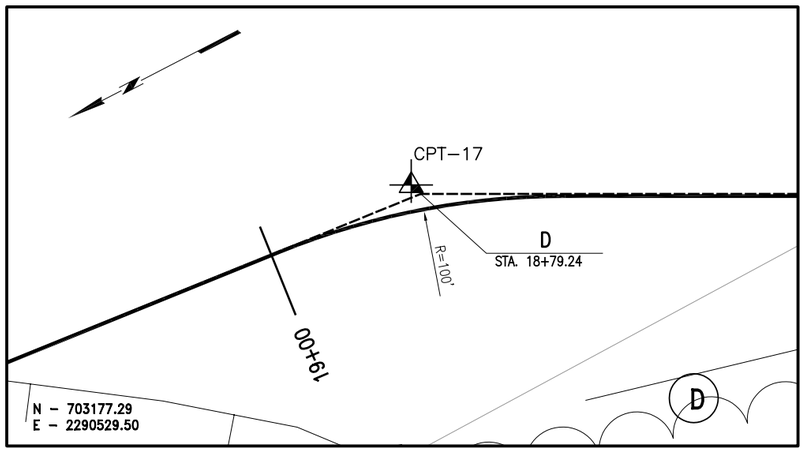

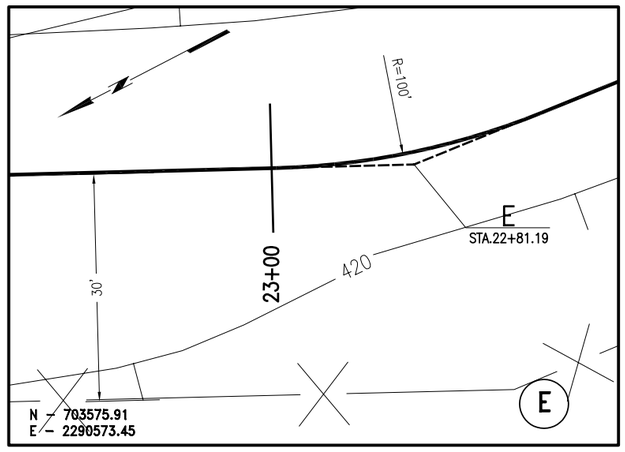

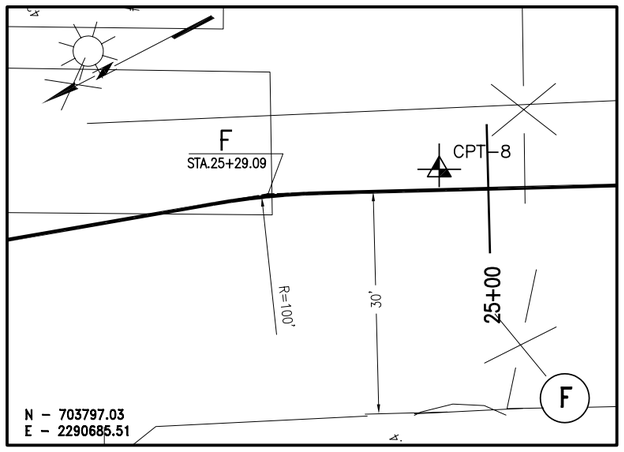

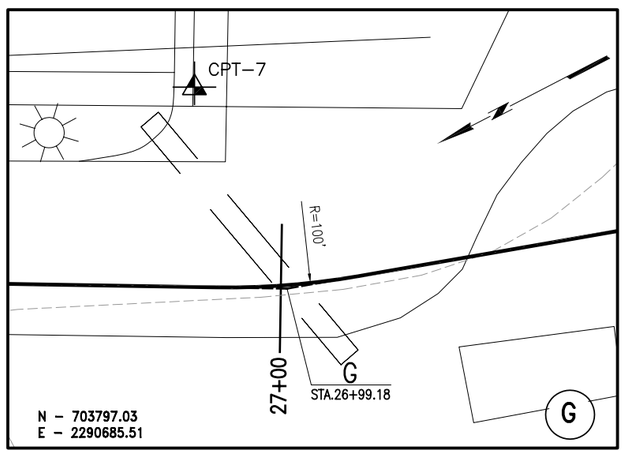

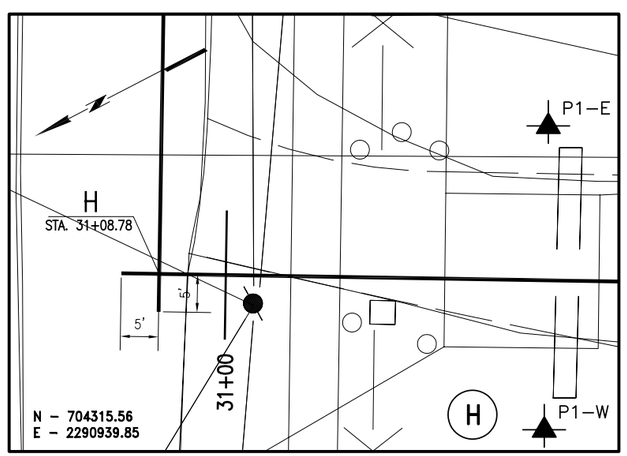

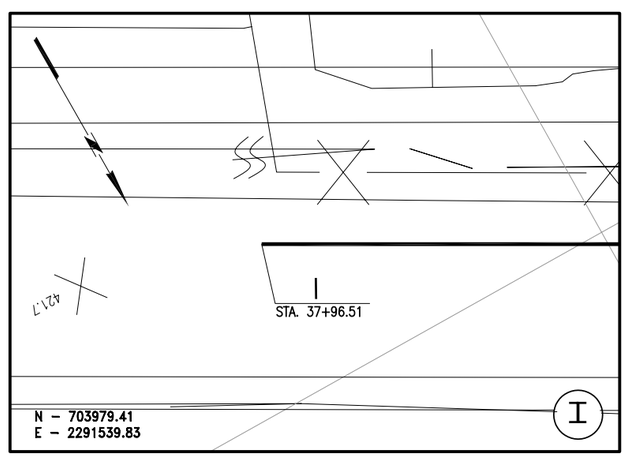

SOLUTIA, INC
SITE R
SAUGET ILLINOIS

INQUIP ASSOCIATES, INC
McLEAN VIRGINIA

MUESER RUTLEDGE CONSULTING ENGINEERS
14 PENN PLAZA – 225 W. 34TH STREET, NY, NY 10122

SCALE	MADE BY	DATE	FILE NO.
AS NOTED	E.C.	8–12–03	10060
	CH'KD BY K.R.	DATE 8–12–03	DRAWING NO.
CONTROL POINTS			8

CAP BELOW SWALE

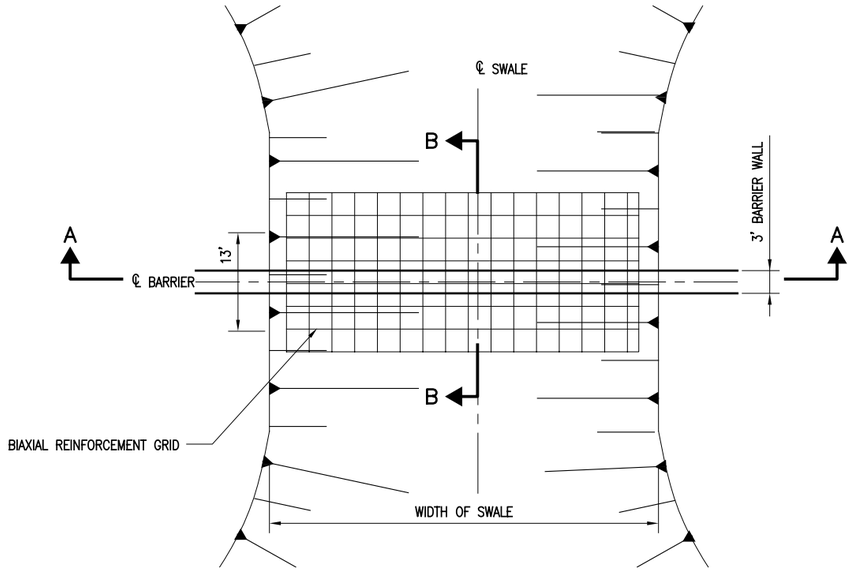

GRAPHIC SCALE

10' 5' 0 10' 20'

CAP AT GRADE TYPICAL

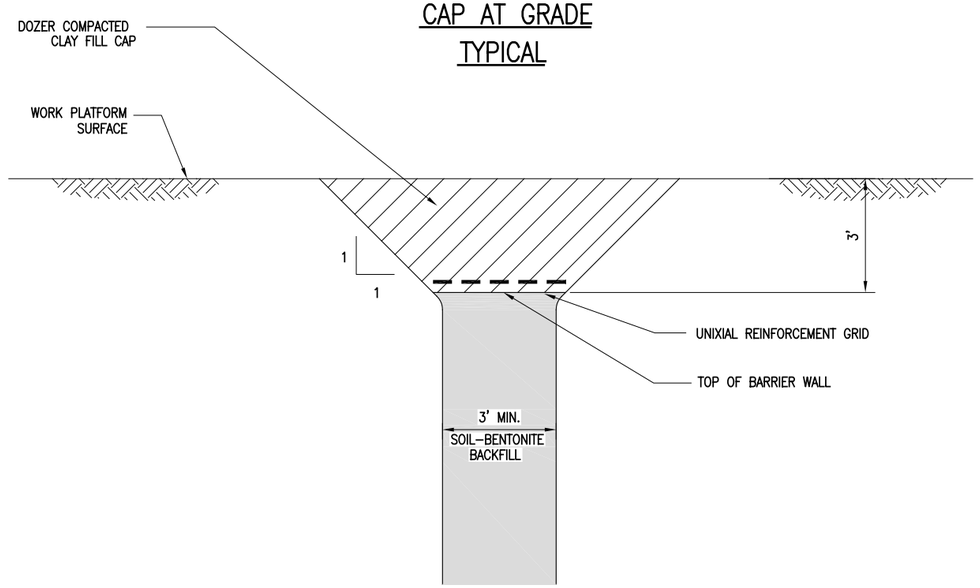

GRAPHIC SCALE

2' 1' 0 2' 4'

CAP AT GRADE

A. Excavate backfill and notch top of trench.

B. Place uniaxial reinforcement grid.

C. Place clay fill above work platform, in loose lifts (not to exceed 18"), and compact with dozer, taking care not to mud-wave backfill.

D. Cut cap level with ground/work platform.

CAP BELOW SWALE

A. Remove work platform to preconstruction grade.

B. Excavate backfill and place HDPE liner. Hold liner in place with pins.

C. Replace backfill in loose lifts (not to exceed 18").

D. Place uniaxial reinforcement grid.

E. Place biaxial reinforcement grid.

F. Place compacted clay cap and topsoil or other approved material.

NOTES:

1. Uniaxial Reinforcement Grid tensile strength at 5% strain shall be greater than or equal to 2000 lb/ft (Tensar UX1400HS or equiv.) Grid shall be a minimum of 3 ft wide.

2. Biaxial Reinforcement Grid tensile strength at 5% strain shall be greater than or equal to 1300 lb/ft (Tensar BX1500 or equiv.) Grid shall be a minimum of 13 ft wide.

CAP DETAILS

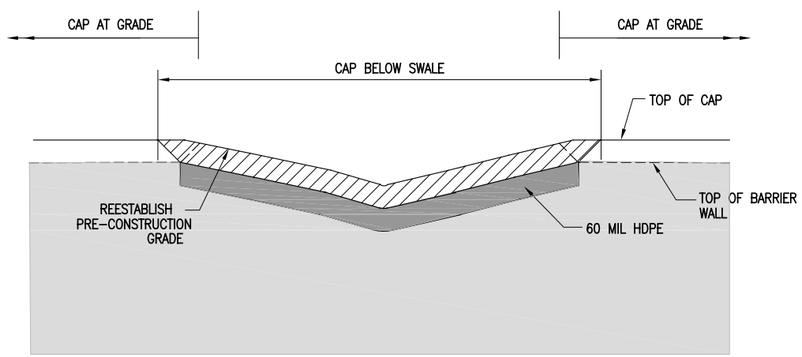

SECTION A-A

GRAPHIC SCALE

10' 5' 0 10' 20'

CAP BELOW SWALE

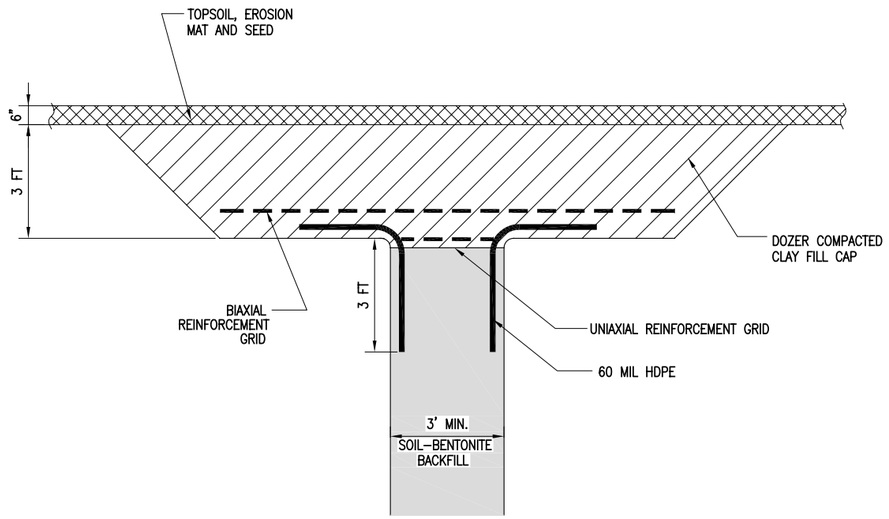

SECTION B-B

GRAPHIC SCALE

2' 1' 0 2' 4'

SOLUTIA, INC SITE R	
SAUGET	ILLINOIS
INQUIP ASSOCIATES, INC	
McLEAN	VIRGINA
MUESER RUTLEDGE CONSULTING ENGINEERS 14 PENN PLAZA – 225 W. 34TH STREET, NY, NY 10122	
SCALE: AS NOTED	MADE BY E.C DATE 8-21-03 CH'KD BY K.R. DATE 8-21-03
FILE NO. 10060	
CAP DETAILS	DRAWING NO. 9

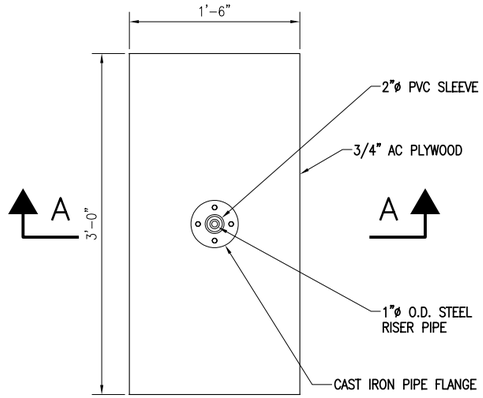

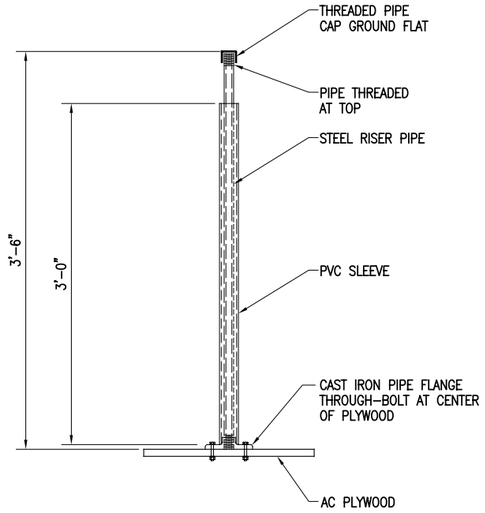

BACKFILL SETTLEMENT MONITORING PLATE
SCALE: 1 1/2"=1'-0"

SECTION A–A
SCALE: 1 1/2"=1'-0"

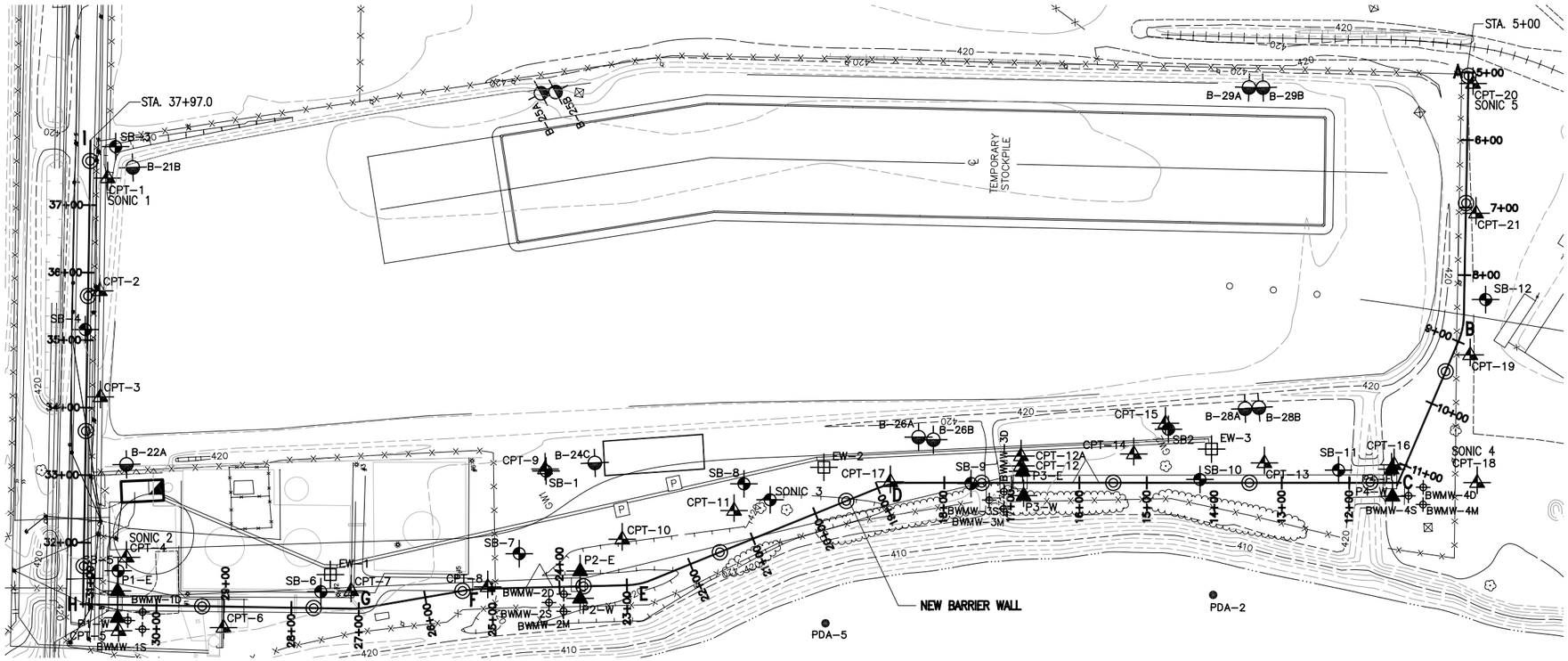

LEGEND

- CPT – CONE PENETROMETER LOCATION (2001)
- SONIC – SONIC BORING LOCATION (2002)
- SB – STANDARD PENETRATION TEST BORING (2001 AND 2002)
- SETTLEMENT PLATE

NOTES:

1. Backfill Settlement Monitoring Plates shall be place at 200 ft spacing along barrier centerline. At lead–in slope, plates shall be placed after the overlap joint is completed and backfill has progressed for the second placement.
2. Place settlement plat on S–B backfill surface 18" below ground level after backfill placement has moved 50 ft beyond plate location.
3. Survey elevation of top of riser pipe immediately after installation. Survey daily thereafter (except Saturday and Sunday). Provide tabular summary of survey to Owner.
4. Settlement plates shall be identified by construction station at actual location.
5. Remove plates before cap placement.

SOLUTIA, INC
SITE R
SAUGET ILLINOIS

INQUIP ASSOCIATES, INC
McLEAN VIRGINIA

MUESER RUTLEDGE CONSULTING ENGINEERS
14 PENN PLAZA – 225 W. 34TH STREET, NY, NY 10122

SCALE	MADE BY E.C	DATE 9–04–03	FILE NO.
AS NOTED	CH'KD BY K.R.	DATE 9–04–03	10060

BACKFILL SETTLEMENT MONITORING

DRAWING NO. 10

Bentonite Bags (4000# each) Shipped To Solutia From Federal

Page #	Sales Order	Order Date	Ship Trailer No.	Ship Date	Ship Quantity	Tons Shipped	INQUIP Delivery Date
1	HCIV005761	09/16/2003	Watring 2041	09/17/2003	11	22	09/19/2003
2	5762	09/16/2003	Ranger 5114	09/18/2003	11	22	09/19/2003
3	5763	09/16/2003	ABL Exp. #88	09/19/2003	12	24	09/25/2003
4	5764	09/16/2003	Anderson Trucking 101	09/23/2003	12	24	10/25/2003
5	5838	10/17/2003	Mont. Trans. 24	10/22/2003	12	24	10/27/2003
6	5839	10/17/2003	Quality 24	10/22/2003	12	24	10/27/2003
7	5903	11/04/2003	Amhof #22	11/05/2003	12	24	11/05/2003
8	5904	11/04/2003	Monument #37	11/05/2003	12	24	11/05/2003
9	5969	11/18/2003	rbs 71	11/21/2003	12	24	11/19/2003
10	5970	11/18/2003	Jessee Trucking 127	11/20/2003	12	24	11/24/2003
11	6042	12/05/2003	MWL 19	12/09/2003	11	22	12/11/2003
12	6043	12/05/2003	Trax. Inc. #9	12/12/2003	12	24	12/12/2003
13	6044	12/05/2003	Ram 514	12/12/2003	12	24	12/12/2003
14	6045	12/05/2003	Quality 2	12/12/2003	12	24	12/12/2003
15	6054	12/09/2003	Ram #509	12/16/2003	11	22	12/16/2003
16	6055	12/09/2003	Mont. Trans #10	12/15/2003	12	24	12/17/2003
17	6277	04/06/2004	Arrow #9735	04/06/2004	11	22	04/07/2004
18	6278	04/06/2004	Link #143	04/08/2004	11	22	04/12/2004
19	6369	05/20/2004	C&D #6	05/21/2004	11	22	05/21/2004
20	6370	05/20/2004	Delta Southern #344	05/24/2004	11	22	05/24/2004
21	6371	05/20/2004	Garheart #101	05/26/2004	11	22	05/26/2004
22	6372	05/20/2004	Arrow # 4187	05/26/2004	11	22	05/26/2004
23	6443	06/02/2004	Mont. Trans. #5	06/08/2004	11	22	06/08/2004
24	6444	06/02/2004	Mont. Trans # 842	06/08/2004	11	22	06/08/2004
25	6445	06/02/2004	Mikkelson #6	06/10/2004	11	22	06/10/2004
26	6446	06/02/2004	Arrow # 4279	06/04/2004	11	22	06/04/2004
27	6447	06/02/2004	Mont Trans # 101	06/04/2004	11	22	06/04/2004
28	6568	07/12/2004	Hansen # 034	07/12/2004	11	22	07/15/2004
29	6569	07/12/2004	Road Runner #18	07/13/2004	11	22	07/13/2004
30	6570	07/12/2004	Arrow *#4381*	07/14/2004	11	22	07/14/2004
31	6571	07/12/2004	Arrow #4012	07/15/2004	11	22	07/14/2004
32	6578	07/16/2004	Quality	07/19/2004	11	22	07/19/2004
33	6579	07/16/2004	Arrow #1088	07/20/2004	11	22	07/20/2004
34	6580	07/16/2004	Arrow #19568	07/20/2004	11	22	07/20/2004

Bentonite Bags (4000# each) Shipped To Solutia From Federal

35	6581	07/16/2004	Mont Trans # 10	07/21/2004	11	22	07/21/2004	
36	1071941		McConnell	07/21/2004	15	22.5	08/17/2004	3000# bags
37	6598	07/22/2004	Mont Trans #5	07/26/2004	11	22	07/26/2004	
38	6599	07/22/2004	Mont Trans #12	07/27/2004	11	22	07/27/2004	
39	6600	07/22/2004	Mont Trans #10	07/27/2004	11	22	07/27/2004	
40	6601	07/22/2004	Quality #60	07/27/2004	11	22	07/27/2004	
41	6654	08/12/2004	Quality #68	08/17/2004	12	24	08/17/2004	
42	6655	08/12/2004	Arrow #1124	08/18/2004	11	22	08/18/2004	
43	1071941		Spitale	07/21/2004	14	21	08/30/2004	3000# bags
44	6656	08/12/2004	Mont Trans #12	08/20/2004	12	24	08/20/2004	
45	6688	08/27/2004	Mont Trans #2606	08/31/2004	11	22	08/31/2004	
46	6689	08/27/2004	Quality #74	08/30/2004	12	24	08/30/2004	
47	6726	09/22/2004	Mont Trans #842	09/24/2004	11	22	09/24/2004	
48	6727	09/22/2004	Mont Trans #5	09/28/2004	12	24	09/28/2004	
49	6728	09/22/2004	Delta Southern #478	09/29/2004	11	22	10/01/2004	
50	6729	09/22/2004	Quality#17	09/29/2004	12	24	10/01/2004	
51	6730	09/22/2004	Reisig #180	10/04/2004	12	24	10/04/2004	
52	6731	09/22/2004	Minot #78	10/01/2004	12	24	10/01/2004	
53	6735	09/24/2004	Pacer	09/25/2004	11	22	09/25/2004	
54	6737	09/24/2004	Pacer #6081	09/27/2004	11	22	09/27/2004	
55	6767	10/26/2004	Arrow #1037	10/29/2004	12	24	10/29/2004	
56	6769	10/26/2004	Arrow # 4092	10/29/2004	12	24	10/29/2004	
57	4790		INQUIP		10	20	04/03/2004	
58	4792		INQUIP		10	20	04/05/2004	
57	4790		INQUIP		10	20	04/05/2004	
				Total Bags Shipped.	**674**	**1333.5**	**Tons**	

1230 tons from Federal
103.5 tons from INQUIP

Notes: INQUIP reported an additional load of 10 bags delivered from their yard on 11/3/2003. R. Scherrer disagreed with delivery of the load. R. Sherrer's understanding was that the first three loads delivered after the project shut down were from INQUIP's yard and did not have certifications at that time. Certifications were requested by Solutia from INQUIP. INQUIP retrieved two certifications for the three loads. Two additional loads were delivered at later dates with certifications.

Bentonite Bags

Federal

	Order Date	Ship Date	Delivered	Bags	Pounds	Tons	Order #	Bill of Lading
1	9/16/2003	9/17/2003	9/17/2003	11	44000	22	HCIV005761	XGRE542535
2	9/16/2003	9/18/2003	9/18/2003	11	44000	22	HCIV005762	XGRE42566
3	9/16/2003	9/19/2003	9/19/2003	12	48000	24	HCIV005763	XGRE542612
4	9/16/2003	9/23/2003	9/23/2003	12	48000	24	HCIV005764	XGRE542657
5	10/17/2003	10/22/2003	10/21/2003	12	48000	24	HCIV005838	XGRE543390
6	10/17/2003	10/22/2003	10/22/2003	12	48000	24	HCIV005839	XGRE543405
7	11/18/2003	11/20/2003	11/20/2003	12	48000	24	HCIV005970	XGRE5441C5
8	11/18/2003	11/21/2003	11/21/2003	12	48000	24	HCIV005969	XGRE544151
9	1/4/2003	11/5/2003	11/5/2003	12	48000	24	HCIV005903	XGRE543717
10	11/4/2003	11/5/2003	11/5/2003	12	48000	24	HCIV005904	XGRE543719
11	12/5/2003	2/9/2003	12/9/2003	11	44000	22	HCIV006042	XGRE544542
12	12/5/2003	12/12/2003	12/12/2003	12	44000	48	HCIV006043	XGRE544647
13	12/5/2003	12/12/2003	12/12/2003	12	44000	48	HCIV006044	XGRE544655
14	12/5/2003	12/12/2003	12/12/2003	12	48000	48	HCIV006045	XGRE544658
15	12/9/2003	12/16/2003	2/16/2003	11	4000	22	HCIV006054	XGRE544722
16	12/9/2003	12/15/2003	12/15/2003	12	48000	48	HCIV006055	XGRE544708
17	4/6/2004	4/8/2004	4/12/2004	11	4000	22	HCIV006278	XGRE547070
18	4/6/2004	4/6/2004	4/6/2004	11	44000	22	HCIV006277	XGRE547035
19	5/20/2004	5/2/2004	5/21/2004	11	44000	22	HCIV006369	XGRE548020
20	5/20/2004	5/24/2003	5/24/2004	11	44000	22	HCIV006370	XGRE548049
21	5/20/2004	5/26/2004	5/26/2004	11	44000	22	HCIV006372	XGRE548105
22	5/20/2004	5/26/2004	5/26/2004	11	44000	22	HCIV006371	XGRE548115
23	6/2/2004	6/4/2004	6/4/2004	11	44000	22	HCIV006447	XGRE548271
24	6/2/2004	6/4/2004	6/4/2004	11	44000	22	HCIV006446	XGRE548304
25	6/2/2004	6/8/2004	6/8/2004	11	44000	22	HCIV006443	XGRE548388
26	6/2/2004	6/8/2004	6/8/2004	11	44000	22	HCIV006444	XGRE548376
27	6/2/2004	6/10/2004	6/10/2004	11	44000	22	HCIV006445	XGRE548445
28	7/12/2004	7/13/2004	7/13/2004	11	44000	22	HCIV006569	XGRE549192

* Correct Tons

29	7/ 2004	7/15/2004	7/14/2004	11	44000	22	HCIV006571	XGRE549275
30	7/12/2004	7/12/2004	7/15/2004	11	44000	22	HCIV006568	XGRE549181
31	7/12/2004	7/14/2004	7/14/2004	11	44000	22	HCIV006570	XGRE549237
32	DUP #21		~~6/17/2004~~	~~11~~	~~44000~~	~~22~~	~~HCIV006372~~	~~XGRE548105~~
33			7/19/2004	11	44000	22	HCIV006578	XGRE549369
~~34~~			~~7/20/2004~~	~~11~~	~~44000~~	~~22~~	~~HCIV006587~~	~~XGRE549392~~
35		7/21/2004	7/21/2004	11	44000	22	HCIV006581	XGRE54928
36		7/20/2004	7/20/2004	11	44000	22	HCIV006580	XGRE549400
37		7/26/2004	7/26/2004	11	44000	22	HCIV006598	XGRE549540
38		7/27/2004	7/27/2004	11	44000	22	HCIV006601	XGRE549562
39		7/27/2004	7/27/2004	11	44000	22	HCIV006599	XGRE549580
40		7/27/2000	7/27/2004	11	44000	22	HCIV006600	XGRE549571
41		7/20/2004	7/20/2004	11	44000	22	HCIV006579	XGRE549392
42		8/17/2004	8/17/2004	12	48000	24	HCIV006654	XGRE550108
43		8/18/2004	8/18/2004	11	44000	22	HCIV006655	XGRE550143
44			8/20/2004	12	48000	24	HCIV006656	XGRE50225
45			8/30/2004	12	48000	24	HCIV006689	XGRE 50405
46			8/31/2004	11	44000	22	HCIV006688	XGRE550486
47			9/24/2004	11	44000	22	HCIV006726	XGRE551110
48			9/28/2004	12	48000	24	HCIV006727	XGRE551197
49			9/25/2004	11	44000	22	HCIV006735	XMMM549462
50			9/27/2004	11	44000	22	HCIV006737	XMMM549481
51			10/1/2004	12	48000	24	HCIV006731	XGRE551298
52		9/29/2004	10/1/2004	11	44000	22	HCIV006728	XGRE551228
53		9/29/2004	10/1/2004	12	48000	24	HCIV006729	XGRE551240
54			10/4/2004	12	48000	24	HCIV006730	XGRE551347
55			10/29/2004	12	48000	24	HCIV006767	XGRE552076
56			10/29/2004	12	48000	24	HCIV006769	XGRE552065
						1370		

11 OK DO NOT HAVE

56 + 6 = 62 - 1 DUP = 61 - 2 = 59

54 FROM DEBBIE + 5 = 59

1274 → 1226 → 1230 DEBBIE

1	11/3/2003	10	40000	20.00	4792	Trenchquip

2	4/3/2004	10	40000	20.00	4790	
3	4/5/2004	10	40000	20.00	4792	
4	4/5/2004	10	40000	20.00	4790	
5	8/17/2004	15	45000	22.50		04-7603-32
6	8/30/2004	14	56000	28.00		
			42000	130.50		

CORRECT TONS

123.5
-20
103.5

62 LOADS
- 1 DUPLICATE
61
- 2 I DON'T HAVE
59
- 1 BAG FROM INQUIP
58

Delivered By	Certs	
Hi-Ball Trucking \ Watring 2041	5761	1
Hi-Ball Trucking \ Ranger 5114	5762	2
ABL Express #88	5763	3
Hi-Ball Trucking \ Anderson	5764	4
Quality	5838	5
Montana Transport Company	5839	6
Jessee Trucking \ Granite Trans.	5970	7
Teal Transport \ rbs	5969	8
Hi-Ball Trucking	5903	9
Hi-Ball Trucking	5904	10
Materials Management - MWL #19	6042	11
Quality	6043	12
ICCI \ Ram #514	6044	13
Quality	6045	14
ICCI \ Ram 509	6054	15
Montana Transport	6055	16
Link 143 \ Teal Transport	6278	17
Arrow Trucking Company	6277	18
C & D Trucking	6369	19
Delta Southern	6370	20
Arrow Trucking Company	6372	21
Garheart #101	6371	22
Montana Transport Company	6447	23
Arrow Trucking Company	6446	24
Montana Transport Company	6443	25
Montana Transport Company	6444	26
Mikkelson	6445	27
Road Runner # 18 \ Apollo Trans.	6569	28

Arrow T[illegible]king Company	6571	29
Hansen Trucking, Inc. \ Quality	6568	30
Arrow Trucking Company	6570	31
Arrow Trucking Company	6372	32
Quality	6578	33
Arrow Trucking Company	6587	34
Montana Transport Company	6581	35
Arrow Trucking Company	6580	36
Montana Transport Company	6598	37
Quality	6601	38
Montana Transport Company	6599	39
Montana Transport Company	6600	40
Arrow Trucking Company	6579	41
Quality # 88	6654	42
Arrow Trucking Company	6655	43
Montana Transport	6656	44
Quality #74	6689	45
Montana Transportation # 2606	6688	46
Montana Transportation # 842	6726	47
Montana Transport # 5	6727	48
Pacer	6735	49
Pacer # 6081	6737	50
Minot Bldrs. #78 \ L.L. Smith	6731	51
Delta Southern #478	6728	52
Quality #17	6729	53
Reisig # 180	6730	54
Arrow Trucking Company #1037	6767	55
Arrow Trucking Company #4092	6769	56

DO NOT HAVE

Boone Transportation	4792	1

CCC
McConnell Heavy Hauling, Inc.
Spitale Company

4790	2
4792	3
4790	4
1071941	5
1071941	6

} IN QUIP LOADS FROM YARD.

(1)

GP-101

LABORATORY ANALYSIS CERTIFICATION

GREYBULL PLANT

DATE TESTED 8/25/2003

SOLD TO:	SHIP TO:
INQUIP ASSOCIATES, INC. P.O. BOX 2182 SANTA BARBAR FLORIDA 93120 USA SALES ORDER NO.: HCTV005761	INQUIP ASSOCIATES, INC. 141635509 5 RIVERVIEW AVE SAUGET IL 62206 USA

SHIPPING DATE:	RAILCAR OR TRUCK NUMBER:	PLANT OF ORIGIN:	PRODUCT ID:
9-17-03	WATRING 2044	GREYBULL	GEL

Note Our data for the above shipment shows the following test results.

Test or Property	API Spec	Result
Viscosity	30 min.	53
Plastic Viscosity (cP)	N/A	
Yield Point (lf / 100 ft2)	N/A	
Filtrate Volume (cm3)	15.0 max.	12.0
> 75 micron (wt. %)	4.0 max.	1.2

Test or Property	API Spec	Result
Moisture (wt. %)	12.5 max.	7.6
Y.P. / P.V. Ratio	3.0 max.	1.32

This certifies that the product shipped to the location as stated above meets the requirements of A.P.I. Section 13A; Section 4 for "Drilling Grade Bentonite." Should you have any questions or require additional information please let us know 1-307-765-4496.

Signed Date 9/18/03

Approved by: Plant Manager

LebanaCert.doc (4/22/97)
Rev E (9/99)

Rw 5

(2)

GR-101

LABORATORY ANALYSIS CERTIFICATION

GREYBULL PLANT

DATE TESTED 9/2/2003

SOLD TO:	SHIP TO:
INQUIP ASSOCIATES, INC. P.O. BOX 2182 SANTA BARBAR FLORIDA 93120 USA SALES ORDER NO.: HCTV005762	INQUIP ASSOCIATES, INC. 14165509 5 RIVERVIEW AVE SAUGET IL 62206 USA

SHIPPING DATE:	RAILCAR OR TRUCK NUMBER:	PLANT OF ORIGIN:	PRODUCT ID:
9-18-03	RANGER 5114	GREYBULL	GEL

Note Our data for the above shipment shows the following test results.

Test or Property	API Spec	Result
Viscosity	30 min.	40
Plastic Viscosity (cP)	N/A	
Yield Point (# / 100 ft2)	N/A	
Filtrate Volume (cm3)	15.0 max.	12.6
> 75 micron (wt. %)	4.0 max.	1.1

Test or Property	API Spec	Result
Moisture (wt. %)	12.6 max.	7.7
Y.P. / P.V. Ratio	3.0 max.	1.33

This certifies that the product shipped to the location as stated above meets the requirements of A.P.I. Section 13A; Section 4 for "Drilling Grade Bentonite." Should you have any questions or require additional information please let us know 1-307-765-4496.

Signed 9/19/03 Date

Approved by: Plant Manager

LabarnaCert.doc (4/22/97)
Rev E (9/99)

GP-101

3

LABORATORY ANALYSIS CERTIFICATION

GREYBULL PLANT

DATE TESTED 9/18/2003

SOLD TO:	SHIP TO:
INQUIP ASSOCIATES, INC. P.O. BOX 2182 SANTA BARBAR FLORIDA 93120 USA SALES ORDER NO.: HCIV005763	INQUIP ASSOCIATES, INC. 141635509 5 RIVERVIEW AVE SAUGET IL 62206 USA

SHIPPING DATE:	RAILCAR OR TRUCK NUMBER:	PLANT OF ORIGIN:	PRODUCT TYPE:
9-19-03	ABL EXP #89 4000 LBS INVENTORY	GREYBULL	GRANULAR

Note Our data for the above shipment shows the following test results.

Test or Property	Spec.	Result	Test or Property	Spec.	Result
Filtrate Volume (cm3)	18 max.	12.8			
Swell Index (mL)	18 Min.	30			
Moisture (wt. %)	12 max.	8.0			

This certifies that the product shipped to the location as stated above meets the requirements. Should you have any questions or require additional information please let us know 1-307-765-4496.

Signed 9/22/03
Date

Approved by: Plant Manager

LabanaCert.doc (4/22/97)
Rev E (9/99)

GP-101

(4)

LABORATORY ANALYSIS CERTIFICATION

GREYBULL PLANT

DATE TESTED 9/18/2003

SOLD TO:	SHIP TO:
INQUIP ASSOCIATES, INC. P.O. BOX 2182 SANTA BARBAR FLORIDA 93120 USA SALES ORDER NO.: SETV005764	INQUIP ASSOCIATES, INC. 141635509 5 RIVERVIEW AVE SAUGET IL 62206 USA

SHIPPING DATE:	RAILCAR OR TRUCK NUMBER:	PLANT OF ORIGIN:	PRODUCT TYPE:
9-23-03	[illegible] 4000 LBS INVENTORY	GREYBULL	GRANULAR

Note Our data for the above shipment shows the following test results.

Test or Property	Spec.	Result	Test or Property	Spec.	Result
Filtrate Volume (cm3)	16 max.	12.8			
Swell Index (mL)	16 Min.	30			
Moisture (wt. %)	12 max.	8.0			

This certifies that the product shipped to the location as stated above meets the requirements. Should you have any questions or require additional information please let us know 1-307-765-4496.

Signed [signature] Date 9/24/03

Approved by: Plant Manager

LabansCert.doc (4/22/97)
Rev E (9/99)

RWS

(5)

GP-101

LABORATORY ANALYSIS CERTIFICATION

GREYBULL PLANT

DATE TESTED 10/21/2003

SOLD TO:	SHIP TO:
INQUIP ASSOCIATES, INC. P.O. BOX 2182 SANTA BARBAR CALIFORNIA 93120 USA SALES ORDER NO.: HCIV005838	INQUIP ASSOCIATES, INC. 141635509 5 RIVERVIEW AVE SAUGET IL 62206 USA

SHIPPING DATE:	RAILCAR OR TRUCK NUMBER:	PLANT OF ORIGIN:	PRODUCT TYPE:
10-21-03	BIG BAGS NW MONT TRANS 24	GREYBULL	GRANULAR 4000# Bags

Note Our data for the above shipment shows the following test results.

Test or Property	Spec.	Result
Filtrate Volume (cm3)	18 max.	12.0
Swell Index (mL)	18 Min.	29
Moisture (wt. %)	12 max.	8.0

Test or Property	Spec.	Result

This certifies that the product shipped to the location as stated above meets the requirements. Should you have any questions or require additional information please let us know 1-307-765-4485.

Signed 10/24/03 Date

Approved by: Plant Manager

LabansCert.doc (4/22/97)
Rev E (9/99)

HCIV5838

RWS

GP-101

LABORATORY ANALYSIS CERTIFICATION

GREYBULL PLANT

DATE TESTED 10/21/2003

SOLD TO:	SHIP TO:
INQUIP ASSOCIATES, INC. P.O. BOX 2182 SANTA BARBAR CALIFORNIA 93120 USA SALES ORDER NO.: HCTV005839	INQUIP ASSOCIATES, INC. 141635509 5 RIVERVIEW AVE SAUGET IL 62206 USA

SHIPPING DATE:	RAILCAR OR TRUCK NUMBER:	PLANT OF ORIGIN:	PRODUCT TYPE:
10-22-03	BIG BAGS NW QUALITY 29	GREYBULL	GRANULAR 4000# Bags

Note Our data for the above shipment shows the following test results.

Test or Property	Spec.	Result	Test or Property	Spec.	Result
Filtrate Volume (cm3)	18 max.	12.0			
Swell Index (mL)	18 Min.	29			
Moisture (wt. %)	12 max.	8.0			

This certifies that the product shipped to the location as stated above meets the requirements. Should you have any questions or require additional information please let us know 1-307-765-4498.

Signed BLJ 10/24/03 Date

Approved by: Plant Manager

LabansCert.doc (4/22/97)
Rev E (9/99)

HCTV 5839

GP-101

LABORATORY ANALYSIS CERTIFICATION

GREYBULL PLANT

DATE TESTED 11/4/2003

SOLD TO:	SHIP TO:
INQUIP ASSOCIATES, INC. P.O. BOX2182 SANTA BARBAR CALIFORNIA 93120 USA SALES ORDER NO.: AMHOF #22 HCN 005963	INQUIP ASSOCIATES, INC. 141635509 5 RIVERVIEW AVE SAUGET IL 62206 USA

SHIPPING DATE:	RAILCAR OR TRUCK NUMBER:	PLANT OF ORIGIN:	PRODUCT TYPE:
11-5-03	4000# BIG BAGS INVENTORY	GREYBULL	GRANULAR

Note Our data for the above shipment shows the following test results.

Test or Property	Spec.	Result
Filtrate Volume (cm3)	18 max.	12.0
Swell Index (mL)	18 Min.	28
Moisture (wt. %)	12 max.	10.2

Test or Property	Spec.	Result

This certifies that the product shipped to the location as stated above meets the requirements. Should you have any questions or require additional information please let us know 1-307-765-4496.

Signed 11/10/03 Date

Approved by: Plant Manager

LabanaCert.doc (4/22/97)
Rev E (9/99)

GP-101

LABORATORY ANALYSIS CERTIFICATION

GREYBULL PLANT

DATE TESTED 11/5/2003

SOLD TO:	SHIP TO:
INQUIP ASSOCIATES, INC. P.O. BOX 2182 SANTA BARBAR CALIFORNIA 93120 USA SALES ORDER NO.: HGIV005904 MONUMENT 37	INQUIP ASSOCIATES, INC. 141635509 5 RIVERVIEW AVE SAUGET IL 62206 USA

SHIPPING DATE:	RAILCAR OR TRUCK NUMBER:	PLANT OF ORIGIN:	PRODUCT TYPE:
11-5-03	4000# BIG BAGS INVENTORY	GREYBULL	GRANULAR

Note Our data for the above shipment shows the following test results.

Test or Property	Spec.	Result
Filtrate Volume (cm3)	18 max.	12.2
Swell Index (mL)	18 Min.	23
Moisture (wt. %)	12 max.	8.4

Test or Property	Spec.	Result

This certifies that the product shipped to the location as stated above meets the requirements. Should you have any questions or require additional information please let us know 1-307-765-4496.

Signed 11/10/03 Date

Approved by: Plant Manager

LabsnaCert.doc (4/22/97)
Rev E (9/99)

Rw 9

GP-101

9

LABORATORY ANALYSIS CERTIFICATION

GREYBULL PLANT

DATE TESTED 11/19/2003

SOLD TO:	SHIP TO:
INQUIP ASSOCIATES, INC. P.O. BOX 2182 SANTA BARBAR CALIFORNIA 93120 USA 5969 SALES ORDER NO.: HCIV005969	INQUIP ASSOCIATES, INC. 141635509 5 RIVERVIEW AVE SAUGET IL 62206 USA

SHIPPING DATE:	RAILCAR OR TRUCK NUMBER:	PLANT OF ORIGIN:	PRODUCT TYPE:
11-21-03	4000# BIG BAGS	GREYBULL	GRANULAR

Note Our data for the above shipment shows the following test results.

Test or Property	Spec.	Result	Test or Property	Spec.	Result
Filtrate Volume (cm3)	18 max.	12.6			
Swell Index (mL)	18 Min.	26			
Moisture (wt. %)	12 max.	8.4			

This certifies that the product shipped to the location as stated above meets the requirements. Should you have any questions or require additional information please let us know 1-307-765-4496.

Signed 11/24/03 Date

Approved by: Plant Manager

LabanaCert.doc (4/22/97)
Rev E (8/99)

M

GP-101

LABORATORY ANALYSIS CERTIFICATION

GREYBULL PLANT

DATE TESTED 11/19/2003

SOLD TO:	SHIP TO:
INQUIP ASSOCIATES, INC. P.O. BOX 2182 SANTA BARBAR CALIFORNIA 93120 USA SALES ORDER NO.: HCIV005970	INQUIP ASSOCIATES, INC. 141635509 5 RIVERVIEW AVE SAUGET IL 62206 USA

SHIPPING DATE:	RAILCAR OR TRUCK NUMBER:	PLANT OF ORIGIN:	PRODUCT TYPE:
11-20-03	4000# BIG BAGS JESSEE TRUCKING 127	GREYBULL	GRANULAR

Note Our data for the above shipment shows the following test results.

Test or Property	Spec.	Result
Filtrate Volume (cm3)	18 max.	12.8
Swell Index (mL)	18 Min.	26
Moisture (wt. %)	12 max.	8.4

Test or Property	Spec.	Result

This certifies that the product shipped to the location as stated above meets the requirements. Should you have any questions or require additional information please let us know 1-307-765-4496.

Signed 11/21/03 Date

Approved by: Plant Manager

LebensCert.doc (4/22/97)
Rev E (5/99)

GP-101

LABORATORY ANALYSIS CERTIFICATION

GREYBULL PLANT

DATE TESTED 11/19/2003

SOLD TO:	SHIP TO:
INQUIP ASSOCIATES, INC. P.O. BOX 2182 SANTA BARBAR CALIFORNIA 93120 USA SALES ORDER NO.: HCIV006042	INQUIP ASSOCIATES, INC. 141635509 5 RIVERVIEW AVE SAUGET IL 62206 USA

SHIPPING DATE:	RAILCAR OR TRUCK NUMBER:	PLANT OF ORIGIN:	PRODUCT TYPE:
12-9-03	4000# BIG BAGS Appx. 190	GREYBULL	GRANULAR

Note Our data for the above shipment shows the following test results.

Test or Property	Spec.	Result
Filtrate Volume (cm3)	18 max.	12.8
Swell Index (mL)	18 Min.	26
Moisture (wt. %)	12 max.	8.4

Test or Property	Spec.	Result

This certifies that the product shipped to the location as stated above meets the requirements. Should you have any questions or require additional information please let us know 1-307-765-4496.

Signed 12/16/03 Date

Approved by: Plant Manager

LabanaCert.doc (4/22/97)
Rev E (9/99)

GP-101

LABORATORY ANALYSIS CERTIFICATION

GREYBULL PLANT

DATE TESTED 12/11/2003

SOLD TO:	SHIP TO:
INQUIP ASSOCIATES, INC. P.O. BOX 2182 SANTA BARBAR CALIFORNIA 93120 USA SALES ORDER NO.: HCTV006043	INQUIP ASSOCIATES, INC. 141635509 5 RIVERVIEW AVE SAUGET IL 62206 USA

SHIPPING DATE:	RAILCAR OR TRUCK NUMBER:	PLANT OF ORIGIN:	PRODUCT TYPE:
12-12-03	4000# BIG BAGS TRAN INC 9	GREYBULL	GRANULAR

Note Our data for the above shipment shows the following test results.

Test or Property	Spec.	Result
Filtrate Volume (cm3)	18 max.	11.4
Swell Index (mL)	18 Min.	27
Moisture (wt. %)	12 max.	8.8

Test or Property	Spec.	Result

This certifies that the product shipped to the location as stated above meets the requirements. Should you have any questions or require additional information please let us know 1-307-765-4498.

12/15/07

Signed Date

Approved by: Plant Manager

LabansCert.doc (4/22/97)
Rev E (9/99)

GP-101

LABORATORY ANALYSIS CERTIFICATION

GREYBULL PLANT

DATE TESTED 12/9/2003

SOLD TO:	SHIP TO:
INQUIP ASSOCIATES, INC. P.O. BOX 2182 SANTA BARBAR CALIFORNIA 93120 USA **SALES ORDER NO.:** HCIV006044	INQUIP ASSOCIATES, INC. 141635509 5 RIVERVIEW AVE SAUGET IL 62206 USA

SHIPPING DATE:	RAILCAR OR TRUCK NUMBER:	PLANT OF ORIGIN:	PRODUCT TYPE:
12-12-03	4000# BIG BAGS RAN 514	GREYBULL	GRANULAR

Note Our data for the above shipment shows the following test results.

Test or Property	Spec.	Result
Filtrate Volume (cm3)	18 max.	13.0
Swell Index (mL)	18 Min.	24
Moisture (wt. %)	12 max.	9.0

Test or Property	Spec.	Result

This certifies that the product shipped to the location as stated above meets the requirements. Should you have any questions or require additional information please let us know 1-307-765-4696.

Signed 12/15/03 Date

Approved by: Plant Manager

LabsrvCert.doc (4/22/97)
Rev E (9/99)

GP-101

LABORATORY ANALYSIS CERTIFICATION

GREYBULL PLANT

DATE TESTED 12/12/2003

SOLD TO:	SHIP TO:
INQUIP ASSOCIATES, INC. P.O. BOX 2182 SANTA BARBAR CALIFORNIA 93120 USA SALES ORDER NO.: HCIV006045	INQUIP ASSOCIATES, INC. 141635509 5 RIVERVIEW AVE SAUGET IL 62206 USA

SHIPPING DATE:	RAIL CAR OR TRUCK NUMBER:	PLANT OF ORIGIN:	PRODUCT TYPE:
12-12-03	4000# BULK BAGS	GREYBULL	GRANULAR

Note Our data for the above shipment shows the following test results.

Test or Property	Spec.	Result	Test or Property	Spec.	Result
Filtrate Volume (cm3)	18 max.	13.4			
Swell Index (mL)	18 Min.	26			
Moisture (wt. %)	12 max.	7.6			

This certifies that the product shipped to the location as stated above meets the requirements. Should you have any questions or require additional information please let us know 1-307-765-4496.

Signed 12/15/03 Date

Approved by: Plant Manager

LabanaCert.doc (4/22/97)

Rev E (9/99)

GP-101

(15)

LABORATORY ANALYSIS CERTIFICATION

GREYBULL PLANT

DATE TESTED 12/15/2003

SOLD TO:	SHIP TO:
INQUIP ASSOCIATES, INC. P.O. BOX 2182 SANTA BARBAR CALIFORNIA 93120 USA SALES ORDER NO.: HCIV006054	INQUIP ASSOCIATES, INC. 141635509 5 RIVERVIEW AVE SAUGET IL 62206 USA

SHIPPING DATE:	~~RAILCAR OR~~ TRUCK NUMBER:	PLANT OF ORIGIN:	PRODUCT TYPE:
12-16-03	4000# BIG BAGS RAM 569	GREYBULL	GRANULAR

Note Our data for the above shipment shows the following test results.

Test or Property	Spec.	Result	Test or Property	Spec.	Result
Filtrate Volume (cm3)	18 max.	13.4			
Swell Index (mL)	18 Min.	27			
Moisture (wt. %)	12 max.	7.8			

This certifies that the product shipped to the location as stated above meets the requirements. Should you have any questions or require additional information please let us know 1-307-765-4498.

Signed 12/17/03 Date

Approved by: Plant Manager

LabansCert.doc (4/22/97)
Rev E (9/99)

GP-101

LABORATORY ANALYSIS CERTIFICATION

GREYBULL PLANT

DATE TESTED 12/15/2003

SOLD TO:	SHIP TO:
INQUIP ASSOCIATES, INC. P.O. BOX 2182 SANTA BARBAR CALIFORNIA 93120 USA SALES ORDER NO.: HCIV006055	INQUIP ASSOCIATES, INC. 141635509 5 RIVERVIEW AVE SAUGET IL 62206 USA

SHIPPING DATE:	RAILCAR OR TRUCK NUMBER:	PLANT OF ORIGIN:	PRODUCT TYPE:
12-15-03	4000# BIG BAGS	GREYBULL	GRANULAR

Note Our data for the above shipment shows the following test results.

Test or Property	Spec.	Result
Filtrate Volume (cm3)	18 max.	13.4
Swell Index (mL)	16 Min.	27
Moisture (wt. %)	12 max.	7.8

Test or Property	Spec.	Result

This certifies that the product shipped to the location as stated above meets the requirements. Should you have any questions or require additional information please let us know 1-307-765-4496.

Signed 12/16/03 Date

Approved by: Plant Manager

SWACO

Mi

LABORATORY ANALYSIS CERTIFICATION

GP-101

GREYBULL PLANT

DATE TESTED 4/6/2004

SOLD TO:	SHIP TO:
INQUIP ASSOCIATES, INC. PO BOX 2182 SANTA BARBAR CA 93120 USA SALES ORDER #: Hcw0064277	INQUIP ASSOCIATES, INC. 141635509 5 RIVERVIEW AVE SAUGET IL 62206 USA

SHIPPING DATE:	RAILCAR OR TRUCK NUMBER:	PLANT OF ORIGIN:	PRODUCT:
040604		GREYBULL	GRANULAR

Note Our data for the above shipment shows the following test results.

Test or Property	Spec.	Result	Test or Property	Spec.	Result
Moisture(wt.%)	12 Max.	9.6	+45	N/A	5.6
Swell	18	25	+70	N/A	24.8
Filtrate Volume(mL)	18 Max.	13.6	+100	N/A	37.0
+12	N/A	0.0	+200	N/A	7.9
+20	N/A	0.1	PAN	N/A	2.3

This certifies that the product shipped to the location as stated above meets the requirements of ISO 9000:2000 standards and meets or exceeds M-I SWACO specifications. Should you have any questions or require additional information please let us know 1-307-765-4486.

6/16/2004

Signed Date

Approved by: Plant Manager

LabanaCert.doc (4/22/97) Rev E (9/98)

MI SWACO **LABORATORY ANALYSIS CERTIFICATION**

GP-101

GREYBULL PLANT

DATE TESTED 4/6/2004

SOLD TO:	SHIP TO:
INQUIP ASSOCIATES, INC. P O BOX 2182 SANTA BARBAR CA 93120 USA SALES ORDER #: HCIV006278	INQUIP ASSOCIATES, INC. 1416355509 5 RIVERVIEW AVE SAUGET IL 62206 USA

SHIPPING DATE:	RAILCAR OR TRUCK NUMBER:	PLANT OF ORIGIN:	PRODUCT:
4-6-04	LINK #143	GREYBULL	GRANULAR

Note: Our data for the above shipment shows the following test results.

Test or Property	Spec.	Result
Moisture(wt.%)	12 Max.	9.6
Swell	18 Min.	25
Filtrate Volume(mL)	18 Max.	13.8
+12	N/A	0.0
+20	N/A	0.1

Test or Property	Spec.	Result
+45	N/A	5.6
+70	N/A	24.8
+100	N/A	37.0
+200	N/A	7.9
PAN	N/A	2.3

This certifies that the product shipped to the location as stated above meets the requirements of ISO 9000:2000 standards and meets or exceeds MI SWACO specifications. Should you have any questions or require additional information please let us know 1-307-765-4486.

Signed 4/12/04 Date

Approved by: Plant Manager

LabanaCert.doc (4/22/97)
Rev E (9/99)

CERTIFICATION

GREYBULL PLANT

DATE TESTED 5/12/2004

SOLD TO:	SHIP TO:
INQUIP ASSOCIATES, INC. P O BOX 2182 SANTA BARBAR CA 93120 USA SALES ORDER #: HCIV006389	INQUIP ASSOCIATES, INC. 141635509 5 RIVERVIEW AVE SAUGET IL 62206 USA

SHIPPING DATE:	RAILCAR OR TRUCK NUMBER:	PLANT OF ORIGIN:	PRODUCT:
5-21-04	C&D #6	GREYBULL	GRANULAR

Note Our data for the above shipment shows the following test results.

Test or Property	Spec.	Result
Moisture(wt.%)	12 Max.	8.8
Swell	18 Min.	25
Filtrate Volume(mL)	18 Max.	14.0
+12	N/A	0.0
+20	N/A	0.1

Test or Property	Spec.	Result
+40	N/A	1.5
+70	N/A	26.5
+100	N/A	35.4
+200	N/A	13.6
PAN	N/A	5.2

This certifies that the product shipped to the location as stated above meets the requirements of ISO 9000:2000 standards and meets or exceeds M-I SWACO specifications. Should you have any questions or require additional information please let us know 1-307-765-4496.

5/26/2004

Signed Date

Approved by: Plant Manager

LabMaCert.doc (4/22/97)
Rev E (9/99)

CERTIFICATION

GREYBULL PLANT

DATE TESTED 5/12/2004

SOLD TO:	SHIP TO:
INQUIP ASSOCIATES, INC. P O BOX 2182 SANTA BARBAR CA 93120 USA SALES ORDER #: HCIV006370	INQUIP ASSOCIATES, INC. 141635509 5 RIVERVIEW AVE SAUGET IL 62206 USA

SHIPPING DATE:	RAILCAR OR TRUCK NUMBER:	PLANT OF ORIGIN:	PRODUCT:
5-24-04	DELTA SOUTHERN #344	GREYBULL	GRANULAR

Note Our data for the above shipment shows the following test results.

Test or Property	Spec.	Result
Moisture(wt.%)	12 Max.	8.8
Swell	18 Min.	25
Filtrate Volume(mL)	18 Max.	14.0
+12	N/A	0.0
+20	N/A	0.1

Test or Property	Spec.	Result
+45	N/A	6.5
+70	N/A	26.5
+100	N/A	35.4
+200	N/A	13.6
PAN	N/A	5.2

This certifies that the product shipped to the location as stated above meets the requirements of ISO 9000:2000 standards and meets or exceeds M-I SWACO specifications. Should you have any questions or require additional information please let us know 1-307-765-4496.

5/26/2004

Signed Date

Approved by: Plant Manager

LabansCert.doc (4/22/97)
Rev E (9/99)

M-I SWACO LABORATORY ANALYSIS CERTIFICATION

GP-101

GREYBULL PLANT

DATE TESTED 5/25/2004

SOLD TO:	SHIP TO:
INQUIP ASSOCIATES, INC. P O BOX 2162 SANTA BARBAR CA 93120 USA SALES ORDER #: HCIV008371	INQUIP ASSOCIATES, INC. 141635509 5 RIVERVIEW AVE SAUGET IL 62206 USA

SHIPPING DATE:	RAILCAR OR TRUCK NUMBER:	PLANT OF ORIGIN:	PRODUCT:
5-26-04	GARHEART #101	GREYBULL	GRANULAR

Note Our data for the above shipment shows the following test results.

Test or Property	Spec.	Result
Moisture(wt.%)	12 Max.	8.4
Swell	16 Min.	26
Filtrate Volume(mL)	18 Max.	13.6
+12	N/A	0.0
+20	N/A	0.2

Test or Property	Spec.	Result
+45	N/A	14.3
+70	N/A	41.0
+100	N/A	26.4
+200	N/A	15.3
PAN	N/A	3.5

This certifies that the product shipped to the location as stated above meets the requirements of ISO 9000:2000 standards and meets or exceeds M-I SWACO specifications. Should you have any questions or require additional information please let us know 1-307-765-4496.

Signed 5/27/2004 Date

Approved by: Plant Manager

LabanaCert.doc (4/22/97)
Rev E (9/99)

MI SWACO

LABORATORY ANALYSIS CERTIFICATION

GP-101

GREYBULL PLANT

DATE TESTED 5/25/2004

SOLD TO:	SHIP TO:
INQUIP ASSOCIATES, INC. P O BOX 2182 SANTA BARBAR CA 93120 USA SALES ORDER #: HCIV008372	INQUIP ASSOCIATES, INC. 141635509 5 RIVERVIEW AVE SAUGET IL 62206 USA

SHIPPING DATE:	RAILCAR OR TRUCK NUMBER:	PLANT OF ORIGIN:	PRODUCT:
5-26-04	ARROW #4187	GREYBULL	GRANULAR

Note Our data for the above shipment shows the following test results.

Test or Property	Spec.	Result
Moisture(wt.%)	12 Max.	9.0
Swell	18 Min.	26
Filtrate Volume(mL)	16 Max.	14.2
+12	N/A	0.0
+20	N/A	0.2

Test or Property	Spec.	Result
+45	N/A	25.4
+70	N/A	45.9
+100	N/A	18.2
+200	N/A	8.7
PAN	N/A	1.0

This certifies that the product shipped to the location as stated above meets the requirements of ISO 9000:2000 standards and meets or exceeds M-I SWACO specifications. Should you have any questions or require additional information please let us know 1-307-765-4498.

5/27/2004

Signed Date

Approved by: Plant Manager

LabanaCert.doc (4/22/97)
Rev E (9/99)

23

MI SWACO

LABORATORY ANALYSIS CERTIFICATION

GP-101

GREYBULL PLANT

DATE TESTED 6/7/2004

SOLD TO:	SHIP TO:
INQUIP ASSOCIATES, INC. PO BOX 2182 SANTA BARBAR CA 93120 USA SALES ORDER #: HCIV006443	INQUIP ASSOCIATES, INC. 141635509 S RIVERVIEW AVE SAUGET IL 62206 USA

SHIPPING DATE:	RAILCAR OR TRUCK NUMBER:	PLANT OF ORIGIN:	PRODUCT ID:
6-8-04	MONT TRANS #5	GREYBULL	GEL

Note Our data for the above shipment shows the following test results.

Test or Property	API Spec.	Result
Viscosity	30 min.	43
Plastic Viscosity (cP)	N/A	
Yield Point (# / 100 ft2)	N/A	
Filtrate Volume (cm3)	15.0 max.	14.6
> 75 micron (wt. %)	4.0 max.	0.9

Test or Property	API Spec.	Result
Moisture (wt. %)	N/A	6.2
Y.P. / P.V. Ratio	3.0 max.	1.38

This certifies that the product shipped to the location as stated above meets the requirements of A.P.I. Section 13A; Section 4 for "Drilling Grade Bentonite." Should you have any questions or require additional information please let us know 1-307-765-4496.

6/9/2004

Signed Date

Approved by: Plant Manager

LabanaCert.doc (4/22/97)
Rev E (9/99)

(24)

MI SWACO

LABORATORY ANALYSIS CERTIFICATION

GP-101

GREYBULL PLANT

DATE TESTED 6/7/2004

SOLD TO:	SHIP TO:
INQUIP ASSOCIATES, INC. P O BOX 2182 SANTA BARBAR CA 93120 USA SALES ORDER #: HGIV006444	INQUIP ASSOCIATES, INC. 141635309 5 RIVERVIEW AVE SAUGET IL 62206 USA

SHIPPING DATE:	RAILCAR OR TRUCK NUMBER:	PLANT OF ORIGIN:	PRODUCT ID:
6-8-04	MONT TRANS #942	GREYBULL	GEL

Note Our data for the above shipment shows the following test results.

Test or Property	API Spec.	Result
Viscosity	30 min.	43
Plastic Viscosity (cP)	N/A	
Yield Point (# / 100 ft2)	N/A	
Filtrate Volume (cm3)	15.0 max.	14.6
> 75 micron (wt. %)	4.0 max.	0.9

Test or Property	API Spec.	Result
Moisture (wt. %)	N/A	6.2
Y.P. / P.V. Ratio	3.0 max.	1.33

This certifies that the product shipped to the location as stated above meets the requirements of A.P.I. Section 13A; Section 4 for "Drilling Grade Bentonite." Should you have any questions or require additional information please let us know 1-307-765-4496.

6/9/2004

Signed Date

Approved by: Plant Manager

LabanaCert.doc (4/22/97)
Rev E (9/99)

MI SWACO

LABORATORY ANALYSIS CERTIFICATION

(25)

GREYBULL PLANT

DATE TESTED 6/9/2004

SOLD TO:	SHIP TO:
INQUIP ASSOCIATES, INC. PO BOX 2182 SANTA BARBAR CA 93120 USA SALES ORDER #: HCIV005445 (corrected)	INQUIP ASSOCIATES, INC. 141635509 5 RIVERVIEW AVE SAUGET IL 62206 USA

SHIPPING DATE:	RAILCAR OR TRUCK NUMBER:	PLANT OF ORIGIN:	PRODUCT ID:
6-10-04	MIKKELSON #6	GREYBULL	GEL

Note Our data for the above shipment shows the following test results.

Test or Property	API Spec.	Result
Viscosity	30 min.	36
Plastic Viscosity (cP)	N/A	
Yield Point (# / 100 ft2)	N/A	
Filtrate Volume (cm3)	15.0 max.	14.6
> 75 micron (wt. %)	4.0 max.	1.3

Test or Property	API Spec.	Result
Moisture (wt. %)	N/A	6.9
Y.P. / P.V. Ratio	3.0 max.	0.77

This certifies that the product shipped to the location as stated above meets the requirements of A.P.I. Section 13A; Section 4 for "Drilling Grade Bentonite." Should you have any questions or require additional information please let us know 1-307-765-4486.

6/11/2004

Signed Date

Approved by: Plant Manager

LabenaCert.doc (4/22/97)
Rev E (9/98)

26

MI SWACO

LABORATORY ANALYSIS CERTIFICATION

GREYBULL PLANT

DATE TESTED 6/4/2004

SOLD TO:	SHIP TO:
INQUIP ASSOCIATES, INC. P O BOX 2182 SANTA BARBAR CA 93120 USA 6446 SALES ORDER #: HCIV006446	INQUIP ASSOCIATES, INC. 141635509 5 RIVERVIEW AVE SAUGET IL 62206 USA

SHIPPING DATE:	RAILCAR OR TRUCK NUMBER:	PLANT OF ORIGIN:	PRODUCT ID:
6-4-04	ARROW #4279	GREYBULL	GEL

Note Our data for the above shipment shows the following test results.

Test or Property	API Spec.	Result
Viscosity	30 min.	41
Plastic Viscosity (cP)	N/A	
Yield Point (# / 100 ft2)	N/A	
Filtrate Volume (cm3)	15.0 max.	14.8
> 75 micron (wt. %)	4.0 max.	1.5

Test or Property	API Spec.	Result
Moisture (wt. %)	N/A	7.2
Y.P. / P.V. Ratio	3.0 max.	1.33

This certifies that the product shipped to the location as stated above meets the requirements of A.P.I. Section 13A; Section 4 for "Drilling Grade Bentonite." Should you have any questions or require additional information please let us know 1-307-765-4406.

Signed 6/7/2004
Date

Approved by: Plant Manager

LabanaCert.doc (4/22/97)
Rev E (9/99)

MI SWACO

LABORATORY ANALYSIS CERTIFICATION

GF-101

(21)

GREYBULL PLANT

DATE TESTED 5/25/2004

SOLD TO:	SHIP TO:
INQUIP ASSOCIATES, INC. PO BOX 2182 SANTA BARBAR CA 93120 USA 6447 SALES ORDER #: HCV008447	INQUIP ASSOCIATES, INC. 141635309 5 RIVERVIEW AVE SAUGET IL 62206 USA

SHIPPING DATE:	RAILCAR OR TRUCK NUMBER:	PLANT OF ORIGIN:	PRODUCT ID:
6-6-04	MONT TRANS #101	GREYBULL	GRL

Note Our data for the above shipment shows the following test results.

Test or Property	API Spec.	Result
Viscosity	30 min.	56
Plastic Viscosity (cP)	N/A	
Yield Point (# / 100 ft2)	N/A	
Filtrate Volume (cm3)	15.0 max.	13.8
> 75 micron (wt. %)	4.0 max.	1.2

Test or Property	API Spec.	Result
Moisture (wt. %)	N/A	7.7
Y.P. / P.V. Ratio	3.0 max.	1.50

This certifies that the product shipped to the location as stated above meets the requirements of A.P.I. Section 13A; Section 4 for "Drilling Grade Bentonite." Should you have any questions or require additional information please let us know 1-307-765-4486.

Signed 6/7/2004 Date

Approved by: Plant Manager

LabanaCert.doc (4/22/97)
Rev E (9/99)

MI SWACO

LABORATORY ANALYSIS CERTIFICATION

GP-101

25

GREYBULL PLANT

DATE TESTED 6/8/2004

SOLD TO:	SHIP TO:
INQUIP ASSOCIATES, INC. P O BOX 2182 SANTA BARBAR CA 93120 USA HCIV 6568 SALES ORDER #: HCIV006568	INQUIP ASSOCIATES, INC. 141635509 5 RIVERVIEW AVE SAUGET IL 62206 USA

SHIPPING DATE:	RAILCAR OR TRUCK NUMBER:	PLANT OF ORIGIN:	PRODUCT:
7-12-04	HANSEN #034	GREYBULL	GRANULAR

Note Our data for the above shipment shows the following test results.

Test or Property	Spec.	Result
Moisture(wt.%)	12 Max.	10.2
Swell	18 Min.	27
Filtrate Volume(mL)	18 Max.	14.4
+12	N/A	0.1
+20	N/A	0.1

Test or Property	Spec.	Result
+45	N/A	10.3
+70	N/A	39.5
+100	N/A	27.4
+200	N/A	20.8
PAN	N/A	2.0

This certifies that the product shipped to the location as stated above meets the requirements of ISO 9000:2000 standards and meets or exceeds M-I SWACO specifications. Should you have any questions or require additional information please let us know 1-307-765-4400.

Signed 7/13/2004 Date

Approved by: Plant Manager

LabanaCert.doc (4/22/97)
Rev E (9/99)

MI SWACO

LABORATORY ANALYSIS CERTIFICATION

GP-101

(24)

GREYBULL PLANT

DATE TESTED 7/14/2004

SOLD TO:	SHIP TO:
INQUIP ASSOCIATES, INC. P O BOX 2182 SANTA BARBAR CA 93120 USA HCIV 65769 SALES ORDER #: HCIV006569	INQUIP ASSOCIATES, INC. 141695500 5 RIVERVIEW AVE SAUGET IL 62206 USA

SHIPPING DATE:	RAILCAR OR TRUCK NUMBER:	PLANT OF ORIGIN:	PRODUCT:
7-13-04	ROAD RUNNER #18	GREYBULL	GRANULAR

Note Our data for the above shipment shows the following test results.

Test or Property	Spec.	Result
Moisture(wt.%)	12 Max.	10.0
Swell	18 Min.	25
Filtrate Volume(mL)	18 Max.	13.0
+12	N/A	0.0
+20	N/A	0.0

Test or Property	Spec.	Result
+45	N/A	14.7
+70	N/A	35.9
+100	N/A	23.0
+200	N/A	21.8
PAN	N/A	5.1

This certifies that the product shipped to the location as stated above meets the requirements of ISO 9000:2000 standards and meets or exceeds M-I SWACO specifications. Should you have any questions or require additional information please let us know 1-307-765-4402

Signed 7/15/2004 Date

Approved by: Plant Manager

LabanaCert.doc (4/22/97)
Rev E (3/99)

1570

MI SWACO

LABORATORY ANALYSIS CERTIFICATION

GP-101

(30)

GREYBULL PLANT

DATE TESTED 6/7/2004

SOLD TO:	SHIP TO:
INQUIP ASSOCIATES, INC. P O BOX 2182 SANTA BARBAR CA 93120 USA 6570 SALES ORDER #: HCIV006570	INQUIP ASSOCIATES, INC. 141635509 5 RIVERVIEW AVE SAUGET IL 62206 USA

SHIPPING DATE:	RAILCAR OR TRUCK NUMBER:	PLANT OF ORIGIN:	PRODUCT:
7-14-04	ARROW TRUCKING #4381	GREYBULL	GRANULAR

Note Our data for the above shipment shows the following test results.

Test or Property	Spec.	Result
Moisture(wt.%)	12 Max.	9.0
Swell	18 Min.	28
Filtrate Volume(mL)	18 Max.	13.6
+12	N/A	0.0
+20	N/A	0.3

Test or Property	Spec.	Result
+45	N/A	18.1
+70	N/A	41.5
+100	N/A	22.8
+200	N/A	15.7
PAN	N/A	1.6

This certifies that the product shipped to the location as stated above meets the requirements of ISO 9000:2000 standards and meets or exceeds M-I SWACO specifications. Should you have any questions or require additional information please let us know 1-307-765-4496.

Signed 7/15/2004 Date

Approved by: Plant Manager

LabanaCert.doc (4/22/97)
Rev E (9/99)

M-I SWACO

LABORATORY ANALYSIS CERTIFICATION

GP-101

(31)

GREYBULL PLANT

DATE TESTED 7/15/2004

SOLD TO:	SHIP TO:
INQUIP ASSOCIATES, INC. P O BOX 2182 SANTA BARBAR CA 93120 USA SALES ORDER #: HCIV008571	INQUIP ASSOCIATES, INC. 1416355509 5 RIVERVIEW AVE SAUGET IL 62206 USA

SHIPPING DATE:	RAILCAR OR TRUCK NUMBER:	PLANT OF ORIGIN:	PRODUCT:
7-15-04	ARROW #4012	GREYBULL	GRANULAR

Note Our data for the above shipment shows the following test results.

Test or Property	Spec.	Result
Moisture(wt.%)	12 Max.	9.2
Swell	18 Min.	21
Filtrate Volume(mL)	18 Max.	13.4
+12	N/A	0.0
+20	N/A	0.6

Test or Property	Spec.	Result
+45	N/A	22.9
+70	N/A	42.7
+100	N/A	18.5
+200	N/A	13.2
PAN	N/A	2.4

This certifies that the product shipped to the location as stated above meets the requirements of ISO 9000:2000 standards and meets or exceeds M-I SWACO specifications. Should you have any questions or require additional information please let us know 1-307-755-4496.

7/16/2004

Signed Date

Approved by: Plant Manager

LabanaCert.doc (4/22/97)
Rev E (9/98)

MI SWACO

LABORATORY ANALYSIS CERTIFICATION

GREYBULL PLANT

DATE TESTED 7/19/2004

SOLD TO:	SHIP TO:
INQUIP ASSOCIATES, INC. P O BOX 2182 SANTA BARBAR CA 93120 USA SALES ORDER #: HCIV 6578	INQUIP ASSOCIATES, INC. 141635509 5 RIVERVIEW AVE BAUGET IL 62206 USA

SHIPPING DATE:	RAILCAR OR TRUCK NUMBER:	PLANT OF ORIGIN:	PRODUCT ID:
07/19/2004	QUALITY #11	GREYBULL	GEL

Note Our data for the above shipment shows the following test results.

Test or Property	API Spec.	Result
Viscosity	30 min.	56
Plastic Viscosity (cP)	N/A	
Yield Point (# / 100 ft2)	N/A	
Filtrate Volume (cm3)	15.0 max.	13.0
> 75 micron (wt. %)	4.0 max.	2.0

Test or Property	API Spec.	Result
Moisture (wt. %)	N/A	7.8
Y.P. / P.V. Ratio	3.0 max.	1.50

This certifies that the product shipped to the location as stated above meets the requirements of A.P.I. Section 13A; Section 4 for "Drilling Grade Bentonite." Should you have any questions or require additional information please let us know 1-307-765-4496.

7/22/2004

Signed Date

Approved by: Plant Manager

LabanaCert.doc (4/22/97)

Rev E (9/99)

MI SWACO

LABORATORY ANALYSIS CERTIFICATION

6579 33

BULK 11 Bags

GREYBULL PLANT

DATE TESTED 7/20/2004

SOLD TO:	SHIP TO:
INQUIP ASSOCIATES, INC. P O BOX 2182 SANTA BARBAR CA 93120 USA SALES ORDER #: HCIV 6579	INQUIP ASSOCIATES, INC. 141635509 5 RIVERVIEW AVE SAUGET IL 62206 USA

SHIPPING DATE:	RAILCAR OR TRUCK NUMBER:	PLANT OF ORIGIN:	PRODUCT ID:
07/20/2004	ARROW #1088	GREYBULL	GEL

Note Our data for the above shipment shows the following test results.

Test or Property	API Spec.	Result
Viscosity	30 min.	56
Plastic Viscosity (cP)	N/A	
Yield Point (# / 100 ft2)	N/A	
Filtrate Volume (cm3)	15.0 max.	13.2
> 75 micron (wt. %)	4.0 max.	2.0

Test or Property	API Spec.	Result
Moisture (wt. %)	N/A	7.3
Y.P. / P.V. Ratio	3.0 max.	1.29

This certifies that the product shipped to the location as stated above meets the requirements of A.P.I. Section 13A; Section 4 for "Drilling Grade Bentonite." Should you have any questions or require additional information please let us know 1-307-765-4400.

7/22/2004

Signed Date

Approved by: Plant Manager

LebaneCert.doc (4/22/97)

Rev E (9/99)

MI SWACO

LABORATORY ANALYSIS CERTIFICATION

33 54

GREYBULL PLANT

DATE TESTED 7/20/2004

SOLD TO:	SHIP TO:
INQUIP ASSOCIATES, INC. P O BOX 2182 SANTA BARBAR CA 93120 USA SALES ORDER #: HCIV 6580	INQUIP ASSOCIATES, INC. 141635509 5 RIVERVIEW AVE SAUGET IL 62206 USA

SHIPPING DATE:	RAILCAR OR TRUCK NUMBER:	PLANT OF ORIGIN:	PRODUCT ID:
07/20/2004	ARROW #19568	GREYBULL	GEL

BAGS 11

Note Our data for the above shipment shows the following test results.

Test or Property	API Spec.	Result
Viscosity	30 min.	56
Plastic Viscosity (cP)	N/A	
Yield Point (# / 100 ft2)	N/A	
Filtrate Volume (cm3)	15.0 max.	13.2
> 75 micron (wt. %)	4.0 max.	2.0

Test or Property	API Spec.	Result
Moisture (wt. %)	N/A	7.3
Y.P. / P.V. Ratio	3.0 max.	1.29

This certifies that the product shipped to the location as stated above meets the requirements of A.P.I. Section 13A; Section 4 for "Drilling Grade Bentonite." Should you have any questions or require additional information please let us know 1-307-765-4496.

7/22/2004

Signed Date

Approved by: Plant Manager

LabansCert.doc (4/22/97)
Rev E (9/99)

GP-101

MI SWACO

LABORATORY ANALYSIS CERTIFICATION

Bulk Bags 11 55

GREYBULL PLANT

DATE TESTED 7/20/2004

SOLD TO:	SHIP TO:
INQUIP ASSOCIATES, INC. P O BOX 2182 SANTA BARBAR CA 93120 USA SALES ORDER #: HGIV 6581	INQUIP ASSOCIATES, INC. 141635509 5 RIVERVIEW AVE SAUGET IL 62206 USA

SHIPPING DATE:	RAILCAR OR TRUCK NUMBER:	PLANT OF ORIGIN:	PRODUCT ID:
07/21/2004	MONT TRANS #10	GREYBULL	GEL

Note Our data for the above shipment shows the following test results.

Test or Property	API Spec.	Result
Viscosity	30 min.	56
Plastic Viscosity (cP)	N/A	
Yield Point (# / 100 ft2)	N/A	
Filtrate Volume (cm3)	15.0 max.	13.2
> 75 micron (wt. %)	4.0 max.	2.0

Test or Property	API Spec.	Result
Moisture (wt. %)	N/A	7.3
Y.P. / P.V. Ratio	3.0 max.	1.29

This certifies that the product shipped to the location as stated above meets the requirements of A.P.I. Section 13A; Section 4 for "Drilling Grade Bentonite." Should you have any questions or require additional information please let us know 1-307-765-4496.

7/22/2004

Signed Date

Approved by: Plant Manager

LabanaCert.doc (4/22/97)
Rev E (9/99)

15 Bales

08/19/2004 THU 16:35 FAX 17034420188 INQUIP ASSOCIATES, INC. +++ SOLUTIA 001/001

Date: 7/23/04 Time: 1:47:24 AM

From: Bentonite Performance Mineral To: Jim Edwards

INQUIP ASSOCIATES

CERTIFICATE OF ANALYSIS 2004

PRODUCT: HARA-KADE 90

SHIPPED FROM: BPM MINERALS LLC
HCR 69, BOX 112
COLONY PLANT
BELLE FOURCHE, SO. DAK. 57717

TRUCK No.	LOAD DATE	LOT No.(S)	% MOIST 12 MAX	MESH %-200 67.5 MIN	AGED 600 30.0 MIN	AGED 300	P.V.	Y.P	YP/PV RATIO 3 MAX	FLUID LOSS 15 MAX
QUALITY 78-78A	07-21-04	1071941	9.7	77.0	34.0	24.5	9.5	15.0	1.58	11.6

YTD No. of TRUCKS		% MOIST 12 MAX	MESH %-200 67.5 MIN	AGED 600 30.0 MIN	AGED 300	P.V.	Y.P	YP/PV RATIO 3 MAX	FLUID LOSS 15 MAX
8	M AVG	10.00	76.69	36.50	26.00	10.50	15.50	1.49	11.58
	STD DEV	0.44	1.60	3.46	2.39	1.24	1.64	0.17	0.32

SOLD TO: INQUIP ASSOCIATES
P.O. BOX 6277
McLEAN, VA 22106-6277

ATTN: JIM EDWARDS
FAX: (703) 442-0188

SHIPPED TO: INQUIP ASSOCIATES
c/o W G Yates & Sons Construction
317 Children Rd.
Pearl, MS 39208

CC: B. AKERS
FILE

Q.A. SUPERVISOR
Alan Hardison
07/23/04

Prepared by: ash

96

MI SWACO

LABORATORY ANALYSIS CERTIFICATION

GP-101

3637

GREYBULL PLANT

DATE TESTED 7/26/2004

11 BLS

SOLD TO:	SHIP TO:
INQUIP ASSOCIATES, INC. P O BOX 2182 SANTA BARBARA CA 93120 USA HCIV 6598 SALES ORDER #: HCIV 6598	INQUIP ASSOCIATES, INC. 141635509 5 RIVERVIEW AVE SAUGET IL 62206 USA

SHIPPING DATE:	RAILCAR OR TRUCK NUMBER:	PLANT OF ORIGIN:	PRODUCT:
07/26/2004	Mont Trans #5	GREYBULL	GRANULAR

Note Our data for the above shipment shows the following test results.

Test or Property	Spec.	Result
Moisture(wt.%)	12 Max.	9.2
Swell	18 Min.	25
Filtrate Volume(mL)	18 Max.	13.6
+12	N/A	0.0
+20	N/A	0.8

Test or Property	Spec.	Result
+45	N/A	34.6
+70	N/A	26.4
+100	N/A	21.2
+200	N/A	12.8
PAN	N/A	2.6

This certifies that the product shipped to the location as stated above meets the requirements of ISO 9000:2000 standards and meets or exceeds M-I SWACO specifications. Should you have any questions or require additional information please let us know 1-307-765-4496.

7/28/2004

Signed Date

Approved by: Plant Manager

LabanaCert.doc (4/22/97)
Rev E (9/99)

MI SWACO

LABORATORY ANALYSIS CERTIFICATION

GP-101

3B

GREYBULL PLANT

DATE TESTED 7/26/2004

SOLD TO:	SHIP TO:
INQUIP ASSOCIATES, INC. P O BOX 2182 SANTA BARBAR CA 93120 USA HCIV 6599 SALES ORDER #: HCIV 6599	INQUIP ASSOCIATES, INC. 141635509 5 RIVERVIEW AVE SAUGET IL 62206 USA

SHIPPING DATE:	RAILCAR OR TRUCK NUMBER:	PLANT OF ORIGIN:	PRODUCT:
07/27/2004	Mont Trans #12	GREYBULL	GRANULAR

Note Our data for the above shipment shows the following test results.

Test or Property	Spec.	Result
Moisture(wt.%)	12 Max.	9.2
Swell	18 Min.	25
Filtrate Volume(mL)	18 Max.	13.6
+12	N/A	0.0
+20	N/A	0.8

Test or Property	Spec.	Result
+45	N/A	34.6
+70	N/A	26.4
+100	N/A	21.2
+200	N/A	12.8
PAN	N/A	2.6

This certifies that the product shipped to the location as stated above meets the requirements of ISO 9000:2000 standards and meets or exceeds M-I SWACO specifications. Should you have any questions or require additional information please let us know 1-307-765-4496.

7/28/2004

Signed Date

Approved by: Plant Manager

LabsnaCert.doc (4/22/97)

Rev E (9/99)

MI SWACO

LABORATORY ANALYSIS CERTIFICATION

GP-101

35

GREYBULL PLANT

DATE TESTED 7/26/2004

SOLD TO:	SHIP TO:
INQUIP ASSOCIATES, INC. P O BOX 2182 SANTA BARBAR CA 93120 USA HCIV 6600 SALES ORDER #: HCIV 6600	INQUIP ASSOCIATES, INC. 141635509 5 RIVERVIEW AVE SAUGET IL 62206 USA

11 BAGS

SHIPPING DATE:	RAILCAR OR TRUCK NUMBER:	PLANT OF ORIGIN:	PRODUCT:
07/27/2004	Mont Trans #10	GREYBULL	GRANULAR

Note Our data for the above shipment shows the following test results.

Test or Property	Spec.	Result
Moisture(wt.%)	12 Max.	9.2
Swell	18 Min.	25
Filtrate Volume(mL)	18 Max.	13.6
+12	N/A	0.0
+20	N/A	0.8

Test or Property	Spec.	Result
+45	N/A	34.6
+70	N/A	26.4
+100	N/A	21.2
+200	N/A	12.8
PAN	N/A	2.6

This certifies that the product shipped to the location as stated above meets the requirements of ISO 9000:2000 standards and meets or exceeds M-I SWACO specifications. Should you have any questions or require additional information please let us know 1-307-765-4406.

7/28/2004

Signed Date

Approved by: Plant Manager

LebanaCert.doc (4/22/97)
Rev E (9/99)

GP-101

LABORATORY ANALYSIS CERTIFICATION

GREYBULL PLANT

DATE TESTED 7/26/2004

SOLD TO:	SHIP TO:
INQUIP ASSOCIATES, INC. P O BOX 2182 SANTA BARBAR CA 93120 USA HCIV 6601 SALES ORDER #: HCIV 6601	INQUIP ASSOCIATES, INC. 141635509 5 RIVERVIEW AVE SAUGET IL 62206 USA

SHIPPING DATE:	RAILCAR OR TRUCK NUMBER:	PLANT OF ORIGIN:	PRODUCT:
07/27/2004	Quality #60	GREYBULL	GRANULAR

Note Our data for the above shipment shows the following test results.

Test or Property	Spec.	Result
Moisture(wt.%)	12 Max.	9.2
Swell	18 Min.	25
Filtrate Volume(mL)	18 Max.	13.6
+12	N/A	0.0
+20	N/A	0.8

Test or Property	Spec.	Result
+45	N/A	34.6
+70	N/A	26.4
+100	N/A	21.2
+200	N/A	12.8
PAN	N/A	2.6

This certifies that the product shipped to the location as stated above meets the requirements of ISO 9000:2000 standards and meets or exceeds M-I SWACO specifications. Should you have any questions or require additional information please let us know 1-307-765-4406.

7/26/2004

Signed Date

Approved by: Plant Manager

LabaraCert.doc (4/22/97)
Rev E (9/99)

MI SWACO LABORATORY ANALYSIS CERTIFICATION

GM-101

41

GREYBULL PLANT

DATE TESTED 5/17/2004

SOLD TO:	SHIP TO:
INQUIP ASSOCIATES, INC. P O BOX 2182 SANTA BARBAR CA 93120 USA HCIV 66054 SALES ORDER #: HCIV066054	INQUIP ASSOCIATES, INC. 141635509 5 RIVERVIEW AVE SAUGET IL 62206 USA

12 Bags

SHIPPING DATE:	RAILCAR OR TRUCK NUMBER:	PLANT OF ORIGIN:	PRODUCT:
1-17-04	QUALITY #88	GREYBULL	GRANULAR

Note Our data for the above shipment shows the following test results.

Test or Property	Spec.	Result
Moisture(wt.%)	12 Max.	10.8
Swell	18 Min.	23
Filtrate Volume(mL)	18 Max.	14.6
+12	N/A	0.0
+20	N/A	0.0

Test or Property	Spec.	Result
+45	N/A	10.7
+70	N/A	27.7
+100	N/A	22.7
+200	N/A	28.1
PAN	N/A	11.0

This certifies that the product shipped to the location as stated above meets the requirements of ISO 9000:2000 standards and meets or exceeds M-I SWACO specifications. Should you have any questions or require additional information please let us know 1-307-758-4490.

5/18/2004

Signed Date

Approved by: Plant Manager

LabansCert.doc (4/22/97)
Rev E (9/99)

CERTIFICATION

GREYBULL PLANT

DATE TESTED 8/16/2004

SOLD TO:	SHIP TO:
INQUIP ASSOCIATES, INC. PO BOX 2182 SANTA BARBAR CA 93120 USA HCIV 66555 SALES ORDER #: HCIV006555	INQUIP ASSOCIATES, INC. 141635909 5 RIVERVIEW AVE SAUGET IL 62206 USA

SHIPPING DATE:	RAILCAR OR TRUCK NUMBER:	PLANT OF ORIGIN:	PRODUCT:
8-18-04	ARROW 81124	GREYBULL	GRANULAR

Note: Our data for the above shipment shows the following test results.

Test or Property	Spec.	Result
Moisture(wt.%)	12 Max.	11.3
Swell	18 Min.	24
Filtrate Volume(mL)	18 Max.	14.2
+12	N/A	0.0
+20	N/A	0.8

Test or Property	Spec.	Result
+45	N/A	43.2
+70	N/A	45.8
+100	N/A	6.4
+200	N/A	2.1
PAN	N/A	1.8

This certifies that the product shipped to the location as stated above meets the requirements of ISO 9000:2000 standards and meets or exceeds M-I SWACO specifications. Should you have any questions or require additional information please let us know 1-307-765-4498.

8/19/2004

Signed Date

Approved by: Plant Manager

LabansCert.doc (4/22/97)
Rev E (9/99)

08/19/2004 THU 16:35 / FAX 17034420188 INQUIP ASSOCIATES, INC. +++ SOLUTIA 001/001
From: Bentonite Performance Mineral To: Jim Edwards Date: 7/23/04 Time: 1:47:34 AM

14
PAGES

INQUIP ASSOCIATES

CERTIFICATE OF ANALYSIS 2004

PRODUCT: BARA-KADE 90

SHIPPED FROM: BPM MINERALS LLC
HCR 69, BOX 112
COLONY PLANT
BELLE FOURCHE, SO. DAK. 57717

TRUCK No.	LOAD DATE	LOT No.(S)	% MOIST 12 MAX	MESH % 200 67.5 MIN	AGED 600 30.0 MIN	AGED 300	P.V.	Y.P	YP/PV RATIO 3 MAX	FLUID LOSS 15 MAX
QUALITY 78-78A	07-21-04	1071941	9.7	77.0	34.0	24.5	9.5	15.0	1.58	13.6

YTD No. of TRUCKS		% MOIST 12 MAX	MESH % 200 67.5 MIN	AGED 600 30.0 MIN	AGED 300	P.V.	Y.P	YP/PV RATIO 3 MAX	FLUID LOSS 15 MAX
8	M AVG	10.80	76.69	36.50	26.09	10.59	15.50	1.49	13.58
	STD DEV	0.44	1.60	3.46	2.39	1.14	1.64	0.17	0.32

SOLD TO: INQUIP ASSOCIATES
P.O. BOX 6277
McLEAN, VA 22106-6277

ATTN: JIM EDWARDS
FAX: (703) 442-0118

SHIPPED TO: INQUIP ASSOCIATES
c/o W G Yates & Sons Construction
317 Children Rd.
Pearl, MS 39208

CC: B. AKERS
FILE

Q.A. SUPERVISOR
Alan Hardison
07/23/04

Prepared by: mh

GP-101

MI SWACO LABORATORY ANALYSIS CERTIFICATION

GREYBULL PLANT

DATE TESTED 8/17/2004

SOLD TO:	SHIP TO:
INQUIP ASSOCIATES, INC. P O BOX 2182 SANTA BARBAR CA 93120 USA HCIV 66656 SALES ORDER #: HCIV 6656	INQUIP ASSOCIATES, INC. 141635509 5 RIVERVIEW AVE SAUGET IL 62206 USA

SHIPPING DATE:	RAILCAR OR TRUCK NUMBER:	PLANT OF ORIGIN:	PRODUCT:
08/20/2004	Mont Trans #12	GREYBULL	GRANULAR

Note Our data for the above shipment shows the following test results.

Test or Property	Spec.	Result
Moisture(wt.%)	12 Max.	11.6
Swell	15 Min.	25
Filtrate Volume(mL)	18 Max.	14.2
+12	N/A	0.0
+20	N/A	2.2

Test or Property	Spec.	Result
+45	N/A	28.2
+70	N/A	35.3
+100	N/A	17.8
+200	N/A	14.5
PAN	N/A	2.0

This certifies that the product shipped to the location as stated above meets the requirements of ISO 9000:2000 standards and meets or exceeds M-I SWACO specifications. Should you have any questions or require additional information please let us know 1-307-765-4496.

8/24/2004

Signed Date

Approved by: Plant Manager

LabsmCert.doc (4/22/97)
Rev E (9/99)

MI SWACO

LABORATORY ANALYSIS CERTIFICATION

45

GREYBULL PLANT

DATE TESTED 8/16/2004

SOLD TO:	SHIP TO:
INQUIP ASSOCIATES, INC. P O BOX 2182 SANTA BARBAR CA 93120 USA HCIV 66688 SALES ORDER #: HCIV006688	INQUIP ASSOCIATES, INC. 141635509 5 RIVERVIEW AVE SAUGET IL 62206 USA

11 Bags

SHIPPING DATE:	RAILCAR OR TRUCK NUMBER:	PLANT OF ORIGIN:	PRODUCT:
8-31-04	MONT TRANS #2606	GREYBULL	GRANULAR

Note Our data for the above shipment shows the following test results.

Test or Property	Spec.	Result
Moisture(wt.%)	12 Max.	11.2
Swell	18 Min.	24
Filtrate Volume(mL)	18 Max.	14.2
+12	N/A	0.0
+20	N/A	0.8

Test or Property	Spec.	Result
+45	N/A	43.2
+70	N/A	45.8
+100	N/A	6.4
+200	N/A	2.1
PAN	N/A	1.8

This certifies that the product shipped to the location as stated above meets the requirements of ISO 9000:2000 standards and meets or exceeds M-I SWACO specifications. Should you have any questions or require additional information please let us know 1-307-785-4496.

Signed 9/1/2004 Date

Approved by: Plant Manager

LabanaCert.doc (4/22/97)
Rev E (9/99)

MI SWACO

LABORATORY ANALYSIS CERTIFICATION

GP-101

46

GREYBULL PLANT

DATE TESTED 8/20/2004

SOLD TO:	SHIP TO:
INQUIP ASSOCIATES, INC. P O BOX 2182 SANTA BARBAR CA 93120 USA HCIV 66689 SALES ORDER #: HCIV000689	INQUIP ASSOCIATES, INC. 141635509 5 RIVERVIEW AVE SALIGET IL 62206 USA

12 PAGES

SHIPPING DATE:	RAILCAR OR TRUCK NUMBER:	PLANT OF ORIGIN:	PRODUCT:
8-30-04	QUALITY 674	GREYBULL	GRANULAR

Note Our data for the above shipment shows the following test results.

Test or Property	Spec.	Result
Moisture(wt.%)	12 Max.	9.0
Swell	18 Min.	27
Filtrate Volume(mL)	18 Max.	12.8
+12	N/A	0.0
+20	N/A	0.9

Test or Property	Spec.	Result
+45	N/A	26.9
+70	N/A	38.4
+100	N/A	17.9
+200	N/A	13.5
PAN	N/A	3.2

This certifies that the product shipped to the location as stated above meets the requirements of ISO 9001:2000 standards and meets or exceeds M-I SWACO specifications. Should you have any questions or require additional information please let us know 1-307-765-4496.

8/31/2004

Signed Date

Approved by: Plant Manager

LabansCert.doc (4/22/97)
Rev E (9/99)

GP-101

47

MI SWACO

LABORATORY ANALYSIS CERTIFICATION

GREYBULL PLANT

DATE TESTED 9/27/2004

SOLD TO:	SHIP TO:
INQUIP ASSOCIATES, INC. P O BOX 2182 SANTA BARBAR CA 93120 USA HCIV6726 SALES ORDER #: HCIV006726	INQUIP ASSOCIATES, INC. 141635509 5 RIVERVIEW AVE SAUGET IL 62206 USA

SHIPPING DATE:	RAILCAR OR TRUCK NUMBER:	PLANT OF ORIGIN:	PRODUCT:
9-24-04	MONT TRANS #842	GREYBULL	GRANULAR

Note Our data for the above shipment shows the following test results.

Test or Property	Spec.	Result
Moisture(wt.%)	12 Max.	11.8
Swell	18 Min	24
Filtrate Volume(mL)	18 Max.	15.2
+12	N/A	69.7
+20	N/A	29.6

Test or Property	Spec.	Result
+45	N/A	0.4
+70	N/A	0.0
+100	N/A	0.0
+200	N/A	0.0
PAN	N/A	0.2

This certifies that the product shipped to the location as stated above meets the requirements of ISO 9000:2000 standards and meets or exceeds M-I SWACO specifications. Should you have any questions or require additional information please let us know 1-307-765-4496.

Signed 10/1/2004 Date

Approved by: Plant Manager

LabanaCert.doc (4/22/97)
Rev E (9/99)

GP-101

MI SWACO LABORATORY ANALYSIS CERTIFICATION

GREYBULL PLANT

DATE TESTED 9/27/2004

SOLD TO:	SHIP TO:
INQUIP ASSOCIATES, INC. P O BOX 2182 SANTA BARBAR CA 93120 USA SALES ORDER #: HCIV006727	INQUIP ASSOCIATES, INC. 141633509 5 RIVERVIEW AVE SAUGET IL 62206 USA

HCIV 6727

SHIPPING DATE:	RAILCAR OR TRUCK NUMBER:	PLANT OF ORIGIN:	PRODUCT:
9-28-04	MONT TRANS #5	GREYBULL	GRANULAR

Note Our data for the above shipment shows the following test results.

Test or Property	Spec.	Result
Moisture(wt.%)	12 Max.	10.4
Swell	18 Min	22
Filtrate Volume(mL)	18 Max.	15.0
+12	N/A	66.2
+20	N/A	32.4

Test or Property	Spec.	Result
+45	N/A	0.8
+70	N/A	0.0
+100	N/A	0.0
+200	N/A	0.0
PAN	N/A	0.2

This certifies that the product shipped to the location as stated above meets the requirements of ISO 9001:2000 standards and meets or exceeds M-I SWACO specifications. Should you have any questions or require additional information please let us know 1-307-765-4486.

10/1/2004

Signed Date

Approved by: Plant Manager

LabansCert.doc (4/22/97)
Rev E (9/99)

GP-101

49

MI SWACO

LABORATORY ANALYSIS CERTIFICATION

GREYBULL PLANT

DATE TESTED 9/28/2004

SOLD TO:	SHIP TO:
INQUIP ASSOCIATES, INC. P O BOX 2182 SANTA BARBAR CA 93120 USA HCIV6728 SALES ORDER #: HCIV006728	INQUIP ASSOCIATES, INC. 141635509 5 RIVERVIEW AVE SAUGET IL 62206 USA

SHIPPING DATE:	RAILCAR OR TRUCK NUMBER:	PLANT OF ORIGIN:	PRODUCT:
9-29-04	DELTA SOUTHERN #478	GREYBULL	GRANULAR

Note Our data for the above shipment shows the following test results.

Test or Property	Spec.	Result	Test or Property	Spec.	Result
Moisture(wt.%)	12 Max.	8.6	+45	N/A	17.2
Swell	18 Min.	23	+70	N/A	0.0
Filtrate Volume(mL)	18 Max.	15.6	+100	N/A	0.0
+12	N/A	27.3	+200	N/A	0.0
+20	N/A	55.1	PAN	N/A	0.2

This certifies that the product shipped to the location as stated above meets the requirements of ISO 9000:2000 standards and meets or exceeds M-I SWACO specifications. Should you have any questions or require additional information please let us know 1-307-765-4488

Signed 10/1/2004 Date

Approved by: Plant Manager

LabansCert.doc (4/22/97)
Rev E (9/99)

GP-101

M-I SWACO LABORATORY ANALYSIS CERTIFICATION

GREYBULL PLANT

DATE TESTED 9/28/2004

SOLD TO:	SHIP TO:
INQUIP ASSOCIATES, INC. P O BOX 2182 SANTA BARBAR CA 93120 USA SALES ORDER #: HCIV006729	INQUIP ASSOCIATES, INC. 141635509 5 RIVERVIEW AVE SAUGET IL 62206 USA

HCIV 6729

SHIPPING DATE:	RAILCAR OR TRUCK NUMBER:	PLANT OF ORIGIN:	PRODUCT:
9-29-04	QUALITY #17	GREYBULL	GRANULAR

Note Our data for the above shipment shows the following test results.

Test or Property	Spec.	Result
Moisture(wt.%)	12 Max.	8.6
Swell	18 Min.	23
Filtrate Volume(mL)	16 Max.	15.6
+12	N/A	27.3
+20	N/A	55.1

Test or Property	Spec.	Result
+45	N/A	17.2
+70	N/A	0.0
+100	N/A	0.0
+200	N/A	0.0
PAN	N/A	0.2

This certifies that the product shipped to the location as stated above meets the requirements of ISO 9000:2000 standards and meets or exceeds M-I SWACO specifications. Should you have any questions or require additional information please let us know 1-307-765-4446

10/1/2004

Signed Date

Approved by: Plant Manager

LabansCert.doc (4/22/97)
Rev E (9/09)

M-I SWACO LABORATORY ANALYSIS CERTIFICATION

GP-101

51

GREYBULL PLANT

DATE TESTED 9/28/2004

SOLD TO:	SHIP TO:
INQUIP ASSOCIATES, INC.	INQUIP ASSOCIATES, INC.
P O BOX 2152	141625309
	5 RIVERVIEW AVE
SANTA BARBAR CA 93120	SAUGET IL 62206
USA	USA
SALES ORDER #: HCIV006730	

HCIV6730

SHIPPING DATE:	RAILCAR OR TRUCK NUMBER:	PLANT OF ORIGIN:	PRODUCT:
10-4-04	REISG 6180	GREYBULL	GRANULAR

Note Our data for the above shipment shows the following test results.

Test or Property	Spec.	Result
Moisture(wt.%)	12 Max.	9.6
Swell	16 Min.	24
Fibrate Volume(mL)	18 Max.	14.5
+12	N/A	0.0
+20	N/A	2.3

Test or Property	Spec.	Result
+45	N/A	28.3
+70	N/A	30.0
+100	N/A	20.0
+200	N/A	15.5
PAN	N/A	3.8

This certifies that the product shipped to the location as stated above meets the requirements of ISO 9000:2000 standards and meets or exceeds M-I SWACO specifications. Should you have any questions or require additional information please let us know 1-307-786-4400.

10/8/2004

Signed Date

Approved by: Plant Manager

LebanaCert.doc (4/22/97)
Rev E (9/99)

52

M-I SWACO LABORATORY ANALYSIS CERTIFICATION

GREYBULL PLANT

DATE TESTED 9/29/2004

SOLD TO:	SHIP TO:
INQUIP ASSOCIATES, INC. P O BOX 2182 SANTA BARBAR CA 93120 USA HCIV 6731 SALES ORDER #: HCIV006731	INQUIP ASSOCIATES, INC. 141635909 5 RIVERVIEW AVE SAUGET IL 62206 USA

SHIPPING DATE:	RAILCAR OR TRUCK NUMBER:	PLANT OF ORIGIN:	PRODUCT:
10-1-04	MINOT BLDRS #78	GREYBULL	GRANULAR

Note our data for the above shipment shows the following test results.

Test or Property	Spec.	Result
Moisture(wt.%)	12 Max.	8.6
Swell	18 Min	24
Filtrate Volume(mL)	18 Max.	14.6
+12	N/A	0.0
+20	N/A	2.3

Test or Property	Spec.	Result
+45	N/A	28.3
+70	N/A	30.0
+100	N/A	20.0
+200	N/A	15.5
PAN	N/A	3.8

This certifies that the product shipped to the location as stated above meets the requirements of ISO 9001:2000 standards and meets or exceeds M-I SWACO specifications. Should you have any questions or require additional information please let us know 1-307-765-4496.

10/4/2004

Signed Date

Approved by: Plant Manager

LabsnaCert.doc (4/22/97)
Rev E (9/99)

MI SWACO

LABORATORY ANALYSIS CERTIFICATION

GP-101

53

HCIV 6735

GREYBULL PLANT

DATE TESTED 7/23/2004

SOLD TO:	SHIP TO:
INQUIP ASSOCIATES, INC. P O BOX 2182 SANTA BARBARA CA 93120 USA SALES ORDER #: HCIV006735	INQUIP ASSOCIATES, INC. 141635509 5 RIVERVIEW AVE SAUGET IL 62206 USA

SHIPPING DATE:	RAILCAR OR TRUCK NUMBER:	PLANT OF ORIGIN:	PRODUCT ID:
09-25-04	Pacer (not JH Walker)	GREYBULL	GEL

3 Bags

Note Our data for the above shipment shows the following test results.

Test or Property	API Spec.	Result
Viscosity	30 min.	50
Plastic Viscosity (cP)	N/A	
Yield Point (# / 100 ft2)	N/A	
Filtrate Volume (cm3)	15.0 max.	14.0
> 75 micron (wt. %)	4.0 max.	1.9

Test or Property	API Spec.	Result
Moisture (wt. %)	N/A	7.9
Y.P. / P.V. Ratio	3.0 max.	1.57

This certifies that the product shipped to the location as stated above meets the requirements of A.P.I. Section 13A; Section 9 for "Drilling Grade Bentonite." Should you have any questions or require additional information please let us know 1-307-765-4498.

9/28/2004

Signed Date

Approved by: Plant Manager

LabanaCert.doc (4/22/97)
Rev E (9/99)

MI SWACO

LABORATORY ANALYSIS CERTIFICATION

HCIV 6737

GREYBULL PLANT

DATE TESTED 7/26/2004

SOLD TO:	SHIP TO:
INQUIP ASSOCIATES, INC. P O BOX 2182 SANTA BARBARA CA 93120 USA SALES ORDER #: HCIV006737	INQUIP ASSOCIATES, INC. 141635509 5 RIVERVIEW AVE SAUGET IL 62206 USA

SHIPPING DATE:	RAILCAR OR TRUCK NUMBER:	PLANT OF ORIGIN:	PRODUCT ID:
09-27-04	PACER 6081	GREYBULL	GEL

Note Our data for the above shipment shows the following test results.

Test or Property	API Spec.	Result
Viscosity	30 min.	56
Plastic Viscosity (cP)	N/A	
Yield Point (# / 100 ft2)	N/A	
Filtrate Volume (cm3)	15.0 max.	14.0
> 75 micron (wt. %)	4.0 max.	1.7

Test or Property	API Spec.	Result
Moisture (wt. %)	N/A	7.6
Y.P. / P.V. Ratio	3.0 max.	2.00

This certifies that the product shipped to the location as stated above meets the requirements of A.P.I. Section 13A; Section 9 for "Drilling Grade Bentonite." Should you have any questions or require additional information please let us know 1-307-765-4498.

9/28/2004

Signed Date

Approved by: Plant Manager

LabanaCert.doc (4/22/97)
Rev E (9/99)

MI SWACO

LABORATORY ANALYSIS CERTIFICATION

GP-101

55

GREYBULL PLANT

DATE TESTED 9/30/2004

SOLD TO:	SHIP TO:
INQUIP ASSOCIATES, INC. P O BOX 2182 SANTA BARBAR CA 93120 USA HCIV66767 SALES ORDER #: HCIV006767	INQUIP ASSOCIATES, INC. 141635509 5 RIVERVIEW AVE SAUGET IL 62206 USA

SHIPPING DATE:	RAILCAR OR TRUCK NUMBER:	PLANT OF ORIGIN:	PRODUCT:
10-29-04	ARROW #1037	GREYBULL	GRANULAR

Note Our data for the above shipment shows the following test results.

Test or Property	Spec.	Result	Test or Property	Spec.	Result
Moisture(wt.%)	12 Max.	11.4	+45	N/A	12.2
Swell	18 Min.	24	+70	N/A	25.8
Filtrate Volume(mL)	16 Max.	15.8	+100	N/A	26.1
+12	N/A	0.0	+200	N/A	26.4
+20	N/A	1.1	PAN	N/A	7.9

This certifies that the product shipped to the location as stated above meets the requirements of ISO 9000:2000 standards and meets or exceeds M-I SWACO specifications. Should you have any questions or require additional information please let us know 1-307-765-4466

11/2/2004

Signed Date

Approved by: Plant Manager

LabanaCert.doc (4/22/97)
Rev E (9/99)

MI SWACO

LABORATORY ANALYSIS CERTIFICATION

GP-101

56

GREYBULL PLANT

DATE TESTED 9/30/2004

SOLD TO:	SHIP TO:
INQUIP ASSOCIATES, INC. P O BOX 2182 SANTA BARBAR CA 93120 USA HCIV 67669 SALES ORDER #: HCIV006769	INQUIP ASSOCIATES, INC. 141639509 5 RIVERVIEW AVE SAUGET IL 62206 USA

SHIPPING DATE:	RAILCAR OR TRUCK NUMBER:	PLANT OF ORIGIN:	PRODUCT:
10-29-04	ARROW #4092	GREYBULL	GRANULAR

Note Our data for the above shipment shows the following test results.

Test or Property	Spec.	Result	Test or Property	Spec.	Result
Moisture(wt.%)	12 Max.	10.6	+45	N/A	17.1
Swell	18 Min.	23	+70	N/A	26.4
Filtrate Volume(mL)	18 Max.	15.4	+100	N/A	23.3
+12	N/A	0.0	+200	N/A	17.3
+20	N/A	1.7	PAN	N/A	4.1

This certifies that the product shipped to the location as stated above meets the requirements of ISO 9001:2000 standards and meets or exceeds M-I SWACO specifications. Should you have any questions or require additional information please let us know 1-307-765-4495.

11/1/2004

Signed Date

Approved by: Plant Manager

LabanaCert.doc (4/22/97)
Rev E (9/99)

RECEIVED
APR 1 3 2004

LABORATORY ANALYSIS CERTIFICATION

GP-101

GREYBULL PLANT

DATE TESTED 7/24/2002

SOLD TO:	SHIP TO:
INQUIP ASSOCIATES, INC. P O BOX 2182 SANTA BARBARA CA 93120 USA SALES ORDER #: HCIV 4790	INQUIP ASSOCIATES, INC. 141635509 5 RIVERVIEW AVE SAUGET IL 62206 USA

SHIPPING DATE:	RAILCAR OR TRUCK NUMBER:	PLANT OF ORIGIN:	PRODUCT ID:
7/25/02	BN 286031	GREYBULL	GEL

Note Our data for the above shipment shows the following test results.

Test or Property	API Spec.	Result
Viscosity	30 min.	35
Plastic Viscosity (cP)	N/A	
Yield Point (# / 100 ft2)	N/A	
Filtrate Volume (cm3)	15.0 max.	13.0
> 75 micron (wt. %)	4.0 max.	1.1

Test or Property	API Spec.	Result
Moisture (wt. %)	N/A	7.7
Y.P. / P.V. Ratio	3.0 max.	0.69

This certifies that the product shipped to the location as stated above meets the requirements of A.P.I. Section 13A; Section 4 for "Drilling Grade Bentonite." Should you have any questions or require additional information please let us know 1-307-765-4496.

Debra Massey 4/12/04
Signed Date

Approved by: Plant Manager

LabanaCert.doc (4/22/97)
Rev E (9/99)

CERTS
THESE TWO ARE
FOR 3 TRAILER LOADS
OF BULK BAGS FROM
INQUIPS YARD.

RECEIVED
APR 1 3 2004

LABORATORY ANALYSIS CERTIFICATION

GP-101

GREYBULL PLANT

DATE TESTED 7/26/2002

SOLD TO:	SHIP TO:
INQUIP ASSOCIATES, INC. P O BOX 2182 SANTA BARBARA CA 93120 USA SALES ORDER #: HCIV 4782	INQUIP ASSOCIATES, INC. 141635509 5 RIVERVIEW AVE SAUGET IL 62206 USA

SHIPPING DATE:	RAILCAR OR TRUCK NUMBER:	PLANT OF ORIGIN:	PRODUCT ID:
07/26/02	BN 296270	GREYBULL	GEL

Note Our data for the above shipment shows the following test results.

Test or Property	API Spec.	Result
Viscosity	30 min.	41
Plastic Viscosity (cP)	N/A	
Yield Point (# / 100 ft2)	N/A	
Filtrate Volume (cm3)	15.0 max.	13.8
> 75 micron (wt. %)	4.0 max.	0.8

Test or Property	API Spec.	Result
Moisture (wt. %)	N/A	7.2
Y.P. / P.V. Ratio	3.0 max.	1.42

This certifies that the product shipped to the location as stated above meets the requirements of A.P.I. Section 13A; Section 4 for "Drilling Grade Bentonite." Should you have any questions or require additional information please let us know 1-307-765-4496.

Debra Massey 4/12/04
Signed Date

Approved by: Plant Manager

LabansCert.doc (4/22/97)
Rev E (9/99)

Bulk Bentonite (Railcar and Tractor Trailers) Shipped To Solutia From Federal

Page #	Sales Order	Order Date	Ship Trailer No.	Ship Date	Ship Quantity Tons	Delivered Tons
1	HCIV005609	08/08/2003	BNSF 422962	08/12/2003	99.48	80.29
2	5610	08/08/2003	BN 446365	08/13/2003	98.53	94.24
3	5670	08/19/2003	L W Miller 1002	08/21/2003	24.38	24.38
4	5671	08/19/2003	LW Miller 557	08/22/2003	25.61	25.61
5	5675	08/20/2003	BNSF 420569	08/26/2003	97.28	87.74
6	5676	08/20/2003	BNSF 422500	08/27/2003	99.98	99.98
7	5677	08/20/2003	BNSF 422745	08/28/2003	97.1	87.64
8	5681	08/26/2003	BNSF 420553	08/26/2003	24.17	24.17
9	5682	08/26/2003	BNSF 423872	08/28/2003	24.88	24.88
10	5683	08/26/2003	LW Miller 903	08/29/2003	24.21	24.21
11	5755	09/12/2003	BN 447454	09/17/2003	97.4	87.97
12	5756	09/12/2003	BN 458785	09/17/2003	99.45	97.47
13	5816	10/01/2003	BNSF 424151	10/07/2003	96.98	96.23
14	5817	10/01/2003	BN 453151	10/07/2003	95.98	92.80
15	5825	10/06/2003	BN 453996	10/09/2003	99.7	103.35
16	5826	10/06/2003	BN 45050	10/09/2003	96.35	93.75
17	5828	10/08/2003	BN 455952	10/09/2003	24.74	24.74
18	5829	10/08/2003	BNSF 422680	10/10/2003	24.99	24.99
19	5833	10/14/2003	BNSF 422214	10/20/2003	95.38	92.21
20	5834	10/14/2003	BN 449966	10/20/2003	99.2	120.01
21	5860	10/21/2003	BNSF 422788	10/23/2003	95.83	93.59
22	5861	10/21/2003	BNSF 425107	10/23/2003	98.45	95.23
23	5869	10/28/2003	BNSF 425008	11/03/2003	95.63	87.39
24	5902	11/03/2003	ATSF 314569	11/06/2003	98.68	85.95
25	5937	11/11/2003	ATSF 314777	11/17/2003	99.3	82.59
26	5971	11/18/2003	BN 453102	11/20/2003	97.08	94.82
27	5972	11/18/2003	ATSF 314863	11/20/2003	95.03	103.67
28	5981	11/21/2003	BN 453832	12/02/2003	96.33	81.47
29	6018	12/01/2003	ASTF 314195	12/05/2003	100.65	120.31
30	6019	12/01/2003	BN 458706	12/06/2003	97.88	97.44
31	6020	12/01/2003	BNSF 424509	12/02/2003	99.38	101.07
32	6287	04/15/2004	BNSF 422603	04/16/2004	96.15	97.88
33	6289	04/16/2004	Mercedes #559	04/21/2004	24.43	24.43
34	6290	04/16/2004	LW Miller #562	04/22/2004	24.28	24.28
35	6291	04/16/2004	LW Miller #1021	04/26/2004	24.54	24.54
36	6307	04/19/2004	BN 458581	04/20/2004	99.55	71.12
37	6308	04/19/2004	BNSF 425008	04/27/2004	99.38	114.49
38	6353	05/13/2004	9059	05/14/2004	24.59	24.59
39	6542	07/01/2004	BNSF 423160	07/06/2004	24.56	24.56
40	6543	07/01/2004	BN 446343	07/02/2004	24.56	24.56
41	6544	07/01/2004	BNSF 425326	07/03/2004	24.49	24.49
42	6545	07/01/2004	LW Miller 575	07/14/2004	25	25.00
43	6546	07/01/2004	ATSF 314786	07/09/2004	100.35	97.38
44	6547	07/01/2004	ATSF 313813	07/15/2004	95.83	82.63
45	6553	07/01/2004	ATSF 314491	07/15/2004	99.58	97.48
46	6561	07/12/2004	BNSF 425019	07/13/2004	24.59	24.59
47	6562	07/12/2004	BNSF 422447	07/13/2004	24.26	24.26
48	6563	07/12/2004	BNSF 422449	07/15/2004	24.91	24.91
49	6564	07/12/2004	MCCORKLE #1800 ?	07/15/2004	25.56	25.56

Bulk Bentonite (Railcar and Tractor Trailers) Shipped To Solutia From Federal

50	6623	08/02/2004	BNSF 422605	08/07/2004	99.05	90.96
51	6624	08/02/2004	ATSF314438	08/09/2004	99.68	93.45
52	6625	08/02/2004	ATSF314037	08/09/2004	98.48	93.83
53	6626	08/02/2004	McCorkle #1830	08/02/2004	24.35	24.35
54	6627	08/02/2004	Mercedes #563	08/05/2004	23.8	23.8
55	6628	08/02/2004	Mission Petro.	08/03/2004	24.58	24.58
56	6632	08/05/2004	Mission Petro.#9059	08/06/2004	23.37	23.37
57	6633	08/05/2004	Mercedes #55	08/09/2004	23.89	23.89
58	6657	08/12/2004	Mercedes #557	08/16/2004	24.61	24.61
59	6658	08/12/2004	Mercedes #561	08/17/2004	24.14	24.14
60	6659	08/12/2004	Mission #9302	08/13/2004	22.77	22.77
61	6660	08/12/2004	Mission #9059	08/16/2004	23.67	23.67
62	6661	08/12/2004	LW Miller #809	08/17/2004	24.39	24.39
63	6685	08/27/2004	McCorkle 1769	08/31/2004	25.14	25.14
64	6687	08/27/2004	LW Miller 1024	09/01/2004	24.75	24.75
65	6701	09/03/2004	JH Walker 422	09/07/2004	25	25
66	6702	09/03/2004	JH Walker 145	09/07/2004	23.42	23.42
67	6703	09/03/2004	JH Walker 104	09/07/2004	22.76	22.76
				Total Tons Shipped:	**4064.49**	
				Total Tons Received:		**3945.82**
				Material Loss Tons:	**118.67**	

Bentonite

Mercedes Trucking, Inc.

	Order Date	Ship Date	Delivered	GR	TR	NT	TN	Order #	Bill of Lading	Cert.
1	4/16/2004	4/21/2004	4/22/2004	80940	32080	48860	24.43	HCIV006289	XGRE547330	6289
2	7/6/2004		7/8/2004	79700	30580	49120	24.56	HCIV006542	XMMM547305	6542
3	7/12/2004	7/13/2004	7/14/2004	79640	30460	49180	24.59	HCIV006561	XMM547554	6561
4		8/7/2004	8/5/2004	78400	30800	47600	23.80	HCIV006627	XMMM548207	6627
5		8/9/2004	8/9/2004	79100	31320	47780	23.89	HCIV006633	XGRE549918	6633
6		8/16/2004	8/16/2004	79760	30540	49220	24.61	HCIV006657	XGRE550073	6657
7		8/17/2004	8/17/2004	80080	31800	48280	24.14	HCIV006658	XGRE550107	6658
							170.02			

L.W. Miller Diviersified, Inc.

	Order Date	Ship Date	Delivered	GR	TR	NT	TN	Order #	Bill of Lading	Cert.
1	8/19/2003	8/22/2003	8/22/2003	80500	29280	51220	25.61	HCIV005671	XGRE541923	5671
2	8/19/2003	8/21/2003	8/24/2003			48760	24.38	HCIV005670	XGRE541875	5670
3			8/27/2003	79340	29580	49760	24.88	HCIV005682		5682
4	8/26/2003	8/29/2003	8/29/2003			48420	24.21	HCIV005683	XGRE542114	5683
5	4/16/2004	4/22/2004	4/23/2004	78660	30100	48560	24.28	HCIV006290	XGRE547366	6290
6	4/16/2004	4/26/2004	4/28/2004	78420	29340	49080	24.54	HCIV006291	XGRE547449	6291
7	7/3/2004		7/3/2004	79100	30120	48980	24.49	HCIV006544	HCIV500910	6544
8	7/12/2004		7/14/2004	80080	30080	50000	25.00	HCIV006545	XGRE549234	6545
9		8/17/2004	8/17/2004	79220	30440	48780	24.39	HCIV006661	XGRE550114	6661
10			9/1/2004	78980	29480	49500	24.75	HCIV006687		6687
							246.53			

Mission Peteroleum Carriers, Inc.

Order Date	Ship Date	Delivered	GR	TR	NT	TN	Order #	Bill of Lading	Cert

1	5/14/2004		5/14/2004	78660	29480	49180	24.59	HCIV006353	XMMM546034	6353
2			8/3/2004	78660	29500	49160	24.58	HCIV006628	XMMM548199	6628
3		8/6/2004	8/6/2004	77920	31180	46740	23.37	HCIV006632	XMMM548305	6632
4		8/13/2004	8/13/2004	75640	30100	45540	22.77	HCIV006659	XMMM548484	6659
5		8/16/2004	8/16/2004	78040	30700	47340	23.67	HCIV006660	XMMM548511	6660
6	7/2/2004			78640	29520	49120	24.56	HCIV006543	XMMM547257	6543
							143.54			

McCorkle Truck Line, Inc.

	Order Date	Ship Date	Delivered	GR	TR	NT	TN	Order #	Bill of Lading	Cert
1	7/12/2004	7/13/2004	7/15/2004	78980	30460	48520	24.26	HCIV006562	XMMM547568	6562
2	7/12/2004		7/15/2004	79800	29980	49820	24.91	HCIV006563	XMMM547653	6563
3	7/12/2004		7/15/2004	79540	28420	51120	25.56	HCIV006564	XGRE549283	6564
4			8/2/2004	78280	29580	48700	24.35	HCIV006626	XMMM548168	6626
5			8/31/2004	78920	28640	50280	25.14	HCIV006685	XMMM548837	6685
							124.22			

Willoughby

	Order Date	Ship Date	Delivered	GR	TR	NT	TN	Order #	Bill of Lading	Cert
1	8/26/2003	8/26/2003	8/26/2003	76220	27880	48340	24.17	HCIV005681	XMMM540847	5681
2	8/26/2003	8/28/2003	8/27/2003	79340	29580	49760	24.88	HCIV005682	XMMM540873	(5682) DUPLICATE
3	10/8/2003	10/9/2003	10/9/2003	77840	28360	49480	24.74	HCIV005828	XMMM541710	5828
4	10/8/2003	10/10/2003	10/10/2003	78600	28620	49980	24.99	HCIV005829	XMMM541742	5829
							98.78			

J.H. Walker

1			9/7/2004	78980	28980	50000	25.00	HCIV006701	XMMM548995	6701
2			9/7/2004	76320	29480	46840	23.42	HCIV006702	XMMM549002	6702
3			9/7/2004	74140	28620	45520	22.76	HCIV006703	XMMM548996	6703
							71.18			

Printed 11-3-04

Benton

Ee-Jay Motor Transports, Inc.

	Order Date	Ship Date	Delivered	GR	TR	NT	TN	Railcar #	Cert
1	8/8/2003	8/12/2003	9/11/2003	71800	26160	45640	22.82	BNSF 422962	5609
2	8/8/2003	8/12/2003	9/16/2003	57800	26400	31400	15.70	BNSF 422962	5609
3	8/8/2003	8/12/2003	9/19/2003	67840	26260	41580	20.79	BNSF 422962	5609
4	8/8/2003	8/12/2003	9/30/2003	66440	24480	41960	20.98	BNSF 422962	5609
							80.29 DELIVERED		
							99.45 TO SHIPPED.		

C. Grantham-Driver

	Order Date	Ship Date	Delivered	GR	TR	NT	Tons	Railcar	Cert
5	8/20/2003	8/27/2003	9/11/2003	57520	29480	28040	14.02	BNSF 422500	5676
6	8/20/2003	8/27/2003	9/15/2003	76380	29580	46800	23.40	BNSF 422500	5676
7	8/20/2003	8/27/2003	9/16/2003	70940	29480	41460	20.73	BNSF 422500	5676
8	8/20/2003	8/27/2003	9/18/2003	75840	29580	46260	23.13	BNSF 422500	5676
9	8/20/2003	8/27/2003	9/19/2003	80460	31740	48720	18.70	BNSF 422500	5676
							99.98		
10	8/20/2003	8/26/2003	9/19/2003	80460	31740	48720	5.66	BNSF 420569	5675
11	8/20/2003	8/26/2003	9/24/2003	71840	27900	43940	21.97	BNSF 420569	5675
12	8/20/2003	8/26/2003	9/25/2003	75660	29320	46340	23.17	BNSF 420569	5675
13	8/20/2003	8/26/2003	9/30/2003	79280	29320	49960	24.98	BNSF 420569	5675
14	8/20/2003	8/26/2003	10/1/2003	53480	29560	23920	11.96	BNSF 420569	5675
							87.74		

15	9/12/2003	9/17/2003	10/1/2003	57620	29680	27940	13.97	BNSF 458785	5756
16	9/12/2003	9/17/2003	10/1/2003	67180	29480	37700	18.85	BNSF 458785	5756
17	9/12/2003	9/17/2003	10/3/2003	79000	29340	49660	24.83	BNSF 458785	5756
18	9/12/2003	9/17/2003	10/3/2003	85360	29560	55800	27.90	BNSF 458785	5756
19	9/12/2003	9/17/2003	10/6/2003	53380	29540	23840	11.92	BNSF 458785	5756
							92.47		
20	9/12/2003	9/17/2003	10/7/2003	50360	29620	20740	10.37	BN 447454	5755
21	9/12/2003	9/17/2003	10/8/2003	59800	28380	31420	15.71	BN 447454	5755
22	9/12/2003	9/17/2003	10/8/2003	73540	29620	43920	21.96	BN 447454	5755
23	9/12/2003	9/17/2003	10/9/2003	74820	29580	45240	22.62	BN 447454	5755
24	9/12/2003	9/17/2003	10/9/2003	63200	28580	34620	17.31	BN 447454	5755
							87.97		
25	8/8/2003	8/13/2003	10/10/2003	78806	29780	49026	24.51	BN 446365	5610
26	8/8/2003	8/13/2003	10/13/2003	49460	28280	21180	10.59	BN 446365	5610
27	8/8/2003	8/13/2003	10/14/2003	72900	29740	43160	21.58	BN 446365	5610
28	8/8/2003	8/13/2003	10/14/2003	66240	28380	37860	18.93	BN 446365	5610
29	8/8/2003	8/13/2003	10/15/2003	66920	29660	37260	18.63	BN 446365	5610
							94.24		
30	8/20/2003	8/28/2003	10/16/2003	70220	29440	40780	20.39	BNSF 422745	5677
31	8/20/2003	8/28/2003	10/16/2003	52520	28200	24320	12.16	BNSF 422745	5677
32	8/20/2003	8/28/2003	10/17/2003	77380	29760	47620	23.81	BNSF 422745	5677
33	8/20/2003	8/28/2003	10/17/2003	64640	28540	36100	18.05	BNSF 422745	5677
34	8/20/2003	8/28/2003	10/17/2003	78260	29640	48620	13.23	BNSF 422745	5677
							87.64		
35	10/6/2003	10/9/2003	10/17/2003				8.59	BN 453996	5825
36	10/6/2003	10/9/2003	10/20/2003	72820	29080	43740	21.87	BN 453996	5825
37	10/6/2003	10/9/2003	10/20/2003	82160	29600	52560	26.28	BN 453996	5825
38	10/6/2003	10/9/2003	10/21/2003	77040	28740	48300	24.15	BN 453996	5825

39	10/6/2003	10/9/2003	10/22/2003	74580	29660	44920	22.46	BN 453996	5825
							103.35		
40	10/6/2003	10/9/2003	10/23/2003	71360	28820	42540	21.27	BN 454050	5826
41	10/6/2003	10/9/2003	10/23/2003	88580	29620	58960	29.48	BN 454050	5826
42	10/6/2003	10/9/2003	10/24/2003	70060	28620	41440	20.72	BN 454050	5826
43	10/6/2003	10/9/2003	10/24/2003	74020	29460	44560	22.28	BN 454050	5826
							93.75		
44	10/1/2003	10/7/2003	10/27/2003	69260	28820	40440	20.22	BN 453151	5817
45	10/1/2003	10/7/2003	10/28/2003	73660	29990	43670	21.84	BN 453151	5817
46	10/1/2003	10/7/2003	10/28/2003	69420	28860	40560	20.28	BN 453151	5817
47	10/1/2003	10/7/2003	10/29/2003	70860	29940	40920	20.46	BN 453151	5817
48	10/1/2003	10/7/2003	10/29/2003	61640	28940		10.00	BN 453151	5817
							92.8		
49	10/1/2003	10/7/2003	10/29/2003	61640	28940		6.35	BNSF 424151	5816
50	10/1/2003	10/7/2003	10/30/2003	67560	29720	37840	18.92	BNSF 424151	5816
51	10/1/2003	10/7/2003	10/31/2003	61880	28180	33700	16.85	BNSF 424151	5816
52	10/1/2003	10/7/2003	10/31/2003	76640	29860	46780	23.39	BNSF 424151	5816
53	10/1/2003	10/7/2003	10/31/2003	70740	28700	42040	21.02	BNSF 424151	5816
							84.53 - 96.23		
54	10/21/2003	10/23/2003	11/5/2003	48100	28700	19400	9.70	BNSF 424151	5816
55	10/21/2003	10/23/2003	11/3/2003	88300	29580	58720	29.36	BNSF 425107	5861
56	10/21/2003	10/23/2003	11/5/2003	76840	29720	47120	23.56	BNSF 425107	5861
57	10/21/2003	10/23/2003	11/5/2003	68100	28360	39740	19.87	BNSF 425107	5861
58	10/21/2003	10/23/2003	11/6/2003	74360	29480	44880	22.44	BNSF 425107	5861
							~~104.93~~ 95.23		
59	10/21/2003	10/23/2003	11/7/2003	63440	28280	35160	17.58	BNSF 422788	5860
60	10/21/2003	10/23/2003	11/10/2003	74040	29520	44520	22.26	BNSF 422788	5860
61	10/21/2003	10/23/2003	11/10/2003	64600	28240	36360	18.18	BNSF 422788	5860
62	10/21/2003	10/23/2003	11/13/2003	66060	29460	36600	18.30	BNSF 422788	5860

63	10/21/2003	10/23/2003	11/13/2003	62700	28160	34540	17.27	BNSF	422788	5860
							93.54			
64	10/14/2003	10/20/2003	11/14/2003	70340	29680	40660	20.33	BN	449966	5834
65	10/14/2003	10/20/2003	11/14/2003	72760	28300	44460	22.23	BN	449966	5834
66	10/14/2003	10/20/2003	11/15/2003	78940	29480	49460	24.73	BN	449966	5834
67	10/14/2003	10/20/2003	11/17/2003	61440	28260	33180	16.59	BN	449966	5834
68	10/14/2003	10/20/2003	11/17/2003	74460	29760	44700	22.35	BN	449966	5834
69	10/14/2003	10/20/2003	11/18/2003	56160	28600	27560	13.78	BN	449966	5834
							120.01			
70	10/14/2003	10/20/2003	11/19/2003	75160	29660	45500	22.75	BNSF	422214	5833
71	10/14/2003	10/20/2003	11/20/2003	61380	28360	33020	16.51	BNSF	422214	5833
72	10/14/2003	10/20/2003	11/21/2003	68720	29560	39160	19.58	BNSF	422214	5833
73	10/14/2003	10/20/2003	11/21/2003	56760	28180	28580	14.29	BNSF	422214	5833
74	10/14/2003	10/20/2003	11/24/2003	67940	29780	38160	19.08	BNSF	422214	5833
							92.21			
75	11/3/2003	11/6/2003	11/24/2003	57300	28440	28860	14.43	ATSF	314569	5902
76	11/3/2003	11/6/2003	11/24/2003	75820	29500	46320	23.16	ATSF	314569	5902
77	11/3/2003	11/6/2003	11/26/2003	84300	29760	54540	27.27	ATSF	314569	5902
78	11/3/2003	11/6/2003	11/26/2003	70660	28480	42180	21.09	ATSF	314569	5902
							85.95			
79	10/28/2003	11/3/2003	12/1/2003	80540	29380	51160	25.58	BNSF	425008	5869
80	10/28/2003	11/3/2003	12/1/2003	78600	29500	49100	24.55	BNSF	425008	5869
81	10/28/2003	11/3/2003	12/2/2003	68960	28300	40660	20.33	BNSF	425008	5869
82	10/28/2003	11/3/2003	12/4/2003	62140	28280	33860	16.93	BNSF	425008	5869
							87.39			
83	11/11/2003	11/17/2003	12/5/2003	68520	29640	38880	19.44	ATSF	314777	5937
84	11/11/2003	11/17/2003	12/8/2003	82060	29540	52520	26.26	ATSF	314777	5937
85	11/11/2003	11/17/2003	12/8/2003	61820	28300	33520	16.76	ATSF	314777	5937
86	11/11/2003	11/17/2003	12/9/2003	68440	28180	40260	20.13	ATSF	314777	5937
							82.59			

87			5/4/2004	78500	29540	48960	24.48	BN	453102	5971
88			5/6/2004	45040	28040	17000	8.50	BN	453102	5971
89			4/21/2004	74820	29600	45220	22.61	BN	453102	5971
90			4/20/2004	57020	28500	28520	14.26	BN	453102	5971
91			5/3/2004	78300	28360	49940	24.97	BN	453102	5971
							91.82			
92	11/18/2003	11/20/2003	12/9/2003	82260	29260	53000	26.50	ATSF	314863	5972
93	11/18/2003	11/20/2003	12/10/2003	69920	26220	41700	20.85	ATSF	314863	5972
94	11/18/2003	11/20/2003	12/11/2003	69040	29280	39760	19.88	ATSF	314863	5972
95	11/18/2003	11/20/2003	12/13/2003	68960	28360	40600	20.30	ATSF	314863	5972
96	11/18/2003	11/20/2003	12/15/2003	61880	29600	32280	16.14	ATSF	314863	5972
							103.67			
97	12/1/2003	12/2/2003	12/16/2003	72060	28640	43420	21.71	BNSF	424509	6020
98	12/1/2003	12/2/2003	12/30/2003	55760	29500	26260	13.13	BNSF	424509	6020
99	12/1/2003	12/2/2003	12/30/2003	65920	28400	37520	18.76	BNSF	424509	6020
100	12/1/2003	12/2/2003	1/8/2004	78120	29720	48400	24.20	BNSF	424509	6020
101	12/1/2003	12/2/2003	1/8/2004	70340	28340	42000	21.00	BNSF	424509	6020
102	12/1/2003	12/2/2003	2/20/2004	34240	29700	4540	2.27	BNSF	424509	6020
							101.07			
103	11/21/2003	12/2/2003	2/23/2004	70140	29680	40460	20.23	BN	453832	5981
104	11/21/2003	12/2/2003	2/24/2004	63080	28480	34600	17.30	BN	453832	5981
105	11/21/2003	12/2/2003	2/26/2004	77820	29700	48120	24.06	BN	453832	5981
106	11/21/2003	12/2/2003	2/26/2004	68020	28260	39760	19.88	BN	453832	5981
							81.47			
107	12/1/2003	12/6/2003	3/16/2004	47940	28540	19400	9.70	BN	458706	6019
108	12/1/2003	12/6/2003	3/17/2004	67600	29580	38020	19.01	BN	458706	6019
109	12/1/2003	12/6/2003	3/18/2004	59980	29740	30240	15.12	BN	458706	6019
110	12/1/2003	12/6/2003	3/18/2004	56420	28300	28120	14.06	BN	458706	6019

111	12/1/2003	12/6/2003	3/22/2004	69580	27860	41720	20.86	BN 458706	6019
112	12/1/2003	12/6/2003	3/24/2004	67080	29700	37380	18.69	BN 458706	6019
							39.44		
113	12/1/2003	12/5/2003	3/26/2004	80640	29260	51380	25.69	ATSF 314195	6018
114	12/1/2003	12/5/2003	4/7/2004	72800	29720	43080	21.54	ATSF 314195	6018
115	12/1/2003	12/5/2003	4/8/2004	76800	33640	43160	21.58	ATSF 314195	6018
116	12/1/2003	12/5/2003	4/13/2004	73520	29640	43880	21.94	ATSF 314195	6018
117	12/1/2003	12/5/2003	4/19/2004	60240	29540	30700	15.35	ATSF 314195	6018
118	12/1/2003	12/5/2003	4/20/2004	57020	28600	28420	14.21	ATSF 314195	6018
							120.31		
119	4/15/2004	4/16/2004	5/12/2004	37100	28300	8800	4.40	BNSF 422603	6287
120	4/15/2004	4/16/2004	5/17/2004	84440	29620	54820	27.41	BNSF 422603	6287
121	4/15/2004	4/16/2004	5/18/2004	67000	28240	38760	19.38	BNSF 422603	6287
122	4/15/2004	4/16/2004	5/19/2004	51700	10140	41560	20.78	BNSF 422603	6287
123	4/15/2004	4/16/2004	5/21/2004	80500	28680	51820	25.91	BNSF 422603	6287
							97.88		
124	4/19/2004	4/20/2004	6/3/2004	36100	27180	8920	4.46	BN 458581	6307
125	4/19/2004	4/20/2004	6/7/2004	60860	28680	32180	16.09	BN 458581	6307
126	4/19/2004	4/20/2004	6/10/2004	59980	26980	33000	16.50	BN 458581	6307
127	4/19/2004	4/20/2004	6/14/2004	78800	28480	50320	25.16	BN 458581	6307
128	4/19/2004	4/20/2004	6/15/2004	44940	27120	17820	8.91	BN 458581	6307
							71.12		
129	4/19/2004	4/27/2004	6/9/2004	69880	27080	42800	21.40	BNSF 425008	6308
130	4/19/2004	4/27/2004	6/17/2004	81400	28480	52920	26.46	BNSF 425008	6308
131	4/19/2004	4/27/2004	6/18/2004	68960	28300	40660	20.33	BNSF 425008	6308
132	4/19/2004	4/27/2004	6/29/2004	81260	28480	52780	26.39	BNSF 425008	6308
133			6/9/2004	66840	27020	39820	19.91	BNSF 425008	6308
							114.49		
134	7/1/2004	7/9/2004	7/22/2004	71540	34140	37400	18.70	ATSF 314786	6546

135	7/1/2004	7/9/2004	7/23/2004	87620	28380	59240	29.62	ATSF 314786	6546
136	7/1/2004	7/9/2004	7/28/2004	68360	26960	41400	20.70	ATSF 314786	6546
137	7/1/2004	7/9/2004	7/29/2004	57940	28500	29440	14.72	ATSF 314786	6546
138	7/1/2004	7/9/2004	8/2/2004	54140	26860	27280	13.64	ATSF 314786	6546
							97.38		
139	5/13/2004	5/14/2004	8/3/2004	58540	28440	30100	15.05	ATSF314491	6553
140	5/13/2004	5/14/2004	8/3/2004	66140	27000	39140	19.57	ATSF314491	6553
141	5/13/2004	5/14/2004	8/5/2004			37980	18.99	ATSF314491	6553
142	5/13/2004	5/14/2004	8/6/2004	83880	28340	55540	27.77	ATSF314491	6553
143	5/13/2004	5/14/2004	8/9/2004	51180	26980	24200	12.10	ATSF314491	6553
144			8/12/2004				4.00	ATSF314491	6553
							97.48		
145	7/1/2004		8/12/2004				16.95	ATSF 313813	6547
146	7/1/2004		8/13/2004	76960	28180	48780	24.39	ATSF 313813	6547
147	7/1/2004		8/18/2004	50940	28180	22760	11.38	ATSF 313813	6547
148		9/1/2004	8/18/2004	55300	27220	28080	14.04	ATSF 313813	6547
149			8/16/2004			31740	15.87	ATSF 313813	6547
							2757.90	82.68	

Bellman Truck Company

1		8/7/2004	8/20/2004	82440	26360	56080	28.04	BNSF 422605	6623
2		8/7/2004	8/23/2004	86106	27340	58766	29.38	BNSF 422605	6623
3		8/7/2004	8/24/2004	97000	29920	67080	33.54	BNSF 422605	6623
							90.96		
4			8/24/2004	89280	35460	53820	26.91	BNSF 314438	6624
5			8/26/2004	62680	28300	34380	17.19	BNSF 314438	6624
6			8/27/2004	75540	28460	47080	23.54	BNSF 314438	6624
7			8/30/2004	79040	27420	51620	25.81	BNSF 314438	6624
							93.45		

8	8/31/2004	81680	27620	54060	27.03	ATSF	314037	6625
9	9/1/2004	83960	28120	55840	27.92	ATSF	314037	6625
10	9/2/2004	88720	28360	60360	30.18	ATSF	314037	6625
11	9/7/2004	45380	27980	17400	8.70	ATSF	314037	6625
					278.24	93.83		

TOTAL 278.24

80.29
278.24
2757.90

3,116.43

170.02
246.53
143.54
124.22
98.78
71.18

854.27 - DUPLICATE 24.88 = 829.39
+ 3,116.43
3945.82 TOTAL

SHIP 4064.49
DEL - 3945.82
DIFF 118.67

GP-101

LABORATORY ANALYSIS CERTIFICATION

GREYBULL PLANT

DATE TESTED 8/13/2003

SOLD TO:	SHIP TO:
INQUIP ASSOCIATES, INC. 5 RIVERVIEW SAUGET IL 62206 USA SALES ORDER NO.: HCIV005609	INQUIP ASSOCIATES, INC. 5 RIVERVIEW SAUGET IL 62206 USA

SHIPPING DATE:	RAILCAR OR TRUCK NUMBER:	PLANT OF ORIGIN:	PRODUCT ID:
6-12-03	BNSF 422962	GREYBULL	GEL

Note Our data for the above shipment shows the following test results.

Test or Property	API Spec	Result
Viscosity	30 min.	43
Plastic Viscosity (cP)	N/A	
Yield Point (# / 100 ft2)	N/A	
Filtrate Volume (cm3)	15.0 max.	13.4
> 75 micron (wt. %)	4.0 max.	1.9

Test or Property	API Spec	Result
Moisture (wt. %)	12.5 max. 10% max	7.7
Y.P. / P.V. Ratio	3.0 max.	1.07

This certifies that the product shipped to the location as stated above meets the requirements of A.P.I. Section 13A; Section 4 for "Drilling Grade Bentonite." Should you have any questions or require additional information please let us know 1-307-765-4486.

Signed [signature] Date 8/18/03

Approved by: Plant Manager

LabanaCert.doc (4/22/97)
Rev E (9/99)

RWS

GP-101

LABORATORY ANALYSIS CERTIFICATION

GREYBULL PLANT

DATE TESTED 8/13/2003

SOLD TO:	SHIP TO:
INQUIP ASSOCIATES, INC. 5 RIVERVIEW SAUGET IL 62206 USA SALES ORDER NO.: HCIV000610	INQUIP ASSOCIATES, INC. 5 RIVERVIEW SAUGET IL 62206 USA

SHIPPING DATE:	RAILCAR OR TRUCK NUMBER:	PLANT OF ORIGIN:	PRODUCT ID:
8-13-03	BN 446365	GREYBULL	GEL

Note: Our data for the above shipment shows the following test results.

Test or Property	API Spec	Result
Viscosity	30 min.	43
Plastic Viscosity (cP)	N/A	
Yield Point (lb / 100 ft2)	N/A	
Filtrate Volume (cm3)	15.0 max.	13.4
> 75 micron (wt. %)	4.0 max.	1.9

Test or Property	API Spec	Result
Moisture (wt. %)	12.5 max.	7.7
Y.P. / P.V. Ratio	3.0 max.	1.07

This certifies that the product shipped to the location as stated above meets the requirements of A.P.I. Section 13A; Section 4 for "Drilling Grade Bentonite." Should you have any questions or require additional information please let us know 1-307-765-4496.

Signed 8/18/03 Date

Approved by: Plant Manager

LaboratoryCert.doc (4/22/97)
Rev E (9/98)

GP-101

LABORATORY ANALYSIS CERTIFICATION

GREYBULL PLANT

DATE TESTED 8/22/2003

SOLD TO:	SHIP TO:
INQUIP ASSOCIATES, INC. P.O. BOX 2182 SANTA BARBAR FLORIDA 93120 USA SALES ORDER NO.: 1SCIV005670	INQUIP ASSOCIATES, INC. 1416345509 5 RIVERVIEW AVE SAUGET IL 62206 USA

SHIPPING DATE:	RAILCAR OR TRUCK NUMBER:	PLANT OF ORIGIN:	PRODUCT ID:
8-21-03	L W MILLER 1002	GREYBULL	GEL

Note: Our data for the above shipment shows the following test results.

Test or Property	API Spec	Result
Viscosity	30 min.	50
Plastic Viscosity (cP)	N/A	
Yield Point (lb / 100 ft2)	N/A	
Filtrate Volume (cm3)	18.0 max.	12.0
> 75 micron (wt. %)	4.0 max.	1.3

Test or Property	API Spec	Result
Moisture (wt. %)	12.5 max.	7.0
Y.P. / P.V. Ratio	3.0 max.	1.33

This certifies that the product shipped to the location as stated above meets the requirements of A.P.I. Section 13A; Section 4 for "Drilling Grade Bentonite." Should you have any questions or require additional information please let us know 1-307-765-4484.

Signed 8/22/03 Date

Approved by: Plant Manager

LabanaCert.doc (4/22/97)
Rev E (9/99)

GP-101

LABORATORY ANALYSIS CERTIFICATION

GREYBULL PLANT

DATE TESTED 8/25/2003

SOLD TO:	SHIP TO:
INQUIP ASSOCIATES, INC. P.O. BOX 2182 SANTA BARBAR FLORIDA 93120 USA SALES ORDER NO.: HCSV005671	INQUIP ASSOCIATES, INC. 1416355909 5 RIVERVIEW AVE SAUGET IL 62206 USA

SHIPPING DATE:	RAILCAR OR TRUCK NUMBER:	PLANT OF ORIGIN:	PRODUCT ID:
8-22-03	LW MILLER 857	GREYBULL	GEL

Note: Our data for the above shipment shows the following test results.

Test or Property	API Spec	Result
Viscosity	30 min.	58
Plastic Viscosity (cP)	N/A	
Yield Point (lb / 100 ft2)	N/A	
Filtrate Volume (cm3)	15.0 max.	12.0
> 75 micron (wt. %)	4.0 max.	1.2

Test or Property	API Spec	Result
Moisture (wt. %)	12.5 max.	7.6
Y.P. / P.V. Ratio	3.0 max.	1.22

This certifies that the product shipped to the location as stated above meets the requirements of A.P.I. Section 13A; Section 4 for "Drilling Grade Bentonite." Should you have any questions or require additional information please let us know 1-307-765-4490.

Signed 8/25/03 Date

Approved by: Plant Manager

LabentCert.doc (4/22/97)
Rev E (8/99)

GP-101

LABORATORY ANALYSIS CERTIFICATION

GREYBULL PLANT

DATE TESTED 8/26/2003

SOLD TO:	SHIP TO:
INQUIP ASSOCIATES, INC. 5 RIVERVIEW SAUGET IL 62206 USA SALES ORDER NO.: HOV005675	M-I, LLC C/O SE-JAY MOTOR TRANSPORTERS EAST ST. LOUIS IL USA

SHIPPING DATE:	RAILCAR OR TRUCK NUMBER:	PLANT OF ORIGIN:	PRODUCT ID:
8-26-03	BNSF 420569	GREYBULL	OBL

Note Our data for the above shipment shows the following test results.

Test or Property	API Spec	Result
Viscosity	30 min.	41
Plastic Viscosity (cP)	N/A	
Yield Point (# / 100 ft2)	N/A	
Filtrate Volume (cm3)	15.0 max.	14.0
> 75 micron (wt. %)	4.0 max.	1.7

Test or Property	API Spec	Result
Moisture (wt. %)	12.5 max.	7.7
Y.P. / P.V. Ratio	3.0 max.	1.15

This certifies that the product shipped to the location as stated above meets the requirements of A.P.I. Section 13A; Section 6 for "Drilling Grade Bentonite." Should you have any questions or require additional information please let us know 1-307-765-4490.

Signed 8/27/03 Date

Approved by: Plant Manager

LabanalCert.doc (4/22/97)
Rev E (9/99)

GP-101

LABORATORY ANALYSIS CERTIFICATION

GREYBULL PLANT

DATE TESTED 8/27/2003

SOLD TO:	SHIP TO:
INQUIP ASSOCIATES, INC. 5 RIVERVIEW SAUGET IL 62206 USA **SALES ORDER NO.:** HCIV 5676	INQUIP ASSOCIATES, INC. 5 RIVERVIEW SAUGET IL 62206 USA

SHIPPING DATE:	RAILCAR OR TRUCK NUMBER:	PLANT OF ORIGIN:	PRODUCT ID:
08/27/2003	BNSF 422500	GREYBULL	GEL

Note Our data for the above shipment shows the following test results.

Test or Property	API Spec.	Result
Viscosity	30 min.	40
Plastic Viscosity (cP)	N/A	
Yield Point (# / 100 ft2)	N/A	
Filtrate Volume (cm3)	15.0 max.	13.4
> 75 micron (wt. %)	4.0 max.	1.1

Test or Property	API Spec.	Result
Moisture (wt. %)	N/A	7.1
Y.P. / P.V. Ratio	3.0 max.	1.33

This certifies that the product shipped to the location as stated above meets the requirements of A.P.I. Section 13A; Section 4 for "Drilling Grade Bentonite." Should you have any questions or require additional information please let us know 1-307-765-4495.

Debra Massey 11/6/03
Signed Date

Approved by: Plant Manager

LabsnaCert.doc (4/22/97)
Rev E (9/99)

2 of 5

LABORATORY ANALYSIS CERTIFICATION

GREYBULL PLANT

DATE TESTED 8/28/2003

BOLD TO:	SHIP TO:
INQUIP ASSOCIATES, INC. 5 RIVERVIEW SAUKET IL 62206 USA SALES ORDER NO.: 5677	INQUIP ASSOCIATES, INC. 5 RIVERVIEW SAUQET IL 62206 USA

SHIPPING DATE:	RAILCAR OR TRUCK NUMBER:	PLANT OF ORIGIN:	PRODUCT ID:
08/28/03	BNSF 422745	GREYBULL	GEL

Note: Our data for the above shipment shows the following test results.

Test or Property	API Spec	Result
Viscosity	30 min.	36
Plastic Viscosity (cP)	N/A	
Yield Point (# / 100 ft2)	N/A	
Filtrate Volume (cm3)	15.0 max.	13.4
> 75 micron (wt. %)	4.0 max.	1.5

Test or Property	API Spec	Result
Moisture (wt. %)	12.5 max.	7.7
Y.P. / P.V. Ratio	3.0 max.	1.00

This certifies that the product shipped to the location as stated above meets the requirements of A.P.I. Section 13A; Section 4 for "Drilling Grade Bentonite." Should you have any questions or require additional information please let us know 1-587-765-4496.

Marcie Williams 8/29/03
Signed Date

Approved by: Plant Manager

LabsmsCert.doc (4/22/97)
Rev E (9/99)

GP-101

LABORATORY ANALYSIS CERTIFICATION

GREYBULL PLANT

DATE TESTED 8/8/2003

SOLD TO:	SHIP TO:
INQUIP ASSOCIATES, INC. 5 RIVERVIEW SAUGET IL 62206 USA SALES ORDER NO.: HCIV 5681	INQUIP ASSOCIATES, INC. 5 RIVERVIEW SAUGET IL 62206 USA

SHIPPING DATE:	RAILCAR OR TRUCK NUMBER:	PLANT OF ORIGIN:	PRODUCT ID:
08/26/2003	BNSF 420553	GREYBULL	GBL

Note Our data for the above shipment shows the following test results.

Test or Property	API Spec.	Result
Viscosity	30 min.	50
Plastic Viscosity (cP)	N/A	
Yield Point (# / 100 ft2)	N/A	
Filtrate Volume (cm3)	15.0 max.	14.6
> 75 micron (wt. %)	4.0 max.	2.0

Test or Property	API Spec.	Result
Moisture (wt. %)	12.5 max.	7.4
Y.P. / P.V. Ratio	3.0 max.	2.16

This certifies that the product shipped to the location as stated above meets the requirements of A.P.I. Section 13A; Section 4 for "Drilling Grade Bentonite." Should you have any questions or require additional information please let us know 1-307-765-4496.

Marcie Williams 8/28/03
Signed Date

Approved by: Plant Manager

LabanaCert.doc (4/22/97)
Rev E (9/99)

GP-101

LABORATORY ANALYSIS CERTIFICATION

GREYBULL PLANT

DATE TESTED 7/18/2003

SOLD TO:	SHIP TO:
INQUIP ASSOCIATES, INC. 5 RIVERVIEW SAUGET IL 62206 USA SALES ORDER NO.: HCIV 5682	INQUIP ASSOCIATES, INC. 5 RIVERVIEW SAUGET IL 62206 USA

SHIPPING DATE:	RAILCAR OR TRUCK NUMBER:	PLANT OF ORIGIN:	PRODUCT ID:
08/28/2003	BNSF 423872	GREYBULL	GEL

Note Our data for the above shipment shows the following test results.

Test or Property	API Spec.	Result
Viscosity	30 min.	56
Plastic Viscosity (cP)	N/A	
Yield Point (# / 100 ft2)	N/A	
Filtrate Volume (cm3)	15.0 max.	13.0
> 75 micron (wt. %)	4.0 max.	2.1

Test or Property	API Spec.	Result
Moisture (wt. %)	12.5 max.	7.6
Y.P. / P.V. Ratio	3.0 max.	1.50

This certifies that the product shipped to the location as stated above meets the requirements of A.P.I. Section 13A; Section 4 for "Drilling Grade Bentonite." Should you have any questions or require additional information please let us know 1-307-765-4496.

Marci Williams 8/28/03
Signed Date

Approved by: Plant Manager

LabanaCert.doc (4/22/97)
Rev E (9/99)

(16)

LABORATORY ANALYSIS CERTIFICATION

GREYBULL PLANT

DATE TESTED 9/2/2003

SOLD TO:	SHIP TO:
INQUIP ASSOCIATES, INC. P.O. BOX 2182 SANTA BARBAR FLORIDA 93120 USA SALES ORDER NO.: HCTV003683	INQUIP ASSOCIATES, INC. 141635509 5 RIVERVIEW AVE SAUGET IL 62206 USA

SHIPPING DATE:	RAILCAR OR TRUCK NUMBER:	PLANT OF ORIGIN:	PRODUCT ID:
8-29-03	LW MILLER 903	GREYBULL	GEL

Note Our data for the above shipment shows the following test results.

Test or Property	API Spec	Result
Viscosity	30 min.	40
Plastic Viscosity (cP)	N/A	
Yield Point (# / 100 ft2)	N/A	
Filtrate Volume (cm3)	15.0 max.	12.8
> 75 micron (wt. %)	4.0 max.	1.1

Test or Property	API Spec	Result
Moisture (wt. %)	12.5 max.	7.7
Y.P. / P.V. Ratio	3.0 max.	1.33

This certifies that the product shipped to the location as stated above meets the requirements of A.P.I. Section 13A; Section 4 for "Drilling Grade Bentonite." Should you have any questions or require additional information please let us know 1-307-765-4496.

Signed [signature] Date 9/2/03

Approved by: Plant Manager

LabanaCert.doc (4/22/97)
Rev E (9/99)

Pws

GP-101

LABORATORY ANALYSIS CERTIFICATION

GREYBULL PLANT

DATE TESTED 9/17/2003

SOLD TO:	SHIP TO:
INQUIP ASSOCIATES, INC. 5 RIVERVIEW SAUGET IL 62206 USA SALES ORDER NO.: HCIV005755	INQUIP ASSOCIATES, INC. 5 RIVERVIEW SAUGET IL 62206 USA

SHIPPING DATE:	RAILCAR OR TRUCK NUMBER:	PLANT OF ORIGIN:	PRODUCT ID:
9-17-03	BN 447454	GREYBULL	GBL

Note Our data for the above shipment shows the following test results.

Test or Property	API Spec	Result
Viscosity	30 min.	32
Plastic Viscosity (cP)	N/A	
Yield Point (# / 100 ft2)	N/A	
Filtrate Volume (cm3)	15.0 max.	13.0
> 75 micron (wt. %)	4.0 max.	2.0

Test or Property	API Spec	Result
Moisture (wt. %)	12.5 max.	7.9
Y.P. / P.V. Ratio	3.0 max.	1.06

This certifies that the product shipped to the location as stated above meets the requirements of A.P.I. Section 13A; Section 4 for "Drilling Grade Bentonite." Should you have any questions or require additional information please let us know 1-307-765-4496.

Signed 9/18/03 Date

Approved by: Plant Manager

LabansCert.doc (4/22/97)
Rev E (9/99)

GP-101

LABORATORY ANALYSIS CERTIFICATION

GREYBULL PLANT

DATE TESTED 9/17/2003

SOLD TO:	SHIP TO:
INQUIP ASSOCIATES, INC. 5 RIVERVIEW SAUGET IL 62206 USA SALES ORDER NO.: MCIV005756	INQUIP ASSOCIATES, INC. 5 RIVERVIEW SAUGET IL 62206 USA

SHIPPING DATE:	RAILCAR OR TRUCK NUMBER:	PLANT OF ORIGIN:	PRODUCT ID:
9-17-03	BN 458785	GREYBULL	GEL

Note Our data for the above shipment shows the following test results.

Test or Property	API Spec	Result
Viscosity	30 min.	42
Plastic Viscosity (cP)	N/A	
Yield Point (#/100 ft2)	N/A	
Filtrate Volume (cm3)	15.0 max.	15.0
> 75 micron (wt. %)	4.0 max.	2.0

Test or Property	API Spec	Result
Moisture (wt. %)	12.5 max.	7.9
Y.P. / P.V. Ratio	3.0 max.	1.06

This certifies that the product shipped to the location as stated above meets the requirements of A.P.I. Section 13A; Section 4 for "Drilling Grade Bentonite." Should you have any questions or require additional information please let us know 1-307-765-4496.

Signed 9/18/03 Date

Approved by: Plant Manager

LebanaCert.doc (4/22/97)
Rev E (9/99)

(13)

GP-101

LABORATORY ANALYSIS CERTIFICATION

GREYBULL PLANT

DATE TESTED 10/7/2003

SOLD TO:	SHIP TO:
INQUIP ASSOCIATES, INC. 5 RIVERVIEW SAUGET IL 62206 USA SALES ORDER NO.: HCTV005816	INQUIP ASSOCIATES, INC. 5 RIVERVIEW SAUGET IL 62206 USA

SHIPPING DATE:	RAILCAR OR TRUCK NUMBER:	PLANT OF ORIGIN:	PRODUCT ID:
10-7-03	BNSF 424151	GREYBULL	GEL

Note Our data for the above shipment shows the following test results.

Test or Property	API Spec	Result
Viscosity	30 min.	38
Plastic Viscosity (cP)	N/A	
Yield Point (# / 100 ft2)	N/A	
Filtrate Volume (cm3)	15.0 max.	13.6
> 75 micron (wt. %)	4.0 max.	1.8

Test or Property	API Spec	Result
Moisture (wt. %)	12.5 max.	8.0
Y.P. / P.V. Ratio	3.0 max.	1.75

This certifies that the product shipped to the location as stated above meets the requirements of A.P.I. Section 13A; Section 4 for "Drilling Grade Bentonite." Should you have any questions or require additional information please let us know 1-307-765-4496.

Signed 10/8/03 Date

Approved by: Plant Manager

LabansCert.doc (4/22/97)
Rev E (9/99)

RWS

GP-101

LABORATORY ANALYSIS CERTIFICATION

GREYBULL PLANT

DATE TESTED 10/7/2003

SOLD TO:	SHIP TO:
INQUIP ASSOCIATES, INC. 5 RIVERVIEW SAUGET IL 62206 USA SALES ORDER NO.: HCIV005817	INQUIP ASSOCIATES, INC. 5 RIVERVIEW SAUGET IL 62206 USA

SHIPPING DATE:	RAILCAR OR TRUCK NUMBER:	PLANT OF ORIGIN:	PRODUCT ID:
10-7-03	BN 453151	GREYBULL	GEL

Note Our data for the above shipment shows the following test results.

Test or Property	API Spec	Result
Viscosity	30 min.	58
Plastic Viscosity (cP)	N/A	
Yield Point (# / 100 ft2)	N/A	
Filtrate Volume (cm3)	15.0 max.	13.6
> 75 micron (wt. %)	4.0 max.	1.8

Test or Property	API Spec	Result
Moisture (wt. %)	12.5 max.	8.0
Y.P. / P.V. Ratio	3.0 max.	1.75

This certifies that the product shipped to the location as stated above meets the requirements of A.P.I. Section 13A; Section 4 for "Drilling Grade Bentonite." Should you have any questions or require additional information please let us know 1-307-765-4496.

Signed 10/8/03 Date

Approved by: Plant Manager

LabanaCert.doc (4/22/97)
Rev E (9/99)

Rec'd

15

LABORATORY ANALYSIS CERTIFICATION

GP-101

GREYBULL PLANT

DATE TESTED 10/9/2003

SOLD TO:	SHIP TO:
INQUIP ASSOCIATES, INC. 5 RIVERVIEW SAUGET IL 62206 USA SALES ORDER NO.: HCIV005825	INQUIP ASSOCIATES, INC. 5 RIVERVIEW SAUGET IL 62206 USA

SHIPPING DATE:	RAILCAR OR TRUCK NUMBER:	PLANT OF ORIGIN:	PRODUCT ID:
10-9-03	BN 453996	GREYBULL	GEL

Note Our data for the above shipment shows the following test results.

Test or Property	API Spec.	Result
Viscosity	30 min.	54
Plastic Viscosity (cP)	N/A	
Yield Point (# / 100 ft2)	N/A	
Filtrate Volume (cm3)	15.0 max.	12.2
> 75 micron (wt. %)	4.0 max.	3.9

Test or Property	API Spec.	Result
Moisture (wt. %)	12.5 max.	8.4
Y.P. / P.V. Ratio	3.0 max.	1.38

This certifies that the product shipped to the location as stated above meets the requirements of A.P.I. Section 13A, Section 4 for "Drilling Grade Bentonite." Should you have any questions or require additional information please let us know 1-307-765-4496.

Signed 10-10-03 Date

Approved by: Plant Manager

LabanaCert.doc (4/22/97)
Rev E (9/99)

Rus

(16)

LABORATORY ANALYSIS CERTIFICATION

GP-101

GREYBULL PLANT

DATE TESTED 10/9/2003

SOLD TO:	SHIP TO:
INQUIP ASSOCIATES, INC. 5 RIVERVIEW SAUGET IL 62206 USA SALES ORDER NO.: HCIV005826	INQUIP ASSOCIATES, INC. 5 RIVERVIEW SAUGET IL 62206 USA

SHIPPING DATE:	RAILCAR OR TRUCK NUMBER:	PLANT OF ORIGIN:	PRODUCT ID:
10-9-03	BN 454050	GREYBULL	GEL

Note Our data for the above shipment shows the following test results.

Test or Property	API Spec.	Result
Viscosity	30 min.	54
Plastic Viscosity (cP)	N/A	
Yield Point (#/ 100 ft2)	N/A	
Filtrate Volume (cm3)	15.0 max.	12.2
> 75 micron (wt. %)	4.0 max.	2.9

Test or Property	API Spec.	Result
Moisture (wt. %)	12.5 max.	8.4
Y.P. / P.V. Ratio	3.0 max.	1.38

This certifies that the product shipped to the location as stated above meets the requirements of A.P.I. Section 13A; Section 4 for "Drilling Grade Bentonite." Should you have any questions or require additional information please let us know 1-307-765-4498.

Signed 10-10-03 Date

Approved by: Plant Manager

LabansCert.doc (4/22/97)
Rev E (9/99)

Rev 5

LABORATORY ANALYSIS CERTIFICATION

GP-101

GREYBULL PLANT

DATE TESTED 9/19/2003

SOLD TO:	SHIP TO:
INQUIP ASSOCIATES, INC. 5 RIVERVIEW SAUGET IL 62206 USA SALES ORDER NO.: HCIV 5828	INQUIP ASSOCIATES, INC. 5 RIVERVIEW SAUGET IL 62206 USA

SHIPPING DATE:	RAILCAR OR TRUCK NUMBER:	PLANT OF ORIGIN:	PRODUCT ID:
10/9/2003	BN 455952	GREYBULL	GEL

Note Our data for the above shipment shows the following test results.

Test or Property	API Spec.	Result
Viscosity	30 min.	44
Plastic Viscosity (cP)	N/A	
Yield Point (# / 100 ft2)	N/A	
Filtrate Volume (cm3)	15.0 max.	13.4
> 75 micron (wt. %)	4.0 max.	1.6

Test or Property	API Spec.	Result
Moisture (wt. %)	12.5 max.	6.8
Y.P. / P.V. Ratio	3.0 max.	1.14

This certifies that the product shipped to the location as stated above meets the requirements of A.P.I. Section 13A; Section 4 for "Drilling Grade Bentonite." Should you have any questions or require additional information please let us know 1-307-765-4498.

Marcie Williams 10/13/03
Signed Date

Approved by: Plant Manager

LebanaCert.doc (4/22/97)
Rev E (9/99)

LABORATORY ANALYSIS CERTIFICATION

GP-101

GREYBULL PLANT

DATE TESTED 9/24/2003

SOLD TO:	SHIP TO:
INQUIP ASSOCIATES, INC. 5 RIVERVIEW SAUGET IL 62206 USA **SALES ORDER NO.:** HCIV 5829	INQUIP ASSOCIATES, INC. 5 RIVERVIEW SAUGET IL 62206 USA

SHIPPING DATE:	RAILCAR OR TRUCK NUMBER:	PLANT OF ORIGIN:	PRODUCT ID:
10/10/2003	BNSF 422680	GREYBULL	GEL

Note Our data for the above shipment shows the following test results.

Test or Property	API Spec.	Result
Viscosity	30 min.	50
Plastic Viscosity (cP)	N/A	
Yield Point (# / 100 ft2)	N/A	
Filtrate Volume (cm3)	15.0 max.	12.8
> 75 micron (wt. %)	4.0 max.	2.4

Test or Property	API Spec.	Result
Moisture (wt. %)	12.5 max.	8.4
Y.P. / P.V. Ratio	3.0 max.	0.78

This certifies that the product shipped to the location as stated above meets the requirements of A.P.I. Section 13A; Section 4 for "Drilling Grade Bentonite." Should you have any questions or require additional information please let us know 1-307-765-4496.

Marcie Williams 10/13/03
Signed Date

Approved by: Plant Manager

LebanaCert.doc (4/22/97)
Rev E (9/99)

GP-101

LABORATORY ANALYSIS CERTIFICATION

GREYBULL PLANT

DATE TESTED 10/20/2003

SOLD TO:	SHIP TO:
INQUIP ASSOCIATES, INC. 5 RIVERVIEW SAUGET IL 62206 USA SALES ORDER NO.: HCIV005833	INQUIP ASSOCIATES, INC. 5 RIVERVIEW SAUGET IL 62206 USA

SHIPPING DATE:	RAILCAR OR TRUCK NUMBER:	PLANT OF ORIGIN:	PRODUCT ID:
10-20-03	BNSF 422214	GREYBULL	GEL

Note Our data for the above shipment shows the following test results.

Test or Property	API Spec	Result
Viscosity	30 min.	53
Plastic Viscosity (cP)	N/A	
Yield Point (# / 100 ft2)	N/A	
Filtrate Volume (cm3)	15.0 max.	12.2
> 75 micron (wt. %)	4.0 max.	1.6

Test or Property	API Spec	Result
Moisture (wt. %)	12.5 max.	7.9
Y.P./P.V. Ratio	3.0 max.	1.12

This certifies that the product shipped to the location as stated above meets the requirements of A.P.I. Section 13A; Section 4 for "Drilling Grade Bentonite." Should you have any questions or require additional information please let us know 1-307-765-4485.

Signed 10-21-03 Date

Approved by: Plant Manager

LabansCert.doc (4/22/97)
Rev E (9/99)

GP-101

55

51

6624

MI SWACO

LABORATORY ANALYSIS CERTIFICATION

GREYBULL PLANT

DATE TESTED 8/9/2004

SOLD TO:	SHIP TO:
INQUIP ASSOCIATES, INC. P O BOX 2182 SANTA BARBAR CA 93120 USA HCIV 6624 SALES ORDER #: HCIV008624	INQUIP ASSOCIATES, INC. 141635509 5 RIVERVIEW AVE SAUGET IL 62206 USA

SHIPPING DATE:	RAILCAR OR TRUCK NUMBER:	PLANT OF ORIGIN:	PRODUCT ID:
8-9-04	ATSF314438	GREYBULL	GEL

Note Our data for the above shipment shows the following test results.

Test or Property	API Spec.	Result
Viscosity	30 min.	45
Plastic Viscosity (cP)	N/A	
Yield Point (# / 100 ft2)	N/A	
Filtrate Volume (cm3)	15.0 max.	14.8
> 75 micron (wt. %)	4.0 max.	2.1

Test or Property	API Spec.	Result
Moisture (wt. %)	N/A	7.6
Y.P. / P.V. Ratio	3.0 max.	1.46

This certifies that the product shipped to the location as stated above meets the requirements of A.P.I. Section 13A; Section 4 for "Drilling Grade Bentonite." Should you have any questions or require additional information please let us know 1-307-765-4486.

Signed 8/11/2004 Date

Approved by: Plant Manager

LabanaCert.doc (4/22/97)
Rev E (9/99)

MI SWACO

LABORATORY ANALYSIS CERTIFICATION

GP-101

GREYBULL PLANT

DATE TESTED 8/9/2004

SOLD TO:	SHIP TO:
INQUIP ASSOCIATES, INC. P O BOX 2152 SANTA BARBAR CA 93120 USA HCIV 66625 SALES ORDER #: HCIV006825	INQUIP ASSOCIATES, INC. 141635509 5 RIVERVIEW AVE SAUGET IL 62206 USA

SHIPPING DATE:	RAILCAR OR TRUCK NUMBER:	PLANT OF ORIGIN:	PRODUCT ID:
8-9-04	ATSF 314037	GREYBULL	OIL

27.03
27.42

Note: Our data for the above shipment shows the following test results.

Test or Property	API Spec.	Result
Viscosity	30 min.	45
Plastic Viscosity (cP)	N/A	
Yield Point (# / 100 ft2)	N/A	
Filtrate Volume (cm3)	15.0 max.	14.8
> 76 micron (wt. %)	4.0 max.	2.1

Test or Property	API Spec.	Result
Moisture (wt. %)	N/A	7.6
Y.P. / P.V. Ratio	3.0 max.	1.46

This certifies that the product shipped to the location as stated above meets the requirements of A.P.I. Section 13A; Section 4 for "Drilling Grade Bentonite." Should you have any questions or require additional information please let us know 1-307-765-4489.

8/11/2004

Signed Date

Approved by: Plant Manager

LabansCert.doc (4/22/97)
Rev E (9/99)

CERTIFICATION

GREYBULL PLANT

DATE TESTED 7/1/2004

6626 53

T. Miller

SOLD TO:	SHIP TO:
INQUIP ASSOCIATES, INC. P O BOX 2182 SANTA BARBAR CA 93120 USA SALES ORDER #: HCIV 6626	INQUIP ASSOCIATES, INC. 141635509 5 RIVERVIEW AVE SAUGET IL 62206 USA

SHIPPING DATE:	RAILCAR OR TRUCK NUMBER:	PLANT OF ORIGIN:	PRODUCT ID:
08/02/2004	McCorkle #1830	GREYBULL	GEL

Note Our data for the above shipment shows the following test results.

Test or Property	API Spec.	Result
Viscosity	30 min.	50
Plastic Viscosity (cP)	N/A	
Yield Point (# / 100 ft2)	N/A	
Filtrate Volume (cm3)	15.0 max.	14.4
> 75 micron (wt. %)	4.0 max.	2.0

Test or Property	API Spec.	Result
Moisture (wt. %)	N/A	8.8
Y.P. / P.V. Ratio	3.0 max.	1.13

This certifies that the product shipped to the location as stated above meets the requirements of A.P.I. Section 13A; Section 4 for "Drilling Grade Bentonite." Should you have any questions or require additional information please let us know 1-307-765-4496.

Signed 8/5/2004 Date

Approved by: Plant Manager

LabanaCert.doc (4/22/97)

Rev E (9/99)

MI SWACO

LABORATORY ANALYSIS CERTIFICATION

6827 58 54

6627

GREYBULL PLANT

DATE TESTED 7/16/2004

SOLD TO:	SHIP TO:
INQUIP ASSOCIATES, INC. P O BOX 2182 SANTA BARBAR CA 93120 USA SALES ORDER #: HCIV 6627	INQUIP ASSOCIATES, INC. 141635509 5 RIVERVIEW AVE SAUGET IL 62206 USA

SHIPPING DATE:	RAILCAR OR TRUCK NUMBER:	PLANT OF ORIGIN:	PRODUCT ID:
08/05/2004	Mercedes #563	GREYBULL	GEL

MERCEDES TRAILER 8/5/04

Note Our data for the above shipment shows the following test results.

Test or Property	API Spec.	Result
Viscosity	30 min.	47
Plastic Viscosity (cP)	N/A	
Yield Point (# / 100 ft2)	N/A	
Filtrate Volume (cm3)	15.0 max.	13.0
> 75 micron (wt. %)	4.0 max.	2.1

Test or Property	API Spec.	Result
Moisture (wt. %)	N/A	7.6
Y.P. / P.V. Ratio	3.0 max.	1.13

This certifies that the product shipped to the location as stated above meets the requirements of A.P.I. Section 13A; Section 4 for "Drilling Grade Bentonite." Should you have any questions or require additional information please let us know 1-307-765-4496.

8/5/2004

Signed Date

Approved by: Plant Manager

LabanaCert.doc (4/22/97)

Rev E (9/99)

MI SWACO

LABORATORY ANALYSIS CERTIFICATION

GP-101

6628

Trailer

GREYBULL PLANT

DATE TESTED 7/1/2004

SOLD TO:	SHIP TO:
INQUIP ASSOCIATES, INC. P O BOX 2182 SANTA BARBAR CA 93120 USA SALES ORDER #: HCIV 6628	INQUIP ASSOCIATES, INC. 141635509 5 RIVERVIEW AVE SAUGET IL 62206 USA

SHIPPING DATE:	RAILCAR OR TRUCK NUMBER:	PLANT OF ORIGIN:	PRODUCT ID:
08/03/2004	Mission Petroleum	GREYBULL	GEL

Note Our data for the above shipment shows the following test results.

Test or Property	API Spec.	Result
Viscosity	30 min.	50
Plastic Viscosity (cP)	N/A	
Yield Point (# / 100 ft2)	N/A	
Filtrate Volume (cm3)	15.0 max.	14.4
> 75 micron (wt. %)	4.0 max.	2.0

Test or Property	API Spec.	Result
Moisture (wt. %)	N/A	8.8
Y.P. / P.V. Ratio	3.0 max.	1.13

This certifies that the product shipped to the location as stated above meets the requirements of A.P.I. Section 13A; Section 4 for "Drilling Grade Bentonite." Should you have any questions or require additional information please let us know 1-307-765-4496.

8/5/2004

Signed Date

Approved by: Plant Manager

LabansCert.doc (4/22/97)
Rev E (9/99)

CERTIFICATION

GREYBULL PLANT

DATE TESTED 7/15/2004

SOLD TO:	SHIP TO:
INQUIP ASSOCIATES, INC. P O BOX 2182 SANTA BARBAR CA 93120 USA HCIV 6632 SALES ORDER #: HCIV 6632	INQUIP ASSOCIATES, INC. 141635509 5 RIVERVIEW AVE SAUGET IL 62206 USA

SHIPPING DATE:	RAILCAR OR TRUCK NUMBER:	PLANT OF ORIGIN:	PRODUCT ID:
08/06/2004	Mission Petroleum #9059	GREYBULL	GEL

Note Our data for the above shipment shows the following test results.

Test or Property	API Spec.	Result
Viscosity	30 min.	38
Plastic Viscosity (cP)	N/A	
Yield Point (# / 100 ft2)	N/A	
Filtrate Volume (cm3)	15.0 max.	14.0
> 75 micron (wt. %)	4.0 max.	2.8

Test or Property	API Spec.	Result
Moisture (wt. %)	N/A	8.0
Y.P. / P.V. Ratio	3.0 max.	0.71

This certifies that the product shipped to the location as stated above meets the requirements of A.P.I. Section 13A; Section 4 for "Drilling Grade Bentonite." Should you have any questions or require additional information please let us know 1-307-765-4496.

8/10/2004

Signed Date

Approved by: Plant Manager

LabanaCert.doc (4/22/97)
Rev E (9/99)

LABORATORY ANALYSIS
CERTIFICATION

GREYBULL PLANT

DATE TESTED 8/9/2004

SOLD TO:	SHIP TO:
INQUIP ASSOCIATES, INC. P O BOX2182 SANTA BARBAR CA 93120 USA SALES ORDER #: HCIV006633	INQUIP ASSOCIATES, INC. 141635509 S RIVERVIEW AVE SAUGET IL 62206 USA

HCIV 66633

TRAILER MERCEDES

SHIPPING DATE:	RAILCAR OR TRUCK NUMBER:	PLANT OF ORIGIN:	PRODUCT ID:
8-9-04	MERCEDES TRUCKING #55	GREYBULL	GEL

Note Our data for the above shipment shows the following test results.

Test or Property	API Spec.	Result
Viscosity	30 min.	45
Plastic Viscosity (cP)	N/A	
Yield Point (lb / 100 ft2)	N/A	
Filtrate Volume (cm3)	15.0 max.	14.8
> 75 micron (wt. %)	4.0 max.	2.1

Test or Property	API Spec.	Result
Moisture (wt. %)	N/A	7.6
Y.P. / P.V. Ratio	3.0 max.	1.46

This certifies that the product shipped to the location as stated above meets the requirements of A.P.I. Section 13A Section 4 for "Drilling Grade Bentonite." Should you have any questions or require additional information please let us know 1-307-765-4665.

8/11/2004

Signed Date

Approved by: Plant Manager

LabansCertLdoc (4/22/97)
Rev E (9/99)

MI SWACO

LABORATORY ANALYSIS CERTIFICATION

GP-101

GREYBULL PLANT

DATE TESTED 8/16/2004

SOLD TO:	SHIP TO:
INQUIP ASSOCIATES, INC. P O BOX 2182 SANTA BARBAR CA 93120 USA SALES ORDER #: HCIV006857	INQUIP ASSOCIATES, INC. 141635509 5 RIVERVIEW AVE SAUGET IL 62206 USA

HCIV 6657

SHIPPING DATE:	RAILCAR OR TRUCK NUMBER:	PLANT OF ORIGIN:	PRODUCT ID:
8-16-04	MERCEDES #557	GREYBULL	GBL

MERCEDES
24.61 TNS

Note: Our data for the above shipment shows the following test results.

Test or Property	API Spec.	Result
Viscosity	30 min.	44
Plastic Viscosity (cP)	N/A	
Yield Point (# / 100 ft2)	N/A	
Filtrate Volume (cm3)	15.0 max.	14.2
> 75 micron (wt. %)	4.0 max.	2.1

Test or Property	API Spec.	Result
Moisture (wt. %)	N/A	7.6
Y.P. / P.V. Ratio	3.0 max.	1.14

This certifies that the product shipped to the location as stated above meets the requirements of A.P.I. Section 13A; Section 4 for "Drilling Grade Bentonite." Should you have any questions or require additional information please let us know 1-307-765-4498.

8/17/2004

Signed Date

Approved by: Plant Manager

LabansCert.doc (4/22/97)

Rev E (9/99)

MI SWACO

LABORATORY ANALYSIS CERTIFICATION

GP-101

63
54

GREYBULL PLANT

DATE TESTED 8/16/2004

SOLD TO:	SHIP TO:
INQUIP ASSOCIATES, INC. P O BOX 2182 SANTA BARBAR CA 93120 USA HCIV 66658 SALES ORDER #: HCIV 6658	INQUIP ASSOCIATES, INC. 141635509 5 RIVERVIEW AVE SAUGET IL 62206 USA

MERCEDES
24.14 TONS

SHIPPING DATE:	RAILCAR OR TRUCK NUMBER:	PLANT OF ORIGIN:	PRODUCT ID:
08/17/2004	Mercedes #561	GREYBULL	GEL

Note Our data for the above shipment shows the following test results.

Test or Property	API Spec.	Result
Viscosity	30 min.	44
Plastic Viscosity (cP)	N/A	
Yield Point (# / 100 ft2)	N/A	
Filtrate Volume (cm3)	15.0 max.	14.2
> 75 micron (wt. %)	4.0 max.	2.1

Test or Property	API Spec.	Result
Moisture (wt. %)	N/A	7.6
Y.P. / P.V. Ratio	3.0 max.	1.14

This certifies that the product shipped to the location as stated above meets the requirements of A.P.I. Section 13A; Section 4 for "Drilling Grade Bentonite." Should you have any questions or require additional information please let us know 1-337-765-4496.

8/18/2004

Signed Date

Approved by: Plant Manager

LabenaCert.doc (4/22/97)
Rev E (9/99)

MI SWACO

CERTIFICATION

GREYBULL PLANT

DATE TESTED 7/13/2004

SOLD TO:	SHIP TO:
INQUIP ASSOCIATES, INC. P O BOX 2182 SANTA BARBARA CA 93120 USA HCIV 6659 SALES ORDER #: HCIV 6659	INQUIP ASSOCIATES, INC. 141635509 5 RIVERVIEW AVE SAUGET IL 62206 USA

SHIPPING DATE:	RAILCAR OR TRUCK NUMBER:	PLANT OF ORIGIN:	PRODUCT ID:
08/13/2004	Mission #9302	GREYBULL	GEL

MISSION PETROLEUM TRUCK

22.77 TDS

Note Our data for the above shipment shows the following test results.

Test or Property	API Spec.	Result
Viscosity	30 min.	56
Plastic Viscosity (cP)	N/A	
Yield Point (# / 100 ft2)	N/A	
Filtrate Volume (cm3)	15.0 max.	14.0
> 75 micron (wt. %)	4.0 max.	1.6

Test or Property	API Spec.	Result
Moisture (wt. %)	N/A	7.4
Y.P. / P.V. Ratio	3.0 max.	1.29

This certifies that the product shipped to the location as stated above meets the requirements of A.P.I. Section 13A; Section 4 for "Drilling Grade Bentonite." Should you have any questions or require additional information please let us know 1-307-765-4495.

Signed 8/17/2004 Date

Approved by: Plant Manager

LabanaCert.doc (4/22/97)
Rev E (9/99)

MI SWACO

LABORATORY ANALYSIS CERTIFICATION

GP-101

GREYBULL PLANT

DATE TESTED 7/16/2004

SOLD TO:	SHIP TO:
INQUIP ASSOCIATES, INC. P O BOX 2182 SANTA BARBAR CA 93120 USA HCIV 66660 SALES ORDER #: HCIV 6660	INQUIP ASSOCIATES, INC. 141635509 5 RIVERVIEW AVE SAUGET IL 62206 USA

SHIPPING DATE:	RAILCAR OR TRUCK NUMBER:	PLANT OF ORIGIN:	PRODUCT ID:
08/16/2004	Mission #9059	GREYBULL	GEL

Note Our data for the above shipment shows the following test results.

Test or Property	API Spec.	Result
Viscosity	30 min.	47
Plastic Viscosity (cP)	N/A	
Yield Point (# / 100 ft2)	N/A	
Filtrate Volume (cm3)	15.0 max.	13.0
> 75 micron (wt. %)	4.0 max.	2.1

Test or Property	API Spec.	Result
Moisture (wt. %)	N/A	7.6
Y.P. / P.V. Ratio	3.0 max.	1.13

This certifies that the product shipped to the location as stated above meets the requirements of A.P.I. Section 13A; Section 4 for "Drilling Grade Bentonite." Should you have any questions or require additional information please let us know 1-307-765-4486.

8/18/2004

Signed Date

Approved by: Plant Manager

LabsnsCert.doc (4/22/97)
Rev E (9/99)

MI SWACO

LABORATORY ANALYSIS CERTIFICATION

GP-101

GREYBULL PLANT

DATE TESTED 8/16/2004

SOLD TO:	SHIP TO:
INQUIP ASSOCIATES, INC. P O BOX 2182 SANTA BARBAR CA 93120 USA SALES ORDER #: HCIV 5661	INQUIP ASSOCIATES, INC. 141635509 5 RIVERVIEW AVE SAUGET IL 62206 USA

HCIV labeled

LW Miller
Trailer
24.37 Tons

SHIPPING DATE:	RAILCAR OR TRUCK NUMBER:	PLANT OF ORIGIN:	PRODUCT ID:
08/17/2004	LW Miller #809	GREYBULL	GEL

Note: Our data for the above shipment shows the following test results.

Test or Property	API Spec.	Result
Viscosity	30 min.	44
Plastic Viscosity (cP)	N/A	
Yield Point (# / 100 ft2)	N/A	
Filtrate Volume (cm3)	15.0 max.	14.2
> 75 micron (wt. %)	4.0 max.	2.1

Test or Property	API Spec.	Result
Moisture (wt. %)	N/A	7.6
Y.P. / P.V. Ratio	3.0 max.	1.14

This certifies that the product shipped to the location as stated above meets the requirements of A.P.I. Section 13A; Section 4 for "Drilling Grade Bentonite." Should you have any questions or require additional information please let us know 1-307-765-4496.

Signed

8/18/2004
Date

Approved by: Plant Manager

LabanaCert.doc (4/22/97)
Rev E (9/99)

MI SWACO LABORATORY ANALYSIS

CERTIFICATION

GREYBULL PLANT

DATE TESTED 7/19/2004

6685

SOLD TO:	SHIP TO:
INQUIP ASSOCIATES, INC. P O BOX 21E2 SANTA BARBAR CA 93120 USA HCIV 6685 SALES ORDER #: HCIV006685	INQUIP ASSOCIATES, INC. 141635509 5 RIVERVIEW AVE SAUGET IL 62206 USA

SHIPPING DATE:	RAILCAR OR TRUCK NUMBER:	PLANT OF ORIGIN:	PRODUCT ID:
08-31-04	MCCORKLE 1769	GREYBULL	GEL

Note Our data for the above shipment shows the following test results.

Test or Property	API Spec.	Result
Viscosity	30 min.	56
Plastic Viscosity (cP)	N/A	
Yield Point (# / 100 ft2)	N/A	
Filtrate Volume (cm3)	15.0 max.	13.0
> 75 micron (wt. %)	4.0 max.	2.0

Test or Property	API Spec.	Result
Moisture (wt. %)	N/A	7.8
Y.P. / P.V. Ratio	3.0 max.	1.50

This certifies that the product shipped to the location as stated above meets the requirements of A.P.I. Section 13A; Section 4 for "Drilling Grade Bentonite." Should you have any questions or require additional information please let us know 1-307-765-4498.

9/8/2004

Signed Date

Approved by: Plant Manager

LabansCert.doc (4/22/97)

Rev E (9/99)

MI SWACO

LABORATORY ANALYSIS CERTIFICATION

GP-101

6687

GREYBULL PLANT

DATE TESTED 8/6/2004

SOLD TO:	SHIP TO:
INQUIP ASSOCIATES, INC. P O BOX 2182 SANTA BARBAR CA 93120 USA HCIV 6687 SALES ORDER #: HCIV006687	INQUIP ASSOCIATES, INC. 141635509 5 RIVERVIEW AVE SAUGET IL 62206 USA

SHIPPING DATE:	RAILCAR OR TRUCK NUMBER:	PLANT OF ORIGIN:	PRODUCT ID:
09-01-04	L.W. MILLER 1024	GREYBULL	GEL

Note Our data for the above shipment shows the following test results.

Test or Property	API Spec.	Result
Viscosity	30 min.	48
Plastic Viscosity (cP)	N/A	
Yield Point (# / 100 ft2)	N/A	
Filtrate Volume (cm3)	15.0 max.	13.2
> 75 micron (wt. %)	4.0 max.	2.0

Test or Property	API Spec.	Result
Moisture (wt. %)	N/A	7.7
Y.P. / P.V. Ratio	3.0 max.	1.20

This certifies that the product shipped to the location as stated above meets the requirements of A.P.I. Section 13A; Section 4 for "Drilling Grade Bentonite." Should you have any questions or require additional information please let us know 1-307-765-4486.

9/8/2004

Signed Date

Approved by: Plant Manager

LabenaCert.doc (4/22/97)

Rev E (9/99)

CERTIFICATION

GREYBULL PLANT

DATE TESTED 7/16/2004

SOLD TO:	SHIP TO:
INQUIP ASSOCIATES, INC. P O BOX 2182 SANTA BARBAR CA 93120 USA HCIV 6701 SALES ORDER #: HCIV006701	INQUIP ASSOCIATES, INC. 141635509 5 RIVERVIEW AVE SAUGET IL 62206 USA

SHIPPING DATE:	RAILCAR OR TRUCK NUMBER:	PLANT OF ORIGIN:	PRODUCT ID:
09-07-04	J.H. WALKER 422	GREYBULL	GEL

Note Our data for the above shipment shows the following test results.

Test or Property	API Spec.	Result
Viscosity	30 min.	47
Plastic Viscosity (cP)	N/A	
Yield Point (# / 100 ft2)	N/A	
Filtrate Volume (cm3)	15.0 max.	13.0
> 75 micron (wt. %)	4.0 max.	2.1

Test or Property	API Spec.	Result
Moisture (wt. %)	N/A	7.6
Y.P. / P.V. Ratio	3.0 max.	1.13

This certifies that the product shipped to the location as stated above meets the requirements of A.P.I. Section 13A; Section 4 for "Drilling Grade Bentonite." Should you have any questions or require additional information please let us know 1-307-765-4486.

9/8/2004

Signed Date

Approved by: Plant Manager

LabanaCert.doc (4/22/97)

Rev E (9/99)

MI SWACO

LABORATORY ANALYSIS CERTIFICATION

GP-101

GREYBULL PLANT

DATE TESTED 7/26/2004

SOLD TO:	SHIP TO:
INQUIP ASSOCIATES, INC. P O BOX 2182 SANTA BARBAR CA 93120 USA HCIV 6702 SALES ORDER #: HCIV006702	INQUIP ASSOCIATES, INC. 141635509 5 RIVERVIEW AVE SAUGET IL 62206 USA

SHIPPING DATE:	RAILCAR OR TRUCK NUMBER:	PLANT OF ORIGIN:	PRODUCT ID:
09-07-04	J.H. WALKER 145	GREYBULL	GEL

Note Our data for the above shipment shows the following test results.

Test or Property	API Spec.	Result
Viscosity	30 min.	56
Plastic Viscosity (cP)	N/A	
Yield Point (# / 100 ft2)	N/A	
Filtrate Volume (cm3)	15.0 max.	14.0
> 75 micron (wt. %)	4.0 max.	1.7

Test or Property	API Spec.	Result
Moisture (wt. %)	N/A	7.6
Y.P. / P.V. Ratio	3.0 max.	2.00

This certifies that the product shipped to the location as stated above meets the requirements of A.P.I. Section 13A; Section 4 for "Drilling Grade Bentonite." Should you have any questions or require additional information please let us know 1-307-765-4406.

9/9/2004

Signed Date

Approved by: Plant Manager

MI SWACO

CERTIFICATION

GREYBULL PLANT

DATE TESTED 8/17/2004

6703

SOLD TO:	SHIP TO:
INQUIP ASSOCIATES, INC. P O BOX 2182 SANTA BARBAR CA 93120 USA HCIV 6703 SALES ORDER #: HCIV006703	INQUIP ASSOCIATES, INC. 141635509 5 RIVERVIEW AVE SAUGET IL 62206 USA

GREY
WALKER
OVER THE ROAD
TRAILER

SHIPPING DATE:	RAILCAR OR TRUCK NUMBER:	PLANT OF ORIGIN:	PRODUCT ID:
09-07-04	J.H. WALKER 104	GREYBULL	GEL

Note Our data for the above shipment shows the following test results.

Test or Property	API Spec.	Result
Viscosity	30 min.	48
Plastic Viscosity (cP)	N/A	
Yield Point (# / 100 ft2)	N/A	
Filtrate Volume (cm3)	15.0 max.	14.0
> 75 micron (wt. %)	4.0 max.	2.3

Test or Property	API Spec.	Result
Moisture (wt. %)	N/A	8.5
Y.P. / P.V. Ratio	3.0 max.	1.43

This certifies that the product shipped to the location as stated above meets the requirements of A.P.I. Section 13A; Section 4 for "Drilling Grade Bentonite." Should you have any questions or require additional information please let us know 1-307-765-4456.

9/8/2004

Signed Date

Approved by: Plant Manager

LabanaCert.doc (4/22/97)
Rev E (8/99)

SECTION 02290

SOIL-BENTONITE BARRIER WALL

PART 1 GENERAL

1.01 DESCRIPTION

A. Furnish all plant, labor, equipment and materials, and perform all operations as required to design and construct a soil-bentonite barrier wall as shown in the Drawings and specified herein.

B. The slurry trench shall be a continuous, vertically sided trench excavated through soil supported using slurry. The alignment and minimum depth are indicated on the Contract Drawings.

C. The contractor shall be responsible for detailed design of the soil-bentonite barrier wall and shall be responsible for the adequacy and performance of the completed barrier wall. The contractor's design shall, as a minimum, meet the requirements of this section.

D. The work shall include, but not be limited to the following items:

1. Detailed design of the soil-bentonite barrier wall

2. Preparation of a working pad surface, where required.

3. Excavation of slurry trench.

4. Circulation and maintenance of bentonite slurry.

5. Placing soil bentonite backfill in the slurry filled trench as shown on the Drawings.

6. Handling of spoils from slurry wall installation, and managing surface water runoff during construction.

E. Barrier wall backfill is defined as a mixture of naturally-deposited, on-site and off-site soils (if required) and bentonite slurry proportioned to provide hydraulic conductivity of less than or equal to 1×10^{-7} cm/sec when mixed to a homogenous consistency and placed within the excavated slurry trench in a controlled manner. The controlled laboratory mix design for the proportioned backfill mix shall be in the range of 1×10^{-6} to 1×10^{-8} cm/sec. The on-site soil material shall be excavated from the slurry trench and off-site soil material (if required) shall be brought to the site from an approved off-site source. The maximum allowable particle size in the backfill is 3 inches.

F. The depth of the slurry wall has been estimated from the borings taken during the Pre-Design Investigation. Some variation of the depth is to be anticipated. The slurry wall shall penetrate the overburden down to top of bedrock.

G. The Contractor shall submit evidence that his firm or competent in slurry trench construction. The Contractor shall have a minimum of five years of experience in slurry trench construction to similar depths and in similar materials as this project and have knowledge in all aspects of soil-bentonite slurry trench construction. Two projects which each had installations of at least 30,000 cubic yards of wall volume shall be included.

H. The Contractor shall submit qualifications of key personnel including, design engineer, and field personnel proposed for work performed pursuant to this specification. Key personnel shall be experienced in the design and construction of soil-bentonite barrier walls and the proposed superintendent must have completed at least one project for the Contractor.

I. The Contractor's Design Engineer shall have at least 5 years experience in design of soil-bentonite cutoff walls and shall be a Registered Professional Engineer in Illinois.

1.02 DEFINITIONS

A. A slurry wall as referred to herein is a wall of the minimum dimensions shown on the Drawings, excavated through the existing soils to top of bedrock by the slurry trench method of excavation, and backfilled with a soil-bentoinite mixture to form a seepage barrier. The wall must be resistant to cracking and erosion.

B. The slurry trench method of excavation consists of excavating a trench in the existing soils while at the same time keeping the trench filled with bentonite-water slurry. The basic purpose of the slurry is to maintain the stability of the walls of the trench.

C. Slurry is a stable, colloidal, thixotropic suspension of powdered bentonite in water.

D. Bentonite is a natural clay whose principal mineral constituent is sodium montmorillonite.

E. Slurry Loss is a drop of the slurry surface in the excavation of 5 feet or more in a time period of 30 minutes or less not resulting from removal of excavated material.

F. Surface water is all water that enters the work area above the ground surface from either natural or artificial sources.

G. Groundwater denotes all water below the existing ground surface within the work area.

H. The working pad is the surface on which the equipment shall operate to construct the wall. The elevation of this surface along the alignment of the trench shall be such that it does not cause slurry in any part of the open trench to be more than 2 feet below the top of the trench or less than 5 feet above groundwater level.

I. Soil-bentonite is a low strength mixture of soil and bentonite-water slurry. The soil used to make the backfill may be taken from the excavation spoils.

J. Engineer is the representative of the Owner who will review the contractor's work, provide Quality Assurance of the contractor's work , and judge whether the completed work is acceptable.

K. The Contractor's Design Engineer is the engineer who will perform the detailed design of the soil-bentonite barrier wall, and prepare and seal the final design. He shall be the engineer of record for the soil-bentonite barrier wall.

1.03 REFERENCE STANDARDS

A. American Society for Testing Materials (ASTM)

1. ASTM C143 Standard Test Method for Slump of Hydraulic-Cement Concrete.

2. ASTM D422 Standard Test Method for Particle-Size Analysis of Soils.

3. ASTM D 2166 Standard Test Method for Unconfined Compressive Strength of Cohesive Soils.

4. ASTM D2216 Standard Test Method for Laboratory Determination of Water (Moisture) Content of Soil and Rock by Mass.

5. ASTM D4318 Standard Test Method for Liquid Limit, Plastic Limit, and Plasticity Index of Soils.

6. ASTM D 4380 Standard Test Method for Density of Bentonite Slurries.

7. ASTM D5084 Standard Test Method for Measurement of Hydraulic Conductivity of Saturated Porous Materials Using a Flexible Wall Permeameter.

B. American Petroleum Institute (API)

1. API Specification 13A Specification for Oil Well Drilling Fluid Materials.

2. API Recommended Practice 13B Standard Procedure for Testing Drilling Fluids.

C. Where reference is made to one of the above standards, the revision in effect at the time of work shall apply.

D. In the event of a conflict between this Specification and the referenced standards, this Specification shall govern.

1.04 SUBMITTALS

A. Submit four copies of a Barrier Wall Construction Plan. Submit a minimum of 2 weeks prior to the start of barrier wall construction. The Construction Plan shall include four copies of the barrier wall design including sealed construction plans, specifications, and calculations. The plan should include drawings and written text as necessary to clearly indicate the following:

1. Proposed wall construction sequence and anticipated schedule, including description of corner construction and any revisions to meet backfill material properties required for corner construction. A detailed construction schedule shall

be submitted indicating a detailed critical path schedule which includes mobilization, work pad preparation, guide wall construction, slurry wall construction, and anticipated contingencies to assure the project schedule is met. The submittal shall indicate production rates and shift schedules needed to meet the project requirements.

2. Proposed slurry mixing, and pumping equipment. The barrier wall backfill mix design shall be selected by the Contractor. Successful barrier wall backfill design testing and documentation including hydraulic conductivity and chemical compatibility testing will be required for backfill mixes prior to use on the site. Chemical compatibility test data for the existing site conditions will be provided to the Contractor by the Owner.

3. Proposed trench excavation equipment.

4. Proposed trench backfill mixing and placement equipment and procedures including method for confirming top of rock and excavation depths.

5. Detailed contingency plan outlining steps to be followed in the event of excessive slurry loss. The plans shall also include method to be used to treat excessive slurry loss, (grouting, etc.).

6. Proposed method(s) to prevent bentonite slurry from entering nearby water courses or sewer lines in the event of slurry loss.

7. Documents certifying the properties of bentonite and other materials. At the Owner's request, the Contractor shall furnish samples of any other materials in sufficient amount for independent quality control testing.

8. Documentation that the off-site borrow soil (if required) proposed by the Contractor for use in preparing the barrier wall backfill is free of man-placed materials, oils or other potentially hazardous materials.

9. Results of geotechnical index property testing (gradation per ASTM D422 and Atterberg Limits per ASTM D4318) conducted on the off-site borrow soil proposed by the Contractor for use in preparing the barrier wall backfill, if off-site borrow soil is required.

10. Calculations of proposed slurry trench stability used by the Contractor as the basis for selecting the proposed minimum slurry elevation.

11. Proposed truck traffic patterns and bentonite stockpile areas and hydrating ponds and equipment decontamination area. Include locations and design of temporary slurry trench/barrier wall crossings by trucks and other construction equipment.

12. Contractor's Quality Control Plan including sample quality control test and measurement forms to be completed by the Contractor during construction; description of quality control testing equipment and procedures, and off-site testing laboratory proposed for use.

13. Proposed excess soil and slurry disposal and site cleanup procedures. Excess water is to be dried off prior to placement of material in the temporary stockpile shown on the drawings.

B. Submit results of construction quality control testing, trench depth measurements and daily field reports during construction. Daily field reports should contain the following:

1. Day, month, year, time of work sights (beginning and end); list of all workers names, equipment used, and major deliveries.

2. The location of completed barrier wall installed during the work shifts and all barrier wall portions completed to-date on a plan of suitable scale not smaller than 1 inch = 10 feet.

3. Other pertinent observations including, but not limited to: slurry loss; ground settlement and/or heave; collapses of the barrier wall; and any unusual behavior of any equipment during the process.

4. Summary of any downtime or other unproductive time, including time, duration, and reason.

5. Certificate for each truck load delivery of bentonite.

6. Quantity of bentonite and other materials used that day.

7. All laboratory test results.

8. The Contractor shall submit Daily Quality Control Reports at the end of the next working day.

C. Prepare and submit four copies of a construction quality assurance report after completing barrier wall construction that includes the results of construction quality control test results, trench depth measurements, and record barrier wall surface elevation and wall alignment surveys conducted by a Land Surveyor registered in the State of Illinois, documenting that the wall was constructed in accordance with the Drawings and Specifications.

1.05 METHOD OF MEASUREMENT

A. Soil-bentonite slurry walls, complete in place, will be measured by the number of square feet of wall based on the design elevations as shown on the Drawings (measured on the vertical surface). Verification of trench bottom elevations will be performed during the installation of the soil-bentonite slurry wall.

1.06 BASIS OF PAVEMENT

A. Payment will be made on the basis of actual validated costs plus an agreed-to Fixed Dollar Fee. The Fee will be paid on a prorated basis consistent with the project monthly completion schedule not to exceed 50% of the total value of the Fee. Following final

acceptance of the work, the remaining 50% of the total Fee will be paid in a single payment.

1.07 QUALITY CONTROL AND ASSURANCE

1. Additional testing, measurements and observations as described for quality control, will be conducted by the Engineer for purposes of quality assurance. The Contractor shall cooperate with the Engineer in conducting quality assurance testing.

2. The Contractor shall provide quality control measures as necessary to assure that the barrier wall is constructed in a manner that satisfies the performance requirements set forth by the Contractor's design engineer, and these Specifications. Quality control measures shall be implemented by the Contractor during the construction sequence to avoid defects in the finished wall that would reduce the effectiveness of the barrier. These measures shall include but are not limited to visual observations and measurements by the Contractor's experienced personnel on the excavation and backfilling procedures, trench depths and alignment, barrier continuity, and testing of slurry and backfill, as necessary, to provide a barrier wall meeting these Specifications. The Contractor is required to perform quality control testing in accordance with his Quality Control Plan, these Specifications, and CQAP; and to provide the Engineer with the results of quality control testing, measurements and documentation of observations on a daily basis.

PART 2 MATERIALS

2.01 ADDITIVES

A. Additives such as dispersants, plugging agents, and/or softeners may be added to the water or slurry so as to obtain proper workability of the slurry and efficient use of the bentonite. Additives to the slurry must be approved by the Engineer and the EPA prior to use.

2.02 BENTONITE

A. Bentonite used in preparing the bentonite-water slurry and soil bentonite backfill mix shall be sodium montomorillonite bentonite, Fed Jel 90 (FJ-90) or approved equivalent. If FJ-90 is not used, the Contractor shall perform laboratory testing to demonstrate equivalency (at his cost). Bentonite shall meet the latest version of API Standard 13A "Specification for Oil Well Drilling Fluid Materials."

2.03 WATER

A. Water used for the slurry and barrier backfill mixing shall be from the local potable water source. The mixing water shall be free of deleterious substances, leachate, or oil and grease that may adversely affect the properties of the bentonite slurry. Mixing water supply shall be tested weekly by the Contractor for the properties listed here with the results submitted to the Engineer. The water shall exhibit a pH in the range of 7 (±0.5), shall have a total hardness less than 300 ppm, and shall have total dissolved solids below 500 ppm. The water shall be tested weekly for conductivity as well.

2.04 SOIL

A. The material to be used for backfill shall be composed of slurry, sand, silt and clay and may be obtained from the trench excavation or from borrow sources approved by the Owner. Soil particles equal to or larger than 3 inches in diameter shall be separated and removed from the on-site soils and stockpiled in the designated excess soil area shown on the Drawings. The on-site soils shall also be free of roots, rubbish, organics, or other foreign matter which could be detrimental to the backfill mix.

B. Soil used to construct working pad surfaces and control berms along the trench alignment will be excavated from on- or off-site borrow sources. In areas where only berms are required, minimal surficial excavation is allowed along the trench alignment to mine adequate borrow soils for berm construction. The Contractor shall use the borrow source area nearest to the location of the ongoing slurry wall construction to minimize traffic.

2.05 SLURRY

A. The bentonite-water slurry shall be prepared by mixing powdered bentonite with water in a high-speed colloidal or venturi-type flash mixer which achieves complete dispersion of the bentonite particles. The bentonite slurry shall be fully hydrated for a minimum of 30 minutes after mixing in the mixed before introduction into the trench. The slurry shall be maintained in holding pits or tanks and agitated to hold all particles in suspension. Prior to pumping into the trench, the slurry shall be required to be tested for the following from A.P.I. Recommended Practice 13-B1. Minimum or maximum values shall be determined by the contractor's design engineer based on site conditions: percent bentonite (by weight), slurry unit weight, apparent viscosity, rate of filtrate loss, and pH.

Testing to verify that these requirements have been met shall be performed by the Contractor.

B. Slurry within the trench shall be monitored for consistency in accordance with A.P.I. Recommended Practice 13B-1. Minimum or maximum values for the flollowing parameters should be stated in the Contractor's design: pH, unit weight, and.apparent viscosity.

Testing to verify that these requirements are followed shall be performed by the Contractor. Immediately adjust the slurry properties if measurements indicate variations from these requirements. The contractor shall be responsible for maintaining the stability of the trench excavation. Weighting agents may be used to increase the density of the slurry if necessary to maintain trench stability.

C. The dry bentonite will need to have a manufacturer's certification that the bentonite meets the following API 13A requirements:

Viscosity	30 min @ 600 rpm
Filtrate Volume	15 cm^3 max
>75 Micron	4 % wt max
Moisture	10% wt max

Yield Point/Plastic Viscosity 3 max

2.06 BARRIER WALL BACKFILL

A. Backfill introduced into the trench shall be a stable, homogeneous mixture of soil excavated from the trench with maximum particle size less than 3 inches, imported soil from the off-site borrow (if necessary) and slurry and dry bentonite if necessary. Other materials proposed by the Contractor will be considered but must be approved the by the Engineer. The backfill mix shall be designed by the contractor and submitted to the Engineer for approval. The resulting mix shall have a hydraulic conductivity less than or equal to 1 x 10-7 cm/sec. All backfill shall be mixed at a location adjacent to the trench. Mixing of backfill with slurry in the trench shall not be permitted. The Contractor will demonstrate to the Engineer the suitability of the backfill mix before placement.

2.07 EQUIPMENT

A. The Contractor shall operate a slurry plant consisting of a bentonite storage facility, high speed colloidal or venturi-type flash mixer, slurry mixing and hydration tanks or pits. The tanks or pits shall have ample storage capacity to allow hydration time and serve as a reservoir in case of rapid slurry loss. The slurry shall be agitated or recirculated in the tanks. No slurry shall be made in the trench excavation.

B. The Contractor shall provide sufficient numbers and types of excavating equipment such as a trackhoe and clamshell to complete the project within the schedule. Equipment shall be special slurry trench excavating equipment or combinations of equipment capable of accommodating a slurry wall construction.

C. The soil bentonite backfill shall be mixed with heavy equipment next to the wall alignment. No backfill mixing will be allowed in the trench.

PART 3 EXECUTION

3.01 GENERAL

A. The slurry wall shall be constructed to the lines and elevations shown on the Drawings, unless otherwise authorized by the Engineer.

1. The slurry wall shall penetrate the subsurface soils to the elevations shown on the Drawings. The slurry wall will penetrate the bedrock 1-foot or refusal. (Boulders will not be considered bedrock.)

2. After the trench excavation reaches the accepted elevation, the Engineer and Contractor shall measure and document the actual wall elevations.

B. Width: The minimum width of the soil-bentonite slurry wall will be determined by the width of the required excavating equipment, but shall not be less than 30 inches wide at any point along the wall's elevation.

C. The horizontal alignment shall be as shown in the Drawings.

3.02 SITE PREPARATION

A. Prepare the barrier wall trenching area and staging areas as described in this paragraph.

B. Remove existing concrete pavement and ground cover within the lateral limits of the barrier wall area. Limits of the work area shall be as shown on the Drawings. Install and maintain survey stakes in appropriate locations along the trench to identify 100-foot station locations along the trench. These stakes will be referenced for quality control and quality assurance measurements during trench construction.

C. Contractor shall have suitable earth trenching equipment such as a backhoe and/or clamshell so that the required width of trench can be carried to its final depth of cut continuously along the trench alignment line. Additional equipment such as air lift pumps and slurry desanders shall be provided by the Contractor, to clean the slurry in accordance with the requirements of these Specifications. Impact drills or chisels shall be available as necessary for breaking and removal of boulders and/or dense soil layers from the trench.

D. The slurry batching plant shall include the necessary equipment including a mixer capable of continuously producing a homogenous colloidal suspension of bentonite in water, pumps, valves, hoses, supply lines, and other equipment as required to adequately supply slurry to the trench and to adjust the pH of the slurry as necessary. The slurry shall be agitated or recirculated in storage ponds or tanks as required to maintain a homogeneous mix. No slurry is to be made in the trench. Mixing of water and bentonite shall continue until bentonite particles are fully hydrated and the resulting slurry is homogeneous. Storage ponds or tanks shall be provided by the Contractor to store freshly mixed slurry during hydration, and to serve as a reserve supply of slurry in the event of slurry loss from the trench.

E. Equipment and methods, for processing, mixing and placing backfill shall include suitable means of separating particles 3 inches in diameter and larger from the excavated on-site soil, a suitable type of earthmoving or grading machine, such as a bulldozer, motor grader, power harrow, or pug mill blender that is capable of thoroughly mixing the backfill materials into a homogeneous mix having the required properties, and suitable earthmoving or grading equipment for placing the material in the trench as hereinafter specified.

F. The Contractor shall have available the equipment necessary to test the fresh bentonite slurry, in-trench slurry, and soil-bentonite backfill mix including a pH meter, slump cone, Marsh funnel, filter press, mud balance, slurry sampler, and any other equipment required to adequately assess the properties of the slurry and backfill.

G. Three extraction wells have been installed and will be operational at the time of the barrier wall installation. In addition, eight piezometers have been installed. Four of the piezometers will be operational at the time of the barrier wall installation (P-1E, P-2E, P-3E, and P-4E). The piezometers are located approximately 15 to 20 feet from the

centerline of the new barrier wall. Conduit will be installed to connect the piezometers and extraction wells. This conduit will be marked in the field. It will be the Contractor's responsibility to avoid damaging the wells, piezometers, and conduit and cable. Any damage caused due to construction activities will need to be repaired or replaced at the Contractor's expense.

3.03 SLURRY TRENCHING

A. The Contractor shall provide labor and equipment sufficient to operate excavation equipment during routine construction of the slurry wall. Adequate replacement equipment and maintenance and supervisory support shall be provided to minimize equipment downtime and maintain the construction schedule. Excavation of the slurry trench shall be performed as outlined below.

1. The Contractor shall excavate the slurry trench in a continuous manner, carrying the excavation to the full depth required at the point where work is started and carrying the required depth along the line of the trench for each trench segment. Slurry shall be introduced into the trench at the same time trenching is begun and shall be maintained in the trench during excavation and until backfilling has been completed. The Contractor shall maintain the stability of the excavated trench at all times for its full depth. The level of the bentonite slurry shall be maintained within 2 feet of the work platform surface, except as approved by the Engineer to maintain the stability of the trench. The Contractor shall have personnel, equipment, and materials ready to raise the slurry level at any time. To this end, the Contractor shall have personnel on call to raise the slurry level at all times, weekends and/or holidays included. The Contractor shall provide the Engineer for review and approval the proposed method to construct the intersection of the walls. This submittal shall be provided at least 10 days prior to commencing trench excavation.

2. Bentonite slurry introduced into the trench shall be mixed and handled as specified herein. Soil excavated from the trench which is suitable for backfill shall be stockpiled on the working platform for blending with off-site soil borrow material (if required) and slurry. Such stockpiles shall not be placed within 25 feet of the open trench, or further as necessary to maintain trench stability. The Contractor shall separate cobbles greater than or equal to 3 inches in diameter from the excavated soil stockpiles. Cobbles greater than or equal to 3 inches in diameter shall be excluded from the soil-bentonite trench backfill. In addition, the Engineer may require the Contractor to segregate soils with visible signs of contamination, or soils with unusually high VOC concentrations based on health and safety screening, from soils stockpiled for backfill mixing.

3. The excavation under slurry head shall be carried out in a manner which, when completed, provides a continuous minimum 30-inch wide trench to the required depth for the full length of the trench. The trench shall be excavated to the appropriate bottom elevations shown on the Drawings unless otherwise directed by the Engineer.

4. The Contractor shall be responsible for all costs associated with the implementation of the Contingency Plan in the event of slurry loss or trench

collapse. The steps which the Contractor shall take in the event of a slurry loss shall, at a minimum, include increasing slurry viscosity; backfilling trench with stockpiled soils and re-excavating; and use of soil-bentonite backfill and re-excavating. The plans shall also indicate steps to be taken to contain lost slurry.

The Contractor shall maintain a stockpile of suitable materials, such as backfill soils as necessary to be used for emergency backfilling tin the event of sudden, rapid slurry loss or used as outlined in the Contingency Plans.

The slurry trench shall be essentially vertical. The working pad and/or excavating equipment shall be leveled to be plumb within 3% of vertical.

5. The Contractor shall cooperate with the Engineer in determining that the bottom of the trench has reached the intended depth and is properly cleaned prior to advancing the excavating equipment. After the trench bottom has been cleaned, the Contractor shall measure the actual excavated depth of trench relative to surveyed stations. Depth measurement frequency shall be every 10 feet unless otherwise directed by the Engineer. Trench bottom cleaning equipment shall be operated in a manner which prevents removal of material from the walls of the trench.

6. The Contractor shall provide a suitable means for determining the depth of trench to within 0.5 foot.

7. The horizontal alignment of the trench must not deviate from that shown on the plans by more than 2 feet unless otherwise authorized by the Engineer. Measurements shall be taken every 50 feet of trenching to verify that the trench meets this tolerance.

8. Excess soil and oversized particles from slurry trench excavation shall be placed in the on-site disposal area.

3.04 SLURRY CONTROL TESTING

A. Testing of fresh bentonite slurry shall be performed by the Contractor at least twice each day or as directed by the Engineer prior to introduction into the trench. Testing shall include the following:

- temperature
- pH
- unit weight (API 13B-1)
- viscosity (API 13B-1)
- filtrate loss (API 13B-1)

Verbal test results shall be provided immediately to the Engineer and written test results shall be provided to the Engineer within 24 hours of testing.

B. Slurry from the bottom of the trench at the toe of the backfill slope and at the point of trenching shall similarly be tested by the Contractor at the beginning and end of each 8-hour work shift for the following properties:

- temperature
- pH
- unit weight (API 13B-1)
- viscosity (API 13B-1)

Verbal test results shall be provided immediately to the Engineer and written test results shall be provided to the Engineer within 24 hours of testing.

C. The apparatus necessary to obtain samples and perform the tests specified above shall be supplied by the Contractor.

D. The Contractor shall be prepared to immediately adjust the pH of the trench slurry as necessary, recirculate slurry within the trench and clean it of debris or sediment as necessary to achieve the desired properties. In particular, slurry at the bottom of the trench may require recirculation and desanding prior to backfilling the trench with the barrier wall backfill.

3.05 BACKFILL

A. Backfill Mixing

1. Slurry and the on-site soil shall be mixed and blended in mechanical blenders or by windrowing, bulldozing, blading or by other approved methods. Mixing and blending shall be performed in such a manner as to produce the required properties of the backfill. Pockets of gravel with little to no finer soils shall be removed and transported to the designated excess soil stockpile area. The Contractor shall manually remove any deleterious materials if required. Deleterious materials may consist of cobbles with 3-inch diameter and larger, organic silts, peat and peat-like material with relatively high organic content. Just prior to placement, the backfill material shall meet the slump, and unit weight requirements determined the by Contractor's design engineer. Accurate records of the amount of slurry used in the backfill mix and the slump shall be tabulated per 50 feet of trench and submitted to the Engineer daily. Dry bentonite shall be added and thoroughly mixed into the backfill material to obtain the required backfill properties.

B. Backfill Placement

1. The barrier wall backfill shall be placed continuously from the beginning of the trench, in the direction of the excavation, to the end of the trench. The toe of the slope of the trench excavation shall precede the toe of the backfill slope by not less than 20 feet, or as required to permit inspection and measurement. Placing operations shall proceed such that the surface of the backfill below the slurry shall follow a reasonably smooth grade and shall not have hollows which may trap pockets of slurry during subsequent backfilling. Free dropping of backfill material through the slurry will not be permitted. Initial backfill shall be placed by tremie methods or other method submitted by the Contractor and approved by the Engineer. Initial barrier wall backfill placement will continue until the surface of the backfill rises above the surface of the slurry level at the end of the trench. At the Contractor's discretion, additional backfill placement may continue with the

approved method of initial backfill placement or the Contractor may place additional barrier wall backfill above the level of the slurry on the previous barrier wall backfill, thus advancing the existing backfill face. The backfill shall not be dropped or deposited in any manner that will cause segregation. Backfill placement shall be discontinued if the unit weight differential between the in-trench slurry and the barrier wall backfill is less than that specified by the Contractor's design engineer. The toe of the backfill material that rises to the top of the trench at the terminal end of the trench shall be re-excavated as necessary to remove any entrapped slurry, silts, and sands that may exist. This material shall be replaced with new backfill material.

3.06 BACKFILL CONTROL TESTING

A. As a minimum testing of backfill shall be performed by the Contractor according to the following schedule:

• backfill slump (ASTM C143) and backfill unit weight (API 13B-1)	1 test per 200 cubic yards of backfill
• backfill gradation (ASTM D422)	1 test per 800 cubic yards of backfill
• Flexible wall hydraulic Conductivity (remolded) (ASTM D5084)	1 test per 2,000 cubic yards

B. Properties of the bentonite slurry during excavation and prior to backfill placement shall be measured by the Contractor. Samples shall be taken in the trench and at the slurry plant. Quality control tests include Marsh Funnel viscosity, mud balance density, filtrate loss, and pH, as specified by API Standard Procedure RP-13B.

C. The Contractor is responsible for installation of slurry wall to top of bedrock. In order to verify placement, the Contractor shall make and record depth soundings every 10 feet along the trench centerline. Soundings shall consist of measurement of the depth to the bottom of the excavation immediately after excavating and measurement of depth to the bottom of the excavation immediately before backfilling. Soundings shall be made with a device approved by the Engineer.

D. In addition, the Contractor shall measure and record the depth to the slope of the backfill at 20-foot intervals at the beginning and end of each 8-hour work shift. If there is an indication of soil accumulation on the backfill slope between the end of a previous shift and beginning of a new shift, the Contractor shall clean the backfill slope to remove the accumulated soil before proceeding with additional backfilling.

3.07 QUALITY CONTROL TESTING

A. Tests and measurements shall be carried out by the Contractor as specified herein, and data sheets for tests and measurements shall be maintained on a current basis at the job site. Quality control test results shall be made available to the Engineer on a daily basis or more frequently where specified herein. Additional quality control testing shall be

performed by the Contractor at the Engineer's request. The Contractor shall assist the Engineer in performance of the quality assurance testing. The Engineer may perform additional tests for quality assurance and documentation purposes and shall be assisted by the Contractor as necessary to make such tests. The Contractor shall provide the Engineer with a quality control report at the end of the project which includes all quality control testing and measurement data and certifies that the barrier wall was constructed in accordance with the Drawings and Specifications.

3.08 POST-CONSTRUCTION MONITORING AND TESTING

A. Settlement platforms consisting of 2-foot-square by 3/4-inch-thick plywood sheets with a 1-inch-diameter, 30-inch-long steel riser pipe connected to the center of each board shall be installed 18 inches below the surface of the completed trench backfill at 200-foot intervals along the wall within 24 hours of the completion of backfilling within 50 feet of the settlement platform location. A 3-inch-diameter PVC pipe sleeve shall be installed over the riser pipe from the plywood surface to above the top of the trench backfill to separate the riser pipe from the soil-bentonite backfill outside the sleeve.

B. The elevation of the top of each settlement platform riser pipe shall be surveyed immediately after the platform has been installed and backfilled, then daily thereafter for two weeks, and weekly thereafter until the Engineer indicates that the protective cap installation can begin.

3.09 SITE CLEANUP AND BARRIER WALL PROTECTIVE CAP INSTALLATION

A. The open trench and barrier wall shall not be crossed by construction equipment except at designated locations which are prepared by the Contractor using a temporary trench crossing designed and constructed by the Contractor.

B. After completion of slurry trench backfilling, all remaining excavated material and slurry shall be removed from within 25 feet of the barrier wall and the surface shall be cleaned and leveled as directed by the Engineer. No slurry shall be left in pits, and all pits shall be pumped dry and backfilled restored to their original condition. The Contractor shall repair any damage to the completed slurry trench incurred during construction or site cleanup activities. Any such damage shall be immediately repaired by the Contractor in a manner acceptable to the Engineer.

C. Following excess slurry disposal, excavate the barrier wall to the top of wall elevations indicated on the Contract Drawings. Install clay cap fill as indicated on the Drawings. The Contractor shall allow a minimum of 30 days after completion of trench backfilling or longer if required by the Engineer before constructing the protective cap over the barrier wall.

D. Areas disturbed during construction shall be graded, compacted, and resurfaced to restore the site to original grade.

E. The Contractor shall prepare as-built barrier wall plan and profile record drawings (based on level survey and trench depth measurements) similar to those included in the Drawings and provide them to the Engineer as part of the quality control documentation.

END OF SECTION

GROUNDWATER MITIGATION CONTROL SYSTEM, SAUGET AREA 2

Date: 11/8/04

Approximate time of depth measurements: A.M.

STATION	Trench Depth (ft.)	Down Rigger, Confirmation Measurements (ft.)	Clam Sampler	Comments:
37+93	6			
37+80	7			
37+70	5			
37+60	3			
37+40	4			
37+20	3			
37+00	2			
36+80	1			

GROUNDWATER MITIGATION CONTROL SYSTEM, SAUGET AREA 2

Date: 11/6/04

Approximate time of depth measurements: AM

STATION	Trench Depth (ft.)	Down Rigger, Confirmation Measurements (ft.)	Clam Sampler	Comments:
37+60	25			
37+80	20			
37+20	19			
37+60	15			
37+50	14			
37+40	13			
37+20	10			
37+00	9			
36+00	7			
35+00				
				Slurry Level - 6 1/2"

GROUNDWATER MITIGATION CONTROL SYSTEM, SAUGET AREA 2

Date: 11/5/04

Approximate time of depth measurements: A.M.

STATION	Trench Depth (ft.)	Down Rigger, Confirmation Measurements (ft.)	Clam Sampler	Comments:
33+70	0			
34+00	3			
35+00	11			
36+00	16			
37+00	21			
+20	25			STA 37+00
+40	26			HUB EL = 422.90
+60	28			TANS EL = 421.57
+80	30			SLURRY EL = 420.78
+93	35			
37+90		35 / 10.7		
+80		30 / 9.1		
+70		30 / 9.1		

GROUNDWATER MITIGATION CONTROL SYSTEM, SAUGET AREA 2

Date: 11/4/04

Approximate time of depth measurements: A.M.

STATION	Trench Depth (ft.)	Down Rigger, Confirmation Measurements (ft.)	Clam Sampler	Comments:
33+40	0			
34+00	7			
35+00	16			37+20
36+00	21			HUB EL 422.90
37+00	30			PAVE EL 421.57
+20	33			SLURRY EL 420.90
+40	34			
+60	38			
+80	41			
+93	40			
37+90		40 / 12.2		
+80		44 / 12.5		
+70		38 / 11.6		

GROUNDWATER MITIGATION CONTROL SYSTEM, SAUGET AREA 2

Date: 11/3/04

Approximate time of depth measurements: A.M.

STATION	Trench Depth (ft.)	Down Rigger, Confirmation Measurements (ft.)	Clam Sampler	Comments:
33+20	6			
34+00	10			
35+00	19			
36+00	25			
37+00	34			STA 37+20
+20	35			HWB EL 422.90
+40	37			PMS EL 421.57
+60	39			SURVEY EL 420.82
+80	42			
+93	38			
37+90	38	11.6		
+80	42	12.8		
+70	42	12.8		

GROUNDWATER MITIGATION CONTROL SYSTEM, SAUGET AREA 2

Date: 11/2/04

Approximate time of depth measurements: A.M.

STATION	Trench Depth (ft.)	Down Rigger, Confirmation Measurements (ft.)	Clam Sampler	Comments:
33+20	0			
34+00	11			
35+00	19			
36+00	25			
37+00	34			
+20	36			
+40	37			
+60	38			
+80	43			
+93	38			

GROUNDWATER MITIGATION CONTROL SYSTEM, SAUGET AREA 2

Date: 11/1/04

Approximate time of depth measurements: A.M.

STATION	Trench Depth (ft.)	Down Rigger, Confirmation Measurements (ft.)	Clam Sampler	Comments:
32+00	0			
33+00	2			
34+00	13			
35+00	14			
36+00	27			
37+00	33			
+20	35			
+40	36			
+60	37			
+80	40			
+93	40			
				STA 37+00
				UWB EL 422.90
				DWB EL 421.57
				SLUICE EL 420.57
37+90		40 12.2		
+80		40 12.2		
+70		39 11.9		

GROUNDWATER MITIGATION CONTROL SYSTEM, SAUGET AREA 2

Date: 10/28/04

Approximate time of depth measurements: A.M.

STATION	Trench Depth (ft.)	Down Rigger, Confirmation Measurements (ft.)	Clam Sampler	Comments:
32+20	0			
33+00	13		34+30	CLAM SAMPLES OBSERVED
34+00	23		34+80	TO BE PROB OF SEDIMENT.
35+00	30			
36+00	36			
37+00	43			
+20	44			
+40	46			
+60	46			STA 37+20
+80	46			HUB EL 422.90
+93	51			PINS EL 421.57
				SLURRY EL 420.99
37+90		51 15.5		
+80		46 14.0		
+70		46 14.0		

GROUNDWATER MITIGATION CONTROL SYSTEM, SAUGET AREA 2

Date: 10/27/04

Approximate time of depth measurements: A.M.

STATION	Trench Depth (ft.)	Down Rigger, Confirmation Measurements (ft.)	Clam Sampler	Comments:
32+00	1		34+40	CLAM SAMPLES OBSERVED
33+00	21		34+90	TO BE FREE OF SEDIMENT
34+00	20			
35+00	38			
36+00	44			
37+00	51			
+20	52			
+40	53			
+60	57			
+80	59			STA 37+20
+93	61			HUB BL = 422.90
				LANE BL = 421.57
				QUERY BL = 421.07
37+90		61 / 18.6		
+80		59 / 18.0		
+70		58 / 17.7		

GROUNDWATER MITIGATION CONTROL SYSTEM, SAUGET AREA 2

Date: 10/29/04

Approximate time of depth measurements: A.M.

STATION	Trench Depth (ft.)	Down Rigger, Confirmation Measurements (ft.)		Clam Sampler	Comments:
32+60	0				
33+00	6			34+60	CLAM SAMPLES OBSERVED
34+00	19			35+10	TO BE FREE OF SEDIMENT.
35+00	26				
36+00	32				
37+00	39				
+20	40				
+40	42				
+60	44				
+80	48				STA 37+20
+93	50				WB EL 422.90
					DAVE EL 421.57
					SURVEY EL 420.95
37+90		50	15.2		
+50		48	14.6		
+70		45	13.7		

GROUNDWATER MITIGATION CONTROL SYSTEM, SAUGET AREA 2

Date: 10/26/04

Approximate time of depth measurements: A.M.

STATION	Trench Depth (ft.)	Down Rigger, Confirmation Measurements (ft.)	Clam Sampler	Comments:
31+70	1		34+30	CLAM SAMPLES OBSERVED
32+00	9		34+80	TO BE FREE OF SEDIMENT.
33+00	OR			
34+00	37			
35+00	44			
36+00	51			
37+00	57			
+20	59			
+40	60			
+60	60			STA 37+20
+80	67			HUB EL = 422.90
+93	71			PINS EL = 421.57
				SLURRY EL = 420.76
37+90		71 / 21.6		
+80		67 / 20.4		
+70		68 / 20.7		

GROUNDWATER MITIGATION CONTROL SYSTEM, SAUGET AREA 2

Date: 10/25/04

Approximate time of depth measurements: A.M.

STATION	Trench Depth (ft.)	Down Rigger, Confirmation Measurements (ft.)	Clam Sampler	Comments:
31+20	1		34+20	CLAM SAMPLES OBSERVED
32+00	12		34+70	TO BE FREE OF SEDIMENT
33+00	34			
34+00	43			
35+00	53			
36+20	60			
37+00	66			
+20	68			
+40	70			
+60	70			
+80	75			STA 37+20
+93	72			HUB EL = 422.90
				PINE EL = 421.57
				SURVEY EL = 420.61
37+90		72 / 22.0		
+80		75 / 22.9		
+70		72 / 22.0		

GROUNDWATER MITIGATION CONTROL SYSTEM, SAUGET AREA 2

Date: 10/22/04

Approximate time of depth measurements: A.M.

STATION	Trench Depth (ft.)	Down Rigger, Confirmation Measurements (ft.)	Clam Sampler	Comments:
31+00	1			
32+00	20			
33+00	37		34+10	CLAM SAMPLES OBSERVED
34+00	49		34+60	TO BE TOP OF SEDIMENT
35+00	52			
36+00	65			
37+00	70			
+20	72			
+40	74			
+60	77			
+80	81			
+93	77			
				STA 37+20
				MUD EL 422.90
				PAVE EL 421.57
				SLURRY EL 420.94
37+90		77 23.5		
+80		81 24.7		
+70		80 24.4		

GROUNDWATER MITIGATION CONTROL SYSTEM, SAUGET AREA 2

Date: 10/21/04

Approximate time of depth measurements: A.M.

STATION	Trench Depth (ft.)	Down Rigger, Confirmation Measurements (ft.)	Clam Sampler	Comments:
30+60	1			
31+00	9		31+00	CLAM SAMPLES OBSERVED
32+00	24		34+50	TO BE FREE OF SEDIMENT
33+00	44			
34+00	55			
35+00	64			
36+00	73			
37+00	79			
+20	80			
+40	81			
+60	86			STA 37+20
+80	89			HUB EL = 422.90
+93	87			PAVE EL = 421.57
				SLURRY EL = 420.07
37+90		87		
+80		89		
+70		89		

GROUNDWATER MITIGATION CONTROL SYSTEM, SAUGET AREA 2

Date: 10/20/04

Approximate time of depth measurements:

STATION	Trench Depth (ft.)	Down Rigger, Confirmation Measurements (ft.)	Clam Sampler	Comments:
30+60	1			
31+00	11			
32+00	29			
33+00	44			
34+00	56			
35+00	65			
36+00	72			
37+00	79			
+20	80			
+40	81			
+60	85			
+80	84			
+93	87			STA 37+20
				HUB EL 422.90
				PAVE EL 421.57
				SLURRY EL 420.07
37+90		87 26.5		
+80		84 25.6		
+70		86 26.2		

GROUNDWATER MITIGATION CONTROL SYSTEM, SAUGET AREA 2

Date: 10/19/04

Approximate time of depth measurements: A.M.

STATION	Trench Depth (ft.)	Down Rigger, Confirmation Measurements (ft.)	Clam Sampler	Comments:
30+50	3		34+40	CLAM SAMPLES OBSERVED
31+00	12		34+90	TO BE FREE OF SEDIMENT
32+00	32			
33+00	47			
34+00	59			
35+00	66			
36+00	74			
37+00	80			
+20	80			STA 37+20
+40	81			HUB EL 422.90
+60	85			PAVS EL 421.57
+80	88			SLURRY EL 420.82
+93	88			
37+90		88 26.8		
+80		88 26.8		
+70		85 25.9		

GROUNDWATER MITIGATION CONTROL SYSTEM, SAUGET AREA 2

Date: 10/18/04

Approximate time of depth measurements: A.M.

STATION	Trench Depth (ft.)	Down Rigger, Confirmation Measurements (ft.)	Clam Sampler	Comments:
30+50	2		34+40	CLAM SAMPLES OBSERVED
31+00	13		34+90	TO BE FREE OF SEDIMENT.
32+00	37			
33+00	45			
34+00	58			
35+00	67			
36+00	74			
37+00	79			
+20	80			STA 37+30
+40	81			HUB EL = 423.17
+60	82			PAN EL = 421.54
+80	85			SLURRY EL = 421.04
+93	82			
37+90		82 25.0		
+80		85 25.9		
+70		82 25.0		

GROUNDWATER MITIGATION CONTROL SYSTEM, SAUGET AREA 2

Date: 10/16/04

Approximate time of depth measurements: A.M.

STATION	Trench Depth (ft.)	Down Rigger, Confirmation Measurements (ft.)	Clam Sampler	Comments:
30+20	1		33+80	CLAM SAMPLES OBSERVED W/
31+00	19		34+30	8" FREE OF SEDIMENT.
32+00	39			
33+00	54			
34+00	66			
35+00	76			
36+00	82			
37+00	87			
+20	88			SHA 37+30
+40	90			HUB EL = 423.17
+60	92			PAVE EL = 421.54
+80	95			SURFACE EL = 420.62
+93	95			
37+90		95 / 29.0		
+80		95 / 29.0		
+70		93 / 28.4		

GROUNDWATER MITIGATION CONTROL SYSTEM, SAUGET AREA 2

Date: 10/15/04

Approximate time of depth measurements: A.M.

STATION	Trench Depth (ft.)	Down Rigger, Confirmation Measurements (ft.)	Clam Sampler	Comments:
30+00	3		33+20	A. AM SAMPLES OBTAINED
31+00	25		33+70	TO BE FREE OF SEDIMENT
32+00	46			
33+00	60			
34+00	75			
35+00	85			
36+00	91			
37+00	97			STA 37+30
+20	98			TOB EL = 443.17
+40	100			PWIS EL = 421.54
+60	102			SLURRY FT = 420.88
+80	100			
+93	100			
37+90		100 30.5		
+80		100 30.5		
+70		100 30.5		

GROUNDWATER MITIGATION CONTROL SYSTEM, SAUGET AREA 2

Date: 10/14/04

Approximate time of depth measurements: A.M.

STATION	Trench Depth (ft.)	Down Rigger, Confirmation Measurements (ft.)	Clam Sampler	Comments:
29+50	3			
30+00	10		32+60	CLAM SAMPLES OBSERVED
31+00	29		33+10	TO BE FREE OF SEDIMENT.
32+00	51			
33+00	69			
34+00	85			
35+00	97			
36+00	105			
37+00	110			
+20	112			
+40	116			STA 37+30
+60	117			HUB EL = 423.17
+80	114			PAVE EL = 421.54
+93	114			SLURRY EL = 420.12
37+90	114 / 34.75 →			
+80	114 / 34.75 →			
+70	114 / 34.75 →			

GROUNDWATER MITIGATION CONTROL SYSTEM, SAUGET AREA 2

Date: 10/13/04

Approximate time of depth measurements:

STATION	Trench Depth (ft.)	Down Rigger, Confirmation Measurements (ft.)	Clam Sampler	Comments:
29+70	4		32+00	CLAM SAMPLES OBSERVED
30+00	16		32+50	TO BE FREE OF SEDIMENT
31+00	34			
32+00	61			
33+00	79			
34+00	96			
35+00	108			
36+00	115			
37+00	123			
+20	125			
+40	126			STA 37+30
+60	126			HWB EL = 423.17
+80	126			DAMS EL = 421.54
+93	126			SWELL EL = 419.21
37+90	126.0 / 38.4			
37+80	126.0 / 38.4			
37+70	126.0 / 38.4			

GROUNDWATER MITIGATION CONTROL SYSTEM, SAUGET AREA 2

Date: 10/12/04

Approximate time of depth measurements: A.M.

STATION	Trench Depth (ft.)	Down Rigger, Confirmation Measurements (ft.)	Clam Sampler	Comments:
~~28+60~~	1			
29+00	6		31+40	CLAM SAMPLES DESIRED
30+00	21		31+90	~~TO BE FREE OF SEDIMENT~~
31+00	40			
32+00	66			
33+00	84			
34+00	100			
35+00	112			
36+00	119			
37+00	127			
+20	128			
+40	131			STA 37+30
+60	129			HUB EL = 423.17
+80	129			PINS EL = 421.54
+93	137			SURVEY EL = 420.29
37+70		137 / 41.8		
+80		129 / 39.3		END OF TRENCH, BACKFILL SURFACE
+90		129 / 39.3		CLEANING.

GROUNDWATER MITIGATION CONTROL SYSTEM, SAUGET AREA 2

Date: 10/11/04

Approximate time of depth measurements: A.M.

STATION	Trench Depth (ft.)	Down Rigger, Confirmation Measurements (ft.)	Clam Sampler	Comments:
28+80	17		30+60	CLAM SAMPLES OBSERVED
29+80	24		31+10	TO BE FREE OF SEDIMENT.
30+80	41			
31+80	65			
32+80	85			
33+80	100			
34+80	112			
35+80	120			
36+80	130			
37+00	129			
+20	130			
+40	130			
+60	132			STA 37+30
+80	141			HUB EL 423.17'
+93	141			PAVE EL 421.59'
				SLURRY LEVEL 419.8'
37+70	43.2 1417			
+80	43.2 1417	141.0		
+90	43.3 142			

GROUNDWATER MITIGATION CONTROL SYSTEM, SAUGET AREA 2

Date: 10/9/04

Approximate time of depth measurements: 8:00Am

STATION	Trench Depth (ft.)	Down Rigger, Confirmation Measurements (ft.)	Clam Sampler	Comments:
				BACKFILL Clam Samples
28+00	2		30+00	OBSERVED TO BE FREE
29+00	16		31+20	OF SEDIMENTS.
30+00	30			
31+00	46			
32+00	78			
33+00	99			
34+00	111			
35+00	120			
36+00	129			
36+40	132			
36+60	132			
36+80	136			
37+00	134			STA. 37+40
37+20	134			HUB 422.97
37+40	139			PAVE EL. 421.43
37+50	141			SLURRY EL. 420.60
TRENCH CLEANING				
37+90	43.56 142.9	142		
37+80	43.48 142.6	141.5		
37+70	43.48 142.6	142		
37+60	43.52 142.7			
37+50	43.46 142.5			
37+40	43.44 142.5			

10/9/04

GROUNDWATER MITIGATION CONTROL SYSTEM, SAUGET AREA 2

Date: 10/8/04

Approximate time of depth measurements:

STATION	Trench Depth (ft.)		Down Rigger, Confirmation Measurements (ft.)	Clam Sampler	Comments:
27+60	1			29+40	CLAM SAMPLES OBSERVED
28+00	8			29+90	TO BE FREE OF SEDIMENT
29+00	22				
30+00	35				
31+00	49				
32+00	78				
33+00	105				
34+00	114				
35+00	123				
36+00	130				
+20	133				
+40	131				STA 35+10
+60	130				HUB EL 424.93
+80	136				-5.08
37+00	138				SLUDGE EL 419.85
+20	140				
+40	139				
+60	141				
+80	141				
+93	140				
37+10	43.1	141.4			
+20	43.1	141.4			
+30	43.2	141.7			
+40	43.1	141.4	142.0		
+50	43.1	141.4			
+60	43.1	141.4			
+70	43.1	141.4			
+80	43.2	141.7			
+90	43.1	141.4			
EOT +93	43.1	141.4			

GROUNDWATER MITIGATION CONTROL SYSTEM, SAUGET AREA 2

Date: 10/7/04

Approximate time of depth measurements: A.M.

STATION	Trench Depth (ft.)		Down Rigger, Confirmation Measurements (ft.)	Clam Sampler	Comments:
~~27+40~~	5				
~~28+40~~	20			28+80	CLAM SAMPLES OBSERVED
~~29+40~~	35			29+30	TO BE FREE OF SEDIMENT.
~~30+40~~	45				
~~31+40~~	59				
~~32+40~~	101				
~~33+40~~	115				
~~34+40~~	125				
~~35+40~~	135				
+60	133				~~SA~~ 35+10
+80	136				HWB 424.92
~~36+00~~	136				- 4.33
+20	136				Slurry @ - 420.59
+40	141				
+60	143				
+80	140				
~~37+00~~	141				
+20	140				
+40	142				
~~38+93~~	145				
~~36+40~~	43.4	142.4			
+50	43.3	142.0			
+60	43.0	141.0			
+70	43.0	141.0			
+80	43.0	141.0	140.0		
+90	43.0	141.0			
~~37+00~~	43.0	141.0	141.0		
+10	~~43.0~~	141.0	141.0		
+20	~~43.9~~	140.7			
+30	43.2	141.7			
+40	43.0	141.0			
+50	43.6	141.0			
+60	43.0	141.0			
+70	43.1	141.4			
+80	43.2	141.7			

GROUNDWATER MITIGATION CONTROL SYSTEM, SAUGET AREA 2

Date: 10/6/04

Approximate time of depth measurements:

STATION	Trench Depth (ft.)	Down Rigger, Confirmation Measurements (ft.)	Clam Sampler	Comments:
27+00	2		29+20	CLAM SAMPLES OBSERVED TO
28+00	18		29+70	BE FREE OF SEDIMENT -
29+00	32			
30+00	45			
31+00	57			
32+00	82			
33+00	126			
34+00	133			
+20	134			A.M.
+40	136			STA 35+10
+60	138			EWB 424.92'
+80	139			- 4.0
35+00	140			SCREEN BL = 420.92
+10	142			
+20	145			
+40	145			
+60	145			
+80	145			P.M.
36+00	145			
37+00	144			-4.33
37+93	142			SCREEN BL = 420.59
A.M.			P.M.	
35+00	43.5	142.7	36+70	43.4 142.4
+10	43.6	143.0	+20	43.6 143.0 / 141.0
+20	43.6	143.0	+30	43.6 143.0
+30	43.6	143.0	+40	43.6 143.0 / 144.0
+40	43.7	143.3 142	+50	43.5 142.7
+56	43.7	143.3	+60	43.2 141.7
+60	43.6	143.0		
+70	43.6	143.0 142		
+80	43.5	142.7		
+90	43.6	143.0		
36+00	43.4	142.4		

GROUNDWATER MITIGATION CONTROL SYSTEM, SAUGET AREA 2

Date: 10/5/04 Am

Approximate time of depth measurements:

STATION	Trench Depth (ft.)	Down Rigger, Confirmation Measurements (ft.)	Clam Sampler	Comments:
26+00	BACKFILL AT MARK			
26+60	5			
27+60	15			
28+60	31			
29+60	43			
30+60	54			
31+00	66			
32+00	83			
32+60	129			
32+80	130			
33+00	130		29+10	CLAM SAMPLES OBSERVED
33+20	134		29+60	TO BE FREE OF SEDIMENT
33+40	135			
33+60	137			
33+80	141			
34+00	142			AM.
34+20	142			STA 34+40
34+40	142			HWB 425.96
34+60	140			- 5.91
35+60	144			SLURRY EL = 420.05
36+60	142			
37+93	141			PM
				STA 34+40
AM TRENCH	BOTTOM CLEANING.			HWB 425.96
33+60	42.3 138.7			- 4.583
+70	42.4 139.1			SLURRY EL. 421.38
+80	42.5 139.4			
+90	42.6 139.7	10/5/04 PM CLEAN OUT.		
34+00	42.7 140.1	141 34+60	43.3 142.0	
+10	42.6 139.7	34+70	43.41 142.4	
+20	42.6 139.7	34+80	43.49 142.16	
+30	42.7 140.1	34+90	43.48 142.16	143 DOWN RIGGER
+40	42.7 140.1	142 35+00	43.50 142.7	
+50	42.7 140.1	35+10	43.55 142.8	
+60	42.7 140.1			

GROUNDWATER MITIGATION CONTROL SYSTEM, SAUGET AREA 2

Date: 10/4/04

Approximate time of depth measurements:

STATION	Trench Depth (ft.)	Down Rigger, Confirmation Measurements (ft.)	Clam Sampler	Comments:
26+00	0			
+60	10		28 +70	CLAM SAMPLER OBSERVED
27+60	25		29+20	TO BE EDGE OF SEDIMENT
28+60	37			
29+60	47			
30+60	55			
31+60	70			
+80	71			
32+00	71			
+20	93			34 +40
+40	117			425.96
+60	139			- 5.71
+80	140			SLURRY EL = 420.25
33+00	140			
+20	141			
+40	140			
+60	142			
34+60	141			
35+60	145			
36+60	141			
37+60	142			
+93	141			
32+60	42.0 137.8			
+68	42.0 137.8			
+73	41.9 137.4			
+80	42.0 137.8			
+90	41.9 137.4			
33+00	42.0 137.8			
+10	42.1 137.4	140		
+20	42.1 137.4			
+30	42.1 137.4			
+40	42.1 137.4			
+50	42.2 138.4			
+60	42.3 138.7	141.0		
+70	42.4 139.1			
+80	42.3 138.7			
+90	42.2 138.4			
34+00	42.5 139.4			
+10	42.6 139.7			

GROUNDWATER MITIGATION CONTROL SYSTEM, SAUGET AREA 2

Date: 10/2/04

Approximate time of depth measurements:

STATION	Trench Depth (ft.)		Down Rigger, Confirmation Measurements (ft.)		Clam Sampler			Comments:	
25+50	3								
+70	4				28+30			CLAM SAMPLES OBSERVED	
26+20	16				28+80			TO BE FREE OF SEDIMENT	
27+70	29								
28+20	41								
29+70	53								
30+70	Tide								
31+70	21								
+90	22								
32+10	87								
+30	106								
+50	119								
+68	133								
+73	133								
+90	132								
33+10	133								
+30	140		~~140~~						
+50	141								
+70	~~140~~								
34+70	142								
35+70	142								
36+70	144								
+93	144								
32+60	41.8	137.1			33+60	42.1	138.1		
+68	42.0	137.8			+70	42.2	138.4		
+73	41.9	137.4			+80	42.3	138.7		
+80	41.9	137.4			+90	42.3	138.7		
+90	41.8	137.1			34+00	42.5	139.4	141	
33+00	41.9	137.4			+10	42.5	139.4		
+10	42.0	137.8			+20	42.6	139.7		
+20	42.1	138.1			+30	42.7	140.1		
+30	42.1	138.1	140		+40	42.8	140.4	142	
+40	42.1	138.1			+50	42.9	140.7		
+50	42.1	138.1			+60	43.0	141.0	142	

STA 34+40
425.96
- 5.79
SURVEY 420.17

GROUNDWATER MITIGATION CONTROL SYSTEM, SAUGET AREA 2

Date: 10/1/04

Approximate time of depth measurements: A.M.

STATION	Trench Depth (ft.)	Down Rigger, Confirmation Measurements (ft.)	Clam Sampler	Comments:
25 +50	3			
+70	4			
26+70	15			
27+70	29			
28 +70	41			
29 +70	53			
30 +70	65			
31+70	70			
+90	71			
32 + 10	88			~~S+A~~ 34 +40
+30	106			HWB EL = 426.96
+50	120			− 5.25
+68	131			Slurry EL = 420.71
+73	133			
+90	131			
33 +10	130			
+30	133			
+50	130			
+70	123			
34 +70	144			
35+70	144			
36 +70	142			
37+70	144			
+93	144			

Date: 9/30/04 GROUNDWATER MITIGATION CONTROL SYSTEM, SAUGET AREA 2

Approximate time of depth measurements: A.M.

STATION	Trench Depth (ft.)	Down Rigger, Confirmation Measurements (ft.)	Clam Sampler	Comments:
25+50	3			
+70	5			
26+70	16			
27+70	29			
28+70	41			
29+70	55			
30+70	65			
31+70	70			
+90	72			
32+10	88			
+30	106			STA 33+10
+50	114			HUB EL= 427.21
+68	121			-6.46
+73	122			SURVEY EL= 420.75
+90	119			
33+10	119			
+30	120			
+50	121			
+70	123			
34+70	144			
35+70	144			
36+70	142			
37+70	143			
+93	143			

GROUNDWATER MITIGATION CONTROL SYSTEM, SAUGET AREA 2

Date: 9/29/04

Approximate time of depth measurements: A.M.

STATION	Trench Depth (ft.)	Down Rigger, Confirmation Measurements (ft.)	Clam Sampler	Comments:
25+50	3			
+70	5			
26+70	16			
27+70	29			
28+70	41			
29+70	54			
30+70	64			
31+70	71			
+90	71			
32+10	88			
+30	105			
+50	110			
+70	115			
+90	119			
33+10	120			
+30	126			
+50	129			
+70	130			
34+70	143			
35+70	145			
36+70	143			
37+70	144			
37+93	141			

GROUNDWATER MITIGATION CONTROL SYSTEM, SAUGET AREA 2

Date: 9/28/04

Approximate time of depth measurements: AM.

STATION	Trench Depth (ft.)	Down Rigger, Confirmation Measurements (ft.)	Clam Sampler	Comments:
25+50	3			
+70	5			
26+70	15			
27+70	38			
28+70	40			
29+70	54			STA 33+00
30+70	63			427.62
31+70	71			SLURRY EL - 421.04
+90	70			
32+10	68			
+30	74			
+50	70			
+70	119			
32+90	118			
33+10	120			
+30	124			
+50	124			
+70	129			
34+70	143			
35+70	144			
36+70	143			
37+70	145			
37+93	143			

Date: 9/27/04 ~~4/27/04~~ GROUNDWATER MITIGATION CONTROL SYSTEM, SAUGET AREA 2

Approximate time of depth measurements:

STATION	Trench Depth (ft.)	Down Rigger, Confirmation Measurements (ft.)	Clam Sampler	Comments:
31+70	68			
31+90	70			
~~32~~+10	~~73~~			
~~32+30~~	73			
~~32~~+50	~~77~~			
~~32~~+68	~~75~~			
~~32~~+73	119			
~~32~~+90	118			
~~33~~+10	120			
~~33~~+30	124			STA 33+00
~~33~~+50	124			~~427.62~~
~~33~~+70	129			SLURRY EL = ~~420.87~~

GROUNDWATER MITIGATION CONTROL SYSTEM, SAUGET AREA 2

Date: 9/24/04

Approximate time of depth measurements: A.M.

STATION	Trench Depth (ft.)	Down Rigger, Confirmation Measurements (ft.)	Clam Sampler	Comments:
PROFILE				
25+10	2			
+60	3			
26+60	16			
27+60	30			
28+60	40			
29+60	52			
30+60	60			
31+60	68			
32+60	72			
33+60	128			
+80	130			
34+00	131			
+20	134			
+40	137			
+60	142			
+80	144			
35+00	145			
+20	145			
+40	145			
+60	145			
36+60	141			
37+60	142			
37+03	147			
32+68	75			
33+73	120			
33+80	120			
33+00	121			
33+20	124			
33+40	125			
33+60	128			
33+80	130			

GROUNDWATER MITIGATION CONTROL SYSTEM, SAUGET AREA 2

Date: 4/23/04

Approximate time of depth measurements: A.M.

STATION	Trench Depth (ft.)		Down Rigger, Confirmation Measurements (ft.)	Clam Sampler	Comments:
PROFILE					
25+10	3			27+70	CLAM SAMPLES OBSERVED
+60	10			28+20	TO BE FREE OF SEDIMENT
26+60	19				
27+60	30				
28+60	41				
29+60	55				
30+60	62				
31+60	74				
32+60	86				
33+60	127				
+80	129			STA	35+50
34+00	131			1408 BL	424.61
+20	134				- 3.875
+40	138			SLURRY BL	420.74
+60	142				
+80	144				
35+00	145				
+20	145				
+40	145				
+60	145				
36+60	140				
37+60	142				
37+93	141				
CLEAN OUT					
34+60	43.0	141			
+70	43.1	141.4			
+80	43.1	141.4			
+90	43.1	141.4			
35+00	43.1	141.4			
+10	43.1	141.4	144		
+20	43.2	141.7			
+30	43.2	141.7			
+40	43.2	141.7	143		
+50	43.3	142			
+60	43.2	141.7			
+70	43.4	142.4			
+80	43.3	142			
+90	43.3	142			
36+00	43.2	141.7			

GROUNDWATER MITIGATION CONTROL SYSTEM, SAUGET AREA 2

Date: 4/22/04

Approximate time of depth measurements: A.M.

STATION	Trench Depth (ft.)		Down Rigger, Confirmation Measurements (ft.)	Clam Sampler	Comments:
PROFILE					
24+90	2			27+30	CLAM SAMPLES OBSERVED
25+60	15			27+80	TO BE FREE OF SEDIMENT
26+60	24				
27+60	36				
28+60	50				
29+60	58				
30+60	66				
31+60	76				
32+60	91				
33+60	127				
+80	129				
34+00	130				
+20	134			STA	35+70
+40	138			HUB EL	424.23
+60	142				- 3.67
+80	144		144	SLURRY EL=	420.56
35+00	144				
+20	145		145		
+40	145				
+60	145				
36+60	140				
37+60	141				
37+93	142				
CLEANOUT					
34+60	43.0	141			
+70	43.1	141.4			
+80	43.1	141.4	144		
+90	43.0	141			
35+00	43.1	141.4			
+10	43.1	141.4			
+20	43.2	141.7	145		
+30	43.3	142			
+40	43.3	142			
+50	43.3	142			
+60	43.3	142			
+70	43.3	142			
+80	43.4	142.4			
+90	43.3	142			
36+00	43.4	142.4			

GROUNDWATER MITIGATION CONTROL SYSTEM, SAUGET AREA 2

Date: 9/21/04

Approximate time of depth measurements: A.M.

STATION	Trench Depth (ft.)		Down Rigger, Confirmation Measurements (ft.)	Clam Sampler	Comments:
PROFILE					
24+50	2			26+70	CLAM SAMPLES OBSERVED
+60	10			27+20	TO BE FREE OF SEDIMENT -
25+60	20				
26+60	26				
27+60	38				
28+60	51				
29+60	61				
30+60	68				
31+60	79				
32+60	92			S+A =	35+70
33+60	127			HUB EL =	424.23'
+80	130				- 3.58'
34+00	130			SLURRY EL =	420.65'
+20	134				
+40	139				
+60	141				
+80	143				
35+00	144				
+20	145				
+40	145				
+60	145				
36+60	141				
37+60	141				
37+93	135				
CLEAN OUT					
34+60	43.0	141.0			
+70	43.2	141.7			
+80	43.1	141.4			
+90	43.1	141.4	144		
35+00	43.1	141.4			
+10	43.2	141.7			
+20	43.2	141.7			
+30	43.2	141.7			
+40	43.3	142			
+50	43.3	142	144		
+60	43.3	142			
+70	43.3	142			
+80	43.4	142.4			
+90	43.3	142			
36+00	43.3	142			

GROUNDWATER MITIGATION CONTROL SYSTEM, SAUGET AREA 2

Date: 9/20/04

Approximate time of depth measurements: A.M.

STATION	Trench Depth (ft.)		Down Rigger, Confirmation Measurements (ft.)	Clam Sampler	Comments:
PEOPLES					
24+50	2				
+60	16			27+90	CLAM SAMPLES OBSERVED TO
25+60	25			28+40	BE FREE OF SEDIMENT-
26+60	32				
27+60	42				
28+60	55				
29+60	63				
30+60	72				
31+60	84				
32+60	98				
33+60	127				
+80	130				
34+00	131				
+20	134			STA = 35+70	
+40	138			HUB EL = 424.23'	
+60	143			- 4.08'	
+80	144			SLURRY EL = 420.15'	
35+00	145				
+20	144				
+40	144				
+60	144				
36+60	141				
37+60	140				
37+93	137				
CLEAN OUT					
34+60	42.8	140.4			
+70	43.0	141.0			
+80	43.0	141.0	144		
+90	42.9	140.7			
35+00	43.0	141.0			
+10	43.1	141.4			
+20	43.1	141.4			
+30	43.2	141.7			
+40	43.3	142.0			
+50	43.2	141.7			
+60	43.2	141.7	144		
+70	43.2	141.7			
+80	43.2	141.7			
+90	43.2	141.7			
36+00	43.2	141.7			

GROUNDWATER MITIGATION CONTROL SYSTEM, SAUGET AREA 2

Date: 9/17/04

Approximate time of depth measurements: A.M.

STATION	Trench Depth (ft.)		Down Rigger, Confirmation Measurements (ft.)	Clam Sampler	Comments:
PROFILE					
24+50	1			27+80	CLAM SAMPLES OBSERVED
+60	16			27+30	TO BE FREE OF SEDIMENT
25+60	27				
26+60	34				
27+60	44				
28+60	57				
29+60	68				
30+60	77				
31+60	88				
32+60	106				
33+60	126			STA =	35+80
+80	128			HUB EL =	423.93
34+00	130				- 3.60
+20	134			SLEEVE EL =	420.33
+40	137				
+60	143				
+80	144				
35+00	143				
+20	144				
+40	145				
+60	144				
36+60	141				
37+60	141				
37+93	140				
CLEAN OUT					
34+60	43.1	141.4			
+70	43.2	141.7			
+80	43.2	141.7			
+90	43.2	141.7	144		
35+00	43.1	141.4			
+10	43.2	141.7			
+20	43.3	142.0			
+30	43.3	142.0			
+40	43.4	142.4			
+50	43.3	142.0			
+60	43.2	141.7			
+70	43.4	142.4	144		
+80	43.4	142.4			
+90	43.5	142.7			
36+00	43.5	142.7			

GROUNDWATER MITIGATION CONTROL SYSTEM, SAUGET AREA 2

Date: 9/16/04

Approximate time of depth measurements: A.M.

STATION	Trench Depth (ft.)	Down Rigger, Confirmation Measurements (ft.)		Clam Sampler	Comments:
PROFILE					
24+50	2				
24+60	16			28+40	CLAM SAMPLES OBSERVED
25+60	32			27+90	TO BE FREE OF SEDIMENT
26+60	39				
27+60	50				
28+60	60				
29+60	71				
30+60	81				
31+60	92				
32+60	107				
33+60	127				
+80	129				
34+00	130				SLURRY LEVEL
+20	135				STA 35+80
+40	138				SLURRY EL = 420.56
+60	143				
+80	144				
35+00	144				
+20	145				
+40	144				
+60	144				
36+60	140				
37+60	144				
37+93	70				
CLEAN OUT					
~~34+60~~	43.0	141.0			
+70	43.1	141.4			
+80	43.1	141.4			
+90	43.2	141.7			
35+00	43.2	141.7			
+10	43.2	141.7			
+20	43.3	142.0			
+30	43.3	142.0	144		
+40	43.4	142.4			
+50	43.4	142.4			
+60	43.4	142.4			
+70	43.3	142.0			
+80	43.4	142.4	144		
+90	43.4	142.4			
36+00	43.3	142.0			

GROUNDWATER MITIGATION CONTROL SYSTEM, SAUGET AREA 2

Date: 9/16/04

Approximate time of depth measurements: A.M.

STATION	Trench Depth (ft.)	Down Rigger, Confirmation Measurements (ft.)	Clam Sampler	Comments:
PROFILE				
24+50	2			
24+60	16			
25+60	32			
26+60	39			
27+60	50			
28+60	60			
29+60	71			
30+60	81			
31+60	92			
32+60	107			
33+60	127			
+80	129			
34+00	130			
+20	135			
+40	138			
+60	143			
+80	144			
35+00	144			
+20	145			
+40	144			
+60	144			
36+60	140			
37+60	144			
37+93	70			

GROUNDWATER MITIGATION CONTROL SYSTEM, SAUGET AREA 2

Date: 9/15/04

Approximate time of depth measurements: A.M.

STATION	Trench Depth (ft.)		Down Rigger, Confirmation Measurements (ft.)	Clam Sampler	Comments:
34+60	43.0	141.0		28+00	CLAM SAMPLES OBSERVED
+70	43.0	141.0		28+50	TO BE FREE OF SEDIMENT
+80	43.1	141.4			
+90	43.1	141.4			
35+00	43.1	141.4			
+10	43.2	141.7			
+20	43.3	142.0	144		
+30	43.3	142.0			
+40	43.4	142.4			
+50	43.4	142.4			STA 35+80
+60	43.3	142.0	144		SLURRY EL = 420.68
+70	43.3	142.0			

GROUNDWATER MITIGATION CONTROL SYSTEM, SAUGET AREA 2

Date: 9/14/04

Approximate time of depth measurements:

STATION	Trench Depth (ft.)	Down Rigger, Confirmation Measurements (ft.)	Clam Sampler	Comments:
CLEAN BOT	A.M.			
34+60	42.8 140.4		27+40	CLAM SAMPLES OBSERVED
+70	43.0 141.0		27+90	TO BE FREE OF SEDIMENT
+80	43.0 141.0	142		
+90	43.0 141.0			
35+00	43.0 141.0			
+10	43.1 141.4			
+20	43.1 141.4			
+30	43.2 141.7			STA 35+50
+40	43.2 141.7	143	A.M.	SLURRY EL = 420.66
+50	43.3 142.0		P.M.	SLURRY EL = 421.56
+60	43.2 141.7			
+70	43.2 141.7			
PROFILE	P.M.			
24+50	2			
+60	16			
25+60	35			
26+60	44			
27+60	53			
28+60	63			
29+60	75			
30+60	87			
31+60	97			
32+60	115			
33+60	131			
+80	130			
34+00	133			
+20	135			
+40	140			
+60	143			
+80	143			
35+00	145			
+20	145			
+40	144			
+60	144			
36+60	140			
37+60	142			
35+30	144			

GROUNDWATER MITIGATION CONTROL SYSTEM, SAUGET AREA 2

Date: 9/13/04

Approximate time of depth measurements:

STATION	Trench Depth (ft.)		Down Rigger, Confirmation Measurements (ft.)	Clam Sampler	Comments:
CLEAN OUT	A.M.				
34+60	42.8	140.4		27+70	CLAM SAMPLES OBSERVED
+70	43.0	141.0		28+20	TO BE FREE OF SEDIMENT
+80	43.0	141.0	143.0		
+90	43.1	141.4			
35+00	43.0	141.0			
+10	43.1	141.4			
+20	43.0	141.0	141.0		
+30	43.3	142.0			
+40	43.3	142.0			
+50	43.3	142.0			STA 35+50
+60	44.0	144.3			SLURRY EL = 420.81
+70	43.5	142.7			
PROBES	P.M.				
24+60	2				
24+60	18				
25+60	39				
26+60	47				
27+60	57				
28+60	70				
29+60	80				
30+60	90				
31+60	102				
32+60	115				
33+60	128				
+80	131				
34+00	132				
+20	135				
+40	138				
+60	143				
+80	142				
35+00	141				
+20	140				
+40	143				
+60	143				
36+60	138				
37+60	93				

GROUNDWATER MITIGATION CONTROL SYSTEM, SAUGET AREA 2

Date: 9/13/04

Approximate time of depth measurements: A.M.

STATION	Trench Depth (ft.)	Down Rigger, Confirmation Measurements (ft.)	Clam Sampler	Comments:
24+50	2			
24+60	18			
25+00	42			
26+60	50			
27+60	62			
28+60	72			
29+60	83			
30+60	92			
31+60	103			
32+60	115			
33+60	130			
+80	132			
34+00	133			
+20	133			
+40	134			
+60	136			
+80	136			
35+00	136			
+20	133			
+40	136			
+60	140			
36+60	137			
37+60	92			
37+93	71			

GROUNDWATER MITIGATION CONTROL SYSTEM, SAUGET AREA 2

Date: 9/10/04

Approximate time of depth measurements:

STATION	Trench Depth (ft.)	Down Rigger, Confirmation Measurements (ft.)	Clam Sampler	Comments:
CLEANOUT	A.M.			
33+68	42.4 139.1		28+40	CLAM SAMPLES OBSERVED
+70	42.4 139.1	140.0	28+90	TO BE FREE OF SEDIMENT
+80	42.5 139.4			
+90	42.5 139.4			
34+00	42.5 139.4			
+10	42.5 139.4			33+40
+20	42.5 139.4			HUB EL 426.28
+30	42.7 140.1			SURVEY EL = 420.45
+40	42.8 140.7	141.0		
+50	42.8 140.4			
+60	42.9 140.7			

GROUNDWATER MITIGATION CONTROL SYSTEM, SAUGET AREA 2

Date: 9/9/04

Approximate time of depth measurements:

STATION	Trench Depth (ft.)	Down Rigger, Confirmation Measurements (ft.)	Clam Sampler	Comments:
PLEASANT	A.M.			
33+60	42.0 137.1		28+50	CLAM SAMPLES OBSERVED
+70	42.3 138.7		29+00	TO BE FREE OF SEDIMENT.
+80	42.6 139.7	141		
+90	42.6 139.7			
34+00	42.5 139.4			
+10	42.6 139.7			
+20	42.5 139.4			
+30	42.6 139.7			
+40	42.9 ~~140.7~~			
+50	42.8 140.4	142		
+60	42.7 140.1			
				STA 33+40
PROFILE	P.M.			SLURRY EL = 140.62
24+50	2			
24+60	17			
25+80	46			
26+60	55			
27+60	66			
28+60	75			
29+60	86			
30+60	97			
31+60	105			
32+60	120			
+50	129			
33+60	131			
+20	134			
+40	137			
+60	140			
+80	141			
34+00	141			
+20	141			
+40	141			
+60	142			
34+90	142			
35+10	139			
35+40	136			
35+60	140			
35+85	143			
36+60	120			
37+60	55			
37+93	73			

GROUNDWATER MITIGATION CONTROL SYSTEM, SAUGET AREA 2

Date: 9/8/04

Approximate time of depth measurements:

STATION	Trench Depth (ft.)		Down Rigger, Confirmation Measurements (ft.)	Clam Sampler	Comments:
CLEANOUT	A.M.				
33+60	42.0	137.8		28+40	CLAM SAMPLES ASSIGNED TO
+70	42.2	138.4		28+90	BE FREE OF SEDIMENT.
+80	42.3	138.7			
+90	42.6	139.7			
34+00	42.5	139.4	141		
+10	42.5	139.4			
+20	42.5	139.4			
+30	42.6	139.7			STA 32+90
+40	42.7	140.1	142		SLURRY EL = 470.66
+50	42.8	140.4			
PROFILE	P.M.				
24+50	2				
+60	19				
25+60	51				
26+60	60				
27+60	69				
28+60	77				
29+60	87				
30+60	98				
31+60	107				
32+60	119				
+80	131				
33+00	131				
+20	133				
+40	137				
+60	140				
+80	141				
34+00	141				
+20	140				
+40	140				
+60	140				
35+60	139				
36+60	137				
37+60	2				

GROUNDWATER MITIGATION CONTROL SYSTEM, SAUGET AREA 2

Date: 9/8/04

Approximate time of depth measurements: A.M.

STATION	Trench Depth (ft.)	Down Rigger, Confirmation Measurements (ft.)	Clam Sampler	Comments:
PROFILE A.M.:				
24+80	2			
24+60	18			
25+60	55			
26+60	61			
27+60	71			
28+60	80			
29+60	90			
30+60	100			
31+60	110			
32+60	124			SLURRY EL = 420.66
+80	131			
33+00	132			
+20	134			
+40	136			
+60	140			
+80	139			
34+00	139			
+20	140			
+40	137			
+60	134			
35+60	144			
36+60	123			
37+60	2			
37+93	109			

GROUNDWATER MITIGATION CONTROL SYSTEM, SAUGET AREA 2

Date: 9/7/04

Approximate time of depth measurements: A.M.

STATION	Trench Depth (ft.)	Down Rigger, Confirmation Measurements (ft.)	Clam Sampler	Comments:
CLEANOUT				
32+70	42.5 139.4		27+60	CLAM SAMPLES OBSERVED
+80	42.5 139.4		28+30	TO BE FREE OF SEDIMENT.
+90	42.7 140.1	139		
33+00	42.6 139.7			
+10	42.2 138.4			
+20	42.7 140.1			
+30	42.6 139.7	140		
+40	42.9 146.7			
+50	42.6 139.7			SLURRY EL = 420.29
+60	42.6 139.7			STA 33+90
PROFILE				

GROUNDWATER MITIGATION CONTROL SYSTEM, SAUGET AREA 2

Date: 9/3/04

Approximate time of depth measurements:

STATION	Trench Depth (ft.)		Down Rigger, Confirmation Measurements (ft.)	Clam Sampler	Comments:
CLEAN OUT A.M	42.0	137.8			
32+60	42.0			27+40	CLAM SAMPLES OBSERVED
+70	42.0			27+90	TO BE PRIOR TO SEDIMENT
+80	42.0		141		
+90	42.0				
33+00	42.0				
+10	42.0				
+20	42.1	138.1			
+30	42.2	138.4	142		
+40	42.1	138.1			SCREEN BL = 421.20
+50	42.1				
+60	42.1				
PROFILE P.M					
24+80	2				
24+60	20				
25+60	59				
26+60	67				
27+60	76				
28+60	86				
29+60	96				
30+60	107				
31+60	117				
+80	120				
32+00	123				
+20	125				
+40	129				
+60	133				
+80	139				
33+00	138				
+20	141				
+40	141				
+60	142				
34+60	136				
35+60	142				
36+60	71				
37+20	24				

GROUNDWATER MITIGATION CONTROL SYSTEM, SAUGET AREA 2

Date: 9/2/04

Approximate time of depth measurements: P.M.

STATION	Trench Depth (ft.)	Down Rigger, Confirmation Measurements (ft.)	Clam Sampler	Comments:
PROFILE				
24+60	2			
25+60	61			
26+60	70			
27+60	79			
28+60	88			
29+60	101			
30+60	111			
31+60	121			
+80	125			
32+00	124			
+20	131			
+40	135			
+60	138			
+80	140			
33+00	139			
+20	141			
+40	143			
+60	143			
34+60	119			
35+60	138			
36+60	70			
36+90	8			

GROUNDWATER MITIGATION CONTROL SYSTEM, SAUGET AREA 2

Date: 9/2/04

Approximate time of depth measurements: A.M.

STATION	Trench Depth (ft.)		Down Rigger, Confirmation Measurements (ft.)	Clam Sampler	Comments:
CLEAN OUT					
32+20	43.2	141.7		26+50	CLAM SAMPLES OBSERVED
+80	43.4	142.4		27+00	TO BE FREE OF SEDIMENT
+40	43.4	142.4	145		
+60	43.0	141.0			
+00	42.7	140.0			
+70	42.7	140.1			
+80	42.6	139.7			STA. 30+60
+90	42.7	140.1			HUB EL 422.93
33 +00	42.6	139.7	140		SLURRY TO BOARD 1.46
+10	42.6	139.7			421.47
+20	42.7	140.1			
+30	42.8	140.4			
PROFILE					
24+50	3				
25+20	60				
26+20	69				
27+20	80				
28+20	90				
29+20	100				
30+20	113				
31+20	125				
+40	126				
+60	129				
+80	131				
32+00	134				
+20	143				
+40	145				
+60	142				
+80	140				
33+00	140				
+20	141				
34+20	111				
35+20	141				
36+20	67				
36+90	26				

GROUNDWATER MITIGATION CONTROL SYSTEM, SAUGET AREA 2

Date: 9/1/04

Approximate time of depth measurements: Pm

STATION	Trench Depth (ft.)	Down Rigger, Confirmation Measurements (ft.)	Clam Sampler	Comments:
TRENCH BOTTOM CLEAN OUT 1100pm TO			4:20pm.	INQUIR ELECTED NOT
TO PLACE BACKFILL THIS LATE IN THE DAY. TRENCH BOTTOM TO BE				
RECLEANED TOMORROW MORNING PRIOR TO FILL PLACEMENT.				
32+20	43.7 / 143.3			
32+30	44.0 / 144.3			
32+40	43.6 / 143.0			
32+50	43.2 / 141.7			
32+60	43.3 / 142	142		
32+70	42.8 / 140.4			
32+80	43.1 / 141.4			

GROUNDWATER MITIGATION CONTROL SYSTEM, SAUGET AREA 2

Date: 8/31/04

Approximate time of depth measurements: AM.

STATION	Trench Depth (ft.)	Down Rigger, Confirmation Measurements (ft.)	Clam Sampler	Comments:
PROFILE				
24+50	2			
25+20	60			
26+20	70			
27+20	79			
28+20	90			
29+20	100			
30+20	111			
31+20	123			
+40	126			
+60	129			STA 30+60
+80	132			HUB EL = 422.93
32+00	134			BOARD TO SLURRY = -2.0
+20	138			SLURRY EL = 420.93
+40	143			
+60	67			
+80	126			
33+00	133			
+20	132			
34+20	123			
35+20	100			
36+20	76			
36+80	24			
32+55	67			
32+72	129			

GROUNDWATER MITIGATION CONTROL SYSTEM, SAUGET AREA 2

Date: 8/31/04

Approximate time of depth measurements: P.M.

STATION	Trench Depth (ft.)	Down Rigger, Confirmation Measurements (ft.)	Clam Sampler	Comments:
Profiles				
24+50	2			
25+20	60			
26+20	70			
27+20	79			
28+20	89			
29+20	100			
30+20	112			
31 +20	123			
+40	127			
+60	130			
+80	131			
32 +00	133			
+20	137			
+40	144			
+60	116			
+80	105			
33 + 00	134			
+20	133			
34+20	118			
35+20	100			
36+20	73			
37+00	6			

GROUNDWATER MITIGATION CONTROL SYSTEM, SAUGET AREA 2

Date: 8/30/04

Approximate time of depth measurements: A.M/P.M.

STATION	Trench Depth (ft.)	Down Rigger, Confirmation Measurements (ft.)	Clam Sampler	Comments:
CLEAN OUT	8/31/04 PM			
31+60	43.5 / 142.7		27+40	CLAM SAMPLES OBSERVED
31+70	43.1 / 14.4		27+90	TO BE FREE OF SEDIMENT.
31+80	43.3 / 142.0			
31+90	43.3 / 142.0	-143.0		
32+00	43.41 142.4	(134)		
32+10	43.51 142.7			
32+20	43.61 143.0	(138)		
32+30	43.91 144.0			STA 30+60
8/31/04	AM			HUB EL = 422.93.
24+50	2			BOARD TO SLURRY = 2.42
25+20	60			SLURRY EL = 420.51
26+20	70			
27+20	79			
28+20	90			
29+20	100			
30+20	111			
31+00	123			
+40	126			
+60	129			
+80	132			
32+00	134			
+20	138			
+40	143			
+60	67			
+80	126			
33+00	133			
+20	130			
34+20	123			
35+20	100			
36+20	76			
36+80	24			
32+55	67			
32+72	129			

GROUNDWATER MITIGATION CONTROL SYSTEM, SAUGET AREA 2

Date: 8/30/04

Approximate time of depth measurements: 9/P.M.

STATION	Trench Depth (ft.)	Down Rigger, Confirmation Measurements (ft.)	Clam Sampler	Comments:
CLEANOUT				
31+60	43.5 / 142.7		27+40	CLAM SAMPLES OBSERVED
31+70	43.1 / 141.4		27+90	TO BE FREE OF SEDIMENT
31+80	43.3 / 142.0			
31+90	43.3 / 142.0	143.0		
32+00	43.4 / 142.4			
32+10	43.5 / 142.7			
32+20	43.6 / 143.0			
32+30	43.9 / 144.0			
				STA 30+60
				HUB EL = 422.93
				BOARD TO SLURRY = 2.42
				SLURRY EL = 420.51

GROUNDWATER MITIGATION CONTROL SYSTEM, SAUGET AREA 2

Date: 8/27/04

Approximate time of depth measurements: P.M.

STATION	Trench Depth (ft.)	Down Rigger, Confirmation Measurements (ft.)	Clam Sampler	Comments:
PROFILE				
24+50	2			
25+00	57			
26+00	69			
27+00	80			
28+00	90			
29+00	100			
30+00	111			
31+00	128			
+20	131			
+40	133			
+60	135			
+80	139			
32+00	140			
+20	144			
+40	126			
+60	73			
+80	138			
33+00	141			
34+00	139			
35+00	60			
36+00	45			
36+60	12			

GROUNDWATER MITIGATION CONTROL SYSTEM, SAUGET AREA 2

Date: 8/26/04

Approximate time of depth measurements: P.M.

STATION	Trench Depth (ft.)	Down Rigger, Confirmation Measurements (ft.)	Clam Sampler	Comments:
CLEAN OUT				
31+40	43.0 / 141.0		~~27~~+50	CLAM SAMPLES OBSERVED TO BE
31+50	43.1 / 141.1		~~27~~+00	FREE OF SEDIMENT
31+60	43.2 / 141.7	143.0		
31+70	43.1 / 141.4			
31+80	43.4 / 142.4			
31+90	43.3 / 142.0			
32+00	43.3 / 142.0			
PROFILE				
24+50	2			30+60
25+00	58			HUB EL = 422.93
26+00	69			BOARD TO SLURRY = 1.5'
27+00	80			SLURRY EL = 421.43'
28+00	90			
29+00	102			
30+00	111			
31+00	128			
+20	132			
+40	133			
+60	137			
+80	138			
32+00	141			
+20	133			
+40	128			
+60	73			
+80	118			
33+00	117			
34+00	140			
35+00	64			
36+00	42			

GROUNDWATER MITIGATION CONTROL SYSTEM, SAUGET AREA 2

Date: 8/26/04

Approximate time of depth measurements: A.M.

STATION	Trench Depth (ft.)	Down Rigger, Confirmation Measurements (ft.)	Clam Sampler	Comments:
PROFILE A.M.				
24+58	1			
25+40	64			
26+40	75			
27+40	86			
28+40	97			
29+40	106			
30+40	117			
+60	121			
+80	122			
31+00	128			
+20	134			
+40	130			
+60	142			
+80	138			
32+00	132			
+20	134			
+40	130			
33+40	123			
34+40	143			
35+40	60			
35+60	75			

GROUNDWATER MITIGATION CONTROL SYSTEM, SAUGET AREA 2

Date: 8/25/04

Approximate time of depth measurements: A.M.

STATION	Trench Depth (ft.)	Down Rigger, Confirmation Measurements (ft.)	Clam Sampler	Comments:
PROFILE A.M.	EARLY MORNING.			
24+50	2			
25+40	64			
26+40	75			
27+40	85			
28+40	96			
29+40	106			
30+40	118			
+60	119			STA 30+50
+80	124			HUB EL = 423.05
31+00	128			BOARD TO SURVEY = 1.54
+20	131			SURVEY EL = 421.51
+40	131			
+60	140			
+80	139			
32+00	138			
+20	135			
+40	130			
33+40	130			
34+40	75			
35+10	24			

GROUNDWATER MITIGATION CONTROL SYSTEM, SAUGET AREA 2

Date: 8/24/04

Approximate time of depth measurements: A.M.

STATION	Trench Depth (ft.)	Down Rigger, Confirmation Measurements (ft.)	Clam Sampler	Comments:
EARLY MORNING				
24+50	2		24+40	CLAM SAMPLES OBSERVED
25+20	66		24+90	TO BE FREE OF SEDIMENT
26+20	74			
27+20	86			
28+20	95			
29+20	105			
30+20	116			
+40	117			
+60	121			
+80	122			
31+00	130			
+20	134			
+40	138			
+60	138			
+80	137			
32+00	138			
+20	133			
33+20	110			
34+20	66			
35+10	23			
MID MORNING				
CLEAN OUT				
31+30	42.7 / 140.1			
+40	42.6 / 139.7			
+50	42.8 / 140.4	141.0		
+60	42.8 / 140.4			
+70	43.1 / 141.4			
+80	43.3 / 142.0			

GROUNDWATER MITIGATION CONTROL SYSTEM, SAUGET AREA 2

Date: 8/20/04

Approximate time of depth measurements:

STATION	Trench Depth (ft.)	Down Rigger, Confirmation Measurements (ft.)	Clam Sampler	Comments:
CLEAN OUT				
30+80	137		26+00	CLAM SAMPLES OBSTRUCTED TO R
+90	139		26+50	PROF OF SEDIMENT
31+00	139			
+10	139	142		
+20	139.9			
+30	140.2			
PROFILE				STA 30+50
24+50	2			HUB EL = 443.05
25+20	66			BOARD TO SLURRY = -1.33
26+20	75			SLURRY EL = 421.72
27+20	85			
28+20	96			
29+20	106			
30+20	116			
+40	118			
+60	120			
+80	124			
31+00	132			
+20	135			
+40	140			
+60	139			
+80	108			
32+00	105			
+20	136			
33+20	68			
34+20	70			
≈34+70	6			

GROUNDWATER MITIGATION CONTROL SYSTEM, SAUGET AREA 2

Date: 8/19/04

Approximate time of depth measurements:

STATION	Trench Depth (ft.)	Down Rigger, Confirmation Measurements (ft.)	Clam Sampler	Comments:
CLEAN OUT				
30+30	137.0		25+90	CLAM SAMPLES OBSERVED
+40	137.6		26+40	TO BE FREE OF SEDIMENT
+50	137.9			
+60	137.6	137		
+70	137.6			
+80	137.0			
PROFILE				SHA 30+50
24+50	2			HUB EL = 423.05
24+80	44			BOARD TO SLURRY = -1.35
25+80	74			SLURRY EL = 421.70
26+80	84			
27+80	94			
28+80	105			
29+80	117			
30+00	120			
+20	123			
+40	128			
+60	128			
+80	128			
31+00	131			
+20	137			
+40	136			
+60	127			
+80	113			
+90	108			
32+80	137			
33+30	66			
34+30	20			

GROUNDWATER MITIGATION CONTROL SYSTEM, SAUGET AREA 2

Date: 8/18/04

Approximate time of depth measurements:

STATION	Trench Depth (ft.)	Down Rigger, Confirmation Measurements (ft.)	Clam Sampler	Comments:
CLEAN OUT A.M.				
30+00	136.5		26+50	CLAM SAMPLES OBSERVED
+10	136.9		27+00	TO BE FREE OF SEDIMENT
+20	137.4	137		
+30	137.0			
+40	137.0			
PROFILE P.M.				STA 29+10
24+50	2			HUB EL = 423.70
25+20	68			BOARD TO SLURRY = -2.08
26+20	79			SLURRY EL = 421.62
27+20	91			
28+20	104			
29+20	115			
+40	118			
+60	121			
+80	123			
30+00	125			
+20	130			
+40	136			
+60	136			
+80	135			
31+00	137			
+20	136			
32+20	144			
33+20	142			
33+85	22			

Date: 8/17/04 GROUNDWATER MITIGATION CONTROL SYSTEM, SAUGET AREA 2

Approximate time of depth measurements:

STATION	Trench Depth (ft.)	Down Rigger, Confirmation Measurements (ft.)	Clam Sampler	Comments:
24+50	2			
25+00	66			
26+00	82			
27+00	92			
28+00	105			
29+00	116			
+20	118			
+40	118			
+60	124			
+80	128			
30+00	128			
+20	133			
+40	134			
+60	137			
+80	123			
31+00	138			
32+00	107			
33+00	52			
33+85	22			

GROUNDWATER MITIGATION CONTROL SYSTEM, SAUGET AREA 2

Date: 8/16/04

Approximate time of depth measurements:

STATION	Trench Depth (ft.)		Down Rigger, Confirmation Measurements (ft.)	Clam Sampler	Comments:
CLEAN OUT A.M.					
29+90	41.7	136.8		~~26+50~~	CLAM SAMPLES OBSERVED
30+00	41.7	136.8		~~26+00~~	TO BE FLOC OF SEDIMENT.
+10	41.7	136.8	137	26+40	
+20	41.7	136.8		26+90	
+30	41.7	136.8			
+40	41.6	136.4	137		
+50	41.6	136.4			
+60	41.0	134.5			STA 29+10
			HIGH SPOT NEED TO TRY CHISEL.		HUB EL = 423.70
PROFILE P.M.					BOARD TO SLURRY = 2.125
24+50	2				SLURRY EL = 421.58
25+00	106				
26+00	84				
27+00	95				
28+00	106				
29+00	120				
+20	123				
+40	122				
+60	125				
+80	126				
30+00	129				
+20	138				
+40	139				
+60	136				
+80	126				
31+00	137				
32+00	105				
33+00	71				
≈33+40	00				

GROUNDWATER MITIGATION CONTROL SYSTEM, SAUGET AREA 2

Date: 8/13/04

Approximate time of depth measurements:

STATION	Trench Depth (ft.)	Down Rigger, Confirmation Measurements (ft.)	Clam Sampler	Comments:
CLEAN OUT A.M.			26+10	CLAM SAMPLES OBSERVED
29+90	136.8		25+50	TO BE FREE OF SEDIMENT.
30+00	136.8			
30+10	136.8	139.0		
30+20	136.5			
30+30	136.8			
30+40	136.2			
30+50	136.5			
				STA 26+60
				HUB EL = 424.17
				BOARD TO SLURRY = 2.92
PROFILE P.M.				SLURRY EL = 421.25
29+50	2			
25+20	73			
26+20	88			
27+20	100			
28+20	110			
29+20	126			
29+40	126			
29+60	125			
29+80	127			
30+00	136			
30+20	137			
30+40	138			
30+60	136			
30+80	125			
31+00	137			
31+20	140			
32+20	144			
33+20	57			
33+40	20			

GROUNDWATER MITIGATION CONTROL SYSTEM, SAUGET AREA 2

Date: 8/12/04

Approximate time of depth measurements:

STATION	Trench Depth (ft.)	Down Rigger, Confirmation Measurements (ft.)	Clam Sampler	Comments:
CLEAN OUT A.M.				
29+30	135.2		26+70	CLAM SAMPLES OBSERVED
29+40	135.5		26+20	TO BE FREE OF SEDIMENT
29+50	135.8	136		
29+60	135.5			
29+70	136.0			
29+80	136.0			26+60
29+90	137.2			HUB EL = 424.17
30+00	137.2	137		BOARD TO SLURRY = 2.38
30+10	137.2			SLURRY EL = 421.79
30+20	137.0			
30+30	137.0			
PROFILE P.M.				
24+50	8			
24+80	42			
25+80	93			
26+80	100			
27+80	112			
28+80	123			
29+00	126			
29+20	130			
29+40	130			
29+60	130			
29+80	128			
30+00	137			
30+20	137			
30+40	132			
30+60	137			
30+80	122			
31+80	116			
32+80	11			
33+40	20			

GROUNDWATER MITIGATION CONTROL SYSTEM, SAUGET AREA 2

Date: 8/11/04

Approximate time of depth measurements:

STATION	Trench Depth (ft.)	Down Rigger, Confirmation Measurements (ft.)	Clam Sampler	Comments:
CLEAN OUT A.M.				
28+30	135.0		26+30	CLAM SAMPLES OBSERVED TO
28+40	135.5		26+80	BE FREE OF SEDIMENT.
28+50	135.5			
28+60	135.8	136.		
28+70	135.1			
28+80	136.0			
28+90	136.3			26+60
29+00	135.8	136.		HUB EL = 424.17
29+10	135.0			BOARD TO SLURRY = 2.4
29+20	135.4			SLURRY EL = 421.77
29+30	135.4			
PROFILE P.M.				
24+50	2			
25+20	76			
26+20	105			
27+20	113			
28+20	122			
28+40	126			
28+60	128			
28+80	131			
29+00	132			
29+20	131			
29+40	137			
29+60	137			
29+80	136			
30+00	139			
30+20	136			
31+20	138			
31+90	3			

GROUNDWATER MITIGATION CONTROL SYSTEM, SAUGET AREA 2

Date: 8/10/04

Approximate time of depth measurements:

STATION	Trench Depth (ft.)	Down Rigger, Confirmation Measurements (ft.)	Clam Sampler	Comments:
CLEAN OUT A.M.				
27+30	135.3		25+60	CLAM SAMPLES OBSERVED TO
27+40	135.1		26+10	BE FREE OF SEDIMENT
27+50	135.7			
27+60	135.9			
27+70	135.5	136		
27+80	135.0			
27+90	135.2			
28+00	135.1			STA 26+60
28+10	135.0	135		HUB EL = 424.17
28+20	135.0			BOARD TO SLURRY = 2.42
28+30	135.0			SLURRY EL = 421.75
EVENING				
PROFILE 4PM.				
24+50	3			
25+20	75			
26+20	112			
27+20	122			
27+40	124			
27+60	124			
27+80	127			
28+00	129			
28+20	130			
28+40	130			
28+60	131			
28+80	136			
29+00	135			
29+20	135			
30+20	137			
31+20	59			
31+80	108			

GROUNDWATER MITIGATION CONTROL SYSTEM, SAUGET AREA 2

Date: 8/9/04

Approximate time of depth measurements: Am

STATION	Trench Depth (ft.)	Down Rigger, Confirmation Measurements (ft.)	Clam Sampler	Comments:
TRENCH BOTTOM CLEANING				
26+20	134.5		25+90	
26+30	134.0		25+50	
26+40	134.5			26+40
26+50	134.5			HUB. 423.91
26+60	134.5	135		BOARD TO HUB 0
26+70	134.9			BOARD TO SLURRY -2.79
26+80	134.3			SLURRY EL = 421.12
26+90	135.0	135.5		
27+00	135.2			
27+10	135.1			STA. 26+60
27+20	135.5			HUB. 424.17
27+30	135.3			BOARD TO HUB 0
				BOARD TO SLURRY -2.5
EVENING PROFILE				SLURRY EL. = 421.67
24+50	3			
25+00	71			
25+40	103			
25+60	110			
25+80	114			
26+00	115			
26+20	119			
26+40	121			
26+60	121			
26+80	123			
27+00	123			
27+20	129			
27+40	130			
27+60	131			
28+40	131			
29+40	138			
30+40	41m 134.5			
30+50	131			
31+30	133			
± 31+80	80			

Average slurry el. 421.40

GROUNDWATER MITIGATION CONTROL SYSTEM, SAUGET AREA 2

Date: 8/6/04

Approximate time of depth measurements: Pm

STATION	Trench Depth (ft.)	Down Rigger, Confirmation Measurements (ft.)	Clam Sampler	Comments:
1:50pm TRENCH BOTTOM CLEANING				
25+90	133.8			STATION 26+40
26+00	133.8			HUB EL. 423.91
26+10	133.8	133.5		HUB TO BOARD 0
26+20	133.8			BOARD TO SLURRY = -2.46
26+30	134.0			SLURRY EL = 421.45
26+40	134.5			
26+50	134.5	135.5		
26+60	135.0			
26+70	134.1			
EVENING PROFILE				
3:45pm 24+50	10			
25+00	107			
25+20	75			
25+40	103			
25+60	115			
25+80	125			
26+00	129			
26+20	132			
26+40	136			
26+60	132			
26+80	136			
27+00	135			
28+00	133			
29+00	135			
30+00	138			
31+00	4			
31+20	139			
31+40	133			

GROUNDWATER MITIGATION CONTROL SYSTEM, SAUGET AREA 2

Date: 8/5/04

Approximate time of depth measurements:

STATION	Trench Depth (ft.)	Down Rigger, Confirmation Measurements (ft.)	Clam Sampler	Comments:
NORTH A.M.				
24+50	2			
25+00	65			
25+20	75			STA 20+10
25+40	104			HUB EL = 423.51
25+60	117			BOARD TO SLURRY = -2.25
25+80	128			SLURRY EL = 421.26
26+00	130			
26+20	131			
26+40	135			
26+60	135			
26+80	135			
27+00	135			
28+00	133			
29+00	134			
30+00	129			
31+00	21M -			
31+40	2			
SOUTH A.M.				
5+00		21		
5+10		20		
5+20		15		
5+30		17		
SOUTH P.M.				
5+00	2 *			
5+20	2 *			* TWO FEET OF WET SLURRY
5+40	2 *			ABOVE BACKFILL MAT.
5+60	0			BACKFILL MAT. IS ABOVE
				EXISTING GRADE. THERE-
				FORE BACKFILL TO STA 5+00
				IS COMPLETE.

GROUNDWATER MITIGATION CONTROL SYSTEM, SAUGET AREA 2

Date: 8/4/04

Approximate time of depth measurements:

STATION	Trench Depth (ft.)	Down Rigger, Confirmation Measurements (ft.)	Clam Sampler	Comments:
North (A.M.)				
24+50	2			STA 26+10
25+00	67			HUB EL = 423.81
25+20	75			BOARD TO SLURRY = -2.5
25+40	105			SLURRY EL = 421.31
25+60	116			
25+80	127			
26+00	129			
26+20	132			
26+40	132			
26+60	134			
26+80	134			
27+00	135			
28+00	134			
29+00	127			
30+00	129			
30+20	125			
30+40	123			
30+60	135			
31+40	3			
South (A.M.)				
5+00		27		
5+10		25		
5+20		25		
5+30		24		
South (P.M.)				
5+00	21			
5+20	19			
5+40	16			
5+60	13			
5+80	12			
6+00	9			
6+80	4			

GROUNDWATER MITIGATION CONTROL SYSTEM, SAUGET AREA 2

Date: 8/3/04

Approximate time of depth measurements:

STATION	Trench Depth (ft.)	Down Rigger, Confirmation Measurements (ft.)	Clam Sampler	Comments:
NORTH A.M.				
24+50	2			
25+00	67			STA 26+00
25+20	76			HUB EL = 423.21
25+40	105			BOARD TO SLURRY = -1.83
25+60	118			SLURRY EL = 421.38
25+80	128			
26+00	130			
26+20	133			
26+50	135			
26+80	135			
27+00	135			
27+50	134			
27+80	128			
27+60	133			
28+00	129			
28+20	126			
28+40	109			
28+60	102			
28+70	101			
SOUTH A.M.				
5+00		31		
5+10		31	6+10	CLAM SAMPLES NEED TO BE
5+20		29	6+20	TO BE FREE OF SEDIMENT
5+30		29		
SOUTH P.M.				
5+00	32			
5+20	28			
5+40	24			
5+60	18			
5+80	20			
6+00	17			
7+00	12			
7+60	3			

GROUNDWATER MITIGATION CONTROL SYSTEM, SAUGET AREA 2

Date: 8/2/04

Approximate time of depth measurements:

STATION	Trench Depth (ft.)	Down Rigger, Confirmation Measurements (ft.)	Clam Sampler	Comments:
~~North~~ A.M.				
~~24+50~~	~~6~~			STA = 26+00
~~25+00~~	~~62~~			HUB EL = 423.21
~~25+20~~	~~76~~			BOARD TO SLURRY = -2.42
~~25+40~~	~~104~~			~~HUB EL~~ = 420.79
~~25+60~~	~~111~~			SLURRY EL. =
~~25+80~~	~~129~~			
~~26+00~~	~~130~~			
~~26+25~~	~~133~~			
~~26+50~~	~~135~~			
~~26+75~~	~~135~~			
~~27+00~~	~~136~~			
~~28+00~~	~~136~~			
~~29+00~~	~~136~~			
~~30+00~~	~~75~~			
~~30+60~~	~~1~~			
~~Clean out~~ A.M.				
~~5+00~~		~~35~~	~~6+00~~	~~Clam samples observed~~
~~5+10~~		~~34~~	~~6+50~~	~~to be free of sediment.~~
~~5+20~~		~~33~~		
~~5+30~~		~~32~~		
~~South~~ P.M.				
~~5+00~~	~~31~~			
~~5+20~~	~~30~~			
~~5+40~~	~~27~~			
~~5+60~~	~~27~~			
~~5+80~~	~~25~~			
~~6+00~~	~~23~~			
~~7+00~~	~~15~~			
~~8+00~~	~~1~~			

GROUNDWATER MITIGATION CONTROL SYSTEM, SAUGET AREA 2

Date: 7/29/04

Approximate time of depth measurements:

STATION	Trench Depth (ft.)	Down Rigger, Confirmation Measurements (ft.)	Clam Sampler	Comments:
NORTH (A.M.)				
24+50	3			
25+00	72			STA 26+00
25+20	76			HUB EL = 423.21
25+40	105			BOARD TO SLURRY = - 1.96
25+60	118			SLURRY EL = 421.25
25+80	129			
26+00	130			
26+20	133			
26+40	137			
26+60	135			
26+80	135			
27+00	136			
28+00	137			
29+00	130			
29+30	131			
29+60	131			
29+90	137			
CLEANOUT (A.M.)				
5+00		36	6+00	CLAM SAMPLES OBSERVED
5+10		36	6+50	TO BE FREE OF SEDIMENT.
5+20		35		
5+30		32		
SOUTH (P.M.)				
5+00	37			
5+20	32			
5+40	31			
5+60	28			
5+80	27			
6+00	25			
7+00	17			
8+00	7			
8+20	2			

GROUNDWATER MITIGATION CONTROL SYSTEM, SAUGET AREA 2

Date: 7/28/04

Approximate time of depth measurements:

STATION	Trench Depth (ft.)	Down Rigger, Confirmation Measurements (ft.)	Clam Sampler	Comments:
NORTH (A.M.)				
24+50	2			STA 26+00
25+00	70			HUB EL = 423.21
25+20	75			BOARD TO SLURRY = -1.83
25+40	105			SLURRY EL = 421.38
25+60	117			
25+80	128			
26+00	130			
26+20	133			
26+40	135			
26+60	136			
26+80	137			
27+00	137			
28+00	137			
29+00	132			
30+00	43			
A.M. CLEANOUT				
5+00		35		
5+10		36	7+10	CLAM SAMPLES OBSERVED TO
5+20		35	6+60	BE FREE OF SEDIMENT.
5+30		34		
SOUTH (P.M.)				
5+00	36			
5+20	33			
5+40	31			
5+60	28			
5+80	27			
6+00	25			
7+00	18			
8+00	9			
8+40	6			

GROUNDWATER MITIGATION CONTROL SYSTEM, SAUGET AREA 2

Date: 7/27/04

Approximate time of depth measurements: P.M.

SOUTH

STATION	Trench Depth (ft.)	Down Rigger, Confirmation Measurements (ft.)	Clam Sampler	Comments:
AM. CLEAN OUT.				BACKFILL
5+00	42		7+20	CLAM SAMPLES OBSERVED
5+10	41		7+20	TO BE FREE OF SEDIMENTS.
5+20	40			
5+30	40			
PM PROFILE				
5+00	35			
5+20	35			
5+40	34			
5+60	BASKET SET OF ATTHIS LOCATION.			
5+80	30			
6+00	30			
7+00	22			
8+00	110			
9+00	7			
9+50	0			

GROUNDWATER MITIGATION CONTROL SYSTEM, SAUGET AREA 2

Date: 7/27/04

Approximate time of depth measurements: Am

NORTH

STATION	Trench Depth (ft.)	Down Rigger, Confirmation Measurements (ft.)	Clam Sampler	Comments:
24+50	2			
25+00	71			
25+20	76			
25+40	106			STA. 26+00
25+60	110			HUB EL. 423.21
25+80	128			BOARD TO SLURRY -1.54
26+00	132			SLURRY EL. 421.67
26+20	134			
26+40	136			
26+60	136			
26+80	136			
27+00	137			
28+00	138			
28+50	132			
29+00	101			
29+20	72			
29+40	70			
29+60	24			
29+80	15			

Jay Wichern 7/27/04

GROUNDWATER MITIGATION CONTROL SYSTEM, SAUGET AREA 2

Date: 7/26/04

Approximate time of depth measurements: P.M.

SOUTH

STATION	Trench Depth (ft.)	Down Rigger, Confirmation Measurements (ft.)	Clam Sampler	Comments:
5+00	41			
5+20	41		8+30	CLAM SAMPLES OBSERVED
5+40	39		7+80	TO BE FREE OF SEDIMENT.
5+60	37			
5+80	35			
6+00	35			
7+00	30			
8+00	25			
9+00	14			
10+00	1			
5+00		46		
5+10		46		
5+20		47		
5+30		46		

GROUNDWATER MITIGATION CONTROL SYSTEM, SAUGET AREA 2

Date: 7/26/04

Approximate time of depth measurements: A.M.

NORTH

STATION	Trench Depth (ft.)	Down Rigger, Confirmation Measurements (ft.)	Clam Sampler	Comments:
24+50	4			
25+00	71			
25+20	76			
25+40	107			
25+60	118			
25+80	129			
26+00	131			
26+20	133			
26+40	136			
26+60	134			STA 26+00
26+80	137			HUB EL = 423.21
27+00	137			BOARD TO SLURRY = -1.81
28+00	137			SLURRY EL = 421.4
29+00	45			
29+50	24			

GROUNDWATER MITIGATION CONTROL SYSTEM, SAUGET AREA 2

Date: 7/23/04

Approximate time of depth measurements: P.M.

SOUTH

STATION	Trench Depth (ft.)	Down Rigger, Confirmation Measurements (ft.)	Clam Sampler	Comments:
5+00	45			
5+20	48		8+70	CLAM SAMPLES OBSERVED
5+40	44		9+20	TO BE FREE OF SEDIMENT
5+60	42			
5+80	41			
6+00	40			
7+00	35			
8+00	26			
9+00	18			
10+00	6			
10+22	1			
5+00		55		
5+10		54		
5+20		55		
5+30		50		

GROUNDWATER MITIGATION CONTROL SYSTEM, SAUGET AREA 2

Date: 7/23/04

Approximate time of depth measurements: A.M.

~~NORTH~~

STATION	Trench Depth (ft.)	Down Rigger, Confirmation Measurements (ft.)	Clam Sampler	Comments:
~~24+50~~	5			
~~24+80~~	42			
~~25+00~~	~~107~~			
~~25+80~~	127			
25+90	130			
~~26+10~~	131			
~~26+30~~	135			
~~26+50~~	135			
~~26+80~~	135			
~~27+00~~	135			
~~27+20~~	134			STA 26+00
~~27+40~~	137			HUB EL. = 423.21
~~27+60~~	136			BOARD TO SLURRY = 1.71
~~27+80~~	137			SLURRY EL. = 421.5
~~28+00~~	137			
~~28+20~~	136			
~~28+40~~	133			
~~28+60~~	76			
~~28+80~~	73			
~~29+60~~	23			

GROUNDWATER MITIGATION CONTROL SYSTEM, SAUGET AREA 2

Date: 7/22/04

Approximate time of depth measurements: Pm

3:00pm

STATION	Trench Depth (ft.)	Down Rigger, Confirmation Measurements (ft.)	Clam Sampler	Comments:
TRENCH BOTTOM CLEANING.				
25+90	40.8 / 133.8			
26+00	40.8 / 133.8	134		SLURRY ELEVATION
26+10	40.8 / 133.8			STATION 26+00
26+20	40.8 / 133.8			HUB - 423.21
26+30	40.9 / 134.2	134.5		BOARD TO HUB - 0
26+40	41.0 / 134.5			BOARD TO SLURRY - 2.21
26+50	41.0 / 134.5			SLURRY EL. = 421.0
26+60	41.0 / 134.5			

7/22/04

GROUNDWATER MITIGATION CONTROL SYSTEM, SAUGET AREA 2

Date: 7/22/04

Approximate time of depth measurements:

STATION	Trench Depth (ft.)	Down Rigger, Confirmation Measurements (ft.)	Clam Sampler	Comments:
5+00	58		7+10	CLAM SAMPLER OBSERVED
5+20	55		7+60	TO BE FREE OF SEDIMENT.
5+40	47			
5+60	47			
5+80	45			
6+00	44			
7+00	38			
8+00	31			
9+00	22			
10+00	12			
10+50	2			
				STA 5+80
				HUB EL = 423.99
5+00		56		BOARD TO SLURRY = -2.92
5+10		55		SLURRY EL = 421.07
5+20		53		
5+30		52		

GROUNDWATER MITIGATION CONTROL SYSTEM, SAUGET AREA 2

Date: 7/22/04

Approximate time of depth measurements: AM PROFILE

STATION	Trench Depth (ft.)	Down Rigger, Confirmation Measurements (ft.)	Clam Sampler	Comments:
24+50	5			
24+80	42			
25+80	131			
26+80	134			
27+00	136			
27+20	135			
27+40	136			
27+60	134			
27+80	134			
28+00	137			
28+20	133			STA
28+40	129			HUB EL =
28+60	80			BEARD TO SLURRY =
28+80	73			SLURRY EL =
29+60	23			

GROUNDWATER MITIGATION CONTROL SYSTEM, SAUGET AREA 2

Date: 7/21/04

Approximate time of depth measurements:

STATION	Trench Depth (ft.)	Down Rigger, Confirmation Measurements (ft.)	Clam Sampler	Comments:
5+00	56			
5+20	55		7+50	CLAM SAMPLES OBSERVED
5+40	52		7+00	TO BE FREE OF SEDIMENT
5+60	52			
5+80	48			
6+00	47			
7+00	42			
8+00	35			
9+00	25			
10+00	17			
10+97	2			
24+50	3			
24+60	15			
24+80	42			
25+00	69			
25+20	76			
25+40	101			
25+60	117			
25+80	134			
26+00	131			
26+20	137			
26+40	135			
26+60	137			
26+80	136			
27+00	136			
27+20	135			
27+40	137			
27+60	135			
27+80	137			
28+00	131			
28+20	131			
28+40	76			
28+60	80			
28+80	75			
29+00	45			
5+00	~~56~~	56		
5+10	~~55~~	55		
5+20	~~54~~	54		
5+30	~~53~~	53		

GROUNDWATER MITIGATION CONTROL SYSTEM, SAUGET AREA 2

Date: 7/20/04

Approximate time of depth measurements:

STATION	Trench Depth (ft.)	Down Rigger, Confirmation Measurements (ft.)	Clam Sampler	Comments:
5+00	56			
5+20	54		8+00	CLAM SAMPLES OBSERVED
5+40	52		7+50	TO BE FREE OF SEDIMENT.
5+60	51			
5+80	49			
6+00	47			
7+00	42			
8+00	35			
9+00	28			
10+00	19			
11+00	5			9+A 5+80
11+20	EOT			HUB EL = 473.99
				BOARD TO SLURRY = 2.79
24+50	5			SLURRY EL = 471.2
24+75	42			
25+00	67			
25+25	77			
25+50	109			
25+75	132			
26+00	132			
26+25	135			
26+50	136			
26+75	135			
27+00	135			
27+25	135			
27+50	135			
27+75	115			
28+00	75			
28+25	74			
28+50	75			
5+00	56			
5+10	57			
5+20	55			
5+30	55			

GROUNDWATER MITIGATION CONTROL SYSTEM, SAUGET AREA 2

Date: 7/19/04

Approximate time of depth measurements:

STATION	Trench Depth (ft.)	Down Rigger, Confirmation Measurements (ft.)	Clam Sampler	Comments:
5+00	55		8+10	CLAM SAMPLES OBSERVED
5+20	57		8+60	TO BE FREE OF SEDIMENT
5+40	55			
5+60	54			
5+80	51			
6+00	50			
7+00	46			
8+00	40			
9+00	31			
10+00	22			
11+00	11			
11+40	5			
~~12+00~~		11+50 BOT		STA 5+80
				HUB EL = 423.99
24+50	3			BOARD TO SLURRY = -2.63
24+75	25 ?*			SLURRY EL = 421.36
25+00	60			
25+25	78			
25+50	99			
25+75	126			
26+00	130			
26+25	131			
26+50	135			
26+75	133			
27+00	134			
27+25	135			
27+50	135			
27+75	79			*
28+00	68			
28+25	76			
28+50	108			
5+30		60		
5+20		62		
5+10		62		
5+00		62		

GROUNDWATER MITIGATION CONTROL SYSTEM, SAUGET AREA 2

Date: 7/16/04

Approximate time of depth measurements:

STATION	Trench Depth (ft.)	Down Rigger, Confirmation Measurements (ft.)	Clam Sampler	Comments:
5+00	60		0+00	CLAM SAMPLES OBSERVED
5+20	62		8+50	TO BE FREE OF SEDIMENT.
5+40	60			
5+60	56			
5+80	56			
6+00	55			
7+00	50			
8+00	43			
9+00	33			
10+00	26			
11+00	14			STA 5+80
11+80	2			INVERT 473.99
				BOARD TO SLURRY = 2.17
				SLURRY EL = 471.82
24+50	3			
24+75	42			
25+00	69			
25+25	77			
25+50	102			
25+75	127			
26+00	132			
26+25	134			
26+50	136			
26+75	97			
27+00	137			
27+25	84			
27+50	83			
27+75	82			
28+00	56			
28+25	22			
28+50	24			
5+00	67	67		
5+10	67	67		
5+30	66	64		
5+30	65	65		

GROUNDWATER MITIGATION CONTROL SYSTEM, SAUGET AREA 2

Date: 7/15/04

Approximate time of depth measurements:

STATION	Trench Depth (ft.)	Down Rigger, Confirmation Measurements (ft.)	Clam Sampler	Comments:
5+00	67			
5+20	66		9:00	CLAM SAMPLES OBTAINED
5+40	64		9+10	TO BE FREE OF SEDIMENT
5+60	63			
5+80	61			
6+00	59			
7+00	53			
8+00	44			
9+00	42			
10+00	32			STA 5+80
11+00	20			HUB EL = 423.99
12+00	4			BOARD TO SLURRY = -2.13
12+20	1			SLURRY EL = 421.86
24+50	2			
24+75	42			
25+00	63			
25+25	78			
25+50	104			
25+75	129			
26+00	130			
26+25	135			
26+50	126			
26+75	109			
27+00	116			
27+25	80			
27+50	84			
27+80	86			
5+00		72		
5+10		72		
5+20		70		
5+30		69		

GROUNDWATER MITIGATION CONTROL SYSTEM, SAUGET AREA 2

Date: 7/14/04

Approximate time of depth measurements:

STATION	Trench Depth (ft.)	Down Rigger, Confirmation Measurements (ft.)	Clam Sampler	Comments:
5+00	72			
5+20	72		10+20	CLAM SAMPLES OBSERVED
5+40	67		9+70	TO BE FREE OF
5+60	65			SEDIMENT.
5+80	62			
6+00	62			
7+00	56			
8+00	51			
9+00	46			
10+00	35			STA 5+80
11+00	23			HUB EL = 423.99
12+00	9			BOARD TO SLURRY = -2.21
12+40	1			SLURRY EL = 421.78
24+50	2			
24+75	42			
25+00	69			
25+25	79			
25+50	98			
25+75	128			
26+00	127			
26+25	107			
26+50	110			
26+75	80			
27+00	78			
5+00		69		
5+10		71		
5+20		71		
5+30		70		

GROUNDWATER MITIGATION CONTROL SYSTEM, SAUGET AREA 2

Date: 7/13/04

Approximate time of depth measurements:

STATION	Trench Depth (ft.)	Down Rigger, Confirmation Measurements (ft.)	Clam Sampler	Comments:
5+00	71			
5+20	71		10+30	CLAM SAMPLES OBTAINED
5+40	69		10+80	TO BE FREE OF
5+60	66			SEDIMENT
5+80	65			
6+00	65			
7+00	60			
8+00	55			
9+00	48			
10+00	38			STA 5+80
11+00	27			HUB EL = 423.49
12+00	13			BOARD TO SLURRY = -1.83
12+80	2			SLURRY EL = 422.16
24+50	2			
24+75	41			
25+00	65			
25+25	76			
25+50	100			
25+75	121			
26+00	88			
26+25	84			
26+50	80			
26+75	80			
27+00	81			
5+00		81		
5+10		82		
5+20		81		
5+30		80		

GROUNDWATER MITIGATION CONTROL SYSTEM, SAUGET AREA 2

Date: 7/12/04

Approximate time of depth measurements:

STATION	Trench Depth (ft.)	Down Rigger, Confirmation Measurements (ft.)	Clam Sampler	Comments:
5+00	85			
5+20	83		10+20	CLAM SAMPLES OBSERVED
5+40	81		10+70	TO BE FREE OF
5+60	79			SEDIMENT
5+80	78			
6+00	76			
7+00	67			
8+00	62			
9+00	55			
10+00	46			
11+00	35			
12+00	18			STA 5+80
13+00	2			HUB EL = 423.99
				BOARD TO SLURRY = -1.75
				SLURRY EL = 422.24
24+50	2			
24+75	43			
25+00	62			
25+25	79			
25+50	78			
25+75	87			
26+00	88			
26+25	84			
26+50	85			
26+75	75			
27+00	70			
5+00	8	85		
5+10		84		
5+30		84		
5+70		81		

GROUNDWATER MITIGATION CONTROL SYSTEM, SAUGET AREA 2

Date: 7/10/04

Approximate time of depth measurements:

STATION	Trench Depth (ft.)	Down Rigger, Confirmation Measurements (ft.)	Clam Sampler	Comments:
5+00	84			
5+20	83		10+00	CLAM SAMPLES OBSERVED
5+40	80		9+50	TO BE FREE OF
5+60	78			SEDIMENT
5+80	77			
6+00	76			
7+00	70			
8+00	64			
9+00	58			
10+00	49			
11+00	36			STA 5780
12+00	21			HAB EL = 423.99
13+00	6			BOARD TO SURVEY = -2.04
13+30	1			SURVEY EL = 421.95
24+50	3			
24+75	43			
25+00	67			
25+25	77			
25+50	80			
25+75	86			
26+00	88			
26+25	86			
26+50	87			
26+75	77			
27+00	74			
5+00	89			
5+10	88			
5+20	89			
5+30	87			

GROUNDWATER MITIGATION CONTROL SYSTEM, SAUGET AREA 2

Date: 7/9/04

Approximate time of depth measurements:

STATION	Trench Depth (ft.)	Down Rigger, Confirmation Measurements (ft.)	Clam Sampler	Comments:
5+00	85			
5+20	89		9+60	CLAM SAMPLES
5+40	86		10+10	OBSERVED TO BE FREE
5+60	85			OF SEDIMENT
5+80	82			
6+00	80			
7+00	74			
8+00	68			
9+00	63			
10+00	52			STA 5+80
11+00	40			HUB EL = 423.99
12+00	24			BKGD TO SLURRY = -2.46
13+00	12			SLURRY EL = 421.53
13+80	1			
24+50	2			
24+75	45			
25+00	68			
25+25	78			
25+50	79			
25+75	85			
26+00	86			
26+25	86			
26+50	80			
26+75	76			
27+00	44			
5+00		100		
5+10		96		
5+20		97		
5+30		95		

GROUNDWATER MITIGATION CONTROL SYSTEM, SAUGET AREA 2

Date: 7/8/04

Approximate time of depth measurements: AM/PM

STATION	Trench Depth (ft.)	Down Rigger, Confirmation Measurements (ft.)	Clam Sampler	Comments:
5+00	95			
5+20	97		9+20	NAM SAMPLES ARE TO
5+40	96		9+70	BE FREE OF
5+60	92			SEDIMENT.
5+80	90			
6+00	87			
7+00	80			
8+00	75			STA 5+80
9+00	67			HUB EL= 423.99
10+00	57			BOARD to SLURRY = 2.92
11+00	45			SLURRY EL = 1421.07
12+00	31			
13+00	17			
14+00	5			
14+20	2			
24+50	3			
24+75	43			
25+00	63			
25+25	80			
25+50	84			
25+75	88			
26+00	88			
26+25	89			
26+50	23			
26+75	18			
27+00	23			
5+30		105		
5+20		107		
5+10		109		
5+00		110		

CHECK STATIONS ?

GROUNDWATER MITIGATION CONTROL SYSTEM, SAUGET AREA 2

Date: 7/7/04

Approximate time of depth measurements: P.M.

STATION	Trench Depth (ft.)	Down Rigger, Confirmation Measurements (ft.)	Clam Sampler	Comments:
5+00	110		8+60 9+10	
5+20	107			
5+40	106			
5+60	103			
5+80	99			
6+00	99			
7+00	91			
8+00	85			
9+00	73			
10+00	62			
11+00	52			
12+00	40			
13+00	24			
14+00	8			
14+40	0			

GROUNDWATER MITIGATION CONTROL SYSTEM, SAUGET AREA 2

Date: 7/7/04

Approximate time of depth measurements: A.M.

STATION	Trench Depth (ft.)	Down Rigger, Confirmation Measurements (ft.)	Clam Sampler	Comments:
5+00	110			
5+20	106			
5+40	105			
5+60	104			STA 5+80
5+80	99			HOE EL = 493.99
6+00	97			BOOM TO SLURRY = 1.81
7+00	91			SLURRY EL = 492.18
8+00	84			
9+00	75			
10+00	65			
11+00	54			
12+00	40			
13+60	25			
14+00	11			
14+60	2			
24+50	3			
24+75	24			
25+00	65			
25+25	79			
25+50	78			
25+75	89			
26+00	86			
26+25	72			
26+50	74			
	71			
BACKFILL SLOPE CLEANOFF				
5+30	105			
5+70	106			
5+10	107			
5+00	110			

GROUNDWATER MITIGATION CONTROL SYSTEM, SAUGET AREA 2

Date: 7/1/04

Approximate time of depth measurements:

STATION	Trench Depth (ft.)	Down Rigger, Confirmation Measurements (ft.)	Clam Sampler	Comments:
5+00	112			
5+20	107		8+50	CLAM SAMPLES OBSERVED
5+40	105		9+00	TO BE FREE OF
5+60	101			SEDIMENT
5+80	99			
6+00	97			
7+00	91			
8+00	85			
9+00	75			
10+00	65			
11+00	53			
12+00	40			
13+00	24			
14+00	11			
14+60	0			
				STA 5+80
				HUB EL = 423.99
				BOARD TO SLURRY = 2.67
				SLURRY EL = 421.32
24+80	4			
24+75	25			
25+00	67			
25+25	83			
25+50	77			
25+75	57			
26+00	57			
26+20	24			
CLEAN OFF TOP OF				
BACKFILL 5+30 TO 5+02				
5+30	116			
5+20	118			
5+10	118			
5+00	121			

Pm PROFILE

Am PROFILE

GROUNDWATER MITIGATION CONTROL SYSTEM, SAUGET AREA 2

Date: 6/30/04

Approximate time of depth measurements:

STATION	Trench Depth (ft.)	Down Rigger, Confirmation Measurements (ft.)	Clam Sampler	Comments:
5+00	123			
5+20	120		9+00	Clam Samples Obtained
5+40	117		9+50	to BE FREE OF
5+60	113			SEDIMENT
5+80	110			
6+00	107			
7+00	98			
8+00	91			
9+00	81			
10+00	70			
11+00	59			
12+00	46			
13+00	32			
14+00	17			
15+00	2			S+A 5+80
				HUB EL = 423.99
				ROAD TO SLURRY = -2.42
24+50	4			SLURRY EL = 421.57
24+75	25			
25+00	54			
25+25	75			
25+50	74			
25+75	23			
5+20	139	140		
5+10	141			
5+00	140			

GROUNDWATER MITIGATION CONTROL SYSTEM, SAUGET AREA 2

Date: 6/29/04

Approximate time of depth measurements:

STATION	Trench Depth (ft.)	Down Rigger, Confirmation Measurements (ft.)	Clam Sampler	Comments:
5+00	140			
5+20	137		10+10	CLAM SAMPLES OBSERVED TO
5+40	134		9+60	BE FREE OF SEDIMENT.
5+60	131			
5+80	126			
6+00	122			
6+20	120			
6+40	120			
7+20	107			
8+20	100			
9+70	90			
10+20	79			
11+20	67			
12+20	53			
13+20	36			
14+20	20			
15+20	5			STA 5+80
15+40	1			NB EL 423.99
				BOARD TO SLURRY 25.5"
24+50	2			423.99
24+75	21			- 2.125
25+00	49			SLURRY = EL 421.9
25+25	35 41			
25+50	22			
25+75	22			
TRENCH BOTTOM CLEAN OUT				
5+40	138.5			
5+30	138.5	140		
5+20	138.5			
5+10	141.0			
5+00	140.0			

NORTH BARRIER WALL EXT.

GROUNDWATER MITIGATION CONTROL SYSTEM, SAUGET AREA 2

Date: 6/28/04

Approximate time of depth measurements: P.M.

STATION	Trench Depth (ft.)	Down Rigger, Confirmation Measurements (ft.)	Clam Sampler	Comments:
5+00	140			
5+80	141		9+80	CLAM SAMPLES TAKEN TO
5+40	136		10+30	BE FREE OF SEDIMENT
5+60	133			
5+80	127			
6+00	125			
6+20	121			
6+40	120			
7+40	106			
~~9~~+40	100			
9+40	89			
10+40	78			
11+40	66			STA 5+80
12+40	49			HUB EL = 40-3.99
13+40	35			BOARD TO SLURRY -2.67
14+40	20			SLURRY EL = ~~42.67~~ 421.32
15+40	5			
15+60	1			
5+60	42 / 137.8			
5+50	42 / 137.8	140		
5+40	42 / 137.8			
5+30	42 / 137.8			
5+20	41.9 / 137.73	141		
5+10	42 / 137.8			
5+00	42 / 137.8			

GROUNDWATER MITIGATION CONTROL SYSTEM, SAUGET AREA 2

Date: 6/25/04

Approximate time of depth measurements: P.M.

STATION	Trench Depth (ft.)	Down Rigger, Confirmation Measurements (ft.)	Clam Sampler	Comments:
5+00	139			
5+20	139			
5+40	141			
5+60	135			
5+80	132			
6+00	130			
6+20	126			
6+40	124			
6+60	121			
7+60	108			
8+60	99			
9+60	87			STA 5+90
10+60	77			STA EL = 423.78
11+60	63			HUB TO BOARD = 0
12+60	48			BOARD TO SLURRY = 2.31
13+60	35			SLURRY EL = ~~2.31~~ 421.47
14+60	22			
15+60	10			
16+00	3			

GROUNDWATER MITIGATION CONTROL SYSTEM, SAUGET AREA 2

Date: 6/24/04

Approximate time of depth measurements: P.M.

STATION	Trench Depth (ft.)	Down Rigger, Confirmation Measurements (ft.)	Clam Sampler	Comments:
5+00	109		11+20	CLAM SAMPLES OBSERVED
5+20	138		10+70	TO BE FREE OF SEDIMENT.
5+40	140			
5+60	134			
5+80	133			
6+00	130			
6+20	128			
6+40	124			
6+60	122			
7+60	111			
8+60	99			
9+60	88			STA 5+80
10+60	78			HUB EL - 423.98
11+60	64			HUB TO BOARD - 0.
12+60	50			BOARD TO SLURRY - 2.75
13+60	36			SLURRY EL = 421.23
14+60	22			
15+60	11			
16+00	3			
6+20	138.5			
6+10	138.5			
6+00	138.5			
5+90	138.5	140		
5+80	138.0			
5+70	42.1 / 138.1			
5+60	40.0 / 137.8			

GROUNDWATER MITIGATION CONTROL SYSTEM, SAUGET AREA 2

Date: 6/23/04

Approximate time of depth measurements: P.M.

STATION	Trench Depth (ft.)	Down Rigger, Confirmation Measurements (ft.)	Clam Sampler	Comments:
5+10	5			
5+20	137			
5+40	138			
5+60	140			
5+80	134			
6+00	138			
6+20	140			
6+40	130			
6+60	127			
6+80	122			
7+00	120			
8+00	109			
9+00	99			
10+00	88			
11+00	78			
12+00	64			
13+00	50			5+70
14+00	34			423.47
15+00	20			+0
16+00	7			-1.83
16+20	2			Survey Level = 421.64

GROUNDWATER MITIGATION CONTROL SYSTEM, SAUGET AREA 2

Date: 6/22/04

Approximate time of depth measurements:

STATION	Trench Depth (ft.)	Down Rigger, Confirmation Measurements (ft.)	Clam Sampler	Comments:
5+10	7			
5+20	139		11+60	CLAM SAMPLES OBSERVED
5+40	138		11+11	TO BE FREE OF SEDIMENT
5+60	141			
5+80	140			
6+00	134			
6+20	134			
6+40	130			
6+60	127			
6+80	107			
7+00	119			
8+00	108			
9+00	97			S+A 5+80
10+00	90			HUB EL 423.97
11+00	75			BOARD TO HUB -0-
12+00	63			BOARD TO SLURRY = 2.21
13+00	50			SLURRY EL = 421.76
14+00	34			
15+00	20			
16+00	7			
16+20	3			
6+20	41.9 137.4			
6+10	42 137.8			
6+00	42 137.8			
5+90	42 137.8			
5+80	42 137.8			
5+70	42 137.8	139		
5+60	42 137.8			

GROUNDWATER MITIGATION CONTROL SYSTEM, SAUGET AREA 2

Date: 6/21/04

Approximate time of depth measurements: PM

STATION	Trench Depth (ft.)	Down Rigger, Confirmation Measurements (ft.)	Clam Sampler	Comments:
5+10	7		11+50	
5+20	138		12+01	
5+40	139			
5+60	140			
5+80	139			
6+00	138			
6+20	137			
6+40	130			
6+60	129			
6+80	123			
7+00	120			
8+00	109			
9+00	97			
10+00	89			
11+00	77			
12+00	63			
13+00	50			
14+00	35			
15+00	20			STATION 6+10
16+00	7			HUB @ 424.06
16+20	2			BOARD TO HUB + .083
				BOARD TO SLURRY - 2.54
				SLURRY EL. = 421.60
6+20	41.8 / 137			
6+10	41.8 / 137			
10+00	41.8 / 137	135		
5+90	41.8 / 137			
5+80	41.8 / 137			
5+70	41.8 / 137			
5+60	41.8 / 137	141		

GROUNDWATER MITIGATION CONTROL SYSTEM, SAUGET AREA 2

Date: 6/18/04

Approximate time of depth measurements: P.M.

STATION	Trench Depth (ft.)	Down Rigger, Confirmation Measurements (ft.)	Clam Sampler	Comments:
5+00	7 * ? SITE OF SLOPE.			
5+20	135			
5+40	135			
5+60	136			
5+80	137			
6+00	138			
6+20	135			
6+40	130			
6+60	128			
6+80	123			
7+80	116			
8+00	108			
9+00	99			
10+00	89			
11+00	80			
12+00	65			
13+00	52			
14+00	35			
15+00	24			
16+00	10			
16+40	3			

COMPLETED 6/21/04 AM

COMPLETED 6/18/04 PM

GROUNDWATER MITIGATION CONTROL SYSTEM, SAUGET AREA 2

Date: 6/17/04

Approximate time of depth measurements: PM

STATION	Trench Depth (ft.)	Down Rigger, Confirmation Measurements (ft.)	Clam Sampler	Comments:
16+40	3			
16+00	10			
15+00	23			
14+00	36			
13+00	51			
12+00	64			
11+06	79			
10+00	90			
9+00	99			
8+00	109			
7+00	120			
6+80	122			
6+60	128			
6+40	129			
6+20	134			
6+00	138			
5+80	135			
5+60	125			
5+40	128			
5+20	122			
5+00	0			

GROUNDWATER MITIGATION CONTROL SYSTEM, SAUGET AREA 2

Date: 6/16/04

Approximate time of depth measurements: P.M.

STATION	Trench Depth (ft.)	Down Rigger, Confirmation Measurements (ft.)	Clam Sampler	Comments:
5+10	27		11+60	CLAM SAMPLER OBSERVED TO BE FREE OF SEDIMENT
5+20	85		12+00	
5+40	133			
5+60	135			
5+80	136			
6+00	136			
6+20	133			
6+40	130			
6+60	126			
6+80	124			STA 6+20
7+00	120			HUB EL 423.82
8+00	107			HUB TO BOARD + .021
9+00	99			BOARD TO SLURRY = 2.25
10+00	90			SLURRY EL = 421.59
11+00	80			
12+00	65			
13+00	52			
14+00	35			
15+00	22			
16+00	9			
16+40	4			
6+30	137.5			
6+20	137.5			
6+10	135.0	139.5		
6+00	135.0			
5+90	137.5			
5+80	137.2			

GROUNDWATER MITIGATION CONTROL SYSTEM, SAUGET AREA 2

Date: 6/15/04

Approximate time of depth measurements: P.M.

STATION	Trench Depth (ft.)	Down Rigger, Confirmation Measurements (ft.)	Clam Sampler	Comments:
5+10	5			
5+20	23			
5+30	22			
5+40	137			
5+50	135			
5+60	133			
5+70	134			
5+80	137			
6+00	138			
6+20	138			
6+40	133			
6+60	131			
6+80	127			
7+00	122			
7+20	120			
7+40	117			
8+40	107			
9+40	97			
10+40	90			
11+40	78			
12+40	63			
13+40	52			
14+40	35			
15+40	22			
16+40	8			
16+80	1			

GROUNDWATER MITIGATION CONTROL SYSTEM, SAUGET AREA 2

Date: 6/14/04

Approximate time of depth measurements: P.M.

STATION	Trench Depth (ft.)	Down Rigger, Confirmation Measurements (ft.)	Clam Sampler	Comments:
5+00	7			
5+20	21		11+90	CLAM SAMPLES OBSERVED TO
5+40	125		12+40	BE FREE OF SEDIMENT.
5+60	134			
5+80	138			
6+00	138			
6+20	138			
6+40	134			
6+60	~~127~~ 130			
6+80	126			
7+00	123			
7+20	119			
7+40	118			
8+40	107			
9+40	97			
10+40	90			
11+40	78			STA 6+30
12+40	63			HUB EL 423.95
13+40	51			HUB TO BOARD + 0.46
14+40	35			BOARD TO SURVEY - 2.04
15+40	22			SURVEY EL 422.05
16+40	8			
16+80	2			
6+30	137.5			
6+20	137.5			
6+10	137.5			
6+00	138.0	140.0		
5+90	138.0			
5+80	138.0			

GROUNDWATER MITIGATION CONTROL SYSTEM, SAUGET AREA 2

Date: 6/11/04

Approximate time of depth measurements: AM & P.M

STATION	Trench Depth (ft.)	Down Rigger, Confirmation Measurements (ft.)	Clam Sampler	Comments:
EOT (5+00)	X:			
5+20	24		11+60	CLAM SAMPLES OBSERVED
5+40	13m #42'		12+20	TO BE FREE OF SEDIMENT
5+60	132			
5+80	137			
6+00	138			
6+20	137			
6+40	~~+30~~ 132			
6+60	~~+30~~ 130			
6+80	~~+35~~ 125			
7+00	122			
7+20	120			
8+20	109			
9+20	99			
10+20	91			
11+20	80			
12+20	65			
13+20	54			STA 6+50
14+20	40			HUB EL. 423.51
15+20	30			HUB TO BOARD + 0.229
16+20	10			BOARD TO SLURRY - 2.293
17+00	~~3~~ 2			SLURRY EL. 421.447
6+60	137.0			
6+50	137.0	137.0		
6+40	137.0			
6+30	137.0	139.0		
6+20	137.0			
6+10	137.5			
6+00	137.5			

GROUNDWATER MITIGATION CONTROL SYSTEM, SAUGET AREA 2

Date: 6/10/04

Approximate time of depth measurements:

STATION	Trench Depth (ft.)	Down Rigger, Confirmation Measurements (ft.)	Clam Sampler	Comments:
5+60	124			
5+80	135		11+50	CLAM SAMPLES OBSERVED
6+00	138		12+00	TO BE FREE OF SEDIMENT
6+20	139			
6+40	138			
6+60	136			
6+80	127			
7+00	125			
7+20	124			
7+40	120			
7+60	119			
8+60	106			
9+60	97			
10+60	87			
11+60	76			
12+60	63			STA 6+60
13+60	50			HUB EL 423.27
14+60	38			HUB TO BOARD + 0.167
15+60	25			BOARD TO SLURRY - 2.04
16+60	11			SLURRY ELEV 421.40
17+20	3			
6+60	136.5			
6+50	136.5			
6+40	136.5	137.0		
6+30	137.0			
6+20	137.0	139.0		
6+10	137.5			
6+00	137.0			

GROUNDWATER MITIGATION CONTROL SYSTEM, SAUGET AREA 2

Date: 6/9/04

Approximate time of depth measurements: A.M./P.M.

STATION	Trench Depth (ft.)	Down Rigger, Confirmation Measurements (ft.)	Clam Sampler	Comments:
5+60	121		12+90	CLAM SAMPLES OBSERVED
5+80	133		12+40	TO BE FREE OF
6+00	139			SEDIMENT
6+20	138			
6+40	138			
6+60	138			
6+80	128			
7+00	126			
7+20	125			STA 6+60
7+40	123			HUB EL 423.27
7+60	121			BOARD TO HUB +0.188
8+60	110			HUB TO SLURRY - 2.125
9+60	1001			SLURRY ELEV 421.263
10+60	90			
11+60	79			
12+60	66			
13+60	55			
14+60	43			
15+60	29			
16+60	14			
17+40	2			
6+60	135.5			
6+50	136.0			
6+40	136.5			
6+30	136.5	138.0		
6+20	136.5			
6+10	137.0	139.0		
6+00	137.0			

GROUNDWATER MITIGATION CONTROL SYSTEM, SAUGET AREA 2

Date: 6/8/04

Approximate time of depth measurements: AM/P.M.

STATION	Trench Depth (ft.)	Down Rigger, Confirmation Measurements (ft.)	Clam Sampler	Comments:
EOT				
5+60	83		12+90	CLAM SAMPLES OBSERVED TO BE
5+80	135		12+40	FREE OF SEDIMENT.
6+00	138			
6+20	137			
6+40	136			
6+60	135			
6+80	130			
7+00	130			
7+20	129			STA 6+60
7+40	126			HUB EL 423.27
7+60	124			HUB TO BOARD +0.188
8+60	112			BOARD TO SLURRY -1.917
9+60	104			SLURRY ELEVATION 421.54
10+60	92			
11+60	79			
12+60	69			
13+60	56			
14+60	44			
15+60	30			
16+60	15			
17+60	2			
EOT				
6+60	41.4	135.8		
6+50	41.4	135.8	136.0	
6+40	41.4	135.8		
6+30	41.4	135.8		
6+20	41.4	135.8	138.0	

GROUNDWATER MITIGATION CONTROL SYSTEM, SAUGET AREA 2

Date: 6/7/04

Approximate time of depth measurements: PM

STATION	Trench Depth (ft.)	Down Rigger, Confirmation Measurements (ft.)	Clam Sampler	Comments:
5+65	92			
5+80	92			
6+00	126			
6+20	129			
6+40	133			
6+60	133			
6+80	130			
7+00	130			
7+20	125			
7+40	126			
7+60	125			
8+60	111			
9+60	103			
10+60	92			
11+60	80			
12+60	69			
13+60	57			
14+60	44			
15+60	31			
16+60	16			
17+60	2			

GROUNDWATER MITIGATION CONTROL SYSTEM, SAUGET AREA 2

Date: 6/4/04

Approximate time of depth measurements:

STATION	Trench Depth (ft.)	Down Rigger, Confirmation Measurements (ft.)	Clam Sampler	Comments:
5+65	67			
5+80	65			
6+00	122			
6+10	127			
6+20	130			
6+30	135			
6+40	131			
6+50	132			
6+60	130			
6+80	131			
7+00	130			
7+20	128			
7+40	126			
7+60	123			
8+60	111			
8+60	104			
10+60	91			
11+60	80			
12+60	68			
13+60	57			
14+60	43			
15+60	31			
16+60	16			
17+60	1			
5+90	37.5M / 123ft			

GROUNDWATER MITIGATION CONTROL SYSTEM, SAUGET AREA 2

Date: 6/3/04

Approximate time of depth measurements: P.M.

STATION	Trench Depth (ft.)	Down Rigger, Confirmation Measurements (ft.)	Clam Sampler	Comments:
5+65	67			
5+80	66			
6+00	80			
6+20	125			
6+40	130			
6+60	131			
6+80	130			
7+00	130			
7+20	128			
7+40	125			
7+60	122			
8+60	111			
9+60	95* ?			
10+60	90			
11+60	80			
12+60	68			
13+60	56			
14+60	42			
15+60	30			
16+60	16			
17+60	2			
353 10+10 P	35.2m / 115.5ft			

GROUNDWATER MITIGATION CONTROL SYSTEM, SAUGET AREA 2

Date: 6/2/04

Approximate time of depth measurements: P.M.

STATION	Trench Depth (ft.)	Down Rigger, Confirmation Measurements (ft.)	Clam Sampler	Comments:
5+65	60			
5+80	70		12+50	CLAM SAMPLES OBSERVED TO BE
6+00	79		13+00	FREE OF SEDIMENT
6+20	75			
6+40	131			
6+60	133			
6+80	130			
7+00	137			STA 7+00
7+20	127			HUB EL 423.11
7+40	125			HUB TO BOARD T.042
7+60	123			BOARD TO SLURRY -2.042
8+60	112			SLURRY LEVEL 421.11
9+60	103			
10+60	91			
11+60	79			
12+60	68			
13+60	57			
14+60	43			
15+60	30			
16+60	16			
17+60	1			
7+10	41.4	135.8		
7+00	41.4	135.8		
6+90	41.4	135.8		
6+80	41.4	135.8	137.0	
6+70	41.4	135.8		
6+60	41.4	135.8		
6+50	41.4	135.8		

GROUNDWATER MITIGATION CONTROL SYSTEM, SAUGET AREA 2

Date: 6/1/04

Approximate time of depth measurements: A.M.

STATION	Trench Depth (ft.)	Down Rigger, Confirmation Measurements (ft.)	Clam Sampler	Comments:
6+20	32 ?*			
6+40	108		11+90	CLAM SAMPLES OBSERVED TO
6+60	109		12+40	BE FREE OF SEDIMENT
6+80	121			
7+00	130			
7+20	131			
7+40	130			
7+60	125			
7+80	122			
8+00	120			
9+00	112			
10+00	102			STA 7+00
11+00	90			HUB EL 423.11
12+00	78			HUB TO BOARD +.042
13+00	63			BOARD TO SLURRY -2.75
14+00	55			SLURRY LEVEL 420.40
15+00	42			
16+00	24			
17+00	15			
17+80	3			

GROUNDWATER MITIGATION CONTROL SYSTEM, SAUGET AREA 2

Date: 5/26/04

Approximate time of depth measurements: A.M.

STATION	Trench Depth (ft.)	Down Rigger, Confirmation Measurements (ft.)	Clam Sampler	Comments:
6+20	124			
6+40	136			
6+60	110			
6+80	131			
7+00	134			STA 7+40
7+20	130			STA HUB EL 423.12
7+40	128			HUB TO BOARD +.0.125
7+60	124			BOARD TO SLURRY - 1.917
7+80	121			SLURRY LEVEL 421.33
8+00	120			
9+00	110			
10+00	101			
11+00	89			
12+00	77			
13+00	66			
14+00	55			
15+00	42			
16+00	30			
17+00	16			
17+80	2			

GROUNDWATER MITIGATION CONTROL SYSTEM, SAUGET AREA 2

Date: 5/25/04

Approximate time of depth measurements: A.M.

STATION	Trench Depth (ft.)	Down Rigger, Confirmation Measurements (ft.)	Clam Sampler	Comments:
7+40	137.0			
7+30	136.5	137.0		
7+20	136.5		11+90	CLAM SAMPLES OBSERVED
7+10	137.0		12+40	TO BE FREE OF SEDIMENT.
7+00	136.5	137.0		
6+90	137.0			
				STA 7+40
				HUB EL 423.12
				BOARD TO HUB + 0.125
				BOARD TO SLURRY -2.604
				SLURRY EL = 420.64

GROUNDWATER MITIGATION CONTROL SYSTEM, SAUGET AREA 2

Date: 5/24/04

Approximate time of depth measurements:

STATION	Trench Depth (ft.)	Down Rigger, Confirmation Measurements (ft.)	Clam Sampler	Comments:
6+20	23			
6+40	92		12+70	CLAM SAMPLES OBSERVED
6+60	111 *?		13+20	TO BE FREE OF SEDIMENT
6+80	132			
7+00	135			
7+20	135			
7+40	135			
7+60	127			
7+80	123			
8+00	123			
8+20	120			STA 8+40
8+40	119			HUB EL 423.12
9+40	109			BOARD TO HUB = +0.125
10+40	99			BOARD TO SLURRY = -2.917
11+40	86			SLURRY EL = 420.33
12+40	72			
13+40	63			
14+40	52			
15+40	38			
16+40	25			
17+40	10			
18+00	2			
7+50	136.5			
7+40	137.0			
7+30	136.5			
7+20	136.5	137.0		
7+10	136.5			
7+00	136.5	137.0		
6+90	136.5			

GROUNDWATER MITIGATION CONTROL SYSTEM, SAUGET AREA 2

Date: 5/21/04

Approximate time of depth measurements: P.M

STATION	Trench Depth (ft.)	Down Rigger, Confirmation Measurements (ft.)	Clam Sampler	Comments:
6+20	~~22~~		13+30	CLAM SAMPLES OBSERVED TO
6+40	62		13+80	BE FREE OF SEDIMENT
6+60	135			
6+80	135			
7+00	137			
7+20	129			
7+40	128			STA 9+00
7+60	126			HUB EL 422.78
7+80	124			HUB TO BOARD = +0.5
8+00	123			BOARD TO SLURRY = 3.33
8+20	121			SLURRY EL. = 419.95
8+40	120			
9+40	110			
10+40	101			
11+40	88			
12+40	76			
13+40	66			
14+40	54			
15+40	42			
16+40	29			
17+40	11			
18+20	3			
~~7+90~~	135.8			
~~7+80~~	136.1			
~~7+70~~	136.8	139		
~~7+60~~	136.8			
~~7+50~~	135.8	137		
~~7+40~~	136.1			

GROUNDWATER MITIGATION CONTROL SYSTEM, SAUGET AREA 2

Date: 5/20/04

Approximate time of depth measurements: Pm

STATION	Trench Depth (ft.)	Down Rigger, Confirmation Measurements (ft.)	Clam Sampler	Comments:
18+40	3			
17+80	12			
16+80	27			
15+80	40.			
14+80	50			
13+80	65			
12+80	75			
11+80	85			
10+80	98			
9+80	111			
8+80	122			
8+60	123			
8+40	125			
8+20	127			
8+00	134			
7+80	137			
7+60	135			
7+40	138			
7+20	135			
7+00	130			
6+80	134			
6+50	77			
6+20	30			

GROUNDWATER MITIGATION CONTROL SYSTEM, SAUGET AREA 2

Date: 5/20/04

Approximate time of depth measurements: Am

STATION	Trench Depth (ft.)	Down Rigger, Confirmation Measurements (ft.)	Clam Sampler	Comments:
19+00	0			
18+80	2		14+60	BACKFILL CLAM SAMPLES
17+80	15		14+10	OBSERVED TO BE FREE OF
16+80	28			SEDIMENTS
15+80	42			
14+80	53			
13+80	65			STA. 9+00
12+80	76			HUB EL. 422.78
11+80	85			HUB TO BOARD +.54
10+80	97			BOARD TO SLURRY - 2.88
9+80	110			SLURRY EL. 420.44
9+40	115			
9+20	118			
9+00	121			
8+80	122			
8+60	124			
8+40	125			
8+20	126			
8+00	130			
7+80	134			
7+60	133			
7+40	133			
7+20	136			
7+00	129			
6+80	78			
6+60	60			
6+40	57			
6+20	23			
6+15	0			
MORNING	TRENCH			
BOTTOM CLEANING				
7+90	136			
7+80	136	136		
7+70	136.5			
7+60	136.5			
7+50	136.5	137		
7+40	137			

8+70 123.
8+50 125

GROUNDWATER MITIGATION CONTROL SYSTEM, SAUGET AREA 2

Date: 5/18/04 Am

Approximate time of depth measurements:

STATION	Trench Depth (ft.)	Down Rigger, Confirmation Measurements (ft.)	Clam Sampler	Comments:
MORNING	TRENCH BOTTOM			
CLEANING			15+40	SLURRY LEVEL
8+50	136.5		14+70	STATION 9+10
8+40	136.0			HUB EL. 423.08
8+30	136.5	138		HUB TO BOARD +.479
8+20	136.0			BOARD TO SLURRY - 3.08
8+10	137.0	138		SLURRY EL. 420.48
8+00	136.5			
7+90	136.0			
7+80	137.0	138		
7+70	137.0			

GROUNDWATER MITIGATION CONTROL SYSTEM, SAUGET AREA 2

Date: 5/17/04

Approximate time of depth measurements: P.M.

STATION	Trench Depth (ft.)	Down Rigger, Confirmation Measurements (ft.)	Clam Sampler	Comments:
			15+00	CLAM SAMPLES OBSERVED
6+60	20		15+50	TO BE FREE OF SEDIMENT
7+40	133			
~~7~~+60	135			
7+80	135			
8+00	134			
8+20	134			SLURRY LEVEL ELEVATION
8+40	135			STA 8+90
8+60	131			HUB EL 423.08
8+80	130			HUB TO BOARD +0.458
9+00	129			BOARD TO SLURRY - 3.417
9+20	122			SLURRY LEVEL ELEVATION=
9+40	120			420.12
10+40	109			
11+40	95			
12+40	~~85~~			
13+40	~~75~~			
14+40	61			
15+40	52			
16+40	40			
17+40	25			
18+40	12			
19+40	2			
~~8+50~~	NO CLEAN			
~~8+40~~	OUT OR BACKFILL			
~~8+30~~	ACTIVITY TODAY			
~~8+20~~				
~~8+10~~				

GROUNDWATER MITIGATION CONTROL SYSTEM, SAUGET AREA 2

Date: 5/13/04

Approximate time of depth measurements: PM.

STATION	Trench Depth (ft.)	Down Rigger, Confirmation Measurements (ft.)	Clam Sampler	Comments:
				BACKFILL
6+60	20		15+30	CLAM SAMPLES OBSERVED
7+05	31m / 101.7		14+70	TO BE FREE OF SEDIMENTS.
7+50	122			4:30pm
7+80	122			853 EXCAVATING PANEL
8+00	136			AT 6+98 TO 7+10
8+20	129			
8+40	137			
8+60	129			SLURRY EL.
8+80	129			STA. 8+70
9+00	127			HUB EL. 423.47
9+20	122			HUB TO BOARD +.042
9+40	120			BOARD TO SLURRY - 2.75
9+60	117			SLURRY EL. 420.76
9+80	114			
10+80	103			
11+80	89			
12+80	81			
13+80	70			
14+80	56			
15+80	46			
16+80	33			
17+80	20			
18+80	8			
19+00	5			
19+20	0			
MORNING CLEANING	TRENCH BOTTOM			
9+00	136.5			
8+90	136.0			
8+80	136.5			
8+70	136.5	137.0		
8+60	136.5			
8+50	137.5			
8+40	136.0			

853 CLAM

GROUNDWATER MITIGATION CONTROL SYSTEM, SAUGET AREA 2

Date: 5/12/04

Approximate time of depth measurements: P.M.

STATION	Trench Depth (ft.)	Down Rigger, Confirmation Measurements (ft.)	Clam Sampler	Comments:
6+60	19			
7+00	67			
7+55	~~32m/105'~~			
7+80	124			
8+00	140			
8+20	127			
8+40	136			
8+60	132			
8+80	134			STA 8+70 HUB EL - 423.47 HUB TO BOARD + .042 BOARD TO SLURRY - 2.833 SLURRY LEVEL EL - 420.68
9+00	135			
9+20	127			
9+40	125			
9+60	120			
9+80	117			
10+80	106			
11+80	92			
12+80	84			
13+80	73			
14+80	61			
15+80	51			
16+80	34			
17+80	24			
18+80	8			
19+80	2			

GROUNDWATER MITIGATION CONTROL SYSTEM, SAUGET AREA 2

Date: 5/11/04

Approximate time of depth measurements: P.M.

STATION	Trench Depth (ft.)	Down Rigger, Confirmation Measurements (ft.)	Clam Sampler	Comments:
			13+60	CLAM SAMPLES OBSERVED
			14+10	TO BE FREE OF SEDIMENT.
6+60	20			
7+00	60'			
7+60	32m/105'			
7+80	125			
8+00	12.3			
8+20	125			
8+40	135.5 MACHINE			STA 9+90
8+60	131			HUB EL 423.27
8+80	135			HUB TO BOARD +.666
9+00	134			BOARD TO SLURRY -2.75
9+20	124			SLURRY EL. 421.20
9+40	120			
9+60	118			
9+80	116			
10+80	105			
11+80	92			
12+80	84			
13+80	73			
14+80	61			
15+80	52			
16+80	38			
17+80	23			
18+80	8			
19+20	2			

GROUNDWATER MITIGATION CONTROL SYSTEM, SAUGET AREA 2

Date: 5/10/05

Approximate time of depth measurements:

STATION	Trench Depth (ft.)	Down Rigger, Confirmation Measurements (ft.)	Clam Sampler	Comments:
6+60	17		13+40	CLAM SAMPLES OBSERVED
6+80	36		13+90	TO BE FREE OF
7+80	75			SEDIMENT -
8+00	127			
8+20	125			
8+40	127			
8+60	135			
8+80	134			
9+00	134			
9+20	125			
9+40	121			
9+60	119			STA 9+90
9+80	117			HUB EL 423.27
10+80	105			HUB TO BOARD .542
11+80	92			BOARD TO SLURRY 3.125
12+80	83			SLURRY LEVEL 420.69
13+80	74			
14+80	61			
15+80	51			
16+80	37			
17+80	24			
18+80	8			
19+20	2			
19+40	0			
9+00	135.5			
8+90	135.5			
8+80	137.0	138.0		
8+70	136.5			
8+60	136.0			

GROUNDWATER MITIGATION CONTROL SYSTEM, SAUGET AREA 2

Date: 5/7/04

Approximate time of depth measurements: AM & PM

STATION	Trench Depth (ft.)	Down Rigger, Confirmation Measurements (ft.)	Clam Sampler	Comments:
6+60	~~121~~ 1.21		13+60	CLAM SAMPLES OBSERVED
7+00	~~85~~ 1.79		14+00	TO BE FREE OF SEDIMENT
8+00	85			
8+20	124			
8+40	126			
8+60	136			
8+80	135			
9+00	138			
9+20	125			
9+40	121			
9+60	120			STA 9+90
9+80	117			HUB - 423.27
10+00	110			HUB TO BOARD - +.63
11+00	105			BOARD TO SURVEY - -2.85
12+00	92			SURVEY EL 421.05
13+00	82			
14+00	72			
15+00	60			
16+00	50			
17+00	37			
18+00	22			
19+00	9			
19+40	2			
9+00	135			
8+90	135			
8+80	135.5	136		
8+70	136			
8+60	137			

GROUNDWATER MITIGATION CONTROL SYSTEM, SAUGET AREA 2

Date: 5/6/04

Approximate time of depth measurements: Pm

STATION	Trench Depth (ft.)	Down Rigger, Confirmation Measurements (ft.)	Clam Sampler	Comments:
EOT 6+55	0			
6+60	21			
6+80	31			
7+40	84			STA. 9+90
8+00	73			HUB EL. 423.27
8+30	120			HUB TO BOARD +.65
8+40	128			BOARD TO SLURRY -3.04
8+60	134			SLURRY EL. 420.88
8+80	135			
9+00	126			
9+20	123			
9+40	120			
9+60	119			
9+80	116			
10+00	115			
11+00	104			
12+00	91			
13+00	81			
14+00	71			
15+00	60			
16+00	49			
17+00	37			
18+00	23			
19+00	11			
19+40	5			

53 AM →

GROUNDWATER MITIGATION CONTROL SYSTEM, SAUGET AREA 2

Date: 5/5/04

Approximate time of depth measurements: P.M.

STATION	Trench Depth (ft.)	Down Rigger, Confirmation Measurements (ft.)	Clam Sampler	Comments:
6+60	14			
7+00	79			
7+50	83			
8+00	75			
8+20	78			SLURRY LEVEL
8+40	76			STA 9+90
8+60	137			HUB EL = 423.27
8+80	135			HUB TO BOARD = +.583
9+00	127			BOARD TO SLURRY = -2.916
9+20	124			SLURRY EL. = 420.937
9+40	120			
9+60	119			
9+80	117			
10+00	115			
11+00	104			
12+00	91			
13+00	82			
14+00	71			
15+00	61			
16+00	50			
17+00	37			
18+00	23			
19+00	10			
19+40	5			

GROUNDWATER MITIGATION CONTROL SYSTEM, SAUGET AREA 2

Date: 5/4/04

Approximate time of depth measurements:

STATION	Trench Depth (ft.)	Down Rigger, Confirmation Measurements (ft.)	Clam Sampler	Comments:
7+10	60			
7+50	83		13+90	CLAM SAMPLES OBSERVED
8+00	77		13+40	~~TO BE FREE OF SEDIMENT.~~
~~8+20~~	~~78~~			
8+40	74			
8+60	75			
8+80	130			
9+00	127			SLURRY LEVEL
9+20	124			STA = 9+90
9+40	121			HUB EL = 423.27
9+60	120			HUB TO BOARD = +.583
9+80	116			BOARD TO SLURRY = -2.854
10+00	115			SLURRY LEVEL EL = 420.99
11+00	105			
12+00	92			
13+00	82			
14+00	72			
15+00	60			
16+00	49			
17+00	37			
18+00	23			
19+00	9			
19+40 ~~19+40~~	5			
EOT 16+95	0			
~~EOT 19+50~~	0			
A.M. CLEAN OUT				
9+40	135.0			
9+30	135.5			
9+20	135.5	136.0		
9+10	135.5			
9+00	137.0			

GROUNDWATER MITIGATION CONTROL SYSTEM, SAUGET AREA 2

Date: 5/3/04

Approximate time of depth measurements: P.M.

STATION	Trench Depth (ft.)	Down Rigger, Confirmation Measurements (ft.)	Clam Sampler	Comments:
6+85	5			
7+80	72			
8+80	132			
9+00	132			
9+20	133			
9+40	127			
9+60	128			
9+80	125			
10+00	125			
10+20	120			
10+40	116			
10+60	114			
10+80	111			
11+80	98			
12+80	83			
13+80	79			
14+80	69			
15+80	58			
16+80	42			
17+80	28			
18+80	14			
19+60	3			
9+60	134.5			
9+50	134.5			
9+40	135	136		
9+30	135			
9+20	135			

GROUNDWATER MITIGATION CONTROL SYSTEM, SAUGET AREA 2

Date: 5/3/04

Approximate time of depth measurements: Am

STATION	Trench Depth (ft.)	Down Rigger, Confirmation Measurements (ft.)	Clam Sampler	Comments:
			14+50	
			14+00	
7+40	18			
7+80	73			
8+80	109			
9+00	73			
9+20	135			
9+40	136			
9+60	134			
9+80	130			
10+00	123			SLURRY ELEVATION
10+20	121			STA 9+90
10+40	117			HUB EL 423.27
10+60	115			HUB TO BOARD + .583
10+80	113			BOARD TO SLURRY - 3.625
11+50	100			SLURRY ELEVATION = 420.23
12+80	91			
13+80	81			
14+80	71			
15+80	58			
16+80	45			
17+80	31			
18+80	18			
19+80	5			
20+00	2			

POWER PLANT 73.7 ELEV 138.7

GROUNDWATER MITIGATION CONTROL SYSTEM, SAUGET AREA 2

Date: 4/30/04

Approximate time of depth measurements: Am/Pm

CLEAN OUT ACTIVITIES.

STATION	Trench Depth (ft.)	Down Rigger, Confirmation Measurements (ft.)	Clam Sampler	Comments:
				AM. STA. 10+00
9+80	134		15+20	HUB EL. 423.36
9+70	134	135	14+60	HUB - BOARD + .63
9+60	134			BOARD TO SLURRY - 2.88
9+50	135	135.5		SLURRY EL = 421.11
9+40	135			
9+30	134.5			1:30pm STA. 9+90
9+20	134.5			HUB EL. 423.37
				HUB - BOARD + .58
				BOARD - SLURRY - 3.25
				SLURRY EL. 420.7

GROUNDWATER MITIGATION CONTROL SYSTEM, SAUGET AREA 2

Date: 4/29/04

Approximate time of depth measurements: P.M.

STATION	Trench Depth (ft.)	Down Rigger, Confirmation Measurements (ft.)	Clam Sampler	Comments:
7+~~40~~	7			
~~7~~+80	76			
8+80	71			
9+00	138			
9+20	126			
9+40	135			
9+60	130			
9+80	134			SLURRY LEVEL
10+00	131			STA 10+00
10+20	123			HUB EL - 423.36
10+40	119			HUB TO BOARD - +.666
10+60	119			BOARD TO SLURRY - 3.083
10+80	113			SLURRY LEVEL ELEV - 420.94
11+80	101			
12+80	92			
13+80	82			
14+80	73			
15+80	60			
16+80	48			
17+80	35			
18+80	22			
19+80	9			
20+20	2			

GROUNDWATER MITIGATION CONTROL SYSTEM, SAUGET AREA 2

Date: 4/28/04

Approximate time of depth measurements:

STATION	Trench Depth (ft.)	Down Rigger, Confirmation Measurements (ft.)	Clam Sampler	Comments:
			14+50	CLAM SAMPLES OBSERVED
			15+00	TO BE FREE OF SEDIMENT
8+00	76			
8+80	72			
9+00	73			SLURRY LEVEL EL
9+20	125			STA 9+90
9+40	133			HUB EL 423.27
9+60	126			HUB to BOARD - .708
9+80	125			BOARD to SLURRY - 3.33
10+00	121			SLURRY LEVEL EL - 420.65
10+20	122			
10+40	117			
10+60	118			
10+80	114			
11+80	101			
12+80	92			
13+80	82			
14+80	73			
15+80	60			
16+80	48			
17+80	30			
18+80	23			
19+80	10			
20+20	2			
CLEAN OUT A.M.				
10+20	135			
10+10	135			
10+00	135	134.5		
9+90	135			
9+80	134			

GROUNDWATER MITIGATION CONTROL SYSTEM, SAUGET AREA 2

Date: 4/27/04

Approximate time of depth measurements: PM.

STATION	Trench Depth (ft.)	Down Rigger, Confirmation Measurements (ft.)	Clam Sampler	Comments:
7+70	0			
7+80	35			
8+20	61			
8+50	74			
8+90	70			
9+20	125			
9+40	123			SLURRY LEVEL EL.
9+60	129			STA - 9+90
9+80	126			HUB EL. - 423.27
10+00	134			HUB TO BOARD - +.688
10+20	133			BOARD TO SLURRY - 3.0
10+40	132			SLURRY ELEVATION - 420.96
10+60	126			
10+80	122			
11+00	124			
11+20	114			
12+20	102			
13+20	93			
14+20	84			
15+20	72			
16+20	59			
17+20	45			
18+20	32			
19+20	22			
20+20	8			
20+80	1			

863 clam →

GROUNDWATER MITIGATION CONTROL SYSTEM, SAUGET AREA 2

Date: 4/26/04

Approximate time of depth measurements: P.M.

STATION	Trench Depth (ft.)	Down Rigger, Confirmation Measurements (ft.)	Clam Sampler	Comments:
8+20	56			
9+20	93			
9+40	115			
9+60	129			
9+80	129			
10+00	129			SLURRY LEVEL
10+20	131			STA - 10+40
10+40	131			HUB EL - 422.77
10+60	127			HUB TO BOARD - +0.25
10+80	123			BOARD TO SLURRY - 1.75
11+00	124			SLURRY ELEVATION = 421.27
11+20	115			
12+20	102			
13+20	91			
14+20	83			
15+20	72			
16+20	60			
17+20	45			
18+20	33			
19+20	20			
20+20	10			
21+00	2			

GROUNDWATER MITIGATION CONTROL SYSTEM, SAUGET AREA 2

Date: 4/23/04

Approximate time of depth measurements: P.M.

STATION	Trench Depth (ft.)	Down Rigger, Confirmation Measurements (ft.)	Clam Sampler	Comments:
8+20	88			
8+40	~~87~~		14+80	~~CLAM SAMPLES OBSERVED~~
8+60	~~85~~ 72 ?		14+30	TO BE FREE OF SEDIMENT
8+80	~~83~~ 74 ?			
9+00	72			
9+20	81			
9+40	78			
9+60	131			
9+80	128			SLURRY LEVEL
10+00	181			STA 10+60
10+20	129			HUB EL = 423.64
10+40	128			HUB TO BOARD = 1.95'
10+60	127			BOARD TO SLURRY 2'
10+80	122			SLURRY ELE 422.54
11+00	123			
12+00	104			
13+00	96			
14+00	86			
15+00	75			
16+00	63			
17+00	50			
18+00	36			
19+00	25			
20+00	11			
21+00	7			
10+60	134.5			
10+50	134.5			
10+40	134.5	135		
10+30	134.5			
10+20	135.0			

GROUNDWATER MITIGATION CONTROL SYSTEM, SAUGET AREA 2

Date: 4/22/04

Approximate time of depth measurements: P.M.

STATION	Trench Depth (ft.)	Down Rigger, Confirmation Measurements (ft.)	Clam Sampler	Comments:
8+50	22			
8+60	59		15+40	CLAM SAMPLES OBSERVED
9+60	128		14+90	TO BE FREE of SEDIMENT
9+80	128			
10+00	135			
10+20	135			
10+40	134			
10+60	136			
10+80	128			
11+00	128			SLURRY LEVEL
11+20	113			STA 10+60
11+40	111			HUB EL = 423.64
11+60	108			HUB TO BOARD = +10.75 = 1.895
12+60	100			BOARD TO SLURRY = -42.0 = 3.5
13+60	92			SLURRY LEVEL EL = 421.04
14+60	82			
15+60	71			
16+60	56			
17+60	43			
18+60	31			
19+60	19			
20+60	5			
21+00	2			
MORNING	CLEAN OUT			
10+60	134			
10+50	135			
10+40	135	134.5		
10+30	135			

GROUNDWATER MITIGATION CONTROL SYSTEM, SAUGET AREA 2

Date: 4/21/04

Approximate time of depth measurements: P.M.

STATION	Trench Depth (ft.)	Down Rigger, Confirmation Measurements (ft.)	Clam Sampler	Comments:
8+50	8			NO TRENCHING OR BACKFILL ACTIVITIES PERFORMED THIS DAY.
8+60	55			
9+60	119			
9+80	128			
10+00	134			
10+20	135			
10+40	135			
10+60	132			
10+80	128			
11+00	128			
11+20	115			
11+40	112			
11+60	110			
12+60	102			
13+60	95			
14+60	85			
15+60	72			
16+60	59			
17+60	47			
18+60	35			
19+60	22			
20+60	10			
21+20	2			

GROUNDWATER MITIGATION CONTROL SYSTEM, SAUGET AREA 2

Date: 4/20/04

Approximate time of depth measurements:

STATION	Trench Depth (ft.)	Down Rigger, Confirmation Measurements (ft.)	Clam Sampler	Comments:
(P.M. - PROFILE)				
8+50	21		15+20	CLAM SAMPLES OBSERVED
8+60	59		15+70	TO BE MADE OF SEDIMENT
9+60	79			
9+80	127			
10+00	135			
10+20	135			
10+40	132			
10+60	133			
10+80	127			
11+00	127			SLURRY LEVEL
11+20	116			STA = 10+60
11+40	112			HUB EL = 423.64
11+60	110			HUB TO BOARD = + 0.875
12+60	101			BOARD TO SLURRY = - 3.125
13+60	95			SLURRY LEVEL = 421.39
14+60	85			
15+60	72			
16+60	60			
17+60	45			
18+60	35			
19+60	23			
20+60	11			
21+20	2			
(A.M. CLEANOUT)				
10+60	40.8	133.8		
10+50	41.0	134.5		
10+40	41.0	134.5	133.5	
10+30	41.0	134.5		
10+20	41.0	134.5	135.0	
10+10	41.0	134.5		
10+00	41.0	134.5		

GROUNDWATER MITIGATION CONTROL SYSTEM, SAUGET AREA 2

Date: 4/19/04

Approximate time of depth measurements: P.M.

STATION	Trench Depth (ft.)	Down Rigger, Confirmation Measurements (ft.)	Clam Sampler	Comments:
8+50	24			
8+60	72		15+00	CLAM SAMPLES OBSERVED
9+60	79		15+50	TO BE FREE OF
9+80	126			SEDIMENT
10+00	130			
10+20	130			
10+40	128			
10+60	128			SLURRY LEVEL
10+80	127			STA = 10+50
11+00	125			HUB EL = 422.87
11+20	113			HUB TO BOARD = +.583
11+40	114			BOARD TO SLURRY = -3.25
11+60	111			SLURRY EL = 420.20
12+60	102			
13+60	94			
14+60	85			
15+60	72			
16+60	60			
17+60	48			
18+60	37			
19+60	25			
20+60	13			
21+60	1			

GROUNDWATER MITIGATION CONTROL SYSTEM, SAUGET AREA 2

Date: 4/16/04 8m

Approximate time of depth measurements:

STATION	Trench Depth (ft.)	Down Rigger, Confirmation Measurements (ft.)	Clam Sampler	Comments:
8+45	0			
8+50	23			
8+80	74			
9+00	73			
9+20	75			
9+40	79			
9+60	77			
9+80	123			
10+00	127			
10+20	127			
10+40	125			
10+60	124			
10+80	120			
11+00	119			
11+20	114			
11+40	111			
11+60	110			
11+80	108			
12+00	107			
13+00	100			
14+00	90			
15+00	80			
16+00	70			
17+00	55			
18+00	44			
19+00	34			
20+00	20			
21+00	9			
21+60	2			

GROUNDWATER MITIGATION CONTROL SYSTEM, SAUGET AREA 2

Date: 4/16/04

Approximate time of depth measurements:

STATION	Trench Depth (ft.)		Down Rigger, Confirmation Measurements (ft.)	Clam Sampler	Comments:
10+20	41	134.5		15+20	CLAM SAMPLES OBSERVED
10+30	41	134.5		15+70	TO BE FREE OF SEDIMENT
10+40	41	134.5			
10+50	41	134.5			
10+60	41	134.5	134		
10+70	40.8	133.8			
10+80	41	134.5	134		
10+90	41	134.5			SLURRY LEVEL
11+00	41	134.5			STA 10+80
					HUB EL = 423.30'
					BOARD TO HUB = 0'
					BOARD TO SLURRY = -3.5'
					SLURRY EL = 419.8

GROUNDWATER MITIGATION CONTROL SYSTEM, SAUGET AREA 2

Date: 4/15/04

Approximate time of depth measurements: P.M.

STATION	Trench Depth (ft.)	Down Rigger, Confirmation Measurements (ft.)	Clam Sampler	Comments:
8+50	24		14+70	CLAM SAMPLES OBSERVED
8+80	65		15+10	TO BE FREE OF
9+00	62			SEDIMENT
9+20	20	FALSE READING.		
9+50	78	DOWN RIGGER MAY HAVE		
9+70	75	HUNG UP ON SIDEWALL.		
10+00	130			SLURRY LEVEL
10+40	128			STA = 11+00
10+60	127			HUB EL = 422.94
10+65	124			BOARD TO HUB = -.125
10+80	118			BOARD TO SLURRY = 2.875
11+00	119			SLURRY LEVEL = 419.94
11+20	115			
11+40	109			
11+60	112			
11+80	110			
12+00	110			
12+20	108			
12+40	105			
13+40	98			
14+40	91			
15+40	78			
16+40	65			
17+40	53			
18+40	41			
19+40	31			
20+40	17			
21+40	5			
22+00	EOT			

GROUNDWATER MITIGATION CONTROL SYSTEM, SAUGET AREA 2

Date: 4/14/04

Approximate time of depth measurements:

STATION	Trench Depth (ft.)	Down Rigger, Confirmation Measurements (ft.)	Clam Sampler	Comments:
8+50	25		15+00	CLAM SAMPLES APPEAR
9+40	80		16+20	TO BE FREE OF SEDIMENTS
10+00	137			
10+20	124			
10+40	131			
10+60	123			
10+80	110			SLURRY LEVEL
11+00	104			STA 11+50
11+20	112			HUB EL 423.18
11+40	117			BOARD TO HUB + .025
11+60	112			BOARD TO SURRY - 3.08
11+80	108			SLURRY LEVEL ELV. 420.23
12+00	107			
12+20	106			
12+40	108			
13+40	101			
14+40	94			
15+40	80			
16+40	68			
17+40	56			
18+40	44			
19+40	34			
20+40	21			
21+40	10			
22+00	3			

GROUNDWATER MITIGATION CONTROL SYSTEM, SAUGET AREA 2

Date: 4/13/04

Approximate time of depth measurements:

STATION	Trench Depth (ft.)	Down Rigger, Confirmation Measurements (ft.)	Clam Sampler	Comments:
11+40	41.0 134.5		15+20	BACKFILL CLAM SAMPLES
11+30	40.8 133.8	133	14+80	OBSERVED TO BE FREE OF
11+20	40.7 133.5			SEDIMENTS.
11+10	40.8 133.8			
11+00	40.8 133.8	134		AM. SLURRY ELEVATION
10+90	40.8 133.8			STA. 11+55
10+80	40.8 133.8			HUB EL. 423.44
				HUB TO BOARD 0'
				BOARD TO SLURRY - 3.125
				SLURRY EL. = 420.3
8+85	21			
9+50	71			
10+00	82			
10+20	136			
10+40	122			
10+60	123			
10+80	130			
11+00	130			
11+20	124			
11+40	120			
11+60	116			
11+80	115			
12+00	113			
12+20	110			
12+40	115			
13+40	108			
14+40	98			
15+40	85			
16+40	74			
17+40	60			
18+40	48			
19+40	36			
20+40	25			
21+40	13			
22+20	3			
22+40	0			

GROUNDWATER MITIGATION CONTROL SYSTEM, SAUGET AREA 2

Date: 4/12/04

Approximate time of depth measurements: A.M. & P.M.

STATION	Trench Depth (ft.)	Down Rigger, Confirmation Measurements (ft.)	Clam Sampler	Comments:
9+50	66			
10+00	81		16+00	CLAM SAMPLES OBSERVED TO
10+40	116		15+60	~~BE FREE OF SEDIMENT~~
10+60	123			
10+80	124			NOTE: WEDGE FROM ± 10+63
11+00	122			TO ± 10+70
11+20	119			
11+40	122			
11+60	123			
8+85	21			SLURRY LEVEL DTA = 11+75
9+40	65			HUB EL 423.27
10+40	115			HUB TO BOARD 0.125'
10+60	123			BOARD TO SLURRY 3.54'
10+80	124			SLURRY LEVEL 419.86
11+00	122			
11+20	118			
11+40	120			
11+60	115			
11+80	118			
12+00	116			
12+20	114			
12+40	112			
13+40	111			
14+40	101			
15+40	89			
16+40	78			
17+40	65			
18+40	54			
19+40	43			
20+40	30			
21+40	17			
22+40	3			

GROUNDWATER MITIGATION CONTROL SYSTEM, SAUGET AREA 2

Date: 4/9/04

Approximate time of depth measurements: P.M.

STATION	Trench Depth (ft.)	Down Rigger, Confirmation Measurements (ft.)	Clam Sampler	Comments:
8+90	5			
9+20	21			
9+40	57			
9+60	76			
9+80	80			
10+00	82			
10+20	132			
10+30	84			
10+40	116			
10+50	118			
10+60	123			
10+65	7			
10+70	129			
10+80	135			
10+90	126			
11+00	121			
11+10	115			
11+20	118			
11+25(+32)	123			
11+40	122			
11+50	124			
11+60	122			
11+80	120			
12+00	117			
12+20	113			
12+40	111			
13+40	110			
14+40	102			
15+40	89			
16+40	77			
17+40	66			
18+40	55			
19+40	43			
20+40	30			
21+40	18			
22+40	3			

GROUNDWATER MITIGATION CONTROL SYSTEM, SAUGET AREA 2

Date: 4/9/04

Approximate time of depth measurements: A.M.

STATION	Trench Depth (ft.)	Down Rigger, Confirmation Measurements (ft.)	Clam Sampler	Comments:
9+40	65			CLAM SAMPLES OBSERVED TO BE FREE OF SEDIMENT
9+60	67		15+40	
9+80	63		15+70	
10+00	83			
10+20	106			
10+40	123			SLURRY LEVEL STA = 11+80
10+60	131			HUB EL = 422.38
10+80	123			HUB TO BOARD = +.458'
11+00	114			BOARD TO SLURRY = -2.25
11+20	125			SLURRY EL = 420.59
11+40	120			
11+60	115			

GROUNDWATER MITIGATION CONTROL SYSTEM, SAUGET AREA 2

Date: 4/8/04

Approximate time of depth measurements: A.M / P.M.

STATION	Trench Depth (ft.)	Down Rigger, Confirmation Measurements (ft.)	Clam Sampler	Comments:
9+20	24		15+70	CLAM SAMPLES OBSERVED TO
9+40	63		15+20	BE FREE OF SEDIMENTS
9+60	64			
9+80	62			
A.M. 10+00	81			SLURRY LEVEL STA 11+70
10+20	81			HUB EL 423.27
10+40	134			HUB TO BOARD 0.125
10+60	131			BOARD TO SLURRY 3.33
10+80	124			SLURRY EL 420.07
11+00	112			
11+20	123			
11+40	138			
9+20	50			
P.M 9+60	68			
10+00	80			
10+40	109			
10+60	131			
10+80	124			
11+00	115			
11+20	123			
11+40	127			
11+60	123			
11+80	117			
12+00	111			
12+20	113			
12+40	114			
13+40	113			
14+40	104			
15+40	91			
16+40	78			
17+40	66			
18+40	56			
19+40	45			
20+40	31			
21+40	20			
22+40	5			
23+00	1			

GROUNDWATER MITIGATION CONTROL SYSTEM, SAUGET AREA 2

Date: 4/7/09

Approximate time of depth measurements: PM.

STATION	Trench Depth (ft.)	Down Rigger, Confirmation Measurements (ft.)	Clam Sampler	Comments:
9+20	23			
9+40	63			
10+00	80			
10+40	137			
10+60	132			
10+80	127			
10+90	122			
11+00	115			
11+20	124			
11+40	133			
11+60	130			
11+80	128			
12+00	126			
12+20	119			
12+40	116			
13+40	107			
14+40	104			
15+40	93			
16+40	82			
17+40	70			
18+40	58			
19+40	47			
20+40	35			
21+40	23			
22+40	8			
23+00	4			

GROUNDWATER MITIGATION CONTROL SYSTEM, SAUGET AREA 2

Date: 4/7/04

Approximate time of depth measurements: A.M.

STATION	Trench Depth (ft.)	Down Rigger, Confirmation Measurements (ft.)	Clam Sampler	Comments:
9+70	32			
9+80	66			BACKFILL CLAM SAMPLES
10+00	85		15+80	OBSERVED TO BE FREE
10+20	85		15+30	OF SEDIMENTS
10+40	79			
10+60	131			
10+80	122			
10+90	121			
11+00	115			
11+20	128			
11+40	133			
				SLURRY LEVEL STA 11+80
				HUB EL 422.38
				HUB TO BOARD +.46'
				BOARD TO SLURRY -2.35'
				SLURRY EL. = 420.46

GROUNDWATER MITIGATION CONTROL SYSTEM, SAUGET AREA 2

Date: 4/06/04

Approximate time of depth measurements: P.M.

STATION	Trench Depth (ft.)	Down Rigger, Confirmation Measurements (ft.)	Clam Sampler	Comments:
9+70	36			
9+80	60			
10+00	85			
10+20	82			
10+40	82			
10+60	131			
10+80	131			
10+90	121			
11+00	113			
11+20	116			
11+40	130			
11+60	130			
11+80	128			
12+00	124			
12+20	117			
12+40	116			
13+40	116			
14+40	104			
15+40	95			
16+40	84			
17+90	72			
18+40	60			
19+40	49			
20+40	36			
21+40	26			
22+40	12			
23+40	2			

GROUNDWATER MITIGATION CONTROL SYSTEM, SAUGET AREA 2

Date: 4/6/04

Approximate time of depth measurements: A.M.

STATION	Trench Depth (ft.)		Down Rigger, Confirmation Measurements (ft.)	Clam Sampler	Comments:
9+80	46				
9+90	55			15+60	BACKFILL CLAM SAMPLES
10+10	45			16+20	OBSERVED TO BE FREE
10+20	67				OF SEDIMENTS
10+40	81				
10+60	133				
10+80	128				
10+90	118				
11+00	115				
11+20	127				SLURRY LEVEL STATION 11+80
11+40	130				HUB EL. 422.38
					HUB TO BOARD ± 4.6'
CLEAN OUT					BOARD TO SLURRY 2.33'
11+80	41.0	134.5			SLURRY EL. = 420.51
11+70	41.0	134.5			
11+60	41.0	134.5	134.5		
11+50	41.0	134.5			
11+40	41.0	134.5			
11+30	40.8	133.8			

GROUNDWATER MITIGATION CONTROL SYSTEM, SAUGET AREA 2

Date: 4/5/04

Approximate time of depth measurements: P.M.

STATION	Trench Depth (ft.)	Down Rigger, Confirmation Measurements (ft.)	Clam Sampler	Comments:
9+80	45			
10+00	56			
10+20	67			
10+40	83			
10+60	132			
10+80	124			
10+90	121			
11+00	115			
11+20	123			
11+40	134			
11+60	122			
11+80	127			
12+00	120			
12+20	120			
12+40	118			
12+60	119			
12+80	115			
13+80	115			
14+80	102			
15+80	92			
16+80	81			
17+80	68			
18+80	58			
19+80	47			
20+80	36			
21+80	25			
22+80	12			
23+40	4			
	EOT			

Date: 4/5/04 GROUNDWATER MITIGATION CONTROL SYSTEM, SAUGET AREA 2

Approximate time of depth measurements: A.M.

STATION	Trench Depth (ft.)	Down Rigger, Confirmation Measurements (ft.)	Clam Sampler	Comments:
10+20	67			
10+60	130		17+00	
10+80	125		16+50	SLURRY LEVEL
10+90	121			STA 11+80
11+00	114			HUB EL = 422.38
11+20	121			BOARD TO HUB = 6.0
11+40	127			BOARD TO SLURRY = 34.0
				SLURRY LEVEL = 420.05
CLEANOUT				
12+20	41.0	131.5		
12+10	41.0			
12+00	41.0			
11+90	41.0			
11+80	41.0			

GROUNDWATER MITIGATION CONTROL SYSTEM, SAUGET AREA 2

Date: 4/2/04

Approximate time of depth measurements: Pm

STATION	Trench Depth (ft.)	Down Rigger, Confirmation Measurements (ft.)	Clam Sampler	Comments:
23+40	5			
23+20	8			
22+20	21			
21+20	33			
20+20	46			
19+20	58			
18+20	70			
17+20	79			
16+20	89			
15+20	101			
14+20	107			
13+20	121			
13+00	122			
12+80	122			
12+60	129			
12+40	131			
12+20	126			
12+00	135			
11+80	135			
11+60	133			
11+40	133			
11+20	122			
11+00	113			
10+90	121			
10+80	126			
10+60	134			
10+40	85			
10+20	69			
EOT 9+60	27			

GROUNDWATER MITIGATION CONTROL SYSTEM, SAUGET AREA 2

Date: 4/2/04

Approximate time of depth measurements: A.M.

STATION	Trench Depth (ft.)	Down Rigger, Confirmation Measurements (ft.)	Clam Sampler	Comments:
9+60	18			
10+00	16			
10+20	69			
10+40	82		17+80	
10+60	130			
10+80	123		17+30	SLURRY ELEVATION
10+90	120			STA 12+20
11+00	113			HUB EL. 422.32
11+20	122			BOARD TO HUB - 3.25
11+40	128			BOARD TO SLURRY 31.25
				SLURRY EL. = 419.99
CLEAN OUT				
12+50	40.9	134.2		
12+40	41.0	134.5		
12+30	41.0	134.5		
12+20	41.0	134.5	135	
12+10	41.0	134.5		
12+00	41.0	134.5		
11+90	41.0	134.5		
11+80	41.0	134.5		

GROUNDWATER MITIGATION CONTROL SYSTEM, SAUGET AREA 2

Date: 4/1/04

Approximate time of depth measurements: P.M.

STATION	Trench Depth (ft.)	Down Rigger, Confirmation Measurements (ft.)	Clam Sampler	Comments:
23+80	2			
23+40	9			
22+40	22			
21+40	34			
20+40	45			
19+40	58			
18+40	69			
17+40	77			
16+40	87			
15+40	97			
14+40	103			
13+40	119			
13+20	118			
13+00	119			
12+80	122			
12+60	131			
12+40	135			
12+20	135			
12+00	135			
11+80	135			
11+60	129			
11+40	133			
11+20	120			
11+00	116			
10+90	117			
10+80	123			
10+60	130			
9+60	9			
EOT				

GROUNDWATER MITIGATION CONTROL SYSTEM, SAUGET AREA 2

Date: 4-1-04

Approximate time of depth measurements: A.M.

STATION	Trench Depth (ft.)	Down Rigger, Confirmation Measurements (ft.)	Clam Sampler	Comments:
10+60	129			
10+80	125		18+60	
10+90	120		18+10	
11+00	115			
11+20	121			
11+40	125			
				SLURRY ELEVATION
CLEAN OUT				STATION 12+20
12+50	40.8 133.8			HUB EL. 422.32'
12+40	41.0 134.5			BOARD TO HUB 3.25"
12+30	41.0 134.5			BOARD TO SLURRY 27.0
12+20	41.0 134.5	134		SLURRY EL. = 420.34
12+10	40.8 133.8			
12+00	40.8 133.8			
11+90	41.0 134.5			
11+80	41.0 134.5			
~~12+60~~				
~~12+50~~				
~~+40~~				
~~+30~~				
~~+20~~				

GROUNDWATER MITIGATION CONTROL SYSTEM, SAUGET AREA 2

Date: 3/31/04

Approximate time of depth measurements: P.M.

STATION	Trench Depth (ft.)	Down Rigger, Confirmation Measurements (ft.)	Clam Sampler	Comments:
23+80	3			
23+40	12			
22+40	24			
21+40	38			
20+40	48			
19+40	61			
18+40	71			
17+40	79			
16+40	93			
15+40	103			
14+40	109			
13+40	118			
13+20	114			
13+00	117			
12+80	127			
12+60	134			
12+40	133			
12+20	135			
12+00	132			
11+80	134			
11+60	131			
11+40	130			
11+20	121			
11+00	110			
10+90	119			
10+80	125			
10+60	128			
10+00 EOT	16			

GROUNDWATER MITIGATION CONTROL SYSTEM, SAUGET AREA 2

Date: 3/31/04

Approximate time of depth measurements: A.M.

STATION	Trench Depth (ft.)	Down Rigger, Confirmation Measurements (ft.)	Clam Sampler	Comments:
10+60	130			
10+80	131		18+70	
10+90	122		19+20	
11+00	114			
11+20	114			
11+40	122			
CLEAN OUT				SLURRY ELEVATION
12+50	41.0 134.5			STATION 12+35
12+40	41.0 134.5			HUB EL. 422.53
12+30	41.0 134.5			BOARD TO HUB 3.5
12+20	41.0 134.5			BOARD TO SLURRY 27.5
12+10	41.0 134.5	134		SLURRY EL. = 420.53
12+00	40.8 133.8			
11+90	40.8 133.8			
11+80	41.0 134.5			

GROUNDWATER MITIGATION CONTROL SYSTEM, SAUGET AREA 2

Date: 3/30/04

Approximate time of depth measurements: PM

STATION	Trench Depth (ft.)	Down Rigger, Confirmation Measurements (ft.)	Clam Sampler	Comments:
10+60	131			
10+80	133			
10+90	125			
11+00	115			
11+20	116			
11+40	120			
11+60	129			
11+80	128			
12+00	135			
12+20	135			
12+40	135			
12+60	133			
12+80	130			
13+00	124			
13+20	119			
13+40	116			
14+40	109			
15+40	99			
16+40	94			
17+40	85			
18+40	75			
19+40	64			
20+40	49			
21+40	41			
22+40	29			
23+40	12			
23+90	2			

GROUNDWATER MITIGATION CONTROL SYSTEM, SAUGET AREA 2

Date: 3/30/04

Approximate time of depth measurements: Am

STATION	Trench Depth (ft.)	Down Rigger, Confirmation Measurements (ft.)	Clam Sampler	Comments:
10+00	94			
11+00	100			
11+40	124			
11+60	128			
11+80	130			
12+00	134			
12+20	135			IN-PLACE BACKFILL CLAM
12+40	128			SAMPLES OBSERVED TO
12+60	130			BE FREE OF SEDIMENTS.
12+80	127			
13+00	123			
13+20	123			
13+40	115			
14+40	109			
15+40	99			
16+40	93			
17+40	88		17+70	
18+40	78		18+20	
19+40	67			
20+40	56			
21+40	45			
22+40	32			SLURRY ELEVATION
23+40	14			STATION 12+20
24+40	4			HUB EL. 422.32
				BOARD TO HUB +.25'
				BOARD TO SLURRY -2.1
12+50	41.0 / 134.5			SLURRY EL. = 420.47
12+40	41.0 / 134.5			
12+30	41.0 / 134.5			
12+20	41.0 / 134.5	135		
12+10	41.0 / 134.5			
12+00	41.0 / 134.5			
11+90	41.0 / 134.5			
11+80	41.0 / 134.5			

GROUNDWATER MITIGATION CONTROL SYSTEM, SAUGET AREA 2

Date: 3/29/04

Approximate time of depth measurements: A.M.

STATION	Trench Depth (ft.)	Down Rigger, Confirmation Measurements (ft.)	Clam Sampler	Comments:
24+00	2			
23+40	16			
22+40	32			
21+40	43			
20+40	51			
19+40	61			BACKFILL CLAM SAMPLES
18+40	78			OBSERVED TO BE BROWN
17+40	94		17+20	CLAYEY SAND FILL
16+40	97		16+60	FREE OF SEDIMENTS.
15+40	108			
14+40	116			
13+40	122			
13+20	122			
13+00	124			
12+80	125			
12+60	124			
12+40	130			
12+20	131			12+40
12+00	133			SLURRY LEVEL
11+80	131			
11+60	128			HUBEL. 422.43
11+40	125			BOARD TO HUB +.21'
11+00	97			BOARD TO SLURRY -2.17'
10+90	81			SLURRY EL. 420.47
10+60	91			
12+60	40.93 / 134.3			
12+50	41.00 / 134.5			
12+40	41.00 / 134.5	135 FT		
12+30	41.00 / 134.5			
12+00	40.70 / 133.5*	135 FT		

* NOTE: 653 HAD MECHANICAL BREAK DOWN. BROKEN SHEAVE AT TIME OF THIS READING. A DOWN RIGGER MEASUREMENT WAS TAKEN (135') CONFIRMING PREVIOUSLY RECORDED ROCK DEPTHS OF (134.4, 134.7, AND 134.8) STATION 12+20 IS CLEAN TO TOP OF ROCK

Randy Sturm

GROUNDWATER MITIGATION CONTROL SYSTEM, SAUGET AREA 2

Date: 3/26/24

Approximate time of depth measurements: PM

STATION	Trench Depth (ft.)	Down Rigger, Confirmation Measurements (ft.)	Clam Sampler	Comments:
24+00	3			
23+40	18			
22+40	34			
21+40	43			
20+40	55			
19+40	69			
18+40	77			
17+40	90			
16+40	100			
15+40	108			
14+40	118			
13+40	127			
13+20	126			
13+00	125			
12+80	127			
12+60	133			
12+40	130			
12+20	131			
12+00	133			
11+80	131			
11+60	128			
11+40	125			
11+00	91			
10+40	92			

Date: 3/25/04

GROUNDWATER MITIGATION CONTROL SYSTEM, SAUGET AREA 2

Approximate time of depth measurements:

A.M P.M

STATION	~~Trench Depth~~ (ft.)	~~Down Rigger, Confirmation~~ Measurements (ft.)	V-23 Clam Sampler	INITIAL SNDING Comments: / FINAL SNDING
10+60	94	93	15+40 107	113 (34.5) 113
11+00	77	92	15+50	106 (32.3) 108
11+40	122	125	15+60	105 (32.0) 107
11+60	130	129	15+70	101 (30.8) 112
11+80	129	130	15+80	112 (34.1) 112
12+00	129	129	15+90 (102)	92 (28.0) 111
12+20	125	127	16+00	107 (32.6) 107
12+40	120	122	16+10	105 (32.0) 105
12+60	120	119	16+20	89 (27.1) 108
12+80	120	121	16+30	103 (31.4) 103
13+00	119	120	16+40 96	86 (26.2) 102
13+20	117	120	16+50	99 (30.2) 99
13+40	118	115	16+60	83 (25.3) 97
14+40	114	115	16+70	96 (29.3) 96
15+40	113	105	16+80	82 (25.0) 101
16+40	85	94	16+90 (89)	93 (29.9) 98
17+40	80	87	17+00	96 (29.3) 96
18+40	79	76	17+10	85 (25.9) 100
19+40		68	17+20	96 (29.3) 96
20+40		52	17+30	80 (24.4) 92
21+40		45	17+40 82	85 (25.9) 85
22+40		36	17+50	~~85 (25.9)~~ ~~78 (23.8)~~ 85
23+40		22	17+60	90 (27.4) 94
24+00		5	17+70	85 (25.9) 90
			17+80	85

GROUNDWATER MITIGATION CONTROL SYSTEM, SAUGET AREA 2

Date: 3/24/04

Approximate time of depth measurements: P.M.

STATION	Trench Depth (ft.)	Down Rigger, Confirmation Measurements (ft.)	Clam Sampler	Comments:
18+40	78			
17+40	80			
16+40	84			
15+40	104			
14+40	116			
13+40	118			
13+20	118			
13+00	120			
12+80	121			
12+60	120			
12+40	121			
12+20	128			
12+00	129			
11+80	130			
11+60	131			
11+40	127			
11+00	80			
10+60	76			

GROUNDWATER MITIGATION CONTROL SYSTEM, SAUGET AREA 2

Date: 3/23

Approximate time of depth measurements:

3/23 3/24 A.M.

STATION	Trench Depth (ft.)	Down Rigger, Confirmation Measurements (ft.)	Clam Sampler	Comments:
10+60	89	93		
11+00	93	102		
11+40	125	128		
11+60	131	130		
11+80	131	128		
~~12+00~~	129	129		
~~12+20~~	126	128		
~~12+40~~	128	120		
12+60	123	(3/23 128') 118		
12+80	108	(3/23 125') 120		
13+00	107	(3/23 125') 120		
13+20	107	(3/23 125') 125'		
13+40	107	(3/23 120') 120		
14+40	96	100		
15+40	93	97		
16+40	86	85		
17+40	80	78		
18+40	78	75		

GROUNDWATER MITIGATION CONTROL SYSTEM, SAUGET AREA 2

Date: 3/22/04

Approximate time of depth measurements:

AM PM

STATION	Trench Depth (ft.)	~~Down Rigger, Confirmation~~ Measurements (ft.)	3/23 Clam Sampler	Comments:
10+60	91	88	89	COMPARISON SOUNDING
11+00	67	111	93	AM - PM
11+40	114	127	125	
11+60	112	131	131	
11+80	115	132	131	
12+00	114	133	129	
12+20	112	130	126	
12+40	111	132	128	
12+60	108	120	123	
12+80	105	108	108	
13+00	109	108	107	
13+20	107	107	107	
13+40	107	106	107	
14+40	99	98	96	
15+40	97	96	93	
16+40	85	84	86	
17+40	78	76	80	
18+40	75	78	78	
19+40	64	68		
20+40	52	53		
21+40	42	46		
22+40	37	35		
23+40	20	21		
2400	3	4		
16+40				

GROUNDWATER MITIGATION CONTROL SYSTEM, SAUGET AREA 2

Date: 3/22/04

Approximate time of depth measurements:

AM P.M

STATION	Trench Depth (ft.)	~~Down Rigger, Confirmation~~ Measurements (ft.)	Clam Sampler	Comments:
10+60	91	88		COMPARISON SOUNDING AM - PM
11+00	67	111		
11+40	114	127		
11+60	112	131		
11+80	115	132		
12+00	114	133		
12+20	112	130		
12+40	111	132		
12+60	108	120		
12+80	105	108		
13+00	109	108		
13+20	107	107		
13+40	107	106		
14+40	99	98		
15+40	97	96		
16+40	85	84		
17+40	78	76		
18+40	75	78		
19+40	64	68		
20+40	52	53		
21+40	42	46		
22+40	37	35		
23+40	20	21		
2400	3	4		

GROUNDWATER MITIGATION CONTROL SYSTEM, SAUGET AREA 2

Date: 3/18/04

Approximate time of depth measurements:

STATION	Trench Depth (ft.)	Down Rigger, Confirmation Measurements (ft.)	Clam Sampler	Comments:
	UNIT WEIGHT	PCF WET		
12+40	105.0			
13+00	102.0			
13+40	102.5			
14+40	98			
15+40	101			
16+40	100.5			
17+00	103			
18+40	104			
19+40	96			
20+40	101.0			
21+40	95			
22+40	117			
23+40	116.5			
BACKFILL	125			

GROUNDWATER MITIGATION CONTROL SYSTEM, SAUGET AREA 2

Date: 3/17/04

Approximate time of depth measurements:

STATION	Trench Depth (ft.)	Down Rigger, Confirmation Measurements (ft.)	Clam Rig. ~~Clam Sampler~~	Comments:
#1 12+40	BOAT W. 111'	= 33.8m SAMPLE	~~44.3~~ → N/A	DID NOT ZERO.
#2 13+40	BOAT W. 108 / PIN 107	= 32.9m. SAMPLE	38.9m / 127.6'	
14+40	PIN 98			
15+40	PIN 98			
13+00	———	———	38.5m / 126.3'	
SAMPLE #1	98 PCF MUD BALANCE IN DENSITY.			
	40% SOLIDS			
SAMPLE #2	101 PCF UNIT WEIGHT W DENSITY.			
	SAND > 20% → UP TO 50%			
	FT, m			
	DOWN FILLER /	RIG		
13+00	104 / 31.7	38.3	125.6	
14+40	93 / 28.4m	30.9	121.0	
15+40	96 / 29.3m	~~32~~ 29	107.9	
16+40	82 / 25	~~30~~ 29	~~87~~ 95	
17+40	78 / 23.8	27.5	90.2	
18+40	~~86~~ / 23.2			
19+40	67 / 20.4			
20+40	54 / 16.5			
21+40	42 / 12.8			
22+40	35 / 10.7			
23+40	17 / 5.2			

SAMPLE L. USE PIN.

- PROFILE TRENCH
- CLAM SAMPLE
- DROP CLOSE CLAM.

GROUNDWATER MITIGATION CONTROL SYSTEM, SAUGET AREA 2

Date: 3/16/04

Approximate time of depth measurements: P.M.

STATION	Trench Depth (ft.)	Down Rigger, Confirmation Measurements (ft.)	Clam Sampler	Comments:
10+60	95			
11+40	123			
11+60	clam			
11+80	110			
12+00	112			
12+20	111			
12+40	111			
12+60	112			
12+80	105			
13+00	108			
13+20	110			
13+40	104			
14+40	98			
15+40	96			
16+40	85			
17+40	79			
18+40	76			
19+40	63			
20+40	50			
21+40	40			
22+40	35			
23+40	17			
24+00	7			

Groundwater Mitigation Control System, Sauget Area 2 Trench Profile During Temporary Shutdown							
Date:	02/13/04	02/17/04	02/20/04	02/27/04	03/01/04	03/02/04	03/05/04
STATION	Trench Depth (ft.)	Trench Depth (ft.)	Trench Depth (ft.)	Trench Depth (ft.)	Trench Depth (ft.)	Trench Depth (ft.)	Trench Depth (ft.)
10+70	112	109	109	108	111	108	109
10+90	117	116	115	110	114	110	110
11+30	124	123	120	105	112	105	112
11+40	124	123	125	120	124	120	120
12+40	129	129	128	126	128	125	127
13+40	122	122	123	118	120	120	120
14+40	109	113	113	107	108	115	109
15+40	106	105	105	92	117	107	105
16+40	94	92	93	97	98	95	93
17+40	82	85	85	87	87	82	85
18+40	70	69	69	70	85	78	78
19+40	68	68	67	68	62	60	67
20+40	55	53	55	55	56	56	56
21+40	40	40	41	43	43	45	43
COMMENTS: 1.) 2/27/04 trench profile appeared questionable during review. A new trench profile was requested on Monday 3/1/04.							
Date:							
STATION	Trench Depth (ft.)						
10+70							
10+90							
11+30							
11+40							
12+40							
13+40							
14+40							
15+40							
16+40							
17+40							
18+40							
19+40							
20+40							
21+40							

GROUNDWATER MITIGATION CONTROL SYSTEM, SAUGET AREA 2

Date: 3/12/04

Approximate time of depth measurements: PM

STATION	Trench Depth (ft.)	Down Rigger, Confirmation Measurements (ft.)	Clam Sampler	Comments:
10+00	95			
10+80	111			
11+00	118			
11+20	117			
11+40	118			

Groundwater Mitigation Control System, Sauget Area 2 Trench Profile During Temporary Shutdown							
Date:	02/13/04	02/17/04	02/20/04	02/27/04			
STATION	Trench Depth (ft.)	Trench Depth (ft.)	Trench Depth (ft.)	Trench Depth (ft.)	Trench Depth (ft.)	Trench Depth (ft.)	Trench Depth (ft.)
10+70	112	109	109	108			
10+90	117	116	115	110			
11+30	124	123	120	105			
11+40	124	123	125	120			
12+40	129	129	128	126			
13+40	122	122	123	118			
14+40	109	113	113	107			
15+40	106	105	105	92			
16+40	94	92	93	97			
17+40	82	85	85	87			
18+40	70	69	69	70			
19+40	68	68	67	68			
20+40	55	53	55	55			
21+40	40	40	41	43			

GROUNDWATER MITIGATION CONTROL SYSTEM, SAUGET AREA 2

Date: 3/8/04

Approximate time of depth measurements: A.M.

STATION	Trench Depth (ft.)	Down Rigger, Confirmation Measurements (ft.)	Clam Sampler	Comments:
10+60	115			
11+00	100			
11+20	111			
11+40	123			
11+60	118			
11+80	122			
12+00	120			
12+20	123			
12+40	128			
12+60	126			
12+80	120			
13+00	115			
14+00	94			
15+00	96			
16+00	75			
17+00	84			
18+00	70			
19+00	58			
20+00	46			
21+00	47			
22+00	30			
23+00	41			
24+00	5			

GROUNDWATER MITIGATION CONTROL SYSTEM, SAUGET AREA 2

Date: 2/17/04

TRENCH PROFILE DURING SHUTDOWN PERIOD.

Approximate time of depth measurements: Am

STATION	Trench Depth (ft.)	Down Rigger, Confirmation Measurements (ft.)	Clam Sampler	Comments:
21+40	40			NOTE: R. SCHERRER
20+40	53			SUBTRACTED 1' TO CORRECT
19+40	68			BROKEN DOWN RIGGER.
18+40	69			INQUIP PLANS TO HAVE
17+40	85			DOWN RIGGER REPAIRED
16+40	92			BY FRIDAY.
15+40	105			
14+40	113			
13+40	122			
12+40	129			
11+40	123			
11+30	123			
10+90	116			
10+70	109			

GROUNDWATER MITIGATION CONTROL SYSTEM, SAUGET AREA 2

Date: 2/13/04

TRENCH PROFILE DURING SHUT DOWN PERIOD.

Approximate time of depth measurements: Am

STATION	Trench Depth (ft.)	Down Rigger, Confirmation Measurements (ft.)	Clam Sampler	Comments:
10+70	112			
10+90	117			
11+30	124			
11+40	124			
12+40	129			
13+40	122			
14+40	109			
15+40	106			
16+40	94			
17+40	82			
18+40	70			
19+40	68			
20+40	55			
21+40	40			

GROUNDWATER MITIGATION CONTROL SYSTEM, SAUGET AREA 2

Date: 1/23/04 Am

Approximate time of depth measurements: Am

STATION	Trench Depth (ft.)	Down Rigger, Confirmation Measurements (ft.)	Clam Sampler	Comments:
10+60	126			
11+40	135			
11+60	134			
11+80	133			
12+00	133			
12+20	132			
12+40	131			
12+60	128 ~~130~~			
12+80	125			
13+00	125			
13+20	122			
13+40	120			
14+40	115			
15+40	107		16+00	BACKFILL CLAM SAMPLES
16+40	96		16+40	OBSERVED TO BE FREE OF
17+40	82			SEDIMENTS.
18+40	75			
19+40	68			
20+40	55			12+00
21+40	43			HUB EL. 422.42
22+40	28			BOARD TO HUB +.40
~~23+40~~	16			BOARD TO SLURRY -2.67
				SLURRY EL. 420.2
12+20	41.09 134.8			
12+10	41.04 134.6			
12+00	41.07 134.7	134.5		
11+90	41.16 135.0			
11+80	41.08 134.7			
11+70	40.99 134.4			
11+60	40.94 134.3			
11+50	40.92 134.2			
11+40	40.80 133.8			

GROUNDWATER MITIGATION CONTROL SYSTEM, SAUGET AREA 2

Date: 1/22/04

Approximate time of depth measurements: AM

STATION	Trench Depth (ft.)	Down Rigger, Confirmation Measurements (ft.)	Clam Sampler	Comments:
10+60	124			
11+00	106			
11+20	128			
11+40	134			
11+60	134			
11+80	134			
12+00	133			
12+20	133			
12+40	130			
12+60	126			
12+80	125			
13+00	125			
14+00	117			
15+00	110			BARREL CLAM SAMPLES
16+00	102		15+10	OBSERVED TO BE FREE
17+00	90		15+60	OF SEDIMENTS
18+00	78			
19+00	72			
20+00	60			
21+00	48			
22+00	38			
23+00	25			
24+00	8			12+20
				HUB 422.32
12+30	40.88 134.1			HUB TO BOARD +.416
12+90	41.08 134.7	133.5		BOARD TO SLURRY -2.54
12+10	41.04 134.6			SLURRY EL. 420.24
12+00	41.10 134.8	134		
11+90	41.11 134.8			
11+80	41.0 134.5			
11+70	40.80 133.8			SOUTHWEST CORNER
11+60	40.90 134.2			
11+50	40.91 134.2			10+60 124
11+40	40.80 133.8			10+70 125
				10+80 127
				10+90 128
				11+00 130
				11+10 108
				11+20 110
				11+30 105

GROUNDWATER MITIGATION CONTROL SYSTEM, SAUGET AREA 2

Date: 1/21/04

Approximate time of depth measurements: A.M.

STATION	Trench Depth (ft.)	Down Rigger, Confirmation Measurements (ft.)	Clam Sampler	Comments:
10+60	110			
11+40	92			
11+60	126			
11+80	135			
12+00	132			
12+20	130			
12+40	128			
12+60	128			
12+80	126			
13+00	125			
13+20	124			
13+40	122			
14+40	115			BACKFILL CLAM SAMPLES
15+40	108		14+40	OBSERVED TO BE FREE
16+40	97		14+80	OF SEDIMENTS.
17+40	88			
18+40	80			
19+40	70			
20+40	60			
21+40	45			
22+40	26			
23+40	82			
24+40	0			
12+50	41.09 134.8			
12+40	41.08 134.7			12+30
12+30	40.93 134.3	134		HUB EL. 422.32
12+20	40.97 134.4			HUB TO BOARD +.42
12+10	41.00 134.5			BOARD TO SLURRY - 2.0'
12+00	40.94 134.3			SLURRY EL. 420.74
11+90	40.94 134.3			
				SOUTHWEST CORNER
				11+00 87'

GROUNDWATER MITIGATION CONTROL SYSTEM, SAUGET AREA 2

Date: 1/20/04

Approximate time of depth measurements: AM

STATION	Trench Depth (ft.)	Down Rigger, Confirmation Measurements (ft.)	Clam Sampler	Comments:
10+60	109			
11+00	109			
12+00	130			
12+20	131			
12+40	132			
12+60	134			
12+80	133			
13+00	132			
13+20	130			
13+40	125			
13+60	125			
13+80	121			
14+00	122			
15+00	114		14+60	CLAM SAMPLES OBSERVED
16+00	105		14+80	TO BE FREE OF
17+00	95			SEDIMENTS
18+00	84			
19+00	78			
20+00	68			
21+00	53			
22+00	39			
23+00	27			
24+00	10			
				12+60
13+00	41.21 135.2			HUB EL. 422.52
12+90	41.18 135.1	135		HUB TO BOARD +.333
12+80	41.20 135.1			BOARD TO SLURRY - 2.69
12+70	41.17 135.0			SLURRY EL 420.16
12+60	41.07 134.7			
12+50	41.10 134.8			
12+40	41.11 134.8			SOUTH WEST CORNER
				10+80 110
				11+20 110

GROUNDWATER MITIGATION CONTROL SYSTEM, SAUGET AREA 2

Date: 1/19/04

Approximate time of depth measurements: Am

STATION	Trench Depth (ft.)	Down Rigger, Confirmation Measurements (ft.)	Clam Sampler	Comments:
10+60	109			
11+00	109			
12+00	126			
12+20	129			
12+40	127			
12+60	133			
12+80	133			
13+00	133			
13+20	129			
13+40	123			
13+60	126			
13+80	122			
14+00	120			BACKFILL CLAM SAMPLES
15+00	114		15+80	OBSERVED TO BE FREE
16+00	105		15+40	OF SEDIMENTS.
17+00	90			
18+00	87			
19+00	80			
20+00	68			12+90
21+00	55			HUB EL. 422.47
22+00	43			HUB TO BOARD, +.35'
23+00	26			BOARD TO SLURRY - 2.5'
24+00	10			SLURRY EL. 420.32
24+40	3			
13+00	41.31 135.5			
12+90	41.13 134.9	135.5		
12+80	41.01 134.5			
12+70	41.08 134.7			SOUTHWEST
12+60	41.00 134.5			CORNER
12+50	41.06 134.7			10+80 110
12+40	40.86 134.0			11+20 110

GROUNDWATER MITIGATION CONTROL SYSTEM, SAUGET AREA 2

Date: 1/16/04

Approximate time of depth measurements: A.M.

STATION	Trench Depth (ft.)	Down Rigger, Confirmation Measurements (ft.)	Clam Sampler	Comments:
10+60	108			
11+00	106			
12+00	126			
12+20	134			
12+40	131			
12+60	129			
12+80	128			
13+00	130			
13+20	128			
13+40	126			
13+60	124			
13+80	121			
14+00	120			
15+00	113		14+40	CLAM SAMPLES OBSERVED
16+00	105		14+60	TO BE FREE OF
17+00	97			SEDIMENTS
18+00	90			
19+00	80			
20+00	69			
21+00	56			
22+00	43			
23+00	32			
24+00	16			
24+80	2			
				12+80
13+00	41.27 135.4			HUB EL. 422.47
12+90	41.23 135.2			HUB TO BOARD ~~41.5~~ +.375
12+80	41.24 135.3			BOARD TO SLURRY - 2.25
12+70	41.27 135.4	135.0		SLURRY EL. 420.59
12+60	41.10 134.8			
12+50	41.13 134.9			
10+60	108			
10+70	108			
10+80	106			
10+90	110			
11+00	106			

GROUNDWATER MITIGATION CONTROL SYSTEM, SAUGET AREA 2

Date: 1/15/04

Approximate time of depth measurements: A.M.

STATION	Trench Depth (ft.)	Down Rigger, Confirmation Measurements (ft.)	Clam Sampler	Comments:
10+60	110			
11+40	105			
12+40	~~135~~			
12+60	127			
12+80	132			
13+00	134			
13+20	135	135.5		
13+40	129			
13+60	130			
13+80	126			
14+00	125			
14+20	122			
14+40	120			
15+40	115			CLAM SAMPLES OBSERVED
16+40	105		16+60	TO BE FREE OF
17+40	97 ~~90~~		17+00	SEDIMENTS
18+40	83			
19+40	80			
20+40	67			
21+40	53			
22+40	41			
23+40	25			
24+40	10			
24+80	3			
13+30	40.96 134.3			13+20
13+20	41.22 135.2	135.5		HUB EL. 422.44
13+10	41.21 135.2			HUB TO BOARD +.5
13+00	41.27 135.4			BOARD TO SLURRY -2.58'
12+90	41.14 134.9			SLURRY EL. 420.36

GROUNDWATER MITIGATION CONTROL SYSTEM, SAUGET AREA 2

Date: 1/14/04

Approximate time of depth measurements: Am

STATION	Trench Depth (ft.)	Down Rigger, Confirmation Measurements (ft.)	Clam Sampler	Comments:
10+60	110			
11+40	105			
12+40	131			
12+60	128			
12+80	128			
13+00	132			
13+20	134			
13+40	132			
13+60	128			
13+80	125			
14+00	124			
14+20	122			
14+40	120			BACKFILL CLAM SAMPLES OBSERVED TO BE FREE OF SEDIMENTS.
15+40	115			
16+40	104			
17+40	96		17+30	
18+40	80		17+80	
19+40	79			13+30
20+40	69			HUB EL. 422.46
21+40	58			HUB TO BOARD +.46
22+40	42			BOARD TO SLURRY -2.21
23+40	28			SLURRY EL. 420.71
24+40	7			
24+80	3			
13+30	41.31 135.5			10+60 110'
13+20	41.29 135.4	134.5		10+70 110' 10'
13+10	41.19 135.1			10+80 112' 20'
13+00	41.14 134.9	134.0		10+90 113' 30'
12+90	41.01 134.5			11+00 112' 40'
				11+10 114' 50'
				11+20 112' 60'
				11+30 106' 70'
				12+00 83'

GROUNDWATER MITIGATION CONTROL SYSTEM, SAUGET AREA 2

Date: 1/13/04

Approximate time of depth measurements: A.M.

STATION	Trench Depth (ft.)	Down Rigger, Confirmation Measurements (ft.)	Clam Sampler	Comments:
10+60	110			
11+40	102			
12+40	125			
12+60	126			
12+80	127			
13+00	134			
13+20	133			
13+40	129			
13+60	135			
13+80	130			
14+00	128			
14+20	125			
14+40	123			
15+40	120			
16+40	105			
17+40	96			
18+40	90		18+00	BACKFILL CLAM SAMPLES
19+40	82		18+40	OBSERVED TO BE FREE OF
20+40	70			SEDIMENTS
21+40	55			
22+40	47			
23+40	30			
24+40	8			
25+00	3			
13+50	41.12	134.9		
13+40	41.12	134.9		
13+30	41.46	136.0	135.0	
13+20	41.56	136.3		
13+10	41.02	134.5		
13+00	40.99	134.4	134.0	

GROUNDWATER MITIGATION CONTROL SYSTEM, SAUGET AREA 2

Date: 8/12/04

Approximate time of depth measurements:

STATION	Trench Depth (ft.)	Down Rigger, Confirmation Measurements (ft.)	Clam Sampler	Comments:
10+60	110			
11+00	111			
12+00	69			
13+00	127			
13+20	121			
13+40	125			
13+60	129			
13+80	130			
14+00	128			
14+20	125			
14+40	122			
14+60	122			
14+80	122			
15+00	119			
16+00	111			
17+00	101			BACKFILL CLAM SAMPLES OBSERVED TO BE FREE OF SEDIMENTS
18+00	94		18+60	
19+00	87		18+20	
20+00	76			
21+00	63			13+60
22+00	51			HUB EL. 422.76
23+00	40			HUB TO BOARD + .33
24+00	27			BOARD TO SLURRY - 2.56'
25+00	6			SLURRY EL. 420.51
13+70	41.05 134.6			
13+60	41.17 135.0	135.5		
13+50	41.18 135.0			
13+40	40.95 134.3			SOUTHWEST CORNER
13+30	40.92 134.2	134.0		10+60 110
13+20	40.82 133.9		+10'	10+70 110
13+10	40.8 133.8		+20'	10+80 112
13+00	40.9 134.2		+30'	10+90 111
			+40'	11+00 111
			+50'	11+10 111
			+60'	11+20 112
			+70'	11+30 105

Date: 1/9/04

GROUNDWATER MITIGATION CONTROL SYSTEM, SAUGET AREA 2

Approximate time of depth measurements: AM.

STATION	Trench Depth (ft.)	Down Rigger, Confirmation Measurements (ft.)	Clam Sampler	Comments:
10+60	111			
11+00	108			
12+00	69			
13+00	123			
13+20	122			
13+40	120			
13+60	125			
13+80	125			
14+00	128			
14+20	129			
14+40	129			
14+60	128			
14+80	125			
15+00	122			
16+00	113			
17+00	104			
18+00	98			
19+00	87			BACKFILL CLAM SAMPLES
20+00	78		19+00	OBSERVED TO BE FREE OF
21+00	65		19+50	SEDIMENTS.
22+00	54			
23+00	40			
24+00	27			
25+00	7			
				13+80
14+00	41.24 135.3			HUB EL. 423.16
13+90	41.25 135.3			HUB TO BOARD +0.0
13+80	40.97 134.4	134.0		BOARD TO SLURRY - 2.5'
13+70	41.0 134.5			SLURRY EL. = 420.66
13+60	41.29 135.4			
13+50	41.21 135.2			
13+40	41.34 135.6			
				10+60 111 SOUTHWEST
				+10' 112 CORNER
				+20' 113
				+30' 110
				+40' 108
				+50' 116
				+60' 107
				+70' 107

GROUNDWATER MITIGATION CONTROL SYSTEM, SAUGET AREA 2

Date: 11/8/04

Approximate time of depth measurements: A.M.

STATION	Trench Depth (ft.)	Down Rigger, Confirmation Measurements (ft.)	Clam Sampler	Comments:
10+60	110			
11+40	107			
12+40	110			
13+40	123			
13+60	119			
13+80	126			
14+00	129			
14+20	130			
14+40	130			
14+60	131			
14+80	130			
15+00	128			
15+20	125			
15+40	124			
16+40	112			
17+40	104			
18+40	94			
19+40	85			BACKFILL CLAM SAMPLES
20+40	72		20+00	OBSERVED TO BE FREE OF
21+40	62		20+50	SEDIMENTS
22+40	51			
23+40	37			
24+40	7			14+30
25+20	6			HUB EL. 422.94
				HUB TO BOARD +.65
				BOARD TO SLURRY -2.71
14+40	40.96	134.3		SLURRY EL. 420.9
14+30	40.90	134.2		
14+20	40.86	134.0	134.5	
14+10	41.06	134.7	134.0	
14+00	40.81	133.9		
13+90	40.90	134.2		

GROUNDWATER MITIGATION CONTROL SYSTEM, SAUGET AREA 2

Date: 1/7/04

Approximate time of depth measurements: A.M.

STATION	Trench Depth (ft.)	Down Rigger, Confirmation Measurements (ft.)	Clam Sampler	Comments:
10+60	*			* NOTE: DOWN RIGGER CABLE BROKE. THESE MEASUREMENTS WERE NOT TAKEN TODAY.
11+60	*			
12+60	130			
13+00	125			
13+80	127			
14+00	130			
14+20	130			
14+40	130			
14+60	128			
14+80	131			
15+00	127			
15+20	128			
15+40	125			
15+60	123			
16+60	112			
17+60	105			
18+60	95			
19+60	86			
20+60	73			BACKFILL CLAM SAMPLES OBSERVED TO BE FREE OF SEDIMENTS.
21+60	63		21+00	
22+60	51		21+60	
23+60	35			
24+60	18			14+60
25+40	5			HUB EL. 422.95
				HUB TO BOARD +.46
14+70	41.21 / 135.2	*		BOARD TO SLURRY = 2.54
14+60	41.21 / 135.2			SLURRY EL. 420.87
14+50	40.73 / 133.6			
14+40	40.92 / 134.2			
14+30	40.80 / 133.8			

Date: 1/6/04 GROUNDWATER MITIGATION CONTROL SYSTEM, SAUGET AREA 2

Approximate time of depth measurements: A.M.

STATION	Trench Depth (ft.)	Down Rigger, Confirmation Measurements (ft.)	Clam Sampler	Comments:
10+60 EOT	113			
+10'	115			
+20'	116			
+30'	112			
+40'	111			
+50'	115			
+60'	114			
+70'	109			

Date: 1/5/04 GROUNDWATER MITIGATION CONTROL SYSTEM, SAUGET AREA 2

Approximate time of depth measurements: A.M

STATION	Trench Depth (ft.)	Down Rigger, Confirmation Measurements (ft.)	Clam Sampler	Comments:
10+60	114			
11+60	66			
12+60	81			
13+60	126			
13+80	127			
14+00	130			
14+20	130			
14+40	130			
14+60	130			
14+80	128			
15+00	129			
15+20	128			
15+40	126			
15+60	122			
16+60	107			
17+60	103			
18+60	96			
19+60	87			
20+60	74			
21+60	63			
22+60	51			
23+60	37			
24+60	19			
25+40	5			

Date: 1/2/04

GROUNDWATER MITIGATION CONTROL SYSTEM, SAUGET AREA 2

Approximate time of depth measurements: A.M.

STATION	Trench Depth (ft.)	Down Rigger, Confirmation Measurements (ft.)	Clam Sampler	Comments:
10+60	116			
11+60	166			
12+60	80			
13+60	134			
13+80	129			
14+00	128			
14+20	130			
14+40	131			
14+60	134			
14+80	132			
15+00	131			
15+20	130			
15+40	128			
15+60	124			
16+60	112			
17+60	105			
18+60	95			
19+60	86			
20+60	73			
21+60	62			
22+60	52			
23+60	35			
24+60	18			
25+40	6			

Jan	
Feb	
Mar	
Apr	
May	
June	
July	
Aug	
Sep	
Oct	
Nov	
Dec	
Year End	2003

wilsonjones.

www.wilsonjones.com

W124505-TPM

GROUNDWATER MITIGATION CONTROL SYSTEM, SAUGET AREA 2

Date: 12/30/03

Approximate time of depth measurements: AM

STATION	Trench Depth (ft.)	Down Rigger, Confirmation Measurements (ft.)	Clam Sampler	Comments:
10+50	113			
11+00	118			
12+00	70			
13+00	132			
14+00	130			
14+20	129			
14+40	129			
14+60	125			
14+80	128			
15+00	133			
15+20	134			
15+40	132			
15+60	127			
15+80	118			
16+00	113			
17+00	108			
18+00	103			
19+00	92			
20+00	83			
21+00	71			BACKFILL CLAM SAMPLES
22+00	60		21+40	OBSERVED TO BE FREE
23+00	47		21+80	OF SEDIMENTS
24+00	32			
25+00	13			
25+40	6			
				15+15
15+10	41.61 136.5			HUB EL. 423.38
15+00	41.43 135.9			HUB TO BOARD +.33'
14+90	41.49 136.1	135.5		BOARD TO SLURRY - 2.75'
14+80	41.21 135.2	136.0		SLURRY EL. 420.96
14+70	41.16 135.0			
14+60	41.34 135.6			
14+50	41.16 135.0			

GROUNDWATER MITIGATION CONTROL SYSTEM, SAUGET AREA 2

Date: 12/29/03

Approximate time of depth measurements: AM.

STATION	Trench Depth (ft.)	Down Rigger, Confirmation Measurements (ft.)	Clam Sampler	Comments:
10+40	115			
11+40	113			
12+40	87			
13+40	127			
14+40	130			
14+60	125			
14+80	125			
15+00	127			
15+20	120			
15+40	122			
15+60	123			
15+80	120			
16+00	112			
16+20	110			
16+40	115			
17+40	105			
18+40	100			BACKFILL CLAM SAMPLES OBSERVED TO BE FREE OF SEDIMENTS
19+40	92		19+90	
20+40	80			
21+40	68		21+00	
22+40	58			
23+40	45			15+40
24+40	29			HUB EL. 422.87
25+40	11			BOARD TO HUB +.75'
25+80	5			BOARD TO SLURRY - 2.33'
				SLURRY EL. 421.29
15+40	41.71 / 136.8	1ST 133 / 2ND 137		NOTES: 1ST DOWN RIGGER
15+30	41.55 / 136.3	1ST 134 / 2ND 136		READINGS INDICATED ± 3' OF
15+20	41.43 / 135.9			MATERIAL REMAINING ON TRENCH
15+10	41.53 / 136.2			BOTTOM. INSOUP RECLAIMED
15+00	41.48 / 136.1	1360		AGAIN. END DOWN RIGGER
				READINGS APPEARED GOOD.

GROUNDWATER MITIGATION CONTROL SYSTEM, SAUGET AREA 2

Date: 12/24/03

Approximate time of depth measurements: A.M.

STATION	Trench Depth (ft.)	Down Rigger, Confirmation Measurements (ft.)	Clam Sampler	Comments:
10+60 EOT	123			
11+00	125			
12+00	74			
13+00	110			
13+20	128			
13+40	133			
13+60	135			
13+80	130			
14+00	132			
14+20	131			
14+40	130			
14+60	130			
14+80	132			
15+00	129			
16+00	115			
17+00	115			
18+00	105			
19+00	95			
20+00	84			
21+00	73			
22+00	63			
23+00	50			
24+00	35			
25+00	18			
26+00 EOT	2			

2 of 2

GROUNDWATER MITIGATION CONTROL SYSTEM, SAUGET AREA 2

Date: 12/22/03

Approximate time of depth measurements: A.M.

STATION	Trench Depth (ft.)	Down Rigger, Confirmation Measurements (ft.)	Clam Sampler	Comments:
10+60	118			
11+60	67			
12+60	80			
12+80	135			
13+00	110			
13+20	127			
13+40	129		19+40	CLAM SAMPLES APPEAR TO BE
13+60	131			FREE OF SEDIMENTARY
13+80	131		19+00	MATERIAL.
14+00	130			
14+20	131			
14+40	130			
14+60	128			
15+60	127			
16+60	122			15+80 HUB EL 422.03'
17+60	112			HUB TO BOARD -.33'
18+60	98			BOARD TO SURFACE +2.33'
19+60	93			SURFACE EL. @ 420.03
20+60	80			
21+60	70			
22+60	58			
23+60	45			
24+60	28			
25+60	12			
26+20	2			
13+60	41.29	135.4		
13+50	41.28	135.4		
13+40	41.54	136.3	136.0	

12/22/03 BATCH REPORT

GROUNDWATER MITIGATION CONTROL SYSTEM, SAUGET AREA 2

Date: 12/17/03

Approximate time of depth measurements: A.M.

STATION	Trench Depth (ft.)	Down Rigger, Confirmation Measurements (ft.)	Clam Sampler	Comments:
10+50 EOT	128			
11+40	132			
12+40	82			
13+40	130			
14+40	130			
14+60	130			
14+80	130			
15+00	128			
15+20	126			
15+40	130			
15+60	128			
15+80	125			
16+00	126			
16+20	124			
16+40	123			
17+40	113			
18+40	102			
19+40	94			
20+40	82			
21+40	71			
22+40	59			
23+40	47			
24+40	37			
25+40	15			
26+20 EOT	3			
71				
8				

GROUNDWATER MITIGATION CONTROL SYSTEM, SAUGET AREA 2

Date: 12/16/03

Approximate time of depth measurements: Am

STATION	Trench Depth (ft.)	Down Rigger, Confirmation Measurements (ft.)	Clam Sampler	Comments:
12+80	111			
13+80	131			
14+80	130			
15+00	129			
15+20	129			
15+40	129			
15+60	129			
15+80	131			
16+00	130			
16+20	129			
16+40	112 ? (MAY BE 122)			BACKFILL CLAM SAMPLES
16+60	123		16+60	OBSERVED TO BE FREE OF
16+80	123		17+00	SEDIMENTS.
17+80	114			
18+80	102			15+60 HUB EL. 422.98
19+80	92			HUB TO BOARD +.50
20+80	81			BOARD TO SLURRY -1.96
21+80	70			SLURRY EL. 421.52
22+80	58			TAKEN THIS MORNING
23+80	39			
24+80	29			
25+80	12			
26+60	2			
11+80	74			
10+80	30			
10+50	130	END OF TRENCH		
15+90	41.38 135.7			15+80
15+80	41.45 136.0	136.5		HUB EL. 423.03
15+70	41.5 136.1			HUB TO BOARD +.21
15+60	41.54 136.3			BOARD TO SLURRY -2.21
15+50	41.60 136.7			SLURRY EL. 421.0
15+40	41.60 136.4	136.0		THIS AFTERNOON
15+30	41.45 136.0	135.5		

GROUNDWATER MITIGATION CONTROL SYSTEM, SAUGET AREA 2

Date: 12/15/03

Approximate time of depth measurements: Am.

STATION	Trench Depth (ft.)	Down Rigger, Confirmation Measurements (ft.)	Clam Sampler	Comments:
EOT	134 ← 108			
11+20	810			
12+20	74			
13+20	843 CLAM			
14+20	133			
15+20	126			
15+40	131			
15+60	134			
15+80	138			
16+00	135			
16+20	131			BACKFILL CLAM SAMPLES
16+40	130			OBSERVED TO BE FREE OF
16+60	125			SEDIMENTS.
16+80	124			
17+00	122			
17+20	120			16+00
18+20	108		18+00	HUBEL. 423.18
19+20	99		18+80	HUB TO BOARD +.521
20+20	89			BOARD TO SLURRY -2.75
21+20	80			SLURRY EL. ± 420.95
22+20	68			
23+20	58			
24+20	43			
25+20	29			
26+20	12			
26+80	1			
16+20	41.65 / 136.6			
16+10	41.64 / 136.6			
16+00	41.46 / 136.0	135.5		
15+80	41.52 / 136.2			

GROUNDWATER MITIGATION CONTROL SYSTEM, SAUGET AREA 2

te: 12/12/03

Approximate time of depth measurements: A.M.

STATION	Trench Depth (ft.)	Down Rigger, Confirmation Measurements (ft.)	Clam Sampler	Comments:
11+20	21			
12+20	73			
13+20	82			
14+20	133			
15+20	130			
15+40	130			
15+60	134			
15+80	134			
16+00	135			
16+20	134 → TOE			
16+40	131			
16+60	128			
16+80	127			
17+00	123			BACKFILL CLAM SAMPLES
17+20	122		17+35	OBSERVED TO BE FREE OF
18+20	117		16+70	SEDIMENTS.
19+20	104			
20+20	93			
21+20	82			
22+20	74			16+10
23+20	62			HUB EL. 423.10
24+20	47			BOARD TO HUB 5"
25+20	33			BOARD TO SLURRY 29"
26+20	17			SLURRY EL. = 429.10
27+00	3			
16+30	41.64	136.6		
16+20	41.60	136.4		
16+10	41.56	136.3	136.0	
16+00	41.55	136.3		

GROUNDWATER MITIGATION CONTROL SYSTEM, SAUGET AREA 2

ate: 12/11/03

Approximate time of depth measurements: AM

STATION	Trench Depth (ft.)	Down Rigger, Confirmation Measurements (ft.)	Clam Sampler	Comments:
11+20	22			
12+20	73			
13+20	82			
14+20	130			
15+20	130			
15+40	130			
15+60	135			
15+80	132			
16+00	136			
16+20	134			
16+40	133			
16+60	133			
16+80	128			
17+00	128			
17+20	123			BACKFILL CLAM SAMPLES
18+20	112		18+50	OBSERVED TO BE FREE
19+20	107		19+20	OF SEDIMENTS
20+20	97			
21+20	88			16+20
22+20	78			HUBEL 422.98
23+20	69			HUB TO BOARD +.5
24+20	53			BOARD TO SLURRY -2.54
25+20	35			SLURRY EL 420.94
26+20	18			
27+20	1			
16+40	41.68 130.7			
+30	41.4 135.8			
+20	41.52 130.7	136.0		
+10	41.47 135.9			
+00	41.46 136			

GROUNDWATER MITIGATION CONTROL SYSTEM, SAUGET AREA 2

ıte: 12/10/03

Approximate time of depth measurements: A.M.

STATION	Trench Depth (ft.)	Down Rigger, Confirmation Measurements (ft.)	Clam Sampler	Comments:
11+40	7			
12+40	78			
13+40	73			
14+40	132			
15+40	131			
15+60	133			
15+80	135			
16+00	136			
16+20	136			
16+40	124(?)			
16+60	132			
16+80	130			
17+00	127			
17+20	125			BACKFILL CLAM SAMPLES
17+40	117		18+60	OBSERVED TO BE FREE OF
18+40	114		18+20	SEDIMENTS
19+40	107			
20+40	97			
21+40	88			16+40
22+40	77			HUB EL. 422.55
23+40	66			HUB TO BOARD +.05
24+40	57			BOARD TO SLURRY - 2.25
25+40	37			EL. OF SLURRY = 421.35
26+40	20			
27+20	3			16+00
				HUB EL. 423.17
16+50	41.4 135.8			HUB TO BOARD + .15
16+40	41.55 136.3	135.5		BOARD TO SLURRY - 1.92
16+30	41.62 136.5			EL. OF SLURRY = 421.40
16+20	41.52 136.2			
16+10	41.61 136.5			
16+00	41.44 135.9	136.0		
15+90	41.5 136.1			
15+80	41.5 136.1			
15+70	41.52 136.2			
15+60	41.51 136.2			
15+50	41.7 136.8			

GROUNDWATER MITIGATION CONTROL SYSTEM, SAUGET AREA 2

Date: 12/9/03

Approximate time of depth measurements: A.M.

STATION	Trench Depth (ft.)	Down Rigger, Confirmation Measurements (ft.)	Clam Sampler	Comments:
11+90	25			
12+40	70			CLAM SAMPLER BROKE PRIOR TO COMPLETING 2ND SAMPLE.
13+40	82			
14+40	67			
15+40	131			
15+60	134			BACKFILL CLAM SAMPLE OBSERVED TO BE FREE OF SEDIMENTS
15+80	136			
16+00	134			
16+20	135			
16+40	133			
16+60	133			16+40
16+80	133			HUB EL. 422.93
17+00	129			HUB TO BOARD +.33
17+20	126			BOARD TO SLURRY -1.875
17+40	128			EL. OF SLURRY ~~421.39~~ 421.4
18+40	117		19+20	
19+40	110			
20+40	100			16+85
21+40	90			HUB EL. 423.55
22+40	79			HUB TO BOARD +.54
23+40	68			BOARD TO SLURRY -2.667
24+40	54			EL OF SLURRY 421.4
25+40	37			
26+40	22			
27+40	2			
16+60	41.42	135.9		
16+50	41.35	135.6		
16+40	41.45	136	136.5	
16+30	41.55	136.3		
16+20	41.54	136.3		
16+10	41.57	136.3		
16+00	41.57	136.3	136	
15+90	41.42	135.9		
15+80	41.23	135.2		
15+70	41.31	135.5		

GROUNDWATER MITIGATION CONTROL SYSTEM, SAUGET AREA 2

ate: 12/8/03

Approximate time of depth measurements: A.M.

STATION	Trench Depth (ft.)	Down Rigger, Confirmation Measurements (ft.)	Clam Sampler	Comments:
12+20	23			
12+80	72			
13+80	70			
14+80	132			
15+80	133			
16+00	136			
16+20	133			
16+40	132			
16+60	133			
16+80	133			
17+00	131			
17+20	128			
17+40	127			
17+60	125			
17+80	123			
18+00	121			
18+20	118			
18+40	117			BACKFILL CLAM SAMPLES
18+60	116		19+10	OBSERVED TO BE FREE
18+80	113		19+60	OF SEDIMENTS.
19+80	106			
20+80	97			
21+80	88			16+80
22+80	77			HUB EL. 422.57
23+80	65			HUB TO BOARD +.46
24+80	52			BOARD TO SLURR -1.875
25+80	33			EL. OF SLURRY = 421.5
26+80	18			
27+40	5			16+40
				HUB EL. 422.53
16+80	41.42 / 135.9	136.5		HUB TO BOARD +.29
16+70	41.31 / 135.5			BOARD TO SLURRY -1.875
16+60	41.39 / 135.8			EL. OF SLURRY 421.3
16+50	41.21 / 135.2			
16+40	41.18 / 135.1	136.0		
16+30	41.6 / 136.4			
16+20	41.65 / 136.6			
16+10	41.6 / 136.4			
16+00	41.52 / 136.2			
15+90	41.51 / 136.2			

GROUNDWATER MITIGATION CONTROL SYSTEM, SAUGET AREA 2

ate: 12/05/03

Approximate time of depth measurements:

STATION	Trench Depth (ft.)		Down Rigger, Confirmation Measurements (ft.)	Clam Sampler	Comments:
27 + 40	9				
26 + 40		28			
26 + 80	22				
25 + 80		36			
24 + 80	62				
23 + 80		65			
22 + 80	78				
21 + 80		96*			
20 + 80	100			20+60	BACKFILL CLAM SAMPLES
19 + 80		109		19+80	OBSERVED TO BE FREE
18 + 80	113				OF SEDIMENTS.
18 + 60		117			
18 + 46	120				
18 + 20		122			
18 + 00	130				
17 + 80		132			
17 + 60	133				
17 + 40		121			
17 + 20	136				
17 + 00		136			
16 + 80	133				
15 + 86		135			STATION 17+60
14 + 80	133				HUB EL. 422.99
13 + 80		72			HUB TO BOARD 0
12 + 80	65				BOARD TO SLURRY -1.71
12 + 45		23	END TRENCH		SLURRY EL ± 421.28
					STATION 17+20
					HUB EL. 423.41
17 + 70	40.95 m	134.3			HUB TO BOARD 0
17 + 60	41.06	134.6	134.0		BOARD TO SLURRY -2.21
17 + 50	41.19	135.1			SLURRY EL. ± 421.2
17 + 40	40.90	134.1			
17 + 30	41.10	134.8			
17 + 20	41.10	134.8	135.5		
17 + 10	41.10	134.8			
17 + 00	41.10	134.8			
16 + 90	41.00	134.4			
16 + 80	41.00	134.4	135.0		
16 + 70	41.06	134.6			
16 + 60	41.00	134.4			

GROUNDWATER MITIGATION CONTROL SYSTEM, SAUGET AREA 2

Date: 12/04/03

Approximate time of depth measurements:

STATION	Trench Depth (ft.)	Down Rigger, Confirmation Measurements (ft.)	Clam Sampler	Comments:
27 + 40	15			
26 + 40	30			
25 + 40	45			
24 + 40	60			
23 + 40	73		22+60	BACKFILL CLAM SAMPLES
22 + 40	86			OBSERVED TO BE FREE OF
21 + 40	95		21+20	SEDIMENTS
20 + 40	105			
19 + 40	114			
19 + 20	118			
19 + 00	118			
18 + 80	126			
18 + 60	120			
18 + 40	130			
18 + 20	126			
18 + 00	130			TOE OF BACKFILL OBSERVED
17 + 80	132			TO BE BETWEEN 17+80 & 17+60.
17 + 60	135			
17 + 40	134			
17 + 20	135			
17 + 00	135			
16 + 80	135			
16 + 60	133			
15 + 60	135			
14 + 60	67			
13 + 60	75			
12 + 60	26			

GROUNDWATER MITIGATION CONTROL SYSTEM, SAUGET AREA 2

Date: 12/03/03

Approximate time of depth measurements:

REVIEWED 12/03/03 AM. BY R. SCHERRER.

STATION	Trench Depth (ft.)	Down Rigger, Confirmation Measurements (ft.)	Clam Sampler	Comments:
11+30	30	END TRENCH		
12+40	73			
13+40	65			
14+40	135			
15+40	133			
16+40	130			
17+40	120			
17+60	123			
17+80	118			
18+00	117			
18+20	115			
18+40	115			
18+60	113			
18+80	110			
19+00	106			
19+20	105			
19+40	107			
20+40	97			BACKFILL CLAM SAMPLES
21+40	87		21+65	OBSERVED TO BE FREE OF
22+40	75		22+20	SEDIMENTS
23+40	65			
24+40	61			
25+40	56			
26+40	33			17+50 HUB. 422.92
27+40	25			HUB TO BOARD 0
				BOARD TO SLURRY -1.33
				SLURRY EL ± 421.59
17+70	41.07 m	134.7		
17+60	41.00	134.4		17+20 HUB EL. 423.41
17+50	40.90	134.1 135		HUB TO BOARD +.42
17+40	41.20	135.1 135@	±17+45 DOWN RIGGER	BOARD TO SLURRY -2.46
17+30	40.80	133.8		SLURRY EL. ± 421.37
17+20	40.85	133.9 134.5	DOWN RIGGER	
17+10	41.00	134.4		
17+00	41.26	135.1		
16+90	40.70	133.4		
16+80	41.00	134.4		
16+70	40.80	133.8		
16+60	40.80	133.8		

THESE READING WERE TAKEN AT THE WRONG STATIONS. INFORMED INQUIP TO PERFORM A SECOND TRENCH PROFILE.

CLEAN OUT MEASUREMENTS WERE OBSERVED BY R. SCHERRER AND TAKEN AT THE CORRECT LOCATIONS.

RWS 12/3/03

GROUNDWATER MITIGATION CONTROL SYSTEM, SAUGET AREA 2

Date:

Approximate time of depth measurements: 12-3-03 Late Afternoon

STATION	Trench Depth (ft.)	Down Rigger, Confirmation Measurements (ft.)	Clam Sampler	Comments:
27+40	16			AFTERNOON PROFILE REQUESTED BY T. SCHERER AFTER REVIEW OF INCOMING MEASUREMENTS PROVIDED BY INSQUIP FOR THE MORNING PROFILE.
26+40	32			
25+40	46			
24+40	62			
23+46	73			
22+40	86			
21+40	95			
20+40	106			
19+40	113			THIS PROFILE INDICATES THAT THE FILL MATERIAL CONTINUES TO BULK UP NEAR THE START AND MID. OF TRENCH WITH SOME MOVEMENT AT THE TOE.
19+20	118			
19+00	118			
18+80	126			
18+60	128			
18+40	130			
18+20	126			
18+00	130			
17+80	132		BACKFILL	TOE OBSERVED TO BE BETWEEN STATION 17+80 AND 17+60 AS COMPARED TO CLEAN OUT MEASUREMENTS ON 12-2-03 Am.
17+60	135			
17+40	134			
17+20	135			
17+00	135			
16+80	135			
16-60	133			
15-60	135			
14-60	66			
13-60	71			
12 [illegible]	26			

Gayle Scherer 12/4/03

GROUNDWATER MITIGATION CONTROL SYSTEM, SAUGET AREA 2

Date: 12/2/03

Approximate time of depth measurements: A.M.

STATION	Trench Depth (ft.)	Down Rigger, Confirmation Measurements (ft.)	Clam Sampler	Comments:
13+20	24			
13+40	46			
14+40	69			
15+40	70			
16+40	135			
17+40	134			
17+60	132			
17+80	133			
18+00	132			
18+20	135			
18+40	133			
18+60	127			
18+80	125			
19+00	123			
19+20	120			
19+40	120			
20+40	112		21+00	BACKFILL CLAM SAMPLES
21+40	104		21+40	OBSERVED TO BE FREE
22+40	98		[illegible]	OF SEDIMENTS.
23+40	83			
24+40	77			
25+40	55			
26+40	40			
27+40	26			
18+40	41.35	135.6		
18+30	41.46	136.0		
18+20	41.48	136.1		
18+10	41.65	136.6		
18+00	41.23	135.2		
17+90	41.21	135.2		
17+80	41.13	134.9		
17+70	40.97	134.4		

GROUNDWATER MITIGATION CONTROL SYSTEM, SAUGET AREA 2

Date: 12/1/03

Approximate time of depth measurements: A.M.

STATION	Trench Depth (ft.)	Down Rigger, Confirmation Measurements (ft.)	Clam Sampler	Comments:
13+60	35			CLAM #1 @ 16+20
14+20	59			
15+20	68			
16+20	137			
17+20	131			
17+40	135			
17+60	134			
17+80	131			
18+00	133			
18+20	131			
18+40	128			
18+60	128			
18+80	126			
19+00	126			BACKFILL CLAM SAMPLES
19+20	128		19+90	OBSERVED TO BE FREE OF
20+20	116			SEDIMENTS
21+20	108		20+70	
22+20	98			
23+20	87			18+20 HUBEL. 423.39
24+20	76			HUB TO BOARD 0
25+20	62			BOARD TO SLURRY -2.38
26+20	47			SLURRY EL. ± 421.0
27+20	33			
27+40	30			
				17+8 HUBEL. 423.55
18+40	41.35	135.6		HUB TO BOARD 0
18+30	41.39	135.8	135.5	BOARD TO SLURRY -2.58'
18+20	41.36	135.7	137	SLURRY EL. ± 420.97
18+10	41.18	135.1		
18+00	41.15	135.0		
17+90	41.16	135.0		
17+80	41.15	135.0	134.5	

GROUNDWATER MITIGATION CONTROL SYSTEM, SAUGET AREA 2

Date: 11/28/03

Approximate time of depth measurements: A.M.

STATION	Trench Depth (ft.)	Down Rigger, Confirmation Measurements (ft.)	Clam Sampler	Comments:
13+80	36			
14+20	58			
15+20	70			
16+20	CLAM #1			
17+20	132			
17+40	135			
17+60	133			
17+80	133			
18+00	133			
18+20	129			
18+40	130			
18+60	130			
18+80	130			
19+00	130			
19+20	130			
20+20	117			
21+20	108			
22+20	98			
23+20	87			
24+20	75			
25+20	62			
26+20	47			
27+20	34			
27+40	30			

GROUNDWATER MITIGATION CONTROL SYSTEM, SAUGET AREA 2

Date: 11/20/03

Approximate time of depth measurements: P.M.

STATION	Trench Depth (ft.)	Down Rigger, Confirmation Measurements (ft.)	Clam Sampler	Comments:
13+40	36			
14+40	70			
15+40	69			
16+40	132			
17+40	135			
17+60	134			
17+80	133			
18+00	135			
18+20	136			
18+40	130			
18+60	128			
18+80	130			
19+00	127			
19+20	130			
19+40	125			
20+40	115			
21+40	106			
22+40	98			
23+40	85			
24+40	75			
25+40	60			
26+40	45			
27+40	32			

GROUNDWATER MITIGATION CONTROL SYSTEM, SAUGET AREA 2

Date: 11/25/03

Approximate time of depth measurements: A.M.

STATION	Trench Depth (ft.)	Down Rigger, Confirmation Measurements (ft.)	Clam Sampler	Comments:
14+20	~~27~~			
14+60	48			
15+60	70			CLAM 1 @ 17+50
16+60	130			CLAM 2 @ 16+60
17+60	129			
17+80	134			
18+00	135			
18+20	132			
18+40	135			
18+60	134			
18+80	132	~~18+90~~	18+90	BACKFILL CLAM SAMPLES OBSERVED TO BE FREE OF SEDIMENTS.
19+00	127			
19+20	125			
19+40	125			
19+60	120	~~19+60~~	19+60	
20+60	114			
21+60	104			
22+60	96			
23+60	85			
24+60	74			
25+60	60			
26+60	46			
27+40	26			
18+60	41.2	135.1		
18+50	41.40	135.8		
18+40	41.46	136.0		
18+30	41.53	136.2		
18+20	41.46	136.0		
18+10	41.15	135.0		
18+00	41.35	135.6		
17+90	41.15	135.0		
17+80	41.10	134.8		

GROUNDWATER MITIGATION CONTROL SYSTEM, SAUGET AREA 2

Date: 11/24/03

Approximate time of depth measurements: A.M.

STATION	Trench Depth (ft.)	Down Rigger, Confirmation Measurements (ft.)	Clam Sampler	Comments:
14+20 EOT	20			
14+60	52			
15+60	70			
16+60	~~70~~ 71			
17+60	130			
17+80	134			
18+00	135			
18+20	137			
18+40	136			
18+60	134			
18+80	133			
19+00	130		19+00	BACKFILL CLAM SAMPLES OBSERVED TO BE FREE OF SEDIMENTS.
19+20	129			
19+40	127			
19+60	125			
20+60	116		20+40	
21+60	108			
22+60	97			
23+60	88			
24+60	76			
25+60	63			
26+60	48			
27+40 E.O.T	30			
18+60	41.41 135.8			
18+50	41.50 136.1			
18+40	41.60 136.4			
18+30	41.52 136.2			
18+20	41.35 135.6			
18+10	41.25 135.3			
18+00	41.28 135.4			
17+90	40.93 134.3			
17+80	41.22 135.2			

GROUNDWATER MITIGATION CONTROL SYSTEM, SAUGET AREA 2

Date: 11/21/03

Approximate time of depth measurements: 4m.

STATION	Trench Depth (ft.)	Down Rigger, Confirmation Measurements (ft.)	Clam Sampler	Comments:
14+80	20 EOT			
15+60	71			
16+60	70			
17+00	Clam #2			
17+60	Clam #1 33:9.			
17+80	132			
18+00	134			
18+20	135			
18+40	135			
18+60	134			
18+80	132			
19+00	128			
19+20	130			
19+40	124			
19+60	126			
20+60	118			
21+60	110		22+00	BACKFILL CLAM SAMPLES
22+60	99			OBSERVED TO BE FREE
23+60	88		23+00	OF SEDIMENTS
24+60	78			
25+60	67			
26+60	55			
27+40	29 EOT			
				SLURRY LEVEL CHECK:
18+60	41.55 136.3			AT 18+50
18+50	41.74 136.9	FILTER CAKE 136' / SLURRY	135.5'	HUBEL. 422.59
18+40	41.38 135.7			HUB TO LEVEL 2.75"
18+30	41.57 136.3			LEVEL TO SLURRY 26.5
18+20	41.47 136.0			SLURRY EL. = 421.03
18+10	41.41 135.8			
18+00	41.24 135.3	FILTER CAKE 135' / SLURRY	134'	
17+90	41.14 134.9			
17+80	40.99 134.4			
17+70	40.75 133.7			

GROUNDWATER MITIGATION CONTROL SYSTEM, SAUGET AREA 2

Date: 11/20/03

Approximate time of depth measurements: 6:45

STATION	Trench Depth (ft.)		Down Rigger, Confirmation Measurements (ft.)	Clam Sampler	Comments:
15+60	20				
16+60		70			
17+60	67				
17+80		83			
18+00	133				
18+20		134			
18+40	134				
18+60		136			
18+80	135				
19+00		129			
19+20	130				
19+40		127			
19+60	127				
19+80		124		20+00	BACKFILL CLAM SAMPLES
20+60	119				OBSERVED TO BE FREE
21+60		112		21+00	OF SEDIMENTS
22+60	104				
23+60		93			
24+60	82				
25+60		72			
26+60	56				
27+40		30			
					SLURRY LEVEL CHECK:
18+80	41.14	134.9			AT 18+50
18+70	41.45	136.0			HUB EL. 422.54
18+60	41.27	135.4			HUB TO LEVEL 7.5"
18+50	41.52	136.2	136		LEVEL TO SLURRY 26"
18+40	41.20	135.1			SLURRY EL. = 421.05
18+30	41.33	135.6			
18+20	41.29	135.4	136		
18+10	41.23	135.2			
18+00	41.09	134.8			
17+90	41.00	134.5			

GROUNDWATER MITIGATION CONTROL SYSTEM, SAUGET AREA 2

Date: 11/19/03

Approximate time of depth measurements: 6:45

STATION	Trench Depth (ft.)	Down Rigger, Confirmation Measurements (ft.)	Clam Sampler	Comments:
16+00	25			
16+60	60			
17+60	68			
17+80	87			
18+00	124			
18+20	131			
18+40	134			
18+60	127			
18+80	129			
19+00	131			
19+20	132			
19+40	132			
19+60	132			
19+80	108			
20+00	125			
20+20	125			
20+40	125			
20+60	122			
20+80	122			
21+80	113			
22+80	104		22+80	
23+80	94			
24+80	87			
25+80	74		24+60	
26+80	158			
27+40	30			
13+80	41.02 134.5			
15+20	41.30 135.5			
15+60	41.41 135.6	136		SLURRY EL. ± 421.25
15+80	41.71 136.8(2)			REPORTED ON DFS DFR #50
16+40	41.02 135.2	134.5		
15+20	41.21 135.2			
15+20	41.29 135.4			
15+40	40.83 134.1			

GROUNDWATER MITIGATION CONTROL SYSTEM, SAUGET AREA 2

Date: 11/17/03

Approximate time of depth measurements: 7:00

STATION	Trench Depth (ft.)	Down Rigger, Confirmation Measurements (ft.)	Clam Sampler	Comments:
27+40	27			
26+60	62			
25+60	76			BACK FILL CLAM SAMPLE
24+60	88		24+70	OBSERVED TO BE FREE OF
23+60	99			SEDIMENTS.
22+60	106			
21+60	116			
20+60	123			
19+60	130			
19+40	130			
19+20	133			
19+00	131			
18+80	131			
18+60	130			
18+40	134			
18+20	130			
18+00	CLAM #1			
17+80	88			
17+60	68			
17+30	CLAM #2			
16+60	62			
16+00	25			
EOT				

GROUNDWATER MITIGATION CONTROL SYSTEM, SAUGET AREA 2

Date: 11/15/03

Approximate time of depth measurements:

STATION	Trench Depth (ft.)	Down Rigger, Confirmation Measurements (ft.)	Clam Sampler	Comments:
18+80	135			
19+00	134			
19+20	133			
19+40	134			
19+60	133			
19+80	129			
20+00	126			
20+20	126			
20+40	128			
20+60	124			
20+80	123			
21+80	118			
22+80	110		22+77 OK	
23+80	100			
24+80	90		25+00 OK	
25+80	75			
26+80	60			
27+50	TOP OF TRENCH			
18+80	40.8 / 133.8			
18+90	40.89 / 134.1	134		
19+00	41.1 / 134.8			
19+10	41.0 / 134.5			
19+20	40.6 / 133.2	133		
19+30	41.01 / 134.5			
19+40	41.07 / 134.7			
19+50	41.41 / 135.8			
19+60	41.2 / 135.1			
19+70	41.2 / 135.1			
19+80	41.24 / 135.3			

GROUNDWATER MITIGATION CONTROL SYSTEM, SAUGET AREA 2

Date: 11/14/03

Approximate time of depth measurements: 7:30

STATION	Trench Depth (ft.)	Down Rigger, Confirmation Measurements (ft.)	Clam Sampler	Comments:
17+00	21			
17+40	38			
18+40	129			
19+40	133			
19+60	132			
19+80	132			
20+00	134			
20+20	132			
20+40	130			
20+60	129			
20+80	127			
21+00	126			
21+20	124			
21+40	125			
21+60	124			BACKFILL CLAM SAMPLES
22+40	117		22+70	OBSERVED TO BE FREE
23+40	107			OF SEDIMENTS.
24+40	97			
25+40	83		25+70	
26+40	68			
27+40	26			
19+40	41.21 / 135.2			DOWN RIGGER 134 FROM SLURRY SURFACE
19+50	40.83 / 133.9	136		136' TO PREVIOUS SLURRY LINE
19+60	41.05 / 134.6			
19+70	41.35 / 135.6			
19+80	41.50 / 136.1			
19+90	41.43 / 135.9			DOWN RIGGER 132.5 FROM SLURRY
20+00	41.33 / 135.6	135		135' FROM PREVIOUS SLURRY LINE
20+10	41.30 / 135.5			
20+20	41.07 / 134.7			
20+30	41.26 / 135.3			
20+40	41.21 / 135.2			
				20+00
				HUB 422.60
				BOARD TO HUB +1.21
				BOARD TO SLURRY -4.17
				SLURRY EL. 419.0

GROUNDWATER MITIGATION CONTROL SYSTEM, SAUGET AREA 2

Date: 11/13/03

Approximate time of depth measurements: 8:00

STATION	Trench Depth (ft.)	Down Rigger, Confirmation Measurements (ft.)	Clam Sampler	Comments:
17+60	10			
18+20	60			MAY HAVE ERRONEOUS DEPTHS
19+20	179			DUE TO MISSIZED DOWN-
20+20	130			RIGGER CABLE. ~~MEAS~~
20+40	130			SOME MEASUREMENTS MAY
20+60	130			BE AS SHORT AS 4' OFF.
20+80	130			
21+00	130			
21+20	128			
21+40	128			
21+60	125			
21+80	122			
22+00	122			
22+20	118			BACKFILL
23+20	109		23+10	CLAM SAMPLE FREE OF SEDIMENTS
24+20	101			BACKFILL
25+20	90		25+30	CLAM SAMPLE FREE OF SEDIMENTS
26+20	78			
27+20	42			
27+40	25			
20+40	41.0m 134.5			
20+50	40.85m 134.1			
20+60	40.85m 134.0			
20+70	40.75m 133.7			
20+80	40.65m 133.3			
20+90	41.02m 134.5			
21+00	40.7m 133.5			
21+10	40.88m 133.9			
21+20	40.8m 133.8			
21+30	40.73m 133.6			
21+40	40.97m 134.4			
				STA. 21+20
				HUB 421.74
				HUB TO BOARD +1.33
				BOARD TO SLURRY -3.17
				SLURRY EL: 419.9

GROUNDWATER MITIGATION CONTROL SYSTEM, SAUGET AREA 2

Date: 11/12/03

Approximate time of depth measurements: 8:00

STATION	Trench Depth (ft.)	Down Rigger, Confirmation Measurements (ft.)	Clam Sampler	Comments:
27+40	26			
27+20	43			
26+20	78			
25+20	89			
24+20	101			
23+20	110			
22+20	118			
21+40	130			
21+20	130			
21+00	130			
20+80	130			
20+60	130			
20+40	130			
20+20	130			
20+00	131			
19+80	128			
19+60	128			
19+40	127			
19+20	130			
18+20	56			
17+60	23			
CLAM C	18+40			

GROUNDWATER MITIGATION CONTROL SYSTEM, SAUGET AREA 2

Date: 11/10/03

Approximate time of depth measurements: 7:00

STATION	Trench Depth (ft.)	Down Rigger, Confirmation Measurements (ft.)	Clam Sampler	Comments:
17+60	~~28~~			
18+60	~~77~~			
19+60	133			
20+60	134			
20+80	134			
21+00	134			
21+20	134			
21+40	~~134~~ 133			
21+60	~~129~~ 131			
21+80	~~127~~ 129			
22+00	~~124~~ 127			
22+20	~~123~~ 124			
22+40	~~121~~ 123			
22+60	~~110~~ 121			
23+60	~~100~~ 110			
24+60	~~88~~ 100			
25+60	~~75~~ 88			
26+60	75			
27+40	24			
CLAM 1	19+30			
CLAM 2				

GROUNDWATER MITIGATION CONTROL SYSTEM, SAUGET AREA 2

Date: 11/7/03

Approximate time of depth measurements: 8:30

STATION	Trench Depth (ft.)	Down Rigger, Confirmation Measurements (ft.)	Clam Sampler	Comments:
17+60	24			
18+60	73			
19+60	133			
20+60	134			
20+80	134			
21+00	134			
21+20	134			
21+40	133			
21+60	129			
21+80	128			
22+00	127			
22+20	123			
22+40	121			
22+60	120			
23+60	110			
24+60	98			
25+60	86			
26+60	74			
27+40	24			
CLAM 1	19+80			
CLAM 2	19+40			

GROUNDWATER MITIGATION CONTROL SYSTEM, SAUGET AREA 2

Date: 11/6/03

Approximate time of depth measurements: 8:30

STATION	Trench Depth (ft.)	Down Rigger, Confirmation Measurements (ft.)	Clam Sampler	Comments:
EOT				
17+60	24			
18+60	73			
19+60	81			
20+60	134			
20+80	134			(SILT FENCE)
21+00	134			
21+20	134			
21+40	133			
21+60	129			
21+80	128			
22+00	127			
22+20	124			
22+40	124			
22+60	121			
23+60	110			
24+60	100			
25+60	87			
26+60	74			
27+40	25			
EOT				
CLAM #1	20+40			
CLAM #2	19+40			

GROUNDWATER MITIGATION CONTROL SYSTEM, SAUGET AREA 2

Date: 11/5/03

Approximate time of depth measurements: 8:30

STATION	Trench Depth (ft.)	Down Rigger, Confirmation Measurements (ft.)	Clam Sampler	Comments:
~~27+40~~	~~27~~		@ 24+10	SAMPLE FREE OF SEDIMENTS
~~26+40~~	~~78~~			
~~25+40~~	91		@ 28+80	SAMPLE FREE OF SEDIMENTS
~~24+40~~	103			
~~23+40~~	~~124~~ 113			
~~22+40~~	~~123~~ 124			
~~22+20~~	~~127~~ 123			
~~22+00~~	~~128~~ 127			
21+80	128			
21+60	128			
21+40	128			
~~21+20~~	128			
21+00	130	~~21+10 = 134~~		
20+80	133			
20+60	133			
20+40	128 (CLAM)			
20+20	132			
20+00	129			
19+80	83			
18+80	73			
17+80	65			
17+60	35			
CLAM #1	20+30			
CLAM #2	19+50			
21+20	40.85 / 134			
21+10	40.82 / 133.9	134		
21+00	40.73 / 133.6			
20+90	40.63 / 133.3			
20+80	40.73 / 133.6			
20+70	40.76 / 133.7			
20+60	40.80 / 133.8	136		MAY BE FALSE READING (CHISEL HOLE)
20+50	40.93 / 134.3			
20+40	40.98 / 134.4			

GROUNDWATER MITIGATION CONTROL SYSTEM
SAUGET AREA 2

Date: 11/4/03

A.M. Depth Measurements		P.M. Depth Measurements	
Station	Trench Depth (Ft.)	Station	Trench Depth (Ft.)
27+40	27		
26+40	79		
25+40	91		
24+40	103		
23+40	113		
22+40	124		
22+20	125		
22+00	127		
21+80	127		
21+60	128 ↑		
21+40	128 (TOE)		
21+20	130 ↓		
21+00	132		
20+80	133		
20+60	134		
20+40	78		
19+40	74		
18+40	71		
18+10	38 E.O.T.		

CLAM #1 @ 20+70

CLAM #2 @ 19+80

GROUNDWATER MITIGATION CONTROL SYSTEM
SAUGET AREA 2

Date: 11/3/03

A.M. Depth Measurements

Station	Trench Depth (Ft.)
27+40	28
26+40	83
25+40	97
24+40	109
23+40	~~109~~ 116
23+20	120
23+00	121
22+80	125
22+60	126
22+40	130
22+20	133
22+00	133
21+80	133
21+60	128
21+40	130
20+40	134
19+40	75
18+40	37
22+40	40.41 / 132.5
22+30	40.52 / 132.9
22+20	40.55 / 133.0
22+10	40.59 / 133.1
22+00	40.77 / 133.7
21+90	40.82 / 133.9
21+80	40.82 / 133.9
21+70	40.90 / 134.1
21+60	40.72 / 133.6
21+50	40.66 / 133.4
21+40	40.74 / 133.6
21+30	40.65 / 133.3
21+20	40.75 / 133.7
21+10	40.64 / 133.3
21+00	40.67 / 133.4
BACKFILL - CLAM SAMPLER	
25+30	CLEAN / FREE OF SAND LENSE
21+00	" "

DOWN RIGGER, 133.0

134.0

BACKFILL MATERIAL IN-PLACE UNIT WEIGHT

101.5 PCF

107.0 PCF

P.M. Depth Measurements

Station	Trench Depth (Ft.)

GROUNDWATER MITIGATION CONTROL SYSTEM
SAUGET AREA 2

Date: 10/31/03

A.M. Depth Measurements			P.M. Depth Measurements	
Station	Trench Depth (Ft.)		Station	Trench Depth (Ft.)
27+40	28			
26+40	83			
25+40	97			
24+40	110			
23+40	116			
23+20	120			
23+00	121			
22+80	123			
22+60	124			
22+40	127			
22+20	131			
22+00	132			
21+80	133			
21+60	134			
21+40	134			
20+40	78			
19+40	74			
18+40	37			
CLAM 1 @ 21+00				
CLAM 2 @ 20+60				
		CONFIRMATION WITH DOWN RIGGER		
CLEANOUT / ROCK VERIFICATION				
22+40	40.45m / 132.7			
22+30	40.54m / 133.0			
22+20	40.54m / 133.0			
22+10	40.78m / 133.8			
22+00	40.50m / 132.8	133.0'		
21+90	40.55m / 133.0			
21+80	40.70 m / 133.5			
21+70	40.86m / 134.0	134.0'		
21+60	40.89m / 134.1			
21+50	40.80m / 133.8			
21+40	40.68m / 133.4			
CLAM SAMPLER				
24+70	CLEAN FREE OF SAND			
25+50	" "			

GROUNDWATER MITIGATION CONTROL SYSTEM
SAUGET AREA 2

Date: 10/30/03

A.M. Depth Measurements

Station	Trench Depth (Ft.)
E. O. T.	
27+40	30
26+40	83
25+40	96
24+40	108
23+40	117
23+20	119
23+00	120
22+80	122
22+60	124
22+40	128
22+20	132
22+00	133
21+80	133
21+60	133
21+40	87
20+40	78
19+40	73
18+40	28
E. O. T.	
CLAM # 1 @ 21+30	
CLAM # 2 @ 20+60	

TOB

P.M. Depth Measurements

Station	Trench Depth (Ft.)

GROUNDWATER MITIGATION CONTROL SYSTEM
SAUGET AREA 2

Date: 10/29/03

A.M. Depth Measurements

Station	Trench Depth (Ft.)
27+40	28
27+00	62
26+40	83
25+80	90
25+20	98
24+60	106
24+00	111
23+80	113
23+60	115
23+40	117
23+20	118
23+00	121
22+80	123
22+60	125
22+40	125
22+20	131
22+00	132
21+80	CLAM #1
21+60	98
21+40	89
21+20	133
20+60	75
20+00	79
19+40	74
18+80	42

P.M. Depth Measurements

Station	Trench Depth (Ft.)

GROUNDWATER MITIGATION CONTROL SYSTEM
SAUGET AREA 2

Date: 10/28/03

CRANE INST.

A.M. Depth Measurements

~~P.M.~~ Depth Measurements

Station	Trench Depth (Ft.)
27+40	28
27+00	62
26+40	89
26+80	96
25+20	105
24+60	111
24+00	117
23+80	120
23+60	121
23+40	122
23+20	126
23+00	131
22+80	132
22+60	132
22+40	133
22+20	133
22+00	133
21+40	84
20+80	76
20+20	81
19+60	73
19+20	1.8 END TRENCH
20+90	CLAM #2

Station	Trench Depth (Ft.)
23+00	40.54m/133.0Ft
22+90	40.63m/133.3Ft
22+80	40.67m/133.4
22+70	40.67m/133.4
22+60	40.75m/133.7
22+50	40.77m/133.7
22+40	40.73m/133.6
22+30	40.53m/133.1
22+20	40.65m/133.3
22+10	40.58m/133.1

GROUNDWATER MITIGATION CONTROL SYSTEM
SAUGET AREA 2

Date: ~~10/28/03~~ 10/27/03

A.M. Depth Measurements		P.M. Depth Measurements	
Station	Trench Depth (Ft.)	Station	Trench Depth (Ft.)
19+40	51		
19+60	~~72~~		
20+20	80		
20+80	80		
21+40	81		
22+00	133		
22+20	133		
22+40	132		
22+60	131		
22+80	131		
23+00	130		
23+20	125		
23+40	124		
23+60	121		
23+80	119		
24+00	117		
24+60	112		
25+20	104		
25+80	97		
26+40	88		
27+00	58		
27+40	25		

GROUNDWATER MITIGATION CONTROL SYSTEM
SAUGET AREA 2

Date: 10/24/03 — CLEAN OUT AND ROCK CONFIRMATION WITH CRANE INST - AND

A.M. Depth Measurements

Station	Trench Depth (Ft.)
23+00	40.49m 132.8FT
22+90	40.45m 132.7 FT
22+80	40.47m 132.7FT
22+70	40.46m 132.7FT
22+60	40.54m 133 FT
22+50	40.53m 132.9FT
22+45	40.55m 133 FT
22+40	40.51m 132.9 FT
22+30	40.60m 133.2 FT
22+20	40.53m 132.9FT

A.M. ~~P.M.~~ Depth Measurements

Station	Trench Depth (Ft.)
19+80	25
20+20	87
20+80	75
21+40	81
22+00	CLAM #1
22+20	133
22+40	133
22+60	133
22+80	133
23+00	130
23+20	126
23+40	125
23+60	122
23+80	120
24+00	116
24+60	110
25+20	106
25+80	101
26+40	92
27+00	62
27+40	30

GROUNDWATER MITIGATION CONTROL SYSTEM
SAUGET AREA 2

Date: 10/03/03

A.M. Depth Measurements

Station	Trench Depth (Ft.)
END OF TRENCH	
27+40	26
27+20	43
26+60	80
26+00	98
25+40	105
24+80	111
24+20	115
24+00	
23+80	
23+60	
23+40	126
TOE 23+20	130
23+00	133

P.M. Depth Measurements

Station	Trench Depth (Ft.)
27+40	29
26+80	44
26+20	96
25+60	101
25+00	109
24+40	115
23+80	120
23+60	122
23+40	124
23+20	124
23+00	128
TOE 22+80	128
22+60	131
22+40	133
22+20	CLAM
22+00	134
21+80	133
21+20	80
20+60	75
20+00	82
19+8	26 END OF TRENCH

GROUNDWATER MITIGATION CONTROL SYSTEM
SAUGET AREA 2

Date: 10/22/03

A.M. Depth Measurements

Station	Trench Depth (Ft.)
27+40	30
27+00	60
26+40	101
25+80	110
25+20	112
24+60	118
24+40	120
24+20	122
24+00	123
23+80	128
23+60	130
23+40	131
23+20	133
23+00	133
22+80	134
22+60	CLAM #1
22+00	80
21+40	81
20+80	83
20+50	29
	END OF TRENCH

TOE

P.M. Depth Measurements

Station	Trench Depth (Ft.)
27+40	20
27+20	41
27+00	60
26+80	69
26+60	81
26+40	92
26+20	95
26+00	97
25+80	101
25+60	102
25+40	105
25+20	107
25+00	108
24+80	110
24+60	112
24+40	114
24+20	115
24+00	119
23+80	121
23+60	121
23+40	123
23+20	125
23+00	127
22+80	127
22+60	131
22+40	132
22+20	CLAM - 80
22+00	80
21+80	131
21+60	85
21+40	82
21+20	80
21+00	78
20+80	76
20+60	76
20+40	81
20+20	166
E.O.T	

GROUNDWATER MITIGATION CONTROL SYSTEM
SAUGET AREA 2

Date: 10/22/03 ROCK CONFIRMATION W/ CRANE INST.

A.M. Depth Measurements

Station	Trench Depth (Ft.)
23+30	40.48m-132.7FT
23+60	40.53m-132.9FT
23+50	40.55m-133.0FT
23+45	40.48m-132.7
23+40	40.40m-132.5
23+30	40.57m-133.0
23+20	40.49m-132.8
23+10	40.57m-133.1
23+00	40.56m-133.0
22+90	40.60m-133.2
22+80	40.56m-133.0

P.M. Depth Measurements

Station	Trench Depth (Ft.)

GROUNDWATER MITIGATION CONTROL SYSTEM
SAUGET AREA 2

Date: 10-21-03

A.M. Depth Measurements

Station	Trench Depth (Ft.)
27 + 40	32
27 + 20	45
27 + 00	62
26 + 80	70
26 + 60	80
26 + 40	100
26 + 20	111
26 + 00	111
25 + 80	114
25 + 60	116
25 + 40	119
25 + 20	120
25 + 00	123
24 + 80	122
24 + 60	124
24 + 40	125
24 + 20	127
24 + 00	130
23 + 80	120
23 + 60	131
23 + 40	131
23 + 20	129
23 + 00	131
22 + 80	128
22 + 90	130
23 + 10	132 *
22 + 60	132
22 + 40	129
22 + 30	1# CLAM
22 + 20	116
22 + 00	83
21 + 80	77
21 + 60	82
21 + 40	80
21 + 20	71
21 + 00	71
20 + 90	24 END TRENCH
22 + 90	131
23 + 00	131
23 + 10	131

P.M. Depth Measurements

Station	Trench Depth (Ft.)
27 +40	30
27+20	40
27+00	60
26+80	70
26+60	78
26+40	101
26+20	101
26+00	103
25+80	104
25+60	109
25+40	111
25+20	113
25+00	115
24+80	116
24+60	120
24+40	117
24+20	123
24+00	124
* 23+ 80	125
* 23+ 60	127
23+ 40	128
23+ 20	128
23+00	131
22+ 80	132
22+ 60	132
22+ 40	135
22+ 20	115
22+ 00	115
21+80	105
21+60	85
21+40	79
21+20	80
21+00	72
20+80	61
20+60	62
~~20+40~~ End of Trench	26
~~20+20~~	

GROUNDWATER MITIGATION CONTROL SYSTEM
SAUGET AREA 2

Date: 10-20-03

A.M. Depth Measurements

Station	Trench Depth (Ft.)
27+40	35
27+20	44
27+00	62
26+80	70
26+60	80
26+40	101
26+20	113
26+00	117
25+80	118
25+60	120
25+40	122
25+20	123
25+00	124
24+80	126
24+60	129
24+50	130
24+40	132
24+30	130
24+20	130
24+10	135
24+00	133
23+90	134
23+80	135
23+70	132
23+60	133
23+50	134
23+40	133
23+30	134
23+20	CLAM #1
23+00	136
22+80	135
22+60	136
22+40	85
22+20	CLAM #2
22+00	80
21+80	80
21+60	86
21+40	90
21+20	67

10'

P.M. Depth Measurements

Station	Trench Depth (Ft.)
27+40	
27+20	
27+00	
26+80	
26+60	
26+40	100
26+20	110
26+00	112
25+80	113
25+60	116
25+40	118
25+20	112
25+00	123
24+80	121
24+60	125
24+40	128
24+20	129
24+00	132
23+80	133
23+60	132
23+40	131
23+20	133
23+00	134
22+80	134
22+60	134
22+40	85
22+20	120
22+00	84
21+80	79
21+60	80
21+40	83
21+20	83
21+00	72
20+80	66
20+60	28 END TRENCH

GROUNDWATER MITIGATION CONTROL SYSTEM
SAUGET AREA 2

Date: 10-20-03

A.M. Depth Measurements

Station	Trench Depth (Ft.)
27+40	35
27+20	44
27+00	62
26+80	70
26+60	80
26+40	101
26+20	113
26+00	117
25+80	118
25+60	120
25+40	122
25+20	123
25+00	124
24+80	126
24+60	129
24+50	130
24+40	132
24+30	130
24+20	130
24+10	135
24+00	133
23+90	134
23+80	135
23+70	132
23+60	133
23+50	134
23+40	133
23+30	134
23+20	CLAM #1
23+00	136
22+80	135
22+60	136
22+40	85
22+20	CLAM #2
22+00	80
21+80	80
21+60	86
21+40	90
21+20	67

10'

P.M. Depth Measurements

Station	Trench Depth (Ft.)

PRELIMINARY

GROUNDWATER MITIGATION CONTROL SYSTEM
SAUGET AREA 2

Date: ~~9/23/03~~ 10/17/03

A.M. Depth Measurements

Station	Trench Depth (Ft.)
27 + 40	32
27 + 20	44
27 + 00	61
26 + 80	71
26 + 60	82
26 + 40	[redacted] 101
26 + 20	114
26 + 00	132
25 + 80	132
25 + 60	134
25 + 40	135
25 + 20	136
25 + 00	135
24 + 80	136
24 + 60	135
24 + 40	135
24 + 20	136
24 + 00	136
23 + 80	135
23 + 60	135
23 + 40	CLAM #2
23 + 20	132
23 + 00	90
22 + 80	
22 + 60	
22 + 40	
22 + 20	
22 + 00	

P.M. Depth Measurements

Station	Trench Depth (Ft.)

PRELIMINARY

GROUNDWATER MITIGATION CONTROL SYSTEM
SAUGET AREA 2

Date: ~~9/23/03~~ 10-16-03

A.M. Depth Measurements

Station	Trench Depth (Ft.)

P.M. Depth Measurements

Station	Trench Depth (Ft.)
27 + 40	
27 + 20	
27 + 00	
26 + 80	
26 + 60	
26 + 40	102
26 + 20	115
26 + 00	133
25 + 80	133
25 + 60	~~138~~ 134
25 + 46	133
25 + 20	132
25 + 00	132
24 + 80	132
24 + 60	132
24 + 40	134
24 + 20	134
24 + 00	135
23 + 80	135
23 + 60	132
23 + 40	137
23 + 20	131
23 + 00	90
22 + 80	131
22 + 60	79
22 + 40	80
22 + 20	80
22 + 00	76
21 + 80	85
21 + 60	77
21 + 40	32 END TRENCH

14.8

PRELIMINARY

GROUNDWATER MITIGATION CONTROL SYSTEM
SAUGET AREA 2

Date: ~~9/23/03~~ 10/16/03

Clean Out 1:00 Pool A.M.

A.M. Depth Measurements

Station	Trench Depth (Ft.)
~~26+00~~ TAPE	133.8"
GAUGE	40.74 = 133.63
~~27~~+40	32
~~27~~+~~20~~	43
~~27~~+00	59
~~26~~+80	70
~~26~~+60	80
~~26~~+40	100
~~26~~+~~20~~	112
~~26~~+00	134
~~25~~+80	135
~~25~~+60	137
~~25~~+40	135
~~25~~+~~20~~	136
~~25~~+00	137
~~24~~+80	135
~~24~~+60	136
~~24~~+40	135
~~24~~+20	136
~~24~~+00	136
~~23~~+80	135
~~23~~+60	133
~~23~~+40	CLAM #2
~~23~~+~~20~~	~~87~~ 96
~~23~~+00	136
~~22~~+80	CLAM # 1
~~22~~+60	78
~~22~~+40	80
~~22~~+20	~~80~~ 76
~~22~~+90	134
~~22~~+00	71
~~21~~+80	47
~~21~~+60	48
~~21~~+50	24

~~P.M.~~ Depth Measurements

Station	Trench Depth (Ft.)
	Computer Cable
~~26~~+00	133 CBL
~~25~~+90	133 CBL
~~25~~+~~80~~ 90	40.44 m=132.8 ft
~~25~~+80	40.55 m=133.0 ft
~~25~~+70	40.45m = 132.7ft
~~25~~+60	40.43m=132.6ft
~~25~~+50	40.33m=132.3ft
~~25~~+40	40.39m=132.5ft
~~25~~+30	40.35m=132.3ft
~~25~~+20	40.34m=132.3ft
~~25~~+10	40.36m=132.4ft
~~25~~+00	40.24m=132.0ft
~~24~~+90	40.48m=132.8ft
~~24~~+80	40.42m=132.6ft
~~24~~+70	40.47m=132.7ft
~~24~~+60	40.47m=132.7ft
~~24~~+50	40.55m=133.0ft
~~24~~+40	40.52m=132.9ft
~~24~~+30	40.48m=132.8ft
~~24~~+20	40.56m=133.0ft
~~24~~+10	40.59m=133.1ft
~~24~~+00	40.50m=132.8ft
~~23~~+90	40.46m=132.7ft

133.0

132.0

132.0

132.0

133.0

PRELIMINARY

GROUNDWATER MITIGATION CONTROL SYSTEM
SAUGET AREA 2

Date: ~~9/23/03~~ 10/16/03

A.M. Depth Measurements

Station	Trench Depth (Ft.)
~~26+80~~ TAPE	133.8"
GAUGE	40.74 = 133.63
27+40	32
~~27+20~~	43
27+00	59
26+80	70
26+60	80
26+40	100
26+20	112
26+00	134
25+80	135
25+60	137
25+40	135
25+~~20~~	136
25+00	137
~~24~~+80	135
24+60	136
24+40	135
24+20	136
24+00	136
23+80	135
23+60	133
23+40	CLAM #2
23+20	~~87~~ 96
23+00	136
22+80	CLAM #1
22+60	78
22+40	80
22+20	~~80~~ 76
22+90	134
22+00	71
21+80	47
21+60	48
21+50	24

P.M. Depth Measurements

Station	Trench Depth (Ft.)

13

GROUNDWATER MITIGATION CONTROL SYSTEM
SAUGET AREA 2

Date: 10/15/03 Clean Out

A.M. Depth Measurements

Station	Trench Depth (Ft.)
26+10	134.0'
26+00	134.0'
25+90	134.0'
25+80	134.0'
25+70	133.0'
25+60	133'
25+50	133'
25+40	133'
25+30	133'
25+20	133'
25+10	133'
25+00	133'
24+90	133'
24+85	133'
24+80	133'
24+70	133'
24+60	133'
24+50	133'
24+40	133'
24+30	133'

P.M. Depth Measurements

Station	Trench Depth (Ft.)

GROUNDWATER MITIGATION CONTROL SYSTEM
SAUGET AREA 2

Date: 10-14-03

A.M. Depth Measurements

Station	Trench Depth (Ft.)
27+40	35
27+20	44
27+00	60
26+80	70
26+60	81
26+40	100
26+20	115
26+00	CLAM #1
25+80	133
25+60	133
25+40	132
25+20	133
25+00	130
24+80	130
24+60	132
24+40	130
24+20	135
24+00	132
23+80	114 CLAM #2
23+60	90
23+40	88
23+20	86
23+00	80
22+80	75
22+60	77
22+40	63
22+20	63
22+00	24
	END OF TRENCH

P.M. Depth Measurements

Station	Trench Depth (Ft.)
27 + 40	35
27 + 20	45
27 + 00	60
26 + 80	70
26 + 60	81
26 + 40	100
26 + 20	115
26 + 00	133
25 + 80	135
25 + 60	134
25 + 40	133
25 + 20	132-134
25 + 00	133
24 + 80	134
24 + 60	135
24 + 40	134
24 + 20	135
24 + 00	135
23 + 80	135 CLAM #1
23 + 60	95
23 + 40	90
23 + 20	98 CLAM #2
23 + 00	80
22 + 80	70
22 + 60	78
22 + 40	85
22 + 20	88
22 + 00	65
21 + 90	22 END TRENCH

GROUNDWATER MITIGATION CONTROL SYSTEM
SAUGET AREA 2

Date: ~~9/23/03~~ 10/14/03 Clean Out Mnmts.

A.M. Depth Measurements

Station	Trench Depth (Ft.)
26+00	133
25+90	135
25+80	135
25+70	134
25+60	131
25+50	125
25+40	131
25+30	131
25+20	131
25+10	131
25+00	131
24+90	131
24+80	131
24+70	131
24+60	135
24+50	137
24+40	
24+30	
24+20	
24+10	
24+00	
~~25~~+60	134
25+50	133
25+40	133
25+30	133
25+20	132
25+10	133
25+00	133
24+90	135
24+80	134
24+70	~~132~~ 134
24+40	134.5
24+30	

P.M. Depth Measurements

Station	Trench Depth (Ft.)

GROUNDWATER MITIGATION CONTROL SYSTEM
SAUGET AREA 2

Date: [redacted] 10/13/03

A.M. Depth Measurements

Station	Trench Depth (Ft.)
27+40	35
27+20	43
27+00	60
26+80	70
26+60	81
26+40	98
26+20	111
26+00	133
25+80	133
25+60	132
25+40	132
25+20	135
25+00	131
24+80	132
24+60	135
24+40	134
24+20	} #1 CLAM
24+00	}
23+80	88
23+60	94
23+40	91
23+20	86
23+00	85
22+80	78
22+60	46
22+40	47
22+20	23 END TRENCH

P.M. Depth Measurements

Station	Trench Depth (Ft.)
27+40	35
27+20	45
27+00	60
26+80	71
26+60	81
26+40	98
26+20	112
26+00	133
25+80	134
25+60	132
25+40	131
25+20	134
25+00	130
24+80	131
24+60	132
24+40	135
24+20	128
24+00	[redacted] } 132 #1 CLAM
23+80	88 }
23+60	94
23+40	89 CLAM #2
23+20	86
23+00	85
22+80	77
22+60	75
22+40	66
22+20	34
22+00	25 END T

GROUNDWATER MITIGATION CONTROL SYSTEM
SAUGET AREA 2

Date: 10-9-03 — 10-10-03

A.M. Depth Measurements		P.M. Depth Measurements		
Station	Trench Depth (Ft.)	Station	Trench Depth (Ft.)	
27+40	35	27 + 40	35	
27+20	45	27 + 20	45	
27+00	61	27 + 00	61	
26+80	76	26 + 80	72	
26+60	50	26 + 60	82	
26+40	100	26 + 40	100	
26+20	114	26 + 20	114	
26+00	130	26 + 00	134	
25+80	130	25 + 80	132	
25+60		25 + 60	132	
25+40	RAIN	25 + 40	132	
25+20		25 + 20	132	
25+00		25 + 00	128	CLAM
		24 + 80	129	
		24 + 60	132	
		24 + 40	133	
		24 + 20	135	
		24 + 00	85	
		23 + 80	85	
		23 + 60	89	
		23 + 40	88	
		23 + 20	84	
		23 + 00	83	
		22 + 80	88	
		22 + 60	35	
		22 + 40	53	
		22 + 20	24	START DIG
		22 + 00	29	
		21 + 90	29	END TRENCH

GROUNDWATER MITIGATION CONTROL SYSTEM
SAUGET AREA 2

Date: 10-8-03

A.M. Depth Measurements			P.M. Depth Measurements		
Station	Trench Depth (Ft.)		Station	Trench Depth (Ft.)	
27+40	35		27+40	35	
27+20	43		27+20	44	
27+00	75		27+00	61	
26+80	80		26+80	70	
26+60	100		26+60	102	
26+40	110		26+40	117	
26+20	133		26+20	135	
26+00	135		26+00	134	
25+80	133		25+80	134	
25+60	128		25+60	135	
25+40	126		25+40	133	
25+20	132		25+20	133	
25+00		CLAM	25+00	130	
24+80	127		24+80	130	CLAM
24+60	96		24+60	96	
24+40	85		24+40	85	
24+20	86		24+20	86	
24+00	90		24+00	87	
23+80	88		23+80	88	
23+60	95		23+60	95	
23+40	87		23+40	96	
23+20	84		23+20	87	
23+00	30		23+00	70	
22+80	30	END TRENCH	22+80	60	
			22+60	57	
			22+65	30	

GROUNDWATER MITIGATION CONTROL SYSTEM
SAUGET AREA 2

Date: 10-7-03

A.M. Depth Measurements

Station	Trench Depth (Ft.)

P.M. Depth Measurements

Station	Trench Depth (Ft.)
27 + 40	36
27 + 20	45
27 + 00	61
26 + 80	75
26 + 60	83
26 + 40	100
26 + 20	113
26 + 00	134
25 + 80	133
25 + 60	132
25 + 40	132
25 + 20	135
25 + 00	129
24 + 80	~~120~~ 126
24 + 60	90
24 + 40	85
24 + 20	88
24 + 00	88
23 + 80	87
23 + 60	95
23 + 40	88
23 + 20	81
23 + 00	80
22 + 80	29 END TRENCH

41
80
29

GROUNDWATER MITIGATION CONTROL SYSTEM
SAUGET AREA 2

Date: 10-6-03

A.M. Depth Measurements

Station	Trench Depth (Ft.)
27+40	35
27+20	42
27+00	50
26+80	72
26+60	81
26 + 40	97
26 + 20	113
26 + 00	132
25 + 80	130
25 + 60	131
25 + 40	132
25 + 20	129
25 + 00	85
24 + 80	85
24 + 60	86
24 + 40	86
24 + 20	88
24 + 00	90
23 + 80	93
23 + 60	78
23 + 40	28
23 + 20	END.

P.M. Depth Measurements

Station	Trench Depth (Ft.)	
27+40	35	
27+20	48	
27+00	60	
26+80	70	
26+60	80	
26+40	97	
26+20	110	
26+00	132	
25+80	130	
25+60	132	
25+40	128	
25+20	130	
25+00	127	
24 + 80	87	
24 + 60	90	
24 + 40	84	
24 + 20	86	
24 + 00	90	
23 + 80	86	
23 + 60	89	
23 + 40	93	
23 + 20	71	
23 + 10	58	END TRENCH

GROUNDWATER MITIGATION CONTROL SYSTEM
SAUGET AREA 2

Date: 10-4-03

A.M. Depth Measurements			P.M. Depth Measurements		
Station	Trench Depth (Ft.)		Station	Trench Depth (Ft.)	
27 + 40	37		27+40	135	
27 + 20	47		27+20	47	
27 + 00	63		27+00	60	
26 + 80	74		26+80	75	
26 + 60	83		26+60	83	
26 + 40	100		26+40	101	
26 + 20	110		26+20	110	
26 + 00	135		26+00	135	
25 + 80	134		25+80	135	
25 + 60	135		25+60	135	
25 + 40	137		25+40	132	
25 + 20	85		25+20	113	CHAM
25 + 00	88		25+00	88	
24 + 80	90		24+80	88	
24 + 60	90		24+60	[redacted]89	
24 + 40	88		24+40	86	
24 + 20	86		24+20	87	
24 + 00	88		24+00	86	
23 + 80	92		23+80	92	
23 + 60	87		23+60	80	
23 + 40	28	END TRENCH	23+40	27	

GROUNDWATER MITIGATION CONTROL SYSTEM
SAUGET AREA 2

Date: 10-3-03

A.M. Depth Measurements

Station	Trench Depth (Ft.)
27+40	35
27+20	42
27+00	60
26+80	68
26+60	80
26+40	95
26+20	110
26+00	130
25+80	130
25+60	130
25+40	132
25+20	85
25+00	85
24+80	87
24+60	88
24+40	85
24+20	88
24+00	77
23+80	70
23+60	70
23+40	26 END

P.M. Depth Measurements

Station	Trench Depth (Ft.)
27+40	35
27+20	43
27+00	60
26+80	70
26+60	80
26+40	98
26+20	113
26+00	132
25+80	132
25+60	133
25+40	135
25+20	86
25+00	87
24+80	90
24+60	90
24+40	88
24+20	93
24+00	92
23+80	95
23+60	90
23+40	25 END TRENCH
23+20	
23+	

GROUNDWATER MITIGATION CONTROL SYSTEM
SAUGET AREA 2

Date: 10-2-03

A.M. Depth Measurements

Station	Trench Depth (Ft.)	
27+40	34	
27+20	44	
27+00	60	
26+80	68	
26+60	80	
26+40	95	
26+20	112	
26+00	125	
25+80	133	
25+70	133	
25+60	120	
25+40	125	
25+20	83	
25+00	85	
24+80	90	
24+60	88	
24+40	85	
24+20	90	
24+00	91	
23+80	30	
23+70	28	END TRENCH

P.M. Depth Measurements

Station	Trench Depth (Ft.)	
27+40	38	
27+20	47	
27+00	60	
26+80	70	
26+60	80	
26+40	98	
26+20	115	
26+00	135	
25+80	135	
25+70	135	
25+60	135	
25+40	135	
25+30	136	
25+20	84	
25+00	85	
24+80	88	
24+60	90	
24+40	85	
24+20	90	
24+00	80	
23+80	66	
23+60	67	
23+40	27	END TRENCH

GROUNDWATER MITIGATION CONTROL SYSTEM
SAUGET AREA 2

Date: 10-1-03

A.M. Depth Measurements

Station	Trench Depth (Ft.)	
27+40	35	
27+20	43	
27+00	60	
26+80	70	
26+60	80	
26+40	100	
26+20	112	
26+00	125	
25+80	130	
25+60	125	
25+40	80	
25+20	85	
25+00	90	
24+80	90	
24+60	90	
24+40	87	
24+20	80	
24+00	35	
23+80	30	
23+70	27	END TRENCH

P.M. Depth Measurements

Station	Trench Depth (Ft.)	
27+40	34	
27+20	45	
27+00	63	
26+80	75	
26+60	81	
26+40	100	
26+20	114	
26+00	125	
25+80	135	
25+60	133	
25+40	127	
25+20	85	
25+00	89	
24+80	90	
24+60	91	
24+40	85	
24+20	84	
24+00	85	
23+86	47	
23+70	27	END TRENCH
25+70	135	
25+50	130	

23470 OR 23+60

GROUNDWATER MITIGATION CONTROL SYSTEM
SAUGET AREA 2

Date: 9-30-03

A.M. Depth Measurements

Station	Trench Depth (Ft.)
27 + 40	35
27 + 20	45
27 + 00	60
26 + 80	70
26 + 60	82
26 + 40	98
26 + 20	114
26 + 00	126
25 + 80	126
25 + 60	81
25 + 40	82
25 + 20	85
25 + 00	87
24 + 80	92
24 + 60	87
24 + 40	47
24 + 20	50
24 + 00	48

P.M. Depth Measurements

Station	Trench Depth (Ft.)	
27+40	34	
27+20	43	
27+00	60	
24+80	70	
24+60	80	
24+40	97	
24+20	113	
24+00	135	
25+80	130	
25+60	125	
25+40	84	
25+20	86	
25+00	87	
24+80	92	
24+60	88	
24+40	90	
24+20	73	
24+00	32	
23+80	32	
23+60	27	END TRENCH

GROUNDWATER MITIGATION CONTROL SYSTEM
SAUGET AREA 2

Date: 09/29/03

A.M. Depth Measurements

Station	Trench Depth (Ft.)	
27 + 40	36	
27 + 20	45	
27 + 00	65	
26 + 80	71	
26 + 60	82	
26 + 40	102	
26 + 20	115	
26 + 00	128	
25 + 80	78	
25 + 60	81	
25 + 40	81	
25 + 20	87	
25 + 00	87	
24 + 80	91	
24 + 60	93	
24 + 40	29	
24 + 20	30	
24 + 00	24	END TRENCH

P.M. Depth Measurements

Station	Trench Depth (Ft.)	
27 + 40	36	
27 + 20	44	
27 + 00	65	
26 + 80	76	
26 + 60	82	
26 + 40	102	
26 + 20	115	
26 + 00	127	
25 + 80	116	
25 + 60	81	
25 + 40	85	
25 + 20	87	
25 + 00	[illegible] 87	
24 + 80	91	
24 + 60	91	
24 + 40	39	
24 + 20	36	
24 + 00	24	END TRENCH

GROUNDWATER MITIGATION CONTROL SYSTEM
SAUGET AREA 2

Date: 9/28/03

A.M. Depth Measurements

Station	Trench Depth (Ft.)
Sta. 27+50	0.0
Sta. 27+40	36.0
Sta. 27+20	47.0
Sta. 27+00	65.0
Sta. 26+80	78.0
Sta. 26+60	83.0
Sta. 26+40	102.0
Sta. 26+20	116.0
Sta. 26+00	125.0
Sta. 25+80	80.0
Sta. 25+60	85.0
Sta. 25+40	86.0
Sta. 25+20	90.0
Sta. 25+00	91.0
Sta. 24+80	95.0
Sta 24+60	96.0
Sta 24+40	30.0
Sta 24+20	32.0
Sta 24+00	29.0

P.M. Depth Measurements

Station	Trench Depth (Ft.)
Sta. 27+50	0.0
Sta. 27+40	36.0
Sta. 27+20	47.0
Sta. 27+00	65.0
Sta. 26+80	78.0
Sta. 26+60	83.0
Sta. 26+40	102.0
Sta. 26+20	116.0
Sta. 26+00	125.0
Sta. 25+80	80.0
Sta. 25+60	85.0
Sta. 25+40	86.0
Sta. 25+20	90.0
Sta. 25+00	91.0
Sta. 24+80	95.0
Sta 24+60	96.0
Sta 24+40	30.0
Sta 24+20	32.0
Sta 24+00	29.0
Sta 25+90	127.0
	Current Clam Position

GROUNDWATER MITIGATION CONTROL SYSTEM
SAUGET AREA 2

Date: 9/27/03

A.M. Depth Measurements

Station	Trench Depth (Ft.)
Sta. 27+50	0.0
Sta. 27+40	37.0
Sta. 27+20	45.0
Sta. 27+00	57.0
Sta. 26+80	74.0
Sta. 26+60	83.0
Sta. 26+40	105.0
Sta. 26+20	116.0
Sta. 26+00	125.0
Sta. 25+80	80.0
Sta. 25+60	84.0
Sta. 25+40	84.0
Sta. 25+20	90.0
Sta. 25+00	91.0
Sta. 24+80	93.0
Sta 24+60	95.0
Sta 24+40	30.0
Sta 24+20	29.0
Sta 24+00	25.0

P.M. Depth Measurements

Station	Trench Depth (Ft.)
Sta. 27+50	0.0
Sta. 27+40	36.0
Sta. 27+20	47.0
Sta. 27+00	65.0
Sta. 26+80	78.0
Sta. 26+60	83.0
Sta. 26+40	102.0
Sta. 26+20	116.0
Sta. 26+00	125.0
Sta. 25+80	80.0
Sta. 25+60	85.0
Sta. 25+40	86.0
Sta. 25+20	90.0
Sta. 25+00	91.0
Sta. 24+80	95.0
Sta 24+60	96.0
Sta 24+40	30.0
Sta 24+20	32.0
Sta 24+00	29.0

GROUNDWATER MITIGATION CONTROL SYSTEM
SAUGET AREA 2

Date: 9-25-03

A.M. Depth Measurements

Station	Trench Depth (Ft.)
27+40	~~40~~ 35
27+20	~~45~~ 42
27+00	66
26+80	74
26+60	82
26+40	98
26+20	115
26+00	104
25+80	80
25+60	81
25+40	82
25+20	88
25+00	85
24+80	91
24+60	92
24+40	50

P.M. Depth Measurements

Station	Trench Depth (Ft.)	
27+40	35	
27+20	42	
27+00	66	
26+80	74	
26+60	82	
26+40	98	
26+20	115	
26+00	104	
25+80	80	
25+60	81	
25+40	82	
25+20	88	
25+00	85	
24+80	93	
24+60	95	
24+40	61	
24+20	32	
24+00	26	END TRENCH

GROUNDWATER MITIGATION CONTROL SYSTEM
SAUGET AREA 2

Date: 9/24/03

A.M. Depth Measurements

Station	Trench Depth (Ft.)
Sta. 27+50	0.0
Sta. 27+40	36.0
Sta. 27+20	46.0
Sta. 27+00	65.0
Sta. 26+80	76.0
Sta. 26+60	82.0
Sta. 26+40	101.0
Sta. 26+20	116.0
Sta. 26+00	80.0
Sta. 25+80	80.0
Sta. 25+60	82.0
Sta. 25+40	82.0
Sta. 25+20	89.0
Sta. 25+00	92.0
Sta. 24+80	59.0
Sta 24+60	35.0
Sta 24+40	12.0
Sta 24+30	5.0

P.M. Depth Measurements

Station	Trench Depth (Ft.)
Sta. 27+50	0.0
Sta. 27+40	37.0
Sta. 27+20	46.0
Sta. 27+00	64.0
Sta. 26+80	76.0
Sta. 26+60	83.0
Sta. 26+40	101.0
Sta. 26+20	115.0
Sta. 26+00	80.0
Sta. 25+80	80.0
Sta. 25+60	82.0
Sta. 25+40	82.0
Sta. 25+20	88.0
Sta. 25+00	86.0
Sta. 24+80	77.0
Sta 24+60	76.0
Sta 24+40	50.0
Sta 24+30	5.0

GROUNDWATER MITIGATION CONTROL SYSTEM
SAUGET AREA 2

Date: 9/23/03

A.M. Depth Measurements

Station	Trench Depth (Ft.)

P.M. Depth Measurements

Station	Trench Depth (Ft.)	
27+40	30	
27+20	42	
27+00	60	
26+80	70	
26+60	82	
26+40	98	
26+20	116	
26+00	106	
25+80	80	
25+60	83	
25+40	82	
25+20	88	
25+00	92	
24+80	58	
24+60	32	
24+40	32	
24+30	5	END TRENCH

GROUNDWATER MITIGATION CONTROL SYSTEM
SAUGET AREA 2

Date: 9/22/03

A.M. Depth Measurements

Station	Trench Depth (Ft.)
27+40	36
27+20	45
27+00	63
26+80	70
26+60	82
26+40	97
26+20	102
26+00	79
25+80	79
25+60	83
25+40	83
25+20	90
25+00	92
24+80	87
24+70	25

END TRENCH

P.M. Depth Measurements

Station	Trench Depth (Ft.)
27+40	35
27+20	47
27+00	66
26+80	74
26+60	82
26+40	102
26+20	100
26+00	129
25+80	80
25+60	83
25+40	83
25+20	90
25+00	93
24+80	87 SB SHOWN ON 9/23/03
24+60	29
24+40	12 ~~END TRENCH~~
24+30	5 END TRENCH 24+30
24+30 D	
26+15	129'
26+05	130'

9-19 P.M.

9/19/03 pm

STA	FT
27+40 -	40
27+20 -	50
27+00 -	70
26+80 -	80
26+60 -	82
26+40 -	97
26+20 -	82
26+00 -	80
25+80 -	80
25+60 -	83
25+40 -	83
25+20 -	85
25+00 -	83
24+80 -	76
24+70 -	6
24+60 End-Trench	

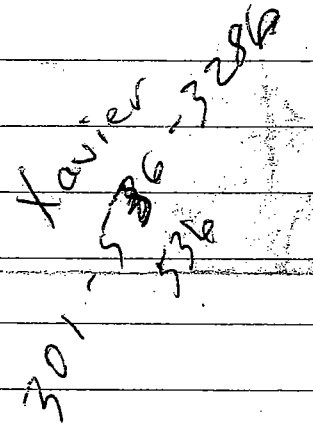

9/19/03
Am

STA	9-18 Am FT
27+40	35
27+20	47
27+00	64
26+80	70
26+60	81
26+40	92
26+20	80
26+00	77
25+80	79
25+60	84
25+40	80
25+20	70
25+00	73

2 H368 □ levels
2 6C192
2 6A503

9-18-03

27 + 40 - 35
27 + 20 - 48
27 + 00 - 62
26 + 80 - 69
26 + 60 - 80
26 + 40 - 88
26 + 20 - 78
26 + 00 - 79
25 + 80 - 78
25 + 60 - 82
25 + 40 - 87
25 + 20 - 65
25 + 00 - 60
24 + 80 - 59

"Richard Williams"
<r_assoc@ameritech.net>
02/15/2006 08:24 AM

To "Ken Berry " <kenneth_berry@urscorp.com>
cc
bcc
Subject FW: Conditional Approval of Spoils Management at Site R, Sauget Area 2 Site

FYI

Richard S. Williams
R.S. Williams & Associates
984 Creekside Circle
Naperville, IL 60563
(630) 698-0275
r_assoc@ameritech.net
or
rswill1@solutia.com
-----Original Message-----
From: Smith, Steven D
Sent: Friday, March 25, 2005 1:56 PM
To: Williams, Richard S
Subject: FW: Conditional Approval of Spoils Management at Site R, Sauget Area 2 Site
Importance: High

Note !

From: Fayoumi.Nabil@epamail.epa.gov [mailto:Fayoumi.Nabil@epamail.epa.gov]
Sent: Friday, March 25, 2005 10:43 AM
To: Smith, Steven D; l.glen.kurowski@monsanto.com
Cc: Sandra.Bron@epa.state.il.us; Clair Morris; Chris English
Subject: Re: Conditional Approval of Spoils Management at Site R, Sauget Area 2 Site
Steve and Glen,
Attached are USEPA's comments and recommendations regarding the Management of spoils at site R. In order to proceed with the spoils management at site R, as proposed by the PRPs, the USEPA is requesting that spoils analytical data be included in the revised Area 2 Human Health Risk Assessment (HHRA) that will be prepared following the completion of Area 2 RIFS's Supplemental Investigation. The USEPA reserves the right to order spoils to be removed from the 50-year flood plain, if the human health risk levels are deemed unacceptable.
Please note that the temporary spoil stockpile on top of site R is not covered by this conditional approval. This spoil stockpile is to be managed in accordance with RA design document. Please call with any questions.

Thanks,

NF

.....
Nabil Fayoumi
Remedial Project Manager
Superfund Division

U. S. EPA - Region 5
Phone: 312-886-6840
Fax: 312-886-4071

E-mail: fayoumi.nabil@epa.gov MEMORANDUM 032405 Site R Spoils.doc

Comments Regarding Spoils Management at Site R, Sauget Area 2

TO: Nabil Fayoumi/USEPA

FROM: CH2M HILL

DATE: March 24, 2005

This technical memorandum provides our comments regarding the management of spoils at Sauget Area 2 (SA2), Site R. Our comments are based on the following information:

- A letter dated February 25, 2005, from Solutia to USEPA outlining a management proposal for Site R spoils.
- A technical memorandum submitted by CH2M HILL on February 28, 2005, providing comments on the environmental sampling approach proposed in Solutia's February 25 letter.
- Analytical results from six spoils samples that were collected on March 7, 2005, and analyzed for total and Toxicity Characteristic Leaching Procedure (TCLP) concentrations of volatile organic compounds (VOCs), semi-volatile organic compounds (SVOCs), metals, and polychlorinated biphenyls (PCBs). Field procedures followed during the sampling effort are summarized in CH2M HILL's *Weekly Summary Report, USEPA Field Oversight, Sauget Area 2, Sauget, IL, Week Ending March 11, 2005.* Analytical results from the spoils samples were emailed to USEPA, IEPA, and CH2M HILL on March 18, 2005.

Human Health Risk Considerations

CH2M HILL has reviewed the analytical results for six spoils samples collected on March 7, 2005, from various one-foot intervals, ranging from 0.5 and 1.5 feet to 3.5 and 4.5 feet. Although no samples were collected from surface soil (0 to 6 inches) below ground surface, the detected concentrations are expected to be representative of surface soil concentrations now present in this area. Analytical results were compared against October 2004 EPA Region 9 Preliminary Remedial Goals (PRGs) for industrial soil, adjusted for a Hazard Quotient of 0.1 for PRGs based on non-carcinogenic effects. These screening values correspond to updated levels from the 2002 PRGs used in the 2003 Human Health Risk Assessment (HHRA) for Sauget Area 2 (ENSR Corporation, August 2003).

Three constituents were detected in spoils samples at concentrations exceeding 2004 EPA Region 9 PRGs: arsenic and the PCBs Aroclor 1248 and Aroclor 1260. The highest detected arsenic concentration (6.7 mg/kg) in the spoils samples was less than the maximum background concentration in surface soil (9.05 mg/kg) and equal to the maximum background concentration for subsurface soil (6.7 mg/kg) presented in the HHRA (ENSR Corporation, 2003). For this reason, arsenic in the spoils is not considered a Constituent of Potential Concern (COPC) from a human health risk standpoint. However, the PCB

compounds are COPCs that should be evaluated in a HHRA because the detected concentrations exceed 2004 EPA Region 9 PRGs in the spoils samples. (It should be noted that the 2003 HHRA did not identify any COPCs in surface soil at Site R).

Placement of 6 inches of clean fill on top of the spoils can prevent exposure of construction and industrial workers to the spoils via direct contact, ingestion, and particulate inhalation. (This, of course, assumes that no future construction or industrial activities disturb the clean fill and expose the underlying spoils). However, because the area lies within the 50-year floodplain, the potential exists for floodwaters to erode the uppermost 6 inches of fill, exposing the underlying spoils at the ground surface, thereby completing an exposure pathway to construction and industrial workers. For this reason, we recommend that a HHRA be performed to account for possible exposure of future construction and industrial workers to the spoils.

EPA Region 9 PRGs are conservative screening values that are based on an excess lifetime cancer risk (ELCR) of $1x10^{-6}$ per chemical. Industrial Soil PRGs are based on a worker exposure frequency of 250 days per year, while the 2003 HHRA assumes a lower exposure frequency of 190 days per year. Additionally, other exposure factors incorporated in the EPA Region 9 PRGs are different than those used in the HHRA for construction workers and industrial workers. Because the maximum detected concentrations of Aroclor 1248 and Aroclor 1260 (1.2 mg/kg and 1.8 mg/kg, respectively) are within one order of magnitude of the EPA Region 9 Industrial Soil PRG (0.74 mg/kg), and because the exposure assumptions for the PRGs are typically more conservative than those assumed in the HHRA for Site R, both compounds are likely to pose a risk on the order of $1x10^{-5}$ to $1x10^{-6}$. This risk range may be acceptable to USEPA, but risk calculations and justification for accepting the risk level should be provided in a HHRA. This assessment could be included in the revised HHRA that will be prepared for the Sauget Area 2 Sites following the completion of the Supplemental Investigation.

Ecological Risk Considerations

The analytical results from the spoils samples do not appear to pose substantial risks to ecological receptors in the area.

Recommendations

We feel that a reasonable approach for addressing spoils at Site R is to proceed with Solutia's proposal of hauling roughly 4,000 cubic yards of spoils to the south spoils containment area on top of the Site R landfill, grading the remaining spoils between the barrier wall cap and the toe of the landfill, and covering the remaining spoils with 6 inches of clean fill. We recommend that Solutia provide human health risk calculations demonstrating that this approach does not pose an unacceptable risk to future human receptors if the 6 inches of clean fill is removed by floodwaters in the future. USEPA can ask for the spoils to be hauled out of the 50-year floodplain if the calculated human health risk level is deemed unacceptable by the Agency.

February 24, 2005

Mr. Nabil S. Fayoumi
U. S. Environmental Protection Agency - Region 5
Superfund Division
77 West Jackson Boulevard (SR-6J)
Chicago, Illinois 60604-3590

Re: Slurry Wall Spoils Generation
Groundwater Migration Control System
Sauget Area 2 – Sites O, Q, R And S
Sauget, Illinois

Dear Mr. Fayoumi:

During a teleconference on February 22, 2005, you requested a proposal for the management of the spoil material generated by construction of the slurry wall for the Groundwater Migration Control System at the Sauget Area 2 Site R. This letter provides information on the final volume of spoils generated by the construction and presents the requested management proposal.

In Section 4.4.1 of the revised Prefinal Design submitted to you on July 3, 2003, it was noted that the design allowed for a maximum of approximately 20,000 cubic yards of spoil to be stored in a temporary stockpile on top of Site R, consisting of excavated soil, bentonite slurry, and excess or spilled backfill mix. It was also noted that the actual volume of spoil was expected to 10,000 cubic yards or less. That estimate was revised in a letter dated October 24, 2003. In that letter, the spoil volume was projected to be between 17,500 and 25,500 cubic yards, primarily because of the need to add imported clay soil to decrease the permeability of the in situ materials and because of the inability to use the fly ash, boulders, and landfilled materials encountered at the site for backfill.

The actual volume of spoil generated at the site is approximately 39,000 cubic yards. The sources of the additional materials are the following:

- The total volume of surplus slurry to be solidified amounted to about 10,000 cu. yd., as opposed to the 5,000 cu. yd. estimate contained in our October 4, 2003 letter. The increase in the surplus slurry was largely the result of the fact that fresh slurry had to be added to the trench on a continuous basis to control the sand content and density, despite our best efforts to de-sand the in-place slurry. The

winter shutdown at the beginning of 2004 also resulted in the generations of additional slurry volumes that could not be reused.

- The slurry trench between approximately stations 28+00 and 31+00 was excavated with a mechanical clamshell because of potential subsurface obstructions. The bucket on a mechanical clam cannot be controlled with the same degree of precision as a hydraulic clam, with the result that the trench width in this area was closer to 8 feet than the 3.5 feet that is representative of the rest of the trench. Allowing for the addition of 15 percent clay borrow and 5 percent bentonite to achieve the permeability specifications, the additional spoil generated in this section of the project was approximately 1,500 cu. yd.

- Because of the presence of fly ash across most of the site, a substantial granular work pad had to be constructed along most of the trench alignment for support of the excavation equipment. The upper two feet of this work pad was removed and classified as spoil. This amounts to approximately 6,000 cu. yd.

- In our October 24 letter, we estimated that the volume of landfilled material present along the trench alignment in Site Q would be about 1,500 cu. yd. The actual volume of unsuitable material transported to the containment area on top of Site R was approximately 4,500 cu. yd., about 3,000 cu. yd. more than estimated.

At present, about 11,000 cu. yd. of soil and 3,000 cu. yd. of liquid slurry are located in the temporary stockpile on top of Site R. Some of the soil is very wet and requires stabilizing and the slurry will have to be solidified. This will result in an additional 700 to 1000 cu. yd. of cement being added to the materials. The remaining 24,000 cu. yd. of spoil is presently located between the slurry wall and the western toe of the landfill, as shown on the attached Figure 1. That material will either have to be placed in locations other than on top of the Site R landfill, or a second containment area for an additional temporary stockpile will have to be constructed on top of the landfill.

Approximately half of the spoil along the toe of the landfill (11,000 cu. yd.) has already been graded to promote drainage and natural drying. This material is located in the southern half of the site (as shown on Figure 1) and was spread in this location because the stockpile area was full and it had to be graded to prevent stormwater ponding and subsequent softening. About 6,000 cu. yd. has been covered with a minimum of 6 inches of clean topsoil in order to minimize the volume of contact stormwater requiring collection and treatment, while the rest is sloped to drain, but has not been covered by topsoil. The approximately 13,000 cu. yd. of ungraded material sits in piles and windrows in the northern half of the site.

Based on the current configuration of the temporary stockpile area, approximately 4,000 cu. yd. of the ungraded spoil will have to be transported to the top of the landfill to allow completion of the pile to the design grades. It is proposed that the remaining 20,000 cu. yd. of spoil presently located between the slurry wall and the toe of the landfill, including the 11,000 cu. yd. that have already been graded, be left in place. The 9,000 cu. yd. of

ungraded material will be graded to promote natural drainage and all of the spoil will be covered by at least 6 inches of clean topsoil and seeded.

This proposal has the advantage of providing a secure long term management alternative for the spoil, while allowing improvements in the pre-construction surface water drainage system at the site. Prior to construction of the slurry wall, the lowest part of the site was the central portion between the river bank and the western toe of the landfill. Water ponded in this area even after modest rainstorms and access was difficult until the ponded water evaporated or infiltrated. Easy access to this area is important since extraction well EW-2 and piezometer pairs PZ-2 and PZ-3 are located in this is the part of the site. By spreading and grading the spoils as proposed, the ponding will be eliminated without the need to import even more borrow material from off-site sources..

Since the spoil will all be located upgradient of the barrier wall, potential groundwater impacts from infiltration of precipitation through the material is not an issue. All groundwater upgradient of the wall is extracted and pumped to the American Bottoms Regional Wastewater Treatment Facility for treatment and disposal. Thus, the only potential environmental pathways of concern are direct contact with the spoil and migration of the spoil into the surface water system as a result of erosion during a flood event.

Direct contact in not considered to be an important exposure pathway since the site is secured with a perimeter fence and is not used for any routine purpose. Consequently, human presence is extremely sporadic and the opportunity for direct contact is minimal. During an evaluation of the current site risks to human health that was completed as part of the RCRA Environmental Indicator process, the existing site security was judged to provide sufficient protection to satisfy concerns about exposure to occupational workers and trespassers.

With regard to possible erosion and migration into the surface water regime, placement of the spoil in this area of the site will not increase the likelihood that it will be eroded during a flooding event. The material will be placed in a low lying portion of the site and will be covered by at least 6 inches of clean topsoil. In the event of flooding, the velocity structure of the floodwaters is such that this area will be a low velocity regime in which surface soil erosion will be minimal or non-existent. Published data on the critical flow velocity required to erode different soils and surfaces indicates that a flow velocity in the vicinity of 4 feet per second is necessary to cause erosion in a grass lined channel. The area under consideration is not a channel with concentrated flow and, consequently, even higher velocities will be required to cause erosion. It is unlikely that overbank velocities this high will be experienced during a flood event at the site. However, it is recommended that regular inspection of the topsoil and vegetative growth layer form a part of the routine Operation and Maintenance activities at the site to ensure that potential erosion is identified early and repaired.

As a means of documenting the volume and characteristics of the spoil placed in this portion of the site, it is proposed that four samples of the material be obtained at random

locations and depths (approximately one sample per 5,000 cu yd. of spoil). These samples will be analyzed for volatile and semi-volatile organic constituents, using Methods 8260 and 8270 respectively. These compounds are the primary constituents of concern identified in groundwater at the site and would be expected to be the constituents present in soil excavated from beneath the water table in the slurry trench. Once the results are available and the grading is complete, a report will be prepared showing isopachs of spoil thickness, based on pre- and post-construction surveys, and the results of the analytical testing.

If you have any questions about this letter, or wish to discus the details of the proposal, please do not hesitate to call me.

Sincerely,

Solutia Inc.

Steven D. Smith
Project Coordinator

cc: Sandra Bron - IEPA
Chris English – CH2M Hill
Glen Kurowski, Monsanto
Bruce Yare - Solutia
Richard Williams - Solutia

STORMWATER POLLUTION PREVENTION PLAN FOR CONSTRUCTION ACTIVITIES REVISION TO PLAN FOR PIPELINE CONSTRUCTION

BARRIER WALL
GMCS AREA 2 – SITE R

Solutia Inc.
Sauget, Illinois
Illinois Permit No. ILR108258

Prepared for:
Inquip Associates, Inc.
P. O. Box 6277
McLean, VA 22106

August 14, 2003

URS Corporation
1001 Highland Plaza Drive West, Suite 300
St. Louis, MO 63100
(314) 429-0100
Project # 21561236.00001

TABLE OF CONTENTS

SECTION 1 REQUIREMENTS AND CERTIFICATIONS 1-1

1.1 Requirements 1-1
1.2 Permitting 1-1
1.3 Certifications 1-2
1.3.1 Plan Preparer 1-2
1.3.2 Owner 1-2
1.3.3 Contractor 1-2

SECTION 2 PROJECT DESCRIPTION 2-1

2.1 Description of Site and Project 2-1
2.2 Current Activities 2-1
2.3 Site Maps 2-3

SECTION 3 STORMWATER MANAGEMENT CONTROLS 3-1

3.1 Erosion and Sediment Controls During Construction Activities 3-1
3.2 Final Stabilization Practices 3-1
3.3 Stormwater Management Controls 3-1
3.4 Other Wastes 3-2
3.5 Off-site Vehicle Tracking 3-2
3.6 Dust Suppression 3-3

SECTION 4 MAINTENANCE 4-1

SECTION 5 TRAINING 5-1

SECTION 6 INSPECTIONS 6-1

SECTION 7 NON-STORMWATER DISCHARGES 7-1

7.1 Inventory for Pollution Prevention Plan 7-1
7.2 Spill Prevention 7-1
7.2.1 Good Housekeeping 7-1
7.2.2 Hazardous Products 7-2
7.2.3 Product Specific Practices 7-2
7.2.4 Spill Prevention Practices 7-2

TABLE OF CONTENTS

List of Figures

Figure 1 SWPPP Site Plan

Figure 2 Details (from: Storm Water Management for Construction Activities, EPA, 1992)

- Earth Dike
- Drainage Swale
- Interceptor Dikes and Swales
- Temporary Stream Crossing
- Temporary Storm Drain Diversion
- Pipe Slope Drains
- Silt Fence
- Gravel or Stone Filter Berm
- Sediment Trap
- Temporary Sediment Basin
- Check Dams
- Stabilized Construction Entrance

Figure 3 BMP Fact Sheets(from: Storm Water Management for Construction Activities, EPA, 1992)

- Silt Fence
- Pipe Slope Drain
- Stabilized Construction Entrance
- Filter Fabric Inlet Protection
- Excavated Gravel Inlet Protection
- Block and Gravel Inlet Protection
- Check Dams
- Earth Dike
- Drainage Swale
- Temporary Sediment Trap

List of Appendices

Appendix A Notice of Coverage Under Construction Storm Water General Permit, issued by IEPA May 27, 2003

Appendix B Letter Notice to IEPA of Amendment to Existing SWPPP

Appendix C Notice of Termination of Coverage Under the General Permit

Appendix D Inspection Forms

Appendix E Product Specific and Spill Prevention Practices

Appendix F General State Operating Permit

SECTION ONE Requirements

1.1 REQUIREMENTS

Stormwater Pollution Prevention Plans (SWPPP) are required by the State of Illinois Environmental Protection Agency (IEPA) to ensure the design, implementation, management and maintenance of Best Management Practices (BMP) in order to reduce the amount of sediment and other pollutants in stormwater discharges associated with land disturbance activities, comply with the Illinois Water Quality Standards, and insure compliance with the terms and conditions of the general land disturbance permit.

This SWPPP is an amendment to National Pollution Discharge Elimination System (NPDES) Permit No. ILR108258 issued by IEPA May 27, 2003 for related activities at the site. The following documents shall be kept on site during the life of this project:

- This SWPPP
- The original SWPPP for the Permanent Discharge Pipeline
- Copies of signed application forms (Notice of Intent)
- Specific NPDES permit issued by IEPA
- Inspection reports
- Amendments to the SWPPP
- Notice of Termination upon completion of all land disturbance activities.

1.2 PERMITTING

The State of Illinois Environmental Protection Agency has issued a specific NPDES Permit for construction activities at this site. A copy of this Permit is in Appendix A. In order to obtain coverage under this general permit, the following permitting sequence is to be followed:

- Solutia will submit a letter to IEPA requesting an addendum to the existing SWPPP. A copy of this letter is in Appendix B.
- The next step is to implement this SWPPP.
- After construction and all land disturbance work is complete, and final ground cover has been established, submit Notice of Termination (NOT) (Appendix C) of coverage under the General Permit for stormwater discharges associated with construction site activities.

SECTION ONE Requirements

1.3 CERTIFICATIONS

1.3.1 Plan Preparer

This plan has been prepared in accordance with the General State Stormwater Permit (NPDES Permit No. ILR10) and related IEPA guidance manuals.

M J Bynum — 8/14/03

Plan Prepared by URS Corporation — Date

1.3.2 Owner

We hereby certify that we are aware of and will comply with the terms and conditions of the General State Stormwater Permit and this SWPPP.

Gary W Vandivier — 9/4/03

Site Manager
Solutia, Inc. — Date

1.3.3 Contractor

I certify under penalty of law that I understand the terms and conditions of the general National Pollution Discharge Elimination System (NPDES) permit (ILR100000) that authorizes the storm water discharges associated with industrial activity from the construction site identified as part of this certification.

_____ _____

Site Superintendent — Date
Contractor: Inquip Associates, Inc., P. O Box 6277, McLean, VA 22106, 703-442-0143
Site address: 5 Riverview Avenue, Sauget, Illinois

SECTION TWO Project Description

2.1 DESCRIPTION OF SITE AND PROJECT

The work area for the Barrier Wall construction activities is located at Site R, at 5 Riverview Avenue in the City of Sauget, St. Clair County, Illinois. Site R is a closed industrial-waste disposal area. The work area lies along the east bank of the Mississippi River. The Barrier Wall is being constructed as a part of a project to control groundwater migration from the site to the Mississippi River.

Site R contains approximately 34 acres of land, not all of which will be disturbed by the construction of the barrier wall. The wall is approximately 3,500 feet long. The width of the area directly impacted by the wall construction equipment will vary from 50 feet to 150 feet. Other areas required for the construction of the wall include mixing of wall materials and backfill, and stockpiles of excavated materials that are not suitable for final wall construction. The work area is on terrain that slopes gently from east to west toward the Mississippi River.

Spoils excavated for the wall construction below the groundwater level should be considered to be impacted by hazardous materials. For this reason, special care shall be taken to control stormwater. Stormwater may be classified for the purposes of this project into three groups:

1. Run-on stormwater is that which is generated off site, beyond the boundaries of Site R. This stormwater shall be directed around the work areas and channeled to the Mississippi River without coming into contact with the disturbed areas.

2. Contact stormwater is that rainwater which comes into contact with excavated spoils from the barrier wall, groundwater which may be contained in the spoils, and that which is used to generate the slurry for the wall construction. All excess contact stormwater, that is not used in wall construction, shall be directed to a storage tank and treatment system supplied by Solutia, Inc.

3. Non-contact stormwater is that rainwater which falls on the site, that is not in contact with the wall construction activity. This stormwater may be directed to the Mississippi River through and using appropriate erosion and sediment controls as described herein.

2.2 CURRENT ACTIVITIES

Site R is a closed industrial-waste disposal area owned by Solutia Inc. Activities such as groundwater monitoring and cap maintenance are routinely performed at this site by Solutia Inc.

SECTION TWO Project Description

Solutia Inc. has constructed a permanent discharge pipeline, that is part of the groundwater migration control system that will address groundwater impact under the site. There are no full time employees at the site.

Overall, construction may be summarized as follows:

- Install erosion and sedimentation control measures prior to any land disturbance activity. Install stabilized construction entrances at Riverview. Sedimentation control measures may be installed in stages as the barrier wall construction proceeds. While the barrier wall is being constructed in Riverview, a second stabilized construction entrance may be required at the southern end of the site.
- Clear and grub the site as the work progresses in stages.
- Construct the Stormwater Treatment System (by others)
- Perform exploratory excavation along route of the barrier wall from approximately Station 12+50 to 31+50. This excavation is only expected to be 20 feet deep and should not intercept the groundwater. Therefore, only non-contact stormwater may be generated. The trench will be backfilled immediately with the excavated material. A temporary silt fence may be used for control of sedimentation runoff.
- Construct the barrier wall in stages starting at Station 12+50 and working northerly toward Station 31+50.
- A temporary stockpile will be constructed on the eastern portion of the existing landfill to contain excess excavated material. Runoff from this area should be considered to be contact stormwater.
- Perform exploratory excavation along Riverview Avenue. This excavation is only expected to be 20 feet deep and should not intercept the groundwater. Therefore, only non-contact stormwater may be generated. The trench will be backfilled immediately with the excavated material. A temporary silt fence may be used for control of sedimentation runoff.
- Continue to construct the barrier wall in Riverview Avenue.
- Perform exploratory excavation from Station 12+50 to 5+00. This excavation is only expected to be 20 feet deep and should not intercept the groundwater. Therefore, only non-contact stormwater may be generated. The trench will be backfilled immediately

with the excavated material. A temporary silt fence may be used for control of sedimentation runoff.

- Construct the barrier wall from Station 12+50 to 5+00.
- Temporarily stabilize denuded areas within 14-days of last construction activity in that area. After the barrier wall is constructed in any area, the control devices may be converted from contact stormwater to non-contact stormwater function. Install additional erosion and sediment control devices as required.
- As outdoor construction activity is completed and the site is stabilized, reseed and fertilize any remaining areas disturbed by construction
- Stabilize disturbed areas following completion of final construction
- Continue inspections and maintenance until site is finally stabilized
- File Notice of Termination (NOT) of coverage under the General Permit for stormwater discharges associated with construction site activities.

2.3 SITE MAPS

A site location map is in the general construction documents. Locations of the proposed erosion and sediment controls are provided in the site plans contained herein.

SECTION THREE Stormwater Management Controls

3.1 EROSION AND SEDIMENT CONTROLS DURING CONSTRUCTION ACTIVITIES

The general locations of erosion and sediment controls are shown on Figure 1. Filter fabric fencing will be used along the down gradient construction boundaries to trap sediment migrating from the work area and may be used to define and segregate work areas. All erosion and sediment controls shall be in place prior to disturbing the soils.

Due to the nature of the construction, it is anticipated that stormwater from any particular area may be classified as contact or non-contact at different times depending on the activity and stage of the construction. The Contractor may install and remove control devices to contain or segregate stormwater to accommodate the construction. No device that has been in contact with or used in a control for contact stormwater may be reused in a non-contact application. However, devices that have been used in a non-contact application may be reused in a contact application.

During the construction process, the Contractor may install temporary swales and berms to control erosion. Mulch shall be applied if the disturbed area will not receive final stabilization within 14 calendar days. Existing grass swales should be protected and utilized to slow the velocity of stormwater leaving the site.

The discharge rate used for sizing pumps, channels and swales, etc. should be calculated for a 24-hour, 25-year storm as follows:

- The volume and rate of run-off may be determined by use of the Rational Method $Q = C*I*A$
- The run-off coefficient used for the site is 0.1
- From Rainfall Frequency Atlas of the Midwest, assuming a time of concentration of 15 minutes, the precipitation is 1.63 inches, giving a rate of $I = 4*1.63 = 6.52$ inches per hour
- $Q = 0.1*6.52*1 = 6.52$ cfs per acre = 49 gpm per acre

3.2 FINAL STABILIZATION PRACTICES

After final construction is completed, the newly graded areas and exposed soils will be seeded, fertilized and mulched. Disturbed areas will be stabilized, either temporarily or permanently as soon as possible, but no later than 14 days after completion of construction activities at that area.

3.3 STORMWATER MANAGEMENT CONTROLS

SECTIONTHREE Stormwater Management Controls

The wall construction activities will not result in runoff flows that are higher than pre-construction levels. Therefore, long-term stormwater management controls for this project are not warranted, nor are any such controls included as part of this SWPPP.

3.4 OTHER WASTES

Any solid waste materials excavated during the construction process will be collected and stored in securely lidded metal drums or roll-off containers provided by a licensed waste management company under contract to Solutia. The containers will meet local and state waste management regulations. Solid wastes include metal objects, pipe, rebar and concrete, and does not include soil that can be reused as backfill.

Concrete pavement from Riverview Avenue may be disposed in the temporary stockpile or hauled off to a construction demolition landfill.

Trash and construction debris from the site will be deposited in a separate suitable container. The trash and debris will be hauled to an approved landfill. No construction waste material will be buried onsite.

Any liquid wastes that show up in the excavated material may be mixed as part of the slurry and deposited back into the trench as part of the barrier wall.

Personnel will be instructed regarding the correct procedure for waste disposal. Notices stating these practices will be posted in the office trailer and the site operations manager will be responsible for seeing that these procedures are followed.

All excess contact stormwater shall be pumped to the Stormwater Treatment System provided by Solutia. The site operations manager will be responsible for seeing that these practices are followed.

All sanitary waste will be regularly collected from the portable units by a licensed sanitary waste management contractor.

3.5 OFF-SITE VEHICLE TRACKING

Access to the site is via paved roads. A stabilized construction entrance/exit will be required. All construction equipment will be decontaminated by means of a high-pressure water wash to obtain a visibly clean condition prior to exiting the site.

3.6 DUST SUPPRESSION

Water sprays will be used to control dust during extended dry periods. Chemical dust suppressants shall not be used.

SECTION FOUR Maintenance

Stabilization practices will include stabilization of concess, staging and parking areas. Graded surfaces will be seeded and fertilized.

Structural practices will include filter fabric fencing, andporary swales. Filter fabric fences will be installed at the bottom of long graded slop

To maintain the above practices, the following will be pe

- Maintenance and repairs will be conducted wit of inspection report (see Section 5).
- Sediment will be removed from behind the sediand traps when it becomes greater than 1/3 the height of the sediment contrSediment shall be managed as required by its water content. If considered tstormwater, then sediment shall be placed in the temporary stockpile.
- Conveyance structures shall be maintained so e in the design condition. Velocity attenuating channels shall provide vegetor other means as designed to accomplish the desired result. Foreign debris,ves and lawn cuttings shall not be allowed to accumulate in drainage ditches.
- Permanent seeding shall be inspected weekly dud of establishment for bare spots and areas of insufficient germination or grial action shall be taken to establish a stabilized surface in these areas once i
- The street entrance to the access drive shall be kd, dust, and debris.

SECTIONFIVE Training

Periodic training of all employees at all levels of responsibility will be conducted to assure compliance with the requirements of this SWPPP. Training topics will include spill response, materials/equipment handling procedures, and good housekeeping strategies. Additional discussion topics will include maintenance and inspection procedures for the stormwater erosion control structures.

SECTION SIX Inspections

The Contractor will designate a qualified person or persons to perform the following inspections:

- Disturbed areas and areas used for storage or materials that are exposed to precipitation will be inspected for evidence of, or the potential for, pollutants entering the drainage system.
- Erosion and sediment control measures identified in the plan will be observed to ensure that they are operating correctly.
- Where discharge locations or points are accessible, they will be inspected to ascertain whether erosion control measures are effective in preventing significant impacts to receiving waters.
- Locations where vehicles enter or exit the site will be inspected for evidence of offsite sediment tracking.

The inspection will be conducted by the site operations manager at least once every seven calendar days and within 24-hours after a storm of 0.5 inch or greater until the area is stabilized. After that portion of the site is finally stabilized, inspection will be conducted at least once every month until the stormwater permit is terminated.

Based on the results of the inspection, the site description and control measures of this SWPPP will be revised as appropriate, but in no case later than seven calendar days following the inspection.

A report summarizing the scope of the inspection, name and qualifications of personnel making the inspection, the date(s) of the inspection, major observations relating to the implementation of the SWPPP, and actions taken in accordance with the above will be made and retained as part of the SWPPP for at least three years from the date that the site is finally stabilized. The report will be signed in accordance with the General Permit.

Copies of the forms to be used for the Inspection and Maintenance Report are included in Appendix D of this SWPPP.

SECTIONSEVEN Non-Stormwater Discharges

7.1 INVENTORY FOR POLLUTION PREVENTION PLAN

The following substances are expected to be present onsite during construction and have the potential for polluting stormwater:

- Fuels
- Lubricants
- Fertilizer
- Bentonite
- Attapulgite, a clay material
- Clayey borrow
- Cement

7.2 SPILL PREVENTION

The following are the material management practices that will be used to reduce the risk of spills or other accidental exposure of the materials and substances described above to stormwater runoff.

7.2.1 Good Housekeeping

The following good housekeeping practices will be followed onsite during the construction project.

- An effort will be made to store only enough product required to do the job.
- All materials stored onsite will be stored in a neat, orderly manner in their appropriate containers, and, if possible, under a roof or other enclosure.
- Products will be kept in their original containers with the original manufacturer's label.
- Substances will not be mixed with one another unless recommended by the manufacturer.
- Whenever possible, all of a product will be used before disposing of the container.
- Manufacturer's recommendations for proper use and disposal will be followed.
- The site superintendent will inspect daily to ensure proper use and disposal of materials onsite.

SECTIONSEVEN Non-Stormwater Discharges

7.2.2 Hazardous Products

These practices will be used to reduce the risks associated with hazardous material, if hazardous materials are used.

- Products will be kept in the original containers unless they are not resealable.
- Original labels and material safety data will be retained.
- Fuels will be stored in double walled tanks with less than 1,000 gallon capacity.
- If surplus product must be disposed of, manufacturer's or local and State recommended methods for proper disposal will be followed.

7.2.3 Product Specific Practices

The product specific practices to be followed are provided in Appendix E.

7.2.4 Spill Prevention Practices

The spill prevention practices to be followed are provided in Appendix E.

Figures

Figure 1 SWPPP Site Plan

Figures

Figure 2 Details (from: Storm Water Management for Construction Activities, EPA, 1992)

- Earth Dike
- Drainage Swale
- Interceptor Dikes and Swales
- Temporary Stream Crossing
- Temporary Storm Drain Diversion
- Pipe Slope Drains
- Silt Fence
- Gravel or Stone Filter Berm
- Sediment Trap
- Temporary Sediment Basin
- Check Dams
- Stabilized Construction Entrance

Earth Dike

What Is It

An earth dike is a ridge or ridge and channel combination used to protect work areas from upslope runoff and to divert sediment-laden water to appropriate traps or stable outlets. The dike consists of compacted soil and stone, riprap, or vegetation to stabilize the channel.

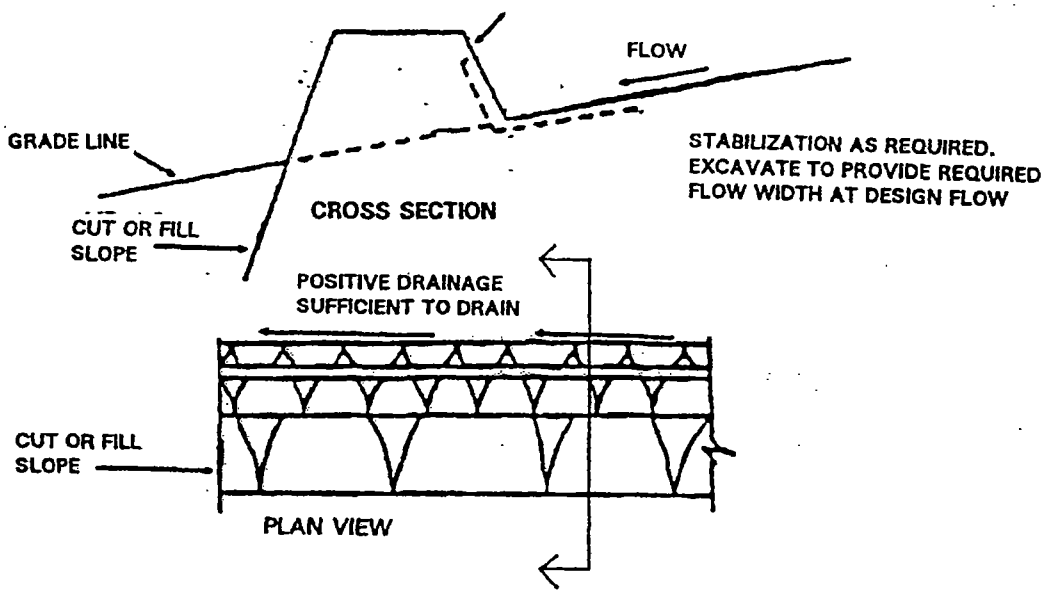

FIGURE 3.10 EARTH DIKE
(Modified from Maryland Department of the Environment, 1991)

When and Where to Use It

Earth dikes are used in construction areas to control erosion, sedimentation, or flood damage. Earth dikes can be used in the following situations:

- Above disturbed existing slopes and above cut or fill slopes to prevent runoff over the slope
- Across unprotected slopes, as slope breaks, to reduce slope length
- Below slopes to divert excess runoff to stabilized outlets
- To divert sediment laden water to sediment traps
- At or near the perimeter of the construction area to keep sediment from leaving the site

- Above disturbed areas before stabilization to prevent erosion and maintain acceptable working conditions
- Temporary diversions may also serve as sediment traps when the site has been overexcavated on a flat grade or in conjunction with a sediment fence.

What to Consider

Despite an earth dike's simplicity, improper design can limit its effectiveness; therefore, the State or local requirements should be consulted. Some general considerations include proper compaction of the earth dike, appropriate location to divert the intercepted runoff, and properly designed ridge height and thicknesses. Earth dikes should be constructed along a positive grade. There should be no dips or low points in an earth dike where the storm water will collect (other than the discharge point). Also, the intercepted runoff from disturbed areas should be diverted to a sediment-trapping device. Runoff from undisturbed areas can be channeled to an existing swale or to a level spreader. Stabilization for the dike and flow channel of the drainage swale should be accomplished as soon as possible. Stabilization materials can include vegetation or stone/riprap.

Advantages of an Earth Dike
• Can be constructed from materials and equipment which are typically already present on a construction site
Disadvantages of an Earth Dike
• Frequent inspection and maintenance required

Drainage Swale

What Is It

A drainage swale is a channel with a lining of vegetation, riprap, asphalt, concrete, or other material. It is constructed by excavating a channel and applying the appropriate stabilization.

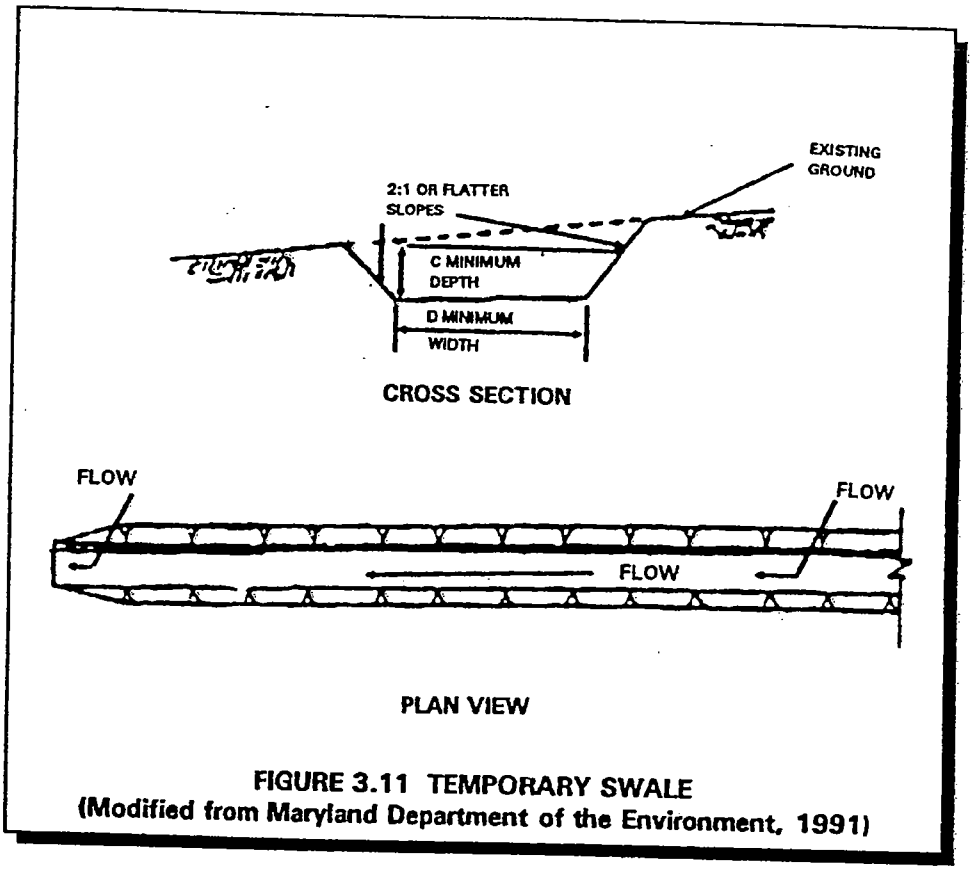

FIGURE 3.11 TEMPORARY SWALE
(Modified from Maryland Department of the Environment, 1991)

When and Where to Use It

A drainage swale applies when runoff is to be conveyed without causing erosion. Drainage swales can be used to convey runoff from the bottom or top of a slope. Drainage swales accomplish this by intercepting and diverting the flow to a suitable outlet. For swales draining a disturbed area, the outlet can be to a sediment trapping device prior to its release.

What to Consider

Since design flows, channel linings, and appropriate outlet devices will need to be considered, consult your State's requirements on such erosion control measures prior to constructing a drainage swale. General considerations include:

- Divert the intercepted runoff to an appropriate outlet.

- The swale should be lined using geotextiles, grass, sod, riprap, asphalt, or concrete. The selection of the liner is dependent upon the volume and the velocity of the anticipated runoff.
- The swale should have a positive grade. There should be no dips or low points in the swale where storm water will collect.

Advantages of a Drainage Swale
• Excavation of swale can be easily performed with earth moving equipment • Can transport large volumes of runoff
Disadvantages of a Drainage Swale
• Stabilization and design costs can make construction expensive • Use is restricted to areas with relatively flat slopes

Interceptor Dikes and Swales

What Are They

Interceptor dikes (ridges of compacted soil) and swales (excavated depressions) are used to keep upslope runoff from crossing areas where there is a high risk of erosion. They reduce the amount and speed of flow and then guide it to a stabilized outfall (point of discharge) or sediment trapping area (see sections on Sediment Traps and Temporary Sediment Basins). Interceptor dikes and swales divert runoff using a combination of earth dike and vegetated swale. Runoff is channeled away from locations where there is a high risk of erosion by placing a diversion dike or swale at the top of a sloping disturbed area. Dikes and swales also collect overland flow, changing it into concentrated flows. Interceptor dikes and swales can be either temporary or permanent storm water control structures.

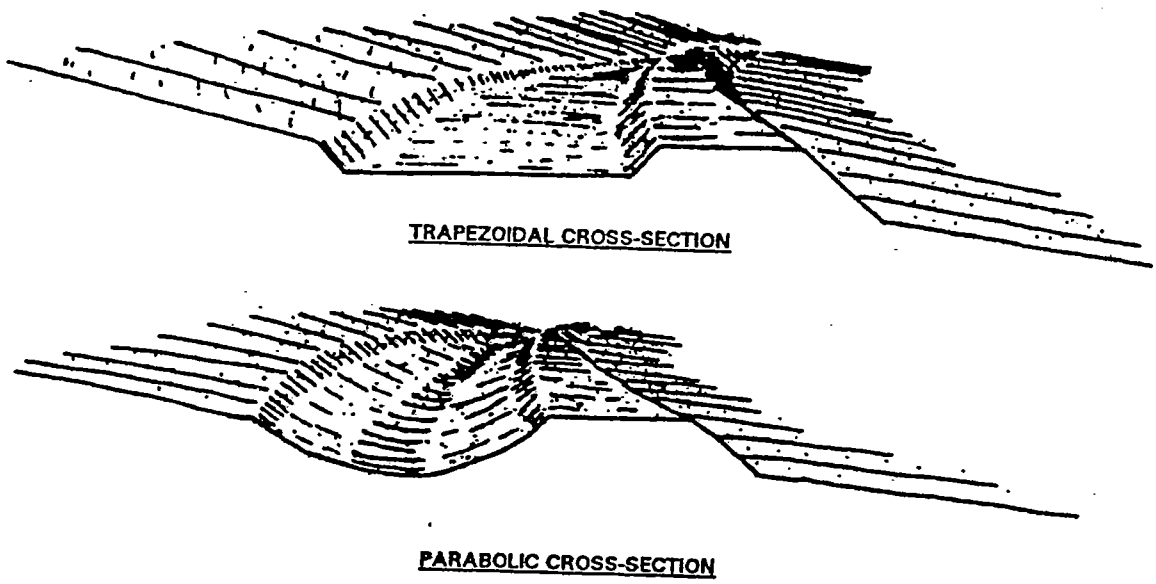

FIGURE 3.12 TYPICAL INTERCEPTOR DIKES AND SWALES
(Modified from State of Maryland, 1983)

When and Where to Use Them

Interceptor dikes and swales are generally built around the perimeter of a construction site before any major soil disturbing activity takes place. Temporary dikes or swales may also be used to protect existing buildings; areas, such as stockpiles; or other small areas that have not yet been fully stabilized. When constructed along the upslope perimeter of a disturbed or high-risk area (though not necessarily all the way around it), dikes or swales prevent runoff from uphill areas from crossing the unprotected slope. Temporary dikes or swales constructed on the down slope side of the disturbed or high-risk area will prevent runoff that contains sediment from leaving the site before sediment is removed. For short slopes, a dike or swale at the top of the slope reduces the

amount of runoff reaching the disturbed area. For longer slopes, several dikes or swales are placed across the slope at intervals. This practice reduces the amount of runoff that accumulates on the face of the slope and carries the runoff safely down the slope. In all cases, runoff is guided to a sediment trapping area or a stabilized outfall before release.

What to Consider

Temporary dikes and swales are used in areas of overland flow; if they remain in place longer than 15 days, they should be stabilized. Runoff channeled by a dike or swale should be directed to an adequate sediment trapping area or stabilized outfall. Care should be taken to provide enough slope for drainage but not too much slope to cause erosion due to high runoff flow speed. Temporary interceptor dikes and swales may remain in place as long as 12 to 18 months (with proper stabilization) or be rebuilt at the end of each day's activities. Dikes or swales should remain in place until the area they were built to protect is permanently stabilized. Interceptor dikes and swales can be permanent controls. However, permanent controls: should be designed to handle runoff after construction is complete; should be permanently stabilized; and should be inspected and maintained on a regular basis. Temporary and permanent control measures should be inspected once each week on a regular schedule and after every storm. Repairs necessary to the dike and flow channel should be made promptly.

Advantages of Interceptor Dikes and Swales
• Are simple and effective for channeling runoff away from areas subject to erosion
• Can handle flows from large drainage areas
• Are inexpensive because they use materials and equipment normally found onsite
Disadvantages of Interceptor Dikes and Swales
• If constructed improperly, can cause erosion and sediment transport since flows are concentrated
• May cause problems to vegetation growth if water flow is too fast
• Require additional maintenance, inspections, and repairs

Temporary Stream Crossing

What Is It

A temporary stream crossing is a bridge or culvert across a stream or watercourse for short-term use by construction vehicles or heavy equipment. Vehicles moving over unprotected stream banks will damage the bank, thereby releasing sediments and degrading the stream bank. A stream crossing provides a means for construction vehicles to cross streams or watercourses without moving sediment to streams, damaging the streambed or channel, or causing flooding.

When and Where to Use It

A temporary stream crossing is used when heavy equipment should be moved from one side of a stream channel to another, or where light-duty construction vehicles have to cross the stream channel frequently for a short period of time. Temporary stream crossings should be constructed only when it is necessary to cross a stream and a permanent crossing is not yet constructed.

- Bridges—Where available materials and designs are adequate to bear the expected loadings, bridges are preferred as a temporary stream crossing.

- Culverts—Culverts are the most common type of stream crossings and are relatively easy to construct. A pipe, which is to carry the flow, is laid into the channel and covered by gravel.

What to Consider

When feasible, one should always attempt to minimize or eliminate the need to cross streams. Temporary stream crossings are a direct source of pollution; therefore, every effort should be made to use an alternate method (e.g., longer detour), when feasible. When it becomes necessary to cross a stream, a well planned approach will minimize the damage to the stream bank and reduce erosion. The design of temporary stream crossings requires knowledge of the design flows and other information; therefore, a professional engineer and specific State and local requirements should be consulted. State/local jurisdictions may require a separate permit for temporary stream crossings; contact them directly to learn about their exact requirements.

The specific loads and the stream conditions will dictate what type of stream crossing to employ. Bridges are the preferred method to cross a stream as they provide the least obstruction to flows and fish migration.

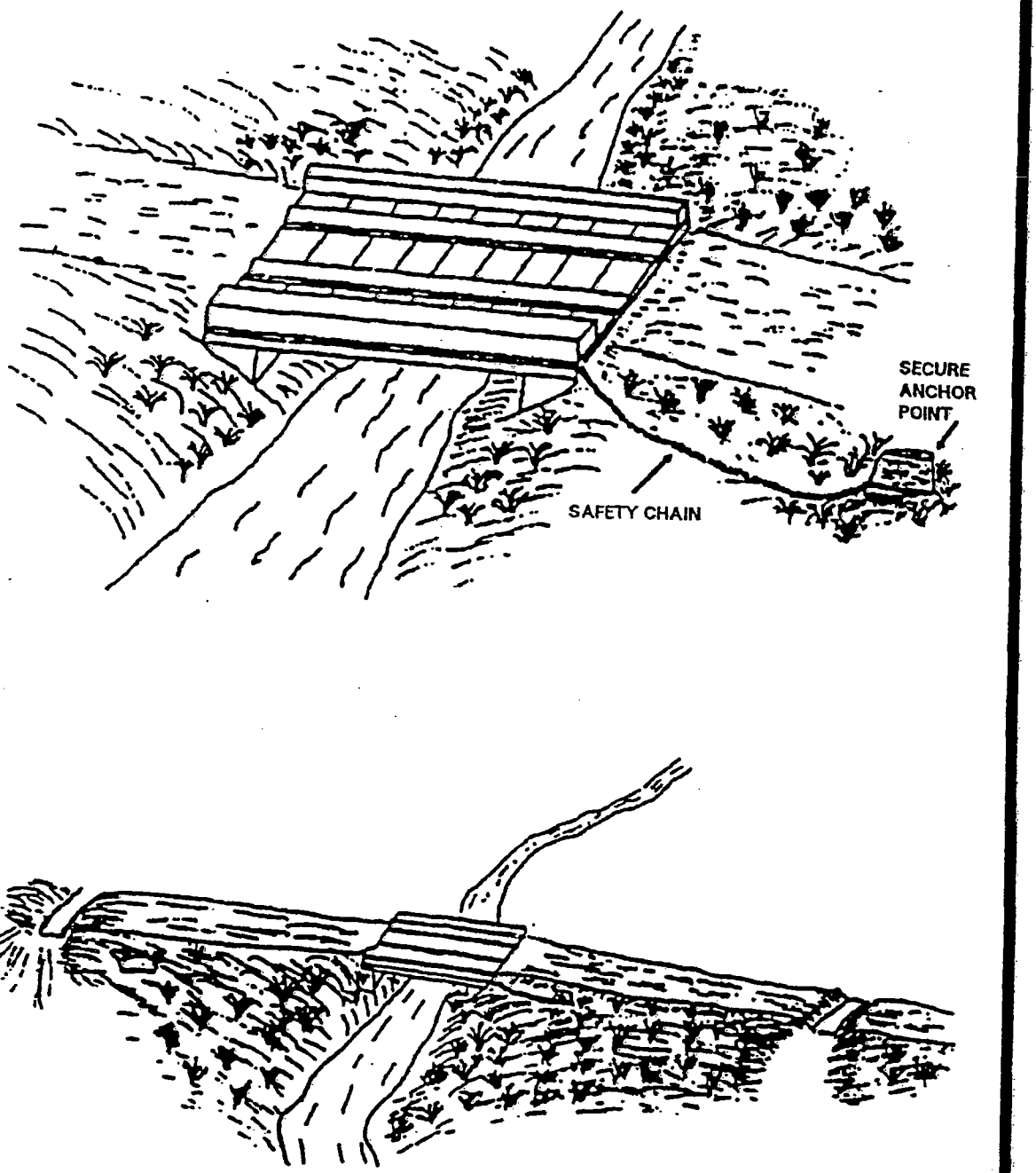

FIGURE 3.13 TEMPORARY ACCESS BRIDGE
(Modified from Maryland Department of the Environment, 1991)

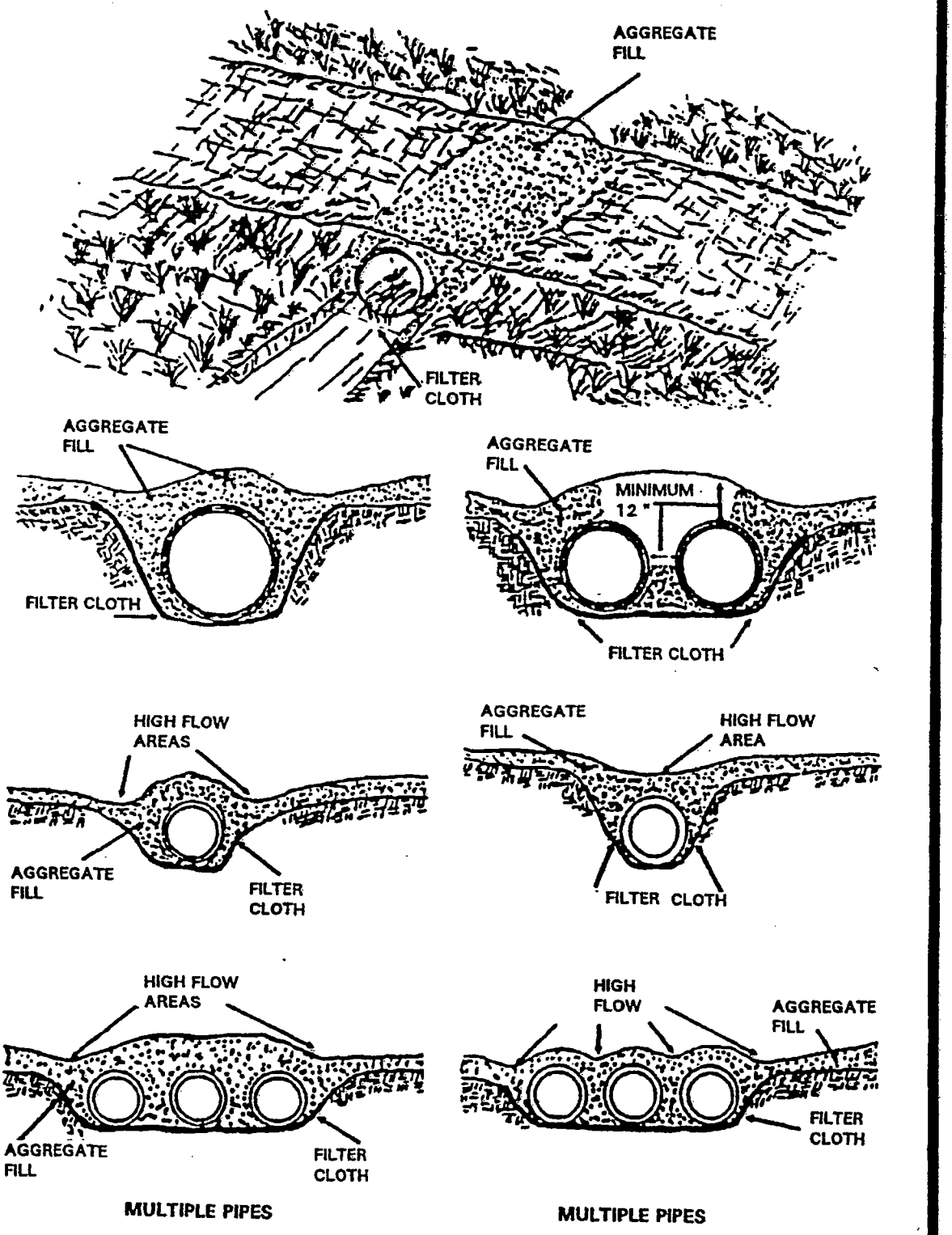

FIGURE 3.14 TEMPORARY ACCESS CULVERT
(Modified from Maryland Department of the Environment, 1991)

Advantages of a Temporary Stream Crossing
• Bridges provide the least obstruction to flow and fish migration and the construction material can be salvaged • Culverts are inexpensive and easily installed structures
Disadvantages of a Temporary Stream Crossing
• Bridges are expensive to design and install • Culverts cause greater disturbances during installation and removal

Temporary Storm Drain Diversion

What Is It

A temporary storm drain is a pipe which redirects an existing storm drain system or outfall channel to discharge into a sediment trap or basin.

When and Where to Use It

Use storm drain diversions to temporarily divert flow going to a permanent outfall. This diverted flow should be directed to a sediment-trapping device. A temporary storm drain diversion should remain in place as long as the area draining to the storm sewer remains disturbed. Another method is to delay completion of the permanent outfall and instead using temporary diversions to a sediment trapping device before discharge. Finally, a sediment trap or basin can be constructed below a permanent storm drain outfall. The basin would be designed to trap any sediment before final discharge.

What to Consider

Since the existing storm draining systems will be modified, careful consideration to piping configuration and resulting impact of installing a temporary storm drain diversion should be given. The temporary diversions will also need to be moved, once the construction has ceased and it is necessary to restore the original storm drainage systems. Therefore, appropriate restoration measures such as flushing the storm drain prior to removal of the sediment trap or basin, stabilizing the outfall, restoration of grade areas, etc. should be taken. And finally, the State or local requirements should be consulted for detailed requirements.

Advantages of a Temporary Storm Drain Diversion
• Requires little maintenance once installed
Disadvantages of a Temporary Storm Drain Diversion
• Disturbs existing storm drainage patterns

Pipe Slope Drains

What Are They

Pipe slope drains reduce the risk of erosion by discharging runoff to stabilized areas. Made of flexible or rigid pipe, they carry concentrated runoff from the top to the bottom of a slope that has already been damaged by erosion or is at high risk for erosion. They are also used to drain saturated slopes that have the potential for soil slides. Pipe slope drains can be either temporary or permanent depending on the method of installation and material used.

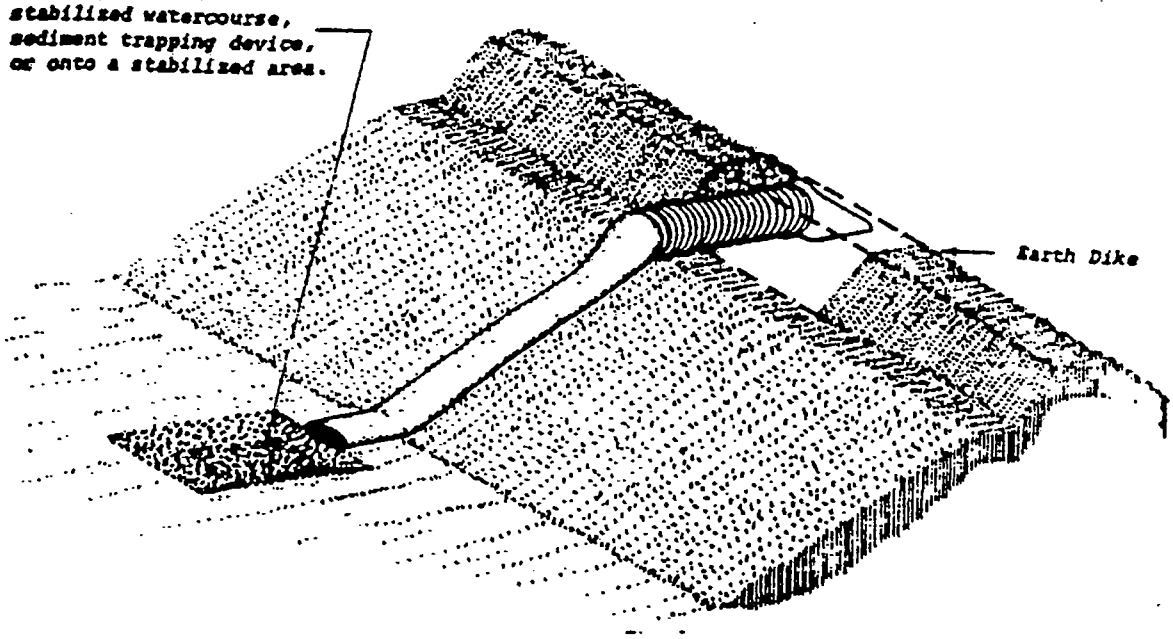

FIGURE 3.15 FLEXIBLE PIPE SLOPE DRAIN
(Modified from State of Maryland, 1983)

When and Where to Use Them

Pipe slope drains are used whenever it is necessary to convey water down a slope without causing erosion. They are especially effective before a slope has been stabilized or before permanent drainage structures are ready for use. Pipe slope drains may be used with other devices, including diversion dikes or swales, sediment traps, and level spreaders (used to spread out storm water runoff uniformly over the surface of the ground). Temporary pipe slope drains, usually flexible tubing or conduit, may be installed prior to the construction of permanent drainage structures. Permanent slope drains may be placed on or beneath the ground surface; pipes, sectional downdrains, paved chutes, or clay tiles may be used.

Paved chutes may be covered with a surface of concrete or other impenetrable material. Subsurface drains can be constructed of concrete, PVC, clay tile, corrugated metal, or other permanent material.

What to Consider

The drain design should be able to handle the volume of flow. The inlets and outlets of a pipe slope drain should be stabilized. This means that a flared end section should be used at the entrance of the pipe. The soil around the pipe entrance should be fully compacted. The soil at the discharge end of the pipe should be stabilized with riprap (a combination of large stones, cobbles, and boulders). The riprap should be placed along the bottom of a swale which leads to a sediment trapping structure or another stabilized area.

Pipe slope drains should be inspected on a regular schedule and after any major storm. Be sure that the inlet from the pipe is properly installed to prevent bypassing the inlet and undercutting the structure. If necessary, install a headwall, riprap, or sandbags around the inlet. Check the outlet point for erosion and check the pipe for breaks or clogs. Install outlet protection if needed and promptly clear breaks and clogs.

Advantages of Pipe Slope Drains
• Can reduce or eliminate erosion by transporting runoff down steep slopes or by draining saturated soils • Are easy to install and require little maintenance
Disadvantages of Pipe Slope Drains
• Require that the area disturbed by the installation of the drain should be stabilized or it, too, will be subject to erosion • May clog during a large storm

Silt Fence

What Is It

A silt fence, also called a "filter fence," is a temporary measure for sedimentation control. It usually consists of posts with filter fabric stretched across the posts and sometimes with a wire support fence. The lower edge of the fence is vertically trenched and covered by backfill. A silt fence is used in small drainage areas to detain sediment. These fences are most effective where there is overland flow (runoff that flows over the surface of the ground as a thin, even layer) or in minor swales or drainageways. They prevent sediment from entering receiving waters. Silt fences are also used to catch wind blown sand and to create an anchor for sand dune creation. Aside from the traditional wooden post and filter fabric method, there are several variations of silt fence installation including silt fence which can be purchased with pockets presewn to accept use of steel fence posts.

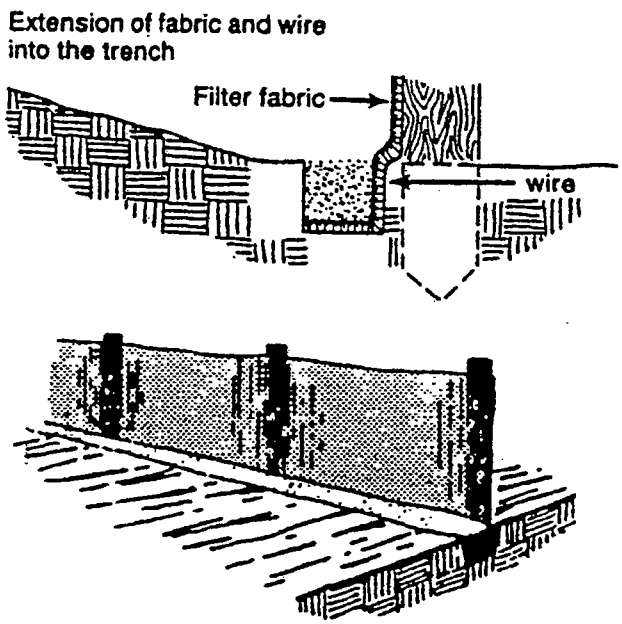

FIGURE 3.17 SILT FENCE DETAILS
(Modified from State of North Carolina, 1988; and State of Wisconsin, 1988)

When and Where to Use It

A silt fence should be installed prior to major soil disturbance in the drainage area. The fence should be placed across the bottom of a slope along a line of uniform elevation (perpendicular to the direction of flow). It can be used at the outer boundary of the work area. However, the fence does not have to surround the work area completely. In addition, a silt fence is effective where sheet and rill erosion may be a problem. Silt fences should not be constructed in streams or swales.

What to Consider

A silt fence is not appropriate for controlling runoff from a large area. This type of fence can be more effective than a straw bale barrier if properly installed and maintained. It may be used in combination with other erosion and sediment practices.

The effective life span for a silt fence depends upon the material of construction and maintenance. The fence requires frequent inspection and prompt maintenance to maintain its effectiveness. Inspect the fence after each rainfall. Check for areas where runoff eroded a channel beneath the fence, or where the fence was caused to sag or collapse by runoff flowing over the top. Remove and properly dispose of sediment when it is one-third to one-half the height of the fence or after each storm.

Advantages of a Silt Fence
• Removes sediments and prevents downstream damage from sediment deposits
• Reduces the speed of runoff flow
• Minimal clearing and grubbing required for installation
• Inexpensive
Disadvantages of a Silt Fence
• May result in failure from improper choice of pore size in the filter fabric or improper installation
• Should not be used in streams
• Is only appropriate for small drainage areas with overland flow
• Frequent inspection and maintenance is necessary to ensure effectiveness

Gravel or Stone Filter Berm

What Is It

A gravel or stone filter berm is a temporary ridge constructed of loose gravel, stone, or crushed rock. It slows and filters flow, diverting it from an exposed traffic area. Diversions constructed of compacted soil may be used where there will be little or no construction traffic within the right-of way. They are also used for directing runoff from the right-of-way to a stabilized outlet.

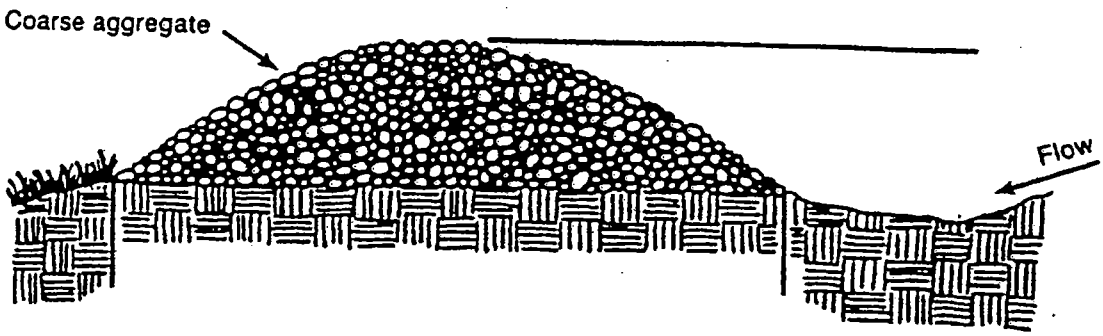

FIGURE 3.18 TYPICAL GRAVEL FILTER BERM
(Modified from Commonwealth of Virginia, 1980)

When and Where to Use It

This method is appropriate where roads and other rights-of-way under construction should accommodate vehicular traffic. Berms are meant for use in areas with gentle slopes. They may also be used at traffic areas within the construction site.

What to Consider

Berm material should be well graded gravel or crushed rock. The spacing of the berms will depend on the steepness of the slope: berms should be placed closer together as the slope increases. The diversion should be inspected regularly after each rainfall, or if breached by construction or other vehicles. All needed repairs should be performed immediately. Accumulated sediment should be removed and properly disposed of and the filter material replaced, as necessary.

Advantages of a Gravel or Stone Filter Berm
• Is a very efficient method of sediment control • Reduces the speed of runoff flow
Disadvantages of a Gravel or Stone Filter Berm
• Is more expensive than methods that use onsite materials • Has a very limited life span • Can be difficult to maintain because of clogging from mud and soil on vehicle tires

Sediment Trap

What Is It

A sediment trap is formed by excavating a pond or by placing an earthen embankment across a low area or drainage swale. An outlet or spillway is constructed using large stones or aggregate to slow the release of runoff. The trap retains the runoff long enough to allow most of the silt to settle out.

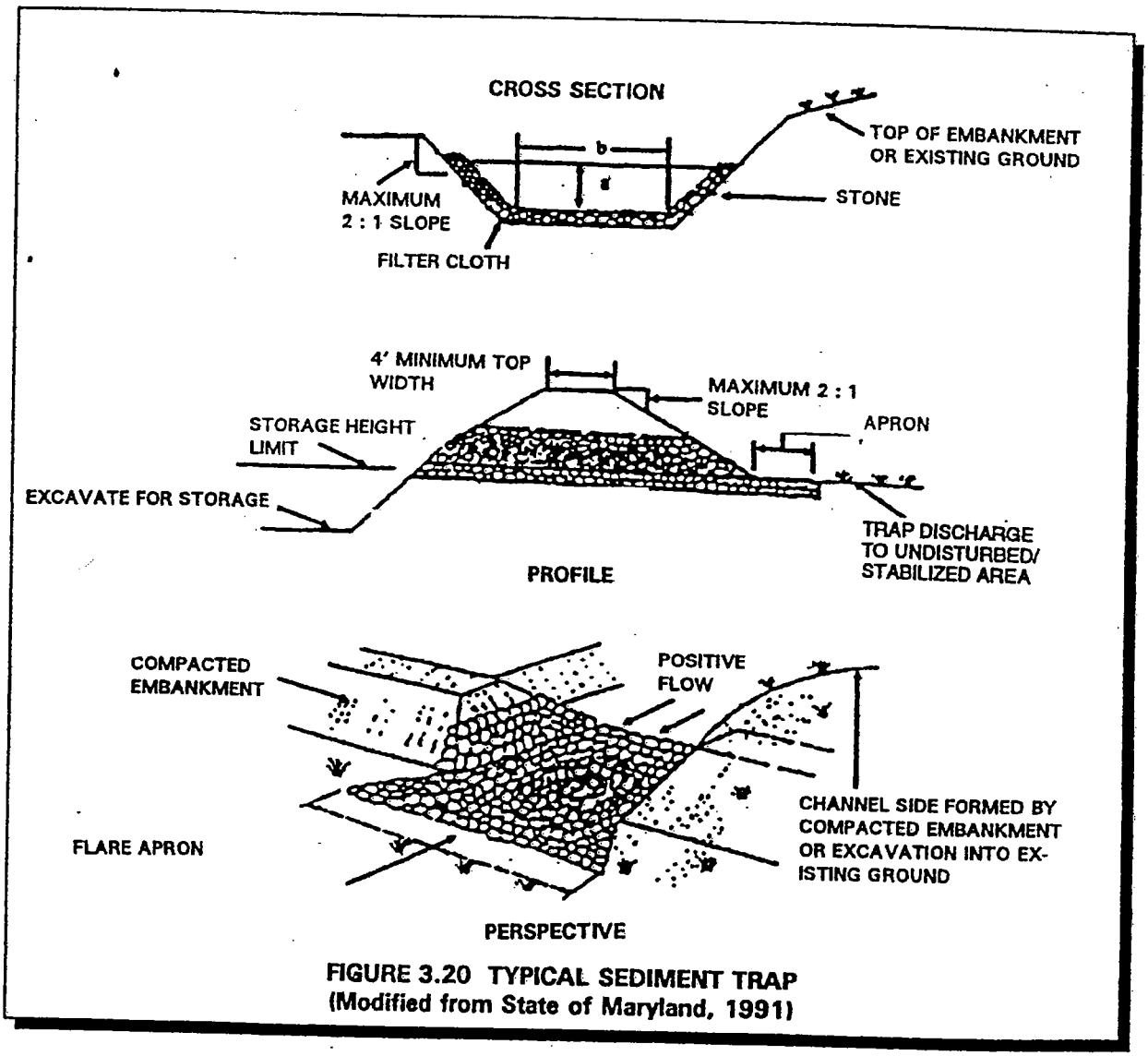

FIGURE 3.20 TYPICAL SEDIMENT TRAP
(Modified from State of Maryland, 1991)

When and Where to Use It

A temporary sediment trap may be used in conjunction with other temporary measures, such as gravel construction entrances, vehicle wash areas, slope drains, diversion dikes and swales, or diversion channels.

What to Consider

Sediment traps are suitable for small drainage areas, usually no more than 10 acres. The trap should be large enough to allow the sediments to settle and should have a capacity to store the collected sediment until it is removed. The volume of storage required depends upon the amount and intensity of expected rainfall and on estimated quantities of sediment in the storm water runoff. Check your Permit to see if it specifies a minimum storage volume for sediment traps.

The effective life of a sediment trap depends upon adequate maintenance. The trap should be readily accessible for periodic maintenance and sediment removal. Traps should be inspected after each rainfall and cleaned when no more than half the design volume has been filled with collected sediment. The trap should remain in operation and be properly maintained until the site area is permanently stabilized by vegetation and/or when permanent structures are in place.

Advantages of a Temporary Sediment Trap
• Protects downstream areas from clogging or damage due to sediment deposits
• Is inexpensive and simple to install
• Can simplify the design process by trapping sediment at specific spots onsite
Disadvantages of a Temporary Sediment Trap
• Is suitable only for a limited area
• Is effective only if properly maintained
• Will not remove very fine silts and clays

DRAINAGE SWALE

September 1992

Design Criteria

- Temporary drainage swales are appropriate in the following situations:
  - To divert upslope flows away from disturbed areas such as cut or fill slopes and to divert runoff to a stabilized outlet
  - To reduce the length of the slope runoff will cross
  - At the perimeter of the construction site to prevent sediment-laden runoff from leaving the site
  - To direct sediment-laden runoff to a sediment trapping device.
- When the drainage area is greater than 10 acres the United States Department of Agriculture - Soil Conservation Service (USDA - SCS) standards and specifications for diversions should be consulted.
- Swales may have side slopes ranging from 3:1 to 2:1.
- The minimum channel depth should be between 12 inches and 18 inches.
- The minimum width at the bottom of the channel should be 24 inches and the bottom should be level.
- The channel should have a uniform positive grade between 2% and 5%, with no sudden decreases where sediments may accumulate and cause overtopping.
- The channel should be stabilized with temporary or permanent stabilization measures.
- Grades over 10% may require an engineering design.
- Construct the swale away from areas of major construction traffic.
- Runoff must discharge to a stabilized outlet.

Materials

- Grass seed for temporary or permanent stabilization
- Sod
- Coarse aggregate or riprap

Construction Specifications

- Clear the area of all trees, brush, stumps or other obstructions.
- Construct the swale to the designed cross-section, line and grade making sure that there are no irregularities or bank projections to impede the flow.
- The lining should be well compacted using earth moving equipment and stabilization initiated as soon as possible.
- Stabilize lining with grass seed, sod, or riprap.
- Surplus material should be properly distributed or disposed of so that it does not interfere with the functioning of the swale.
- Outlet dissipation measures should be used to avoid the risk of erosion.

Maintenance

- Inspect regularly and after every storm, make any repairs necessary to ensure the measure is in good working order.
- Inspect the flow channel and outlet for deficiencies or signs of erosion.
- If surface of the channel requires material to be added be sure it is properly compacted.
- Reseed or stabilize the channel as needed to prevent erosion during a storm event.

Sources

- Commonwealth of Virginia - County of Fairfax, 1987. 1987 Check List For Erosion And Sediment Control - Fairfax County, Virginia.
- State of North Carolina, 1988. Erosion and Sediment Control Planning and Design Manual. North Carolina Sedimentation Control Commission, Department of Natural Resources and Community Development.
- Maryland Department of the Environment, 1991. 1991 Maryland Standards And Specifications For Soil Erosion And Sediment Control - Draft.
- Storm Water Management Manual for the Puget Sound Basin. State of Washington, Department of Ecology, 1991.
- Cost Data:
  - Draft Sediment and Erosion Control, An Inventory of Current Practices, April 20, 1990. Prepared by Kamber Engineering for the U.S. Environmental Protection Agency, Office of Water Enforcement and Permits, Washington, D.C. 20460.

TEMPORARY SEDIMENT TRAP

September 1992

Design Criteria

- Temporary sediment traps are appropriate in the following locations:
  - At the outlet of the perimeter controls installed during the first stage of construction.
  - At the outlet of any structure which concentrates sediment-laden runoff, e.g. at the discharge point of diversions, channels, slope drains, or other runoff conveyances.
  - Above a storm water inlet that is in line to receive sediment-laden runoff.
- Temporary sediment traps may be constructed by excavation alone or by excavation in combination with an embankment.
- Temporary sediment traps are often used in conjunction with a diversion dike or swale.
- The drainage area for the sediment trap should not exceed 5 disturbed acres.
- The trap must be accessible for ease of regular maintenance which is critical to its functioning properly.
- Sediment traps are temporary measures and should not be planned to remain in place longer than between 18 and 24 months.
- The capacity of the sedimentation pool should provide storage volume for 3,600 cubic feet/acre drainage area.
- The outlet should be designed to provide a 2 foot settling depth and an additional sediment storage area 1½ feet deep at the bottom of the trap.
- The embankment may not exceed 5 feet in height.
- The recommended minimum width at the top of the embankment is between 2 feet and 5 feet.
- The minimum recommended length of the weir is between 3 feet and 4 feet, and the maximum is 12 feet in length.
- Table 5 illustrates the typical relationship between the embankment height, the height of the outlet (H_o), and the width (W) at the top of the embankment.

TABLE 5. EMBANKMENT HEIGHT vs. OUTLET HEIGHT AND WIDTH

H	H_o	W
1.5	0.5	2.0
2.0	1.0	2.0
2.5	1.5	2.5
3.0	2.0	2.5
3.5	2.5	3.0
4.0	3.0	3.0
4.5	3.5	4.0
5.0	4.0	4.5

Materials

- Filter fabric (see fabric requirement for silt fence)
- Coarse aggregate or riprap 2 inches to 14 inches in diameter
- Washed gravel ¾ to 1½ inches in diameter
- Seed and mulch for stabilization

Construction Specifications

- Clear the area of all trees, brush, stumps or other obstructions.
- Construct the embankment in 8 inch lifts compacting each lift with the appropriate earth moving equipment. Fill material must be free of woody vegetation, roots, or large stones.
- Keep cut and fill slopes between 3:1 and 2:1 or flatter.
- Line the outlet area with filter fabric prior to placing stone or gravel.
- Construct the gravel outlet using heavy stones between 6 inches and 14 inches in diameter and face the upstream side with a 12 inch layer of ¾ inch to 1½ inch washed gravel on the upstream side.
- Seed and mulch the embankment as soon as possible to ensure stabilization.

Maintenance

- Inspect regularly and after every storm. Make any repairs necessary to ensure the measure is in good working order.
- Frequent removal of sediment is critical to the functioning of this measure. At a minimum sediment should be removed and the trap restored to its original volume when sediment reaches ½ of the original volume.
- Sediment removed from the trap must be properly disposed.
- Check the embankment regularly to make sure it is structurally sound.

Sources

- Commonwealth of Virginia - County of Fairfax, 1987. 1987 Check List For Erosion And Sediment Control - Fairfax County, Virginia.
- State of North Carolina, 1988. Erosion and Sediment Control Planning and Design Manual. North Carolina Sedimentation Control Commission, Department of Natural Resources and Community Development.
- Maryland Department of the Environment, 1991. 1991 Maryland Standards And Specifications For Soil Erosion And Sediment Control - Draft.
- Storm Water Management Manual for the Puget Sound Basin. State of Washington, Department of Ecology, 1991.
- Cost Data:
  - Draft Sediment and Erosion Control, An Inventory of Current Practices, April 20, 1990. Prepared by Kamber Engineering for the U.S. Environmental Protection Agency, Office of Water Enforcement and Permits, Washington, D.C. 20460.

APPENDIX A Notice of Coverage Under Construction Stormwater General Permit

ILLINOIS ENVIRONMENTAL PROTECTION AGENCY

1021 NORTH GRAND AVENUE EAST, P.O. BOX 19276, SPRINGFIELD, ILLINOIS 62794-9276
JAMES R. THOMPSON CENTER, 100 WEST RANDOLPH, SUITE 11-300, CHICAGO, IL 60601

ROD R. BLAGOJEVICH, GOVERNOR RENEE CIPRIANO, DIRECTOR

217/782-0610

May 27, 2003

SOLUTAI INC
575 MARYVILLE CENTRE DR
ST LOUIS, MO 63166

Re: FACILITY: SITE R SAUGET
NPDES Permit No: ILR108258
COUNTY: ST CLAIR

Notice of Coverage Under Construction Storm Water General Permit

Dear NPDES Permittee:

We have reviewed your application and determined that storm water discharges associated with industrial activity from construction sites are appropriately covered by the attached General NPDES Permit issued by the Agency.

Your discharge is covered by this permit effective as of the date of this letter. The Permit as issued covers application requirements, a storm water pollution prevention plan and reporting requirements.

This letter shows your facility permit number below the construction site name. Please save this number and reference it in all future correspondance. Should you have any questions concerning the Permit, please contact the Permit Section at the above telephone number and address.

Very truly yours,

Toby Frevert

Toby Frevert, P.E.
Manager
Division of Water Pollution Control

TF:med:concoverage 3

Enclosure

cc: Records Unit

Region 6

APPENDIX B

Letter Notice To IEPA of Amendment

SOLUTIA

Solutions for a better life.

Solutia Inc.
W.G. Krummrich Plant
500 Monsanto Avenue
Sauget, Illinois 62206-1198
Tel 618-271-5835

August 13, 2003

Ms. Marilyn Davenport
Permit Section
Division of Water Pollution Control
Illinois Environmental Protection Agency
1021 North Grand Avenue East
Springfield, Illinois 62794-9276

Re: Notice of Intent Addendum
General Permit to Discharge Storm Water
Construction Site Activities
Site R – Sauget, Illinois

Dear Ms. Davenport:

Pursuant to your conversation with Mr. Martin Swanson of URS on August 12, 2003, we are submitting this addendum to the Notice of Intent (NOI) which was prepared for Site R, 5 Riverview Avenue, Sauget, Illinois. The original NOI was submitted on April 24, 2003 for coverage under the Illinois Environmental Protection Agency (IEPA) General Permit to discharge storm water from construction activities. The IEPA issued the Notice of Coverage under the Construction General Storm Water Permit (NPDES Permit No. ILR108258) on May 27, 2003. A copy of the original NOI and the IEPA Notice of Coverage are attached.

This addendum is submitted to cover additional construction activities being performed at the same site. These additional activities will increase the total size of the construction site to encompass 4.5 acres. These construction activities are scheduled to begin on August 22, 2003 and should be completed by March, 2004. The contractor for the work will be Inquip Associates, Inc., P.O. Box 6277, McLean, Virginia, 22106. The contact person for our contractor is Mr. James C. Edwards (703-442-0143).

The storm water pollution prevention plan (SWPPP) that was prepared for the initial construction activities is being modified to reflect the additional work to be performed at the site. This SWPPP will be finalized prior to the start of construction and will be adhered to throughout the construction activities.

Please be advised that I am the new contact person for Solutia on the project. I can be reached at 314-674-6768. Should you have any questions, or require additional information regarding this NOI addendum, please feel free to call.

Sincerely,
Solutia Inc.

Gary W. Vandiver for Richard Fuller

Gary W. Vandiver
Project Coordinator

Attachments

NOTICE OF INTENT (NOI)
ILLINOIS ENVIRONMENTAL PROTECTION AGENCY
GENERAL PERMIT TO DISCHARGE STORM WATER
CONSTRUCTION SITE ACTIVITIES

Please use the tab or arrow keys

OWNER INFORMATION

NAME:	LAST: Solutia Inc.	FIRST:	MIDDLE:	OWNER TYPE: Private		
MAILING ADDRESS:	575 Maryville Centre Drive					
CITY:	St. Louis	STATE: MO	ZIP: 63166			
CONTACT PERSON:	Steve Smith	TELEPHONE NUMBER:	AREA CODE: 314	NUMBER: 674-4660		

CONTRACTOR INFORMATION

NAME:	LAST: (To Be Determined)	FIRST:	MIDDLE:	TELEPHONE NUMBER:	AREA CODE:	NUMBER:
MAILING ADDRESS:		CITY:		STATE:	ZIP:	

CONSTRUCTION SITE INFORMATION

SELECT ONE:	Existing Site	NOTE: WHEN SELECTING CHANGE OF INFORMATION ENTER PERMIT NO. ILR10								
FACILITY NAME:	Site R	OTHER NPDES PERMIT NOS.:								
FACILITY LOCATION:	5 Riverview Avenue	TELEPHONE NUMBER:	AREA CODE: 618	NUMBER: 875-0268						
CITY:	Sauget	STATE: IL	ZIP: 62201	LATITUDE:	38° 35'	55"	LONGITUDE:	90° 11' 2"		
COUNTY:	St. Clair	SECTION:		TOWNSHIP:		RANGE:				
APPROX. CONST. START DATE:	05 / 12 / 03	APPROX. CONSTRUCTION END DATE:	10 / 10 / 03	TOTAL SIZE OF CONSTRUCTION SITE IN ACRES:	2.9					

TYPE OF CONSTRUCTION (SELECT ALL THAT APPLY)

☐ RESIDENTIAL ☑ COMMERCIAL ☐ INDUSTRIAL ☐ RECONSTRUCTION ☐ TRANSPORTATION ☐ OTHER

HISTORIC PRESERVATION AND ENDANGERED SPECIES COMPLIANCE

HAS THIS PROJECT SATISFIED APPLICABLE REQUIREMENTS FOR COMPLIANCE WITH ILLINOIS LAW ON:

HISTORIC PRESERVATION	☑ YES	☐ NO
ENDANGERED SPECIES	☑ YES	☐ NO

I certify under penalty of law that this document and all attachments were prepared under my direction and supervision in accordance with a system designed to assure that qualified personnel properly gather and evaluate the information submitted. Based on my inquiry of the person or persons who manage this system, or those persons directly responsible for gathering the information, the information submitted is, to the best of my knowledge and belief, true, accurate, and complete. I am aware that there are significant penalties for submitting false information, including the possibility of fine and imprisonment. In addition, I certify that the provisions of the permit, including the development and implementation of a storm water pollution prevention plan and a monitoring program plan, will be complied with.

OWNER SIGNATURE: _____ DATE: 4/24/03

MAIL COMPLETED FORM TO:	ILLINOIS ENVIRONMENTAL PROTECTION AGENCY DIVISION OF WATER POLLUTION CONTROL ATTN: PERMIT SECTION POST OFFICE BOX 19276 SPRINGFIELD, ILLINOIS 62794-9276	FOR OFFICE USE ONLY LOG: PERMIT NO. ILR10 DATE:
(DO NOT SUBMIT ADDITIONAL DOCUMENTATION UNLESS REQUESTED)		

Information required by this form must be provided to comply with 415 ILCS 5/39 (1996). Failure to do so may prevent this form from being processed and could result in your application being denied. This form has been approved by the Forms Management Center.

IL 532 2104
WPC 623 Rev. 5/99

e. Storm water discharges that the Agency, at its discretion, determines are not appropriately authorized or controlled by this general permit.

C. **Authorization.**

1. In order for storm water discharges from construction sites to be authorized to discharge under this general permit a discharger must submit a Notice of Intent (NOI) in accordance with the requirements of Part II below, using an NOI from provided by the Agency, or be covered by a valid Illinois General NPDES Construction Site Activities Permit.

2. Where a new operator (contractor) is selected after the submittal of an NOI under Part II below, a new Notice of Intent (NOI) must be submitted by the owner in accordance with Part II.

3. For projects that have complied with State law on historic preservation and endangered species prior to submittal of the NOI, through coordination with the Illinois Historic Preservation Agency and the Illinois Department of Natural Resources or through fulfillment of the terms of interagency agreements with those agencies, the NOI shall indicate that such compliance has occurred.

Unless notified by the Agency to the contrary, dischargers who submit an NOI in accordance with the requirements of this permit are authorized to discharge storm water from construction sites under the terms and conditions of this permit either:

a. 48 hours after the date the NOI is postmarked, if the project had established compliance with Illinois law regarding historic preservation and endangered species prior to submittal of the NOI;
or

b. 30 days after the date the NOI is postmarked, if the project had not established compliance with Illinois historic preservation and endangered species requirements prior to submittal of the NOI.

The Agency may deny coverage under this permit and require submittal of an application for an individual NPDES permit based on a review of the NOI or other information.

Part II. NOTICE OF INTENT REQUIREMENTS

A. **Deadlines for Notification.**

1. To receive authorization under this general permit, a discharge must either be covered by a valid Illinois General NPDES Construction Site Permit, or a Notice of Intent (NOI) in accordance with the requirements of this part must be submitted prior to the commencement of construction. For projects that have established compliance with Illinois law regarding historic preservation and endangered species prior to submittal of the NOI, the NOI must be submitted at least 48 hours prior to the commencement of construction. For all other projects, the NOI must be submitted at least 30 days prior to the commencement of construction.

2. Discharges that are covered by a valid Illinois General NPDES Construction Site Activities Permit are automatically covered by this permit.

3. A discharger may submit an NOI in accordance with the requirements of this part after the start of construction. In such instances, the Agency may bring an enforcement action for any discharges of storm water associated with industrial activity from a construction site that have occurred on or after the start of construction.

B. **Failure to Notify.** Dischargers who fail to notify the Agency of their intent to be covered, and discharge storm water associated with construction site activity to Waters of the State without an NPDES permit, are in violation of the Environmental Protection Act and Clean Water Act.

C. **Contents of Notice of Intent.** The Notice of Intent shall be signed in accordance with Part VI.G (Signatory Requirements) of this permit by all of the entities identified in paragraph 2 below and shall include the following information:

1. The mailing address, and location of the construction site for which the notification is submitted. Where a mailing address for the site is not available, the location can be described in terms of the latitude and longitude of the approximate center of the facility to the nearest 15 seconds, or the nearest quarter section (if the section, township and range is provided) that the construction site is located in;

2. The owner's name, address, telephone number, and status as Federal, State, private, public or other entity.

3. The name, address and telephone number of the general contractor(s) that have been identified at the time of the NOI submittal;

4. The name of the receiving water(s), or if the discharge is through a municipal separate storm sewer, the name of the municipal operator of the storm sewer and the ultimate receiving water(s);

5. The number of any NPDES permit for any discharge (including non-storm water discharges) from the site that is currently authorized by an NPDES permit.

6. A yes or no indication of whether the owner or operator has existing quantitative data which describes the concentration of pollutants in storm water discharges (existing data should not be included as part of the NOI); and

7. A brief description of the project, estimated timetable for major activities, estimates of the number of acres of the site on which soil will be disturbed, and a certification that a storm water pollution prevention plan has been prepared for the facility in accordance with Part IV of this permit, and such plan provides compliance with local sediment and erosion plans or permits and/or storm water management plans or permits in accordance with paragraph VI.G.1 (Signatory Requirements) of this permit. **(A copy of the plans or permits <u>should not</u> be included with the NOI submission).**

A. **Deadlines for Plan Preparation and Compliance.**

The plan shall:

1. Be completed prior to the start of the construction to be covered under this permit and updated as appropriate;

2. Provide for compliance with the terms and schedule of the plan beginning with the initiation of construction activities.

B. **Signature and Plan Review.**

1. The plan shall be signed in accordance with Part VI.G (Signatory Requirements), and be retained on-site at the facility which generates the storm water discharge in accordance with Part VI.E (Duty to Provide Information) of this permit.

2. The permittee shall make plans available upon request from this Agency or a local agency approving sediment and erosion plans, grading plans, or storm water management plans; or in the case of a storm water discharge associated with industrial activity which discharges through a municipal separate storm sewer system with an NPDES permit, to the municipal operator of the system.

3. The Agency may notify the permittee at any time that the plan does not meet one or more of the minimum requirements of this Part. Such notification shall identify those provisions of the permit which are not being met by the plan, and identify which provisions of the plan requires modifications in order to meet the minimum requirements of this part. Within 7 days from receipt of notification from the Agency, the permittee shall make the required changes to the plan and shall submit to the Agency a written certification that the requested changes have been made. Failure to comply shall terminate authorization under this permit.

4. All storm water pollution prevention plans required under this permit are considered reports that shall be available to the public under Section 308(b) of the CWA. The permittee shall make plans available to members of the public upon request by the public. However, the permittee may claim any portion of a storm water pollution prevention plan as confidential in accordance with 40 CFR Part 2.

C. **Keeping Plans Current**. The permittee shall amend the plan whenever there is a change in design, construction, operation, or maintenance, which has a significant effect on the potential for the discharge of pollutants to the Waters of the State and which has not otherwise been addressed in the plan or if the storm water pollution prevention plan proves to be ineffective in eliminating or significantly minimizing pollutants from sources identified under paragraph D.2 below, or in otherwise achieving the general objectives of controlling pollutants in storm water discharges associated with construction site activity. In addition, the plan shall be amended to identify any new contractor and/or subcontractor that will implement a measure of the storm water pollution prevention plan. Amendments to the plan may be reviewed by the Agency in the same manner as Part IV.B, above.

D. **Contents of Plan**. The storm water pollution prevention plan shall include the following items:

1. **Site Description**. Each plan shall, provide a description of the following:

   a. A description of the nature of the construction activity;

   b. A description of the intended sequence of major activities which disturb soils for major portions of the site (e.g. grubbing, excavation, grading);

   c. Estimates of the total area of the site and the total area of the site that is expected to be disturbed by excavation, grading, or other activities;

   d. An estimate of the runoff coefficient of the site after construction activities are completed and existing data describing the soil or the quality of any discharge from the site;

   e. A site map indicating drainage patterns and approximate slopes anticipated before and after major grading activities, locations where vehicles enter or exit the site and controls to prevent offsite sediment tracking, areas of soil disturbance, the location of major structural and nonstructural controls identified in the plan, the location of areas where stabilization practices are expected to occur, surface waters (including wetlands), and locations where storm water is discharged to a surface water; and

   f. The name of the receiving water(s) and the ultimate receiving water(s), and areal extent of wetland acreage at the site.

2. **Controls**. Each plan shall include a description of appropriate controls that will be implemented at the construction site. The plan will clearly describe for each major activity identified in paragraph D.1 above, appropriate controls and the timing during the construction process that the controls will be implemented. (For example, perimeter controls for one portion of the site will be installed after the clearing and grubbing necessary for installation of the measure, but before the clearing and grubbing for the remaining portions of the site. Perimeter controls will be actively maintained until final stabilization of those portions of the site upward of the perimeter control. Temporary perimeter controls will be removed after final stabilization). The description of controls shall address as appropriate the following minimum components:

   a. **Erosion and Sediment Controls.**

      (i). **Stabilization Practices**. A description of interim and permanent stabilization practices, including site-specific scheduling of the implementation of the practices. Site plans should ensure that existing vegetation is preserved where attainable and that disturbed portions of the site are stabilized. Stabilization practices may include: temporary seeding, permanent seeding, mulching, geotextiles, sod stabilization, vegetative buffer strips, protection of trees, preservation of mature vegetation, and other appropriate measures. A record of the dates when major grading activities occur, when construction activities temporarily or permanently cease on a portion of the site, and when stabilization measures are initiated shall be included in the plan. Except as provided in paragraphs (A) and (B) below, stabilization measures shall be initiated as soon as practicable in portions of the site where construction activities have temporarily or permanently ceased, but in no case more than 14 days after the construction activity in that portion of the site has temporarily or permanently ceased.

         (A). Where the initiation of stabilization measures by the 14th day after construction activity temporary or permanently cease is precluded by snow cover, stabilization measures shall be initiated as soon as practicable.

(B). Where construction activity will resume on a portion of the site within 21 days from when activities ceased, (e.g. the total time period that construction activity is temporarily ceased is less than 21 days) then stabilization measures do not have to be initiated on that portion of site by the 14th day after construction activity temporarily ceased.

(ii). **Structural Practices**. A description of structural practices to the degree attainable, to divert flows from exposed soils, store flows or otherwise limit runoff and the discharge of pollutants from exposed areas of the site. Such practices may include silt fences, earth dikes, drainage swales, sediment traps, check dams, subsurface drains, pipe slope drains, level spreaders, storm drain inlet protection, rock outlet protection, reinforced soil retaining systems, gabions, and temporary or permanent sediment basins. Structural practices should be placed on upland soils to the degree attainable. The installation of these devices may be subject to Section 404 of the CWA.

b. **Storm Water Management**. A description of measures that will be installed during the construction process to control pollutants in storm water discharges that will occur after construction operations have been completed. Structural measures should be placed on upland soils to the degree attainable. The installation of these devices may be subject to Section 404 of the CWA. This permit only addresses the installation of storm water management measures, and not the ultimate operation and maintenance of such structures after the construction activities have been completed and the site has undergone final stabilization. Permittees are responsible for only the installation and maintenance of storm water management measures prior to final stabilization of the site, and are not responsible for maintenance after storm water discharges associated with industrial activity have been eliminated from the site.

(i). Such practices may include: storm water detention structures (including wet ponds); storm water retention structures; flow attenuation by use of open vegetated swales and natural depressions; infiltration of runoff onsite; and sequential systems (which combine several practices). The pollution prevention plan shall include an explanation of the technical basis used to select the practices to control pollution where flows exceed predevelopment levels.

(ii). Velocity dissipation devices shall be placed at discharge locations and along the length of any outfall channel as necessary to provide a non-erosive velocity flow from the structure to a water course so that the natural physical and biological characteristics and functions are maintained and protected (e.g. maintenance of hydrologic conditions, such as the hydroperiod and hydrodynamics present prior to the initiation of construction activities).

c. **Other Controls.**

(i). **Waste Disposal.** No solid materials, including building materials, shall be discharged to Waters of the State, except as authorized by a Section 404 permit.

(ii). The plan shall ensure and demonstrate compliance with applicable State and/or local waste disposal, sanitary sewer or septic system regulations.

d. **Approved State or Local Plans.**

(i). The management practices, controls and other provisions contained in the storm water pollution prevention plan must be at least as protective as the requirements contained in Illinois Environmental Protection Agency's Illinois Urban Manual, 1995. Facilities which discharge storm water associated with construction site activities must include in their storm water pollution prevention plan procedures and requirements specified in applicable sediment and erosion site plans or storm water management plans approved by local officials. Requirements specified in sediment and erosion site plans or site permits or storm water management site plans or site permits approved by local officials that are applicable to protecting surface water resources are, upon submittal of an NOI to be authorized to discharge under this permit, incorporated by reference and are enforceable under this permit even if they are not specifically included in a storm water pollution prevention plan required under this permit. This provision does not apply to provisions of master plans, comprehensive plans, non-enforceable guidelines or technical guidance documents that are not identified in a specific plan or permit that is issued for the construction site.

(ii) Dischargers seeking alternative permit requirements are not authorized by this permit and shall submit an individual permit application in accordance with 40 CFR 122.26 at the address indicated in Part II.D (Where to Submit) of this permit, along with a description of why requirements in approved local plans or permits should not be applicable as a condition of an NPDES permit.

3. **Maintenance.** A description of procedures to maintain in good and effective operating conditions vegetation, erosion and sediment control measures and other protective measures identified in the site plan.

4. **Inspections.** Qualified personnel (provided by the permittee) shall inspect disturbed areas of the construction site that have not been finally stabilized, structural control measures, and locations where vehicles enter or exit the site at least once every seven calendar days and within 24 hours of the end of a storm that is 0.5 inches or greater or equivalent snowfall.

a. Disturbed areas and areas used for storage of materials that are exposed to precipitation shall be inspected for evidence of, or the potential for, pollutants entering the drainage system. Erosion and sediment control measures identified in the plan shall be observed to ensure that they are operating correctly. Where discharge locations or points are accessible, they shall be inspected to ascertain whether erosion control measures are effective in preventing significant impacts to receiving waters. Locations where vehicles enter or exit the site shall be inspected for evidence of offsite sediment tracking.

b. Based on the results of the inspection, the description of potential pollutant sources identified in the plan in accordance with paragraph IV.D.1 (Site Description) of this permit and pollution prevention measures identified in the plan in accordance with paragraph IV.D.2 (Controls) of this permit shall be revised as appropriate as soon as practicable after such inspection. Such modifications shall provide for timely implementation of any changes to the plan within 7 calendar days following the inspection.

c. A report summarizing the scope of the inspection, name(s) and qualifications of personnel making the inspection, the date(s) of the inspection, major observations relating to the implementation of the storm water pollution prevention plan, and actions taken in accordance with paragraph b above shall be made and retained as part of the storm water pollution prevention plan for at least three years after the date of inspection. The report shall be signed in accordance with Part VI.G (Signatory Requirements) of this permit.

d. The permittee shall complete and submit within 5 days an "Incidence of Noncompliance" (ION) report for any violation of the storm water pollution prevention plan observed during an inspection conducted, including those not required by the Plan. Submission shall be on forms provided by the Agency and include specific information on the cause of noncompliance, actions which were taken to prevent any further causes of noncompliance, and a statement detailing any environmental impact which may have resulted from the noncompliance.

e. All reports of noncompliance shall be signed by a responsible authority as defined in Part VI.G (Signatory Requirements).

f. All reports of noncompliance shall be mailed to the Agency at the following address:

Illinois Environmental Protection Agency
Division of Water Pollution Control
Compliance Assurance Section
1021 North Grand East
Post Office Box 19276
Springfield, Illinois 62794-9276

5. **Non-Storm Water Discharges** - Except for flows from fire fighting activities, sources of non-storm water listed in paragraph III.A.2 of this permit that are combined with storm water discharges associated with industrial activity must be identified in the plan. The plan shall identify and insure the implementation of appropriate pollution prevention measures for the non-storm water component(s) of the discharge.

E. **Additional requirements for storm water discharge from industrial activities other than construction, including dedicated asphalt plants, and dedicated concrete plants.** - This permit may only authorize a storm water discharge associated with industrial activity from a construction site that is mixed with a storm water discharge from an industrial source other than construction, where:

1. the industrial source other than construction is located on the same site as the construction activity;

2. storm water discharges associated with industrial activity from the areas of the site where construction activities are occurring are in compliance with the terms of this permit; and

3. storm water discharges associated with industrial activity from the areas of the site where industrial activity other than construction are occurring (including storm water discharges from dedicated asphalt plants (other than asphalt emulsion facilities) and dedicated concrete plants) are in compliance with the terms, including applicable NOI or application requirements, of a different NPDES general permit or individual permit authorizing such discharges.

F. **Contractors.**

1. The storm water pollution prevention plan must clearly identify for each measure identified in the plan, the contractor(s) or subcontractor(s) that will implement the measure. All contractors and subcontractors identified in the plan must sign a copy of the certification statement in paragraph 2 below in accordance with Part VI.G (Signatory Requirements) of this permit. All certifications must be included in the storm water pollution prevention plan except for owners that are acting as contractor.

2. **Certification Statement.** All contractors and subcontractors identified in a storm water pollution prevention plan in accordance with paragraph 1 above shall sign a copy of the following certification statement before conducting any professional service at the site identified in the storm water pollution prevention plan:

"I certify under penalty of law that I understand the terms and conditions of the general National Pollutant Discharge Elimination System (NPDES) permit (ILR100000) that authorizes the storm water discharges associated with industrial activity from the construction site identified as part of this certification."

The certification must include the name and title of the person providing the signature in accordance with Part VI.G of this permit; the name, address and telephone number of the contracting firm; the address (or other identifying description) of the site; and the date the certification is made.

Part V. RETENTION OF RECORDS

A. The permittee shall retain copies of storm water pollution prevention plans and all reports and notices required by this permit, and records of all data used to complete the Notice of Intent to be covered by this permit, for a period of at least three years from the date that the site is finally stabilized. This period may be extended by request of the Agency at any time.

B. The permittee shall retain a copy of the storm water pollution prevention plan required by this permit at the construction site from the date of project initiation to the date of final stabilization.

Part VI. STANDARD PERMIT CONDITIONS

A. **Duty to Comply.**

1. The permittee must comply with all conditions of this permit. Any permit noncompliance constitutes a violation of Illinois Environmental Protection Act and the CWA and is grounds for enforcement action; for permit termination, revocation and reissuance, or modification; or for denial of a permit renewal application.

2. **Penalties for Violations of Permit Conditions.**

a. Criminal

(1). Negligent Violations The CWA provides that any person who negligently violates permit conditions implementing Sections 301, 302, 306, 307, 308, 318, or 405 of the Act is subject to a fine of not less than $2,500 nor more than $25,000 per day of violation, or by imprisonment for not more than 1 years, or both. The Environmental Protection Act provides that any person who negligently violates subsection (f) of Section 12 of the Act, any provision of any regulation, standard, or filing requirement under subsection (b) of Section 39 of the Act, or any

NPDES permit issued under the Act is subject to a fine not to exceed $10,000 for each day of violation.

(2). Knowing Violations The CWA provides that any person who knowingly violates permit conditions implementing Sections 301, 302, 306, 307, 308, 318, or 405 of the Act is subject to a fine of not less than $5,000 nor more than $50,000 per day of violation, or by imprisonment for not more than 3 year, or both. The Environmental Protection Act provides that any person who knowingly violates subsection (f) of Section 12 of the Act, any provision of any regulation, standard, or filing requirement under subsection (b) of Section 39 of the Act, or any NPDES permit issued under the Act commits a Class 4 felony, and in addition to any other penalty prescribed by law is subject to a fine not to exceed $25,000 for each day of violation.

(3). Knowing Endangerment The CWA provides that any person who knowingly violates permit conditions implementing Sections 301, 302, 306, 307, 308, 318, or 405 of the Act and who knows at that time that he is placing another person in imminent danger of death or serious bodily injury is subject to a fine of not more than $250,000, or by imprisonment for not more than 15 years, or both.

(4). False Statement The CWA provides that any person who knowingly makes any false material statement, representation, or certification in any application, record, report, plan, or other document filed or required to be maintained under the Act or who knowingly falsifies, tampers with, or renders inaccurate, any monitoring device or method required to be maintained under the Act, shall upon conviction, be punished by a fine of not more than $10,000 or by imprisonment for not more than 2 years, or by both. If a conviction of a permitee is for a violation committed after a first conviction of such person under this paragraph, punishment shall be by a fine of not more than $20,000 per day of violation, or by imprisonment of not more than 4 years, or by both. (See Section 309.c.4 of the Clean Water Act). The Environmental Protection Act provides that any person who knowingly makes any false statement, representation, or certification in an application form, or form pertaining to a NPDES permit or who knowingly renders inaccurate any monitoring device or record required in connection with any such permit or with any discharge which is subject to the provisions of subsection (f) of Section 12 of the Act commits a Class A misdemeanor, and in addition to any other penalties provided by law is subject to a fine not to exceed $10,000 for each day of violation.

b. Civil Penalties - The CWA provides that any person who violates a permit condition implementing Sections 301, 302, 306, 307, 308, 318, or 405 of the Act is subject to a civil penalty not to exceed $25,000 per day for each violation. The Environmental Protection Act provides that any person who violates subsection (f) of Section 12 of the Act, any provision of any regulation, standard, or filing requirement under subsection (b) of Section 39 of the Act, or any NPDES permit issued under the Act is subject to a civil penalty not to exceed $50,000 for each violation and an additional civil penalty of not to exceed $10,000 for each day during which the violation continues.

c. Administrative Penalties - The CWA provides that any person who violates a permit condition implementing Sections 301, 302, 306, 307, 308, 318, or 405 of the Act is subject to an administrative penalty, as follows:

(1). Class I penalty Not to exceed $10,000 per violation nor shall the maximum amount exceed $25,000.

(2). Class II penalty Not to exceed $10,000 per day for each day during which the violation continues nor shall the maximum amount exceed $125,000.

B. **Continuation of the Expired General Permit**. This permit expires five years from the date of issuance. An expired general permit continues in force and effect until a new general permit or an individual permit is issued. Only those facilities authorized to discharge under the expiring general permit are covered by the continued permit.

C. **Need to halt or reduce activity not a defense.** It shall not be a defense for a permittee in an enforcement action that it would have been necessary to halt or reduce the permitted activity in order to maintain compliance with the conditions of this permit.

D. **Duty to Mitigate**. The permittee shall take all reasonable steps to minimize or prevent any discharge in violation of this permit which has a reasonable likelihood of adversely affecting human health or the environment.

E. **Duty to Provide Information.** The permittee shall furnish within a reasonable time to the Agency or local agency approving sediment and erosion plans, grading plans, or storm water management plans; or in the case of a storm water discharge associated with industrial activity which discharges through a municipal separate storm sewer system with an NPDES permit, to the municipal operator of the system, any information which is requested to determine compliance with this permit. Upon request, the permittee shall also furnish to the Agency or local agency approving sediment and erosion plans, grading plans, or storm water management plans; or in the case of a storm water discharge associated with industrial activity which discharges through a municipal separate storm sewer system with an NPDES permit, to the municipal operator of the system, copies of records required to be kept by this permit.

F. **Other Information.** When the permittee becomes aware that he or she failed to submit any relevant facts or submitted incorrect information in the Notice of Intent or in any other report to the Agency, he or she shall promptly submit such facts or information.

G. **Signatory Requirements.** All Notices of Intent, storm water pollution prevention plans, reports, certifications or information either submitted to the Agency or the operator of a large or medium municipal separate storm sewer system, or that this permit requires be maintained by the permittee, shall be signed.

1. All Notices of Intent shall be signed as follows:

a. For a corporation: by a responsible corporate officer. For the purpose of this section, a responsible corporate officer means: (1) a president, secretary, treasurer, or vice-president of the corporation in charge of a principal business function, or any other person who performs similar policy or decision-making functions for the corporation; or (2) the manager of one or more manufacturing, production or operating facilities employing more than 250 persons or having gross annual sales or expenditures exceeding $25,000,000 (in second-quarter 1980 dollars) if authority to sign documents has been assigned or delegated to the manager in accordance with corporate procedures;

b. For a partnership or sole proprietorship: by a general partner or the proprietor, respectively; or

c. For a municipality, State, Federal, or other public agency: by either a principal executive officer or ranking elected official. For purposes of this section, a principal executive officer of a Federal agency includes (1) the chief executive officer of the agency, or (2) a senior executive officer

having responsibility for the overall operations of a principal geographic unit of the agency.

2. All reports required by the permit and other information requested by the Agency shall be signed by a person described above or by a duly authorized representative of that person. A person is a duly authorized representative only if:

   a. The authorization is made in writing by a person described above and submitted to the Agency.

   b. The authorization specifies either an individual or a position having responsibility for the overall operation of the regulated facility or activity, such as the position of manager, operator, superintendent, or position of equivalent responsibility or an individual or position having overall responsibility for environmental matters for the company. (A duly authorized representative may thus be either a named individual or any individual occupying a named position).

   c. **Changes to authorization.** If an authorization under paragraph I.C (Authorization) is no longer accurate because a different individual or position has responsibility for the overall operation of the construction site, a new authorization satisfying the requirements of paragraph I.C must be submitted to the Agency prior to or together with any reports, information, or applications to be signed by an authorized representative.

   d. **Certification.** Any person signing documents under this Part shall make the following certification:

      "I certify under penalty of law that this document and all attachments were prepared under my direction or supervision in accordance with a system designed to assure that qualified personnel properly gathered and evaluated the information submitted. Based on my inquiry of the person or persons who manage the system, or those persons directly responsible for gathering the information, the information submitted is, to the best of my knowledge and belief, true, accurate, and complete. I am aware that there are significant penalties for submitting false information, including the possibility of fine and imprisonment for knowing violations."

H. **Penalties for Falsification of Reports.** Section 309(c)(4) of the Clean Water Act provides that any person who knowingly makes any false material statement, representation, or certification in any record or other document submitted or required to be maintained under this permit, including reports of compliance or noncompliance shall, upon conviction, be punished by a fine of not more than $10,000, or by imprisonment for not more than 2 years, or by both. Section 44(j)(4) and (5) of the Environmental Protection Act provides that any person who knowingly makes any false statement, representation, or certification in an application form, or form pertaining to a NPDES permit commits a Class A misdemeanor, and in addition to any other penalties provided by law is subject to a fine not to exceed $10,000 for each day of violation.

I. **Penalties for Falsification of Monitoring Systems.** The CWA provides that any person who falsifies, tampers with, or knowingly renders inaccurate any monitoring device or method required to be maintained under this permit shall, upon conviction, be punished by fines and imprisonment described in Section 309 of the CWA. The Environmental Protection Act provides that any person who knowingly renders inaccurate any monitoring device or record required in connection with any NPDES permit or with any discharge which is subject to the provisions of subsection (f) of Section 12 of the Act commits a Class A misdemeanor, and in addition to any other penalties provided by law is subject to a fine not to exceed $10,000 for each day of violation.

J. **Oil and Hazardous Substance Liability.** Nothing in this permit shall be construed to preclude the institution of any legal action or relieve the permittee from any responsibilities, liabilities, or penalties to which the permittee is or may be subject under section 311 of the CWA.

K. **Property Rights.** The issuance of this permit does not convey any property rights of any sort, nor any exclusive privileges, nor does it authorize any injury to private property nor any invasion of personal rights, nor any infringement of Federal, State or local laws or regulations.

L. **Severability.** The provisions of this permit are severable, and if any provision of this permit, or the application of any provision of this permit to any circumstance, is held invalid, the application of such provision to other circumstances, and the remainder of this permit shall not be affected thereby.

M. **Transfers.** This permit is not transferable to any person except after notice to the Agency. The Agency may require the discharger to apply for and obtain an individual NPDES permit as stated in Part I.C (Authorization).

N. **Requiring an Individual Permit or an Alternative General Permit.**

1. The Agency may require any person authorized by this permit to apply for and/or obtain either an individual NPDES permit or an alternative NPDES general permit. Any interested person may petition the Agency to take action under this paragraph. Where the Agency requires a discharger authorized to discharge under this permit to apply for an individual NPDES permit, the Agency shall notify the discharger in writing that a permit application is required. This notification shall include a brief statement of the reasons for this decision, an application form, a statement setting a deadline for the discharger to file the application, and a statement that on the effective date of the individual NPDES permit or the alternative general permit as it applies to the individual permittee, coverage under this general permit shall automatically terminate. Applications shall be submitted to the Agency indicated in Part II.D (Where to Submit) of this permit. The Agency may grant additional time to submit the application upon request of the applicant. If a discharger fails to submit in a timely manner an individual NPDES permit application as required by the Agency under this paragraph, then the applicability of this permit to the individual NPDES permittee is automatically terminated at the end of the day specified by the Agency for application submittal.

2. Any discharger authorized by this permit may request to be excluded from the coverage of this permit by applying for an individual permit. In such cases, the permittee shall submit an individual application in accordance with the requirements of 40 CFR 122.26(c)(1)(ii), with reasons supporting the request, to the Agency at the address indicated in Part II.D (Where to Submit) of this permit. The request may be granted by issuance of any individual permit or an alternative general permit if the reasons cited by the permittee are adequate to support the request.

3. When an individual NPDES permit is issued to a discharger otherwise subject to this permit, or the discharger is authorized to discharge under an alternative NPDES general permit, the applicability of this permit to the individual NPDES permittee is automatically terminated on the effective date of the individual permit or the date of authorization of coverage under the alternative general permit, whichever the case may be. When an individual NPDES permit is denied to a discharger otherwise subject to this permit, or the discharger is denied for coverage under an alternative NPDES general permit, the applicability of this permit to the individual NPDES permittee remains in effect, unless otherwise specified by the Agency.

O. **State/Environmental Laws.** No condition of this permit shall release the permittee from any responsibility or requirements under other environmental statutes or regulations.

P. **Proper Operation and Maintenance.** The permittee shall at all times properly operate and maintain all facilities and systems of treatment and control (and related appurtenances) which are installed or used by the permittee to achieve compliance with the conditions of this permit and with the requirements of storm water pollution prevention plans. Proper operation and maintenance also includes adequate laboratory controls and appropriate quality assurance procedures. Proper operation and maintenance requires the operation of backup or auxiliary facilities or similar systems, installed by a permittee only when necessary to achieve compliance with the conditions of the permit.

Q. **Inspection and Entry.** The permittee shall allow the Agency or, in the case of a construction site which discharges through a municipal separate storm sewer, an authorized representative of the municipal operator or the separate storm sewer receiving the discharge, upon the presentation of credentials and other documents as may be required by law, to:

1. Enter upon the permittee's premises where a regulated facility or activity is located or conducted or where records must be kept under the conditions of this permit;

2. Have access to and copy at reasonable times, any records that must be kept under the conditions of this permit; and

3. Inspect at reasonable times any facilities or equipment (including monitoring and control equipment).

R. **Permit Actions.** This permit may be modified, revoked and reissued, or terminated for cause. The filing of a request by the permittee for a permit modification, revocation and reissuance, or termination, or a notification of planned changes or anticipated noncompliance does not stay any permit condition.

Part VII. REOPENER CLAUSE

A. If there is evidence indicating potential or realized impacts on water quality due to any storm water discharge associated with industrial activity covered by this permit, the discharger may be required to obtain individual permit or an alternative general permit in accordance with Part I.C (Authorization) of this permit or the permit may be modified to include different limitations and/or requirements.

B. Permit modification or revocation will be conducted according to provisions of 35 Ill. Adm. Code, Subtitle C, Chapter I and the provisions of 40 CFR 122.62, 122.63, 122.64 and 124.5.

Part VIII. DEFINITIONS

"Agency" means the Illinois Environmental Protection Agency.

"Best Management Practices" ("BMPs") means schedules of activities, prohibitions of practices, maintenance procedures, and other management practices to prevent or reduce the pollution of waters of the United States. BMPs also include treatment requirements, operating procedures, and practices to control plant site runoff, spillage or leaks, sludge or waste disposal, or drainage from raw material storage.

"Commencement of Construction" - The initial disturbance of soils associated with clearing, grading, or excavating activities or other construction activities.

"CWA" means Clean Water Act (formerly referred to as the Federal Water Pollution Control Act or Federal Water Pollution Control Act Amendments of 1972) Pub.L. 92-500, as amended Pub. L. 95-217, Pub. L. 95-576, Pub. L. (96-483 and Pub. L. 97-117, 33 U.S.C. 1251 et.seq.)

"Dedicated portable asphalt plant" - A portable asphalt plant that is located on or contiguous to a construction site and that provides asphalt only to the construction site that the plant is located on or adjacent to. The term dedicated portable asphalt plant does not include facilities that are subject to the asphalt emulsion effluent limitation guideline at 40 CFR 443.

"Dedicated portable concrete plant" - A portable concrete plant that is located on or contiguous to a construction site and that provides concrete only to the construction site that the plant is located on or adjacent to.

"Dedicated sand or gravel operation" - An operation that produces sand and/or gravel for a single construction project.

"Director" means the Director of the Illinois Environmental Protection Agency or an authorized representative.

"Final Stabilization" means that all soil disturbing activities at the site have been completed, and that a uniform perennial vegetative cover with a density of 70% the cover for unpaved areas and areas not covered by permanent structures has been established or equivalent stabilization measures (such as the use of riprap, gabions or geotextiles) have been employed.

"Large and Medium municipal separate storm sewer system" means all municipal separate storm sewers that are either:

(i) located in an incorporated place (city) with a population of 100,000 or more as determined by the latest Decennial Census by the Bureau of Census (these cities are listed in Appendices F and G of 40 CFR Part 122); or

(ii) located in the counties with unincorporated urbanized populations of 100,000 or more, except municipal separate storm sewers that are located in the incorporated places, townships or towns within such counties (these counties are listed in Appendices H and I of 40 CFR Part 122); or

(iii) owned or operated by a municipality other than those described in paragraph (i) or (ii) and that are designated by the Director as part of the large or medium municipal separate storm sewer system.

"NOI" means notice of intent to be covered by this permit (see Part II of this permit.)

"Point Source" means any discernible, confined, and discrete conveyance, including but not limited to, any pipe, ditch, channel, tunnel, conduit, well, discrete fissure, container, rolling stock, concentrated animal feeding operation, landfill leachate collection system, vessel or other floating craft from which pollutants are or may be discharges. This term does not include return flows from irrigated agriculture or agricultural storm water runoff.

"Runoff coefficient" means the fraction of total rainfall that will appear at the conveyance as runoff.

"Storm Water" means storm water runoff, snow melt runoff, and surface runoff and drainage.

"Storm Water Associated with Industrial Activity" means the discharge from any conveyance which is used for collecting and conveying storm water and which is directly related to manufacturing, processing or raw materials storage areas at an industrial plant. The term does not include discharges from facilities or activities excluded from the NPDES program. For the categories of industries identified in subparagraphs (i) through (x) of this subsection, the term includes, but is not limited to, storm water discharges from industrial plant yards; immediate access roads and rail lines used or traveled by carriers of raw materials, manufactured products, waste material, or by-products used or created by the facility; material handling sites; refuse sites; sites used for the application or disposal of process waste waters (as defined at 40 CFR 401); sites used for the storage and maintenance of material handling equipment; sites used for residual treatment, storage, or disposal; shipping and receiving areas; manufacturing buildings; storage areas (including tank farms) for raw materials, and intermediate and finished products; and areas where industrial activity has taken place in the past and significant materials remain and are exposed to storm water. For the categories of industries identified in subparagraph (xi), the term includes only storm water discharges from all areas listed in the previous sentence (except access roads) where material handling equipment or activities, raw materials, intermediate products, final products, waste materials, by-products, or industrial machinery are exposed to storm water. For the purposes of this paragraph, material handling activities include the: storage, loading and unloading, transportation, or conveyance of any raw material, intermediate product, finished product, by-product or waste product. The term excludes areas located on plant lands separate from the plant's industrial activities, such as office buildings and accompanying parking lots as long as the drainage from the excluded areas is not mixed with storm water drained from the above described areas. Industrial facilities (including industrial facilities that are Federally or municipally owned or operated that meet the description of the facilities listed in this paragraph (i)- (xi)) include those facilities designated under 40 CFR 122.26(a)(1)(v). The following categories of facilities are considered to be engaging in "industrial activity" for purposes of this subsection:

(i) Facilities subject to storm water effluent limitations guidelines, new source performance standards, or toxic pollutant effluent standards under 40 CFR Subchapter N (except facilities with toxic pollutant effluent standards which are exempted under category (xi) of this paragraph);

(ii) Facilities classified as Standard Industrial Classifications 24 (except 2434), 26 (except 265 and 267), 28, 29, 311, 32, 33, 3441, 373;

(iii) Facilities classified as Standard Industrial Classifications 10 through 14 (mineral industry) including active or inactive mining operations (except for areas of coal mining operations meeting the definition of a reclamation area under 40 CFR 434.11(l)) and oil and gas exploration, production, processing, or treatment operations, or transmission facilities that discharge storm water contaminated by contact with or that has come into contact with, any overburden, raw material, intermediate products, finished products, byproducts or waste products located on the site of such operations; inactive mining operations are mining sites that are not being actively mined, but which have an identifiable owner/operator;

(iv) Hazardous waste treatment, storage, or disposal facilities, including those that are operating under interim status or a permit under Subtitle C of RCRA;

(v) Landfills, land application sites, and open dumps that have received any industrial wastes (waste that is received from any of the facilities described under this subsection) including those that are subject to regulation under Subtitle D of RCRA;

(vi) Facilities involved in the recycling of materials, including metal scrapyards, battery reclaimers, salvage yards, and automobile junkyards, including but limited to those classified as Standard Industrial Classification 5015 and 5093;

(vii) Steam electric power generating facilities, including coal handling sites;

(viii) Transportation facilities classified as Standard Industrial Classifications 40, 41, 42, 44, and 45 which have vehicle maintenance shops, equipment cleaning operations, or airport deicing operations. Only those portions of the facility that are either involved in vehicle maintenance (including vehicle rehabilitation, mechanical repairs, painting, fueling, and lubrication), equipment cleaning operations, airport deicing operations, or which are otherwise identified under subparagraphs (i)-(vii) or (ix)-(xi) of this subsection are associated with industrial activity;

(ix) Treatment works treating domestic sewage or any other sewage sludge or wastewater treatment device or system, used in the storage treatment, recycling, and reclamation of municipal or domestic sewage, including land dedicated to the disposal of sewage sludge that are located within the confines of the facility, with a design flow of 1.0 mgd or more, or required to have an approved pretreatment program under 40 CFR 403. Not included are farm lands, domestic gardens or lands used for sludge management where sludge is beneficially reused and which are not physically located in the confines of the facility, or areas that are in compliance with 40 CFR 503;

(x) Construction activity including clearing, grading and excavation activities except: operations that result in the disturbance of less than five acres of total land area which are not part of a larger common plan of development or sale;

(xi) Facilities under Standard Industrial Classifications 20, 21, 22, 23, 2434, 25, 265, 267, 27, 283, 31 (except 311), 34 (except 3441), 35, 36, 37 (except 373), 38, 39, 4221-25, (and which are not otherwise included within categories (i)-(x)).

"Waters" mean all accumulations of water, surface and underground, natural, and artificial, public and private, or parts thereof, which are wholly or partially within, flow through, or border upon the State of Illinois, except that sewers and treatment works are not included except as specially mentioned; provided, that nothing herein contained shall authorize the use of natural or otherwise protected waters as sewers or treatment works except that in-stream aeration under Agency permit is allowable.

Table 1
Summary of Validated Groundwater Sample Detections - Organics (June 2005 Sampling Event)
Site R Quarterly Groundwater Monitoring
Solutia, Inc. - Sauget, Illinois

Monitoring Well		BWMW-1S	MDL	BWMW-1M	MDL	BWMW-1D	MDL	BWMW-2S	MDL	BWMW-2M	MDL	BWMW-2D	MDL
Lab Sample ID		680-5178-1		680-5178-2		680-5178-3		680-5178-4		680-5178-5		680-5273-1	
Date Sampled		6/22/2005		6/22/2005		6/22/2005		6/22/2005		6/22/2005		6/23/2005	
Time Sampled		9:10		12:05		09:05		15:45		15:40		09:10	
Volatile Organic Compounds (USEPA Method 8260B)													
Date Analyzed		7/1/2005		6/29/2005		6/29/2005		6/29/2005		6/29/2005		6/30/2005	
Analyte	**CAS No.**	**(ug/L)**		**(ug/L)**		**(ug/L)**		**(ug/L)**		**(ug/L)**		**(ug/L)**	
Acetone	67-64-1	7300 UJ	7300	150 UJ	150	150 UJ	150	15 UJ	15	***4900 J***	370	***4500***	180
Benzene	71-43-2	***1000***	540	***110***	11	***37***	11	***160***	1.1	***1200***	27	***800***	14
2-Butanone	78-93-3	790 U	790	14 UJ	14	14 UJ	14	1.4 UJ	1.4	36 UJ	36	***77 J***	18
Chlorobenzene	108-90-7	***120000***	410	***2500***	8.2	***5200***	21	***250***	0.82	***6300***	21	***4300***	10
Chloroform	67-66-3	520 U	520	10 U	10	10 U	10	1.0 U	1.0	***150***	26	13 U	13
1,2-Dichloroethane	107-06-2	280 U	280	5.6 U	5.6	5.6 U	5.6	0.56 U	0.56	***6400***	14	***2800***	7
cis-1,2-Dichloroethene	156-59-2	550 U	550	11 U	11	11 U	11	1.1 U	1.1	***28 J***	11	***22 J***	14
Ethylbenzene	100-41-4	620 U	620	12 U	12	12 U	12	1.2 U	1.2	***200***	31	***120***	16
Methylene Chloride	75-09-2	440 U	440	8.8 U	8.8	8.8 U	8.8	0.88 U	0.88	***310***	22	***270***	11
4-Methyl-2-pentanone	108-10-1	450 U	450	9.0 U	9.0	9.0 U	9.0	0.90 U	0.90	***500***	23	***590***	11
1,1,2,2-Tetrachloroethane	79-34-5	210 U	210	4.2 U	4.2	4.2 U	4.2	0.52 U	0.52	***30 J***	26	5.3 U	5.3
Tetrachloroethene	127-18-4	750 U	750	15 U	15	15 U	15	1.5 U	1.5	***190***	38	***68***	19
Toluene	108-88-3	620 U	620	12 U	12	12 U	12	1.2 U	1.2	***2400***	31	***1400***	16
Trichloroethene	79-01-6	710 U	710	14 U	14	14 U	14	1.4 U	1.4	***200***	36	***150***	18
Xylenes, Total	1330-20-7	1300 U	1300	26 U	26	26 U	26	2.6 U	2.6	***1500***	65	***770***	33
Semi-Volatile Organic Compounds (USEPA Method 8270C)													
Date Prepared		6/27/2005		6/27/2005		6/27/2005		6/27/2005		6/27/2005		6/29/2005	
Date Analyzed		7/20/2005		7/20/2005		7/27/2005		7/27/2005		7/21/2005		7/11/2005	
Analyte	**CAS No.**	**(ug/L)**		**(ug/L)**		**(ug/L)**		**(ug/L)**		**(ug/L)**		**(ug/L)**	
Bis(2-ethylhexyl) phthalate	117-81-7	4.9 U	4.8	20 U	19	19 U	19	9.8 U	9.8	480 U	480	470 U	470
4-Chloroaniline	106-47-8	***52 J***	2.5	***2300***	10	10 U	10	5.2 U	5.2	***9200 J***	250	250 U	250
2-Chlorophenol	95-57-8	***41 J***	3.5	14 U	14	***38 J***	14	7.2 U	7.2	***15000***	350	***7400***	340
1,2-Dichlorobenzene	95-50-1	4.9 U	4.9	20 U	20	19 U	19	10 U	10	490 U	490	480 UJ	480
1,3-Dichlorobenzene	541-73-1	2.7 U	2.7	11 U	11	11 U	11	5.5 U	5.5	270 U	270	260 U	260
1,4-Dichlorobenzene	106-46-7	***6.7 J***	2.5	***81 J***	10	10 U	10	5.2 U	5.2	250 U	250	250 U	250
2,4-Dichlorophenol	120-83-2	3.2 U	3.2	13 U	13	***3000***	13	6.6 U	6.6	***42000***	320	***20000***	310
Diethyl phthalate	84-66-2	2.9 U	2.9	12 U	12	***14 J***	11	5.9 U	5.9	290 U	290	280 U	280
3 & 4 Methylphenol	65794-96-9	3.2 U	3.2	13 U	13	***36 J***	13	6.6 U	6.6	***2200 J***	320	310 U	310
Naphthalene	91-20-3	***58 J***	3.7	15 U	15	15 U	15	***22 J***	7.6	***4900***	370	360 U	360
2-Nitroaniline	88-74-4	3.4 U	3.4	14 U	14	***53 J***	13	6.9 U	6.9	330 U	330	330 U	330
Nitrobenzene	98-95-3	4.6 U	4.6	18 U	18	***50 J***	18	9.3 U	9.3	450 U	450	440 U	440
Phenol	108-95-2	4.9 U	4.9	19 U	19	***29 J***	19	9.9 U	9.9	***79000***	480	***34000***	470
1,2,4-Trichlorobenzene	120-82-1	2.6 U	2.6	11 U	11	10 U	10	5.4 U	5.4	260 U	260	260 U	260
2,4,6-Trichlorophenol	88-06-2	3.4 U	3.4	14 U	14	***1200***	14	7.0 U	7.0	***5000***	340	***2900 J***	330

Table 1
Summary of Validated Groundwater Sample Detections - Organics (June 2005 Sampling Event)
Site R Quarterly Groundwater Monitoring
Solutia, Inc. - Sauget, Illinois

Monitoring Well		BWMW-1S	MDL	BWMW-1M	MDL	BWMW-1D	MDL	BWMW-2S	MDL	BWMW-2M	MDL	BWMW-2D	MDL
Lab Sample ID		680-5178-1		680-5178-2		680-5178-3		680-5178-4		680-5178-5		680-5273-1	
Date Sampled		6/22/2005		6/22/2005		6/22/2005		6/22/2005		6/22/2005		6/23/2005	
Time Sampled		9:10		12:05		09:05		15:45		15:40		09:10	
Organochlorine Pesticides (USEPA Method 8081A)													
Date Prepared		6/27/2005		6/27/2005		6/27/2005		6/27/2005		6/27/2005		6/27/2005	
Date Analyzed		7/1/2005		7/1/2005		7/1/2005		7/1/2005		7/1/2005		7/1/2005	
Analyte	**CAS No.**	**(ug/L)**		**(ug/L)**		**(ug/L)**		**(ug/L)**		**(ug/L)**		**(ug/L)**	
Endosulfan I	959-98-8	0.0062 U	0.0062	0.0062 U	0.0062	0.061 U	0.061	0.0062 U	0.0062	0.0063 U	0.0063	0.0062 U	0.0062
Heptachlor	76-44-8	***0.049 J***	0.0074	0.0074 U	0.0074	0.072 U	0.072	0.0074 U	0.0074	0.0075 U	0.0075	0.0074 U	0.0074
Chlorinated Herbicides (USEPA Method 8151A)													
Date Prepared		6/28/2005		6/28/2005		6/28/2005		6/28/2005		6/28/2005		6/29/2005	
Date Analyzed		7/19/2005		7/19/2005		7/19/2005		7/19/2005		7/19/2005		7/19/2005	
Analyte	**CAS No.**	**(ug/L)**		**(ug/L)**		**(ug/L)**		**(ug/L)**		**(ug/L)**		**(ug/L)**	
2,4-D	94-75-7	2.2 U	2.2	0.11 U	0.11	1.1 U	1.1	0.55 U	0.55	***26000 J***	1100	***22000 J***	1100
Dichlorprop	120-36-5	***33***	0.59	0.029 U	0.029	***2.5 JN***	0.29	***11***	0.15	***1600***	29	***2200*** J	29
Pentachlorophenol	87-86-5	3.5 U	3.5	0.17 U	0.17	***8.4***	1.7	0.9 U	0.9	180 U	180	180 U	180
Silvex (2,4,5-TP)	93-72-1	0.65 U	0.65	0.032 U	0.032	0.32 U	0.32	0.17 U	0.17	32 U	32	32 U	32
Total Organic Carbon (USEPA Method 9060)													
Date Analyzed		7/15/2005		7/15/2005		7/15/2005		7/15/2005		7/15/2005		7/18/2005	
Analyte	**CAS No.**	**(mg/L)**		**(mg/L)**		**(mg/L)**		**(mg/L)**		**(mg/L)**		**(mg/L)**	
Total Organic Carbon	7440-44-0	***14***	0.50	***13***	0.50	***58***	0.50	***42***	0.50	***1,000***	25	***590***	10

Parameters not listed were not detected in any samples.
Results in ***bold italics*** denote detections.
MDL = Method Detection Limit

Flags and Qualifiers
U - Analyte was not detected at or above the Method Detection Limit (MDL).
UJ - Analyte was not detected at or above the Method Detection Limit (MDL); the detection limit is estimated.
J - Result is an estimated value.
JN - Analyte is tentatively identified and the result is an estimated value.

Checked by: KMG Date: 11/14/2005
Reviewed by: LAH Date: 11/22/2005

Table 1
Summary of Validated Groundwater Sample Detections - Organics (June 2005 Sampling Event)
Site R Quarterly Groundwater Monitoring
Solutia, Inc. - Sauget, Illinois

Monitoring Well		BWMW-3S	MDL	BWMW-3M	MDL	BWMW-3D	MDL	BWMW-4S	MDL	BWMW-4M	MDL	BWMW-4D	MDL
Lab Sample ID		680-5131-2		680-5131-3		680-5131-1		680-5131-6		680-5131-4		680-5131-5	
Date Sampled		6/20/2005		6/21/2005		6/20/2005		6/21/2005		6/21/2005		6/21/2005	
Time Sampled		16:05		08:50		15:00		15:10		11:50		15:35	
Volatile Organic Compounds (USEPA Method 8260B)													
Date Analyzed		6/29/2005		6/29/2005		6/29/2005		6/29/2005		6/29/2005		6/29/2005	
Analyte	**CAS No.**	**(ug/L)**		**(ug/L)**		**(ug/L)**		**(ug/L)**		**(ug/L)**		**(ug/L)**	
Acetone	67-64-1	7.3 U	7.3	37 U	37	37 U	37	7.3 U	7.3	37 U	37	37 U	37
Benzene	71-43-2	***19***	0.54	***51***	2.7	***81***	2.7	0.54 U	0.54	***20***	2.7	***6.0***	2.7
2-Butanone	78-93-3	0.72 U	0.72	3.6 U	3.6	3.6 U	3.6	0.72 U	0.72	3.6 U	3.6	3.6 U	3.6
Chlorobenzene	108-90-7	***110***	0.41	***2400***	2.1	***3700***	2.1	***9.7***	0.41	***1000***	2.1	***280***	2.1
Chloroform	67-66-3	0.52 U	0.52	2.6 U	2.6	2.6 U	2.6	0.52 U	0.52	2.6 U	2.6	2.6 U	2.6
1,2-Dichloroethane	107-06-2	0.28 U	0.28	1.4 U	1.4	1.4 U	1.4	0.28 U	0.28	1.4 U	1.4	1.4 U	1.4
cis-1,2-Dichloroethene	156-59-2	0.55 U	0.55	2.8 U	2.8	2.8 U	2.8	0.55 U	0.55	2.8 U	2.8	2.8 U	2.8
Ethylbenzene	100-41-4	0.62 U	0.62	3.1 U	3.1	3.1 U	3.1	0.62 U	0.62	***9.0 J***	3.1	3.1 U	3.1
Methylene Chloride	75-09-2	0.44 U	0.44	2.2 U	2.2	2.2 U	2.2	0.44 U	0.44	2.2 U	2.2	2.2 U	2.2
4-Methyl-2-pentanone	108-10-1	0.45 U	0.45	2.3 U	2.3	2.3 U	2.3	0.45 U	0.45	2.3 U	2.3	2.3 U	2.3
1,1,2,2-Tetrachloroethane	79-34-5	0.21 U	0.21	1.1 U	1.1	1.1 U	1.1	0.21 U	0.21	1.1 U	1.1	1.1 U	1.1
Tetrachloroethene	127-18-4	0.75 U	0.75	3.8 U	3.8	3.8 U	3.8	0.75 U	0.75	3.8 U	3.8	3.8 U	3.8
Toluene	108-88-3	***0.66 J***	0.62	***11***	3.1	3.1 U	3.1	0.62 U	0.62	3.1 U	3.1	3.1 U	3.1
Trichloroethene	79-01-6	0.71 U	0.71	3.6 U	3.6	3.6 U	3.6	0.71 U	0.71	3.6 U	3.6	3.6 U	3.6
Xylenes, Total	1330-20-7	1.3 U	1.3	6.5 U	6.5	6.5 U	6.5	1.3 U	1.3	6.5 U	6.5	6.5 U	6.5
Semi-Volatile Organic Compounds (USEPA Method 8270C)													
Date Prepared		6/27/2005		6/27/2005		6/27/2005		6/27/2005		6/27/2005		6/27/2005	
Date Analyzed		7/20/2005		7/21/2005		7/20/2005		7/20/2005		7/20/2005		7/21/2005	
Analyte	**CAS No.**	**(ug/L)**		**(ug/L)**		**(ug/L)**		**(ug/L)**		**(ug/L)**		**(ug/L)**	
Bis(2-ethylhexyl) phthalate	117-81-7	0.98 UJ	0.98	***68 J***	48	***76 J***	47	0.98 UJ	0.98	***28 J***	25	***6.3 J***	4.7
4-Chloroaniline	106-47-8	***7.8 J***	0.52	***2000***	25	***4800***	25	0.52 UJ	0.52	***3400***	13	***240***	2.5
2-Chlorophenol	95-57-8	0.72 U	0.72	35 U	35	35 U	35	0.72 UJ	0.72	18 U	18	3.5 U	3.5
1,2-Dichlorobenzene	95-50-1	1.0 U	1.0	49 U	49	48 U	48	1.0 UJ	1.0	25 U	25	***490***	4.8
1,3-Dichlorobenzene	541-73-1	0.55 U	0.55	27 U	27	***170 J***	26	0.55 UJ	0.55	14 U	14	2.6 U	2.6
1,4-Dichlorobenzene	106-46-7	***3.3 J***	0.52	***260 J***	25	25 U	25	***0.92 J***	0.52	***61 J***	13	***53***	2.5
2,4-Dichlorophenol	120-83-2	0.66 U	0.66	32 U	32	32 U	32	0.66 UJ	0.66	17 U	17	3.2 U	3.2
Diethyl phthalate	84-66-2	0.59 U	0.59	29 U	29	28 U	28	0.59 UJ	0.59	15 U	15	2.8 U	2.8
3 & 4 Methylphenol	65794-96-9	***6.8 J***	0.66	32 U	32	32 U	32	0.66 UJ	0.66	17 U	17	3.2 U	3.2
Naphthalene	91-20-3	0.76 U	0.76	37 U	37	***300 J***	37	0.76 UJ	0.76	***87 J***	19	3.7 U	3.7
2-Nitroaniline	88-74-4	0.69 U	0.69	33 U	33	33 U	33	0.69 UJ	0.69	17 U	17	3.3 U	3.3
Nitrobenzene	98-95-3	0.93 U	0.93	45 U	45	45 U	45	0.93 UJ	0.93	23 U	23	4.5 U	4.5
Phenol	108-95-2	0.99 U	0.99	48 U	48	48 U	48	0.99 UJ	0.99	25 U	25	4.8 U	4.8
1,2,4-Trichlorobenzene	120-82-1	0.54 U	0.54	26 U	26	26 U	26	0.54 UJ	0.54	14 U	14	***45 J***	2.6
2,4,6-Trichlorophenol	88-06-2	0.70 U	0.70	34 U	34	34 U	34	0.70 UJ	0.70	18 U	18	3.4 U	3.4

Table 1
Summary of Validated Groundwater Sample Detections - Organics (June 2005 Sampling Event)
Site R Quarterly Groundwater Monitoring
Solutia, Inc. - Sauget, Illinois

Monitoring Well		BWMW-3S	MDL	BWMW-3M	MDL	BWMW-3D	MDL	BWMW-4S	MDL	BWMW-4M	MDL	BWMW-4D	MDL
Lab Sample ID		680-5131-2		680-5131-3		680-5131-1		680-5131-6		680-5131-4		680-5131-5	
Date Sampled		6/20/2005		6/21/2005		6/20/2005		6/21/2005		6/21/2005		6/21/2005	
Time Sampled		16:05		08:50		15:00		15:10		11:50		15:35	
Organochlorine Pesticides (USEPA Method 8081A)													
Date Prepared		6/27/2005		6/27/2005		6/27/2005		6/27/2005		6/27/2005		6/27/2005	
Date Analyzed		7/1/2005		7/1/2005		7/1/2005		7/1/2005		7/1/2005		7/1/2005	
Analyte	**CAS No.**	**(ug/L)**		**(ug/L)**		**(ug/L)**		**(ug/L)**		**(ug/L)**		**(ug/L)**	
Endosulfan I	959-98-8	0.0063 U	0.0063	0.0063 U	0.0063	0.0063 U	0.0063	0.032 U	0.0062	***0.17 J***	0.0062	***0.15***	0.0062
Heptachlor	76-44-8	0.0075 U	0.0075	0.0075 U	0.0075	0.0075 U	0.0075	0.0073 U	0.0073	0.0074 U	0.0074	0.0074 U	0.0074
Chlorinated Herbicides (USEPA Method 8151A)													
Date Prepared		6/27/2005		6/28/2005		6/27/2005		6/28/2005		6/28/2005		6/28/2005	
Date Analyzed		7/19/2005		7/19/2005		7/19/2005		7/19/2005		7/19/2005		7/19/2005	
Analyte	**CAS No.**	**(ug/L)**		**(ug/L)**		**(ug/L)**		**(ug/L)**		**(ug/L)**		**(ug/L)**	
2,4-D	94-75-7	0.42 U	0.42	***7.0***	0.10	0.42 U	0.42	0.11 U	0.11	0.42 U	0.42	0.10 U	0.10
Dichlorprop	120-36-5	0.12 U	0.12	***7.3*** J	0.029	0.12 U	0.12	0.029 U	0.029	***1.0 J***	0.11	0.029 U	0.029
Pentachlorophenol	87-86-5	0.69 U	0.69	0.17 U	0.17	0.69 U	0.69	0.17 U	0.17	0.69 U	0.69	***1.7***	0.17
Silvex (2,4,5-TP)	93-72-1	0.13 U	0.13	***0.098 JN***	0.031	0.13 U	0.13	0.032 U	0.032	0.13 U	0.13	0.031 U	0.031
Total Organic Carbon (USEPA Method 9060)													
Date Analyzed		7/15/2005		7/15/2005		7/15/2005		7/15/2005		7/15/2005		7/15/2005	
Analyte	**CAS No.**	**(mg/L)**		**(mg/L)**		**(mg/L)**		**(mg/L)**		**(mg/L)**		**(mg/L)**	
Total Organic Carbon	7440-44-0	***13***	0.50	***90***	0.50	***32***	0.50	***4.8***	0.50	***18***	0.50	***4.3***	0.50

Parameters not listed were not detected in any samples.
Results in ***bold italics*** denote detections.
MDL = Method Detection Limit

Flags and Qualifiers
U - Analyte was not detected at or above the Method Detection Limit (MDL).
UJ - Analyte was not detected at or above the Method Detection Limit (MDL); the detection limit is estimated.
J - Result is an estimated value.
JN - Analyte is tentatively identified and the result is an estimated value.

Checked by: KMG Date: 11/14/2005
Reviewed by: LAH Date: 11/22/2005

Table 2
Summary of Validated Groundwater Sample Detections - Inorganics (June 2005 Sampling Event)
Site R Quarterly Groundwater Monitoring
Solutia, Inc. - Sauget, Illinois

Monitoring Well		BWMW-1S	MDL	BWMW-1M	MDL	BWMW-1D	MDL	BWMW-2S	MDL	BWMW-2M	MDL	BWMW-2D	MDL
Lab Sample ID		680-5178-1		680-5178-2		680-5178-3		680-5178-4		680-5178-5		680-5273-1	
Date Sampled		6/22/2005		6/22/2005		6/22/2005		6/22/2005		6/22/2005		6/23/2005	
Time Sampled		9:10		12:05		09:05		15:45		15:40		09:10	
Mercury (USEPA Method 7470A)													
Date Prepared		7/8/2005		7/8/2005		7/8/2005		7/8/2005		7/8/2005		7/12/2005	
Date Analyzed		7/10/2005		7/10/2005		7/10/2005		7/10/2005		7/10/2005		7/16/2005	
Analyte	**CAS No.**	**(mg/L)**		**(mg/L)**		**(mg/L)**		**(mg/L)**		**(mg/L)**		**(mg/L)**	
Mercury	7439-97-6	0.00020 U	0.000080	0.00020 U	0.000080	0.00020 U	0.000080	0.00020 U	0.000080	0.00020 U	0.000080	***8.6E-05 J***	0.000080
Metals (USEPA Method 6010B)													
Date Prepared		6/30/2005		6/30/2005		6/30/2005		6/30/2005		6/30/2005		7/8/2005	
Date Analyzed		7/2/2005		7/2/2005		7/2/2005		7/2/2005		7/2/2005		7/11/2005	
Analyte	**CAS No.**	**(mg/L)**		**(mg/L)**		**(mg/L)**		**(mg/L)**		**(mg/L)**		**(mg/L)**	
Arsenic	7440-38-2	***0.043***	0.0042	0.010 U	0.0042	0.010 U	0.0042	***0.0055 J***	0.0042	0.010 U	0.0042	0.0084 U	0.0042
Barium	7440-39-3	***0.23***	0.0012	***0.63***	0.0012	***0.56***	0.0012	***0.34***	0.0012	***0.086***	0.0012	***0.094***	0.0012
Chromium	7440-47-3	***0.0011 J***	0.00083	***0.0017 J***	0.00083	***0.0028 J***	0.00083	***0.0069 J***	0.00083	***0.0012 J***	0.00083	0.010 U	0.00083
Copper	7440-50-8	0.020 U	0.0017	0.020 U	0.0017	0.020 U	0.0017	0.0050 U	0.0017	0.0019 U	0.0017	***0.0024 J***	0.0017
Lead	7439-92-1	0.0050 U	0.0022	0.0050 U	0.0022	***0.017***	0.0022	***0.0024 J***	0.0022	0.0050 U	0.0022	0.0050 U	0.0022
Nickel	7440-02-0	0.040 U	0.0018	0.040 U	0.0018	***0.011 J***	0.0018	***0.0061 J***	0.0018	***0.029 J***	0.0018	***0.013 J***	0.0018
Total Dissolved Solids (USEPA Method 160.1)													
Date Analyzed		6/27/2005		6/27/2005		6/27/2005		6/27/2005		6/27/2005		6/29/2005	
Analyte	**CAS No.**	**(mg/L)**		**(mg/L)**		**(mg/L)**		**(mg/L)**		**(mg/L)**		**(mg/L)**	
Total Dissolved Solids	-	***1,500***	5.0	***830***	5.0	***850***	5.0	***1,500***	5.0	***2,200***	5.0	***1800***	5.0

Parameters not listed were not detected in any samples.
Results in ***bold italics*** denote detections.
MDL = Method Detection Limit
Samples are not filtered.

Flags and Qualifiers
U - Analyte was not detected at or above the Reporting Limit (RL).
J - Result is an estimated value below the Reporting Limit (RL) but greater than or equal to the Method Detection Limit (MDL); The concentration is an approximate value.

Checked by: KMG Date: 11/14/2005
Reviewed by: LAH Date: 11/22/2005

Table 2

Summary of Validated Groundwater Sample Detections - Inorganics (June 2005 Sampling Event)

Site R Quarterly Groundwater Monitoring

Solutia, Inc. - Sauget, Illinois

Monitoring Well		BWMW-3S	MDL	BWMW-3M	MDL	BWMW-3D	MDL	BWMW-4S	MDL	BWMW-4M	MDL	BWMW-4D	MDL
Lab Sample ID		680-5131-2		680-5131-3		680-5131-1		680-5131-6		680-5131-4		680-5131-5	
Date Sampled		6/20/2005		6/21/2005		6/20/2005		6/21/2005		6/21/2005		6/21/2005	
Time Sampled		16:05		08:50		15:00		15:10		11:50		15:35	
Mercury (USEPA Method 7470A)													
Date Prepared		7/5/2005		7/5/2005		7/5/2005		7/5/2005		7/5/2005		7/5/2005	
Date Analyzed		7/7/2005		7/7/2005		7/7/2005		7/7/2005		7/7/2005		7/7/2005	
Analyte	**CAS No.**	**(mg/L)**		**(mg/L)**		**(mg/L)**		**(mg/L)**		**(mg/L)**		**(mg/L)**	
Mercury	7439-97-6	0.00020 U	0.000080	0.00020 U	0.000080	0.00020 U	0.000080	0.00020 U	0.000080	0.00020 U	0.000080	0.00020 U	0.000080
Metals (USEPA Method 6010B)													
Date Prepared		6/29/2005		6/29/2005		6/29/2005		6/29/2005		6/29/2005		6/29/2005	
Date Analyzed		7/1/2005		7/1/2005		7/1/2005		7/1/2005		7/1/2005		7/1/2005	
Analyte	**CAS No.**	**(mg/L)**		**(mg/L)**		**(mg/L)**		**(mg/L)**		**(mg/L)**		**(mg/L)**	
Arsenic	7440-38-2	***0.090***	0.0042	0.010 U	0.0042	0.010 U	0.0042	***0.012***	0.0042	0.010 U	0.0042	0.010 U	0.0042
Barium	7440-39-3	***0.47***	0.0012	***0.56***	0.0012	***0.62***	0.0012	***0.23***	0.0012	***0.24***	0.0012	***0.085***	0.0012
Chromium	7440-47-3	***0.022***	0.00083	0.010 U	0.00083	***0.0011 J***	0.00083	***0.0021 J***	0.00083	***0.0011 J***	0.00083	***0.0017 J***	0.00083
Copper	7440-50-8	***0.010 J***	0.0017	0.020 U	0.0017	0.020 U	0.0017	0.020 U	0.0017	0.020 U	0.0017	0.020 U	0.0017
Lead	7439-92-1	***0.0025 J***	0.0022	0.0050 U	0.0022	0.0050 U	0.0022	0.0050 U	0.0022	0.0050 U	0.0022	0.0050 U	0.0022
Nickel	7440-02-0	***0.025 J***	0.0018	***0.0065 J***	0.0018	***0.0054 J***	0.0018	***0.0031 J***	0.0018	***0.0061 J***	0.0018	***0.0060 J***	0.0018
Total Dissolved Solids (USEPA Method 160.1)													
Date Analyzed		6/23/2005		6/23/2005		6/23/2005		6/23/2005		6/23/2005		6/23/2005	
Analyte	**CAS No.**	**(mg/L)**		**(mg/L)**		**(mg/L)**		**(mg/L)**		**(mg/L)**		**(mg/L)**	
Total Dissolved Solids	-	***1,200***	5.0	***1,300***	5.0	***1,200***	5.0	***8.0***	5.0	***640 J***	5.0	***620***	5.0

Parameters not listed were not detected in any samples.
Results in ***bold italics*** denote detections.
MDL = Method Detection Limit
Samples are not filtered.

Flags and Qualifiers
U - Analyte was not detected at or above the Reporting Limit (RL).
J - Result is an estimated value below the Reporting Limit (RL) but greater than or equal to the Method Detection Limit (MDL); The concentration is an approximate value.

Checked by: KMG Date: 11/14/2005
Reviewed by: LAH Date: 11/22/2005

Table 3
Summary of Validated QA/QC Sample Detections - Organics (June 2005 Sampling Event)
Site R Quarterly Groundwater Monitoring
Solutia, Inc. - Sauget, Illinois

Monitoring Well		DUP 1	MDL	DUP 2	MDL	RB 1	MDL	RB 2	MDL	Trip Blank	MDL	Trip Blank	MDL
Lab Sample ID		680-5131-7FD		680-5273-2		680-5131-8RB		680-5178-6RB		680-5131-9TB		680-5178-7TB	
Date Sampled		6/21/2005		6/23/2005		6/21/2005		6/22/2005		6/21/2005		6/22/2005	
Time Sampled		11:50		9:10		15:35		16:00		0:00		0:00	
Volatile Organic Compounds (USEPA Method 8260B)													
Date Analyzed		6/29/2005		6/30/2005		6/29/2005		6/29/2005		6/30/2005		6/29/2005	
Analyte	**CAS No.**	**(ug/L)**		**(ug/L)**		**(ug/L)**		**(ug/L)**		**(ug/L)**		**(ug/L)**	
Acetone	67-64-1	37 U	37	***4100***	180	7.3 U	7.3	7.3 U	7.3	7.3 U	7.3	7.3 U	7.3
Benzene	71-43-2	***23***	2.7	***860***	14	0.54 U	0.54	0.54 U	0.54	0.54 U	0.54	0.54 U	0.54
2-Butanone	78-93-3	3.6 U	3.6	***82 J***	18	0.72 U	0.72	0.72 U	0.72	0.72 U	0.72	0.72 U	0.72
Chlorobenzene	108-90-7	***1100***	2.1	***4700***	10	0.41 U	0.41	***1.7***	0.41	0.41 U	0.41	0.41 U	0.41
1,2-Dichloroethane	107-06-2	1.4 U	1.4	***2900***	7	0.28 U	0.28	0.28 U	0.28	0.28 U	0.28	0.28 U	0.28
cis-1,2-Dichloroethene	156-59-2	2.8 U	2.8	***27***	14	0.55 U	0.55	0.55 U	0.55	0.55 U	0.55	0.55 U	0.55
Ethylbenzene	100-41-4	3.1 UJ	3.1	***130***	16	0.62 U	0.62	0.62 U	0.62	0.62 U	0.62	0.62 U	0.62
Methylene Chloride	75-09-2	2.2 U	2.2	***300***	11	0.44 U	0.44	0.44 U	0.44	0.44 U	0.44	0.44 U	0.44
4-Methyl-2-pentanone	108-10-1	2.3 U	2.3	***600***	11	0.45 U	0.45	0.45 U	0.45	0.45 U	0.45	0.45 U	0.45
Tetrachloroethene	127-18-4	3.8 U	3.8	***69***	19	0.75 U	0.75	0.75 U	0.75	0.75 U	0.75	0.75 U	0.75
Toluene	108-88-3	3.1 U	3.1	***1500***	16	0.62 U	0.62	***0.81 J***	0.62	0.62 U	0.62	0.62 U	0.62
Trichloroethene	79-01-6	3.6 U	3.6	***160***	18	0.71 U	0.71	0.71 U	0.71	0.71 U	0.71	0.71 U	0.71
Xylenes, Total	1330-20-7	6.5 U	6.5	***890***	33	1.3 U	1.3	1.3 U	1.3	1.3 U	1.3	1.3 U	1.3
Semi-Volatile Organic Compounds (USEPA Method 8270C)													
Date Prepared		6/27/2005		6/29/2005		6/27/2005		6/27/2005					
Date Analyzed		7/20/2005		7/13/2005		7/20/2005		7/30/2005					
Analyte	**CAS No.**	**(ug/L)**		**(ug/L)**		**(ug/L)**		**(ug/L)**					
4-Chloroaniline	106-47-8	***3400***	13	250 U	250	0.52 U	0.52	0.50 U	0.50				
2-Chlorophenol	95-57-8	18 U	18	***9200***	340	0.72 U	0.72	0.70 U	0.70				
1,2-Dichlorobenzene	95-50-1	25 U	25	***600 J***	470	1.0 U	1.0	0.97 U	0.97				
1,4-Dichlorobenzene	106-46-7	***79 J***	13	250 U	250	0.52 U	0.52	0.50 U	0.50				
2,4-Dichlorophenol	120-83-2	16 U	16	***25000***	310	0.66 U	0.66	0.64 U	0.64				
Phenol	108-95-2	24 U	24	***45000***	470	0.99 U	0.99	0.96 U	0.96				
2,4,5-Trichlorophenol	95-95-4	15 U	15	***3300 J***	300	0.63 U	0.63	0.61 U	0.61				
Organochlorine Pesticides (USEPA Method 8081A)													
Date Prepared		6/27/2005		6/27/2005		6/27/2005		6/27/2005					
Date Analyzed		7/1/2005		7/2/2005		7/1/2005		7/1/2005					
Analyte	**CAS No.**	**(ug/L)**		**(ug/L)**		**(ug/L)**		**(ug/L)**					
4,4'-DDD	72-54-8	***0.11*** J	0.01	0.011 U	0.01	0.011 U	0.01	0.011 U	0.01				
Chlorinated Herbicides (USEPA Method 8151A)													
Date Prepared		6/28/2005		6/29/2005		6/28/2005		6/28/2005					
Date Analyzed		7/19/2005		7/19/2005		7/19/2005		7/19/2005					
Analyte	**CAS No.**	**(ug/L)**		**(ug/L)**		**(ug/L)**		**(ug/L)**					
2,4-D	94-75-7	0.44 U	0.44	***11000 J***	1100	0.11 U	0.11	***0.57 J***	0.44				
Dichlorprop	120-36-5	***1.6 J***	0.12	***990*** J	29	0.030 U	0.030	0.12 U	0.12				
Total Organic Carbon (USEPA Method 9060)													
Date Analyzed		7/15/2005		7/18/2005		7/15/2005		7/15/2005					
Analyte	**CAS No.**	**(mg/L)**		**(mg/L)**		**(mg/L)**		**(mg/L)**					
Total Organic Carbon	7440-44-0	***17***	0.50	***590***	10	1.0 U	0.50	1.0 U	0.50				

Parameters not listed were not detected in any samples.
Results in ***bold italics*** denote detections.
MDL = Method Detection Limit
DUP 1 is a duplicate of BWMW-2D
DUP 2 is a duplicate of BWMW-4M

Flags and Qualifiers
U - Analyte was not detected at or above the Method Detection Limit (MDL).
UJ - Analyte was not detected at or above the Method Detection Limit (MDL); the detection limit is estimated.
J - Result is an estimated value.
JN - Analyte is tentatively identified and the result is an estimated value.

Checked by: KMG Date: 11/14/2005
Reviewed by: LAH Date: 11/22/2005

Table 4
Summary of Validated QA/QC Sample Detections - Inorganics (June 2005 Sampling Event)
Site R Quarterly Groundwater Monitoring
Solutia, Inc. - Sauget, Illinois

Monitoring Well		DUP 1	MDL	DUP 2	MDL	RB 1	MDL	RB 2	MDL	Trip Blank	MDL	Trip Blank	MDL
Lab Sample ID		680-5131-7FD		680-5273-2		680-5131-8RB		680-5178-6RB		680-5131-9TB		680-5178-7TB	
Date Sampled		6/21/2005		6/23/2005		6/21/2005		6/22/2005		6/21/2005		6/22/2005	
Time Sampled		11:50		9:10		15:35		16:00		0:00		0:00	
Mercury (USEPA Method 7470A)													
Date Prepared		7/5/2005		7/12/2005		7/5/2005		7/8/2005					
Date Analyzed		7/7/2005		7/16/2005		7/7/2005		7/10/2005					
Dilution Factor		1		1		1		1					
Analyte	**CAS No.**	**(mg/L)**		**(mg/L)**		**(mg/L)**		**(mg/L)**					
Mercury	7439-97-6	0.00020 U	0.000080	***0.000080 J***	0.000080	0.00020 U	0.000080	0.00020 U	0.000080				
Metals (USEPA Method 6010B)													
Date Prepared		6/29/2005		7/8/2005		6/29/2005		6/30/2005					
Date Analyzed		7/1/2005		7/11/2005		7/1/2005		7/2/2005					
Dilution Factor		1		1		1		1					
Analyte	**CAS No.**	**(mg/L)**		**(mg/L)**		**(mg/L)**		**(mg/L)**					
Barium	7440-39-3	***0.25***	0.0012	***0.096***	0.0012	***0.0017 J***	0.0012	0.010 U	0.0012				
Chromium	7440-47-3	***0.0021 J***	0.00083	***0.0017 J***	0.00083	0.010 U	0.00083	0.010 U	0.00083				
Copper	7440-50-8	0.020 U	0.0017	0.020 U	0.0017	0.020 U	0.0017	***0.0028 J***	0.0017				
Lead	7439-92-1	0.0050 U	0.0022	***0.0028 J***	0.0022	0.0050 U	0.0022	0.0050 U	0.0022				
Nickel	7440-02-0	***0.0065 J***	0.0018	***0.012 J***	0.0018	0.040 U	0.0018	0.040 U	0.0018				
Total Dissolved Solids (USEPA Method 160.1)													
Date Analyzed		6/23/2005		6/29/2005		6/23/2005		6/27/2005					
Analyte	**CAS No.**	**(mg/L)**		**(mg/L)**		**(mg/L)**		**(mg/L)**					
Total Dissolved Solids	-	***2,000*** J	5.0	***1,800***	5.0	***640***	5.0	***13***	5.0				

Parameters not listed were not detected in any samples.
Results in ***bold italics*** denote detections.
Samples are not filtered.

Flags and Qualifiers
U - Analyte was not detected at or above the Reporting Limit (RL).
J - Result is an estimated value below the Reporting Limit (RL) but greater than or equal to the Method Detection Limit (MDL); The concentration is an approximate value.

Checked by: KMG Date: 11/14/2005
Reviewed by: LAH Date: 11/22/2005

Table 1
Summary of Validated Groundwater Sample Detections - Organics (September 2005 Sampling Event)
Site R Quarterly Groundwater Monitoring
Solutia, Inc. - Sauget, Illinois

Monitoring Well		BWMW-1S	MDL	BWMW-1M	MDL	BWMW-1D	MDL	BWMW-2S	MDL	BWMW-2M	MDL	BWMW-2D	MDL	BWMW-3S	MDL	BWMW-3M	MDL	BWMW-3D	MDL	BWMW-4S	MDL	BWMW-4M	MDL	BWMW-4D	MDL
Lab Sample ID		680-8521-1		680-8521-3		680-8521-2		680-8596-3		680-8596-5		680-8596-8		680-8474-5		680-8474-7		680-8474-8				680-8474-3		680-8429-1	
Date Sampled		9/21/2005		9/21/2005		9/21/2005		9/22/2005		9/22/2005		9/22/2005		9/20/2005		9/20/2005		9/20/2005		9/20/2005		9/20/2005		9/19/2005	
Time Sampled		10:17		11:50		10:23		10:15		10:38		13:05		13:15		14:34		13:25		dry		10:15		13:45	
Volatile Organic Compounds (USEPA Method 8260B)																									
Date Analyzed		10/4/2005		10/4/2005		10/4/2005		10/4/2005		10/4/2005		10/4/2005		10/3/2005		10/3/2005		10/3/2005				10/3/2005		10/4/2005	
Analyte	CAS No.	(ug/L)		(ug/L)		(ug/L)		(ug/L)		(ug/L)		(ug/L)		(ug/L)		(ug/L)		(ug/L)		(ug/L)		(ug/L)		(ug/L)	
Acetone	67-64-1	1,500 U	1500	150 UJ	150	370 U	370	15 U	15	*3,400*	370	*2,500*	370	7.3 UJ	7.3	7.3 UJ	7.3	7.3 UJ	7.3			7.3 UJ	7.3	7.3 UJ	7.3
Benzene	71-43-2	*1,400*	110	*160*	11	27 U	27	*160*	1.1	*900*	27	*670*	27	*35*	0.54	*67*	0.54	*86*	0.54			*1.9*	0.54	*6.3*	0.54
Bromomethane	74-83-9	*190* UJ	190	19 U	19	47 UJ	47	1.9 U	1.9	47 U	47	47 U	47	0.93 UJ	0.93	0.93 UJ	0.93	*13*	0.93			0.93 UJ	0.93	*13*	0.93
Chlorobenzene	108-90-7	*130,000 J*	410	*1,700*	8.2	*7,400*	21	*220*	0.82	*5,200*	21	*4,500*	21	*180*	2.1	*1,500*	8.2	*3,300*	8.2			*190*	2.1	*330*	2.1
Chloroform	67-66-3	100 U	100	10 U	10	26 U	26	1.0 U	1.0	*98*	26	*59*	26	0.52 U	0.52	0.52 U	0.52	0.52 U	0.52			0.52 U	0.52	0.52 U	0.52
1,1-Dichloroethane	75-34-3	110 U	110	11 U	11	28 U	28	1.1 U	1.1	28 U	28	26 U	28	0.56 U	0.56	0.56 U	0.56	*1.1*				0.58 U	0.56	0.56 U	0.56
1,2-Dichloroethane	107-06-2	56 U	56	5.6 U	5.6	14 U	14	0.56 U	0.56	*3,000*	14	*1,700*	14	0.28 U	0.28	0.28 U	0.28	0.28 U	0.28			0.28 U	0.28	0.28 U	0.28
cis-1,2-Dichloroethene	156-59-2	110 U	110	11 U	11	28 U	28	1.1 U	1.1	28 U	28	*35 J*	28	0.55 U	0.55	0.55 U	0.55	*4.8*	0.55			*0.89 J*	0.55	*0.56 J*	0.55
trans-1,2-Dichloroethene	156-60-5	160 U	160	16 U	16	40 U	40	1.6 U	1.6	40 U	40	40 U	40	0.80 U	0.80	0.80 U	0.80	*1.3*				0.80 U	0.80	0.80 U	0.80
Ethylbenzene	100-41-4	120 U	120	12 U	12	31 U	31	1.2 U	1.2	*150*	31	*170*	31	0.62 U	0.62	*1.5*	0.62	*31*	0.62			0.62 U	0.62	0.62 U	0.62
Methylene Chloride	75-09-2	88 U	88	8.8 U	8.8	22 U	22	0.88 U	0.88	*200 J*	22	*100 J*	22	0.44 U	0.44	0.44 U	0.44	0.44 U	0.44			0.44 U	0.44	0.44 U	0.44
4-Methyl-2-pentanone	108-10-1	90 U	90	9.0 U	9.0	23 U	23	0.90 U	0.90	*730*	23	*420 J*	23	0.45 U	0.45	*0.80 J*	0.45	*1.5 J*	0.45			0.45 U	0.45	0.45 U	0.45
Tetrachloroethene	127-18-4	150 U	150	15 U	15	38 U	38	1.5 U	1.5	*110*	38	*76*	38	0.75 U	0.75	0.75 U	0.75	*7.5*	0.75			0.75 U	0.75	0.75 U	0.75
Toluene	108-88-3	120 U	120	12 U	12	31 U	31	1.2 U	1.2	*1,800*	31	*1,100*	31	0.62 U	0.62	*1.5*	0.62	*40*	0.62			0.62 U	0.62	0.62 U	0.62
Trichloroethene	79-01-6	140 U	140	14 U	14	36 U	36	1.4 U	1.4	*160*	36	*99*	36	0.71 U	0.71	0.71 U	0.71	*4.1*	0.71			0.71 U	0.71	0.71 U	0.71
Xylenes, Total	1330-20-7	260 U	260	26 U	26	65 U	65	2.6 U	2.6	*1,200*	65	*1,100*	65	*1.3 J*	1.3	*2.6*	1.3	*170*	1.3			1.3 U	1.3	*2.7*	1.3
Semi-Volatile Organic Compounds (USEPA Method 8270C)																									
Date Prepared		9/23/2005		9/23/2005		9/23/2005		9/27/2005		9/27/2005		9/27/2005		9/22/2005		9/22/2005		9/22/2005				9/22/2005		9/21/2005	
Date Analyzed		9/29/2005		9/29/2005		9/29/2005		9/30/2005		10/8/2005		10/8/2005		9/26/2005		9/27/2005		9/26/2005				9/27/2005		9/27/2005	
Analyte	CAS No.	(ug/L)		(ug/L)		(ug/L)		(ug/L)		(ug/L)		(ug/L)		(ug/L)		(ug/L)		(ug/L)		(ug/L)		(ug/L)		(ug/L)	
Bis(2-ethylhexyl) phthalate	117-81-7	9.2 R	9.2	*26 J*	9.2	1.9 R	1.9	4.6 U	4.6	470 U	470	190 U	190	0.92 U	0.92	23 U	23	92 U	92			*1.8 U*	1.8	19 U	19
Benzo(a)anthracene	56-55-3	*6.6 J*	5.5	*5.8 J*	5.5	*1.1 J*	1.1	2.7 U	2.7	280 U	280	110 U	110	0.55 U	0.55	*15 J*	14	55 U	55			*1.5 J*	1.1	11 U	11
Benzo(k)fluoranthene	207-08-9	6.9 U	6.9	*8.3 J*	6.9	1.4 U	1.4	3.4 U	3.4	350 U	350	140 U	140	0.69 U	0.69	17 U	17	69 U	69			1.4 U	1.4	14 U	14
Indeno(1,2,3-cd)pyrene	193-39-5	5.8 U	5.8	5.8 U	5.8	*1.9 J*	1.2	2.9 U	2.9	300 U	300	120 U	120	0.58 U	0.58	15 UJ	15	58 U	58			1.2 UJ	1.2	12 UJ	12
Dibenz(a,h)anthracene	53-70-3	9.4 U	9.4	9.4 U	9.4	*2 J*	1.9	4.7 U	4.7	480 U	480	190 U	190	0.94 U	0.94	24 U	24	94 U	94			1.9 U	1.9	19 UJ	19
Benzo(g,h,i)perylene	191-24-2	9.4 U	9.4	9.4 U	9.4	*2.2 J*	1.9	4.7 U	4.7	480 U	480	190 U	190	0.94 U	0.94	24 U	24	94 U	94			1.9 U	1.9	19 UJ	19
4-Chloroaniline	106-47-8	4.9 U	4.9	*1,800*	4.9	*250*	0.96	*810 J*	2.5	*14,000*	250	*15,000*	99	0.49 U	0.49	*3,600*	12	*10,000*	49			*260*	0.98	*1,800*	10
2-Chlorophenol	95-57-8	*120*	6.8	6.8 U	6.8	*24*	1.4	3.4 U	3.4	*11,000*	340	*5,200*	140	0.68 U	0.68	17 U	17	68 U	68			1.4 U	1.4	14 U	14
1,2-Dichlorobenzene	95-50-1	9.4 U	9.4	9.4 U	9.4	*3.1 J*	1.9	4.7 U	4.7	*550 J*	480	*840 J*	190	*1.8 J*	0.94	24 U	24	*330 J*	94			*6.0 J*	1.9	*2,700*	19
1,3-Dichlorobenzene	541-73-1	5.2 U	5.2	5.2 U	5.2	1.0 U	1.0	2.6 U	2.6	260 U	260	100 U	100	0.52 U	0.52	*14 J*	13	52 U	52			*4.1 J*	1.0	11 U	11
1,4-Dichlorobenzene	106-46-7	*5.1 J*	4.9	*65 J*	4.9	*8.5*	0.98	2.5 U	2.5	250 U	250	99 U	99	*5.5 J*	0.49	*180 J*	12	*130 J*	49			*39*	0.98	*370*	10
2,4-Dichlorophenol	120-83-2	6.2 U	6.2	6.2 U	6.2	*26*	1.2	3.1 U	3.1	*29,000*	310	*9,000*	130	0.62 U	0.62	16 U	16	*76 J*	62			1.2 U	1.2	13 U	13
3 & 4 Methylphenol	65794-96-9	6.2 U	6.2	6.2 U	6.2	1.2 U	1.2	3.1 U	3.1	*1,500 J*	310	130 U	130	*0.79 J*	0.62	16 U	16	62 U	62			1.2 U	1.2	13 U	13
2-Nitroaniline	88-74-4	6.5 U	6.5	6.5 U	6.5	1.3 U	1.3	3.3 U	3.3	330 U	330	*160 J*	130	0.65 U	0.65	16 U	16	65 U	65			1.3 U	1.3	13 UJ	13
Nitrobenzene	98-95-3	8.8 U	8.8	8.8 U	8.8	1.8 U	1.8	4.4 U	4.4	*1,100 J*	440	*500 J*	180	0.88 U	0.88	22 U	22	88 U	88			1.8 U	1.8	18 U	18
Phenol	108-95-2	*19 J*	9.3	9.3 U	9.3	1.9 U	1.9	4.7 U	4.7	*58,000*	470	*29,000*	190	0.93 U	0.93	23 U	23	93 U	93			1.9 U	1.9	19 U	19
1,2,4-Trichlorobenzene	120-82-1	5.1 U	5.1	5.1 U	5.1	1.0 U	1.0	2.5 U	2.5	260 U	260	100 U	100	0.51 U	0.51	13 U	13	51 U	51			1.0 U	1.0	*240*	10
2,4,6-Trichlorophenol	88-06-2	6.6 U	6.6	6.6 U	6.6	1.3 U	1.3	3.3 U	3.3	*4,100 J*	330	*1,700 J*	130	0.66 U	0.66	17 U	17	66 U	66			1.3 U	1.3	12 U	12
Organochlorine Pesticides (USEPA Method 8081A)																									
Date Prepared		9/23/2005		9/23/2005		9/23/2005		9/26/2005		9/26/2005		9/26/2005		9/22/2005		9/22/2005		9/22/2005				9/22/2005		9/22/2005	
Date Analyzed		9/29/2005		9/29/2005		9/29/2005		9/28/2005		9/28/2005		9/28/2005		9/23/2005		9/23/2005		9/23/2005				9/23/2005		9/23/2005	
Analyte	CAS No.	(ug/L)		(ug/L)		(ug/L)		(ug/L)		(ug/L)		(ug/L)		(ug/L)		(ug/L)		(ug/L)		(ug/L)		(ug/L)		(ug/L)	
Endosulfan I	959-98-8	0.0062 U	0.0062	0.0060 U	0.0060	0.0062 U	0.0062	0.0060 U	0.0060	0.061 U	0.061	0.061 U	0.061	0.0060 U	0.0060	*0.067*	0.0060	0.0060 U	0.0060			*0.075*	0.0062	0.0060 U	0.0060
Aldrin	309-00-2	0.0051 U	0.0051	0.0050 U	0.0050	0.0051 U	0.0051	0.0050 U	0.0050	0.050 U	0.050	0.050 U	0.050	0.0050 U	0.0050	0.0050 U	0.0050	0.0050 U	0.0050			*0.032 J*	0.0050	0.0050 U	0.0050
Chlorinated Herbicides (USEPA Method 8151A)																									
Date Prepared		9/23/2005		9/23/2005		9/23/2005		9/27/2005		9/27/2005		9/27/2005		9/23/2005		9/23/2005		9/23/2005				9/23/2005		9/23/2005	
Date Analyzed		9/27/2005		9/27/2005		9/27/2005		10/8/2005		10/8/2005		10/22/2005		9/27/2005		9/27/2005		9/27/2005				9/27/2005		9/27/2005	
Analyte	CAS No.	(ug/L)		(ug/L)		(ug/L)		(ug/L)		(ug/L)		(ug/L)		(ug/L)		(ug/L)		(ug/L)		(ug/L)		(ug/L)		(ug/L)	
2,4-D	94-75-7	0.54 U	0.54	0.11 U	0.11	0.11 U	0.11	0.11 U	0.11	*14,000*	520	*45,000*	1100	0.11 U	0.11	0.11 U	0.11	0.11 U	0.11			0.11 U	0.11	0.11 U	0.11
Dichlorprop	120-36-5	*35*	0.59	0.030 U	0.030	0.029 U	0.029	*6.6*	0.12	*1,200 JN*	29	*2,200 JN*	290	0.030 U	0.030	0.030 U	0.030	*1.7*	0.030			0.029 U	0.029	0.029 U	0.029
Pentachlorophenol	87-86-5	0.88 U	0.88	0.18 U	0.18	0.17 U	1.7	0.17 U	0.17	170 U	170	17 U	17	0.18 U	0.18	0.18 U	0.18	*0.55*	0.18			0.17 U	0.17	*1.7*	0.17
Total Organic Carbon (USEPA Method 9060)																									
Date Analyzed		9/30/2005		9/30/2005		9/30/2005		9/30/2005		10/3/2005		9/30/2005		9/30/2005		9/30/2005		9/30/2005				9/30/2005		9/30/2005	
Analyte	CAS No.	(mg/L)		(mg/L)		(mg/L)		(mg/L)		(mg/L)		(mg/L)		(mg/L)		(mg/L)		(mg/L)		(mg/L)		(mg/L)		(mg/L)	
Total Organic Carbon (TOC)	-	*25*	0.50	*10*	0.50	*8.9*	0.50	*41*	0.50	*590*	10.00	*400*	0.50	*8.4*	0.50	*27*	0.50	*73*	0.50			*4.0*	0.50	*5.0*	0.50

Parameters not listed were not detected in any samples.
Results in ***bold italics*** denote detections.

Flags and Qualifiers
U - Analyte was not detected at or above the Method Detection Limit (MDL).
UJ - Analyte was not detected at or above the Method Detection Limit (MDL); the detection limit is estimated.
J - Result is an estimated value.
JN - Analyte is tentatively identified and the result is an estimated value.

Checked by: LAH Date: 1/23/2006
Reviewed by: RMG Date: 1/30/2006

Parameters not listed were not detected in any samples.
Results in ***bold italics*** denote detections.

Flags and Qualifiers
U - Analyte was not detected at or above the Method Detection Limit (MDL).
UJ - Analyte was not detected at or above the Method Detection Limit (MDL); the detection limit is estimated.
J - Result is an estimated value.
JN - Analyte is tentatively identified and the result is an estimated value.

Checked by: LAH Date: 1/23/2006
Reviewed by: RMG Date: 1/30/2006

Table 2
Summary of Validated Groundwater Sample Detections - Inorganics (September 2005 Sampling Event)
Site R Quarterly Groundwater Monitoring
Solutia, Inc. - Sauget, Illinois

Monitoring Well		BWMW-1S	MDL	BWMW-1M	MDL	BWMW-1D	MDL	BWMW-2S	MDL	BWMW-2M	MDL	BWMW-2D	MDL
Lab Sample ID		680-8521-1		680-8521-3		680-8521-2		680-8596-3		680-8596-5		680-8596-6	
Date Sampled		9/21/2005		9/21/2005		9/21/2005		9/22/2005		9/22/2005		9/22/2005	
Time Sampled		10:17		11:50		10:23		10:15		10:36		13:05	
Mercury (USEPA Method 7470A)													
Date Prepared		9/28/2005		9/28/2005		9/28/2005		9/28/2005		9/28/2005		9/28/2005	
Date Analyzed		9/29/2005		9/29/2005		9/29/2005		9/29/2005		9/29/2005		9/29/2005	
Analyte	**CAS No.**	**(mg/L)**		**(mg/L)**		**(mg/L)**		**(mg/L)**		**(mg/L)**		**(mg/L)**	
Mercury	7439-97-6	**NO DETECTIONS**											
Metals (USEPA Method 6010B)													
Date Prepared		9/26/2005		9/26/2005		9/26/2005		9/27/2005		9/27/2005		9/27/2005	
Date Analyzed		10/18/2005		10/18/2005		10/18/2005		9/28/2005		9/28/2005		9/28/2005	
Analyte	**CAS No.**	**(mg/L)**		**(mg/L)**		**(mg/L)**		**(mg/L)**		**(mg/L)**		**(mg/L)**	
Arsenic	7440-38-2	***0.059***	0.0042	0.0042 U	0.0042	***0.0084 J***	0.0042	***0.063 J***	0.0042	0.0042 U	0.0042	0.0042 U	0.0042
Barium	7440-39-3	***0.23***	0.0012	***0.73***	0.0012	***0.54***	0.0012	***0.63***	0.0012	***0.085***	0.0012	***0.086***	0.0012
Chromium	7440-47-3	***0.028 J***	0.00083	***0.0011 J***	0.00083	***0.00098 J***	0.00083	***0.059 J***	0.00083	***0.0010 J***	0.00083	0.010 U	0.00083
Copper	7440-50-8	0.0017 U	0.0017	0.0017 U	0.0017	0.0017 U	0.0017	***0.28 J***	0.0017	0.0017 U	0.0017	0.0017 U	0.0017
Lead	7439-92-1	0.0022 U	0.0022	0.0022 U	0.0022	***0.0026 J***	0.0022	***0.039 J***	0.0022	0.0022 U	0.0022	0.0022 U	0.0022
Nickel	7440-02-0	***0.0025 J***	0.0018	0.002 U	0.0018	***0.0019 J***	0.0018	***0.075 J***	0.0018	***0.024 J***	0.0018	***0.011 J***	0.0018
Total Dissolved Solids (USEPA Method 160.1)													
Date Analyzed		9/23/2005		9/23/2005		9/23/2005		9/26/2005		9/26/2005		9/26/2005	
Analyte	**CAS No.**	**(mg/L)**		**(mg/L)**		**(mg/L)**		**(mg/L)**		**(mg/L)**		**(mg/L)**	
Total Dissolved Solids (TDS)	-	***1,400***	5.0	***1,200***	5.0	***900***	5.0	***1,600***	5.0	***1,700***	5.0	***1,500***	5.0

Parameters not listed were not detected in any samples.
Results in ***bold italics*** denote detections.
Samples are not filtered.

Flags and Qualifiers
U - Analyte was not detected at or above the Method Detection Limit (MDL).
J - Result is an estimated value.
The concentration is an approximate value.

Checked by: LAH Date: 1/23/2006
Reviewed by: RMG Date: 1/30/2006

Table 2
Summary of Validated Groundwater Sample Detections - Inorganics (September 2005 Sampling Event)
Site R Quarterly Groundwater Monitoring
Solutia, Inc. - Sauget, Illinois

Monitoring Well		BWMW-3S	MDL	BWMW-3M	MDL	BWMW-3D	MDL	BWMW-4S	MDL	BWMW-4M	MDL	BWMW-4D	MDL
Lab Sample ID		680-8474-5		680-8474-7		680-8474-6				680-8474-3		680-8429-1	
Date Sampled		9/20/2005		9/20/2005		9/20/2005		9/20/2005		9/20/2005		9/19/2005	
Time Sampled		13:15		14:34		13:25		dry		10:15		13:45	
Mercury (USEPA Method 7470A)													
Date Prepared		9/26/2005		9/26/2005		9/26/2005				9/26/2005		9/26/2005	
Date Analyzed		9/27/2005		9/27/2005		9/27/2005				9/27/2005		9/27/2005	
Analyte	**CAS No.**	**(mg/L)**		**(mg/L)**		**(mg/L)**		**(mg/L)**		**(mg/L)**		**(mg/L)**	
Mercury	7439-97-6	**NO DETECTIONS**											
Metals (USEPA Method 6010B)													
Date Prepared		9/26/2005		9/26/2005		9/26/2005				9/26/2005		9/21/2005	
Date Analyzed		9/26/2005		9/26/2005		9/26/2005				9/26/2005		9/22/2005	
Analyte	**CAS No.**	**(mg/L)**		**(mg/L)**		**(mg/L)**		**(mg/L)**		**(mg/L)**		**(mg/L)**	
Arsenic	7440-38-2	***0.042***	0.0042	0.0042 U	0.0042	***0.021***	0.0042			0.0042 U	0.0042	0.0042 U	0.0042
Barium	7440-39-3	***0.031***	0.0012	***0.66***	0.0012	***0.38***	0.0012			***0.16***	0.0012	***0.094***	0.0012
Chromium	7440-47-3	***0.0071 J***	0.00083	0.00083 U	0.00083	***0.0018 J***	0.00083			***0.0012 J***	0.00083	***0.0023 J***	0.00083
Copper	7440-50-8	***0.0046 J***	0.0017	0.0017 U	0.0017	0.0017 U	0.0017			0.0017 U	0.0017	0.0017 U	0.0017
Lead	7439-92-1	0.0022 U	0.0022	0.0022 U	0.0022	0.0022 U	0.0022			0.0022 U	0.0022	***0.0027 J***	0.0022
Nickel	7440-02-0	***0.0085 J***	0.0018	***0.0027 J***	0.0018	***0.0041 J***	0.0018			***0.0030 J***	0.0018	***0.0073 J***	0.0018
Total Dissolved Solids (USEPA Method 160.1)													
Date Analyzed		9/22/2005		9/22/2005		9/22/2005				9/22/2005		9/21/2005	
Analyte	**CAS No.**	**(mg/L)**		**(mg/L)**		**(mg/L)**		**(mg/L)**		**(mg/L)**		**(mg/L)**	
Total Dissolved Solids (TDS)	-	***1,600***	5.0	***1,200***	5.0	***1,500***	5.0			***580***	5.0	***680***	5.0

Parameters not listed were not detected in any samples.
Results in ***bold italics*** denote detections.
Samples are not filtered.

Flags and Qualifiers
U - Analyte was not detected at or above the Method Detection Limit (MDL).
J - Result is an estimated value.
is an approximate value.

Checked by: LAH Date: 1/23/2006
Reviewed by: RMG Date: 1/30/2006

Table 3
Summary of Validated QA/QC Sample Detections - Organics (September 2005 Sampling Event)
Site R Quarterly Groundwater Monitoring
Solutia, Inc. - Sauget, Illinois

Monitoring Well		DUP 1	MDL	DUP 2	MDL	FB 1	MDL	FB 2	MDL
Lab Sample ID		680-8474-4FD		680-8596-4		680-8474-1FB		680-8596-1	
Date Sampled		9/20/2005		9/22/2005		9/20/2005		9/22/2005	
Time Sampled		10:15		10:15		08:43		9:00	
Volatile Organic Compounds (USEPA Method 8260B)									
Date Analyzed		10/3/2005		10/4/2005		10/4/2005		10/4/2005	
Analyte	**CAS No.**	**(ug/L)**		**(ug/L)**		**(ug/L)**		**(ug/L)**	
Benzene	71-43-2	***2.2***	0.54	***170***	1.1	0.54 U	0.54	0.54 U	0.54
Carbon Disulfide	75-15-0	0.75 U	0.75	0.75 U	0.75	0.75 U	0.75	0.75 U	0.75
Chlorobenzene	108-90-7	***190***	0.82	***220***	0.82	0.41 U	0.41	0.41 U	0.41
Chloromethane	74-87-3	0.53 U	0.53	1.1 U	1.1	0.53 U	0.53	0.53 U	0.53
cis-1,2-Dichloroethene	156-59-2	***0.85 J***	0.55	1.1 U	1.1	0.55 U	0.55	0.55 U	0.55
Ethylbenzene	100-41-4	***1.7***	0.62	1.2 U	1.2	0.62 U	0.62	0.62 U	0.62
Semi-Volatile Organic Compounds (USEPA Method 8270C)									
Date Prepared		9/22/2005		9/27/2005		9/22/2005		9/27/2005	
Date Analyzed		9/27/2005		9/30/2005		9/26/2005		10/4/2005	
Analyte	**CAS No.**	**(ug/L)**		**(ug/L)**		**(ug/L)**		**(ug/L)**	
4-Chloroaniline	106-47-8	***290***	0.98	***370***	1.0	0.49 U	0.49	0.49 U	0.49
1,2-Dichlorobenzene	95-50-1	***5.5 J***	1.9	***2.4 J***	2.0	0.94 U	0.94	0.94 U	0.94
1,3-Dichlorobenzene	541-73-1	***3.7 J***	1.0	1.1 U	1.1	0.52 U	0.52	0.52 U	0.52
1,4-Dichlorobenzene	106-46-7	***34***	0.98	***1.4 J***	1.0	0.49 U	0.49	0.49 U	0.49
Benzo(a)anthracene	56-55-3	***1.4 J***	1.4	1.1 U	1.1	0.55 U	0.55	0.55 U	0.55
Di-n-butyl phthalate	84-74-2	1.5 U	1.5	1.6 U	1.6	***1.1 J***	0.77	0.77 U	0.77
Di-n-octyl phthalate	117-84-0	1.5 U	1.5	1.6 U	1.6	0.75 U	0.75	0.75 U	0.75
Phenol	108-95-2	1.9 U	1.9	***4.6 J***	1.9	0.93 U	0.93	0.93 U	0.93
Organochlorine Pesticides (USEPA Method 8081A)									
Date Prepared		9/22/2005		9/26/2005		9/22/2005		9/26/2005	
Date Analyzed		9/23/2005		9/28/2005		9/23/2005		9/28/2005	
Analyte	**CAS No.**	**(ug/L)**		**(ug/L)**		**(ug/L)**		**(ug/L)**	
Aldrin	309-00-2	***0.037 J***	0.0050	0.0050 U	0.0050	0.0050 U	0.0050	0.0050 U	0.0050
Endosulfan I	959-98-8	***0.062***	0.0060	0.0060 U	0.0060	0.0060 U	0.0060	0.0060 U	0.0060
Chlorinated Herbicides (USEPA Method 8151A)									
Date Prepared		9/23/2005		9/27/2005		9/23/2005		9/27/2005	
Date Analyzed		9/27/2005		10/8/2005		9/27/2005		10/8/2005	
Analyte	**CAS No.**	**(ug/L)**		**(ug/L)**		**(ug/L)**		**(ug/L)**	
2,4,5-T	93-76-5	0.077 U	0.077	***0.22 J***	0.077	0.077 U	0.077	0.077 U	0.077
Dichlorprop	120-36-5	0.029 U	0.029	***9.8***	0.12	0.029 U	0.029	0.029 U	0.029
Total Organic Carbon (USEPA Method 9060)									
Date Analyzed		9/30/2005		9/30/2005		9/30/2005		9/30/2005	
Analyte	**CAS No.**	**(mg/L)**		**(mg/L)**		**(mg/L)**		**(mg/L)**	
Total Organic Carbon (TOC)	-	***4***	0.50	***36***	0.50	0.50 U	0.50	0.50 U	0.50

Parameters not listed were not detected in any samples.
Results in ***bold italics*** denote detections.

Flags and Qualifiers
U - Analyte was not detected at or above the Method Detection Limit (MDL).
UJ - Analyte was not detected at or above the Method Detection Limit (MDL); the detection limit is estimated.
J - Result is an estimated value.
JN - Analyte is tentatively identified and the result is an estimated value.

Checked by: LAH Date: 1/23/2006
Reviewed by: RMG Date: 1/30/2006

Table 3
Summary of Validated QA/QC Sample Detections - Organics (September 2005 Sampling Event)
Site R Quarterly Groundwater Monitoring
Solutia, Inc. - Sauget, Illinois

Monitoring Well		RB 1	MDL	RB 2	MDL	Trip Blank	MDL	Trip Blank	MDL	Trip Blank	MDL
Lab Sample ID		680-8474-2RB		680-8596-2		680-8474-8		680-8521-4		680-8596-7	
Date Sampled		9/20/2005		9/22/2005		9/20/2005		9/21/2005		9/22/2005	
Time Sampled		09:11		9:22							
Volatile Organic Compounds (USEPA Method 8260B)											
Date Analyzed		10/4/2005		10/4/2005		10/4/2005		10/4/2005		10/4/2005	
Analyte	**CAS No.**	**(ug/L)**		**(ug/L)**		**(ug/L)**		**(ug/L)**		**(ug/L)**	
Benzene	71-43-2	0.54 U	0.54	0.54 U	0.54	0.54 U	0.54	0.54 U	0.54	0.54 U	0.54
Carbon Disulfide	75-15-0	0.75 U	0.75	***0.98 J***	0.75	0.75 U	0.75	0.75 U	0.75	0.75 U	0.75
Chlorobenzene	108-90-7	0.41 U	0.41	***3.9***	0.41	0.41 U	0.41	0.41 U	0.41	0.41 U	0.41
Chloromethane	74-87-3	0.53 U	0.53	0.53 U	0.53	0.53 U	0.53	**0.84 J**	0.53	0.53 U	0.53
cis-1,2-Dichloroethene	156-59-2	0.55 U	0.55	0.55 U	0.55	0.55 U	0.55	0.55 U	0.55	0.55 U	0.55
Ethylbenzene	100-41-4	0.62 U	0.62	0.62 U	0.62	0.62 U	0.62	0.62 U	0.62	0.62 U	0.62
Semi-Volatile Organic Compounds (USEPA Method 8270C)											
Date Prepared		9/27/2005		9/27/2005							
Date Analyzed		10/4/2005		9/30/2005							
Analyte	**CAS No.**	**(ug/L)**		**(ug/L)**							
4-Chloroaniline	106-47-8	0.49 U	0.49	0.50 U	0.50						
1,2-Dichlorobenzene	95-50-1	0.94 U	0.94	0.96 U	0.96						
1,3-Dichlorobenzene	541-73-1	0.52 U	0.52	0.53 U	0.53						
1,4-Dichlorobenzene	106-46-7	0.49 U	0.49	0.50 U	0.50						
Benzo(a)anthracene	56-55-3	0.55 U	0.55	0.56 U	0.56						
Di-n-butyl phthalate	84-74-2	0.77 U	0.77	0.79 U	0.79						
Di-n-octyl phthalate	117-84-0	***30***	0.75	0.77 U	0.77						
Phenol	108-95-2	0.93 U	0.93	0.95 U	0.95						
Organochlorine Pesticides (USEPA Method 8081A)											
Date Prepared		9/22/2005		9/26/2005							
Date Analyzed		9/23/2005		9/28/2005							
Analyte	**CAS No.**	**(ug/L)**		**(ug/L)**							
Aldrin	309-00-2	0.0050 U	0.0050	0.0050 U	0.0050						
Endosulfan I	959-98-8	0.0060 U	0.0060	0.0060 U	0.0060						
Chlorinated Herbicides (USEPA Method 8151A)											
Date Prepared		9/23/2005		9/27/2005							
Date Analyzed		9/27/2005		10/8/2005							
Analyte	**CAS No.**	**(ug/L)**		**(ug/L)**							
2,4,5-T	93-76-5	0.078 U	0.078	0.078 U	0.078						
Dichlorprop	120-36-5	0.029 U	0.029	0.032 U	0.032						
Total Organic Carbon (USEPA Method 9060)											
Date Analyzed		9/30/2005		9/30/2005							
Analyte	**CAS No.**	**(mg/L)**		**(mg/L)**							
Total Organic Carbon (TOC)	-	0.50 U	0.50	0.50 U	0.50						

Parameters not listed were not detected in any samples.
Results in ***bold italics*** denote detections.

Flags and Qualifiers
U - Analyte was not detected at or above the Method Detection Limit (MDL).
UJ - Analyte was not detected at or above the Method Detection Limit (MDL); the detection limit is estimated.
J - Result is an estimated value.
JN - Analyte is tentatively identified and the result is an estimated value.

Checked by: LAH Date: 1/23/2006
Reviewed by: RMG Date: 1/30/2006

Table 4
Summary of Validated QA/QC Sample Detections - Inorganics (September 2005 Sampling Event)
Site R Quarterly Groundwater Monitoring
Solutia, Inc. - Sauget, Illinois

Monitoring Well		DUP 1	MDL	DUP 2	MDL	FB 1	MDL	FB 2	MDL
Lab Sample ID		680-8474-4FD		680-8596-4		680-8474-1FB		680-8596-1	
Date Sampled		9/20/2005		9/22/2005		9/20/2005		9/22/2005	
Time Sampled		10:15		10:15		08:43		9:00	
Mercury (USEPA Method 7470A)									
Date Prepared		9/26/2005		9/28/2005		9/26/2005		9/28/2005	
Date Analyzed		9/27/2005		9/29/2005		9/27/2005		9/29/2005	
Analyte	**CAS No.**	**(mg/L)**		**(mg/L)**		**(mg/L)**		**(mg/L)**	
Mercury	7439-97-6	**NO DETECTIONS**							
Metals (USEPA Method 6010B)									
Date Prepared		9/26/2005		9/27/2005		9/26/2005		9/27/2005	
Date Analyzed		9/26/2005		9/28/2005		9/26/2005		9/28/2005	
Analyte	**CAS No.**	**(mg/L)**		**(mg/L)**		**(mg/L)**		**(mg/L)**	
Arsenic	7440-38-2	0.0042 U	0.0042	***0.021 J***	0.0042	0.0042 U	0.0042	0.0042 U	0.0042
Barium	7440-39-3	***0.19***	0.0012	***0.36***	0.0012	0.0012 U	0.0012	0.0012 U	0.0012
Chromium	7440-47-3	***0.0023 J***	0.00083	***0.013 J***	0.00083	0.00083 U	0.00083	0.00083 U	0.00083
Copper	7440-50-8	***0.0020 J***	0.0017	***0.03 J***	0.0017	0.0017 U	0.0017	0.0017 U	0.0017
Lead	7439-92-1	0.0022 U	0.0022	***0.0095 J***	0.0022	0.0022 U	0.0022	0.0022 U	0.0022
Nickel	7440-02-0	***0.0038 J***	0.0018	***0.016 J***	0.0018	0.0018 U	0.0018	0.0018 U	0.0018
Total Dissolved Solids (USEPA Method 160.1)									
Date Analyzed		9/22/2005		9/26/2005		9/22/2005		9/26/2005	
Analyte	**CAS No.**	**(mg/L)**		**(mg/L)**		**(mg/L)**		**(mg/L)**	
Total Dissolved Solids	-	***570***	5.0	***1,500***	5.0	5.0 U	5.0	5.0 U	5.0

Parameters not listed were not detected in any samples.
Results in ***bold italics*** denote detections.
Samples are not filtered.

Flags and Qualifiers
U - Analyte was not detected at or above the Method Detection Limit (MDL).
J - Result is an estimated value.
Method Detection Limit (MDL); The concentration is an approximate value.

Checked by: LAH Date: 1/23/2006
Reviewed by: RMG Date: 1/30/2006

Table 4
Summary of Validated QA/QC Sample Detections - Inorganics (September 2005 Sampling Event)
Site R Quarterly Groundwater Monitoring
Solutia, Inc. - Sauget, Illinois

Monitoring Well		RB 1	MDL	RB 2	MDL	Trip Blank	MDL	Trip Blank	MDL	Trip Blank	MDL
Lab Sample ID		680-8474-2RB		680-8596-2		680-8474-8		680-8521-4		680-8596-7	
Date Sampled		9/20/2005		9/22/2005		9/20/2005		9/21/2005		9/22/2005	
Time Sampled		09:11		9:22							
Mercury (USEPA Method 7470A)											
Date Prepared		9/26/2005		9/28/2005							
Date Analyzed		9/27/2005		9/29/2005							
Analyte	**CAS No.**	**(mg/L)**		**(mg/L)**							
Mercury	7439-97-6	**NO DETECTIONS**									
Metals (USEPA Method 6010B)											
Date Prepared		9/26/2005		9/27/2005							
Date Analyzed		9/26/2005		9/28/2005							
Analyte	**CAS No.**	**(mg/L)**		**(mg/L)**							
Arsenic	7440-38-2	0.0042 U	0.0042	0.0042 U	0.0042						
Barium	7440-39-3	0.0012 U	0.0012	0.0012 U	0.0012						
Chromium	7440-47-3	0.00083 U	0.00083	0.00083 U	0.00083						
Copper	7440-50-8	***0.0017 J***	0.0017	0.0017 U	0.0017						
Lead	7439-92-1	0.0022 U	0.0022	0.0022 U	0.0022						
Nickel	7440-02-0	0.0018 U	0.0018	0.0018 U	0.0018						
Total Dissolved Solids (USEPA Method 160.1)											
Date Analyzed		9/22/2005		9/26/2005							
Analyte	**CAS No.**	**(mg/L)**		**(mg/L)**							
Total Dissolved Solids	-	5.0 U	5.0	5.0 U	5.0						

Parameters not listed were not detected in any samples.
Results in ***bold italics*** denote detections.
Samples are not filtered.

Flags and Qualifiers
U - Analyte was not detected at or above the Method Detection Limit (MDL).
J - Result is an estimated value.
Method Detection Limit (MDL); The concentration is an approximate value.

Checked by: LAH Date: 1/23/2006
Reviewed by: RMG Date: 1/30/2006

Table 1

Summary of Validated Groundwater Sample Detections - Organics (December 2005 Sampling Event)

Site R Quarterly Groundwater Monitoring

Solutia, Inc. - Sauget, Illinois

Monitoring Well		BWMW-1S	MDL	BWMW-1M	MDL	BWMW-1D	MDL	BWMW-2S	MDL	BWMW-2M	MDL	BWMW-2D	MDL
Lab Sample ID		680-11626-4		680-11626-5		680-11725-5		680-11725-2		680-11725-4		680-11725-3	
Date Sampled		12/14/2005		12/14/2005		12/15/2005		12/15/2005		12/15/2005		12/15/2005	
Time Sampled		14:15		14:45		14:00		11:30		12:45		11:40	
Volatile Organic Compounds (USEPA Method 8260B)													
Date Analyzed		12/24/2005		12/24/2005		12/28/2005		12/29/2005		12/28/2005		12/28/2005	
Analyte	**CAS No.**	**(ug/L)**		**(ug/L)**		**(ug/L)**		**(ug/L)**		**(ug/L)**		**(ug/L)**	
Acetone	67-64-1	3700 U	3700	73 U	73	730 U	730	73 U	73	***2700***	370	***800 J***	370
Benzene	71-43-2	***4,100***	270	***100***	5.4	54 U	54	***130***	5.4	***950***	27	***340***	27
Chlorobenzene	108-90-7	***79,000***	210	***1,600***	4.1	***8,900***	41	***1,000***	4.1	***5,700***	21	***3,000***	21
Chloroform	67-66-3	260 U	260	5.2 U	5.2	52 U	52	5.2 U	5.2	***84***	26	***29 J***	26
1,2-Dichloroethane	107-06-2	140 U	140	2.8 U	2.8	28 U	28	2.8 U	2.8	***3,300***	14	***930***	14
cis-1,2-Dichloroethene	156-59-2	280 U	280	5.5 U	5.5	55 U	55	5.5 U	5.5	***29 J***	28	28 U	28
Ethylbenzene	100-41-4	310 U	310	6.2 U	6.2	62 U	62	6.2 U	6.2	***170***	31	***110***	31
Methylene Chloride	75-09-2	220 U	220	4.4 U	4.4	44 U	44	4.4 U	4.4	***150 J***	22	***46 J***	22
4-Methyl-2-pentanone	108-10-1	230 U	230	4.5 U	4.5	45 U	45	4.5 U	4.5	***670***	23	***210 J***	23
Tetrachloroethene	127-18-4	380 U	380	7.5 U	7.5	75 U	75	7.5 U	7.5	***120***	38	***48 J***	38
Toluene	108-88-3	310 U	310	6.2 U	6.2	62 U	62	6.2 U	6.2	***1,900***	31	***630***	31
Trichloroethene	79-01-6	360 U	360	7.1 U	7.1	71 U	71	7.1 U	7.1	***160***	36	***52***	36
Xylenes, Total	1330-20-7	650 U	650	13 U	13	130 U	130	13 U	13	***1200***	65	***690***	65
Semi-Volatile Organic Compounds (USEPA Method 8270C)													
Date Prepared		12/16/2005		12/16/2005		12/17/2005		12/17/2005		12/17/2005		12/17/2005	
Date Analyzed		12/28/2005		12/27/2005		12/22/2005		12/22/2005		12/29/2005		12/29/2005	
Analyte	**CAS No.**	**(ug/L)**		**(ug/L)**		**(ug/L)**		**(ug/L)**		**(ug/L)**		**(ug/L)**	
Benzo(g,h,i)perylene	191-24-2	9.6 U	9.6	4.8 U	4.8	***1.0 J***	1.0	4.9 U	4.9	10 U	10	10 U	10
Bis(2-ethylhexyl) phthalate	117-81-7	9.4 U	9.4	4.7 U	4.7	0.98 U	0.98	4.8 U	4.8	9.8 U	9.8	9.8 U	9.8
4-Chloroaniline	106-47-8	***69 J***	5.0	***620***	2.5	***3.4 J***	0.52	***610***	2.5	***14000 D***	260	***15,000 D***	52
2-Chloronaphthalene	91-58-7	6.0 U	6.0	3.0 U	3.0	0.62 U	0.62	3.0 U	3.0	6.2 U	6.2	6.2 U	6.2
2-Chlorophenol	95-57-8	***130 D***	6.9	***11 J***	3.5	***29*** U	0.72	3.5 U	3.5	***11,000 D***	360	***2,900 D***	72
Dibenzofuran	132-64-9	6.6 U	6.6	3.3 U	3.3	0.69 U	0.69	3.4 U	3.4	6.9 U	6.9	6.9 U	6.9
1,2-Dichlorobenzene	95-50-1	9.6 U	9.6	***4.9 J***	4.8	***3.0 J***	1.0	4.9 U	4.9	***760***	10	***710***	10
1,3-Dichlorobenzene	541-73-1	5.3 U	5.3	2.6 U	2.6	0.55 U	0.55	2.7 U	2.7	5.5 U	5.5	5.5 U	5.5
1,4-Dichlorobenzene	106-46-7	***6.2 J***	5.0	***76***	2.5	***5.9 J***	0.52	2.5 U	2.5	***360***	5.2	***270***	5.2
2,4-Dichlorophenol	120-83-2	6.3 U	6.3	3.2 U	3.2	***21*** U	0.66	3.2 U	3.2	***28,000 D***	330	***4,600 D***	66
Diethyl phthalate	84-66-2	5.7 U	5.7	2.8 U	2.8	0.59 U	0.59	2.9 U	2.9	***31 J***	5.9	5.9 U	5.9
Fluorene	86-73-7	5.3 U	5.3	2.6 U	2.6	0.55 U	0.55	2.7 U	2.7	***5.5 U***	5.5	5.5 U	5.5
Indeno(1,2,3-cd)pyrene	193-39-5	6.0 U	6.0	3.0 U	3.0	***0.83 J***	0.62	3.0 U	3.0	6.2 U	6.2	6.2 U	6.2
Isophorone	78-59-1	6.4 U	6.4	3.2 U	3.2	0.67 U	0.67	3.3 U	3.3	6.7 U	6.7	6.7 U	6.7
2-Methylphenol	95-48-7	6.7 U	6.7	3.4 U	3.4	0.70 U	0.70	3.4 U	3.4	***33 J***	7.0	7.0 U	7.0
3 & 4 Methylphenol	65794-96-9	6.3 U	6.3	3.2 U	3.2	0.66 U	0.66	3.2 U	3.2	***1700***	6.6	***700***	6.6
Naphthalene	91-20-3	7.3 U	7.3	3.7 U	3.7	0.76 U	0.76	3.7 U	3.7	***4200 JD***	380	380 U	380
2-Nitroaniline	88-74-4	6.6 U	6.6	3.3 U	3.3	0.69 U	0.69	3.4 U	3.4	***530***	6.9	***130 J***	6.9
4-Nitroaniline	100-01-6	8.2 U	8.2	4.1 U	4.1	0.85 U	0.85	4.2 U	4.2	***360 J***	8.5	***150 J***	8.5
Nitrobenzene	98-95-3	8.9 U	8.9	4.5 U	4.5	0.93 U	0.93	4.6 U	4.6	***1300***	9.3	***380***	9.3
2-Nitrophenol	88-75-5	7.0 U	7.0	3.5 U	3.5	0.73 U	0.73	3.6 U	3.6	7.3 U	7.3	7.3 U	7.3
Pentachlorophenol	87-86-5	24 U	24	12 U	12	2.5 U	2.5	12 U	12	***260 J***	25	***53 J***	25
Phenanthrene	85-01-8	7.1 U	7.1	3.6 U	3.6	0.74 U	0.74	3.6 U	3.6	7.4 U	7.4	7.4 U	7.4
Phenol	108-95-2	***37 J***	9.5	4.8 U	4.8	0.99 U	0.99	4.9 U	4.9	***45,000 D***	500	***16,000 D***	99
1,2,4-Trichlorobenzene	120-82-1	5.2 U	5.2	2.6 U	2.6	0.54 U	0.54	2.6 U	2.6	5.4 U	5.4	***82 J***	5.4
2,4,6-Trichlorophenol	88-06-2	6.7 U	6.7	3.4 U	3.4	***5.7 J***	0.70	3.4 U	3.4	***4300 JD***	350	***1,300***	7.0

Table 1

Summary of Validated Groundwater Sample Detections - Organics (December 2005 Sampling Event)

Site R Quarterly Groundwater Monitoring

Solutia, Inc. - Sauget, Illinois

Monitoring Well		BWMW-1S	MDL	BWMW-1M	MDL	BWMW-1D	MDL	BWMW-2S	MDL	BWMW-2M	MDL	BWMW-2D	MDL
Lab Sample ID		680-11626-4		680-11626-5		680-11725-5		680-11725-2		680-11725-4		680-11725-3	
Date Sampled		12/14/2005		12/14/2005		12/15/2005		12/15/2005		12/15/2005		12/15/2005	
Time Sampled		14:15		14:45		14:00		11:30		12:45		11:40	
Organochlorine Pesticides (USEPA Method 8081A)													
Date Prepared		12/16/2005		12/16/2005		12/17/2005		12/17/2005		12/17/2005		12/17/2005	
Date Analyzed		12/19/2005		12/19/2005		12/20/2005		12/20/2005		12/20/2005		12/20/2005	
Analyte	**CAS No.**	**(ug/L)**		**(ug/L)**		**(ug/L)**		**(ug/L)**		**(ug/L)**		**(ug/L)**	
4,4'-DDD	72-54-8	0.011 U	0.011	0.010 U	0.010	0.011 U	0.011	0.011 U	0.011	0.22 U	0.22	0.011 U	0.011
Chlorinated Herbicides (USEPA Method 8151A)													
Date Prepared		12/19/2005		12/19/2005		12/19/2005		12/19/2005		12/19/2005		12/19/2005	
Date Analyzed		1/5/2006		12/22/2005		1/5/2006		12/22/2005		12/22/2005		1/5/2006	
Analyte	**CAS No.**	**(ug/L)**		**(ug/L)**		**(ug/L)**		**(ug/L)**		**(ug/L)**		**(ug/L)**	
2,4-D	94-75-7	0.44 U	0.44	0.11 U	0.11	0.11 U	0.11	0.56 U	0.56	***20,000***	1,100	***40,000***	2,200
Dichlorprop	120-36-5	***6.1 D***	0.12	***0.12 JN***	0.03	0.03 U	0.03	***9.8***	***9.8***	***1,400 J***	30	***1,900***	60
Pentachlorophenol	87-86-5	0.18 U	0.18	0.18 U	0.18	***0.57***	0.18	0.91 U	0.91	180 U	180	360 U	360
Silvex (2,4,5-TP)	93-72-1	0.033 U	0.033	0.033 U	0.033	0.033 U	0.033	0.17 U	0.17	33 U	33	66 U	66
2,4,5-T	93-76-5	0.32 U	0.32	0.08 U	0.08	0.079 U	0.079	0.4 U	0.4	80 U	80	***240 J***	160
Total Organic Carbon (USEPA Method 9060)													
Date Analyzed		12/20/2005		12/20/2005		12/20/2005		12/20/2005		12/20/2005		12/20/2005	
Analyte	**CAS No.**	**(mg/L)**		**(mg/L)**		**(mg/L)**		**(mg/L)**		**(mg/L)**		**(mg/L)**	
Total Organic Carbon (TOC)	-	***12***	0.50	***7.1***	0.50	***8.3***	0.50	***53***	0.50	***430***	0.50	***260***	0.50

Parameters not listed were not detected in any samples.
Results in ***bold italics*** denote detections.

Flags and Qualifiers
U - Analyte was not detected at or above the Method Detection Limit (MDL).
UJ - Analyte was not detected at or above the Method Detection Limit (MDL); the detection limit is estimated.
J - Result is an estimated value.
JN - Analyte is tentatively identified and the result is an estimated value.
D - Diluted. Surrogate or matrix spike recoveries were not obtained; compounds were analyzed at a dilution.

Checked by: MRF Date: 5/4/2006
Reviewed by: MNH Date: 5/5/2006

Table 1

Summary of Validated Groundwater Sample Detections - Organics (December 2005 Sampling Event)

Site R Quarterly Groundwater Monitoring

Solutia, Inc. - Sauget, Illinois

Monitoring Well		BWMW-3S	MDL	BWMW-3M	MDL	BWMW-3D	MDL	BWMW-4S	MDL	BWMW-4M	MDL	BWMW-4D	MDL
Lab Sample ID		680-11626-2		680-11725-1		680-11626-1		680-11585-2		680-11585-1		680-11585-3	
Date Sampled		12/14/2005		12/15/2005		12/14/2005		12/13/2005		12/13/2005		12/13/2005	
Time Sampled		11:00		10:10		10:45		14:15		13:15		15:30	
Volatile Organic Compounds (USEPA Method 8260B)													
Date Analyzed		12/24/2005		12/28/2005		12/24/2005		12/22/2005		12/24/2005		12/22/2005	
Analyte	**CAS No.**	**(ug/L)**		**(ug/L)**		**(ug/L)**		**(ug/L)**		**(ug/L)**		**(ug/L)**	
Acetone	67-64-1	7.3 U	7.3	370 U	370	370 U	370	7.3 U	7.3	15 U	15	7.3 U	7.3
Benzene	71-43-2	***56***	0.54	***100***	27	***86***	27	0.54 U	0.54	***2.2***	1.1	***12***	0.54
Chlorobenzene	108-90-7	***200 D***	0.82	***4,000***	21	***3,200***	21	***2.9***	0.41	***150***	0.82	***230 D***	0.82
Chloroform	67-66-3	0.52 U	0.52	26 U	26	26 U	26	0.52 U	0.52	1.0 U	1.0	0.52 U	0.52
1,2-Dichloroethane	107-06-2	0.28 U	0.28	14 U	14	14 U	14	0.28 U	0.28	0.56 U	0.56	0.28 U	0.28
cis-1,2-Dichloroethene	156-59-2	0.55 U	0.55	28 U	28	28 U	28	0.55 U	0.55	1.1 U	1.1	0.55 U	0.55
Ethylbenzene	100-41-4	0.62 U	0.62	31 U	31	31 U	31	0.62 U	0.62	1.2 U	1.2	***1.8***	0.62
Methylene Chloride	75-09-2	0.44 U	0.44	22 U	22	22 U	22	0.44 U	0.44	0.88 U	0.88	0.44 U	0.44
4-Methyl-2-pentanone	108-10-1	0.45 U	0.45	23 U	23	23 U	23	0.45 U	0.45	0.90 U	0.90	0.45 U	0.45
Tetrachloroethene	127-18-4	0.75 U	0.75	38 U	38	38 U	38	0.75 U	0.75	1.5 U	1.5	0.75 U	0.75
Toluene	108-88-3	0.62 U	0.62	31 U	31	***43 J***	31	0.62 U	0.62	1.2 U	1.2	***0.63 J***	0.62
Trichloroethene	79-01-6	0.71 U	0.71	36 U	36	36 U	36	0.71 U	0.71	1.4 U	1.4	0.71 U	0.71
Xylenes, Total	1330-20-7	***1.3 J***	1.3	65 U	65	***120***	65	1.3 U	1.3	2.6 U	2.6	***7.3***	1.3
Semi-Volatile Organic Compounds (USEPA Method 8270C)													
Date Prepared		12/16/2005		12/17/2005		12/16/2005		12/15/2005		12/15/2005		12/15/2005	
Date Analyzed		12/27/2005		12/22/2005		12/27/2005		12/20/2005		12/20/2005		12/20/2005	
Analyte	**CAS No.**	**(ug/L)**		**(ug/L)**		**(ug/L)**		**(ug/L)**		**(ug/L)**		**(ug/L)**	
Benzo(g,h,i)perylene	191-24-2	0.94 U	0.94	20 U	20	4.7 U	4.7	0.94 U	0.94	1.0 U	1.0	1.0	1.0
Bis(2-ethylhexyl) phthalate	117-81-7	0.92 U	0.92	20 U	20	4.6 U	4.6	***1.9 J***	0.92	0.98 U	0.98	***1.5 J***	0.98
4-Chloroaniline	106-47-8	***8.1 J***	0.49	***8,900 D***	52	***18,000 D***	120	0.49 U	0.49	***40 J***	0.52	***1,100 D***	10
2-Chloronaphthalene	91-58-7	0.58 U	0.58	12 U	12	2.9 U	2.9	0.58 U	0.58	0.62 U	0.62	***5.1 J***	0.62
2-Chlorophenol	95-57-8	***1.1 J***	0.68	14 U	14	***15 J***	3.4	0.68 U	0.68	***29*** U	0.72	***2.4 J***	0.72
Dibenzofuran	132-64-9	0.65 U	0.65	14 U	14	3.3 U	3.3	0.65 U	0.65	0.69 U	0.69	0.69	0.69
1,2-Dichlorobenzene	95-50-1	***2.4 J***	0.94	***37 J***	20	***350***	4.7	0.94 U	0.94	***5.0 J***	1.0	***1,700***	1.0
1,3-Dichlorobenzene	541-73-1	0.52 U	0.52	11 U	11	2.6 U	2.6	0.52 U	0.52	0.55 U	0.55	0.55	0.55
1,4-Dichlorobenzene	106-46-7	***7.4 J***	0.49	***260***	10	***110***	2.5	***1.1 J***	0.49	***27***	0.52	***89***	0.52
2,4-Dichlorophenol	120-83-2	0.62 U	0.62	13 U	13	***130***	3.1	0.62 U	0.62	***0.68 J***	0.66	***9.7 J***	0.66
Diethyl phthalate	84-66-2	***1.4 J***	0.56	12 U	12	***5.4 J***	2.8	0.56 U	0.56	***0.84 J***	0.59	0.59	0.59
Fluorene	86-73-7	0.52 U	0.52	11 U	11	2.6 U	2.6	0.52 U	0.52	***0.55 J***	0.55	0.55	0.55
Indeno(1,2,3-cd)pyrene	193-39-5	0.58 U	0.58	12 U	12	2.9 U	2.9	0.58 U	0.58	0.62 U	0.62	0.62	0.62
Isophorone	78-59-1	0.63 U	0.63	13 U	13	3.2 U	3.2	0.63 U	0.63	0.67 U	0.67	0.67	0.67
2-Methylphenol	95-48-7	0.66 U	0.66	14 U	14	3.3 U	3.3	0.66 U	0.66	0.70 U	0.70	0.70	0.70
3 & 4 Methylphenol	65794-96-9	***1.6 J***	0.62	13 U	13	***5.3 J***	3.1	0.62 U	0.62	0.66 U	0.66	0.66	0.66
Naphthalene	91-20-3	0.72 U	0.72	15 U	15	3.6 U	3.6	0.72 U	0.72	0.76 U	0.76	0.76	0.76
2-Nitroaniline	88-74-4	0.65 U	0.65	14 U	14	3.3 U	3.3	0.65 U	0.65	0.69 U	0.69	0.69	0.69
4-Nitroaniline	100-01-6	0.80 U	0.80	17 U	17	4.0 U	4.0	0.80 U	0.80	0.85 U	0.85	0.85	0.85
Nitrobenzene	98-95-3	0.88 U	0.88	19 U	19	***12 J***	4.4	0.88 U	0.88	0.93 U	0.93	0.93	0.93
2-Nitrophenol	88-75-5	0.69 U	0.69	15 U	15	3.4 U	3.4	0.69 U	0.69	0.73 U	0.73	0.73	0.73
Pentachlorophenol	87-86-5	2.4 U	2.4	50 U	50	12 U	12	2.4 U	2.4	2.5 U	2.5	***3.3 J***	2.5
Phenanthrene	85-01-8	0.70 U	0.70	15 U	15	3.5 U	3.5	0.70 U	0.70	0.74 U	0.74	0.74	0.74
Phenol	108-95-2	***3.9 J***	0.93	20 U	20	4.7 U	4.7	0.93 U	0.93	0.93 U	0.93	0.99 U	0.93
1,2,4-Trichlorobenzene	120-82-1	0.51 U	0.51	11 U	11	***10 J***	2.5	0.51 U	0.51	0.54 U	0.54	***160***	0.54
2,4,6-Trichlorophenol	88-06-2	0.66 U	0.66	14 U	14	3.3 U	3.3	0.66 U	0.66	0.70 U	0.70	***8.7 J***	0.70

Table 1
Summary of Validated Groundwater Sample Detections - Organics (December 2005 Sampling Event)
Site R Quarterly Groundwater Monitoring
Solutia, Inc. - Sauget, Illinois

Monitoring Well		BWMW-3S	MDL	BWMW-3M	MDL	BWMW-3D	MDL	BWMW-4S	MDL	BWMW-4M	MDL	BWMW-4D	MDL
Lab Sample ID		680-11626-2		680-11725-1		680-11626-1		680-11585-2		680-11585-1		680-11585-3	
Date Sampled		12/14/2005		12/15/2005		12/14/2005		12/13/2005		12/13/2005		12/13/2005	
Time Sampled		11:00		10:10		10:45		14:15		13:15		15:30	
Organochlorine Pesticides (USEPA Method 8081A)													
Date Prepared		12/20/2005		12/17/2005		12/16/2005		12/15/2005		12/15/2005		12/15/2005	
Date Analyzed		12/22/2005		12/20/2005		12/19/2005		12/16/2005		12/16/2005		12/16/2005	
Analyte	**CAS No.**	**(ug/L)**		**(ug/L)**		**(ug/L)**		**(ug/L)**		**(ug/L)**		**(ug/L)**	
4,4'-DDD	72-54-8	0.011 U	0.011	0.011 U	0.011	***0.16 JN***	0.01	0.011 U	0.011	0.011 U	0.011	0.011 U	0.011
Chlorinated Herbicides (USEPA Method 8151A)													
Date Prepared		12/19/2005		12/19/2005		12/19/2005		12/19/2005		12/19/2005		12/19/2005	
Date Analyzed		1/5/2006		12/22/2005		12/22/2005		12/22/2005		1/5/2006		12/22/2005	
Analyte	**CAS No.**	**(ug/L)**		**(ug/L)**		**(ug/L)**		**(ug/L)**		**(ug/L)**		**(ug/L)**	
2,4-D	94-75-7	0.11 U	0.11	0.11 U	0.11	***10***	0.43	0.11 U	0.11	0.11 U	0.11	***2.1***	0.11
Dichlorprop	120-36-5	0.029 U	0.029	0.03 U	0.03	0.12 U	0.12	0.03 U	0.03	0.03 U	0.03	0.029 U	0.029
Pentachlorophenol	87-86-5	0.18 U	0.18	0.18 U	0.18	***0.78 J***	0.7	0.18 U	0.18	0.18 U	0.18	***2.5***	0.17
Silvex (2,4,5-TP)	93-72-1	0.032 U	0.032	0.033 U	0.033	0.13 U	0.13	0.033 U	0.033	0.033 U	0.033	***0.046 JN***	0.032
2,4,5-T	93-76-5	0.078 U	0.078	0.08 U	0.08	***4.5***	0.31	0.08 U	0.08	0.08 U	0.08	***0.37 J***	0.078
Total Organic Carbon (USEPA Method 9060)													
Date Analyzed		12/20/2005		12/20/2005		12/20/2005		12/20/2005		12/20/2005		12/20/2005	
Analyte	**CAS No.**	**(mg/L)**		**(mg/L)**		**(mg/L)**		**(mg/L)**		**(mg/L)**		**(mg/L)**	
Total Organic Carbon (TOC)	-	***12***	0.50	***22***	0.50	***58***	0.50	***13***	0.50	***3.2***	0.50	***8.5***	0.50

Parameters not listed were not detected in any samples.
Results in ***bold italics*** denote detections.

Flags and Qualifiers
U - Analyte was not detected at or above the Method Detection Limit (MDL).
UJ - Analyte was not detected at or above the Method Detection Limit (MDL); the detection limit is estimated.
J - Result is an estimated value.
JN - Analyte is tentatively identified and the result is an estimated value.
D - Diluted. Surrogate or matrix spike recoveries were not obtained; compounds were analyzed at a dilution.

Checked by: MRF Date: 5/4/2006
Reviewed by: MNH Date: 5/5/2006

Table 2
Summary of Validated Groundwater Sample Detections - Inorganics (December 2005 Sampling Event)
Site R Quarterly Groundwater Monitoring
Solutia, Inc. - Sauget, Illinois

Monitoring Well		BWMW-1S	MDL	BWMW-1M	MDL	BWMW-1D	MDL	BWMW-2S	MDL	BWMW-2M	MDL	BWMW-2D	MDL
Lab Sample ID		680-11626-4		680-11626-5		680-11725-5		680-11725-2		680-11725-4		680-11725-3	
Date Sampled		12/14/2005		12/14/2005		12/15/2005		12/15/2005		12/15/2005		12/15/2005	
Time Sampled		14:15		14:45		14:00		11:30		12:45		11:40	
Mercury (USEPA Method 7470A)													
Date Prepared		12/16/2005		12/16/2005		12/19/2005		12/19/2005		12/19/2005		12/19/2005	
Date Analyzed		12/19/2005		12/19/2005		12/20/2005		12/20/2005		12/20/2005		12/20/2005	
Analyte	**CAS No.**	**(mg/L)**		**(mg/L)**		**(mg/L)**		**(mg/L)**		**(mg/L)**		**(mg/L)**	
Mercury	7439-97-6	**NO DETECTIONS**											
Metals (USEPA Method 6010B)													
Date Prepared		12/19/2005		12/19/2005		12/19/2005		12/19/2005		12/19/2005		12/19/2005	
Date Analyzed		12/21/2005		12/21/2005		12/21/2005		12/21/2005		12/21/2005		12/21/2005	
Analyte	**CAS No.**	**(mg/L)**		**(mg/L)**		**(mg/L)**		**(mg/L)**		**(mg/L)**		**(mg/L)**	
Arsenic	7440-38-2	***0.1***	0.0042	0.0042 U	0.0042	0.0042 U	0.0042	***0.011***	0.0042	0.0042 U	0.0042	0.0042 U	0.0042
Barium	7440-39-3	***0.21***	0.0012	***0.67***	0.0012	***0.46***	0.0012	***0.34***	0.0012	***0.092***	0.0012	***0.1***	0.0012
Cadmium	7440-43-9	0.001 U	0.0010	0.001 U	0.0010	0.001 U	0.0010	0.001 U	0.0010	0.001 U	0.0010	0.001 U	0.0010
Chromium	7440-47-3	***0.018***	0.00083	***0.0011 J***	0.00083	0.002 U	0.00083	***0.012***	0.00083	0.0024 U	0.00083	0.0039 U	0.00083
Copper	7440-50-8	***0.0033 J***	0.0017	0.0017 U	0.0017	***0.0019 J***	0.0017	***0.0091 J***	0.0017	***0.0019 J***	0.0017	***0.002 J***	0.0017
Lead	7439-92-1	***0.0052***	0.0022	0.0022 U	0.0022	***0.0091***	0.0022	***0.0046 J***	0.0022	0.0022 U	0.0022	***0.0028 J***	0.0022
Nickel	7440-02-0	***0.0120 J***	0.0018	***0.0021 J***	0.0018	***0.0032 J***	0.0018	***0.0094 J***	0.0018	***0.026 J***	0.0018	***0.015 J***	0.0018
Total Dissolved Solids (USEPA Method 160.1)													
Date Analyzed		12/16/2005		12/16/2005		12/19/2005		12/19/2005		12/19/2005		12/19/2005	
Analyte	**CAS No.**	**(mg/L)**		**(mg/L)**		**(mg/L)**		**(mg/L)**		**(mg/L)**		**(mg/L)**	
Total Dissolved Solids (TDS)	-	***1,000***	5.0	***1,200***	5.0	***780***	5.0	***1,700***	5.0	***1,700***	5.0	***1,500***	5.0

Parameters not listed were not detected in any samples.
Results in ***bold italics*** denote detections.
Samples are not filtered.

Flags and Qualifiers
U - Analyte was not detected at or above the Method Detection Limit (MDL).
J - Result is an estimated value.
Method Detection Limit (MDL); The concentration is an approximate value.

Checked by: MRF Date: 5/4/2006
Reviewed by: MNH Date: 5/5/2006

Table 2

Summary of Validated Groundwater Sample Detections - Inorganics (December 2005 Sampling Event)

Site R Quarterly Groundwater Monitoring

Solutia, Inc. - Sauget, Illinois

Monitoring Well		BWMW-3S	MDL	BWMW-3M	MDL	BWMW-3D	MDL	BWMW-4S	MDL	BWMW-4M	MDL	BWMW-4D	MDL
Lab Sample ID		680-11626-2		680-11725-1		680-11626-1		680-11585-2		680-11585-1		680-11585-3	
Date Sampled		12/14/2005		12/15/2005		12/14/2005		12/13/2005		12/13/2005		12/13/2005	
Time Sampled		11:00		10:10		10:45		14:15		13:15		15:30	
Mercury (USEPA Method 7470A)													
Date Prepared		12/16/2005		12/19/2005		12/16/2005		12/15/2005		12/15/2005		12/15/2005	
Date Analyzed		12/19/2005		12/20/2005		12/19/2005		12/19/2005		12/19/2005		12/19/2005	
Analyte	**CAS No.**	**(mg/L)**		**(mg/L)**		**(mg/L)**		**(mg/L)**		**(mg/L)**		**(mg/L)**	
Mercury	7439-97-6	**NO DETECTIONS**											
Metals (USEPA Method 6010B)													
Date Prepared		12/19/2005		12/19/2005		12/19/2005		12/15/2005		12/15/2005		12/15/2005	
Date Analyzed		12/21/2005		12/21/2005		12/21/2005		12/16/2005		12/16/2005		12/16/2005	
Analyte	**CAS No.**	**(mg/L)**		**(mg/L)**		**(mg/L)**		**(mg/L)**		**(mg/L)**		**(mg/L)**	
Arsenic	7440-38-2	***0.037***	0.0042	0.0042 U	0.0042	***0.021***	0.0042	***0.093***	0.0042	0.0042 U	0.0042	0.0042 U	0.0042
Barium	7440-39-3	***0.47***	0.0012	***0.68***	0.0012	***0.24***	0.0012	***0.71***	0.0012	***0.17***	0.0012	***0.089***	0.0012
Cadmium	7440-43-9	0.001 U	0.001	0.001 U	0.001	0.001 U	0.001	***0.0031 J***	0.001	0.001 U	0.001	0.001 U	0.001
Chromium	7440-47-3	***0.015***	0.00083	***0.0071 J***	0.00083	***0.0013 J***	0.00083	***0.0034 J***	0.00083	0.00083 U	0.00083	***0.0017 J***	0.00083
Copper	7440-50-8	***0.011 J***	0.0017	***0.0032 J***	0.0017	***0.0018 J***	0.0017	***0.011 J***	0.0017	0.0028 U	0.0028	0.0038 U	0.0038
Lead	7439-92-1	0.0022 U	0.0022	***0.0032 J***	0.0022	0.0022 U	0.0022	0.0022 U	0.0022	0.0022 U	0.0022	0.0022 U	0.0022
Nickel	7440-02-0	***0.015 J***	0.0018	***0.0089 J***	0.0018	***0.0033 J***	0.0018	0.0018 U	0.0018	0.0018 U	0.0018	***0.0062 J***	0.0018
Total Dissolved Solids (USEPA Method 160.1)													
Date Analyzed		12/19/2005		12/19/2005		12/16/2005		12/16/2005		12/16/2005		12/16/2005	
Analyte	**CAS No.**	**(mg/L)**		**(mg/L)**		**(mg/L)**		**(mg/L)**		**(mg/L)**		**(mg/L)**	
Total Dissolved Solids (TDS)	-	***1,900***	5.0	***1,200***	5.0	***1,500***	5.0	***2,000***	5.0	***600***	5.0	***720***	5.0

Parameters not listed were not detected in any samples.

Results in ***bold italics*** denote detections.

Samples are not filtered.

Flags and Qualifiers

U - Analyte was not detected at or above the Method Detection Limit (MDL).

J - Result is an estimated value.

Method Detection Limit (MDL); The concentration is an approximate value.

Checked by: MRF Date: 5/4/2006

Reviewed by: MNH Date: 5/5/2006

Table 3
Summary of Validated QA/QC Sample Detections - Organics (December 2005 Sampling Event)
Site R Quarterly Groundwater Monitoring
Solutia, Inc. - Sauget, Illinois

Monitoring Well		DUP 1	MDL	DUP 2	MDL	FB 1	MDL	FB 2	MDL
Lab Sample ID		680-11585-4		680-11725-7		680-11585-5		680-11626-6	
Date Sampled		12/13/2005		12/15/2005		12/13/2005		12/14/2005	
Time Sampled		13:15		11:40		16:30		16:00	
Volatile Organic Compounds (USEPA Method 8260B)									
Date Analyzed		12/22/2005		12/28/2005		12/21/2005		12/24/2005	
Analyte	**CAS No.**	**(ug/L)**		**(ug/L)**		**(ug/L)**		**(ug/L)**	
Acetone	67-64-1	7.3 U	7.3	***830 J***	370	7.3 U	7.3	7.3 U	7.3
Benzene	71-43-2	***2.4***	0.54	***360***	27	0.54 U	0.54	0.54 U	0.54
Carbon disulfide	75-15-0	0.75 U	0.75	38 U	38	0.75 U	0.75	0.75 U	0.75
Chlorobenzene	108-90-7	***180***	0.41	***3100***	21	0.41 U	0.41	0.41 U	0.41
Chloroform	67-66-3	0.52 U	0.52	***30 J***	26	0.52 U	0.52	0.52 U	0.52
1,2-Dichloroethane	107-06-2	0.28 U	0.28	***960 J***	14	0.28 U	0.28	0.28 U	0.28
Ethylbenzene	100-41-4	**1.0**	0.62	***110***	31	0.62 U	0.62	0.62 U	0.62
Methylene Chloride	75-09-2	0.44 U	0.44	***51 J***	22	0.44 U	0.44	0.44 U	0.44
4-Methyl-2-pentanone	108-10-1	0.45 U	0.45	***230 J***	23	0.45 U	0.45	0.45 U	0.45
Tetrachloroethene	127-18-4	0.75 U	0.75	***55***	38	0.75 U	0.75	0.75 U	0.75
Toluene	108-88-3	0.62 U	0.62	***670***	31	0.62 U	0.62	0.62 U	0.62
Trichloroethene	79-01-6	0.71 U	0.71	***47 J***	36	0.71 U	0.71	0.71 U	0.71
Xylenes, Total	1330-20-7	1.3 U	1.3	***700***	65	1.3 U	1.3	1.3 U	1.3
Semi-Volatile Organic Compounds (USEPA Method 8270C)									
Date Prepared		12/15/2005		12/17/2005		12/15/2005		12/16/2005	
Date Analyzed		12/20/2005		12/29/2005		12/20/2005		12/27/2005	
Analyte	**CAS No.**	**(ug/L)**		**(ug/L)**		**(ug/L)**		**(ug/L)**	
Bis(2-ethylhexyl) phthalate	117-81-7	***1.3 J***	0.96	9.2 U	9.2	0.96 U	0.96	0.96 U	0.96
4-Chloroaniline	106-47-8	***83***	0.50	***18,000 D***	49	0.50 U	0.50	0.50 U	0.50
2-Chlorophenol	95-57-8	0.71 UJ	0.71	**3,000 D**	68	0.71 U	0.71	0.71 U	0.71
1,2-Dichlorobenzene	95-50-1	***3.8 J***	0.98	**800**	9.4	0.98 U	0.98	0.98 U	0.98
1,3-Dichlorobenzene	541-73-1	***2.3 J***	0.54	5.2 U	5.2	0.54 U	0.54	0.54 U	0.54
1,4-Dichlorobenzene	106-46-7	***21 J***	0.51	**300**	4.9	0.51 U	0.51	0.51 U	0.51
2,4-Dichlorophenol	120-83-2	0.65 UJ	0.65	***4,700 D***	62	0.65 U	0.65	0.65 U	0.65
3 & 4 Methylphenol	65794-96-9	0.65 UJ	0.65	***760***	6.2	0.65 U	0.65	0.65 U	0.65
Naphthalene	91-20-3	0.75 UJ	0.75	***84 J***	7.2	0.75 U	0.75	0.75 U	0.75
Nitrobenzene	98-95-3	0.91 UJ	0.91	**500**	8.8	0.91 U	0.91	0.91 U	0.91
Pentachlorophenol	87-86-5	2.5 UJ	2.5	***63 J***	24	2.5 U	2.5	2.5 U	2.5
Phenol	108-95-2	0.97 UJ	0.97	***17,000 D***	93	0.97 U	0.97	0.97 U	0.97
1,2,4-Trichlorobenzene	120-82-1	0.53 UJ	0.53	***100***	5.1	0.53 U	0.53	0.53 U	0.53
2,4,6-Trichlorophenol	88-06-2	0.69 UJ	0.69	***1,500***	1.6	0.69 U	0.69	0.69 U	0.69

Table 3

Summary of Validated QA/QC Sample Detections - Organics (December 2005 Sampling Event)

Site R Quarterly Groundwater Monitoring

Solutia, Inc. - Sauget, Illinois

Monitoring Well		DUP 1	MDL	DUP 2	MDL	FB 1	MDL	FB 2	MDL
Lab Sample ID		680-11585-4		680-11725-7		680-11585-5		680-11626-6	
Date Sampled		12/13/2005		12/15/2005		12/13/2005		12/14/2005	
Time Sampled		13:15		11:40		16:30		16:00	
Organochlorine Pesticides (USEPA Method 8081A)									
Date Prepared		12/15/2005		12/17/2005		12/15/2005		12/19/2005	
Date Analyzed		12/16/2005		12/20/2005		12/16/2005		12/21/2005	
Analyte	**CAS No.**	**(ug/L)**		**(ug/L)**		**(ug/L)**		**(ug/L)**	
-	-	**NO DETECTIONS**							
Chlorinated Herbicides (USEPA Method 8151A)									
Date Prepared		12/19/2005		12/19/2005		12/19/2005		12/19/2005	
Date Analyzed		1/5/2006		1/5/2006		12/22/2006		12/22/2006	
Analyte	**CAS No.**	**(ug/L)**		**(ug/L)**		**(ug/L)**		**(ug/L)**	
2,4-D	93-76-7	0.11 U	0.11	***46,000 D***	1,100	0.11 U	0.11	0.11 U	0.11
Dichlorprop	120-36-5	0.029 U	0.029	***1500 J***	30	0.030 U	0.030	0.029 U	0.029
2,4,5-T	93-76-5	0.077 U	0.077	***230 J***	80	0.080 U	0.080	0.078 U	0.078
Total Organic Carbon (USEPA Method 9060)									
Date Analyzed		12/20/2005		12/20/2005		12/20/2005		12/20/2005	
Analyte	**CAS No.**	**(mg/L)**		**(mg/L)**		**(mg/L)**		**(mg/L)**	
Total Organic Carbon (TOC)	-	***3.5***	0.50	***260***	0.50	0.50 U	0.50	0.50 U	0.50

Parameters not listed were not detected in any samples.
Results in ***bold italics*** denote detections.

Flags and Qualifiers
U - Analyte was not detected at or above the Method Detection Limit (MDL).
UJ - Analyte was not detected at or above the Method Detection Limit (MDL); the detection limit is estimated.
J - Result is an estimated value.
JN - Analyte is tentatively identified and the result is an estimated value.
B - Compound was found in the blank and the sample.
D - Diluted. Surrogate or matrix spike recoveri

Checked by: MRF Date: 5/4/2006
Reviewed by: MNH Date: 5/5/2006

Table 3
Summary of Validated QA/QC Sample Detections - Organics (December 2005 Sampling Event)
Site R Quarterly Groundwater Monitoring
Solutia, Inc. - Sauget, Illinois

Monitoring Well		RB 1	MDL	RB 2	MDL	Trip Blank	MDL	Trip Blank	MDL	Trip Blank	MDL
Lab Sample ID		680-11626-3		680-11725-6		680-11585-6		680-11626-7		680-11725-8	
Date Sampled		12/14/2005		12/15/2005		12/13/2005		12/14/2005		12/15/2005	
Time Sampled		12:15		14:45							
Volatile Organic Compounds (USEPA Method 8260B)											
Date Analyzed		12/24/2005		12/28/2005		12/22/2005		12/24/2005		12/28/2005	
Analyte	**CAS No.**	(ug/L)		(ug/L)		(ug/L)		(ug/L)		(ug/L)	
Acetone	67-64-1	7.3 U	7.3	7.3 U	7.3	7.3 U	7.3	7.3 U	7.3	7.3 U	7.3
Benzene	71-43-2	0.54 U	0.54	0.54 U	0.54	0.54 U	0.54	0.54 U	0.54	0.54 U	0.54
Carbon disulfide	75-15-0	***2.1***	0.75	0.75 U	0.75	0.75 U	0.75	0.75 U	0.75	0.75 U	0.75
Chlorobenzene	108-90-7	0.41 U	0.41	***0.47 J***	0.41	0.41 U	0.41	0.41 U	0.41	0.41 U	0.41
Chloroform	67-66-3	0.52 U	0.52	0.52 U	0.52	0.52 U	0.52	0.52 U	0.52	0.52 U	0.52
1,2-Dichloroethane	107-06-2	0.28 U	0.28	0.28 U	0.28	0.28 U	0.28	0.28 U	0.28	0.28 U	0.28
Ethylbenzene	100-41-4	0.62 U	0.62	0.62 U	0.62	0.62 U	0.62	0.62 U	0.62	0.62 U	0.62
Methylene Chloride	75-09-2	0.44 U	0.44	0.44 U	0.44	0.44 U	0.44	0.44 U	0.44	0.44 U	0.44
4-Methyl-2-pentanone	108-10-1	0.45 U	0.45	0.45 U	0.45	0.45 U	0.45	0.45 U	0.45	0.45 U	0.45
Tetrachloroethene	127-18-4	0.75 U	0.75	0.75 U	0.75	0.75 U	0.75	0.75 U	0.75	0.75 U	0.75
Toluene	108-88-3	0.62 U	0.62	0.62 U	0.62	0.62 U	0.62	0.62 U	0.62	0.62 U	0.62
Trichloroethene	79-01-6	0.71 U	0.71	0.71 U	0.71	0.71 U	0.71	0.71 U	0.71	0.71 U	0.71
Xylenes, Total	1330-20-7	1.3 U	1.3	1.3 U	1.3	1.3 U	1.3	1.3 U	1.3	1.3 U	1.3
Semi-Volatile Organic Compounds (USEPA Method 8270C)											
Date Prepared		12/16/2005		12/17/2005							
Date Analyzed		12/27/2005		12/20/2005							
Analyte	**CAS No.**	(ug/L)		(ug/L)							
Bis(2-ethylhexyl) phthalate	117-81-7	0.92 U	0.92	***1.8 JB***	0.96						
4-Chloroaniline	106-47-8	0.49 U	0.49	0.50 U	0.50						
2-Chlorophenol	95-57-8	0.68 U	0.68	0.71 U	0.71						
1,2-Dichlorobenzene	95-50-1	0.94 U	0.94	0.98 U	0.98						
1,3-Dichlorobenzene	541-73-1	0.52 U	0.52	0.54 U	0.54						
1,4-Dichlorobenzene	106-46-7	0.49 U	0.49	0.51 U	0.51						
2,4-Dichlorophenol	120-83-2	0.62 U	0.62	0.65 U	0.65						
3 & 4 Methylphenol	65794-96-9	0.62 U	0.62	0.65 U	0.65						
Naphthalene	91-20-3	0.72 U	0.72	0.75 U	0.75						
Nitrobenzene	98-95-3	0.88 U	0.88	0.91 U	0.91						
Pentachlorophenol	87-86-5	2.4 U	2.4	2.5 U	2.5						
Phenol	108-95-2	0.93 U	0.93	***1.9 J***	0.97						
1,2,4-Trichlorobenzene	120-82-1	0.51 U	0.51	0.53 U	0.53						
2,4,6-Trichlorophenol	88-06-2	0.66 U	0.66	0.79 U	0.79						

Table 3
Summary of Validated QA/QC Sample Detections - Organics (December 2005 Sampling Event)
Site R Quarterly Groundwater Monitoring
Solutia, Inc. - Sauget, Illinois

Monitoring Well		RB 1	MDL	RB 2	MDL	Trip Blank	MDL	Trip Blank	MDL	Trip Blank	MDL
Lab Sample ID		680-11626-3		680-11725-6		680-11585-6		680-11626-7		680-11725-8	
Date Sampled		12/14/2005		12/15/2005		12/13/2005		12/14/2005		12/15/2005	
Time Sampled		12:15		14:45							
Organochlorine Pesticides (USEPA Method 8081A)											
Date Prepared		12/19/2005		12/19/2005							
Date Analyzed		12/21/2005		12/21/2005							
Analyte	**CAS No.**	**(ug/L)**		**(ug/L)**							
-	-	**NO DETECTIONS**									
Chlorinated Herbicides (USEPA Method 8151A)											
Date Prepared		12/19/2005		12/19/2005							
Date Analyzed		12/22/2006		12/22/2006							
Analyte	**CAS No.**	**(ug/L)**		**(ug/L)**							
2,4-D	93-76-7	0.11 U	0.11	0.11 U	0.11						
Dichlorprop	120-36-5	0.030 U	0.030	0.029 U	0.029						
2,4,5-T	93-76-5	0.080 U	0.080	0.078 U	0.078						
Total Organic Carbon (USEPA Method 9060)											
Date Analyzed		12/20/2005		12/20/2005							
Analyte	**CAS No.**	**(mg/L)**		**(mg/L)**							
Total Organic Carbon (TOC)	-	0.50 U	0.50	0.50 U	0.50						

Parameters not listed were not detected in any samples.
Results in ***bold italics*** denote detections.

Flags and Qualifiers
U - Analyte was not detected at or above the Method Detection Limit (MDL).
UJ - Analyte was not detected at or above the Method Detection Limit (MDL); the detection limit is estimated.
J - Result is an estimated value.
JN - Analyte is tentatively identified and the result is an estimated value.
B - Compound was found in the blank and the sample.
D - Diluted. Surrogate or matrix spike recoveri

Checked by: MRF Date: 5/4/2006
Reviewed by: MNH Date: 5/5/2006

Table 4

Summary of Validated QA/QC Sample Detections - Inorganics (December 2005 Sampling Event)

Site R Quarterly Groundwater Monitoring

Solutia, Inc. - Sauget, Illinois

Monitoring Well		DUP 1	MDL	DUP 2	MDL	FB 1	MDL	FB 2	MDL
Lab Sample ID		680-11585-4		680-11725-7		680-11585-5		680-11626-6	
Date Sampled		12/13/2005		12/15/2005		12/13/2005		12/14/2005	
Time Sampled		13:15		11:40		16:30		16:00	
Mercury (USEPA Method 7470A)									
Date Prepared		12/15/2005		12/19/2005		12/15/2005		12/16/2005	
Date Analyzed		12/19/2005		12/20/2005		12/19/2005		12/19/2005	
Analyte	**CAS No.**	**(mg/L)**		**(mg/L)**		**(mg/L)**		**(mg/L)**	
Mercury	7439-97-6	**NO DETECTIONS**							
Metals (USEPA Method 6010B)									
Date Prepared		12/15/2005		12/15/2005		12/19/2005		12/19/2005	
Date Analyzed		12/16/2005		12/16/2005		12/21/2005		12/21/2005	
Analyte	**CAS No.**	**(mg/L)**		**(mg/L)**		**(mg/L)**		**(mg/L)**	
Barium	7440-39-3	***0.17***	0.0012	***0.11***	0.0012	0.0012 U	0.0012	0.0012 U	0.0012
Chromium	7440-47-3	0.00083 U	0.00083	***0.0059 J***	0.00083	0.00083 U	0.00083	0.00083 U	0.00083
Copper	7440-50-8	***0.0032 JB***	0.0017	***0.0026 J***	0.0017	***0.0027 JB***	0.0017	0.0017 U	0.0017
Lead	7439-92-1	0.0022 U	0.0022	***0.0023 J***	0.0022	0.0022 U	0.0022	0.0022 U	0.0022
Nickel	7440-02-0	0.0018 U	0.0018	***0.015 J***	0.0018	0.0018 U	0.0018	0.0018 U	0.0018
Total Dissolved Solids (USEPA Method 160.1)									
Date Analyzed		12/19/2005		12/19/2005		12/19/2005		12/19/2005	
Analyte	**CAS No.**	**(mg/L)**		**(mg/L)**		**(mg/L)**		**(mg/L)**	
Total Dissolved Solids	-	***600***	5.0	***1,400***	5.0	5.0 U	5.0	5.0 U	5.0

Parameters not listed were not detected in any samples.

Results in ***bold italics*** denote detections.

Samples are not filtered.

Flags and Qualifiers

U - Analyte was not detected at or above the Method Detection Limit (MDL).

J - Result is an estimated value.

B - Compound was found in the blank and the sample.

Method Detection Limit (MDL); The concentration is an approximate value.

Checked by: MRF Date: 5/4/2006

Reviewed by: MNH Date: 5/5/2006

Table 4

Summary of Validated QA/QC Sample Detections - Inorganics (December 2005 Sampling Event)

Site R Quarterly Groundwater Monitoring

Solutia, Inc. - Sauget, Illinois

Monitoring Well		RB 1	MDL	RB 2	MDL	Trip Blank	MDL	Trip Blank	MDL	Trip Blank	MDL
Lab Sample ID		680-11626-3		680-11725-6		680-11585-6		680-11626-7		680-11725-8	
Date Sampled		12/14/2005		12/15/2005		12/13/2005		12/14/2005		12/15/2005	
Time Sampled		12:15		14:45							
Mercury (USEPA Method 7470A)											
Date Prepared		12/16/2005		12/19/2005							
Date Analyzed		12/19/2005		12/20/2005							
Analyte	**CAS No.**	**(mg/L)**		**(mg/L)**							
Mercury	7439-97-6	**NO DETECTIONS**									
Metals (USEPA Method 6010B)											
Date Prepared		12/19/2005		12/19/2005							
Date Analyzed		12/21/2005		12/21/2005							
Analyte	**CAS No.**	**(mg/L)**		**(mg/L)**							
Barium	7440-39-3	0.0012 U	0.0012	0.0012 U	0.0012						
Chromium	7440-47-3	0.00083 U	0.00083	***0.0010 J***	0.00083						
Copper	7440-50-8	0.0017 U	0.0017	0.0017 U	0.0017						
Lead	7439-92-1	0.0022 U	0.0022	0.0022 U	0.0022						
Nickel	7440-02-0	0.0018 U	0.0018	0.0018 U	0.0018						
Total Dissolved Solids (USEPA Method 160.1)											
Date Analyzed		12/19/2005		12/19/2005							
Analyte	**CAS No.**	**(mg/L)**		**(mg/L)**							
Total Dissolved Solids	-	***5***	5.0	***23***	5.0						

Parameters not listed were not detected in any samples.

Results in ***bold italics*** denote detections.

Samples are not filtered.

Flags and Qualifiers

U - Analyte was not detected at or above the Method Detection Limit (MDL).

J - Result is an estimated value.

B - Compound was found in the blank and the sample.

Method Detection Limit (MDL); The concentration is an approximate value.

Checked by: MRF Date: 5/4/2006

Reviewed by: MNH Date: 5/5/2006

2006

March, June, September and December

DRAFT

Table 1

Summary of Validated Groundwater Sample Detections - Organics (March 2006 Sampling Event)

Site R Quarterly Groundwater Monitoring

Solutia, Inc. - Sauget, Illinois

Monitoring Well		BWMW-1S	MDL	BWMW-1M	MDL	BWMW-1D	MDL	BWMW-2S	MDL	BWMW-2M	MDL	BWMW-2D	MDL
Lab Sample ID		680-14567-8		680-14567-11		680-14567-9		680-14567-13		680-14567-14		680-14567-15	
Date Sampled		3/14/2006		3/15/2006		3/14/2006		3/15/2006		3/15/2006		3/15/2006	
Time Sampled		14:30		9:45		14:07		11:30		12:15		11:45	
Volatile Organic Compounds (USEPA Method 8260B)													
Date Analyzed		3/23/2006		3/24/2006		3/23/2006		3/24/2006		3/24/2006		3/24/2006	
Analyte	**CAS No.**	**(ug/L)**		**(ug/L)**		**(ug/L)**		**(ug/L)**		**(ug/L)**		**(ug/L)**	
Acetone	67-64-1	7,300 U	7,300	73 U	73	370 U	370	15 U	15	***4,600***	370	***1,300***	180
Benzene	71-43-2	***11,000***	540	***110***	5.4	27 U	27	***130***	1.1	***820***	27	***490***	14
Chlorobenzene	108-90-7	***120,000***	410	***1,700***	4.1	***8,300***	21	***260***	0.82	***6,400***	21	***3,600***	10
Chloroform	67-66-3	520 U	520	5.2 U	5.2	26 U	26	1 U	1	***80***	26	***35***	13
1,2-Dichloroethane	107-06-2	280 U	280	2.8 U	2.8	14 U	14	0.56 U	0.56	***2,100***	14	***1,000***	7.0
cis-1,2-Dichloroethene	156-59-2	550 U	550	5.5 U	5.5	28 U	28	1.1 U	1.1	***45 J***	28	***27***	14
Ethylbenzene	100-41-4	620 U	620	6.2 U	6.2	31 U	31	1.2 U	1.2	***220***	31	***130***	16
Methylene Chloride	75-09-2	440 U	440	4.4 U	4.4	22 U	22	0.88 U	0.88	***150 J***	22	***68 J***	11
4-Methyl-2-pentanone	108-10-1	450 U	450	4.5 U	4.5	23 U	23	0.9 U	0.9	***470 J***	23	***320***	11
Tetrachloroethene	127-18-4	750 U	750	7.5 U	7.5	38 U	38	1.5 U	1.5	***160***	38	***55***	19
Toluene	108-88-3	620 U	620	6.2 U	6.2	31 U	31	1.2 U	1.2	***1,900***	31	***720***	16
Trichloroethene	79-01-6	710 U	710	7.1 U	7.1	36 U	36	1.4 U	1.4	***160***	36	***69***	18
Xylenes, Total	1330-20-7	1,300 U	1,300	13 U	13	65 U	65	2.6 U	2.6	***1,700***	65	***790***	33
Semi-Volatile Organic Compounds (USEPA Method 8270C)													
Date Prepared		3/17/2006		3/17/2006		3/17/2006		3/17/2006		3/17/2006		3/17/2006	
Date Analyzed		3/24/2006		3/21/2006		3/21/2006		3/21/2006		3/24/2006		3/24/2006	
Analyte	**CAS No.**	**(ug/L)**		**(ug/L)**		**(ug/L)**		**(ug/L)**		**(ug/L)**		**(ug/L)**	
Bis(2-ethylhexyl) phthalate	117-81-7	9.6 UJ	9.6	1.0 UJ	1.0	1.0 UJ	1.0	***1.2 J***	0.92	19 UJ	19	9.5 UJ	9.5
4-Chloroaniline	106-47-8	***53 J***	5.1	***320 D***	1.1	***140***	0.54	***370 D***	0.98	***7,300 D***	100	***11,000 D***	50
2-Chlorophenol	95-57-8	***140***	7.1	***13***	0.73	***32***	0.75	***0.98 J***	0.68	***5,700 D***	140	***3,500 D***	70
1,2-Dichlorobenzene	95-50-1	9.8 U	9.8	***4.0 J***	1.0	***2.9 J***	1.0	***3.1 J***	0.94	***520***	20	***600***	9.7
1,3-Dichlorobenzene	541-73-1	5.4 U	5.4	***2.2 J***	0.56	0.57 U	0.57	0.52 U	0.52	11 U	11	5.3 U	5.3
1,4-Dichlorobenzene	106-46-7	***5.6 J***	5.1	***67***	0.53	***8.4 J***	0.54	***1.5 J***	0.49	***240***	10	***240***	5
2,4-Dichlorophenol	120-83-2	6.5 U	6.5	0.67 U	0.67	***6.5 J***	0.69	***1.4 J***	0.62	***15,000 D***	130	***5,100 D***	64
Diethyl phthalate	84-66-2	5.8 U	5.8	0.6 U	0.6	0.61 U	0.61	0.56 U	0.56	12 U	12	5.7 U	5.7
Fluorene	86-73-7	5.4 U	5.4	***1.4 J***	0.56	0.57 U	0.57	0.52 U	0.52	11 U	11	5.3 U	5.3
3 & 4 Methylphenol	65794-96-9	6.5 U	6.5	0.67 U	0.67	0.69 U	0.69	***2.2 J***	0.62	***1,200***	13	***480***	6.4
2-Nitroaniline	88-74-4	6.8 U	6.8	0.7 U	0.7	0.72 U	0.72	0.65 U	0.65	***370 J***	14	***130 J***	6.7
4-Nitroaniline	100-01-6	8.3 U	8.3	0.87 U	0.87	0.89 U	0.89	0.8 U	0.8	***240 J***	17	8.3 U	8.3
Nitrobenzene	98-95-3	9.1 U	9.1	0.95 U	0.95	0.97 U	0.97	0.88 U	0.88	***1,000***	18	***350***	9.0
N-Nitroso-di-n-propylamine	621-64-7	6.1 U	6.1	0.63 U	0.63	0.65 U	0.65	0.58 U	0.58	***15 J***	12	6 U	6
Pentachlorophenol	87-86-5	25 U	25	2.6 U	2.6	2.6 U	2.6	2.4 U	2.4	***190 J***	49	***41 J***	24
Phenol	108-95-2	9.7 U	9.7	1.0 U	1.0	1.0 U	1.0	0.93 U	0.93	***26,000 D***	190	***11,000 D***	96
1,2,4-Trichlorobenzene	120-82-1	5.3 U	5.3	0.55 U	0.55	0.56 U	0.56	0.51 U	0.51	***62 J***	11	***57 J***	5.2
2,4,6-Trichlorophenol	88-06-2	6.9 U	6.9	0.71 U	0.71	***2.6 J***	0.73	0.66 U	0.66	***2,800***	14	***1,200***	6.8

Table 1
Summary of Validated Groundwater Sample Detections - Organics (March 2006 Sampling Event)
Site R Quarterly Groundwater Monitoring
Solutia, Inc. - Sauget, Illinois

Monitoring Well		BWMW-1S	MDL	BWMW-1M	MDL	BWMW-1D	MDL	BWMW-2S	MDL	BWMW-2M	MDL	BWMW-2D	MDL
Lab Sample ID		680-14567-8		680-14567-11		680-14567-9		680-14567-13		680-14567-14		680-14567-15	
Date Sampled		3/14/2006		3/15/2006		3/14/2006		3/15/2006		3/15/2006		3/15/2006	
Time Sampled		14:30		9:45		14:07		11:30		12:15		11:45	
Organochlorine Pesticides (USEPA Method 8081A)													
Date Prepared		3/17/2006		3/17/2006		3/17/2006		3/17/2006		3/17/2006		3/17/2006	
Date Analyzed		3/24/2006		3/24/2006		3/24/2006		3/24/2006		3/27/2006		3/27/2006	
Analyte	**CAS No.**	**(ug/L)**		**(ug/L)**		**(ug/L)**		**(ug/L)**		**(ug/L)**		**(ug/L)**	
4,4'-DDD	72-54-8	0.010 UJ	0.010	0.011 UJ	0.011	***0.21 JP***	0.011	0.010 UJ	0.010	0.44 U	0.44	0.44 U	0.44
Chlorinated Herbicides (USEPA Method 8151A)													
Date Prepared		3/17/2006		3/17/2006		3/17/2006		3/17/2006		3/17/2006		3/17/2006	
Date Analyzed		3/20/2006		3/20/2006		3/21/2006		3/20/2006		3/21/2006		3/21/2006	
Analyte	**CAS No.**	**(ug/L)**		**(ug/L)**		**(ug/L)**		**(ug/L)**		**(ug/L)**		**(ug/L)**	
2,4-D	94-75-7	0.11 U	0.11	0.11 U	0.11	***2.1***	0.11	0.11 U	0.11	***10,000 D***	***540***	***2,900 D***	220
Dichlorprop	120-36-5	***17 D***	0.30	0.030 U	0.030	***0.32 J***	0.030	***7.3***	0.029	***900***	***15***	***580***	1.5
Pentachlorophenol	87-86-5	0.18 U	0.18	0.18 U	0.18	0.18 U	0.18	0.17 U	0.17	89 U	89	9.0 U	9.0
2,4,5-T	93-76-5	0.08 U	0.08	0.08 U	0.08	0.079 U	0.079	0.077 U	0.077	***130 JP***	40	4.0 U	4.0
Total Organic Carbon (USEPA Method 9060)													
Date Analyzed		3/20/2006		3/20/2006		3/20/2006		3/20/2006		3/20/2006		3/20/2006	
Analyte	**CAS No.**	**(mg/L)**		**(mg/L)**		**(mg/L)**		**(mg/L)**		**(mg/L)**		**(mg/L)**	
Total Organic Carbon (TOC)	-	***18***	0.50	***9.3***	0.50	***8.1***	0.50	***43***	0.50	***380***	0.50	***240***	0.50

Parameters not listed were not detected in any samples.
Results in ***bold italics*** denote detections.

Flags and Qualifiers
U - Analyte was not detected at or above the Method Detection Limit (MDL).
UJ - Analyte was not detected at or above the Method Detection Limit (MDL); the detection limit is estimated.
J - Result is an estimated value.
JP - Result is an estimated value; The lower of the two values is reported when the % difference between the results of two GC columns is greater than 40%.
D - Compound analyzed at a dilution.

Checked by: MRF Date: 6/26/2006
Reviewed by: RMG Date:

Table 1
Summary of Validated Groundwater Sample Detections - Organics (March 2006 Sampling Event)
Site R Quarterly Groundwater Monitoring
Solutia, Inc. - Sauget, Illinois

Monitoring Well		BWMW-3S	MDL	BWMW-3M	MDL	BWMW-3D	MDL	BWMW-4S	MDL	BWMW-4M	MDL	BWMW-4D	MDL
Lab Sample ID		680-14567-5		680-14567-6		680-14567-7		680-14567-1		680-14567-2		680-14516-1	
Date Sampled		3/14/2006		3/14/2006		3/14/2006		3/13/2006		3/13/2006		3/10/2006	
Time Sampled		10:50		12:20		10:55		11:02		12:34		11:50	
Volatile Organic Compounds (USEPA Method 8260B)													
Date Analyzed		3/23/2006		3/23/2006		3/23/2006		3/22/2006		3/22/2006		3/22/2006	
Analyte	**CAS No.**	**(ug/L)**		**(ug/L)**		**(ug/L)**		**(ug/L)**		**(ug/L)**		**(ug/L)**	
Acetone	67-64-1	29 U	29	180 U	180	150 U	150	7.3 U	7.3	7.3 U	7.3	7.3 U	7.3
Benzene	71-43-2	***98***	2.2	***72***	14	***68***	11	0.54 U	0.54	***3.8***	0.54	***11***	0.54
Chlorobenzene	108-90-7	***380***	1.6	***2,700***	10	***2400***	8.2	***3.5***	0.41	***190***	0.41	***240 D***	0.82
Chloroform	67-66-3	2.1 U	2.1	13 U	13	10 U	10	0.52 U	0.52	0.52 U	0.52	0.52 U	0.52
1,2-Dichloroethane	107-06-2	1.1 U	1.1	7 U	7	5.6 U	5.6	0.28 U	0.28	0.28 U	0.28	0.28 U	0.28
cis-1,2-Dichloroethene	156-59-2	2.2 U	2.2	14 U	14	11 U	11	0.55 U	0.55	0.55 U	0.55	0.55 U	0.55
Ethylbenzene	100-41-4	2.5 U	2.5	16 U	16	***18 J***	12	0.62 U	0.62	0.87 J	0.87	***1.8***	0.62
Methylene Chloride	75-09-2	1.8 U	1.8	11 U	11	8.8 U	8.8	0.44 U	0.44	0.44 U	0.44	0.44 U	0.44
4-Methyl-2-pentanone	108-10-1	1.8 U	1.8	11 U	11	9 U	9	0.45 U	0.45	0.45 U	0.45	0.45 U	0.45
Tetrachloroethene	127-18-4	3 U	3	19 U	19	15 U	15	0.75 U	0.75	0.75 U	0.75	0.75 U	0.75
Toluene	108-88-3	2.5 U	2.5	16 U	16	***16 J***	12	0.62 U	0.62	0.62 U	0.62	0.62 U	0.62
Trichloroethene	79-01-6	2.8 U	2.8	18 U	18	14 U	14	0.71 U	0.71	0.71 U	0.71	0.71 U	0.71
Xylenes, Total	1330-20-7	5.2 U	5.2	33 U	33	***61***	26	1.3 U	1.3	1.3 U	1.3	***7.8***	1.3
Semi-Volatile Organic Compounds (USEPA Method 8270C)													
Date Prepared		3/17/2006		3/17/2006		3/17/2006		3/17/2006		3/17/2006		3/14/2006	
Date Analyzed		3/21/2006		3/21/2006		3/22/2006		3/21/2006		3/21/2006		3/16/2006	
Analyte	**CAS No.**	**(ug/L)**		**(ug/L)**		**(ug/L)**		**(ug/L)**		**(ug/L)**		**(ug/L)**	
Bis(2-ethylhexyl) phthalate	117-81-7	0.96 UJ	0.96	0.92 UJ	0.92	1.8 UJ	1.8	1.0 UJ	1.0	***2.2 J***	0.95	0.92 U	0.92
4-Chloroaniline	106-47-8	***11 J***	0.51	***2,900 D***	25	***6,900 D***	49	0.53 U	0.53	***160***	0.50	***930 D***	9.8
2-Chlorophenol	95-57-8	***0.86 J***	0.71	***5.2 J***	0.68	***11 J***	1.4	0.73 U	0.73	0.7 U	0.7	***1.1 J***	0.68
1,2-Dichlorobenzene	95-50-1	***2.8 J***	0.98	***44***	0.94	***280***	1.9	1.0 U	1.0	***4.0 J***	0.97	***1,800 D***	19
1,3-Dichlorobenzene	541-73-1	0.54 U	0.54	***29***	0.52	1.0 U	1.0	0.56 U	0.56	0.53 U	0.53	0.52 U	0.52
1,4-Dichlorobenzene	106-46-7	***9.0 J***	0.51	***260 J D***	25	***110***	0.98	***0.87 J***	0.53	***19***	0.50	***55***	0.49
2,4-Dichlorophenol	120-83-2	0.65 U	0.65	0.62 U	0.62	***65***	1.2	0.67 U	0.67	0.64 U	0.64	***6 J***	0.62
Diethyl phthalate	84-66-2	0.58 U	0.58	0.56 U	0.56	***3.1 J***	1.1	0.6 U	0.6	***0.94 J***	0.57	0.56 U	0.56
Fluorene	86-73-7	0.54 U	0.54	0.52 U	0.52	1 U	1	0.56 U	0.56	0.53 U	0.53	0.52 U	0.52
3 & 4 Methylphenol	65794-96-9	***1.3 J***	0.65	0.62 U	0.62	1.2 U	1.2	0.67 U	0.67	0.64 U	0.64	0.62 UJ	0.62
2-Nitroaniline	88-74-4	0.68 U	0.68	0.65 U	0.65	1.3 U	1.3	0.7 U	0.7	0.67 U	0.67	0.65 U	0.65
4-Nitroaniline	100-01-6	0.83 U	0.83	0.8 U	0.8	1.6 U	1.6	0.87 U	0.87	0.83 U	0.83	0.8 U	0.8
Nitrobenzene	98-95-3	0.91 U	0.91	0.88 U	0.88	1.8 U	1.8	0.95 U	0.95	0.9 U	0.9	0.88 U	0.88
N-Nitroso-di-n-propylamine	621-64-7	0.61 U	0.61	0.58 U	0.58	1.2 U	1.2	0.63 U	0.63	0.6 U	0.6	0.58 U	0.58
Pentachlorophenol	87-86-5	2.5 U	2.5	2.4 U	2.4	4.7 U	4.7	2.6 U	2.6	2.4 U	2.4	2.4 U	2.4
Phenol	108-95-2	0.97 U	0.97	***4.5 J***	0.93	1.9 U	1.9	1.0 U	1.0	0.96 U	0.96	0.93 U	0.93
1,2,4-Trichlorobenzene	120-82-1	0.53 U	0.53	0.51 U	0.51	***8.6 J***	1.0	0.55 U	0.55	0.52 U	0.52	***150***	0.51
2,4,6-Trichlorophenol	88-06-2	0.69 U	0.69	0.66 U	0.66	***18 J***	1.3	0.71 U	0.71	0.68 U	0.68	***4.4 J***	0.66

Table 1
Summary of Validated Groundwater Sample Detections - Organics (March 2006 Sampling Event)
Site R Quarterly Groundwater Monitoring
Solutia, Inc. - Sauget, Illinois

Monitoring Well		BWMW-3S	MDL	BWMW-3M	MDL	BWMW-3D	MDL	BWMW-4S	MDL	BWMW-4M	MDL	BWMW-4D	MDL
Lab Sample ID		680-14567-5		680-14567-6		680-14567-7		680-14567-1		680-14567-2		680-14516-1	
Date Sampled		3/14/2006		3/14/2006		3/14/2006		3/13/2006		3/13/2006		3/10/2006	
Time Sampled		10:50		12:20		10:55		11:02		12:34		11:50	
Organochlorine Pesticides (USEPA Method 8081A)													
Date Prepared		3/17/2006		3/17/2006		3/17/2006		3/17/2006		3/17/2006		3/14/2006	
Date Analyzed		3/24/2006		3/24/2006		3/24/2006		3/23/2006		3/24/2006		3/17/2006	
Analyte	**CAS No.**	**(ug/L)**		**(ug/L)**		**(ug/L)**		**(ug/L)**		**(ug/L)**		**(ug/L)**	
4,4'-DDD	72-54-8	0.011 UJ	0.011	0.011 UJ	0.011	0.010 UJ	0.010	0.011 U	0.011	0.011 UJ	0.011	0.010 U	0.010
Chlorinated Herbicides (USEPA Method 8151A)													
Date Prepared		3/17/2006		3/17/2006		3/17/2006		3/17/2006		3/17/2006		3/14/2006	
Date Analyzed		3/20/2006		3/20/2006		3/22/2006		3/20/2006		3/20/2006		3/16/2006	
Analyte	**CAS No.**	**(ug/L)**		**(ug/L)**		**(ug/L)**		**(ug/L)**		**(ug/L)**		**(ug/L)**	
2,4-D	94-75-7	0.11 U	0.11	***0.55***	0.11	***30***	0.85	0.11 U	0.11	0.11 U	0.11	***1.4***	0.11
Dichlorprop	120-36-5	0.03 U	0.03	0.029 U	0.029	***12***	0.23	0.029 U	0.029	0.029 U	0.029	0.03 U	0.03
Pentachlorophenol	87-86-5	0.18 U	0.18	0.17 U	0.17	***2.2***	1.4	0.17 U	0.17	0.17 U	0.17	***1.1***	0.18
2,4,5-T	93-76-5	0.08 U	0.08	0.077 U	0.077	***15***	0.62	0.077 U	0.077	0.077 U	0.077	***0.46 J***	0.080
Total Organic Carbon (USEPA Method 9060)													
Date Analyzed		3/20/2006		3/20/2006		3/20/2006		3/20/2006		3/21/2006		3/15/2006	
Analyte	**CAS No.**	**(mg/L)**		**(mg/L)**		**(mg/L)**		**(mg/L)**		**(mg/L)**		**(mg/L)**	
Total Organic Carbon (TOC)	-	***24***	0.50	***24***	0.50	***62***	0.50	***8.9***	0.50	***4.7***	0.50	***29 J***	0.50

Parameters not listed were not detected in any samples.
Results in ***bold italics*** denote detections.

Flags and Qualifiers
U - Analyte was not detected at or above the Method Detection Limit (MDL).
UJ - Analyte was not detected at or above the Method Detection Limit (MDL); the detection limit is estimated.
J - Result is an estimated value.
JP - Result is an estimated value; The lower of the two values is reported when the % difference between the results of two GC columns is greater than 40%.
D - Compound analyzed at a dilution.

Checked by: MRF Date: 5/29/2006
Reviewed by: RMG Date:

Table 2

Summary of Validated Groundwater Sample Detections - Inorganics (March 2006 Sampling Event)

Site R Quarterly Groundwater Monitoring

Solutia, Inc. - Sauget, Illinois

Monitoring Well		BWMW-1S	MDL	BWMW-1M	MDL	BWMW-1D	MDL	BWMW-2S	MDL	BWMW-2M	MDL	BWMW-2D	MDL
Lab Sample ID		680-14567-8		680-14567-11		680-14567-9		680-14567-13		680-14567-14		680-14567-15	
Date Sampled		3/14/2006		3/15/2006		3/14/2006		3/15/2006		3/15/2006		3/15/2006	
Time Sampled		14:30		9:45		14:07		11:30		12:15		11:45	
Mercury (USEPA Method 7470A)													
Date Prepared		3/21/2006		3/21/2006		3/21/2006		3/21/2006		3/21/2006		3/21/2006	
Date Analyzed		3/22/2006		3/22/2006		3/22/2006		3/22/2006		3/22/2006		3/22/2006	
Analyte	**CAS No.**	**(mg/L)**		**(mg/L)**		**(mg/L)**		**(mg/L)**		**(mg/L)**		**(mg/L)**	
Mercury	7439-97-6	**NO DETECTIONS**											
Metals (USEPA Method 6010B)													
Date Prepared		3/16/2006		3/16/2006		3/16/2006		3/16/2006		3/16/2006		3/16/2006	
Date Analyzed		3/20/2006		3/21/2006		3/20/2006		3/21/2006		3/21/2006		3/21/2006	
Analyte	**CAS No.**	**(mg/L)**		**(mg/L)**		**(mg/L)**		**(mg/L)**		**(mg/L)**		**(mg/L)**	
Arsenic	7440-38-2	***0.10***	0.0042	0.0042 U	0.0042	0.0042 U	0.0042	0.0042 U	0.0042	0.0042 U	0.0042	0.0042 U	0.0042
Barium	7440-39-3	***0.23***	0.0012	***0.61***	0.0012	***0.66***	0.0012	***0.30***	0.0012	***0.11***	0.0012	***0.095***	0.0012
Chromium	7440-47-3	0.011 U	0.00083	0.00083 U	0.00083	0.00083 U	0.00083	0.0060 U	0.00083	0.0025 U	0.00083	0.0014 U	0.00083
Copper	7440-50-8	0.0042 U	0.0017	0.0017 U	0.0017	0.0017 U	0.0017	0.0037 U	0.0017	0.0017 U	0.0017	0.0017 U	0.0017
Lead	7439-92-1	***0.0055***	0.0022	0.0023 U	0.0022	***0.0037 J***	0.0022	0.0039 U	0.0022	0.0022 U	0.0022	0.0022 U	0.0022
Nickel	7440-02-0	0.014 U	0.0018	0.0018 U	0.0018	0.0018 U	0.0018	***0.0061 J***	0.0018	***0.023 J***	0.0018	***0.0091 J***	0.0018
Total Dissolved Solids (USEPA Method 160.1)													
Date Analyzed		3/15/2006		3/17/2006		3/15/2006		3/17/2006		3/17/2006		3/17/2006	
Analyte	**CAS No.**	**(mg/L)**		**(mg/L)**		**(mg/L)**		**(mg/L)**		**(mg/L)**		**(mg/L)**	
Total Dissolved Solids (TDS)	-	***1,100***	5.0	***1,200***	5.0	***880***	5.0	***1,700***	5.0	***1,600***	5.0	***1,600***	5.0

Parameters not listed were not detected in any samples.

Results in ***bold italics*** denote detections.

Samples are not filtered.

Flags and Qualifiers

U - Analyte was not detected at or above the Method Detection Limit (MDL).

J - Result is an estimated value.

The concentration is an approximate value.

Checked by: MRF Date: 6/26/2006

Reviewed by: RMG Date:

Table 2

Summary of Validated Groundwater Sample Detections - Inorganics (March 2006 Sampling Event)

Site R Quarterly Groundwater Monitoring

Solutia, Inc. - Sauget, Illinois

Monitoring Well		BWMW-3S	MDL	BWMW-3M	MDL	BWMW-3D	MDL	BWMW-4S	MDL	BWMW-4M	MDL	BWMW-4D	MDL
Lab Sample ID		680-14567-5		680-14567-6		680-14567-7		680-14567-1		680-14567-2		680-14516-1	
Date Sampled		3/14/2006		3/14/2006		3/14/2006		3/13/2006		3/13/2006		3/10/2006	
Time Sampled		10:50		12:20		10:55		11:02		12:34		11:50	
Mercury (USEPA Method 7470A)													
Date Prepared		3/21/2006		3/21/2006		3/21/2006		3/21/2006		3/21/2006		3/17/2006	
Date Analyzed		3/22/2006		3/22/2006		3/22/2006		3/22/2006		3/22/2006		3/20/2006	
Analyte	**CAS No.**	**(mg/L)**		**(mg/L)**		**(mg/L)**		**(mg/L)**		**(mg/L)**		**(mg/L)**	
Mercury	7439-97-6	**NO DETECTIONS**											
Metals (USEPA Method 6010B)													
Date Prepared		3/16/2006		3/16/2006		3/16/2006		3/16/2006		3/16/2006		3/15/2006	
Date Analyzed		3/20/2006		3/20/2006		3/20/2006		3/20/2006		3/20/2006		3/22/2006	
Analyte	**CAS No.**	**(mg/L)**		**(mg/L)**		**(mg/L)**		**(mg/L)**		**(mg/L)**		**(mg/L)**	
Arsenic	7440-38-2	***0.027***	0.0042	0.0042 U	0.0042	***0.0046 J***	0.0042	***0.13***	0.0042	0.0042 U	0.0042	0.0057 U	0.0042
Barium	7440-39-3	***0.32***	0.0012	***0.58***	0.0012	***0.14***	0.0012	***1.2***	0.0012	***0.22***	0.0012	***0.1***	0.0012
Chromium	7440-47-3	0.0049 U	0.00083	0.0040 U	0.00083	0.00083 U	0.00083	0.0025 U	0.00083	0.0010 U	0.00083	0.0013 U	0.00083
Copper	7440-50-8	0.0027 U	0.0017	0.0025 U	0.0017	0.0017 U	0.0017	0.0017 U	0.0017	0.0017 U	0.0017	0.0017 U	0.0017
Lead	7439-92-1	0.0022 U	0.0022	0.0022 U	0.0022	0.0022 U	0.0022	0.0022 U	0.0022	0.0022 U	0.0022	0.0022 U	0.0022
Nickel	7440-02-0	0.0025 U	0.0018	0.0050 U	0.0018	0.0019 U	0.0018	0.0018 U	0.0018	0.0020 U	0.0018	***0.0069 J***	0.0018
Total Dissolved Solids (USEPA Method 160.1)													
Date Analyzed		3/15/2006		3/15/2006		3/15/2006		3/15/2006		3/15/2006		3/13/2006	
Analyte	**CAS No.**	**(mg/L)**		**(mg/L)**		**(mg/L)**		**(mg/L)**		**(mg/L)**		**(mg/L)**	
Total Dissolved Solids (TDS)	-	***1,800***	5.0	***1,300***	5.0	***1,600***	5.0	***2,000***	5.0	***670***	5.0	***800***	5.0

Parameters not listed were not detected in any samples.
Results in ***bold italics*** denote detections.
Samples are not filtered.

Flags and Qualifiers
U - Analyte was not detected at or above the Method Detection Limit (MDL).
J - Result is an estimated value.
is an approximate value.

Checked by: MRF Date: 5/29/2006
Reviewed by: RMG Date:

Table 3
Summary of Validated QA/QC Sample Detections - Organics (March 2006 Sampling Event)
Site R Quarterly Groundwater Monitoring
Solutia, Inc. - Sauget, Illinois

Monitoring Well		DUP 1	MDL	DUP 2	MDL	RB 1	MDL	RB 2	MDL
Lab Sample ID		680-14516-2		680-14567-16		680-14567-4		680-14567-12	
Date Sampled		3/10/2006		3/15/2006		3/14/2006		3/15/2006	
Time Sampled		11:15		11:45		8:20		8:42	
Volatile Organic Compounds (USEPA Method 8260B)									
Date Analyzed		3/22/2006		3/24/2006		3/22/2006		3/23/2006	
Analyte	**CAS No.**	**(ug/L)**		**(ug/L)**		**(ug/L)**		**(ug/L)**	
Acetone	67-64-1	7.3 U	7.3	***1,300***	180	7.3 U	7.3	7.3 U	7.3
Benzene	71-43-2	***12***	0.54	***480***	14	0.54 U	0.54	0.54 U	0.54
Chlorobenzene	108-90-7	***240 D***	0.82	***3,400***	10	0.41 U	0.41	0.41 U	0.41
Chloroform	67-66-3	0.52 U	0.52	***34***	13	0.52 U	0.52	0.52 U	0.52
1,2-Dichloroethane	107-06-2	0.28 U	0.28	***990***	7.0	0.28 U	0.28	0.28 U	0.28
cis-1,2-Dichloroethene	156-59-2	0.55 U	0.55	***26***	14	0.55 U	0.55	0.55 U	0.55
Ethylbenzene	100-41-4	***1.8***	0.62	***130***	16	0.62 U	0.62	0.62 U	0.62
Methylene Chloride	75-09-2	0.44 U	0.44	***67 J***	11	0.44 U	0.44	0.44 U	0.44
4-Methyl-2-pentanone	108-10-1	0.45 U	0.45	***310***	11	0.45 U	0.45	0.45 U	0.45
Tetrachloroethene	127-18-4	0.75 U	0.75	***52***	19	0.75 U	0.75	0.75 U	0.75
Toluene	108-88-3	0.62 U	0.62	***720***	16	***0.78 J***	0.62	0.62 U	0.62
Trichloroethene	79-01-6	0.71 U	0.71	***66***	18	0.71 U	0.71	0.71 U	0.71
Xylenes, Total	1330-20-7	***8.2***	1.3	***770***	33	1.3 U	1.3	1.3 U	1.3
Semi-Volatile Organic Compounds (USEPA Method 8270C)									
Date Prepared		3/14/2006		3/17/2006		3/17/2006		3/17/2006	
Date Analyzed		3/16/2006		3/24/2006		3/21/2006		3/21/2006	
Analyte	**CAS No.**	**(ug/L)**		**(ug/L)**		**(ug/L)**		**(ug/L)**	
4-Chloroaniline	106-47-8	***4,200 D***	25	***11,000 D***	51	0.52 U	0.52	0.51 U	0.51
2-Chlorophenol	95-57-8	***1.9 J***	0.68	***3,700 D***	71	0.72 U	0.72	0.71 U	0.71
1,2-Dichlorobenzene	95-50-1	***3,300 D***	47	***660***	9.8	1.0 U	1.0	0.98 U	0.98
1,4-Dichlorobenzene	106-46-7	***80***	0.49	***250***	5.1	0.52 U	0.52	0.51 U	0.51
2,4-Dichlorophenol	120-83-2	***15 J***	0.62	***5,100 D***	65	0.66 U	0.66	0.65 U	0.65
2-Methylphenol	95-48-7	***18 J***	0.68	6.9 U	6.9	0.7 U	0.7	0.69 U	0.69
3 & 4 Methylphenol	65794-96-9	***4.1 J***	0.62	***570***	6.5	0.66 U	0.66	0.65 U	0.65
2-Nitroaniline	88-74-4	0.65 U	0.65	***140 J***	6.8	0.69 U	0.69	0.68 U	0.68
4-Nitroaniline	100-01-6	0.80 U	0.80	***100 J***	8.3	0.85 U	0.85	0.83 U	0.83
Nitrobenzene	98-95-3	0.88 U	0.88	***420***	9.1	0.93 U	0.93	0.91 U	0.91
Pentachlorophenol	87-86-5	***2.9 J***	2.4	***45 J***	25	2.5 U	2.5	2.5 U	2.5
Phenol	108-95-2	0.93 U	0.93	***12,000 D***	97	0.99 U	0.99	0.97 U	0.97
1,2,4-Trichlorobenzene	120-82-1	***190***	0.51	***55 J***	5.3	0.54 U	0.54	0.53 U	0.53
2,4,5-Trichlorophenol	95-95-4	***0.6 J***	0.59	6.2 U	6.2	0.63 U	0.63	0.62 U	0.62
2,4,6-Trichlorophenol	88-06-2	***8.5 J***	0.66	***1,300***	6.9	0.7 U	0.7	0.69 U	0.69
Organochlorine Pesticides (USEPA Method 8081A)									
Date Prepared		3/14/2006		3/17/2006		3/17/2006		3/17/2006	
Date Analyzed		3/17/2006		3/27/2006		3/24/2006		3/24/2006	
Analyte	**CAS No.**	**(ug/L)**		**(ug/L)**		**(ug/L)**		**(ug/L)**	
All	-	**NO DETECTIONS**							
Chlorinated Herbicides (USEPA Method 8151A)									
Date Prepared		3/14/2006		3/17/2006		3/17/2006		3/17/2006	
Date Analyzed		3/16/2006		3/21/2006		3/20/2006		3/20/2006	
Analyte	**CAS No.**	**(ug/L)**		**(ug/L)**		**(ug/L)**		**(ug/L)**	
2,4-D	94-75-7	***2.0***	0.10	***2,600 D***	220	0.11 U	0.11	0.11 U	0.11
Dichlorprop	120-36-5	0.029 U	0.029	***590***	1.5	0.030 U	0.030	0.030 U	0.030
Pentachlorophenol	87-86-5	***1.8***	0.17	8.9 U	8.9	0.18 U	0.18	0.18 U	0.18
2,4,5-T	93-76-5	***0.69 J***	0.076	4.0 U	4.0	0.081 U	0.081	0.080 U	0.080
Total Organic Carbon (USEPA Method 9060)									
Date Analyzed		3/15/2006		3/20/2006		3/20/2006		3/20/2006	
Analyte	**CAS No.**	**(mg/L)**		**(mg/L)**		**(mg/L)**		**(mg/L)**	
Total Organic Carbon (TOC)	-	***11 J***	0.50	***240***	0.50	0.50 U	0.50	0.50 U	0.50

Parameters not listed were not detected in any samples.
Results in ***bold italics*** denote detections.

Flags and Qualifiers
U - Analyte was not detected at or above the Method Detection Limit (MDL).
UJ - Analyte was not detected at or above the Method Detection Limit (MDL); the detection limit is estimated.
J - Result is an estimated value.
D - Compound analyzed at a dilution.

Checked by: MRF Date: 6/26/2006
Reviewed by: RMG Date:

Table 3
Summary of Validated QA/QC Sample Detections - Organics (March 2006 Sampling Event)
Site R Quarterly Groundwater Monitoring
Solutia, Inc. - Sauget, Illinois

Monitoring Well		Trip Blank	MDL	Trip Blank	MDL	Trip Blank	MDL	Trip Blank	MDL
Lab Sample ID		680-14516-3		680-14567-3		680-14567-10		680-14567-17	
Date Sampled		3/10/2006		3/13/2006		3/14/2006		3/15/2006	
Time Sampled									
Volatile Organic Compounds (USEPA Method 8260B)									
Date Analyzed		3/22/2006		3/22/2006		3/22/2006		3/23/2006	
Analyte	**CAS No.**	**(ug/L)**		**(ug/L)**		**(ug/L)**		**(ug/L)**	
Acetone	67-64-1	7.3 U	7.3	7.3 U	7.3	7.3 U	7.3	7.3 U	7.3
Benzene	71-43-2	0.54 U	0.54	0.54 U	0.54	0.54 U	0.54	0.54 U	0.54
Chlorobenzene	108-90-7	0.41 U	0.41	0.41 U	0.41	0.41 U	0.41	0.41 U	0.41
Chloroform	67-66-3	0.52 U	0.52	0.52 U	0.52	0.52 U	0.52	0.52 U	0.52
1,2-Dichloroethane	107-06-2	0.28 U	0.28	0.28 U	0.28	0.28 U	0.28	0.28 U	0.28
cis-1,2-Dichloroethene	156-59-2	0.55 U	0.55	0.55 U	0.55	0.55 U	0.55	0.55 U	0.55
Ethylbenzene	100-41-4	0.62 U	0.62	0.62 U	0.62	0.62 U	0.62	0.62 U	0.62
Methylene Chloride	75-09-2	0.44 U	0.44	0.44 U	0.44	0.44 U	0.44	0.44 U	0.44
4-Methyl-2-pentanone	108-10-1	0.45 U	0.45	0.45 U	0.45	0.45 U	0.45	0.45 U	0.45
Tetrachloroethene	127-18-4	0.75 U	0.75	0.75 U	0.75	0.75 U	0.75	0.75 U	0.75
Toluene	108-88-3	0.62 U	0.62	0.62 U	0.62	0.62 U	0.62	0.62 U	0.62
Trichloroethene	79-01-6	0.71 U	0.71	0.71 U	0.71	0.71 U	0.71	0.71 U	0.71
Xylenes, Total	1330-20-7	1.3 U	1.3	1.3 U	1.3	1.3 U	1.3	1.3 U	1.3
Semi-Volatile Organic Compounds (USEPA Method 8270C)									
Date Prepared									
Date Analyzed									
Analyte	**CAS No.**								
4-Chloroaniline	106-47-8								
2-Chlorophenol	95-57-8								
1,2-Dichlorobenzene	95-50-1								
1,4-Dichlorobenzene	106-46-7								
2,4-Dichlorophenol	120-83-2								
2-Methylphenol	95-48-7								
3 & 4 Methylphenol	65794-96-9								
2-Nitroaniline	88-74-4								
4-Nitroaniline	100-01-6								
Nitrobenzene	98-95-3								
Pentachlorophenol	87-86-5								
Phenol	108-95-2								
1,2,4-Trichlorobenzene	120-82-1								
2,4,5-Trichlorophenol	95-95-4								
2,4,6-Trichlorophenol	88-06-2								
Organochlorine Pesticides (USEPA Method 8081A)									
Date Prepared									
Date Analyzed									
Analyte	**CAS No.**								
All	-								
Chlorinated Herbicides (USEPA Method 8151A)									
Date Prepared									
Date Analyzed									
Analyte	**CAS No.**								
2,4-D	94-75-7								
Dichlorprop	120-36-5								
Pentachlorophenol	87-86-5								
2,4,5-T	93-76-5								
Total Organic Carbon (USEPA Method 9060)									
Date Analyzed									
Analyte	**CAS No.**								
Total Organic Carbon (TOC)	-								

Parameters not listed were not detected in any samples.
Results in ***bold italics*** denote detections.

Flags and Qualifiers
U - Analyte was not detected at or above the Method Detection Limit (MDL).
UJ - Analyte was not detected at or above the Method Detection Limit (MDL); the detection limit is estimated.
J - Result is an estimated value.
D - Compound analyzed at a dilution.

Checked by: MRF Date: 6/26/2006
Reviewed by: RMG Date:

Table 4

Summary of Validated QA/QC Sample Detections - Inorganics (March 2006 Sampling Event)

Site R Quarterly Groundwater Monitoring

Solutia, Inc. - Sauget, Illinois

Monitoring Well		DUP 1	MDL	DUP 2	MDL	RB 1	MDL	RB 2	MDL
Lab Sample ID		680-14516-2		680-14567-16		680-14567-4		680-14567-12	
Date Sampled		3/10/2006		3/15/2006		3/14/2006		3/15/2006	
Time Sampled		11:15		11:45		8:20		8:42	
Mercury (USEPA Method 7470A)									
Date Prepared		3/17/2006		3/21/2006		3/21/2006		3/21/2006	
Date Analyzed		3/20/2006		3/22/2006		3/22/2006		3/22/2006	
Analyte	**CAS No.**	**(mg/L)**		**(mg/L)**		**(mg/L)**		**(mg/L)**	
Mercury	7439-97-6	**NO DETECTIONS**							
Metals (USEPA Method 6010B)									
Date Prepared		3/15/2006		3/16/2006		3/16/2006		3/16/2006	
Date Analyzed		3/22/2006		3/21/2006		3/20/2006		3/21/2006	
Analyte	**CAS No.**	**(mg/L)**		**(mg/L)**		**(mg/L)**		**(mg/L)**	
Barium	7440-39-3	***0.096***	0.0012	***0.099***	0.0012	0.0012 U	0.0012	0.0012 U	0.0012
Chromium	7440-47-3	0.0013 U	0.00083	0.0017 U	0.00083	0.00083 U	0.00083	***0.0013 J***	0.00083
Lead	7439-92-1	***0.0024 J***	0.0022	0.0022 U	0.0022	0.0022 U	0.0022	0.0022 U	0.0022
Nickel	7440-02-0	***0.0067 J***	0.0018	***0.0094 J***	0.0018	0.0018 U	0.0018	0.0018 U	0.0018
Total Dissolved Solids (USEPA Method 160.1)									
Date Analyzed		3/13/2006		3/17/2006		3/15/2006		3/17/2006	
Analyte	**CAS No.**	**(mg/L)**		**(mg/L)**		**(mg/L)**		**(mg/L)**	
Total Dissolved Solids (TDS)	-	***820***	5.0	***1,600***	5.0	5.0 U	5.0	5.0 U	5.0

Parameters not listed were not detected in any samples.

Results in ***bold italics*** denote detections.

Samples are not filtered.

Flags and Qualifiers

U - Analyte was not detected at or above the Method Detection Limit (MDL).

J - Result is an estimated value.

The concentration is an approximate value.

Checked by: MRF Date: 6/26/2006

Reviewed by: RMG Date:

Table 4
Summary of Validated QA/QC Sample Detections - Inorganics (March 2006 Sampling Event)
Site R Quarterly Groundwater Monitoring
Solutia, Inc. - Sauget, Illinois

Monitoring Well		Trip Blank	MDL	Trip Blank	MDL	Trip Blank	MDL	Trip Blank	MDL
Lab Sample ID		680-14516-3		680-14567-3		680-14567-10		680-14567-17	
Date Sampled		3/10/2006		3/13/2006		3/14/2006		3/15/2006	
Time Sampled									
Mercury (USEPA Method 7470A)									
Date Prepared									
Date Analyzed									
Analyte	**CAS No.**								
Mercury	7439-97-6								
Metals (USEPA Method 6010B)									
Date Prepared									
Date Analyzed									
Analyte	**CAS No.**								
Barium	7440-39-3								
Chromium	7440-47-3								
Lead	7439-92-1								
Nickel	7440-02-0								
Total Dissolved Solids (USEPA Method 160.1)									
Date Analyzed									
Analyte	**CAS No.**								
Total Dissolved Solids (TDS)	-								

Parameters not listed were not detected in any samples.
Results in ***bold italics*** denote detections.
Samples are not filtered.

Flags and Qualifiers
U - Analyte was not detected at or above the Method Detection Limit (MDL).
J - Result is an estimated value.
The concentration is an approximate value.

Checked by: MRF Date: 6/26/2006
Reviewed by: RMG Date:

Table 1

Summary of Validated Groundwater Sample Detections - Organics (June 2006 Sampling Event)

Site R Quarterly Groundwater Monitoring

Solutia, Inc. - Sauget, Illinois

Monitoring Well		BWMW-1S	MDL	BWMW-1M	MDL	BWMW-1D	MDL	BWMW-2S	MDL	BWMW-2M	MDL	BWMW-2D	MDL
Lab Sample ID		680-17801-1		680-17801-4		680-17801-2		680-17928-2		680-17928-3		680-17928-4	
Date Sampled		6/20/2006		6/20/2006		6/20/2006		6/22/2006		6/22/2006		6/22/2006	
Time Sampled		13:10		17:05		13:15		10:20		10:30		12:15	
Volatile Organic Compounds (USEPA Method 8260B)													
Date Prepared		6/23/2006		6/23/2006		6/23/2006		6/27/2006		6/27/2006		6/27/2006	
Date Analyzed		6/23/2006		6/23/2006		6/23/2006		6/27/2006		6/27/2006		6/27/2006	
Analyte	**CAS No.**	**(ug/L)**		**(ug/L)**		**(ug/L)**		**(ug/L)**		**(ug/L)**		**(ug/L)**	
Acetone	67-64-1	150 UJ	150	150 UJ	150	150 UJ	150	15 UJ	15	***2,100 J***	370	***2,600 J***	370
Benzene	71-43-2	***2,400 D***	270	***83***	11	11 U	11	***91***	1.1	***540***	27	***500***	27
2-Butanone	78-93-3	14 U	14	14 U	14	14 U	14	1.4 UJ	1.4	***80 J***	36	***110 J***	36
Chlorobenzene	108-90-7	***57,000 D***	210	***1,700***	8.2	***5,000 D***	21	***210***	0.82	***5,600***	21	***2,900***	21
Chloroform	67-66-3	10 U	10	10 U	10	10 U	10	1.0 U	1.0	***49 J***	26	***49 J***	26
1,2-Dichloroethane	107-06-2	5.6 U	5.6	5.6 U	5.6	5.6 U	5.6	***1.2 J***	0.56	***2,300***	14	***1,600***	14
cis-1,2-Dichloroethene	156-59-2	11 U	11	11 U	11	11 U	11	1.1 U	1.1	***44 J***	28	***28 J***	28
Ethylbenzene	100-41-4	12 U	12	12 U	12	12 U	12	1.2 U	1.2	***170***	31	***92***	31
Methylene Chloride	75-09-2	8.8 U	8.8	8.8 U	8.8	8.8 U	8.8	0.88 U	0.88	***130 J***	22	***100 J***	22
4-Methyl-2-pentanone	108-10-1	9.0 U	9.0	9.0 U	9.0	9.0 U	9.0	0.9 U	0.9	***520***	23	***600***	23
Tetrachloroethene	127-18-4	15 U	15	15 U	15	15 U	15	1.5 U	1.5	***140***	38	***40 J***	38
Toluene	108-88-3	12 U	12	12 U	12	12 U	12	1.2 U	1.2	***1,600***	31	***720***	31
Trichloroethene	79-01-6	14 U	14	14 U	14	14 U	14	1.4 U	1.4	***92***	36	***69***	36
Xylenes, Total	1330-20-7	26 U	26	26 U	26	26 U	26	2.6 U	2.6	***1,300***	65	***590***	65
Semi-Volatile Organic Compounds (USEPA Method 8270C)													
Date Prepared		6/23/2006		6/23/2006		6/23/2006		6/27/2006		6/27/2006		6/27/2006	
Date Analyzed		6/30/2006		6/29/2006		6/29/2006		7/12/2006		7/12/2006		7/12/2006	
Analyte	**CAS No.**	**(ug/L)**		**(ug/L)**		**(ug/L)**		**(ug/L)**		**(ug/L)**		**(ug/L)**	
Benzo(g,h,i)perylene	191-24-2	***27 J***	9.4	0.94 UJ	0.94	0.94 UJ	0.94	4.9 UJ	4.9	9.6 UJ	9.6	49 UJ	49
Bis(2-ethylhexyl)phthalate	117-81-7	9.2 UJ	9.2	0.92 U	0.92	0.92 U	0.92	4.8 UJ	4.8	9.4 UJ	9.4	48 UJ	48
4-Chloroaniline	106-47-8	***78 J***	4.9	***240 JD***	2.5	***100***	0.49	***340 D***	2.5	***12,000 JD***	100	***28,000 JD***	500
2-Chlorophenol	95-57-8	***41 J***	6.8	***6.8 J***	0.68	***17***	0.68	3.5 UJ	3.5	***6,100 JD***	140	***9,500 JD***	700
Dibenz(a,h)anthracene	53-70-3	***22 J***	9.4	0.94 UJ	0.94	0.94 UJ	0.94	4.9 UJ	4.9	9.6 UJ	9.6	49 UJ	49
1,2-Dichlorobenzene	95-50-1	9.4 UJ	9.4	***4.7 J***	0.94	***1.8 J***	0.94	4.9 UJ	4.9	***510 J***	9.6	***770 J***	49
1,3-Dichlorobenzene	541-73-1	5.2 UJ	5.2	***1.9 J***	0.52	0.52 U	0.52	2.7 UJ	2.7	***17 J***	5.3	27 UJ	27
1,4-Dichlorobenzene	106-46-7	***5.3 J***	4.9	***60***	0.49	***6.1 J***	0.49	2.5 UJ	2.5	***250 J***	5.0	***300 J***	25
2,4-Dichlorophenol	120-83-2	6.2 UJ	6.2	0.62 U	0.62	***4.5 J***	0.62	3.2 UJ	3.2	***18,000 JD***	130	***15,000 JD***	640
Diethyl phthalate	84-66-2	5.6 UJ	5.6	0.56 U	0.56	0.56 U	0.56	2.9 UJ	2.9	***23 J***	5.7	29 UJ	29
Di-n-butyl phthalate	84-74-2	7.7 UJ	7.7	0.77 U	0.77	0.77 U	0.77	4.0 UJ	4.0	7.9 UJ	7.9	40 UJ	40
Indeno(1,2,3-cd)pyrene	193-39-5	***21 J***	5.8	0.58 UJ	0.58	0.58 UJ	0.58	3.0 UJ	3.0	6.0 UJ	6.0	30 UJ	30
3 & 4 Methylphenol	65794-96-9	6.2 UJ	6.2	0.62 U	0.62	0.62 U	0.62	3.2 UJ	3.2	***1,200 J***	6.3	***1,700 J***	32
Naphthalene	91-20-3	7.2 UJ	7.2	***7.8 J***	0.72	0.72 U	0.72	3.7 UJ	3.7	7.3 UJ	7.3	37 UJ	37
2-Nitroaniline	88-74-4	6.5 UJ	6.5	0.65 U	0.65	0.65 U	0.65	3.4 UJ	3.4	***390 J***	6.6	***330 J***	33
4-Nitroaniline	100-01-6	8.0 UJ	8.0	0.80 U	0.80	0.80 U	0.80	4.2 UJ	4.2	***240 J***	8.2	41 UJ	41
Nitrobenzene	98-95-3	8.8 UJ	8.8	0.88 U	0.88	0.88 U	0.88	4.6 UJ	4.6	***970 J***	8.9	***1,000 J***	45
Pentachlorophenol	87-86-5	24 UJ	24	2.4 U	2.4	2.4 U	2.4	12 UJ	12	***230 J***	24	120 UJ	120
Phenol	108-95-2	***11 J***	9.3	0.93 U	0.93	***1.2 J***	0.93	4.9 UJ	4.9	***25,000 JD***	190	***44,000 JD***	960
1,2,4-Trichlorobenzene	120-82-1	5.1 UJ	5.1	0.51 U	0.51	0.51 U	0.51	2.6 UJ	2.6	***61 J***	5.2	26 UJ	26
2,4,6-Trichlorophenol	88-06-2	6.6 UJ	6.6	0.66 U	0.66	0.66 U	0.66	3.4 UJ	3.4	***3,300 JD***	130	***3,000 J***	34

Table 1
Summary of Validated Groundwater Sample Detections - Organics (June 2006 Sampling Event)
Site R Quarterly Groundwater Monitoring
Solutia, Inc. - Sauget, Illinois

Monitoring Well		BWMW-1S	MDL	BWMW-1M	MDL	BWMW-1D	MDL	BWMW-2S	MDL	BWMW-2M	MDL	BWMW-2D	MDL
Lab Sample ID		680-17801-1		680-17801-4		680-17801-2		680-17928-2		680-17928-3		680-17928-4	
Date Sampled		6/20/2006		6/20/2006		6/20/2006		6/22/2006		6/22/2006		6/22/2006	
Time Sampled		13:10		17:05		13:15		10:20		10:30		12:15	
Organochlorine Pesticides (USEPA Method 8081A)													
Date Prepared		6/22/2006		6/22/2006		6/22/2006		6/26/2006		6/26/2006		6/26/2006	
Date Analyzed		6/26/2006		6/26/2006		6/26/2006		6/27/2006		6/27/2006		6/27/2006	
Analyte	**CAS No.**	**(ug/L)**		**(ug/L)**		**(ug/L)**		**(ug/L)**		**(ug/L)**		**(ug/L)**	
gamma-Chlordane	5566-34-7	0.013 U	0.013	0.012 UJ	0.012	0.013 U	0.013	0.052 UJ	0.052	0.26 U	0.26	0.26 U	0.26
Endosulfan I	959-98-8	0.0065 U	0.0065	0.0060 UJ	0.0060	0.0062 U	0.0062	0.026 UJ	0.026	0.13 U	0.13	0.13 U	0.13
Endosulfan Sulfate	1031-07-8	0.01 U	0.01	0.0094 UJ	0.0094	***0.034 JP***	0.0096	0.040 UJ	0.040	0.20 U	0.20	0.20 U	0.20
Methoxychlor	72-43-5	0.024 U	0.024	0.023 UJ	0.023	0.023 U	0.023	0.096 UJ	0.096	0.48 U	0.48	0.48 U	0.48
Chlorinated Herbicides (USEPA Method 8151A)													
Date Prepared		6/25/2006		6/25/2006		6/25/2006		6/29/2006		6/29/2006		6/29/2006	
Date Analyzed		6/27/2006		6/27/2006		6/27/2006		7/5/2006		7/6/2006		7/6/2006	
Analyte	**CAS No.**	**(ug/L)**		**(ug/L)**		**(ug/L)**		**(ug/L)**		**(ug/L)**		**(ug/L)**	
2,4-D	94-75-7	0.11 U	0.11	0.11 U	0.11	0.11 U	0.11	***0.46 JN***	0.11	***23,000 JD***	530	***16,000 JD***	540
Dichlorprop	120-36-5	***10***	0.12	0.029 U	0.029	***0.14 J***	0.029	***3.1 J***	0.029	***720 JN***	5.8	***1,100 J***	30
Pentachlorophenol	87-86-5	0.18 U	0.18	0.17 U	0.17	0.18 U	0.18	0.17 U	0.17	35 UJ	35	180 UJ	180
Silvex (2,4,5-TP)	93-72-1	***0.042 JN***	0.033	0.032 U	0.032	0.032 U	0.032	***0.098 JN***	0.032	6.4 UJ	6.4	33 UJ	33
2,4,5-T	93-76-5	0.079 U	0.079	0.077 U	0.077	0.078 U	0.078	***0.13 JN***	0.078	***150 JN***	16	***230 J***	79
Total Organic Carbon (USEPA Method 9060)													
Date Analyzed		6/30/2006		6/30/2006		6/30/2006		7/3/2006		7/3/2006		7/3/2006	
Analyte	**CAS No.**	**(mg/L)**		**(mg/L)**		**(mg/L)**		**(mg/L)**		**(mg/L)**		**(mg/L)**	
Total Organic Carbon (TOC)	-	***11***	0.50	***8.7***	0.50	***6.9***	0.50	***41***	0.50	***330***	5.0	***360***	5.0

Parameters not listed were not detected in any samples.
Results in ***bold italics*** denote detections.
NS - Well purged dry and sufficient water for sample collection had not recharged into the well within 24 hours; In accordance with the Field Sampling Plan (FSP; URS, 2003), a groundwater sample was not collected.

Flags and Qualifiers
U - Analyte was not detected at or above the Method Detection Limit (MDL).
UJ - Analyte was not detected at or above the Method Detection Limit (MDL); the detection limit is estimated.
J - Result is an estimated value.
JP - Result is an estimated value; The lower of the two values is reported when the % difference between the results of two GC columns is greater than 40%.
JN - Result is an estimated value; %D > 50% between columns for analyte concentration calculation.
D - Compound analyzed at a dilution.
JD - Compound analyzed at a dilution; Surrogate not calculated due to sample dilution (BWMW-1S, BWMW-2S, BWMW-2M and BWMW-2D); Surrogate not recovered in diluted sample (BWMW-1M, BWMW-3M, BWMW-3D and BWMW-4M); and Sample extracted outside of hold time (BWMW-4D).

Checked by: MRF Date: 8/31/2006
Reviewed by: RMG Date: 9/1/2006

Table 1

Summary of Validated Groundwater Sample Detections - Organics (June 2006 Sampling Event)

Site R Quarterly Groundwater Monitoring

Solutia, Inc. - Sauget, Illinois

Monitoring Well		BWMW-3S	MDL	BWMW-3M	MDL	BWMW-3D	MDL	BWMW-4S	MDL	BWMW-4M	MDL	BWMW-4D	MDL
Lab Sample ID		680-17841-4		680-17841-6		680-17841-5				680-17841-2		680-17841-1	
Date Sampled		6/21/2006		6/21/2006		6/21/2006		6/21/2006		6/21/2006		6/21/2006	
Time Sampled		13:35		15:35		13:45		dry		10:20		9:35	
Volatile Organic Compounds (USEPA Method 8260B)													
Date Prepared		6/23/2006		6/23/2006		6/23/2006				6/23/2006		6/23/2006	
Date Analyzed		6/23/2006		6/23/2006		6/23/2006				6/23/2006		6/23/2006	
Analyte	**CAS No.**	**(ug/L)**		**(ug/L)**		**(ug/L)**		**(ug/L)**		**(ug/L)**		**(ug/L)**	
Acetone	67-64-1	7.3 U	7.3	73 U	73	150 UJ	150	NS		7.3 U	7.3	15 UJ	15
Benzene	71-43-2	***94***	0.54	***170***	5.4	***72***	11	NS		***6.3***	0.54	***7.6***	1.1
2-Butanone	78-93-3	0.72 U	0.72	***27 J***	7.2	14 UJ	14	NS		0.72 U	0.72	1.4 UJ	1.4
Chlorobenzene	108-90-7	***330 D***	2.1	***4,400 D***	21	***1,900***	8.2	NS		***81***	0.41	***200***	0.82
Chloroform	67-66-3	0.52 U	0.52	5.2 U	5	10 U	10	NS		0.52 U	0.52	1.0 U	1.0
1,2-Dichloroethane	107-06-2	0.28 U	0.28	2.8 U	3	5.6 U	5.6	NS		0.28 U	0.28	0.56 U	0.56
cis-1,2-Dichloroethene	156-59-2	0.55 U	0.55	5.5 U	6	11 U	11	NS		0.55 U	0.55	1.1 U	1.1
Ethylbenzene	100-41-4	0.62 U	0.62	6.2 U	6	12 U	12	NS		0.62 U	0.62	1.2 U	1.2
Methylene Chloride	75-09-2	0.44 U	0.44	4.4 U	4	8.8 U	8.8	NS		0.44 U	0.44	0.88 U	0.88
4-Methyl-2-pentanone	108-10-1	0.45 U	0.45	4.5 U	5	9.0 U	9.0	NS		0.45 U	0.45	0.9 U	0.9
Tetrachloroethene	127-18-4	0.75 U	0.75	7.5 U	8	15 U	15	NS		0.75 U	0.75	1.5 U	1.5
Toluene	108-88-3	0.62 U	0.62	6.2 U	6	12 U	12	NS		0.62 U	0.62	1.2 U	1.2
Trichloroethene	79-01-6	0.71 U	0.71	7.1 U	7	14 U	14	NS		0.71 U	0.71	1.4 U	1.4
Xylenes, Total	1330-20-7	***2.3***	1.3	13 U	13	26 U	26	NS		1.3 U	1.3	***4.0***	2.6
Semi-Volatile Organic Compounds (USEPA Method 8270C)													
Date Prepared		6/23/2006		6/23/2006		6/23/2006				6/23/2006		6/23/2006	
Date Analyzed		6/29/2006		6/29/2006		6/29/2006				6/29/2006		6/29/2006	
Analyte	**CAS No.**	**(ug/L)**		**(ug/L)**		**(ug/L)**		**(ug/L)**		**(ug/L)**		**(ug/L)**	
Benzo(g,h,i)perylene	191-24-2	0.98 U	0.98	4.8 U	4.8	4.9 U	4.9	NS		0.97 U	0.97	0.96 UJ	0.96
Bis(2-ethylhexyl)phthalate	117-81-7	0.96 U	0.96	4.7 U	4.7	4.8 U	4.8	NS		0.95 U	0.95	***3.9 J***	0.94
4-Chloroaniline	106-47-8	***49***	0.51	***10,000 JD***	50	***25,000 JD***	100	NS		***380 JD***	5.0	***4,100 JD***	25
2-Chlorophenol	95-57-8	***0.91 J***	0.71	***7.1 J***	3.5	***5.2 J***	3.5	NS		***1.2 J***	0.70	0.69 UJ	0.68
Dibenz(a,h)anthracene	53-70-3	0.98 U	0.98	4.8 U	4.8	4.9 U	4.9	NS		0.97 U	0.97	0.96 UJ	0.96
1,2-Dichlorobenzene	95-50-1	***3.0 J***	0.98	***20 J***	4.8	***150***	4.9	NS		***6.9 J***	0.97	***1,800 JD***	47
1,3-Dichlorobenzene	541-73-1	0.54 U	0.54	2.6 U	2.6	2.7 U	2.7	NS		0.53 U	0.53	0.53 UJ	0.53
1,4-Dichlorobenzene	106-46-7	***9.4 J***	0.51	***220***	2.5	***87***	2.5	NS		***24***	0.50	***20 J***	0.50
2,4-Dichlorophenol	120-83-2	0.65 U	0.65	3.2 U	3.2	***5.4 J***	3.2	NS		0.64 U	0.64	***6.2 J***	0.63
Diethyl phthalate	84-66-2	0.58 U	0.58	2.8 U	2.8	2.9 U	2.9	NS		0.57 U	0.57	0.57 UJ	0.57
Di-n-butyl phthalate	84-74-2	0.80 U	0.80	3.9 U	3.9	4.0 U	4.0	NS		0.80 U	0.80	***1.0 J***	0.79
Indeno(1,2,3-cd)pyrene	193-39-5	0.61 U	0.61	3.0 U	3.0	3.0 U	3.0	NS		0.60 U	0.60	0.60 UJ	0.60
3 & 4 Methylphenol	65794-96-9	0.65 U	0.65	3.2 U	3.2	3.2 U	3.2	NS		0.64 U	0.64	***0.66 J***	0.63
Naphthalene	91-20-3	0.75 U	0.75	3.7 U	3.7	3.7 U	3.7	NS		0.74 U	0.74	***23 J***	0.73
2-Nitroaniline	88-74-4	0.68 U	0.68	3.3 U	3.3	3.3 U	3.3	NS		0.67 U	0.67	0.66 UJ	0.66
4-Nitroaniline	100-01-6	0.83 U	0.83	4.1 U	4.1	4.1 U	4.1	NS		0.83 U	0.83	0.82 UJ	0.82
Nitrobenzene	98-95-3	0.91 U	0.91	4.5 U	4.5	4.5 U	4.5	NS		0.90 U	0.90	***1.8 J***	0.89
Pentachlorophenol	87-86-5	2.5 U	2.5	12 U	12	12 U	12	NS		2.4 U	2.4	2.4 UJ	2.4
Phenol	108-95-2	***1.4 J***	0.97	4.8 U	4.8	4.8 U	4.8	NS		0.96 U	0.96	0.95 UJ	0.95
1,2,4-Trichlorobenzene	120-82-1	0.53 U	0.53	2.6 U	2.6	***4.2 J***	2.6	NS		0.52 U	0.52	***49 J***	0.52
2,4,6-Trichlorophenol	88-06-2	0.69 U	0.69	3.4 U	3.4	3.4 U	3.4	NS		0.68 U	0.68	***3.4 J***	0.67

Table 1
Summary of Validated Groundwater Sample Detections - Organics (June 2006 Sampling Event)
Site R Quarterly Groundwater Monitoring
Solutia, Inc. - Sauget, Illinois

Monitoring Well		BWMW-3S	MDL	BWMW-3M	MDL	BWMW-3D	MDL	BWMW-4S	MDL	BWMW-4M	MDL	BWMW-4D	MDL
Lab Sample ID		680-17841-4		680-17841-6		680-17841-5				680-17841-2		680-17841-1	
Date Sampled		6/21/2006		6/21/2006		6/21/2006		6/21/2006		6/21/2006		6/21/2006	
Time Sampled		13:35		15:35		13:45		dry		10:20		9:35	
Organochlorine Pesticides (USEPA Method 8081A)													
Date Prepared		6/23/2006		6/23/2006		6/23/2006				6/23/2006		6/23/2006	
Date Analyzed		6/28/2006		6/28/2006		6/28/2006				6/28/2006		6/28/2006	
Analyte	**CAS No.**	**(ug/L)**		**(ug/L)**		**(ug/L)**		**(ug/L)**		**(ug/L)**		**(ug/L)**	
gamma-Chlordane	5566-34-7	***0.067 P***	0.013	***0.053 JP***	0.013	***0.029 JP***	0.013	NS		***0.013 JP***	0.013	0.012 U	0.012
Endosulfan I	959-98-8	0.0063 U	0.0063	***0.023 JP***	0.0062	0.0062 UJ	0.0062	NS		0.0063 U	0.0063	0.0061 U	0.0061
Endosulfan Sulfate	1031-07-8	0.0098 U	0.0098	0.0096 UJ	0.0096	0.0096 UJ	0.0096	NS		0.0098 U	0.0098	0.0095 U	0.0095
Methoxychlor	72-43-5	0.024 U	0.024	***0.052 JP***	0.023	0.023 UJ	0.023	NS		0.024 U	0.024	0.023 U	0.023
Chlorinated Herbicides (USEPA Method 8151A)													
Date Prepared		6/26/2006		6/26/2006		6/26/2006				6/26/2006		6/26/2006	
Date Analyzed		6/27/2006		6/27/2006		6/27/2006				6/27/2006		6/27/2006	
Analyte	**CAS No.**	**(ug/L)**		**(ug/L)**		**(ug/L)**		**(ug/L)**		**(ug/L)**		**(ug/L)**	
2,4-D	94-75-7	0.11 U	0.11	0.11 U	0.11	0.11 UJ	0.11	NS		0.11 U	0.11	***0.42 JP***	0.11
Dichlorprop	120-36-5	0.029 U	0.029	***0.35 JP***	0.029	0.029 UJ	0.029	NS		0.030 U	0.030	0.030 U	0.030
Pentachlorophenol	87-86-5	0.17 U	0.17	0.17 U	0.17	0.18 U	0.17	NS		0.18 U	0.18	***1.5 J***	0.18
Silvex (2,4,5-TP)	93-72-1	0.032 U	0.032	0.032 U	0.032	0.032 U	0.032	NS		0.033 U	0.033	0.033 U	0.033
2,4,5-T	93-76-5	0.078 U	0.078	0.078 U	0.078	0.078 U	0.078	NS		0.080 U	0.080	***0.37 J***	0.080
Total Organic Carbon (USEPA Method 9060)													
Date Analyzed		7/4/2006		7/4/2006		7/4/2006				7/4/2006		7/4/2006	
Analyte	**CAS No.**	**(mg/L)**		**(mg/L)**		**(mg/L)**		**(mg/L)**		**(mg/L)**		**(mg/L)**	
Total Organic Carbon (TOC)	-	***19***	0.50	***50***	0.50	***32***	0.50	NS		***4.4***	0.50	***14***	0.50

Parameters not listed were not detected in any samples.
Results in ***bold italics*** denote detections.
NS - Well purged dry and sufficient water for sample collection had not recharged into the well within 24 hours; In accordance with the Field Sampling Plan (FSP; URS, 2003), a groundwater sample was not collected.

Flags and Qualifiers
U - Analyte was not detected at or above the Method Detection Limit (MDL).
UJ - Analyte was not detected at or above the Method Detection Limit (MDL); the detection limit is estimated.
J - Result is an estimated value.
JP - Result is an estimated value; The lower of the two values is reported when the % difference between the results of two GC columns is greater than 40%.
JN - Result is an estimated value; %D > 50% between columns for analyte concentration calculation.
D - Compound analyzed at a dilution.
JD - Compound analyzed at a dilution; Surrogate not calculated due to sample dilution (BWMW-1S, BWMW-2S, BWMW-2M and BWMW-2D); Surrogate not recovered in diluted sample (BWMW-1M, BWMW-3M, BWMW-3D and BWMW-4M); and sample extracted outside of hold time (BWMW-4D).

Checked by: MRF Date: 8/31/2006
Reviewed by: RMG Date: 9/1/2006

Table 2
Summary of Validated Groundwater Sample Detections - Inorganics (June 2006 Sampling Event)
Site R Quarterly Groundwater Monitoring
Solutia, Inc. - Sauget, Illinois

Monitoring Well		BWMW-1S	MDL	BWMW-1M	MDL	BWMW-1D	MDL	BWMW-2S	MDL	BWMW-2M	MDL	BWMW-2D	MDL
Lab Sample ID		680-17801-1		680-17801-4		680-17801-2		680-17928-2		680-17928-3		680-17928-4	
Date Sampled		6/20/2006		6/20/2006		6/20/2006		6/22/2006		6/22/2006		6/22/2006	
Time Sampled		13:10		17:05		13:15		10:20		10:30		12:15	
Mercury (USEPA Method 7470A)													
Date Prepared		6/27/2006		6/27/2006		6/27/2006		6/30/2006		6/30/2006		6/30/2006	
Date Analyzed		6/27/2006		6/27/2006		6/27/2006		7/3/2006		7/3/2006		7/3/2006	
Analyte	**CAS No.**	**(mg/L)**		**(mg/L)**		**(mg/L)**		**(mg/L)**		**(mg/L)**		**(mg/L)**	
Mercury	7439-97-6	**NO DETECTIONS**											
Metals (USEPA Method 6010B)													
Date Prepared		6/29/2006		6/29/2006		6/29/2006		6/29/2006		6/29/2006		6/29/2006	
Date Analyzed		7/3/2006		7/2/2006		7/2/2006		7/2/2006		7/2/2006		7/2/2006	
Analyte	**CAS No.**	**(mg/L)**		**(mg/L)**		**(mg/L)**		**(mg/L)**		**(mg/L)**		**(mg/L)**	
Arsenic	7440-38-2	***0.12***	0.0042	0.0042 U	0.0042	***0.0047 J***	0.0042	***0.022 J***	0.0042	0.0042 U	0.0042	0.0042 U	0.0042
Barium	7440-39-3	***0.24***	0.0012	***0.59***	0.0012	***0.63***	0.0012	***0.39***	0.0012	***0.088 J***	0.0012	***0.090 J***	0.0012
Copper	7440-50-8	***0.030***	0.0017	0.0017 U	0.0017	0.0017 U	0.0017	***0.0039 J***	0.0017	0.0017 U	0.0017	0.0017 U	0.0017
Lead	7439-92-1	***0.0053 J***	0.0022	0.0022 U	0.0022	***0.0059 J***	0.0022	0.0022 U	0.0022	0.0022 U	0.0022	0.0022 U	0.0022
Nickel	7440-02-0	***0.012 J***	0.0018	0.0018 U	0.0018	0.0018 U	0.0018	***0.0068 J***	0.0018	***0.024 J***	0.0018	***0.012 J***	0.0018
Total Dissolved Solids (USEPA Method 160.1)													
Date Analyzed		6/22/2006		6/22/2006		6/22/2006		6/28/2006		6/28/2006		6/28/2006	
Analyte	**CAS No.**	**(mg/L)**		**(mg/L)**		**(mg/L)**		**(mg/L)**		**(mg/L)**		**(mg/L)**	
Total Dissolved Solids (TDS)	-	***900***	5.0	***1,100***	5.0	***870***	5.0	***1,600***	5.0	***1,600***	5.0	***1,800***	5.0

Parameters not listed were not detected in any samples.
Results in ***bold italics*** denote detections.
NS - Well purged dry and sufficient water for sample collection had not recharged into the well within 24 hours; In accordance with the Field Sampling Plan (FSP; URS, 2003), a groundwater sample was not collected.
Samples are not filtered.
Flags and Qualifiers
U - Analyte was not detected at or above the Method Detection Limit (MDL).
J - Result is an estimated value.

Checked by: MRF Date: 8/31/2006
Reviewed by: RMG Date: 9/1/2006

Table 2
Summary of Validated Groundwater Sample Detections - Inorganics (June 2006 Sampling Event)
Site R Quarterly Groundwater Monitoring
Solutia, Inc. - Sauget, Illinois

Monitoring Well		BWMW-3S	MDL	BWMW-3M	MDL	BWMW-3D	MDL	BWMW-4S	MDL	BWMW-4M	MDL	BWMW-4D	MDL
Lab Sample ID		680-17841-4		680-17841-6		680-17841-5				680-17841-2		680-17841-1	
Date Sampled		6/21/2006		6/21/2006		6/21/2006		6/21/2006		6/21/2006		6/21/2006	
Time Sampled		13:35		15:35		13:45		dry		10:20		9:35	
Mercury (USEPA Method 7470A)													
Date Prepared		6/29/2006		6/29/2006		6/29/2006				6/29/2006		6/29/2006	
Date Analyzed		7/3/2006		7/3/2006		7/3/2006				7/3/2006		7/3/2006	
Analyte	**CAS No.**	(mg/L)		(mg/L)		(mg/L)		(mg/L)		(mg/L)		(mg/L)	
Mercury	7439-97-6	**NO DETECTIONS**						NS		**NO DETECTIONS**			
Metals (USEPA Method 6010B)													
Date Prepared		6/29/2006		6/29/2006		6/29/2006				6/29/2006		6/29/2006	
Date Analyzed		7/2/2006		7/2/2006		7/2/2006				7/2/2006		7/2/2006	
Analyte	**CAS No.**	(mg/L)		(mg/L)		(mg/L)		(mg/L)		(mg/L)		(mg/L)	
Arsenic	7440-38-2	***0.029***	0.0042	0.0042 U	0.0042	***0.0053 J***	0.0042	NS		0.0042 U	0.0042	0.0042 U	0.0042
Barium	7440-39-3	***0.35***	0.0012	***0.84***	0.0012	***0.21***	0.0012	NS		***0.24***	0.0012	***0.11***	0.0012
Copper	7440-50-8	***0.0018 J***	0.0017	0.0017 U	0.0017	0.0017 U	0.0017	NS		0.0017 U	0.0017	0.0017 U	0.0017
Lead	7439-92-1	0.0022 U	0.0022	0.0022 U	0.0022	0.0022 U	0.0022	NS		0.0022 U	0.0022	0.0022 U	0.0022
Nickel	7440-02-0	***0.0025 J***	0.0018	***0.0050 J***	0.0018	***0.0024 J***	0.0018	NS		0.0018 U	0.0018	***0.0076 J***	0.0018
Total Dissolved Solids (USEPA Method 160.1)													
Date Analyzed		6/27/2006		6/27/2006		6/27/2006				6/27/2006		6/27/2006	
Analyte	**CAS No.**	(mg/L)		(mg/L)		(mg/L)		(mg/L)		(mg/L)		(mg/L)	
Total Dissolved Solids (TDS)	-	***1,600***	5.0	***1,400***	5.0	***1,500***	5.0	NS		***610***	5.0	***620***	5.0

Parameters not listed were not detected in any samples.
Results in ***bold italics*** denote detections.
NS - Well purged dry and sufficient water for sample collection had not recharged into the well within 24 hours; In accordance with the Field Sampling Plan (FSP; URS, 2003), a groundwater sample was not collected.
Samples are not filtered.

Flags and Qualifiers
U - Analyte was not detected at or above the Method Detection Limit (MDL).
J - Result is an estimated value.

Checked by: MRF Date: 8/31/2006
Reviewed by: RMG Date: 9/1/2006

Table 3
Summary of Validated QA/QC Sample Detections - Organics (June 2006 Sampling Event)
Site R Quarterly Groundwater Monitoring
Solutia, Inc. - Sauget, Illinois

Monitoring Well		DUP 1	MDL	DUP 2	MDL	RB 1	MDL	RB 2	MDL
Lab Sample ID		680-17801-5		680-17841-7		680-17841-3		680-17928-1	
Date Sampled		6/20/2006		6/21/2006		6/21/2006		6/22/2006	
Time Sampled		17:05		13:45		11:30		9:10	
Volatile Organic Compounds (USEPA Method 8260B)									
Date Prepared		6/23/2006		6/26/2006		6/23/2006		6/27/2006	
Date Analyzed		6/23/2006		6/26/2006		6/23/2006		6/27/2006	
Analyte	**CAS No.**	**(ug/L)**		**(ug/L)**		**(ug/L)**		**(ug/L)**	
Benzene	71-43-2	***76***	11	***74***	11	0.54 U	0.54	0.54 U	0.54
Chlorobenzene	108-90-7	***1,200***	8.2	***2,400***	8.2	0.41 U	0.41	0.41 U	0.41
Toluene	108-88-3	12 U	12	12 U	12	0.62 U	0.62	***1.6***	0.62
Semi-Volatile Organic Compounds (USEPA Method 8270C)									
Date Prepared		6/23/2006		6/23/2006		6/23/2006		6/27/2006	
Date Analyzed		6/29/2006		6/29/2006		6/29/2006		7/7/2006	
Analyte	**CAS No.**	**(ug/L)**		**(ug/L)**		**(ug/L)**		**(ug/L)**	
4-Chloroaniline	106-47-8	***240 D***	2.5	***26,000 D***	100	0.51 U	0.51	0.52 U	0.52
2-Chlorophenol	95-57-8	***7.4 J***	0.68	***4.7 J***	3.5	0.71 U	0.71	0.72 U	0.72
1,2-Dichlorobenzene	95-50-1	***4.6 J***	0.94	***140***	4.8	0.98 U	0.98	1.0 U	1.0
1,3-Dichlorobenzene	541-73-1	***1.9 J***	0.52	***4.2 J***	2.6	0.54 U	0.54	0.55 U	0.55
1,4-Dichlorobenzene	106-46-7	***62***	0.49	***82***	2.5	0.51 U	0.51	0.52 U	0.52
2,4-Dichlorophenol	120-83-2	0.62 U	0.62	***5.0 J***	3.2	0.65 U	0.65	0.66 U	0.66
Fluorene	86-73-7	***1.3 J***	0.52	2.6 U	2.6	0.54 U	0.54	0.55 U	0.55
Phenol	108-95-2	***2.3 J***	0.93	4.8 U	4.8	0.97 U	0.97	0.99 U	0.99
1,2,4-Trichlorobenzene	120-82-1	0.51 U	0.51	***4.2 J***	2.6	0.53 U	0.53	0.54 U	0.54
2,4,6-Trichlorophenol	88-06-2	0.66 U	0.66	3.4 U	3.4	0.69 U	0.69	0.70 U	0.70
Organochlorine Pesticides (USEPA Method 8081A)									
Date Prepared		6/22/2006		6/23/2006		6/23/2006		6/26/2006	
Date Analyzed		6/26/2006		6/28/2006		6/28/2006		6/27/2006	
Analyte	**CAS No.**	**(ug/L)**		**(ug/L)**		**(ug/L)**		**(ug/L)**	
gamma-Chlordane	5566-34-7	0.012 U	0.012	***0.022 JP***	0.013	0.013 U	0.013	0.013 U	0.013
Chlorinated Herbicides (USEPA Method 8151A)									
Date Prepared		6/25/2006		6/26/2006		6/26/2006		6/29/2006	
Date Analyzed		6/27/2006		6/27/2006		6/27/2006		7/5/2006	
Analyte	**CAS No.**	**(ug/L)**		**(ug/L)**		**(ug/L)**		**(ug/L)**	
2,4-D	94-75-7	0.11 U	0.11	***0.3 JP***	0.10	0.11 U	0.11	0.11 U	0.11
Dichlorprop	120-36-5	0.029 U	0.029	***0.14 JP***	0.029	0.030 U	0.030	0.029 U	0.029
2,4,5-T	93-76-5	0.077 U	0.077	***0.37 J***	0.076	0.080 U	0.080	0.078 U	0.078
Total Organic Carbon (USEPA Method 9060)									
Date Analyzed		6/30/2006		7/4/2006		7/4/2006		7/3/2006	
Analyte	**CAS No.**	**(mg/L)**		**(mg/L)**		**(mg/L)**		**(mg/L)**	
Total Organic Carbon (TOC)	-	***8.8***	0.50	***33***	0.50	0.50 U	0.50	0.50 U	0.50

Parameters not listed were not detected in any samples.
Results in ***bold italics*** denote detections.

Flags and Qualifiers
U - Analyte was not detected at or above the Method Detection Limit (MDL).
UJ - Analyte was not detected at or above the Method Detection Limit (MDL); the detection limit is estimated.
J - Result is an estimated value.
JP - Result is an estimated value; The lower of the two values is reported when the % difference between the results of two GC columns is greater than 40%.
D - Compound analyzed at a dilution.

Table 3
Summary of Validated QA/QC Sample Detections - Organics (June 2006 Sampling Event)
Site R Quarterly Groundwater Monitoring
Solutia, Inc. - Sauget, Illinois

Monitoring Well	DUP 1	MDL	DUP 2	MDL	RB 1	MDL	RB 2	MDL
Lab Sample ID	680-17801-5		680-17841-7		680-17841-3		680-17928-1	
Date Sampled	6/20/2006		6/21/2006		6/21/2006		6/22/2006	
Time Sampled	17:05		13:45		11:30		9:10	
	Checked by:	MRF		Date:	8/31/2006			
	Reviewed by:	RMG		Date:	9/1/2006			

Table 3
Summary of Validated QA/QC Sample Detections - Organics (June 2006 Sampling Event)
Site R Quarterly Groundwater Monitoring
Solutia, Inc. - Sauget, Illinois

Monitoring Well		FB 1	MDL	FB 2	MDL	Trip Blank	MDL	Trip Blank	MDL	Trip Blank	MDL
Lab Sample ID		680-17801-3		680-17928-5		680-17801-6		680-17841-8		680-17928-6	
Date Sampled		6/20/2006		6/22/2006		6/20/2006		6/21/2006		6/22/2006	
Time Sampled		16:30		13:30							
Volatile Organic Compounds (USEPA Method 8260B)											
Date Prepared		6/23/2006		6/27/2006		6/23/2006		6/23/2006		6/27/2006	
Date Analyzed		6/23/2006		6/27/2006		6/23/2006		6/23/2006		6/27/2006	
Analyte	**CAS No.**	**(ug/L)**		**(ug/L)**		**(ug/L)**		**(ug/L)**		**(ug/L)**	
Benzene	71-43-2	0.54 U	0.54	0.54 U	0.54	0.54 U	0.54	0.54 U	0.54	0.54 U	0.54
Chlorobenzene	108-90-7	0.41 U	0.41	0.41 U	0.41	0.41 U	0.41	0.41 U	0.41	0.41 U	0.41
Toluene	108-88-3	***1.5***	0.62	***1.3***	0.62	0.62 U	0.62	0.62 U	0.62	0.62 U	0.62
Semi-Volatile Organic Compounds (USEPA Method 8270C)											
Date Prepared		6/23/2006		6/27/2006							
Date Analyzed		6/29/2006		7/7/2006							
Analyte	**CAS No.**	**(ug/L)**		**(ug/L)**							
4-Chloroaniline	106-47-8	0.49 U	0.49	***4.7 J***	0.50						
2-Chlorophenol	95-57-8	0.68 U	0.68	***1.4 J***	0.69						
1,2-Dichlorobenzene	95-50-1	0.94 U	0.94	0.95 U	0.95						
1,3-Dichlorobenzene	541-73-1	0.52 U	0.52	0.52 U	0.52						
1,4-Dichlorobenzene	106-46-7	0.49 U	0.49	0.50 U	0.50						
2,4-Dichlorophenol	120-83-2	0.62 U	0.62	***2.5 J***	0.63						
Fluorene	86-73-7	0.52 U	0.52	0.52 U	0.52						
Phenol	108-95-2	0.93 U	0.93	***7.4 J***	0.94						
1,2,4-Trichlorobenzene	120-82-1	0.51 U	0.51	0.51 U	0.51						
2,4,6-Trichlorophenol	88-06-2	0.66 U	0.66	***1.4 J***	0.67						
Organochlorine Pesticides (USEPA Method 8081A)											
Date Prepared		6/22/2006		6/26/2006							
Date Analyzed		6/26/2006		6/27/2006							
Analyte	**CAS No.**	**(ug/L)**		**(ug/L)**							
gamma-Chlordane	5566-34-7	0.013 U	0.013	0.013 U	0.013						
Chlorinated Herbicides (USEPA Method 8151A)											
Date Prepared		6/25/2006		6/29/2006							
Date Analyzed		6/27/2006		7/5/2006							
Analyte	**CAS No.**	**(ug/L)**		**(ug/L)**							
2,4-D	94-75-7	0.11 U	0.11	***0.67***	0.11						
Dichlorprop	120-36-5	0.029 U	0.029	0.029 U	0.029						
2,4,5-T	93-76-5	0.077 U	0.077	0.077 U	0.077						
Total Organic Carbon (USEPA Method 9060)											
Date Analyzed		6/30/2006		7/3/2006							
Analyte	**CAS No.**	**(mg/L)**		**(mg/L)**							
Total Organic Carbon (TOC)	-	0.50 U	0.50	0.50 U	0.50						

Parameters not listed were not detected in any samples.
Results in ***bold italics*** denote detections.

Flags and Qualifiers
U - Analyte was not detected at or above the Method Detection Limit (MDL).
UJ - Analyte was not detected at or above the Method Detection Limit (MDL); the detection limit is estimated.
J - Result is an estimated value.
JP - Result is an estimated value; The lower of the two values is reported when the % difference between the results of two GC columns is greater than 40%.
D - Compound analyzed at a dilution.

Table 3
Summary of Validated QA/QC Sample Detections - Organics (June 2006 Sampling Event)
Site R Quarterly Groundwater Monitoring
Solutia, Inc. - Sauget, Illinois

Monitoring Well	FB 1	MDL	FB 2	MDL	Trip Blank	MDL	Trip Blank	MDL	Trip Blank	MDL
Lab Sample ID	680-17801-3		680-17928-5		680-17801-6		680-17841-8		680-17928-6	
Date Sampled	6/20/2006		6/22/2006		6/20/2006		6/21/2006		6/22/2006	
Time Sampled	16:30		13:30							
	Checked by:	MRF		Date:	8/31/2006					
	Reviewed by:	RMG		Date:	9/1/2006					

Table 4

Summary of Validated QA/QC Sample Detections - Inorganics (June 2006 Sampling Event)

Site R Quarterly Groundwater Monitoring

Solutia, Inc. - Sauget, Illinois

Monitoring Well		DUP 1	MDL	DUP 2	MDL	RB 1	MDL	RB 2	MDL
Lab Sample ID		680-17801-5		680-17841-7		680-17841-3		680-17928-1	
Date Sampled		6/20/2006		6/21/2006		6/21/2006		6/22/2006	
Time Sampled		17:05		13:45		11:30		9:10	
Mercury (USEPA Method 7470A)									
Date Prepared		6/27/2006		6/29/2006		6/29/2006		6/30/2006	
Date Analyzed		6/27/2006		7/3/2006		7/3/2006		7/3/2006	
Analyte	**CAS No.**	**(mg/L)**		**(mg/L)**		**(mg/L)**		**(mg/L)**	
Mercury	7439-97-6	**NO DETECTIONS**							
Metals (USEPA Method 6010B)									
Date Prepared		6/29/2006		6/29/2006		6/29/2006		6/29/2006	
Date Analyzed		7/2/2006		7/2/2006		7/2/2006		7/2/2006	
Analyte	**CAS No.**	**(mg/L)**		**(mg/L)**		**(mg/L)**		**(mg/L)**	
Arsenic	7440-38-2	0.0042 U	0.0042	***0.0091 J***	0.0042	0.0042 U	0.0042	0.0042 U	0.0042
Barium	7440-39-3	***0.60***	0.0012	***0.19***	0.0012	0.0012 U	0.0012	0.0012 U	0.0012
Lead	7439-92-1	0.0022 U	0.0022	0.0022 U	0.0022	***0.0025 J***	0.0022	0.0022 U	0.0022
Nickel	7440-02-0	0.0018 U	0.0018	***0.0021 J***	0.0018	0.0018 U	0.0018	0.0018 U	0.0018
Total Dissolved Solids (USEPA Method 160.1)									
Date Analyzed		6/22/2006		6/27/2006		6/27/2006		6/28/2006	
Analyte	**CAS No.**	**(mg/L)**		**(mg/L)**		**(mg/L)**		**(mg/L)**	
Total Dissolved Solids (TDS)	-	***1,100***	5.0	***1,500***	5.0	5.0 U	5.0	5.0 U	5.0

Parameters not listed were not detected in any samples.

Results in ***bold italics*** denote detections.

Samples are not filtered.

Flags and Qualifiers

U - Analyte was not detected at or above the Method Detection Limit (MDL).

J - Result is an estimated value.

Checked by: MRF Date: 8/31/2006

Reviewed by: RMG Date: 9/1/2006

Table 4

Summary of Validated QA/QC Sample Detections - Inorganics (June 2006 Sampling Event)

Site R Quarterly Groundwater Monitoring

Solutia, Inc. - Sauget, Illinois

Monitoring Well		FB 1	MDL	FB 2	MDL	Trip Blank	MDL	Trip Blank	MDL	Trip Blank	MDL
Lab Sample ID		680-17801-3		680-17928-5		680-17801-6		680-17841-8		680-17928-6	
Date Sampled		6/20/2006		6/22/2006		6/20/2006		6/21/2006		6/22/2006	
Time Sampled		16:30		13:30							
Mercury (USEPA Method 7470A)											
Date Prepared		6/27/2006		6/30/2006							
Date Analyzed		6/27/2006		7/3/2006							
Analyte	**CAS No.**	**(mg/L)**		**(mg/L)**							
Mercury	7439-97-6	**NO DETECTIONS**									
Metals (USEPA Method 6010B)											
Date Prepared		6/29/2006		6/29/2006							
Date Analyzed		7/2/2006		7/2/2006							
Analyte	**CAS No.**	**(mg/L)**		**(mg/L)**							
Arsenic	7440-38-2	0.0042 U	0.0042	0.0042 U	0.0042						
Barium	7440-39-3	0.0012 U	0.0012	0.0012 U	0.0012						
Lead	7439-92-1	0.0022 U	0.0022	0.0022 U	0.0022						
Nickel	7440-02-0	0.0018 U	0.0018	0.0018 U	0.0018						
Total Dissolved Solids (USEPA Method 160.1)											
Date Analyzed		6/22/2006		6/28/2006							
Analyte	**CAS No.**	**(mg/L)**		**(mg/L)**							
Total Dissolved Solids (TDS)	-	5.0 U	5.0	5.0 U	5.0						

Parameters not listed were not detected in any samples.

Results in ***bold italics*** denote detections.

Samples are not filtered.

Flags and Qualifiers

U - Analyte was not detected at or above the Method Detection Limit (MDL).

J - Result is an estimated value.

Checked by: MRF Date: 8/31/2006

Reviewed by: RMG Date: 9/1/2006

Table 1
Summary of Validated Groundwater Sample Detections - Organics (September 2006 Sampling Event)
Site R Quarterly Groundwater Monitoring
Solutia, Inc. - Sauget, Illinois

Monitoring Well		BWMW-1S	MDL	BWMW-1M	MDL	BWMW-1D	MDL	BWMW-2S	MDL	BWMW-2M	MDL	BWMW-2D	MDL
Lab Sample ID		680-20473-3		680-20473-5		680-20473-4		680-20473-6		680-20473-8		680-20473-7	
Date Sampled		9/20/2006		9/20/2006		9/20/2006		9/20/2006		9/21/2006		9/20/2006	
Time Sampled		11:53		13:03		12:10		15:35		9:28		15:40	
Volatile Organic Compounds (USEPA Method 8260B)													
Date Prepared		9/23/2006		9/23/2006		9/23/2006		9/23/2006		9/23/2006		9/23/2006	
Date Analyzed		9/23/2006		9/23/2006		9/23/2006		9/23/2006		9/23/2006		9/23/2006	
Analyte	**CAS No.**	**(ug/L)**		**(ug/L)**		**(ug/L)**		**(ug/L)**		**(ug/L)**		**(ug/L)**	
Acetone	67-64-1	150 U	150	73 U	73	150 U	150	15 U	15	***4,100***	370	***3,500***	180
Benzene	71-43-2	***14,000 D***	540	***36***	5.4	***14 J***	11	***99***	1.1	***780***	27	***650***	14
Chlorobenzene	108-90-7	***140,000 D***	410	***1,700***	4.1	***7,700 D***	16	***260***	0.82	***6,000***	21	***3,700***	10
Chloroform	67-66-3	10 U	10	5.2 U	5.2	10 U	10	1.0 U	1.0	***71***	26	***45***	13
1,2-Dichloroethane	107-06-2	5.6 U	5.6	2.8 U	2.8	5.6 U	5.6	0.56 U	0.56	***3,200***	14	***2,000***	7.0
cis-1,2-Dichloroethene	156-59-2	11 U	11	5.5 U	5.5	11 U	11	1.1 U	1.1	***41 J***	28	***23 J***	14
Ethylbenzene	100-41-4	***12 J***	12	6.2 U	6.2	12 U	12	1.2 U	1.2	***180***	31	***120***	16
Methylene Chloride	75-09-2	8.8 U	8.8	4.4 U	4.4	8.8 U	8.8	0.88 U	0.88	***130 J***	22	***87 J***	11
4-Methyl-2-pentanone	108-10-1	9.0 U	9.0	4.5 U	4.5	9.0 U	9.0	0.9 U	0.9	***730***	23	***710***	11
Tetrachloroethene	127-18-4	15 U	15	7.5 U	7.5	15 U	15	1.5 U	1.5	***140***	38	***50***	19
Toluene	108-88-3	***32***	12	6.2 U	6.2	12 U	12	1.2 U	1.2	***1,700***	31	***800***	16
Trichloroethene	79-01-6	14 U	14	7.1 U	7.1	14 U	14	1.4 U	1.4	***110***	36	***72***	18
Xylenes, Total	1330-20-7	26 U	26	13 U	13	26 U	26	2.6 U	2.6	***1,400***	65	***710***	33
Semi-Volatile Organic Compounds (USEPA Method 8270C)													
Date Prepared		9/27/2006		9/27/2006		9/27/2006		10/2/2006		9/27/2006		9/27/2006	
Date Analyzed		9/29/2006		9/29/2006		9/29/2006		10/4/2006		9/29/2006		9/29/2006	
Analyte	**CAS No.**	**(ug/L)**		**(ug/L)**		**(ug/L)**		**(ug/L)**		**(ug/L)**		**(ug/L)**	
4-Chloroaniline	106-47-8	***50***	0.52	***29***	0.50	***130***	0.50	***170***	0.49	***11,000 JD***	110	***24,000 JD***	100
2-Chlorophenol	95-57-8	***100***	0.72	***7.0 J***	0.69	***56***	0.69	0.68 U	0.68	***8,900 JD***	150	***7,700 JD***	140
1,2-Dichlorobenzene	95-50-1	***2.3 J***	1.0	***5.8 J***	0.96	***2.5 J***	0.96	***2.4 J***	0.94	***490 J***	5.1	***440 J***	5.0
1,3-Dichlorobenzene	541-73-1	0.55 U	0.55	0.53 U	0.53	0.53 U	0.53	0.52 U	0.52	***17 J***	2.8	***10 J***	2.8
1,4-Dichlorobenzene	106-46-7	***3.5 J***	0.52	***49***	0.50	***5.3 J***	0.50	***1.1 J***	0.49	***240 J***	2.7	***180 J***	2.6
2,4-Dichlorophenol	120-83-2	0.66 U	0.66	0.63 U	0.63	***95***	0.63	0.62 U	0.62	***23,000 JD***	130	***10,000 JD***	130
Diethyl phthalate	84-66-2	0.59 U	0.59	0.57 U	0.57	0.57 U	0.57	***0.67 J***	0.56	***28 J***	3.0	***13 J***	3.0
Dimethyl phthalate	131-11-3	0.59 U	0.59	0.57 U	0.57	0.57 U	0.57	0.56 U	0.56	***53 J***	3.0	3.0 UJ	3.0
3 & 4 Methylphenol	65794-96-9	***1.9 J***	0.66	0.63 U	0.63	0.63 U	0.63	0.62 U	0.62	***1,200 JD***	130	***890 JD***	130
Naphthalene	91-20-3	0.76 U	0.76	0.73 U	0.73	0.73 U	0.73	0.72 U	0.72	3.9 UJ	3.9	3.8 UJ	3.8
2-Nitroaniline	88-74-4	0.69 U	0.69	0.66 U	0.66	0.66 U	0.66	0.65 U	0.65	***440 J***	3.5	***150 J***	3.5
Nitrobenzene	98-95-3	0.93 U	0.93	0.89 U	0.89	0.89 U	0.89	0.88 U	0.88	***540 JD***	190	***480 JE***	4.7
Pentachlorophenol	87-86-5	2.5 U	2.5	2.4 U	2.4	2.6 J	2.4	2.4 U	2.4	***280 J***	13	***53 J***	13
Phenol	108-95-2	***34***	0.99	0.95 U	0.95	0.95 U	0.95	0.95 U	0.95	***36,000 JD***	200	***32,000 JD***	200
1,2,4-Trichlorobenzene	120-82-1	0.54 U	0.54	0.52 U	0.52	0.52 U	0.52	0.51 U	0.51	***65 J***	2.8	***47 J***	2.7
2,4,6-Trichlorophenol	88-06-2	0.70 U	0.70	0.67 U	0.67	***33***	0.67	0.66 U	0.66	***3,600 JD***	140	***1,800 JD***	140

Table 1
Summary of Validated Groundwater Sample Detections - Organics (September 2006 Sampling Event)
Site R Quarterly Groundwater Monitoring
Solutia, Inc. - Sauget, Illinois

Monitoring Well		BWMW-1S	MDL	BWMW-1M	MDL	BWMW-1D	MDL	BWMW-2S	MDL	BWMW-2M	MDL	BWMW-2D	MDL
Lab Sample ID		680-20473-3		680-20473-5		680-20473-4		680-20473-6		680-20473-8		680-20473-7	
Date Sampled		9/20/2006		9/20/2006		9/20/2006		9/20/2006		9/21/2006		9/20/2006	
Time Sampled		11:53		13:03		12:10		15:35		9:28		15:40	
Organochlorine Pesticides (USEPA Method 8081A)													
Date Prepared		9/26/2006		9/26/2006		9/26/2006		9/26/2006		9/26/2006		9/26/2006	
Date Analyzed		9/27/2006		9/27/2006		9/27/2006		9/27/2006		9/27/2006		9/27/2006	
Analyte	**CAS No.**	**(ug/L)**		**(ug/L)**		**(ug/L)**		**(ug/L)**		**(ug/L)**		**(ug/L)**	
gamma-Chlordane	5566-34-7	0.013 UJ	0.013	0.013 U	0.013	0.013 UJ	0.013	0.013 UJ	0.013	0.065 UJ	0.065	0.065 UJ	0.065
4,4'-DDD	72-54-8	***0.012 JP***	0.011	0.011 U	0.011	0.011 UJ	0.011	0.011 UJ	0.011	0.055 UJ	0.055	0.055 UJ	0.055
Endosulfan I	959-98-8	0.0065 UJ	0.0065	0.0062 U	0.0062	0.0063 UJ	0.0063	0.0064 UJ	0.0064	0.032 UJ	0.032	0.032 UJ	0.032
Endosulfan Sulfate	1031-07-8	0.01 UJ	0.01	0.0096 U	0.0096	0.0098 UJ	0.0098	0.01 UJ	0.01	0.05 UJ	0.05	0.05 UJ	0.05
Endrin ketone	53494-70-5	0.016 UJ	0.016	0.015 U	0.015	0.016 UJ	0.016	0.016 UJ	0.016	0.08 UJ	0.08	0.08 UJ	0.08
Methoxychlor	72-43-5	0.024 UJ	0.024	0.023 U	0.023	0.024 UJ	0.024	0.024 UJ	0.024	0.12 UJ	0.12	0.12 UJ	0.12
Chlorinated Herbicides (USEPA Method 8151A)													
Date Prepared		9/25/2006		9/25/2006		9/25/2006		9/25/2006		9/25/2006		9/25/2006	
Date Analyzed		9/26/2006		9/26/2006		9/26/2006		9/26/2006		9/27/2006		9/27/2006	
Analyte	**CAS No.**	**(ug/L)**		**(ug/L)**		**(ug/L)**		**(ug/L)**		**(ug/L)**		**(ug/L)**	
2,4-D	94-75-7	0.11 U	0.11	0.11 U	0.11	***0.50 J***	0.11	0.11 U	0.11	***18,000 JD***	1,100	***10,000 JD***	550
Dichlorprop	120-36-5	***12 D***	0.15	0.029 U	0.029	***0.22 JP***	0.029	***1.4***	0.030	***1,600 JD***	30	***1,300 JD***	15
Pentachlorophenol	87-86-5	0.18 U	0.18	0.17 U	0.17	***0.62 J***	0.17	0.18 U	0.18	180 UJ	180	90 UJ	90
Silvex (2,4,5-TP)	93-72-1	0.033 U	0.033	0.032 U	0.032	0.032 U	0.032	***0.051 JP***	0.033	33 UJ	33	17 UJ	17
2,4,5-T	93-76-5	0.080 U	0.080	0.078 U	0.078	0.078 U	0.078	0.080 U	0.080	***290 JD***	80	***160 JD***	40
Total Organic Carbon (USEPA Method 9060)													
Date Analyzed		9/26/2006		9/26/2006		9/26/2006		9/26/2006		9/26/2006		9/26/2006	
Analyte	**CAS No.**	**(mg/L)**		**(mg/L)**		**(mg/L)**		**(mg/L)**		**(mg/L)**		**(mg/L)**	
Total Organic Carbon (TOC)	-	***15***	0.50	***7.4***	0.50	***12***	0.50	***39***	0.50	***450***	0.50	***310***	0.50

Parameters not listed were not detected in any samples.
Results in ***bold italics*** denote detections.
NS - Well purged dry and sufficient water for sample collection had not recharged into the well within 24 hours; In accordance with the Field Sampling Plan (FSP; URS, 2003), a groundwater sample was not collected.

Flags and Qualifiers
U - Analyte was not detected at or above the Method Detection Limit (MDL).
UJ - Analyte was not detected at or above the Method Detection Limit (MDL); the detection limit is estimated.
J - Result is an estimated value.
JP - Result is an estimated value; The lower of the two values is reported when the % difference between the results of two GC columns is greater than 40%.
JE - Result is an estimated value; Result exceeded calibration range and secondary dilution produced a non-detect value.
D - Compound analyzed at a dilution.
JD - Compound analyzed at a dilution; Surrogates not calculated due to sample dilution (BWMW-2M and BWMW-2D); Low surrogate recovery due to sample dilution (BWMW-2M, BWMW-2D, BWMW-3M, BWMW-3D and BWMW-4DDL); and High surrogate recovery >150% (BWMW-1D and BWMW-3D).

Checked by: MRF Date: 1/11/2007
Reviewed by: MNH Date: 1/12/2007

Table 1
Summary of Validated Groundwater Sample Detections - Organics (September 2006 Sampling Event)
Site R Quarterly Groundwater Monitoring
Solutia, Inc. - Sauget, Illinois

Monitoring Well		BWMW-3S	MDL	BWMW-3M	MDL	BWMW-3D	MDL	BWMW-4S	MDL	BWMW-4M	MDL	BWMW-4D	MDL
Lab Sample ID		680-20407-6		680-20407-8		680-20407-7		680-20473-9		680-20407-2		680-20407-1	
Date Sampled		9/19/2006		9/19/2006		9/19/2006		9/19/2006		9/18/2006		9/18/2006	
Time Sampled		11:20		15:00		12:55		9:35		15:20		13:20	
Volatile Organic Compounds (USEPA Method 8260B)													
Date Prepared		9/24/2006		9/26/2006		9/23/2006		9/23/2006		9/23/2006		9/23/2006	
Date Analyzed		9/24/2006		9/26/2006		9/23/2006		9/23/2006		9/23/2006		9/23/2006	
Analyte	**CAS No.**	**(ug/L)**		**(ug/L)**		**(ug/L)**		**(ug/L)**		**(ug/L)**		**(ug/L)**	
Acetone	67-64-1	15 U	15	73 U	73	150 U	150	7.3 U	7.3	7.3 U	7.3	15 U	15
Benzene	71-43-2	***93***	1.1	***40***	5.4	***70***	11	0.54 U	0.54	***4.6***	0.54	***9.7***	1.1
Chlorobenzene	108-90-7	***350***	0.82	***1,300***	4.1	***2,800***	8.2	***1.9***	0.41	***200***	0.41	***270***	0.82
Chloroform	67-66-3	1.0 U	1.0	5.2 U	5.2	10 U	10	0.52 U	0.52	0.52 U	0.52	1.0 U	1.0
1,2-Dichloroethane	107-06-2	0.56 U	0.56	2.8 U	2.8	5.6 U	5.6	0.28 U	0.28	0.28 U	0.28	0.56 U	0.56
cis-1,2-Dichloroethene	156-59-2	1.1 U	1.1	5.5 U	5.5	11 U	11	0.55 U	0.55	0.55 U	0.55	1.1 U	1.1
Ethylbenzene	100-41-4	1.2 U	1.2	6.2 U	6.2	***22***	12	0.62 U	0.62	***0.66 J***	0.62	***1.8 J***	1.2
Methylene Chloride	75-09-2	0.88 U	0.88	4.4 U	4.4	8.8 U	8.8	0.44 U	0.44	0.44 U	0.44	0.88 U	0.88
4-Methyl-2-pentanone	108-10-1	0.9 U	0.9	4.5 U	4.5	9.0 U	9.0	0.45 U	0.45	0.45 U	0.45	0.9 U	0.9
Tetrachloroethene	127-18-4	1.5 U	1.5	7.5 U	7.5	15 U	15	0.75 U	0.75	0.75 U	0.75	1.5 U	1.5
Toluene	108-88-3	1.2 U	1.2	6.2 U	6.2	***23***	12	0.62 U	0.62	0.62 U	0.62	1.2 U	1.2
Trichloroethene	79-01-6	1.4 U	1.4	7.1 U	7.1	14 U	14	0.71 U	0.71	0.71 U	0.71	1.4 U	1.4
Xylenes, Total	1330-20-7	***2.7 J***	2.6	13 U	13	***79***	26	1.3 U	1.3	1.3 U	1.3	***7.4***	2.6
Semi-Volatile Organic Compounds (USEPA Method 8270C)													
Date Prepared		9/22/2006		9/22/2006		9/22/2006				9/22/2006		9/22/2006	
Date Analyzed		9/26/2006		9/26/2006		9/26/2006				9/26/2006		9/26/2006	
Analyte	**CAS No.**	**(ug/L)**		**(ug/L)**		**(ug/L)**		**(ug/L)**		**(ug/L)**		**(ug/L)**	
4-Chloroaniline	106-47-8	***7.7 J***	0.52	***7,200 JD***	25	***8,900 JD***	27	NS		***140***	0.49	***880 JD***	5.2
2-Chlorophenol	95-57-8	***0.76 J***	0.72	***6.9 J***	3.5	***11 J***	3.7	NS		0.68 U	0.68	0.72 U	0.72
1,2-Dichlorobenzene	95-50-1	***4.7 J***	1.0	***27 J***	4.9	***150 J***	5.1	NS		***5.5 J***	0.94	***1,600 JD***	10
1,3-Dichlorobenzene	541-73-1	0.55 U	0.55	***19 J***	2.7	***3.0 J***	2.8	NS		***2.5 J***	0.52	0.55 U	0.55
1,4-Dichlorobenzene	106-46-7	***12***	0.52	***210 J***	2.5	***62 J***	2.7	NS		***20***	0.49	***46***	0.52
2,4-Dichlorophenol	120-83-2	0.66 U	0.66	3.2 UJ	3.2	***47 J***	3.4	NS		0.62 U	0.62	***3.8 J***	0.66
Diethyl phthalate	84-66-2	0.59 U	0.59	2.9 UJ	2.9	3.0 UJ	3.0	NS		0.56 U	0.56	0.59 U	0.59
Dimethyl phthalate	131-11-3	0.59 U	0.59	2.9 UJ	2.9	3.0 UJ	3.0	NS		0.56 U	0.56	0.59 U	0.59
3 & 4 Methylphenol	65794-96-9	***3.1 J***	0.66	3.2 UJ	3.2	3.4 UJ	3.4	NS		0.62 U	0.62	0.66 U	0.66
Naphthalene	91-20-3	0.76 U	0.76	3.7 UJ	3.7	3.9 UJ	3.9	NS		***5.0 J***	0.72	0.76 U	0.76
2-Nitroaniline	88-74-4	0.69 U	0.69	3.4 UJ	3.4	3.5 UJ	3.5	NS		0.65 U	0.65	0.69 U	0.69
Nitrobenzene	98-95-3	0.93 U	0.93	4.6 UJ	4.6	4.7 UJ	4.7	NS		0.88 U	0.88	0.93 U	0.93
Pentachlorophenol	87-86-5	2.5 U	2.5	12 UJ	12	13 UJ	13	NS		2.4 U	2.4	2.5 U	2.5
Phenol	108-95-2	***1.9 J***	0.99	4.9 UJ	4.9	5.1 UJ	5.1	NS		0.93 U	0.93	***1.1 J***	0.99
1,2,4-Trichlorobenzene	120-82-1	0.54 U	0.54	2.6 UJ	2.6	***3.3 J***	2.8	NS		0.51 U	0.51	***110***	0.54
2,4,6-Trichlorophenol	88-06-2	0.70 U	0.70	3.4 UJ	3.4	3.6 UJ	3.6	NS		0.66 U	0.66	***3.5 J***	0.70

Table 1
Summary of Validated Groundwater Sample Detections - Organics (September 2006 Sampling Event)
Site R Quarterly Groundwater Monitoring
Solutia, Inc. - Sauget, Illinois

Monitoring Well		BWMW-3S	MDL	BWMW-3M	MDL	BWMW-3D	MDL	BWMW-4S	MDL	BWMW-4M	MDL	BWMW-4D	MDL
Lab Sample ID		680-20407-6		680-20407-8		680-20407-7		680-20473-9		680-20407-2		680-20407-1	
Date Sampled		9/19/2006		9/19/2006		9/19/2006		9/19/2006		9/18/2006		9/18/2006	
Time Sampled		11:20		15:00		12:55		9:35		15:20		13:20	
Organochlorine Pesticides (USEPA Method 8081A)													
Date Prepared		9/22/2006		9/22/2006		9/22/2006				9/22/2006		9/22/2006	
Date Analyzed		9/25/2006		9/26/2006		9/25/2006				9/25/2006		9/25/2006	
Analyte	**CAS No.**	**(ug/L)**		**(ug/L)**		**(ug/L)**		**(ug/L)**		**(ug/L)**		**(ug/L)**	
gamma-Chlordane	5566-34-7	***0.024 JP***	0.013	***0.049 JP***	0.013	0.061 UJ	0.061	NS		0.013 U	0.013	0.013 U	0.013
4,4'-DDD	72-54-8	0.011 UJ	0.011	0.011 UJ	0.011	0.052 UJ	0.052	NS		0.011 U	0.011	0.011 U	0.011
Endosulfan I	959-98-8	0.0064 UJ	0.0064	***0.059 JP***	0.0063	***0.037 JP***	0.030	NS		***0.023 JP***	0.0063	***0.010 JP***	0.0064
Endosulfan Sulfate	1031-07-8	0.01 UJ	0.01	***0.013 JP***	0.0098	0.047 UJ	0.047	NS		0.0098 U	0.0098	0.01 U	0.01
Endrin ketone	53494-70-5	0.016 UJ	0.016	0.016 UJ	0.016	***0.16 JP***	0.075	NS		0.016 U	0.016	0.016 U	0.016
Methoxychlor	72-43-5	0.024 UJ	0.024	***0.062 JP***	0.024	0.11 UJ	0.11	NS		0.024 U	0.024	0.024 U	0.024
Chlorinated Herbicides (USEPA Method 8151A)													
Date Prepared		9/21/2006		9/21/2006		9/21/2006				9/21/2006		9/21/2006	
Date Analyzed		9/22/2006		9/22/2006		9/22/2006				9/22/2006		9/22/2006	
Analyte	**CAS No.**	**(ug/L)**		**(ug/L)**		**(ug/L)**		**(ug/L)**		**(ug/L)**		**(ug/L)**	
2,4-D	94-75-7	0.11 U	0.11	0.11 U	0.11	***6.7 JD***	0.22	NS		0.11 U	0.11	0.11 U	0.11
Dichlorprop	120-36-5	***0.30 J***	0.030	***0.31 JP***	0.030	***0.76 J***	0.030	NS		0.029 U	0.029	0.030 U	0.030
Pentachlorophenol	87-86-5	0.18 U	0.18	0.18 U	0.18	***0.47 J***	0.18	NS		0.18 U	0.18	***1.3***	0.18
Silvex (2,4,5-TP)	93-72-1	0.033 U	0.033	0.033 U	0.033	0.033 U	0.033	NS		0.032 U	0.032	0.033 U	0.033
2,4,5-T	93-76-5	0.08 U	0.080	0.079 U	0.079	***3.3 J***	0.080	NS		0.078 U	0.078	0.080 U	0.080
Total Organic Carbon (USEPA Method 9060)													
Date Analyzed		9/26/2006		9/26/2006		9/26/2006				9/26/2006		9/26/2006	
Analyte	**CAS No.**	**(mg/L)**		**(mg/L)**		**(mg/L)**		**(mg/L)**		**(mg/L)**		**(mg/L)**	
Total Organic Carbon (TOC)	-	***18***	0.50	***35***	0.50	***38***	0.50	NS		***4.7***	0.50	***7.0***	0.50

Parameters not listed were not detected in any samples.
Results in ***bold italics*** denote detections.
NS - Well purged dry and sufficient water for sample collection had not recharged into the well within 24 hours; In accordance with the Field Sampling Plan (FSP; URS, 2003), a groundwater sample was not collected.

Flags and Qualifiers
U - Analyte was not detected at or above the Method Detection Limit (MDL).
UJ - Analyte was not detected at or above the Method Detection Limit (MDL); the detection limit is estimated.
J - Result is an estimated value.
JP - Result is an estimated value; The lower of the two values is reported when the % difference between the results of two GC columns is greater than 40%.
JE - Result is an estimated value; Result exceeded calibration range and secondary dilution produced a non-detect value.
D - Compound analyzed at a dilution.
JD - Compound analyzed at a dilution; Surrogates not calculated due to sample dilution (BWMW-2M and BWMW-2D); Low surrogate recovery due to sample dilution (BWMW-2M, BWMW-2D, BWMW-3M, BWMW-3D and BWMW-4DDL); and High surrogate recovery >150% (BWMW-1D and BWMW-3D).

Checked by: MRF Date: 1/11/2007
Reviewed by: MNH Date: 1/12/2007

Table 2
Summary of Validated Groundwater Sample Detections - Inorganics (September 2006 Sampling Event)
Site R Quarterly Groundwater Monitoring
Solutia, Inc. - Sauget, Illinois

Monitoring Well		BWMW-1S	MDL	BWMW-1M	MDL	BWMW-1D	MDL	BWMW-2S	MDL	BWMW-2M	MDL	BWMW-2D	MDL
Lab Sample ID		680-20473-3		680-20473-5		680-20473-4		680-20473-6		680-20473-8		680-20473-7	
Date Sampled		9/20/2006		9/20/2006		9/20/2006		9/20/2006		9/21/2006		9/20/2006	
Time Sampled		11:53		13:03		12:10		15:35		9:28		15:40	
Mercury (USEPA Method 7470A)													
Date Prepared		9/26/2006		9/26/2006		9/26/2006		9/26/2006		9/26/2006		9/26/2006	
Date Analyzed		9/26/2006		9/26/2006		9/26/2006		9/26/2006		9/26/2006		9/26/2006	
Analyte	**CAS No.**	(mg/L)		(mg/L)		(mg/L)		(mg/L)		(mg/L)		(mg/L)	
Mercury	7439-97-6	NO DETECTIONS											
Metals (USEPA Method 6010B)													
Date Prepared		9/26/2006		9/26/2006		9/26/2006		9/26/2006		9/26/2006		9/26/2006	
Date Analyzed		9/26/2006		9/26/2006		9/26/2006		9/26/2006		9/26/2006		9/26/2006	
Analyte	**CAS No.**	(mg/L)		(mg/L)		(mg/L)		(mg/L)		(mg/L)		(mg/L)	
Arsenic	7440-38-2	***0.12***	0.0042	0.0042 U	0.0042	***0.0047 J***	0.0042	0.0042 U	0.0042	0.0042 U	0.0042	0.0042 U	0.0042
Barium	7440-39-3	***0.23 J***	0.0012	***0.49 J***	0.0012	***0.63 J***	0.0012	***0.31 J***	0.0012	***0.095 J***	0.0012	***0.17 J***	0.0012
Chromium	7440-47-3	***0.0036 J***	0.00083	***0.0009 J***	0.00083	***0.0018 J***	0.00083	***0.012 J***	0.00083	***0.0019 J***	0.00083	***0.0084 J***	0.00083
Copper	7440-50-8	***0.0018 J***	0.0017	0.0017 U	0.0017	0.0017 U	0.0017	***0.0031 J***	0.0017	0.0017 U	0.0017	***0.0029 J***	0.0017
Lead	7439-92-1	0.0022 U	0.0022	0.0022 U	0.0022	***0.0081 J***	0.0022	0.0022 U	0.0022	0.0022 U	0.0022	0.0022 U	0.0022
Nickel	7440-02-0	***0.0056 J***	0.0018	0.0018 U	0.0018	***0.0088 J***	0.0018	***0.0067 J***	0.0018	***0.024 J***	0.0018	***0.022 J***	0.0018
Total Dissolved Solids (USEPA Method 160.1)													
Date Analyzed		9/25/2006		9/25/2006		9/25/2006		9/25/2006		9/25/2006		9/25/2006	
Analyte	**CAS No.**	(mg/L)		(mg/L)		(mg/L)		(mg/L)		(mg/L)		(mg/L)	
Total Dissolved Solids (TDS)	-	***950***	10	***1,100***	10	***950***	10	***1,600***	10	***1,800***	10	***1,500***	10

Parameters not listed were not detected in any samples.
Results in ***bold italics*** denote detections.
NS - Well purged dry and sufficient water for sample collection had not recharged into the well within 24 hours; In accordance with the Field Sampling Plan (FSP; URS, 2003), a groundwater sample was not collected.
Samples are not filtered.

Flags and Qualifiers
U - Analyte was not detected at or above the Method Detection Limit (MDL).
J - Result is an estimated value.

Checked by: MRF Date: 1/11/2007
Reviewed by: MNH Date: 1/12/2007

Table 2
Summary of Validated Groundwater Sample Detections - Inorganics (September 2006 Sampling Event)
Site R Quarterly Groundwater Monitoring
Solutia, Inc. - Sauget, Illinois

Monitoring Well		BWMW-3S	MDL	BWMW-3M	MDL	BWMW-3D	MDL	BWMW-4S	MDL	BWMW-4M	MDL	BWMW-4D	MDL
Lab Sample ID		680-20407-6		680-20407-8		680-20407-7		680-20473-9		680-20407-2		680-20407-1	
Date Sampled		9/19/2006		9/19/2006		9/19/2006		9/19/2006		9/18/2006		9/18/2006	
Time Sampled		11:20		15:00		12:55		9:35		15:20		13:20	
Mercury (USEPA Method 7470A)													
Date Prepared		9/26/2006		9/26/2006		9/26/2006				9/26/2006		9/26/2006	
Date Analyzed		9/26/2006		9/26/2006		9/26/2006				9/26/2006		9/26/2006	
Analyte	**CAS No.**	**(mg/L)**		**(mg/L)**		**(mg/L)**		**(mg/L)**		**(mg/L)**		**(mg/L)**	
Mercury	7439-97-6	**NO DETECTIONS**						NS		**NO DETECTIONS**			
Metals (USEPA Method 6010B)													
Date Prepared		9/21/2006		9/21/2006		9/21/2006				9/21/2006		9/21/2006	
Date Analyzed		9/21/2006		9/21/2006		9/21/2006				9/21/2006		9/21/2006	
Analyte	**CAS No.**	**(mg/L)**		**(mg/L)**		**(mg/L)**		**(mg/L)**		**(mg/L)**		**(mg/L)**	
Arsenic	7440-38-2	***0.018***	0.0042	0.0042 U	0.0042	0.0042 U	0.0042	NS		0.0042 U	0.0042	0.0042 U	0.0042
Barium	7440-39-3	***0.36 J***	0.0012	***0.77 J***	0.0012	***0.25 J***	0.0012	NS		***0.27 J***	0.0012	***0.1 J***	0.0012
Chromium	7440-47-3	***0.015 J***	0.00083	***0.012 J***	0.00083	***0.006 J***	0.00083	NS		***0.0032 J***	0.00083	***0.0052 J***	0.00083
Copper	7440-50-8	***0.0076 J***	0.0017	***0.0064 J***	0.0017	***0.0021 J***	0.0017	NS		***0.002 J***	0.0017	***0.0036 J***	0.0017
Lead	7439-92-1	***0.003 J***	0.0022	0.0022 U	0.0022	0.0022 U	0.0022	NS		0.0022 U	0.0022	***0.0025 J***	0.0022
Nickel	7440-02-0	***0.017 J***	0.0018	***0.013 J***	0.0018	***0.0062 J***	0.0018	NS		***0.0037 J***	0.0018	***0.0061 J***	0.0018
Total Dissolved Solids (USEPA Method 160.1)													
Date Analyzed		9/21/2006		9/21/2006		9/21/2006				9/21/2006		9/21/2006	
Analyte	**CAS No.**	**(mg/L)**		**(mg/L)**		**(mg/L)**		**(mg/L)**		**(mg/L)**		**(mg/L)**	
Total Dissolved Solids (TDS)	-	***1,500***	10	***1,400***	10	***1,700***	10	NS		***780***	5.0	***590***	5.0

Parameters not listed were not detected in any samples.
Results in ***bold italics*** denote detections.
NS - Well purged dry and sufficient water for sample collection had not recharged into the well within 24 hours; In accordance with the Field Sampling Plan (FSP; URS, 2003), a groundwater sample was not collected.
Samples are not filtered.

Flags and Qualifiers
U - Analyte was not detected at or above the Method Detection Limit (MDL).
J - Result is an estimated value.

Checked by: MRF Date: 1/11/2007
Reviewed by: MNH Date: 1/12/2007

Table 3

Summary of Validated QA/QC Sample Detections - Organics (September 2006 Sampling Event)

Site R Quarterly Groundwater Monitoring

Solutia, Inc. - Sauget, Illinois

Monitoring Well		DUP 1	MDL	DUP 2	MDL	RB 1	MDL	RB 2	MDL
Lab Sample ID		680-20407-3		680-20473-11		680-20407-5		680-20473-1	
Date Sampled		9/18/2006		9/20/2006		9/19/2006		9/20/2006	
Time Sampled		13:20		12:10		8:45		10:10	
Volatile Organic Compounds (USEPA Method 8260B)									
Date Prepared		9/24/2006		9/23/2006		9/23/2006		9/23/2006	
Date Analyzed		9/24/2006		9/23/2006		9/23/2006		9/23/2006	
Analyte	**CAS No.**	**(ug/L)**		**(ug/L)**		**(ug/L)**		**(ug/L)**	
Benzene	71-43-2	***10***	1.1	22 U	22	0.54 U	0.54	0.54 U	0.54
Chlorobenzene	108-90-7	***250***	0.82	***8000***	16	0.41 U	0.41	0.41 U	0.41
Chloroform	67-66-3	1.0 U	1.0	21 U	21	***0.57 J***	0.52	***0.62 J***	0.52
Ethylbenzene	100-41-4	***1.7 J***	1.2	25 U	25	0.62 U	0.62	0.62 U	0.62
Toluene	108-88-3	1.2 U	1.2	25 U	25	0.62 U	0.62	0.62 U	0.62
Xylenes, Total	1330-20-7	***6.9***	2.6	52 U	52	1.3 U	1.3	1.3 U	1.3
Semi-Volatile Organic Compounds (USEPA Method 8270C)									
Date Prepared		9/22/2006		9/27/2006		9/22/2006		9/27/2006	
Date Analyzed		9/26/2006		9/29/2006		9/26/2006		9/29/2006	
Analyte	**CAS No.**	**(ug/L)**		**(ug/L)**		**(ug/L)**		**(ug/L)**	
4-Chloroaniline	106-47-8	***530 JD***	5.3	***130***	0.52	0.53 U	0.53	0.52 U	0.52
2-Chlorophenol	95-57-8	0.73 U	0.73	***37***	0.72	0.73 U	0.73	0.72 U	0.72
1,2-Dichlorobenzene	95-50-1	***920 JD***	10	***2.9 J***	1.0	1.0 U	1.0	1.0 U	1.0
1,4-Dichlorobenzene	106-46-7	***34***	0.53	***6.7 J***	0.52	0.53 U	0.53	0.52 U	0.52
2,4-Dichlorophenol	120-83-2	***2.9 J***	0.71	***52***	0.66	0.67 U	0.67	0.66 U	0.66
Diethyl phthalate	84-66-2	0.60 U	0.60	***0.62 J***	0.59	0.60 U	0.60	0.59 U	0.59
Phenol	108-95-2	1.0 U	1.0	***8.6 J***	0.99	1.0 U	1.0	0.99 U	0.99
1,2,4-Trichlorobenzene	120-82-1	***83***	0.55	0.54 U	0.54	0.55 U	0.55	0.54 U	0.54
2,4,6-Trichlorophenol	88-06-2	***2.9 J***	0.71	***17***	0.70	0.71 U	0.71	0.70 U	0.70

Table 3

Summary of Validated QA/QC Sample Detections - Organics (September 2006 Sampling Event)

Site R Quarterly Groundwater Monitoring

Solutia, Inc. - Sauget, Illinois

Monitoring Well		DUP 1	MDL	DUP 2	MDL	RB 1	MDL	RB 2	MDL
Lab Sample ID		680-20407-3		680-20473-11		680-20407-5		680-20473-1	
Date Sampled		9/18/2006		9/20/2006		9/19/2006		9/20/2006	
Time Sampled		13:20		12:10		8:45		10:10	
Organochlorine Pesticides (USEPA Method 8081A)									
Date Prepared		9/22/2006		9/26/2006		9/22/2006		9/26/2006	
Date Analyzed		9/25/2006		9/27/2006		9/25/2006		9/27/2006	
Analyte	**CAS No.**	**(ug/L)**		**(ug/L)**		**(ug/L)**		**(ug/L)**	
Endosulfan I	959-98-8	***0.015 JP***	0.0064	0.0062 U	0.0062	0.0064 U	0.0064	0.0064 U	0.0064
Chlorinated Herbicides (USEPA Method 8151A)									
Date Prepared		9/21/2006		9/25/2006		9/21/2006		9/25/2006	
Date Analyzed		9/22/2006		9/27/2006		9/22/2006		9/26/2006	
Analyte	**CAS No.**	**(ug/L)**		**(ug/L)**		**(ug/L)**		**(ug/L)**	
2,4-D	94-75-7	0.11 U	0.11	***0.65 J***	0.11	0.11 U	0.11	0.11 U	0.11
Dichlorprop	120-36-5	0.030 U	0.030	***0.21 J***	0.029	0.029 U	0.029	0.030 U	0.030
Pentachlorophenol	87-86-5	***1.2***	0.18	***0.72 J***	0.17	0.18 U	0.18	0.18 U	0.18
Total Organic Carbon (USEPA Method 9060)									
Date Analyzed		9/26/2006		9/26/2006		9/26/2006		9/26/2006	
Analyte	**CAS No.**	**(mg/L)**		**(mg/L)**		**(mg/L)**		**(mg/L)**	
Total Organic Carbon (TOC)	-	***6.8***	0.50	***12***	0.50	0.50 U	0.50	0.50 U	0.50

Parameters not listed were not detected in any samples.
Results in ***bold italics*** denote detections.

Flags and Qualifiers
U - Analyte was not detected at or above the Method Detection Limit (MDL).
UJ - Analyte was not detected at or above the Method Detection Limit (MDL); the detection limit is estimated.
J - Result is an estimated value.
JP - Result is an estimated value; The lower of the two values is reported when the % difference between the results of two GC columns is greater than 40%.
JD - Compound analyzed at a dilution; Low surrogate recovery due to sample dilution (DUP-1DL).

Checked by: MRF Date: 1/11/2007
Reviewed by: MNH Date: 1/12/2007

Table 3
Summary of Validated QA/QC Sample Detections - Organics (September 2006 Sampling Event)
Site R Quarterly Groundwater Monitoring
Solutia, Inc. - Sauget, Illinois

Monitoring Well		FB 1	MDL	FB 2	MDL	Trip Blank	MDL	Trip Blank	MDL
Lab Sample ID		680-20407-4		680-20473-2		680-20407-9		680-20473-10	
Date Sampled		9/19/2006		9/20/2006		9/19/2006		9/21/2006	
Time Sampled		8:35		10:20					
Volatile Organic Compounds (USEPA Method 8260B)									
Date Prepared		9/23/2006		9/23/2006		6/23/2006		6/23/2006	
Date Analyzed		9/23/2006		9/23/2006		6/23/2006		6/23/2006	
Analyte	**CAS No.**	(ug/L)		(ug/L)		(ug/L)		(ug/L)	
Benzene	71-43-2	0.54 U	0.54	0.54 U	0.54	0.54 U	0.54	0.54 U	0.54
Chlorobenzene	108-90-7	0.41 U	0.41	0.41 U	0.41	0.41 U	0.41	0.41 U	0.41
Chloroform	67-66-3	0.52 U	0.52	***0.6 J***	0.52	0.52 U	0.52	0.52 U	0.52
Ethylbenzene	100-41-4	0.62 U	0.62	0.62 U	0.62	0.62 U	0.62	0.62 U	0.62
Toluene	108-88-3	***0.79 J***	0.62	0.62 U	0.62	0.62 U	0.62	0.62 U	0.62
Xylenes, Total	1330-20-7	1.3 U	1.3	1.3 U	1.3	1.3 U	1.3	1.3 U	1.3
Semi-Volatile Organic Compounds (USEPA Method 8270C)									
Date Prepared		9/22/2006		9/27/2006					
Date Analyzed		9/26/2006		9/29/2006					
Analyte	**CAS No.**	(ug/L)		(ug/L)					
4-Chloroaniline	106-47-8	0.53 U	0.53	0.52 U	0.52				
2-Chlorophenol	95-57-8	0.73 U	0.73	0.72 U	0.72				
1,2-Dichlorobenzene	95-50-1	1.0 U	1.0	1.0 U	1.0				
1,4-Dichlorobenzene	106-46-7	0.53 U	0.53	0.52 U	0.52				
2,4-Dichlorophenol	120-83-2	0.67 U	0.67	0.66 U	0.66				
Diethyl phthalate	84-66-2	0.60 U	0.60	0.59 U	0.59				
Phenol	108-95-2	1.0 U	1.0	0.99 U	0.99				
1,2,4-Trichlorobenzene	120-82-1	0.55 U	0.55	0.54 U	0.54				
2,4,6-Trichlorophenol	88-06-2	0.71 U	0.71	0.70 U	0.70				

Table 3

Summary of Validated QA/QC Sample Detections - Organics (September 2006 Sampling Event)

Site R Quarterly Groundwater Monitoring

Solutia, Inc. - Sauget, Illinois

Monitoring Well		FB 1	MDL	FB 2	MDL	Trip Blank	MDL	Trip Blank	MDL
Lab Sample ID		680-20407-4		680-20473-2		680-20407-9		680-20473-10	
Date Sampled		9/19/2006		9/20/2006		9/19/2006		9/21/2006	
Time Sampled		8:35		10:20					
Organochlorine Pesticides (USEPA Method 8081A)									
Date Prepared		9/22/2006		9/26/2006					
Date Analyzed		9/25/2006		9/27/2006					
Analyte	**CAS No.**	**(ug/L)**		**(ug/L)**					
Endosulfan I	959-98-8	0.0063 U	0.0063	0.0064 U	0.0064				
Chlorinated Herbicides (USEPA Method 8151A)									
Date Prepared		9/21/2006		9/25/2006					
Date Analyzed		9/22/2006		9/26/2006					
Analyte	**CAS No.**	**(ug/L)**		**(ug/L)**					
2,4-D	94-75-7	0.11 U	0.11	0.11 U	0.11				
Dichlorprop	120-36-5	0.030 U	0.030	0.029 U	0.029				
Pentachlorophenol	87-86-5	0.18 U	0.18	0.18 U	0.18				
Total Organic Carbon (USEPA Method 9060)									
Date Analyzed		9/26/2006		9/26/2006					
Analyte	**CAS No.**	**(mg/L)**		**(mg/L)**					
Total Organic Carbon (TOC)	-	0.50 U	0.50	0.50 U	0.50				

Parameters not listed were not detected in any samples.
Results in ***bold italics*** denote detections.

Flags and Qualifiers
U - Analyte was not detected at or above the Method Detection Limit (MDL).
UJ - Analyte was not detected at or above the Method Detection Limit (MDL); the detection limit is estimated.
J - Result is an estimated value.
JP - Result is an estimated value; The lower of the two values is reported when the % difference between the results of two GC columns is greater than 40%.
JD - Compound analyzed at a dilution; Low surrogate recovery due to sample dilution (DUP-1DL).

Checked by: MRF Date: 1/11/2007
Reviewed by: MNH Date: 1/12/2007

Table 4

Summary of Validated QA/QC Sample Detections - Inorganics (September 2006 Sampling Event)

Site R Quarterly Groundwater Monitoring

Solutia, Inc. - Sauget, Illinois

Monitoring Well		DUP 1	MDL	DUP 2	MDL	RB 1	MDL	RB 2	MDL
Lab Sample ID		680-20407-3		680-20473-11		680-20407-5		680-20473-1	
Date Sampled		9/18/2006		9/20/2006		9/19/2006		9/20/2006	
Time Sampled		13:20		12:10		8:45		10:10	
Mercury (USEPA Method 7470A)									
Date Prepared		9/26/2006		9/26/2006		9/26/2006		9/26/2006	
Date Analyzed		9/26/2006		9/26/2006		9/26/2006		9/26/2006	
Analyte	**CAS No.**	**(mg/L)**		**(mg/L)**		**(mg/L)**		**(mg/L)**	
Mercury	7439-97-6	**NO DETECTIONS**							
Metals (USEPA Method 6010B)									
Date Prepared		9/21/2006		9/26/2006		9/21/2006		9/26/2006	
Date Analyzed		9/21/2006		9/26/2006		9/21/2006		9/26/2006	
Analyte	**CAS No.**	**(mg/L)**		**(mg/L)**		**(mg/L)**		**(mg/L)**	
Barium	7440-39-3	***0.11 J***	0.0012	***0.62 J***	0.0012	0.0012 U	0.0012	0.0012 U	0.0012
Chromium	7440-47-3	***0.0034 J***	0.00083	***0.0018 J***	0.00083	0.00083 U	0.00083	0.00083 U	0.00083
Copper	7440-50-8	***0.0059 J***	0.0017	0.0017 U	0.0017	0.0017 U	0.0017	0.0017 U	0.0017
Lead	7439-92-1	***0.0035 J***	0.0022	***0.0078 J***	0.0022	0.0022 U	0.0022	0.0022 U	0.0022
Nickel	7440-02-0	***0.0051 J***	0.0018	***0.0078 J***	0.0018	0.0018 U	0.0018	0.0018 U	0.0018
Total Dissolved Solids (USEPA Method 160.1)									
Date Analyzed		9/21/2006		9/25/2006		9/21/2006		9/25/2006	
Analyte	**CAS No.**	**(mg/L)**		**(mg/L)**		**(mg/L)**		**(mg/L)**	
Total Dissolved Solids (TDS)	-	***610***	5.0	***870***	10	***12***	5.0	5.0 U	5.0

Parameters not listed were not detected in any samples.
Results in ***bold italics*** denote detections.

Samples are not filtered.

Flags and Qualifiers
U - Analyte was not detected at or above the Method Detection Limit (MDL).
J - Result is an estimated value.

Checked by: MRF Date: 1/11/2007
Reviewed by: MNH Date: 1/12/2007

Table 4

Summary of Validated QA/QC Sample Detections - Inorganics (September 2006 Sampling Event)

Site R Quarterly Groundwater Monitoring

Solutia, Inc. - Sauget, Illinois

Monitoring Well		FB 1	MDL	FB 2	MDL	Trip Blank	MDL	Trip Blank	MDL
Lab Sample ID		680-20407-4		680-20473-2		680-20407-9		680-20473-10	
Date Sampled		9/19/2006		9/20/2006		9/19/2006		9/20/2006	
Time Sampled		8:35		10:20					
Mercury (USEPA Method 7470A)									
Date Prepared		9/26/2006		9/26/2006					
Date Analyzed		9/26/2006		9/26/2006					
Analyte	**CAS No.**	**(mg/L)**		**(mg/L)**					
Mercury	7439-97-6	**NO DETECTIONS**							
Metals (USEPA Method 6010B)									
Date Prepared		9/21/2006		9/26/2006					
Date Analyzed		9/21/2006		9/26/2006					
Analyte	**CAS No.**	**(mg/L)**		**(mg/L)**					
Barium	7440-39-3	0.0012 U	0.0012	0.0012 U	0.0012				
Chromium	7440-47-3	0.00083 U	0.00083	0.00083 U	0.00083				
Copper	7440-50-8	0.0017 U	0.0017	0.0017 U	0.0017				
Lead	7439-92-1	0.0022 U	0.0022	0.0022 U	0.0022				
Nickel	7440-02-0	0.0018 U	0.0018	0.0018 U	0.0018				
Total Dissolved Solids (USEPA Method 160.1)									
Date Analyzed		9/21/2006		9/25/2006					
Analyte	**CAS No.**	**(mg/L)**		**(mg/L)**					
Total Dissolved Solids (TDS)	-	***37***	5.0	5.0 U	5.0				

Parameters not listed were not detected in any samples.
Results in ***bold italics*** denote detections.
Samples are not filtered.

Flags and Qualifiers
U - Analyte was not detected at or above the Method Detection Limit (MDL).
J - Result is an estimated value.

Checked by: MRF Date: 1/11/2007
Reviewed by: MNH Date: 1/12/2007

Table 1
Summary of Validated Groundwater Sample Detections - Organics (December 2006 Sampling Event)
Site R Quarterly Groundwater Monitoring
Solutia, Inc. - Sauget, Illinois

Monitoring Well		BWMW-1S	MDL	BWMW-1M	MDL	BWMW-1D	MDL	BWMW-2S	MDL	BWMW-2M	MDL	BWMW-2D	MDL
Lab Sample ID		680-22820-12		680-22820-11		680-22820-13		680-22820-14		680-22820-15		680-22820-16	
Date Sampled		12/14/2006		12/15/2006		12/14/2006		12/15/2006		12/15/2006		12/15/2006	
Time Sampled		16:45		10:25		14:55		10:50		14:00		12:45	
Volatile Organic Compounds (USEPA Method 8260B)													
Date Prepared		12/28/2006		12/26/2006		12/28/2006		12/26/2006		12/27/2006		12/27/2006	
Date Analyzed		12/28/2006		12/26/2006		12/28/2006		12/26/2006		12/27/2006		12/27/2006	
Analyte	**CAS No.**	**(ug/L)**		**(ug/L)**		**(ug/L)**		**(ug/L)**		**(ug/L)**		**(ug/L)**	
Acetone	67-64-1	370 U	370	73 U	73	37 U	370	***54***	15	***2,400***	370	***2,800***	180
Benzene	71-43-2	***2,400***	27	***21***	5.4	13	27	***57***	1.1	***670***	27	***510***	14
Chlorobenzene	108-90-7	***72,000 D***	210	***1,200***	4.1	***6,800 D***	21	***210***	0.82	***5,400***	21	***2,300***	10
Chloroform	67-66-3	26 U	26	5.2 U	5.2	2.6 U	26	1.0 U	1.0	***66***	26	***44***	13
1,2-Dichloroethane	107-06-2	14 U	14.0	2.8 U	2.8	1.4 U	14	0.56 U	0.56	***2,700***	14	***1,900***	7.0
cis-1,2-Dichloroethene	156-59-2	28 U	28	5.5 U	5.5	2.8 U	28	1.1 U	1.1	***42 J***	28	***19 J***	14
Ethylbenzene	100-41-4	31 U	31	6.2 U	6.2	3.1 U	31	1.2 U	1.2	***150***	31	***73***	16
Methylene Chloride	75-09-2	22 U	22.0	4.4 U	4.4	2.2 U	22	0.88 U	0.88	***100 J***	22	***67 J***	11
4-Methyl-2-pentanone	108-10-1	23 U	23.0	4.5 U	4.5	2.3 U	23	0.9 U	0.9	***280 J***	23	11 U	11
Tetrachloroethene	127-18-4	38 U	38	7.5 U	7.5	3.8 U	38	1.5 U	1.5	***160***	38	***27***	19
Toluene	108-88-3	31 U	31	6.2 U	6.2	3.1 U	31	1.2 U	1.2	***1600***	31	***570***	16
Trichloroethene	79-01-6	36 U	36	7.1 U	7.1	3.6 U	36	1.4 U	1.4	***120***	36	***62***	18
Xylenes, Total	1330-20-7	65 U	65	13 U	13	6.5 U	65	2.6 U	2.6	***1300***	65	***440***	33
Semi-Volatile Organic Compounds (USEPA Method 8270C)													
Date Prepared		12/20/2006		12/20/2006		12/20/2006		12/20/2006		12/20/2006		12/20/2006	
Date Analyzed		1/2/2007		12/29/2006		12/29/2006		12/29/2006		1/3/2007		1/5/2007	
Analyte	**CAS No.**	**(ug/L)**		**(ug/L)**		**(ug/L)**		**(ug/L)**		**(ug/L)**		**(ug/L)**	
4-Chloroaniline	106-47-8	***63***	0.51	***25***	0.52	***41***	0.51	***530 JD***	2.5	***15,000 JD***	100	***36,000 JD***	510
2-Chlorophenol	95-57-8	***170***	0.71	***6.8 J***	0.72	***54***	0.71	***0.90 J***	0.70	***7,500 JD***	140	***8,900 JD***	71
1,2-Dichlorobenzene	95-50-1	***3.4 J***	1.0	***2.9 J***	1.0	***2.2 J***	0.98	***3.3 J***	0.97	***690 JD***	9.6	***510 JD***	98
1,3-Dichlorobenzene	541-73-1	0.54 U	0.54	***1.4 J***	0.55	0.54 U	0.54	0.53 U	0.53	24 JD	5.3	54 UJ	54
1,4-Dichlorobenzene	106-46-7	***6.2 J***	0.51	***44***	0.52	***6.3 J***	0.51	***1.6 J***	0.50	***330 JD***	5.0	***220 JD***	51
2,4-Dichlorophenol	120-83-2	0.65 U	0.65	0.66 U	0.66	***3.0 J***	0.65	0.64 U	0.64	***19,000 JD***	130	***10,000 JD***	65
Diethyl phthalate	84-66-2	0.58 U	0.58	0.59 U	0.59	0.58 U	0.58	0.57 U	0.57	***40 JD***	5.7	58 UJ	58
Dimethyl phthalate	131-11-3	3.0 U	3	0.59 U	0.59	0.58 U	0.58	0.57 U	0.57	5.7 UJ	5.7	58 UJ	58
3 & 4 Methylphenol	65794-96-9	***1.0 J***	0.65	0.66 U	0.66	0.65 U	0.65	0.64 U	0.64	***1,500 JD***	6.3	***1,100 JD***	65
Naphthalene	91-20-3	0.75 U	3.8	0.76 U	0.76	0.75 U	0.75	0.74 U	0.74	7.3 UJ	7.3	75 UJ	75
2-Nitroaniline	88-74-4	0.68 U	0.68	0.69 U	0.69	0.68 U	0.68	0.67 U	0.67	***520 JD***	6.6	***170 JD***	68
Nitrobenzene	98-95-3	0.91 U	0.91	0.93 U	0.93	0.91 U	0.91	0.90 U	0.9	***1,300 JD***	8.9	***440 JD***	91
Pentachlorophenol	87-86-5	2.5 U	2.5	2.5 U	2.5	2.5 U	2.5	2.4 U	2.4	***310 Jd***	24	250 UJ	250
Phenol	108-95-2	0.97 U	0.97	0.99 U	0.99	0.97 U	0.97	0.96 U	0.96	***31,000 JD***	190	***31,000 JD***	970
1,2,4-Trichlorobenzene	120-82-1	0.53 U	0.53	0.54 U	0.54	0.53 U	0.53	0.52 U	0.52	***60 JD***	5.2	53 UJ	53
2,4,6-Trichlorophenol	88-06-2	0.69 U	0.69	0.7 U	0.7	***0.91 J***	0.69	0.68 U	0.68	***2,900 JD***	130	***1,600 JD***	69

Table 1
Summary of Validated Groundwater Sample Detections - Organics (December 2006 Sampling Event)
Site R Quarterly Groundwater Monitoring
Solutia, Inc. - Sauget, Illinois

Monitoring Well		BWMW-1S	MDL	BWMW-1M	MDL	BWMW-1D	MDL	BWMW-2S	MDL	BWMW-2M	MDL	BWMW-2D	MDL
Lab Sample ID		680-22820-12		680-22820-11		680-22820-13		680-22820-14		680-22820-15		680-22820-16	
Date Sampled		12/14/2006		12/15/2006		12/14/2006		12/15/2006		12/15/2006		12/15/2006	
Time Sampled		16:45		10:25		14:55		10:50		14:00		12:45	
Organochlorine Pesticides (USEPA Method 8081A)													
Date Prepared		12/19/2006		12/19/2006		12/19/2006		12/19/2006		12/19/2006		12/19/2006	
Date Analyzed		12/21/2006		12/21/2006		12/21/2006		12/21/2006		12/21/2006		12/21/2006	
Analyte	**CAS No.**	**(ug/L)**		**(ug/L)**		**(ug/L)**		**(ug/L)**		**(ug/L)**		**(ug/L)**	
alpha-BHC	319-84-6	0.0083 U	0.0083	0.0083 UJ	0.0083	0.0083 U	0.0083	0.0083 UJ	0.0083	***0.12 JP***	0.041	***0.066 JP***	0.042
gamma-Chlordane	5566-34-7	0.013 U	0.013	0.013 UJ	0.013	0.013 U	0.013	0.013 UJ	0.013	0.063 UJ	0.063	0.064 UJ	0.064
4,4'-DDD	72-54-8	0.011 U	0.011	0.011 UJ	0.011	0.011 U	0.011	0.011 UJ	0.011	0.053 UJ	0.053	0.054 UJ	0.054
Endosulfan I	959-98-8	0.0062 U	0.0062	0.0064 UJ	0.0064	0.0062 U	0.0062	0.0062 UJ	0.0062	0.031 UJ	0.031	0.031 UJ	0.031
Endosulfan Sulfate	1031-07-8	0.0097 U	0.0097	***0.021 JP***	0.010	***0.041 JP***	0.0097	0.0097 UJ	0.0097	***0.30 J***	0.048	***0.19 JP***	0.049
Endrin ketone	53494-70-5	0.016 U	0.016	0.016 UJ	0.016	0.016 U	0.016	0.016 UJ	0.016	0.077 UJ	0.08	0.078 UJ	0.08
Methoxychlor	72-43-5	0.023 U	0.023	0.024 UJ	0.024	0.023 U	0.023	0.023 UJ	0.023	0.12 UJ	0.12	0.12 UJ	0.12
Chlorinated Herbicides (USEPA Method 8151A)													
Date Prepared		12/19/2006		12/19/2006		12/19/2006		12/19/2006		12/19/2006		12/19/2006	
Date Analyzed		12/20/2006		12/20/2006		12/20/2006		12/20/2006		12/22/2006		12/22/2006	
Analyte	**CAS No.**	**(ug/L)**		**(ug/L)**		**(ug/L)**		**(ug/L)**		**(ug/L)**		**(ug/L)**	
2,4-D	94-75-7	0.11 U	0.11	0.11 U	0.11	0.11 U	0.11	0.11 U	0.11	***21,000 JD***	1,100	***15,000 JD***	1,100
Dichlorprop	120-36-5	***6.2 D***	0.12	0.030 U	0.030	0.030 U	0.030	***4.0***	0.030	***1,600 JP***	29	***1,500 JP***	29
Pentachlorophenol	87-86-5	0.18 U	0.18	0.18 U	0.18	0.18 U	0.18	0.18 U	0.18	170 UJ	170	170 UJ	170
Silvex (2,4,5-TP)	93-72-1	0.032 U	0.032	0.033 U	0.033	0.033 U	0.033	0.033 U	0.033	32 UJ	32	32 UJ	32
2,4,5-T	93-76-5	0.078 U	0.078	0.079 U	0.079	0.079 U	0.079	0.08 U	0.079	78 UJ	78	78 UJ	78
Total Organic Carbon (USEPA Method 9060)													
Date Analyzed		12/20/2006		12/20/2006		12/20/2006		12/20/2006		12/20/2006		12/20/2006	
Analyte	**CAS No.**	**(mg/L)**		**(mg/L)**		**(mg/L)**		**(mg/L)**		**(mg/L)**		**(mg/L)**	
Total Organic Carbon (TOC)	-	***12***	0.50	***7.1***	0.50	***4.9***	0.50	***49***	0.50	***410***	0.50	***370***	0.50

Parameters not listed were not detected in any samples.
Results in ***bold italics*** denote detections.

Flags and Qualifiers
U - Analyte was not detected at or above the Method Detection Limit (MDL).
UJ - Analyte was not detected at or above the Method Detection Limit (MDL); the detection limit is estimated.
J - Result is an estimated value.
JP - Result is an estimated value; The lower of the two values is reported when the % difference between the results of two GC columns is greater than 40%.
JE - Result is an estimated value; Result exceeded calibration range and secondary dilution produced a non-detect value.
P - The lower of the two values is reported when the % difference between the results of two GC columns is greater than 40%.
D - Compound analyzed at a dilution.
JD - Compound analyzed at a dilution; Surrogates not calculated due to sample dilution (BWMW-2M and BWMW-2D); Low surrogate recovery due to sample dilution (BWMW-2M, BWMW-2D, BWMW-3M, BWMW-3D and BWMW-4DDL); and High surrogate recovery >150% (BWMW-1D and BWMW-3D).

Checked by: AWG Date: 5/3/2007
Reviewed by: MRF Date: 5/3/2007

Table 1
Summary of Validated Groundwater Sample Detections - Organics (December 2006 Sampling Event)
Site R Quarterly Groundwater Monitoring
Solutia, Inc. - Sauget, Illinois

Monitoring Well		BWMW-3S	MDL	BWMW-3M	MDL	BWMW-3D	MDL	BWMW-4S	MDL	BWMW-4M	MDL	BWMW-4D	MDL
Lab Sample ID		680-22820-1		680-22820-2		680-22820-3		680-22820-5		680-22820-6		680-22820-8	
Date Sampled		12/13/2006		12/13/2006		12/13/2006		12/14/2006		12/14/2006		12/14/2006	
Time Sampled		14:30		14:40		17:00		13:10		10:00		9:40	
Volatile Organic Compounds (USEPA Method 8260B)													
Date Prepared		12/26/2006		12/27/2006		12/27/2006		12/28/2006		12/27/2006		12/27/2006	
Date Analyzed		12/26/2006		12/27/2006		12/27/2006		12/28/2006		12/27/2006		12/27/2006	
Analyte	**CAS No.**	**(ug/L)**		**(ug/L)**		**(ug/L)**		**(ug/L)**		**(ug/L)**		**(ug/L)**	
Acetone	67-64-1	37 U	37	37 U	37	7.3 U	7.3	7.3 U	7.3	7.3 U	7.3	37 U	37
Benzene	71-43-2	***160***	2.7	***130***	2.7	***12***	0.54	0.54 U	0.54	***17***	0.54	***8.1***	2.7
Chlorobenzene	108-90-7	***440***	2.1	***3,200 D***	10	***2,100 D***	10	***7.4***	0.41	***310 D***	0.82	***200***	2.1
Chloroform	67-66-3	2.6 U	2.6	2.6 U	2.6	0.52 U	0.52	0.52 U	0.52	0.52 U	0.52	2.6 U	2.6
1,2-Dichloroethane	107-06-2	1.4 U	1.4	1.4 U	1.4	0.28 U	0.28	0.28 U	0.28	0.28 U	0.28	1.4 U	1.4
cis-1,2-Dichloroethene	156-59-2	2.8 U	2.8	2.8 U	2.8	0.71 J	0.71	0.55 U	0.55	0.55 U	0.55	2.8 U	2.8
Ethylbenzene	100-41-4	3.1 U	3.1	3.1 U	3.1	2.8 U	2.8	0.62 U	0.62	***2.9***	0.62	3.1 U	3.1
Methylene Chloride	75-09-2	2.2 U	2.2	2.2 U	2.2	0.44 U	0.44	0.44 U	0.44	0.44 U	0.44	2.2 U	2.2
4-Methyl-2-pentanone	108-10-1	2.3 U	2.3	2.3 U	2.3	0.45 U	0.5	0.45 U	0.45	0.45 U	0.45	2.3 U	2.3
Tetrachloroethene	127-18-4	3.8 U	3.8	3.8 U	3.8	0.75 U	0.75	0.75 U	0.75	0.75 U	0.75	3.8 U	3.8
Toluene	108-88-3	3.1 U	3.1	3.1 U	3.1	0.88 U	0.88	0.62 U	0.62	0.62 U	0.62	3.1 U	3.1
Trichloroethene	79-01-6	3.6 U	3.6	3.6 U	3.6	0.71 U	0.71	0.71 U	0.71	0.71 U	0.71	3.6 U	3.6
Xylenes, Total	1330-20-7	6.5 U	6.5	6.5 U	6.5	3.5 U	3.5	1.3 U	1.3	***2.7***	1.3	6.5 U	6.5
Semi-Volatile Organic Compounds (USEPA Method 8270C)													
Date Prepared		12/20/2006		12/20/2006		12/20/2006		12/20/2006		12/20/2006		12/20/2006	
Date Analyzed		12/28/2006		1/3/2007		1/3/2007		12/29/2006		12/29/2006		12/29/2006	
Analyte	**CAS No.**	**(ug/L)**		**(ug/L)**		**(ug/L)**		**(ug/L)**		**(ug/L)**		**(ug/L)**	
4-Chloroaniline	106-47-8	***580 D***	2.6	***15,000 JD***	50	***18,000 JD***	51	0.52 U	0.52	***420 JD***	2.50	***2,300 JD***	10.0
2-Chlorophenol	95-57-8	***1.3*** J	0.72	7.0 UJ	7.0	71 UJ	7.1	0.72 U	0.72	***1.2 J***	0.70	14 U	0.70
1,2-Dichlorobenzene	95-50-1	***4.9*** J	1.0	***35 JD***	9.7	***140 JD***	9.8	1.0 U	1.0	***6.2 J***	19	***780 JD***	19
1,3-Dichlorobenzene	541-73-1	0.55 U	0.55	***24 JD***	5.3	5.4 UJ	5.4	0.55 U	0.55	***2.8 J***	0.53	***1.1 J***	0.53
1,4-Dichlorobenzene	106-46-7	***14***	5.0	***290 JD***	5.0	***83 JD***	5.1	0.52 U	0.52	***21***	0.50	***24***	0.50
2,4-Dichlorophenol	120-83-2	0.66 U	0.66	6.4 UJ	6.4	***12 JD***	6.5	0.66 U	0.66	0.64 U	0.64	***5.8 J***	0.64
Diethyl phthalate	84-66-2	0.59 U	0.59	5.7 UJ	5.7	5.8 UJ	5.8	0.59 U	0.59	0.57 U	0.57	0.57 U	0.57
Dimethyl phthalate	131-11-3	0.59 U	0.59	5.7 UJ	5.7	5.8 UJ	5.8	0.59 U	0.59	0.57 U	0.57	0.57 U	0.57
3 & 4 Methylphenol	65794-96-9	0.66 U	0.66	6.4 UJ	6.4	6.5 UJ	6.5	0.66 U	0.66	0.64 U	0.64	0.64 U	0.64
Naphthalene	91-20-3	0.76 U	0.76	7.4 UJ	7.4	7.5 UJ	7.5	0.76 U	0.76	0.74 U	0.74	0.74 U	0.74
2-Nitroaniline	88-74-4	0.69 U	0.69	6.7 UJ	6.7	6.8 UJ	6.8	0.69 U	0.69	0.67 U	0.67	0.67 U	0.67
Nitrobenzene	98-95-3	0.93 U	0.93	9 UJ	9.0	9.1 UJ	9.1	0.93 U	0.93	0.90 U	0.90	0.9 U	0.9
Pentachlorophenol	87-86-5	2.5 U	2.5	24 UJ	24	25 UJ	25	2.5 U	2.5	2.4 U	2.4	2.4 U	2.4
Phenol	108-95-2	0.99 U	0.99	9.6 UJ	9.6	9.7 UJ	9.7	0.99 U	1.0	0.96 U	0.96	0.96 U	0.96
1,2,4-Trichlorobenzene	120-82-1	0.54 U	0.54	5.2 UJ	5.2	5.3 UJ	5.3	0.54 U	0.54	0.52 U	0.52	***53***	0.62
2,4,6-Trichlorophenol	88-06-2	0.70 U	0.70	6.8 UJ	6.8	6.9 UJ	6.9	0.7 U	0.7	0.68 U	0.68	0.68 U	0.68

Table 1
Summary of Validated Groundwater Sample Detections - Organics (December 2006 Sampling Event)
Site R Quarterly Groundwater Monitoring
Solutia, Inc. - Sauget, Illinois

Monitoring Well		BWMW-3S	MDL	BWMW-3M	MDL	BWMW-3D	MDL	BWMW-4S	MDL	BWMW-4M	MDL	BWMW-4D	MDL
Lab Sample ID		680-22820-1		680-22820-2		680-22820-3		680-22820-5		680-22820-6		680-22820-8	
Date Sampled		12/13/2006		12/13/2006		12/13/2006		12/14/2006		12/14/2006		12/14/2006	
Time Sampled		14:30		14:40		17:00		13:10		10:00		9:40	
Organochlorine Pesticides (USEPA Method 8081A)													
Date Prepared		12/18/2006		12/18/2006		12/18/2006		12/18/2006		12/18/2006		12/18/2006	
Date Analyzed		12/20/2006		12/20/2006		12/20/2006		12/20/2006		12/20/2006		12/20/2006	
Analyte	**CAS No.**	**(ug/L)**		**(ug/L)**		**(ug/L)**		**(ug/L)**		**(ug/L)**		**(ug/L)**	
alpha-BHC	319-84-6	0.0084 UJ	0.0084	0.0083 UJ	0.0083	0.034 U	0.034	0.0088 U	0.0088	0.0081 UJ	0.0081	0.0083 UJ	0.0083
gamma-Chlordane	5566-34-7	0.013 UJ	0.013	0.013 UJ	0.013	0.052 U	0.052	0.013 U	0.013	0.012 UJ	0.012	0.013 UJ	0.013
4,4'-DDD	72-54-8	0.011 UJ	0.011	0.011 UJ	0.011	0.044 U	0.044	***0.089 J***	0.011	0.01 UJ	0.01	0.011 UJ	0.011
Endosulfan I	959-98-8	0.0063 UJ	0.0063	0.0062 UJ	0.0062	0.026 U	0.026	0.0065 U	0.0065	0.006 UJ	0.006	0.0062 UJ	0.0062
Endosulfan Sulfate	1031-07-8	0.0098 UJ	0.0098	0.0097 UJ	0.0097	***0.056 JP***	0.040	0.01 U	0.01	0.0094 UJ	0.0094	0.0096 UJ	0.0096
Endrin ketone	53494-70-5	0.016 UJ	0.016	0.016 UJ	0.016	0.064 U	0.064	0.016 U	0.016	0.015 UJ	0.015	0.015 UJ	0.015
Methoxychlor	72-43-5	0.024 UJ	0.024	0.023 UJ	0.023	0.096 U	0.10	0.024 U	0.024	0.023 UJ	0.023	0.023 UJ	0.023
Chlorinated Herbicides (USEPA Method 8151A)													
Date Prepared		12/19/2006		12/19/2006		12/19/2006		12/19/2006		12/19/2006		12/19/2006	
Date Analyzed		12/20/2006		12/20/2006		12/20/2006		12/20/2006		12/20/2006		12/20/2006	
Analyte	**CAS No.**	**(ug/L)**		**(ug/L)**		**(ug/L)**		**(ug/L)**		**(ug/L)**		**(ug/L)**	
2,4-D	94-75-7	0.11 U	0.11	0.11 U	0.11	***1.3***	0.11	0.11 U	0.11	0.11 U	0.11	***0.33 J***	0.11
Dichlorprop	120-36-5	0.030 U	0.030	***0.19 JP***	0.030	***0.71 P***	0.030	0.030 U	0.030	***0.057 JP***	0.030	***0.099 JP***	0.029
Pentachlorophenol	87-86-5	0.18 U	0.18	0.18 U	0.18	0.18 U	0.18	0.18 U	0.18	0.18 U	0.18	***0.57***	0.17
Silvex (2,4,5-TP)	93-72-1	0.033 U	0.033	0.033 U	0.033	0.033 U	0.033	0.033 U	0.033	0.033 U	0.033	0.032 U	0.032
2,4,5-T	93-76-5	0.080 U	0.080	0.079 U	0.079	***0.88***	0.080	0.080 U	0.080	0.079 U	0.079	0.078 U	0.078
Total Organic Carbon (USEPA Method 9060)													
Date Analyzed		12/20/2006		12/20/2006		12/20/2006		12/20/2006		12/20/2006		12/20/2006	
Analyte	**CAS No.**	**(mg/L)**		**(mg/L)**		**(mg/L)**		**(mg/L)**		**(mg/L)**		**(mg/L)**	
Total Organic Carbon (TOC)	-	***22***	0.50	***30***	0.50	***44***	0.50	***7.8***	0.50	***5.6***	0.50	***8.3***	0.50

Parameters not listed were not detected in any samples.
Results in ***bold italics*** denote detections.

Flags and Qualifiers
U - Analyte was not detected at or above the Method Detection Limit (MDL).
UJ - Analyte was not detected at or above the Method Detection Limit (MDL); the detection limit is estimated.
J - Result is an estimated value.
JP - Result is an estimated value; The lower of the two values is reported when the % difference between the results of two GC columns is greater than 40%.
JE - Result is an estimated value; Result exceeded calibration range and secondary dilution produced a non-detect value.
P - The lower of the two values is reported when the % difference between the results of two GC columns is greater than 40%.
D - Compound analyzed at a dilution.
JD - Compound analyzed at a dilution; Surrogates not calculated due to sample dilution (BWMW-2M and BWMW-2D); Low surrogate recovery due to sample dilution (BWMW-2M, BWMW-2D, BWMW-3M, BWMW-3D and BWMW-4DDL); and High surrogate recovery >150% (BWMW-1D and BWMW-3D).

Checked by: AWG Date: 5/3/2007
Reviewed by: MRF Date: 5/3/2007

Table 2
Summary of Validated Groundwater Sample Detections - Inorganics (December 2006 Sampling Event)
Site R Quarterly Groundwater Monitoring
Solutia, Inc. - Sauget, Illinois

Monitoring Well		BWMW-1S	MDL	BWMW-1M	MDL	BWMW-1D	MDL	BWMW-2S	MDL	BWMW-2M	MDL	BWMW-2D	MDL
Lab Sample ID		680-22820-12		680-22820-11		680-22820-13		680-22820-14		680-22820-15		680-22820-16	
Date Sampled		12/14/2006		12/15/2006		12/14/2006		12/15/2006		12/15/2006		12/15/2006	
Time Sampled		16:45		10:25		14:55		10:50		14:00		12:45	
Mercury (USEPA Method 7470A)													
Date Prepared		1/2/2007		1/2/2007		1/2/2007		1/2/2007		1/2/2007		1/2/2007	
Date Analyzed		1/3/2007		1/3/2007		1/3/2007		1/3/2007		1/3/2007		1/3/2007	
Analyte	**CAS No.**	**(mg/L)**		**(mg/L)**		**(mg/L)**		**(mg/L)**		**(mg/L)**		**(mg/L)**	
Mercury	7439-97-6	0.000080 U	0.000080	0.000080 U	0.000080	0.000080 U	0.000080	0.000080 U	0.000080	***0.000099 J***	0.000080	0.000080 U	0.000080
Metals (USEPA Method 6010B)													
Date Prepared		12/19/2006		12/19/2006		12/19/2006		12/19/2006		12/19/2006		12/19/2006	
Date Analyzed		12/20/2006		12/20/2006		12/20/2006		12/20/2006		12/20/2006		12/20/2006	
Analyte	**CAS No.**	**(mg/L)**		**(mg/L)**		**(mg/L)**		**(mg/L)**		**(mg/L)**		**(mg/L)**	
Arsenic	7440-38-2	0.053	0.0042	0.0042 U	0.0042	0.0042 U	0.0042	***0.012***	0.0042	0.0042 U	0.0042	0.0042 U	0.0042
Barium	7440-39-3	***0.21***	0.0012	***0.53***	0.0012	***0.42***	0.0012	***0.5***	0.0012	***0.093***	0.0012	***0.16***	0.0012
Chromium	7440-47-3	0.0038 UJ	0.00083	0.0014 UJ	0.00083	0.0014 UJ	0.00083	***0.031***	0.00083	***0.0024 J***	0.00083	***0.0044 J***	0.00083
Copper	7440-50-8	0.0021 UJ	0.0017	0.0031 UJ	0.0017	0.0017 U	0.0017	***0.027***	0.0017	***0.010 J***	0.0017	***0.0038 J***	0.0017
Lead	7439-92-1	0.0022 U	0.0022	0.0022 U	0.0022	0.0022 U	0.0022	***0.016***	0.0022	0.0022 U	0.0022	0.0022 U	0.0022
Nickel	7440-02-0	0.0035 UJ	0.0018	0.0018 U	0.0018	0.0019 UJ	0.0018	0.025 UJ	0.0018	***0.025 J***	0.0018	***0.014 J***	0.0018
Total Dissolved Solids (USEPA Method 160.1)													
Date Analyzed		12/20/2006		12/20/2006		12/20/2006		12/20/2006		12/20/2006		12/20/2006	
Analyte	**CAS No.**	**(mg/L)**		**(mg/L)**		**(mg/L)**		**(mg/L)**		**(mg/L)**		**(mg/L)**	
Total Dissolved Solids (TDS)	-	***1,000***	5.0	***1,100***	5.0	***770***	5.0	***1,600***	5.0	***1,700***	5.0	***1,800***	5.0

Parameters not listed were not detected in any samples.
Results in ***bold italics*** denote detections.
NS - Well purged dry and sufficient water for sample collection had not recharged into the well within 24 hours; In accordance with the Field Sampling Plan (FSP; URS, 2003), a groundwater sample was not collected.
Samples are not filtered.

Flags and Qualifiers
U - Analyte was not detected at or above the Method Detection Limit (MDL).
J - Result is an estimated value.

Checked by: AWG Date: 5/3/2007
Reviewed by: MRF Date: 5/3/2007

Table 2
Summary of Validated Groundwater Sample Detections - Inorganics (December 2006 Sampling Event)
Site R Quarterly Groundwater Monitoring
Solutia, Inc. - Sauget, Illinois

Monitoring Well		BWMW-3S	MDL	BWMW-3M	MDL	BWMW-3D	MDL	BWMW-4S	MDL	BWMW-4M	MDL	BWMW-4D	MDL
Lab Sample ID		680-22820-1		680-22820-2		680-22820-3		680-22820-5		680-22820-6		680-22820-8	
Date Sampled		12/13/2006		12/13/2006		12/13/2006		12/14/2006		12/14/2006		12/14/2006	
Time Sampled		14:30		14:40		17:00		13:10		10:00		9:40	
Mercury (USEPA Method 7470A)													
Date Prepared		1/2/2007		1/2/2007		1/2/2007		1/2/2007		1/2/2007		1/2/2007	
Date Analyzed		1/3/2007		1/3/2007		1/3/2007		1/3/2007		1/3/2007		1/3/2007	
Analyte	**CAS No.**	**(mg/L)**		**(mg/L)**		**(mg/L)**		**(mg/L)**		**(mg/L)**		**(mg/L)**	
Mercury	7439-97-6	0.000080 U	0.000080	0.000080 U	0.000080	0.000080 U	0.000080	***0.000091 J***	0.000080	***0.000080 J***	0.000080	0.000080 U	0.000080
Metals (USEPA Method 6010B)													
Date Prepared		12/19/2006		12/19/2006		12/19/2006		12/19/2006		12/19/2006		12/19/2006	
Date Analyzed		12/20/2006		12/20/2006		12/20/2006		12/20/2006		12/20/2006		12/20/2006	
Analyte	**CAS No.**	**(mg/L)**		**(mg/L)**		**(mg/L)**		**(mg/L)**		**(mg/L)**		**(mg/L)**	
Arsenic	7440-38-2	***0.011***	0.0042	0.0042 U	0.0042	0.0042 U	0.0042	***0.052***	0.0042	0.0042 U	0.0042	0.0042 U	0.0042
Barium	7440-39-3	***0.47***	0.0012	***0.68***	0.0012	***0.3***	0.0012	***0.44***	0.0012	***0.28***	0.0012	***0.10***	0.0012
Chromium	7440-47-3	0.0023 UJ	0.00083	0.0031 UJ	0.00083	0.0085 UJ	0.00083	0.0027 UJ	0.00083	0.0013 UJ	0.00083	0.0024 UJ	0.00083
Copper	7440-50-8	0.0022 UJ	0.0017	0.003 UJ	0.0017	0.0026 UJ	0.0017	0.0064 UJ	0.0017	0.0017 U	0.0017	0.0025 UJ	0.0017
Lead	7439-92-1	0.0022 U	0.0022	0.0022 U	0.0022	0.0022 U	0.0022	0.0022 U	0.0022	0.0022 U	0.0022	0.0022 U	0.0022
Nickel	7440-02-0	0.0018 U	0.0018	0.006 UJ	0.0018	0.0076 UJ	0.0018	0.0018 U	0.0018	0.0022 UJ	0.0018	0.0057 UJ	0.0018
Total Dissolved Solids (USEPA Method 160.1)													
Date Analyzed		12/20/2006		12/20/2006		12/20/2006		12/20/2006		12/20/2006		12/20/2006	
Analyte	**CAS No.**	**(mg/L)**		**(mg/L)**		**(mg/L)**		**(mg/L)**		**(mg/L)**		**(mg/L)**	
Total Dissolved Solids (TDS)	-	***1,600***	5.0	***1,300***	5.0	***1,600***	5.0	***2,200***	5.0	***730***	5.0	***490***	5.0

Parameters not listed were not detected in any samples.
Results in ***bold italics*** denote detections.
NS - Well purged dry and sufficient water for sample collection had not recharged into the well within 24 hours; In accordance with the Field Sampling Plan (FSP; URS, 2003), a groundwater sample was not collected.
Samples are not filtered.

Flags and Qualifiers
U - Analyte was not detected at or above the Method Detection Limit (MDL).
J - Result is an estimated value.

Checked by: AWG Date: 5/3/2007
Reviewed by: MRF Date: 5/3/2007

Table 3

Summary of Validated QA/QC Sample Detections - Organics (December 2006 Sampling Event)

Site R Quarterly Groundwater Monitoring

Solutia, Inc. - Sauget, Illinois

Monitoring Well		DUP 1	MDL	DUP 2	MDL	RB 1	MDL	RB 2	MDL
Lab Sample ID		680-22820-7		680-22820-19		680-22820-9		680-22820-17	
Date Sampled		12/14/2006		12/15/2006		12/14/2006		12/15/2006	
Time Sampled		0:00		0:00		11:45		11:30	
Volatile Organic Compounds (USEPA Method 8260B)									
Date Prepared		12/28/2006		12/28/2006		12/26/2006		12/26/2006	
Date Analyzed		12/28/2006		12/28/2006		12/26/2006		12/26/2006	
Analyte	**CAS No.**	(ug/L)		(ug/L)		(ug/L)		(ug/L)	
Acetone	67-64-1	7.3 U	7.3	***2,900***	180	7.3 U	7.3	7.3 U	7.3
Benzene	71-43-2	***17***	0.54	***680***	14	0.54 U	0.54	0.54 U	0.54
Chlorobenzene	108-90-7	***250 D***	0.82	***2,900***	10	0.41 U	0.41	***0.48 J***	0.41
Chloroform	67-66-3	0.52 U	0.52	***48***	13	0.52 U	0.52	0.52 U	0.52
1,2-Dichloroethane	107-06-2	0.28 U	0.28	***2,600***	7.0	0.28 U	0.28	0.28 U	0.28
cis-1,2-Dichloroethene	156-59-2	0.55 U	0.55	***28***	14	0.55 U	0.55	0.55 U	0.55
Ethylbenzene	100-41-4	***2.5***	0.62	***110***	16	0.62 U	0.62	0.62 U	0.62
Methylene Chloride	75-09-2	0.44 U	0.44	***77 J***	11	0.44 U	0.44	0.44 U	0.44
4-Methyl-2-pentanone	108-10-1	0.45 U	0.45	***710***	11	0.45 U	0.45	0.45 U	0.45
Tetrachloroethene	127-18-4	0.75 U	0.75	***46***	19	0.75 U	0.75	0.75 U	0.75
Toluene	108-88-3	***0.75 J***	0.62	***800***	16	0.62 U	0.62	0.62 U	0.62
Trichloroethene	79-01-6	0.71 U	0.71	***81***	18	0.71 U	0.71	0.71 U	0.71
Xylenes, Total	1330-20-7	***2.1***	1.3	***650***	33	1.3 U	1.3	1.3 U	1.3
Semi-Volatile Organic Compounds (USEPA Method 8270C)									
Date Prepared		12/20/2006		12/20/2006		12/20/2006		12/20/2006	
Date Analyzed		12/29/2006		1/3/2007		12/29/2006		1/2/2006	
Analyte	**CAS No.**	(ug/L)		(ug/L)		(ug/L)		(ug/L)	
4-Chloroaniline	106-47-8	***420 D***	2.5	***30,000 D***	200	0.51 U	0.51	0.52 U	0.52
2-Chlorophenol	95-57-8	***0.93 J***	0.68	***6,600 D***	280	0.71 U	0.71	0.72 U	0.72
1,2-Dichlorobenzene	95-50-1	***5.8 J***	0.94	***570***	9.8	0.98 U	0.98	1.0 U	1.0
1,3-Dichlorobenzene	541-73-1	***2.9 J***	0.52	***13 J***	5.4	0.54 U	0.5	0.55 U	0.6
1,4-Dichlorobenzene	106-46-7	***22***	0.49	***240***	5.1	0.51 U	0.51	0.52 U	0.52
2,4-Dichlorophenol	120-83-2	0.62 U	0.62	***7,500 D***	260	0.65 U	0.65	0.66 U	0.66
Diethyl phthalate	84-66-2	0.56 U	0.56	5.8 U	5.8	0.58 U	0.58	0.59 U	0.59
3 & 4 Methylphenol	65794-96-9	0.62 U	0.62	***1,200***	6.5	0.65 U	0.65	0.66 U	0.66
Phenol	108-95-2	0.93 U	0.93	***23,000 D***	390	0.97 U	0.97	0.99 U	0.99
1,2,4-Trichlorobenzene	120-82-1	0.51 U	0.51	***44 J***	5.3	0.53 U	0.53	0.54 U	0.54
2,4,6-Trichlorophenol	88-06-2	0.66 U	0.66	***1,900***	6.9	0.69 U	0.69	0.70 U	0.70

Table 3
Summary of Validated QA/QC Sample Detections - Organics (December 2006 Sampling Event)
Site R Quarterly Groundwater Monitoring
Solutia, Inc. - Sauget, Illinois

Monitoring Well		DUP 1	MDL	DUP 2	MDL	RB 1	MDL	RB 2	MDL
Lab Sample ID		680-22820-7		680-22820-19		680-22820-9		680-22820-17	
Date Sampled		12/14/2006		12/15/2006		12/14/2006		12/15/2006	
Time Sampled		0:00		0:00		11:45		11:30	
Organochlorine Pesticides (USEPA Method 8081A)									
Date Prepared		12/18/2006		12/19/2006		12/18/2006		12/19/2006	
Date Analyzed		12/20/2006		12/21/2006		12/20/2006		12/21/2006	
Analyte	**CAS No.**	**(ug/L)**		**(ug/L)**		**(ug/L)**		**(ug/L)**	
alpha-BHC	319-84-6	0.0083 U	0.0083	***0.058 JP***	0.042	0.0083 U	0.0083	0.0086 U	0.0086
Endosulfan sulfate	1031-07-8	0.0096 U	0.0096	***0.15 JP***	0.049	0.0096 U	0.0096	0.010 U	0.010
Chlorinated Herbicides (USEPA Method 8151A)									
Date Prepared		12/19/2006		12/19/2006		12/19/2006		12/19/2006	
Date Analyzed		12/20/2006		12/22/2006		12/20/2006		12/20/2006	
Analyte	**CAS No.**	**(ug/L)**		**(ug/L)**		**(ug/L)**		**(ug/L)**	
2,4-D	94-75-7	0.11 U	0.11	***11,000 D***	1,100	0.11 U	0.11	0.11 U	0.11
Dichlorprop	120-36-5	***0.063 JP***	0.029	***1,400 P***	29	0.030 U	0.030	0.030 U	0.030
Total Organic Carbon (USEPA Method 9060)									
Date Analyzed		12/20/2006		12/20/2006		12/20/2006		12/20/2006	
Analyte	**CAS No.**	**(mg/L)**		**(mg/L)**		**(mg/L)**		**(mg/L)**	
Total Organic Carbon (TOC)	-	***5.7***	0.50	***380***	0.50	0.50 U	0.50	0.50 U	0.50

Parameters not listed were not detected in any samples.
Results in ***bold italics*** denote detections.

Flags and Qualifiers
U - Analyte was not detected at or above the Method Detection Limit (MDL).
UJ - Analyte was not detected at or above the Method Detection Limit (MDL); the detection limit is estimated.
J - Result is an estimated value.
JP - Result is an estimated value; The lower of the two values is reported when the % difference between the results of two GC columns is greater than 40%.
JD - Compound analyzed at a dilution; Low surrogate recovery due to sample dilution (DUP-1DL).

Checked by: AWG Date: 5/3/2007
Reviewed by: MRF Date: 5/3/2007

Table 3
Summary of Validated QA/QC Sample Detections - Organics (December 2006 Sampling Event)
Site R Quarterly Groundwater Monitoring
Solutia, Inc. - Sauget, Illinois

Monitoring Well		FB 1	MDL	FB 2	MDL	Trip Blank	MDL	Trip Blank	MDL
Lab Sample ID		680-22820-4		680-22820-18		680-22820-10		680-22820-20	
Date Sampled		12/14/2006		12/15/2006		12/14/2006		12/15/2006	
Time Sampled		8:10		8:30					
Volatile Organic Compounds (USEPA Method 8260B)									
Date Prepared		12/26/2006		12/26/2006		12/26/2006		12/27/2006	
Date Analyzed		12/26/2006		12/26/2006		12/26/2006		12/27/2006	
Analyte	**CAS No.**	(ug/L)		(ug/L)		(ug/L)		(ug/L)	
Acetone	67-64-1	7.3 U	7.3	7.3 U	7.3	7.3 U	7.3	7.3 U	7.3
Benzene	71-43-2	0.54 U	0.54	0.54 U	0.54	0.54 U	0.54	0.54 U	0.54
Chlorobenzene	108-90-7	0.41 U	0.41	0.41 U	0.41	0.41 U	0.41	0.41 U	0.41
Chloroform	67-66-3	0.52 U	0.52	0.52 U	0.52	0.52 U	0.52	0.52 U	0.52
1,2-Dichloroethane	107-06-2	0.28 U	0.28	0.28 U	0.28	0.28 U	0.28	0.28 U	0.28
cis-1,2-Dichloroethene	156-59-2	0.55 U	0.55	0.55 U	0.55	0.55 U	0.55	0.55 U	0.55
Ethylbenzene	100-41-4	0.62 U	0.62	0.62 U	0.62	0.62 U	0.62	0.62 U	0.62
Methylene Chloride	75-09-2	0.44 U	0.44	0.44 U	0.44	0.44 U	0.44	0.44 U	0.44
4-Methyl-2-pentanone	108-10-1	0.45 U	0.45	0.45 U	0.45	0.45 U	0.45	0.45 U	0.45
Tetrachloroethene	127-18-4	0.75 U	0.75	0.75 U	0.75	0.75 U	0.75	0.75 U	0.75
Toluene	108-88-3	0.62 U	0.62	0.62 U	0.62	0.62 U	0.62	0.62 U	0.62
Trichloroethene	79-01-6	0.71 U	0.71	0.71 U	0.71	0.71 U	0.71	0.71 U	0.71
Xylenes, Total	1330-20-7	1.3 U	1.3	1.3 U	1.3	1.3 U	1.3	1.3 U	1.3
Semi-Volatile Organic Compounds (USEPA Method 8270C)									
Date Prepared		12/20/2006		12/20/2006					
Date Analyzed		12/29/2006		1/2/2007					
Analyte	**CAS No.**	(ug/L)		(ug/L)					
4-Chloroaniline	106-47-8	0.52 U	0.52	0.50 U	0.50				
2-Chlorophenol	95-57-8	0.72 U	0.72	0.70 U	0.70				
1,2-Dichlorobenzene	95-50-1	1.0 U	1.0	0.97 U	0.97				
1,3-Dichlorobenzene	541-73-1	0.55 U	0.55	0.53 U	0.53				
1,4-Dichlorobenzene	106-46-7	0.52 U	0.52	0.50 U	0.50				
2,4-Dichlorophenol	120-83-2	0.66 U	0.66	0.64 U	0.64				
Diethyl phthalate	84-66-2	0.59 U	0.59	0.57 U	0.57				
3 & 4 Methylphenol	65794-96-9	0.66 U	0.66	0.64 U	0.64				
Phenol	108-95-2	0.99 U	0.99	0.96 U	0.96				
1,2,4-Trichlorobenzene	120-82-1	0.54 U	0.54	0.52 U	0.52				
2,4,6-Trichlorophenol	88-06-2	0.70 U	0.70	0.68 U	0.68				

Table 3

Summary of Validated QA/QC Sample Detections - Organics (December 2006 Sampling Event)

Site R Quarterly Groundwater Monitoring

Solutia, Inc. - Sauget, Illinois

Monitoring Well		FB 1	MDL	FB 2	MDL	Trip Blank	MDL	Trip Blank	MDL
Lab Sample ID		680-22820-4		680-22820-18		680-22820-10		680-22820-20	
Date Sampled		12/14/2006		12/15/2006		12/14/2006		12/15/2006	
Time Sampled		8:10		8:30					
Organochlorine Pesticides (USEPA Method 8081A)									
Date Prepared		12/18/2006		12/19/2006					
Date Analyzed		12/20/2006		12/21/2006					
Analyte	**CAS No.**	**(ug/L)**		**(ug/L)**					
alpha-BHC	319-84-6	0.0086 U	0.0086	0.0083 U	0.0083				
Endosulfan sulfate	1031-07-8	0.010 U	0.010	0.0097 U	0.0097				
Chlorinated Herbicides (USEPA Method 8151A)									
Date Prepared		12/19/2006		12/19/2006					
Date Analyzed		12/20/2006		12/20/2006					
Analyte	**CAS No.**	**(ug/L)**		**(ug/L)**					
2,4-D	94-75-7	0.11 U	0.11	0.11 U	0.11				
Dichlorprop	120-36-5	0.030 U	0.030	0.029 U	0.029				
Total Organic Carbon (USEPA Method 9060)									
Date Analyzed		12/20/2006		12/20/2006					
Analyte	**CAS No.**	**(mg/L)**		**(mg/L)**					
Total Organic Carbon (TOC)	-	0.50 U	0.50	0.50 U	0.50				

Parameters not listed were not detected in any samples.
Results in ***bold italics*** denote detections.

Flags and Qualifiers
U - Analyte was not detected at or above the Method Detection Limit (MDL).
UJ - Analyte was not detected at or above the Method Detection Limit (MDL); the detection limit is estimated.
J - Result is an estimated value.
JP - Result is an estimated value; The lower of the two values is reported when the % difference between the results of two GC columns is greater than 40%.
JD - Compound analyzed at a dilution; Low surrogate recovery due to sample dilution (DUP-1DL).

Checked by: AWG Date: 5/3/2007
Reviewed by: MRF Date: 5/3/2007

Table 4

Summary of Validated QA/QC Sample Detections - Inorganics (December 2006 Sampling Event)

Site R Quarterly Groundwater Monitoring

Solutia, Inc. - Sauget, Illinois

Monitoring Well		DUP 1	MDL	DUP 2	MDL	RB 1	MDL	RB 2	MDL
Lab Sample ID		680-22820-7		680-22820-19		680-22820-9		680-22820-17	
Date Sampled		12/14/2006		12/15/2006		12/14/2006		12/15/2006	
Time Sampled		0:00		0:00		11:45		11:30	
Mercury (USEPA Method 7470A)									
Date Prepared		1/2/2007		1/2/2007		1/2/2007		1/2/2007	
Date Analyzed		1/3/2007		1/3/2007		1/3/2007		1/3/2007	
Analyte	**CAS No.**	**(mg/L)**		**(mg/L)**		**(mg/L)**		**(mg/L)**	
Mercury	7439-97-6	0.000080 U	0.000080	0.00011 J	0.000080	0.00008 U	0.000080	0.00008 U	0.000080
Metals (USEPA Method 6010B)									
Date Prepared		12/19/2006		12/19/2006		12/19/2006		12/19/2006	
Date Analyzed		12/20/2006		12/20/2006		12/20/2006		12/20/2006	
Analyte	**CAS No.**	**(mg/L)**		**(mg/L)**		**(mg/L)**		**(mg/L)**	
Barium	7440-39-3	***0.30***	0.0012	***0.15***	0.0012	0.0012 U	0.0012	0.0012 U	0.0012
Chromium	7440-47-3	0.0018 UJ	0.00083	***0.0037 J***	0.00083	0.00083 U	0.00083	0.00083 U	0.00083
Copper	7440-50-8	0.0017 U	0.0017	***0.0064 J***	0.0017	0.0017 U	0.0017	0.0017 U	0.0017
Lead	7439-92-1	0.0022 U	0.0022	0.0022 U	0.0022	0.0022 U	0.0022	0.0022 U	0.0022
Nickel	7440-02-0	0.0023 UJ	0.0018	***0.013 J***	0.0018	0.0018 U	0.0018	0.0018 U	0.0018
Total Dissolved Solids (USEPA Method 160.1)									
Date Analyzed		12/20/2006		12/20/2006		12/20/2006		12/20/2006	
Analyte	**CAS No.**	**(mg/L)**		**(mg/L)**		**(mg/L)**		**(mg/L)**	
Total Dissolved Solids (TDS)	-	***710***	5.0	***1,800***	5.0	***33***	5.0	***51***	5.0

Parameters not listed were not detected in any samples.
Results in ***bold italics*** denote detections.

Samples are not filtered.

Flags and Qualifiers
U - Analyte was not detected at or above the Method Detection Limit (MDL).
J - Result is an estimated value.

Checked by: AWG Date: 5/3/2007
Reviewed by: MRF Date: 5/3/2007

Table 4

Summary of Validated QA/QC Sample Detections - Inorganics (December 2006 Sampling Event)

Site R Quarterly Groundwater Monitoring

Solutia, Inc. - Sauget, Illinois

Monitoring Well		FB 1	MDL	FB 2	MDL	Trip Blank	MDL	Trip Blank	MDL
Lab Sample ID		680-22820-4		680-22820-18		680-22820-10		680-22820-20	
Date Sampled		12/14/2006		12/15/2006		12/14/2006		12/15/2006	
Time Sampled		8:10		8:30					
Mercury (USEPA Method 7470A)									
Date Prepared		1/2/2007		1/2/2007					
Date Analyzed		1/3/2007		1/3/2007					
Analyte	**CAS No.**	**(mg/L)**		**(mg/L)**					
Mercury	7439-97-6	0.00008 U	0.000080	0.00008 U	0.000080				
Metals (USEPA Method 6010B)									
Date Prepared		12/19/2006		12/19/2006					
Date Analyzed		12/20/2006		12/20/2006					
Analyte	**CAS No.**	**(mg/L)**		**(mg/L)**					
Barium	7440-39-3	0.0012 U	0.0012	0.0012 U	0.0012				
Chromium	7440-47-3	0.00083 U	0.00083	0.00083 U	0.00083				
Copper	7440-50-8	0.0017 U	0.0017	0.0017 U	0.0017				
Lead	7439-92-1	0.0022 U	0.0022	0.0022 U	0.0022				
Nickel	7440-02-0	0.0018 U	0.0018	0.0018 U	0.0018				
Total Dissolved Solids (USEPA Method 160.1)									
Date Analyzed		12/20/2006		12/20/2006					
Analyte	**CAS No.**	**(mg/L)**		**(mg/L)**					
Total Dissolved Solids (TDS)	-	5.0 U	5.0	***19***	5.0				

Parameters not listed were not detected in any samples.
Results in ***bold italics*** denote detections.

Samples are not filtered.

Flags and Qualifiers
U - Analyte was not detected at or above the Method Detection Limit (MDL).
J - Result is an estimated value.

Checked by: AWG Date: 5/3/2007
Reviewed by: MRF Date: 5/3/2007

2007

March, June, September and December

DRAFT

Table 1
Summary of Validated Groundwater Sample Detections - Organics (March 2007 Sampling Event)
Site R Quarterly Groundwater Monitoring
Solutia, Inc. - Sauget, Illinois

Monitoring Well		BWMW-1S	MDL	BWMW-1M	MDL	BWMW-1D	MDL	BWMW-2S	MDL	BWMW-2M	MDL	BWMW-2D	MDL
Lab Sample ID		680-25231-1		680-25231-11		680-25231-12		680-25231-14		680-25231-15		680-25231-16	
Date Sampled		3/21/2007		3/21/2007		3/21/2007		3/22/2007		3/22/2007		3/22/2007	
Time Sampled		13:05		13:30		12:30		9:52		9:20		11:10	
Volatile Organic Compounds (USEPA Method 8260B)													
Date Prepared		3/31/2007		3/31/2007		3/31/2007		4/4/2007		4/4/2007		4/4/2007	
Date Analyzed		3/31/2007		3/31/2007		3/31/2007		4/4/2007		4/4/2007		4/4/2007	
Analyte	**CAS No.**	(ug/L)		(ug/L)		(ug/L)		(ug/L)		(ug/L)		(ug/L)	
Acetone	67-64-1	730 U	730	150 U	150	370 U	370	7.3 U	7.3	***3,000***	730	***7,000***	730
Benzene	71-43-2	***2,000 D***	540	***18 J***	11	***32 J***	27	***36 D***	0.54	***760***	54	***1,300***	54
Chlorobenzene	108-90-7	***93,000 D***	410	***1,500***	8.2	***12,000 D***	41	***310 D***	0.41	***8,000***	41	***6,500***	41
Chloroform	67-66-3	52 U	52	10 U	10	26 U	26	0.52 U	0.52	***67 J***	52	***100***	52
1,2-Dichloroethane	107-06-2	28 U	28	5.6 U	5.6	14 U	14	0.28 U	0.28	***2,500***	28	***4,500***	28
Ethylbenzene	100-41-4	62 U	62	12 U	12	31 U	31	0.62 U	0.62	***220***	62	***190***	62
Methylene Chloride	75-09-2	44 U	44	8.8 U	8.8	22 U	22	0.44 U	0.44	***150 J***	44	***200 J***	44
4-Methyl-2-pentanone	108-10-1	45 U	45	9.0 U	9.0	23 U	23	0.45 U	0.45	***370 J***	45	***1,300***	45
Tetrachloroethene	127-18-4	75 U	75	15 U	15	38 U	38	0.75 U	0.75	***190***	75	***91 J***	75
Toluene	108-88-3	62 U	62	12 U	12	31 U	31	0.62 U	0.62	***2,100***	62	***1,900***	62
Trichloroethene	79-01-6	71 U	71	14 U	14	36 U	36	0.71 U	0.71	***140***	71	***170***	71
Xylenes, Total	1330-20-7	130 U	130	26 U	26	65 U	65	1.3 U	1.3	***1,200***	130	***850***	130
Semi-Volatile Organic Compounds (USEPA Method 8270C)													
Date Prepared		3/23/2007		3/23/2007		3/23/2007		3/26/2007		3/26/2007		3/26/2007	
Date Analyzed		4/2/2007		4/2/2007		4/2/2007		4/2/2007		4/9/2007		4/9/2007	
Analyte	**CAS No.**	(ug/L)		(ug/L)		(ug/L)		(ug/L)		(ug/L)		(ug/L)	
Benzo[b]fluoranthene	205-99-2	0.76 U	0.76	0.78 U	0.78	0.78 U	0.78	0.78 U	0.78	38 U	38	39 U	39
Benzo[k]fluoranthene	207-08-9	0.72 UJ	0.72	0.73 UJ	0.73	0.73 UJ	0.73	0.73 UJ	0.73	36 UJ	36	37 UJ	37
Benzo[g,h,i]perylene	191-24-2	0.98 U	0.98	1.0 U	1.0	1.0 U	1.0	1.0 U	1.0	49 U	49	50 U	50
Benzo[a]pyrene	50-32-8	0.98 UJ	0.98	1.0 UJ	1.0	1.0 UJ	1.0	1.0 UJ	1.0	49 UJ	49	50 UJ	50
4-Chloroaniline	106-47-8	***36***	0.51	0.52 U	0.52	***7.7 J***	0.52	***130***	0.52	***11,000 JD***	250	***21,000 JD***	260
2-Chlorophenol	95-57-8	***77***	0.71	***4.7 J***	0.72	***26***	0.72	0.72 U	0.72	***7,900 D***	350	***12,000 JD***	360
Dibenz(a,h)anthracene	56-55-3	0.98 U	0.98	1.0 U	1.0	1.0 U	1.0	1.0 U	1.0	49 U	49	50 U	50
1,2-Dichlorobenzene	95-50-1	***2.0 J***	1.0	***6.8 J***	1.0	***2.0 J***	1.0	***2.5 J***	1.0	***470 J***	49	***550***	50
1,3-Dichlorobenzene	541-73-1	0.54 U	0.54	***1.5 J***	0.55	0.55 U	0.55	0.55 U	0.55	27 U	27	U	28
1,4-Dichlorobenzene	106-46-7	***4.2 J***	0.51	***49***	0.52	***4.5 J***	0.52	***1.2 J***	0.52	***230 J***	25	***240 J***	26
2,4-Dichlorophenol	120-83-2	0.65 U	0.65	0.66 U	0.66	***23***	0.66	0.66 U	0.66	***24,000 JD***	320	***19,000 JD***	330
Diethyl phthalate	84-66-2	0.58 U	0.58	0.59 U	0.59	0.59 U	0.59	0.59 U	0.59	***36 J***	29	30 U	30
2,4-Dimethylphenol	105-67-9	0.98 U	0.98	1.0 U	1.0	1.0 U	1.0	1.0 U	1.0	***140 J***	49	50 U	50
Dimethyl phthalate	131-11-3	0.58 U	0.58	0.59 U	0.59	0.59 U	0.59	0.59 U	0.59	***30 J***	29	30 U	30
2-Methylphenol	95-48-7	0.69 U	0.69	0.70 U	0.70	0.70 U	0.70	0.70 U	0.70	34 U	34	***40 J***	35
3 & 4 Methylphenol	65794-96-9	0.65 U	0.65	0.66 U	0.66	0.66 U	0.66	***1.1 J***	0.66	***1,300***	32	***1,900***	33
Naphthalene	91-20-3	***4.9 J***	0.75	0.76 U	0.76	0.76 U	0.76	0.76 U	0.76	***96 J***	37	38 UJ	38
2-Nitroaniline	88-74-4	0.68 U	0.68	0.69 U	0.69	0.69 U	0.69	0.69 U	0.69	***380 J***	34	***330 J***	35
4-Nitroaniline	88-74-4	0.83 U	0.83	0.85 U	0.85	0.85 U	0.85	0.85 U	0.85	***310 J***	42	***330 J***	43
Nitrobenzene	98-95-3	0.91 U	0.91	0.93 U	0.93	0.93 U	0.93	0.93 U	0.93	***1,100***	46	***1,100***	47
Pentachlorophenol	87-86-5	2.5 UJ	2.5	2.5 UJ	2.5	2.5 UJ	2.5	2.5 UJ	2.5	***250 J***	120	130 UJ	130
Phenol	108-95-2	0.97 U	0.97	0.99 U	0.99	0.99 U	0.99	***1.2 J***	0.99	***33,000 JD***	490	***52,000 JD***	500
1,2,4-Trichlorobenzene	120-82-1	0.53 U	0.53	0.54 U	0.54	0.54 U	0.54	0.54 U	0.54	***50 J***	26	***56 J***	27
2,4,6-Trichlorophenol	88-06-2	0.69 U	0.69	0.70 U	0.70	***8.2 J***	0.70	0.70 U	0.70	***3,400***	34	***3,000***	35

Table 1
Summary of Validated Groundwater Sample Detections - Organics (March 2007 Sampling Event)
Site R Quarterly Groundwater Monitoring
Solutia, Inc. - Sauget, Illinois

Monitoring Well		BWMW-1S	MDL	BWMW-1M	MDL	BWMW-1D	MDL	BWMW-2S	MDL	BWMW-2M	MDL	BWMW-2D	MDL
Lab Sample ID		680-25231-1		680-25231-11		680-25231-12		680-25231-14		680-25231-15		680-25231-16	
Date Sampled		3/21/2007		3/21/2007		3/21/2007		3/22/2007		3/22/2007		3/22/2007	
Time Sampled		13:05		13:30		12:30		9:52		9:20		11:10	
Organochlorine Pesticides (USEPA Method 8081A)													
Date Prepared		3/23/2007		3/23/2007		3/23/2007		3/26/2007		3/26/2007		3/26/2007	
Date Analyzed		3/29/2007		3/29/2007		3/29/2007		3/29/2007		3/29/2007		3/29/2007	
Analyte	**CAS No.**	**(ug/L)**		**(ug/L)**		**(ug/L)**		**(ug/L)**		**(ug/L)**		**(ug/L)**	
alpha-BHC	319-84-6	0.0086 U	0.0086	***0.012 JP***	0.0086	0.042 U	0.042	0.0083 UJ	0.0083	0.043 UJ	0.043	0.042 UJ	0.042
Heptachlor	76-44-8	0.0076 U	0.0076	***0.0099 JP***	0.0076	0.037 U	0.037	0.0074 UJ	0.0074	0.038 UJ	0.038	0.037 UJ	0.037
Chlorinated Herbicides (USEPA Method 8151A)													
Date Prepared		3/26/2007		3/26/2007		3/26/2007		3/26/2007		3/26/2007		3/26/2007	
Date Analyzed		3/28/2007		3/28/2007		3/28/2007		3/29/2007		3/29/2007		3/29/2007	
Analyte	**CAS No.**	**(ug/L)**		**(ug/L)**		**(ug/L)**		**(ug/L)**		**(ug/L)**		**(ug/L)**	
2,4-D	94-75-7	0.11 U	0.11	0.11 U	0.11	0.11 U	0.11	***0.13 JP***	0.11	***17,000 JD***	550	***18,000 JD***	550
Dichlorprop	120-36-5	***7.8 D***	0.058	0.03 U	0.030	0.029 U	0.030	***1.1***	0.029	***1,400 JD***	30	***1,600 JD***	30
Pentachlorophenol	87-86-5	0.17 U	0.17	0.18 U	0.18	0.17 U	0.18	0.18 U	0.18	180 UJ	180	180 UJ	180
Silvex (2,4,5-TP)	93-72-1	0.032 U	0.032	0.033 U	0.033	0.032 U	0.033	***0.039 JP***	0.032	33 UJ	33	33 UJ	33
Total Organic Carbon (USEPA Method 9060)													
Date Analyzed		4/6/2007		4/6/2007		4/6/2007		4/6/2007		4/6/2007		4/6/2007	
Analyte	**CAS No.**	**(mg/L)**		**(mg/L)**		**(mg/L)**		**(mg/L)**		**(mg/L)**		**(mg/L)**	
Total Organic Carbon (TOC)	-	***12***	0.50	***6.5***	0.50	***4.2***	0.50	***35***	0.50	***410***	0.50	***480***	0.50

Parameters not listed were not detected in any samples.
Results in ***bold italics*** denote detections.

Flags and Qualifiers
U - Analyte was not detected at or above the Method Detection Limit (MDL).
UJ - Analyte was not detected at or above the Method Detection Limit (MDL); the detection limit is estimated.
J - Result is an estimated value.
JP - Result is an estimated value; The lower of the two values is reported when the % difference between the results of two GC columns is greater than 40%.
JE - Result is an estimated value; Result exceeded calibration range and secondary dilution produced a non-detect value
P - The lower of the two values is reported when the % difference between the results of two GC columns is greater than 40%.
D - Compound analyzed at a dilution.
JD - Compound analyzed at a dilution; Surrogates not calculated due to sample dilution (BWMW-2M and BWMW-2D); Low surrogate recovery due to sample dilution (BWMW-2M, BWMW-2D, BWMW-3M, BWMW-3D and BWMW-4DDL); and High surrogate recovery >150% (BWMW-1D and BWMW-3D).

Checked by: MRF Date: 6/4/2007
Reviewed by: RMG Date: 6/4/2007

Table 1
Summary of Validated Groundwater Sample Detections - Organics (March 2007 Sampling Event)
Site R Quarterly Groundwater Monitoring
Solutia, Inc. - Sauget, Illinois

Monitoring Well		BWMW-3S	MDL	BWMW-3M	MDL	BWMW-3D	MDL	BWMW-4S	MDL	BWMW-4M	MDL	BWMW-4D	MDL
Lab Sample ID		680-25231-7		680-25231-9		680-25231-8		680-25231-3		680-25231-4		680-25231-5	
Date Sampled		3/20/2007		3/21/2007		3/21/2007		3/20/2007		3/20/2007		3/20/2007	
Time Sampled		15:20		9:50		9:35		13:30		10:55		10:15	
Volatile Organic Compounds (USEPA Method 8260B)													
Date Prepared		4/3/2007		3/31/2007		3/31/2007		4/3/2007		4/3/2007		4/3/2007	
Date Analyzed		4/3/2007		3/31/2007		3/31/2007		4/3/2007		4/3/2007		4/3/2007	
Analyte	**CAS No.**	**(ug/L)**		**(ug/L)**		**(ug/L)**		**(ug/L)**		**(ug/L)**		**(ug/L)**	
Acetone	67-64-1	15 U	15	150 U	150	150 U	150	7.3 U	7.3	37 U	37	15 U	15
Benzene	71-43-2	***67***	1.1	***200 D***	27	***100***	11	0.54 U	0.54	***8.6***	2.7	***18***	1.1
Chlorobenzene	108-90-7	***250***	0.82	***5,800 D***	21	***2,800***	8.2	***11***	0.41	***250***	2.1	***280***	0.82
Chloroform	67-66-3	1.0 U	1.0	10 U	10	10 U	10	0.52 U	0.52	2.6 U	2.6	1.0 U	1.0
1,2-Dichloroethane	107-06-2	0.56 U	0.56	5.6 U	5.6	5.6 U	5.6	0.28 U	0.28	1.4 U	1.4	0.56 U	0.56
Ethylbenzene	100-41-4	1.2 U	1.2	12 U	12	***13 J***	12	0.62 U	0.62	3.1 U	3.1	***1.8 J***	1.2
Methylene Chloride	75-09-2	0.88 U	0.88	8.8 U	8.8	8.8 U	8.8	0.44 U	0.44	2.2 U	2.2	0.88 U	0.88
4-Methyl-2-pentanone	108-10-1	0.9 U	0.9	9.0 U	9.0	9.0 U	9.0	0.45 U	0.45	2.3 U	2.3	0.90 U	0.90
Tetrachloroethene	127-18-4	1.5 U	1.5	15 U	15	15 U	15	0.75 U	0.75	3.8 U	3.8	1.5 U	1.5
Toluene	108-88-3	1.2 U	1.2	12 U	12	***13 J***	12	0.62 U	0.62	3.1 U	3.1	***1.6 J***	1.2
Trichloroethene	79-01-6	1.4 U	1.4	14 U	14	14 U	14	0.71 U	0.71	3.6 U	3.6	1.4 U	1.4
Xylenes, Total	1330-20-7	2.6 U	2.6	26 U	26	***35 J***	26	1.3 U	1.3	6.5 U	6.5	***4.8***	2.6
Semi-Volatile Organic Compounds (USEPA Method 8270C)													
Date Prepared		3/23/2007		3/23/2007		3/23/2007		3/23/2007		3/23/2007		3/23/2007	
Date Analyzed		4/2/2007		4/5/2007		4/3/2007		4/3/2007		4/2/2007		4/3/2007	
Analyte	**CAS No.**	**(ug/L)**		**(ug/L)**		**(ug/L)**		**(ug/L)**		**(ug/L)**		**(ug/L)**	
Benzo[b]fluoranthene	205-99-2	0.78 U	0.78	***1.1 J***	0.75	8.0 UJ	8.0	0.78 U	0.78	0.78 U	0.78	0.78 U	0.78
Benzo[k]fluoranthene	207-08-9	0.73 UJ	0.73	***1.2 J***	0.70	7.4 UJ	7.4	0.73 UJ	0.73	0.73 UJ	0.73	0.73 UJ	0.73
Benzo[g,h,i]perylene	191-24-2	1.0 U	1.0	***1.4 J***	0.96	10 UJ	10	1.0 U	1.0	1.0 U	1.0	1.0 U	1.0
Benzo[a]pyrene	50-32-8	1.0 UJ	1.0	***1.6 J***	0.96	10 UJ	10	1.0 UJ	1.0	1.0 UJ	1.0	1.0 UJ	1.0
4-Chloroaniline	106-47-8	***58***	0.52	0.50 U	0.50	***8,000 JD***	53	0.52 U	0.52	0.52 U	0.52	***970 JD***	10
2-Chlorophenol	95-57-8	***2.3 J***	0.72	0.69 U	0.69	7.3 UJ	7.3	0.72 U	0.72	1.3 J	1.3	0.72 U	0.72
Dibenz(a,h)anthracene	56-55-3	1.0 U	1.0	***1.3 J***	0.96	10 UJ	10	1.0 U	1.0	1.0 U	1.0	1.0 U	1.0
1,2-Dichlorobenzene	95-50-1	***3.2 J***	1.0	***21***	0.96	***150 J***	10	1.0 U	1.0	***7.9 J***	7.9	***770 JD***	20
1,3-Dichlorobenzene	541-73-1	0.55 U	0.55	0.53 U	0.53	5.6 UJ	5.6	0.55 U	0.55	***3.0 J***	0.55	0.55 U	0.55
1,4-Dichlorobenzene	106-46-7	***8.7 J***	0.52	***220 JD***	5.0	***71 J***	5.3	***1.3 J***	0.52	***23***	0.52	***21***	0.52
2,4-Dichlorophenol	120-83-2	0.66 U	0.66	0.63 U	0.63	6.7 UJ	6.7	0.66 U	0.66	0.66 U	0.66	0.66 U	0.66
Diethyl phthalate	84-66-2	0.59 U	0.59	0.57 U	0.57	6.0 UJ	6.0	0.59 U	0.59	0.59 U	0.59	0.59 U	0.59
2,4-Dimethylphenol	105-67-9	1.0 U	1.0	0.96 U	0.96	10 UJ	10	1.0 U	1.0	1.0 U	1.0	1.0 U	1.0
Dimethyl phthalate	131-11-3	0.59 U	0.59	0.57 U	0.57	6.0 UJ	6.0	0.59 U	0.59	0.59 U	0.59	0.59 U	0.59
2-Methylphenol	95-48-7	0.70 U	0.70	0.67 U	0.67	7.1 UJ	7.1	0.70 U	0.70	0.70 U	0.70	0.70 U	0.70
3 & 4 Methylphenol	65794-96-9	***4.0 J***	0.66	***2.5 J***	0.63	6.7 UJ	6.7	0.66 U	0.66	0.66 U	0.66	0.66 U	0.66
Naphthalene	91-20-3	0.76 U	0.76	0.73 U	0.73	7.8 UJ	7.8	0.76 U	0.76	0.76 U	0.76	0.76 U	0.76
2-Nitroaniline	88-74-4	0.69 U	0.69	0.66 U	0.66	7.0 UJ	7.0	0.69 U	0.69	0.69 U	0.69	0.69 U	0.69
4-Nitroaniline	88-74-4	0.85 U	0.85	0.82 U	0.82	8.7 UJ	8.7	0.85 U	0.85	0.85 U	0.85	0.85 U	0.85
Nitrobenzene	98-95-3	0.93 U	0.93	0.89 U	0.89	9.5 UJ	9.5	0.93 U	0.93	0.93 U	0.93	0.93 U	0.93
Pentachlorophenol	87-86-5	2.5 UJ	2.5	2.4 UJ	2.4	26 UJ	26	2.5 UJ	2.5	2.5 UJ	2.5	2.5 UJ	2.5
Phenol	108-95-2	***3.9 J***	0.99	***6.3 J***	0.95	10 UJ	10	0.99 U	0.99	0.99 U	0.99	0.99 U	0.99
1,2,4-Trichlorobenzene	120-82-1	0.54 U	0.54	0.52 U	0.52	5.5 UJ	5.5	0.54 U	0.54	0.54 U	0.54	***53***	0.54
2,4,6-Trichlorophenol	88-06-2	0.70 U	0.70	0.67 U	6.8	7.1 UJ	7.1	0.70 U	0.70	0.70 U	0.70	***3.8 J***	0.70

Table 1
Summary of Validated Groundwater Sample Detections - Organics (March 2007 Sampling Event)
Site R Quarterly Groundwater Monitoring
Solutia, Inc. - Sauget, Illinois

Monitoring Well		BWMW-3S	MDL	BWMW-3M	MDL	BWMW-3D	MDL	BWMW-4S	MDL	BWMW-4M	MDL	BWMW-4D	MDL
Lab Sample ID		680-25231-7		680-25231-9		680-25231-8		680-25231-3		680-25231-4		680-25231-5	
Date Sampled		3/20/2007		3/21/2007		3/21/2007		3/20/2007		3/20/2007		3/20/2007	
Time Sampled		15:20		9:50		9:35		13:30		10:55		10:15	
Organochlorine Pesticides (USEPA Method 8081A)													
Date Prepared		3/23/2007		3/23/2007		3/23/2007		3/23/2007		3/23/2007		3/23/2007	
Date Analyzed		3/29/2007		3/29/2007		3/29/2007		3/29/2007		3/29/2007		3/29/2007	
Analyte	**CAS No.**	**(ug/L)**		**(ug/L)**		**(ug/L)**		**(ug/L)**		**(ug/L)**		**(ug/L)**	
alpha-BHC	319-84-6	0.0086 U	0.0086	0.0083 UJ	0.0083	0.043 U	0.043	0.0084 U	0.0084	0.0088 U	0.0088	0.043 U	0.043
Heptachlor	76-44-8	0.0076 U	0.0076	0.0074 UJ	0.0074	0.038 U	0.038	0.0075 U	0.0075	0.0078 U	0.0078	0.038 U	0.038
Chlorinated Herbicides (USEPA Method 8151A)													
Date Prepared		3/26/2007		3/26/2007		3/26/2007		3/26/2007		3/26/2007		3/26/2007	
Date Analyzed		3/28/2007		3/28/2007		3/28/2007		3/28/2007		3/28/2007		3/28/2007	
Analyte	**CAS No.**	**(ug/L)**		**(ug/L)**		**(ug/L)**		**(ug/L)**		**(ug/L)**		**(ug/L)**	
2,4-D	94-75-7	0.11 U	0.11	0.11 U	0.11	0.11 U	0.11	0.11 U	0.11	0.11 U	0.11	0.11 U	0.11
Dichlorprop	120-36-5	***0.37 J***	0.030	***0.79 P***	0.029	***0.50 J***	0.030	0.03 U	0.030	***0.13 JP***	0.030	***0.15 J***	0.030
Pentachlorophenol	87-86-5	0.18 U	0.18	***0.45 M***	0.17	0.18 U	0.18	0.18 U	0.18	0.18 U	0.18	***0.63***	0.18
Silvex (2,4,5-TP)	93-72-1	0.033 U	0.033	0.032 U	0.033	0.033 U	0.033	0.033 U	0.033	0.033 U	0.033	0.033 U	0.032
Total Organic Carbon (USEPA Method 9060)													
Date Analyzed		4/6/2007		4/6/2007		4/6/2007		4/6/2007		4/6/2007		4/6/2007	
Analyte	**CAS No.**	**(mg/L)**		**(mg/L)**		**(mg/L)**		**(mg/L)**		**(mg/L)**		**(mg/L)**	
Total Organic Carbon (TOC)	-	***23***	0.50	***47***	0.50	***28***	0.50	***4.3***	0.50	***4.8***	0.50	***7.4***	0.50

Parameters not listed were not detected in any samples.
Results in ***bold italics*** denote detections.

Flags and Qualifiers
U - Analyte was not detected at or above the Method Detection Limit (MDL).
UJ - Analyte was not detected at or above the Method Detection Limit (MDL); the detection limit is estimated.
J - Result is an estimated value.
JP - Result is an estimated value; The lower of the two values is reported when the % difference between the results of two GC columns is greater than 40%.
JE - Result is an estimated value; Result exceeded calibration range and secondary dilution produced a non-detect value
P - The lower of the two values is reported when the % difference between the results of two GC columns is greater than 40%.
D - Compound analyzed at a dilution.
JD - Compound analyzed at a dilution; Surrogates not calculated due to sample dilution (BWMW-2M and BWMW-2D); Low surrogate recovery due to sample dilution (BWMW-2M, BWMW-2D, BWMW-3M, BWMW-3D and BWMW-4DDL); and High surrogate recovery >150% (BWMW-1D and BWMW-3D).

Checked by: MRF Date: 6/4/2007
Reviewed by: RMG Date: 6/4/2007

Table 2
Summary of Validated Groundwater Sample Detections - Inorganics (March 2007 Sampling Event)
Site R Quarterly Groundwater Monitoring
Solutia, Inc. - Sauget, Illinois

Monitoring Well		BWMW-1S	MDL	BWMW-1M	MDL	BWMW-1D	MDL	BWMW-2S	MDL	BWMW-2M	MDL	BWMW-2D	MDL
Lab Sample ID		680-25231-1		680-25231-11		680-25231-12		680-25231-14		680-25231-15		680-25231-16	
Date Sampled		3/21/2007		3/21/2007		3/21/2007		3/22/2007		3/22/2007		3/22/2007	
Time Sampled		13:05		13:30		12:30		9:52		9:20		11:10	
Mercury (USEPA Method 7470A)													
Date Prepared		3/27/2007		3/27/2007		3/27/2007		3/27/2007		3/27/2007		3/27/2007	
Date Analyzed		3/29/2007		3/29/2007		3/29/2007		3/29/2007		3/29/2007		3/29/2007	
Analyte	**CAS No.**	**(mg/L)**		**(mg/L)**		**(mg/L)**		**(mg/L)**		**(mg/L)**		**(mg/L)**	
Mercury	7439-97-6	0.00008 U	0.000080	0.00008 U	0.000080	0.00008 U	0.000080	0.00008 U	0.000080	0.00008 U	0.000080	0.00008 U	0.000080
Metals (USEPA Method 6010B)													
Date Prepared		3/27/2007		3/27/2007		3/27/2007		3/27/2007		3/27/2007		3/27/2007	
Date Analyzed		3/28/2007		3/28/2007		3/28/2007		3/28/2007		3/28/2007		3/28/2007	
Analyte	**CAS No.**	**(mg/L)**		**(mg/L)**		**(mg/L)**		**(mg/L)**		**(mg/L)**		**(mg/L)**	
Arsenic	7440-38-2	***0.14***	0.0042	0.0042 U	0.0042	0.0042 U	0.0042	***0.02***	0.0042	0.0042 U	0.0042	0.0042 U	0.0042
Barium	7440-39-3	***0.37***	0.0012	***0.46***	0.0012	***0.33***	0.0012	***1.1***	0.0012	***0.089***	0.0012	***0.11***	0.0012
Chromium	7440-47-3	***0.038***	0.00083	0.0019 UJ	0.00083	0.0038 UJ	0.00083	***0.07***	0.00083	0.0014 UJ	0.00083	0.0028 UJ	0.00083
Copper	7440-50-8	***0.023***	0.0017	0.0017 U	0.0017	0.002 UJ	0.0017	***5.7***	0.0017	0.0086 UJ	0.0017	0.0023 UJ	0.0017
Lead	7439-92-1	***0.011***	0.0022	0.0022 U	0.0022	***0.022***	0.0022	***0.1***	0.0022	0.0022 U	0.0022	0.0022 U	0.0022
Nickel	7440-02-0	***0.037 J***	0.0018	0.0018 U	0.0018	***0.0042 J***	0.0018	***0.063***	0.0018	***0.022 J***	0.0018	***0.015 J***	0.0018
Total Dissolved Solids (USEPA Method 160.1)													
Date Analyzed		3/23/2007		3/23/2007		3/23/2007		3/26/2007		3/26/2007		3/26/2007	
Analyte	**CAS No.**	**(mg/L)**		**(mg/L)**		**(mg/L)**		**(mg/L)**		**(mg/L)**		**(mg/L)**	
Total Dissolved Solids (TDS)	-	***940***	10	***1,000***	10	***690***	10	***1,500***	10	***1,700***	10	***1,800***	10

Parameters not listed were not detected in any samples.
Results in ***bold italics*** denote detections.
NS - Well purged dry and sufficient water for sample collection had not recharged into the well within 24 hours; In accordance with the Field Sampling Plan (FSP; URS, 2003), a groundwater sample was not collected.
Samples are not filtered.

Flags and Qualifiers
U - Analyte was not detected at or above the Method Detection Limit (MDL).
J - Result is an estimated value.

Checked by: MRF Date: 6/4/2007
Reviewed by: RMG Date: 6/4/2007

Table 2

Summary of Validated Groundwater Sample Detections - Inorganics (March 2007 Sampling Event)

Site R Quarterly Groundwater Monitoring

Solutia, Inc. - Sauget, Illinois

Monitoring Well		BWMW-3S	MDL	BWMW-3M	MDL	BWMW-3D	MDL	BWMW-4S	MDL	BWMW-4M	MDL	BWMW-4D	MDL
Lab Sample ID		680-25231-7		680-25231-9		680-25231-8		680-25231-3		680-25231-4		680-25231-5	
Date Sampled		3/20/2007		3/21/2007		3/21/2007		3/20/2007		3/20/2007		3/20/2007	
Time Sampled		15:20		9:50		9:35		13:30		10:55		10:15	
Mercury (USEPA Method 7470A)													
Date Prepared		3/27/2007		3/27/2007		3/27/2007		3/27/2007		3/27/2007		3/27/2007	
Date Analyzed		3/29/2007		3/29/2007		3/29/2007		3/29/2007		3/29/2007		3/29/2007	
Analyte	**CAS No.**	**(mg/L)**		**(mg/L)**		**(mg/L)**		**(mg/L)**		**(mg/L)**		**(mg/L)**	
Mercury	7439-97-6	0.00008 U	0.000080	0.00008 U	0.000080	0.00008 U	0.000080	0.00008 U	0.000080	0.00008 U	0.000080	0.00008 U	0.000080
Metals (USEPA Method 6010B)													
Date Prepared		3/27/2007		3/27/2007		3/27/2007		3/27/2007		3/27/2007		3/27/2007	
Date Analyzed		3/28/2007		3/28/2007		3/28/2007		3/28/2007		3/28/2007		3/28/2007	
Analyte	**CAS No.**	**(mg/L)**		**(mg/L)**		**(mg/L)**		**(mg/L)**		**(mg/L)**		**(mg/L)**	
Arsenic	7440-38-2	***0.048***	0.0042	0.0042 U	0.0042	0.0042 U	0.0042	***0.017***	0.0042	0.0042 U	0.0042	0.0042 U	0.0042
Barium	7440-39-3	***0.41***	0.0012	***0.81***	0.0012	***0.18***	0.0012	***0.26***	0.0012	***0.26***	0.0012	***0.09***	0.0012
Chromium	7440-47-3	0.0045 UJ	0.00083	0.0022 UJ	0.00083	0.00083 U	0.00083	0.0027 UJ	0.00083	0.00083 U	0.00083	0.0023 UJ	0.00083
Copper	7440-50-8	0.004 UJ	0.0017	0.0044 UJ	0.0017	0.0017 U	0.0017	0.0027 UJ	0.0017	0.0017 U	0.0017	0.0018 UJ	0.0017
Lead	7439-92-1	0.0022 U	0.0022	0.0022 U	0.0022	0.0022 U	0.0022	0.0022 U	0.0022	0.0022 U	0.0022	0.0036 UJ	0.0022
Nickel	7440-02-0	***0.0036 J***	0.0018	***0.0089 J***	0.0018	***0.0029 J***	0.0018	0.0018 U	0.0018	0.0018 U	0.0018	***0.0058 J***	0.0018
Total Dissolved Solids (USEPA Method 160.1)													
Date Analyzed		3/23/2007		3/23/2007		3/23/2007		3/22/2007		3/22/2007		3/22/2007	
Analyte	**CAS No.**	**(mg/L)**		**(mg/L)**		**(mg/L)**		**(mg/L)**		**(mg/L)**		**(mg/L)**	
Total Dissolved Solids (TDS)	-	***1,600***	10	***1,400***	10	***1,300***	10	***2,000 B***	10	***620 B***	10	***610 B***	10

Parameters not listed were not detected in any samples.

Results in ***bold italics*** denote detections.

NS - Well purged dry and sufficient water for sample collection had not recharged into the well within 24 hours; In accordance with the Field Sampling Plan (FSP; URS, 2003), a groundwater sample was not collected.

Samples are not filtered.

Flags and Qualifiers

U - Analyte was not detected at or above the Method Detection Limit (MDL).

J - Result is an estimated value.

Checked by: MRF Date: 6/4/2007

Reviewed by: RMG Date: 6/4/2007

Table 3
Summary of Validated QA/QC Sample Detections - Organics (March 2007 Sampling Event)
Site R Quarterly Groundwater Monitoring
Solutia, Inc. - Sauget, Illinois

Monitoring Well		DUP 1	MDL	DUP 2	MDL	RB 1	MDL	RB 2	MDL
Lab Sample ID		680-25231-6		680-25231-17		680-25231-1		680-25231-18	
Date Sampled		3/20/2007		3/22/2007		3/20/2007		3/22/2007	
Time Sampled		0:00		0:00		8:25		11:45	
Volatile Organic Compounds (USEPA Method 8260B)									
Date Prepared		3/31/2007		4/5/2007		4/3/2007		4/4/2007	
Date Analyzed		3/31/2007		4/5/2007		4/3/2007		4/4/2007	
Analyte	**CAS No.**	(ug/L)		(ug/L)		(ug/L)		(ug/L)	
Acetone	67-64-1	7.3 U	7.3	***6,300***	370	7.3 U	7.3	7.3 U	7.3
Benzene	71-43-2	***12***	0.54	***1,300***	27	0.54 U	0.54	0.54 U	0.54
Chlorobenzene	108-90-7	***300 D***	0.41	***6,200***	21	0.41 U	0.41	0.41 U	0.41
Chloroform	67-66-3	0.52 U	0.52	***94***	26	0.52 U	0.52	***1.1***	0.52
1,2-Dichloroethane	107-06-2	0.28 U	0.28	***4,500***	14	0.28 U	0.28	0.28 U	0.28
cis-1,2-Dichloroethene	156-59-2	0.55 U	0.55	***39 J***	28	0.55 U	0.55	0.55 U	0.55
Ethylbenzene	100-41-4	***0.70 J***	0.62	***180***	31	0.62 U	0.62	0.62 U	0.62
Methylene Chloride	75-09-2	0.44 U	0.44	***210 J***	22	***1.4 J***	0.44	0.44 U	0.44
4-Methyl-2-pentanone	108-10-1	0.45 U	0.45	***1,200***	23	0.45 U	0.45	0.45 U	0.45
Tetrachloroethene	127-18-4	0.75 U	0.75	***90***	38	0.75 U	0.75	0.75 U	0.75
Toluene	108-88-3	0.62 U	0.62	***1,900***	31	***0.67 J***	0.62	0.62 U	0.62
Trichloroethene	79-01-6	0.71 U	0.71	***170***	36	0.71 U	0.71	0.71 U	0.71
Xylenes, Total	1330-20-7	1.3 U	1.3	***890***	65	1.3 U	1.3	1.3 U	1.3
Semi-Volatile Organic Compounds (USEPA Method 8270C)									
Date Prepared		3/23/2007		3/26/2007		3/23/2007		3/26/2007	
Date Analyzed		4/3/2007		4/9/2007		4/3/2007		4/2/2007	
Analyte	**CAS No.**	(ug/L)		(ug/L)		(ug/L)		(ug/L)	
4-Chloroaniline	106-47-8	***130 M***	0.50	***19,000 JD***	130	0.52 U	0.52	0.50 U	0.50
2-Chlorophenol	95-57-8	***0.94 J***	0.69	***12,000 JD***	180	0.72 U	0.72	0.69 U	0.69
Di-n-butyl phthalate	84-74-2	0.79 U	0.79	21 U	21	***1.3 J***	0.82	0.78 U	0.78
1,2-Dichlorobenzene	95-50-1	***8.7 J***	0.96	***530***	25	1.0 U	1.0	0.95 U	0.95
1,3-Dichlorobenzene	541-73-1	***3.2 J***	0.53	14 U	14	0.55 U	0.55	0.52 U	0.52
1,4-Dichlorobenzene	106-46-7	***23***	0.50	***230 J***	13	0.52 U	0.52	0.50 U	0.50
2,4-Dichlorophenol	120-83-2	0.63 U	0.63	***18,000 JD***	170	0.66 U	0.66	0.63 U	0.63
Diethyl phthalate	84-66-2	0.57 U	0.57	***21 J***	15	0.59 U	0.59	0.56 U	0.56
2,4-Dimethylphenol	105-67-9	0.96 U	0.96	25 U	25	1.0 U	1.0	0.95 U	0.95
Indeno[1,2,3-cd]pyrene	193-24-2	0.60 U	0.60	16 U	16	***0.82 J***	0.62	0.59 U	0.59
2-Methylphenol	95-48-7	0.67 U	0.67	***35 J***	18	0.70 U	0.70	0.67 U	0.67
3 & 4 Methylphenol	65794-96-9	0.63 U	0.63	***1,900***	17	0.66 U	0.66	0.63 U	0.63
Naphthalene	91-20-3	0.73 U	0.73	***110 J***	19	0.76 U	0.76	0.72 U	0.72
2-Nitroaniline	88-74-4	0.66 U	0.66	***330 J***	17	0.69 U	0.69	0.66 U	0.66
4-Nitroaniline	88-74-4	0.82 U	0.82	***270 J***	21	0.85 U	0.85	0.81 U	0.81
Nitrobenzene	98-95-3	0.89 U	0.89	***1,100***	23	0.93 U	0.93	0.89 U	0.89
N-Nitrosodiphenylamine	86-30-6	0.77 U	0.77	***23 J***	20	0.80 U	0.80	0.76 U	0.76
Pentachlorophenol	87-86-5	2.4 U	2.4	***97 J***	63	2.5 U	2.5	2.4 U	2.4
Phenol	108-95-2	0.95 U	0.95	***48,000 JD***	250	0.99 U	0.99	0.94 U	0.94
1,2,4-Trichlorobenzene	120-82-1	0.52 U	0.52	***54 J***	14	0.54 U	0.54	0.51 U	0.51
2,4,6-Trichlorophenol	88-06-2	0.67 U	0.67	***2,900***	18	0.70 U	0.70	0.67 U	0.67

Table 3
Summary of Validated QA/QC Sample Detections - Organics (March 2007 Sampling Event)
Site R Quarterly Groundwater Monitoring
Solutia, Inc. - Sauget, Illinois

Monitoring Well		DUP 1	MDL	DUP 2	MDL	RB 1	MDL	RB 2	MDL
Lab Sample ID		680-25231-6		680-25231-17		680-25231-1		680-25231-18	
Date Sampled		3/20/2007		3/22/2007		3/20/2007		3/22/2007	
Time Sampled		0:00		0:00		8:25		11:45	
Organochlorine Pesticides (USEPA Method 8081A)									
Date Prepared		3/23/2007		3/26/2007		3/23/2007		3/26/2007	
Date Analyzed		3/29/2007		3/30/2007		3/29/2007		3/29/2007	
Analyte	**CAS No.**	**(ug/L)**		**(ug/L)**		**(ug/L)**		**(ug/L)**	
alpha-BHC	319-84-6	0.0086 U	0.0086	0.043 UJ	0.043	0.0086 U	0.0086	0.0086 U	0.0086
Heptachlor	76-44-8	0.0076 U	0.0076	0.038 UJ	0.038	0.0076 U	0.0076	0.0076 U	0.0076
Chlorinated Herbicides (USEPA Method 8151A)									
Date Prepared		3/26/2007		3/26/2007		3/26/2007		3/26/2007	
Date Analyzed		3/28/2007		3/29/2007		3/28/2007		4/2/2007	
Analyte	**CAS No.**	**(ug/L)**		**(ug/L)**		**(ug/L)**		**(ug/L)**	
2,4-D	94-75-7	0.11 U	0.11	***14,000 JD***	550	0.11 U	0.11	0.11 U	0.11
Dichlorprop	120-36-5	***0.096 J P***	0.030	***1,300 JD***	30	0.03 U	0.030	0.03 U	0.030
Pentachlorophenol	87-86-5	0.18 U	0.180	180 UJ	180	0.18 U	0.180	0.18 U	0.180
Silvex (2,4,5-TP)	93-72-1	0.033 U	0.330	33 UJ	33	0.033 U	0.033	0.033 U	0.033
Total Organic Carbon (USEPA Method 9060)									
Date Analyzed		4/6/2007		4/6/2007		4/6/2007		4/6/2007	
Analyte	**CAS No.**	**(mg/L)**		**(mg/L)**		**(mg/L)**		**(mg/L)**	
Total Organic Carbon (TOC)	-	***4.7***	0.50	***500***	0.50	0.50 U	0.50	***0.56 J***	0.50

Parameters not listed were not detected in any samples.
Results in ***bold italics*** denote detections.

Flags and Qualifiers
U - Analyte was not detected at or above the Method Detection Limit (MDL).
UJ - Analyte was not detected at or above the Method Detection Limit (MDL); the detection limit is estimated.
J - Result is an estimated value.
JP - Result is an estimated value; The lower of the two values is reported when the % difference between the results of two GC columns is greater than 40%.
JD - Compound analyzed at a dilution; Low surrogate recovery due to sample dilution (DUP-1DL).
M - Manual Integrated Compound

Checked by: MRF Date: 6/4/2007
Reviewed by: RMG Date: 6/4/2007

Table 3
Summary of Validated QA/QC Sample Detections - Organics (March 2007 Sampling Event)
Site R Quarterly Groundwater Monitoring
Solutia, Inc. - Sauget, Illinois

Monitoring Well		FB 1		MDL	FB 2		MDL	Trip Blank		MDL	Trip Blank		MDL
Lab Sample ID		680-25231-2			680-25231-19			680-25231-13			680-25231-20		
Date Sampled		3/20/2007			3/22/2007			3/21/2007			3/22/2007		
Time Sampled		8:35			11:30								
Volatile Organic Compounds (USEPA Method 8260B)													
Date Prepared		4/3/2007			4/4/2007			3/31/2007			4/3/2007		
Date Analyzed		4/3/2007			4/4/2007			3/31/2007			4/3/2007		
Analyte	**CAS No.**	(ug/L)			(ug/L)			(ug/L)			(ug/L)		
Acetone	67-64-1	7.3	U	7.3	7.3	U	7.3	7.3	U	7.3	7.3	U	7.3
Benzene	71-43-2	0.54	U	0.54	0.54	U	0.54	0.54	U	0.54	0.54	U	0.54
Chlorobenzene	108-90-7	0.41	U	0.41	0.41	U	0.41	0.41	U	0.41	0.41	U	0.41
Chloroform	67-66-3	0.52	U	0.52	***1.1***		0.52	0.52	U	0.52	0.52	U	0.52
1,2-Dichloroethane	107-06-2	0.28	U	0.28	0.28	U	0.28	0.28	U	0.28	0.28	U	0.28
cis-1,2-Dichloroethene	156-59-2	0.55	U	0.55	0.55	U	0.55	0.55	U	0.55	0.55	U	0.55
Ethylbenzene	100-41-4	0.62	U	0.62	0.62	U	0.62	0.62	U	0.62	0.62	U	0.62
Methylene Chloride	75-09-2	0.44	U	0.44	0.44	U	0.44	0.44	U	0.44	0.44	U	0.44
4-Methyl-2-pentanone	108-10-1	0.45	U	0.45	0.45	U	0.45	0.45	U	0.45	0.45	U	0.45
Tetrachloroethene	127-18-4	0.75	U	0.75	0.75	U	0.75	0.75	U	0.75	0.75	U	0.75
Toluene	108-88-3	***0.78***	***J***	0.62	0.62	U	0.62	0.62	U	0.62	0.62	U	0.62
Trichloroethene	79-01-6	0.71	U	0.71	0.71	U	0.71	0.71	U	0.71	0.71	U	0.71
Xylenes, Total	1330-20-7	1.3	U	1.3	1.3	U	1.3	1.3	U	1.3	1.3	U	1.3
Semi-Volatile Organic Compounds (USEPA Method 8270C)													
Date Prepared		3/23/2007			3/26/2007								
Date Analyzed		4/2/2007			4/2/2007								
Analyte	**CAS No.**	(ug/L)			(ug/L)								
4-Chloroaniline	106-47-8	0.53	U	0.53	0.50	U	0.50						
2-Chlorophenol	95-57-8	0.73	U	0.73	0.69	U	0.69						
Di-n-butyl phthalate	84-74-2	0.84	U	0.84	0.79	U	0.79						
1,2-Dichlorobenzene	95-50-1	1.0	U	1.0	0.96	U	0.96						
1,3-Dichlorobenzene	541-73-1	0.56	U	0.56	0.53	U	0.53						
1,4-Dichlorobenzene	106-46-7	0.53	U	0.53	0.50	U	0.50						
2,4-Dichlorophenol	120-83-2	0.67	U	0.67	0.63	U	0.63						
Diethyl phthalate	84-66-2	0.60	U	0.60	0.57	U	0.57						
2,4-Dimethylphenol	105-67-9	1.0	U	1.0	0.96	U	0.96						
Indeno[1,2,3-cd]pyrene	193-24-2	0.63	U	0.63	0.60	U	0.60						
2-Methylphenol	95-48-7	0.71	U	0.71	0.67	U	0.67						
3 & 4 Methylphenol	65794-96-9	0.67	U	0.67	0.63	U	0.63						
Naphthalene	91-20-3	0.78	U	0.78	0.73	U	0.73						
2-Nitroaniline	88-74-4	0.70	U	0.70	0.66	U	0.66						
4-Nitroaniline	88-74-4	0.87	U	0.87	0.82	U	0.82						
Nitrobenzene	98-95-3	0.95	U	0.95	0.89	U	0.89						
N-Nitrosodiphenylamine	86-30-6	0.82	U	0.82	0.77	U	0.77						
Pentachlorophenol	87-86-5	2.6	U	2.60	2.4	U	2.4						
Phenol	108-95-2	1.0	U	1.0	0.95	U	0.95						
1,2,4-Trichlorobenzene	120-82-1	0.55	U	0.55	0.52	U	0.52						
2,4,6-Trichlorophenol	88-06-2	0.71	U	0.71	0.67	U	0.67						

Table 3
Summary of Validated QA/QC Sample Detections - Organics (March 2007 Sampling Event)
Site R Quarterly Groundwater Monitoring
Solutia, Inc. - Sauget, Illinois

Monitoring Well		FB 1	MDL	FB 2	MDL	Trip Blank	MDL	Trip Blank	MDL
Lab Sample ID		680-25231-2		680-25231-19		680-25231-13		680-25231-20	
Date Sampled		3/20/2007		3/22/2007		3/21/2007		3/22/2007	
Time Sampled		8:35		11:30					
Organochlorine Pesticides (USEPA Method 8081A)									
Date Prepared		3/23/2007		3/26/2007					
Date Analyzed		3/29/2007		3/29/2007					
Analyte	**CAS No.**	**(ug/L)**		**(ug/L)**					
alpha-BHC	319-84-6	0.0086 U	0.0086	0.0086 U	0.0086				
Heptachlor	76-44-8	0.0076 U	0.0076	0.0076 U	0.0076				
Chlorinated Herbicides (USEPA Method 8151A)									
Date Prepared		3/26/2007		3/26/2007					
Date Analyzed		3/28/2007		4/2/2007					
Analyte	**CAS No.**	**(ug/L)**		**(ug/L)**					
2,4-D	94-75-7	0.11 U	0.11	0.11 U	0.11				
Dichlorprop	120-36-5	0.03 U	0.030	0.03 U	0.030				
Pentachlorophenol	87-86-5	0.18 U	0.180	0.18 U	0.180				
Silvex (2,4,5-TP)	93-72-1	0.033 U	0.033	0.033 U	0.033				
Total Organic Carbon (USEPA Method 9060)									
Date Analyzed		4/6/2007		4/6/2007					
Analyte	**CAS No.**	**(mg/L)**		**(mg/L)**					
Total Organic Carbon (TOC)	-	0.50 U	0.50	0.50 U	0.50				

Parameters not listed were not detected in any samples.
Results in ***bold italics*** denote detections.

Flags and Qualifiers
U - Analyte was not detected at or above the Method Detection Limit (MDL).
UJ - Analyte was not detected at or above the Method Detection Limit (MDL); the detection limit is estimated.
J - Result is an estimated value.
JP - Result is an estimated value; The lower of the two values is reported when the % difference between the results of two GC columns is greater than 40%.
JD - Compound analyzed at a dilution; Low surrogate recovery due to sample dilution (DUP-1DL).
M - Manual Integrated Compound

Checked by: MRF Date: 6/4/2007
Reviewed by: RMG Date: 6/4/2007

Table 4

Summary of Validated QA/QC Sample Detections - Inorganics (March 2007 Sampling Event)

Site R Quarterly Groundwater Monitoring

Solutia, Inc. - Sauget, Illinois

Monitoring Well		DUP 1	MDL	DUP 2	MDL	RB 1	MDL	RB 2	MDL
Lab Sample ID		680-25231-6		680-25231-17		680-25231-1		680-25231-18	
Date Sampled		3/20/2007		3/22/2007		3/20/2007		3/22/2007	
Time Sampled		0:00		0:00		8:25		11:45	
Mercury (USEPA Method 7470A)									
Date Prepared		3/27/2007		3/27/2007		3/27/2007		3/27/2007	
Date Analyzed		3/29/2007		3/29/2007		3/29/2007		3/29/2007	
Analyte	**CAS No.**	**(mg/L)**		**(mg/L)**		**(mg/L)**		**(mg/L)**	
Mercury	7439-97-6	0.00008 U	0.000080	0.00008 U	0.000080	0.00008 U	0.000080	0.00008 U	0.000080
Metals (USEPA Method 6010B)									
Date Prepared		3/27/2007		3/27/2007		3/27/2007		3/27/2007	
Date Analyzed		3/28/2007		3/28/2007		3/28/2007		3/28/2007	
Analyte	**CAS No.**	**(mg/L)**		**(mg/L)**		**(mg/L)**		**(mg/L)**	
Arsenic	7440-38-2	0.0042 U	0.0042	0.0042 U	0.0042	0.0042 U	0.0042	0.0042 U	0.0042
Barium	7440-39-3	***0.27***	0.0012	***0.11***	0.0012	0.0012 U	0.0012	0.0012 U	0.0012
Chromium	7440-47-3	0.00083 U	0.00083	0.0023 UJ	0.00083	0.00083 U	0.00083	0.00083 U	0.00083
Copper	7440-50-8	0.0017 U	0.0017	0.0023 UJ	0.0017	***0.0017 J***	0.0017	0.0017 U	0.0017
Lead	7439-92-1	0.0022 U	0.0022	0.0022 U	0.0022	0.0022 U	0.0022	***0.0029 J***	0.0022
Nickel	7440-02-0	***0.0022 J***	0.0018	***0.015 J***	0.0018	0.0018 U	0.0018	0.0018 U	0.0018
Total Dissolved Solids (USEPA Method 160.1)									
Date Analyzed		3/23/2007		3/26/2007		3/22/2007		3/26/2007	
Analyte	**CAS No.**	**(mg/L)**		**(mg/L)**		**(mg/L)**		**(mg/L)**	
Total Dissolved Solids (TDS)	-	***620***	10	***1,800***	10	5 U	10	***26***	5.0

Parameters not listed were not detected in any samples.
Results in ***bold italics*** denote detections.

Samples are not filtered.

Flags and Qualifiers
U - Analyte was not detected at or above the Method Detection Limit (MDL).
J - Result is an estimated value.

Checked by: MRF Date: 6/4/2007
Reviewed by: RMG Date: 6/4/2007

Table 4

Summary of Validated QA/QC Sample Detections - Inorganics (March 2007 Sampling Event)

Site R Quarterly Groundwater Monitoring

Solutia, Inc. - Sauget, Illinois

Monitoring Well		FB 1	MDL	FB 2	MDL	Trip Blank	MDL	Trip Blank	MDL
Lab Sample ID		680-25231-2		680-25231-19		680-25231-13		680-25231-20	
Date Sampled		3/20/2007		3/22/2007		3/21/2007		3/22/2007	
Time Sampled		8:35		11:30					
Mercury (USEPA Method 7470A)									
Date Prepared		3/27/2007		3/27/2007					
Date Analyzed		3/29/2007		3/29/2007					
Analyte	**CAS No.**	**(mg/L)**		**(mg/L)**					
Mercury	7439-97-6	0.00008 U	0.000080	0.00008 U	0.000080				
Metals (USEPA Method 6010B)									
Date Prepared		3/27/2007		3/27/2007					
Date Analyzed		3/28/2007		3/28/2007					
Analyte	**CAS No.**	**(mg/L)**		**(mg/L)**					
Arsenic	7440-38-2	0.0042 U	0.0042	0.0042 U	0.0042				
Barium	7440-39-3	0.0012 U	0.0012	0.0012 U	0.0012				
Chromium	7440-47-3	0.00083 U	0.00083	0.00083 U	0.00083				
Copper	7440-50-8	0.0017 U	0.0017	0.0017 U	0.0017				
Lead	7439-92-1	0.0022 U	0.0022	0.0022 U	0.0022				
Nickel	7440-02-0	0.0018 U	0.0018	0.0018 U	0.0018				
Total Dissolved Solids (USEPA Method 160.1)									
Date Analyzed		3/22/2007		3/26/2007					
Analyte	**CAS No.**	**(mg/L)**		**(mg/L)**					
Total Dissolved Solids (TDS)	-	5 U	10	5 U	5.0				

Parameters not listed were not detected in any samples.
Results in ***bold italics*** denote detections.

Samples are not filtered.

Flags and Qualifiers

U - Analyte was not detected at or above the Method Detection Limit (MDL).
J - Result is an estimated value.

Checked by: MRF Date: 6/4/2007
Reviewed by: RMG Date: 6/4/2007

Table 1
Summary of Validated Groundwater Sample Detections - Organics (June 2007 Sampling Event)
Site R Quarterly Groundwater Monitoring
Solutia, Inc. - Sauget, Illinois

Monitoring Well		BWMW-1S	MDL	BWMW-1M	MDL	BWMW-1D	MDL	BWMW-2S	MDL	BWMW-2M	MDL	BWMW-2D	MDL
Lab Sample ID		680-27703-16		680-27703-17		680-27703-18		680-27703-9		680-27703-10		680-27703-13	
Date Sampled		6/20/2007		6/20/2007		6/20/2007		6/19/2007		6/19/2007		6/20/2007	
Time Sampled		11:15		12:05		11:40		15:20		14:45		10:00	
Volatile Organic Compounds (USEPA Method 8260B)													
Date Prepared		6/26/2007		6/26/2007		6/26/2007		6/25/2007		6/26/2007		6/26/2007	
Date Analyzed		6/26/2007		6/26/2007		6/26/2007		6/25/2007		6/26/2007		6/26/2007	
Analyte	**CAS No.**	(ug/L)		(ug/L)		(ug/L)		(ug/L)		(ug/L)		(ug/L)	
Acetone	67-64-1	1,700 U	1,700	34 U	34	170 U	170	34 U	34	***3,300***	85	***6,600***	85
Benzene	71-43-2	***1,700***	320	***63***	6.4	32 U	32	***390***	6.4	***710***	16	***1,200***	16
Chlorobenzene	108-90-7	***110,000***	340	***1,600***	6.8	***9,900***	34	***2,400***	6.8	***5,200***	17	***6,000***	17
Chloroform	67-66-3	290 U	290	5.8 U	5.8	29 U	29	5.8 U	5.8	***52***	15	***87***	15
Chloromethane	74-87-3	280 U	280	5.6 U	5.6	28 U	28	5.6 U	5.6	14 U	14	14 U	14
1,1-Dichloroethane	75-34-3	320 U	320	6.4 U	6.4	32 U	32	6.4 U	6.4	***21 J***	16	16 U	16
1,2-Dichloroethane	107-06-2	310 U	310	6.2 U	6.2	31 U	31	6.2 U	6.2	***2,100***	16	***3,500***	16
cis-1,2-Dichloroethene	156-59-2	330 U	330	6.6 U	6.6	33 U	33	6.6 U	6.6	***40 J***	17	***39 J***	17
Ethylbenzene	100-41-4	300 U	300	6.0 U	6.0	30 U	30	6.0 U	6.0	***150***	15	***180***	15
Methylene Chloride	75-09-2	1,000 U	1,000	20 U	20	100 U	100	20 U	20	***120 J***	50	***190 J***	50
4-Methyl-2-pentanone	108-10-1	600 U	600	12 U	12	60 U	60	12 U	12	***370 J***	30	***1,100***	30
Tetrachloroethene	127-18-4	280 U	280	5.6 U	5.6	28 U	28	5.6 U	5.6	***120***	14	***120***	14
Toluene	108-88-3	310 U	310	6.2 U	6.2	31 U	31	6.2 U	6.2	***1,400***	16	***1,800***	16
Trichloroethene	79-01-6	400 U	400	8.0 U	8.0	40 U	40	8.0 U	8.0	***90***	20	***170***	20
Xylenes, Total	1330-20-7	870 U	870	17 U	17	87 U	87	17 U	17	***1,000***	44	***1,100***	44
Semi-Volatile Organic Compounds (USEPA Method 8270C)													
Date Prepared		6/25/2007		6/25/2007		6/25/2007		6/25/2007		6/25/2007		6/25/2007	
Date Analyzed		7/10/2007		7/10/2007		7/10/2007		7/10/2007		7/11/2007		7/11/2007	
Analyte	**CAS No.**	(ug/L)		(ug/L)		(ug/L)		(ug/L)		(ug/L)		(ug/L)	
Bis(2-ethylhexyl) phthalate	117-81-7	0.92 U	0.92	***0.99 J***	0.92	0.92 U	0.92	0.92 U	0.92	190 UJ	190	180 UJ	180
Carbazole	86-74-8	0.49 U	0.49	0.49 U	0.49	0.49 U	0.49	***0.67 J***	0.49	100 UJ	100	94 UJ	94
4-Chloroaniline	106-47-8	***32***	4.7	***220 JD***	4.7	***100***	4.7	***170***	4.7	***13,000 J***	960	***26,000 J***	910
2-Chlorophenol	95-57-8	***86***	0.98	***7.7 J***	0.98	***16***	0.98	0.98 U	0.98	***6,000 J***	200	***10,000 J***	190
1,2-Dichlorobenzene	95-50-1	***2.8 J***	0.49	***6.9 J***	0.49	***3.0 J***	0.49	***3.5 J***	0.49	***420 J***	100	***660 J***	94
1,3-Dichlorobenzene	541-73-1	0.49 U	0.49	***2.0 J***	0.49	0.49 U	0.49	0.49 U	0.49	100 UJ	100	94 UJ	94
1,4-Dichlorobenzene	106-46-7	***6.2 J***	0.49	***67***	0.49	***4.9 J***	0.49	***1.5 J***	0.49	***230 J***	100	***310 J***	94
2,4-Dichlorophenol	120-83-2	0.98 U	0.98	0.98 U	0.98	***390 JD***	0.98	0.98 U	0.98	***19,000 J***	200	***19,000***	190
Diethyl phthalate	84-66-2	0.49 U	0.49	0.49 U	0.49	***2.8 J***	0.49	0.49 U	0.49	100 UJ	100	94 UJ	94
2,4-Dimethylphenol	105-67-9	1.1 U	1.1	1.1 U	1.1	1.1 U	1.1	1.1 U	1.1	220 UJ	220	***260 J***	210
Di-n-butyl phthalate	84-74-2	9.8 U	0.49	9.8 U	0.49	0.49 U	0.49	9.8 U	0.49	100 UJ	100	94 UJ	94
Fluorene	86-73-7	0.49 U	0.49	***0.96 J***	0.49	0.49 U	0.49	0.49 U	0.49	100 UJ	100	94 UJ	94
3 & 4 Methylphenol	15831-10-4	0.98 U	0.98	0.98 U	0.98	0.98 U	0.98	***1.1 J***	0.98	***880 J***	200	***1,400 J***	190
Naphthalene	91-20-3	0.49 U	0.49	0.49 U	0.49	***22***	0.49	0.49 U	0.49	100 UJ	100	94 UJ	94
2-Nitroaniline	88-74-4	4.9 U	4.9	4.9 U	4.9	***10 J***	4.9	4.9 U	4.9	1000 UJ	1000	940 UJ	940
Nitrobenzene	98-95-3	0.49 U	0.49	0.49 U	0.49	***5.4 J***	0.49	0.49 U	0.49	***710 J***	100	***880 J***	94
Pentachlorophenol	87-86-5	4.9 U	4.9	4.9 U	4.9	***6.7 J***	4.9	4.9 U	4.9	1,000 UJ	1000	940 UJ	940
Phenol	108-95-2	***6.9 J***	0.49	***1.8 J***	0.49	***1.8 J***	0.49	***1.7 J***	0.49	***22,000 J***	100	***36,000 J***	94
1,2,4-Trichlorobenzene	120-82-1	0.70 U	0.70	0.70 U	0.70	***0.89 J***	0.70	0.70 U	0.70	140 UJ	140	130 UJ	130
2,4,6-Trichlorophenol	88-06-2	0.49 U	0.49	0.49 U	0.49	***140***	0.49	0.49 U	0.49	***2,700 J***	100	***2,600 J***	94

Table 1
Summary of Validated Groundwater Sample Detections - Organics (June 2007 Sampling Event)
Site R Quarterly Groundwater Monitoring
Solutia, Inc. - Sauget, Illinois

Monitoring Well		BWMW-1S	MDL	BWMW-1M	MDL	BWMW-1D	MDL	BWMW-2S	MDL	BWMW-2M	MDL	BWMW-2D	MDL
Lab Sample ID		680-27703-16		680-27703-17		680-27703-18		680-27703-9		680-27703-10		680-27703-13	
Date Sampled		6/20/2007		6/20/2007		6/20/2007		6/19/2007		6/19/2007		6/20/2007	
Time Sampled		11:15		12:05		11:40		15:20		14:45		10:00	
Organochlorine Pesticides (USEPA Method 8081A)													
Date Prepared		6/25/2007		6/25/2007		6/25/2007		6/25/2007		6/25/2007		6/25/2007	
Date Analyzed		6/27/2007		6/27/2007		6/28/2007		6/27/2007		6/27/2007		6/27/2007	
Analyte	**CAS No.**	**(ug/L)**		**(ug/L)**		**(ug/L)**		**(ug/L)**		**(ug/L)**		**(ug/L)**	
4,4'-DDD	72-54-8	0.0056 U	0.0056	0.0057 U	0.0057	0.0057 U	0.0057	0.0056 U	0.0056	0.059 UJ	0.059	0.058 UJ	0.058
alpha-BHC	319-84-6	***0.0093 JP***	0.0076	***0.01 JP***	0.0079	***0.014 JP***	0.0079	0.0076 U	0.0076	0.081 UJ	0.081	0.079 UJ	0.079
Endosulfan sulfate	1031-07-8	0.0066 U	0.0066	***0.041 J***	0.0068	***0.10***	0.0068	0.0066 U	0.0066	***0.41 JDP***	0.07	***0.14 JDP***	0.069
Heptachlor	76-44-8	0.0042 U	0.0042	0.0044 U	0.0044	0.0044 U	0.0044	0.0042 U	0.0042	0.045 UJ	0.045	0.044 UJ	0.044
Chlorinated Herbicides (USEPA Method 8151A)													
Date Prepared		6/22/2007		6/22/2007		6/22/2007		6/22/2007		6/22/2007		6/22/2007	
Date Analyzed		6/25/2007		6/25/2007		6/25/2007		6/25/2007		6/26/2007		6/26/2007	
Analyte	**CAS No.**	**(ug/L)**		**(ug/L)**		**(ug/L)**		**(ug/L)**		**(ug/L)**		**(ug/L)**	
2,4,5-T	93-76-5	0.061 U	0.061	0.06 U	0.06	0.06 U	0.06	***0.086 JP***	0.062	31 UJ	31	31 UJ	31
2,4-D	94-75-7	0.059 U	0.059	0.058 U	0.058	0.058 U	0.058	***0.27 JP***	0.06	***14,000 JD***	30	***14,000 JD***	30
Dichlorprop	120-36-5	***2.7***	0.043	0.043 U	0.043	0.043 U	0.043	***0.61 P***	0.045	***330 JDP***	22	***870 JDP***	22
Pentachlorophenol	87-86-5	0.023 U	0.023	0.023 U	0.023	***0.74 J***	0.023	0.024 U	0.024	12 UJ	12	12 UJ	12
Total Organic Carbon (USEPA Method 9060)													
Date Analyzed		7/3/2007		4/6/2007		7/3/2007		7/3/2007		7/3/2007		7/3/2007	
Analyte	**CAS No.**	**(mg/L)**		**(mg/L)**		**(mg/L)**		**(mg/L)**		**(mg/L)**		**(mg/L)**	
Total Organic Carbon (TOC)	-	***11***	0.50	***8.8***	0.50	***17***	0.50	***32***	0.50	***360***	0.50	***480***	0.50

Parameters not listed were not detected in any samples.
Results in ***bold italics*** denote detections.

Flags and Qualifiers
U - Analyte was not detected at or above the Method Detection Limit (MDL).
UJ - Analyte was not detected at or above the Method Detection Limit (MDL); the detection limit is estimated.
J - Result is an estimated value.
JP - Result is an estimated value; The lower of the two values is reported when the % difference between the results of two GC columns is greater than 40%.
P - The lower of the two values is reported when the % difference between the results of two GC columns is greater than 40%.
D - Compound analyzed at a dilution.
JD - Compound analyzed at a dilution; Surrogates not calculated due to sample dilution (BWMW-1M and BWMW-1D); Low surrogate recovery due to sample dilution (BWMW-3M, BWMW-3D, BWMW-4M, and BWMW-4D).
JDP - Compound analyzed at a dilution; The lower of the two values is reported when the % difference between the results of two GC columns is greater than 40%; the result is an estimated value.

Checked by: PGU Date: 8/9/2007
Reviewed by: MRF Date: 8/10/2007

Table 1
Summary of Validated Groundwater Sample Detections - Organics (June 2007 Sampling Event)
Site R Quarterly Groundwater Monitoring
Solutia, Inc. - Sauget, Illinois

Monitoring Well		BWMW-3S	MDL	BWMW-3M	MDL	BWMW-3D	MDL	BWMW-4S	MDL	BWMW-4M	MDL	BWMW-4D	MDL
Lab Sample ID		680-27703-4		680-27703-5		680-27703-6		680-27703-3		680-27703-2		680-27703-1	
Date Sampled		6/19/2007		6/19/2007		6/19/2007		6/19/2007		6/18/2007		6/18/2007	
Time Sampled		11:20		11:00		12:30		9:20		14:15		14:25	
Volatile Organic Compounds (USEPA Method 8260B)													
Date Prepared		6/25/2007		6/25/2007		6/25/2007		6/26/2007		6/25/2007		6/25/2007	
Date Analyzed		6/25/2007		6/25/2007		6/25/2007		6/26/2007		6/25/2007		6/25/2007	
Analyte	**CAS No.**	**(ug/L)**		**(ug/L)**		**(ug/L)**		**(ug/L)**		**(ug/L)**		**(ug/L)**	
Acetone	67-64-1	***9.5 J***	3.4	85 U	85	34 U	34	***3.1 J***	1.7	8.5 U	8.5	3.4 U	3.4
Benzene	71-43-2	***82***	0.64	***380***	16	***98***	6.4	0.32 U	0.32	***64***	1.6	***29***	0.64
Chlorobenzene	108-90-7	***280***	0.68	***6,800***	17	***2,300***	6.8	***16***	0.34	***1,700 D***	1.7	***550 D***	0.68
Chloroform	67-66-3	0.58 U	0.58	15 U	15	5.8 U	5.8	0.29 U	0.29	1.5 U	1.5	0.58 U	0.58
Chloromethane	74-87-3	0.56 U	0.56	14 U	14	5.6 U	5.6	***0.47 J***	0.28	1.4 U	1.4	0.56 U	0.56
1,1-Dichloroethane	75-34-3	0.64 U	0.64	16 U	16	6.4 U	6.4	0.32 U	0.32	1.6 U	1.6	0.64 U	0.64
1,2-Dichloroethane	107-06-2	0.62 U	0.62	16 U	16	6.2 U	6.2	0.31 U	0.31	1.6 U	1.6	0.62 U	0.62
cis-1,2-Dichloroethene	156-59-2	0.66 U	0.66	17 U	17	6.6 U	6.6	0.33 U	0.33	1.7 U	1.7	0.66 U	0.66
Ethylbenzene	100-41-4	0.60 U	0.60	15 U	15	6.0 U	6.0	0.30 U	0.30	1.5 U	1.5	***1.3 J***	0.60
Methylene Chloride	75-09-2	2.0 U	2.0	50 U	50	20 U	20	1.0 U	1.0	5.0 U	5.0	2.0 U	2.0
4-Methyl-2-pentanone	108-10-1	1.2 U	1.2	30 U	30	12 U	12	0.60 U	0.60	3.0 U	3.0	1.2 U	1.2
Tetrachloroethene	127-18-4	0.56 U	0.56	14 U	14	5.6 U	5.6	0.28 U	0.28	1.4 U	1.4	0.56 U	0.56
Toluene	108-88-3	***1.6 J***	0.62	16 U	16	6.2 U	6.2	0.31 U	0.31	1.6 U	1.6	***0.77 J***	0.62
Trichloroethene	79-01-6	0.80 U	0.80	20 U	20	8.0 U	8.0	0.40 U	0.40	2.0 U	2.0	0.80 U	0.80
Xylenes, Total	1330-20-7	1.7 U	1.7	44 U	44	17 U	17	0.87 U	0.87	4.4 U	4.4	***3.5 J***	1.7
Semi-Volatile Organic Compounds (USEPA Method 8270C)													
Date Prepared		6/25/2007		6/25/2007		6/25/2007		6/25/2007		6/25/2007		6/25/2007	
Date Analyzed		7/10/2007		7/10/2007		7/10/2007		7/10/2007		7/10/2007		7/10/2007	
Analyte	**CAS No.**	**(ug/L)**		**(ug/L)**		**(ug/L)**		**(ug/L)**		**(ug/L)**		**(ug/L)**	
Bis(2-ethylhexyl) phthalate	117-81-7	0.91 U	0.91	0.94 U	0.94	0.90 U	0.90	0.91 U	0.91	0.91 U	0.91	***1.0 J***	0.89
Carbazole	86-74-8	0.49 U	0.49	0.50 U	0.50	0.48 U	0.48	0.49 U	0.49	0.49 U	0.49	0.47 U	0.47
4-Chloroaniline	106-47-8	***45***	4.7	***11,000 JD***	4.8	***15,000 JD***	4.6	4.7 U	4.7	***2,400 JD***	4.7	***1,700 JD***	4.5
2-Chlorophenol	95-57-8	***2.0 J***	0.97	***7.9 J***	1.0	***4.2 J***	0.96	0.97 U	0.97	***4.6 J***	0.97	0.94 U	0.94
1,2-Dichlorobenzene	95-50-1	***2.1 J***	0.49	***3.7 J***	0.50	***85***	0.48	***0.78 J***	0.49	***14***	0.49	***800 JD***	0.47
1,3-Dichlorobenzene	541-73-1	0.49 U	0.49	***12***	0.50	***3.8 J***	0.48	0.49 U	0.49	***5.9 J***	0.49	0.47 U	0.47
1,4-Dichlorobenzene	106-46-7	***5.2 J***	0.49	***59***	0.50	***78***	0.48	***2.8 J***	0.49	***53***	0.49	***29***	0.47
2,4-Dichlorophenol	120-83-2	0.97 U	0.97	1.0 U	1.0	0.96 U	0.96	0.97 U	0.97	0.97 U	0.97	***2.7 J***	0.94
Diethyl phthalate	84-66-2	0.49 U	0.49	0.50 U	0.50	0.48 U	0.48	0.49 U	0.49	0.49 U	0.49	0.47 U	0.47
2,4-Dimethylphenol	105-67-9	1.1 U	1.1	1.1 U	1.1	1.1 U	1.1	1.1 U	1.1	1.1 U	1.1	1.0 U	1.0
Di-n-butyl phthalate	84-74-2	9.7 U	0.49	0.50 U	0.50	***0.58 J***	0.48	0.49 U	0.49	9.7 U	0.49	0.47 U	0.47
Fluorene	86-73-7	0.49 U	0.49	0.50 U	0.50	0.48 U	0.48	0.49 U	0.49	0.49 U	0.49	0.47 U	0.47
3 & 4 Methylphenol	15831-10-4	***65***	0.97	***5.2 J***	1.0	0.96 U	0.96	0.97 U	0.97	0.97 U	0.97	0.94 U	0.94
Naphthalene	91-20-3	0.49 U	0.49	0.50 U	0.50	0.48 U	0.48	0.49 U	0.49	0.49 U	0.49	0.47 U	0.47
2-Nitroaniline	88-74-4	4.9 U	4.9	5.0 U	5.0	4.8 U	4.8	4.9 U	4.9	4.9 U	4.9	4.7 U	4.7
Nitrobenzene	98-95-3	0.49 U	0.49	0.50 U	0.50	0.48 U	0.48	0.49 U	0.49	0.49 U	0.49	0.47 U	0.47
Pentachlorophenol	87-86-5	4.9 U	4.9	5.0 U	5.0	4.8 U	4.8	4.9 U	4.9	4.9 U	4.9	4.7 U	4.7
Phenol	108-95-2	***4.1 J***	0.49	0.50 U	0.50	0.48 U	0.48	0.49 U	0.49	0.49 U	0.49	***0.54 J***	0.47
1,2,4-Trichlorobenzene	120-82-1	0.69 U	0.69	0.71 U	0.71	***1.4 J***	0.68	0.69 U	0.69	0.69 U	0.69	***36***	0.67
2,4,6-Trichlorophenol	88-06-2	0.49 U	0.49	0.50 U	0.50	***0.88 J***	0.48	0.49 U	0.49	0.49 U	0.49	***1.1 J***	0.47

Table 1
Summary of Validated Groundwater Sample Detections - Organics (June 2007 Sampling Event)
Site R Quarterly Groundwater Monitoring
Solutia, Inc. - Sauget, Illinois

Monitoring Well		BWMW-3S	MDL	BWMW-3M	MDL	BWMW-3D	MDL	BWMW-4S	MDL	BWMW-4M	MDL	BWMW-4D	MDL
Lab Sample ID		680-27703-4		680-27703-5		680-27703-6		680-27703-3		680-27703-2		680-27703-1	
Date Sampled		6/19/2007		6/19/2007		6/19/2007		6/19/2007		6/18/2007		6/18/2007	
Time Sampled		11:20		11:00		12:30		9:20		14:15		14:25	
Organochlorine Pesticides (USEPA Method 8081A)													
Date Prepared		6/25/2007		6/25/2007		6/25/2007		6/25/2007		6/25/2007		6/25/2007	
Date Analyzed		6/27/2007		6/28/2007		6/28/2007		6/27/2007		6/27/2007		6/27/2007	
Analyte	**CAS No.**	**(ug/L)**		**(ug/L)**		**(ug/L)**		**(ug/L)**		**(ug/L)**		**(ug/L)**	
4,4'-DDD	72-54-8	0.057 U	0.057	0.012 U	0.012	0.0057 UJ	0.0057	***0.13 JD***	0.0057	0.0057 UJ	0.0057	0.0056 U	0.0056
alpha-BHC	319-84-6	0.079 U	0.079	0.016 U	0.016	***0.016 JDP***	0.0079	0.0079 UJ	0.0079	***0.013 JD***	0.0079	0.0076 U	0.0076
Endosulfan sulfate	1031-07-8	0.068 U	0.068	0.014 U	0.014	0.0068 UJ	0.0068	0.0068 UJ	0.0068	0.0068 UJ	0.0068	0.0066 U	0.0066
Heptachlor	76-44-8	0.044 U	0.044	***0.12 P***	0.0090	0.0044 UJ	0.0044	0.0044 UJ	0.0044	0.0044 UJ	0.0044	0.0042 U	0.0042
Chlorinated Herbicides (USEPA Method 8151A)													
Date Prepared		6/22/2007		6/22/2007		6/22/2007		6/22/2007		6/22/2007		6/22/2007	
Date Analyzed		6/25/2007		6/25/2007		6/25/2007		6/25/2007		6/25/2007		6/25/2007	
Analyte	**CAS No.**	**(ug/L)**		**(ug/L)**		**(ug/L)**		**(ug/L)**		**(ug/L)**		**(ug/L)**	
2,4,5-T	93-76-5	0.06 U	0.06	***0.11 JP***	0.06	0.061 U	0.061	0.061 U	0.061	0.062 U	0.062	0.063 U	0.063
2,4-D	94-75-7	***0.26 JP***	0.058	0.058 U	0.058	0.059 U	0.059	0.059 U	0.059	0.06 U	0.06	0.061 U	0.061
Dichlorprop	120-36-5	0.043 U	0.043	***0.47 JP***	0.043	***0.12 JP***	0.044	0.044 U	0.044	***0.094 JP***	0.045	***0.062 JP***	0.045
Pentachlorophenol	87-86-5	0.023 U	0.023	0.023 U	0.023	0.023 U	0.023	0.023 U	0.023	0.024 U	0.024	***0.47 P***	0.024
Total Organic Carbon (USEPA Method 9060)													
Date Analyzed		7/3/2007		7/3/2007		7/3/2007		7/3/2007		7/3/2007		7/3/2007	
Analyte	**CAS No.**	**(mg/L)**		**(mg/L)**		**(mg/L)**		**(mg/L)**		**(mg/L)**		**(mg/L)**	
Total Organic Carbon (TOC)	-	***19***	0.50	***88***	0.50	***24***	0.50	***7.6***	0.50	***9.5***	0.50	***6.7***	0.50

Parameters not listed were not detected in any samples.
Results in ***bold italics*** denote detections.

Flags and Qualifiers
U - Analyte was not detected at or above the Method Detection Limit (MDL).
UJ - Analyte was not detected at or above the Method Detection Limit (MDL); the detection limit is estimated.
J - Result is an estimated value.
JP - Result is an estimated value; The lower of the two values is reported when the % difference between the results of two GC columns is greater than 40%.
P - The lower of the two values is reported when the % difference between the results of two GC columns is greater than 40%.
D - Compound analyzed at a dilution.
JD - Compound analyzed at a dilution; Surrogates not calculated due to sample dilution (BWMW-1M and BWMW-1D); Low surrogate recovery due to sample dilution (BWMW-3M, BWMW-3D, BWMW-4M, and BWMW-4D).
JDP - Compound analyzed at a dilution; The lower of the two values is reported when the % difference between the results of two GC columns is greater than 40%; the result is an estimated value.

Checked by: PGU Date: 8/9/2007
Reviewed by: MRF Date: 8/10/2007

Table 2
Summary of Validated Groundwater Sample Detections - Inorganics (June 2007 Sampling Event)
Site R Quarterly Groundwater Monitoring
Solutia, Inc. - Sauget, Illinois

Monitoring Well		BWMW-1S		MDL	BWMW-1M		MDL	BWMW-1D		MDL	BWMW-2S		MDL	BWMW-2M		MDL	BWMW-2D		MDL
Lab Sample ID		680-27703-16			680-27703-17			680-27703-18			680-27703-9			680-27703-10			680-27703-13		
Date Sampled		6/20/2007			6/20/2007			6/20/2007			6/19/2007			6/19/2007			6/20/2007		
Time Sampled		11:15			12:05			11:40			15:20			14:45			10:00		
Mercury (USEPA Method 7470A)																			
Date Prepared		6/22/2007			6/22/2007			6/22/2007			6/22/2007			6/22/2007			6/22/2007		
Date Analyzed		6/26/2007			6/26/2007			6/26/2007			6/26/2007			6/26/2007			6/26/2007		
Analyte	**CAS No.**	**(mg/L)**			**(mg/L)**			**(mg/L)**			**(mg/L)**			**(mg/L)**			**(mg/L)**		
Mercury	7439-97-6	0.00008	U	0.000080	0.00008	U	0.000080	0.00008	U	0.000080	0.00008	U	0.000080	0.00008	U	0.000080	0.00008	U	0.000080
Metals (USEPA Method 6010B)																			
Date Prepared		6/28/2007			6/28/2007			6/28/2007			6/28/2007			6/28/2007			6/28/2007		
Date Analyzed		6/28/2007			6/28/2007			6/29/2007			6/28/2007			6/28/2007			6/28/2007		
Analyte	**CAS No.**	**(mg/L)**			**(mg/L)**			**(mg/L)**			**(mg/L)**			**(mg/L)**			**(mg/L)**		
Arsenic	7440-38-2	***0.02***		0.0023	0.0023	U	0.0023	0.0023	U	0.0023	***0.014***		0.0023	0.0023	U	0.0023	0.0023	U	0.0023
Barium	7440-39-3	***0.21***		0.002	***0.47***		0.002	***0.35***		0.002	***0.41***		0.002	***0.087***		0.002	***0.14***		0.002
Chromium	7440-47-3	0.01	U	0.0011	0.01	U	0.0011	***0.01***		0.0011	***0.012***		0.0011	0.01	U	0.0011	0.01	U	0.0011
Copper	7440-50-8	***0.018***	***J***	0.0022	0.0022	U	0.0022	***0.0061***	***J***	0.0022	***0.0097***	***J***	0.0022	***0.0046***	***J***	0.0022	0.0022	U	0.0022
Lead	7439-92-1	0.0021	U	0.0021	0.0021	U	0.0021	***0.021***		0.0021	***0.0059***		0.0021	0.0021	U	0.0021	0.0021	U	0.0021
Nickel	7440-02-0	***0.0034***	***J***	0.002	0.002	U	0.002	***0.0099***	***J***	0.002	***0.01***	***J***	0.002	***0.03***	***J***	0.002	***0.015***	***J***	0.002
Total Dissolved Solids (USEPA Method 160.1)																			
Date Analyzed		6/21/2007			6/21/2007			6/22/2007			6/21/2007			6/21/2007			6/21/2007		
Analyte	**CAS No.**	**(mg/L)**			**(mg/L)**			**(mg/L)**			**(mg/L)**			**(mg/L)**			**(mg/L)**		
Total Dissolved Solids (TDS)	-	***1100***		10.0	***1000***		10.0	***670***		5.0	***1600***		5.0	***1600***		10.0	***1800***		10.0

Parameters not listed were not detected in any samples.
Results in ***bold italics*** denote detections.
Samples are not filtered.

Flags and Qualifiers
U - Analyte was not detected at or above the Method Detection Limit (MDL).
J - Result is an estimated value.

Checked by: PGU Date: 8/9/07
Reviewed by: MRF Date: 8/10/07

Table 2
Summary of Validated Groundwater Sample Detections - Inorganics (June 2007 Sampling Event)
Site R Quarterly Groundwater Monitoring
Solutia, Inc. - Sauget, Illinois

Monitoring Well		BWMW-3S	MDL	BWMW-3M	MDL	BWMW-3D	MDL	BWMW-4S	MDL	BWMW-4M	MDL	BWMW-4D	MDL
Lab Sample ID		680-27703-4		680-27703-9		680-27703-6		680-27703-3		680-27703-2		680-27703-1	
Date Sampled		6/19/2007		6/19/2007		6/19/2007		6/19/2007		6/18/2007		6/19/2007	
Time Sampled		11:20		11:00		12:30		9:20		14:15		14:25	
Mercury (USEPA Method 7470A)													
Date Prepared		6/22/2007		6/22/2007		6/22/2007		6/22/2007		6/22/2007		6/22/2007	
Date Analyzed		6/26/2007		6/26/2007		6/26/2007		6/26/2007		6/26/2007		6/26/2007	
Analyte	**CAS No.**	**(mg/L)**		**(mg/L)**		**(mg/L)**		**(mg/L)**		**(mg/L)**		**(mg/L)**	
Mercury	7439-97-6	0.00008 U	0.000080	0.00008 U	0.000080	0.00008 U	0.000080	0.00008 U	0.000080	0.00008 U	0.000080	0.00008 U	0.000080
Metals (USEPA Method 6010B)													
Date Prepared		6/28/2007		6/28/2007		6/28/2007		6/28/2007		6/28/2007		6/28/2007	
Date Analyzed		6/28/2007		6/28/2007		6/28/2007		6/28/2007		6/28/2007		6/28/2007	
Analyte	**CAS No.**	**(mg/L)**		**(mg/L)**		**(mg/L)**		**(mg/L)**		**(mg/L)**		**(mg/L)**	
Arsenic	7440-38-2	***0.066***	0.0023	0.0023 U	0.0023	***0.0029 J***	0.0023	***0.016***	0.0023	0.0023 U	0.0023	0.0023 U	0.0023
Barium	7440-39-3	***0.52***	0.002	***0.96***	0.002	***0.24***	0.002	***0.27***	0.002	***0.37***	0.002	0.1	0.002
Chromium	7440-47-3	0.01 U	0.0011	0.01 U	0.0011	0.01 U	0.0011	0.01 U	0.0011	0.01 U	0.0011	0.01 U	0.0011
Copper	7440-50-8	***0.012 J***	0.0022	0.0022 U	0.0022	0.0022 U	0.0022	***0.046***	0.0022	***0.013 J***	0.0022	0.0022 U	0.0022
Lead	7439-92-1	0.0021 U	0.0021	0.0021 U	0.0021	0.0021 U	0.0021	0.0021 U	0.0021	0.0021 U	0.0021	0.0021 U	0.0021
Nickel	7440-02-0	***0.0037 J***	0.002	***0.0085 J***	0.002	***0.0039 J***	0.002	***0.0033 J***	0.002	***0.004 J***	0.002	0.0048 J	0.002
Total Dissolved Solids (USEPA Method 160.1)													
Date Analyzed		6/21/2007		6/21/2007		6/21/2007		6/21/2007		6/21/2007		6/21/2007	
Analyte	**CAS No.**	**(mg/L)**		**(mg/L)**		**(mg/L)**		**(mg/L)**		**(mg/L)**		**(mg/L)**	
Total Dissolved Solids (TDS)	-	***1500***	10.0	***1600***	10.0	***1400***	10.0	***2100***	10.0	***750***	10.0	***670***	5.0

Parameters not listed were not detected in any samples.
Results in ***bold italics*** denote detections.
Samples are not filtered.

Flags and Qualifiers
U - Analyte was not detected at or above the Method Detection Limit (MDL).
J - Result is an estimated value.

Checked by: PGU Date: 8/9/07
Reviewed by: MRF Date: 8/10/07

Table 3
Summary of Validated QA/QC Sample Detections - Organics (June 2007 Sampling Event)
Site R Quarterly Groundwater Monitoring
Solutia, Inc. - Sauget, Illinois

Monitoring Well		DUP 1		MDL	DUP 2		MDL	RB 1		MDL	RB 2		MDL	FB 1		MDL	FB 2		MDL	Trip Blank		MDL	Trip Blank		MDL
Lab Sample ID		680-27703-11			680-27703-19			680-25231-1			680-27703-15			680-27703-8			680-27703-14			680-27703-12			680-27703-20		
Date Sampled		6/18/2007			6/20/2007			6/19/2007			6/20/2007			6/19/2007			6/20/2007			6/18/2007			6/20/2007		
Time Sampled		14:25			10:00			8:45			8:45			8:30			8:30			0:00			0:00		
Volatile Organic Compounds (USEPA Method 8260B)																									
Date Prepared		6/25/2007			6/26/2007			6/25/2007			6/26/2007			6/25/2007			6/26/2007			6/25/2007			6/26/2007		
Date Analyzed		6/25/2007			6/26/2007			6/26/2007			6/26/2007			6/25/2007			6/26/2007			6/25/2007			6/26/2007		
Analyte	**CAS No.**	(ug/L)			(ug/L)			(ug/L)			(ug/L)			(ug/L)			(ug/L)			(ug/L)			(ug/L)		
Acetone	67-64-1	3.4	U	3.4	***7,300***		85	1.7	U	1.7	***4.2***	***J***	1.7	***2.3***	***J***	1.7	1.7	U	1.7	1.7	U	1.7	1.7	U	1.7
Benzene	71-43-2	***67***		0.64	***1,400***		16	0.32	U	0.32	0.32	U	0.32	0.32	U	0.32	0.32	U	0.32	0.32	U	0.32	0.32	U	0.32
Chlorobenzene	108-90-7	***1,900***	***D***	0.68	***6,400***		17	0.34	U	0.34	0.34	U	0.34	0.34	U	0.34	0.34	U	0.34	0.34	U	0.34	0.34	U	0.34
Chloroform	67-66-3	0.58	U	0.58	***98***		15	0.29	U	0.29	0.29	U	0.29	0.29	U	0.29	0.29	U	0.29	0.29	U	0.29	0.29	U	0.29
1,2-Dichloroethane	107-06-2	0.62	U	0.62	***4,000***		16	0.31	U	0.31	0.31	U	0.31	0.31	U	0.31	0.31	U	0.31	0.31	U	0.31	0.31	U	0.31
cis-1,2-Dichloroethene	156-59-2	0.66	U	0.66	***39***	***J***	17	0.33	U	0.33	0.33	U	0.33	0.33	U	0.33	0.33	U	0.33	0.33	U	0.33	0.33	U	0.33
Ethylbenzene	100-41-4	***1.1***	***J***	0.60	***190***		15	0.30	U	0.30	0.30	U	0.30	0.30	U	0.30	0.30	U	0.30	0.30	U	0.30	0.30	U	0.30
Methylene Chloride	75-09-2	2.0	U	2.0	***210***	***J***	50	1.0	U	1.0	1.0	U	1.0	1.0	U	1.0	1.0	U	1.0	1.0	U	1.0	1.0	U	1.0
4-Methyl-2-pentanone	108-10-1	1.2	U	1.2	***1,200***		30	0.60	U	0.60	0.60	U	0.60	0.60	U	0.60	0.60	U	0.60	0.60	U	0.60	0.60	U	0.60
Trichloroethene	79-01-6	0.80	U	0.80	***190***		20	0.40	U	0.40	0.40	U	0.40	0.40	U	0.40	0.40	U	0.40	0.40	U	0.40	0.40	U	0.40
Tetrachloroethene	127-18-4	0.56	U	0.56	***130***		14	0.28	U	0.28	0.28	U	0.28	0.28	U	0.28	0.28	U	0.28	0.28	U	0.28	0.28	U	0.28
Toluene	108-88-3	0.62	U	0.62	***2,100***		16	0.31	U	0.31	***0.44***	***J***	0.31	0.31	U	0.31	0.31	U	0.31	***0.48***	***J***	0.31	***0.59***	***J***	0.31
Xylenes, Total	1330-20-7	1.7	U	1.7	***1,200***		44	0.87	U	0.87	0.87	U	0.87	0.87	U	0.87	0.87	U	0.87	0.87	U	0.87	0.87	U	0.87
Semi-Volatile Organic Compounds (USEPA Method 8270C)																									
Date Prepared		6/25/2007			6/25/2007			6/25/2007			6/25/2007			6/25/2007			6/25/2007								
Date Analyzed		7/10/2007			7/11/2007			7/10/2007			7/11/2007			7/10/2007			7/10/2007								
Analyte	**CAS No.**	(ug/L)			(ug/L)			(ug/L)			(ug/L)			(ug/L)			(ug/L)								
4-Chloroaniline	106-47-8	***2,500***	***JD***	4.8	***17,000***	***J***	910	4.8	U	4.8	4.8	U	4.8	4.8	U	4.8	4.7	U	4.7						
2-Chlorophenol	95-57-8	***6.9***	***J***	1.0	***9,200***	***J***	190	1.0	U	1.0	1.0	U	1.0	1.0	U	1.0	0.97	U	0.97						
1,2-Dichlorobenzene	95-50-1	***18***		0.50	***490***	***J***	94	0.50	U	0.50	0.50	U	0.50	0.50	U	0.50	0.49	U	0.49						
1,3-Dichlorobenzene	541-73-1	***8.5***	***J***	0.50	94	UJ	94	0.50	U	0.50	0.50	U	0.50	0.50	U	0.50	0.49	U	0.49						
1,4-Dichlorobenzene	106-46-7	***73***		0.50	***220***	***J***	94	0.50	U	0.50	0.50	U	0.50	0.50	U	0.50	0.49	U	0.49						
2,4-Dichlorophenol	120-83-2	1.0	U	1.0	***18,000***	***J***	190	1.0	U	1.0	1.0	U	1.0	1.0	U	1.0	0.97	U	0.97						
3 & 4 Methylphenol	15831-10-4	1.0	U	1.0	***1,400***	***J***	190	1.0	U	1.0	1.0	U	1.0	1.0	U	1.0	0.97	U	0.97						
Nitrobenzene	98-95-3	0.50	U	0.50	***910***	***J***	94	0.50	U	0.50	0.50	U	0.50	0.50	U	0.50	0.49	U	0.49						
Phenol	108-95-2	***2.6***	***J***	0.50	***34,000***	***J***	94	0.50	U	0.50	0.50	U	0.50	0.50	U	0.50	***0.76***	***J***	0.49						
2,4,6-Trichlorophenol	88-06-2	0.50	U	0.50	***2,600***	***J***	94	0.50	U	0.50	0.50	U	0.50	0.50	U	0.50	0.49	U	0.49						

Table 3
Summary of Validated QA/QC Sample Detections - Organics (June 2007 Sampling Event)
Site R Quarterly Groundwater Monitoring
Solutia, Inc. - Sauget, Illinois

Monitoring Well		DUP 1	MDL	DUP 2	MDL	RB 1	MDL	RB 2	MDL	FB 1	MDL	FB 2	MDL	Trip Blank	MDL	Trip Blank	MDL
Lab Sample ID		680-27703-11		680-27703-19		680-25231-1		680-27703-15		680-27703-8		680-27703-14		680-27703-12		680-27703-20	
Date Sampled		6/18/2007		6/20/2007		6/19/2007		6/20/2007		6/19/2007		6/20/2007		6/18/2007		6/20/2007	
Time Sampled		14:25		10:00		8:45		8:45		8:30		8:30		0:00		0:00	
Organochlorine Pesticides (USEPA Method 8081A)																	
Date Prepared		6/25/2007		6/25/2007		6/25/2007		6/25/2007		6/25/2007		6/25/2007					
Date Analyzed		6/28/2007		6/28/2007		6/27/2007		6/27/2007		6/27/2007		6/27/2007					
Analyte	**CAS No.**	**(ug/L)**		**(ug/L)**		**(ug/L)**		**(ug/L)**		**(ug/L)**		**(ug/L)**					
Endosulfan sulfate	1031-07-8	0.0066 U	0.0066	***0.15 JDP***	0.069	0.0070 U	0.0070	0.0069 U	0.0069	0.0070 U	0.0070	0.0069 U	0.0069				
Chlorinated Herbicides (USEPA Method 8151A)																	
Date Prepared		6/22/2007		6/22/2007		6/22/2007		6/22/2007		6/22/2007		6/22/2007					
Date Analyzed		6/25/2007		6/26/2007		6/25/2007		6/25/2007		6/25/2007		6/25/2007					
Analyte	**CAS No.**	**(mg/L)**		**(mg/L)**		**(mg/L)**		**(mg/L)**		**(mg/L)**		**(mg/L)**					
2,4-D	94-75-7	0.06 U	0.06	***22,000 JD***	29	0.06 U	0.06	0.06 U	0.06	0.061 U	0.061	0.059 U	0.059				
Dichlorprop	120-36-5	***0.29 J***	0.044	***980 JDP***	22	0.044 U	0.044	0.044 U	0.044	0.045 U	0.045	0.044 U	0.044				
Total Organic Carbon (USEPA Method 9060)																	
Date Analyzed		7/3/2007		7/3/2007		7/3/2007		7/3/2007		7/3/2007		7/3/2007					
Analyte	**CAS No.**	**(mg/L)**		**(mg/L)**		**(mg/L)**		**(mg/L)**		**(mg/L)**		**(mg/L)**					
Total Organic Carbon (TOC)	-	***9.9***	0.50	***480***	0.50	0.50 U	0.50	0.50 U	0.50	0.50 U	0.50	0.50 U	0.50				

Parameters not listed were not detected in any samples.
Results in ***bold italics*** denote detections.

Flags and Qualifiers
U - Analyte was not detected at or above the Method Detection Limit (MDL).
UJ - Analyte was not detected at or above the Method Detection Limit (MDL); the detection limit is estimated.
J - Result is an estimated value.
JP - Result is an estimated value; The lower of the two values is reported when the % difference between the results of two GC columns is greater than 40%.
JD - Compound analyzed at a dilution; Low surrogate recovery due to sample dilution (DUP-2DL).
JDP - Compounds analyzed at a dilution: Low surrogate recovery due to sample dilution (DUP-2DL); The lower of the two values is between the results of two GC columns is greater an estimated value.

Checked by: PGU Date: 8/9/2007
Reviewed by: MRF Date: 8/10/2007

Table 4
Summary of Validated QA/QC Sample Detections - Inorganics (June 2007 Sampling Event)
Site R Quarterly Groundwater Monitoring
Solutia, Inc. - Sauget, Illinois

Monitoring Well		DUP 1		MDL	DUP 2		MDL	RB 1		MDL	RB 2		MDL
Lab Sample ID		680-27703-11			680-27703-19			680-27703-7			680-27703-15		
Date Sampled		6/18/2007			6/20/2007			6/19/2007			6/20/2007		
Time Sampled		14:25			10:00			8:45			8:45		
Mercury (USEPA Method 7470A)													
Date Prepared		6/22/2007			6/22/2007			6/22/2007			6/22/2007		
Date Analyzed		6/26/2007			6/26/2007			6/26/2007			6/26/2007		
Analyte	**CAS No.**	**(mg/L)**			**(mg/L)**			**(mg/L)**			**(mg/L)**		
Mercury	7439-97-6	0.00008	U	0.000080	0.00008	U	0.000080	0.00008	U	0.000080	0.00008	U	0.000080
Metals (USEPA Method 6010B)													
Date Prepared		6/28/2007			6/28/2007			6/28/2007			6/28/2007		
Date Analyzed		6/28/2007			6/29/2007			6/28/2007			6/28/2007		
Analyte	**CAS No.**	**(mg/L)**			**(mg/L)**			**(mg/L)**			**(mg/L)**		
Barium	7440-39-3	***0.35***		0.002	***0.14***		0.002	0.002	U	0.002	0.002	U	0.002
Copper	7440-50-8	0.0022	U	0.0022	0.0022	U	0.0022	0.0022	U	0.0022	***0.027***		0.0022
Nickel	7440-02-0	0.002	U	0.002	***0.015***	***J***	0.002	0.002	U	0.002	0.002	U	0.002
Total Dissolved Solids (USEPA Method 160.1)													
Date Analyzed		6/21/2007			6/22/2007			6/21/2007			6/21/2007		
Analyte	**CAS No.**	**(mg/L)**			**(mg/L)**			**(mg/L)**			**(mg/L)**		
Total Dissolved Solids (TDS)	-	***750***		10.0	***1800***		10.0	***7.0***		5.0	5.0	U	5.0

Parameters not listed were not detected in any samples.
Results in ***bold italics*** denote detections.
Samples are not filtered.

Flags and Qualifiers
U - Analyte was not detected at or above the Method Detection Limit (MDL).
J - Result is an estimated value.

Checked by: PGU Date: 8/9/2007
Reviewed by: MRF Date: 8/10/2007

Table 4
Summary of Validated QA/QC Sample Detections - Inorganics (June 2007 Sampling Event)
Site R Quarterly Groundwater Monitoring
Solutia, Inc. - Sauget, Illinois

Monitoring Well		FB 1		MDL	FB 2		MDL	Trip Blank	MDL	Trip Blank	MDL
Lab Sample ID		680-27703-8			680-27703-14			680-27703-12		680-27703-20	
Date Sampled		6/19/2007			6/20/2007			6/18/2007		6/20/2007	
Time Sampled		8:30			8:30			0:00		0:00	
Mercury (USEPA Method 7470A)											
Date Prepared		6/22/2007			6/22/2007						
Date Analyzed		6/26/2007			6/26/2007						
Analyte	**CAS No.**	**(mg/L)**			**(mg/L)**						
Mercury	7439-97-6	0.00008	U	0.000080	0.00008	U	0.000080				
Metals (USEPA Method 6010B)											
Date Prepared		6/28/2007			6/28/2007						
Date Analyzed		6/28/2007			6/28/2007						
Analyte	**CAS No.**	**(mg/L)**			**(mg/L)**						
Barium	7440-39-3	0.002	U	0.002	0.002	U	0.002				
Copper	7440-50-8	0.0022	U	0.0022	0.0022	U	0.0022				
Nickel	7440-02-0	0.002	U	0.002	0.002	U	0.002				
Total Dissolved Solids (USEPA Method 160.1)											
Date Analyzed		6/22/2007			6/21/2007						
Analyte	**CAS No.**	**(mg/L)**			**(mg/L)**						
Total Dissolved Solids (TDS)	-	5.0	U	5.0	***9.0***		5.0				

Parameters not listed were not detected in any samples.
Results in ***bold italics*** denote detections.
Samples are not filtered.

Flags and Qualifiers
U - Analyte was not detected at or above the Method Detection Limit (MDL).
J - Result is an estimated value.

Checked by: PGU
Reviewed by: MRF

Table 1
Summary of Validated Groundwater Sample Detections - Organics (September 2007 Sampling Event)
Site R Quarterly Groundwater Monitoring
Solutia, Inc. - Sauget, Illinois

Monitoring Well		BWMW-1S		MDL	BWMW-1M		MDL	BWMW-1D		MDL	BWMW-2S		MDL	BWMW-2M		MDL	BWMW-2D		MDL
Lab Sample ID		680-30324-4			680-30324-3			680-30324-1			680-30324-5			680-30212-10			680-30212-9		
Date Sampled		9/20/2007			9/20/2007			9/20/2007			9/20/2007			9/19/2007			9/19/2007		
Time Sampled		11:30			10:00			10:54			14:10			9:10			10:05		
Volatile Organic Compounds (USEPA Method 8260B)																			
Date Prepared		10/2/2007			10/2/2007			10/1/2007			10/2/2007			10/1/2007			10/1/2007		
Date Analyzed		10/2/2007			10/2/2007			10/1/2007			10/2/2007			10/1/2007			10/1/2007		
Analyte	**CAS No.**	(ug/L)			(ug/L)			(ug/L)			(ug/L)			(ug/L)			(ug/L)		
1,2-Dichloroethane	107-06-2	160	U	160	6.2	U	6.2	31	U	31	0.62	U	0.62	***830***		16	***3,100***		16
4-Methyl-2-pentanone	108-10-1	300	U	300	12	U	12	60	U	60	1.2	U	1.2	***140***	***J***	30	***1,100***	***J***	30
Acetone	67-64-1	2,500	U	2,500	100	U	100	500	U	500	10	U	10	***590***	***J***	250	***2,900***	***J***	250
Benzene	71-43-2	***620***		160	***50***		6.4	32	U	32	***58***		0.64	***430***		16	***1,100***		16
Carbon Disulfide	75-15-0	85	U	85	3.4	U	3.4	17	U	17	***1.6***	***J***	0.34	8.5	U	8.5	8.5	U	8.5
Chlorobenzene	108-90-7	***51,000***		170	***5,900***	***D***	17	***8,100***		34	***220***		0.68	***4,200***		17	***5,100***		17
Chloroform	67-66-3	150	U	150	5.8	U	5.8	29	U	29	0.58	U	0.58	***19***	***J***	15	***77***		15
cis-1,2-Dichloroethene	156-59-2	170	U	170	6.6	U	6.6	33	U	33	0.66	U	0.66	***17***	***J***	17	***35***	***J***	17
Ethylbenzene	100-41-4	150	U	150	6.0	U	6	30	U	30	0.60	U	0.60	***160***		15	***190***		15
Methylene Chloride	75-09-2	500	U	500.0	20	U	20	100	U	100	2.0	U	2.0	50	U	50	***160***	***J***	50
Tetrachloroethene	127-18-4	140	U	140	5.6	U	5.6	28	U	28	0.56	U	0.56	***130***		14	***99***		14
Toluene	108-88-3	160	U	160	6.2	U	6.2	31	U	31	0.62	U	0.62	***860***		16	***1,600***		16
Trichloroethene	79-01-6	200	U	200	8.0	U	8	40	U	40	0.80	U	0.80	***41***	***J***	20	***130***		20
Xylenes, Total	1330-20-7	440	U	440	17	U	17	87	U	87	1.7	U	1.7	***1,100***		44	***1,200***		44
Semi-Volatile Organic Compounds (USEPA Method 8270C)																			
Date Prepared		9/25/2007			9/25/2007			9/25/2007			9/25/2007			9/25/2007			9/25/2007		
Date Analyzed		9/27/2007			9/27/2007			9/27/2007			9/27/2007			9/27/2007			9/27/2007		
Analyte	**CAS No.**	(ug/L)			(ug/L)			(ug/L)			(ug/L)			(ug/L)			(ug/L)		
1,2,4-Trichlorobenzene	120-82-1	3.4	U	3.4	0.69	U	0.69	0.70	U	0.70	0.69	U	0.69	***48***	***J***	3.5	***46***	***J***	3.5
1,2-Dichlorobenzene	95-50-1	2.4	U	2.4	***8.1***	***J***	0.49	***2.6***	***J***	0.49	***3.6***	***J***	0.49	***400***	***J***	2.5	***600***	***J***	2.5
1,3-Dichlorobenzene	541-73-1	2.4	U	2.4	***3.3***	***J***	0.49	0.49	U	0.49	0.49	U	0.49	***14***	***J***	2.5	***14***	***J***	2.5
1,4-Dichlorobenzene	106-46-7	***2.5***	***J***	2.4	***85***		0.49	***8.0***	***J***	0.49	***1.7***	***J***	0.49	***200***	***J***	2.5	***240***	***J***	2.5
2,4,6-Trichlorophenol	88-06-2	2.4	U	2.4	0.49	U	0.49	***34***		0.49	0.49	U	0.49	***2,400***	***D***	49	***3,100***	***J D***	200
2,4-Dichlorophenol	120-83-2	4.9	U	4.9	0.97	U	0.97	***68***		0.98	0.97	U	0.97	***15,000***	***D***	98	***18,000***	***J D***	390
2-Chlorophenol	95-57-8	***66***	***J***	4.9	***15***		0.97	***20***	***J***	0.49	***1.5***	***J***	0.97	***3,500***	***D***	98	***13,000***	***J D***	390
2-Methylnaphthalene	91-57-6	2.4	U	2.4	0.49	U	0.49	0.49	U	0.49	0.49	U	0.49	2.5	U	2.5	2.5	U	2.5
2-Nitroaniline	88-74-4	24	U	24	4.9	U	4.9	4.9	U	4.9	4.9	U	4.9	***370***	***J***	25	***310***	***J***	25
3&4 Methylphenol	106-44-5	4.9	U	4.9	0.97	U	0.97	0.98	U	0.98	0.97	U	0.97	***460***	***J***	4.9	***1,700***	***J D***	390
4-Chloro-3-methylphenol	59-50-7	2.5	U	2.5	0.50	U	0.50	0.51	U	0.51	0.50	U	0.5	2.5	U	2.5	25	U	25
4-Chloroaniline	106-47-8	23	U	23	***29***		4.7	***48***	***J***	4.7	***110***		4.7	***8,500***	***D***	470	***30,000***	***J D***	1900
4,6-Dinitro-2-methylphenol	534-52-1	24	U	24	4.9	U	4.9	4.9	U	4.9	4.9	U	4.9	25	U	25	25	U	25
4-Nitroaniline	88-74-4	9.7	U	9.7	1.9	U	1.9	2.0	U	2.0	1.9	U	1.9	***160***	***J***	9.8	***200***	***J***	9.8
Benzo[g,h,i]perylene	191-24-2	3.3	U	3.3	0.65	U	0.65	0.66	U	0.66	0.65	U	0.65	3.3	U	3.3	3.3	U	3.3
Bis(2-Chloroethoxy)methane	111-91-1	2.4	U	2.4	0.49	U	0.49	0.49	U	0.49	0.49	U	0.49	2.5	U	2.5	2.5	U	2.5
Diethyl phthalate	84-66-2	2.4	U	2.4	0.49	U	0.49	0.49	U	0.49	0.49	U	0.49	***21***	***J***	2.5	***17***	***J***	2.5
Fluorene	86-73-7	2.4	U	2.4	***1.1***	***J***	0.49	0.49	U	0.49	0.49	U	0.49	2.5	U	2.5	2.5	U	2.5
Hexachlorocyclopentadiene	77-47-4	24	U	24	4.9	U	4.9	4.9	U	4.9	4.9	U	4.9	25	U	25	25	U	25
Nitrobenzene	98-95-3	2.4	U	2.4	0.49	U	0.49	0.49	U	0.49	0.49	U	0.49	***540***	***J***	2.5	***760***	***J***	2.5
Pentachlorophenol	87-86-5	24	U	24	4.9	U	4.9	4.9	U	4.9	4.9	U	4.9	***250***	***J***	25	***72***	***J***	25
Phenol	108-95-2	***4.3***	***J***	2.4	***2.5***	***J***	0.49	***2.0***	***J***	0.49	***1.4***	***J***	0.49	***11,000***	***D***	49	***47,000***	***J D***	200

Table 1
Summary of Validated Groundwater Sample Detections - Organics (September 2007 Sampling Event)
Site R Quarterly Groundwater Monitoring
Solutia, Inc. - Sauget, Illinois

Monitoring Well		BWMW-1S		MDL	BWMW-1M		MDL	BWMW-1D		MDL	BWMW-2S		MDL	BWMW-2M		MDL	BWMW-2D		MDL
Lab Sample ID		680-30324-4			680-30324-3			680-30324-1			680-30324-5			680-30212-10			680-30212-9		
Date Sampled		9/20/2007			9/20/2007			9/20/2007			9/20/2007			9/19/2007			9/19/2007		
Time Sampled		11:30			10:00			10:54			14:10			9:10			10:05		
Organochlorine Pesticides (USEPA Method 8081A)																			
Date Prepared		9/24/2007			9/24/2007			9/24/2007			9/24/2007			9/24/2007			9/24/2007		
Date Analyzed		9/26/2007			9/26/2007			9/26/2007			9/26/2007			9/26/2007			9/26/2007		
Analyte	**CAS No.**	(ug/L)			(ug/L)			(ug/L)			(ug/L)			(ug/L)			(ug/L)		
4,4'-D	72-54-8	0.0057	U	0.0057	0.0057	U	0.0057	***0.012***	***J P***	0.0058	0.0059	U	0.0059	***0.077***	***J P***	0.029	***0.090***	***J P***	0.029
alpha-BHC	319-84-6	0.0079	U	0.0079	0.0079	U	0.0079	0.0079	U	0.0079	0.0081	U	0.0081	0.040	U	0.040	0.039	U	0.039
gamma-Chlordane	5103-74-2	0.0056	U	0.0056	0.0056	U	0.0056	0.0057	U	0.0057	0.0058	U	0.0058	0.028	U	0.028	0.028	U	0.028
Chlorinated Herbicides (USEPA Method 8151A)																			
Date Prepared		9/24/2007			9/24/2007			9/24/2007			9/24/2007			9/24/2007			9/24/2007		
Date Analyzed		9/25/2007			9/25/2007			9/25/2007			9/25/2007			9/25/2007			9/25/2007		
Analyte	**CAS No.**	(ug/L)			(ug/L)			(ug/L)			(ug/L)			(ug/L)			(ug/L)		
2,4,5-T	93-76-5	0.061	U	0.061	0.062	U	0.062	0.063	U	0.063	0.063	U	0.063	***130***	***J P***	31	***230***	***J***	31
2,4-D	94-75-7	0.059	U	0.059	0.060	U	0.060	0.061	U	0.061	0.061	U	0.061	***12,000***	***J D***	300	***19,000***	***J D***	300
Dicamba	1918-00-9	0.040	U	0.04	0.040	U	0.040	0.041	U	0.041	0.041	U	0.041	20	U	20	20	U	20
Dichlorprop	120-36-5	***0.78***		0.044	***0.062***	***J***	0.044	0.045	U	0.045	***0.82***		0.045	***800***	***J D***	22	***1,900***	***J D***	22
Pentachlorophenol	87-86-5	0.023	U	0.023	0.024	U	0.024	***0.37***	***J P***	0.024	0.024	U	0.024	12	U	12	12	U	12
Total Organic Carbon (USEPA Method 9060)																			
Date Analyzed		10/1/2007			10/1/2007			10/1/2007			10/1/2007			10/2/2007			10/2/2007		
Analyte	**CAS No.**	(mg/L)			(mg/L)			(mg/L)			(mg/L)			(mg/L)			(mg/L)		
Total Organic Carbon (TOC)	-	***8.4***		0.50	***8.2***		0.50	***6.8***		0.50	***26***		0.50	***240***		0.50	***420***		5.0

Parameters not listed were not detected in any samples.
Results in ***bold italics*** denote detections.

Flags and Qualifiers
U - Analyte was not detected at or above the Method Detection Limit (MDL).
UJ - Analyte was not detected at or above the Method Detection Limit (MDL); the detection limit is estimated.
J - Result is an estimated value.
JP - Result is an estimated value; The lower of the two values is reported when the % difference between the results of two GC columns is greater than 40%.
JE - Result is an estimated value; Result exceeded calibration range and secondary dilution produced a non-detect value
P - The lower of the two values is reported when the % difference between the results of two GC columns is greater than 40%.
D - Compound analyzed at a dilution.
JD - Compound analyzed at a dilution.

Prepared by: MEB Date: 11/14/2007
Checked by: AWG Date: 11/19/2007

Table 1
Summary of Validated Groundwater Sample Detections - Organics (September 2007 Sampling Event)
Site R Quarterly Groundwater Monitoring
Solutia, Inc. - Sauget, Illinois

Monitoring Well		BWMW-3S		MDL	BWMW-3M		MDL	BWMW-3D		MDL	BWMW-4S		MDL	BWMW-4M		MDL	BWMW-4D		MDL
Lab Sample ID		680-30212-14			680-30212-6			680-30212-5			680-30212-11			680-30212-2			680-30212-1		
Date Sampled		9/19/2007			9/18/2007			9/18/2007			9/19/2007			9/18/2007			9/18/2007		
Time Sampled		14:18			15:48			15:20			10:57			10:20			10:00		
Volatile Organic Compounds (USEPA Method 8260B)																			
Date Prepared		10/1/2007			9/28/2007			9/28/2007			10/2/2007			10/1/2007			9/28/2007		
Date Analyzed		10/1/2007			9/28/2007			9/28/2007			10/2/2007			10/1/2007			9/28/2007		
Analyte	**CAS No.**	(ug/L)			(ug/L)			(ug/L)			(ug/L)			(ug/L)			(ug/L)		
1,2-Dichloroethane	107-06-2	0.62	U	0.62	16	U	16	6.2	U	6.2	0.31	U	0.31	1.6	U	1.6	1.6	U	1.6
4-Methyl-2-pentanone	108-10-1	1.2	U	1.2	30	U	30	12	U	12.0	0.60	U	0.60	3.0	U	3.0	3.0	U	3.0
Acetone	67-64-1	10	U	10	250	U	250	100	U	100	5.0	U	5.0	25	U	25	25	U	25
Benzene	71-43-2	***57***		0.64	***280***		16	***82***		6.4	0.32	U	0.32	***40***		1.6	***17***		1.6
Carbon Disulfide	75-15-0	***0.81***	***J***	0.34	8.5	U	8.5	3.4	U	3.4	0.17	U	0.17	0.85	U	0.85	0.85	U	0.85
Chlorobenzene	108-90-7	***200***		0.68	***7,200***		17	***2,100***		6.8	***8.7***		0.34	***660***		1.7	***540***		1.7
Chloroform	67-66-3	0.58	U	0.58	15	U	15	5.8	U	5.8	0.29	U	0.29	1.5	U	1.5	1.5	U	1.5
cis-1,2-Dichloroethene	156-59-2	0.66	U	0.66	17	U	17	6.6	U	6.6	0.33	U	0.33	1.7	U	1.7	1.7	U	1.7
Ethylbenzene	100-41-4	0.60	U	0.60	***16***	***J***	15	6.0	U	6	0.30	U	0.3	1.5	U	1.5	1.5	U	1.5
Methylene Chloride	75-09-2	2.0	U	2.0	50	U	50	20	U	20	1.0	U	1.0	5.0	U	5.0	5.0	U	5.0
Tetrachloroethene	127-18-4	0.56	U	0.56	14	U	14	5.6	U	5.6	0.28	U	0.28	1.4	U	1.4	1.4	U	1.4
Toluene	108-88-3	0.62	U	0.62	16	U	16	6.2	U	6.2	***0.31***	***J***	0.31	1.6	U	1.6	1.6	U	1.6
Trichloroethene	79-01-6	0.80	U	0.80	20	U	20	8.0	U	8.0	0.40	U	0.40	2.0	U	2.0	2.0	U	2.0
Xylenes, Total	1330-20-7	1.7	U	1.7	44	U	44	17	U	17	0.87	U	0.87	4.4	U	4.4	4.4	U	4.4
Semi-Volatile Organic Compounds (USEPA Method 8270C)																			
Date Prepared		9/25/2007			9/25/2007			9/25/2007			9/25/2007			9/25/2007			9/25/2007		
Date Analyzed		9/27/2007			9/27/2007			9/27/2007			9/27/2007			9/27/2007			9/27/2007		
Analyte	**CAS No.**	(ug/L)			(ug/L)			(ug/L)			(ug/L)			(ug/L)			(ug/L)		
1,2,4-Trichlorobenzene	120-82-1	0.67	U	0.67	3.3	U	3.3	3.4	U	3.4	0.69	U	0.69	0.67	U	0.67	***45***		0.67
1,2-Dichlorobenzene	95-50-1	***3.5***	***J***	0.47	***8.9***	***J***	2.4	***75***	***J***	2.4	***1.1***	***J***	0.49	***11***		0.47	***1,300***	***D***	9.4
1,3-Dichlorobenzene	541-73-1	0.47	U	0.47	***18***	***J***	2.4	***2.9***	***J***	2.4	0.49	U	0.49	***4.8***	***J***	0.47	***2.3***	***J***	0.47
1,4-Dichlorobenzene	106-46-7	***9.2***	***J***	0.47	***110***	***J***	2.4	***54***	***J***	2.4	***1.7***	***J***	0.49	***38***		0.47	***56***		0.47
2,4,6-Trichlorophenol	88-06-2	0.47	U	0.47	2.4	U	2.4	2.4	U	2.4	0.49	U	0.49	0.47	U	0.47	***1.4***	***J***	0.47
2,4-Dichlorophenol	120-83-2	0.94	U	0.94	4.7	U	4.7	4.9	U	4.9	0.97	U	0.97	0.94	U	0.94	***3.0***	***J***	0.94
2-Chlorophenol	95-57-8	***4.8***	***J***	0.94	4.7	U	4.7	4.9	U	4.9	0.97	U	0.97	***0.97***	***J***	0.94	0.94	U	0.94
2-Methylnaphthalene	91-57-6	0.47	U	0.47	2.4	U	2.4	2.4	U	2.4	0.49	U	0.49	0.47	U	0.47	0.47	U	0.47
2-Nitroaniline	88-74-4	4.7	U	4.7	24	U	24	24	U	24	4.9	U	4.9	4.7	U	4.7	4.7	U	4.7
3&4 Methylphenol	106-44-5	***12***	***J***	0.94	4.7	U	4.7	4.9	U	4.9	0.97	U	0.97	0.94	U	0.94	0.94	U	0.94
4-Chloro-3-methylphenol	59-50-7	0.49	U	0.49	2.5	U	2.5	2.5	U	2.5	0.50	U	0.50	0.49	U	0.49	0.49	U	0.49
4-Chloroaniline	106-47-8	***14***	***J***	4.5	***13,000***	***J D***	450	***11,000***	***J D***	470	4.7	U	4.7	***680***	***D***	45	***2,100***	***D***	91
4,6-Dinitro-2-methylphenol	534-52-1	4.7	U	4.7	24	U	24	24	U	24	4.9	U	4.9	4.7	U	4.7	4.7	U	4.7
4-Nitroaniline	88-74-4	1.9	U	1.9	9.4	U	9.4	9.7	U	9.7	1.9	U	1.9	1.9	U	1.9	0.47	U	0.47
Benzo[g,h,i]perylene	191-24-2	0.63	U	0.63	3.2	U	3.2	3.3	U	3.3	0.65	U	0.65	0.63	U	0.63	0.63	U	0.63
Bis(2-Chloroethoxy)methane	111-91-1	0.47	U	0.47	***4.9***	***J***	2.4	2.4	U	2.4	0.49	U	0.49	0.47	U	0.47	0.47	U	0.47
Diethyl phthalate	84-66-2	0.47	U	0.47	2.4	U	2.4	2.4	U	2.4	0.49	U	0.49	0.47	U	0.47	0.47	U	0.47
Fluorene	86-73-7	0.47	U	0.47	2.4	U	2.4	2.4	U	2.4	0.49	U	0.49	0.47	U	0.47	0.47	U	0.47
Hexachlorocyclopentadiene	77-47-4	4.7	U	4.7	24	U	24	24	U	24	4.9	U	4.9	4.7	U	4.7	4.7	U	4.7
Nitrobenzene	98-95-3	0.47	U	0.47	2.4	U	2.4	2.4	U	2.4	0.49	U	0.49	0.47	U	0.47	0.47	U	0.47
Pentachlorophenol	87-86-5	4.7	U	4.7	24	U	24	24	U	24	4.9	U	4.9	4.7	U	4.7	4.7	U	4.7
Phenol	108-95-2	***8.1***	***J***	0.47	2.4	U	2.4	2.4	U	2.4	0.49	U	0.49	***0.76***	***J***	0.47	0.47	U	0.47

Table 1
Summary of Validated Groundwater Sample Detections - Organics (September 2007 Sampling Event)
Site R Quarterly Groundwater Monitoring
Solutia, Inc. - Sauget, Illinois

Monitoring Well		BWMW-3S		MDL	BWMW-3M		MDL	BWMW-3D		MDL	BWMW-4S		MDL	BWMW-4M		MDL	BWMW-4D		MDL
Lab Sample ID		680-30212-14			680-30212-6			680-30212-5			680-30212-11			680-30212-2			680-30212-1		
Date Sampled		9/19/2007			9/18/2007			9/18/2007			9/19/2007			9/18/2007			9/18/2007		
Time Sampled		14:18			15:48			15:20			10:57			10:20			10:00		
Organochlorine Pesticides (USEPA Method 8081A)																			
Date Prepared		9/24/2007			9/24/2007			9/24/2007			9/24/2007			9/24/2007			9/24/2007		
Date Analyzed		9/26/2007			9/26/2007			9/26/2007			9/26/2007			9/26/2007			9/26/2007		
Analyte	**CAS No.**	**(ug/L)**			**(ug/L)**			**(ug/L)**			**(ug/L)**			**(ug/L)**			**(ug/L)**		
4,4'-D	72-54-8	0.0057	U	0.0057	0.0056	U J	0.0056	0.0056	U	0.0056	***0.16***		0.0056	0.0058	U	0.0058	0.0056	U	0.0056
alpha-BHC	319-84-6	0.0079	U	0.0079	***0.046***	***J D***	0.0076	0.0076	U	0.0075	0.0076	U	0.0076	0.0079	U	0.0079	0.0076	U	0.0076
gamma-Chlordane	5103-74-2	0.0056	U	0.0056	***0.013***	***J P***	0.0055	0.0055	U	0.0055	0.0055	U	0.0055	0.0057	U	0.0057	0.0055	U	0.0055
Chlorinated Herbicides (USEPA Method 8151A)																			
Date Prepared		9/24/2007			9/24/2007			9/24/2007			9/24/2007			9/24/2007			9/24/2007		
Date Analyzed		9/25/2007			9/25/2007			9/25/2007			9/25/2007			9/25/2007			9/25/2007		
Analyte	**CAS No.**	**(ug/L)**			**(ug/L)**			**(ug/L)**			**(ug/L)**			**(ug/L)**			**(ug/L)**		
2,4,5-T	93-76-5	0.062	U	0.062	0.061	U	0.061	0.060	U	0.060	0.063	U	0.063	0.063	U	0.063	0.060	U	0.060
2,4-D	94-75-7	0.060	U	0.060	0.059	U	0.059	0.058	U	0.058	0.061	U	0.061	0.061	U	0.061	0.058	U	0.058
Dicamba	1918-00-9	***0.16***	***J P***	0.041	***0.057***	***J P***	0.039	0.039	U	0.039	0.041	U	0.041	0.041	U	0.041	0.039	U	0.039
Dichlorprop	120-36-5	***0.12***	***J P***	0.045	***0.44***	***J P***	0.043	***0.14***	***J P***	0.043	0.045	U	0.045	0.045	U	0.045	0.043	U	0.043
Pentachlorophenol	87-86-5	0.024	U	0.024	0.023	U	0.023	0.023	U	0.023	0.024	U	0.024	0.024	U	0.024	***0.53***		0.023
Total Organic Carbon (USEPA Method 9060)																			
Date Analyzed		10/2/2007			10/2/2007			10/2/2007			10/2/2007			10/2/2007			10/2/2007		
Analyte	**CAS No.**	**(mg/L)**			**(mg/L)**			**(mg/L)**			**(mg/L)**			**(mg/L)**			**(mg/L)**		
Total Organic Carbon (TOC)	-	***18***		0.50	***88***		0.50	***23***		0.50	***11***		0.50	***4.6***		0.50	***6.7***		0.50

Parameters not listed were not detected in any samples.
Results in ***bold italics*** denote detections.

Flags and Qualifiers
U - Analyte was not detected at or above the Method Detection Limit (MDL).
UJ - Analyte was not detected at or above the Method Detection Limit (MDL); the detection limit is estimated.
J - Result is an estimated value.
JP - Result is an estimated value; The lower of the two values is reported when the % difference between the results of two GC columns is greater than 40%.
JE - Result is an estimated value; Result exceeded calibration range and secondary dilution produced a non-detect value
P - The lower of the two values is reported when the % difference between the results of two GC columns is greater than 40%.
D - Compound analyzed at a dilution.
JD - Compound analyzed at a dilution.

Prepared by: MEB Date: 11/14/2007
Checked by: AWG Date: 11/19/2007

Table 2
Summary of Validated Groundwater Sample Detections - Inorganics (September 2007 Sampling Event)
Site R Quarterly Groundwater Monitoring
Solutia, Inc. - Sauget, Illinois

Monitoring Well		BWMW-1S		MDL	BWMW-1M		MDL	BWMW-1D		MDL	BWMW-2S		MDL	BWMW-2M		MDL	BWMW-2D		MDL
Lab Sample ID		680-30324-4			680-30324-3			680-30324-1			680-30324-5			680-30212-10			680-30212-9		
Date Sampled		9/20/2007			9/20/2007			9/20/2007			9/20/2007			9/19/2007			9/19/2007		
Time Sampled		11:30			10:00			10:54			14:10			9:10			10:05		
Metals (USEPA Method 6010B)																			
Date Prepared		9/26/2007			9/26/2007			9/26/2007			9/26/2007			9/26/2007			9/26/2007		
Date Analyzed		9/27/2007			9/27/2007			9/27/2007			9/27/2007			9/27/2007			9/27/2007		
Analyte	**CAS No.**	(mg/L)			(mg/L)			(mg/L)			(mg/L)			(mg/L)			(mg/L)		
Arsenic	7440-38-2	***0.081***		0.0023	0.0023	U	0.0023	0.0023	U	0.0023	***0.0054***	*J*	0.0023	0.0023	U	0.0023	0.0023	U	0.0023
Barium	7440-39-3	***0.22***		0.0020	***0.47***		0.0020	***0.52***		0.0020	***0.31***		0.0020	***0.075***		0.0020	***0.13***		0.0020
Chromium	7440-47-3	***0.0089***	*J*	0.0011	***0.0015***	*J*	0.0011	0.0011	U	0.0011	***0.015***		0.0011	***0.0042***	*J*	0.0011	***0.0018***	*J*	0.0011
Copper	7440-50-8	***0.0093***	*J*	0.0022	***0.0036***	*J*	0.0022	***0.0047***	*J*	0.0022	***0.013***	*J*	0.0022	***0.0024***	*J*	0.0022	***0.0023***	*J*	0.0022
Lead	7439-92-1	***0.0051***		0.0021	0.0021	U	0.0021	***0.0061***		0.0021	***0.0023***	*J*	0.0021	0.0021	U	0.0021	0.0021	U	0.0021
Nickel	7440-02-0	***0.011***	*J*	0.0020	0.0020	U	0.0020	0.0020	U	0.0020	***0.016***	*J*	0.0020	***0.021***	*J*	0.0020	***0.016***	*J*	0.0020
Mercury (USEPA Method 7470A)																			
Date Prepared		10/2/2007			10/2/2007			10/2/2007			10/2/2007			10/2/2007			10/2/2007		
Date Analyzed		10/3/2007			10/3/2007			10/3/2007			10/3/2007			10/3/2007			10/3/2007		
Analyte	**CAS No.**	(mg/L)			(mg/L)			(mg/L)			(mg/L)			(mg/L)			(mg/L)		
Mercury	7439-97-6	0.000080	U	0.000080	0.000080	U	0.000080	0.000080	U	0.000080	0.000080	U	0.000080	0.000080	U	0.000080	0.000080	U	0.000080
Total Dissolved Solids (USEPA Method 160.1)																			
Date Analyzed		9/27/2007			9/27/2007			9/27/2007			9/27/2007			9/26/2007			9/26/2007		
Analyte	**CAS No.**	(mg/L)			(mg/L)			(mg/L)			(mg/L)			(mg/L)			(mg/L)		
Total Dissolved Solids (TDS)	-	***870***		10	***1,000***		10	***850***		10	***1,500***		20	***1,500***		10	***1,800***		10

Parameters not listed were not detected in any samples.
Results in ***bold italics*** denote detections.
NS - Well purged dry and sufficient water for sample collection had not recharged into the well within 24 hours; In accordance with the Field Sampling Plan (FSP; URS, 2003), a groundwater sample was not collected.
Samples are not filtered.

Flags and Qualifiers
U - Analyte was not detected at or above the Method Detection Limit (MDL).
J - Result is an estimated value.

Prepared by: MEB Date: 11/14/2007
Checked by: AWG Date: 11/19/2007

Table 2
Summary of Validated Groundwater Sample Detections - Inorganics (September 2007 Sampling Event)
Site R Quarterly Groundwater Monitoring
Solutia, Inc. - Sauget, Illinois

Monitoring Well		BWMW-3S		MDL	BWMW-3M		MDL	BWMW-3D		MDL	BWMW-4S		MDL	BWMW-4M		MDL	BWMW-4D		MDL
Lab Sample ID		680-30212-14			680-30212-6			680-30212-5			680-30212-11			680-30212-2			680-30212-1		
Date Sampled		9/19/2007			9/18/2007			9/18/2007			9/19/2007			9/18/2007			9/18/2007		
Time Sampled		14:18			15:48			15:20			10:57			10:20			10:00		
Metals (USEPA Method 6010B)																			
Date Prepared		9/26/2007			9/26/2007			9/26/2007			9/26/2007			9/26/2007			9/26/2007		
Date Analyzed		9/27/2007			9/27/2007			9/27/2007			9/27/2007			9/27/2007			9/27/2007		
Analyte	**CAS No.**	**(mg/L)**			**(mg/L)**			**(mg/L)**			**(mg/L)**			**(mg/L)**			**(mg/L)**		
Arsenic	7440-38-2	***0.086***		0.0023	0.0023	U	0.0023	***0.0026***	***J***	0.0023	***0.26***		0.0023	0.0023	U	0.0023	0.0023	U	0.0023
Barium	7440-39-3	***0.62***		0.0020	***0.97***		0.0020	***0.22***		0.0020	***3.3***		0.0020	***0.28***		0.0020	***0.11***		0.0020
Chromium	7440-47-3	***0.046***		0.0011	0.0011	U	0.0011	0.0011	U	0.0011	***0.0099***	***J***	0.0011	***0.0014***	***J***	0.0011	***0.0012***	***J***	0.0011
Copper	7440-50-8	***0.035***	***J***	0.0022	0.0022	U	0.0022	0.0022	U	0.0022	***0.055***	***J***	0.0022	0.0022	U	0.0022	0.0022	U	0.0022
Lead	7439-92-1	***0.018***	***J***	0.0021	0.0021	U	0.0021	0.0021	U	0.0021	***0.0078***	***J***	0.0021	0.0021	U	0.0021	0.0021	U	0.0021
Nickel	7440-02-0	***0.041***		0.0020	***0.0053***	***J***	0.0020	***0.0026***	***J***	0.0020	***0.0057***	***J***	0.0020	0.0020	U	0.0020	***0.0030***	***J***	0.0020
Mercury (USEPA Method 7470A)																			
Date Prepared		10/2/2007			10/2/2007			10/2/2007			10/2/2007			10/2/2007			10/2/2007		
Date Analyzed		10/3/2007			10/3/2007			10/3/2007			10/3/2007			10/3/2007			10/3/2007		
Analyte	**CAS No.**	**(mg/L)**			**(mg/L)**			**(mg/L)**			**(mg/L)**			**(mg/L)**			**(mg/L)**		
Mercury	7439-97-6	***0.000130***	***J***	0.000080	***0.000083***	***J***	0.000080	0.000080	U	0.000080	0.000080	U	0.000080	0.000080	U	0.000080	0.000080	U	0.000080
Total Dissolved Solids (USEPA Method 160.1)																			
Date Analyzed		9/26/2007			9/23/2007			9/23/2007			9/26/2007			9/23/2007			9/23/2007		
Analyte	**CAS No.**	**(mg/L)**			**(mg/L)**			**(mg/L)**			**(mg/L)**			**(mg/L)**			**(mg/L)**		
Total Dissolved Solids (TDS)	-	***1,200***		10	***1,600***		20	***1,300***		20	***2,100***		10	***600***		10	***670***		10

Parameters not listed were not detected in any samples.
Results in ***bold italics*** denote detections.
NS - Well purged dry and sufficient water for sample collection had not recharged into the well within 24 hours; In accordance with the Field Sampling Plan (FSP; URS, 2003), a groundwater sample was not collected.
Samples are not filtered.

Flags and Qualifiers
U - Analyte was not detected at or above the Method Detection Limit (MDL).
J - Result is an estimated value.

Prepared by: MEB Date: 11/14/2007
Checked by: AWG Date: 11/19/2007

Table 3
Summary of Validated QA/QC Sample Detections - Organics (September 2007 Sampling Event)
Site R Quarterly Groundwater Monitoring
Solutia, Inc. - Sauget, Illinois

Monitoring Well		DUP 1		MDL	DUP 2		MDL	RB 1		MDL	RB 2		MDL
Lab Sample ID		680-30212-7			680-30324-2			680-30212-3			680-30212-13		
Date Sampled		9/18/2007			9/20/2007			9/18/2007			9/19/2007		
Time Sampled		0:00			0:00			11:30			12:40		
Volatile Organic Compounds (USEPA Method 8260B)													
Date Prepared		10/1/2007			10/2/2007			9/28/2007			10/1/2007		
Date Analyzed		10/1/2007			10/2/2007			9/28/2007			10/1/2007		
Analyte	**CAS No.**	(ug/L)			(ug/L)			(ug/L)			(ug/L)		
1,2-Dichloroethane	107-06-2	3.1	U	3.1	31	U	31	0.31	U	0.31	0.31	U	0.31
4-Methyl-2-pentanone	108-10-1	6.0	U	6.0	60	U	60	0.60	U	0.60	0.60	U	0.60
Acetone	67-64-1	50	U	50	500	U	500	5.0	U	5.0	5.0	U	5.0
Benzene	71-43-2	***120***		3.2	32	U	32	0.32	U	0.32	0.32	U	0.32
Carbon Disulfide	75-15-0	1.7	U	1.7	17	U	17	***0.55***	***J***	0.17	0.17	U	0.17
Chlorobenzene	108-90-7	***2,100***	***D***	6.8	***8,200***		34	0.34	U	0.34	***1.5***		0.34
Chloroform	67-66-3	2.9	U	2.9	29	U	29	0.29	U	0.29	0.29	U	0.29
cis-1,2-Dichloroethene	156-59-2	3.3	U	3.3	33	U	33	0.33	U	0.33	0.33	U	0.33
Ethylbenzene	100-41-4	***4.1***	***J***	3.0	30	U	30	0.30	U	0.30	0.30	U	0.3
Methylene Chloride	75-09-2	10	U	10	100	U	100	1.0	U	1.0	1.0	U	1.0
Tetrachloroethene	127-18-4	2.8	U	2.8	28	U	28	0.28	U	0.28	0.28	U	0.28
Toluene	108-88-3	3.1	U	3.1	31	U	31	0.31	U	0.31	0.31	U	0.31
Trichloroethene	79-01-6	4.0	U	4.0	40	U	40	0.40	U	0.40	0.40	U	0.40
Xylenes, Total	1330-20-7	8.7	U	8.7	87	U	87	0.87	U	0.87	0.87	U	0.87
Semi-Volatile Organic Compounds (USEPA Method 8270C)													
Date Prepared		9/25/2007			9/25/2007			9/25/2007			9/25/2007		
Date Analyzed		9/27/2007			9/27/2007			9/27/2007			9/27/2007		
Analyte	**CAS No.**	(ug/L)			(ug/L)			(ug/L)			(ug/L)		
1,2,4-Trichlorobenzene	120-82-1	3.3	U	3.3	0.7	U	0.7	0.69	U	0.69	0.71	U	0.71
1,2-Dichlorobenzene	95-50-1	***80***	***J***	2.4	***2.3***	***J***	0.5	0.49	U	0.49	0.50	U	0.50
1,3-Dichlorobenzene	541-73-1	2.4	U	2.4	0.49	U	0.49	0.49	U	0.49	0.50	U	0.50
1,4-Dichlorobenzene	106-46-7	***60***	***J***	2.4	***5.4***	***J***	0.5	0.49	U	0.49	0.50	U	0.50
2,4,6-Trichlorophenol	88-06-2	2.4	U	2.4	0.49	U	0.49	0.49	U	0.49	0.50	U	0.50
2,4-Dichlorophenol	120-83-2	4.7	U	4.7	***52***		0.98	0.97	U	0.97	1.0	U	1
2-Chlorophenol	95-57-8	4.7	U	4.7	***14***		0.98	0.97	U	0.97	1.0	U	1
2-Methylnaphthalene	91-57-6	2.4	U	2.4	0.49	U	0.49	0.49	U	0.49	0.5	U	0.5
2-Nitroaniline	88-74-4	24	U	24	4.9	U	4.9	4.9	U	4.9	5	U	5
3&4 Methylphenol	106-44-5	4.7	U	4.7	0.98	U	0.98	0.97	U	0.97	1	U	1
4-Chloro-3-methylphenol	59-50-7	2.50	U	2.50	0.51	U	0.51	0.50	U	0.50	0.52	U	0.52
4-Chloroaniline	106-47-8	***5,400***	***J D***	450	***36***		4.7	4.7	U	4.7	4.8	U	4.8
4,6 Dinitro-2-methylphenol	534-52-1	24	U	24	4.9	U	4.9	4.9	U	4.9	5.0	U	5.0
4-Nitroaniline	88-74-4	9.4	U	9.4	2	U	2	1.9	U	1.9	2	U	2
Benzo[g,h,i]perylene	191-24-2	3.2	U	3.2	0.66	U	0.66	0.65	U	0.65	0.67	U	0.67
Bis(2-chloroethoxy)methane	111-91-1	2.4	U	2.4	0.49	U	0.49	0.49	U	0.49	0.5	U	0.5
Diethyl phthalate	84-66-2	2.4	U	2.4	0.49	U	0.49	0.49	U	0.49	0.5	U	0.5
Fluorene	86-73-7	2.4	U	2.4	0.49	U	0.49	0.49	U	0.49	0.5	U	0.5
Hexachlorocyclopentadiene	77-47-4	24	U	24	4.9	U	4.9	4.9	U	4.9	5	U	5
Nitrobenzene	98-95-3	2.4	U	2.4	0.49	U	0.49	0.49	U	0.49	0.5	U	0.5
Pentachlorophenol	87-86-5	24	U	24	4.9	U	4.9	4.9	U	4.9	5	U	5
Phenol	108-95-2	2.4	U	2.4	0.49	U	0.49	0.49	U	0.49	0.5	U	0.5

Table 3
Summary of Validated QA/QC Sample Detections - Organics (September 2007 Sampling Event)
Site R Quarterly Groundwater Monitoring
Solutia, Inc. - Sauget, Illinois

Monitoring Well		DUP 1		MDL	DUP 2		MDL	RB 1		MDL	RB 2		MDL
Lab Sample ID		680-30212-7			680-30324-2			680-30212-3			680-30212-13		
Date Sampled		9/18/2007			9/20/2007			9/18/2007			9/19/2007		
Time Sampled		0:00			0:00			11:30			12:40		
Organochlorine Pesticides (USEPA Method 8081A)													
Date Prepared		9/24/2007			9/24/2007			9/24/2007			9/24/2007		
Date Analyzed		9/26/2007			9/26/2007			9/26/2007			9/26/2007		
Analyte	**CAS No.**	**(ug/L)**			**(ug/L)**			**(ug/L)**			**(ug/L)**		
4,4'-DDD	72-54-8	0.0056	U	0.0056	***0.013***	***J P***	0.0058	0.0057	U	0.0057	0.0058	U	0.0058
alpha-BHC	319-84-6	0.0076	U	0.0075	0.0079	U	0.0079	0.0079	U	0.0079	0.0079	U	0.0079
gamma-Chlordane	5103-74-2	0.0055	U	0.0055	0.0057	U	0.0057	0.0056	U	0.0056	0.0057	U	0.0057
Chlorinated Herbicides (USEPA Method 8151A)													
Date Prepared		9/24/2007			9/24/2007			9/24/2007			9/24/2007		
Date Analyzed		9/25/2007			9/25/2007			9/25/2007			9/25/2007		
Analyte	**CAS No.**	**(ug/L)**			**(ug/L)**			**(ug/L)**			**(ug/L)**		
2,4,5-T	93-76-5	***0.43***	***J***	0.060	0.061	U	0.0061	0.061	U	0.061	0.062	U	0.062
2,4-D	94-75-7	***0.18***	***J P***	0.058	0.059	U	0.0059	0.059	U	0.059	0.060	U	0.06
Dicamba	1918-00-9	0.039	U	0.039	0.040	U	0.0400	0.039	U	0.039	0.040	U	0.04
Dichlorprop	120-36-5	***0.11***	***J***	0.043	0.044	U	0.0440	0.043	U	0.043	0.044	U	0.044
Pentachlorophenol	87-86-5	0.023	U	0.023	***0.33***	***P***	0.023	0.023	U	0.023	0.024	U	0.024
Total Organic Carbon (USEPA Method 9060)													
Date Analyzed		10/2/2007			10/1/2007			10/2/2007			10/2/2007		
Analyte	**CAS No.**	**(mg/L)**			**(mg/L)**			**(mg/L)**			**(mg/L)**		
Total Organic Carbon (TOC)	-	***24***		0.50	***6.7***		0.50	0.50	U	0.50	0.50	U	0.50

Parameters not listed were not detected in any samples.
Results in ***bold italics*** denote detections.

Flags and Qualifiers
U - Analyte was not detected at or above the Method Detection Limit (MDL).
UJ - Analyte was not detected at or above the Method Detection Limit (MDL); the detection limit is estimated.
J - Result is an estimated value.
JP - Result is an estimated value; The lower of the two values is reported when the % difference between the results of two GC columns is greater than 40%.
JD - Compound analyzed at a dilution.

Prepared by: MEB Date: 11/14/2007
Checked by: AWG Date: 11/19/2007

Table 3
Summary of Validated QA/QC Sample Detections - Organics (September 2007 Sampling Event)
Site R Quarterly Groundwater Monitoring
Solutia, Inc. - Sauget, Illinois

Monitoring Well		FB 1		MDL	FB 2		MDL	Trip Blank		MDL	Trip Blank		MDL
Lab Sample ID		680-30212-4			680-30212-12								
Date Sampled		9/18/2007			9/19/2007								
Time Sampled		13:35			11:20								
Volatile Organic Compounds (USEPA Method 8260B)													
Date Prepared		9/28/2007			10/1/2007			9/28/2007			10/1/2007		
Date Analyzed		9/28/2007			10/1/2007			9/28/2007			10/1/2007		
Analyte	**CAS No.**	(ug/L)			(ug/L)			(ug/L)			(ug/L)		
1,2-Dichloroethane	107-06-2	0.31	U	0.31	0.31	U	0.31	0.31	U	0.31	0.31	U	0.31
4-Methyl-2-pentanone	108-10-1	0.60	U	0.60	0.60	U	0.6	0.60	U	0.60	0.60	U	0.60
Acetone	67-64-1	5.0	U	5.0	5.0	U	5.0	5.0	U	5.0	5.0	U	5.0
Benzene	71-43-2	0.32	U	0.32	0.32	U	0.32	0.32	U	0.32	0.32	U	0.32
Carbon Disulfide	75-15-0	0.17	U	0.17	***0.36***	***J***	0.17	0.17	U	0.17	0.17	U	0.17
Chlorobenzene	108-90-7	0.34	U	0.34	0.34	U	0.34	0.34	U	0.34	0.34	U	0.34
Chloroform	67-66-3	0.29	U	0.29	0.29	U	0.29	0.29	U	0.29	0.29	U	0.29
cis-1,2-Dichloroethene	156-59-2	0.33	U	0.33	0.33	U	0.33	0.33	U	0.33	0.33	U	0.33
Ethylbenzene	100-41-4	0.3	U	0.3	0.30	U	0.30	0.30	U	0.30	0.30	U	0.30
Methylene Chloride	75-09-2	1.0	U	1.0	1.0	U	1.0	1.0	U	1.0	1.0	U	1.0
Tetrachloroethene	127-18-4	0.28	U	0.28	0.28	U	0.28	0.28	U	0.28	0.28	U	0.28
Toluene	108-88-3	0.31	U	0.31	0.31	U	0.31	0.31	U	0.31	0.31	U	0.31
Trichloroethene	79-01-6	0.40	U	0.40	0.40	U	0.40	0.40	U	0.40	0.40	U	0.40
Xylenes, Total	1330-20-7	0.87	U	0.87	0.87	U	0.87	0.87	U	0.87	0.87	U	0.87
Semi-Volatile Organic Compounds (USEPA Method 8270C)													
Date Prepared		9/25/2007			9/25/2007								
Date Analyzed		9/27/2007			9/27/2007								
Analyte	**CAS No.**	(ug/L)			(ug/L)								
1,2,4-Trichlorobenzene	120-82-1	0.69	U	0.69	0.69	U	0.69						
1,2-Dichlorobenzene	95-50-1	0.49	U	0.49	0.49	U	0.49						
1,3-Dichlorobenzene	541-73-1	0.49	U	0.49	0.49	U	0.49						
1,4-Dichlorobenzene	106-46-7	0.49	U	0.49	0.49	U	0.49						
2,4,6-Trichlorophenol	88-06-2	0.49	U	0.49	0.49	U	0.49						
2,4-Dichlorophenol	120-83-2	0.97	U	0.97	0.97	U	0.97						
2-Chlorophenol	95-57-8	0.97	U	0.97	0.97	U	0.97						
2-Methylnaphthalene	91-57-6	0.49	U	0.49	0.49	U	0.49						
2-Nitroaniline	88-74-4	4.9	U	4.9	4.9	U	4.9						
3&4 Methylphenol	106-44-5	0.97	U	0.97	0.97	U	0.97						
4-Chloro-3-methylphenol	59-50-7	0.50	U	0.50	0.50	U	0.50						
4-Chloroaniline	106-47-8	4.7	U	4.7	4.7	U	4.7						
4,6 Dinitro-2-methylphenol	534-52-1	4.9	U	4.9	4.9	U	4.9						
4-Nitroaniline	88-74-4	1.9	U	1.9	1.9	U	1.9						
Benzo[g,h,i]perylene	191-24-2	0.65	U	0.65	0.65	U	0.65						
Bis(2-chloroethoxy)methane	111-91-1	0.49	U	0.49	0.49	U	0.49						
Diethyl phthalate	84-66-2	0.49	U	0.49	0.49	U	0.49						
Fluorene	86-73-7	0.49	U	0.49	0.49	U	0.49						
Hexachlorocyclopentadiene	77-47-4	4.9	U	4.9	4.9	U	4.9						
Nitrobenzene	98-95-3	0.49	U	0.49	0.49	U	0.49						
Pentachlorophenol	87-86-5	4.9	U	4.9	4.9	U	4.9						
Phenol	108-95-2	0.49	U	0.49	0.49	U	0.49						

Table 3
Summary of Validated QA/QC Sample Detections - Organics (September 2007 Sampling Event)
Site R Quarterly Groundwater Monitoring
Solutia, Inc. - Sauget, Illinois

Monitoring Well		FB 1		MDL	FB 2		MDL	Trip Blank	MDL	Trip Blank	MDL
Lab Sample ID		680-30212-4			680-30212-12						
Date Sampled		9/18/2007			9/19/2007						
Time Sampled		13:35			11:20						
Organochlorine Pesticides (USEPA Method 8081A)											
Date Prepared		9/24/2007			9/24/2007						
Date Analyzed		9/26/2007			9/26/2007						
Analyte	**CAS No.**	(ug/L)			(ug/L)						
4,4'-DDD	72-54-8	0.0058	U	0.0058	0.0057	U	0.0057				
alpha-BHC	319-84-6	0.0079	U	0.0079	0.0079	U	0.0079				
gamma-Chlordane	5103-74-2	0.0057	U	0.0057	0.0056	U	0.0056				
Chlorinated Herbicides (USEPA Method 8151A)											
Date Prepared		9/24/2007			9/24/2007						
Date Analyzed		9/25/2007			9/25/2007						
Analyte	**CAS No.**	(ug/L)			(ug/L)						
2,4,5-T	93-76-5	0.063	U	0.063	0.061	U	0.061				
2,4-D	94-75-7	0.061	U	0.061	0.059	U	0.059				
Dicamba	1918-00-9	0.041	U	0.041	0.040	U	0.040				
Dichlorprop	120-36-5	0.045	U	0.045	0.044	U	0.044				
Pentachlorophenol	87-86-5	0.024	U	0.024	0.023	U	0.023				
Total Organic Carbon (USEPA Method 9060)											
Date Analyzed		10/2/2007			10/2/2007						
Analyte	**CAS No.**	(mg/L)			(mg/L)						
Total Organic Carbon (TOC)	-	0.50	U	0.50	0.50	U	0.50				

Parameters not listed were not detected in any samples.
Results in ***bold italics*** denote detections.

Flags and Qualifiers
U - Analyte was not detected at or above the Method Detection Limit (MDL).
UJ - Analyte was not detected at or above the Method Detection Limit (MDL); the detection limit is estimated.
J - Result is an estimated value.
JP - Result is an estimated value; The lower of the two values is reported when the % difference between the results of two GC columns is greater than 40%.
JD - Compound analyzed at a dilution.

Prepared by: MEB Date: 11/14/2007
Checked by: AWG Date: 11/19/2007

Table 4

Summary of Validated QA/QC Sample Detections - Inorganics (September 2007 Sampling Event)

Site R Quarterly Groundwater Monitoring

Solutia, Inc. - Sauget, Illinois

Monitoring Well		DUP 1		MDL	DUP 2		MDL	RB 1		MDL	RB 2		MDL
Lab Sample ID		680-30212-7			680-30324-2			680-30212-3			680-30212-13		
Date Sampled		9/18/2007			9/20/2007			9/18/2007			9/19/2007		
Time Sampled		0:00			0:00			11:30			12:40		
Metals (USEPA Method 6010B)													
Date Prepared		9/26/2007			9/26/2007			9/26/2007			9/26/2007		
Date Analyzed		9/27/2007			9/27/2007			9/27/2007			9/27/2007		
Analyte	**CAS No.**	(mg/L)			(mg/L)			(mg/L)			(mg/L)		
Arsenic	7440-38-2	0.0023	U	0.0023	0.0023	U	0.0023	0.0023	U	0.0023	0.0023	U	0.0023
Barium	7440-39-3	***0.21***		0.0020	***0.56***		0.0020	0.0020	U	0.0020	0.0020	U	0.0020
Chromium	7440-47-3	0.0011	U	0.0011	0.0011	U	0.0011	0.0011	U	0.0011	0.0011	U	0.0011
Copper	7440-50-8	0.0022	U	0.0022	***0.0046***	***J***	0.0022	***0.016***	***J***	0.0022	***0.016***	***J***	0.0022
Lead	7439-92-1	0.0021	U	0.0021	***0.0055***	***J***	0.0021	***0.053***		0.0021	***0.0094***		0.0021
Nickel	7440-02-0	***0.0023***	***J***	0.0020	0.0020	U	0.002	0.0020	U	0.002	0.0020	U	0.0020
Mercury (USEPA Method 7470A)													
Date Prepared		10/2/2007			10/2/2007			10/2/2007			10/2/2007		
Date Analyzed		10/3/2007			10/3/2007			10/3/2007			10/3/2007		
Analyte	**CAS No.**	(mg/L)			(mg/L)			(mg/L)			(mg/L)		
Mercury	7439-97-6	0.000080	U	0.000080	0.000080	U	0.000080	0.000080	U	0.000080	0.000080	U	0.000080
Total Dissolved Solids (USEPA Method 160.1)													
Date Analyzed		9/23/2007			9/27/2007			9/23/2007			9/26/2007		
Analyte	**CAS No.**	(mg/L)			(mg/L)			(mg/L)			(mg/L)		
Total Dissolved Solids (TDS)	-	***1300***		20	***820***		10	5.0	U	5.0	5.0	U	5.0

Parameters not listed were not detected in any samples.
Results in ***bold italics*** denote detections.

Samples are not filtered.

Flags and Qualifiers
U - Analyte was not detected at or above the Method Detection Limit (MDL).
J - Result is an estimated value.

Prepared by: MEB Date: 11/14/2007
Checked by: AWG Date: 11/19/2007

Table 4

Summary of Validated QA/QC Sample Detections - Inorganics (September 2007 Sampling Event)

Site R Quarterly Groundwater Monitoring

Solutia, Inc. - Sauget, Illinois

Monitoring Well		FB 1		MDL	FB 2		MDL	Trip Blank	MDL	Trip Blank	MDL
Lab Sample ID		680-30212-4			680-30212-12						
Date Sampled		9/18/2007			9/19/2007						
Time Sampled		13:35			11:20						
Metals (USEPA Method 6010B)											
Date Prepared		9/26/2007			9/26/2007						
Date Analyzed		9/27/2007			9/27/2007						
Analyte	**CAS No.**	**(mg/L)**			**(mg/L)**						
Arsenic	7440-38-2	0.0023	U	0.0023	0.0023	U	0.0023				
Barium	7440-39-3	0.0020	U	0.0020	0.0020	U	0.0020				
Chromium	7440-47-3	0.0011	U	0.0011	0.0011	U	0.0011				
Copper	7440-50-8	0.0022	U	0.0022	0.0022	U	0.0022				
Lead	7439-92-1	0.0021	U	0.0021	0.0021	U	0.0021				
Nickel	7440-02-0	0.0020	U	0.0020	0.0020	U	0.0020				
Mercury (USEPA Method 7470A)											
Date Prepared		10/2/2007			10/2/2007						
Date Analyzed		10/3/2007			10/3/2007						
Analyte	**CAS No.**	**(mg/L)**			**(mg/L)**						
Mercury	7439-97-6	0.000080	U	0.000080	0.000080	U	0.000080				
Total Dissolved Solids (USEPA Method 160.1)											
Date Analyzed		9/23/2007			9/26/2007						
Analyte	**CAS No.**	**(mg/L)**			**(mg/L)**						
Total Dissolved Solids (TDS)	-	5.0	U	5.0	5.0	U	5.0				

Parameters not listed were not detected in any samples.
Results in ***bold italics*** denote detections.

Samples are not filtered.

Flags and Qualifiers

U - Analyte was not detected at or above the Method Detection Limit (MDL).
J - Result is an estimated value.

Prepared by: MEB Date: 11/14/2007
Checked by: AWG Date: 11/19/2007

Table 1
Summary of Validated Groundwater Sample Detections - Organics (December 2007 Sampling Event)
Site R Quarterly Groundwater Monitoring
Solutia, Inc. - Sauget, Illinois

Monitoring Well		BWMW-1S		MDL	BWMW-1M		MDL	BWMW-1D		MDL	BWMW-2S		MDL	BWMW-2M		MDL	BWMW-2D		MDL
Lab Sample ID		680-32849-1			680-32849-3			680-32849-2			680-32806-5			680-32806-10			680-32806-6		
Date Sampled		12/17/2007			12/17/2007			12/17/2007			12/14/2007			12/14/2007			12/14/2007		
Time Sampled		11:45			12:45			12:20			13:05			11:40			12:25		
Volatile Organic Compounds (USEPA Method 8260B)																			
Date Prepared		12/27/2007			12/28/2007			12/27/2007			12/28/2007			12/28/2007			12/26/2007		
Date Analyzed		12/27/2007			12/28/2007			12/27/2007			12/28/2007			12/28/2007			12/26/2007		
Analyte	**CAS No.**	(ug/L)			(ug/L)			(ug/L)			(ug/L)			(ug/L)			(ug/L)		
1,1-Dichloroethane	75-35-4	0.32	U	0.32	16	U	16	32	U	32	0.64	U	0.64	***18***	***J***	16	16	U	16
1,2-Dichloroethane	107-06-2	0.31	U	0.31	16	U	16	31	U	31	***3.0***		0.62	16	U	16	***3,400***		16
2-Butanone	78-93-3	***1.2***	***J***	0.60	30	U	30	60	U	60	1.2	U	1.2	30	U	30	30	U	30
4-Methyl-2-pentanone	108-10-1	0.60	U	0.60	30	U	30	60	U	60	1.2	U	1.2	30	U	30	***1,100***		30
Acetone	67-64-1	5.0	U	5.0	250	U	250	500	U	500	10	U	10	***380***	***J***	250	***5,500***	***J***	250
Benzene	71-43-2	***1,300***	***J D***	320	16	U	16	32	U	32	***87***		0.64	***370***		16	***1,000***		16
Bromomethane	74-83-9	***5.6***	***J***	0.50	25	U	25	50	U	50	1.0	U	1.0	25	U	25	25	U	25
Carbon Disulfide	75-15-0	***0.18***	***J***	0.17	8.5	U	8.5	17	U	17	***0.38***	***J***	0.34	8.5	U	8.5	***9.8***	***J***	8.5
Chlorobenzene	108-90-7	***52,000***	***J D***	340	***3,500***		17	***8,700***		34	***240***		0.68	***4,100***		17	***4,400***		17
Chloroform	67-66-3	0.29	U	0.29	15	U	15	29	U	29	0.58	U	0.58	15	U	15	***56***		15
cis-1,2-Dichloroethene	156-59-2	***2.8***	***J***	0.33	17	U	17	33	U	33	0.66	U	0.66	***20***	***J***	17	***23***	***J***	17
Ethylbenzene	100-41-4	***12***	***J***	0.30	15	U	15	30	U	30	0.60	U	0.60	***150***		15	***160***		15
Methylene Chloride	75-09-2	1.0	U	1.0	50	U	50	100	U	100	2.0	U	2.0	50	U	50	***120***	***J***	50
Tetrachloroethene	127-18-4	0.28	U	0.28	14	U	14	28	U	28	0.56	U	0.56	***150***		14	***94***		14
Toluene	108-88-3	***2.8***	***J***	0.31	16	U	16	31	U	31	***0.83***	J	0.62	***630***		16	***1,300***		16
Trichloroethene	79-01-6	0.40	U	0.40	20	U	20	40	U	40	0.80	U	0.80	***35***	***J***	20	***120***		20
Vinyl Chloride	75-01-4	0.20	U	0.20	10	U	10	20	U	20	0.40	U	0.40	***21***	***J***	10	10	U	10
Xylenes, Total	1330-20-7	***10***	***J***	0.87	44	U	44	87	U	87	1.7	U	1.7	***1,200***		44	***1,100***		44
Semi-Volatile Organic Compounds (USEPA Method 8270C)																			
Date Prepared		12/24/2007			12/24/2007			12/24/2007			12/21/2007			12/21/2007			12/21/2007		
Date Analyzed		12/28/2007			12/28/2007			12/28/2007			12/27/2007			12/28/2007			1/17/2008		
Analyte	**CAS No.**	(ug/L)			(ug/L)			(ug/L)			(ug/L)			(ug/L)			(ug/L)		
1,2,4-Trichlorobenzene	120-82-1	0.67	U	0.67	0.67	U	0.67	***0.87***	***J***	0.67	0.70	U	0.70	35	U	35	***43***	***J***	14
1,2-Dichlorobenzene	95-50-1	***1.3***	***J***	0.47	***1.9***	***J***	0.47	***3.0***	***J***	0.47	***2.5***	***J***	0.49	***290***	***J***	25	***440***		9.7
1,3-Dichlorobenzene	541-73-1	0.47	U	0.47	0.47	U	0.47	0.47	U	0.47	0.49	U	0.49	25	U	25	9.7	U	9.7
1,4-Dichlorobenzene	106-46-7	***2.3***	***J***	0.5	***31***	***J***	0.47	***6.4***	***J***	0.47	***1.2***	***J***	0.49	***130***	***J***	25	***170***	***J***	9.7
2,4,5-Trichlorophenol	95-95-4	0.75	U	0.75	0.75	U	0.75	***1.2***	***J***	0.75	0.78	U	0.78	39	U	39	16	U	16
2,4,6-Trichlorophenol	88-06-2	0.47	U	0.47	0.47	U	0.47	***120***		0.47	0.49	U	0.49	***1,500***		25	***2,400***		9.7
2,4-Dichlorophenol	120-83-2	0.94	U	0.94	0.94	U	0.94	***190***	***D***	4.70	***0.98***	***J***	0.98	***9,500***		49	***8,300***	***D***	190
2,4-Dimethylphenol	105-67-9	1.0	U	1.0	1.0	U	1.0	1.0	U	1.0	1.1	U	1.1	***61***	***J***	54	***220***		21
2-Chlorophenol	95-57-8	***77***	***J***	0.94	***3.0***	***J***	0.94	***9.2***	***J***	0.94	0.98	U	0.98	***1,600***		49	***6,600***	***D***	190
2-Nitroaniline	88-74-4	4.7	U	4.7	4.7	U	4.7	4.7	U	4.7	4.9	U	4.9	250	U	25	***210***	***J***	97
3&4 Methylphenol	15831-10-4	0.94	U	0.94	0.94	U	0.94	0.94	U	0.94	***1.1***	***J***	0.98	***140***	***J***	49	***1,300***		19
4-Chloroaniline	106-47-8	***10***	***J***	4.5	***7.6***	***J***	4.5	***60***		4.5	***110***		4.7	***6,600***		240	***13,000***	***D***	930
Diethyl phthalate	84-66-2	0.47	U	0.47	0.47	U	0.47	***0.88***	***J***	0.47	0.49	U	0.49	25	U	25	***16***	***J***	9.7
Fluorene	86-73-7	0.47	U	0.47	***0.87***	***J***	0.47	0.47	U	0.47	0.49	U	0.49	25	U	25	9.7	U	9.7
Nitrobenzene	98-95-3	0.47	U	0.47	0.47	U	0.47	0.47	U	0.47	0.49	U	0.49	***210***	***J***	25	***540***		9.7
Phenol	108-95-2	***9.6***	***J***	0.47	0.47	U	0.47	***3.5***	***J***	0.47	0.49	U	0.49	***2,200***		25	***24,000***	***D***	97

Table 1
Summary of Validated Groundwater Sample Detections - Organics (December 2007 Sampling Event)
Site R Quarterly Groundwater Monitoring
Solutia, Inc. - Sauget, Illinois

Monitoring Well		BWMW-1S		MDL	BWMW-1M		MDL	BWMW-1D		MDL	BWMW-2S		MDL	BWMW-2M		MDL	BWMW-2D		MDL
Lab Sample ID		680-32849-1			680-32849-3			680-32849-2			680-32806-5			680-32806-10			680-32806-6		
Date Sampled		12/17/2007			12/17/2007			12/17/2007			12/14/2007			12/14/2007			12/14/2007		
Time Sampled		11:45			12:45			12:20			13:05			11:40			12:25		
Organochlorine Pesticides (USEPA Method 8081A)																			
Date Prepared		12/20/2007			12/20/2007			12/20/2007			12/20/2007			12/20/2007			12/20/2007		
Date Analyzed		12/21/2007			12/21/2007			12/21/2007			12/21/2007			12/21/2007			12/21/2007		
Analyte	**CAS No.**	(ug/L)			(ug/L)			(ug/L)			(ug/L)			(ug/L)			(ug/L)		
4,4'-DDD	72-54-8	0.0058	U	0.0058	0.0059	U	0.0059	***0.049***	***J P***	0.0057	0.0057	U	0.0057	***0.10***	***J P***	0.029	***0.13***	***J P***	0.028
alpha-BHC	319-84-6	0.0079	U	0.0079	0.0081	U	0.0081	0.0079	U	0.0079	0.0078	U	0.0078	0.039	U J	0.039	0.039	U	0.039
Chlorinated Herbicides (USEPA Method 8151A)																			
Date Prepared		12/20/2007			12/20/2007			12/20/2007			12/20/2007			12/20/2007			12/20/2007		
Date Analyzed		12/22/2007			12/22/2007			12/22/2007			12/21/2007			12/25/2007			12/21/2007		
Analyte	**CAS No.**	(ug/L)			(ug/L)			(ug/L)			(ug/L)			(ug/L)			(ug/L)		
2,4,5-T	93-76-5	0.063	U	0.063	0.063	U	0.063	0.063	U	0.063	***0.14***	***J P***	0.063	3.1	U	3.1	***210***	***J P***	31
2,4-D	94-75-7	0.061	U	0.061	0.061	U	0.061	***0.94***	***J P***	0.061	0.061	U	0.061	***1,400***	***J D***	30.0	***21,000***	***J D***	300
Dichlorprop	120-36-5	***4.6***		0.045	0.045	U	0.045	0.045	U	0.045	***0.88***	***P***	0.045	2.2	U	2.2	***1,200***	***J***	22
Pentachlorophenol	87-86-5	0.024	U	0.024	0.024	U	0.024	***2.2***	***J***	0.024	0.024	U	0.024	1.2	U	1.2	12	U	12
Silvex (2,4,5-TP)	93-72-1	0.047	U	0.047	0.047	U	0.047	0.047	U	0.047	***0.059***	***J P***	0.047	2.3	U	2.3	23	U	23
Total Organic Carbon (USEPA Method 9060)																			
Date Analyzed		1/7/2008			1/7/2008			1/7/2008			1/5/2008			1/5/2008			1/5/2008		
Analyte	**CAS No.**	(mg/L)			(mg/L)			(mg/L)			(mg/L)			(mg/L)			(mg/L)		
Total Organic Carbon (TOC)	7440-44-0	***12***		0.50	***6.4***		0.50	***10***		0.50	***21***		0.50	***160***		0.50	***400***		0.50

Parameters not listed were not detected in any samples.
Results in ***bold italics*** denote detections.
NS - Well purged dry and sufficient water for sample collection had not recharged into the well within 24 hours; In accordance with the Field Sampling Plan (FSP; URS, 2003), a groundwater sample was not collected.

Flags and Qualifiers
U - Analyte was not detected at or above the Method Detection Limit (MDL).
UJ - Analyte was not detected at or above the Method Detection Limit (MDL); the detection limit is estimated.
J - Result is an estimated value.
JP - Result is an estimated value; The lower of the two values is reported when the % difference between the results of two GC columns is greater than 40%.
JE - Result is an estimated value; Result exceeded calibration range and secondary dilution produced a non-detect value
P - The lower of the two values is reported when the % difference between the results of two GC columns is greater than 40%.
D - Compound analyzed at a dilution.
JD - Compound analyzed at a dilution.

Prepared by: MWD Date: 1/30/2008
Checked by: AWG Date: 2/4/2008

Table 1
Summary of Validated Groundwater Sample Detections - Organics (December 2007 Sampling Event)
Site R Quarterly Groundwater Monitoring
Solutia, Inc. - Sauget, Illinois

Monitoring Well		BWMW-3S		MDL	BWMW-3M		MDL	BWMW-3D		MDL	BWMW-4S		MDL	BWMW-4M		MDL	BWMW-4D		MDL
Lab Sample ID		680-32806-7			680-32806-9			680-32806-8			NS			680-32806-1			680-32806-2		
Date Sampled		12/14/2007			12/14/2007			12/13/2007			NS			12/13/2007			12/13/2007		
Time Sampled		9:35			9:55			15:10			NS			13:55			13:00		
Volatile Organic Compounds (USEPA Method 8260B)																			
Date Prepared		12/26/2007			12/28/2007			12/23/2007			NS			12/25/2007			12/23/2007		
Date Analyzed		12/26/2007			12/28/2007			12/23/2007			NS			12/25/2007			12/23/2007		
Analyte	**CAS No.**	(ug/L)			(ug/L)			(ug/L)			(ug/L)			(ug/L)			(ug/L)		
1,1-Dichloroethane	75-35-4	0.64	U	0.64	16	U	16	6.4	U	6.4	NS			0.64	U	0.64	0.64	U	0.64
1,2-Dichloroethane	107-06-2	0.62	U	0.62	16	U	16	6.2	U	6.2	NS			0.62	U	0.62	0.62	U	0.62
2-Butanone	78-93-3	1.2	U	1.2	30	U	30	12	U	12	NS			1.2	U	1.2	1.2	U	1.2
4-Methyl-2-pentanone	108-10-1	1.2	U	1.2	30	U	30	12	U	12	NS			1.2	U	1.2	1.2	U	1.2
Acetone	67-64-1	10	U	10	250	U	250	100	U	100	NS			10	U	10	10	U	10
Benzene	71-43-2	***110***		0.64	***260***		16	***120***		6.4	NS			***14***		0.64	***24***	***J D***	0.64
Bromomethane	74-83-9	1.0	U	1.0	25	U	25	10	U	10	NS			1.0	U	1.0	1.0	U	1.0
Carbon Disulfide	75-15-0	0.34	U	0.34	8.5	U	8.5	3.4	U	3.4	NS			***1.1***	***J***	0.34	0.34	U	0.34
Chlorobenzene	108-90-7	***390***	***D***	1.7	***5,500***		17	***2,000***		6.8	NS			***360***		0.68	***650***	***J D***	1.7
Chloroform	67-66-3	0.58	U	0.58	15	U	15	5.8	U	5.8	NS			0.58	U	0.58	0.58	U	0.58
cis-1,2-Dichloroethene	156-59-2	0.66	U	0.66	17	U	17	6.6	U	6.6	NS			0.66	U	0.66	0.66	U	0.66
Ethylbenzene	100-41-4	0.60	U	0.60	15	U	15	6.0	U	6.0	NS			***0.60***	***J***	0.60	0.60	U	0.60
Methylene Chloride	75-09-2	2.0	U	2.0	50	U	50	20	U	20	NS			2.0	U	2.0	2.0	U	2.0
Tetrachloroethene	127-18-4	0.56	U	0.56	14	U	14	5.6	U	5.6	NS			0.56	U	0.56	0.56	U	0.56
Toluene	108-88-3	***1.3***	***J***	0.62	16	U	16	6.2	U	6.2	NS			0.62	U	0.62	0.62	U	0.62
Trichloroethene	79-01-6	0.80	U	0.80	20	U	20	8.0	U	8.0	NS			0.80	U	0.80	0.80	U	0.80
Vinyl Chloride	75-01-4	0.40	U	0.40	10	U	10	4.0	U	4.0	NS			0.40	U	0.40	0.40	U	0.40
Xylenes, Total	1330-20-7	***4.1***		1.7	44	U	44	17	U	17	NS			1.7	U	1.7	1.7	U	1.7
Semi-Volatile Organic Compounds (USEPA Method 8270C)																			
Date Prepared		12/21/2007			12/21/2007			12/20/2007			NS			12/20/2007			12/20/2007		
Date Analyzed		1/17/2008			12/27/2007			12/24/2007			NS			12/24/2007			12/24/2007		
Analyte	**CAS No.**	(ug/L)			(ug/L)			(ug/L)			(ug/L)			(ug/L)			(ug/L)		
1,2,4-Trichlorobenzene	120-82-1	0.69	U	0.69	0.67	U	0.67	0.69	U	0.69	NS			0.69	U	0.69	***19***		0.69
1,2-Dichlorobenzene	95-50-1	***3.1***	***J***	0.49	***7.3***	***J***	0.47	***30***		0.49	NS			***5.6***	***J***	0.49	***710***	***D***	9.7
1,3-Dichlorobenzene	541-73-1	0.49	U	0.49	***14***		0.47	***1.4***	***J***	0.49	NS			***1.3***	***J***	0.49	***16***		0.49
1,4-Dichlorobenzene	106-46-7	***8.6***	***J***	0.49	***110***		0.47	***35***		0.49	NS			***16***		0.49	***110***		0.49
2,4,5-Trichlorophenol	95-95-4	0.78	U	0.78	0.75	U	0.75	0.78	U	0.78	NS			0.78	U	0.78	0.78	U	0.78
2,4,6-Trichlorophenol	88-06-2	0.49	U	0.49	0.47	U	0.47	0.49	U	0.49	NS			0.49	U	0.49	0.49	U	0.49
2,4-Dichlorophenol	120-83-2	0.97	U	0.97	0.94	U	0.94	0.97	U	0.97	NS			0.97	U	0.97	***2.1***	***J***	0.97
2,4-Dimethylphenol	105-67-9	1.1	U	1.1	1.0	U	1.0	1.1	U	1.1	NS			1.1	U	1.1	1.1	U	1.1
2-Chlorophenol	95-57-8	0.97	U	0.97	***8.2***	***J***	0.94	0.97	U	0.97	NS			0.97	U	0.97	0.97	U	0.97
2-Nitroaniline	88-74-4	4.9	U	4.9	4.7	U	4.7	4.9	U	4.9	NS			4.9	U	4.9	4.9	U	4.9
3&4 Methylphenol	15831-10-4	0.97	U	0.97	***1.9***	***J***	0.94	0.97	U	0.97	NS			0.97	U	0.97	0.97	U	0.97
4-Chloroaniline	106-47-8	***5.4***	***J***	4.7	***3,400***	***D***	91	***3,400***	***D***	190	NS			***180***	***D***	9.3	***1,100***	***D***	93
Diethyl phthalate	84-66-2	0.49	U	0.49	0.47	U	0.47	0.49	U	0.49	NS			0.49	U	0.49	0.49	U	0.49
Fluorene	86-73-7	0.49	U	0.49	0.47	U	0.47	0.49	U	0.49	NS			0.49	U	0.49	0.49	U	0.49
Nitrobenzene	98-95-3	0.49	U	0.49	0.47	U	0.47	0.49	U	0.49	NS			0.49	U	0.49	0.49	U	0.49
Phenol	108-95-2	***2.6***	***J***	0.49	0.47	U	0.47	0.49	U	0.49	NS			0.49	U	0.49	0.49	U	0.49

Table 1
Summary of Validated Groundwater Sample Detections - Organics (December 2007 Sampling Event)
Site R Quarterly Groundwater Monitoring
Solutia, Inc. - Sauget, Illinois

Monitoring Well		BWMW-3S		MDL	BWMW-3M		MDL	BWMW-3D		MDL	BWMW-4S		MDL	BWMW-4M		MDL	BWMW-4D		MDL
Lab Sample ID		680-32806-7			680-32806-9			680-32806-8			NS			680-32806-1			680-32806-2		
Date Sampled		12/14/2007			12/14/2007			12/13/2007			NS			12/13/2007			12/13/2007		
Time Sampled		9:35			9:55			15:10			NS			13:55			13:00		
Organochlorine Pesticides (USEPA Method 8081A)																			
Date Prepared		12/20/2007			12/20/2007			12/20/2007			NS			12/20/2007			12/20/2007		
Date Analyzed		12/21/2007			12/21/2007			12/21/2007			NS			12/21/2007			12/21/2007		
Analyte	**CAS No.**	(ug/L)			(ug/L)			(ug/L)			(ug/L)			(ug/L)			(ug/L)		
4,4'-DDD	72-54-8	0.0056	U J	0.0056	0.0057	U	0.0057	0.0058	U	0.0058	NS			0.0056	U J	0.0056	0.0058	U	0.0058
alpha-BHC	319-84-6	0.0076	U J	0.0076	***0.016***	***J P***	0.0079	0.0079	U	0.0079	NS			0.0076	U J	0.0076	0.0079	U	0.0079
Chlorinated Herbicides (USEPA Method 8151A)																			
Date Prepared		12/20/2007			12/20/2007			12/20/2007			NS			12/20/2007			12/20/2007		
Date Analyzed		12/21/2007			12/21/2007			12/21/2007			NS			12/21/2007			12/21/2007		
Analyte	**CAS No.**	(ug/L)			(ug/L)			(ug/L)			(ug/L)			(ug/L)			(ug/L)		
2,4,5-T	93-76-5	0.062	U	0.062	0.063	U	0.063	***0.091***	***J P***	0.063	NS			0.062	U	0.062	***0.18***	***J P***	0.063
2,4-D	94-75-7	0.060	U	0.060	0.061	U	0.061	0.061	U	0.061	NS			0.060	U	0.060	0.061	U	0.061
Dichlorprop	120-36-5	0.045	U	0.045	***0.26***	***J P***	0.045	0.045	U	0.045	NS			0.044	U	0.044	0.045	U	0.045
Pentachlorophenol	87-86-5	0.024	U	0.024	0.024	U	0.024	0.024	U	0.024	NS			0.024	U	0.024	0.024	U	0.024
Silvex (2,4,5-TP)	93-72-1	0.047	U	0.047	0.047	U	0.047	0.047	U	0.047	NS			0.046	U	0.046	0.047	U	0.047
Total Organic Carbon (USEPA Method 9060)																			
Date Analyzed		1/5/2008			1/5/2008			1/5/2008			NS			1/5/2008			1/5/2008		
Analyte	**CAS No.**	(mg/L)			(mg/L)			(mg/L)			(mg/L)			(mg/L)			(mg/L)		
Total Organic Carbon (TOC)	7440-44-0	***15***		0.50	***43***		0.50	***28***		0.50	NS			***4.1***		0.50	***14***		0.50

Parameters not listed were not detected in any samples.
Results in ***bold italics*** denote detections.

Flags and Qualifiers
U - Analyte was not detected at or above the Method Detection Limit (MDL).
UJ - Analyte was not detected at or above the Method Detection Limit (MDL); the detection limit is estimated.
J - Result is an estimated value.
JP - Result is an estimated value; The lower of the two values is reported when the % difference between the results of two GC columns is greater than 40%.
JE - Result is an estimated value; result exceeded calibration range and secondary dilution produced a non-detect value
P - The lower of the two values is reported when the % difference between the results of two GC columns is greater than 40%.
D - Compound analyzed at a dilution.
JD - Compound analyzed at a dilution.

Prepared by: MWD Date: 1/30/2008
Checked by: AWG Date: 2/4/2008

Table 2
Summary of Validated Groundwater Sample Detections - Inorganics (December 2007 Sampling Event)
Site R Quarterly Groundwater Monitoring
Solutia, Inc. - Sauget, Illinois

Monitoring Well		BWMW-1S		MDL	BWMW-1M		MDL	BWMW-1D		MDL	BWMW-2S		MDL	BWMW-2M		MDL	BWMW-2D		MDL
Lab Sample ID		680-32849-1			680-32849-3			680-32849-2			680-32806-5			680-32806-10			680-32806-6		
Date Sampled		12/17/2007			12/17/2007			12/17/2007			12/14/2007			12/14/2007			12/14/2007		
Time Sampled		11:45			12:45			12:20			13:05			11:40			12:25		
Metals (USEPA Method 6010B)																			
Date Prepared		12/31/2007			12/31/2007			12/31/2007			12/31/2007			12/31/2007			12/31/2007		
Date Analyzed		1/5/2008			1/5/2008			1/5/2008			1/4/2008			1/5/2008			1/4/2008		
Analyte	**CAS No.**	(mg/L)			(mg/L)			(mg/L)			(mg/L)			(mg/L)			(mg/L)		
Arsenic	7440-38-2	***0.27***		0.0023	0.0023	U	0.0023	***0.0024***	***J***	0.0023	***0.0044***	***J***	0.0023	0.0023	U	0.0023	***0.0047***	***J***	0.0023
Barium	7440-39-3	***0.30***		0.0020	***0.47***		0.0020	***0.50***		0.0020	***0.24***		0.0020	***0.072***		0.0020	***0.13***		0.0020
Chromium	7440-47-3	***0.011***		0.0011	***0.0014***	***J***	0.0011	***0.0024***	***J***	0.0011	***0.0031***	***J***	0.0011	***0.0025***	***J***	0.0011	***0.0022***	***J***	0.0011
Copper	7440-50-8	***0.013***	***J***	0.0022	0.0022	U	0.0022	***0.0094***	***J***	0.0022	***0.0049***	***J***	0.0022	***0.0079***	***J***	0.0022	***0.0038***	***J***	0.0022
Lead	7439-92-1	***0.0078***		0.0021	0.0021	U	0.0021	***0.011***		0.0021	0.0021	U	0.0021	0.0021	U	0.0021	0.0021	U	0.0021
Nickel	7440-02-0	***0.013***	***J***	0.0020	0.0020	U	0.0020	***0.0058***	***J***	0.0020	***0.0038***	***J***	0.0020	***0.020***	***J***	0.0020	***0.015***	***J***	0.0020
Mercury (USEPA Method 7470A)																			
Date Prepared		12/31/2007			12/31/2007			12/31/2007			12/31/2007			12/31/2007			12/31/2007		
Date Analyzed		1/2/2008			1/2/2008			1/2/2008			1/4/2008			1/2/2008			1/2/2008		
Analyte	**CAS No.**	(mg/L)			(mg/L)			(mg/L)			(mg/L)			(mg/L)			(mg/L)		
Mercury	7439-97-6	0.000080	U	0.000080	0.000080	U	0.000080	0.000080	U	0.000080	0.000080	U	0.000080	0.000080	U	0.000080	0.000080	U	0.000080
Total Dissolved Solids (USEPA Method 160.1)																			
Date Analyzed		12/23/2007			12/23/2007			12/23/2007			12/16/2007			12/16/2007			12/16/2007		
Analyte	**CAS No.**	(mg/L)			(mg/L)			(mg/L)			(mg/L)			(mg/L)			(mg/L)		
Total Dissolved Solids (TDS)	-	***1,100***		10	***1,000***		10	***870***		10	***1,400***		10	***1,400***		10	***1,600***		10

Parameters not listed were not detected in any samples.
Results in ***bold italics*** denote detections.
NS - Well purged dry and sufficient water for sample collection had not recharged into the well within 24 hours; in accordance with the Field Sampling Plan (FSP; URS, 2003), a groundwater sample was not collected.
Samples are not filtered.

Flags and Qualifiers
U - Analyte was not detected at or above the Method Detection Limit (MDL).
J - Result is an estimated value.

Prepared by: MWD Date: 1/30/2008
Checked by: AWG Date: 2/4/2008

Table 2
Summary of Validated Groundwater Sample Detections - Inorganics (December 2007 Sampling Event)
Site R Quarterly Groundwater Monitoring
Solutia, Inc. - Sauget, Illinois

Monitoring Well		BWMW-3S		MDL	BWMW-3M		MDL	BWMW-3D		MDL	BWMW-4S		MDL	BWMW-4M		MDL	BWMW-4D		MDL
Lab Sample ID		680-32806-7			680-32806-9			680-32806-8			NS			680-32806-1			680-32806-2		
Date Sampled		12/14/2007			12/14/2007			12/13/2007			NS			12/13/2007			12/13/2007		
Time Sampled		9:35			9:55			15:10			NS			13:55			13:00		
Metals (USEPA Method 6010B)																			
Date Prepared		12/31/2007			12/31/2007			12/31/2007			NS			12/31/2007			12/31/2007		
Date Analyzed		1/4/2008			1/4/2008			1/4/2008			NS			1/4/2008			1/4/2008		
Analyte	**CAS No.**	(mg/L)			(mg/L)			(mg/L)			(mg/L)			(mg/L)			(mg/L)		
Arsenic	7440-38-2	***0.018***		0.0023	0.0023	U	0.0023	0.0023	U	0.0023	NS			***0.0025***	*J*	0.0023	***0.0054***	*J*	0.0023
Barium	7440-39-3	***0.30***		0.0020	***0.78***		0.0020	***0.22***		0.0020	NS			***0.31***		0.0020	***0.11***		0.0020
Chromium	7440-47-3	***0.0020***	*J*	0.0011	***0.0015***	*J*	0.0011	***0.0013***	*J*	0.0011	NS			0.0011	U	0.0011	***0.0014***	*J*	0.0011
Copper	7440-50-8	***0.0035***	*J*	0.0022	***0.0028***	*J*	0.0022	0.0022	U	0.0022	NS			0.0022	U	0.0022	0.0022	U	0.0022
Lead	7439-92-1	0.0021	U	0.0021	0.0021	U	0.0021	0.0021	U	0.0021	NS			0.0021	U	0.0021	0.0021	U	0.0021
Nickel	7440-02-0	0.0020	U	0.0020	***0.0075***	*J*	0.0020	***0.0023***	*J*	0.0020	NS			0.0020	U	0.0020	***0.0054***	*J*	0.0020
Mercury (USEPA Method 7470A)																			
Date Prepared		12/31/2007			12/31/2007			12/31/2007			NS			12/31/2007			12/31/2008		
Date Analyzed		1/2/2008			1/2/2008			1/2/2008			NS			1/2/2008			1/4/2008		
Analyte	**CAS No.**	(mg/L)			(mg/L)			(mg/L)			(mg/L)			(mg/L)			(mg/L)		
Mercury	7439-97-6	0.000080	U	0.000080	0.000080	U	0.000080	0.000080	U	0.000080	NS			0.000080	U	0.000080	0.000080	U	0.000080
Total Dissolved Solids (USEPA Method 160.1)																			
Date Analyzed		12/16/2007			12/16/2007			12/16/2007			NS			12/16/2007			12/16/2007		
Analyte	**CAS No.**	(mg/L)			(mg/L)			(mg/L)			(mg/L)			(mg/L)			(mg/L)		
Total Dissolved Solids (TDS)	-	***1,500***		10	***1,300***		10	***1,400***		10	NS			***660***		5.0	***690***		10

Parameters not listed were not detected in any samples.
Results in ***bold italics*** denote detections.
NS - Well purged dry and sufficient water for sample collection had not recharged into the well within 24 hours; In accordance with the Field Sampling Plan (FSP; URS, 2003), a groundwater sample was not collected.
Samples are not filtered.

Flags and Qualifiers
U - Analyte was not detected at or above the Method Detection Limit (MDL).
J - Result is an estimated value.

Prepared by: MWD Date: 1/30/2008
Checked by: AWG Date: 2/4/2008

Table 3
Summary of Validated QA/QC Sample Detections - Organics (December 2007 Sampling Event)
Site R Quarterly Groundwater Monitoring
Solutia, Inc. - Sauget, Illinois

Monitoring Well		DUP 1		MDL	DUP 2		MDL	RB 1		MDL	RB 2		MDL
Lab Sample ID		680-32806-11			680-32849-4			680-32806-3			680-32849-5		
Date Sampled		12/13/2007			12/17/2007			12/13/2007			12/17/2007		
Time Sampled		0:00			0:00			10:15			10:00		
Volatile Organic Compounds (USEPA Method 8260B)													
Date Prepared		12/25/2007			12/27/2007			12/23/2007			12/27/2007		
Date Analyzed		12/25/2007			12/27/2007			12/23/2007			12/27/2007		
Analyte	**CAS No.**	(ug/L)			(ug/L)			(ug/L)			(ug/L)		
Benzene	71-43-2	***56***		3.2	***1,300***		32	0.32	U	0.32	0.32	U	0.32
Carbon Disulfide	75-15-0	***2.2***	***J***	1.7	17	U	17	0.17	U	0.17	0.17	U	0.17
Chlorobenzene	108-90-7	***1,200***		3.4	***56,000***	***D***	170	0.34	U	0.34	0.34	U	0.34
Xylenes, Total	1330-20-7	8.7	U	8.7	87	U	87	0.87	U	0.87	0.87	U	0.87
Semi-Volatile Organic Compounds (USEPA Method 8270C)													
Date Prepared		12/20/2007			12/24/2007			12/20/2007			12/24/2007		
Date Analyzed		12/24/2007			12/28/2007			12/24/2007			12/28/2007		
Analyte	**CAS No.**	(ug/L)			(ug/L)			(ug/L)			(ug/L)		
1,2,4-Trichlorobenzene	120-82-1	***14***		0.69	0.67	U	0.67	0.69	U	0.69	0.68	U	0.68
1,2-Dichlorobenzene	95-50-1	***720***	***D***	4.9	***1.3***	***J***	4.7	0.49	U	0.49	0.48	U	0.48
1,3-Dichlorobenzene	541-73-1	***16***		0.49	0.47	U	0.47	0.49	U	0.49	0.48	U	0.48
1,4-Dichlorobenzene	106-46-7	***110***		0.49	***3.5***	***J***	0.47	0.49	U	0.49	0.48	U	0.48
2,4-Dichlorophenol	120-83-2	***1.8***	***J***	0.97	0.94	U	0.94	0.97	U	0.97	0.95	U	0.95
2-Chlorophenol	95-57-8	***1.1***	***J***	1.0	***170***		0.94	0.97	U	0.97	0.95	U	0.95
4-Chloroaniline	106-47-8	***1,200***	***D***	47	***22***		4.5	4.7	U	4.7	4.6	U	4.6
Phenol	108-95-2	0.49	U	0.49	***24***		0.47	0.49	U	0.49	0.48	U	0.48

Table 3
Summary of Validated QA/QC Sample Detections - Organics (December 2007 Sampling Event)
Site R Quarterly Groundwater Monitoring
Solutia, Inc. - Sauget, Illinois

Monitoring Well		DUP 1		MDL	DUP 2		MDL	RB 1		MDL	RB 2		MDL
Lab Sample ID		680-32806-11			680-32849-4			680-32806-3			680-32849-5		
Date Sampled		12/13/2007			12/17/2007			12/13/2007			12/17/2007		
Time Sampled		0:00			0:00			10:15			10:00		
Organochlorine Pesticides (USEPA Method 8081A)													
Date Prepared		12/20/2007			12/20/2007			12/20/2007			12/20/2007		
Date Analyzed		12/24/2007			12/21/2007			12/21/2007			12/21/2007		
Analyte	**CAS No.**	**(ug/L)**			**(ug/L)**			**(ug/L)**			**(ug/L)**		
Chlorinated Herbicides (USEPA Method 8151A)													
Date Prepared		12/20/2007			12/20/2007			12/20/2007			12/20/2007		
Date Analyzed		12/25/2007			12/22/2007			12/21/2007			12/22/2007		
Analyte	**CAS No.**	**(ug/L)**			**(ug/L)**			**(ug/L)**			**(ug/L)**		
2,4-D	94-75-7	***1.3***		0.061	0.059	U	0.059	0.061	U	0.061	0.061	U	0.061
Dichlorprop	120-36-5	0.045	U	0.045	***5.4***	***D***	0.17	0.045	U	0.045	0.045	U	0.045
Total Organic Carbon (USEPA Method 9060)													
Date Analyzed		1/5/2008			1/7/2008			1/5/2008			1/7/2008		
Analyte	**CAS No.**	**(mg/L)**			**(mg/L)**			**(mg/L)**			**(mg/L)**		
Total Organic Carbon (TOC)	7440-44-0	***14***		0.50	***12***		0.50	0.50	U	0.50	0.50	U	0.50

Parameters not listed were not detected in any samples.
Results in ***bold italics*** denote detections.

Flags and Qualifiers
U - Analyte was not detected at or above the Method Detection Limit (MDL).
UJ - Analyte was not detected at or above the Method Detection Limit (MDL); the detection limit is estimated.
J - Result is an estimated value.
JP - Result is an estimated value; The lower of the two values is reported when the % difference between the results of two GC columns is greater than 40%.
JD - Compound analyzed at a dilution.

Prepared by: MWD Date: 1/30/2008
Checked by: AWG Date: 2/4/2008

Table 3
Summary of Validated QA/QC Sample Detections - Organics (December 2007 Sampling Event)
Site R Quarterly Groundwater Monitoring
Solutia, Inc. - Sauget, Illinois

Monitoring Well		FB 1		MDL	FB 2		MDL	Trip Blank		MDL	Trip Blank		MDL
Lab Sample ID		680-32806-4			680-32849-6			680-32806-12			680-32849-7		
Date Sampled		12/13/2007			12/17/2007			12/14/2007			12/17/2008		
Time Sampled		12:10			10:30								
Volatile Organic Compounds (USEPA Method 8260B)													
Date Prepared		12/23/2007			12/27/2007			12/27/2007			12/27/2007		
Date Analyzed		12/23/2007			12/27/2007			12/27/2007			12/27/2007		
Analyte	**CAS No.**	(ug/L)			(ug/L)			(ug/L)			(ug/L)		
Benzene	71-43-2	0.32	U	0.32	0.32	U	0.32	0.32	U	0.32	0.32	U	0.32
Carbon Disulfide	75-15-0	0.17	U	0.17	***0.20***	***J***	0.17	***0.18***	***J***	0.17	0.17	U	0.17
Chlorobenzene	108-90-7	0.34	U	0.34	0.34	U	0.34	0.34	U	0.34	0.34	U	0.34
Xylenes, Total	1330-20-7	0.87	U	0.87	***0.88***	***J***	0.87	0.87	U	0.87	0.87	U	0.87
Semi-Volatile Organic Compounds (USEPA Method 8270C)													
Date Prepared		12/20/2007			12/24/2007								
Date Analyzed		12/24/2007			1/7/2008								
Analyte	**CAS No.**	(ug/L)			(ug/L)								
1,2,4-Trichlorobenzene	120-82-1	0.69	U	0.69	0.68	U	0.68						
1,2-Dichlorobenzene	95-50-1	0.49	U	0.49	0.48	U	0.48						
1,3-Dichlorobenzene	541-73-1	0.49	U	0.49	0.48	U	0.48						
1,4-Dichlorobenzene	106-46-7	0.49	U	0.49	0.48	U	0.48						
2,4-Dichlorophenol	120-83-2	0.97	U	0.97	0.95	U	0.95						
2-Chlorophenol	95-57-8	0.97	U	0.97	0.95	U	0.95						
4-Chloroaniline	106-47-8	4.7	U	4.7	4.6	U	4.6						
Phenol	108-95-2	0.49	U	0.49	0.48	U	0.48						

Table 3
Summary of Validated QA/QC Sample Detections - Organics (December 2007 Sampling Event)
Site R Quarterly Groundwater Monitoring
Solutia, Inc. - Sauget, Illinois

Monitoring Well		FB 1		MDL	FB 2		MDL	Trip Blank	MDL	Trip Blank	MDL
Lab Sample ID		680-32806-4			680-32849-6			680-32806-12		680-32849-7	
Date Sampled		12/13/2007			12/17/2007			12/14/2007		12/17/2008	
Time Sampled		12:10			10:30						
Organochlorine Pesticides (USEPA Method 8081A)											
Date Prepared		12/20/2007			12/20/2007						
Date Analyzed		12/21/2007			12/21/2007						
Analyte	**CAS No.**	**(ug/L)**			**(ug/L)**						
Chlorinated Herbicides (USEPA Method 8151A)											
Date Prepared		12/20/2007			12/20/2007						
Date Analyzed		12/21/2007			12/22/2007						
Analyte	**CAS No.**	**(ug/L)**			**(ug/L)**						
2,4-D	94-75-7	0.059	U	0.059	0.061	U	0.061				
Dichlorprop	120-36-5	0.044	U	0.044	0.045	U	0.045				
Total Organic Carbon (USEPA Method 9060)											
Date Analyzed		1/5/2007			1/7/2008						
Analyte	**CAS No.**	**(mg/L)**			**(mg/L)**						
Total Organic Carbon (TOC)	7440-44-0	0.50	U	0.50	0.50	U	0.50				

Parameters not listed were not detected in any samples.
Results in ***bold italics*** denote detections.

Flags and Qualifiers
U - Analyte was not detected at or above the Method Detection Limit (MDL).
UJ - Analyte was not detected at or above the Method Detection Limit (MDL); the detection limit is estimated.
J - Result is an estimated value.
JP - Result is an estimated value; The lower of the two values is reported when the % difference between the results of two GC columns is greater than 40%.
JD - Compound analyzed at a dilution.

Prepared by: MWD Date: 1/30/2008
Checked by: AWG Date: 2/4/2008

Table 4
Summary of Validated QA/QC Sample Detections - Inorganics (December 2007 Sampling Event)
Site R Quarterly Groundwater Monitoring
Solutia, Inc. - Sauget, Illinois

Monitoring Well		DUP 1		MDL	DUP 2		MDL	RB 1		MDL	RB 2		MDL
Lab Sample ID		680-32806-11			680-32849-4			68032806-3			680-32849-5		
Date Sampled		12/13/2007			12/17/2007			12/13/2007			12/17/2007		
Time Sampled		0:00			0:00			10:15			10:00		
Metals (USEPA Method 6010B)													
Date Prepared		12/31/2007			12/31/2007			12/31/2007			12/31/2007		
Date Analyzed		1/5/2008			1/5/2008			1/4/2008			1/5/2008		
Analyte	**CAS No.**	**(mg/L)**			**(mg/L)**			**(mg/L)**			**(mg/L)**		
Arsenic	7440-38-2	***0.0032***	***J***	0.0023	***0.24***		0.0023	***0.0024***	***J***	0.0023	0.0023	U	0.0023
Barium	7440-39-3	***0.11***		0.0020	***0.27***		0.0020	0.0020	U	0.0020	0.0020	U	0.0020
Chromium	7440-47-3	***0.0012***	***J***	0.0011	***0.0090***	***J***	0.0011	0.0011	U	0.0011	0.0011	U	0.0011
Copper	7440-50-8	***0.0023***	***J***	0.0022	***0.011***	***J***	0.0022	***0.0031***	***J***	0.0022	***0.0091***	***J***	0.0022
Lead	7439-92-1	0.0021	U	0.0021	***0.0040***	***J***	0.0021	0.0021	U	0.0021	0.0021	U	0.0021
Nickel	7440-02-0	***0.0057***	***J***	0.0020	***0.0089***	***J***	0.002	0.0020	U	0.002	0.0020	U	0.0020
Mercury (USEPA Method 7470A)													
Date Prepared		12/31/2007			12/31/2007			12/31/2007			12/31/2007		
Date Analyzed		1/2/2008			1/2/2008			1/2/2008			1/2/2008		
Analyte	**CAS No.**	**(mg/L)**			**(mg/L)**			**(mg/L)**			**(mg/L)**		
Mercury	7439-97-6	0.000080	U	0.000080	0.000080	U	0.000080	0.000080	U	0.000080	0.000080	U	0.000080
Total Dissolved Solids (USEPA Method 160.1)													
Date Analyzed		12/16/2007			12/23/2007			12/16/2007			12/23/2007		
Analyte	**CAS No.**	**(mg/L)**			**(mg/L)**			**(mg/L)**			**(mg/L)**		
Total Dissolved Solids (TDS)	-	***690***		10	***1,100***		10	***6.0***		5.0	***14***		5.0

Parameters not listed were not detected in any samples.
Results in ***bold italics*** denote detections.
Samples are not filtered.

Flags and Qualifiers
U - Analyte was not detected at or above the Method Detection Limit (MDL).
J - Result is an estimated value.

Prepared by: MWD Date: 1/30/2008
Checked by: AWG Date: 2/4/2008

Table 4
Summary of Validated QA/QC Sample Detections - Inorganics (December 2007 Sampling Event)
Site R Quarterly Groundwater Monitoring
Solutia, Inc. - Sauget, Illinois

Monitoring Well		FB 1		MDL	FB 2		MDL	Trip Blank	MDL	Trip Blank	MDL
Lab Sample ID		680-32806-4			680-32849-6						
Date Sampled		12/13/2007			12/17/2007						
Time Sampled		12:10			10:30						
Metals (USEPA Method 6010B)											
Date Prepared		12/31/2007			12/31/2007						
Date Analyzed		1/4/2008			1/5/2008						
Analyte	**CAS No.**	(mg/L)			(mg/L)						
Arsenic	7440-38-2	0.0023	U	0.0023	0.0023	U	0.0023				
Barium	7440-39-3	0.0020	U	0.0020	0.0020	U	0.0020				
Chromium	7440-47-3	0.0011	U	0.0011	***0.0012***	***J***	0.0011				
Copper	7440-50-8	0.0022	U	0.0022	0.0022	U	0.0022				
Lead	7439-92-1	0.0021	U	0.0021	0.0021	U	0.0021				
Nickel	7440-02-0	0.0020	U	0.0020	0.0020	U	0.0020				
Mercury (USEPA Method 7470A)											
Date Prepared		12/31/2007			12/31/2007						
Date Analyzed		1/2/2008			1/2/2008						
Analyte	**CAS No.**	(mg/L)			(mg/L)						
Mercury	7439-97-6	0.000080	U	0.000080	0.000080	U	0.000080				
Total Dissolved Solids (USEPA Method 160.1)											
Date Analyzed		12/16/2007			12/23/2007						
Analyte	**CAS No.**	(mg/L)			(mg/L)						
Total Dissolved Solids (TDS)	-	5.0	U	5.0	***32***		5.0				

Parameters not listed were not detected in any samples.
Results in ***bold italics*** denote detections.
Samples are not filtered.

Flags and Qualifiers
U - Analyte was not detected at or above the Method Detection Limit (MDL).
J - Result is an estimated value.

Prepared by: MWD Date: 1/30/2008
Checked by: AWG Date: 2/4/2008