Quality Assurance Project Plan

Ellsworth Industrial Park Site
Downers Grove, Illinois

September 2006

Revision 0: 15 September 2006

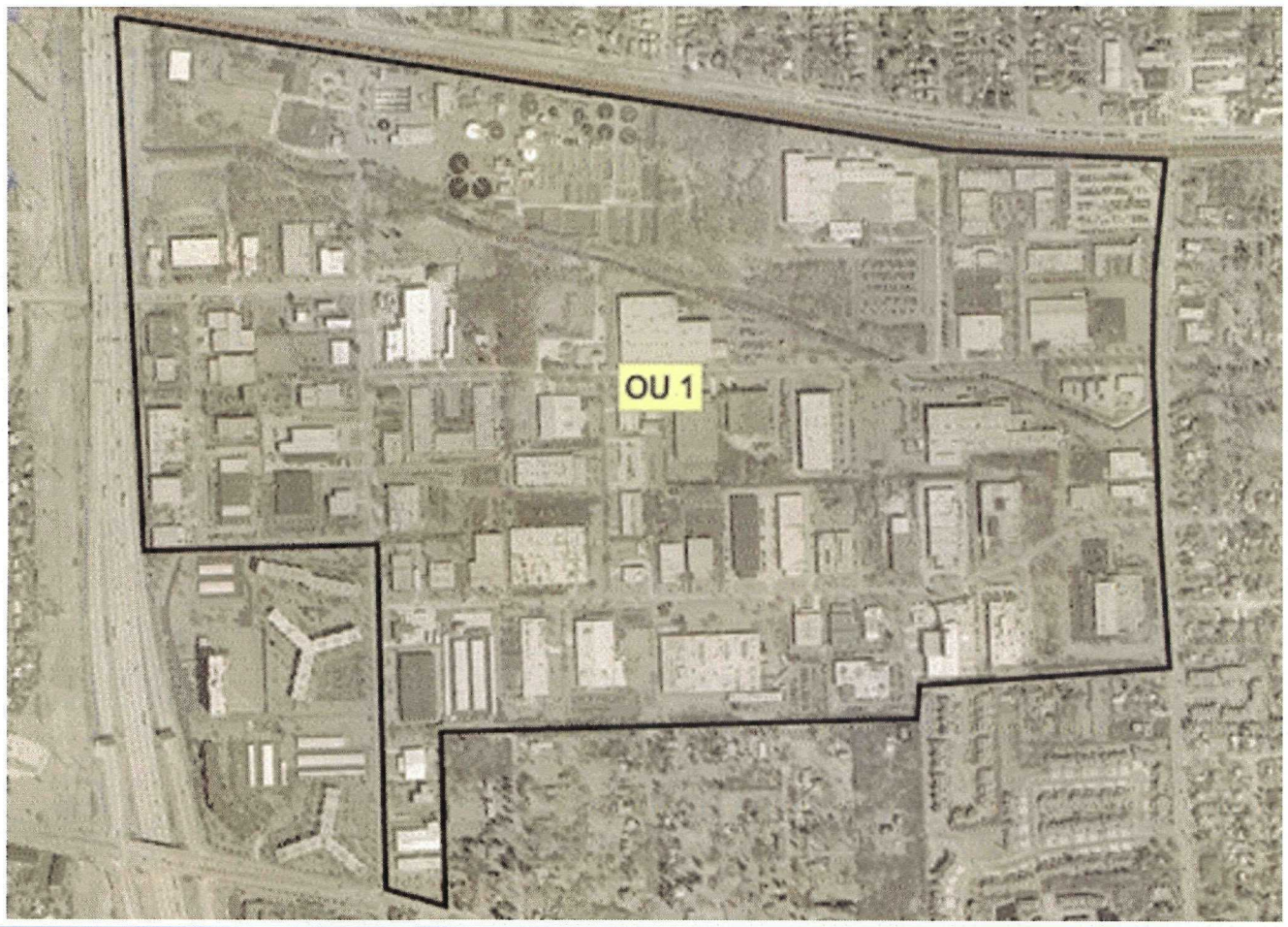

Prepared for

U.S. Environmental Protection Agency
Region V
77 West Jackson Boulevard
Chicago, Illinois 60604

Prepared by

Weston Solutions, Inc.
20 N. Wacker
Ste. 1210
Chicago, IL 60606

This document was prepared in accordance with U.S. EPA Contract Number 68-W7-0026, WESTON Region V Response Action Contract (RAC), and contains confidential busines information.

Work Assignment Number:
251-RICO-B52A

Document Control Number:
RFW251-2A-AVZD

EPA Region 5 Records Ctr.
304501

Weston Solutions, Inc.
Suite 1210
20 N. Wacker Drive
Chicago, IL 60606-2901
312-424-3300 • Fax 312-424-3330
www.westonsolutions.com

15 September 2006

Mr. Mazin Enwiya
Work Assignment Manager
U.S. Environmental Protection Agency
77 West Jackson Boulevard
Chicago, Illinois 60604

U.S. EPA Contract No.: 68-W7-0026
Work Assignment No.: 251-RICO-B52A
Document Control No.: RFW251-2E-AVZD

Subject: Quality Assurance Project Plan / Field Sampling Plan
Ellsworth Industrial Park
Downers Grove, Illinois

Dear Mr. Enwiya:

Weston Solutions, Inc. (WESTON®) is pleased to submit for U.S. EPA's review, three copies of the Quality Assurance Project Plan and Field Sampling Plan (QAPP/FSP), Revision 0 for the Ellsworth Industrial Park Site in Downers Grove, Illinois.

Should you have any questions or require additional information, please feel free to contact us.

Very truly yours,

WESTON SOLUTIONS, INC.

Joseph M. Ruiz
Site Manager

for James M. Burton, P.E.
Program Manager

Enclosure
cc: P. Vogtman, U.S. EPA (letter only)

I:\WO\RAC\251\36509-LTR.WPD RFW251-2E-AVZD

This document was prepared by Weston Solutions, Inc., expressly for U.S. EPA. It shall not be released or disclosed in whole or in part without the express, written permission of U.S. EPA.

an employee-owned company

QUALITY ASSURANCE PROJECT PLAN
ELLSWORTH INDUSTRIAL PARK SITE
DOWNERS GROVE, DUPAGE COUNTY, ILLINOIS

WORK ASSIGNMENT NO. 251-RICO-B52A
REVISION 0 - 15 SEPTEMBER 2006

Prepared for

U.S. EPA Contract No. 68-W7-0026
U.S. Environmental Protection Agency
77 West Jackson Boulevard
Chicago, Illinois 60604

Document Control No. RFW251-2E-AVZD

This document was prepared by Weston Solutions, Inc., expressly for U.S. EPA in accordance with U.S. EPA Region V Response Action Contract (RAC)-U.S. EPA Contract No. 68-W7-0026 and contains confidential business information. It shall not be released or disclosed in whole or in part without the express, written permission of U.S. EPA.

QAPP

TABLE OF CONTENTS

Section	Title	Pages
A	**PROJECT MANAGEMENT**	A-1
A.1	TITLE OF PLAN AND APPROVAL	A-1
A.2	INTRODUCTION	A-2
A.3	DISTRIBUTION LIST	A-3
A.4	PROJECT ORGANIZATION AND RESPONSIBILITIES	A-3
A.4.1	Project Management	A-3
A.5	PROBLEM DEFINITION/BACKGROUND INFORMATION	A-7
A.5.1	Site Description	A-7
A.5.2	Site Background and History	A-8
A.6	PROJECT/TASK DESCRIPTION AND SCHEDULE	A-16
A.6.1	Conduct Site Reconnaissance	A-17
A.6.2	Conduct Geological Investigations - Soil	A-17
A.6.3	Conduct Hydrogeological Investigations - Groundwater	A-18
A.7	QUALITY OBJECTIVES AND CRITERIA FOR MEASUREMENT DATA	A-19
A.7.1	Data Quality Objectives	A-19
A.7.2	Precision, Accuracy, and Sensitivity of Analysis	A-23
A.7.3	Completeness, Representativeness, and Comparability	A-28
A.7.4	Levels of Quality Control Effort	A-30
A.8	SPECIAL TRAINING REQUIREMENTS/CERTIFICATION	A-32
A.9	DOCUMENTATION AND RECORDS	A-33
A.9.1	Project Documentation	A-33
B	**DATA GENERATION AND ACQUISITION**	B-1
B.1	SAMPLING PROCESS DESIGN	B-1
B.1.1	Sampling Network and Rationale	B-1
B.1.2	Parameters to be Tested and Frequency	B-1
B.2	SAMPLING METHODS REQUIREMENTS	B-1
B.3	SAMPLE HANDLING AND CUSTODY REQUIREMENTS	B-2
B.3.1	Sample Containers and Handling	B-2
B.3.2	Documentation	B-3
B.3.3	Field Log	B-3
B.3.4	Sample Custody - Overview	B-4
B.3.5	Chain-of-Custody Form	B-5
B.3.6	Field-Specific Chain-of-Custody Procedures	B-5
B.3.7	Sample Shipping Procedures	B-6
B.3.8	Laboratory Chain-of-Custody Procedures	B-6
B.4	ANALYTICAL METHODS REQUIREMENTS	B-7
B.4.1	Analytical Laboratory Procedures	B-7

This document was prepared by Weston Solutions, Inc., expressly for U.S. EPA. It shall not be released or disclosed in whole or in part without the express, written permission of U.S. EPA.

TABLE OF CONTENTS

Section	Title	Pages
B.5	QUALITY CONTROL REQUIREMENTS	B-7
B.5.1	Field Quality Control Checks	B-7
B.5.2	Laboratory Quality Control Checks	B-8
B.6	INSTRUMENT/EQUIPMENT PREVENTIVE MAINTENANCE	B-8
B.6.1	Field Equipment/Instruments	B-8
B.6.2	Laboratory Instruments	B-9
B.7	INSTRUMENT CALIBRATION AND FREQUENCY	B-9
B.7.1	Laboratory Instruments	B-10
B.8	INSPECTION/ACCEPTANCE REQUIREMENTS FOR SUPPLIES AND CONSUMABLES	B-10
B.9	DATA ACQUISITION REQUIREMENTS (NON-DIRECT MEASUREMENTS)	B-10
B.10	DATA MANAGEMENT	B-10
B.10.1	Field Measurements and Sample Collection	B-11
B.10.2	Laboratory Reporting and Record-Keeping	B-11
B.10.3	Electronic Records	B-12
C	**ASSESSMENT/OVERSIGHT**	C-1
C.1	ASSESSMENT AND RESPONSE ACTIONS	C-1
C.1.1	Field Performance Assessment	C-2
C.1.2	Laboratory Performance Audits	C-2
C.1.3	Corrective Action	C-3
C.2	REPORTS TO MANAGEMENT	C-5
D	**DATA VALIDATION AND USABILITY**	D-1
D.1	REVIEW, VALIDATION, AND VERIFICATION REQUIREMENTS	D-1
D.1.1	Data Reduction and Review	D-1
D.1.2	Data Validation	D-2
D.2	VALIDATION AND VERIFICATION METHODS	D-3
D.3	USABILITY/RECONCILIATION WITH DATA QUALITY OBJECTIVES	D-3

This document was prepared by Weston Solutions, Inc., expressly for U.S. EPA. It shall not be released or disclosed in whole or in part without the express, written permission of U.S. EPA.

LIST OF TABLES

Table	Title
A-1	QAPP Distribution List
A-2	Reporting Limits and Screening Criteria - VOC Soil
A-3	Reporting Limits and Screening Criteria - VOC Groundwater
A-4	Reporting Limits and Screening Criteria - Other Parameters (Soil, Water, Air)

LIST OF FIGURES

Figure	Title
A-1	Project Organization Chart
A-2	Site Location Map
A-3	OU1 Detailed Site Map
A-4a	Previous Investigation Sample Locations
A-4b	Previous Soil Sample Locations
A-5	Detections of Primary and Secondary Chlorinated Solvents in Soil
A-6a	Primary and Secondary Chlorinated Solvent Detections in Soil Exceeding Preliminary Screening Criteria
A-6b	Primary Chlorinated Solvent Detections in Soil (0-5 ft) Exceeding Preliminary Screening Criteria
A-6c	Primary Chlorinated Solvent Detections in Soil (5-10 ft) Exceeding Preliminary Screening Criteria
A-6d	Primary Chlorinated Solvent Detections in Soil (10-15 ft) Exceeding Preliminary Screening Criteria

This document was prepared by Weston Solutions, Inc., expressly for U.S. EPA. It shall not be released or disclosed in whole or in part without the express, written permission of U.S. EPA.

LIST OF FIGURES
(CONTINUED)

Figure	Title
A-6e	Primary Chlorinated Solvent Detections in Soil (15-20 ft) Exceeding Preliminary Screening Criteria
A-6f	Primary Chlorinated Solvent Detections in Soil (20-25 ft) Exceeding Preliminary Screening Criteria
A-6g	Primary Chlorinated Solvent Detections in Soil (25-30 ft) Exceeding Preliminary Screening Criteria
A-6h	Primary Chlorinated Solvent Detections in Soil (30-35 ft) Exceeding Preliminary Screening Criteria
A-6i	Primary Chlorinated Solvent Detections in Soil (35-40 ft) Exceeding Preliminary Screening Criteria
A-6j	Primary Chlorinated Solvent Detections in Soil (40-45 ft) Exceeding Preliminary Screening Criteria
A-7a	Secondary Chlorinated Solvent Detections in Soil (5-10 ft) Exceeding Preliminary Screening Criteria
A-7b	Secondary Chlorinated Solvent Detections in Soil (10-15 ft) Exceeding Preliminary Screening Criteria
A-8a	Groundwater Sample Locations-Shallow Groundwater
A-8b	Detections of Primary and Secondary Chlorinated Solvents in Shallow Groundwater
A-8c	Primary Chlorinated Solvent Detections in Shallow Groundwater Exceeding Preliminary Screening Criteria
A-8d	Secondary Chlorinated Solvent Detections in Shallow Groundwater Exceeding Preliminary Screening Criteria
A-9a	Groundwater Sample Locations-Intermediate Groundwater
A-9b	Detections of Primary and Secondary Chlorinated Solvents in Intermediate Groundwater

This document was prepared by Weston Solutions, Inc., expressly for U.S. EPA. It shall not be released or disclosed in whole or in part without the express, written permission of U.S. EPA.

LIST OF FIGURES
(CONTINUED)

Figure	Title
A-9c	Primary Chlorinated Solvent Detections in Intermediate Groundwater Exceeding Preliminary Screening Criteria
A-9d	Secondary Chlorinated Solvent Detections in Intermediate Groundwater Exceeding Preliminary Screening Criteria
A-10a	Groundwater Sample Locations-Bedrock Groundwater
A-10b	Detections of Primary and Secondary Chlorinated Solvents in Bedrock Groundwater
A-10c	Primary Chlorinated Solvent Detections in Bedrock Groundwater Exceeding Preliminary Screening Criteria
A-11	Project Schedule

LIST OF APPENDICES

A	Field Sampling Plan
B	CRL and SAS Laboratory SOPs
C	Field Parameter SOPs

This document was prepared by Weston Solutions, Inc., expressly for U.S. EPA. It shall not be released or disclosed in whole or in part without the express, written permission of U.S. EPA.

ACRONYMS AND ABBREVIATIONS

bgs	below ground surface
CFR	Code of Federal Regulations
CLP	U.S. EPA Contract Laboratory Program
CPR	cardiopulmonary resuscitation
CRL	U.S. EPA Region V Central Regional Laboratory
CRQL	Contract-Required Quantitation Limits
DCN	Document Control Number
DQO	data quality objective
DSITMS	Direct Sampling Ion Trap Mass Spectrometry
EDD	electronic deliverable document
EDP	electronic data processor
ERT	Environmental Response Team
ESAT	Environmental Service Assistance Team
FIELDS	Field Environmental Decision Support
FSP	Field Sampling Plan
FSS	Field Services Section
ft	foot
FTL	Field Team Leader
GC/MS	gas chromatograph/mass spectrometer
GIS	Geographic Information System
GPS	Global Positioning System
HASP	Health and Safety Plan
HAZWOPER	Hazardous Waste Operations and Emergency Response
HHRA	Human Health Risk Assessment
HSA	Hollow stem auger
IAC	Illinois Administrative Code
IDW	Investigative Derived Waste
IEPA	Illinois Environmental Protection Agency
LCS	laboratory control sample
LCSD	laboratory control spike duplicate
MCLs	Maximum Contaminant Levels
mg/kg	milligrams per kilogram
MS/MSD	matrix spike/matrix spike duplicate

This document was prepared by Weston Solutions, Inc., expressly for U.S. EPA. It shall not be released or disclosed in whole or in part without the express, written permission of U.S. EPA.

ACRONYMS AND ABBREVIATIONS
(Continued)

NIST	National Institute of Standards and Technology
O&M	operation and maintenance
OSHA	Occupational Safety and Health Administration
PCB	polychlorinated biphenyl
PE	performance evaluation
PID	Photo ionization detector
PPE	personal protective equipment
PRP	potentially responsible party
QA	quality assurance
QAO	Quality Assurance Officer
QAPP	Quality Assurance Project Plan
QA/QC	quality assurance and quality control
QC	quality control
RAC	Remedial Action Contract
REAC	Response Engineering and Analytical Contract
RI/FS	Remedial Investigation/Feasibility Study
RPD	relative percent difference
RPM	Remedial Project Manager
RSCC	Region V Sample Control Coordinator
RSD	relative standard deviation
SHSC	Site Health and Safety Coordinator
SLERA	Screening Level Ecological Risk Assessment
SMC	Sample Management Coordinator
SOP	Standard Operating Procedure
SOW	Statement of Work
ug/L	micrograms per liter
U.S. EPA	United States Environmental Protection Agency
VOC	volatile organic compound
WAM	Work Assignment Manager
WESTON	Weston Solutions, Inc.
° C	degrees Celsius

This document was prepared by Weston Solutions, Inc., expressly for U.S. EPA. It shall not be released or disclosed in whole or in part without the express, written permission of U.S. EPA.

SECTION A

PROJECT MANAGEMENT

A.1 TITLE OF PLAN AND APPROVAL

Quality Assurance Project Plan
Ellsworth Industrial Park Site
Downers Grove, Illinois

Prepared by:
WESTON SOLUTIONS, Inc
750 East Bunker Court
Suite 500
Vernon Hills, Illinois 60061-4055

Prepared by: _____ Date: 09/14/06
for Trenna J. Sundquist, Assistant Geologist

Reviewed by: _____ Date: 09/14/06
Joseph M. Ruiz, Site Manager

Reviewed by: _____ Date: 09/14/06
for James Burton, Program Manager

Approved by: _____ Date: _____
Mazin Enwiya, U.S. EPA Work Assignment Manager

Approved by: _____ Date: _____
U.S. EPA Region V FSS Quality Assurance Reviewer

This document was prepared by Weston Solutions, Inc., expressly for U.S. EPA. It shall not be released or disclosed in whole or in part without the express, written permission of U.S. EPA.

A.2 INTRODUCTION

The United States Environmental Protection Agency (U.S. EPA) requires that all environmental monitoring and measurement efforts mandated or supported by the U.S. EPA participate in a centrally managed quality assurance and quality control (QA/QC) program. Any party generating data under this program has the responsibility to implement minimum procedures to assure that the precision, accuracy, completeness, and representativeness of its data are known and documented. To ensure the responsibility is met uniformly, each party must prepare a written Quality Assurance Project Plan (QAPP) covering each project it is to perform.

This QAPP has been prepared in accordance with the *U.S. EPA - Region 5, Instructions on the Preparation of a Superfund Division QAPP, U.S. EPA QA/R-5, (Revision 0, June 2000);* the *EPA Requirements for QAPPs, U.S. EPA QA/R-5, (EPA/240/B-01/003, March 2001);* and the *EPA Guidance for QAPPs, U.S. EPA QA/G-5, (EPA/600/R-98/018, February 1998).* As described in the instructions, this QAPP is organized into four Sections as described below:

1. SECTION A: The elements in this section cover aspects of project management, objectives, and history. This section identifies the roles and responsibilities of project personnel and describes the communication procedures. This section identifies the goal of the technical assistance at the Site.

1. SECTION B: The elements in this section describe the design and implementation of measurement systems that will be used during the technical assistance at the Site. This section describes sampling procedures, analytical methods/procedures, and data handling and documentation procedures. Standard Operating Procedures (SOPs) for sampling and testing are referenced and included as attachments to this QAPP. Quality control (QC) procedures, frequency requirements, acceptance criteria, and corrective action procedures associated with all methods are also provided in this section.

1. SECTION C: The elements in this section describe the procedures used to ensure proper implementation of Section B.

This document was prepared by Weston Solutions, Inc., expressly for U.S. EPA. It shall not be released or disclosed in whole or in part without the express, written permission of U.S. EPA.

1. SECTION D: The elements in this section describe the quality assurance (QA) activities that are expected to occur after the data collection phase of the remedial investigation is completed.

A.3 DISTRIBUTION LIST

The distribution list is provided in Table A-1.

A.4 PROJECT ORGANIZATION AND RESPONSIBILITIES

Key personnel responsibilities are discussed in the following subsections. QAPP Figure A-1 presents the project organization chart.

A.4.1 Project Management

This project is a fund-lead remedial investigation/feasibility study (RI/FS) which is being coordinated by a U.S. EPA Work Assignment Manager (WAM) who has overall responsibility for all phases of this project.

Operational responsibilities involving execution and direct management of the technical and administrative aspects of this project have been assigned as follows:

A.4.1.1 Project Management Responsibilities

U.S. EPA Work Assignment Manager - Mr. Mazin Enwiya is the U.S. EPA WAM for this project. The U.S. EPA WAM has overall responsibility for all phases of the Ellsworth Industrial Park (Ellsworth) project.

This document was prepared by Weston Solutions, Inc., expressly for U.S. EPA. It shall not be released or disclosed in whole or in part without the express, written permission of U.S. EPA.

WESTON Program Manager - Mr. James Burton, P.E. is the Weston Solutions, Inc. (WESTON®) Program Manager. The Program Manager has overall responsibility for the work assignment. The Program Manager is responsible for ensuring that the project meets all U.S. EPA objectives and quality standards. He is also responsible for ensuring that all work is executed in accordance with the U.S. EPA's technical directives. The WESTON Program Manager is responsible for assigning and monitoring the functions and responsibilities of the WESTON Site Manager. In addition, he will commit the necessary resources and personnel to meet the objectives of this project.

WESTON Site Manager - Mr. Joseph Ruiz is the Site Manager. The Site Manager is responsible for implementing the project objectives utilizing the personnel assigned. The Site Manager's primary function is to ensure that the technical, financial, and scheduling objectives are achieved successfully. The WESTON Site Manager will coordinate with the WESTON Program Manager, and Quality Assurance Officer (QAO) and will be the major point of contact and control for matters concerning the project. His other responsibilities include:

- Coordination and management of project personnel.
- Project scheduling.
- Coordination and review of required deliverables.
- General QA of field activities.
- Represent the project team at meetings and public hearings.

A.4.1.2 Quality Assurance Responsibilities

U.S. EPA Field Services Section (FSS) Quality Assurance Reviewer - The U.S. EPA Region V Superfund FSS will be responsible to review and approve the QAPPs. The U.S. EPA FSS also has the discretion to conduct external performance and system audits of field and laboratory activities.

WESTON Quality Assurance Officer - Mr. Jon Olander is the WESTON Remedial Action Contract (RAC) QAO. The WESTON QAO has the responsibility to implement and administer the WESTON QA Program. He is responsible for coordinating all procedures and tasks pertaining to QA and reporting to the WESTON Program Manager on QA issues. Other duties include:

This document was prepared by Weston Solutions, Inc., expressly for U.S. EPA. It shall not be released or disclosed in whole or in part without the express, written permission of U.S. EPA.

- Exercise overall responsibility for all audits under the RAC contract.
- Determine projects and activities to be audited.
- Establish audit schedules.
- Notify the audited entity of nonconformance and the need for corrective actions.
- Approve the disposition of nonconformance.
- Update and/or develop new SOPs in response to an observed need.

WESTON Sample Management Coordinator (SMC) - Ms. Tonya Balla is the WESTON SMC. WESTON's SMC will coordinate all Ellsworth Site sampling requirements and will coordinate with the U.S. EPA Region V Regional Sample Control Coordinator (RSCC) for any analyses going through the U.S. EPA Region V Central Regional Laboratory (CRL). In addition, the WESTON SMC will coordinate with any WESTON procured laboratory performing analysis. Ms. Balla will also be responsible for coordinating or performing analytical data review.

A.4.1.3 Field Responsibilities

WESTON Field Team Leader - WESTON will designate a FTL that will be responsible for the daily direction of the team members regarding the work plan-specific tasks. The FTL will provide the initial technical review of all deliverables and data collection activities. In essence, this person will be responsible for the management of the field team and the supervision of all field activities in the absence of the WESTON Site Manager.

WESTON Site Health and Safety Coordinator (SHSC) - WESTON will designate a person to be responsible for implementing the Health and Safety Plan (HASP). The SHSC will perform health and safety monitoring and ensure compliance with all health and safety requirements.

A.4.1.4 Laboratory Responsibilities

Multiple laboratories will be supporting this project. The U.S. EPA Region V Environmental Service Assistance Team (ESAT) mobile laboratory will be providing onsite field support. The mobile laboratory will analyze soil for volatile organic compounds (VOCs) employing direct sampling ion

This document was prepared by Weston Solutions, Inc., expressly for U.S. EPA. It shall not be released or disclosed in whole or in part without the express, written permission of U.S. EPA.

trap mass spectrometry (DSITMS). All of the VOC samples analyzed in the field by the mobile laboratory will be forwarded to U.S. EPA Region Vs Central Regional Laboratory (CRL) laboratory in Chicago, Illinois for percent moisture analysis. In addition, select samples will be submitted to the CRL laboratory for analysis. CRL will analyze a percentage of split soil VOC samples as a QA/QC measure. Select soil samples will be submitted to the CRL for total organic carbon (TOC), and grain size analyses. Groundwater samples will also be analyzed by the fixed CRL for VOCs, TOC, alkalinity, and major anions (fluoride, chloride, and nitrate).

U.S. EPAs Environmental Response Team (ERT)/Response Engineering and Analytical Contract (REAC) laboratory in Edison New Jersey will be providing air analytical services for selected VOCs. The air analysis will support the utility corridor sampling that is detailed in the FSP.

WESTON has procured several laboratories to conduct analyses that the CRL or the U.S. EPA Contract Laboratory Program (CLP) are unable to perform. CGC Inc, in Madison, Wisconsin will perform hydraulic conductivity test on select soil samples. ESN Rocky Mountain in Golden, Colorado will conduct cation exchange capacity (CEC), and oxidation-reduction potential (ORP) for soil samples and sulfate and dissolved hydrocarbon analysis (methane, ethane, and ethene) for groundwater samples. Beacon Environmental Services, Inc., in Bel Air, Maryland will perform VOC passive gas analysis for air samples. The WESTON procured laboratories were selected through a competitive bid process. WESTON has worked will all of the above laboratories on other assignments.

The WESTON SMC is responsible for initiating and scheduling all analyses with the CRL and with each WESTON procured laboratory. In addition, the WESTON SMC will coordinate with the WESTON Site Manager and FTL in executing all laboratory arrangements. .

CGC Inc. – Mr. Kim Lewis is the laboratory director. Mr. Kirk Solberg is the laboratory project manager for the Ellworth project. Mr. Solberg will be responsible for coordinating the samples with WESTON and the laboratory. Mr. Solberg will be the point of contact for any problems or concerns.

This document was prepared by Weston Solutions, Inc., expressly for U.S. EPA. It shall not be released or disclosed in whole or in part without the express, written permission of U.S. EPA.

ESN Rocky Mountain – Mr. Steve Merritt is the laboratory manager and laboratory project manager Mr. Merritt will be responsible for coordinating the samples with WESTON and the laboratory and will be the point of contact for any problems or concerns.

Beacon Environmental Services Inc., - Mr. Harry O'Neill is the Quality Assurance Officer/President and Mr. Steven Thornley is the laboratory director. They will be responsible for coordinating the samples with WESTON and the laboratory. Mr. O'Neill will be the point of contact for any problems or concerns.

A.5 PROBLEM DEFINITION/BACKGROUND INFORMATION

The objectives of the field investigation at the Ellsworth Site are to conduct further environmental sampling to investigate the overall nature and extent of soil and groundwater contamination and to develop remedial alternatives for the Ellsworth Site. Soil and groundwater samples will be collected as part of this investigation and analyzed to determine the degree and extent of contamination.

A.5.1 Site Description

The Ellsworth Site is located in Downers Grove, DuPage County, Illinois (QAPP Figure A-2). Downers Grove is a developed area containing mainly residential, commercial, and light industrial properties. The approximate boundaries of the overall Site are Burlington Avenue to the north, 63rd Street to the south, Lee and Springside Avenues to the east, and Interstate 355 (I-355) to the west. The overall Site has been further subdivided by the U.S. EPA into Operable Unit 1 (OU1) and Operable Unit 2 (OU2). This QAPP is specific to OU1, which consists of the industrial park property (see QAPP Figure A-3). OU2 consists of the groundwater contamination areas detected in the residential areas outside (south and west) of the Ellsworth Site. OU1 consists primarily of commercial/light industrial properties, and OU2 consists primarily of residential, recreational, and commercial properties. OU1 is bordered on the north by Burlington Avenue; on the south by Elmore and Inverness Avenues; on the east by Belmont Avenue; and on the west by I-355. QAPP Figure A-3

This document was prepared by Weston Solutions, Inc., expressly for U.S. EPA. It shall not be released or disclosed in whole or in part without the express, written permission of U.S. EPA.

shows individual properties within the Ellsworth Industrial Park, and includes an orthophoto obtained from DuPage County.

Multiple surface features are located within and surrounding the Ellsworth Site, including paved roadways, alleys, and sidewalks; residential structures; commercial/industrial buildings; parking lots; open vegetated areas; a wastewater treatment plant (WWTP); and lightly wooded areas. St. Joseph Creek runs from east to west through the northern half of the Site. Ground surface elevations increase moving north or south away from St. Joseph Creek. Site drainage appears to be towards the St. Joseph Creek from the north and south portions of the Site. Although a topographic survey of the Site has not been completed, the ground surface where the monitoring wells have been previously installed ranges from approximately 686 to 717-feet above mean sea level (MSL).

A.5.2 Site Background and History

The Ellsworth property was built in the late 1950's and currently consists of approximately 135 businesses. Surrounding properties encompass residential, recreational, and commercial/light industrial properties. The businesses that currently occupy the industrial park and the surrounding areas perform a broad range of activities. Detailed descriptions of historical operations have not been included within this report unless they have been determined to be relevant regarding potential sources of chlorinated solvent contamination.

A.5.2.1 Previous Site Investigations

A number of past investigations have been conducted at and surrounding the Ellsworth Site by Federal, State, Municipal, and private property owners. The following subsections summarize these investigations. Analytical data from the investigations in the "Investigations Conducted by Others" subsection was not incorporated into the Ellsworth database, and is not reflected in the QAPP tables or figures.

This document was prepared by Weston Solutions, Inc., expressly for U.S. EPA. It shall not be released or disclosed in whole or in part without the express, written permission of U.S. EPA.

QAPP Figure A-4a presents the Previous Investigation Sample Locations; QAPP Figure A-4b presents the Previous Soil Sampling Locations; QAPP Figure A-5 presents the Detections of Primary and Secondary Chlorinated Solvents in Soil; QAPP Figures A-6a through A-6j present the Primary Chlorinated Solvent Detections in Soil Exceeding Preliminary Screening Criteria; QAPP Figures A-7a and A-7b present the Secondary Chlorinated Solvents in Soil Exceeding Preliminary Screening Criteria; QAPP Figures A-8a through A-8d present the Primary and Secondary Chlorinated Solvents in Shallow Groundwater; QAPP Figures A-9a through A-9d present the Primary and Secondary Chlorinated Solvents in Intermediate Groundwater; and QAPP Figures A-10a, A-10b, and A-10c present the Primary and Secondary Chlorinated Solvents in Bedrock Groundwater.

Initial Residential Well Sampling

Between Spring and Fall 2001, the IEPA performed residential water well sampling on the east side of I-355 near Downers Grove in response to citizen concerns related to private-well sampling in neighboring Lisle. The investigation consisted of three rounds of residential-well sampling throughout the area. Approximately 495 private wells were sampled and analyzed for levels of VOCs. Sample results indicated elevated levels of perchloroethylene (PCE), trichloroethyene (TCE), and other related VOCs. Approximately 52% of the samples collected during Round 1 and Round 2 contained PCE or TCE above 5 micrograms per liter (µg/L) or parts per billion (ppb) (the federal drinking-water standard and the State of Illinois Maximum Contamination Limit [MCL]). The results of this investigation identified a chlorinated solvent plume within the bedrock aquifer.

Subsurface Groundwater Investigation

In response to initial residential-well water sampling, IEPA performed a cone penetration test (CPT) investigation within the Ellsworth Industrial Park. The results of this investigation are contained in the *Subsurface Groundwater Investigation Report, Ellsworth Industrial Park* (Parsons, 2001). The investigation used a CPT rig to log the overburden lithology in the area and collect groundwater samples at a variety of depths above the bedrock in order to evaluate potential source area(s) of chlorinated solvent releases. The area of investigation included only the southern and southeastern-most portions of the industrial park along portions of Wisconsin, Elmore, and Inverness Avenues.

This document was prepared by Weston Solutions, Inc., expressly for U.S. EPA. It shall not be released or disclosed in whole or in part without the express, written permission of U.S. EPA.

Groundwater samples were collected using the CPT sampler and by the installation of temporary 3/4-inch polyvinyl chloride (PVC) piezometers. During the investigation, 28 groundwater samples were collected from 27 separate sampling locations within the industrial park. Of the 28 groundwater samples, one sample was found to contain TCE above the method detection limit.

Phase I Site Assessment

In February 2002, the U.S. EPA and the IEPA conducted additional joint-effort groundwater investigations within and outside the industrial park to further evaluate the presence of chlorinated solvent groundwater contamination and narrow down potential source areas. The results of this investigation were documented in the *Final Preliminary Groundwater Investigation Report* (Weston, 2002), and has been heretofore referred to as the Phase I Site Assessment (SA). During this study, the IEPA conducted boring and sampling activities using a Geoprobe unit outfitted with a membrane interface probe (MIP) for soil logging and sample collection. The U.S. EPA performed a follow-up CPT investigation throughout the industrial park and selected areas east of the park. The CPT rig was used to advance stratigraphy borings, which aided in evaluating the geology at each location, as well as identified the presence of water-bearing zones within the unconsolidated overburden soil. Each boring was advanced to refusal, which ranged from approximately 12 to 80 feet below ground surface (bgs). A total of 44 locations were advanced using the CPT and Geoprobe MIP technology. Once the stratigraphy was characterized and the water-bearing zones were identified, depth intervals were selected for groundwater sampling. A total of 37 investigative groundwater samples were collected. Chlorinated constituents, including 1,1,1-trichloroethane (TCA), tetrachloroethylene (PCE), trichloroethylene (TCE), and their common degradation products, were detected at several locations and at various concentrations within the industrial park. The highest concentrations were generally found to be present along Curtiss Street between Chase Street and Katrine Avenue. The presence of TCE and PCE in shallow groundwater provided a potential link between source(s) in the industrial park and contamination observed in residential wells downgradient of the Site.

This document was prepared by Weston Solutions, Inc., expressly for U.S. EPA. It shall not be released or disclosed in whole or in part without the express, written permission of U.S. EPA.

Phase II Site Assessment

Based on the results of the previous groundwater investigations, a Phase II SA was undertaken as a joint effort between the U.S. EPA and the IEPA to further characterize chlorinated solvent contamination in soil and groundwater and identify potential source properties. The results of this investigation were documented in the *Phase II Site Assessment Report* (Weston, 2002). Prior to field investigation activities, efforts were undertaken to gather and evaluate existing data and information on properties and businesses within the industrial park. This information was used to focus field investigative efforts on potential chlorinated solvent source areas based on past and present use of these chemicals. In addition to focused investigations at specific facilities, a network of groundwater monitoring wells were also installed throughout the industrial park to begin evaluating site hydrogeologic characteristics. During the investigation, 21 soil borings were advanced, along with the installation of 25 overburden and 17 bedrock monitoring wells.

The results of the Phase II SA indicated that PCE and TCE, and their degradation products, were present at numerous and widespread locations and depths within the Ellsworth Industrial Park in soil at concentrations up to 500,000 micrograms per kilogram (ug/kg). PCE and TCE were also detected in groundwater in both glacial drift and bedrock aquifers at concentrations up to 190 ug/L. By comparison, the highest PCE/TCE concentrations observed in residential wells south of the Site were typically around 15 ug/L. The compound 1,1,1-TCA was also found at significant concentrations. The data indicated that chlorinated solvent constituents appear likely to be migrating from sources within the industrial park through overburden soil, entering the bedrock aquifer system, and migrating in a downgradient direction towards the affected residences.

Supplemental Investigation

A Supplemental Investigation was undertaken by the U.S. EPA to further investigate 27 additional properties within and outside of Ellsworth Industrial Park boundaries to identify properties that may have contributed to the groundwater contamination detected in the industrial park and residential areas south of the industrial park. The results of this investigation were documented in the *Data Evaluation Summary Report* (Weston, 2004). The scope of work included borehole logging and soil

This document was prepared by Weston Solutions, Inc., expressly for U.S. EPA. It shall not be released or disclosed in whole or in part without the express, written permission of U.S. EPA.

and groundwater sampling. Work was performed at targeted businesses or sites selected by the U.S. EPA based on historical data and information. During the investigation, a total of 118 soil borings were advanced, and 67 groundwater samples were collected. PCE, TCE, and their common breakdown products were detected in shallow soil during this investigation at concentrations up to 35,000 ug/kg, and in shallow groundwater at up to 340 ug/L.

Records Review Activities

Throughout the Ellsworth Industrial Park investigation process, the U.S. EPA and the IEPA have evaluated available documents and records from numerous properties and businesses within and around the industrial park to identify current and previous users of chlorinated-solvent products. In October 2001, the IEPA sent out information-request letters to approximately 21 facilities that had been identified during their initial door-to-door survey of the Ellsworth Industrial Park as using chlorinated cleaners/solvents or other types of chlorinated materials. The information IEPA requested pertained to the Site activities related to the purchasing, receiving, processing, storing, treating, disposing, or otherwise handling of hazardous substances. The U.S. EPA issued supplemental information requests and reviewed this information supplied to the U.S. EPA and the IEPA, along with available records from the U.S. EPA Records Center in order to develop a list of facilities in the industrial park identified as using chlorinated solvents. The U.S. EPA has, and will continue the process of gathering and evaluating background data and information into the RI/FS stage.

Investigations Conducted by Others

Several additional investigations have been conducted by others either as part of investigations related to the Ellsworth Industrial Park groundwater contamination issues, or investigations conducted by individual property owners within Ellsworth Industrial Park as part of due diligence activities. Investigations for which subsurface testing activities took place and records were available are summarized in the following subsections.

This document was prepared by Weston Solutions, Inc., expressly for U.S. EPA. It shall not be released or disclosed in whole or in part without the express, written permission of U.S. EPA.

Wastewater Treatment Plant Sewage Lagoon Area Studies

An investigation was conducted at the Downers Grove Sanitary District's (DGSD) Sewage Lagoon Area in the Fall of 2002 (Huff & Huff, Inc., 2002). This investigation consisted of two soil borings advanced through the existing sludge in the DGSD west and east lagoons; and the installation of five additional monitoring wells on their property adjacent to the lagoons. Sludge/soil samples were collected and analyzed from each of the two soil borings and groundwater samples were collected from the five newly installed wells and three existing monitoring wells. The sludge/soil and groundwater samples were analyzed for VOCs. VOCs were not detected in lagoon sludge/soil samples. VOCs were detected in groundwater confirming the presence of TCE up to 9 ug/L in U.S. EPA monitoring well BD(4I) on the DGSD property. Additional VOCs including 1,1,1-TCA, 1,1-DCA, chloroethane, and vinyl chloride were detected in two of the newly installed monitoring wells. Based on groundwater flow directions presented, this report concluded that the presence of VOCs in groundwater was due to an off-site source.

Chase-Belmont Properties Subsurface Soil Investigation

An investigation was conducted in January 2003 on the five buildings addressed as 5000-5111 Chase Avenue, Downers Grove, Illinois (EarthTech, 2003). A total of 16 geoprobe soil borings were advanced during this investigation at depths ranging from 16 to 20 ft bgs. Sixteen soil samples and four water samples were collected during this investigation at various locations around the buildings and analyzed for VOCs. PCE was detected in shallow soil at concentrations up to 165 ug/Kg. PCE and TCE were detected in shallow groundwater samples at concentrations up to 23 ug/L and 10 ug/L, respectively.

U.S. EPA Hydrogeologic Investigations 2003 and 2004

The U.S. EPA conducted additional hydrogeologic characterization in 2003 and 2004 in the vicinity of the Ellsworth Industrial park. Activities were conducted in what is currently designated OU1, as well as in OU2. Investigation activities consisted of geophysical logging in select residential water supply wells, and water level monitoring throughout the OU1 and OU2 areas. These investigations concluded that wells open to the drift aquifer indicate downward vertical groundwater flow but no

This document was prepared by Weston Solutions, Inc., expressly for U.S. EPA. It shall not be released or disclosed in whole or in part without the express, written permission of U.S. EPA.

consistent horizontal groundwater flow direction. Groundwater flow directions in the bedrock aquifer are predominantly from northwest to southeast and does not appear to have been altered by the cessation of pumping from residential water wells as they were abandoned or decommissioned due to municipal water supply hookup. Geophysical logging indicated that fractures in the dolomite bedrock tend to be concentrated at certain elevations, but elevation patterns were not evident.

Due Diligence and Hydrogeologic Investigations - 2537 Curtiss Street Property

A number of investigations have been conducted at the 2537 Curtiss Street property beginning with a Phase I Environmental Site Assessment (ESA) in November 2000 (Environmental Group Services, Ltd., 2000). The Phase I ESA indicated that chlorinated solvents had been used at the facility and staining and solvent odors were present within expansion joints of the concrete foundation. Based on these results, a Phase II investigation was conducted (Environmental Group Services, Ltd., July 2001). During this investigation, three soil borings were advanced below the concrete foundation within the building. Soil samples were collected and analyzed for VOCs and only minor compound detections were observed. An expanded Phase II investigation was also conducted (Environmental Group Services, Ltd., September 2001) in which additional borings were advanced within the building foundation footprint. PCE was detected in two soil samples ranging from 14 to 33 ug/kg. 1,1,1-TCA was also detected. Based on these results, two additional investigations were carried out to investigate the hydrogeologic characteristics of the Site and determine whether chlorinated solvents were present in shallow groundwater. The results of these investigations were summarized in two reports (Environmental Group Services, Ltd., December 2001, January 2002). Ten shallow monitoring wells were installed on-site, and soil and groundwater samples were collected. These hydrogeologic investigations concluded that the shallow subsurface geology is variable and consists primarily of tills interbedded with saturated silt, sand, and gravel layers. Shallow groundwater is contained within these seams and layers at depths between 13 and 30 feet bgs; however, several wells were also observed to be dry, indicating a perched groundwater system was likely present at shallow depths. PCE, TCE, and 1,1,1-TCA were detected in subsurface soil at concentrations up to 119 ug/kg, 6.6 ug/kg, and 61.6 ug/kg, respectively. PCE and TCE were also found to be present in

This document was prepared by Weston Solutions, Inc., expressly for U.S. EPA. It shall not be released or disclosed in whole or in part without the express, written permission of U.S. EPA.

groundwater samples from the shallow monitoring wells at concentrations up to 140 ug/L and 8.5 ug/L, respectively. PCE/TCE daughter products were also observed at low levels.

Focused Site Investigation - 2659 Wisconsin Avenue Property

Focused Site characterization activities were conducted as part of a remedial action conducted at the 2659 Wisconsin Avenue property (Pioneer Environmental, Inc, 2000 and 2001). Background information indicates chlorinated solvents were used at this facility and a release was documented through a floor drain which impacted soil in a small area on the east side of the building. PCE, TCE, and their daughter products were detected in subsurface soil in this area based on soil boring and sample collection. These reports indicate that the nature and extent of chlorinated solvent contamination was delineated and performed subsequent risk analyses in accordance with the IEPA regulations. Groundwater was not encountered during the focused investigations.

Phase II Site Investigations - 2525 Curtiss Street Property

A Phase I ESA was conducted at the 2525 Curtiss Street property in July 2000 (Caddis, Inc., July 2000). The Phase I ESA indicated that various hazardous substances, including chlorinated solvents, were handled at the facility, and recommended subsequent sampling take place. Based on this recommendation, a Phase II Site Investigation was conducted (Caddis, Inc., August 2000). Information contained in this report indicated a 2,000 gallon waste solvent UST was removed from the Site in 1988. Ten soil borings were conducted at locations around the facility. PCE was detected from all soil samples collected exterior to the south side of the building at concentrations up to 238 ug/kg. Metals and PCBs were not detected above background levels and PCBs were not detected above laboratory detection limits. A Supplemental Phase II Investigation was conducted the following year (Caddis, Inc., October 2001). Eleven additional soil borings were advanced on the south, east, and west sides of the property. PCE was detected in four of the 11 soil borings at concentrations ranging from 71.3 ug/kg to 350 ug/kg. TCE was also detected at 41.2 ug/kg. DCE and 1,1,1-TCA were also detected in soil during this investigation.

This document was prepared by Weston Solutions, Inc., expressly for U.S. EPA. It shall not be released or disclosed in whole or in part without the express, written permission of U.S. EPA.

UST Corrective Action Completion Report - 5225 Walnut Avenue Property

A UST Corrective Action Completion report was prepared for the 5225 Walnut property and submitted to the IEPA (United Environmental Consultants, Inc., September 1999). A 2,500 gallon mineral spirits UST was removed from this property under OSFM Tank Removal Permit #00462-1999. The OSFM representative concluded upon removal that a release had occurred due to strong odors associated with the excavation and an observed sheen on water within the excavation cavity. The release was classified as a "minor" release. Incident No. 991205 was assigned to the release. Approximately 1,750 gallons of liquids were removed using vacuum equipment and approximately 195 cubic yards of soil and backfill were excavated and removed. UST excavation closure soil sampling took place in accordance with IEPA protocol and no constituents were detected above 35 Illinois Administrative Code (IAC) Part 742 Tier I soil cleanup objectives. Although specific correspondence is not available, Site personnel indicated that subsequent to the UST removal, three shallow groundwater monitoring wells were installed on the property to evaluate whether the UST had impacted shallow groundwater. No early results of sampling of these wells was received; however, these wells were sampled during the U.S. EPA Phase II SA in 2002 and VOCs were not detected.

A.6 PROJECT/TASK DESCRIPTION AND SCHEDULE

The field activities to be directed under this QAPP include sampling at the OU1 Ellsworth Site. The goals of the project are the following:

- Delineate potential chlorinated solvent source areas present within the OU1 Ellsworth Site that could act as a continuing source of contamination in groundwater.

- Gather sufficient information to assess effective remedies for the contamination that are protective of human health and the environment.

This document was prepared by Weston Solutions, Inc., expressly for U.S. EPA. It shall not be released or disclosed in whole or in part without the express, written permission of U.S. EPA.

- Delineation of the pathways from the potential source areas to the bedrock aquifer system and the distribution of contamination in the bedrock aquifer, such that mitigation and remedial alternatives can be evaluated and the groundwater quality of the aquifer can be restored.

The technical approach proposed for use at the site utilizes the principles of the Triad approach. The Triad Approach is a U.S. EPA streamlining initiative where detailed systematic planning processes are used to develop and optimize project activities. The Triad approach promotes the use of innovative field-based methods to improve the quantity and quality of information available to support decision making. Data of various types will be used collaboratively to focus the sampling efforts and reduce the overall project costs.

The field sampling activities will include Site reconnaissance (utility corridor survey and sub-slab monitoring); geological investigation (soil sampling); hydrogeological investigation (groundwater sampling); HHRA; and SLERA. The specific field sampling activities are included in the Field Sampling Plan (FSP) attached as Appendix A to this QAPP. The project schedule is provided in QAPP Figure A-11. All planning documents will be approved and any required training will be conducted prior to the start of the anticipated October field activities.

A.6.1 Conduct Site Reconnaissance

A.6.1.1 Utility Corridor Survey

A utility corridor evaluation targeting features such as sump, sand, and grease traps will be performed initially to evaluate potential sources and releases that may not have been identified during previous investigations. This preliminary survey will be designed to further assess the significance and potential extent of current sources, and of other potential source areas encountered. This investigation will be conducted in two stages: data gathering and compilation, and vapor sampling. Vapor analysis will be performed by the U.S. EPA ERT/REAC laboratory in Edison, New Jersey. Further Site reconnaissance procedures are discussed in the FSP (Appendix A).

This document was prepared by Weston Solutions, Inc., expressly for U.S. EPA. It shall not be released or disclosed in whole or in part without the express, written permission of U.S. EPA.

A.6.1.2 Sub-Slab Monitoring

Following the utility corridor survey, building sub-slab passive soil gas monitoring will be conducted. The objective of this monitoring program is to identify if major sources exist below select buildings. The actual locations of the sub-slab samples will be determined based on historical information and visual observations obtained during a detailed building investigation. It is assumed that 92 sub-slab samples will be collected from variable depths from the granular backfill located under building slabs or foundations. The number of sub-slab passive soil gas samples may be refined based on the results of the utility corridor survey and information gathering activities. Passive gas VOC analysis will be conducted by Beacon Environmental Services. Further Site reconnaissance procedures are discussed in the FSP (Appendix A).

A.6.2 Conduct Geological Investigations (Soil)

The geological investigation will consist of a soil boring investigation using a combination of direct-push technology and sonic drilling techniques. The investigation will be conducted in order to characterize potential sources, delineate chlorinated solvent contamination within the soil, characterize the subsurface geology, and to select where additional soil borings and monitoring wells should be advanced. The specific number of soil borings, location of the soil borings, and the soil sampling depths will be determined in the field based on the triad approach. Soil VOC analyses will be conducted onsite by the ESAT mobile laboratory. Percent moisture, additional soil VOC QA/QC samples, grain size, and TOC analysis will be analyzed by the CRL in Chicago, Illinois. Cation exchange capacity and redoxidation potential analysis will be conducted by ESN Rocky Mountain. CGC, Inc., will perform the hydraulic permeability testing. Further geological investigation details and sample collection procedures are discussed in the FSP (Appendix A).

This document was prepared by Weston Solutions, Inc., expressly for U.S. EPA. It shall not be released or disclosed in whole or in part without the express, written permission of U.S. EPA.

A.6.3 Conduct Hydrogeological Investigations (Groundwater)

WESTON will conduct a hydrogeological investigation in order to characterize potential sources, delineate chlorinated solvent contamination within the groundwater, characterize the site geology and hydrogeology, and to select where additional soil borings and monitoring wells should be advanced. The hydrogeological investigation is anticipated to include installation, surveying, hydraulic testing (existing and newly installed), and sampling of existing and newly installed monitoring wells. CRL in Chicago, Illinois will perform VOC, alkalinity, TOC, and major anion analysis. ESN Rocky Mountain will perform sulfate and dissolved hydrocarbon gases (methane, ethane, ethene) analysis. Further hydrogeological investigation details and sample collection procedures are discussed in the FSP (Appendix A).

A.7 QUALITY OBJECTIVES AND CRITERIA FOR MEASUREMENT DATA

The objective of this QAPP is to establish standard procedures so that the integrity, accuracy, precision, completeness, and representativeness of collected samples are maintained and that the required objectives are achieved.

A.7.1 Data Quality Objectives

Data quality objectives (DQOs) are required for all environmental data collection activities. DQOs are statements that define the type, quality, quantity, purpose and use of data to be collected. Data quality is defined in terms of the study objectives, rather than in terms of equipment or equipment analysis method characteristics. The design of a study is closely tied to the DQOs, which serve as the basis for important decisions regarding key design features such as the number and location of samples to be collected, the chemical analyses to be performed, etc. The DQOs must address the

This document was prepared by Weston Solutions, Inc., expressly for U.S. EPA. It shall not be released or disclosed in whole or in part without the express, written permission of U.S. EPA.

hypotheses that are to be proved or disproved and the necessary quality to support or defend the results obtained.

In brief, the DQO process follows a seven-step based on the scientific method that is designed to ensure that the type, quality, and quantity of environmental data used in decision making are appropriate for the intended application, as follows:

1. State the problem that the study is designed to address.
2. Identify the decisions to be made with the data obtained.
3. Identify the types of data inputs needed to make the decision.
4. Define the boundaries (in space and time) of the study.
5. Define the decision rule that will be used to make decisions.
6. Define the acceptable limits on decision errors.
7. Optimize the design for obtaining data in an iterative fashion using information and DQOs identified in Steps 1-6.

Following these seven steps helps ensure that the project plan is carefully thought out and that the data collected will provide sufficient information to support the key decisions which must be made. The following sections summarize the application of the DQO process to the OU1 Ellsworth Site.

Step 1: State the Problem

The basic problem at this Site is three-fold: 1) how to delineate potential chlorinated solvent source areas present within the OU1 Ellsworth Site that could act as a continuing source of contamination

This document was prepared by Weston Solutions, Inc., expressly for U.S. EPA. It shall not be released or disclosed in whole or in part without the express, written permission of U.S. EPA.

in groundwater; 2) how to gather sufficient information to assess effective remedies for the contamination that are protective of human health and the environment; and 3) how to delineate the pathways from the potential source areas to the bedrock aquifer system and the distribution of contamination in the bedrock aquifer, such that mitigation and remedial alternatives can be evaluated and the groundwater quality of the aquifer can be restored.

Step 2: Identify Decisions to Be Made

The basic decisions to be made are: 1) are Site contaminant levels affecting human health and the environment; and 2) what is the extent of soil and groundwater contamination.

Step 3: Identify Types of Input Needed

The objectives of the field investigation at the OU1 Ellsworth Site are to conduct further environmental sampling to investigate the overall nature and extent of soil and groundwater contamination at the Site and to develop remedial alternatives for the OU1 Ellsworth Site. Soil and groundwater samples will be collected as part of this investigation and analyzed to determine the degree and extent of contamination. Vapor and passive gas samples will be analyzed for a select list of VOC compounds (PCE, TCE and the breakdown products). Soil samples will be collected and analyzed to determine the degree and extent of contamination. All soil samples will be analyzed for the select list of VOC compounds and moisture content. A portion of the soil samples will be analyzed for CEC, ORP, in-situ hydraulic conductivity, grain size, and TOC. Groundwater samples will be collected and analyzed to determine the degree and extent of groundwater contamination. Groundwater samples will be analyzed for the select list of VOCs, dissolved hydrocarbon gases (methane, ethane, ethene), TOC, alkalinity, sulfate, and major anions (fluoride, chloride, and nitrate/nitrite.

This document was prepared by Weston Solutions, Inc., expressly for U.S. EPA. It shall not be released or disclosed in whole or in part without the express, written permission of U.S. EPA.

The technical approach proposed for used at the site utilizes the principles of the Triad Approach. The Triad Approach is a U.S. EPA streamlining initiative where detailed systematic planning processes, are used to develop and optimize project activities. Activities are sequenced to limit the size of field crews and the need for exhaustive, unfocused sampling and analysis effort. The Triad approach also promotes the use of innovative field based method to improve the quantity and quality of information available to support decision making. Data of various types are used collaboratively to focus the sampling efforts and reduce overall project costs. Additional rationale on using field measurements to guide sampling locations will be included in the FSP Section 2.

Overall sampling at the site will be conducted using a dynamic sampling approach. Vapor sampling in the utility corridors and passive gas sub-slab monitoring will be analyzed to help determine the presence and location of VOCs. Based on these screening results, decisions will be made on where to focus the geological soil and hydrogeological water investigations. A mobile laboratory will be used onsite to provide field screening VOC results to help guide where to sample. Based on the mobile laboratory field screening VOC measurements, decisions will be made whether to sample at the location, expand the sampling area by stepping out from the sampling point, or decrease the sampling area by stepping in from the sampling point. Ten to 30 percent of the soil samples collected will be sent to CRL for confirmation of the onsite mobile laboratory results. The number of samples projected for this investigation can be found in Table 2-1 of the FSP. Additional rationale on using field measurements to guide sampling locations is included in the FSP Section 2.

Step 4: Define the Boundaries of the Study

The Site boundaries and study area are shown on QAPP Figure A-3. Soil samples and the installation of monitoring wells will be conducted based on historical data as well as the field screening results from the vapor and passive soil gas sampling. The Triad Approach of using field measurements to guide sampling locations will be used. This approach will help maximize field activities and define the extent of contamination with fixed laboratory analytical results.

This document was prepared by Weston Solutions, Inc., expressly for U.S. EPA. It shall not be released or disclosed in whole or in part without the express, written permission of U.S. EPA.

Step 5: Define the Decision Rules

Decisions regarding the need for further investigation or remediation at a location will be based on health risk to exposed humans and ecological receptors.

Air

Vapor and passive soil gas samples for VOCs are being used for field screening purposes and for guiding the geological and hydrogeological investigations. Air results will not be compared to a screening criteria. Rather, air results above the reporting limit will be used to help guide the remaining investigation.

Soil

Soil samples will be collected from soil borings based on the results of the utility corridor survey, the passive soil gas sampling, and historical sampling results. Samples to be analyzed by the mobile laboratory will be selected based on visual observations, PID readings (air monitoring readings), and historical sample results. If the sample analyzed by the mobile laboratory exceeds the screening criteria detailed below, then additional samples from that soil boring will be analyzed. This will continue until the vertical extent of contamination is defined.

Soil VOC analytical data will be screened against available U.S. EPA Region 9 Industrial Soil Standards and will also be compared to Illinois TACO Tier I Industrial Soil standards if Region 9 PRGs are not available. Ten to 30 percent of the samples analyzed by the mobile laboratory will be split and analyzed by CRL, for confirmation. The remaining soil parameters will be supporting information for use in the remedial investigation and feasibility reports.

Groundwater

Groundwater VOC analytical data will be screened against U.S. EPA MCLs. If U.S. EPA MCLs are unavailable, groundwater analytical data will be compared to Illinois Tier I TACO limits for Class I groundwater. If both Federal and Illinois TACO limits are unavailable, groundwater analytical data will be compared to U.S. EPA Region 9 Tap Water Standards. The remaining water parameters will be supporting information for use in the remedial investigation and feasibility reports.

Applicable screening criteria for all matrices and parameters are detailed in Tables A-2 through A-4.

This document was prepared by Weston Solutions, Inc., expressly for U.S. EPA. It shall not be released or disclosed in whole or in part without the express, written permission of U.S. EPA.

Step 6: Define the Acceptable Limits on Decision Errors

Field measurements from the DSITMS will be used to select sampling locations associated with the geological investigation. A portion of the samples will be shipped to and analyzed at the fixed CRL location. All laboratory data will be reviewed and compared to field measurements. To help identify the actual compounds and the corresponding concentrations, grab samples will be collected and sent to fixed laboratories for analysis. This comparison will help confirm the accuracy and precision of the DSITMS readings and reduces uncertainty. Duplicate field samples will help to ensure the accuracy and precision of the results. All data will be reviewed against the functional guidelines, this QAPP, and applicable SOPs to ensure sample data usability and quality. It is possible that data gaps will remain after the initial investigation. Additional sampling locations or parameters can be added in the future as deemed necessary by the U.S. EPA.

Step 7: Optimize Sampling Design

The proposed sampling approach is based upon review of historical data. Analytical methods and sampling procedures were selected to be in compliance with the needs of the HHRA and SLERA. Field decisions using a Triad Approach will be made to support the overall goals of determining the extent of contamination.

A.7.2 Precision, Accuracy, and Sensitivity of Analysis

Tables A-2 and A-3, list the VOCs reporting limits for soil and groundwater and the associated site-specific screening objectives. Table A-4 lists the reporting limits for the other sample parameters. Accuracy and precision limits for VOCs for soil and groundwater are detailed in the applicable CRL SOW. Accuracy and precision limits for all other parameters are found in the applicable laboratory SOPs in Appendix B.

This document was prepared by Weston Solutions, Inc., expressly for U.S. EPA. It shall not be released or disclosed in whole or in part without the express, written permission of U.S. EPA.

A.7.2.1 Precision

Precision is a measure of the agreement between multiple measurements of the same property carried out under similar conditions. Precision thus reflects the reproducibility of the measurement. Precision is evaluated most directly by recording and comparing multiple measurements of the same parameter made on the same sample under similar conditions. In addition, field measurements collected during water sampling are for qualitative purposes only. No remedial action will be completed based solely on field measurement readings gathered during the initial or quarterly sampling.

Precision is expressed in terms of the relative standard deviation (RSD) of the values resulting from the replicate analysis or the relative percent difference (RPD) between the values resulting from duplicate analysis.

Duplicate precision is evaluated by calculating a RPD using the following equation (the smaller the RPD, the greater the precision):

$$RPD = \frac{S - D}{(S + D)/2} \times 100$$

Field Precision

Field precision will be assessed through the collection and measurement of field duplicates and matrix spike/matrix spike duplicates (MS/MSD) samples. Field duplicates will be collected at a rate of one per 10 investigative samples. One MS/MSD will be submitted with every 20 investigative and duplicate samples. Since the number of investigative samples will be determined by field observations, the total number of duplicates and MS/MSD samples for this field program is not presented in the FSP. Field measurements for dissolved oxyen (DO), ORP, pH, conductivity, and

This document was prepared by Weston Solutions, Inc., expressly for U.S. EPA. It shall not be released or disclosed in whole or in part without the express, written permission of U.S. EPA.

temperature will be assessed by taking two measurements of one sample to show measurement agreement, on a 1 per 10 basis. This will be achieved by checking the same measurement on a split of the original sample. Field measurements should be within ±1 unit for pH and ±10% for the remaining results. No remedial action will be completed based solely on field measurement readings gathered during the sampling.

Laboratory Precision

Precision in the fixed laboratories will be assessed through the calculation of RPD. Because the concentration of analytes may be below detection limits in many environmental samples, the RPD data will be generated by preparing MS/MSDs. The mobile laboratory is providing field screening data only. MS/MSDs will not be conducted by the mobile laboratory.

A.7.2.2 Accuracy

Accuracy is a measure of the agreement between an observed value and an accepted reference value. It is a combination of the random error (precision) and systematic error (bias), which are due to sampling and analytical operations. The laboratory and method accuracy are calculated as a percentage using the following equation (the higher the value, the greater the accuracy):

$$\text{Accuracy} = \frac{\text{Measured value}}{\text{True Value}} \times 100$$

Laboratory Accuracy

Laboratory Accuracy will be assessed through the analysis of MS/MSDs, laboratory control samples (LCSs), and surrogate spikes.

This document was prepared by Weston Solutions, Inc., expressly for U.S. EPA. It shall not be released or disclosed in whole or in part without the express, written permission of U.S. EPA.

MS/MSDs are evaluated by analyzing a spiked and unspiked portion of the same investigative sample. The objective is to equal or exceed the accuracy demonstrated for the analytical method on samples of similar matrix, composition, and contaminant concentration. The level of recovery of a compound or analyte and the resulting degree of accuracy expected for the analysis of QA samples and spiked samples are dependent on the sample matrix, method of analysis, and the contaminant. The concentration of the analyte relative to the detection limit of the method is also a factor.

The accuracy of the laboratory procedures is also evaluated by the analysis of LCS and laboratory control spike duplicate (LCSD) samples. The LCS/LCSD sample set consists of a clean matrix that is spiked with known constituents. The LCS/LCSD set is prepared and analyzed along with the investigative samples. The LCS/LCSD set is indicative of the accuracy of the laboratory techniques without possible sample matrix interferences.

The accuracy of sample matrix data will be evaluated by determining the %R of matrix spike and surrogate spike samples, where applicable. The spike recovery is calculated using the following equation:

$$\%R = \frac{\text{Observed spike sample conc. - Unspiked sample conc.}}{\text{True concentration of spike}} \times 100$$

A.7.2.3 Sensitivity

Sensitivity is the ability of the method or instrument to detect the contaminant of concern and other target compounds at the level of interest. Sensitivity is typically expressed in the form of detection limits.

This document was prepared by Weston Solutions, Inc., expressly for U.S. EPA. It shall not be released or disclosed in whole or in part without the express, written permission of U.S. EPA.

A.7.3 Completeness, Representativeness, and Comparability

A.7.3.1 Completeness

Completeness is a measure of the amount of valid data obtained compared to the amount of data that was planned to be collected under normal conditions. Field and laboratory completeness are a measure of the amount of valid measurements obtained from all measurements taken for the project. Valid data will be defined as all data and/or qualified data considered to meet the DQOs for this project. It is expected that the all fixed laboratory will provide data meeting quality control (QC) acceptance criteria for 90% or more of all samples tested (critical samples). The mobile laboratory data is for field screening and will meet an acceptance criteria of 80% or more for all samples tested.

A.7.3.2 Representativeness

Representativeness is a measure of the degree to which data accurately and precisely represent a characteristic of a population, parameter variations at a sampling point, or an environmental condition. This is the degree to which samples represent the conditions for which they were taken.

Measures to Ensure Representativeness of Field Data

Representativeness is dependent upon the proper design of the sampling program and will be satisfied by ensuring that the FSP is followed and that proper sampling techniques are used. The rationale for the sampling network and the sampling techniques are provided in the FSP.

Specific field procedures that will help ensure representativeness of specific samples include:

- Collect samples representative of the entire sample interval.
- Use appropriate sampling methodology and equipment.

This document was prepared by Weston Solutions, Inc., expressly for U.S. EPA. It shall not be released or disclosed in whole or in part without the express, written permission of U.S. EPA.

- Use appropriate sampling procedures, including equipment decontamination.
- Perform sample procedures consistently and methodically.

Measures to Ensure Representativeness of Laboratory Data

Using the proper analytical procedures, meeting sample-holding times, and analyzing and assessing duplicate samples ensures representativeness in the laboratory.

A.7.3.3 Comparability

Comparability is a measure of the degree to which one data set can be compared to another. Conditions of comparability include standardized siting, standardized sampling and analysis, consistency of reporting units and standardized data format.

Measures to Ensure Comparability of Field Data

Comparability is dependent upon the proper design of the sampling program and will be satisfied by adhering to the standard sample collection, standard analytical procedures, and standard reporting methods described in the FSP.

Measures to Ensure Comparability of Laboratory Data

The analytical data to be obtained during the sampling activities will be comparable to existing data by using similar sampling methods, analytical methods, and QC objectives.

This document was prepared by Weston Solutions, Inc., expressly for U.S. EPA. It shall not be released or disclosed in whole or in part without the express, written permission of U.S. EPA.

A.7.4 Levels of Quality Control Effort

To assess the quality of data resulting from the sampling program, field duplicates and MS/MSD samples will be collected and submitted to the analytical laboratory. QC samples will also be prepared and analyzed by the laboratory. Laboratory QC samples will include method blanks, laboratory duplicates, and laboratory control samples (as applicable).

A.7.4.1 Field Quality Control

Field/rinsate blank, duplicate, and matrix spike samples will be analyzed to assess the quality of the data resulting from the field sampling program. Field blank and field duplicate samples will be shipped to the analytical laboratory as blind samples. Field blanks consisting of ultra pure water (laboratory grade) will be submitted to the analytical laboratories to assess the quality of the data resulting from the monitoring well sampling activities. Rinsate blanks consisting of ultra pure water poured across or run through sampling equipment will be submitted to the analytical laboratories to assess the decontamination procedures associated with the monitoring well sampling activities. Field/rinsate blank samples are analyzed to check for procedures at the Site that may cause sample contamination. Duplicate samples are analyzed to check for sampling and analytical reproducibility. Matrix spikes provide information about the effect of the sample matrix on the digestion and measurement methodology. All matrix spikes are performed in duplicate and are known as MS/MSD samples.

The general level of the QC effort will be one field duplicate for every 10 or fewer investigative samples (i.e., a 10 percent frequency). Field duplicates will receive a unique sample identification number and will be submitted to the laboratory as a "blind" duplicate to avoid laboratory bias. Field duplicates are analyzed to check for sampling and analytical reproducibility. Field blanks will only be collected for water samples and will consist of ultra pure water (laboratory grade). No field

This document was prepared by Weston Solutions, Inc., expressly for U.S. EPA. It shall not be released or disclosed in whole or in part without the express, written permission of U.S. EPA.

blanks will be collected for soil samples because the CRL/Region V discourages the use of water for soil field blanks.

Matrix spikes provide information about the effect of the sample matrix on the preparation and measurement methodology. MS/MSD samples for organic analyses (spike/duplicate for inorganic analysis) will be analyzed at a minimum of one per 20 investigative and duplicate samples.

Trip blanks will be associated with all aqueous VOC samples. A trip blank will be included in every shipment of aqueous VOC samples.

Temperature blanks will be included in each cooler being shipped to ensure that the temperature in the cooler meets the specified requirements.

WESTON will be conducting physical measurements during soil sampling and field measurements during monitoring well sampling. Physical measurements (sent to an offsite laboratory for analysis) will include TOC, CEC, ORP, grain size, and in-situ hydraulic conductivity (generally only collected from low-permeability materials such as clay). Field measurements will include DO, ORP, pH, conductivity, and temperature and are further defined in the FSP.

A.7.4.2 Laboratory Quality Control

The level of QC for all parameters will be consistent with the standard CRL and WESTON procured laboratory SOPs for all soil and groundwater parameters.

This document was prepared by Weston Solutions, Inc., expressly for U.S. EPA. It shall not be released or disclosed in whole or in part without the express, written permission of U.S. EPA.

A.8 SPECIAL TRAINING REQUIREMENTS/CERTIFICATION

Training of field staff will be provided to ensure that technical, operational, and quality requirements are understood. All field team members, will receive training including but not limited to, the following:

- Logbook training- Training for the maintenance of field, equipment, and personal logbooks.

- Health and Safety Training - All field staff will maintain health and safety training to ensure compliance with Occupational Safety and Health Administration (OSHA) as established in 29 Code of Federal Regulations (CFR) 1910.120 and 29 CFR 1910.126 (as applicable). This training includes but is not limited to, 40-hour OSHA Hazardous Waste Operations and Emergency Response (HAZWOPER) training, 8-hour annual HAZWOPER refresher training, 8-hour supervisor training, cardiopulmonary resuscitation (CPR), first aid training, blood-borne pathogens training, and hazardous materials shipping training.

- Data Validation Training - Team members who are responsible for an unbiased assessment of analytical data validation will be trained in accordance with the *U.S. EPA Contract Laboratory Program National Functional Guidelines for Organic Data Review, October 1999; U.S. EPA Contract Laboratory Program National Functional Guidelines for Low Concentration Organics, June 2001; and U.S. EPA Contract Laboratory Program National Functional Guidelines for Inorganic Data Review, (October 2004).* Personnel experienced with data validation will conduct the review. (Reviews will be conducted in accordance with this QAPP, applicable methods, laboratory SOPs and using the Functional Guidelines as guidance).

- Other - The Site Manager will identify any other additional training for employees required to fulfill the RAC SOW.

All Health and Safety Training is documented by each WESTON Office Health and Safety Officer and is accessible to the WESTON SHSC and the WESTON QAO. All other training will be

This document was prepared by Weston Solutions, Inc., expressly for U.S. EPA. It shall not be released or disclosed in whole or in part without the express, written permission of U.S. EPA.

recorded in a matrix to ensure appropriate frequency is achieved. All certificates and/or documentation that records completion of training will be maintained in personnel files.

A.9 DOCUMENTATION AND RECORDS

A.9.1 Project Documentation

Project information generated by WESTON will be documented in a format that is usable by all project personnel. Project data and information will be tracked and managed from its inception in the field to its final storage area. These evidentiary files (relevant records, reports, correspondence, logs, field notebooks, pictures, subcontractor reports, data, etc.) will be maintained by the WESTON Site Manager (and the WESTON QAO, as applicable) in a secured, limited access area. These files will be maintained for a minimum of three years after project closeout and will be offered to the U.S. EPA prior to disposal. Documents and records that will be managed include but are not limited to:

- **Sample Collection Records** - Logbooks, field notes, chain-of-custody records, custody seals, sample tags, phone conversation records, airbills, and corrective action reports.

- **Project Data Assessment Records** - Field sampling audit checklists, field analytical audit checklists, fixed laboratory audit checklists, performance evaluation (PE) sample results, data validation reports, phone conversation records, and corrective action reports.

- **Laboratory Analytical Records** - The analytical laboratory will be responsible for maintaining analytical logbooks, and laboratory data. Raw laboratory data files and electronic and hard copy data will be inventoried and maintained by the laboratory for the time period established by the U.S. EPA for the CLP.

This document was prepared by Weston Solutions, Inc., expressly for U.S. EPA. It shall not be released or disclosed in whole or in part without the express, written permission of U.S. EPA.

All incoming and outgoing correspondence or reports between WESTON and the U.S. EPA will be assigned a unique Document Control Number (DCN). A DCN number is assigned to each individual document contained in the project file.

This document was prepared by Weston Solutions, Inc., expressly for U.S. EPA. It shall not be released or disclosed in whole or in part without the express, written permission of U.S. EPA.

SECTION B

DATA GENERATION AND ACQUISITION

B.1 SAMPLING PROCESS DESIGN

B.1.1 Sampling Network and Rationale

The project objectives described previously will be accomplished by collecting soil, groundwater, air, and passive soil gas samples. FSP Table 2-1a, presents the sample matrices, analytical parameters, and frequencies of sample collection for the current sampling activities and FSP Table 2-1b, presents a summary of the OU1 Ellsworth sampling program.

B.1.2 Parameters to be Tested and Frequency

Utility corridor vapor sampling will be collected in summa canisters and analyzed for VOCs by the U.S. EPA ERT/REAC. Following the utility corridor survey, building sub-slab passive soil gas monitoring will be conducted. Sub-slab passive gas VOC samples will be analyzed by Beacon Environmental Service..

Soil VOC samples will be analyzed on-site using U.S. EPA's Region V ESAT Mobile Laboratory, employing DSITMS. In addition, select samples will be submitted to the U.S. EPA Region V CRL location for VOCs analysis as a QA/QC measure. Select soil samples will also be submitted to CRL for TOC, grain size, and moisture content analyses. In addition, select soil samples will be submitted to a WESTON procured laboratory for CEC and ORP, and another WESTON procured laboratory for in-situ hydraulic permeability analyses.

This document was prepared by Weston Solutions, Inc., expressly for U.S. EPA. It shall not be released or disclosed in whole or in part without the express, written permission of U.S. EPA

Groundwater samples will be submitted to CRL for VOCs analysis. Samples will be submitted to CRL for major anions, alkalinity, and TOC analyses. In addition, select groundwater samples will also be submitted to a WESTON procured laboratory for sulfate and dissolved hydrocarbon gases analyses.

The matrices, parameters, and frequency of collection are introduced in the QAPP Section A.6 and the rationale and collection procedures are further defined in the FSP Sections 2 and 3.

B.2 SAMPLING METHODS REQUIREMENTS

Sample collection procedures for the various sampling activities are described in Section 3 of the FSP. The FSP describes in detail: (i) sampling equipment; (ii) support facilities; (iii) decontamination of the sampling equipment; and (iv) sample storage, preservation, and holding times. Quality assurance during sample collection shall be achieved by following the procedures described in the FSP.

B.3 SAMPLE HANDLING AND CUSTODY REQUIREMENTS

B.3.1 Sample Containers and Handling

FSP Table 7-1 presents the required sample containers, sample preservation methods, and maximum holding times for the proposed environmental sampling. All samples will be placed in appropriate sample containers and labeled. Following sampling, the exterior of all sample bottles will be initially decontaminated near the sampling location by wiping with a moist cloth. The filled sample containers will not be sprayed with water during decontamination because this water could contact the sample if the container is not tightly sealed.

This document was prepared by Weston Solutions, Inc., expressly for U.S. EPA. It shall not be released or disclosed in whole or in part without the express, written permission of U.S. EPA

The sample labels and sample tags will include the sample number, location, date, time of collection, and analyses to be performed. Tags will be provided by the U.S. EPA Region V RSCC. The labels and information for the sample tags will be created using the Forms II Lite software.

Samples for offsite shipment will be cushioned inside the shipping coolers using bubble wrap or vermiculite. The temperature of the all samples will be maintained at 4±2°C with sealed plastic bags of ice. Samples will be shipped via commercial air courier on a daily basis (as feasible) to the analytical laboratory. The exception to this procedure will be for samples that are collected on a Saturday, Sunday, or a holiday. For samples collected on a Saturday, Sunday, or holiday, additional ice will be placed in the coolers or samples will be placed in a secure refrigerator. The coolers or refrigerator will be sealed and kept in a designated secure area until they are picked up by the courier on the next business day.

Prior to shipment, two custody seals will be fastened to the right and left sides of each shipping cooler to secure the lid and provide evidence that the samples have not been tampered with en route to the laboratory. Upon receipt of the cooler at the laboratory, the cooler will be inspected by the laboratory's sample custodian.

Soil samples for onsite analysis by the ESAT mobile laboratory will be hand delivered. Custody will be maintained throughout the sampling collection and analysis process.

B.3.2 Documentation

Field efforts will be carefully documented using a site logbook, field summary reports, sample chain-of-custody forms, sample labels, and custody seals. In addition, field copies of this QAPP, the FSP and the HASP will be kept on-site. Field observation and other pertinent information will be recorded in the field. All entries will be made in ink with no erasures. If an incorrect entry is made, the information will be crossed out with a single strike mark, which will be initialed and dated by

This document was prepared by Weston Solutions, Inc., expressly for U.S. EPA. It shall not be released or disclosed in whole or in part without the express, written permission of U.S. EPA

the person making the correction. Logbooks will be identified by unique sequential numbers. In addition, general information will be recorded in the site logbook daily, including personnel present at the site, sampling activities, and weather.

B.3.3 Field Log

A site logbook will be kept by the FTL to document site activities, field measurements, interactions with subcontractors, sample information, descriptions of photographs, and other relevant information. The following information will be recorded in the field logbook on a daily basis:

- Site location identification.
- Start date and time (in military time format).
- Weather conditions.
- Names of sampling team members.
- Site visitors.
- Level of personal protective equipment (PPE) used.
- Signature.

When collecting environmental samples, the following information will be recorded in the field logbooks, on the sample labels, and on the sample tags:

- Unique sample identification number (discussed in the FSP).
- Date and time of sample collection.
- Type of sample collected.
- Analyses to be performed on sample.
- Preservatives used, especially any nonstandard types, and any other field preparation of the sample.

In addition to the above information, the logbook will contain a detailed description of the sample location, and the samples physical characteristics (i.e. color, odor, etc).

This document was prepared by Weston Solutions, Inc., expressly for U.S. EPA. It shall not be released or disclosed in whole or in part without the express, written permission of U.S. EPA

B.3.4 Sample Custody - Overview

Sample custody is one of several factors necessary for the admissibility of environmental data as evidence in a court of law. Sample custody procedures help to satisfy the two major requirements for admissibility: relevance and authenticity. Sample custody is addressed in three parts: field sample collection, laboratory analysis, and final evidence files. Final evidence files, including all originals of laboratory reports and purge files, will be maintained under document control in a secure area. A sample or evidence file is under custody if the documents:

- Are in the possession of the individual.
- Are in the view of the individual, after being in his/her possession.
- Were in the possession of the individual before being placed in a secure location or are in a designated and identified secure area.

B.3.5 Chain-of-Custody Form

Chain-of-custody forms will be used to track all samples from the time of sampling to the arrival of samples at the laboratory. Every sample container being shipped to the laboratory will contain a chain-of-custody form. Forms II Lite software will be used to generate the chain-of-custody form. The sampler will maintain their copy while the other copies are enclosed in a waterproof enclosure within the shipping container. The laboratory, upon receiving the samples, will complete the remaining copies and keep one copy for its records.

B.3.6 Field-Specific Chain-of-Custody Procedures

To ensure that samples will arrive at the laboratory without breakage and with the chain-of-custody intact, the following sampling and packaging procedures will be followed:

This document was prepared by Weston Solutions, Inc., expressly for U.S. EPA. It shall not be released or disclosed in whole or in part without the express, written permission of U.S. EPA

- The field sampler is personally responsible for the care and custody of the samples until they are transferred to another individual or properly dispatched to the laboratory. As few people as possible should handle the samples.

- All sample containers will be labeled with unique sample numbers and sample locations.

- Sample labels will be completed for each sample using waterproof ink unless precluded by weather conditions.

- The FTL will review all field activities to determine whether proper custody procedures were followed during the field work.

B.3.7 Sample Shipping Procedures

The following transfer of custody and shipment procedures will be followed:

- Samples will be accompanied by a properly completed chain-of-custody record. The sample numbers and locations will be listed on the chain-of-custody record. When transferring the possession of samples, the individuals relinquishing and receiving will sign and record the date and time on the record. This record documents transfer of custody of samples from the sampler to another person, to the laboratory, or to/from a secure storage area.

- Samples will be properly packaged for shipment and dispatched to the laboratory for analysis, with a separate signed custody record enclosed in each sample box or cooler. The cooler will be secured shut with strapping tape. U.S. EPA provided custody seals (orange), for evidence purposes, will be taped to the cooler in at least two locations.

- Whenever samples are split with an independent source or government agency, a separate chain-of-custody record will be prepared for those samples and marked to indicate with whom the samples are being split. The person relinquishing the samples to the facility or agency will request the representative's signature acknowledging sample receipt.

- All shipments will be accompanied by the chain-of-custody record identifying the contents.

This document was prepared by Weston Solutions, Inc., expressly for U.S. EPA. It shall not be released or disclosed in whole or in part without the express, written permission of U.S. EPA

- If the samples are sent by common carrier, a bill of lading will be used. Receipts of bills of lading will be retained as part of the permanent documentation. Commercial carriers will not be required to sign off on the custody records as long as the custody records are sealed inside the sample cooler and the custody seals remain intact.

B.3.8 Laboratory Chain-Of-Custody Procedures

Each lab provide COC procs

The laboratory custody procedures and document control will be carried out according to the applicable laboratory procedures.

B.4 ANALYTICAL METHODS REQUIREMENTS

B.4.1 Analytical Laboratory Procedures

Soil samples will be analyzed on-site using U.S. EPA's Region V ESAT Mobile Laboratory, employing DSITMS. In addition, select samples will be submitted to CRL for VOCs analysis as a QA/QC measure. Select samples will be analyzed by CRL for TOC, grain size; and moisture content. Select soil samples will also be analyzed by a WESTON procured laboratory for CEC , ORP , and in-situ hydraulic permeability. The specific analytical parameter methods, reporting limits, and screening criteria are provided in QAPP Tables A-2 through A-4.

Ggroundwater samples will be submitted to CRL for VOCs analysis, major anions, alkalinity, and TOC. Samples will also be analyzed by a WESTON procured laboratory for sulfate and dissolved hydrocarbon gases. The specific analytical parameter methods, reporting limits, and screening criteria are provided in QAPP Tables A-2 through A-4.

The actual detection limits obtainable for a specific sample depend upon sample characteristics and possible matrix interference. Departures from the detection limits will be consistent with CRL and laboratory SOPs or other applicable requirements including method adherence, deliverables, and audit procedures with CRL and the other methods SOWs.

This document was prepared by Weston Solutions, Inc., expressly for U.S. EPA. It shall not be released or disclosed in whole or in part without the express, written permission of U.S. EPA

B.5 QUALITY CONTROL REQUIREMENTS

B.5.1 Field Quality Control Checks

Field quality control checks are used to assess the representativeness of the sampling. They are designed to determine what effects activities such as sample collection, bottling, shipping, and storage have on sample integrity and to ensure that samples available for analysis in the laboratory are representative of actual conditions on-site. Field quality control checks, which will be conducted in accordance with the applicable procedures and frequencies described in this QAPP and FSP, include MS/MSDs and field duplicates.

B.5.2 Laboratory Quality Control Checks

Internal laboratory QC procedures for the sample analyses are specified in the respective CRL and laboratory SOPs. These specifications include the types of QC checks required (method blanks, reagent/preparation blanks, MS/MSD, calibration standards, internal standards, surrogate standards, the frequency of each audit, the specific calibration check standards, laboratory duplicate/replicate analysis), compounds and concentrations to be used, and the QC acceptance criteria for these audits.

Laboratory analysis will be conducted in accordance with the appropriate CRL and SAS SOWs. Internal laboratory quality control checks include: (1) standardization, (2) reagent or method blank generation, and (3) surrogate and matrix spike addition and analysis.

B.6 INSTRUMENT/EQUIPMENT PREVENTIVE MAINTENANCE

B.6.1 Field Equipment/Instruments

Field measurement instrumentation includes but is not limited to field parameter meters (i.e. pH, conductivity, ORP, DO, and temperature). Instruments will be calibrated daily in accordance with factory guidelines to ensure proper operation and maintenance (O&M). Calibration records will be

This document was prepared by Weston Solutions, Inc., expressly for U.S. EPA. It shall not be released or disclosed in whole or in part without the express, written permission of U.S. EPA

maintained in the site logbook. Malfunctioning instruments will be replaced, as necessary. Spare parts for sampling equipment will be kept on-site whenever possible.

B.6.2 Laboratory Instruments

The primary objective of a preventive maintenance program is to help ensure the timely and effective completion of a measurement effort by minimizing the downtime of crucial sampling and/or analytical equipment due to expected or unexpected component failure. In implementing this program, efforts are focused in three primary areas: maintenance responsibilities, maintenance schedules, and adequate inventory of critical spare parts and equipment. Maintenance responsibilities for laboratory equipment will be assigned to the respective laboratory managers. The laboratory managers will then establish maintenance procedures and schedules for each major equipment item. These will be contained in the maintenance logbooks assigned to each instrument Preventative maintenance is covered in the applicable laboratory SOPs.

Along with a schedule for maintenance activities, an adequate inventory of spare parts is required to minimize equipment down time. This inventory emphasizes those parts (and supplies) which are subject to frequent failure, have limited useful lifetimes, or cannot be obtained in a timely manner should failure occur. The respective laboratory managers are responsible for maintaining an adequate inventory of spare part and backup instrumentation.

B.7 INSTRUMENT CALIBRATION AND FREQUENCY

Calibration procedures and frequency of laboratory instrumentation as specified by the U.S. EPA, or other approved methods will be strictly adhered to. Calibration of field instruments and equipment will be performed at approved intervals as specified by the manufacturer or more frequently as conditions dictate. Calibrations may also be performed at the start and completion of each test run. However, such calibrations will be reinitiated as a result of delay due to work-time

This document was prepared by Weston Solutions, Inc., expressly for U.S. EPA. It shall not be released or disclosed in whole or in part without the express, written permission of U.S. EPA

breaks, work shift change, or in the event that damage is incurred. Calibration standards used as reference standards will be traceable to the National Institute of Standards and Technology (NIST), when possible. All calibration activities and results will be recorded in the site logbook.

B.7.1 Laboratory Instruments

Records of calibration, repair, or replacement will be filed and maintained by the designated laboratory personnel performing QC activities. These records will be filed at the location where the work is performed and will be subject to QA audit. For all instruments, the laboratory shall maintain a factory-trained repair staff with in-house spare parts or shall maintain service contracts with vendors. To facilitate data validation on selected analytical laboratory results, the laboratories will include calibration data deliverables in the raw data packages.

B.8 INSPECTION/ACCEPTANCE REQUIREMENTS FOR SUPPLIES AND CONSUMABLES

Guidelines for sample container procurement are detailed in Section 10 of the FSP.

B.9 DATA ACQUISITION REQUIREMENTS (NON-DIRECT MEASUREMENTS)

Historical data/background information is presented in Section A.5 of the QAPP. Historical data was used to determine the parameters to analyze and the general locations that will be sampled. The current assessment will provide information on potential additional source areas and will provide additional information on the quality of the groundwater.

B.10 DATA MANAGEMENT

The core of WESTON's data management tool set is an environmental data management system. For this project WESTON proposes to use EQuIS® developed by Earthsoft Computer Systems.

This document was prepared by Weston Solutions, Inc., expressly for U.S. EPA. It shall not be released or disclosed in whole or in part without the express, written permission of U.S. EPA

Information collected in the field and electronic data deliverables (EDD) received from the laboratory are electronically uploaded to EQuIS for data reduction and interpretation purposes. In addition, the analytical data will be compared to screening levels. A chemical result that exceeds its respective screening level or cleanup level is displayed with an asterisk (*) in the tables after the result for easy identification.

B.10.1 Field Measurements and Sample Collection

Raw data from any field measurements and sample collection activities will be appropriately recorded in the site logbook. If the data are to be used in the project reports, they will be reduced or summarized, and the method of reduction will be documented in the report. Field measurements will also be electronically tabulated for inclusion in the EQuIS site database.

B.10.2 Laboratory Reporting and Record-Keeping

The laboratories will prepare and submit full analytical and QC data packages. The laboratory deliverables will include the following (as applicable):

- Narrative, including statement of samples received, description of any deviations from standard procedures, explanation of qualifications regarding data quality, and any other significant problems encountered during analysis.
- All QC data including Forms I to X (e.g., surrogate spike results for each sample, matrix spike, and matrix spike duplicate results, method blank results, and initial and continuing calibration checks).
- All inorganic QC data, including Forms I to X (e.g., spike and duplicate results, method blank results, and initial and continuing calibration checks).
- Field and laboratory chain-of-custody documentation pertaining to each sample delivery group analyzed.

This document was prepared by Weston Solutions, Inc., expressly for U.S. EPA. It shall not be released or disclosed in whole or in part without the express, written permission of U.S. EPA

The Laboratory Project Manager will, as part of the data validation process, confirm that documentation is complete and legible; qualitative identifications are accurate; calculations are accurate; results are expressed in the appropriate units and number of significant figures; and the required quality control checks were run and met acceptance criteria. All pages in all data packages will be consecutively numbered. Review and approval of the data will be documented by the Laboratory Project Manager.

B.10.3 Electronic Records

The laboratories will create and submit an EDD simultaneously with the hard copy data package. The EDD will contain the chain of custody information, laboratory ID, date and time of analysis, and the results for the analyses requested. The EDDs are transmitted to WESTON via e-mail.

In addition to preparing data tables that summarize the chemicals identified in the media analyzed, maps will be prepared to display the extent of contamination at the site. WESTON has developed a standard set of geographic information system (GIS) tools for use with ArcView. The labeling tools display the sample location ID, the date and depth of sample collection, and the concentration of the chemical of concern. Because the GIS application is linked to the database, data reporting is "error free".

All chemistry and geology data will be provided to U.S. EPA following the EDMAN guidelines in the EDD Specification Manual. All files will be scanned using the Electronic Data Processor (EDP) program prior to submittal to ensure no errors are contained in the files.

This document was prepared by Weston Solutions, Inc., expressly for U.S. EPA. It shall not be released or disclosed in whole or in part without the express, written permission of U.S. EPA

SECTION C
ASSESSMENT/OVERSIGHT

C.1 ASSESSMENT AND RESPONSE ACTIONS

Assessment of performance of both field and fixed laboratory activities may be conducted to verify that sampling and analysis are performed in accordance with procedures established in the FSP and QAPP. Assessment will be performed in the form of audits. Audits of field and laboratory activities include internal and external audits.

Quality assurance system audits are conducted at least once during activities that may affect the integrity of the sampling program. The objectives of the system audits are:

- To verify that a system of quality control measures, procedures, reviews, and approvals is established for all activities that generate and process environmentally-related data.
- To verify that a system for project documentation (e.g., records, chain-of-custody forms, analytical tags, logbooks, worksheets, etc) is established.
- To verify documentation of the required quality control reviews, approvals, and activity records.
- To identify nonconformances with the established system of quality control measures, procedures, reviews, approvals, and documentation.
- To recommend corrective actions for identified nonconformance.
- To verify implementation of corrective action.
- To provide written reports of audits.

This document was prepared by Weston Solutions, Inc., expressly for U.S. EPA. It shall not be released or disclosed in whole or in part without the express, written permission of U.S. EPA.

C.1.1 Field Performance Assessment

A field performance assessment (internal audit) may be performed by the WESTON Site Manager or a designee. An audit would include examination of sample collection, handling and packaging procedures, chain-of-custody, etc., to ensure compliance with the established requirements. The audit would most likely occur at the onset of the project to verify that all established procedures are followed. Follow-up audits will be conducted as deemed by the QAO and/or Site Manager, to correct deficiencies and to verify that QA procedures are maintained throughout the entire project. Surveillance of field sampling and testing equipment will be performed by the FTL.

External audits may also be conducted by the U.S. EPA Region V FSS. These audits may be scheduled or unannounced.

C.1.2 Laboratory Performance Audits

A laboratory system audit is a review of laboratory operations. It is conducted to verify that the laboratory has the necessary facilities, equipment, staff, and procedures in place to generate acceptable data. These audits may be performed by the U.S. EPA Region V.

A laboratory performance audit verifies the ability of the laboratory to correctly identify and quantify compounds in blind check samples submitted by the auditing agency. Performance audits could consist of the U.S. EPA sending PE samples to any of the laboratories for ongoing assessment of laboratory precision and accuracy. The analytical results of the analysis of PE samples will be evaluated by the U.S. EPA to ensure that the laboratory maintains good performance.

External audits of laboratory activities are the responsibility of the U.S. EPA Region V. The execution and frequency of these audits is at the discretion of the U.S. EPA.

This document was prepared by Weston Solutions, Inc., expressly for U.S. EPA. It shall not be released or disclosed in whole or in part without the express, written permission of U.S. EPA.

C.1.3 Corrective Action

Corrective action can result from nonconformance to QAPP requirements. Corrective action may be required due to malfunctioning equipment systems and instruments, or equipment systems and instruments that fail calibration or generate data that exceed stated acceptance limits and may occur during sampling and handling, sample preparation, laboratory instrument analysis, and data review. It is the responsibility of the WESTON Site Manager to assure that corrective action be initiated as soon as possible.

For non-compliance problems, a formal corrective action program will be determined and implemented at the time the problem is identified. The person who identifies the problem is responsible for notifying the WESTON Site Manager, or his/her designee. Any nonconformance with the established QC procedures in the QAPP or FSP will be identified and corrected in accordance with the QAPP. All changes will be evaluated based on their potential to affect the quality of the data. Information on these problems will be promptly communicated to the WESTON QAO and the U.S. EPA WAM, as applicable. Implementation of corrective actions will be confirmed in writing through the same channels and documented in the site files.

Corrective actions will be implemented and documented in the site logbook. No staff member will initiate corrective action without prior communication of findings through the proper channels. If corrective actions are insufficient, work may be stopped by a stop-work order issued by the U.S. EPA WAM or the WESTON QAO.

For the laboratories, corrective action is implemented at several different levels. The laboratories are required to have a written SOP specifying corrective action to be taken when an analytical error is discovered or the analytical system is determined to be out of control. The SOP requires documentation of the corrective action and notification by the analyst about the errors and corrective procedures.

This document was prepared by Weston Solutions, Inc., expressly for U.S. EPA. It shall not be released or disclosed in whole or in part without the express, written permission of U.S. EPA.

If resampling is deemed necessary due to laboratory problems, the U.S. EPA must identify the necessary approach including cost recovery from ESAT, CRL, or U.S. EPA ERT/REAC or for the additional sampling effort. The WESTON QAO must be notified in writing of all decisions. WESTON will be responsible for negotiating any cost recovery with the WESTON procured laboratories for this project.

C.2 REPORTS TO MANAGEMENT

As recommended in the Region V Model QAPP instructions, quality assurance reporting will be included as part of the project monthly status reports currently issued to the U.S. EPA by the 20th day of each month. These reports will include projected delivery dates and schedule delays, results of performance or system audits, deviations from the QAPP or FSP and the associated corrective action and the usability of data. Additional quality assurance information will be included in the project final report.

This document was prepared by Weston Solutions, Inc., expressly for U.S. EPA. It shall not be released or disclosed in whole or in part without the express, written permission of U.S. EPA.

SECTION D

DATA VALIDATION AND USABILITY

D.1 REVIEW, VALIDATION, AND VERIFICATION REQUIREMENTS

All data generated in field and laboratory activities will be reduced, reviewed, and validated prior to reporting. No data will be disseminated by the laboratory until they have been subjected to the procedures, which are summarized below.

D.1.1 Data Reduction and Review

Raw data from field measurements and sample collection activities will be appropriately recorded in the site logbook. If the data are to be used in the project reports, they will be reduced and summarized, and the method of reduction will be documented in the report.

Laboratory data reduction procedures will be in accordance with the requirements of the ESAT mobile laboratory for VOCs in soil and the CRL for VOCs, major anions, TOC, and alkalinity in groundwater and TOC, grain size, and VOCs in soil. Laboratory data reduction procedures will be in accordance with the requirements of the WESTON procured laboratories for CEC, ORP, and hydraulic conductivity in soil; and sulfate and and dissolved hydrocarbon gases in groundwater. For each of the methods, the Laboratory Project Manager will complete a thorough inspection of all reports prior to release of the data. Following review and approval of the preliminary report by the Laboratory Project Manager, final reports will be generated and signed by the Laboratory Project Manager.

This document was prepared by Weston Solution, Inc., expressly for U.S. EPA. It shall not be released or disclosed in whole or in part without the express, written permission of U.S. EPA.

D.1.2 Data Validation

The U.S. EPA Region V ESAT will complete the data validation for the CRL parameters analyzed for this project. WESTON will do a cursory review of the vapor and passive soil gas results and the mobile laboratory soil VOC results as all of these parameters are generated for screening purposes only. WESTON will do a thorough review of the data generated by the WESTON procured laboratory parameters. Completeness is evaluated by auditing the data package for:

- Chain-of-Custody records.
- Technical holding times.
- Required analytical methods.
- Reporting limits.
- Reporting format.
- Laboratory and field QC reporting forms (blanks, calibrations, laboratory control samples, duplicates, matrix spikes, etc., as appropriate).
- Appropriate supporting data.
- Case narrative.
- Completeness of results.

Details of any missing, incomplete or incorrect parts of the data packages will be stamped "Resubmitted on [date]", attached to the original data package, and returned to the analytical laboratory. All persons receiving data packages will receive copies of the resubmitted data from the laboratory.

This document was prepared by Weston Solution, Inc., expressly for U.S. EPA. It shall not be released or disclosed in whole or in part without the express, written permission of U.S. EPA.

D.2 VALIDATION AND VERIFICATION METHODS

Validation for data usability will be accomplished by comparing the contents of the data packages and QA/QC results to the requirements contained in the QAPP, the respective methods, and the laboratory SOPs. Raw data such as gas chromatograph/mass spectrometer (GC/MS) and GC chromatograms and mass spectra, data reports, and data station printouts will be examined to ensure that reported results are accurate.

The guidelines for data validation are presented in:

- *National Functional Guidelines for Organic Data Review,* U.S. EPA, October 1999.
- *National Functional Guidelines for Low Organic Concentration Data Review,* U.S. EPA, June 2001.
- *National Functional Guidelines for Superfund Organic Methods Data Review,* U.S. EPA, January 2005.
- Data that is not covered in the functional guidelines will be compared against the applicable methods, the laboratory SOPs, and guidelines described in this QAPP.

WESTON will perform data review of the all soil and groundwater data not generated through CRL. The data will be compared against the laboratory SOPs and guidelines described in this QAPP. In addition, WESTON will provide a data compliance check of all data after receipt from the U.S. EPA.

D.3 USABILITY/RECONCILIATION WITH DATA QUALITY OBJECTIVES

Laboratory results will be assessed for compliance with required precision, accuracy, completeness, and sensitivity requirements as described in Section A.7 of this QAPP. Data which does not meet the requirements specified in Section A.7 and QA requirements in the analytical methods will be discussed in the data validation summaries and incorporated into the data assessment report for this project. Any sources of sampling or analytical error will be identified as early as possible during the

This document was prepared by Weston Solution, Inc., expressly for U.S. EPA. It shall not be released or disclosed in whole or in part without the express, written permission of U.S. EPA.

sample collection activities so that corrective action can quickly be implemented. Data which is not deemed usable to support or address the project decision making process will be identified and the potential need for additional sampling will be discussed with all project parties.

This document was prepared by Weston Solution, Inc., expressly for U.S. EPA. It shall not be released or disclosed in whole or in part without the express, written permission of U.S. EPA.

TABLES

Table A-1
QAPP Distribution List
Ellsworth Industrial Park Site
Downers Grove, Illinois

QAPP Recipients	Title	Organization	Phone/Address	E-mail address
Tonya Balla	Sample Management Coordinator	Weston Solutions, Inc. (WESTON)	750 E. Bunker Ct, Ste 500 Vernon Hills, IL 60061 (847) 918-4094	T.Balla@westonsolutions.com
Joseph Ruiz	Site Manager	Weston Solutions, Inc. (WESTON)	20 N. Wacker Dr, Ste 1210 Chicago, IL 60606 (312) 424-3308	J.Ruiz@westonsolutions.com
Mazin Enwiya	Work Assignment Manager	U.S. Environmental Protection Agency (U.S. EPA)	77 West Jackson Boulevard Mail Code: SR-6J Chicago, IL 60604-3507 (312) 886-6217	enwiya.mazin@epa.gov
To Be Determined	Field Services Section Quality Assurance Reviewer	U.S. Environmental Protection Agency (U.S. EPA)	---	---

This document was prepared by Weston Solutions, Inc., expressly for U.S. EPA. It shall not be released or disclosed in whole or in part without the express, written permission of U.S. EPA.

Table A-2a
Reporting Limits & Screening Criteria - ESAT Mobile Laboratory
Volatile Organic Compound (VOC)
Ellsworth Industrial Park Site
Downers Grove, Illinois

CHEMICAL NAME	ESAT Mobile Laboratory Method Quantitation Limits (mg/kg)	TACO I/C Ingestion[a] (mg/kg)	TACO I/C Inhalation[b] (mg/kg)	TACO CW Ingestion[c] (mg/kg)	TACO CW Inhalation[d] (mg/kg)	TACO SCGW Class I[e] (mg/kg)	TACO SCGW Class II[f] (mg/kg)	R9 PRG Industrial[g] (mg/kg)	R9 SSLs[h] (mg/kg)	R3 RBCs Industrial[i] (mg/kg)
1,1,1-Trichloroethane	0.01	--	1200	--	1200	2	9.6	1200	2	290000
1,1-Dichloroethane	0.01	200000	1700	200000	130	23	110	1700	23	200000
1,1-Dichloroethene	0.01	18000	1500	1800	300	0.06	0.3	410	0.06	51000
1,2-Dichloroethane	0.01	63	0.7	1400	0.99	0.02	0.1	0.6	0.02	31
Carbon Tetrachloride	0.01	44	0.64	410	0.9	0.07	0.33	0.55	0.07	22
Cis-1,2-Dichloroethene	0.01	20000	1200	20000	1200	0.4	1.1	150	0.4	10000
Tetrachloroethene	0.01	110	20	2400	28	0.06	0.3	1.3	0.06	5.3
Trans-1,2-Dichloroethene	0.01	41000	3100	41000	3100	0.7	3.4	230	0.7	20000
Trichloroethene	0.01	520	8.9	1200	12	0.06	0.3	0.11	0.06	7.2
Vinyl Chloride	0.01	7.9	1.1	170	1.1	0.01	0.07	0.75	0.01	4

Notes:

-- indicates that criteria for that chemical is not available.

Method Quantitation Limits supplied by ESAT Mobile Laboratory SOP #07-10-00, Volatiles by Mass Spectrosopy in Soils/Sediments

[a] Comparison criteria derived from 35 Illinois Administrative Code (IAC) 742, Tiered Approach to Corrective Action Objectives (TACO), Appendix B, Table B: Soil Remediation Objectives for Industrial/Commercial properties - Industrial/Commercial Worker Ingestion pathway.

[b] Comparison criteria derived from 35 IAC 742, TACO, Appendix B, Table B: Soil Remediation Objectives for Industrial/Commercial properties - Industrial/Commercial Worker Inhalation pathway.

[c] Comparison criteria derived from 35 IAC 742, TACO, Appendix B, Table B: Soil Remediation Objectives for Industrial/Commercial properties - Construction Worker Ingestion pathway.

[d] Comparison criteria derived from 35 IAC 742, TACO, Appendix B, Table B: Soil Remediation Objectives for Industrial/Commercial properties - Construction Worker Inhalation pathway.

[e] Comparison criteria derived from 35 IAC 742, TACO, Appendix B, Table B: Soil Remediation Objectives for Industrial/Commercial properties - Soil Component of the Groundwater Ingestion Exposure Pathway, Class I Groundwater.

[f] Comparison criteria derived from 35 IAC 742, TACO, Appendix B, Table B: Soil Remediation Objectives for Industrial/Commercial properties - Soil Component of the Groundwater Ingestion Exposure Pathway, Class II Groundwater.

[g] Comparison criteria derived from U.S. EPA Region 9 (R9) Preliminary Remediation Goals: Direct Contact Exposure Pathway - Industrial Soil.

[h] Comparison criteria derived from U.S. EPA Region 9 (R9) Preliminary Remediation Goals: Migration to Groundwater - Soil Screening Levels (SSLs), DAF20.

[i] Comparison criteria derived from U.S. EPA Region 3 (R3) Risk Based Criteria - Industrail Soil.

This document was prepared by Weston Solution, Inc., expressly for U.S. EPA. It shall not be released or disclosed in whole or in part without the express, written permission of U.S. EPA.

Table A-2b
Reporting Limits & Screening Criteria - Central Regional Laboratory
Volatile Organic Compound (VOC)
Ellsworth Industrial Park Site
Downers Grove, Illinois

CHEMICAL NAME	CRL Method Detection Limits (mg/kg)	CRL Reporting Limits (mg/kg)	TACO I/C Ingestion[a] (mg/kg)	TACO I/C Inhalation[b] (mg/kg)	TACO CW Ingestion[c] (mg/kg)	TACO CW Inhalation[d] (mg/kg)	TACO SCGW Class I[e] (mg/kg)	TACO SCGW Class II[f] (mg/kg)	R9 PRG Industrial[g] (mg/kg)	R9 SSLs[h] (mg/kg)	R3 RBCs Industrial[i] (mg/kg)
1,1,1-Trichloroethane	0.5 E-3	0.005	--	1200	--	1200	2	9.6	1200	2	290000
1,1-Dichloroethane	0.47 E-3	0.005	200000	1700	200000	130	23	110	1700	23	200000
1,1-Dichloroethene	0.91 E-3	0.005	18000	1500	1800	300	0.06	0.3	410	0.06	51000
1,2-Dichloroethane	1.38 E-3	0.005	63	0.7	1400	0.99	0.02	0.1	0.6	0.02	31
Carbon Tetrachloride	0.86 E-3	0.005	44	0.64	410	0.9	0.07	0.33	0.55	0.07	22
Cis-1,2-Dichloroethene	0.76 E-3	0.005	20000	1200	20000	1200	0.4	1.1	150	0.4	10000
Tetrachloroethene	1.17 E-3	0.005	110	20	2400	28	0.06	0.3	1.3	0.06	5.3
Trans-1,2-Dichloroethene	0.83 E-3	0.005	41000	3100	41000	3100	0.7	3.4	230	0.7	20000
Trichloroethene	1.09 E-3	0.005	520	8.9	1200	12	0.06	0.3	0.11	0.06	7.2
Vinyl Chloride	1.38 E-3	0.005	7.9	1.1	170	1.1	0.01	0.07	0.75	0.01	4

Notes:

-- indicates that criteria for that chemical is not available.

Method Quantitation Limits supplied by CRL Mobile Laboratory SOP #07-10-00, Volatiles by Mass Spectrosopy in Soils/Sediments

[a] Comparison criteria derived from 35 Illinois Administrative Code (IAC) 742, Tiered Approach to Corrective Action Objectives (TACO), Appendix B, Table B: Soil Remediation Objectives for Industrial/Commercial properties - Industrial/Commercial Worker Ingestion pathway.

[b] Comparison criteria derived from 35 IAC 742, TACO, Appendix B, Table B: Soil Remediation Objectives for Industrial/Commercial properties - Industrial/Commercial Worker Inhalation pathway.

[c] Comparison criteria derived from 35 IAC 742, TACO, Appendix B, Table B: Soil Remediation Objectives for Industrial/Commercial properties - Construction Worker Ingestion pathway.

[d] Comparison criteria derived from 35 IAC 742, TACO, Appendix B, Table B: Soil Remediation Objectives for Industrial/Commercial properties - Construction Worker Inhalation pathway.

[e] Comparison criteria derived from 35 IAC 742, TACO, Appendix B, Table B: Soil Remediation Objectives for Industrial/Commercial properties - Soil Component of the Groundwater Ingestion Exposure Pathway, Class I Groundwater.

[f] Comparison criteria derived from 35 IAC 742, TACO, Appendix B, Table B: Soil Remediation Objectives for Industrial/Commercial properties - Soil Component of the Groundwater Ingestion Exposure Pathway, Class II Groundwater.

[g] Comparison criteria derived from U.S. EPA Region 9 (R9) Preliminary Remediation Goals: Direct Contact Exposure Pathway - Industrial Soil.

[h] Comparison criteria derived from U.S. EPA Region 9 (R9) Preliminary Remediation Goals: Migration to Groundwater - Soil Screening Levels (SSLs), DAF20.

[i] Comparison criteria derived from U.S. EPA Region 3 (R3) Risk Based Criteria - Industrail Soil.

I:\WO\RAC\251\36509TA-2b.XLS RFW251-2E-AVZD

This document was prepared by Weston Solution, Inc., expressly for U.S. EPA. It shall not be released or disclosed in whole or in part without the express, written permission of U.S. EPA.

Table A-3
Reporting Limits & Screening Criteria -CRL
Volatile Organic Compound (VOC)
Ellsworth Industrial Park Site
Downers Grove, Illinois

CHEMICAL NAME	CRL Reporting Limits (ug/L)	CRL Method Detection Limit (ug/L	TACO Class I GW[a] (mg/L)	U.S. EPA MCLs[b] (mg/L)	R9 Tap Water[c] (mg/L)
1,1,1-Trichloroethane	1	0.17	0.2	0.2	3.2E+00
1,1-Dichloroethane	1	0.15	0.7	--	8.1E-01
1,1-Dichloroethene	1	0.43	0.007	0.007	3.4E-01
1,2-Dichloroethane	1	0.13	0.005	0.005	1.2E-04
Carbon Tetrachloride	1	0.16	0.005	0.005	1.7E-04
Cis-1,2-Dichloroethene	1	0.16	0.07	0.07	6.1E-02
Tetrachloroethene	1	0.16	0.005	0.005	1.0E-04
Trans-1,2-Dichloroethene	1	0.17	0.1	0.1	1.2E-01
Trichloroethene	1	0.21	0.005	0.005	2.8E-05
Vinyl Chloride	2	--	0.002	0.002	1.979E-05

Notes:
"--" = indicates that criteria for that chemical is not available
Practical Quantitation Limits supplied by CRL Field Analytical Support Project (FASP)

[a] Comparison criteria derived from 35 Illinois Administrative Code 742, Tiered Approach to Corrective Action Objectives, Appendix B Table E - Tier 1 Groundwater Remediation Objectives for the Groundwater Component of the Groundwater Ingestion Route.
[b] Comparison criteria derived from United States Environmental Protection Agency (U.S. EPA) National Primary Drinking Water Regulations - Maximum Contaminant Levels (MCLs).

[c] Comparison criteria derived from U.S. EPA Region 9 (R9) Preliminary Remediation Goals: Direct Contact Exposure Pathway - Tap Water.

This document was prepared by Weston Solution, Inc., expressly for U.S. EPA. It shall not be released or disclosed in whole or in part without the express, written permission of U.S. EPA.

Table A-4
Reporting Limits & Screening Criteria
Other Parameters
Ellsworth Industrial Park Site
Downers Grove, Illinois

Parameter	CRL Method Detection Limit	CRL Reporting Limit	CRL Working Range
TOC (soil)	0.10%	1%	0.1-99% Carbon
TOC (water)	1 mg/L	3 mg/L	3-100 mg/L and 1-20 mg/L

Notes:
Soil Limits supplied by CRL SOP: AIG009
Water Limits supplied by CRL SOP: AIG021A, Method 451.1

Parameter	CRL Method Detection Limit (mg/L)	CRL Reporting Limit (mg/L)	TACO Class I GW[a] (mg/L)	U.S. EPA MCLs[b] (mg/L)	R9 Tap Water[c] (mg/L)
Major Anions					
Fluoride	0.03	2.0	4.0	4.0	0.0022 E+06
Chloride	0.10	3.0	200.0	--	--
Nitrate/Nitrite	0.013	0.50	10.0	10.0	0.001 E+07

.es:
"--" = indicates that criteria for that chemical is not available
Limits supplied by CRL SOP: AIG045, Ion Chromatography

[a] Comparison criteria derived from 35 Illinois Administrative Code 742, Tiered Approach to Corrective Action Objectives, Appendix B Table E - Tier 1 Groundwater Remediation Objectives for the Groundwater Component of the Groundwater Ingestion Route.

[b] Comparison criteria derived from United States Environmental Protection Agency (U.S. EPA) National Primary Drinking Water Regulations - Maximum Contaminant Leve (MCLs).

[c] Comparison criteria derived from U.S. EPA Region 9 (R9) Preliminary Remediation Goals: Direct Contact Exposure Pathway - Tap Water.

Parameter	CRL Method Detection Limit	CRL Reporting Limit
Alkalinity	--	5 mg/L

Notes:
Limits supplied by CRL SOP: AIG005, Method 310.1

Parameter	CRL Method Detection Limit	CRL Reporting Limit
Grain Size	--	gram

Notes:
Limits supplied by CRL SOP: AIG038, Method ASTM D2487-93

This document was prepared by Weston Solution, Inc., expressly for U.S. EPA. It shall not be released or disclosed in whole or in part without the express, written permission of U.S. EPA.

Table A-4
Reporting Limits & Screening Criteria
Other Parameters
Ellsworth Industrial Park Site
Downers Grove, Illinois

Parameter	CRL Reporting Limit
Moisture Content	1%

Notes:
Limits supplied by CRL SOP: AIG019

Parameter	CGC Reporting Limit
Hydraulic Permeability	1X10 -5

Notes:
Limits supplied by CGC SOP: ASTM 5856-95

Parameter	ESN Reporting Limit
Cation Exchange Capacity	milliequivalents/100 grams of soil

Notes:
Limits supplied by ESN SOP: WC.CEC.001 Method 6010B / BaCL2 Compulsive Exchange Method

Parameter	ESN Reporting Limit
Oxidation Reduction Potential	millivolts

Notes:
Limits supplied by ESN SOP: WC.Redox.001

Parameter	ESN Reporting Limit	TACO Class I GW[a] (mg/L)	U.S. EPA MCLs[b] (mg/L)	R9 Tap Water[c] (mg/L)
Sulfate	2 mg/L	400.0	--	--

Limits supplied by ESN SOP: AAAXXX Method 9056B

Notes:
"--" = indicates that criteria for that chemical is not available
Limits supplied by CRL SOP: AIG05, Ion Chromatography

[a] Comparison criteria derived from 35 Illinois Administrative Code 742, Tiered Approach to Corrective Action Objectives, Appendix B Table E - Tier 1 Groundwater Remediation Objectives for the Groundwater Component of the Groundwater Ingestion Route.

[b] Comparison criteria derived from United States Environmental Protection Agency (U.S. EPA) National Primary Drinking Water Regulations - Maximum Contaminant (MCLs).

[c] Comparison criteria derived from U.S. EPA Region 9 (R9) Preliminary Remediation Goals: Direct Contact Exposure Pathway - Tap Water.

This document was prepared by Weston Solution, Inc., expressly for U.S. EPA. It shall not be released or disclosed in whole or in part without the express, written permission of U.S. EPA.

Table A-4
Reporting Limits & Screening Criteria
Other Parameters
Ellsworth Industrial Park Site
Downers Grove, Illinois

Parameter	ESN Reporting Limit
Dissolved Hydrogen Gases	
Methane	300 ug/L
Ethane	50 ug/L
Ethene	50 ug/L

Notes:
Limits supplied by CRL SOP: AIG05, Ion Chromatography

Parameter	ERT/REAC Reporting Limits (ug/m3)
1,1,1-Trichloroethane	4.5
1,1-Dichloroethane	4.5
1,1-Dichloroethene	4.5
1,2-Dichloroethane	4.5
Carbon Tetrachloride	4.5
Cis-1,2-Dichloroethene	4.5
Tetrachloroethene	4.5
Trans-1,2-Dichloroethene	4.5
Trichloroethene	4.5
Vinyl Chloride	4.5

Notes:
Limits supplied by ESN SOP: REAC 1816 Indoor Air Analysis of VOC by GC/MS

Parameter	Beacon Reporting Limits (nanograms)
1,1,1-Trichloroethane	25
1,1-Dichloroethane	25
1,1-Dichloroethene	25
1,2-Dichloroethane	25
Carbon Tetrachloride	25
Cis-1,2-Dichloroethene	25
Tetrachloroethene	25
Trans-1,2-Dichloroethene	25
Trichloroethene	25
Vinyl Chloride	25

Notes:
Limits supplied by Beacon: Method 8260

This document was prepared by Weston Solution, Inc., expressly for U.S. EPA. It shall not be released or disclosed in whole or in part without the express, written permission of U.S. EPA.

FIGURES

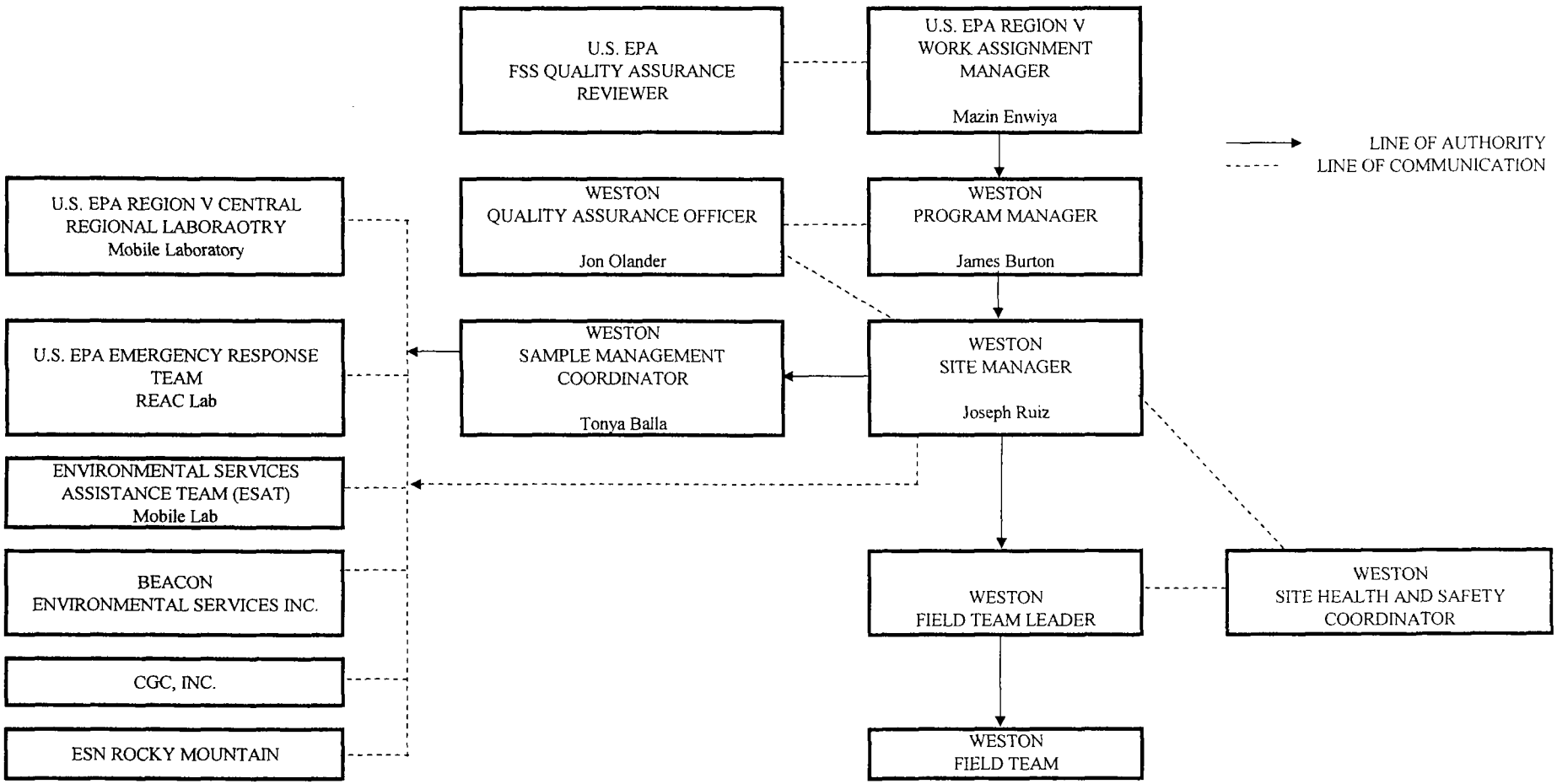

RESPONSE ACTION CONTRACT U.S. EPA CONTRACT No 68-W7-0026 WORK ASSIGNMENT No. 251-RICO-B52A DOCUMENT CONTROL No. RFW251-2E-AVZD	Figure A-1 Project Organization Chart Ellsworth Industrial Park Site Downers Grove, Illinois

I:\WO\RAC\251\36509FigA-1.XLS

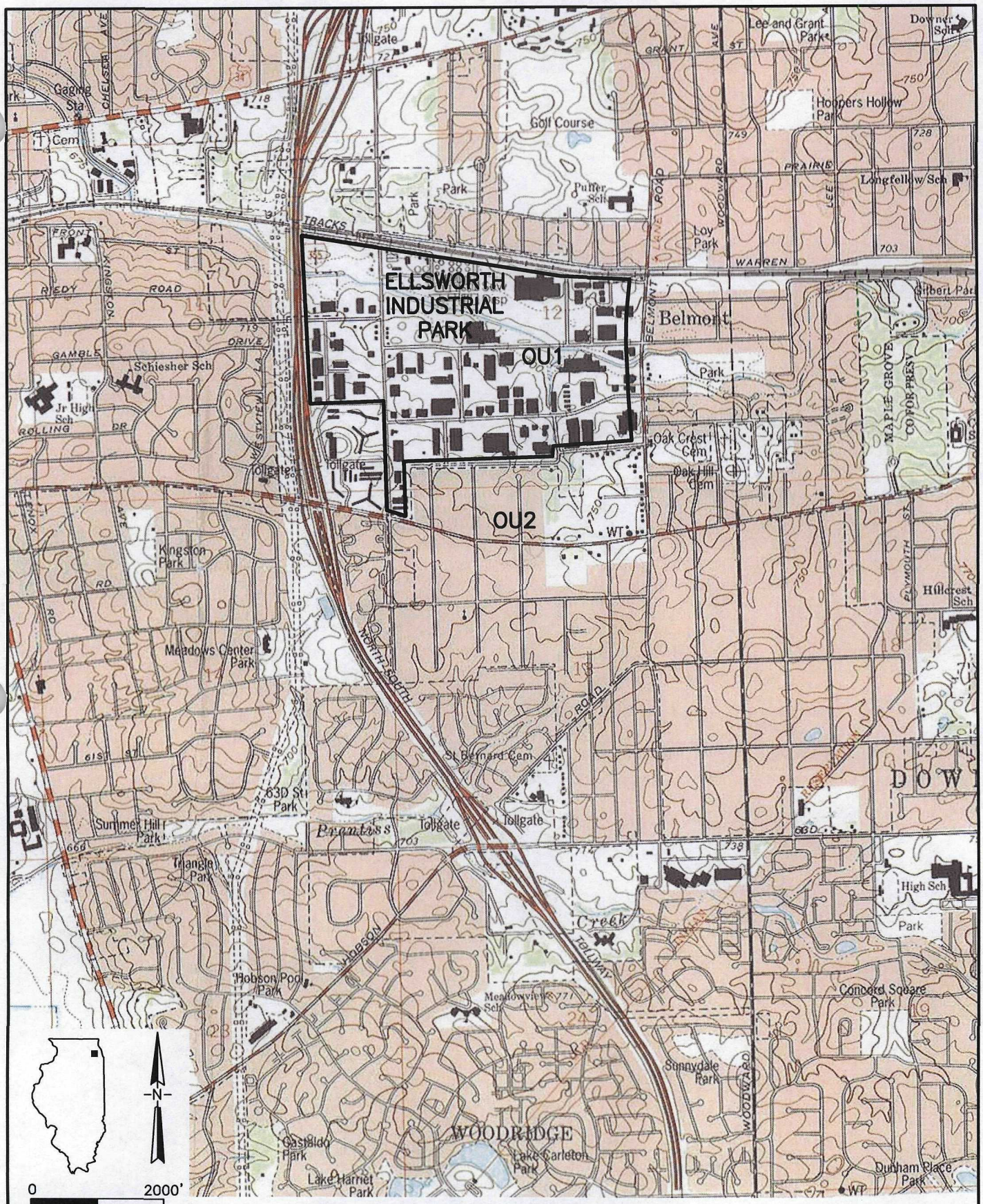

SOURCE: U.S.G.S. 7.5 MINUTE TOPOGRAPHIC MAPS.
WHEATON, ILLINOIS QUADRANGLE.

FIGURE A–2

RESPONSE ACTION CONTRACT	SITE LOCATION MAP
U.S. EPA CONTRACT No. 68–W7–0026 WORK ASSIGNMENT No. **251–RICO–B52A** DOCUMENT CONTROL No. **RFW251–2E–AVZD**	ELLSWORTH INDUSTRIAL PARK SITE U.E. EPA Downers Grove, Illinois

SDMS US EPA Region V

Imagery Insert Form

Some images in this document may be illegible or unavailable in SDMS.
Please see reason(s) indicated below:

☐ Illegible due to bad source documents. Image(s) in SDMS is equivalent to hard copy.

Specify Type of Document(s) / Comments:

☐ Includes ___ COLOR or RESOLUTION variations.
Unless otherwise noted, these pages are available in monochrome. The source document page(s) is more legible than the images. The original document is available for viewing at the Superfund Records Center.

Specify Type of Document(s) / Comments:

☐ Confidential Business Information (CBI).
This document contains highly sensitive information. Due to confidentiality, materials with such information are not available in SDMS. You may contact the EPA Superfund Records Manager if you wish to view this document.

Specify Type of Document(s) / Comments:

☒ Unscannable Material:
Oversized __x__ or ____ Format.
Due to certain scanning equipment capability limitations, the document page(s) is not available in SDMS. .

Specify Type of Document(s) / Comments:

☐ Document is available at the EPA Region 5 Records Center.

Specify Type of Document(s) / Comments:

Figure A-11
Project Schedule
Ellsworth Industrial Park
Downers Grove, Illinois

ID	Task Name	Duration	Start	Finish
1	Kick-Off Meeting	1 day	Tue 8/8/06	Tue 8/8/06
2	QAPP Preparation	28 days	Wed 8/9/06	Fri 9/15/06
3	Work Plan Preparation	22 days	Wed 8/9/06	Thu 9/7/06
4	U.S. EPA Review of QAPP	5 days	Mon 9/18/06	Fri 9/22/06
5	U.S. EPA Review of Work Plan	5 days	Fri 9/8/06	Thu 9/14/06
6	Subcontractor Procurement	15 days	Fri 9/8/06	Thu 9/28/06
7	Mobilization	5 days	Mon 9/18/06	Fri 9/22/06
8	**Sub-Slab Monitoring**	**15 days**	**Mon 9/25/06**	**Fri 10/13/06**
9	Building Investigation	5 days	Mon 9/25/06	Fri 9/29/06
10	Concrete Coring	5 days	Mon 10/2/06	Fri 10/6/06
11	Sample Installation/Removal	5 days	Mon 10/9/06	Fri 10/13/06
12	**Utility Corridor Survey**	**19 days**	**Tue 10/3/06**	**Fri 10/27/06**
13	Obtain Records	1 day	Tue 10/3/06	Tue 10/3/06
14	Conversion to AutoCAD	4 days	Wed 10/4/06	Mon 10/9/06
15	Vapor Sampling	10 days	Mon 10/16/06	Fri 10/27/06
16	**Geological Investigation**	**42 days**	**Mon 10/30/06**	**Tue 12/26/06**
17	Utility Locate - Initial	2 days	Mon 10/30/06	Tue 10/31/06
18	Sonic Drilling & Soil Sampling	20 days	Wed 11/1/06	Tue 11/28/06
19	Geoprobe Drilling & Soil Sampling	20 days	Wed 11/29/06	Tue 12/26/06
20	On-Site Laboratory Analysis	45 days	Mon 10/30/06	Fri 12/29/06
21	**Hydrogeological Investigation**	**26 days**	**Wed 12/27/06**	**Wed 1/31/07**
22	Utility Locate - Initial	2 days	Wed 12/27/06	Thu 12/28/06
23	**Well Installation**	**10 days**	**Fri 12/29/06**	**Thu 1/11/07**
24	Hollow-Stem Auger	10 days	Fri 12/29/06	Thu 1/11/07
25	Sonic Drilling	10 days	Fri 12/29/06	Thu 1/11/07
26	Survey of Monitoring Wells	3 days	Fri 1/12/07	Tue 1/16/07
27	Development of Monitoring Wells	6 days	Tue 1/2/07	Tue 1/9/07
28	Slug Testing of Monitoring Wells	7 days	Wed 1/10/07	Thu 1/18/07
29	Groundwater Sampling	15 days	Wed 1/10/07	Tue 1/30/07
30	Water Level Measurements	1 day	Wed 1/31/07	Wed 1/31/07
31	Investigative Derived Waste Disposal	1 day	Fri 1/12/07	Fri 1/12/07

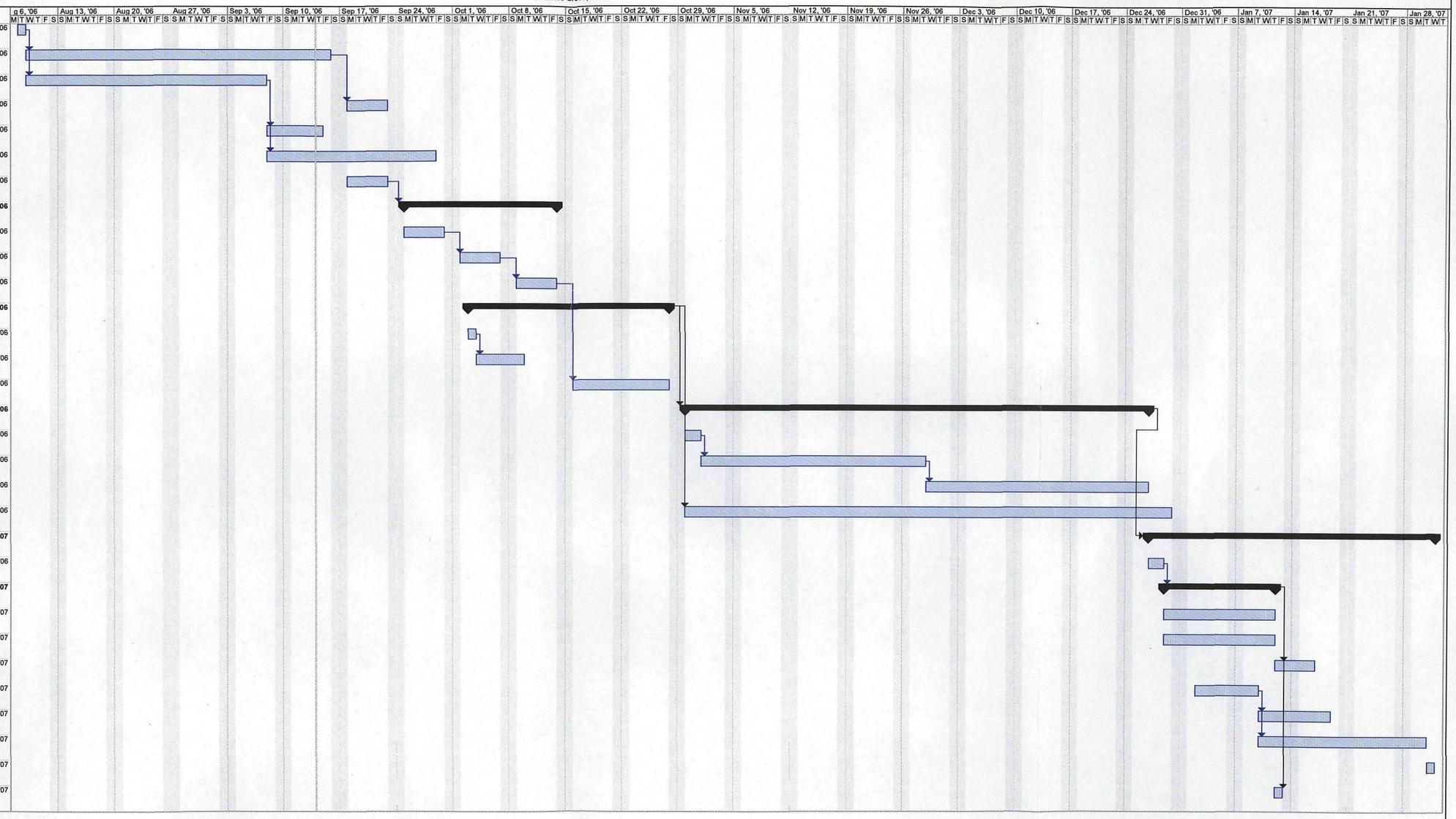

Project: EIP_WP_Schedule-qapp
Date: Thu 9/14/06

Task | Split | Progress | Milestone | Summary | Project Summary | External Tasks | External Milestone | Deadline

RFW251-2E-AVZD

Appendix A
Field Sampling Plan

TABLE OF CONTENTS

Section	Title	Pages
1	INTRODUCTION	1-1
2	SAMPLE NETWORK DESIGN AND RATIONALE	2-1
2.1.	Site Reconnaissance	2-2
2.1.1	Utility Corridor Survey	2-2
2.1.2	Sub-Slab Monitoring	2-3
2.2	Geological Investigations	2-5
2.2.1	Study Area A	2-6
2.2.2	Study Area B	2-6
2.2.3	Study Area C	2-7
2.2.4	Study Area D	2-7
2.2.5	Study Area E	2-8
2.2.6	Study Area F	2-8
2.2.7	Study Area G	2-9
2.2.8	Study Area H	2-9
2.2.9	Study Area I	2-9
2.2.10	Study Area J	2-10
2.2.11	Study Area K	2-10
2.2.12	Other Areas	2-11
2.3	Hydrogeological Investigations	2-11
2.3.1	Study Area A	2-13
2.3.2	Study Area B	2-13
2.3.3	Study Area C	2-14
2.3.4	Study Area D	2-14
2.3.5	Study Area E	2-15
2.3.6	Study Area F	2-15
2.3.7	Study Area G	2-16
2.3.8	Study Area H	2-17
2.3.9	Study Area I	2-17
2.3.10	Study Area J	2-18
2.3.11	Study Area K	2-18
2.3.12	Other Areas	2-19
2.3.13	Bedrock Monitoring Wells	2-20
2.3.14	Survey of New Monitoring Wells	2-20
2.3.15	Hydraulic Tests (Slug Tests)	2-20
2.3.16	Grab Groundwater Sampling	2-21
2.3.17	Monitoring Well Sampling	2-21

This document was prepared by Weston Solutions, Inc., expressly for U.S. EPA. It shall not be released or disclosed in whole or in part without the express, written permission of U.S. EPA.

TABLE OF CONTENTS
(Continued)

Section	Title	Pages
3	**FIELD INVESTIGATION PROTOCOLS**	3-1
3.1	Site Reconnaissance	3-1
3.1.1	Utility Corridor Survey	3-1
3.1.2	Sub-Slab Monitoring	3-2
3.2	Geological Investigations	3-3
3.2.1	Soil Investigation	3-3
3.3	Hydrogeological Investigations	3-6
3.3.1	Monitoring Well Installation	3-6
3.3.2	Monitoring Well Development	3-8
3.3.3	Hydraulic Tests (Slug Tests)	3-9
3.3.4	Groundwater Evaluation Measurements	3-9
3.3.5	Surveying of Monitoring Wells	3-10
3.3.6	Monitoring Well Sampling	3-10
3.4	Decontamination Procedures	3-13
4	**FIELD QUALITY CONTROL SAMPLES**	4-1
4.1	Field Duplicate Samples	4-2
4.2	Matrix Spike/Matrix Spike Duplicate Samples (MS/MSDs)	4-2
4.3	Field Blanks	4-2
4.4	Trip Blanks	4-3
5	**SAMPLE NUMBERING SYSTEM**	5-1
5.1	Project Sample Numbering System	5-1
5.2	CLP Numbering System	5-3
6	**SAMPLE DOCUMENTATION AND TRACKING**	6-1
6.1	Field Record	6-1
6.1.1	Documentation	6-1
6.1.2	Field Log	6-1
6.2	Field Chain-of-Custody Procedures	6-2
6.3	Laboratory Chain-of-Custody Procedures	6-3
6.4	Sample Documentation Forms	6-3
6.4.1	Chain-of-Custody Form	6-4
6.4.2	Chain-of-Custody Seals	6-4
6.4.3	Sample Tags	6-5
6.5	Sample Shipping Procedures	6-6

This document was prepared by Weston Solutions, Inc., expressly for U.S. EPA. It shall not be released or disclosed in whole or in part without the express, written permission of U.S. EPA.

TABLE OF CONTENTS
(Continued)

Section	Title	Pages
7	SAMPLE HANDLING	7-1
	7.1 Sample Containers and Sample Preservation	7-1
	7.2 Sample Packaging and Shipment	7-1
8	SAMPLING TEAM ORGANIZATION	8-1
9	MANAGEMENT OF INVESTIGATION-DERIVED WASTES	9-1
10	SAMPLE CONTAINER PROCUREMENT	10-1

This document was prepared by Weston Solutions, Inc., expressly for U.S. EPA. It shall not be released or disclosed in whole or in part without the express, written permission of U.S. EPA.

LIST OF TABLES

Tables	Title
2-1	Summary of Sample Matrices, Analytical Parameters, and Frequencies for Sampling Program
2-2	Summary of Soil and Groundwater Sampling Program
3-1	Standard Decontamination Protocol for Sampling Equipment
3-2	Standard Decontamination Protocol for Drilling Equipment
7-1	Sample Container, Volume, and Preservation Requirements

This document was prepared by Weston Solutions, Inc., expressly for U.S. EPA. It shall not be released or disclosed in whole or in part without the express, written permission of U.S. EPA.

LIST OF FIGURES

Figures	Title
2-1	Primary and Secondary Study Areas
2-2	Proposed Sampling Locations-Study Area A
2-3	Proposed Sampling Locations-Study Area B
2-4	Proposed Sampling Locations-Study Area C
2-5	Proposed Sampling Locations-Study Area D
2-6	Proposed Sampling Locations-Study Area E
2-7	Proposed Sampling Locations-Study Area F
2-8	Proposed Sampling Locations-Study Area G
2-9	Proposed Sampling Locations-Study Area H
2-10	Proposed Sampling Locations-Study Area I
2-11	Proposed Sampling Locations-Study Area J
2-12	Proposed Sampling Locations-Study Area K
2-13	Proposed Sampling Locations-2500 Curtiss Street
2-14	Proposed Sampling Locations-Property Located South of the Intersection of Curtiss & Glenview, East of Belmont
2-15	Proposed Bedrock Monitoring Wells
3-1	Monitoring Well Construction Diagram

This document was prepared by Weston Solutions, Inc., expressly for U.S. EPA. It shall not be released or disclosed in whole or in part without the express, written permission of U.S. EPA.

SECTION 1
INTRODUCTION

The objective of this FSP is to collect data to support site characterization and to provide technical support for the development of remedial alternatives during the RI/FS process for the Ellsworth Industrial Park OU1 Site (Site). Overall, the goals of the project are the following:

- RI/FS activities;
- Selection of an approach for site remediation; and
- Support a Record of Decision (ROD).

This FSP presents the details of the proposed field sampling activities, discusses sample rationale, and provides the field sampling procedures and protocols. Specifically, the FSP is organized as follows and addresses the following:

- Section 2 – Sample Network Design and Rationale
- Section 3 – Field Investigation Protocols
- Section 4 – Field Quality Control Samples
- Section 5 – Sample Numbering System
- Section 6 – Sample Documentation and Tracking
- Section 7 – Sample Handling
- Section 8 – Sample Team Organization
- Section 9 – Management of Investigation-Derived Wastes
- Section 10 – Sample Container Procurement

This document was prepared by WESTON® under the U.S. EPA Region V Work Assignment No. 251-RICO-B52A.

This document was prepared by Weston Solutions, Inc., expressly for U.S. EPA. It shall not be released or disclosed in whole or in part without the express, written permission of U.S. EPA.

SECTION 2

SAMPLE NETWORK DESIGN AND RATIONALE

The goals of the field investigation at the Site are as follows:

- Delineate potential chlorinated solvent source areas present within OU1 of the Ellsworth Industrial Park Site that could act as a continuing source of contamination in groundwater.
- Gather sufficient information to assess effective remedies for the contamination that are protective of human health and the environment.
- Delineation of the pathways from the potential source areas to the bedrock aquifer system and the distribution of contamination in the bedrock aquifer, such that mitigation and remedial alternatives can be evaluated and the groundwater quality of the aquifer can be restored.

The technical approach proposed for use at the site utilizes the principles of the Triad Approach. The Triad Approach is a U.S. EPA streamlining initiative where detailed systematic planning processes are used to develop and optimize project activities. Activities are sequenced to limit the size of field crews and the need for exhaustive, unfocused sampling and analysis effort. The Triad Approach also promotes the use of innovative field-based methods to improve the quantity and quality of information available to support decision making. Data of various types will be used collaboratively to focus the sampling efforts and reduce overall project costs.

A number of past investigations have been conducted within and surrounding the Site by federal, state, municipal, and private property owners (refer to Section A.5.2.1). Historical sample locations are presented on Figures A-4a and A-4b of the QAPP. Analytical data from all of the investigations that were not conducted by U.S. EPA or the Illinois Environmental Protection Agency (IEPA) were not incorporated into the Ellsworth database, and is not reflected in the QAPP tables or figures.

This document was prepared by Weston Solutions, Inc., expressly for U.S. EPA. It shall not be released or disclosed in whole or in part without the express, written permission of U.S. EPA.

Table 2-1, presents the sample matrices, analytical parameters, and frequencies of sample collection for the proposed sampling activities. In addition, Table 2-2, presents a summary of the overall sampling program, which is detailed by subareas within the Site. The following subsections present the rationale behind each field activity planned for the field investigation.

2.1 SITE RECONNAISSANCE

2.1.1 Utility Corridor Survey

A utility corridor evaluation targeting features such as sump, sand, and grease traps will be performed initially to evaluate potential sources and releases that may not have been identified during previous investigations. This preliminary survey will be designed to further assess the significance and potential extent of current sources, and of other potential source areas encountered. This investigation will be conducted in two stages: data gathering and compilation, and vapor sampling.

The data gathering and compilation stage of the utility corridor survey will be accomplished by first reviewing available records, such as DuPage County underground utility (water, sanitary sewer, storm sewer) maps, individual facility records and maps, and private utility records (ComEd, Peoples Gas/Nicor, telecommunications providers, etc.). The DuPage County underground utility maps are in the process of being converted into electronic files, but are only currently available as paper copies. In order to maximize the effectiveness of the underground utility locations, the paper copies will be digitized and imported as layers onto the existing Ellsworth Industrial Park figures. The main focus of this investigation will be the storm and sanitary sewers within the Ellsworth Industrial Park, specifically the portions of the utility lines extending from the facility buildings to the main lines. If the review of the available records does not yield sufficient information, then an inspection will

This document was prepared by Weston Solutions, Inc., expressly for U.S. EPA. It shall not be released or disclosed in whole or in part without the express, written permission of U.S. EPA.

be undertaken. The inspection may consist of some combination of the following: visual survey, dye testing, inspection camera survey, and inspection radio tracking survey.

The second stage of the utility corridor survey will involve vapor sampling within the underground utility corridors. Vapor samples will be collected from easily accessible locations, such as catch basins, sumps, traps, manholes, and outfalls. The vapor sampling will be conducted using destructible charcoal tube sample collection device. Vapor samples will be collected within the charcoal tubes using personal air sampling pumps at a flow rate of 1 liter per minute (L/min) for a duration of 8 hours. Following sample collection, the tubes will be shipped to U.S. EPAs ERT/REAC laboratory for analysis for the select list of VOC compounds. Sample locations and the total number of samples will be based on the results of the data gathering and compilation stage of the utility corridor survey. It is estimated that approximately 100 investigative samples will be collected during the utility corridor survey.

2.1.2 Sub-Slab Monitoring

Following the utility corridor survey, building sub-slab passive soil gas monitoring will be conducted. The objective of this monitoring program is to identify if major sources exist below select buildings. The buildings where the sub-slab passive soil gas samples will be collected are illustrated on Figures 2-2 through 2-14, and the number of samples anticipated per study area is summarized in Table 2-2. The location of the sub-slab samples illustrated on Figures 2-2 through 2-14 are intended only to provide a visual illustration of the number of samples proposed in each of the areas, and are not meant to necessarily illustrate the proposed sampling locations. The actual locations of the sub-slab samples will be determined based on visual observations and historical information. In addition, the number of sub-slab passive soil gas samples may be refined based on the results of the utility corridor survey and information gathering activities.

This document was prepared by Weston Solutions, Inc., expressly for U.S. EPA. It shall not be released or disclosed in whole or in part without the express, written permission of U.S. EPA.

The installation of passive soil gas samplers beneath building slabs will require that the building slabs be penetrated and soil gas sampled from beneath the building slabs. A concrete coring subcontractor will first core a 1 or 2-inch hole through the building slabs in areas determined by the Field Team Leader during an initial site inspection, and the locations will be based on visual observations and historical information. Following the concrete coring activities, the passive soil gas samples will be collected using the technology and methodology listed in the following subsection. Passive soil gas samples may be collected from variable depths from the granular backfill (which is more porous than native material) located under building slabs or foundations.

Sampling of the soil gas beneath building slabs is accomplished by advancing a 1-inch diameter hole to the required depth using a hammer drill. The passive soil gas sampler (which contains two pairs of hydrophobic adsorbent cartridges selected to effectively target a broad range of compounds) is then installed in the upper portion of the hole. Following the creation of the sampling hole, it is fitted with a sanitized metal pipe sleeve. After the sampler is installed inside the pipe, the hole is patched with an aluminum foil plug and a thin concrete patch (not pre-mixed concrete) to protect the sampler. Corks will not be used to plug the holes, because they can allow contamination to enter into the hole during the exposure period, resulting in false positives.

The samplers will generally be exposed to subsurface gas for three days. The duration of the exposure period will be determined based on the soil type where the passive soil gas sampler is placed. Following the exposure period, the samplers will be retrieved and shipped to Beacon Environmental Services for VOC analysis. A trip blank, which will remain with the passive soil gas samples during preparation, shipment, and storage, will be included with each batch of field samples.

This document was prepared by Weston Solutions, Inc., expressly for U.S. EPA. It shall not be released or disclosed in whole or in part without the express, written permission of U.S. EPA.

2.2 GEOLOGICAL INVESTIGATIONS

The geological investigation will consist of a soil boring investigation using a combination of direct-push technology and sonic drilling techniques. The investigation will be conducted in order to characterize potential sources, delineate chlorinated solvent contamination within the soil, characterize the subsurface geology, and to select where additional soil borings and monitoring wells should be advanced. The specific number of soil borings, location of the soil borings, and the soil sampling depths will be determined in the field. The current sampling program will supplement existing data to fulfill a complete spatial characterization of the Site and the extent of soil contamination.

Soil borings are expected to be advanced in general to 20 to 40-feet below ground surface (bgs), with the termination depth to be based on field observations and the results of the mobile laboratory analysis. It is estimated that a total of 289 soil borings will be advanced, with approximately 20% of the borings advanced to bedrock using sonic drilling methods. This will enable the deeper lithology and chemical conditions to be evaluated at the bedrock surface (e.g., high concentration zones or DNAPL). Soil borings will be continuously logged by a qualified Geologist using the United Soil Classification System (USCS) to document and describe the subsurface geology. Soil samples will be analyzed on-site using the U.S. EPA Region V ESAT Mobile Laboratory, employing GC/MS technology. This method allows for the rapid analysis of many soil samples per day while achieving very low reporting limits (part per billion range) for chlorinated solvents. Samples will be selected along the individual soil cores for on-site analysis through inspection and the use of a photoionization detector (PID) and visual observations. All of these samples will be forwarded to U.S. EPA Region V CRL for percent moisture analysis. Approximately 30% of all soil samples will be split and submitted to CRL for VOCs analysis as a QA/QC measure of the mobile lab. Select samples will also be submitted to CRL for total organic carbon (TOC), and grain size. In addition, select samples will be submitted to WESTON-procured laboratories for cation exchange capacity

This document was prepared by Weston Solutions, Inc., expressly for U.S. EPA. It shall not be released or disclosed in whole or in part without the express, written permission of U.S. EPA.

(CEC), oxidation-reduction potential (ORP), and in-situ hydraulic permeability analyses. A large number of soil samples will be collected from the approximately 289 soil borings advanced at the Site. It is anticipated that the on-site laboratory will only analyze a portion of these samples. The decision to either initially analyze or hold the samples will be made by the FTL based on historical data, field observations and air monitoring readings. The decision to analyze any of the samples that were initially held will also be made by the FTL based on the analytical results from other sample intervals.

The following sections examine the soil sampling activities proposed in each of the study areas individually. A subsection below is included for areas where sampling will occur that is not within any of the study areas.

2.2.1 Study Area A

A total of 21 soil borings are proposed for Study Area A; however, 10 of them are not illustrated on Figure 2-2, because the locations will be determined based on the results of the utility corridor survey and sub-slab sampling. It is assumed that a total of 21 soil borings will be advanced to depths ranging from 20 to 40 ft bgs. If the existing analytical data, utility corridor survey, and sub-slab sampling do not discover any chlorinated solvent contamination within this study area, the number of soil borings advanced may be decreased, potentially excluding some of the 21 soil borings proposed. The quantities and/or locations indicated above and in Table 2-2 and Figure 2-2 are preliminary.

2.2.2 Study Area B

A total of 24 soil borings are proposed for Study Area B; however, 14 of them are not illustrated on Figure 2-3, because the locations will be determined based on the results of the utility corridor survey

This document was prepared by Weston Solutions, Inc., expressly for U.S. EPA. It shall not be released or disclosed in whole or in part without the express, written permission of U.S. EPA.

and sub-slab sampling. It is assumed that a total of 24 soil borings will be advanced to depths ranging from 20 to 40 ft bgs. If the existing analytical data, utility corridor survey, and sub-slab sampling do not discover any chlorinated solvent contamination within this study area, the number of soil borings advanced may be decreased, potentially excluding some of the 24 soil borings proposed. The quantities and/or locations indicated above and in Table 2-2 and Figure 2-3 are preliminary.

2.2.3 Study Area C

A total of 55 soil borings are proposed for Study Area C; however, 10 of them are not illustrated on Figure 2-4, because the locations will be determined based on the results of the utility corridor survey and sub-slab sampling. It is assumed that a total of 55 soil borings will be advanced to depths ranging from 20 to 40 ft bgs. If the existing analytical data, utility corridor survey, and sub-slab sampling do not discover any chlorinated solvent contamination within this study area, the number of soil borings advanced may be decreased, potentially excluding some of the 55 soil borings proposed. The quantities and/or locations indicated above and in Table 2-2 and Figure 2-4 are preliminary.

2.2.4 Study Area D

A total of 27 soil borings are proposed for Study Area D; however, 10 of them are not illustrated on Figure 2-5, because the locations will be determined based on the results of the utility corridor survey and sub-slab sampling. It is assumed that a total of 27 soil borings will be advanced to depths ranging from 20 to 40 ft bgs. If the existing analytical data, utility corridor survey, and sub-slab sampling do not discover any chlorinated solvent contamination within this study area, the number of soil borings advanced may be decreased, potentially excluding some of the 27 soil borings

This document was prepared by Weston Solutions, Inc., expressly for U.S. EPA. It shall not be released or disclosed in whole or in part without the express, written permission of U.S. EPA.

proposed. The quantities and/or locations indicated above and in Table 2-2 and Figure 2-5 are preliminary.

2.2.5 Study Area E

A total of 18 soil borings are proposed for Study Area E; however, 10 of them are not illustrated on Figure 2-6, because the locations will be determined based on the results of the utility corridor survey and sub-slab sampling. It is assumed that a total of 18 soil borings will be advanced to depths ranging from 20 to 40 ft bgs. If the existing analytical data, utility corridor survey, and sub-slab sampling do not discover any chlorinated solvent contamination within this study area, the number of soil borings advanced may be decreased, potentially excluding some of the 18 soil borings proposed. The quantities and/or locations indicated above and in Table 2-2 and Figure 2-6 are preliminary.

2.2.6 Study Area F

A total of 22 soil borings are proposed for Study Area F; however, 10 of them are not illustrated on Figure 2-7, because the locations will be determined based on the results of the utility corridor survey and sub-slab sampling. It is assumed that a total of 22 soil borings will be advanced to depths ranging from 20 to 40 ft bgs. If the existing analytical data, utility corridor survey, and sub-slab sampling do not discover any chlorinated solvent contamination within this study area, the number of soil borings advanced may be decreased, potentially excluding some of the 22 soil borings proposed. The quantities and/or locations indicated above and in Table 2-2 and Figure 2-7 are preliminary.

This document was prepared by Weston Solutions, Inc., expressly for U.S. EPA. It shall not be released or disclosed in whole or in part without the express, written permission of U.S. EPA.

2.2.7 Study Area G

A total of 43 soil borings are proposed for Study Area G; however, 15 of them are not illustrated on Figure 2-8, because the locations will be determined based on the results of the utility corridor survey and sub-slab sampling. It is assumed that a total of 43 soil borings will be advanced to depths ranging from 20 to 40 ft bgs. If the existing analytical data, utility corridor survey, and sub-slab sampling do not discover any chlorinated solvent contamination within this study area, the number of soil borings advanced may be decreased, potentially excluding some of the 43 soil borings proposed. The quantities and/or locations indicated above and in Table 2-2 and Figure 2-8 are preliminary.

2.2.8 Study Area H

The soil borings proposed for Study Area H are not illustrated on Figure 2-9, because the locations will be determined based on the results of the utility corridor survey and sub-slab sampling. It is assumed that a total of 10 soil borings will be advanced to depths ranging from 20 to 40 ft bgs. If the existing analytical data, utility corridor survey, and sub-slab sampling do not discover any chlorinated solvent contamination within this study area, the number of soil borings advanced may be decreased, potentially excluding some of the 10 soil borings proposed. The quantities indicated above and in Table 2-2 are preliminary.

2.2.9 Study Area I

A total of 14 soil borings are proposed for Study Area I; however, 10 of them are not illustrated on Figure 2-10, because the locations will be determined based on the results of the utility corridor survey and sub-slab sampling. It is assumed that a total of 14 soil borings will be advanced to depths ranging from 20 to 40 ft bgs. If the existing analytical data, utility corridor survey and sub-slab

This document was prepared by Weston Solutions, Inc., expressly for U.S. EPA. It shall not be released or disclosed in whole or in part without the express, written permission of U.S. EPA.

sampling do not discover any chlorinated solvent contamination within this study area, the number of soil borings advanced may be decreased, potentially excluding some of the 14 soil borings proposed. The quantities and/or locations indicated above and in Table 2-2 and Figure 2-10 are preliminary.

2.2.10 Study Area J

The soil borings proposed for Study Area J are not illustrated on Figure 2-11, because the locations will be determined based on the results of the utility corridor survey and sub-slab sampling. It is assumed that a total of 15 soil borings will be advanced to depths ranging from 20 to 40 ft bgs. If the existing analytical data, utility corridor survey, and sub-slab sampling do not discover any chlorinated solvent contamination within this study area, the number of soil borings advanced may be decreased, potentially excluding some of the 15 soil borings proposed. The quantities indicated above and in Table 2-2 are preliminary.

2.2.11 Study Area K

The soil borings proposed for Study Area K are not illustrated on Figure 2-12, because the locations will be determined based on the results of the utility corridor survey and sub-slab sampling. It is assumed that a total of 15 soil borings will be advanced to depths ranging from 20 to 40 ft bgs. If the existing analytical data, utility corridor survey, and sub-slab sampling do not discover any chlorinated solvent contamination within this study area, the number of soil borings advanced may be decreased, potentially excluding some of the 15 soil borings proposed. The quantities indicated above and in Table 2-2 are preliminary.

This document was prepared by Weston Solutions, Inc., expressly for U.S. EPA. It shall not be released or disclosed in whole or in part without the express, written permission of U.S. EPA.

2.2.12 Other Areas

2500 Curtiss Street

Although the property located at 2500 Curtiss Street is not within any of the Study Areas, a limited soil investigation is planned. The soil borings proposed are not illustrated on Figure 2-13, because the locations will be determined based on the results of the utility corridor survey and sub-slab sampling. It is assumed that a total of 15 soil borings will be advanced to depths ranging from 20 to 40 ft bgs. If the utility corridor survey and the soil gas sampling do not discover any chlorinated solvent contamination within this study area, the number of soil borings advanced may be decreased, potentially excluding some of the 15 soil borings proposed. The quantities indicated above and in Table 2-2 are preliminary.

Property South of the Intersection of Curtiss and Glenview and East of Belmont

Although the property located south of the intersection of Curtiss and Glenview and east of Belmont is not within any of the Study Areas, a limited soil investigation is planned. The soil borings proposed are not illustrated on Figure 2-14, because the locations will be determined based on the results of the soil gas sampling. It is assumed that a total of 10 soil borings will be advanced to depths ranging from 20 to 40 ft bgs. If the soil gas sampling does not discover any chlorinated solvent contamination within this study area, the number of soil borings advanced may be decreased, potentially excluding some of the 10 soil borings proposed. The quantities indicated above and in Table 2-2 are preliminary.

2.3 HYDROGEOLOGICAL INVESTIGATIONS

WESTON will conduct a hydrogeological investigation to characterize potential sources, delineate chlorinated solvent contamination within the groundwater, characterize the site geology and hydrogeology, and to select where additional soil borings and monitoring wells should be advanced.

This document was prepared by Weston Solutions, Inc., expressly for U.S. EPA. It shall not be released or disclosed in whole or in part without the express, written permission of U.S. EPA.

The hydrogeological investigation is anticipated to include installation, surveying, hydraulic testing (existing and newly installed), and sampling (existing and newly installed).

It is assumed that approximately 83 shallow and intermediate monitoring wells will be installed at the site. In addition, 10 monitoring wells will be installed in the bedrock aquifer. The depths of the monitoring wells will vary greatly across the site and the exact location of the monitoring wells will be determined in the field. The shallow and intermediate monitoring wells will be advanced by a standard truck-mounted hollow-stem auger (HSA) drill rig. Bedrock monitoring wells will be installed using sonic drilling techniques methods. All monitoring wells will be continuously logged by a qualified Geologist using USCS to document and describe the subsurface geology. Monitoring wells installed in areas where more than one of the groundwater types (shallow, intermediate, bedrock) is present, will be installed in nests, which are closely located wells within different aquifers.

Monitoring wells will be 2-inch diameter stainless steel well screens and risers. Screens will be either 5 or 10 feet in length with a slot size of 0.010-inch and will be installed straddling the water table. The wells will be completed as either stick-ups with 6-inch locking steel protective casings and concrete pads; or flush mounts, with locking caps and concrete pads. Each new monitoring well will be developed no sooner than 24 hours after completion to ensure representative groundwater samples can be collected. Sample collection will occur no sooner than 24 hours after well development.

The following sections examine the monitoring well installation and groundwater sampling activities proposed in each of the study areas individually. A subsection below is also included for areas where sampling will occur that is not within any of the study areas. The bedrock monitoring wells that will be installed at the site are not discussed below on an area-by-area basis, but are examined on a Site-wide basis.

This document was prepared by Weston Solutions, Inc., expressly for U.S. EPA. It shall not be released or disclosed in whole or in part without the express, written permission of U.S. EPA.

2.3.1 Study Area A

The proposed locations of monitoring wells within Study Area A are illustrated on Figure 2-2. The exact locations and number of monitoring wells will be determined based on the results of the previous phases of investigation and field observations. Currently, seven intermediate wells are proposed; however, some of these wells could ultimately be classified as shallow or intermediate wells, subject to where groundwater is located. It is assumed that shallow groundwater samples within this area will be collected during the soil investigation as grab samples. The locations specified on Figure 2-2 were based on existing data, but are subject to revision during the field investigation. For example, if either shallow or intermediate groundwater is encountered in the areas of the proposed locations during the soil investigation, the wells will be relocated prior to installation. Also, based on the results of the soil investigation (both chemical and presence or lack of groundwater), the locations of the wells and also the proposed number may be modified. The quantities indicated above and in Table 2-2 are preliminary.

2.3.2 Study Area B

The proposed locations of monitoring wells within Study Area B are illustrated on Figure 2-3. The exact locations and number of monitoring wells will be determined based on the results of the previous phases of investigation and field observations. Currently, six intermediate wells are proposed; however, some of these wells could ultimately be classified as shallow or intermediate wells, subject to where groundwater is located. It is assumed that shallow groundwater samples within this area will be collected during the soil investigation as grab samples. The locations specified on Figure 2-3 were based on existing data, but are subject to revision during the field investigation. For example, if either shallow or intermediate groundwater is encountered in the areas of the proposed locations during the soil investigation, the wells will be relocated prior to installation. Also, based on the results of the soil investigation (both chemical and presence or lack

This document was prepared by Weston Solutions, Inc., expressly for U.S. EPA. It shall not be released or disclosed in whole or in part without the express, written permission of U.S. EPA.

of groundwater), the locations of the wells and also the proposed number may be modified. The quantities indicated above and in Table 2-2 are preliminary.

2.3.3 Study Area C

The proposed locations of monitoring wells within Study Area C are illustrated on Figure 2-4. The exact locations and number of monitoring wells will be determined based on the results of the previous phases of investigation and field observations. Currently, four shallow and eight intermediate wells are proposed; however, this distribution between shallow and intermediate is subject to where groundwater is detected. It is assumed that additional shallow groundwater samples within this area will be collected during the soil investigation as grab samples. The locations specified on Figure 2-4 were based on existing data, but are subject to revision during the field investigation. For example, if either shallow or intermediate groundwater is encountered in the areas of the proposed locations during the soil investigation, the wells will be relocated prior to installation. Also, based on the results of the soil investigation (both chemical and presence or lack of groundwater), the locations of the wells and also the proposed number may be modified. The quantities indicated above and in Table 2-2 are preliminary.

2.3.4 Study Area D

The proposed locations of monitoring wells within Study Area D are illustrated on Figure 2-5. The exact locations and number of monitoring wells will be determined based on the results of the previous phases of investigation and field observations. Currently, four shallow and ten intermediate wells are proposed; however, this distribution between shallow and intermediate is subject to where groundwater is detected. It is assumed that additional shallow groundwater samples within this area will be collected during the soil investigation as grab samples. The locations specified on Figure 2-5 were based on existing data, but are subject to revision during the field investigation. For example,

This document was prepared by Weston Solutions, Inc., expressly for U.S. EPA. It shall not be released or disclosed in whole or in part without the express, written permission of U.S. EPA.

if either shallow or intermediate groundwater is encountered in the areas of the proposed locations during the soil investigation, the wells will be relocated prior to installation. Also, based on the results of the soil investigation (both chemical and presence or lack of groundwater), the locations of the wells and also the proposed number may be modified. The quantities indicated above and in Table 2-2 are preliminary.

2.3.5 Study Area E

The proposed locations of monitoring wells within Study Area E are illustrated on Figure 2-6. The exact locations and number of monitoring wells will be determined based on the results of the previous phases of investigation and field observations. Currently, three intermediate wells are proposed; however, some of these wells could ultimately be classified as shallow or intermediate wells, subject to where groundwater is located. It is assumed that shallow groundwater samples within this area will be collected during the soil investigation as grab samples. The locations specified on Figure 2-6 were based on existing data, but are subject to revision during the field investigation. For example, if either shallow or intermediate groundwater is encountered in the areas of the proposed locations during the soil investigation, the wells will be relocated prior to installation. Also, based on the results of the soil investigation (both chemical and presence or lack of groundwater), the locations of the wells and also the proposed number may be modified. The quantities indicated above and in Table 2-2 are preliminary.

2.3.6 Study Area F

The proposed locations of monitoring wells within Study Area F are illustrated on Figure 2-7. The exact locations and number of monitoring wells will be determined based on the results of the previous phases of investigation and field observations. Currently, four intermediate wells are proposed; however, some of these wells could ultimately be classified as shallow or intermediate

This document was prepared by Weston Solutions, Inc., expressly for U.S. EPA. It shall not be released or disclosed in whole or in part without the express, written permission of U.S. EPA.

wells, subject to where groundwater is located. It is assumed that shallow groundwater samples within this area will be collected during the soil investigation as grab samples. The locations specified on Figure 2-7 were based on existing data, but are subject to revision during the field investigation. For example, if either shallow or intermediate groundwater is encountered in the areas of the proposed locations during the soil investigation, the wells will be relocated prior to installation. Also, based on the results of the soil investigation (both chemical and presence or lack of groundwater), the locations of the wells and also the proposed number may be modified. The quantities indicated above and in Table 2-2 are preliminary.

2.3.7 Study Area G

The proposed locations of monitoring wells within Study Area G are illustrated on Figure 2-8. The exact locations and number of monitoring wells will be determined based on the results of the previous phases of investigation and field observations. Currently, six shallow and nine intermediate wells are proposed; however, this distribution between shallow and intermediate is subject to where groundwater is detected. It is assumed that additional shallow groundwater samples within this area will be collected during the soil investigation as grab samples. The locations specified on Figure 2-8 were based on existing data, but are subject to revision during the field investigation. For example, if either shallow or intermediate groundwater is encountered in the areas of the proposed locations during the soil investigation, the wells will be relocated prior to installation. Also, based on the results of the soil investigation (both chemical and presence or lack of groundwater), the locations of the wells and also the proposed number may be modified. The quantities indicated above and in Table 2-2 are preliminary.

This document was prepared by Weston Solutions, Inc., expressly for U.S. EPA. It shall not be released or disclosed in whole or in part without the express, written permission of U.S. EPA.

2.3.8 Study Area H

The proposed locations of monitoring wells within Study Area H are illustrated on Figure 2-9. The exact locations and number of monitoring wells will be determined based on the results of the previous phases of investigation and field observations. Currently, three intermediate wells are proposed; however, some of these wells could ultimately be classified as shallow or intermediate wells, subject to where groundwater is located. It is assumed that shallow groundwater samples within this area will be collected during the soil investigation as grab samples. The locations specified on Figure 2-9 were based on existing data, but are subject to revision during the field investigation. For example, if either shallow or intermediate groundwater is encountered in the areas of the proposed locations during the soil investigation, the wells will be relocated prior to installation. Also, based on the results of the soil investigation (both chemical and presence or lack of groundwater), the locations of the wells and also the proposed number may be modified. The quantities indicated above and in Table 2-2 are preliminary.

2.3.9 Study Area I

The proposed locations of monitoring wells within Study Area I are illustrated on Figure 2-10. The exact locations and number of monitoring wells will be determined based on the results of the previous phases of investigation and field observations. Currently, three shallow and three intermediate wells are proposed; however, this distribution between shallow and intermediate is subject to where groundwater is detected. It is assumed that additional shallow groundwater samples within this area will be collected during the soil investigation as grab samples. The locations specified on Figure 2-10 were based on existing data, but are subject to revision during the field investigation. For example, if either shallow or intermediate groundwater is not encountered in the areas of the proposed locations during the soil investigation, the wells will be relocated prior to installation. Also, based on the results of the soil investigation (both chemical and presence or lack

This document was prepared by Weston Solutions, Inc., expressly for U.S. EPA. It shall not be released or disclosed in whole or in part without the express, written permission of U.S. EPA.

of groundwater), the locations of the wells and also the proposed number may be modified. The quantities indicated above and in Table 2-2 are preliminary.

2.3.10 Study Area J

The proposed locations of monitoring wells within Study Area J are illustrated on Figure 2-11. The exact locations and number of monitoring wells will be determined based on the results of the previous phases of investigation and field observations. Currently, three intermediate wells are proposed; however, some of these wells could ultimately be classified as shallow or intermediate wells, subject to where groundwater is located. It is assumed that shallow groundwater samples within this area will be collected during the soil investigation as grab samples. The locations specified on Figure 2-11 were based on existing data, but are subject to revision during the field investigation. For example, if either shallow or intermediate groundwater is encountered in the areas of the proposed locations during the soil investigation, the wells will be relocated prior to installation. Also, based on the results of the soil investigation (both chemical and presence or lack of groundwater), the locations of the wells and also the proposed number may be modified. The quantities indicated above and in Table 2-2 are preliminary.

2.3.11 Study Area K

The proposed locations of monitoring wells within Study Area K are illustrated on Figure 2-12. The exact locations and number of monitoring wells will be determined based on the results of the previous phases of investigation and field observations. Currently, four intermediate wells are proposed; however, some of these wells could ultimately be classified as shallow or intermediate wells, subject to where groundwater is located. It is assumed that shallow groundwater samples within this area will be collected during the soil investigation as grab samples. The locations specified on Figure 2-12 were based on existing data, but are subject to revision during the field

This document was prepared by Weston Solutions, Inc., expressly for U.S. EPA. It shall not be released or disclosed in whole or in part without the express, written permission of U.S. EPA.

investigation. For example, if either shallow or intermediate groundwater is encountered in the areas of the proposed locations during the soil investigation, the wells will be relocated prior to installation. Also, based on the results of the soil investigation (both chemical and presence or lack of groundwater), the locations of the wells and also the proposed number may be modified. The quantities indicated above and in Table 2-2 are preliminary.

2.3.12 Other Areas

2500 Curtiss Street

The proposed locations of monitoring wells within 2500 Curtiss Street are illustrated on Figure 2-13. The exact locations and number of monitoring wells will be determined based on the results of the previous phases of investigation and field observations. Currently, three intermediate wells are proposed; however, some of these wells could ultimately be classified as shallow or intermediate wells, subject to where groundwater is located. It is assumed that shallow groundwater samples within this area will be collected during the soil investigation as grab samples. The locations specified on Figure 2-13 were based on existing data, but are subject to revision during the field investigation. For example, if either shallow or intermediate groundwater is encountered in the areas of the proposed locations during the soil investigation, the wells will be relocated prior to installation. Also, based on the results of the soil investigation (both chemical and presence or lack of groundwater), the locations of the wells and also the proposed number may be modified. The quantities indicated above and in Table 2-2 are preliminary.

Property South of the Intersection of Curtiss and Glenview and East of Belmont

The proposed locations of monitoring wells within the property located south of the intersection of Curtiss and Glenview and east of Belmont are illustrated on Figure 2-14. The exact locations and number of monitoring wells will be determined based on the results of the previous phases of investigation and field observations. Currently, three intermediate wells are proposed; however,

This document was prepared by Weston Solutions, Inc., expressly for U.S. EPA. It shall not be released or disclosed in whole or in part without the express, written permission of U.S. EPA.

some of these wells could ultimately be classified as shallow or intermediate wells, subject to where groundwater is located. It is assumed that shallow groundwater samples within this area will be collected during the soil investigation as grab samples. The locations specified on Figure 2-14 were based on existing data, but are subject to revision during the field investigation. For example, if either shallow or intermediate groundwater is encountered during the soil investigation, the wells will be relocated prior to installation. Also, based on the results of the soil investigation (both chemical and presence or lack of groundwater), the locations of the wells and also the proposed number may be modified. The quantities indicated above and in Table 2-2 are preliminary.

2.3.13 Bedrock Monitoring Wells

A total of ten new bedrock monitoring wells will be installed within the Site. The location of four of these proposed wells are shown on Figure 2-15. The remainder of the locations will be determined based on the results of the soil and shallow/intermediate groundwater investigation.

2.3.14 Surveying of Monitoring Wells

Upon completion of the monitoring well installation, WESTON will subcontract an Illinois Licensed Land Surveyor to determine the elevation of the newly installed wells to an accuracy of 0.01 foot, sufficient to allow water level measurement data to be used for groundwater flow mapping.

2.3.15 Hydraulic Tests (Slug Tests)

Single well permeability tests (slug tests) will be conducted in approximately 45 of the monitoring wells at the site (existing and newly installed) to estimate the hydraulic conductivity of the soil. Rising-head and falling-head water levels will be measured using a Hermit SE3000 (or equivalent) data logger equipped with an electronic pressure transducer.

This document was prepared by Weston Solutions, Inc., expressly for U.S. EPA. It shall not be released or disclosed in whole or in part without the express, written permission of U.S. EPA.

2.3.16 Grab Groundwater Sampling

It is assumed that during the geological investigation, that groundwater will be encountered within soil borings, and that grab groundwater samples will be collected from approximately 50 of these borings. Grab groundwater samples will be collected from temporary 1-inch PVC piezometers that will be installed in the soil borings at the depth where groundwater is encountered.

An estimated 50 investigative samples, 5 QA/QC field duplicate samples will be collected from the temporary piezometers and submitted to CRL for analysis. Field blanks are not planned based on the intention of using disposable equipment at each location. Trip blank samples will be required to accompany aqueous VOC sample shipments. Grab groundwater samples will be analyzed for select VOCs.

2.3.17 Monitoring Well Sampling

Groundwater remedial investigation (RI) activities will also consist of sampling newly installed monitoring wells in addition to sampling existing monitoring wells at the site (wells from previous U.S. EPA or IEPA investigations or PRP investigations). An estimated 153 on-site monitoring wells (93 new wells, 40 U.S. EPA/IEPA wells, and 20 PRP wells) will be sampled during RI activities.

An estimated 153 investigative samples and 10 percent field duplicate and field blank QA/QC samples will be collected from on-site monitoring wells. Trip blank samples will also be required to accompany aqueous VOC sample shipments. Groundwater samples will be analyzed for VOCs by CRL. The natural attenuation field measurement parameters to be determined in these monitoring wells will include dissolved oxygen [DO], ORP, pH, conductivity, and temperature, as well as laboratory analyses of major anions [fluoride, chloride, nitrate], alkalinity, and TOC conducted by

This document was prepared by Weston Solutions, Inc., expressly for U.S. EPA. It shall not be released or disclosed in whole or in part without the express, written permission of U.S. EPA.

CRL and sulfate and dissolved hydrocarbon gases ([methane, ethane, ethene) conducted by an a WESTON procured laboratory.

This document was prepared by Weston Solutions, Inc., expressly for U.S. EPA. It shall not be released or disclosed in whole or in part without the express, written permission of U.S. EPA.

SECTION 3
FIELD INVESTIGATION PROTOCOLS

The following sections detail the procedures that will be followed during the field investigation at the Ellsworth Industrial Park. All sample container preservation and volume requirements are outlined in Section 7.

3.1 SITE RECONNAISSANCE

3.1.1 Utility Corridor Survey

A utility corridor evaluation targeting features such as sump, sand, and grease traps will be performed initially to evaluate potential sources and releases that may not have been identified during previous investigations. This preliminary survey will be designed to further assess the significance and potential extent of current sources, and of other potential source areas encountered. This investigation will be conducted in two stages: data gathering and compilation, and vapor sampling.

The data gathering and compilation consists of reviewing available records, such as DuPage County underground utility (water, sanitary sewer, storm sewer) maps, individual facility records and maps, and private utility records (ComEd, Peoples Gas/Nicor, telecommunications providers, etc.). The main focus of this survey will be the storm and sanitary sewers within the OU1 Ellsworth Site, specifically the portions of the utility lines extending from the facility buildings to the main lines. If the review of the available records does not yield sufficient information, then an inspection will be conducted. The inspection may consist of some combination of the following: visual survey, dye testing, inspection camera survey, and inspection radio tracking survey.

This document was prepared by Weston Solutions, Inc., expressly for U.S. EPA. It shall not be released or disclosed in whole or in part without the express, written permission of U.S. EPA.

The second stage of the utility corridor survey will involve vapor sampling within the underground utility corridors. Vapor samples will be collected from easily accessible locations, such as catch basins, sumps, traps, manholes, and outfalls. The vapor sampling will be conducted using destructible charcoal tube sample collection device. Vapor samples will be collected within the charcoal tubes using personal air sampling pumps at a flow rate of 1 liter per minute (L/min) for a duration of 8 hours. Following sample collection, the tubes will be shipped to U.S. EPA's ERT/REAC Laboratory for select VOC analysis. Sample locations and the total number of samples will be based on the results of the data gathering and compilation stage of the utility corridor survey. A step-by-step approach for conducting the utility corridor sampling is presented in Appendix C.

3.1.2 Sub-Slab Monitoring

Sampling of the soil gas beneath building slabs is accomplished by advancing a 1-inch diameter hole to the required depth using a hammer drill. The passive soil gas sampler (which contains two pairs of hydrophobic adsorbent cartridges selected to effectively target a broad range of compounds) is then installed in the upper portion of the hole. Following the creation of the sampling hole, it is fitted with a sanitized metal pipe sleeve. After the sampler is installed inside the pipe, the hole is patched with an aluminum foil plug and a thin concrete patch (not pre-mixed concrete) to protect the sampler. Corks will not be used to plug the holes, because they can allow contamination to enter into the hole during the exposure period, resulting in false positives.

The samplers will generally be exposed to subsurface gas for three days. The duration of the exposure period will be determined based on the soil type where the passive soil gas sampler is placed. Following the exposure period, the samplers will be retrieved and shipped to Beacon Environmental Services for select VOC analysis. A trip blank, which will remain with the passive soil gas samples during preparation, shipment, and storage, will be included with each batch of field samples. A step-by-step approach for conducting the sub-slab monitoring is presented in Appendix C.

This document was prepared by Weston Solutions, Inc., expressly for U.S. EPA. It shall not be released or disclosed in whole or in part without the express, written permission of U.S. EPA.

3.2 GEOLOGICAL INVESTIGATIONS

3.2.1 Soil Investigation

Soil Boring Geoprobe® Sample Collection Procedures

- A truck mounted Geoprobe® (or similar direct push unit) will be used to advance a portion of the soil borings. The selected Geoprobe® rig must be capable of entering multi-terrain areas as needed based on site conditions. A qualified firm will be subcontracted to complete the soil borings.

- Following removal of the sampler from the borehole, the sampler will be opened on a clean surface (e.g., polyethylene sheeting). The soil within the acetate sleeve will be screened visually. A number of samples (most likely two) will be collected from each boring interval as grab samples. The WESTON Geologist supervising the drilling will determine the number and depth of the sample intervals to be collected from each 4-foot acetate sleeve.

- Sample numbering procedures are presented in Section 5.

- The anticipated number of soil borings are shown on Table 2-2.

- Table 7-1 lists the required sample containers, sample volumes, sample preservation requirements, and holding times associated with all parameters.

- All samples collected for analysis by the on-site mobile laboratory will be collected as grab samples. Sample collection will commence immediately upon opening the sampler in order to minimize the loss of VOCs. Sample material from the undisturbed sample interval will be collected in 2-ounce glass jars. No mixing or compositing will be performed on the sample material, thereby limiting the loss of VOCs from the sample.

- All samples sent to CRL will be collected as grab samples. Sample collection will commence immediately upon opening the sampler in order to minimize the loss of VOCs. Sample material from the undisturbed sample interval will be collected in three EnCore 5-gram samplers and a 2-ounce glass jar. No mixing or compositing will be performed on the sample material, thereby limiting the loss of VOCs from the sample. The EnCore samplers will be filled and sealed prior to collection of the glass jar.

This document was prepared by Weston Solutions, Inc., expressly for U.S. EPA. It shall not be released or disclosed in whole or in part without the express, written permission of U.S. EPA.

- Duplicate samples will be collected immediately after the investigative sample and within the same sample interval.

- Any remaining soil cuttings will be placed in a 55-gallon drum and managed according to the requirements specified in Section 9.

- Before commencing soil boring activities at any location, the subcontractor will decontaminate the working end of the Geoprobe® rig, all Geoprobe® equipment, and tools using a high-pressure steam cleaner. The subcontractor will avoid placing equipment, tools, and materials on the ground during the soil boring activities. The standard decontamination protocol for investigative boring equipment is presented in Subsection 3.4.

Soil Boring Drill Rig (HSA or Sonic) Sample Collection Procedures

- A truck mounted HSA or Sonic drill rig will be used to advance a portion of the soil borings. The selected drill rig must be capable of entering multi-terrain areas as needed based on site conditions. A qualified firm will be subcontracted to complete the soil borings.

- Following removal of the sampler from the borehole, the sampler will be opened on a clean surface (e.g., polyethylene sheeting). The soil within the sampler will be screened visually. A number of samples (most likely two) will be collected from each boring interval as grab samples. The WESTON Geologist supervising the drilling will determine the number and depth of the sample intervals to be collected from each sampling interval.

- Sample numbering procedures are presented in Section 5.

- The anticipated number of soil borings are shown on Table 2-2.

- Table 7-1 lists the required sample containers, sample volumes, sample preservation requirements, and holding times associated with all parameters.

- All samples collected for analysis by the on-site mobile laboratory will be collected as grab samples. Sample collection will commence immediately upon opening the sampler in order to minimize the loss of VOCs. Sample material from the undisturbed sample interval will be collected in 2-ounce glass jars. No mixing or compositing will be performed on the sample material, thereby limiting the loss of VOCs from the sample.

This document was prepared by Weston Solutions, Inc., expressly for U.S. EPA. It shall not be released or disclosed in whole or in part without the express, written permission of U.S. EPA.

- All samples sent to CRL will be collected as grab samples. Sample collection will commence immediately upon opening the sampler in order to minimize the loss of VOCs. Sample material from the undisturbed sample interval will be collected in three EnCore 5-gram samplers and a 2-ounce glass jar. No mixing or compositing will be performed on the sample material, thereby limiting the loss of VOCs from the sample. The EnCore samplers will be filled and sealed prior to collection of the glass jar.

- Duplicate samples will be collected immediately after the investigative sample and within the same sample interval.

- Any remaining soil cuttings will be placed in a 55-gallon drum and managed according to the requirements specified in Section 9.

- Before commencing soil boring activities at any location, the subcontractor will decontaminate the working end of the drill rig, all drill rig equipment, and tools using a high-pressure steam cleaner. The subcontractor will avoid placing equipment, tools, and materials on the ground during the soil boring activities. The standard decontamination protocol for investigative boring equipment is presented in Subsection 3.4.

Grab Groundwater Sample Collection Procedures

- Following advancement of the soil borings, the WESTON FTL may choose to collect a grab groundwater sample from the saturated zone of the boring. In order to collect this sample, a temporary 1-inch PVC piezometer will be installed in the soil boring. The screen of the PVC piezometer will be set at the depth where the grab groundwater sample is to be collected. A peristaltic pump and disposable tubing will be used to collect the grab groundwater samples from the piezometer.

- The depth to the water level in the piezometer and the total depth of the piezometer will be measured with an electrical sounding device (accuracy ±0.01 feet). The depth to water and the time of measurement will be recorded. The reference point for these depths will be the top of the piezometer casing.

- The pump and disposable tubing will be lowered carefully into the piezometer to minimize the re-suspension of solids, which may have collected at the bottom of the piezometer. The tubing should not be allowed to touch the bottom of the piezometer. Any solids that are re-suspended during pump installation will be allowed to resettle

This document was prepared by Weston Solutions, Inc., expressly for U.S. EPA. It shall not be released or disclosed in whole or in part without the express, written permission of U.S. EPA.

for five minutes before beginning purging and sampling. The tubing intake position will be located to sample from the center of each piezometer's screened interval.

- Flow rates will be regulated and can be calibrated by measuring the time needed to fill a container of known volume.

- A flow-through cell will be used for monitoring field parameters (DO, ORP, pH, conductivity, and temperature). The specific equipment and methodology used to monitor field parameters during purging would be described in the field notes. Manufacturer's calibration procedures would be followed for the specific instrument(s) used to monitor field parameters.

- Groundwater samples will be collected directly from the pump discharge tubing directly into laboratory supplied, pre-preserved sample containers. Water would be directed against the inner wall of the bottle to minimize aeration of the sample.

- Sample bottles will be filled at an angle in order to limit splashing and bubbling. The sample container, volume, and preservation requirements are presented in Table 7-1. VOA sample bottles will be preserved with hydrochloric acid (HCl) prior to the addition of the sample. The VOA sample bottles will be filled such that no air space is present in the bottle after it is capped. If bubbles appear after the bottle is capped, a new sample will be collected. A new, preserved VOA container will be used to collect the sample. If bubbles persist, an unpreserved VOA sample will be collected (the Field Sample Manager will note the absence of the preservative on the sample paperwork and in the field logbook).

- Samples will be maintained at 4°C with ice after sample collection.

Prior to instrumentation use, it is important to calibrate the instrument to check its accuracy.

3.3 HYDROGEOLOGICAL INVESTIGATIONS

3.3.1 Monitoring Well Installation

WESTON will conduct a hydrogeological investigation to characterize potential sources, delineate chlorinated solvent contamination within the groundwater, characterize the site geology and hydrogeology, and to select where additional soil borings and monitoring wells should be advanced.

This document was prepared by Weston Solutions, Inc., expressly for U.S. EPA. It shall not be released or disclosed in whole or in part without the express, written permission of U.S. EPA.

The hydrogeological investigation is anticipated to include installation, surveying, hydraulic testing (existing and newly installed), and sampling (existing and newly installed).

A truck-mounted HSA or Sonic drill rig will be utilized for monitoring well installation. The drilling subcontractor will employ the following drilling procedures:

- Before drilling at any location, the driller will decontaminate the working end of the drill rig, all drilling equipment, and tools using a high-pressure steam cleaner. The driller will avoid placing equipment, tools, and materials on the ground during the drilling activities.
- A drill rig (HSA or Sonic) will advance the well borings to the desired depths.

After completion of each well boring, a monitoring well will be constructed using the following materials and methods:

- The monitoring well will be constructed of 2-inch inner diameter stainless steel screen and riser. The screen length will be determined during field observations; however, the lengths will vary between 5-feet and 10-feet. The well riser will be covered with a slip cap.
- The annular space around the screen will be filled with a silica sand pack that is allowed to collapse as the rods are withdrawn out of the ground. The filter pack will extend from the bottom of the well to one foot or more above the top of the well screen.
- After the sand pack is in place, the screen will be sealed with 2-feet of bentonite pellets. The bentonite pellets will be hydrated with potable water and allowed to stand for 15 minutes before construction continues.
- The remaining annular space in wells will be backfilled above the seal using cement/bentonite grout (6 parts cement to 1 part bentonite by volume).
- The monitoring wells will vary between flush-mount and stick-up depending on the field observations.

This document was prepared by Weston Solutions, Inc., expressly for U.S. EPA. It shall not be released or disclosed in whole or in part without the express, written permission of U.S. EPA.

- To provide well protection, each well will be furnished with a flush mount cover or stick-up steel casing with locking cap. The flush mount cover or steel casing will be set in a concrete apron at all monitoring well locations. Locks will be provided for each flush mount cover or casing.

The specific number, depth, and location of the monitoring wells will be determined in the field. The proposed monitoring well installation locations are shown on Figures 2-2 through 2-15. Figures 3-1 shows the details of a fully-constructed stick-up monitoring well. Fully-constructed flush-mount monitoring wells will only vary by the type of locking cap and distance above the ground surface.

3.3.2 Monitoring Well Development

After installation of all monitoring wells, each well will be developed using the following procedure:

- All equipment to be introduced into the well will be decontaminated in accordance with the procedures outlined in Subsection 3.4.

- The depth to the water level in the well and the total depth of the well will be measured with an electrical sounding device (accuracy ±0.01 feet). The depth to water and the time of measurement will be recorded. The reference point for these depths will be the top of the well casing. The volume of standing water in the well will be calculated. Volume of water in a 2-inch-diameter well (gallons) = length (feet) x 0.163 (gallons/foot). The well volume will be recorded.

- Each well will be developed by alternately surging and purging for a minimum of 30 minutes. The surge and purge cycle will consist of several minutes of surging followed by several minutes of purging to remove the material collecting in the bottom of the well. The surging will be accomplished by rapidly moving a weighted bailer or surge block in the screened interval. This will displace and suspend any silt or fine sand buildup in the filter pack. This will be followed by purging the well using a bailer or pump to remove the suspended sediment.

- A positive displacement pump, bladder pump or disposable bailer will be used for development, and will be decontaminated in accordance with Subsection 3.7 before being used in a well. A minimum of three well volumes will be removed from the well. After removing the third well volume, readings for dissolved oxygen,

This document was prepared by Weston Solutions, Inc., expressly for U.S. EPA. It shall not be released or disclosed in whole or in part without the express, written permission of U.S. EPA.

oxidation-reduction potential, pH, conductivity, and temperature will be recorded. Well development will continue until these readings stabilize for two consecutive volumes (±10% for dissolved oxygen; ±10mV for oxidation-reduction potential; ±0.1 units for pH; ±3% for specific conductance; and ±1°C for temperature). A maximum of five well volumes will be purged during development. Well development water will be managed in accordance with the requirements outlined in Section 9.

- If the well can be purged dry, the well will be developed in a manner which limits agitation by slowly purging the well dry. Wells which can be purged dry may not be surged and no water will be added to the well.

3.3.3 Hydraulic Tests (Slug Tests)

Rising-head and falling-head slug tests will be conducted on 45 of the wells present at the Site (existing and newly installed) to determine the hydraulic conductivity. Slug tests involve displacing a known volume of water in a well instantaneously and measuring changes in the water level over time as the water level in the well returns to equilibrium. Lowering or raising a slug accomplishes displacement of the water in the well. A slug is a solid cylinder (or hollow, weighted, and capped cylinder) of PVC (or Teflon or stainless steel) with an attachment point for a hauling line. Tests performed by lowering the slug into the well and raising the water level are called falling-head slug tests. Tests performed by raising the slug out of the well and lowering the water level are called rising-head slug tests. Water level measurements will be measured and recorded using a Hermit SE 3000 (or equivalent) data logger equipped with an electronic pressure transducer. Following collection of the water level measurements, the data will be downloaded and reduced to develop curves used in the determination of hydraulic conductivity. A step-by-step approach for conducting the slug tests is presented in Appendix C.

3.3.4 Groundwater Elevation Measurements

As part of hydrogeological investigation activities, the depth to the water surface in each monitoring well will be measured with a water level indicator. Water level elevations will be calculated from available vertical survey data and depth to water measurements and will be plotted to create

This document was prepared by Weston Solutions, Inc., expressly for U.S. EPA. It shall not be released or disclosed in whole or in part without the express, written permission of U.S. EPA.

groundwater potentiometric surface maps. Water level measurements at the monitoring wells will be collected using the following protocols:

- The water level probe and cable will be decontaminated before each use with a distilled water rinse.
- Depth to water will be measured with an electrical sounding device (accuracy ±0.01 ft). The reference point for this measurement will be the top of the inner well casing.
- The depth to water and the time will be recorded in a field logbook.

All groundwater elevation measurements will be conducted in accordance with the SOPs presented in Appendix C.

3.3.5 Surveying of Monitoring Wells

Upon completion of the monitoring well installation, WESTON will subcontract an Illinois Licensed Land Surveyor to determine the elevation of the newly installed wells to an accuracy of 0.01 foot, sufficient to allow water level measurement data to be used for groundwater flow mapping. Each monitoring well will be measured at three locations (ground surface, top of protective casing, and top of inner well casing).

3.3.6 Monitoring Well Sampling

Groundwater RI activities will also consist of sampling newly installed monitoring wells in addition to sampling existing monitoring wells at the site (wells from previous U.S. EPA or IEPA investigations or PRP investigations). An estimated 153 on-site monitoring wells (93 new wells, 40 U.S. EPA/IEPA wells, and 20 PRP wells) will be sampled during RI activities.

This document was prepared by Weston Solutions, Inc., expressly for U.S. EPA. It shall not be released or disclosed in whole or in part without the express, written permission of U.S. EPA.

An estimated 153 investigative samples and 10 percent QA/QC samples (field duplicate and field blank samples) will be collected from on-site monitoring wells. Trip blank samples will also be required to accompany aqueous VOC sample shipments. Groundwater samples will be analyzed by CRL for VOCs. The natural attenuation field measurement parameters to be determined in these monitoring wells will include DO, ORP, pH, conductivity, and temperature, as well as laboratory analyses for major anions [fluoride, chloride, nitrate], alkalinity, and TOC conducted by CRL and sulfate and dissolved hydrocarbon gases [methane, ethane, ethene]) conducted by a WESTON-procured laboratory.

Purging and sampling will occur at least 24 hours after well development. Monitoring wells will be sampled using a positive displacement pump. As a backup, disposable bailers will be available if sampling with the pump is unfeasible due to depth or other problems. All downhole equipment will be decontaminated pursuant to the protocols outlined in Subsection 3.7. Each sample will be collected using the following methodology:

- The depth to the water level in the well and the total depth of the well will be measured with an electrical sounding device (accuracy ±0.01 feet). The depth to water and the time of measurement will be recorded. The reference point for these depths will be the top of the well casing.

- The volume of standing water in the well will be calculated. Volume of water in a 2-inch-diameter well (gallons) = length (feet) x 0.163 (gallons/foot). The well volume will then be recorded.
- The pump and disposable tubing will be lowered carefully into the well to minimize the re-suspension of solids, which may have collected at the bottom of the well. The tubing should not be allowed to touch the bottom of the well. Any solids that are re-suspended during pump installation will be allowed to resettle for five minutes before beginning purging and sampling. The tubing intake position will be located to sample from the center of each well's screened interval.

- A positive displacement pump will be used for purging, and will be decontaminated before being used in a well. Consistent with low-flow (micropurge) protocols, the wells will be purged and sampled at a rate that does not lower the water surface in the well (as measured with an electronic probe during purging). Purge rates will be between 150 and 500 milliliters per minute (mL/min). If the soil surrounding the

This document was prepared by Weston Solutions, Inc., expressly for U.S. EPA. It shall not be released or disclosed in whole or in part without the express, written permission of U.S. EPA.

well has a low hydraulic conductivity, it may be impractical to completely avoid lowering of the water surface in the well. If this is the case, the lowering of the water table should be kept to a minimum. It may be necessary to turn off the pump and allow some recharge to occur before proceeding. In addition, any water level drawdown will be noted in the field notes. Water level measurements (depth to water) will be taken regularly at intervals from 30 seconds to five minutes (depending on the flow rate, more frequently for higher flow rates) to confirm that the water level is not being lowered.

- Flow rates will be regulated and can be calibrated by measuring the time needed to fill a container of known volume. Purge rates would be recorded at regular intervals in the field notes.

- A flow-through cell will be used for monitoring field parameters (DO, ORP, pH, conductivity, and temperature). The specific equipment and methodology used to monitor field parameters during purging would be described in the field notes. Manufacturer's calibration procedures would be followed for the specific instrument(s) used to monitor field parameters.

- Field parameters, purge rates, and depth to water measurements would be recorded at 5-minute intervals during well purging. Purging should be conducted at each well until the field parameters stabilize. Three successive readings will be within ±10% for DO; ±10mV for ORP; ±0.1 units for pH; ±3% for specific conductance; and ± 1°C for temperature.

- Groundwater samples will be collected directly from the pump discharge tubing directly into laboratory supplied, pre-preserved sample containers. Water would be directed against the inner wall of the bottle to minimize aeration of the sample.

- If the monitoring well runs dry before parameter stabilization, the well will be allowed to recharge for 15 minutes and then be pumped dry again and allowed to recharge before sampling.

- Sample bottles will be filled at an angle in order to limit splashing and bubbling. The sample container, volume, and preservation requirements are presented in Table 7-1. VOA sample bottles will be preserved with hydrochloric acid (HCl) prior to the addition of the sample. The VOA sample bottles will be filled such that no air space is present in the bottle after it is capped. If bubbles appear after the bottle is capped, a new sample will be collected. A new, preserved VOA container will be used to collect the sample. If bubbles persist, an unpreserved VOA sample will be collected (the Field Sample Manager will note the absence of the preservative on the sample paperwork and in the field logbook).

This document was prepared by Weston Solutions, Inc., expressly for U.S. EPA. It shall not be released or disclosed in whole or in part without the express, written permission of U.S. EPA.

- Samples will be maintained at 4°C with ice after sample collection.

Prior to instrumentation use, it is important to calibrate the instrument to check its accuracy.

3.4 DECONTAMINATION PROCEDURES

All sampling equipment including pumps, tubing, stainless steel spoons, spatulas, scoops, bowls, etc., will be decontaminated before being used to collect a sample. The decontamination protocol for sampling equipment is presented in Table 3-1.

The working end of the Geoprobe and/or drill rig (hollow-stem auger or sonic) and all downhole and associated boring equipment, tools and materials will be decontaminated prior to intrusion at each new soil boring. Only decontaminated equipment will be placed in a boring. All boring-related equipment will be decontaminated in accordance with the protocols presented in Table 3-2.

A temporary decontamination pad will be constructed at the site. The pad will consist of heavy plastic lining anchored by railroad ties and clean aggregate materials. The pad dimensions shall be large enough to accommodate the Geoprobe and/or drill rig (hollow-stem auger or sonic).

This document was prepared by Weston Solutions, Inc., expressly for U.S. EPA. It shall not be released or disclosed in whole or in part without the express, written permission of U.S. EPA.

SECTION 4

FIELD QUALITY CONTROL SAMPLES

The sampling effort at the OU1 Ellsworth Site will include the following types of field QC samples:

- Field duplicates
- Matrix spikes/matrix spike duplicates (MS/MSD)
- Field/rinsate blanks
- Trip Blanks

Field blanks, field duplicates, matrix spike samples, and trip blanks will be analyzed to assess the quality of the data resulting from the field sampling program. Field blank and field duplicate samples will be shipped to the analytical laboratory as blind samples. Field blanks consisting of ultra pure water (laboratory grade) will be submitted to the analytical laboratories to assess the quality of the data resulting from the monitoring well sampling activities. Rinsate blanks consisting of ultra pure water poured across or run through sampling equipment will be submitted to the analytical laboratories to assess the decontamination procedures associated with the monitoring well sampling. Field/rinsate blank samples are analyzed to check for procedures at the site that may cause sample contamination. Duplicate samples are analyzed to check for sampling and analytical reproducibility. Matrix spikes provide information about the effect of the sample matrix on the digestion and measurement methodology. All matrix spikes are performed in duplicate and are known as MS/MSD samples. Sample containers and handling and shipment procedures that will be used are identical to those used for the investigative samples. Each field QC sample will be documented on a chain-of-custody form. The specific level of QC effort for field activities will be determined on field observations. The following subsections detail the collection procedures for each QC sample type.

This document was prepared by Weston Solutions, Inc., expressly for U.S. EPA. It shall not be released or disclosed in whole or in part without the express, written permission of U.S. EPA.

4.1 FIELD DUPLICATE SAMPLES

Field duplicate samples will be collected at selected locations during soil and groundwater sampling at a 1-per-10 sample frequency, using sample collection procedures identical to those used for the investigative samples. Duplicate samples will be analyzed for the same parameters as the soil and groundwater investigative samples. Duplicates will be collected by alternatively filling two sets of sample jars/bottles from the same sample unit (e.g., split spoon, scoop, tubing, etc.). For samples requiring chemical analyses, the VOC fraction for each duplicate sample will be collected immediately after the VOC fraction for the investigative sample to minimize the loss of VOCs during sample collection.

4.2 MATRIX SPIKE/MATRIX SPIKE DUPLICATE SAMPLES (MS/MSDs)

MS/MSDs will be collected on a 1-per-20 sample (or less) basis for soil and groundwater sampling. MS/MSD samples are investigative samples on which MS/MSD analyses are performed. MS/MSD analyses only apply to organic samples. Extra sample volume is required for both soil and aqueous MS/MSD analyses; therefore, double the normal volume for VOC analysis is needed.

Field blank and field duplicate samples will not be used as MS/MSD samples. All MS/MSD samples will be identified as such on all sample paperwork.

4.3 FIELD BLANKS

Field blank (also referred to as equipment blank) samples will be collected during all groundwater sampling events. No field blanks will be collected for soil samples. Each field blank will be analyzed for the same parameters as the investigative samples in accordance with the same analytical methodologies. For sampling devices used for groundwater sampling, ultra-pure water will be run through the device (in a fashion which mimics actual sampling) into a sample container. The sample will be transferred from the collection containers to the field/rinsate blank sample container in a

This document was prepared by Weston Solutions, Inc., expressly for U.S. EPA. It shall not be released or disclosed in whole or in part without the express, written permission of U.S. EPA.

manner similar to the investigative sample. Field blanks will not be collected for any sampling that uses disposable equipment only for each sample location.

4.4 TRIP BLANKS

One trip blank sample will be enclosed in each sample shipment container in which aqueous VOC samples are included. All sample handling, volume, packaging and preservation requirements for the trip blank will be identical to the investigative VOC samples. The trip blanks will be obtained by pouring ultra-pure water (laboratory-grade water) directly into the sample containers under laboratory-type conditions as soon as it is practicable (given the sample holding time) prior to the beginning of a field sampling event or by purchasing trip blanks from a certified supplier. The trip blanks will then be subsequently placed in a sample shipment container and accompany field personnel to the site. The trip blank will be documented and identified as such on all sample documentation.

This document was prepared by Weston Solutions, Inc., expressly for U.S. EPA. It shall not be released or disclosed in whole or in part without the express, written permission of U.S. EPA.

SECTION 5

SAMPLE NUMBERING SYSTEM

All samples collected for analysis, including QC samples, will be given a unique sample number. The sample numbers will be recorded in the site logbook, the chain-of-custody, and the shipment documents.

WESTON will assign each sample two identification numbers: a project-sample number and a Contract Laboratory Program (CLP) number. The project sample number highlights the sample matrix and location, and will be used for documentation purposes in the site logbook, as well as for presentation of the analytical data in WESTON memoranda and reports. The CLP number is used by the U.S. EPA to track samples through the CLP. If the samples are not sent through the CLP, the CLP sample number can be used by CRL or other Laboratory. Both numbers will be documented on the Forms II lite chain-of-custody form.

5.1 PROJECT SAMPLE NUMBERING SYSTEM

The WESTON project sample numbering system will consist of a 15-character combination of letters, numbers, and dashes in the following format: AAA-BBCCC-DDD-E. The components of the identifiers are as follows:

- **Project Identifier (AAA)** - The first part of the project sample number will consist of a three character code (EIP) that will be used to identify the Ellsworth Industrial Park OU1 Site.

- **Sample Type (BB) and Sample Location (CCC)** - This shall consist of the following:

  - A two-character sample type code:

    - PS - sub-slab passive soil gas samples
    - UC - utility corridor vapor samples

This document was prepared by Weston Solutions, Inc., expressly for U.S. EPA. It shall not be released or disclosed in whole or in part without the express, written permission of U.S. EPA.

- SS - soil samples
- GW - grab groundwater samples
- MW - monitoring well groundwater samples

- A sample location code: The above sample type code will be combined with a sample location identification (e.g, PS001 for sub-slab soil sample 001 or SS001 for soil sample 001). For blanks the two-character sample type code will be combined with FB for field blanks and TB for trip blanks, (e.g, MWFB for a monitoring well groundwater field blank or MWTB for a monitoring well groundwater trip blank).

- **Depth Identifier (DDD)**–This shall consist of the following:

  - A three-digit numeral will be used to identify sample depth, where applicable. The number designation will represent depth in feet bgs of the top of the sample interval. Depth numbers will be rounded to the nearest whole number. For example, a soil sample collected from an interval of 2.5 to 3.5 feet bgs will have a sample depth identifier of 003 indicating the approximate depth of the top of the sample interval. Samples collected from where no depth identification is necessary (samples from sub-slab sampling locations, utility corridors, and monitoring wells), will use XXX as the depth identifier. Exact depths for a specific sample may be also determined by consulting field log notes.

- **Quality Control Sample Identifier (E)**–This shall consist of the following:

  - A one-digit identifier will be used to identify quality control samples collected or prepared in the field. The following designations will be used:

    1 - Investigative sample and matrix spike/matrix spike duplicate (MS/MSD)
    2 - Field duplicate sample
    3 - Equipment blank sample
    4 - Trip blank (TB) sample (aqueous VOC shipments only)

Some examples of the WESTON project sample numbering system are as follows:

- EIP-SS001-002-1: Ellsworth Industrial Park OU1 Site; soil sample location 1; sample depth interval beginning at 2 feet bgs; investigative sample.

- EIP-GW011-030-2: Ellsworth Industrial Park OU1 Site; grab groundwater location 11; sample depth interval beginning at 30 feet bgs; field duplicate sample.

This document was prepared by Weston Solutions, Inc., expressly for U.S. EPA. It shall not be released or disclosed in whole or in part without the express, written permission of U.S. EPA.

- EIP-PS004-XXX-1: Ellsworth Industrial Park OU1 Site; sub-slab passive soil gas samples location 004; irrelevant sample depth; investigative sample.

- EIP-MW001-XXX-4: Ellsworth Industrial Park OU1 Site; monitoring well location 001; irrelevant sample depth; trip blank sample.

5.2 CLP NUMBERING SYSTEM

The CLP sample numbers are unique numbers generated by the CLP or Forms II lite program that are assigned to each sample. The CLP sample numbers enable the Sample Management Office and CRL to track samples through their system. The CLP numbers are placed on the outside of the sample containers and the number is used on all documentation (e.g., chain-of-custody form, sample tags). The CLP sample numbers will be correlated to the WESTON project sample number thereby identifying where the sample was collected. Organic aliquots will have a CLP sample number that begins with the fifth letter of the alphabet (E for Region V) followed by other letters and numbers. Samples that are sent to CRL or SAS may also use the CLP number for consistency at each sampling location.

This document was prepared by Weston Solutions, Inc., expressly for U.S. EPA. It shall not be released or disclosed in whole or in part without the express, written permission of U.S. EPA.

SECTION 6

SAMPLE DOCUMENTATION AND TRACKING

6.1 FIELD RECORDS

Field efforts will be carefully documented using a site logbook, field summary reports, sample chain-of-custody forms, sample labels, and custody seals. In addition, field copies of the QAPP, the FSP, and the HASP will be kept on-site.

6.1.1 Documentation

Field observations and other pertinent information will be recorded in the field. All entries will be made in a bound logbook in ink with no erasures. If an incorrect entry is made, the information will be crossed out with a single strike mark, which will be initialed and dated by the person making the correction. Logbooks will be identified by unique sequential numbers. General information will be recorded in the site logbook daily, including personnel present at the site, sampling activities, and weather.

6.1.2 Field Log

A site logbook will be kept by the field team leader to document site activities, field measurements, and interactions with subcontractors, sample information, descriptions of photographs, and other relevant information. The following information will be recorded in the field logbook on a daily basis:

- Site location identification.
- Start date and time (in military time format).
- Weather conditions.
- Names of sampling team members.

This document was prepared by Weston Solutions, Inc., expressly for U.S. EPA. It shall not be released or disclosed in whole or in part without the express, written permission of U.S. EPA.

- Site visitors.
- Level of personal protective equipment (PPE) used.
- Signature.

When collecting environmental samples, the following information will be recorded in the field logbooks, on the sample labels, and on the sample tags:

- Unique sample identification number.
- Date and time of sample collection.
- Type of sample collected.
- Sampler names.
- Analyses to be performed on sample.
- Preservatives used, especially any non-standard types, and any other field preparation of the sample.

In addition to the above information, the logbook will contain a detailed description of the sample location, and the samples physical characteristics (i.e. color, odor, etc).

6.2 FIELD CHAIN-OF-CUSTODY PROCEDURES

Table 7-1 of the FSP presents the required sample containers, sample preservation methods, and maximum holding times for the proposed environmental sampling. All samples will be placed in appropriate sample containers and labeled. The sample labels and sample tags will include sample number, location, date, and time of collection, and analyses to be performed. Tags will be provided by the U.S. EPA Region V RSCC. The labels and information for the sample tags will be created using the Forms II Lite software. Samples will be cushioned inside the shipping coolers using bubble wrap or other suitable packing material. The temperature of the samples will be maintained at 4±2°C with sealed plastic bags of ice.

This document was prepared by Weston Solutions, Inc., expressly for U.S. EPA. It shall not be released or disclosed in whole or in part without the express, written permission of U.S. EPA.

Samples will be shipped via commercial air courier on a daily basis (as feasible) to the analytical laboratories. The exception to this procedure will be for samples that are collected on a Sunday or a holiday. For samples collected on a Sunday or holiday, additional ice will be placed in the coolers or samples will be placed in a secure refrigerator. The coolers or refrigerator will be sealed and kept in a designated secure area until they are picked up by the courier on the next business day. Samples will be hand delivered to the onsite ESAT mobile laboratory.

Prior to shipment, two custody seals will be fastened to the right and left sides of each shipping cooler to secure the lid and provide evidence that the samples have not been tampered with en route to the laboratory. Upon receipt of the cooler at the laboratory, the cooler will be inspected by the laboratory's sample custodian.

6.3 LABORATORY CHAIN-OF-CUSTODY PROCEDURES

The laboratory custody procedures and document control will be carried out according to the CRL applicable laboratory internal procedures. Laboratory custody procedures are further defined in Section B of the QAPP and corresponding laboratory SOPs.

6.4 SAMPLE DOCUMENTATION FORMS

Required paperwork for laboratory samples includes chain-of-custody, sample tags, and chain-of-custody seals. All sample documentation forms will be prepared by WESTON personnel in accordance with the requirements outlined in the *CLP Guidance for Field Samplers* (U.S. EPA, 2004) or the most recent version. The U.S. EPA is currently using the Forms II Lite Software (Version 5.1.47). The U.S. EPA Region V RSCC is responsible for providing WESTON with updates on changes in the sample documentation forms and requirements. The WESTON SMC will train all field personnel on any new documentation requirements before field activities begin.

This document was prepared by Weston Solutions, Inc., expressly for U.S. EPA. It shall not be released or disclosed in whole or in part without the express, written permission of U.S. EPA.

All paperwork accompanying the samples being shipped to the laboratory will be sealed in a plastic bag that is taped to the inside of the cooler lid. Copies will be made of all sample documentation and retained for in-house files. Analytical tracking information will be consistent with the U.S. EPA's Office of Solid Waste and Emergency Response (OSWER) Directive No. 9240.0-2B *Extending the Tracking of Analytical Services to PRP-Lead Superfund Sites*.

6.4.1 Chain-of-Custody Form

To maintain custody in accordance with the U.S. EPA requirements, the following sample documentation protocol must be implemented:

- Each sample shipment container must have at least one chain-of-custody form enclosed with the samples.
- Each sample in a shipment container must be identified and documented on the accompanying chain-of-custody form.
- The chain-of-custody seal numbers on seals assigned to a particular cooler must be documented on the chain-of-custody form in that cooler.
- The carrier service person does not have to sign the chain-of-custody form if the custody seals remain intact. The airbill number must be written on the chain-of-custody form.

Forms II Lite will be utilized to generate the chain-of-custody for all CRL and SAS samples.

6.4.2 Chain-of-Custody Seals

Chain-of-custody seals are provided by the U.S. EPA Region V RSCC.

- Two seals will be used per shipping container to secure the lid and provide evidence that the samples have not been tampered with.

This document was prepared by Weston Solutions, Inc., expressly for U.S. EPA. It shall not be released or disclosed in whole or in part without the express, written permission of U.S. EPA.

- The chain-of-custody seals must be covered with clean tape to avoid accidental damage during shipment.
- The chain-of-custody seal numbers must be documented on the chain-of-custody form.
- All sample shipment containers require chain-of-custody seals.

6.4.3 Sample Tags

Sample tags, specific to Region V, are provided by the U.S. EPA Region V RSCC. The information that is printed out for the sample label will be printed in duplicate and the copy will be affixed to the sample tag.

- Each sample must have a Sample Tag affixed to it with a string. One tag is allowed for Encore containers when multiple containers are used for one
- Sample Tag numbers are recorded on the chain-of-custody form.

To ensure that samples will arrive at the laboratory without breakage and with the chain-of-custody intact, the following sampling and packaging procedures will be followed:

- The field sampler is personally responsible for the care and custody of the samples until they are transferred to another individual or properly dispatched to the laboratory. As few people as possible should handle the samples.
- All sample containers will be labeled with unique sample numbers and sample locations.
- Sample labels will be completed for each sample using waterproof ink unless precluded by weather conditions.
- The FTL will review all field activities to determine whether proper custody procedures were followed during the field work.

This document was prepared by Weston Solutions, Inc., expressly for U.S. EPA. It shall not be released or disclosed in whole or in part without the express, written permission of U.S. EPA.

6.5 SAMPLE SHIPPING PROCEDURES

The following transfer of custody and shipment procedures will be followed:

- Samples will be accompanied by a properly completed chain-of-custody record. The sample numbers and locations will be listed on the chain-of-custody record. When transferring the possession of samples, the individuals relinquishing and receiving will sign and record the date and time on the record. This record documents transfer of custody of samples from the sampler to another person, to the laboratory, or to/from a secure storage area.

- Samples will be properly packaged for shipment and dispatched to the laboratory for analysis, with a separate signed custody record enclosed in each sample box or cooler. Shipping containers will be secured with custody tape for shipment to the laboratory. The cooler will be secured shut with strapping tape. U.S. EPA provided custody seals (orange), for evidence purposes, will be taped to the cooler in at least two locations.

- Whenever samples are split with an independent source or government agency, a separate chain-of-custody record will be prepared for those samples and marked to indicate with whom the samples are being split. The person relinquishing the samples to the facility or agency will request the representative's signature acknowledging sample receipt.

- All shipments will be accompanied by the chain-of-custody record identifying the contents.

- If the samples are sent by common carrier, a bill of lading will be used. Receipts of bills of lading will be retained as part of the permanent documentation. Commercial carriers will not be required to sign off on the custody records as long as the custody records are sealed inside the sample cooler and the custody seals remain intact.

This document was prepared by Weston Solutions, Inc., expressly for U.S. EPA. It shall not be released or disclosed in whole or in part without the express, written permission of U.S. EPA.

SECTION 7
SAMPLE HANDLING

7.1 SAMPLE CONTAINERS AND SAMPLE PRESERVATION

All samples collected for analysis will be containerized, preserved, packaged, and shipped in accordance with the *CLP Guidance for Field Samplers* (U.S. EPA, 2004), and The U.S. Department of Transportation's (U.S. DOT) regulations (49 CFR 173 to 177). Table 7-1 lists the required sample containers, sample volumes, sample preservation requirements, and holding times associated with all parameters and media applicable to the Ellsworth Industrial Park sampling activities. WESTON will obtain sample containers according to U.S. EPA specifications as described in Section 10.

7.2 SAMPLE PACKAGING AND SHIPMENT

All samples shipped from the Ellsworth Industrial Park must be shipped in accordance with current U.S. DOT regulations and International Air Transport Association (IATA).

Following sampling, the exterior of all sample bottles will be initially decontaminated near the sampling location by wiping with a moist cloth. The filled sample containers will not be sprayed with water during decontamination because this water could contact the sample if the container was not tightly sealed. In preparation for shipment to the laboratories, all samples will be packaged in accordance with the following general procedures:

- Check to make sure the container cap is securely tightened.
- Make sure the sample labels and tags are securely attached to the sample containers. Place each container in a zip-lock bag, ensuring that the sample tags can be read.

This document was prepared by Weston Solutions, Inc., expressly for U.S. EPA. It shall not be released or disclosed in whole or in part without the express, written permission of U.S. EPA.

- Samples will be placed in a shipment container lined with a large plastic bag. Enough absorbent material will be packed around the samples to minimize the possibility of sample container breakage. The temperature will be maintained at 4° C with ice sealed in plastic bags. The remaining space in the container will be filled with additional packing material and the large bag will be sealed.

- Place chain-of-custody packing lists in a zip-lock bag and tape to inside of shipment container lid.

- Close shipment container and seal it shut with strapping tape. If shipment container has a drain port, seal it shut with tape. Place custody seals across seam between the container lid and base so that the custody seal would be broken if shipment container was opened. Cover custody seals with clear tape.

- Affix airbill with shipper's and recipient's names and addresses to top of shipment container. Affix a second mailing label with the same information to the top of the container in case the airbill becomes detached from container during shipment. Place "This End Up" labels on containers.

The WESTON FTL must contact the WESTON SMC to confirm sample shipment dates for all analyses. The FTL will notify the SMC of any last-minute changes in sampling schedule that will affect the sample shipment schedule.

This document was prepared by Weston Solutions, Inc., expressly for U.S. EPA. It shall not be released or disclosed in whole or in part without the express, written permission of U.S. EPA.

SECTION 8

SAMPLING TEAM ORGANIZATION

This project is a federal-lead project which is being coordinated by a U.S. EPA Work Assignment Manager (WAM) who has overall responsibility for all phases of this project. Key personnel responsibilities are detailed in the QAPP Section A.4.

This document was prepared by Weston Solutions, Inc., expressly for U.S. EPA. It shall not be released or disclosed in whole or in part without the express, written permission of U.S. EPA.

SECTION 9

MANAGEMENT OF INVESTIGATION-DERIVED WASTES

For purposes of this FSP, investigative-derived wastes (IDW) are defined as any by-product of the field activities that is suspected or known to be contaminated with any hazardous substances. The performance of field activities will produce waste products such as spent drilling mud, development and purge groundwater, decontamination wastewater, disposable sampling supplies, and expendable PPE.

In order to collect the decontamination wastewater, a portable or temporary decontamination pad will be set up on site by a Subcontractor. Wastewater will be pumped from the decontamination pad, collected, and containerized. Wastewater and purge water generated during the field activities may be pumped into 55-gallon drums or a portable on-site storage tank.

WESTON will refer to the U.S. EPA's *Management of Investigation-Derived Wastes During Site Inspections* (U.S. EPA, 1991) for guidance on off-site disposal policy, if this action is deemed necessary.

The following assumptions have been used in addition to the general assumptions described above.

Soil, Groundwater, and Decontamination Rinsate

- Excess soil cores/drill cuttings, purge water, decontamination water, and development water generated during field activities will be containerized in 55-gallon drums or 10 cubic yard roll-off boxes (drill cuttings only) and moved to the U.S. EPA designated storage area.
- It is assumed that the drums containing soil and water will require off-site disposal as non-hazardous materials.

This document was prepared by Weston Solutions, Inc., expressly for U.S. EPA. It shall not be released or disclosed in whole or in part without the express, written permission of U.S. EPA.

Personal Protective Equipment and Disposable Sample Equipment

Equipment in contact with sample material will be segregated into trash bags and contracted for non-hazardous disposal. Items included for disposal by this method are nitrile surgical gloves, tubing, sample containers broken or discarded after contact with sample media, and other items that come in contact with sample media. Spent PPE and sampling supplies generated during field activities will be containerized in 55-gallon drums and moved to the U.S. EPA designated storage area.

Common Refuse

Other material will be disposed as general refuse in an on-site or off-site dumpster or other trash receptacle. Items included for this disposal method include cardboard, plastic, paper, ice bags, and other material that does not come in contact with sample media.

Drum Labeling

Drums used to store waste material produced during this field program will be labeled with information to include date, material, drum and contents owner (U.S. EPA), and other pertinent information. The side and top of each drum will be labeled with a permanent marking stick.

A total of 93 drums and 5 roll-off boxes are assumed sufficient for containerizing soil cores/drill cuttings, purge water, decontamination water, development water, spent PPE and sampling supplies. 27 drums are assumed to contain solids and 66 drums are assumed to contain liquids.

All IDW and any other waste generated during the sampling activities will be properly disposed of at the completion of all field activities. No equipment or materials will be left on-site after completion of field activities.

This document was prepared by Weston Solutions, Inc., expressly for U.S. EPA. It shall not be released or disclosed in whole or in part without the express, written permission of U.S. EPA.

SECTION 10
SAMPLE CONTAINER PROCUREMENT

Sample containers for the vapor sampling, passive gas sampling, sulfate, and dissolved hydrocarbon gases will be supplied by the respective laboratory. All remaining sample containers being used for chemical analysis during the OU1 Ellsworth Site sampling program will be purchased by WESTON from a reputable supplier capable of providing the bottle quantity and type that meet or exceed the strict quality control requirements set forth by the U.S. EPA in OSWER Directive No. 9240.0-05A. All containers will meet the requirements referenced below.

All sample containers (bottles, EnCore samplers, and jars) will be prepared according to the procedures specified in U.S. EPA's *Specifications and Guidance for Obtaining Contaminant-Free Sample Containers* (U.S. EPA, 1992) or the most current revision. It will be ensured that the bottles, EnCore samplers, and jars used for the sampling activity do not contain target organic contaminants exceeding the level specified in the above-mentioned document.

Corrective actions will be conducted comprehensively to avoid the use of identified contaminated lots from other projects, and to ensure that if the bottle suppliers are deemed unresponsive or unable to provide cleaned bottles as specified, then other U.S. EPA-related projects are not negatively affected by the use of the noncompliant bottles.

This document was prepared by Weston Solutions, Inc., expressly for U.S. EPA. It shall not be released or disclosed in whole or in part without the express, written permission of U.S. EPA.

TABLES

Table 2-1
Summary of Sample Matrices, Analytical Parameters, and Frequencies for Sampling Program
Ellsworth Industrial Park Site
Downers Grove, Illinois

Sample Matrix	Field Parameters	Laboratory Parameters	Investigative			Field Duplicate			Field/Rinsate Blank			MS/MSD[1]			Matrix Total[2]
			No.	Freq.	Total	No.	Freq.	Total	No.	Freq.	Total	No.	Freq.	Total	
Air	Utility Corridor Investigation	VOCs	100	1	100	10	1	10	-	-	-	-	-	-	110
	Sub-Slab Monitoring	VOCs	83	1	83	9	1	9	-	-	-	-	-	-	92
Soil	Geological Investigation	VOCs	1000	1	1000	100	1	100	-	-	-	50	1	50	1100
		TOC	30	1	30	3	1	3	-	-	-	-	-	-	33
		CEC	30	1	30	3	1	3	-	-	-	-	-	-	33
		ORP	30	1	30	3	1	3	-	-	-	-	-	-	33
		Grain Size	30	1	30	3	1	3	-	-	-	-	-	-	33
		Hydraulic Conductivity	15	1	15	-	-	-	-	-	-	-	-	-	15
		pH	30	1	30	-	-	-	-	-	-	-	-	-	30
Groundwater	Soil Borings	VOCs	50	1	50	5	1	5	-	-	-	3	1	3	55
	Monitoring Wells	VOCs	153	1	153	16	1	16	30	1	30	8	1	8	199
		Major Anions	30	1	30	3	1	3	-	-	-	-	-	-	33
		Alkalinity	30	1	30	3	1	3	-	-	-	-	-	-	33
		TOC	30	1	30	3	1	3	-	-	-	-	-	-	33
		Sulfate	30	1	30	3	1	3	-	-	-	-	-	-	33
		Dissolved Hydrogen Gas	30	1	30	3	1	3	-	-	-	-	-	-	33

Notes:
[1] MS/MSDs are not additional samples, but are instead investigative samples on which MS/MSD analyses are performed.
[2] The matrix total does not include trip blank samples and MS/MSDs. One trip blank will accompany every shipment (cooler) of aqueous VOC samples.

This document was prepared by Weston Solutions, Inc., expressly for U.S. EPA. It shall not be released or disclosed in whole or in part without the express, written permission of U.S. EPA.

Table 2-2
Summary of Sampling Program
Ellsworth Industrial Park Site
Downers Grove, Illinois

Area of Interest	Sub-Slab Samples Proposed	Soil Borings Proposed	Grab Groundwater Samples Proposed	Groundwater Samples Proposed	Shallow Monitoring Wells Proposed	Intermediate Monitoring Wells Proposed	Bedrock Monitoring Wells Proposed
Study Area A	6	21	4	7	0	7	0
Study Area B	11	24	6	6	0	6	0
Study Area C	14	55	9	12	4	8	0
Study Area D	12	27	6	14	4	10	0
Study Area E	2	18	3	3	0	3	0
Study Area F	5	22	4	4	0	4	0
Study Area G	11	43	8	15	6	9	0
Study Area H	2	10	1	3	0	3	0
Study Area I	5	14	2	6	3	3	0
Study Area J	5	15	2	3	0	3	0
Study Area K	5	15	2	4	0	4	0
2500 Curtiss Street	5	15	2	3	0	3	0
Property South of the Intersection of Curtiss and Glenview and East of Belmont	0	10	1	3	0	3	0
Bedrock Aquifer (various locations)	0	0	0	10	0	0	10
TOTAL	83	289	50	93	17	66	10

This document was prepared by Weston Solutions, Inc., expressly for U.S. EPA. It shall not be released or disclosed in whole or in part without the express, written permission of U.S. EPA.

Table 3-1
Standard Decontamination Protocol for Sampling Equipment
Ellsworth Industrial Park Site
Downers Grove, Illinois

Step	Procedure
1	Scrub equipment thoroughly with soft-bristle brushes in a phosphate-free, low-sudsing detergent solution.
2	Rinse equipment with tap water by submerging and/or spraying. (*see note below*)
3	Rinse equipment with reagent-grade distilled/de-ionized water until dripping and allow to air dry for 1 to 2 minutes.
4	Rinse equipment a second time with de-ionized water by spraying until dripping.
5	Place equipment on polypropylene or aluminum foil and allow to air-dry for 5 to 10 minutes.
6	Wrap equipment in polypropylene or aluminum foil for handling and/or storage until next use.

Note:

The decontamination liquids will be managed as described in Section 9. If sampling equipment was used to collect oily or adhesive types of contaminated media, or the presence of organic compound residue is suspected, a rinse via spraying with isopropanol will be included after Step 2.

This document was prepared by Weston Solutions, Inc., expressly for U.S. EPA. It shall not be released or disclosed in whole or in part without the express, written permission of U.S. EPA.

Table 3-2
Standard Decontamination Protocol for Drilling Equipment
Ellsworth Industrial Park Site
Downers Grove, Illinois

Step	Procedure
1	Move the drilling rig, Geoprobe, or other equipment/materials to the designated decontamination area at the site.
2	Support all augers and related downhole drilling equipment aboveground and individually steam-clean.
3	Steam-clean the control panel and working area of the drill rig.
4	Place all decontaminated well materials (e.g., well casing, well screen) on clean polypropylene sheeting until use.

Notes:

All steam cleaning will be performed using pressurized steam. Steam cleaning will continue until all solid material and/or visible contamination is removed.

The decontamination liquid will be managed as described in Section 9.

This document was prepared by Weston Solutions, Inc., expressly for U.S. EPA. It shall not be released or disclosed in whole or in part without the express, written permission of U.S. EPA.

Table 7-1
Sample Container, Volume, and Preservation Requirements
Ellsworth Industrial Park Site
Downers Grove, Illinois

Sample Matrix	Analysis	No. of Containers	Type of Containers	Preservatives	Technical Holding Time[1]
Groundwater[3]	VOCs SW-846 Method 8260	2	40-ml glass vials[3]	HCl to pH <2; Cool 4±2°C	14 days
	Dissolved Oxygen	*Field Measurement*			
	Oxidation-Reduction Potential	*Field Measurement*			
	pH	*Field Measurement*			
	Conductivity	*Field Measurement*			
	Temperature	*Field Measurement*			
	Major Anions (fluoride, chloride) Ion Chromatography	1	50-ml or 100-ml poly or glass	Cool 4±2°C	28 days
	Nitrate/nitrite Ion Chromatography	1	250-ml or 500-ml poly or glass	H_2SO_4 to pH <2; Cool 4±2°C	28 days
	Alkalinity EPA Method 310.1	1	1-liter poly	Cool 4±2°C	14 days
	Total Organic Carbon EPA Method 415.1	1	250-ml or 500-ml poly or glass	H_2SO_4 to pH <2; Cool 4±2°C	28 days
	Sulfate EPA Method 9056B	2	250-ml poly	Cool 4±2°C	28 days
	Dissolved Gases (methane, ethane, ethene) Mod. EPA RSK 175	3	250-ml glass	Cool 4±2°C	14 days

This document was prepared by Weston Solutions, Inc., expressly for U.S. EPA. It shall not be released or disclosed in whole or in part without the express, written permission of U.S. EPA.

Table 7-1 (continued)
Sample Container, Volume, and Preservation Requirements
Ellsworth Industrial Park Site
Downers Grove, Illinois

Sample Matrix	Analysis	No. of Containers	Type of Containers	Preservatives	Technical Holding Time[1]
Soil	VOCs - mobile lab SW-846 Method 8260	1	4-oz glass jar	Cool 4±2°C	14 days
	VOCs -CRL SW846 Method 8260	3	5 gram Encore	Cool 4±2°C	48 hours to preserve then 14 days
	Total Organic Carbon SW-846 Method 9060	1	4-oz glass jar	Cool 4±2°C	28 days
	Cation Exchange Capacity EPA Method 6010 / BaCL2 Compulsive Exchange Method	1	4-oz glass jar	Cool 4±2°C	6 months
	Moisture Content EPA Method 310.1	1	2-oz glass jar	Cool 4±2°C	7 days
	Oxidation-Reduction Potential EPA Method 2580	1	4-oz glass jar	Cool 4±2°C	-
	Grain Size ASTM 2487.93	1	32-oz glass jar	Cool 4±2°C	1 year
	Hydraulic Permeability ASTM D 5856..95	1	Shelby Tubes	Cool 4±2°C	-

[1] All holding times are from the date of sample collection.
[2] Soil VOC samples require five (5) 5-gram Encore samplers for each MS/MSD sample.
[3] Four additional 40 ml bottles are required for 1 per 20 samples for MS/MSD analysis.

This document was prepared by Weston Solutions, Inc., expressly for U.S. EPA. It shall not be released or disclosed in whole or in part without the express, written permission of U.S. EPA.

FIGURES

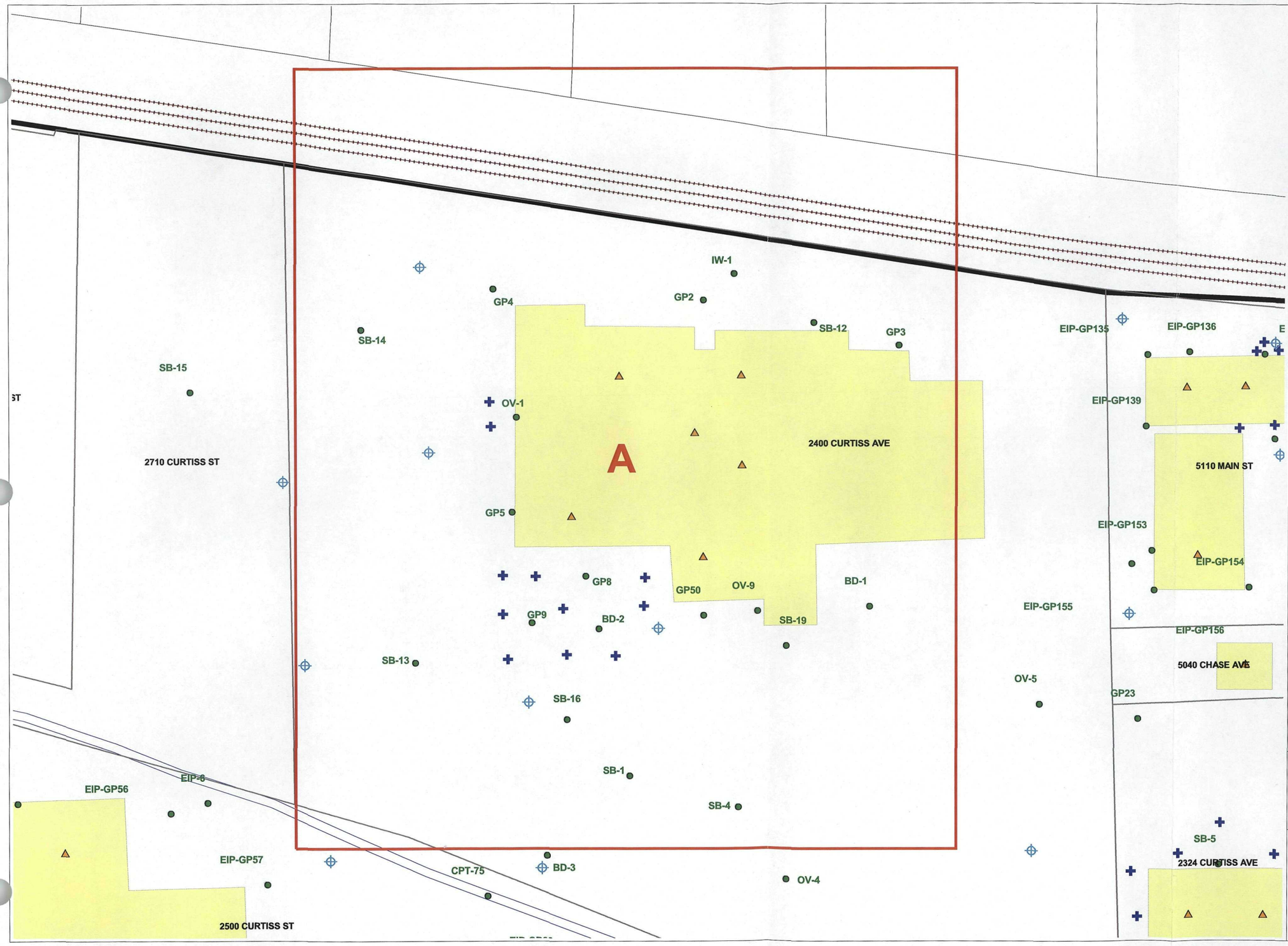

LEGEND:

- Proposed Intermediate Monitoring Well Location
- Proposed Shallow Monitoring Well Location
- Anticipated Sub-Slab Gas Sampling Location
- Proposed Soil Boring Location
- Existing OU1 Sample Locations
- Primary Study Areas
- Secondary Study Areas
- Parcel Boundaries
- OU1 Boundary
- Buildings
- Railroads
- Roads
- Rivers

Notes: Wells located in close proximity indicate a well nest.

N

0 130 Feet

RESPONSE ACTION CONTRACT
US EPA Contract No. 68-W7-0026
Work Assignment No. 251-RICO-B52A
Document Control No. RFW251-2E-AVZD

WESTON SOLUTIONS

Ellsworth Industrial Park - OU1
Downers Grove, Illinois

Weston Solutions, Inc.
750 E. Bunker Ct., Suite 500
Vernon Hills, IL 60061
847-918-4000
http://www.westonsolutions.com

Proposed Sampling Locations Study Area A

WORK ORDER No.:	PROJECT MANAGER:	
DRAWN BY: NJK	CHECKED BY:	
DRAWING NAME:	DIRECTORY/ FOLDER: C:\Ellsworth_Industrial\apr\09_13_06_fsp_d.apr	
CONTRACT No.:	DELIVERY/ ORDER No.:	
SCALE:	REPORT DATE:	
DATE: September 2006	REVISION No.:	FIGURE No.: 2-2

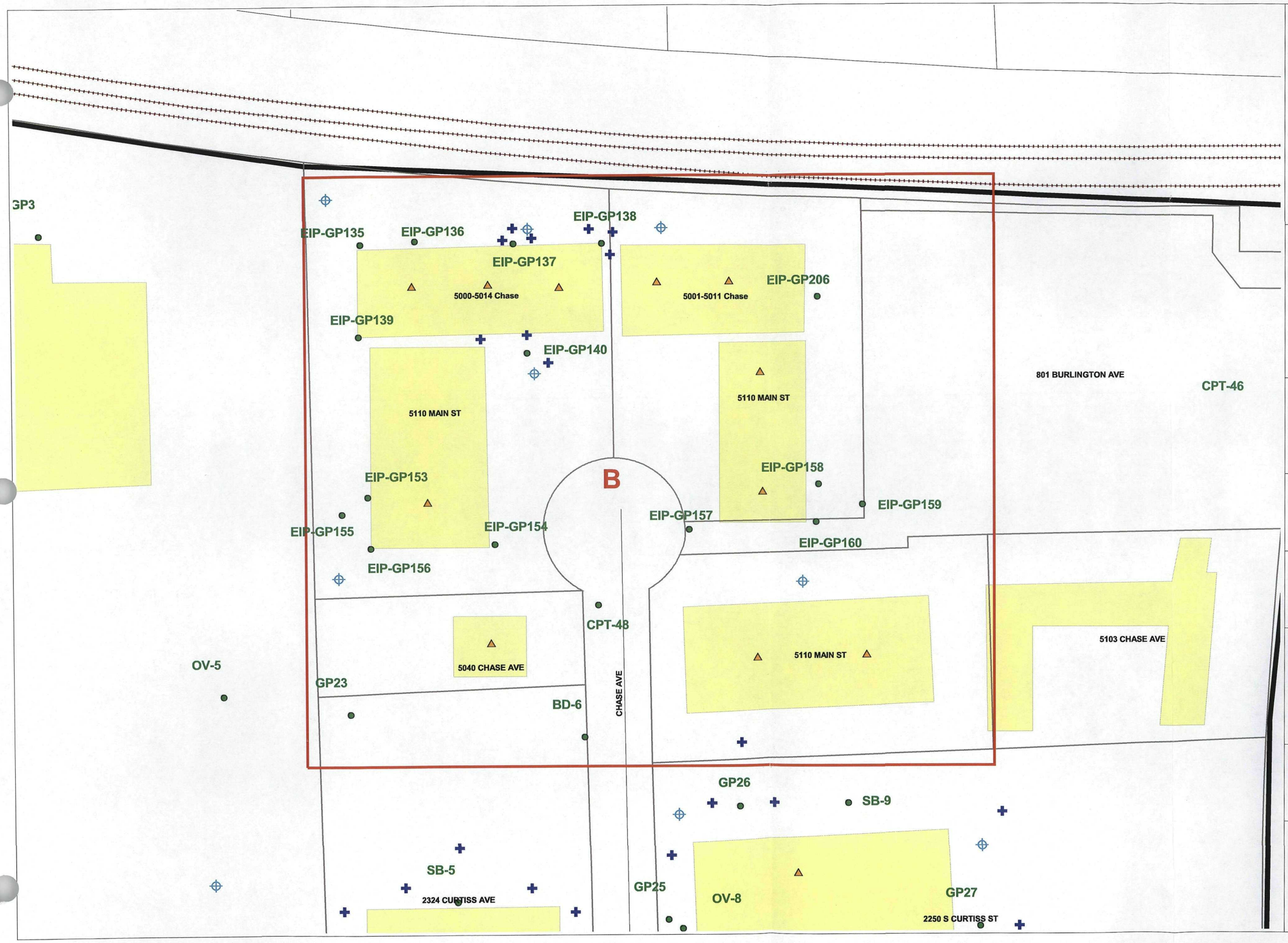

LEGEND:

- Proposed Intermediate Monitoring Well Location
- Proposed Shallow Monitoring Well Location
- Anticipated Sub-Slab Gas Sampling Location
- Proposed Soil Boring Location
- Existing OU1 Sample Locations
- Primary Study Areas
- Secondary Study Areas
- Parcel Boundaries
- OU1 Boundary
- Buildings
- Railroads
- Roads
- Rivers

Notes: Wells located in close proximity indicate a well nest.

N

0 130 Feet

RESPONSE ACTION CONTRACT
US EPA Contract No. 68-W7-0026
Work Assignment No. 251-RICO-B52A
Document Control No. RFW251-2E-AVZD

WESTON SOLUTIONS

Ellsworth Industrial Park - OU1
Downers Grove, Illinois

Weston Solutions, Inc.
750 E. Bunker Ct., Suite 500
Vernon Hills, IL 60061
847-918-4000
http://www.westonsolutions.com

Proposed Sampling Locations Study Area B

WORK ORDER No.:	PROJECT MANAGER:	
DRAWN BY: NJK	CHECKED BY:	
DRAWING NAME:	DIRECTORY/ FOLDER:	
CONTRACT No.:	DELIVERY ORDER No.:	
SCALE:	REPORT DATE:	
DATE: September 2006	REVISION No.:	FIGURE No.: 2-3

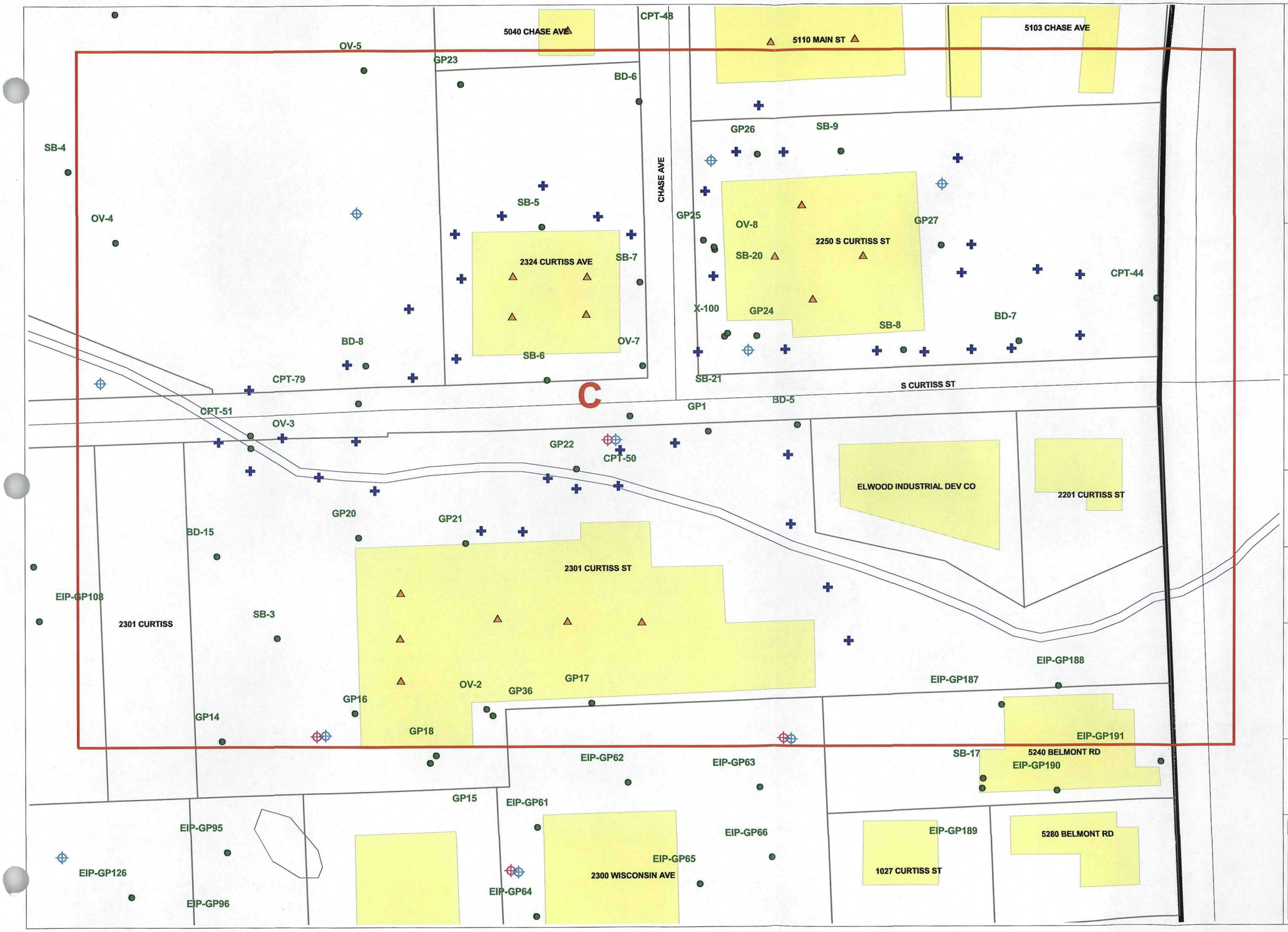

LEGEND:

- Proposed Intermediate Monitoring Well Location
- Proposed Shallow Monitoring Well Location
- Anticipated Sub-Slab Gas Sampling Location
- Proposed Soil Boring Location
- Existing OU1 Sample Locations
- Primary Study Areas
- Secondary Study Areas
- Parcel Boundaries
- OU1 Boundary
- Buildings
- Railroads
- Roads
- Rivers

Notes: Wells located in close proximity indicate a well nest.

N

0 130 Feet

RESPONSE ACTION CONTRACT
US EPA Contract No. 68-W7-0026
Work Assignment No. 251-RICO-B52A
Document Control No. RFW251-2E-AVZD

WESTON SOLUTIONS

Ellsworth Industrial Park - OU1
Downers Grove, Illinois

Weston Solutions, Inc.
750 E. Bunker Ct., Suite 500
Vernon Hills, IL 60061
847-918-4000
http://www.westonsolutions.com

Proposed Sampling Locations
Study Area C

WORK ORDER No.:		PROJECT MANAGER:	
DRAWN BY: NJK		CHECKED BY:	
DRAWING NAME:		DIRECTORY/ FOLDER:	P:\Ellsworth_Industrial\apr\09_13_06_fsp_d.apr
CONTRACT No.:		DELIVERY ORDER No.:	
SCALE:		REPORT DATE:	
DATE: September 2006		REVISION No.:	FIGURE No.: 2-4

LEGEND:

- Proposed Intermediate Monitoring Well Location
- Proposed Shallow Monitoring Well Location
- Anticipated Sub-Slab Gas Sampling Location
- Proposed Soil Boring Location
- Existing OU1 Sample Locations
- Primary Study Areas
- Secondary Study Areas
- Parcel Boundaries
- OU1 Boundary
- Buildings
- Railroads
- Roads
- Rivers

Notes: Wells located in close proximity indicate a well nest.

N

0 120 Feet

RESPONSE ACTION CONTRACT
US EPA Contract No. 68-W7-0026
Work Assignment No. 251-RICO-B52A
Document Control No. RFW251-2E-AVZD

WESTON SOLUTIONS

Ellsworth Industrial Park - OU1
Downers Grove, Illinois

Weston Solutions, Inc.
750 E. Bunker Ct., Suite 500
Vernon Hills, IL 60061
847-918-4000
http://www.westonsolutions.com

Proposed Sampling Locations
Study Area D

WORK ORDER No.:	PROJECT MANAGER:	
DRAWN BY: NJK	CHECKED BY:	
DRAWING NAME:	DIRECTORY/ FOLDER: D:\Ellsworth_Industrial\apr\09_13_06_fsp_6.apr	
CONTRACT No.:	DELIVERY ORDER No.:	
SCALE:	REPORT DATE:	
DATE: September 2006	REVISION No.:	FIGURE No.: 2-5

LEGEND:

- Proposed Intermediate Monitoring Well Location
- Proposed Shallow Monitoring Well Location
- Anticipated Sub-Slab Gas Sampling Location
- Proposed Soil Boring Location
- Existing OU1 Sample Locations
- Primary Study Areas
- Secondary Study Areas
- Parcel Boundaries
- OU1 Boundary
- Buildings
- Railroads
- Roads
- Rivers

Notes: Wells located in close proximity indicate a well nest.

N

0 100 Feet

RESPONSE ACTION CONTRACT
US EPA Contract No. 68-W7-0026
Work Assignment No. 251-RICO-B52A
Document Control No. RFW251-2E-AVZD

WESTON SOLUTIONS

Ellsworth Industrial Park - OU1
Downers Grove, Illinois

Weston Solutions, Inc.
750 E. Bunker Ct., Suite 500
Vernon Hills, IL 60061
847-918-4000
http://www.westonsolutions.com

Proposed Sampling Locations
Study Area E

WORK ORDER No.:		PROJECT MANAGER:	
DRAWN BY: NJK		CHECKED BY:	
DRAWING NAME:		DIRECTORY/ FOLDER:	D:\Ellsworth_Industrial\apr\09_13_06_fsp_d.apr
CONTRACT No.:		DELIVERY ORDER No.:	
SCALE:		REPORT DATE:	
DATE: September 2006		REVISION No.:	FIGURE No.: 2-6

LEGEND:

- Proposed Intermediate Monitoring Well Location
- Proposed Shallow Monitoring Well Location
- Anticipated Sub-Slab Gas Sampling Location
- Proposed Soil Boring Location
- Existing OU1 Sample Locations
- Primary Study Areas
- Secondary Study Areas
- Parcel Boundaries
- OU1 Boundary
- Buildings
- Railroads
- Roads
- Rivers

Notes: Wells located in close proximity indicate a well nest.

N

0 100 Feet

RESPONSE ACTION CONTRACT
US EPA Contract No. 68-W7-0026
Work Assignment No. 251-RICO-B52A
Document Control No. RFW251-2E-AVZD

WESTON SOLUTIONS

Ellsworth Industrial Park - OU1
Downers Grove, Illinois

Weston Solutions, Inc.
750 E. Bunker Ct., Suite 500
Vernon Hills, IL 60061
847-918-4000
http://www.westonsolutions.com

Proposed Sampling Locations
Study Area F

WORK ORDER No.:	PROJECT MANAGER:	
DRAWN BY: NJK	CHECKED BY:	
DRAWING NAME:	DIRECTORY/ FOLDER:	D:\Ellsworth_Industrial\apr\09_13_06_fsp_d.apr
CONTRACT No.:	DELIVERY ORDER No.:	
SCALE:	REPORT DATE:	
DATE: September 2006	REVISION No.:	FIGURE No.: 2-7

LEGEND:

- Proposed Intermediate Monitoring Well Location
- Proposed Shallow Monitoring Well Location
- Anticipated Sub-Slab Gas Sampling Location
- Proposed Soil Boring Location
- Existing OU1 Sample Locations
- Primary Study Areas
- Secondary Study Areas
- Parcel Boundaries
- OU1 Boundary
- Buildings
- Railroads
- Roads
- Rivers

Notes: Wells located in close proximity indicate a well nest.

N

0 120 Feet

RESPONSE ACTION CONTRACT
US EPA Contract No. 68-W7-0026
Work Assignment No. 251-RICO-B52A
Document Control No. RFW251-2E-AVZD

WESTON SOLUTIONS

Ellsworth Industrial Park - OU1
Downers Grove, Illinois

Weston Solutions, Inc.
750 E. Bunker Ct., Suite 500
Vernon Hills, IL 60061
847-918-4000
http://www.westonsolutions.com

Proposed Sampling Locations Study Area G

WORK ORDER No.:	PROJECT MANAGER:	
DRAWN BY: NJK	CHECKED BY:	
DRAWING NAME:	DIRECTORY/ FOLDER: G:\Ellsworth_Industrial\ay\09_13_06_fsp_d.apr	
CONTRACT No.:	DELIVERY ORDER No.:	
SCALE:	REPORT DATE:	
DATE: September 2006	REVISION No.:	FIGURE No.: 2-8

LEGEND:

- Proposed Intermediate Monitoring Well Location
- Proposed Shallow Monitoring Well Location
- Anticipated Sub-Slab Gas Sampling Location
- Proposed Soil Boring Location
- Existing OU1 Sample Locations
- Primary Study Areas
- Secondary Study Areas
- Parcel Boundaries
- OU1 Boundary
- Buildings
- Railroads
- Roads
- Rivers

Notes: Wells located in close proximity indicate a well nest.

N

0 100 Feet

RESPONSE ACTION CONTRACT
US EPA Contract No. 68-W7-0026
Work Assignment No. 251-RICO-B52A
Document Control No. RFW251-2E-AVZD

WESTON SOLUTIONS

Ellsworth Industrial Park - OU1
Downers Grove, Illinois

Weston Solutions, Inc.
750 E. Bunker Ct., Suite 500
Vernon Hills, IL 60061
847-918-4000
http://www.westonsolutions.com

Proposed Sampling Locations
Study Area H

WORK ORDER No.:	PROJECT MANAGER:	
DRAWN BY: NJK	CHECKED BY:	
DRAWING NAME:	DIRECTORY/ FOLDER: C:\Ellsworth_Industrial\apr\09_13_06_fsp_d.apr	
CONTRACT No.:	DELIVERY ORDER No.:	
SCALE:	REPORT DATE:	
DATE: September 2006	REVISION No.:	FIGURE No.: 2-9

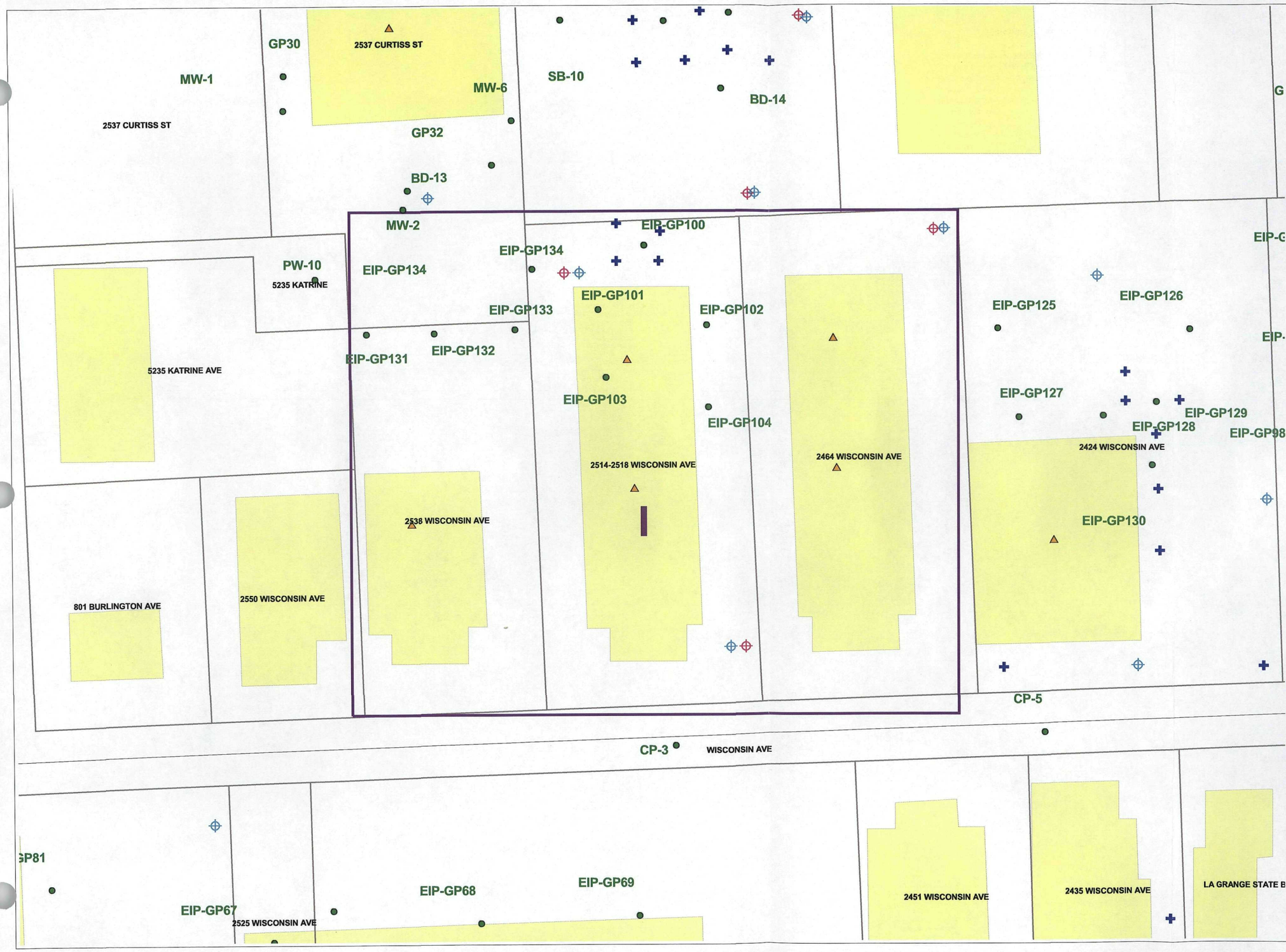

LEGEND:

- Proposed Intermediate Monitoring Well Location
- Proposed Shallow Monitoring Well Location
- Anticipated Sub-Slab Gas Sampling Location
- Proposed Soil Boring Location
- Existing OU1 Sample Locations
- Primary Study Areas
- Secondary Study Areas
- Parcel Boundaries
- OU1 Boundary
- Buildings
- Railroads
- Roads
- Rivers

Notes: Wells located in close proximity indicate a well nest.

N

0 100 Feet

RESPONSE ACTION CONTRACT
US EPA Contract No. 68-W7-0026
Work Assignment No. 251-RICO-B52A
Document Control No. RFW251-2E-AVZD

WESTON SOLUTIONS

Ellsworth Industrial Park - OU1
Downers Grove, Illinois

Weston Solutions, Inc.
750 E. Bunker Ct., Suite 500
Vernon Hills, IL 60061
847-918-4000
http://www.westonsolutions.com

Proposed Sampling Locations Study Area I

WORK ORDER No.:	PROJECT MANAGER:
DRAWN BY: NJK	CHECKED BY:
DRAWING NAME:	DIRECTORY/ FOLDER: D:\Ellsworth_Industrial\apr\09_13_06_fsp_d.apr
CONTRACT No.:	DELIVERY ORDER No.:
SCALE:	REPORT DATE:
DATE: September 2006	REVISION No.: / FIGURE No.: 2-10

LEGEND:

- Proposed Intermediate Monitoring Well Location
- Proposed Shallow Monitoring Well Location
- Anticipated Sub-Slab Gas Sampling Location
- Proposed Soil Boring Location
- Existing OU1 Sample Locations
- Primary Study Areas
- Secondary Study Areas
- Parcel Boundaries
- OU1 Boundary
- Buildings
- Railroads
- Roads
- Rivers

Notes: Wells located in close proximity indicate a well nest.

N

0 100 Feet

RESPONSE ACTION CONTRACT
US EPA Contract No. 68-W7-0026
Work Assignment No. 251-RICO-B52A
Document Control No. RFW251-2E-AVZD

WESTON SOLUTIONS

Ellsworth Industrial Park - OU1
Downers Grove, Illinois

Weston Solutions, Inc.
750 E. Bunker Ct., Suite 500
Vernon Hills, IL 60061
847-918-4000
http://www.westonsolutions.com

Proposed Sampling Locations
Study Area J

WORK ORDER No.:	PROJECT MANAGER:	
DRAWN BY: NJK	CHECKED BY:	
DRAWING NAME:	DIRECTORY/ FOLDER: C:\EIlsworth_Industrial\apr\09_13_06_fsp_d.apr	
CONTRACT No.:	DELIVERY ORDER No.:	
SCALE:	REPORT DATE:	
DATE: September 2006	REVISION No.:	FIGURE No.: 2-11

LEGEND:

- Proposed Intermediate Monitoring Well Location
- Proposed Shallow Monitoring Well Location
- Anticipated Sub-Slab Gas Sampling Location
- Proposed Soil Boring Location
- Existing OU1 Sample Locations
- Primary Study Areas
- Secondary Study Areas
- Parcel Boundaries
- OU1 Boundary
- Buildings
- Railroads
- Roads
- Rivers

Notes: Wells located in close proximity indicate a well nest.

N

0 100 Feet

RESPONSE ACTION CONTRACT
US EPA Contract No. 68-W7-0026
Work Assignment No. 251-RICO-B52A
Document Control No. RFW251-2E-AVZD

Ellsworth Industrial Park - OU1
Downers Grove, Illinois

Weston Solutions, Inc.
750 E. Bunker Ct., Suite 500
Vernon Hills, IL 60061
847-918-4000
http://www.westonsolutions.com

Proposed Sampling Locations
Study Area K

WORK ORDER No.:	PROJECT MANAGER:	
DRAWN BY: NJK	CHECKED BY:	
DRAWING NAME:	DIRECTORY/ FOLDER:	D:\Ellsworth_Industrial\apr\09_13_06_fsp_6.apr
CONTRACT No.:	DELIVERY ORDER No.:	
SCALE:	REPORT DATE:	
DATE: September 2006	REVISION No.:	FIGURE No.: 2-12

LEGEND:

- Proposed Intermediate Monitoring Well Location
- Proposed Shallow Monitoring Well Location
- Anticipated Sub-Slab Gas Sampling Location
- Proposed Soil Boring Location
- Existing OU1 Sample Locations
- Primary Study Areas
- *Secondary Study Areas*
- Parcel Boundaries
- OU1 Boundary
- Buildings
- Railroads
- Roads
- Rivers

Notes: Wells located in close proximity indicate a well nest.

N

0 120 Feet

RESPONSE ACTION CONTRACT
US EPA Contract No. 68-W7-0026
Work Assignment No. 251-RICO-B52A
Document Control No. RFW251-2E-AVZD

WESTON SOLUTIONS

Ellsworth Industrial Park - OU1
Downers Grove, Illinois

Weston Solutions, Inc.
750 E. Bunker Ct., Suite 500
Vernon Hills, IL 60061
847-918-4000
http://www.westonsolutions.com

Proposed Sampling Locations
2500 Curtiss Street

WORK ORDER No.:	PROJECT MANAGER:	
DRAWN BY: NJK	CHECKED BY:	
DRAWING NAME:	DIRECTORY/ FOLDER: D:\Ellsworth_Industrial\apr\09_13_06_fsp_d.apr	
CONTRACT No.:	DELIVERY ORDER No.:	
SCALE:	REPORT DATE:	
DATE: September 2006	REVISION No.:	FIGURE No.: 2-13

LEGEND:

- Proposed Intermediate Monitoring Well Location
- Proposed Shallow Monitoring Well Location
- Anticipated Sub-Slab Gas Sampling Location
- Proposed Soil Boring Location
- Existing OU1 Sample Locations
- Primary Study Areas
- Secondary Study Areas
- Parcel Boundaries
- OU1 Boundary
- Buildings
- Railroads
- Roads
- Rivers

Notes: Wells located in close proximity indicate a well nest.

N

0 100 Feet

RESPONSE ACTION CONTRACT
US EPA Contract No. 68-W7-0026
Work Assignment No. 251-RICO-B52A
Document Control No. RFW251-2E-AVZD

WESTON SOLUTIONS

Ellsworth Industrial Park - OU1
Downers Grove, Illinois

Weston Solutions, Inc.
750 E. Bunker Ct., Suite 500
Vernon Hills, IL 60061
847-918-4000
http://www.westonsolutions.com

Proposed Sampling Locations Property Located South of the Intersection of Curtiss & Glenview, East of Belmont

WORK ORDER No.:	PROJECT MANAGER:	
DRAWN BY: NJK	CHECKED BY:	
DRAWING NAME:	DIRECTORY/ FOLDER: b:\Ellsworth_Industrial\apr\09_13_06_fsp_d.apr	
CONTRACT No.:	DELIVERY ORDER No.:	
SCALE:	REPORT DATE:	
DATE: September 2006	REVISION No.:	FIGURE No.: 2-14

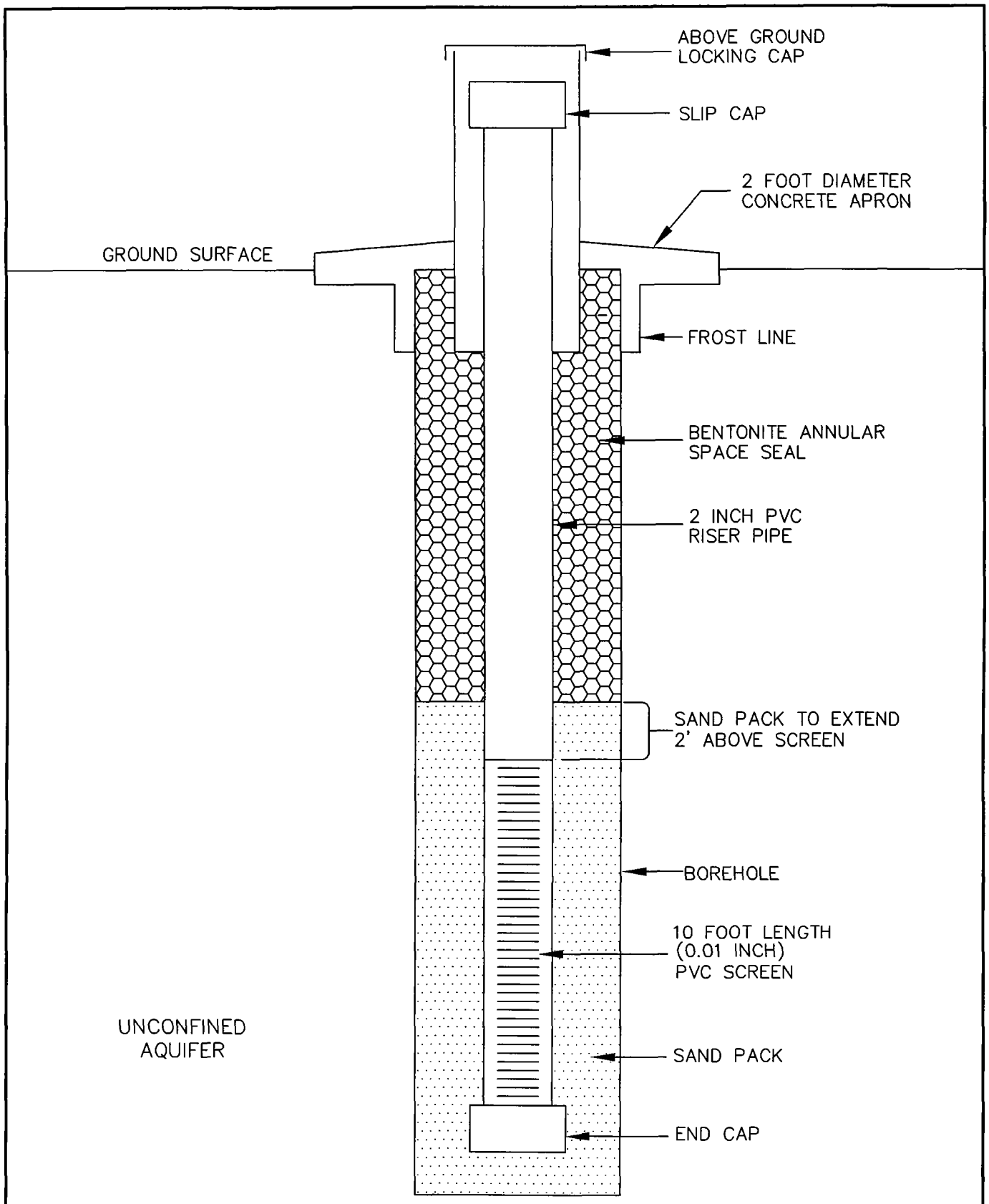

NOT TO SCALE

FIGURE 3-1

RESPONSE ACTION CONTRACT U.S. EPA CONTRACT No. 68-W7-0026 WORK ASSIGNMENT No. **251-RICO-B52A** DOCUMENT CONTROL No. **RFW251-2E-AVZD**	**MONITORING WELL CONSTRUCTION** ELLSWORTH INDUSTRIAL PARK SITE U.E. EPA Downers Grove, Illinois

Appendix B
Laboratory SOPs

Appendix B
Laboratory SOPs

LIST OF LABORATORY SOPs

1 BEACON ENVIRONMENTAL SERVICE LABORATORY SOPs

2 CGC INC. LABORATORY SOP

3 ERT/REAC LABORATORY SOPs

4 ESAT MOBILE LABORATORY SOPs

5 ESN ROCKY MOUNTAIN LABORATORY SOPs

Beacon Environmental Service
Laboratory SOPs

Memorandum

To: Mr. Joe Ruiz
Weston Solutions

From: Harry O'Neill
Beacon Environmental Services, Inc.

Date: September 8, 2006

Subject: Passive Soil-Gas Survey
Ellsworth Industrial Park, Downers Grove, IL
Supporting documentation in response to Request for Proposal dated September 5, 2006

Beacon Environmental Services, Inc. (BEACON) has submitted to WESTON a proposal on September 7, 2006, in response to the subject RFP dated September 5, 2006. Information provided in and accompanying this memorandum supply the information and documentation requested in the RFP.

Below are the requests from the RFP, followed by the information.

1) **Standard operating procedure for installation, removal, handling, and shipping of samples**

   BEACON's SOPs for the collection of passive soil-gas samples are provided as **Attachment 1** to this memorandum.

2) **Standard operating procedures for laboratory analysis**

   BEACON's SOPs for the analysis of passive soil-gas samples are provided as **Attachment 2** to this memorandum. A more detailed Quality Assurance Program Plan is available upon request.

3) **Analytical method information (turn-around-times (TAT), detection limits, container requirements, reporting limits, etc.)**

   TAT and Schedule:
   BEACON will supply WESTON with Field Kits within three (3) business days of notice to proceed.
   Samplers will remain in the field for three to 10 days, with the exact time determined by WESTON and BEACON when site information and project objectives are discussed.
   Following retrieval of samplers, WESTON will overnight the samplers to BEACON for analysis.
   BEACON will provide electronically analytical data to WESTON within five (5) business days of receipt of samples at the laboratory.
   Within 10 days of receipt of samples, BEACON will issue a final survey report with supporting documentation.

   Detection limits and Reporting Limits:
   The reporting limit for each compound is 25 nanograms, but the actual method detection limit (MDL) for each targeted compound is less than five (5) nanograms.

Container requirements:
BEACON provides the vials and all required return shipment materials necessary for WESTON to return the passive soil-gas samplers to BEACON. Further information is discussed in the attached field procedure SOPs.

4) **BEACON's Contact Information**

Function	Contact	Position	Contact Info
Laboratory Contact	Steven Thornley	Laboratory Director	410-838-8780 x112
Sample Manager	Ryan Schneider	Operations Manager	410-838-8780 x111
Quality Assurance Officer	Harry O'Neill	President	410-838-8780 x113

ATTACHMENT 1

STANDARD OPERATING PROCEDURES FOR THE COLLECTION OF PASSIVE SOIL-GAS SAMPLES

BEACON'S

FIELD KIT GUIDE
FOR
PASSIVE SOIL-GAS INVESTIGATIONS

BEACON ENVIRONMENTAL SERVICES, INC

www.beacon-usa.com

[PLEASE READ ENTIRE GUIDE BEFORE STARTING SURVEY]

I. General Information

A. BEACON is furnishing this kit to **WESTON SOLUTIONS** specifically for use on the **Ellsworth Industrial Park Site in Downers Grove, IL**. Install the passive soil-gas samplers **as soon as possible** and **contact BEACON for a retrieval schedule**. If deployment of the devices is delayed, please contact us as soon as possible. BEACON's phone number is (800) 878-5510.

B. It is also essential that, prior to returning the Kit to BEACON, WESTON SOLUTIONS verify that caps are tight on the Passive Soil-Gas (PSG) Samplers and that the Samplers are sealed individually in the small Sampler Bags and also in the larger Return Shipment Bag, with an adsorbent pak.

C. ***Before going to the field*** please inventory the contents of the Kit, checking them against the enclosed list to verify item counts and to become familiar with all components. (Because the components are thoroughly cleaned prior to shipment, the inventory should be conducted without opening the plastic bags.) Note that Trip Blanks are to remain sealed throughout the Survey.

D. Upon receipt of the Field Kit, BEACON requests that WESTON SOLUTIONS sign and date the enclosed Chain-of-Custody Form to document receipt of the Kit. The Field Deployment Report is to be completed during the course of the survey.

E. Following completion of the survey, fill out the Chain-of-Custody Form with the following information: (i) Field Sample IDs, (ii) the name and contact phone number of the person submitting the samples, (iii) the unique number of the custody seal that will be used, and (iv) signature and date of person relinquishing samples. The Chain-of-Custody Form and Field Deployment Report are to be returned with the Field Kit to BEACON. If possible, retain photocopies for your record. Next, pack the Samplers, tools, containers, sampling caps, and requisite documentation in the Field Kit.

Note: Place the Return Shipment Bag, which contains the individually bagged PSG Samplers, in the upper tray and place the tools in the lower compartment of the Kit so they do not damage the Samplers. One trip blank should be included with each Return Shipment Bag.

Affix the tug-tight custody seal to the latch on the Field Kit, pack it in its original cardboard shipping container, and call FedEx (1-800-238-5355) for overnight shipment to:

Beacon Environmental Services, Inc.
Attn: Sample Receiving
323 Williams Street, Suite D
Bel Air, MD 21014
Ph: 410-838-8780

NOTE: **DO NOT PACK IN THE KIT OR SHIPPING BOX STYRENE PEANUTS, NEWSPAPER, OR OTHER MATERIALS THAT COULD CONTAMINATE THE SAMPLES. PLEASE AVOID SMOKING WHILE HANDLING SAMPLERS. NO PRESERVATIVES OR ICE ARE NECESSARY FOR SHIPPING.**

II. Contents

A. This Field Kit contains the components needed for a **95**-point soil-gas survey, plus sufficient additional cartridges for **3** trip blanks (vial labeled **Trip-1, Trip-2, and Trip-3**, not to be opened), and **8** extra Samplers for use in the event of breakage or accidental contamination. In addition, **4** extra transport vials are provided in case a Sampler Vial breaks during retrieval. Assuming that instructions are followed, due care is exercised in QA/QC procedures, and timing schedules are observed, the Kit provides users with an extremely accurate and reliable soil-gas system. **Do not open bags until deployment.**

Code/Item		Quantity
(1)	BEACON PSG SAMPLERS	**106**
(2)	EXTRA TRANSPORT VIALS	**4**
(3)	SAMPLING CAPS (in container)	**103**
(4)	CAP STORAGE CONTAINERS	**2**
(5)	TAPPING DOWELS	**2**
(6)	12" LENGTHS OF COPPER PIPE	**103**
(7)	WIRE CUTTERS	**2**
(8)	GAUZE CLOTHS	**103**
(9)	COPPER PIPE CUTTER	**2**
(10)	SCRATCH AWL	**2**
(11)	VISE GRIPS	**2**
(12)	3" x 4" PLASTIC SAMPLER BAGS (for return shipment of samples)	**103**
(13)	12" x 12" PLASTIC RETURN SHIPMENT BAG	**3**

B. In addition to the materials found in the kit, field teams will need:

- NITRILE GLOVES
- CLEAN TOWEL
- HAMMER
- ELECTRIC ROTARY HAMMER DRILL WITH 1¼" to 1½" DIAMETER BIT WITH AT LEAST 12 INCHES OF CUTTING LENGTH
- OPTIONAL – ½"-DIAMETER BIT WITH 36 INCHES OF CUTTING LENGTH
- BALL-POINT PEN and CLIPBOARD
- PIN FLAGS, WOODEN STAKES, or OTHER LOCATION MARKERS
- FLAGGING TAPE
- BOX OF ALUMINUM FOIL

C. Additional materials necessary only for deployment through asphalt or concrete:

- DRY CONCRETE MORTAR MIX and ASSOCIATED EQUIPMENT (for temporary patching of the sample holes) including:
  SMALL PAIL, WATER, SMALL PLASTIC PUTTY KNIFE
- CHISEL or SCREWDRIVER (to remove the temporary patch)
- ASPHALT COLD PATCH or CEMENT (for final repair of the sample holes)

III. Instructions

A. GENERAL:

Deployment and retrieval of PSG Samplers requires only one person. Separate step-by-step procedures are detailed below for sampling through vegetation or bare soils and for sampling in areas

covered by asphalt, concrete, or gravel. **Keep exposure of sample cartridges to ambient air to a minimum.**

Note: Do not deploy Samplers within 10 feet of a monitoring well, penetrometer, hydropunch shaft, or other intrusive sampling apparatus that potentially creates a preferential pathway for gases.

REMEMBER:

- **TRIP BLANKS ARE NOT TO BE OPENED.**

B. SAMPLER DEPLOYMENT:

Note: Each Sampler contains two sets of adsorbent cartridges. BEACON will analyze one set per Sampler; however, the second set in each Sampler can be analyzed as a field sample duplicate. WESTON SOLUTIONS will note at which locations, if any, duplicates are to be analyzed by writing separate entries corresponding to the sample location followed by the letter "D" (*i.e,* 3, 3-D, 4, 4-D) on the Chain-of-Custody Form. It is not necessary to alter the deployment pattern to have the duplicate samples analyzed. There is an additional per sample charge for analysis of any duplicates.

Vegetation or Bare Soils:

1. At each survey point, clear vegetation as necessary and drill a 1¼"- to 1½"-diameter hole, using a rotary hammer drill or comparable equipment, to a depth of 12 inches. As an option, the hole may be advanced to a greater depth using a ½" drill bit to extend the hole to a three foot depth.

2. When the hole has been completed, take a 12-inch length of ¾"-inside-diameter copper pipe and lower it into the sample hole, being careful not to touch the inside of the pipe. Any portion of the pipe above grade is cut flush with the ground surface, using the copper pipe cutter. With the tapping dowel and a hammer, push or tap the pipe one inch into the base of the drilled hole (see **attached figure**).

3. Remove one of the PSG Samplers (a glass vial containing two sets of ***hydrophobic*** adsorbent cartridges) and unwind the retrieval wire wrapped around it. Holding the capped end of the vial in one hand, pull the wire tight (to straighten it) with the other hand. Remove the solid cap on the Sampler Vial and replace it with a Sampling Cap (a one-hole cap with a screen meshing insert). Place the solid cap in the Field Kit.

Note: At each sampling location, verify that the (black) sampling cap is on the vial before installing the Sampler.

4. Lower the Sampler, open-end down, into the copper pipe approximately six inches so that the retrieval wire sticks out of the hole. Cover the open end of the pipe with a balled up **wad** of aluminum foil, pressing it tightly on top of the pipe with the tapping dowel. Next, cover the hole to grade with local soils or sand, leaving the end of the wire exposed above the surface of the ground. Using the hammer, collapse the soils above the Sampler. **Coil the wire and lay it flat on the ground surface. [Note: Tying a ribbon of flagging tape around the coiled wire will make it easier to locate the Sampler during retrieval.]** Place the solid cap in the Cap Storage Container. Clearly mark the sample location with a pin flag or wooden stake.

5. Close the Field Kit, and on the Field Deployment Report record: (a) sample-point number; (b) date and time of emplacement (to nearest minute); and (c) other relevant information (*e.g.*, soil type, vegetation, proximity to potential source areas). Be sure to mark the sample location and take detailed notes (*i.e.*, compass bearings and distances from fixed reference points).

6. Move to next location.

Concrete, Asphalt, or Gravel Covered Areas:

1. At each survey point, drill a 1¼"- to 1½"-diameter hole through the asphalt/concrete/gravel to bare soil using a rotary hammer drill or comparable equipment. This hole should be approximately 12 inches deep. As an option, the hole may be advanced to a greater depth using a ½" drill bit to extend the hole to a three foot depth.

2. When the hole through concrete/asphalt/gravel has been completed, take a 12-inch length of ¾"-inside-diameter copper pipe and lower it into the sample hole, being careful not to touch the inside of the pipe. Any portion of pipe above grade is cut flush with the ground surface, using the copper pipe cutter. With the tapping dowel and a hammer, push or tap the pipe one inch into the base of the drilled hole (see **attached figure**).

3. Remove one of the PSG Samplers (a glass vial containing two sets of ***hydrophobic*** adsorbent cartridges) and unwind the retrieval wire wrapped around it. Holding the capped end of the vial in one hand, pull the wire tight (to straighten it) with the other hand. Remove the solid cap on the Sampler Vial and replace it with a Sampling Cap (a one-hole cap with a screen meshing insert). Place the solid cap in the Field Kit.

Note: At each sampling location, verify that the (black) sampling cap is on the vial before installing the Sampler.

4. Lower the Sampler, open-end down, into the copper pipe approximately six inches.

If sampling through asphalt or concrete, bend the end of the wire over the top of the pipe so that the coil of wire hangs over the top and outside of the pipe. Next, plug the top of the hole with a wad of aluminum foil. Using the tapping dowel, push down the aluminum foil so it forms a seal on the copper pipe and rests ¼" below the surfacing. Cover the hole to grade with a **¼" thick** concrete patch. [**Note**: A ¼" thick patch is all that is required. If it is thicker it will be difficult to remove during retrieval.] Next, place the solid cap in the Cap Storage Container.

If sampling through gravel, extend the retrieval wire out of the pipe and plug the pipe with a wad of aluminum foil. Using the tapping dowel, push down the aluminum foil so it forms a seal on the copper pipe. Bend the wire over the aluminum foil plug and while the wire is extended out of the hole, cover the aluminum foil with local soil or sand. **Coil the wire and lay it flat on the ground surface.** Next, place the solid cap in the Cap Storage Container.

If a hole deeper than 12 inches is created, it will be necessary to use more than one wad of aluminum foil. In these situations, extend the wire out of the pipe. While holding onto the wire, plug the top of the pipe and hole loosely with as many wads as needed. Before inserting the last wad of foil, bend the wire so it rests below the uppermost wad of foil. This will make it easy to retrieve the Sampler during retrieval.

5. Close the Field Kit, and on the Field Deployment Report record: (a) sample-point number; (b) date and time of emplacement (to nearest minute); (c) type of surfacing and approximate thickness; and (d) other relevant information (*e.g.*, surfacing material, proximity to potential source areas). Be sure to mark the sample location and take detailed notes (*i.e.*, compass bearings and distances from fixed reference points).

6. Move to next location.

C. SAMPLER RETRIEVAL:

Prior to retrieving samples, seal each Trip Blank in a 3"x4" Sampler Bag, and place the bagged Trip Blank in a separate larger bag marked "Return Shipment Bag." One trip blank should be included with each Return Shipment Bag. Stow the sampler blocks, with the Transport vials and extra samplers, in the lower compartment of the kit. The sampler blocks are to be returned to BEACON's lab along with the samples.

Note: Each Sampler contains two sets of adsorbent cartridges. BEACON will analyze one set per Sampler; however, the second set in each Sampler can be analyzed as a field sample duplicate. WESTON SOLUTIONS will note at which locations, if any, duplicates are to be analyzed by writing separate entries corresponding to the sample location followed by the letter "D" (*i.e,* 3, 3-D, 4, 4-D) on the Chain-of-Custody Form. It is not necessary to alter the deployment pattern to have the duplicate samples analyzed. There is an additional per sample charge for analysis of any duplicates.

Vegetation or Bare Soils:

1. At each sample location open the Field Kit and place it and the wire cutters within easy reach. Remove a square of gauze cloth and place it and a clean towel on the open Kit. Remove a solid cap from the Cap Storage Container and place it on the Kit, also.

2. Remove the aluminum foil plug, using vise grips and the scratch awl, if necessary, and retrieve the Sampler from the hole.

3. Holding the Sampler upright, clean the sides of the vial with the clean towel (especially close to the Sampling Cap). Remove the Sampling Cap, cut the wire from the vial with the wire cutters, and clean the vial threads completely with the gauze cloth.
[**Note**: **Completely remove the wire to ensure the cap fits tight on the vial and no soil is returned in the field kit**.]

4. Firmly screw the solid cap on the Sampler Vial and clean the vial completely with the gauze cloth. With a **ballpoint pen** record the sample number, corresponding to the sample location, on the cap's label. [**Note**: Do not use a Sharpie marker.]

5. Return the sampling cap to the Sampling Cap container. Place the sealed and labeled Sampler Vial in the smaller 3" x 4" plastic Sampler Bag. Then place the individually bagged and labeled sampler into the larger bag labeled "Return Shipment Bag."

Note: Each sampler must be individually bagged and placed in a Return Shipment Bag, with approximately 40 samplers and one trip blank per Return Shipment Bag.

6. On the Field Deployment Report, record: (a) date and time of retrieval (to nearest minute); and (b) any other relevant information.

7. After all samples have been retrieved, verify that the caps on each Sampler are sealed tightly and that the seals on the Sampler Bags are closed. Verify that all Samplers are stored in the Return Shipment Bags, which contains an adsorbent pak. Seal the Return Shipment Bags and place them in the upper tray of the Field Kits, and place the provided tools and materials in the lower compartment of the Field Kits.

Note: **It is not necessary to return the gauze pads or the wire with the Field Kit, but return *all* the other materials and equipment (blocks, extra samplers, tools, containers, sampling caps, *etc.*).**

Asphalt, Concrete, or Gravel:

1. At each sample point covered by gravel, clear away the soil or sand to expose the aluminum-foil plug. For those locations covered by asphalt or concrete, use a small chisel and hammer to remove the concrete patch to expose the aluminum foil.

2. Next, open the Field Kit and place it and the wire cutters within easy reach. Remove a square of gauze cloth and place it and a clean towel on the open Kit. Remove a solid cap from the Cap Storage Container and place it on the Kit, also.

3. While securely holding onto the retrieval wire, remove the aluminum-foil plug, using the scratch awl, as necessary. Holding the Sampler upright, clean the sides of the vial with the clean towel (especially close to the Sampling Cap). Remove the Sampling Cap, cut all the wire from the vial with the wire cutters, and clean the vial threads completely with gauze cloth.
[**Note**: **Completely remove the wire to ensure the cap fits tight on the vial and no soil is returned in the field kit**.]

4. Firmly screw the solid cap on the Sampler Vial and clean the vial completely with the gauze cloth. With a **ballpoint pen** record the sample number, corresponding to the sample location, on the cap's label. [**Note**: Do not use a Sharpie marker.]

5. Return the sampling cap to the Sampling Cap container. Place the sealed and labeled Sampler Vial in the smaller 3" x 4" plastic Sampler Bag. Then place the individually bagged and labeled sampler into the larger bag labeled "Return Shipment Bag."

Note: Each sampler must be individually bagged and placed in a Return Shipment Bag, with approximately 40 samplers and one trip blank per Return Shipment Bag.

6. On the Field Deployment Report, record: (a) date and time of retrieval (to nearest minute); and (b) any other relevant information. Return the sampling cap to the Sampling Cap container.

7. After all samples have been retrieved, verify that the caps on each Sampler are sealed tightly and that the seals on the Sampler Bags are closed. Verify that all Samplers are stored in the Return Shipment Bags, which contains an adsorbent pak. Seal the Return Shipment Bags and place them in the upper tray of the Field Kits, and place the provided tools and materials in the lower compartment of the Field Kits.

Note: **It is not necessary to return the used copper pipes, wire, or the gauze pads with the Field Kit, but return *all* the other materials and equipment (blocks, tools, containers, unused copper pipes, sampling caps, *etc.*).**

8. Fill sampling holes to grade with an asphalt cold patch or cement.

IV. Forms

The Field Kit also contains a **Chain-of-Custody Form** and a **Field Deployment Report**.

A. The Chain-of-Custody Form is to be completed in accordance with **Section I**.

B. The Field Deployment Report is to be filled out during the Survey as indicated in **Section III**.

BEACON PASSIVE SAMPLER

DEPLOYMENT THROUGH SOILS

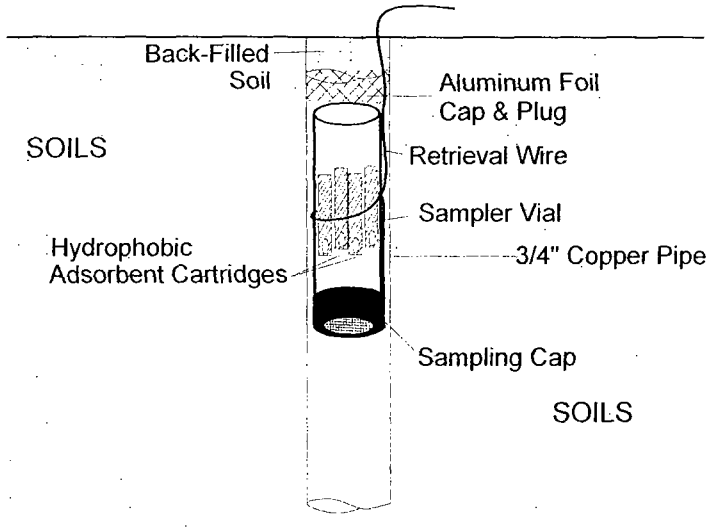

DEPLOYMENT THROUGH AN ASPHALT/CONCRETE CAP

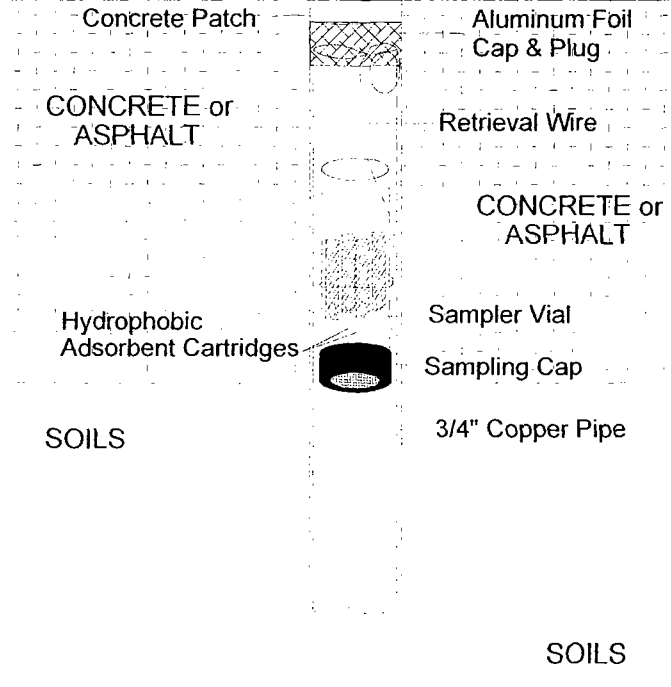

ATTACHMENT 2

STANDARD OPERATING PROCEDURES FOR THE ANALYSIS OF PASSIVE SOIL-GAS SAMPLES

Following are laboratory procedures used with BEACON Passive Soil-Gas Surveys, a screening technology for expedited site investigation. After exposure, adsorbent cartridges from the passive samplers are analyzed using U.S. EPA Method 8260B as described in the Solid Waste Manual (SW-846), a capillary gas chromatographic/mass spectrometric method, modified to accommodate high temperature thermal desorption of the adsorbent cartridges. This procedure is summarized as follows:

A. The adsorbent cartridges are loaded with *internal standards* and *surrogates* prior to loading the autosampler with the cartridges. The loaded cartridges are purged in a helium flow. Then the cartridges are thermally desorbed in a helium flow onto a focusing trap. Any analytes in the helium stream are adsorbed onto a focusing trap.

B. Following trap focusing, the trap is thermally desorbed onto a DB-VRX 60m, 0.25 mm ID, 1.40 micron filament thickness capillary column.

C. The GC/MS is scanned between 35 and 270 Atomic Mass Units (AMU) at 3.12 scans per second.

D. BFB tuning criteria and the *initial five-point calibration* procedures are those stated in method SW846-8260B. System performance and calibration check criteria are met prior to analysis of samples. A laboratory method blank is analyzed after the daily standard to determine that the system is contaminant-free.

E. The instrumentation used for these analyses includes:

- Agilent 6890-5973 Gas Chromatograph/Mass Spectrometer;
- Markes Unity thermal desorber;
- Markes UltrA autosampler; and
- Markes Mass Flow Controller Module.

CGC Inc.
Laboratory SOP

CGC, Inc.

FALLING HEAD PERMEABILITY TEST STANDARD PROCEDURE

PERMEABILITY TESTS WITH SAMPLING TUBES. Permeability tests may be performed directly on undisturbed samples without removing them from the sampling tubes. The sampling tube serves as the permeameter cylinder. (Reference US Army Corps of Engineers Engineering Manual EM1110-2-1906, Appendix VII, 30 NOV 70)

When Shelby tube samples are tested, the annular space between the sample and the Shelby tube is sealed with a bead of bentonite paste to prevent sidewall leakage. Disturbed material or material containing drilling mud is first removed from the top and bottom of the sample. The ends of the sample are then protected with a non-woven geotextile. The sample is then ready for the falling head permeability test as per ASTM D 5856-95 (attached).

Designation: D 5856 – 95 (Reapproved 2002)$^{\epsilon 1}$

Standard Test Method for Measurement of Hydraulic Conductivity of Porous Material Using a Rigid-Wall, Compaction-Mold Permeameter[1]

This standard is issued under the fixed designation D 5856; the number immediately following the designation indicates the year of original adoption or, in the case of revision, the year of last revision. A number in parentheses indicates the year of last reapproval. A superscript epsilon (ε) indicates an editorial change since the last revision or reapproval.

ϵ^1 NOTE—Equation 11 was corrected editorially in January 2003.

1. Scope

1.1 This test method covers laboratory measurement of the hydraulic conductivity (also referred to as *coefficient of permeability*) of laboratory-compacted materials with a rigid-wall, compaction-mold permeameter.

1.2 This test method may be used with laboratory-compacted specimens that have a hydraulic conductivity less than or equal to 1×10^{-5} m/s. The hydraulic conductivity of compacted materials that have hydraulic conductivities greater than 1×10^{-5} m/s may be determined by Test Method D 2434.

1.3 The values stated in SI units are to be regarded as the standard, unless other units are specifically given. By tradition in U.S. practice, hydraulic conductivity is reported in centimetres per second, although the common SI units for hydraulic conductivity are metres per second.

1.4 *This standard does not purport to address all of the safety concerns, if any, associated with its use. It is the responsibility of the user of this standard to establish appropriate safety and health practices and determine the applicability of regulatory limitations prior to use.*

2. Referenced Documents

2.1 *ASTM Standards:*

D 653 Terminology Relating to Soil, Rock, and Contained Fluids[2]

D 698 Test Method for Laboratory Compaction Characteristics of Soil Using Standard Effort (12 400 ft-lbf/ft^3 (600 KN-m/m^3))[2]

D 854 Test Method for Specific Gravity of Soils Solids by Water Pycnometer[2]

D 1557 Test Method for Laboratory Compaction Characteristics of Soil Using Modified Effort (56 000 ft-lbf/ft^3(2700 KN-m/m^3))[2]

D 2216 Method for Laboratory Determination of Water (Moisture) Content of Soil and Rock by Mass[2]

D 2434 Test Method for Permeability of Granular Soils (Constant Head)[2]

D 4753 Specification for Evaluating, Selecting, and Specifying Balances and Scales for Use in Soil, Rock, and Construction Materials[2]

D 5084 Test Method for Measurement of Hydraulic Conductivity of Saturated Porous Materials Using a Flexible Wall Permeameter[2]

E 145 Specification for Gravity-Convection and Forced-Ventilation Ovens[3]

3. Terminology

3.1 *Definitions of Terms Specific to This Standard:*

3.1.1 *flux*—quantity of flow per unit area per unit time.

3.1.2 *hydraulic conductivity, k*—the rate of discharge of water under laminar flow conditions through a unit cross-sectional area of a porous medium under a unit hydraulic gradient and standard temperature conditions (20°C).

3.1.2.1 *Discussion*—The term *coefficient of permeability* is often used instead of *hydraulic conductivity*, but *hydraulic conductivity* is used exclusively in this test method. A more complete discussion of the terminology associated with Darcy's law is given in the literature[4].

3.1.3 *pore volume of flow*—the cumulative quantity of outflow from a test specimen divided by the volume of pore space in the specimen.

3.1.4 For definitions of other terms used in this test method see Terminology D 653.

4. Significance and Use

4.1 This test method applies to one-dimensional, laminar flow of water within laboratory-compacted, porous materials such as soil.

4.2 The hydraulic conductivity of porous materials generally decreases with an increasing amount of air in the pores of the material. This test method applies to porous materials

[1] This test method is under the jurisdiction of ASTM Committee D18 on Soil and Rock and is the direct responsibility of Subcommittee D18.04 on Hydrologic Properties of Soil and Rock.

Current edition approved Nov. 10, 1995. Published January 1996.

[2] *Annual Book of ASTM Standards*, Vol 04.08.

[3] *Annual Book of ASTM Standards*, Vol 04.02.

[4] Olsen, R. E., and Daniel, D. E., "Measurement of the Hydraulic Conductivity of Fine-Grained Soils," *Symposium on Permeability and Groundwater Contaminant Transport, ASTM STP 746*, ASTM, 1981, pp. 18–64.

Copyright © ASTM International, 100 Barr Harbor Drive, PO Box C700, West Conshohocken, PA 19428-2959, United States.

ntaining little or no air. The test method is designed to nimize the amount of air in the test specimen. However, this t method does not ensure complete saturation of the test ecimen with water. In cases where it is essential to saturate : test specimen fully with water, the compacted specimen ay be tested using Test Method D 5084.

4.3 This test method applies to permeation of porous materials with water. Permeation with other liquids, such as emical wastes, can be accomplished using procedures simi- to those described in this test method. However, this test ethod is only intended to be used when water is the permeant uid.

4.4 It is assumed that Darcy's law is valid and that the draulic conductivity is essentially unaffected by hydraulic adient. The validity of Darcy's law may be evaluated by easuring the hydraulic conductivity of the specimen at three draulic gradients; if all measured values are similar (within %), then Darcy's law may be taken as valid. However, when hydraulic gradient acting on a test specimen is changed, the te of stress will also change, and, if the specimen or pore id is compressible, the volume of the test specimen or pore id will change. Thus, some change in hydraulic conductivity ay occur when the hydraulic gradient is altered, even in cases ere Darcy's law is valid.

4.5 One potential problem with this method of testing is the ssibility that water will flow along the interface between the cimen and the compaction/permeameter ring. The tends to be of minimal significance for materials that ell when exposed to water (for example, compacted, clayey ils) but can be a very serious problem for materials that ight tend to shrink and pull away from the walls of the rmeameter. Test Method D 5084 is recommended for any aterial that tends to shrink when exposed to the permeant uid.

4.6 The correlation between results obtained with this test ethod and the hydraulic conductivities of in-place, comcted materials has not been fully investigated. Experience s sometimes shown that flow patterns in small, laboratory-epared test specimens do not necessarily follow the same tterns on large field scales and that hydraulic conductivities easured on small test specimens are not necessarily the same larger-scale values. Therefore, the results should be applied field situations with caution and by qualified personnel.

Apparatus

5.1 *Hydraulic System*—Constant head (Test Method A), lling head (Test Methods B, C, and D), or constant rate of ow (Test Method E) systems may be used provided they meet e criteria outlined as follows:

5.1.1 *Constant Head*—The system must be capable of aintaining a constant hydraulic pressure or head to within ± % and shall include means to measure hydraulic pressures or ads to within the prescribed tolerance. In addition, the head ss across the test specimen must be held constant to within ± % and shall be measured with the same accuracy or better. essures shall be measured by a pressure gage, electronic transducer, or any other device of suitable accuracy. Head of liquid in a standpipe may be measured with a graduated pipette, ruler, scale, or other device of suitable accuracy.

5.1.2 *Falling Head*—The system shall allow for measurement of the applied head loss, thus hydraulic gradient, to within ± 5 % or better at any time. In addition, the ratio of initial head loss divided by final head loss over an interval of time shall be measured such that this computed ratio is accurate to within ± 5 %. The head loss shall be measured with a pressure gage, electronic pressure transducer, engineer's scale, graduated pipette, or any other device of suitable accuracy. Falling head tests may be performed with either a constant tailwater elevation (Test Method B), rising tailwater elevation (Test Method C), or increasing tailwater elevation (Test Method D).

5.1.3 *Constant Rate of Flow*—The system must be capable of maintaining a constant rate of flow through the specimen to within ± 5 % or better. Flow measurement or control shall be by calibrated syringe, graduated pipette, or other device of suitable accuracy. The head loss across the specimen shall be measured to an accuracy of ± 5 % or better using an electronic pressure transducer or other device of suitable accuracy. A means to ensure that the head being measured is not affected by sidewall leakage should be included. More information on testing with a constant rate of flow is given in the literature[5].

5.2 *Flow Measurement System*—Both inflow and outflow volumes shall be measured or controlled. Flow volumes shall be measured by a graduated accumulator, graduated pipette, graduated cylinder, vertical standpipe in conjunction with an electronic pressure transducer, marriotte bottle, or other volume-measuring device of suitable accuracy. For long-term tests, evaporative losses may be significant and should be accounted for using a suitable correction procedure.

5.2.1 *Flow Accuracy*—Required accuracy for the quantity of flow measured over an interval of time is ± 5 % or better.

5.2.2 *Head Losses*—Head losses in the tubes, valves, porous end pieces, and filter paper may lead to error. To guard against such errors, the permeameter shall be assembled with no specimen inside (but with any porous end pieces or sheet of filter paper that will be used) and then the hydraulic system filled. If a constant or falling head test is to be used, the hydraulic pressures or heads that will be used in testing a specimen shall be applied, and the rate of flow measured with an accuracy of ± 5 % or better. This rate of flow shall be at least ten times greater than the rate of flow that is measured when a specimen has been compacted inside the permeameter and the same hydraulic pressures or heads are applied. If a constant rate of flow test is to be used, the rate of flow to be used in testing a specimen shall be supplied to the permeameter and the head loss measured. The head loss without a specimen shall be less than 0.1 times the head loss when a specimen is present.

5.3 *Permeameter Cell*—The permeameter cell shall consist of a rigid-wall compaction mold into which the material to be

[5] Olsen, H. W., Gill, J. D., Wilkins, A. T., and Nelson, N. R., "Innovations in Hydraulic Conductivity Measurements," *Transportation Research Record No. 1*[illegible], Transportation Research Board, National Research Council, Washington, DC, 19[illegible]

ıtod is compacted and in which the compacted material is rmeated; and two end plates to control flow into and out of e test specimen. A swell ring may be provided as discussed in 3.2. The permeameter shall be designed and operated so that rmeant water flows downward through the test specimen, though upward flow may be used if the top of the specimen protected from upward movement by a rigid porous element.

5.3.1 *Compaction Mold/Permeameter Ring*—The compacon mold/permeameter ring shall be constructed of a rigid ıaterial that will not be damaged during compaction of the test pecimen and that will not undergo adverse chemical reactions ith the test material or permeant water. Materials such as teel, aluminum, brass, plastic, and glass have been used. The ıold shall be sufficiently rigid so that its expansion when the ermeameter is pressurized is negligibly small. The mold can e any cylindrical shape so long as: the cross-sectional area long the direction of flow does not vary by more than ± 2 %; eight and diameter are each ≥ 25 mm; height does not vary y more than ± 1 %, and the largest particle and clod size in he compacted specimen is ≤ ⅙ the lesser of the height or liameter.

5.3.2 *Swell Ring*—The top of the permeameter may be designed to function in one of three ways: (*1*) to allow no restraint against swelling (see Fig. 1), in which case a swell ring separates the compaction mold/permeameter ring from the top plate; (*2*) to allow no swelling of the test specimen (see Fig. 2), in which case no swell ring is provided; or (*3*) to control the vertical stress that is applied to the test specimen (see Fig. 3), in which case a swell ring may or may not be needed, depending upon how the top plate is designed and how the vertical stress is applied. If a swell ring is used, it shall be constructed of a rigid material that will not react adversely with the test material or permeant water, shall have the same diameter or width as the compaction mold/permeameter ring, and shall be sufficiently high to allow free swelling of the test specimen or to accommodate stress-control apparatus. Sand

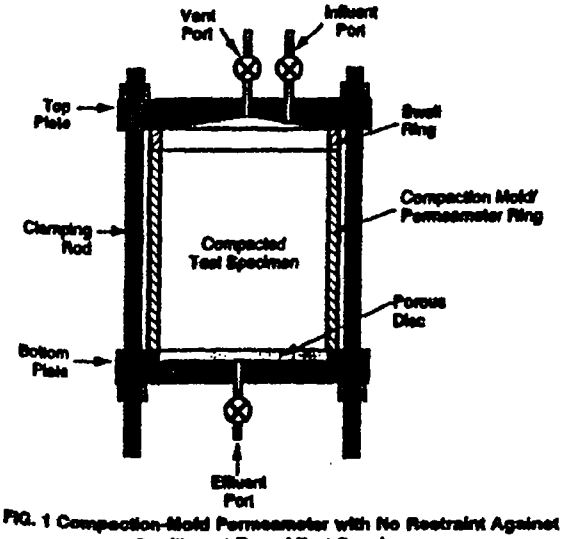

FIG. 1 Compaction-Mold Permeameter with No Restraint Against Swelling at Top of Test Specimen

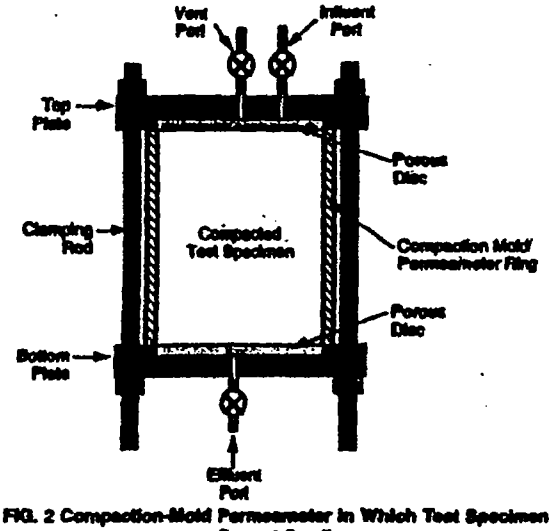

FIG. 2 Compaction-Mold Permeameter in Which Test Specimen Cannot Swell

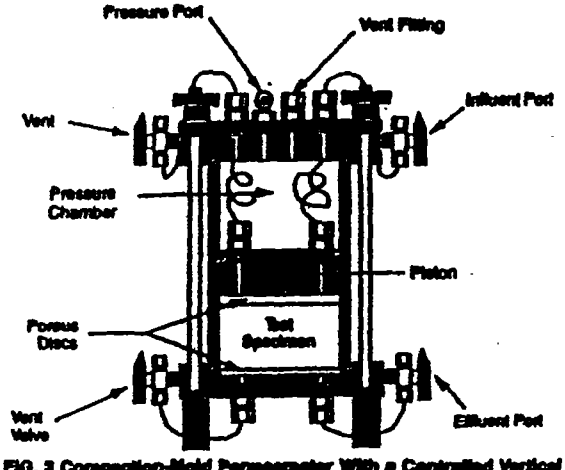

FIG. 3 Compaction-Mold Permeameter With a Controlled Vertical Stress Applied to the Top of the Test Specimen

may be placed in the swell ring to minimize erosion of the specimen from influent flow provided that the sand is included in the measurement of head losses in the permeameter (see 5.2.2).

5.3.3 *Stress-Control Apparatus*—If the upper surface of the compacted test specimen is subjected to a controlled vertical stress, the stress shall be applied through a rigid plate using any means that maintains the stress within ± 5 % of the desired value.

5.3.4 *Bottom Plate*—The bottom plate shall be constructed of rigid material that does not react adversely with the test material or permeant liquid. The plate shall serve the purpose of preventing the test specimen from swelling downward, supporting the test specimen, collecting effluent liquid from the base of the test specimen, and ensuring one-dimensional flow near the effluent end of the test specimen. The base plate shall

be sealed to the compaction mold/permeameter ring, for example, with an O-ring, to prevent leakage. Checks for leaks, conducted without soil in the cell, are helpful to ensure adequacy of the seals. Careful examination of the seal is particularly important when the apparatus is disassembled and re-assembled during the test. The bottom plate shall contain a porous material (such as porous plastic, porous metal, porous corundum, or well-compacted sand) that is far more permeable than the test specimen (5.2.2 ensures that this is the case) and that has the same overall diameter or width as the test specimen. Two base plate designs are acceptable:

5.3.4.1 *Single-Ring*—This design (Fig. 1, Fig. 2, and Fig. 3) consists of a single porous material with the same diameter or width as the test specimen.

5.3.4.2 *Double Ring*—With this design (see Fig. 4), outflow from the central part of the test specimen is separated from flow near the sidewalls in the base plate. The system shall be designed so that the collector ring (see Fig. 4) protrudes approximately 3 mm into the test specimen and completely separates flow entering the base plate through the inner zone from flow entering the outer zone. A thin ring with a sharp edge should be used to prevent disturbance of the soil during installation.

NOTE 1—The double ring is preferred over the single ring because the double ring provides a means for identifying erroneous measurements caused by side-wall leakage. Unless the requestor specifically requests a single-ring base plate, the double-ring base plate shall be used.

5.3.5 *Top Plate*—The top plate shall be constructed from rigid materials that do not react adversely with the test material or permeant water. The top plate shall be sealed to the compaction mold/permeameter ring or swell ring (if present) in a way that prevents leakage. Tests for leaks, conducted without soil in the cell, are helpful to ensure the adequacy of the seals. The plate shall be designed to ensure that flow through the test specimen is one-dimensional.

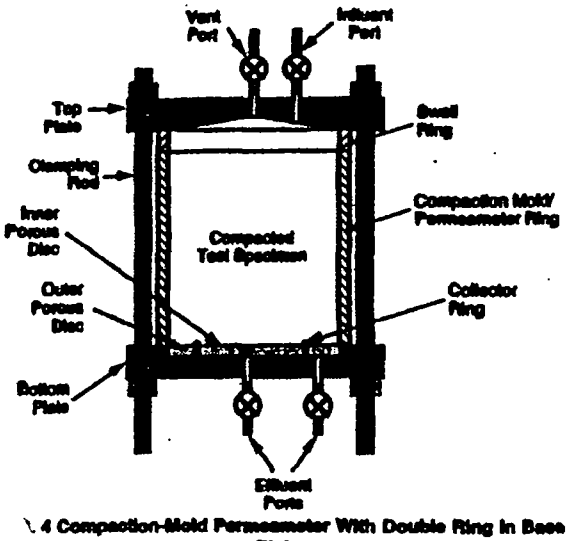

FIG. 4 Compaction-Mold Permeameter With Double Ring in Base Plate

5.4 *Filter Paper*—If necessary to prevent intrusion of material into the pores of the porous end pieces, one or more sheets of filter paper shall be placed between the top and bottom porous end pieces and the specimen. The paper shall have a negligibly small hydraulic impedance. The requirements outlined in 5.2.2 ensure that the impedance is small.

5.5 *Equipment for Compacting a Specimen*—Equipment (including compactor and mold) suitable for the method of compaction specified by the requester shall be used. Examples of compaction equipment/procedures are Test Methods D 698 and D 1557.

5.6 *Devices for Measuring the Dimensions of the Specimen*—Devices used to measure the dimensions of the specimen shall be capable of measuring to the nearest 0.3 mm (0.01 in.) or better and shall be constructed such that their use will not disturb the specimen.

5.7 *Balances*—The balance shall be suitable for determining the mass of the specimen and shall be selected as discussed in Specification D 4753. The mass of specimens less than 100 g shall be determined to the nearest 0.01 g. The mass of specimens 100 g or larger shall be determined to the nearest 0.1 g. The mass of specimens > 1000 g shall be determined to the nearest 1.0 g.

5.8 *Temperature Maintaining Device*—The temperature of the permeameter, test specimen, and reservoir of permeant liquid shall not vary more than ±3°C (±5.7°F). Normally, this is accomplished by performing the test in a room with a relatively constant temperature. If such a room is not available, the apparatus shall be placed in a water bath, insulated chamber, or other device that maintains a temperature within the tolerance specified above. The temperature shall be periodically measured and recorded.

5.9 *Water Content Containers*—The containers shall be in accordance with Test Method D 2216.

5.10 *Drying Oven*—The oven shall be in accordance with Specification E 145.

6. Reagents

6.1 *Permeant Water*:

6.1.1 The permeant water is the liquid used to permeate the test specimen. Any liquid introduced into the test specimen, porous elements, filter paper, or other portions of the permeameter shall be permeant water.

6.1.2 The type of permeant water shall be specified by the requestor. If no specification is made, de-aired tap water shall be used for the permeant liquid. The type of water used shall be indicated in the report. Regardless of the type of permeant water requested, the water shall be de-aired water (see 6.1.3), unless the requestor specifically requests that the water not be de-aired.

NOTE 2—Chemical interactions between a permeant liquid and the porous material may lead to variations in hydraulic conductivity. Distilled water can significantly lower the hydraulic conductivity of clayey soils. For this reason, distilled water is not usually recommended as a permeant liquid. A permeant liquid used by some is 0.005 *N* $CaSO_4$, that can be obtained, for example, by dissolving 6.8 g of non-hydrated, reagent-grade $CaSO_4$ in 10 L of de-aired, distilled (or de-ionized) water. This $CaSO_4$ solution is thought to neither increase nor decrease significantly the

draulic conductivity of clayey soils. In areas with extremely brackish water, the $CaSO_4$ solution is recommended.

6.1.3 To aid in removing as much air from the test specimen possible, de-aired water shall be used. The water is usually -aired by boiling, by spraying a fine mist of water into an acuated vessel attached to a vacuum source, or by forceful itation of water in a container attached to a vacuum source. boiling is used, care shall be taken not to evaporate an cessive amount of water, which can lead to a larger salt ncentration in the permeant water than desired. To prevent solution of air back into the water, de-aired water shall not exposed to air for prolonged periods.

Test Specimen

7.1 *Preparation of Compaction/Permeameter Ring*—Prior compaction, determine the inside dimensions of the mpaction/permeameter ring to the tolerances given in 5.3.1, d determine the mass of the compaction/permeameter ring to e tolerances given in 5.7. If desired, the inside of the rmeameter may be coated with a thin layer of sodium entonite paste to minimize the possibility of side-wall leakge.

7.2 *Compaction*—Prepare the material to be tested and mpacted inside the compaction/permeameter ring in a manr specified by the requestor. If the specimen is placed and mpacted in layers, lightly scarify the surface of each eviously-compacted layer (roughen) with a fork, ice pick, or her suitable object, unless the requester specifically states at scarification is not to be performed. Test Methods D 698 d D 1557 describe two methods of compaction, but any other ethod specified by the requestor may be used as long as the ethod is described in the report. Large clods of material ould not be broken down prior to compaction unless it is own that they will be broken in field construction, as well, or e requestor specifically requests that the clod size be reduced. either hard clods nor individual particles of the material shall ceed ⅙ of either the height or diameter of the specimen. ter compaction, determine the mass of the compaction/ rmeameter ring containing the compacted specimen and mediately mount the compaction/permeameter ring containg the test specimen in the permeameter. Determine the water ntent of the trimmings or excess material in accordance with est Method D 2216. Determine the mass (M) of the test pecimen by subtracting the mass of the compaction/ rmeameter ring from the mass of the compaction/ rmeameter ring plus test specimen.

7.3 Calculate the total volume of the test specimen (V) from e length (L) and diameter (D) of the test specimen as follows:

$$V = \frac{\pi D^2 L}{4} \tag{1}$$

7.4 Calculate the initial dry density (ρ_d) of the compacted pecimen and porosity (n) of the test specimen from the mass M) and volume of the specimen (V) and from the approximate ater content (w, in decimal form) of the specimen as follows:

$$\rho_d = \frac{M}{(1 + w)V} \tag{2}$$

and:

$$n = 1 - \frac{\rho_d}{G_s \rho_w} \tag{3}$$

where:

G_s = the specific gravity of solids, that shall either be measured according to Test Method D 854 or estimated.

NOTE 3—Accurate measurement of the specific gravity of solids of many materials is difficult. The specific gravity of solids shall be determined with an estimated accuracy of ±0.05. For many materials, it is possible to estimate G_s within this accuracy.

7.5 Calculate the volume of the pores in the test specimen (V_p) as follows:

$$V_p = nV \tag{4}$$

8. Procedure

8.1 *Specimen Set-Up*:

8.1.1 If filter paper is used to prevent clogging of porous end pieces, cut filter paper sheets to approximately the same shape as the cross section of the test specimen.

8.1.2 Soak any porous end pieces (discs) and filter paper sheets to be used in a container of permeant water and place the filter paper sheets on the porous end pieces.

8.1.3 Assemble the permeameter cell and fill it with de-aired permeant water. Flush permeant water through the influent line to remove any entrapped gas.

NOTE 4—Care should be exercised when assembling permeameters with a double ring in the base plate to ensure seating of the ring in the specimen. A restraining ring can be placed on top of the specimen during assembly to prevent slippage of the specimen as it is pressed into the ring. Alternatively, the specimen can be compacted directly on the base of the permeameter. If this latter procedure is used, then the base plate and ring should be sturdy enough to prevent breakage during compaction.

8.1.4 If a controlled stress is to be applied to the upper surface of a test specimen, apply it at this stage.

8.2 *Permeation*:

8.2.1 *Hydraulic Gradient*—When possible, the hydraulic gradient used for hydraulic conductivity measurements should be similar to that expected to occur in the field. In general, hydraulic gradients from < 1 to 5 cover most field conditions. However, the use of small hydraulic gradients can lead to very long testing times for materials having low hydraulic conductivity (less than about 1×10^{-8} m/s). Somewhat larger hydraulic gradients are usually used in the laboratory to accelerate testing, but excessive gradients must be avoided because high seepage pressures may consolidate the material, material may be washed from the specimen, channeling along the sidewall may occur, or fine particles may be washed downstream and ping the effluent end of the test specimen. These effects could increase or decrease hydraulic conductivity. For high hydraulic gradients (> 20), a base plate with a double ring (see Fig. 4) is recommended to avoid anomalous measurements caused by channeling along the sidewall. If no hydraulic gradient is specified by the requestor, the following guidelines may be followed:

Hydraulic Conductivity (m/s)	Recommended Maximum Hydraulic Gradient
1×10^{-5} to 1×10^{-6}	2
1×10^{-6} to 1×10^{-7}	5

1×10^{-7} to 1×10^{-8}	10
1×10^{-8} to 1×10^{-9}	20
$< 1 \times 10^{-9}$	30

The constant flow rate method may be advantageous if low gradients and short testing times are desired for testing saturated materials with very low hydraulic conductivity.[5]

8.2.2 *Initialization*—Initiate permeation of the specimen by increasing the influent pressure. The pressure at the effluent end of the test specimen is normally atmospheric pressure (see Note 5). If restraint against upward movement of the specimen is provided, initially flowing the permeant upward may assist in saturation.

NOTE 5—Backpressure is normally not applied in this type of test. If backpressure is used, the flexible wall permeameter (see Test Method D 5084) is recommended. If backpressure is specifically requested with this test method, the requestor shall specify the magnitude of the backpressure. If backpressure is used, use a double-ring effluent collector (see Fig. 5) or employ some other suitable methodology to ensure that the backpressure has not expanded the permeameter ring and caused spurious sidewall leakage.

8.2.3 *Constant Head Test (Test Method A)*—Measure and record the head loss across the test specimen and keep this head loss constant ± 5 %. Measure and record periodically the quantity of inflow as well as the quantity of outflow. If a double-ring effluent collector is used, record the quantity of outflow from both collector rings. Continue permeation until at least four values of hydraulic conductivity are obtained over an interval of time in which: the ratio of outflow to inflow rate is between 0.75 and 1.25, the hydraulic conductivity is steady, and if a double-ring collector is used, the ratio of the flux from the outer ring to that from the inner ring is between 0.75 and 1.25. Consider the hydraulic conductivity steady if four or more consecutive hydraulic conductivity determinations fall within ± 25 % of the mean value for $k \geq 1 \times 10^{-10}$ m/s or within ± 50 % for $k < 1 \times 10^{-10}$ m/s, and a plot of the hydraulic conductivity versus time shows no significant upward or downward trend. See Note 6.

NOTE 6—If the test specimen has been prepared using a dry, highly expandable material such as sodium bentonite or has very low hydraulic conductivity ($< 1 \times 10^{-10}$ m/s), hydration may not be complete even when the requirements in 8.2.3 are met. If incomplete hydration is of concern, a suitable method of soaking the sample can be conducted prior to permeation.

8.2.4 *Falling Head Tests (Test Methods B, C, and D)*—Measure and record the head loss across the test specimen. At no time shall the applied head loss across the specimen be less than 75 % of the initial (maximum) head loss during each individual hydraulic conductivity determination. Continue permeation until at least four values of hydraulic conductivity are obtained over an interval of time in which: the ratio of outflow to inflow rate is between 0.75 and 1.25, the hydraulic conductivity is steady (see 8.2.3), and if a double-ring collector is used, the ratio of the flux from the outer ring to that from the inner ring is between 0.75 and 1.25. See Note 6, Note 7, and Note 8.

NOTE 7—When the water pressure in a test specimen changes, the volume of the pore fluid (especially gas bubbles) can change and the test specimen itself may expand or contract. The requirement that the head loss decrease very much during a falling head test is intended to minimize these potential sources of volume change.

NOTE 8—When the initial and final head losses across the test specimen do not differ by much, great accuracy is needed to comply with the requirement of 5.1.2 that the ratio of initial to final head loss be determined with an accuracy of ± 5 % or better. When the initial and final head losses over an interval of time do not differ very much, it may be possible to comply with the requirements of 8.2.3 and to treat the test as a constant head test.

8.2.4.1 *Test with Constant Tailwater Level (Test Method B)*—If the water pressure at the downstream (tailwater) end of the test specimen is kept constant, periodically measure and record either the quantity of inflow or the level of water in the influent standpipe; measure and record the quantity of outflow from the test specimen.

8.2.4.2 *Test with Constant Headwater and Rising Tailwater Level (Test Method C)*—If the water pressure at the upstream (headwater) end of the test specimen is kept constant, periodically measure and record either the quantity of outflow or the level of water in the effluent standpipe; measure and record the quantity of inflow into the test specimen. A mariotte bottle is a convenient device to measure the quantity of inflow while maintaining a constant head.

8.2.4.3 *Test with Decreasing Headwater Level and Increasing Tailwater Level (Test Method D)*—If the water pressure at the downstream end of the test specimen rises during an interval of time, periodically measure and record either the quantity of inflow and outflow or the changes in water levels in the influent and effluent standpipes.

8.2.5 *Constant Rate of Flow Tests (Test Method E)*—Initiate permeation of the specimen by imposing a constant flow rate. Choose the flow rate so the hydraulic gradient does not exceed the value specified, or if none is specified, the value recommended in 8.2.1. Periodically measure the head loss across the test specimen. Continue permeation until at least four values of hydraulic conductivity are obtained over an interval of time in which hydraulic conductivity is steady (see 8.2.3) and, if a double-ring collector is used, the ratio of the flux from the outer ring to that from the inner ring is between 0.75 and 1.25 (see Note 6). The user shall also ensure that the system is devoid of leaks and that rate of inflow and outflow are similar. One method to verify these conditions is to periodically compare the rate of inflow and outflow and determine if the ratio of inflow to outflow rates is between 0.75 and 1.25. Other suitable methods also can be used.

NOTE 9—Volume measurements should be made after sufficient time has elapsed to permit flow in the measurement reservoirs that is at least ten times the finest graduation on the reservoir. Measurements may be made at shorter time intervals only if it can be ensured that accurate measurements of rate of flow or change in head can be made, or both.

8.3 *Final Dimensions of the Specimen*—After completion of permeation, reduce the applied pressures, carefully disassemble the permeameter cell, and examine the specimen. If the specimen is free to swell, measure the height of the specimen. If the length of the specimen is more than 1.15 times the original length, trim the specimen and repeat the hydraulic conductivity measurement (see Note 10). Take care when trimming the specimen not to smear material across the surface of the test specimen. After trimming, scarify the surface of the specimen. Once the test is complete, measure and record the

final height, diameter, and total mass of the specimen. Then determine the final water content of the specimen by the procedure of Test Method D 2216.

NOTE 10—If the specimen swells into a swell ring, the boundary conditions at the influent end are uncertain. This problem is considered negligible if the amount of swell is less than or equal to 15 % of the original length of the specimen. If the swell is more than 15 %, the material that swelled into the swell ring must be trimmed away. If it is known prior to permeation that a large amount of swell will occur, the specimen may be trimmed at some intermediate point in the test, that is, it is not necessary to wait until all the requirements of Section 8 are satisfied prior to dismantling the cell and trimming away the material that swelled into the swell ring. However, all requirements must be met before a test is complete. Even if the height of the specimen is ≤ 1.15 times the original height, measure the entire length of specimen and then trim the specimen prior to determining the final length, mass, and water content (the final length, mass, and water content are to be determined on that portion of the test specimen contained within the compaction mold/permeameter ring). Use the length measured prior to trimming for the calculation of hydraulic conductivity.

NOTE 11—For some gap-graded materials, migration of particles may affect the measured hydraulic conductivity. Reversing the direction of flow may be useful in assessing the effect of particle migration.

9. Calculation

9.1 *Constant Head and Constant Rate of Flow Tests (Test Methods A and E)*—Calculate the hydraulic conductivity, k, as follows:

$$k = \frac{QL}{Ath} \tag{5}$$

where:

k = hydraulic conductivity, m/s,
Q = quantity of flow, taken as the average of inflow and outflow, m^3,
L = length of specimen along path of flow, m,
A = cross-sectional area of specimen, m^2,
t = interval of time, s, over which the flow Q occurs, and
h = difference in hydraulic head across the specimen, m of water.

NOTE 12—If a double-ring effluent collector is used, the outflow quantity shall be taken as the total quantity from both rings.

9.2 *Falling Head Tests*:

9.2.1 *Constant Tailwater Pressure (Test Method B) and Constant Headwater and Rising Tailwater (Test Method C)*—Calculate the hydraulic conductivity, k, as follows:

$$k = \frac{aL}{At} \ln\left(\frac{h_1}{h_2}\right) \tag{6}$$

where:

a = cross-sectional area of the reservoir containing the influent liquid, m^2,
L = length of the specimen, m,
A = cross-sectional area of the specimen, m^2,
t = elapsed time between determination of h_1 and h_2, s,
h_1 = head loss across the specimen, at time t_1, m, and
h_2 = head loss across the specimen at time t_2, m.

NOTE 13—Test Method C only shall be used for tests conducted in a single ring permeameter (see Fig. 1 and Fig. 2) unless the set-up for a double ring test (see Fig. 4) ensures the tailwater elevations in the effluent reservoirs remain equal throughout the test. Provided the elevations remain equal, then $a = a_1 + a_2$

where:

a_1 = cross-sectional area of the reservoir containing the effluent liquid from the inner ring, m^2, and
a_2 = cross-sectional area of the reservoir containing the effluent liquid from the outer ring, m^2.

9.2.2 *Decreasing Headwater and Increasing Tailwater Pressure (Test Method D)*—Calculate the hydraulic conductivity, k, as follows:

$$k = \frac{a_{in} a_{out} L}{A t (a_{in} + a_{out})} \ln (h_1/h_2) \tag{7}$$

where:

a_{in} = cross-sectional area of the reservoir containing the influent liquid, m^2,
a_{out} = cross-sectional area of the reservoir containing the effluent liquid, m^2,
L = length of the specimen, m,
A = cross-sectional area of the specimen, m^2,
t = elapsed time between determination of h_1 and h_2, s,
h_1 = head loss across the specimen at time t_1, m, and
h_2 = head loss across the specimen at time t_2, m.

NOTE 14—For the case in Test Method D where $a_{out} = a_{in} = a$, the equation for calculating k for a falling head test with a rising tailwater level is:

$$k = \frac{aL}{2At} \ln\left(\frac{h_1}{h_2}\right) \tag{8}$$

Also, Test Method D only shall be used for tests conducted in a single ring permeameter (see Fig. 1 and Fig. 2) unless the set-up for a double ring test (see Fig. 4) ensures the tailwater elevations in the effluent reservoirs remain equal throughout the test. Provided the elevations remain equal, then $a_{out} = a_1 + a_2$

where:

a_1 = cross-sectional area of the reservoir containing the effluent liquid from the inner ring, m[sup]2[reset], and
a_2 = cross-sectional area of the reservoir containing the effluent liquid from the outer ring, m^2.

9.3 Correct the hydraulic conductivity to that for 20°C (68°F), k_{20}, by multiplying k by the ratio of the viscosity of water at test temperature, T, to the viscosity of water at 20°C (68°F), R_T, from Table 1, as follows:

$$k_{20} = R_T k \tag{9}$$

9.4 Let M_s denote the oven dried mass (in kilograms) of material comprising the test specimen, V, the final volume of the test specimen contained in the compaction mold/permeameter ring (in cubic metres), w (dimensionless) the final water content of the test specimen, and G_s the dimensionless specific gravity of solids (see Note 4). Determine the final dry density (ρ_{df} in kg/m^3) of the test specimen as follows:

$$\rho_{df} = \frac{M_s}{V} \tag{10}$$

and the final degree of saturation (S, expressed as a percentage):

$$S = \frac{w}{\frac{\rho_w}{\rho_s} - \frac{1}{G_s}} \times 100 \tag{11}$$

TABLE 1 Correction Factor R_T for Viscosity of Water at Various Temperatures

Temperature (°C)	R_T	Temperature (°C)	R_T
1	1.723	26	0.868
2	1.664	27	0.850
3	1.611	28	0.832
4	1.560	29	0.814
5	1.511	30	0.797
6	1.465	31	0.780
7	1.421	32	0.764
8	1.379	33	0.749
9	1.339	34	0.733
10	1.301	35	0.719
11	1.265	36	0.705
12	1.230	37	0.692
13	1.197	38	0.678
14	1.165	39	0.665
15	1.135	40	0.653
16	1.106	41	0.641
17	1.077	42	0.629
18	1.051	43	0.618
19	1.025	44	0.607
20	1.000	45	0.596
21	0.976	46	0.585
22	0.953	47	0.575
23	0.931	48	0.565
24	0.910	49	0.556

where:

ρ_w = is the density of water (998.2 kg/m^3 at 20°C).

9.5 Determine the number of pore volumes of inflow (N_{PV}) at the end of the test as follows:

$$N_{PV} = \frac{Q_{in}}{V_p} \tag{12}$$

where:

Q_{in} = is the cumulative quantity of inflow from the test specimen and V_p is the initial volume of the pore space within the test specimen (see 7.5).

10. Report

10.1 Report the following information:

10.1.1 Sample identifying information,

10.1.2 Any special selection and preparation process, such as removal of stones or other materials,

10.1.3 Descriptive information on method of compaction,

10.1.4 The initial dimensions of the specimen,

10.1.5 The initial water content and dry density of the specimen,

10.1.6 The type of permeant liquid used,

10.1.7 Type of permeameter used, including type (if any) of confinement against swelling, single- or double-ring base plate, and any non-standard test arrangement such as use of back-pressure,

10.1.8 The test method (A, B, C, D or E) used,

10.1.9 Hydraulic gradient (report the range, if variable),

10.1.10 The total number of pore volumes of permeant liquid that came out of the test specimen and the duration of the test, measured from initiation of permeation to the end of the last set of readings used to determine hydraulic conductivity,

10.1.11 The final length, diameter, water content, dry density, and degree of saturation of the test specimen. Also report the specific gravity of solids used for computations and indicate whether this value was measured or assumed,

10.1.12 The amount of swelling that was measured and whether or not material was trimmed away from the swell ring (if applicable) prior to permeation,

10.1.13 The average hydraulic conductivity for the last four determinations of hydraulic conductivity, reported with two significant figures, for example, 7.1×10^{-10} m/s, and reported in units of m/s (plus additional units, if requested or customary),

10.1.14 A graph or table of hydraulic conductivity versus time or pore volumes of flow and a graph or table of the ratio of outflow to inflow flow rate versus time or pore volume of flow, and

10.1.15 If a double-ring effluent collector was used, report a graph or table of the ratio of flux from the outer ring to that from the inner ring versus time or pore volumes of flow.

11. Precision and Bias

11.1 *Precision*—Data are being evaluated to determine the precision of this test method. In addition, Subcommittee D18.04 on Hydrologic Properties of Soil and Rocks, is seeking pertinent data from users of the test method.

11.2 *Bias*—There is no accepted reference value for this test method; therefore, bias cannot be determined.

12. Keywords

12.1 coefficient of permeability; ground water; hydraulic barriers; hydraulic conductivity; liner; permeameter

ASTM International takes no position respecting the validity of any patent rights asserted in connection with any item mentioned in this standard. Users of this standard are expressly advised that determination of the validity of any such patent rights, and the risk of infringement of such rights, are entirely their own responsibility.

This standard is subject to revision at any time by the responsible technical committee and must be reviewed every five years and if not revised, either reapproved or withdrawn. Your comments are invited either for revision of this standard or for additional standards and should be addressed to ASTM International Headquarters. Your comments will receive careful consideration at a meeting of the responsible technical committee, which you may attend. If you feel that your comments have not received a fair hearing you should make your views known to the ASTM Committee on Standards, at the address shown below.

This standard is copyrighted by ASTM International, 100 Barr Harbor Drive, PO Box C700, West Conshohocken, PA 19428-2959, United States. Individual reprints (single or multiple copies) of this standard may be obtained by contacting ASTM at the above address or at 610-832-9585 (phone), 610-832-9555 (fax), or service@astm.org (e-mail); or through the ASTM website (www.astm.org).

ERT/REAC
Laboratory SOPs

Response Engineering and Analytical Contract

STANDARD OPERATING PROCEDURES

INDOOR AIR ANALYSIS OF VOLATILE ORGANIC COMPOUNDS BY GAS CHROMATOGRAPHY/MASS SPECTROMETRY

CONTENTS

1.0 SCOPE AND APPLICATION

2.0 METHOD SUMMARY

3.0 SAMPLE PRESERVATION, CONTAINERS, HANDLING AND STORAGE

4.0 INTERFERENCES AND POTENTIAL PROBLEMS

5.0 EQUIPMENT/APPARATUS

6.0 REAGENTS

7.0 PROCEDURES

- 7.1 Sample Preparation
- 7.2 GC/MS Operating Conditions
- 7.3 DFTPP Tune
- 7.4 Initial Calibration
- 7.5 Continuing Calibration
- 7.6 GC/MS Analysis
- 7.7 Identification of Target Analytes
- 7.8 Library Search

8.0 CALCULATIONS

- 8.1 Target Compound Analytes
- 8.2 Tentatively Identified Compounds (TICs)
- 8.3 Blank Spike Recoveries

9.0 QUALITY ASSURANCE/ QUALITY CONTROL

- 9.1 Tune (DFTPP)
- 9.2 Initial Calibration for Target Compounds
- 9.3 Continuing Calibration for Target Compounds
- 9.4 Internal Standard Responses and Retention Times
- 9.5 Method Blank Analysis

CONTENTS (cont'd)

9.6 Solvent Blank Analysis
9.7 Blank Spike/Blank Spike Duplicate (BS/BSD)
9.8 Dilution Analysis
9.9 Method Detection Limits
9.10 Precision and Accuracy
9.11 Desorption Efficiencies
9.12 Manual Integrations

10.0 DATA VALIDATION

11.0 HEALTH AND SAFETY

12.0 REFERENCES

13.0 APPENDICES

A - Tables
B - Data Validation Criteria

Complete Rewrite, Revision 0.0, June 2002

SUPERCEDES: SOP #1816; Revision 0.0; 10/07/94; U.S. EPA Contract 68-C4-0022

1.0 SCOPE AND APPLICATION

The objective of this Standard Operating Procedure (SOP) is to provide guidance on the requirements needed to analyze Volatile Organic Compounds (VOCs) in air samples using gas chromatography/mass spectrometry (GC/MS). This method is based on modified National Institute for Occupational Safety and Health (NIOSH) Methods 1003, 1500, and 1501 for the analysis of VOCs in air samples. A list of compounds routinely analyzed by the Response Engineering and Analytical Contract (REAC) laboratory is provided in Table 1, Appendix A.

This method can be used to identify and quantify most VOCs that have boiling points below 200 degrees Celsius (°C). Such compounds include aliphatic hydrocarbons, aromatic hydrocarbons, and halogenated hydrocarbons. Organic compounds that are gaseous at room temperature, reactive, polar, or oxygenated (aldehydes, some ketones and alcohols) are either inefficiently desorbed, or not adsorbed (have relatively early breakthrough).

These are standard (i.e., typically applicable) operating procedures which may be varied or changed as required, dependent on site conditions, equipment limitations or limitations imposed by the procedure. In all instances, the ultimate procedures employed should be documented and associated with the final report.

Mention of trade names or commercial products does not constitute United States Environmental Protection Agency (U.S. EPA) endorsement or recommendation for use.

2.0 METHOD SUMMARY

The air samples are collected on two stage charcoal tubes, extracted with carbon disulfide (CS_2) and the extracts analyzed by GC/MS. Prior to GC/MS analysis, a 1 mL aliquot of the CS_2 extract is spiked with the internal standards listed in Table 2, Appendix A and analyzed for the VOCs in Table 1, Appendix A. Identification and quantitation is made by comparing the retention times and mass spectral data of unknown compounds with those of known compounds from calibration standards as follows:

The gas chromatograph (GC) is temperature programmed to separate the method analytes, which are then detected with the mass spectrometer (MS). The compounds eluting from the GC column are identified by comparing the measured mass spectra and retention times to reference spectra and retention times in a database. Reference spectra and retention times for analytes are obtained by the measurement of calibration standards under the same conditions used for sample extracts. The concentration of each identified analyte is calculated by relating the MS response of the quantitation ion produced by that compound, to the MS response of the quantitation ion produced by a compound that is used as an internal standard.

3.0 SAMPLE PRESERVATION, CONTAINERS, HANDLING AND STORAGE

Charcoal used for sampling is housed in a glass tube that has been flame sealed. The tube contains 600 milligrams (mg) of charcoal and is 11 centimeters (cm) long with a 8 millimeter (mm) inner diameter (ID) and a 6 mm outer diameter (OD) containing two sections of 20/40 mesh activated charcoal separated by urethane foam. The front adsorbing section contains 400 mg of charcoal and the back adsorbing section contains 200 mg of charcoal. To

preserve and store air samples collected on charcoal tubes:

1. Place plastic caps on the charcoal tube ends.
2. Place sample in a whirlpack bag. If duplicate samples are collected, place both charcoal tubes in one whirlpack bag.
3. Protect samples from light and refrigerate at 4°C (±2°C) from the time of collection until extraction and analysis.
4. Recommended maximum holding time is 14 days from date of collection.

4.0 INTERFERENCES AND POTENTIAL PROBLEMS

1. High humidity and temperature, and high sampling flow rates may decrease the absorption capacity of activated carbon. Contaminants may migrate from the front portion to the back portion of the tube.

2. Impurities in the purge gas and solvent vapors in the laboratory account for the majority of contamination problems. The analytical system must be demonstrated to be free from contamination under the conditions of the analysis by analyzing method blanks.

3. Samples can be contaminated by diffusion of volatile organics (particularly fluorocarbons and methylene chloride) into the sample during storage and handling. Lot blanks, field blanks and trip blanks submitted and taken through the extraction and analysis serve as a check on such contamination.

4. Impurities in carbon disulfide (CS_2), the desorbing agent, may cause interferences. It is important to use a chromatographic quality grade, free of benzene.

5.0 EQUIPMENT/APPARATUS

- Micro syringes, Hamilton gas tight syringes: 10, 25, 50, 100, 500, and 1000 µL, 0.006 inch ID needle
- Charcoal tubes, 600 mg two-stage (SKC, Inc. or equivalent)
- Balance, capable of accurately weighing ±0.0001 grams (g)
- Bottle, 10 milliliter (mL), crimp top with Teflon® cap liner.
- Volumetric flasks, Class A with ground-glass stoppers, 5-, 10-, 25-, and 50-mL volumes
- Vials, 2 mL for GC autosampler
- Desorption vials, 4 mL, screw cap with Teflon cap liner (Supelco cat #2-2954 or equivalent)
- Sonicator

- Hewlett Packard (HP) 6890 GC and 5972 mass selective detector (MSD), equipped with a HP 6890 autosampler and controlled by HP Enviroquant (or equivalent software)

- Restek Rtx-5 (crossbonded SE-54) fused silica capillary column, 30 meter (m) x 0.25 mm ID, 0.5 µm dilm thickness (or equivalent)

6.0 REAGENTS

1. Carbon disulfide, benzene less than 1 ppm

2. Decafluorotriphenylphosphine (DFTPP), 50 microgram/milliliter (ug/mL), commercially available. The amount in a 1 microliter (uL) injection is 50 nanograms (ng).

3. Stock calibration standards, 5000 ug/mL, custom mix, commercially available.

4. Intermediate calibration standard, 200 ug/mL Using the stock calibration standard, prepare a ½5 dilution in carbon disulfide. The intermediate calibration standard should be stored with minimal headspace and should be checked frequently for signs of degradation or evaporation, especially just prior to preparing working calibration standards.

5. Working calibration standards, 100, 50, 25, 10, 5, 1 ug/mL in CS_2.

6. Internal standard mix, custom mix, commercially available containing cyclohexane-d_{12}, toluene-d_8, 1,4-dichlorobenzene-d_4, naphthalene-d_8 and 1-chlorooctane in carbon disulfide.

7. Standard spiking solution, commercially available, custom mix, 5000 ug/mL containing Cyclohexane, 1,2-Dichloropropane, Bromoform, Mesitylene, 1,2,4-Trichlorobenzene and 4-Phenylcyclohexene. Note: 1,4-Dichlorobenzene may be substituted if 4-phenylcyclohexene is not commercially available

7.0 PROCEDURES

7.1 Sample Preparation

- All charcoal tube samples and standard solutions must be allowed to warm up to ambient temperature before extraction and analysis.

- The charcoal tubes are extracted by placing the front and back sorbent sections of the sampler tube in separate 4-mL vials. Discard the foam plugs and glass wool of the tube.

- Add 2.0 mL of carbon disulfide to each vial, cap with a Teflon®-lined screw top, shake for 2

minutes, and allow to stand for a minimum of one hour with occasional agitation. Alternatively, sonicate for 15 minutes in a water bath sonicator.

- Sample extracts are now ready for analysis.

7.2 GC/MS Operating Conditions

The operating conditions used for the standards and sample analysis on the HP6890/5972 GC/MSD are listed below. Other conditions may be used as long as the QA/QC and peak identification criteria are met. Any deviation from this SOP must be documented in the case narrative.

Column Identification:	Restek Rtx-5 (cross bonded SE-54), 30 mm x 0.25 mm ID with a 0.5 µm film thickness.
Injector Temperature:	280°C
Transfer Temperature:	280°C
Source Temperature:	Controlled by transfer line
Temperature Program:	40°C for 1 min 4°C/min to 120°C 20°C/min to 270°C hold for 1 min
Pulsed Split Injection:	8:1 split, 14 psi pulse for 1 min
Mass Range:	35 - 360 amu for sample (35-450 amu for DFTPP)
Scan Time:	To give at least five scans per peak and not to exceed two seconds per scan
Injection Volume:	2 µL

7.3 DFTPP (Tune)

Tune the GC/MS system to meet the ion abundance criteria listed in Table 3, Appendix A by injecting 50 ng of DFTPP. Acceptable performance must be achieved every 24 hours.

7.4 Initial Calibration

1. Prepare calibration standards at a minimum of six concentration levels (1, 5, 10, 25, 50, and 100 µg/mL) for each target compound in CS_2 from the 200 ug/mL intermediate calibration standard as follows:

500 uL ⇒ 1.0 mL CS_2	100 ug/mL
250 uL ⇒ 1.0 mL CS_2	50 ug/mL
125 uL ⇒ 1.0 mL CS_2	25 ug/mL
50 uL ⇒ 1.0 mL CS_2	10 ug/mL
25 uL ⇒ 1.0 mL CS_2	5 ug/mL

5 uL ⇒ 1.0 mL CS_2 1 ug/mL

Store all standard solutions at -10 to -20 °C in crimp top vials with Teflon® liners protected from light for a period up to 6 months.

2. Add 20 µL of the internal standard mix to each 1 mL aliquot of the six calibration standards resulting in a concentration of 50 ug/mL. Do not add the internal standard mix if using commercially prepared calibration standards that already contain internal standards.

3. After an acceptable DFTPP tune, inject 1 uL of each of the calibration standards.

4. Use the following equation to calculate and tabulate the relative response factor (RRF) of all target analytes and surrogates in all six calibration standards. The primary ion of the internal standard must be used for quantitation.

$$RRF = \frac{(A_X)(C_{IS})}{(A_{IS})(C_X)}$$

where:

A_X	=	Area of the characteristic ion for the compound to be measured
A_{IS}	=	Area of the characteristic ion for the specific internal standard
C_{IS}	=	Concentration of the internal standard
C_X	=	Concentration of the compound to be measured

5. A five-point calibration for bromoform, styrene, and α-terpinene may be used if the 1 µg/mL RRF is too low. Calculate and tabulate the average RRF and percent relative standard deviation (%RSD)for all compounds. The average RRF for each compound must not be less than 0.05 and the % RSD for each compound must be less than or equal to 30%.

$$RRF_{average} = \frac{(RRF_1 + ... + RRF_5)}{5}$$

$$SD = \sqrt{\frac{\sum_{n=1}^{5} (RRF_{i} - RRF_{average})^2}{4}}$$

$$\%RSD = \frac{SD}{RRF_{average}} \times 100$$

7.5 Continuing Calibration

A check of the initial calibration curve must be performed every 24 hours during sample analysis.

1. Inject 1 µL of a 25 µg/mL calibration standard that contains target analytes and internal standards.

2. Calculate and tabulate the daily RRF for all compounds.

3. Use the following equation to calculate percent difference (% D) between each daily RRF and average RRF from the initial calibration curve.

$$\% D = \frac{|RRF_{Daily} - RRF_{Average}|}{RRF_{Average}} \times 100$$

4. If the minimum RRF of any quantitated analyte (target) is <0.05, the initial calibration curve must be rerun.

5. If the %D of any quantitated analyte (target) is >25%, the initial calibration curve must also be rerun.

6. Reanalysis can be waived by Organic Group Leader as determined on a per project basis.

7.6 GC/MS Analysis

Sample extracts may be analyzed only after the GC/MS has met the requirements of DFTPP, initial calibration, and continuing calibration as described above. The operating conditions used for calibration standards must be employed for analysis of samples.

1. Add 20 µL of the internal standard mix into the method blank, the BS/BSD, and all the sample extracts.

2. Inject 1 uL of the extract for each sample, method blank or BS/BSD sample.

3. If the response of any analyte exceeds that of the highest calibration standard (i.e., 100 µg/mL), the sample extract must be diluted so that the analyte response falls within the linear range established in the initial calibration. Ideally, the concentration of the analyte should fall midrange of the curve after dilution.

5. After a dilution is prepared, the internal standard mix is added accordingly, to maintain the required concentration of 50 ug/mL of each internal standard in the diluted extract.

7.7 Identification of Target Analytes

The target analytes are identified by comparison of the sample mass spectra with the mass spectra of a calibration standard. Two criteria must be satisfied to verify the identifications:

- Elution of the sample component at the GC relative retention time (RRT) as the standard component

- Correspondence of the sample component and standard component mass spectra

1. For establishing correspondence of the RRT, the sample component RRT must compare within ±0.06 RRT units of the RRT of the standard component. For reference, the standard must be run on the same shift as the sample. If coelution of interfering components prohibits accurate assignment of the sample component RRT from the total ion chromatogram, the RRT should be assigned by using extracted ion current profiles for ions unique to the component of interest.

2. For comparison of standard and sample components, reference mass spectra must be obtained from the 25 µg/mL calibration standard. The standard mass spectra may be obtained from the run used to obtain the reference RRTs. In the case of coelution of standard components, the reference mass spectra from the National Institute of Standard and Technology (NIST) Mass Spectral Library should be used or the analyst can use professional judgment to establish the presence of target analytes. If professional judgment is used, it will be documented in the case narrative.

3. The requirements for qualitative verification of mass spectra are as follows:

a. All ions present in the standard mass spectra at a relative intensity greater than 10% (most abundant ion equals 100%) *must* be present in the sample mass spectra

b. The relative intensities of ions specified in (a) must agree within ±20% between the standard and sample spectra. For example, if an ion with an abundance of 50% in the standard spectra, the corresponding sample ion abundance must be between 30-70%.

c. Ions greater than 10% present in the *sample* spectrum but not in the *standard* spectrum must be considered and accounted for by the analyst making the comparison. All target analytes meeting the identification criteria must be reported with their mass spectra. Report the actual value of all target analytes below the quantitation limit with a flag of "J", e.g., "3 J".

4. If a compound cannot be verified by all of the criteria in Step 3 but is identified by the technical judgment of the mass spectral interpretation specialist, the analyst shall report that identification and proceed with the calculation described in Section 8.0. The analyst should report in the case narrative that the technical judgment was utilized.

7.8 Library Search

A library search shall be executed for non-target compounds present in method blanks and samples for the purpose of tentative identification. In this case, the NIST Mass Spectral Library (or equivalent) will be used for identification search.

1. Any organic compounds not listed in Table 1, Appendix A shall be tentatively identified via the NIST mass spectral library. Substances with responses less than 10% of the nearest internal standard are not required to be searched. Only after visual comparison of the sample spectra with the nearest library searches will the mass spectral interpretation specialist assign a tentative identification.

2. Guidelines for making tentative identification:

- Relative intensities of major ions greater than 10% of the most abundant ion in the reference spectrum should be present in the sample spectrum.

- The relative intensities of the major ions should agree within ±20% between the standard and sample spectra. For example, if an ion has an abundance of 50% in the standard spectra, the corresponding sample ion abundance must be between 30-70%.

- Molecular ions present in reference spectrum should be present in sample spectrum.

- Ions present in the sample spectrum but not in the reference spectrum should be reviewed for possible background contamination or presence of coeluting compounds.

- Ions present in the reference spectrum but not in the sample spectrum should be reviewed for possible subtraction from the sample spectrum because of background contamination or coeluting compounds.

NOTE: Data system library reduction programs can sometimes create these discrepancies.

3. If all of the above conditions for a compound are met and if the Q value of the search is ≥80%, that compound will be reported as a tentatively identified compound (TIC). If the Q value is < 80% or the mass spectral interpretation specialist indicates that no valid tentative identification can be made, the compound should be reported as *unknown*. The mass spectral interpretation specialist should give additional classification of the unknown compound, if possible (e.g., unknown phthalate, unknown hydrocarbon, unknown acid type, unknown chlorinated compound). The molecular weight should be included in the TIC report if it can be distinguished from the library search.

4. Up to twenty (20) organic compounds of greatest apparent concentration that are not target analytes shall be identified by a forward library search.

8.0 CALCULATIONS

8.1 Target Analytes

The target analytes identified by the GC/MS method shall be quantitated by the internal standard method. The internal standards (IS) used shall be those listed in Table 2. The EICP area of the characteristic ions of the target analytes and IS are used. Target analyte concentrations and concentration conversions are calculated as follows:

1. Amount of analyte in total µg/sample:

$$ug / sample = \frac{(A_S)(C_{IS})}{(A_{IS})(RRF)} \times V \times DE$$

where:

A_S	=	Area of characteristic ion for the analyte to be measured
A_{IS}	=	Area of characteristic ion for the internal standard
C_{IS}	=	Concentration of internal standard
RRF	=	Relative response factor of analyte

V	=	Extraction Volume (mL)
DE	=	Desorption efficiency, decimal point equivalent

The RRF is calculated from the calibration standard solution mixture using:

$$RRF = \frac{(A_U)(C_S)}{(A_S)(C_U)}$$

where:

A_U	=	Area of characteristic ion of analyte in the standard mixture
A_S	=	Area of characteristic ion of internal standard in the standard mixture
C_S	=	Concentration of internal standard in the standard mixture
C_U	=	Concentration of analyte in the standard mixture

2. Concentration of analyte in mg/m^3:

$$Concentration\ (mg / m^3) = \frac{(Total\ \mu g\ sample\ front\ +\ total\ \mu g\ sample\ back)}{Liters\ sampled} \times \frac{1\ mg}{1000\ ug} \times \frac{1000\ L}{1\ m^3}$$

NOTE: If any target analyte is present in the lot blank, the concentration in µg will be subtracted from the sample concentration.

When the concentration of any identified target analyte is below the quantitation limits but the mass spectrum meets the identification criteria, report the concentration by flagging the results with "J". Any concentration less than 25% of the method detection limit (MDL) will not be reported. All target concentrations are reported to two significant figures

3. Concentration of analyte in parts per billion by volume (ppbv):

$$Concentration\ (ppbv) = (mg / m^3) \times \frac{24.45}{MW} \times 1000$$

where:

MW	=	Molecular Weight of the analyte.

4. Quantitation Detection Limits (QDLs):

The QDLs in ppbv are calculated using the following equation:

$$QDL = 24.45 \times \frac{(C_S)(V_E)(DE)}{(V_S)(MW)}$$

where:

C_S	=	Concentration of lowest standard in the linear range of the six-point calibration curve
V_E	=	Extract volume (mL)
V_S	=	Sample volume (m^3)
DE	=	Desorption efficiency, reciprocal
MW	=	Molecular weight of analyte

8.2 Tentatively Identified Compounds (TICs)

An estimated concentration for tentatively identified compounds (TICs) must be calculated by the internal standard method. For quantification, the nearest preceding internal standard free of interferences shall be used. The formula for calculating concentrations is the same as in Section 8.1, except that area count or peak height of the TICs and their assigned internal standards from the total ion chromatogram is used for quantitation. A relative response factor (RRF) is assumed to be 1.0. All non-target concentrations are reported to two significant figures.

8.3 Blank Spike Recoveries

Blank spike recoveries and relative percent difference (RPD) between the recoveries of each of the compounds in BS/BSD will be calculated by the following equations:

$$\textit{Blank Spike Recovery (\%R)} = \frac{SBR - BR}{SA} \times 100$$

where:

SBR	=	Spike blank result
BR	=	Lot Blank result
SA	=	Spike added

$$RPD = \frac{|BSR - BSDR|}{(BSR + BSDR) / 2} x\ 100$$

where:

RPD	=	Relative percent difference
BSR	=	Blank spike recovery
BSDR	=	Blank spike duplicate recovery

Note: RPD is always expressed as a positive value.

9.0 QUALITY ASSURANCE/ QUALITY CONTROL

9.1 Tune (DFTPP)

The GC/MS must meet the ion abundance tune criteria specified in Table 3, Appendix A, before initiating acquisition activities involving samples, blanks, or standards. The tune check ensures correct mass calibration, mass resolution, and mass transmission. It must be performed every 24 hours during sample analysis.

9.2 Initial Calibration for Target Compounds

Once the tune criteria has been met, the GC/MS system must be initially calibrated using a minimum of six concentrations (1, 5, 10, 25, 50, 100 µg/mL) to determine the linear response of the target analytes.

The initial calibration of the GC/MS is evaluated according to the magnitude and stability of the relative response factors of (RRF) of each target analyte and surrogate. The minimum RRF of each compound at all six levels must be equal to or greater than 0.05 and the %RSD must not exceed 30%. Once this criteria has been met, blanks and samples may be analyzed.

9.3 Continuing Calibration for Target Compounds

After 24 hours of sample acquisition have passed, the GC/MS must be re-tuned using DFTPP and the initial calibration curve verified by the mid-level calibration standard.

1. The DFTPP tune must pass the criteria in Table 3, Appendix A.

2. The 25 ug/mL calibration standard must be used for the continuing calibration.

3. The continuing calibration of the GC/MS is evaluated based on the magnitude of RRF and %D between the *average* RRF of each compound from the initial calibration and the RRF

of that compound in the continuing calibration standard. The minimum RRF of each SPCC in the continuing calibration must be equal to or greater than 0.05 and %D for each CCC must not exceed 25%. For any target compounds present in the sample at a concentration greater than the MDL, those compounds must meet the minimum RRF of 0.05 and the %D criteria of ≤25%.

4. If any of the requirements listed in Step 3 are not met, notify the Organic Group Leader.

9.4 Internal Standard Responses and Retention Times

The response of each of internal standard in all calibration standards, samples, and blanks is crucial for obtaining reliable analytical results because the quantitative determination of semivolatile compounds is based on the area of each internal standard.

1. The amount of each internal standard in a 1 µL injection of sample extract must be 50 ng.
2. The response and the retention time of each internal standard are evaluated for stability. The area of each internal standard in a sample must not vary by more than a factor of 2 (i.e., -50% to +100%) from the area of the same internal standard in the continuing calibration standard. In addition, the retention time of each internal standard must be within ±0.50 minutes (30 seconds) of its retention time in the continuing calibration standard.

3. If samples are quantitated by the initial calibration, the area of each internal standard at 25 µg/mL calibration standard must be used for evaluation.

4. The response of each internal standard in all samples, blanks and spikes must be tabulated. If an internal standard area is outside the QC limits, the extract must be reanalyzed to confirm a matrix effect or to determine if it was within the laboratory's control. If the reanalysis is within QC limits, report only the reanalysis if within the 14-day analysis holding time. If reanalysis confirms matrix effects, submit both sets of data but report the initial run.

9.5 Method Blank Analysis

A method blank is an aliquot of carbon disulfide that is carried through the entire analytical procedure. The purpose of a method blank is to determine the level of contaminations associated with preparation and analysis of samples.

1. One method blank must be prepared for each batch of 20 samples.

2. A method blank should contain no more than the QL of the target analytes listed in Table 1, Appendix A.

3. If a method blank exceeds the contamination limits as described above, the analytical system

is considered as unacceptable. The sources of contamination must be investigated so that appropriate corrective actions can be taken and documented, before proceeding any further sample analysis. Due to the nature of the samples, reextraction is not possible.

9.6 Solvent Blank Analysis

Prior to using a specific lot of carbon disulfide, the solvent must be analyzed and found to be free of any target analytes.

9.7 Blank Spike/Blank Spike Duplicate (BS/BSD)

The BS/BSD recoveries were determined by spiking the charcoal tubes with 50 µg of each analyte (25 µg/mL). No air was drawn through the charcoal tubes. The purpose of the BS/BSD is to evaluate the accuracy and precision of the extraction and analysis, including possible sample matrix effects.

1. One BS/BSD must be prepared every 10 samples or per project. The BS/BSD must be associated with a method blank that meets the criteria in Section 9.5and must be extracted and analyzed within holding time.

2. The spike solutions specified in Step 7 of Section 6.0 must be used.

3. Spike recoveries and relative percent difference (RPD) of each spike compound in the BS/BSD are calculated according to the equations specified in Section 8.3.

4. The quality control limits for recovery and RPD are listed below. The QC limits are advisory at this time and no further action is required if the recovery fall outside the limits.

Recovery	70-130%	RPD	±20%

Note: If the laboratory fails to meet the recovery QC limits and the RPD limits on a routine basis, the Organic Group Leader must investigate the cause and take corrective action.

9.8 Dilution Analysis

If the concentration of any target analyte in a sample extract exceeds the initial calibration range, the sample extract must be diluted and reanalyzed as described in Section 7.6.

1. Use the results from the initial analysis to estimate the approximate dilution factor needed to bring the highest concentration within the linear calibration range.

2. The dilution factor chosen should bring the highest target analyte within the upper half of the calibration range.

3. Submit the data from the original sample and the dilution in which analytes fall within the calibration range.

9.9 Method Detection Limits

The method detection limit (MDL)reported is based on the lowest point of the calibration range. Compounds detected at less than the lowest standard will be reported as "J" values. The matrix will be the charcoal tube media spiked will all the method analytes. It is recommended that a MDL study be performed once a year to verify that the values obtained are below the lowest standard used for reporting.

9.10 Precision and Accuracy

Single laboratory accuracy and precision data were obtained for the method analytes using laboratory fortified charcoal tube blanks with analytes at 5 µg/mL. Seven charcoal tube blanks were spiked with the method analytes and are used to check the instrument precision. The samples were subsequently extracted with CS_2 and analyzed by GC/MS. Calculation of theoretical MDLs were calculated using the formula:

$$\textit{Theoretical MDL} = (S)t_{(n-1,1-\alpha = 0.99)}$$

where:

$t_{(n-1,1-\alpha = 0.99)}$	=	Student's t value for the 99% confidence level with n-1 degrees of freedom
n	=	number of replicates
S	=	the standard deviation of the replicate analyses
S	=	$[\ \Sigma(X_i - \langle X \rangle)^2/(n-1)\ ]^{1/2}$

For seven injections $t_{(n-1,1-\alpha = 0.99)} = 3.143$. Therefore, substituting into equation above yields:

$$\textit{Theoretical MDL} = 3.143 \times S$$

9.11 Desorption Efficiencies

The desorption efficiency (DE) is determined for each compound at 10, 50 and 200 µg levels. Three replicate charcoal tubes are spiked with a standard solution mixture at each level, extracted with CS_2 and analyzed by GC/MS. A blank is also extracted with CS_2 and analyzed to determine any contamination in the carbon disulfide. The DEs are calculated as follows:

$$DE = \frac{Average\ Amount\ Recovered\ (ug\ /\ mL)}{Spiked\ Amount(ug\ /\ mL)}$$

The amount recovered is calculated by:

$$Amount\ Recovered\ (ug\ /\ mL) = \frac{(A_S)(I_S)}{(A_{IS})(RRF)}$$

where:

A_S = Area of the characteristic ion for the compound to be measured
A_{IS} = Area of the characteristic ion for the specific internal standard (IS)
C_{IS} = Amount of internal standard added in nanograms
RRF = Average relative response factor from the analysis of calibration standard

Total microgram in sample (µg/sample)

$$ug\ /\ sample = \frac{(A_S)(C_{IS})}{(A_{IS})(RRF)} \times V \times DE$$

where:

V = Extraction volume (mL)
DE = Desorption efficiency

9.12 Manual Integrations

Manual integration of all target analytes, surrogates, and internal standards shall be submitted for review. The manual integration results shall be flagged with "m" if not performed by the software, and initialed and dated by the analyst. Documentation of the manual integration of quantitation ion peaks must be included in the data package. Refer to REAC SOP# 1001, *Chromatographic Peak Integration Procedures.*

10.0 DATA VALIDATION

Data will be assessed in accordance with the guidelines set forth in the most current version of REAC SOP #1016, *Data Validation Procedures for Routine Organic Analysis* using the criteria listed in Appendix B. However, data is considered satisfactory for submission when all the following requirements are met.

1. All samples must be analyzed under an acceptable tune, initial calibration, and continuing calibration check at the required frequency.

2. The QC requirements described in Section 9.0 should be met at all times. Any deviation or anomalous conditions should be discussed with the Organic Group Leader.

11.0 HEALTH AND SAFETY

When working with potentially hazardous materials, refer to U.S. EPA, Occupational Safety and Health Administration (OSHA) and corporate health and safety practices. More specifically, refer to REAC SOP #3013, *REAC Laboratory Safety Program* and REAC SOP #1501, *Hazardous Waste Management*.

12.0 REFERENCES

National Institute for Occupational Safety and Health. 1994. *NIOSH Manual of Analytical Methods*. Method 1500.

National Institute for Occupational Safety and Health. 1994. *NIOSH Manual of Analytical Methods*. Method 1501.

National Institute for Occupational Safety and Health. 1994. *NIOSH Manual of Analytical Methods*. Method 1003.

United States Environmental Protection Agency, Contract Laboratory Program (CLP). 1999. *Statement of Work for Organic Analysis*, OLM04.2.

13.0 APPENDICES

A - Tables
B - Data Validation Criteria

APPENDIX A
Tables
SOP #1816
June 2002

TABLE 1. Target Compound List (TCL) and Characteristic Ions

TARGET COMPOUND	PRIMARY ION	SECONDARY ION(S)
1,1,1-Trichloroethane	97	99, 61
Cyclohexene	56	84, 69
Benzene	78	52, 50
Carbon Tetrachloride	117	119, 121
Cyclohexene	67	54, 82
n-Heptane	57	71, 100
1,2-Dichloropropane	63	76, 65
Trichloroethene	130	132, 95
1,4-Dioxane	88	58
Methylcyclohexane	83	55, 98
Methylisobutyl Ketone	58	85, 100
Toluene	91	92, 65
n-Octane	57	85, 114
Tetrachloroethene	166	129, 164
Chlorobenzene	112	77, 114
Ethylbenzene	91	106, 77
para-Xylene	91	106, 77
Bromoform	173	171, 91
Styrene	104	78, 103
ortho-Xylene	91	106, 105
n-Nonene	56	69, 55
n-Nonane	57	85, 128
1,1,2,2-Tetrachloroethane	83	85, 168
Cumene	105	120, 79
Mesitylene	105	120, 91
alpha-Methylstyrene	118	117, 78
1,3-Dichlorobenzene	146	111, 148
1,4-Dichlorobenzene	146	148, 111
1,2-Dichlorobenzene	146	111, 148
Benzyl Chloride	91	126, 89
alpha-Terpinene	93	121, 136
D-Limonene	68	93, 79
4-tert-Butyltoluene	133	105, 148
1,2,4-Trichlorobenzene	180	182, 184
Naphthalene	128	127, 129

TABLE 1 (Cont'd). Target Compound List (TCL) and Characteristic Ions

TARGET COMPOUND	PRIMARY ION	SECONDARY ION(S)
4-Phenylcyclohexene	104	158, 78
n-Decene	56	70, 55
n-Decane	57	71, 85
n-Undecene	55	70, 83
n-Undecane	57	71, 85
n-Nonanal	57	82, 98
n-Dodecane	57	71, 85
n-Tridecane	57	71, 85
n-Tetradecane	57	71, 85
n-Pentadecane	57	71, 85
n-Hexadecane	57	71, 85

TABLE 2. Volatile Compound Internal Standards List (ISL) and Characteristic Ions

TARGET COMPOUND	PRIMARY ION	SECONDARY ION(S)
Cyclohexane-d_{12}	64	96, 46
Toluene-d_8	98	100
1,4-Dichlorobenzene-d_4	150	152
Naphthalene-d_8	136	108, 137
1-Chlorooctane	91	55

TABLE 3. Ion Abundance Criteria for Decafluorotriphenyl phosphine (DFTPP) Tune

m/z	Ion Abundance Criteria
51	30 - 80 percent of mass 198
68	Less than 2 percent of mass 69
69	Present
70	Less than 2.0 percent of mass 69
127	25.0 - 75.0 percent of mass 198
197	Less than 1.0 percent of mass 198
198	Base peak, 100 percent relative abundance (see note)
199	5.0 - 9.0 percent of mass 198
275	10.0 - 30.0 percent of mass 198
365	Greater than 0.75 percent of mass 198
441	Present but less than mass 443
442	40.0 - 110 percent of mass 198
443	15.0 - 24.0 percent of mass 442

NOTE: All ion abundances must be normalized to m/z 198, the nominal base peak, even though the ion abundances of m/z 442 may be up to 110 percent that of m/z 198.

TABLE 4. Volatile Compounds Internal Standards with Corresponding Compounds Assigned for Quantitation

Cyclohexane-d_{12}	Toluene-d_8	1,4-Dichlorobenzene-d_4	Naphthalene-d_8	1-Chlorooctane
1,1,1-Trichloroethane	Methylisobutylketone	Cumene	Benzyl Chloride	n-Decene
Cyclohexane	Toluene	Mesitylene	alpha-Terpinene	n-Decane
Carbon Tetrachloride	n-Octane	Alpha-methylstyrene	D-Limonene	n-Undecene
Benzene	Tetrachloroethene	1,3-Dichlorobenzene	4-tert-Butyltoluene	n-Undecane
Cyclohexane	Chlorobenzene	1,4-Dichlorobenzene	1,2,4-Trichlorobenzene	n-Nonanal
n-Heptane	Ethylbenzene	1,2-Dichlorobenzene	Napthalene	n-Dodecane
1,2-Dichloropropane	para-Xylene		4-Phenylcyclohexene	n-Tridecane
Trichloroethene	Bromoform			n-Tetradecane
1,4-Dioxane	Styrene			n-Pentadecane
Methylcyclohexane	ortho-Xylene			n-Hexadecane
	n-Nonene			
	n-Nonane			
	1,1,2,2-Tetrachloroethane			

APPENDIX B
Data Validation Criteria
SOP #1816
June 2002

Data Validation Criteria: VOA using carbon tubes, modified NIOSH 1500/1501/1003

Holding Time	14 days from collection, 15-21 days ⇒ J; >21 days ⇒ non-detects R, hits ⇒ J
Media Blank Contamination	Average media blank subtracted from samples and QC samples
Trip, Field Blank	Sample <5x blank ⇒ U Sample >5x blank ⇒ No qualifier
Mass Spec Tuning	24 hrs; 24-25 hr ⇒ J, >25 hr ⇒ R
ICAL	Minimum six standards, RSD ≤30%; hits> 30% ⇒ J; non-detects: 50-90% ⇒ UJ, >90% ⇒ R
Minimum RF	≥0.050; <0.050 ⇒ hits J, non-hits R
CCAL	Mid-point; %D<25% ; hits> 25% ⇒ J; non-detects: 50-90% ⇒ UJ, >90% ⇒ R
Internal Standards	Area counts 50-200% of calibration area, RT ±0.5 min.; Outside area criteria: hits ⇒ J, 25-50% or >200% non-detects ⇒ UJ, <25% ⇒ R
Compound Identification	Ions >10% in reference spectra, ±20% in sample spectra, RRT±0.06; spectra out ⇒ Prof judgement; RRT>0.06, hits J
BS,BSD	0% recovery ⇒ hits J, non-detects R
Desorption efficiency	within 1 yr or new media lot

U. S. EPA ENVIRONMENTAL RESPONSE TEAM

STANDARD OPERATING PROCEDURES

CHARCOAL TUBE SAMPLING IN AMBIENT AIR

CONTENTS

1.0 SCOPE AND APPLICATION

2.0 METHOD SUMMARY

3.0 SAMPLE PRESERVATION, CONTAINERS, HANDLING, AND STORAGE

4.0 INTERFERENCES AND POTENTIAL PROBLEMS

5.0 EQUIPMENT

- 5.1 Equipment List
- 5.2 Equipment Source

6.0 REAGENTS

7.0 PROCEDURES

- 7.1 Preparation
- 7.2 Calibration Procedure
- 7.3 Field Operation
- 7.4 Post Operation Procedures

8.0 CALCULATIONS

9.0 QUALITY ASSURANCE/QUALITY CONTROL

10.0 DATA VALIDATION

11.0 HEALTH AND SAFETY

12.0 REFERENCES

13.0 APPENDIX

- A - Figures

SUPERSEDES: SOP #2051; Revision 2.0: 06/25/92; U.S. EPA Contract 68-03-3482.

1.0 SCOPE AND APPLICATION

The purpose of the Standard Operating Procedure (SOP) is to define the procedure for charcoal tube sampling which is utilized to identify specific contaminants in ambient air. The greatest selectivity of activated charcoal is towards non-polar organic solvent vapors, (e.g., carbon tetrachloride, chlorobenzene and toluene). Organic compounds that are gaseous at room temperature, reactive, polar, or oxygenated (aldehyde alcohols and some ketones), are either not adsorbed (relatively early breakthrough), or inefficiently desorbed.

These are standard (i.e., typically applicable) operating procedures which may be varied or changed as required, dependent upon site conditions, equipment limitations or limitations imposed by the procedure. In all instances, the ultimate procedures employed should be documented and associated with the final report.

Mention of trade names or commercial products does not constitute U.S. Environmental Protection Agency (U.S. EPA) endorsement or recommendation for use.

2.0 METHOD SUMMARY

Charcoal tube sampling is performed by drawing a known volume of air through a charcoal adsorption tube. As air is drawn through the tube during sampling, gases and vapors adsorb onto the surface of the charcoal. After sampling, the tubes are delivered to the laboratory for analysis.

3.0 SAMPLE PRESERVATION, CONTAINERS, HANDLING, AND STORAGE

Charcoal used for sampling is housed in a glass tube that has been flame sealed. Charcoal tubes most often used contain 150 mg or 600 mg of charcoal. The smaller 150-mg tube is 7-cm long with a 4-mm inner diameter (ID) and a 6-mm outer diameter (OD) containing two sections of 20/40 mesh activated charcoal separated by urethane foam. The adsorbing section contains 100-mg of charcoal, the backup section 50-mg of charcoal. The larger 600-mg tube is 11-cm long with a 6-mm ID and a 8-mm OD containing two sections of 20/40 mesh activated charcoal separated by urethane foam. The adsorbing section contains 400 mg of charcoal, the backup section contains 200-mg of charcoal. A greater volume of air can be drawn through the larger tube thereby providing a greater sensitivity.

To preserve and store samples:

1. Place plastic caps on the charcoal tube ends.
2. Place the sample in a whirl bag. If collocated samples have been collected, place both tubes in one whirl bag.
3. If the sample tube must be stored for more than a week, refrigeration is recommended. Maximum recommended holding time is two weeks.

4.0 INTERFERENCES AND POTENTIAL PROBLEMS

Low sampling flow rates, and high temperature and humidity may cause a decrease in the adsorption capacity of activated carbon. Contaminants from the front portion of the tube may migrate to the back portion of the tube. Refrigeration may minimize this migration.

5.0 EQUIPMENT

5.1 Equipment List

- Personal Sampling Pump
- Dowel Rods
- Single or Dual Rotameter (with stand and desired precalibrated flow rate)
- Charcoal Tubes (600 mg or 150 mg)
- Tygon Tubing (for attaching the tube holder system to the suction side of the pump)
- Sleeves (or support tubes to hold tubes in place)
- Single or Dual Manifold Flow Controller
- Tube Holder End (to support and seal the sampling tube within the plastic housing)
- Glass Tube Cracker
- Resealable Bags
- Whirl Bags
- Plastic End Caps
- Air Sampling Worksheets and Sample Labels
- Chain of Custody Records
- Screwdriver Set

5.2 Equipment Source

Tubes are commercially available from SKC, Inc. and from Mine Safety Appliance Co., both of Pittsburgh, Pennsylvania.

SKC: 1-800-752-8472
Mine Safety Appliance Co.: 1-800-MSA-2222

6.0 REAGENTS

This section is not applicable to this SOP.

7.0 PROCEDURES

7.1 Preparation

1. Determine the extent of the sampling effort, the sampling methods to be employed, and the types and amounts of equipment and supplies needed.

2. Obtain and organize the necessary sampling and monitoring equipment.

3. Decontaminate or pre-clean equipment, and ensure that it is in working order. Precalibrate sampling pumps as described in Section 7.2.

4. Prepare scheduling and coordinate with staff, client, and regulatory agency, if appropriate.

5. Perform a general site survey prior to site entry, in accordance with the site specific Health and Safety Plan.

6. Use stakes, flagging tape, or other appropriate means to identify and mark all sampling locations. If required, the proposed locations may be adjusted based on site access, property boundaries, and surface obstructions.

7.2 Calibration Procedures

To save time in the field, sampling pumps can be precalibrated in the office prior to arriving at the site. The calibration must be checked in the field prior to, and upon completion of sampling.

1. Assemble the calibration train as shown in Figure 1 (Appendix A), using a rotameter, sampling pump, manifold (only if the desired flow rate is below 750 cc/min), a tube holder system (sleeve and tube holder end), and a calibration tube. The calibration tube is a representative tube from the same lot of tubes that is used for sampling.

2. Turn on the pump and adjust the flow using the flow adjust mechanism on the manifold (if used) or on the pump itself until the float ball on the rotameter is aligned with the rotameter's precalibrated flow rate value. A sticker on the rotameter should indicate this value. Refer to ERT/REAC SOP #2118, Rotameter Calibration, for the procedure for calibrating rotameters.

3. Affix a sticker to the manifold (if used) and pump indicating the precalibrated flow rate and sampling media.

4. Remove the calibration tube from the sleeve. The pump and manifold (if used) are calibrated as a unit and should not be separated until the samples have been collected.

7.3 Field Operation

1. Mobilize to the clean zone and calibrate the appropriate number of sampling pumps as described in Section 7.2. If the pumps were precalibrated, the calibration should be checked in the same manner. Fine tuning of the flow may be required.
2. Mobilize to the sampling location.
3. Crack the charcoal tube ends using a glass tube cracker.
4. Insert the charcoal tube in the sleeve with arrow pointing in the direction of air flow (the smaller section is used for a backup and is positioned nearest the sampling pump).
5. Screw the tip onto the sleeve so the charcoal tube is held in place.
6. Attach the sleeve(s) to a single or double manifold. At higher flow rates (>750 cc/min), charcoal tubes can run straight without a manifold.
7. To set up the sampling train, attach one end of the Tygon tubing (approx. 2 foot) to the tip of the sleeve or manifold. Attach the other end of the tubing to the inlet plug on the pump, Figure 2 (Appendix A). Refer to Figures 3 and 4 (Appendix A), respectively, for illustrations of sampling trains without a manifold and with a dual manifold (for collocated samples).
8. Adjust time on the pump to the required sample time.
9. Place the charcoal tube in a position free from obstruction on a dowel rod or stand.
10. Record weather data (e.g., ambient temperature, barometric pressure, relative humidity, and wind direction) on the Air Sampling Worksheet or in the logbook.
11. Turn on the pump.
12. After the pump has run the full time, check the fault button to determine if the pump ran for the scheduled time.
13. Verify calibration by connecting a rotameter with Tygon tubing and turning on the pump. Record the final flow rate on the Air Sampling Worksheet.

7.4 Post Operation Procedures

1. Record the sampling time on the Air Sampling Worksheet.

2. Remove the charcoal tube from the sleeve.

3. Cap charcoal tubes with plastic caps immediately after sampling. Never use rubber caps.

4. Place the sample in a whirl bag labeled with sample ID#, total volume, and required analysis. If collocated samples have been collected, place each tube in a separate whirl bag and assign a unique sample ID # to each tube.

5. Indicate all applicable information on the Air Sampling Worksheet (e.g., sample volume, ID #, location, date, and weather parameters).

6. If the sample tube must be stored for more than a week, refrigeration is recommended.

7. Prepare samples, including QC samples, for transport by packing them in a shipping container with bubble wrap or styrofoam pieces. Complete a Chain of Custody record in accordance with ERT/REAC SOP #4005, Chain of Custody Procedures.

The following methods are typically used for the analysis of charcoal tubes: NIOSH Methods[1,2,3] 1501, Aromatic Hydrocarbons; 1500, Hydrocarbons BP 36°-126°C; and 1003, Halogenated Hydrocarbons. Other analytical parameters may be required. The appropriate analytical methodology should be determined prior to field activities.

8.0 CALCULATIONS

The total volume of a sample is calculated by multiplying the total sample time by the flow rate. The total volume for each sample should be indicated on the Chain of Custody record.

9.0 QUALITY ASSURANCE/QUALITY CONTROL

The following general QA procedures apply:

1. All data must be documented on Air Sampling Worksheets or within site logbooks.

2. All instrumentation must be operated in accordance with operating instructions as supplied by the manufacturer, unless otherwise specified in the work plan. Equipment checkout and calibration activities must occur prior to sampling/operation and they must be documented.

The following specific QC activities apply:

1. Provide one field blank per sampling event or per 20 samples, whichever is greater. The field blank should be handled in the same manner as the sampling tube (break, seal, and transport) except that no air is drawn through it.

2. Collect one collocated sample per sampling event or per 10 samples, whichever is greater. Collocated samples are two samples collected adjacent to each other during the same time period at the same flow rates.

3. Include a minimum of one lot blank tube per manufacturer's lot of tube utilized per sampling event. These tubes are taken directly from the charcoal tube box. Do not break the ends.

10.0 DATA VALIDATION

Results of the quality control samples will be evaluated for contamination. This information will be utilized to qualify the environmental sample results accordingly with the project's data quality objectives.

11.0 HEALTH AND SAFETY

When working with potential hazardous materials, follow U.S. EPA, OSHA and corporate health and safety procedures.

Specific hazards unique to charcoal tube sampling include:

1. Sharp edges associated with the tubes after they have been "cracked."

2. Walking and working surfaces, as well as possible heights, associated with access to sampling locations.

12.0 REFERENCES

(1) Eiler, Peter M., ed. NIOSH Method 1501, Aromatic Hydrocarbons. In: *NIOSH Manual of Analytical Methods*, Third Edition, U.S. Gov.'t Printing Office, Washington, D.C., 1987. p. 1501-1.

(2) Eiler, Peter M., ed. NIOSH Method 1500, Hydrocarbons, BP 36-126°C. In: *NIOSH Manual of Analytical Methods*, Third Edition, U.S. Gov.'t Printing Office, Washington, D.C., 1987. p. 1500-1.

(3) Eiler, Peter M., ed. NIOSH Method 1003, Halogenated Hydrocarbons. In: *NIOSH Manual of Analytical Methods*, Third Edition, U.S. Gov.'t Printing Office, Washington, D.C., 1987. p. 1003-1.

APPENDIX A
Figures
SOP #2103
October 1994

FIGURE 1. Calibration Train

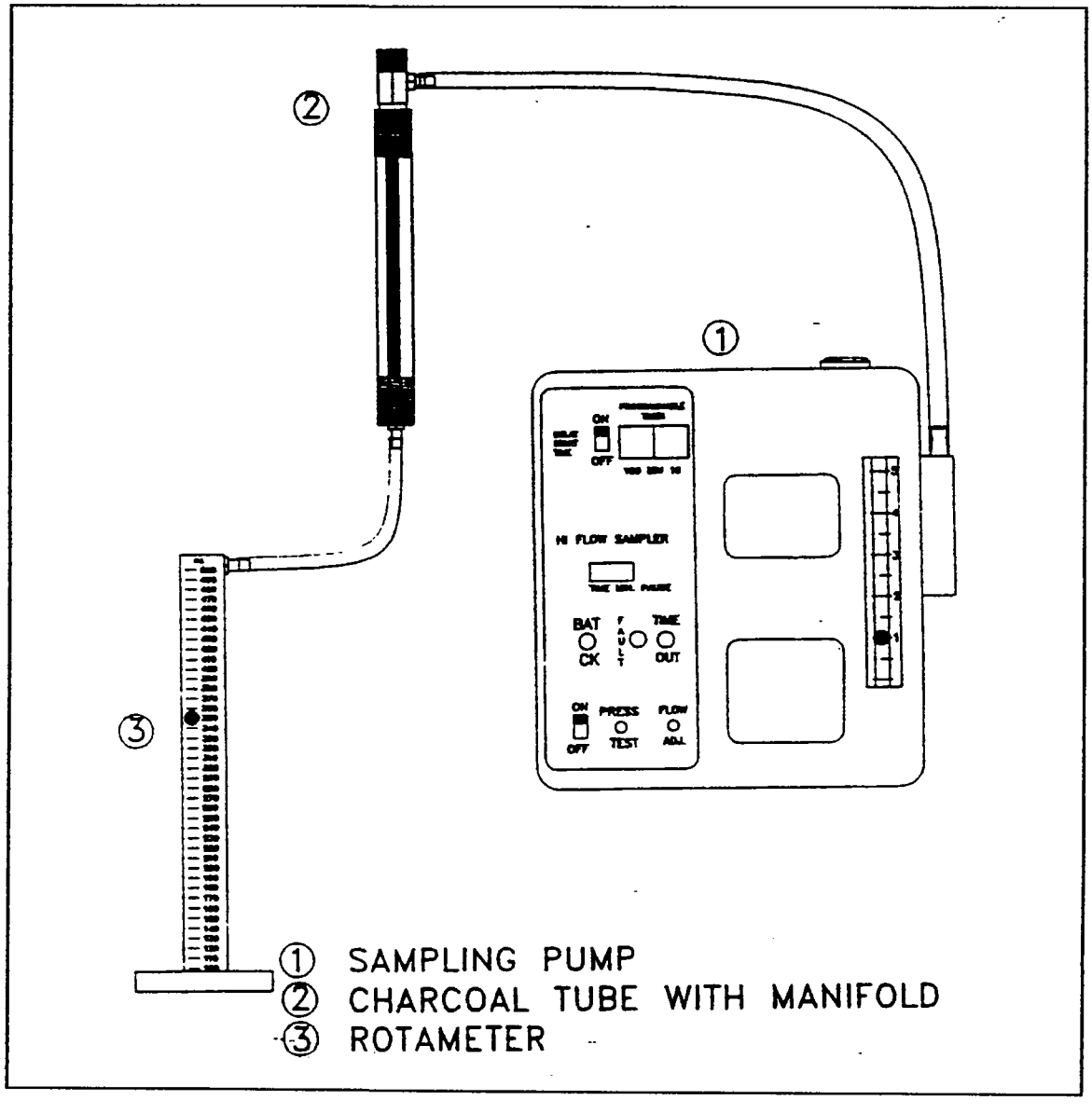

FIGURE 2. Charcoal Tube Sampling Train (Single Manifold)

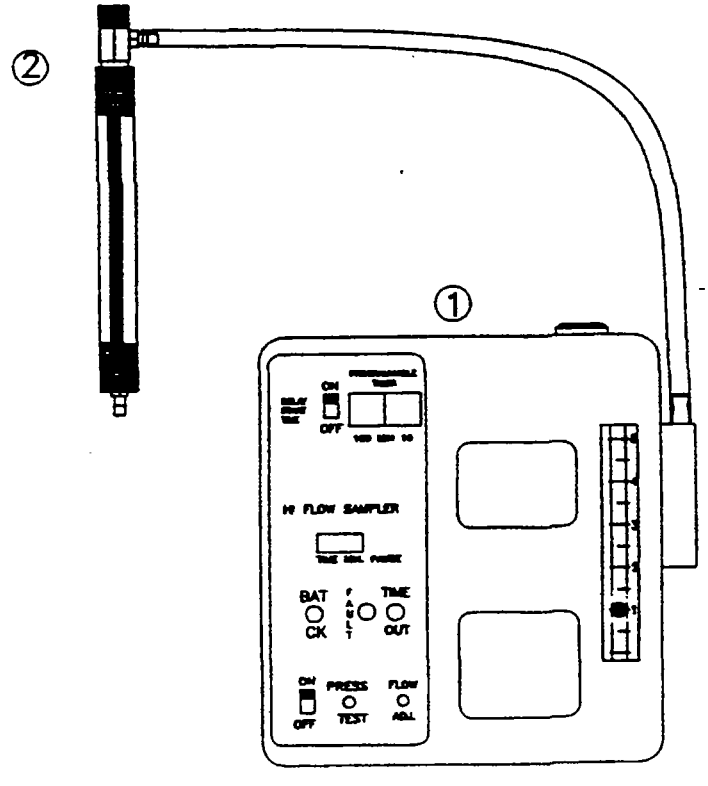

① SAMPLING PUMP
② CHARCOAL TUBE WITH SINGLE MANIFOLD

FIGURE 3. Charcoal Tube Sampling Train (No Manifold)

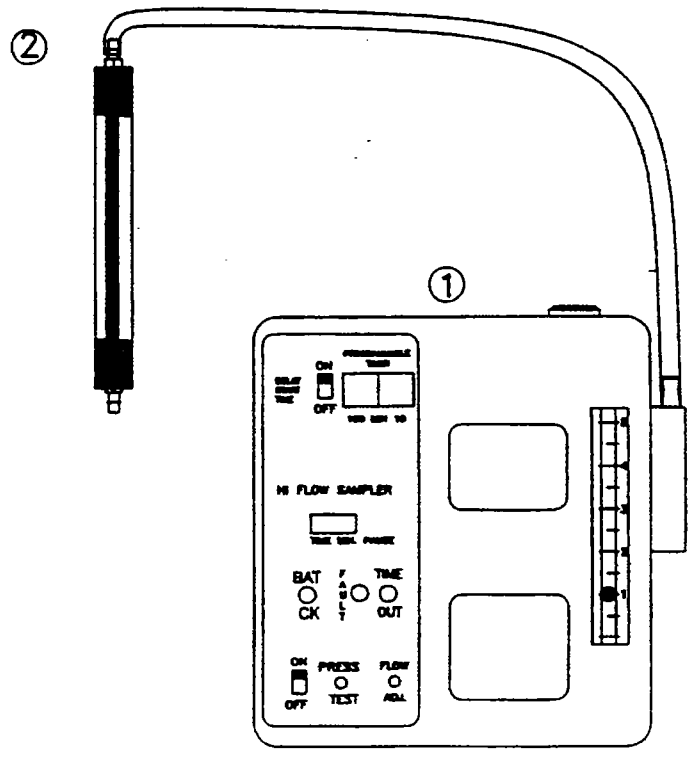

① SAMPLING PUMP
② CHARCOAL TUBE, NO MANIFOLD

FIGURE 4. Charcoal Tube Sampling Train (Dual Manifold for Collocated Sampling)

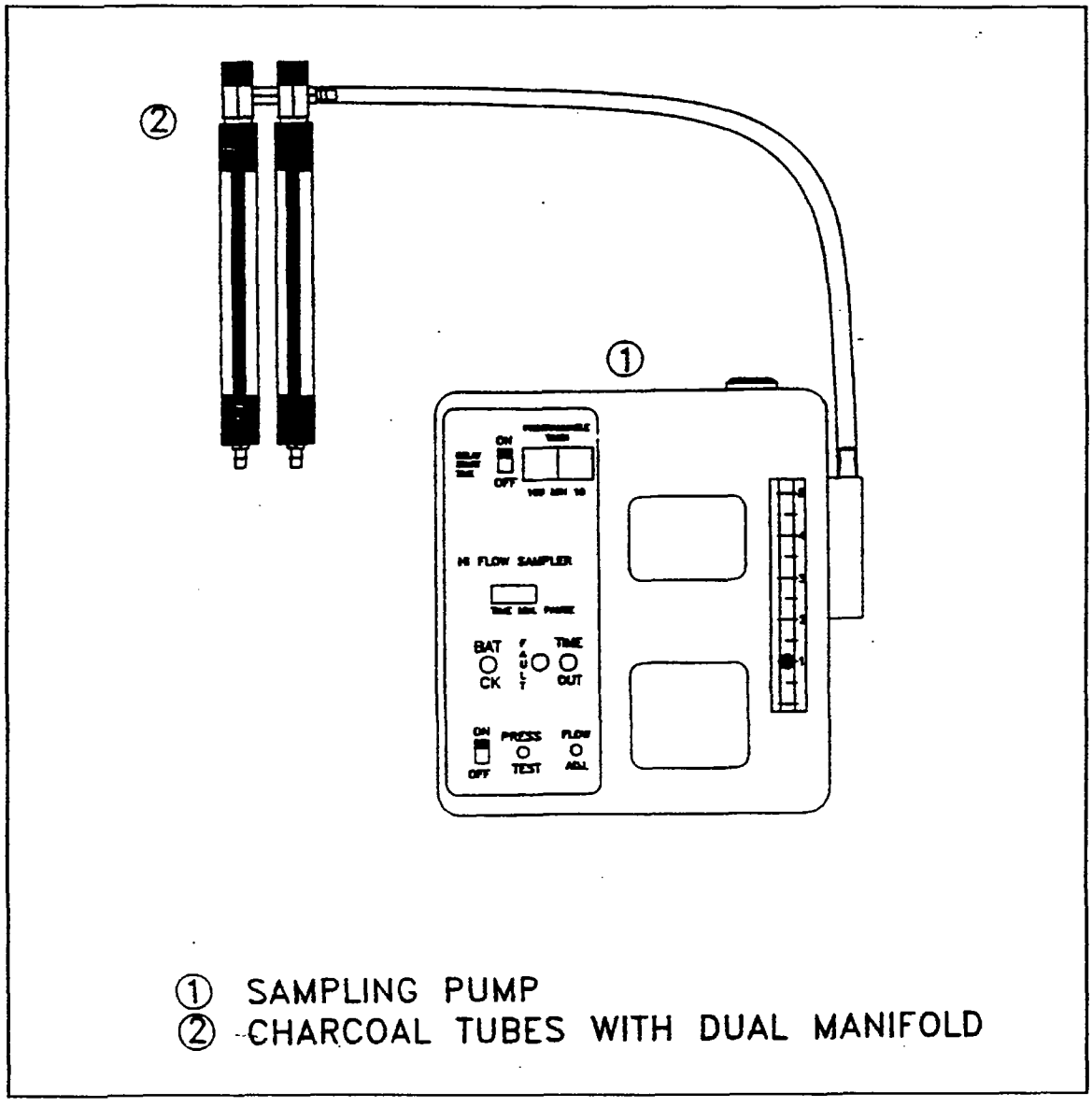

ESAT Mobile Laboratory
Laboratory SOPs

Prepared By: T Sedlacek	Preparation Date June 13, 2006
Approved By:	Approval Date

SOP DESCRIPTION

This Field Analytical Support Project (FASP) method is proposed for use in determining the concentrations of various volatile organic analytes (VOA) in soil/sediment samples.

General Procedures:

Related SOPs

This SOP is used in conjunction with other relevant SOPs found in the following SOP Category:

Section No.	Section Title
01	General Procedures
02	Field Procedures
03	Field Decontamination Procedures
04	Packaging and shipping Procedures
05	Field Equipment Operation and Maintenance Procedures
06	Ground Water Sampling/Monitoring and Analysis Procedures
07	Soil/Sediment Sampling and Analysis Procedures
08	Surface Water Sampling and Analysis Procedures
09	Health and Safety Procedures
10	Regulatory Compliance Procedures
11	Quality Assurance Procedures
12	Incineration/BIF Sampling and Analysis Procedures
13	Waste Sampling and Analysis Procedures.

TABLE OF CONTENTS

Section Page

1 SCOPE, APPLICATION AND LIMITATIONS 4
1.1 LIST OF COMPOUNDS 4
1.2 USER RESTRICTIONS 4
1.3 ANALYTES IDENTIFIED 4
1.4 QUALITY CONTROL 4
1.6 SAFETY 4
2 SUMMARY OF METHOD 5
2.1 PURGE & TRAP 5
2.2 SAMPLE ANALYSIS 5
3 INTERFERENCES 5
4 APPARATUS AND MATERIALS 5
4.1 ANALYTICAL SYSTEMS 5
4.2 OTHER LABORATORY EQUIPMENT 6
5 REAGENTS 7
5.1 Methanol -purge & trap quality or equivalent. 7
5.2 Reagent Water 7
5.3 GASES 7
5.4 STOCK STANDARD SOLUTIONS 7
5.5 CALIBRATION STANDARDS 7
5.6 MATRIX SPIKE SOLUTIONS 8
5.7 SYSTEM MONITORING COMPOUNDS (surrogates) 8
5.8 INTERNAL STANDARDS 8
6 SAMPLE COLLECTION, PRESERVATION, AND HANDLING 8
7 CALIBRATION 9
7.1 TUNING 9
7.2 INITIAL CALIBRATION 9
7.3 CONTINUING CALIBRATION 9
8 PURGE & TRAP 10
8.1 Soil/Sediment Samples, low level. 10
8.2 Soil/Sediment Samples, medium level. 10
9 INSTRUMENTAL ANALYSIS 11
9.1 INSTRUMENT PARAMETER 11
9.2 CHROMATOGRAMS 13
9.3 TARGET ANALYTE IDENTIFICATION 13
9.4 ANALYTICAL SEQUENCE 13
10 CALCULATIONS 13
10.1 INITIAL CALIBRATION 13

10.2 CONTINUING CALIBRATION 14

Section Page

10.3 SAMPLE QUANTITATION 15

11 DELIVERABLES 16

11.1 FIELD DATA SAMPLE REPORTS 16

11.2 FINAL FASP REPORT 16

12 SAMPLE AND DATA STORAGE 16

12.1 DISPOSAL OF SAMPLES 16

12.2 RAW AND SUMMARY DATA STORAGE 17

12.3 PERMANENT DATA STORAGE 17

LIST OF FIGURES

FIGURE TOPIC PAGE

Figure 1 Target Analytes: Target analytes and associated internal standards. 18

Figure 2 Tune Parameters: Tune parameters, BFB ion abundance criteria 19

Figure 3 Matrix Spike Recoveries 19

Figure 4 Surrogate Recoveries 19

Figure 5 Recommended Characterization Ions 20

1 SCOPE, APPLICATION AND LIMITATIONS

1.1 LIST OF COMPOUNDS

Table 1 lists the compounds that may be determined by this method. Approximate method quantitation-limits are 10 ug/Kg for soils when using the calibration levels recommended in section 5.5.

1.2 USER RESTRICTIONS

The method should be used only by trained analysts under the supervision of an experienced chemist.

1.3 ANALYTES IDENTIFIED

The method yields identification and quantitation of the analytes listed in Table 1. Reported values are on as-received basis - no dry weights are used.

1.4 QUALITY CONTROL

This FASP SOP should be used in conjunction with the FASP SOPs for quality control FASP-001-001, FASP-002-001 and FASP-003-001.

1.5 SAFETY

The toxicity or carcinogenicity of each reagent used in this method has not been precisely defined; however, each chemical is to be viewed as a potential health hazard. From this point of view, exposure to these chemicals is to be reduced to the lowest possible level. The laboratory maintains a current file of Material Safety Data Sheets (MSDS) which cover the safe handling and the associated risks of the chemicals used in this method. It is the analysts's responsibility to be familiar with this information.

The samples to be analyzed are from known or suspected hazardous waste sites and potentially may contain hazardous organic and/or inorganic materials at high concentration levels. Be aware of the potential hazards associated with the handling and analysis of these samples.

2 SUMMARY OF METHOD

2.1 PURGE & TRAP

Five g of soil sample with five mL of reagent water is placed in a sparging vessel. The sample is purged with helium onto a trap and is desorbed onto a GC/MS system

2.2 SAMPLE ANALYSIS

Analysis is performed using a temperature programmed gas chromatograph with a capillary column and a mass selective detector (MSD). Identification is based on comparison of retention times and mass spectra between samples and standards. Quantitation is based on the internal standard method. All field and QC samples and standards within the batch will be quantitated using the same method.

3 INTERFERENCES

Interferences may be minimized by use of purge & trap grade reagents, exhaustive cleanup of glassware, and avoidance of solvents in the laboratory. The analytical system must be demonstrated to be free from contamination under conditions of the analysis by running method blanks. Purge and trap or GC interference by sample carryover may be minimized by use of disposable glassware during sample preparation and employing a bake-out after the purge cycle. Interferences extracted from samples are matrix and site-specific. High concentration levels of volatile compounds require proof that no carry-over has occurred. Exhaustive clean-up of purge & trap system may be required.

4 APPARATUS AND MATERIALS

4.1 ANALYTICAL SYSTEMS

Listed below are GC specifications that meet the requirements of this method. Other GC configurations may be substituted if they meet the method requirements.

4.1.1 Gas Chromatograph

An analytical system complete with a temperature programmable GC and all necessary accessories is required.

4.1.2 Column - 75 m x 0.53 mm I.D. x 3um film DB-624 fused silica capillary column (J&W Scientific).

4.1.3 Purge & Trap system Tekmar 2000LCS and Tekmar Precept II automatic sampler with Supelco VOCARB 4000 trap.

4.1.4 Detector - MSD must be capable of scanning from 35 to 500 amu every second or less, using 70 volts (nominal) electron energy in the electron impact mode and producing a mass spectrum which meets the tuning criteria (see Table 2).

4.1.5 Data System - a computer system interfaced to the MSD that allows continuous acquisition and storage on machine readable media of all mass spectra obtained throughout the chromatographic program. The computer must have software that allows searching of any GC/MS data file for ions of a specified mass and plotting such ion abundance versus time or scan number. This type of plot is defined as an extracted ion current profile (EICP). Software must also be available that allows integrating the abundance of any EICP between specified time or scan number limits. The operational data system must be able to flag the data files that have been edited manually by the operator.

4.1.6 Gas Supply - The carrier gas should be ultrapure helium.

4.2 OTHER LABORATORY EQUIPMENT

4.2.1 40 mL VOA vials with teflon lined septa.

4.2.2 Mininert or equivalent vials and septa.

4.2.3 Disposable Pipets - Pasteur, 6 inches long.

4.2.4 Spatulas - Stainless steel, micro and semimicro.

4.2.5 Microsyringes - Assorted sizes.

4.2.6 Balance - Top loading, capable of weighing to 0.01 g, used to weigh samples.

4.2.7 Volumetric Pipets - Class A, 0.5, 1.0, 5, 10, and 25 mL.

4.2.8 Volumetric Flasks - 10, 25, 50, 100 mL.

4.2.9 Leak Detector - GOW-MAC Gas or equivalent leak detector.

4.2.10 Drying Oven - Capable of maintaining temperatures of greater than or equal to 200°C.

5 REAGENTS

5.1 Methanol -purge & trap quality or equivalent.

5.2 Reagent Water - Reagent water is defined as water in which no interference is observed at the retention time above the FASP Quantitation Limit (FQL) for the analyte of interest. The water should be purged with nitrogen prior to use.

5.3 GASES

5.3.1 Helium - Ultra pure or chromatographic grade (always used in conjunction with a oxygen trap).

5.3.1 Nitrogen - Ultra pure or chromatographic grade. Used to purge reagent water.

5.4 STOCK STANDARD SOLUTIONS

Stock standard solutions or analytes should be purchased as manufacturer certified solutions.

5.5 CALIBRATION STANDARDS

Prepare working standards through volumetric dilution of the stock standards with methanol. Prepare calibration standards by spiking the working standard into reagent water. Recommended calibration levels are 10, 25, 50, 100 and 200 ug/Kg for soils. The working standard should be prepared so that the minimal amount of methanol is spiked into the calibration standard. Excessive methanol degrades both the chromatography and the analyte response. For example, a working standard prepared at 25 ug/mL would be spiked at 2, 5, 10, 20 and 40 uL to give the recommended final concentration of the calibration standards.

A gas working standard may be kept separate from the remaining analytes working standard. The two separate working standards are spiked into water to make the calibration standard. More than two separate working standards is not recommended due to the amount of methanol that would be in the highest concentration standard. Gas standards should be replaced weekly and the other standards should be replaced monthly.

Ketones may be prepared at higher levels than the other analytes. A 5x increase in concentration is usually sufficient to insure these analytes can be detected at all five calibration levels. If concentration is increased, the MDL must be raised.

All working standards must be stored below 0°C in Teflon-sealed glass mininert vials with no head space.

5.6 MATRIX SPIKE SOLUTIONS

Matrix spike solutions should be prepared by dilution of stock standard solutions with methanol so that samples will be spiked with 250 ng on column. This level corresponds to the recommended third calibration level. See Table 3 for recommended MS analytes and recovery limits. The MS is required after every twenty samples.

It is recommended that a 50 ng/uL standard is used to spike at the recommended level.

5.7 SYSTEM MONITORING COMPOUNDS (surrogates)

Surrogate solutions should be prepared by dilution of stock standard solutions so that samples will be spiked with 50 ng on column. This level corresponds to the recommended third calibration level. See Table 4 for recommended surrogate analytes and recovery limits. One surrogate per sample may be out of control limits.

5.8 INTERNAL STANDARDS

Internal standards should be prepared by dilution of stock standard solutions with methanol. Samples should be spiked with 50 ng on column. See Table 1 for the analytes corresponding to each internal standard. Internal standard areas in the samples must be 50% to 200% of the value in the corresponding continuing calibration.

The internal standards and surrogates may be included in the same working standard. A 12.5 ng/uL standard prepared with both internal standards and surrogates is used to spike at the recommended levels.

6 SAMPLE COLLECTION, PRESERVATION, AND HANDLING

Samples should be collected, handled, preserved and shipped maintaining a chain of custody following current EPA regulations and recommendations at the time of sample collection.

The use of chain-of-custody records as described in the U.S. EPA "CLP Users Guide" (9240.0-1), December, 1988, is required for sample tracking in the field and subsequent internal lab sample tracking. The maximum holding time for soil samples is 14 days. The maximum holding time for waters is seven days. If waters are acid preserved to a pH of less than 2, hold time is increased to 14 days.

7 CALIBRATION

7.1 TUNING

Prior to any analysis the MSD must pass tuning criteria (Table 2) using 50 ng of bromofluorobenzene (BFB). This standard must be analyzed at the beginning of each 24 hour period during which samples or standards are analyzed. The time period for a GC/MS system tune and standards calibration (initial or continuing calibration) begins at the moment of injection of the BFB standard.

7.2 INITIAL CALIBRATION

After an experienced chromatographer has ensured that the entire chromatographic system is functioning properly; i.e., conditions exist such that resolution, retention times, response reporting, and interpretation of chromatographic spectra are within acceptable quality control limits, the GC may be calibrated (Section 11). Using five calibration standards for each target analyte prepared as described in Section 5.5, initial calibration curves are generated for each target analyte (refer to Section 10 for chromatographic procedures).

The percent relative standard deviation (%RSD, see Section 11) is computed to determine the acceptability of the calibration curve. The %RSD must be ≤30 percent. The initial calibration must be rerun if more than seven analytes fail %RSD limit. Any time the GC/MS system is altered (new column, ion source cleaning, or change in oven temperature program) a new initial calibration curve must be established.

7.3 CONTINUING CALIBRATION

The GC/MS system is checked after every tune with a continuing calibration. The mid-range initial calibration standard is used. The RRF of the continuing calibration is compared to the average RRF of the initial calibration to check the system (see Section 11). The %D between the continuing calibration RRF and the initial calibrations average RRF must be <30 percent. The continuing calibration must be rerun if more than seven analytes fail %D limit. A total of seven analytes, including initial and continuing calibration, may be out of control. If the continuing calibration will not meet required criteria a new initial calibration is required. A continuing calibration remains valid for the 24 hour tune cycle providing the GC system remains unaltered during that time. A continuing calibration must be compared to the most recent initial calibration.

8 PURGE & TRAP

A method blank is required for every matrix and for every group of samples. It must be analyzed after every continuing calibration. The method blank is reagent water or sand taken through every step of the analytical sequence to prove systems are clean of contaminants.

8.1 Soil/Sediment Samples, low level.

8.1.1 Add 5 grams of sample to a tared sparging vessel. Record the weight.

8.1.2 Add fifty ng of each internal standard and surrogate to each standard and sample.

8.1.3 For every twenty samples a matrix spike is required. Fifty ng of each spike compound is recommended.

8.1.4 Samples with analyte concentrations over the calibration range must be diluted, unless the site specific requirements do not require dilutions to be analyzed. Soil sample size must not be below one gram. If further dilution is required, a medium level analysis must be used.

8.2 Soil/Sediment Samples, medium level.

8.2.1 Add 5 grams of sample to a 40 mL VOA vial.

8.2.2 Add 5 mL of methanol to the vial and cap.

8.2.3 Let the solvent extract the volatile components from the soil for ten minutes. Do not shake the sample as this may release the volatile analytes.

8.2.4 Transfer the solvent layer to a vial with zero headspace.

8.2.5 Add 100 uL of the sample to 5 mL of reagent water.

8.2.6 Transfer the sample to sparging vessel.

8.2.7 Fifty ng of each internal standard and surrogate is added.

8.2.8 For every twenty samples a matrix spike is required. Each spike compound is added at 50 ng in the samples.

9 INSTRUMENTAL ANALYSIS

9.1 INSTRUMENT PARAMETER

9.1.1 Purge & Trap

Standby: 30° C
Preheat: 40° C 2 min.
Purge time: 11 min.
Desorb: Preheat: 245° C
Desorb: 250° C for 4 min.
Bake: 260° C for 8 min.
Valves and lines: 150° C
Purge flow: 30 ml/min.
Purge pressure: 150kPa

9.1.2 GC/MS

Temperature Program: Initial temperature: 45° C for 2 min. 8° C/min. to 90° C, no hold, 4° C/min. to 125° C, no hold, 12° C/min. to 220° C hold 1 min. (run time 25.29 min.)

Injector

Temperature: 200° C, constant pressure at 2.56 psi

Transfer Line Temperature: 225° C

Mass selective detector: 70 volts, 35 to 500 amu mass range, scan time not to exceed 1 second per scan.

Other instruments, columns, and chromatographic conditions may be used if FASP QC criteria are met.

9.2 CHROMATOGRAMS

Computer reproductions of chromatograms that are attenuated to ensure that all peaks are on scale over a 100-fold range are acceptable. This is to prevent retention time shifts by column or detector overload. Generally, peak response should be >25 percent and <100 percent of full-scale deflection to allow visual recognition of the various PAH compounds. The following information must be recorded on each chromatogram.

1) Instrument and detector identification.
2) Column phase, length, and I.D.
3) Oven temperature.
4) Injector and Detector temperature.
5) Carrier and make-up gas.
6) Site name.
7) Sample number and matrix.
8) Date and time.
9) GC operator initials.

9.3 TARGET ANALYTE IDENTIFICATION

Qualitative identification is based on retention time and mass spectra as compared to standards.

9.4 ANALYTICAL SEQUENCE

1) Tune; repeat within 24 hours of previous tune
2) Initial or continuing calibration.
3) Associated QC lot method blank.
4) Samples and associated QC matrix spike.

10 CALCULATIONS

10.1 INITIAL CALIBRATION

GC/MS response to target analytes is measured by determining relative response factors (RRF). Calculate the RRF for each target analyte in the initial standard. The data system may be used to make all of these computations.

$$RRF = \frac{(A_x \times C_{is})}{(A_{is} \times C_x)} \qquad \text{Equation 10.1.2}$$

A_x = Area of the characteristic ion for the compound to be measured
A_{is} = Area of the characteristic ion for the specific internal standard
C_{is} = Amount of internal standard injected (ng)
C_x = Amount of the compound to be measured injected (ng)

Using the response factors, calculate the percent relative standard deviation (%RSD) for each target analyte at each concentration level using the following equation.

$$\%RSD = \frac{SD}{\overline{X}} \times 100 \qquad \text{Equation 10.1.2}$$

where SD, the Standard Deviation, is given by

$$SD = \sqrt{\frac{\Sigma(X_i - \overline{X})^2}{N-1}}$$

where:
X_i = individual response factor (per analyte),
$\overline{X}$ = mean of initial three calibration factors (per analyte),
N = number of calibration standards.

The %RSD must be less than 30.0 percent.

10.2 CONTINUING CALIBRATION

Mid-range standards for all initial calibration target analytes must be analyzed every 24 hours. The maximum allowable percent difference (%D) calculated using the equation below for each analyte must be <30 percent.

$$\%D = \frac{(\overline{RRF_i} - RRF_c)}{\overline{RRF_i}} \times 100$$

where: RRF_i = mean Rf from the initial calibration for each analyte
RRF_c = measured Rf from the continuing calibration for the same analyte

10.3 SAMPLE QUANTITATION

Calculate the concentration of the target analytes in the sample using the following equation for internal standards. See Table 1 for internal standards and their associated target analytes. See Table 5 for the recommended characteristic ions and secondary ions. All field and QC samples and standards within the batch will be quantitated using the same method. Samples are calibrated from the continuing calibration.

For soil samples:

$$\text{Concentration in ug/Kg} = \frac{(A_x)\times(I_s)\times(Df)}{(A_{is})\times(RRF)(W_s)}$$

where: A_x = area of the characteristic ion for the analyte to be measured
I_s = amount of internal standard injected in ng
Df = dilution factor if used
A_{is} = area of the characteristic ion for the internal standard
RRF= response factor from the appropriate continuing calibration for the analyte.
W_s = weight of sample extracted in g

For soil samples, the results are reported in micrograms per kilogram (ug/Kg) without correction for percent moisture. No sample results will be corrected because of blank or spike recoveries.

Any target compound found at concentrations of less than one half of the MDL value will be reported as not detected at the MDL value. Any target compound found at concentrations at or above one half of the MDL value will be reported as detected at that concentration and flagged as estimated "J".

QC criteria (as described in FASP QC SOPs) must be met for all analyses. Advisory limits for the matrix spike are presented in Table 3. Internal standard areas in the samples must be 50% to 200% of the value in the corresponding continuing calibration. Surrogate requirements are listed in Table 4. One surrogate may be out of control limits per sample. Samples that fail internal standard or surrogate requirements are considered estimated. Samples with less than ten percent recovery for an internal

standard or two or more surrogates must be reanalyzed to confirm results.

11 DELIVERABLES

11.1 FIELD DATA SAMPLE REPORTS

A field data sample report should be available from the laboratory within 24 hours of sample analysis.

11.2 FINAL FASP REPORT

The final FASP report generated for each project should include the following considerations:

11.2.1 A reference to the FASP method used and a comment addressing any unusual occurrences.

11.2.2 A hard copy of all data and summary sheets documenting required QA/QC data (available within 14 days of completion of all FASP analyses for a project).

11.2.3 A data summary of all reportable results with appropriate units clearly specified.

11.2.4 All calculations are preformed using standard good measurement practices in determining significant figures. Results will be rounded for final deliverables.

11.2.5 All sample results are reported using two significant figures.

11.2.6 A statement, by analyte, that initial, and continuing calibration meet required FASP QC criteria.

Again, all results must be annotated (followed by the flag F) by the laboratory to indicate to future data users that FASP techniques were used in sample analysis.

12 SAMPLE AND DATA STORAGE

12.1 DISPOSAL OF SAMPLES

Samples should be disposed of in accordance with established Federal, State, and local regulations and policies after

completion of analysis by the analytical team on site. Sample extracts may be disposed of after final FASP field data report submission. The responsibility for proper disposal of samples, glassware and extracts rests with the on-site authority. The mobile laboratory is not licensed to transport hazardous waste.

12.2 RAW AND SUMMARY DATA STORAGE

The lab must maintain a hard copy and computer disk storage of all raw (including instrument printouts and logbooks) and summary data associated with an analytical case for a minimum of 6 months after receipt of the hard copy report by the data user.

12.3 PERMANENT DATA STORAGE

After the 6-month period has elapsed, the laboratory should place all records, including raw data and laboratory notebooks, into permanent storage.

Figure 1 Target Analytes: Target analytes and associated internal standards.

Bromochloromethane
Dichlorodifluoromethane
Chloromethane
Bromomethane
Vinyl Chloride
Chloroethane
Trichlorofluoromethane
1,1-Dichloroethene
Methyl Acetate
Acetone
Carbon Disulfide
1,1,2-Trichloro-1,2,2-trifluoromethane
Methylene Chloride
trans-1,2-Dichloroethene
Methyl tert-Butyl Ether
1,1-Dichloroethane
cis-1,2-Dichloroethene
2-Butanone
Chloroform

1,2-Dichloroethane
1,2-Dichloroethane-d4 (surrogate)

1,4-Difluorobenzene
1,1,1-Trichloroethane
Cyclohexane
Carbon tetrachloride
Benzene
Trichloroethene
Methylcyclohexane
1,2-Dichloropropane
Bromodichloromethane
1,1,2-Trichloroethane
Dibromochloromethane
cis-1,3-Dichloropropene
Bromoform
trans-1,3-Dichloropropene

Clorobenzene-d5
4-Methyl-2-pentanone
Toluene
Tetrachloroethene
2-Hexanone
1,2-Dibromoethane
Chlorobenzene
Ethylbenzene
total Xylenes
Styrene
Isopropyl benzene
1,1,2,2-Tetrachloroethane
1,2,4-Trichlorobenzene
1,2-Dibromo-3-Chloropropane
1,2-Dichlorobenzene
1,3-Dichlorobenzene
1,4-Dichlorobenzene
Toluene-d8 (surrogate)
Bromofluorobenzene (surrogate)

Figure 2 Tune Parameters: Tune parameters, BFB ion abundance criteria

mass 50; 8.0% to 40.0% of mass 95
mass 75; 30% to 66% of mass 95
mass 95; base peak, 100% relative abundance (note mass 174).
mass 96; 5% to 9% of mass 95
mass 173; less than 2% of mass 174
mass 174; 50% to 120% of mass 95
mass 175; 4% to 9% of mass 174
mass 176; 93% to 101% of mass 174
mass 177; 5% to 9% of mass 176

Table 3: Matrix spike recovery
Figure 3 Matrix Spike Recoveries

Compound	%R
1,1-Dichloroethene	70-130
Trichloroethene	70-130
Benzene	70-130
Toluene	70-130
Chlorobenzene	70-130

Table 4: Surrogate recovery limits

Compound	%R
1,2-Dichloroethane-d4	70-130
Toluene-d8	70-130
Bromofluorobenzene	70-130

Figure 4 Surrogate Recoveries

Figure 5 Recommended Characterization Ions

Compound	Primary	Secondary	
Dichlorodifluoromethane	85	87	
Chloromethane	50	52	
Bromomethane	94	96	
Vinyl Chloride	62	64	
Chloroethane	64	66	
Trichlorofluoromethane	101	103	
1,1-Dichloroethene	96	61	
1,1,2-Trichloro-1,2,2-trifluoromethane	101	85	151
Acetone	58	43	
Carbon Disulfide	76	78	
Methyl Acetate	74	43	
Methylene Chloride	84	49	51
trans-1,2-Dichloroethene	96	61	
Methyl tert-Butyl Ether	73	43	57
1,1-Dichloroethane	63	65	
cis-1,2-Dichloroethene	96	61	
2-Butanone	72	58	43
Chloroform	83	85	
1,2-Dichloroethane	62	64	
1,1,1-Trichloroethane	97	99	
Cyclohexane	56	69	84
Carbon tetrachloride	117	119	121
Benzene	78		
Trichloroethene	130	132	95
Methylcyclohexane	83	55	98
1,2-Dichloropropane	63	65	114
Bromodichloromethane	83	85	129
cis-1,3-Dichloropropene	75	77	
trans-1,3-Dichloropropene	75	77	
1,1,2-Trichloroethane	97	99	132
Bromoform	173	171	175
4-Methyl-2-pentanone	58	43	
Toluene	91	92	
Tetrachloroethene	164	166	129
2-Hexanone	100	58	43
Dibromochloromethane	129	208	206
1,2-Dibromoethane	107	109	
Chlorobenzene	112	114	
Ethylbenzene	109	91	

Compound	Primary	Secondary
Xylenes	106	91
Styrene	104	78
Isopropyl benzene	105	120
1,1,2,2-Tetrachloroethane	83	85
1,2-Dichlorobenzene	146	111
1,3-Dichlorobenzene	146	111
1,4-Dichlorobenzene	146	111
1,2-Dibromo-3-Chloropropane	75	175 155
1,2,4-Trichlorobenzene	180	182 145
1,2-Dichloroethane-d4 (surrogate)	65	102
Toluene-d8 (surrogate)	98	100
Bromofluorobenzene (surrogate)	95	174
Bromochloromethane (internal standard)	128	130
1,4-Difluorobenzene (internal standard)	114	63 88
Chlorobenzene-d5 (internal standard)	117	119

Table 1.1 FASP TARGET COMPOUND LIST (FTCL) AND FASP PRACTICAL QUANTITATION LIMITS (PQL) IN ORDER OF COMPOUND ELUTION

Practical Quantitation Limits[1]

Volatile Organic	CAS Number	Water (µg/L)	Soil (µg/Kg)	Soil (ng)	Time[5,6]
Trichlorofluoromethane[2]	75-69-4	10	10	20	4.78
1,1-Dichloroethene[2]	75-35-4	10	10	20	5.42
Methylene Chloride[2]	75-09-2	10	10	20	5.86
trans-1,2-Dichloroethene[2]	156-60-5	10	10	20	6.27
1,1-Dichloroethane[2]	75-34-3	10	10	20	6.73
cis-1,2-Dichloroethene[2]	156-59-4	10	10	20	7.45
Chloroform[2]	67-66-3	10	10	40	7.75
1,1,1-Trichloroethane[2]	71-55-6	10	10	20	8.23
Carbon Tetrachloride[2]	56-23-5	10	10	20	8.48
1,2-Dichloroethane[2]	107-06-2	10	10	20	8.60
Benzene[3]	71-43-2	10	10	20	8.90
Trichloroethene[2]	79-01-6	10	10	20	9.48
Bromodichloromethane[2]	75-27-4	10	10	20	9.55
1,2-Dichloropropane[2]	78-87-5	10	10	20	9.68
cis-1,3-Dichloropropene[2]	10061-01-5	10	10	20	10.07
trans-1,3-Dichloropropene[2]	10061-02-6	10	10	20	10.73
Tetrachloroethene[2]	127-18-4	10	10	20	11.45
1,1,2-Trichloroethane[2]	79-00-5	10	10	20	11.62
Toluene[3]	108-88-3	10	10	20	11.90
Dibromochloromethane[2]	124-48-1	10	10	20	12.17
Chlorobenzene[3]	108-90-7	10	10	20	14.23
Bromoform[2]	75-25-2	10	10	20	14.40
Ethylbenzene[3]	100-41-4	10	10	20	14.45
m,p-Xylene[3,4]	1330-20-7	10	10	20	14.62
1,1,2,2-Tetrachloroethane[2]	79-34-5	10	10	20	14.87
o-Xylene[3]	95-47-6	10	10	20	15.33

1 Specific quantitation limits are highly matrix dependent. The PQLs listed are provided for guidance and are dependent on site-specific QAPP and/or QAPjP requirements.

2 Identified and quantitated using the ELCD (Hall detector)

3 Identified and quantitated using the PID

4 The following compounds co-elute: the meta- and para- isomers of Xylene.

5 On the column stated in Table 9-1.

6 At high concentrations some analytes may co-elute.

ESN Rocky Mountain
Laboratory SOPs

ESN Rocky Mountain | Environmental Services Network

130 Capital Drive, Suite C
Golden, CO 80401-5625
(303) 278-1911 • FAX: (303) 278-0104
E-Mail: Methods@ESN-RM.com

Oxidizing Reducing Capabilites in Water and Soil Samples

This SOP is proprietary information of ESN Rocky Mountain and is the for the sole use of ESN Rocky Mountain clients and staff and may not be reproduced without written permission of ESN Rocky Mountain.

Title: **Oxidizing Reducing Capabilities in Water and Soil Samples**

Written by: Steve Monroe Date 9/11/06

Approved by: Lou Meraith Date 9/11/06
Laboratory Manager

1.0 AREA OF APPLICABILITY

Electrometric measurements are made by potentiometric determination of electron activity with a HACH inert/reference electrode (Ag/AgCl). At reduction/oxidizing (redox) equilibrium, the oxidizing or reducing capability of a solution is determined. These measurements are commonly made in polluted streams, chlorinated waters, industrial wastewaters, and other samples. Soils can also be analyzed in this method through a deionized water leach.

2.0 SUMMARY OF SOP

SOILS / Approximately 5 gram of soil/sediment sample is leached in 5 mls of deionized water.
WATERS / 5-30mLs of water is used for direct measurement.

The sample or sample leachate is prepared. The electrode is connected is connected to the meter and the measurement is taken.

3.0 INTERFERENCES AND/OR POTENTIAL PROBLEMS

Platinum OPR electrodes may give unstable readings in solutions containing chromous, vanadous, titanous and other ions that are stronger reducing agents than hydrogen or platinum.

4.0 MATERIALS REQUIRED

Equipment and Supplies:

Sample collection containers:
Soils / 1 - 2 oz glass jar per sample.
Waters / 1 – 25mL poly cubitainer.
Stainless steel spatula.
HACH handheld sensION2 meter.
HACH silver/silver chloride reference electrode.
4 M KCl solution saturated with Ag/AgCl.
Top-loading balance capable of weighing to the nearest 0. 1 g.

ESN Rocky Mountain | Environmental Services Network

130 Capital Drive, Suite C
Golden, CO 80401-5625
(303) 278-1911 • FAX: (303) 278-0104
E-Mail: Methods@ESN-RM.com

This SOP is proprietary information of ESN Rocky Mountain and is the for the sole use of ESN Rocky Mountain clients and staff and may not be reproduced without written permission of ESN Rocky Mountain.

Deionized Water - free of all interfering contaminants

5.0 INSTRUCTIONS

5.1 Sample Collection:

Place approximately 20-50 g of soil/sediment into sample collection container, cap and label.

Place 40+mLs of aqueous sample into a 250mL polycubitainer, cap and label.

5.2 PREPARATION INSTRUCTIONS

Sample Preparation:

A. SOIL / Mix soil sample thoroughly in container. Avoiding twigs and small pebbles weigh approximately 5 grams of sample into a 20 mL vial. Record the weight wet to the nearest 0. 1 g.
WATER / Prepare 30 mL of water sample for measurement.

B. SOIL / Add 5 mL of deionized water and cap the vial. Agitate sample for one minute using a vortex mixer.

C. SOIL / Let the soil sample leach for a minimum of 12 hours.

6.0 ANALYSIS INSTRUCTIONS

Sample Analysis:

A. Take the pH of the sample. Record the measurement

B. Record temperature at which readings were made.

C. Connect the electrode to the meter and set the function switch to the millivolt mode.

D. Once samples are ready for analysis, place the electrode in the sample solution and wait for the reading to stabilize.

E. Once stable record the redox potential.

7.0 CALIBRATIONS AND CALCULATIONS

- No calculations are necessary. The redox potential is a direct reading from the meter.

130 Capital Drive, Suite C
Golden, CO 80401-5625
(303) 278-1911 • FAX: (303) 278-0104
E-Mail: Methods@ESN-RM.com

This SOP is proprietary information of ESN Rocky Mountain and is the for the sole use of ESN Rocky Mountain clients and staff and may not be reproduced without written permission of ESN Rocky Mountain.

8.0 QUALITY CONTROL

a. Select the electrode filling solution to closely match the ionic strength of the sample solution.
b. The filling solution level should always be at least one inch above the level of the solution being measured.
c. Record temperature at which readings were made.

9.0 Data and Records Management:

All work performed for the analyses of samples should be entered into the lab log and the bench log. Data is reported through the Laboratory Information Management System (LIMS).

10.0 REFERENCES

HACH sensION Combination OPR Electrode Instruction Manual

Standard Methods for the Examination of Water and Wastewater, 18th Edition, 1992. Method 2580, Oxidation-Reduction Potential (ORP) (Proposed)

ESN ROCKY MOUNTAIN | Environmental Services Network

130 Capital Drive, Suite C
Golden, CO 80401-5625
(303) 278-1911 • FAX: (303) 278-0104
E-Mail: Methods@ESN-RM.com

Analysis of Water/ Soil for Anions by Ion Chromatography

SOP Number:	AAAXXX	Revision Number:	
Page:	1 of 4	Revision Date:	

This SOP is proprietary information of ESN Rocky Mountain and is the for the sole use of ESN Rocky Mountain clients and staff and may not be reproduced without written permission of ESN Rocky Mountain.

Title:	Approved By:
Analysis of Water/ Soil for Anions by Ion Chromatography	Signature: [signature] Date: 3/25/06

1.0 AREA OF APPLICABILITY

This method is used to determine inorganic anions in aqueous and soil samples by ion chromatography. Target analytes include Fluoride, Chloride, Nitrite, Bromide, Nitrate, Orthophosphate, and Sulfate.

2.0 SUMMARY OF SOP

A small volume of aqueous sample or extract is injected into an ion chromatograph to flush and fill a constant volume sample loop. The sample is then injected into a stream of carbonate eluent in deionized water. The sample is pumped through three different ion exchange columns and into a conductivity detector. The first two columns, a guard column and a separator column, are packed with a high capacity, strongly basic anion exchanger. The ions are separated into discrete bands based on their affinity to the resin contained in the separator column. The last column is a suppressor column that reduces background conductivity of the eluent and converts the analytes to strong acids. The anions, in their acid forms, are then measured using an electrical-conductivity detector cell. Anions are identified based on their retention times compared to known standards. Quantitation is accomplished through Peak Simple software by measuring peak area and comparing it to a calibration curve generated from known standards.

3.0 INTERFERENCES AND/OR POTENTIAL PROBLEMS

Any species with a retention time similar to that of the desired ion will interfere. Large quantities of ions eluting close to the ion of interest will also result in an interference. For example, high levels of organic acids may be present in industrial wastes, which may interfere with inorganic anion analysis. Two common species, formate and acetate, elute close to fluoride and chloride. Also, it is advisable not to have Bromide and Nitrate ratios higher than 1:10 or 10:1 since these two analytes elute closely to each other. Samples exhibiting poor resolution due to interferences are diluted using deionized water. Sample dilution is effective in eliminating most interference problems.

4.0 MATERIALS REQUIRED

Dionex Ion Chromatograph or equivalent, capable of performing the required functions

This SOP is proprietary information of ESN Rocky Mountain and is the for the sole use of ESN Rocky Mountain clients and staff and may not be reproduced without written permission of ESN Rocky Mountain.

Ion Pac Guard Column AG9-HC

Ion Pac Separator Column AS9-HC

ASRS –Ultra Self Regenerating Autosuppressor

Dionex 5 mL Polyvials and caps

Nitrogen and regulator set to 8 psi

ASTM Type II Water, herein referred to as deionized water

5.0 INSTRUCTIONS

5.1 PREPARATION INSTRUCTIONS

5.1.1 PREPARATION OF SAMPLES

For aqueous samples, the only preparation required is to ensure that the sample has been filtered prior to analysis to ensure proper flow through the instrument. The autosampler caps have built in filters, making filtration by the analyst unnecessary. If soil samples are to be analyzed, a water extraction is necessary. Quantities of soil samples used should be determined on an individual basis. In most cases, it is recommended that the aqueous extract allow to settle for one hour prior to filtration and analysis.

5.1.2 PREPARATION OF STANDARDS

Two sources of 1,000 mg/L stock standards are purchased from High Purity Standards or other know reputable vendors accompanied by a Certificate of Analysis. Typically, one solution contains fluoride, chloride, bromide, nitrate, orthophosphate, and sulfate while the second solution contains nitrite only. For the calibration standards, appropriate amounts of the primary stocks are added to a volumetric flask and diluted with deionized water to reach the targeted concentrations. The ICV/CCV/LCS is made by diluting the secondary stock standards to a concentration of 20 mg/L.

5.2 ANALYSIS INSTRUCTIONS

Peak Simple is used to collect the data and stored on the hard drive under the applicable filename, numbered by the date analyzed. Once Peak Simple has begun the sequence, it will control all of the timed events required for the analysis. The analysis chromatogram is continuously updated throughout the run on channel 1. For printing data, files must first be opened in channel 2 and renamed appropriately. Retenition times can be updated for any analyte simple by dragging the retention time window in one direction or the other.

130 Capital Drive, Suite C
Golden, CO 80401-5625
(303) 278-1911 • FAX: (303) 278-0104
E-Mail: Methods@ESN-RM.com

This SOP is proprietary information of ESN Rocky Mountain and is the for the sole use of ESN Rocky Mountain clients and staff and may not be reproduced without written permission of ESN Rocky Mountain.

5.3 INSTRUMENT OPERATING CONDITIONS

The Ion Chromatograph should operate at the following conditions:

Nitrogen set at 8 psi
Pump flow at 1.0 mL/min
Background conductivity at 25 *u*S
ASRS-Ultra Autosuppressor on

6.0 CALIBRATIONS AND CALCULATIONS

A linear calibration forced through zero using peak areas, generated by Peak Simple, is used to determine the concentrations of QC standards, blanks, and samples.

7.0 QUALITY CONTROL

ICV/CCV/LCS
An ICV/LCS at 20 mg/L made from the secondary stock solutions should be run at the beginning of every sequence. The recovery for every analyte should be within 10% of nominal value on order for the analysis to continue. Up to ten samples and duplicates may be analyzed before a CCV/LCS and a blank need to be re-analyzed.

BLANKS
A blank is analyzed following the ICV/LCS to demonstrate that there is no carryover contamination. A blank is also analyzed after the ending CCV.

DUPLICATES
At a minimum, one sample duplicate per batch is run for each day of analysis. RPD recovery for the duplicate should be no more than 20%.

HOLDING TIMES
Holding times for Ortho-phosphate, Nitrite, and Nitrite are 48 hours from the sampling time. All other anions associated with this method have a holding time of 28 days.

DILUTIONS
Any sample detected above the high calibration standard will require a dilution. Ideally, the dilution will be bring the sample concentration to the middle of the calibration range. It may be necessary to report analytes at higher detection levels if interfering analytes occur at levels significantly above the upper reporting limit.

130 Capital Drive, Suite C
Golden, CO 80401-5625
(303) 278-1911 • FAX: (303) 278-0104
E-Mail: Methods@ESN-RM.com

This SOP is proprietary information of ESN Rocky Mountain and is the for the sole use of ESN Rocky Mountain clients and staff and may not be reproduced without written permission of ESN Rocky Mountain.

8.0 REFERENCES

Standard Methods for the Examination of Water and Wastewater, Method 9056B, "Determination of Inorganic Anions by Ion Chromatography," 1994.

ESN Rocky Mountain | Environmental Services Network

130 Capital Drive, Suite C
Golden, CO 80401-5625
(303) 278-1911 • FAX: (303) 278-0104
E-Mail: Methods@ESN-RM.com

DETERMINATION OF CATION EXCHANGE CAPACITY

SOP Number:	WC.CEC.001	Revision Number:	
Page:	1 of 6	Revision Date:	

This SOP is proprietary information of ESN Rocky Mountain and is the for the sole use of ESN Rocky Mountain clients and staff and may not be reproduced without written permission of ESN Rocky Mountain.

Title:	Approved By:
Determination of Cation Exchange Capacity	Stephen Merritt 9/11/06
	Signature Date

1.0 AREA OF APPLICABILITY

This method is used for the determination of Cation Exchange Capacity in soils using the measured quantitative values of Calcium, Magnesium, Potassium, and Aluminum. This calculated value is reported in millequivalents/ 100 grams soil (meq/100g).

2.0 SUMMARY OF SOP

A known quantity of sample is leached with a solution of 1 M NH4Cl and analyzed for Calcium, Magnesium, Potassium, and Aluminum using an ICP-OES. The results are used to calculate the cation exchange capacity.

3.0 INTERFERENCES AND/OR POTENTIAL PROBLEMS

If the soil sample has a pH less than 5, Aluminum may be present in significant quantities yet not accurately measured, thereby leading to a low bias. In addition, samples with a pH greater than 7.5 may contain significant quantities of calcium sulfate resulting in a high saline digestate causing a low bias. For most accurate results, sample pH should be between 5 and 7.5.

4.0 MATERIALS REQUIRED

4.1 INSTRUMENT

Thermo Jarrell Ash ICP, equipped with a TJA autosampler and a peristaltic pump: computer controlled data acquisition system for sample quantitation; and an attached printer. A recirculating pump is used to circulate cooling water through the ICP. A radio frequency generator is included to supply necessary power for plasma emission. A continuous flowing refrigerating system is used to cool the detector to eliminate background noise.

4.2 APPARATUS

Adjustable pipet, with disposable tips, 100-1,000 µL, Eppendorf or equivalent
Class "A" volumetric flasks (100, 500, 1,000 and 2,000 mL)
Automated volume pipettors for adding reagents, repipet or equivalent
Analytical balance

130 Capital Drive, Suite C
Golden, CO 80401-5625
(303) 278-1911 • FAX: (303) 278-0104
E-Mail: Methods@ESN-RM.com

This SOP is proprietary information of ESN Rocky Mountain and is the for the sole use of ESN Rocky Mountain clients and staff and may not be reproduced without written permission of ESN Rocky Mountain.

Pump tubing. White/white ID 0.04, orange/white ID 0.025, purple/ purple ID 2.06
Disposable centrifuge tubes for storing digestates, 50-100 mL
Filter syringe, Acrodisc 0.2 µm, or equivalent
16 x 100 mm autosampler vials

5.0 INSTRUCTIONS

5.1 PREPARATION INSTRUCTIONS

For each batch of samples prepared and analyzed, a method blank, laboratory control sample, sample duplicate, and matrix spike must be included.

For samples, aliquot 2 grams into a 50 mL disposable vial. Add 20 mL 1 M NH4Cl. Shake for two hours. Then centrifuge.

Method Blank. Add 20 mL 1 M NH4Cl to a 50 mL disposable vial. Shake for two hours. Then centrifuge.

Laboratory Control Sample. Add 20 mL 1 M NH4Cl to a 50 mL disposable vial. Add 0.50 mL ICV Stock Supplemental. Shake for two hours. Then centrifuge.

Matrix Spike. Aliquot 2 grams of sample to a 50 mL disposable vial. Add 0.50 mL ICV Stock Supplemental. Shake for two hours. Then centrifuge.

5.2 ANALYSIS INSTRUCTIONS

5.3.1 Instrument Warm Up

Attach the sample tubing (white/white), internal standard tubing (orange/white), and rinse tubing (purple/purple) to the peristaltic pump. For the time being, the tubing can remain in DI water. Turn on the pump and check that flows are consistent.

Turn on the water recirculating pump.

Turn on the argon carrier gas at the dewer. Ensure that the pressure coming out of the tanks is set at 80 psi. Immediately turn on the argon to the torch. To light the flame, the nebulizer should be turned off.

Ignite the argon plasma. To accomplish this, the RF generator should be in the "manual" position. If all conditions for lighting the torch are met, the blue "RF OFF" light will come on. Push the "RF ON" button. Once this button lights up, manually turn up the power on the RF generator until the reflected watts reads 150. Push the ignitor button to light the torch. Once lit, make sure that there is no static being emitted below the flame. If there is, manually turn down the power until it disappears without extinguishing the

This SOP is proprietary information of ESN Rocky Mountain and is the for the sole use of ESN Rocky Mountain clients and staff and may not be reproduced without written permission of ESN Rocky Mountain.

flame. Then turn the power all the way up. The RF generator can now be placed in automatic power control and the nebulizer can be turned on.

The ICP will require a minimum of one hour to warm up.

5.3.2 Sample Analysis

Open up the software program ThermoSPEC. To set up the PC to collect and store data under a file name associated with the date of analysis, select "Methods." For method name, choose "26_Aug_03." Select F3, "Method Info." Change the name of the Analysis Data File to reflect the proper date. Analysis for June 28, 2006 should read "_062806." Now change the name of the Calibration Data File to read such: "062806." These changes will not be saved unless F9 is pressed. In the main screen select "Autosampler." Press F1 twice to access the screen where changes can be made to the sample sequence and checks tables. Again, F9 must be used to save any changes. Now click on "Analysis" when ready to begin the sequence. First select test code 7 "TEST_SH" to profile Copper and check the intensity of the internal standard. For this, a 10 mg/L solution of Copper is introduced through the sample sipper. The Yttrium counts should be about 5,000 and the Copper should be about 2,000. %RSDs for both should be about 2%. If the pump flow and nebulizer are working properly, then analysis may begin. Select test code 1 "26_Aug_03." IA will initialize the autosampler if there is a communication issue. Then select "Analyze" followed by "Autosampler." Press run to begin.

5.3 INSTRUMENT OPERATING CONDITIONS

Operating Conditions

RF Power	1250 watts
Detector Temperature	-90°C
Carrier Gas Pressure	Argon (80 psi minimum)
Nebulizer pressure	21-25 psi
Auxiliary flow	0.5L/min
Peristaltic pump rate	110 rpm
Number of Integrations	3
Flush time	60 seconds, minimum
Rinse time	60 seconds, minimum

6.0 CALIBRATIONS AND CALCULATIONS

A two point linear calibration is performed using a low and high standard. A summary of the calibration is printed automatically after the high calibration standard is analyzed. Concentrations are determined as follows: Slope = Concentration / Intensity Ratio.

Cation Exchange Capacity can be determined using the equation below:

130 Capital Drive, Suite C
Golden, CO 80401-5625
(303) 278-1911 • FAX: (303) 278-0104
E-Mail: Methods@ESN-RM.com

This SOP is proprietary information of ESN Rocky Mountain and is the for the sole use of ESN Rocky Mountain clients and staff and may not be reproduced without written permission of ESN Rocky Mountain.

$$\text{CEC expressed in meq/ 100grams} = \frac{\text{Ca mg/kg}}{20} + \frac{\text{Mg mg/kg}}{12} + \frac{\text{K mg/kg}}{39} + \frac{\text{Al mg/kg}}{9}$$

7.0 QUALITY CONTROL

The following QC is required to be prepared and analyzed for each batch of samples and/or days of analysis. The QC must meet the listed criteria for the data to be considered valid.

Initial Calibration Verification/ Continuing Calibration Verification (ICV/ CCV)
The ICV must be analyzed following the initial calibration and prior to the analysis of any samples. The ICV must recover within ± 10% of the true value for analysis to continue. If the ICV recovers outside of this range, it may be reanalyzed once. If the recovery is still outside of the limits, the analysis must be terminated, the problem corrected, a new ICV/CCV standard prepared, and the instrument must be recalibrated.

Initial Calibration Blank (ICB)
The ICB must be analyzed following the ICV and prior to the analysis of any samples. The ICB is analyzed to show that there is no instrument contamination prior to sample analysis. The concentration detected in the ICB must be below the PQL for all Calcium, Magnesium, Potassium, and Aluminum. If the ICB shows analyte concentrations above the PQL, the analyst may continue the run. However, any samples with positive results for the affected analyte must contain a concentration of that analyte greater than 5 times the level detected in the ICB for the result to be considered valid. Any samples which contain the analyte at a level less than 5 times the level detected in the blank must be reanalyzed with an analysis run showing a blank level less than the PQL. The analyst may also reprepare and reanalyze the ICB one time or have the option to recalibrate the instrument.

Continuing Calibration Blank (CCB)
The CCB must be analyzed following the CCV. The CCB is analyzed to show that there is no instrument contamination during the course of the sample run. The concentration detected in the CCB must be below the PQL for the required analytes. If the CCB shows analyte concentrations above the PQL, the analyst may continue the run. However, any samples bracketed by the affected CCB with positive results for the affected analyte must contain a concentration of that analyte greater than 5 times the level detected in the blank for the result to be considered valid. Any samples that contain the analyte at a level less than 5 times the level detected in the CCB must be reanalyzed with an analysis run showing a blank level less than the PQL. The analyst may also reprepare and reanalyze the CCB one time or have the option to recalibrate the instrument.

Method Blank (MB)
A method blank must be prepared and analyzed with every batch of samples. The MB is analyzed to show that no contamination is introduced during the sample preparation procedure. The concentration detected in the MB must be below the PQL . If the MB shows a concentration above the PQL, the analyst may continue the run. If any samples contain the analyte at a level less than 5 times the level

This SOP is proprietary information of ESN Rocky Mountain and is the for the sole use of ESN Rocky Mountain clients and staff and may not be reproduced without written permission of ESN Rocky Mountain.

detected in the blank, the samples must be redigested.

Laboratory Control Sample (LCS)
An LCS must be prepared and analyzed with each batch of samples. Until control chart limits are established, the LCS must recover within ± 20% of the true value. The LCS recoveries will be monitored with control charts. Once control charts are established for the controlling analytes, the recovery criteria will vary.

Matrix Spike (MS)
A matrix spike must be prepared and analyzed with each batch of samples. The MS should recover within ±25 % of the true value for any sample at concentrations less than 4 times the amount spiked. For samples which are present at concentrations greater than 4 times the spike level, the matrix spike evaluation is exempt from acceptance criteria.

Sample Duplicate (DUP)
A sample duplicate must be prepared and analyzed with each batch of samples. The duplicate should have a relative percent difference of no more than 20%. This percentage may be left open to interpretation if the concentration of an analyte is close to the reporting limit.

Interference Check Sample (ICS)
Two ICS standards will be analyzed. The ICS solution is analyzed to determine if high concentrations of interfering analytes are causing positive or negative interferences on the quantitation of other analytes. The first standard, ICSA, contains Fe, Ca, and Mg at 500 µg/mL and Al at 200 µg/mL. No other analytes are in this solution. The four interferents must recover within ±20% and the remaining analytes should not be present at a level greater than their associated PQL. If an analyte(s) is detected above its PQL, data acceptability must be evaluated and commented upon in the case narrative. The second ICS solution, ICSAB, contains the same four analytes above. It also contains the remaining analytes, at significantly lower concentrations. All analytes must recover within ±20%. If the recovery is outside of this range, the standard may be reprepared and reanalyzed once. If the recovery is still outside of the range, the analysis must be terminated and the instrument recalibrated.

Replicate Precision
The ICP will run three replicates for all analyses. For all results above 10 times the MRL, the percent relative standard deviation (%RSD) between the replicates must be ±20%. If the precision is outside of this range, the sample must be reanalyzed. If the reanalysis reveals the same results, a matrix effect can be suspected. The result from the original analysis should be reported. The analyst must note in the Case Narrative that potential matrix problems exist.

8.0 REFERENCES

Method 6010B, Inductively Coupled Plasma- Atomic Emissions Spectrometry, Revision 2, 1996.

130 Capital Drive, Suite C
Golden, CO 80401-5625
(303) 278-1911 • FAX: (303) 278-0104
E-Mail: Methods@ESN-RM.com

This SOP is proprietary information of ESN Rocky Mountain and is the for the sole use of ESN Rocky Mountain clients and staff and may not be reproduced without written permission of ESN Rocky Mountain.

CEC Determination by BaCl2 Compulsive Exchange Method, Gillman and Sumpter, 1986.

ESN Rocky Mountain | Environmental Services Network

GC ANALYSIS OF WATER FOR DISSOLVED LIGHT HYDROCARBONS (C1-C6) IN HEADSPACE

SOP Number:	NLAG108	Revision Number:	2.3
Page:	1 of 4	Revision Date:	November 1, 2005

This SOP is proprietary information of ESN Rocky Mountain and is the for the sole use of ESN Rocky Mountain clients and staff and may not be reproduced without written permission of ESN Rocky Mountain.

Title:	Approved By:
GC Analysis of Water for Dissolved Light Hydrocarbons (C_1-C_6) in Headspace	Signature: [signature] Date: 11/1/05

1.0 AREA OF APPLICABILITY

This method is for the recovery and determination of dissolved volatile organic compounds in water by headspace analysis.

1.1 TARGET ANALYTES

The analytes of particular interest are nine of the $C_1 - C_6$ hydrocarbons: Methane, ethane, ethylene, propane, propylene, isobutane, n-butane, n-pentane and n-hexane. Vinyl Chloride can also be analyzed by this method, eluting between n-butane and n-pentane.

2.0 MATERIALS REQUIRED

- 250mL amber Boston round bottle with open hole caps and Teflon lined septum
- Nitrogen gas (UHP/Zero grade or better)
- 1-inch 26 gauge needles
- 1-inch 19 gauge needles
- Gas Chromatograph (Hewlett Packard 5890) configured with:
  - Sample Loop
  - Ten port switching valve configured with sample loop and pre-cut column method of sample injection
  - FID detector
  - 1/8" SS of Nickel column packed with activated alumina
  - Pre-cut column with sample packing
  - Nitrogen purge for sample loop
  - HP automatic integrator or standard chromatography software for storing calibration and run data
- Certified working gas standard mixtures containing approximately 1ppm of each component except methane which is approximately 10ppm. (High concentration mixtures at percent levels can be used for dilute standards to cover a wider range.)
- 5mL and 60mL glass transfer syringes (separate syringes for gas standards and sample transfer)
- 5mL disposable plastic syringes
- 50mL syringe filled with ASTM type II water and 26 gauge needle attached
- 100mL graduated cylinder
- Dual septa union
- Sample shaker

This SOP is proprietary information of ESN Rocky Mountain and is the for the sole use of ESN Rocky Mountain clients and staff and may not be reproduced without written permission of ESN Rocky Mountain.

3.0 INSTRUCTIONS

3.1 GAS CHROMATOGRAPH

1. INSTRUMENT SET UP:
   Conditioned alumina columns at 300°C
   Temperature Program: 180°C 1-minute, ramp 40°C/min, hold 240°C
   Total run time is approximately 6 minutes to recycle
   Pre-cut (purge time) compounds heavier than n-hexane
   Range: 6
   Attn: Off
   Valve Temperature: 150°C
   Detector Temperature: 250°C

2. Calibrate the Gas Chromatograph. The FID detector is linear over the range setting listed above. The linearity can be confirmed be creating dilutions of the high concentration standards in multi-layer gas bags.

3. Use a multi-point (3-points or better) calibration if higher precision is required over a large range.

4. Use a single point calibration for routine analysis, using the 1ppm Calibration Mixture. Three consecutive standard injections should repeat within +/- 5% for the initial calibration. Continuing calibration checks should repeat in this range as well.

5. Perform daily opening and closing calibration checks.

6. Run Nitrogen and Air syringe blanks each day and after high concentration samples.

3.2 SAMPLE PREPARATION

1. Remove samples from the refrigerator and let them come to room temperature (20°C) (approximately 4-hours).

2. Place the syringe containing the ASTM Type II water on top of the sample switching valve to warm the water.

3. Make sure that the cap is firmly closed on the bottle, invert the bottle, and clamp it into a lab stand.

4. Insert a fresh one-inch, 19-gauge needle through the septum near one edge of the open-hole cap. Place a 100mL graduated cylinder under the needle.

5. Make sure the regulator on the nitrogen gas supply reads 2psig or less. If necessary, bleed off the excess pressure before continuing.

This SOP is proprietary information of ESN Rocky Mountain and is the for the sole use of ESN Rocky Mountain clients and staff and may not be reproduced without written permission of ESN Rocky Mountain.

6. On the other side of the open hole cap, insert a one-inch, 26-gauge needle connected to the nitrogen gas supply.

7. Turn on the nitrogen gas. Expel 50mL of liquid from the bottle. Because of temporary over-pressurization, the nitrogen flow should be stopped about 5mL before the 50mL mark is reached. Thereafter, carefully use the nitrogen to expel the rest of the required volume.

8. Remove the nitrogen gas needle. Let the bottle "rest" for about one minute. The contents of the bottle are now assumed to be at ambient atmospheric pressure and the total volume of sample in the bottle is now 200mL.

9. Remove the bottle from the stand, place it in the sample shaker, and shake for 5 minutes.

10. Remove the bottle from the shaker and let it stand for a few minutes.

11. Insert a 5mL syringe with a 26-gauge needle through the septum of the bottle. Also insert the needle of the warm Type II water syringe. Use the water to force 5mL of headspace gases from the bottle into the glass syringe.

12. Inject the sample into the gas chromatograph.

13. For data entry and interpretation refer to ESN SOP NLGOP106 Reporting Results.

3.3 DILUTIONS

In some cases, the headspace gasses being determined will be in sufficient concentration to exceed the range of the instrument. If so, dilutions will be required.

1. Using a dual septa union, flush a 5mL disposable syringe with nitrogen 10 times.

2. Fill the syringe with nitrogen to the 5mL mark, and then expel to the 4mL mark.

3. By injecting water into the sample bottle, displace 1mL of headspace gas into the syringe.

4. Inject the sample into the gas chromatograph.

NOTE: The above procedure gives a 1 in 5 dilution of the headspace gas. For different dilutions, adjust the nitrogen to sample ratio in the syringe accordingly.

4.0 QUALITY CONTROL

- After calibrating the instrument, an instrument blank should be run.

This SOP is proprietary information of ESN Rocky Mountain and is the for the sole use of ESN Rocky Mountain clients and staff and may not be reproduced without written permission of ESN Rocky Mountain.

- Syringe blanks should be run before any samples are injected. Filling the syringe with nitrogen prior to injection can do this.
- A method blank is performed using ASTM Type II water in a sample bottle instead of sample.
- A spike is performed by evacuating 50mL of sample water using calibration gas instead of nitrogen.
- A trip blank, if available, must also be analyzed.
- Because the entire contents of a sample bottle are consumed in the analysis, matrix spike analyses can only performed on duplicate samples collected in the field.
- If sufficient duplicate samples are available, duplicate analyses are also performed.

5.0 REFERENCES

Method adapted from the Robert Kerr EPA Laboratory in Oklahoma.

This SOP is proprietary information of ESN Rocky Mountain and is the for the sole use of ESN Rocky Mountain clients and staff and may not be reproduced without written permission of ESN Rocky Mountain.

Title: GC Analysis of Water for Dissolved Light Hydrocarbons (C_1-C_6) in Headspace

Approved By:

Signature Date

1.0 AREA OF APPLICABILITY

This method is for the recovery and determination of dissolved volatile organic compounds in water by headspace analysis.

1.1 TARGET ANALYTES

The analytes of particular interest are nine of the C_1 – C_6 hydrocarbons: Methane, ethane, ethylene, propane, propylene, isobutane, n-butane, n-pentane and n-hexane. Vinyl Chloride can also be analyzed by this method, eluting between n-butane and n-pentane.

2.0 MATERIALS REQUIRED

- 250mL amber Boston round bottle with open hole caps and Teflon lined septum
- Nitrogen gas (UHP/Zero grade or better)
- 1-inch 26 gauge needles
- 1-inch 19 gauge needles
- Gas Chromatograph (Hewlett Packard 5890) configured with:
  - Sample Loop
  - Ten port switching valve configured with sample loop and pre-cut column method of sample injection
  - FID detector
  - 1/8" SS of Nickel column packed with activated alumina
  - Pre-cut column with sample packing
  - Nitrogen purge for sample loop
  - HP automatic integrator or standard chromatography software for storing calibration and run data
- Certified working gas standard mixtures containing approximately 1ppm of each component except methane which is approximately 10ppm. (High concentration mixtures at percent levels can be used for dilute standards to cover a wider range.)
- 5mL and 60mL glass transfer syringes (separate syringes for gas standards and sample transfer)
- 5mL disposable plastic syringes
- 50mL syringe filled with ASTM type II water and 26 gauge needle attached
- 100mL graduated cylinder
- Dual septa union
- Sample shaker

This SOP is proprietary information of ESN Rocky Mountain and is the for the sole use of ESN Rocky Mountain clients and staff and may not be reproduced without written permission of ESN Rocky Mountain.

3.0 INSTRUCTIONS

3.1 GAS CHROMATOGRAPH

1. INSTRUMENT SET UP:
   Conditioned alumina columns at 300°C
   Temperature Program: 180°C 1-minute, ramp 40°C/min, hold 240°C
   Total run time is approximately 6 minutes to recycle
   Pre-cut (purge time) compounds heavier than n-hexane
   Range: 6
   Attn: Off
   Valve Temperature: 150°C
   Detector Temperature: 250°C

2. Calibrate the Gas Chromatograph. The FID detector is linear over the range setting listed above. The linearity can be confirmed be creating dilutions of the high concentration standards in multi-layer gas bags.

3. Use a multi-point (3-points or better) calibration if higher precision is required over a large range.

4. Use a single point calibration for routine analysis, using the 1ppm Calibration Mixture. Three consecutive standard injections should repeat within +/- 5% for the initial calibration. Continuing calibration checks should repeat in this range as well.

5. Perform daily opening and closing calibration checks.

6. Run Nitrogen and Air syringe blanks each day and after high concentration samples.

3.2 SAMPLE PREPARATION

1. Remove samples from the refrigerator and let them come to room temperature (20°C) (approximately 4-hours).

2. Place the syringe containing the ASTM Type II water on top of the sample switching valve to warm the water.

3. Make sure that the cap is firmly closed on the bottle, invert the bottle, and clamp it into a lab stand.

4. Insert a fresh one-inch, 19-gauge needle through the septum near one edge of the open-hole cap. Place a 100mL graduated cylinder under the needle.

5. Make sure the regulator on the nitrogen gas supply reads 2psig or less. If necessary, bleed off the excess pressure before continuing.

This SOP is proprietary information of ESN Rocky Mountain and is the for the sole use of ESN Rocky Mountain clients and staff and may not be reproduced without written permission of ESN Rocky Mountain.

6. On the other side of the open hole cap, insert a one-inch, 26-gauge needle connected to the nitrogen gas supply.

7. Turn on the nitrogen gas. Expel 50mL of liquid from the bottle. Because of temporary over-pressurization, the nitrogen flow should be stopped about 5mL before the 50mL mark is reached. Thereafter, carefully use the nitrogen to expel the rest of the required volume.

8. Remove the nitrogen gas needle. Let the bottle "rest" for about one minute. The contents of the bottle are now assumed to be at ambient atmospheric pressure and the total volume of sample in the bottle is now 200mL.

9. Remove the bottle from the stand, place it in the sample shaker, and shake for 5 minutes.

10. Remove the bottle from the shaker and let it stand for a few minutes.

11. Insert a 5mL syringe with a 26-gauge needle through the septum of the bottle. Also insert the needle of the warm Type II water syringe. Use the water to force 5mL of headspace gases from the bottle into the glass syringe.

12. Inject the sample into the gas chromatograph.

13. For data entry and interpretation refer to ESN SOP NLGOP106 Reporting Results.

3.3 DILUTIONS

In some cases, the headspace gasses being determined will be in sufficient concentration to exceed the range of the instrument. If so, dilutions will be required.

1. Using a dual septa union, flush a 5mL disposable syringe with nitrogen 10 times.

2. Fill the syringe with nitrogen to the 5mL mark, and then expel to the 4mL mark.

3. By injecting water into the sample bottle, displace 1mL of headspace gas into the syringe.

4. Inject the sample into the gas chromatograph.

NOTE: The above procedure gives a 1 in 5 dilution of the headspace gas. For different dilutions, adjust the nitrogen to sample ratio in the syringe accordingly.

4.0 QUALITY CONTROL

- *After calibrating the instrument, an instrument blank should be run.*

This SOP is proprietary information of ESN Rocky Mountain and is the for the sole use of ESN Rocky Mountain clients and staff and may not be reproduced without written permission of ESN Rocky Mountain.

- Syringe blanks should be run before any samples are injected. Filling the syringe with nitrogen prior to injection can do this.
- A method blank is performed using ASTM Type II water in a sample bottle instead of sample.
- A spike is performed by evacuating 50mL of sample water using calibration gas instead of nitrogen.
- A trip blank, if available, must also be analyzed.
- Because the entire contents of a sample bottle are consumed in the analysis, matrix spike analyses can only performed on duplicate samples collected in the field.
- If sufficient duplicate samples are available, duplicate analyses are also performed.

5.0 REFERENCES

Method adapted from the Robert Kerr EPA Laboratory in Oklahoma.

This SOP is proprietary information of ESN Rocky Mountain and is the for the sole use of ESN Rocky Mountain clients and staff and may not be reproduced without written permission of ESN Rocky Mountain.

Title:

GC Analysis of Water for Dissolved Light Hydrocarbons (C_1-C_6) in Headspace

Approved By:

Signature Date 11/1/05

1.0 AREA OF APPLICABILITY

This method is for the recovery and determination of dissolved volatile organic compounds in water by headspace analysis.

1.1 TARGET ANALYTES

The analytes of particular interest are nine of the C_1 – C_6 hydrocarbons: Methane, ethane, ethylene, propane, propylene, isobutane, n-butane, n-pentane and n-hexane. Vinyl Chloride can also be analyzed by this method, eluting between n-butane and n-pentane.

2.0 MATERIALS REQUIRED

- 250mL amber Boston round bottle with open hole caps and Teflon lined septum
- Nitrogen gas (UHP/Zero grade or better)
- 1-inch 26 gauge needles
- 1-inch 19 gauge needles
- Gas Chromatograph (Hewlett Packard 5890) configured with:
  - Sample Loop
  - Ten port switching valve configured with sample loop and pre-cut column method of sample injection
  - FID detector
  - 1/8" SS of Nickel column packed with activated alumina
  - Pre-cut column with sample packing
  - Nitrogen purge for sample loop
  - HP automatic integrator or standard chromatography software for storing calibration and run data
- Certified working gas standard mixtures containing approximately 1ppm of each component except methane which is approximately 10ppm. (High concentration mixtures at percent levels can be used for dilute standards to cover a wider range.)
- 5mL and 60mL glass transfer syringes (separate syringes for gas standards and sample transfer)
- 5mL disposable plastic syringes
- 50mL syringe filled with ASTM type II water and 26 gauge needle attached
- 100mL graduated cylinder
- Dual septa union
- Sample shaker

This SOP is proprietary information of ESN Rocky Mountain and is the for the sole use of ESN Rocky Mountain clients and staff and may not be reproduced without written permission of ESN Rocky Mountain.

3.0 INSTRUCTIONS

3.1 GAS CHROMATOGRAPH

1. INSTRUMENT SET UP:
   Conditioned alumina columns at 300°C
   Temperature Program: 180°C 1-minute, ramp 40°C/min, hold 240°C
   Total run time is approximately 6 minutes to recycle
   Pre-cut (purge time) compounds heavier than n-hexane
   Range: 6
   Attn: Off
   Valve Temperature: 150°C
   Detector Temperature: 250°C

2. Calibrate the Gas Chromatograph. The FID detector is linear over the range setting listed above. The linearity can be confirmed be creating dilutions of the high concentration standards in multi-layer gas bags.

3. Use a multi-point (3-points or better) calibration if higher precision is required over a large range.

4. Use a single point calibration for routine analysis, using the 1ppm Calibration Mixture. Three consecutive standard injections should repeat within +/- 5% for the initial calibration. Continuing calibration checks should repeat in this range as well.

5. Perform daily opening and closing calibration checks.

6. Run Nitrogen and Air syringe blanks each day and after high concentration samples.

3.2 SAMPLE PREPARATION

1. Remove samples from the refrigerator and let them come to room temperature (20°C) (approximately 4-hours).

2. Place the syringe containing the ASTM Type II water on top of the sample switching valve to warm the water.

3. Make sure that the cap is firmly closed on the bottle, invert the bottle, and clamp it into a lab stand.

4. Insert a fresh one-inch, 19-gauge needle through the septum near one edge of the open-hole cap. Place a 100mL graduated cylinder under the needle.

5. Make sure the regulator on the nitrogen gas supply reads 2psig or less. If necessary, bleed off the excess pressure before continuing.

This SOP is proprietary information of ESN Rocky Mountain and is the for the sole use of ESN Rocky Mountain clients and staff and may not be reproduced without written permission of ESN Rocky Mountain.

6. On the other side of the open hole cap, insert a one-inch, 26-gauge needle connected to the nitrogen gas supply.

7. Turn on the nitrogen gas. Expel 50mL of liquid from the bottle. Because of temporary over-pressurization, the nitrogen flow should be stopped about 5mL before the 50mL mark is reached. Thereafter, carefully use the nitrogen to expel the rest of the required volume.

8. Remove the nitrogen gas needle. Let the bottle "rest" for about one minute. The contents of the bottle are now assumed to be at ambient atmospheric pressure and the total volume of sample in the bottle is now 200mL.

9. Remove the bottle from the stand, place it in the sample shaker, and shake for 5 minutes.

10. Remove the bottle from the shaker and let it stand for a few minutes.

11. Insert a 5mL syringe with a 26-gauge needle through the septum of the bottle. Also insert the needle of the warm Type II water syringe. Use the water to force 5mL of headspace gases from the bottle into the glass syringe.

12. Inject the sample into the gas chromatograph.

13. For data entry and interpretation refer to ESN SOP NLGOP106 Reporting Results.

3.3 DILUTIONS

In some cases, the headspace gasses being determined will be in sufficient concentration to exceed the range of the instrument. If so, dilutions will be required.

1. Using a dual septa union, flush a 5mL disposable syringe with nitrogen 10 times.

2. Fill the syringe with nitrogen to the 5mL mark, and then expel to the 4mL mark.

3. By injecting water into the sample bottle, displace 1mL of headspace gas into the syringe.

4. Inject the sample into the gas chromatograph.

NOTE: The above procedure gives a 1 in 5 dilution of the headspace gas. For different dilutions, adjust the nitrogen to sample ratio in the syringe accordingly.

4.0 QUALITY CONTROL

- After calibrating the instrument, an instrument blank should be run.

This SOP is proprietary information of ESN Rocky Mountain and is the for the sole use of ESN Rocky Mountain clients and staff and may not be reproduced without written permission of ESN Rocky Mountain.

- Syringe blanks should be run before any samples are injected. Filling the syringe with nitrogen prior to injection can do this.
- A method blank is performed using ASTM Type II water in a sample bottle instead of sample.
- A spike is performed by evacuating 50mL of sample water using calibration gas instead of nitrogen.
- A trip blank, if available, must also be analyzed.
- Because the entire contents of a sample bottle are consumed in the analysis, matrix spike analyses can only performed on duplicate samples collected in the field.
- If sufficient duplicate samples are available, duplicate analyses are also performed.

5.0 REFERENCES

Method adapted from the Robert Kerr EPA Laboratory in Oklahoma.

ESN ROCKY MOUNTAIN | Environmental Services Network

130 Capital Drive, Suite C
Golden, CO 80401-5625
(303) 278-1911 • FAX: (303) 278-0104
E-Mail: Methods@ESN-RM.com

Analysis of Water/ Soil for Anions by Ion Chromatography

SOP Number:	AAAXXX	Revision Number:	
Page:	1 of 4	Revision Date:	

This SOP is proprietary information of ESN Rocky Mountain and is the for the sole use of ESN Rocky Mountain clients and staff and may not be reproduced without written permission of ESN Rocky Mountain.

Title:	Approved By:
Analysis of Water/ Soil for Anions by Ion Chromatography	Signature: [illegible] Date: 3/25/06

1.0 AREA OF APPLICABILITY

This method is used to determine inorganic anions in aqueous and soil samples by ion chromatography. Target analytes include Fluoride, Chloride, Nitrite, Bromide, Nitrate, Orthophosphate, and Sulfate.

2.0 SUMMARY OF SOP

A small volume of aqueous sample or extract is injected into an ion chromatograph to flush and fill a constant volume sample loop. The sample is then injected into a stream of carbonate eluent in deionized water. The sample is pumped through three different ion exchange columns and into a conductivity detector. The first two columns, a guard column and a separator column, are packed with a high capacity, strongly basic anion exchanger. The ions are separated into discrete bands based on their affinity to the resin contained in the separator column. The last column is a suppressor column that reduces background conductivity of the eluent and converts the analytes to strong acids. The anions, in their acid forms, are then measured using an electrical-conductivity detector cell. Anions are identified based on their retention times compared to known standards. Quantitation is accomplished through Peak Simple software by measuring peak area and comparing it to a calibration curve generated from known standards.

3.0 INTERFERENCES AND/OR POTENTIAL PROBLEMS

Any species with a retention time similar to that of the desired ion will interfere. Large quantities of ions eluting close to the ion of interest will also result in an interference. For example, high levels of organic acids may be present in industrial wastes, which may interfere with inorganic anion analysis. Two common species, formate and acetate, elute close to fluoride and chloride. Also, it is advisable not to have Bromide and Nitrate ratios higher than 1:10 or 10:1 since these two analytes elute closely to each other. Samples exhibiting poor resolution due to interferences are diluted using deionized water. Sample dilution is effective in eliminating most interference problems.

4.0 MATERIALS REQUIRED

Dionex Ion Chromatograph or equivalent, capable of performing the required functions

This SOP is proprietary information of ESN Rocky Mountain and is the for the sole use of ESN Rocky Mountain clients and staff and may not be reproduced without written permission of ESN Rocky Mountain.

Ion Pac Guard Column AG9-HC

Ion Pac Separator Column AS9-HC

ASRS –Ultra Self Regenerating Autosuppressor

Dionex 5 mL Polyvials and caps

Nitrogen and regulator set to 8 psi

ASTM Type II Water, herein referred to as deionized water

5.0 INSTRUCTIONS

5.1 PREPARATION INSTRUCTIONS

5.1.1 PREPARATION OF SAMPLES

For aqueous samples, the only preparation required is to ensure that the sample has been filtered prior to analysis to ensure proper flow through the instrument. The autosampler caps have built in filters, making filtration by the analyst unnecessary. If soil samples are to be analyzed, a water extraction is necessary. Quantities of soil samples used should be determined on an individual basis. In most cases, it is recommended that the aqueous extract allow to settle for one hour prior to filtration and analysis.

5.1.2 PREPARATION OF STANDARDS

Two sources of 1,000 mg/L stock standards are purchased from High Purity Standards or other know reputable vendors accompanied by a Certificate of Analysis. Typically, one solution contains fluoride, chloride, bromide, nitrate, orthophosphate, and sulfate while the second solution contains nitrite only. For the calibration standards, appropriate amounts of the primary stocks are added to a volumetric flask and diluted with deionized water to reach the targeted concentrations. The ICV/CCV/LCS is made by diluting the secondary stock standards to a concentration of 20 mg/L.

5.2 ANALYSIS INSTRUCTIONS

Peak Simple is used to collect the data and stored on the hard drive under the applicable filename, numbered by the date analyzed. Once Peak Simple has begun the sequence, it will control all of the timed events required for the analysis. The analysis chromatogram is continuously updated throughout the run on channel 1. For printing data, files must first be opened in channel 2 and renamed appropriately. Retention times can be updated for any analyte simple by dragging the retention time window in one direction or the other.

130 Capital Drive, Suite C
Golden, CO 80401-5625
(303) 278-1911 • FAX: (303) 278-0104
E-Mail: Methods@ESN-RM.com

This SOP is proprietary information of ESN Rocky Mountain and is the for the sole use of ESN Rocky Mountain clients and staff and may not be reproduced without written permission of ESN Rocky Mountain.

5.3 INSTRUMENT OPERATING CONDITIONS

The Ion Chromatograph should operate at the following conditions:

Nitrogen set at 8 psi
Pump flow at 1.0 mL/min
Background conductivity at 25 uS
ASRS-Ultra Autosuppressor on

6.0 CALIBRATIONS AND CALCULATIONS

A linear calibration forced through zero using peak areas, generated by Peak Simple, is used to determine the concentrations of QC standards, blanks, and samples.

7.0 QUALITY CONTROL

ICV/CCV/LCS

An ICV/LCS at 20 mg/L made from the secondary stock solutions should be run at the beginning of every sequence. The recovery for every analyte should be within 10% of nominal value on order for the analysis to continue. Up to ten samples and duplicates may be analyzed before a CCV/LCS and a blank need to be re-analyzed.

BLANKS

A blank is analyzed following the ICV/LCS to demonstrate that there is no carryover contamination. A blank is also analyzed after the ending CCV.

DUPLICATES

At a minimum, one sample duplicate per batch is run for each day of analysis. RPD recovery for the duplicate should be no more than 20%.

HOLDING TIMES

Holding times for Ortho-phosphate, Nitrite, and Nitrite are 48 hours from the sampling time. All other anions associated with this method have a holding time of 28 days.

DILUTIONS

Any sample detected above the high calibration standard will require a dilution. Ideally, the dilution will be bring the sample concentration to the middle of the calibration range. It may be necessary to report analytes at higher detection levels if interfering analytes occur at levels significantly above the upper reporting limit.

130 Capital Drive, Suite C
Golden, CO 80401-5625
(303) 278-1911 • FAX: (303) 278-0104
E-Mail: Methods@ESN-RM.com

This SOP is proprietary information of ESN Rocky Mountain and is the for the sole use of ESN Rocky Mountain clients and staff and may not be reproduced without written permission of ESN Rocky Mountain.

8.0 REFERENCES

Standard Methods for the Examination of Water and Wastewater, Method 9056B, "Determination of Inorganic Anions by Ion Chromatography," 1994.

Appendix C
Field Parameter SOPs

LIST OF FIELD SOPs

1 SOP FOR FIELD TEMPERATURE, pH, SPECIFIC CONDUCTANCE, DISSOLVED OXYGEN, AND REDOX POTENTIAL

2 SOP FOR WATER LEVEL MEASUREMENTS

3 SOP FOR AQUIFER SLUG TESTS

4 SOP FOR LOW-FLOW GROUNDWATER SAMPLING

5 SOP FOR OPERATION AND MAINTENANCE OF HNU PHOTOIONIZATION DETECTOR

6 SOP FOR GEOPROBE BLADDER PUMP

7 SOP FOR GEOPROBE MACRO-CORE SAMPLER

8 SOP FOR PASSIVE SOIL GAS SURVEY

SOP FOR FIELD TEMPERATURE, pH, SPECIFIC CONDUCTANCE, DISSOLVED OXYGEN, AND REDOX POTENTIAL

SOP FOR FIELD TEMPERATURE, pH, SPECIFIC CONDUCTANCE, DISSOLVED OXYGEN, AND REDOX POTENTIAL MEASUREMENT

1.0 INTRODUCTION

The purpose of this Standard Operating Procedure (SOP) is to provide Weston Solutions, Inc. (WESTON®), personnel with a step-by-step guide to measure water quality parameters for groundwater and surface water. Water quality parameters include temperature, pH, conductivity/specific conductance, dissolved oxygen (DO), and oxidation-reduction potential (ORP).

2.0 CALIBRATION INSTRUCTIONS

Prior to instrumentation use, it is important to calibrate the instrument to check its accuracy. Before performing any calibration procedures the equipment must be allowed to warm-up for at least 15 minutes. Prior to calibration, all instrument probes must be cleaned according to the manufacture's instructions. The probes must also be cleaned by rinsing with deionized water before and after immersing the probe in a calibration solution. For each of the calibration solutions provide enough volume so that the probe is sufficiently covered.

2.1 Temperature

Since the temperature is pre-set at the factory, this probe does not need to be calibrated. However, for instrument probes that rely on the temperature sensor (pH, conductivity, DO, and ORP), the temperature sensor needs to be checked for accuracy against a thermometer that is traceable to the National Institute of Standards and Technology (NIST). The accuracy check should be performed at least once a year, and the date and results of the check kept with the instrument. Below is the verification procedure:

1. Allow a container filled with water with the temperature probe in it to come to room temperature.

2. Place a thermometer that is traceable to the NIST into the water and wait for both temperature readings to stabilize.

3. Compare the two measurements. The instrument's temperature sensor must agree with the reference thermometer within the accuracy of the sensor (± 0.15°C). If the measurements do not agree, the instrument may not be working correctly and the manufacturer should be contacted.

2.2 pH

The pH of a sample is determined electrometrically using a glass electrode. Choose the appropriate standards that will bracket the expected values at the sampling locations. For

This document was prepared by Weston Solutions, Inc., expressly for U.S. EPA. It shall not be released or disclosed in whole or in part without the express, written permission of U.S. EPA.

this procedure, three standards will be used (pH4, pH7, and pH10).

1. All the buffered samples to equilibrate to the ambient temperature.

2. Clean all of the probes with deionized water. Shake of the excess water.

3. Place the pH electrode in the 7.0 buffer solution to standardize the pH electrode and meter. Adjust the "zero" potentiometer on the face of the tester so that the digital display indicates 7.00.

4. Rinse the probe with deionized water and shake off excess water.

5. Place the pH electrode in the 4.0 or 10.0 buffer solution (depending on the desired measurement). Adjust the slope potentiometer on the face of the tester so that the digital display indicates the value of the buffer chosen. It is important to note that there will be interaction between the "zero" and the "slope" adjustments, therefore, the procedure should be repeated several times.

2.3 Specific Conductance

Conductivity is used to measure the ability of an aqueous solution to carry an electrical current. Specific conductance is the conductivity value corrected at 25°C. The standard solutions for calibrating conductivity contain Iodine and Potassium Chloride. Conductivity may be calibrated by removing the black plug to expose the adjustment potentiometer screw.

1. Add the standard solution to the cup, discard and refill. Place the cleaned probe into the specific conductivity standard solution, making sure that the specific conductivity probe is fully submerged.

2. Enter the standard concentration in mS/cm^3 and press enter. The standard concentration should be close to the concentrations you expect to measure. Wait for the "calibrated" message to appear. Repeat this procedure until the digital display indicates the same value twice in a row. Adjust the potentiometer until the digital display indicates the known value of conductivity. To increase the digital display reading, turn the adjustment potentiometer screw counterclockwise (clockwise to decrease).

3. Rinse probe with deionized water.

2.4 Dissolved Oxygen

DO content in water is measured using a membrane electrode. The DO probe's membrane and electrolyte solution should be inspected for any damage or air bubbles prior to calibration. If air bubbles or damage are present, replace the membrane according to the

This document was prepared by Weston Solutions, Inc., expressly for U.S. EPA. It shall not be released or disclosed in whole or in part without the express, written permission of U.S. EPA.

manufacturer suggestions.

1. Calibration of the DO probe requires inputting the current barometric pressure. The equipment should have a barometer within the unit and automatically provides this during the calibration procedure.

2. Clean the probe with tap (or clean ambient water) water and shake off excess water.

3. Place approximately 1/8 inch of water in the bottom of the calibration cup. Place the probe into the cup. Engage only 1 or 2 threads of the calibration cup to ensure the DO probe is vented to the atmosphere. Make sure that the DO and temperature sensors are NOT immersed in water and that the calibration cup is not in direct sunlight. Wait approximately 10 minutes for the air in the calibration cup to become water saturated and for the temperature to equilibrate.

4. Observe the DO reading. When the reading shows no significant change for approximately 30 seconds, press the enter key.

2.5 Oxidation-Reduction Potential

1. Rinse the sensor with a small amount of calibration solution and discard.

2. Carefully immerse the sensor end of the probe into the solution.

3. Gently rotate and/or move the probe up and down to remove any bubbles from the ORP sensor. The sensor must be completely immersed. Screw the calibration cup onto the end of the probe and securely tighten.

4. Allow at least one minute for temperature equilibration before proceeding.

5. Observe the ORP reading, when the reading shown no significant change for approximately 30 seconds press the enter key.

3.0 OPERATING INSTRUCTIONS

1. Fill the clean sample cup at least 2/3 full.

2. Place the probes into the sample cup.

3. Three successive readings shall be within ±0.1 units for pH, ±3 percent for specific conductance, ± 1°C for temperature, ±10 percent for DO, and ± 10 millivolts (mV) for ORP. When the parameters have stabilized, log the measurements into the logbook.

This document was prepared by Weston Solutions, Inc., expressly for U.S. EPA. It shall not be released or disclosed in whole or in part without the express, written permission of U.S. EPA.

4.0 MAINTENANCE

It is important to wipe the sample cup after every sample and rinse the cap with tap water when possible. The battery is located behind the snap-off cover on the bottom of the tester and should be replaced with a 9-volt whenever "LO BAT" appears on the display.

This document was prepared by Weston Solutions, Inc., expressly for U.S. EPA. It shall not be released or disclosed in whole or in part without the express, written permission of U.S. EPA.

SOP FOR WATER LEVEL MEASUREMENTS

SOP FOR WATER LEVEL MEASUREMENTS

1.0 PURPOSE

Weston Solutions, Inc. (WESTON) has adopted the American Society for Testing and Materials (ASTM) Standard Method D4750-87 as its standard operating procedure for *Determining Subsurface Liquid Levels in a Borehole or Monitoring Well (ASTM, 1992)*.

2.0 INTERPRETATION

If there are questions regarding the interpretation or the applicability of items in this operating practice, the Project Manager or Technical Manager should be consulted. In the absence of either of those, contact your Section Manager.

3.0 REFERENCES

American Society for Testing and Materials (ASTM) Standards on Groundwater and Vadose Zone Investigation, 1992, pages 113-118.

Attachment: 1

This document was prepared by Weston Solutions, Inc., expressly for U.S. EPA. It shall not be released or disclosed in whole or in part without the express, written permission of U.S. EPA.

ATTACHMENT 1

AMERICAN SOCIETY FOR TESTING AND MATERIALS DESIGNATION: D4750-87

This document was prepared by Weston Solutions, Inc., expressly for U.S. EPA. It shall not be released or disclosed in whole or in part without the express, written permission of U.S. EPA.

American Society for Testing and Materials Designation: D4750-87

Standard Test Method for Determining Subsurface Liquid Levels in a Borehole or Monitoring Well (Observation Well)[1]

This standard is issued under the fixed designation D4750; the number immediately following the designation indicates the year of original adoption or, in the case of revision, the year of last revision. A number in parentheses indicates the year of last reapproval. A superscript epsilon (ϵ) indicates an editorial change since the last revision or reapproval.

1.0 Scope

1.1 This test method describes the procedures for measuring the level of liquid in a borehole or well and determining the stabilized level of liquid in a borehole.

1.2 The test method applies to boreholes (cased or uncased) and monitoring wells (observation wells) that are vertical or sufficiently vertical so a flexible measuring device can be lowered into the hole.

1.3 Borehole liquid-level measurements obtained using this method will not necessarily correspond to the level of the liquid in the vicinity of the borehole unless sufficient time has been allowed for the level to reach equilibrium position.

1.4 This test method generally is not applicable for the determination of pore-pressure changes due to changes in stress conditions of the earth material.

1.5 This test method is not applicable for the concurrent determination of multiple liquid levels in a borehole.

1.6 The values stated in inch-pound units are to be regarded as the standard.

1.7 *This standard may involve hazardous materials, operations, and equipment. This standard does not purport to address all of the safety problems associated with its use. It is the responsibility of the user of this standard to establish appropriate safety and health practices and determine the applicability of regulatory limitations prior to use.*

[1] This test method is under the jurisdiction of ASTM Committee D-18 on Soil and Rock and is in direct responsibility of Subcommitte D18.02 on Sampling and Related Field Testing for Soil Investigations. Current edition approved Nov. 27, 1987. Published January 1988.

This document was prepared by Weston Solutions, Inc., expressly for U.S. EPA. It shall not be released or disclosed in whole or in part without the express, written permission of U.S. EPA.

2.0 Referenced Document

2.1 *ASTM Standard:*
D653 Terminology Relating to Soil, Rock, and Contained Fluids[2] .

3.0 Terminology

3.1 *Descriptions of Terms Specific to This Standard:*

3.1.1 *borehole* - a hole of circular cross-section made in soil or rock to ascertain the nature of the subsurface materials. Normally, a borehole is advanced using an auger, a drill, or casing with or without drilling fluid.

3.1.2 earth material - soil, bedrock, or fill.

3.1.3 *ground-water level* - the level of the water table surrounding a borehole or well. The ground-water level can be represented as an elevation or as a depth below the ground surface.

3.1.4 *liquid level* - the level of liquid in a borehole or well at a particular time. The liquid level can be reported as an elevation or as a depth below the top of the land surface. If the liquid is ground water it is known as water level.

3.1.5 *monitoring well (observation well)* - a special well drilled in a selected location for observing parameters such as liquid level or pressure changes or for collecting liquid samples. The well may be cased or uncased, but if cased the casing should have openings to allow flow of borehole liquid into or out of the casing.

3.1.6 *stabilized borehole liquid level* - the borehole liquid level which remains essentially constant with time, that is, liquid does not flow into or out of the borehole.

3.1.7 *top of borehole* - the surface of the ground surrounding the borehole.

3.1.8 *water table (ground-water table)* - the surface of a ground-water body at which the water pressure equals atmospheric pressure. Earth material below the ground-water table is saturated with water.

[2] *Annual Book of ASTM Standards,* Vol 04.08.

This document was prepared by Weston Solutions, Inc., expressly for U.S. EPA. It shall not be released or disclosed in whole or in part without the express, written permission of U.S. EPA.

3.2 Definitions:

3.2.1 For definitions of other terms used in this test method, see Terminology D653.

4.0 Significance and Use

4.1 In geotechnical, hydrologic, and waste-management investigations, it is frequently desirable, or required, to obtain information concerning the presence of ground water or other liquids and the depths to the ground-water table or other liquid surface. Such investigations typically include drilling of exploratory boreholes, performing aquifer tests, and possibly completion as a monitoring or observation well. The opportunity exists to record the level of liquid in such boreholes or wells, as the boreholes are being advanced and after their completion.

4.2 Conceptually, a stabilized borehole liquid level reflects the pressure of ground water or other liquid in the earth material exposed along the sides of the borehole or well. Under suitable conditions, the borehole liquid level and the ground-water, or other liquid, level will be the same, and the former can be used to determine the latter. However, when earth materials are not exposed to a borehole, such as material which is sealed off with casing or drilling mud, the borehole water levels may not accurately reflect the ground-water level. Consequently, the user is cautioned that the liquid level in a borehole does not necessarily bear a relationship to the ground-water level at the site.

4.3 The user is cautioned that there are many factors which can influence borehole liquid levels and the interpretation of borehole liquid-level measurements. These factors are not described or discussed in this test method. The interpretation and application of borehole liquid-level information should be done by a trained specialist.

4.4 Installation of piezometers should be considered where complex ground-water conditions prevail or where changes in intergranular stress, other than those associated with fluctuation in water level, have occurred or are anticipated.

5.0 Apparatus

5.1 Apparatus conforming to one of the following shall be used for measuring borehole liquid levels.

5.1.1 *Weighted Measuring Tape* - A measuring tape with a weight attached to the end. The tape shall have graduations that can be read to the nearest 0.01 ft. The tape shall not

This document was prepared by Weston Solutions, Inc., expressly for U.S. EPA. It shall not be released or disclosed in whole or in part without the express, written permission of U.S. EPA.

stretch more than 0.05% under normal use. Steel surveying tapes in lengths of 50, 100, 200, 300, and 500 ft. (20, 30, 50 or 100 m) and widths of ¼ in. (6mm) are commonly used. A black metal tape is better than a chromium-plated tape. Tapes are mounted on hand-cranked reels up to 500 ft (100m) lengths. Mount a slender weight, made of lead, to the end of the tape to ensure plumbness and to permit some feel for obstructions. Attach the weight to the tape with wire strong enough to hold the weight but not as strong as the tape. This permits saving the tape in the event the weight becomes lodged in the well or borehole. The size of the weight shall be such that its displacement of water causes less than a 0.05-ft (15-mm) rise in the borehole water level, or a correction shall be made for the displacement. If the weight extends beyond the end of the tape, a length correction will be needed in measurement Procedure C (see 7.2.3).

5.1.2 *Electrical Measuring Device* - A cable or tape with electrical wire encased, equipped with a weighted sensing tip on one end and an electric meter at the other end. An electric circuit is completed when the tip contacts water; this is registered on the meter. The cable may be marked with graduations similar to a measuring tape (as described in 5.1.1).

5.1.3 *Other Measuring Devices* - A number of other recording and non-recording devices may be used. See Ref. (1) for more details[3].

6.0 Calibration and Standardization

6.1 Calibrate measuring apparatus in accordance with the manufacturers' directions.

7.0 Procedure

7.1 Liquid-level measurements are made relative to a reference point. Establish and identify a reference point at or near the top of the borehole or a well casing. Determine and record the distance from the reference point to the top of the borehole (land surface). If the borehole liquid level is to be reported as an elevation, determine the elevation of the reference point or the top of borehole (land surface). Three alternative measurement procedures (A, B, and C) are described.

Note 1---In general, Procedure A allows for greater accuracy than B or C, and B allows for greater accuracy than C; other procedures have a variety of accuracies that must be determined from the referenced literature (2-5).

This document was prepared by Weston Solutions, Inc., expressly for U.S. EPA. It shall not be released or disclosed in whole or in part without the express, written permission of U.S. EPA.

7.2 *Procedure A - Measuring Tape:*

7.2.1 Chalk the lower few feet of tape by drawing the tape across a piece of colored carpenter's chalk.

7.2.2 Lower a weighted measuring tape slowly into the borehole or well until the liquid surface is penetrated. Observe and record the reading on the tape at the reference point. Withdraw the tape from the borehole and observe the lower end of the tape. The demarcation between the wetted and unwetted portions of the chalked tape should be apparent. Observe and record the reading on the tape at that point. The difference between the two readings is the depth from the reference point to the liquid level.

Note 2 - Submergence of the weight and tape may temporarily cause a liquid-level rise in wells or boreholes having very small diameters. This effect can be significant if the well is in materials of very low hydraulic conductivity.

Note 3 - Under dry surface conditions, it may be desirable to pull the tape from the well or borehole by hand, being careful not to allow it to become kinked, and reading the liquid mark before rewinding the tape onto the reel. In this way, the liquid mark on the chalked part of the tape is rapidly brought to the surface before the wetted part of the tape dries. In cold regions, rapid withdrawal of the tape from the well is necessary before the wet part freezes and becomes difficult to read. The tape must be protected if rain is falling during measurements.

Note 4 - In some pumped wells, or in contaminated wells a layer of oil may float on the water. If the oil layer is only a foot or less thick, read the tape at the top of the oil mark and use this reading for the water-level measurement. The measurement will not be greatly in error because the level of the oil surface in this case will differ only slightly from the level of the water surface that would be measured if no oil was present. If several feet of oil are present in the well, or if it is necessary to know the thickness of the oil layer, a water-detector paste for detecting water in oil and gasoline storage tanks is available commercially. The paste is applied to the lower end of the tape that is submerged in the well. It will show the top of the oil as a wet line and the top of the water as a distinct color change.

7.2.3 As a standard of good practice, the observer should make two measurements. If two measurements of static liquid level made within a few minutes do not agree within about 0.01 or 0.02 ft (generally regarded as the practical limit of precision) in boreholes or wells having a depth to liquid of less than a couple of hundred feet, continue to measure until the reason for the lack of agreement is determined or until the results are shown to be reliable. Where water is dripping into the hole or covering its wall, it may be impossible to get a good water mark on the chalked tape.

7.2.4 After each well measurement, in areas where polluted liquids or ground water is suspected, decontaminate that part of the tape measure that was wetted to avoid contamination of other wells.

This document was prepared by Weston Solutions, Inc., expressly for U.S. EPA. It shall not be released or disclosed in whole or in part without the express, written permission of U.S. EPA.

7.3 *Procedure B - Electrical Measuring Device:*

7.3.1 Check proper operation of the instrument by inserting the tip into water and noting if the contact between the tip and the water surface is registered clearly.

Note 5 - In pumped wells having a layer of oil floating on the water, the electric tape will not respond to the oil surface and, thus, the liquid level determined will be different than would be determined by a steel tape. The difference depends on how much oil is floating on the water A miniature float-driven switch can be put on a two-conductor electric tape that permits detection of the surface of the uppermost fluid.

7.3.2 Dry the tip. Slowly lower the tip into the borehole or well until the meter indicates that the tip has contacted the surface of the liquid.

7.3.3 For devices with measurement graduations on the cable, note the reading at the reference point. This is the liquid-level depth below the reference point of the borehole or well.

7.3.4 For measuring devices without graduations on the cable, mark the cable at the reference point. Withdraw the cable from the borehole or well. Stretch out the cable and measure and record the distance between the tip and the mark on the cable by use of a tape. This distance is the liquid-level depth below the reference point.

7.3.5 A second or third check reading should be taken before withdrawing the electric tape from the borehole or well.

7.3.6 Decontaminate the submerged end of the electric tape or cable after measurements in each well.

Note 6 - The length of the electric line should be checked by measuring with a steel tape after the line has been used for a long time or after it has been pulled hard in attempting to free the line. Some electric lines, especially the single line wire, are subject to considerable permanent stretch. In addition, because the probe is usually larger in diameter than the wire, the probe can become lodged in a well. Sometimes the probe can be attached by twisting the wires together by hand and using only enough electrical tape to support the weight of the probe. In this manner, the point of probe attachment is the weakest point of the entire line. Should the probe become "hung in the hole," the line may be pulled and breakage will occur at the probe attachment point, allowing the line to be withdrawn.

7.4 *Procedure C - Measuring Tape and Sounding Weight:*

7.4.1 Lower a weighted measuring tape into the borehole or well until the liquid surface is reached. This is indicated by an audible splash and a noticeable decrease in the downward force on the tape. Observe and note the reading on the tape at the reference point. Repeat this process until the readings are consistent to the accuracy

This document was prepared by Weston Solutions, Inc., expressly for U.S. EPA. It shall not be released or disclosed in whole or in part without the express, written permission of U.S. EPA.

desired. Record the result as the liquid-level depth below the reference point.

Note 7 - The splash can be made more audible by using a "plopper," a lead weight with a concave bottom surface.

7.4.2 If the liquid level is deep, or if the measuring tape adheres to the side of the borehole, or for other reasons, it may not be possible to detect the liquid surface using this method. If so, use Procedure A or Procedure B.

8.0 Determination of a Stabilized Liquid Level

8.1 As liquid flows into or out of the borehole or well, the liquid level will approach, and may reach, a stabilized level. The liquid level then will remain essentially constant with time.

Note 8 - The time required to reach equilibrium can be reduced by removing or adding liquid until the liquid level is close to the estimated stabilized level.

8.2 Use one of the following two procedures to determine the stabilized liquid level.

8.2.1 *Procedure 1*- Take a series of liquid measurements until the liquid level remains constant with time. As a minimum, two such constant readings are needed (more readings are preferred). The constant reading is the stabilized liquid level for the borehole or well.

Note 9 - If desired, the time and level data could be plotted on graph paper in order to show when equilibrium is reached.

8.2.2 *Procedure 2* - Take at least three liquid-level measurements at approximately equal time intervals as the liquid level changes during the approach to a stabilized liquid level.

8.2.2.1 The approximate position of the stabilized liquid level in the well or borehole is calculated using the following equation:

$$h_0 = \frac{y_1^2}{y_1 \; y_2}$$

where:

h_0 = distance the liquid level must change to reach the stabilized liquid level,

This document was prepared by Weston Solutions, Inc., expressly for U.S. EPA. It shall not be released or disclosed in whole or in part without the express, written permission of U.S. EPA.

y_1 = distance the liquid level changed during the time interval between the first two liquid-level readings, and

y_2 = distance the liquid level changed during the time interval between the second and the third liquid level readings.

8.2.2.2 Repeat the above process using successive sets of three measurements until the h_0 computed is consistent to the accuracy desired. Compute the stabilized liquid level in the well or borehole.

Note 10 - The time span required between readings for Procedures 1 and 2 depends on the permeability of the earth material. In material with comparatively high permeability (such as sand), a few minutes may be sufficient. In materials with comparatively low permeability (such as clay), many hours or days may be needed. The user is cautioned that in clayey soils the liquid in the borehole or well may never reach a stabilized liquid level equivalent to the level in the earth materials surrounding the borehole or well.

9.0 Report

9.1 For borehole or well liquid-level measurements, report, as a minimum, the following information:

9.1.1 Borehole or well identification.

9.1.2 Description of reference point.

9.1.3 Distance between reference point and top borehole or land surface.

9.1.4 Elevation of top of borehole or reference point (if the borehole or well liquid level is reported as an elevation).

9.1.5 Description of measuring device used, and graduation.

9.1.6 Procedure of measurement.

9.1.7 Date and time of reading.

9.1.8 Borehole or well liquid level.

9.1.9 Description of liquid in borehole or well.

9.1.10 State whether borehole is cased, uncased, or contains a monitoring (observation) well

This document was prepared by Weston Solutions, Inc., expressly for U.S. EPA. It shall not be released or disclosed in whole or in part without the express, written permission of U.S. EPA.

standpipe and give description of, and length below top of borehole of, casing or standpipe.

9.1.1.1 Drilled depth of borehole, if known.

9.2 For determination of stabilized liquid level, report:

9.2.1 All pertinent data and computations.

9.2.2 Procedure of determination.

9.2.3 The stabilized liquid level.

9.3 *Report Forms*—An example of a GEOLIS Location Identification form is shown in Fig. 1. An example of a GEOLIS Water Level form, for recording continuing measurements for a borehole or well, is shown in Fig. 2.

10.0 Precision and Bias

10.1 Borehole liquid levels shall be measured and recorded to the accuracy desired and consistent with the accuracy of the measuring device and procedures used. Procedure A multiple measurements by wetted tape should agree within 0.02 ft (6 mm). Procedure B multiple measurements by electrical tape should agree within 0.04 ft (12 mm). Procedure C multiple measurements by tape and sounding weight should agree within 0.04 ft (12 mm). Garber and Koopman (2) describe corrections that can be made for effects of thermal expansion of tapes or cables and of stretch due to the suspended weight of tape or cable and plumb weight when measuring liquid levels at depths greater than 500 ft (150 m).

11.0 References

(1) N*ational Handbook of Recommended Method for Water Data Acquisition---Chapter 2---Ground Water"* Office of Water Data Coordination, Washington, DC, 1980.

(2) Garber, M.S., and Koopman, F.C., "Methods of Measuring Water Levels in Deep Wells, *"U.S. Geologic Survey Techniques for Water Resources Investigations,* Book 8, Chapter A-1, 1968.

(3) Hvorslev, M. J., "Ground Water Observations," in *Subsurface Exploration and Sampling of Soils for Civil Engineering Purposes.* American Society Civil Engineers, New York, NY 1949.

(4) Zegarra, E.J., "Suggested Method for Measuring Water Level in Boreholes," *Special Procedures for Testing Soil and Rock for Engineering Purposes,* ASTM STP 479, ASTM, 1970.

(5) "Determination of Water Level in a Borehole," CSA Standard A 119.6 - 1971, Canadian Standards
Association, 1971.

The American Society for Testing and Materials takes no position respecting the validity of any patent rights asserted in connection with

This document was prepared by Weston Solutions, Inc., expressly for U.S. EPA. It shall not be released or disclosed in whole or in part without the express, written permission of U.S. EPA.

any item mentioned in this standard. Users of this standard are expressly advised that determination of the validity of any such patent rights, and the risk of infringement of such rights, are entirely their own responsibility.

This standard is subject to revision at any time by the responsible technical committee and must be reviewed every five years and if not revised, either reapproved or withdrawn. Your comments are invited either for revision of this standard or for additional standards and should be addressed to ASTM Headquarters. Your comments will receive careful consideration at a meeting of the responsible technical committee, which you may attend. If you feel that your comments have not received a fair hearing you should make your views known to the ASTM Committee on Standards, 1916 Race St., Philadelphia, PA 19103.

This document was prepared by Weston Solutions, Inc., expressly for U.S. EPA. It shall not be released or disclosed in whole or in part without the express, written permission of U.S. EPA.

SOP FOR AQUIFER SLUG TESTS

SOP FOR AQUIFER SLUG TESTS

1.0 PURPOSE

The procedure defines the methods for collecting data to calculate to calculate in situ hydraulic conductivity by the use of slug test methods.

2.0 DISCUSSION

Slug tests are used to estimate the hydraulic conductivity (K), the transimissivity (T), and the storage coefficient (s) of a water-bearing zone. These parameters (K, T, s) are used to determine the rates of groundwater flow and contaminant transport.

Three types of tests are commonly used to characterize aquifer properties:

- Laboratory Tests - Provide point estimates of the one-dimensional vertical hydraulic conductivity while ignoring all but small-scale heterogeneities.

- Slug Test - Provide in situ estimates of the two-dimensional horizontal hydraulic conductivity (and sometimes T and s) for a localized zone around a borehole.

- Pumping Test - Provide in situ estimates of three-dimensional flow parameters for a relatively large area around a pumping well (Knufs and Scheinfield, 1987).

Typically, all three types of tests will be used together to characterize a site. The usefulness of laboratory tests, however, is limited because: (1) they do not effectively test macro-scale hydrologic features, such as fractures, and (2) they can only test flow in one dimension (usually vertical flow) and are not useful for evaluating two-dimensional horizontal flow. The use of pumping tests is limited by the expense of the tests and the need to dispose of large volumes of contaminated groundwater.

Slug tests involve displacing a known volume of water in a well instantaneously and measuring changes in the water level over time as the water level in the well returns to equilibrium. Displacing the water in the well is accomplished by lowering or raising the slug. A slug is a solid cylinder (or hollow, weighted, and capped cylinder) of PVC (or Teflon or stainless steel) with an attachment point for a hauling line. Other variations of the test include the instantaneous addition or removal of a known volume of water to or from the well. Tests performed by lowering the slug into the well and raising the water level are called falling-head slug tests. Tests performed by raising the slug out of the well and lowering the water level are called rising-head slug tests. Data from both types of tests are comparable so long as the screened and filter pack section of the well is fully saturated

This document was prepared by Weston Solutions, Inc., expressly for U.S. EPA. It shall not be released or disclosed in whole or in part without the express, written permission of U.S. EPA.

(falling-head slug tests will produce erroneous results if the well screen or filter pack is partially saturated). Typically, falling-head tests and raising-head tests are conducted in pairs (when appropriate) as a quality control check to measure consistency of test results.

Slug tests have several advantages over other types of aquifer tests because they:

- Can evaluate the hydraulic conductivity of small portions of a water bearing zone to assess aquifer heterogeneity.
- Are technically simple to conduct in the field.
- Are relatively inexpensive to complete even in large numbers.
- Can be completed in a relatively short time.
- Pose fewer risks to the health and safety of field personnel.
- Pose little or no problems with the disposal of contaminated water.

Slug tests are not without disadvantages, however. Black and Kipp (1977) noted that "slug tests have long been disregarded both because aquifer characteristics derived from them were unreliable and because water-level measurement devices were largely incapable of reacting quickly enough." The widespread use of pressure transducers and electronic data collection devices has largely eliminated the second disadvantage. However, slug tests are still sometimes presumed to have a low reliability. This is a significant criticism because as Chu et al. (1987) noted, the accurate estimation of aquifer properties (i.e., K, T, s) is the most sensitive parameter in groundwater flow and contaminant transport modeling next to boundary conditions.

Slug test data are usually analyzed using the methods proposed by Hvorslev (1951), Cooper et al.(1967), and Bower and Rice (1976). Hvorslev's method can be applied to a variety of different well and aquifer geometries, but has been used most commonly for unconfined systems. Bower and Rice's method is also designed for unconfined systems and has been used more commonly than Hvorslev's method because it is somewhat easier to calculate. The CBP method is the most commonly used method for analyzing slug tests in confined aquifers. The CBP method is the only one of the four that uses type-curve matching instead of straight-line fitting to analyze the water level change data.

To date, most research on slug testing has focused either on developing methods (largely modifications of the aforementioned (four methods) for analyzing special test conditions (e.g., skin effects, oscillatory water level behavior), or conducting theoretical modeling studies of test sensitivity.

This document was prepared by Weston Solutions, Inc., expressly for U.S. EPA. It shall not be released or disclosed in whole or in part without the express, written permission of U.S. EPA.

Neuzil (1982), Bredehoeft and Papadopulos (1980), and Leap (1984) discussed pressurized slug tests for low permeability formations. Kipp (1985), Kabala et al. (1985), and Van Der Kamp (1976) discussed the analysis of oscillations in water levels as the levels begin to reach equilibrium. Widdowson (1990) described a method for conducting and analyzing slug tests in multilevel wells. Sageev (1986) presented type curves for the CBP method that can be used to account for wellbore storage and skin effects. Karasaki et al. (1988) presented type curves for various types of fractured rock geometries.

Bower (1989) described how several slug test "anomalies" can be analyzed more accurately by eliminating the effects of filter pack drainage. Olson and Daniel (1981) discussed factors that can influence test results. Pandit and Miner (1986) discussed methods to reduce uncertainty related to the estimation of initial excess head and to curve matching. McElwee et al. (1990) modeled the effects of partial penetration, anisotropy, boundaries, and well skin on slug test reliability. Ramey et al. (1975), Faust and Mercer (1984), and Moench and Hsieh (1985) discussed how a low-permeability skin around a well bore can lead to underestimates of an aquifer's K or T values by several orders of magnitude. Chapuis (1989) evaluated the sensitivity of various shape factors proposed for Hvorslev's method and found differences in predicted K values between 40 percent (for long screens) to 100 percent (for short screens). Chirlin (1989) compared results from both the Hvorslev and CBP methods and found them to be similar only within an order of magnitude. Barker and Black (1983) modeled slug tests in fractured rock and concluded that T could be overestimated by up to 300 percent.

3.0 PROCEDURES

3.1 Preparation

3.1.1 Office Preparation

It is required that key project members meet with the Project Manager to discuss contractual requirements for surface aquifer slug tests. At a minimum, this discussion needs to address the following items:

- The extent and methods of the slug tests to be performed. Review available background information (i.e., topographic maps, aquifer data, geologic survey maps, well records, other site reports, etc.). If appropriate, prepare a work plan.

- Prepare or request appropriate WESTON personnel to prepare a Health and Safety Plan. The plan must be approved and signed by the

This document was prepared by Weston Solutions, Inc., expressly for U.S. EPA. It shall not be released or disclosed in whole or in part without the express, written permission of U.S. EPA.

Corporate Health and Safety Officer or his/her designee prior to performance of field activities.

- Review associated operating practices (Section 3.1) for information on the performance of all relevant field activities that will be required to complete slug tests.

- Obtain appropriate permission for property access and off site testing.

- Determine necessary testing and monitoring equipment (as listed in Appendix A). Decontaminate or pre-clean equipment. If possible, inspect and test all equipment to determine the operating condition of equipment to be utilized prior to performance of field activities.

- Obtain the appropriate GEOLIS™ Forms and HARC Slug Test Information Sheet. The GEOLIS™ Forms will include the Location Identification Form and optional Notes and Sketch Forms. The HARC Sheets will include the Slug Test Information and the Transducer QA Sheets. See Attachment 2 for samples of GEOLIS™ Forms and HARC Slug Test Information Sheets.

- Obtain a logbook for documentation of equipment checks and all other miscellaneous activities not documented in GEOLIS™ Forms or the HARC Sheets.

- Contact delivery service to confirm ability to ship all equipment and samples to and from the site. Determine if shipping restrictions exist and confirm regulations and specifications.

- Prepare schedules and coordinate with staff, client, and regulatory agencies, if appropriate.

3.1.2 Field Preparation

- Confirm that all equipment has been decontaminated or pre-cleaned before testing.

- Conduct a site survey prior to site entry in accordance with the Health and Safety Plan.

- Locate the monitor wells to be tested and check for proper labeling and signs of vandalism.

This document was prepared by Weston Solutions, Inc., expressly for U.S. EPA. It shall not be released or disclosed in whole or in part without the express, written permission of U.S. EPA.

- Open the well lock and protective casing, remove the well cap and monitor the well head with an organic vapor detector (PID or FID) or as specified in the Site Health and Safety Plan. The resultant readings will determine the protective level required when working over the well head.

- Record in the logbook the appearance and physical condition of the monitor well, the depth to water, the stickup, and the depth of the well. Calculate the volume of standing water in the well.

- Calibrate the transducer.

3.2 Aquifer Slug Test Operation

3.2.1 General Information

The following are general procedures for performing slug tests. The procedures required for a particular slug test may vary slightly from those described, depending on site-specific conditions.

Take precautions to minimize the potential for cross-contamination between wells. Slugs and measuring devices that contact aquifer water must be properly decontaminated prior to initiating each test. If tests are performed on more than one monitor well, begin testing at the least contaminated well (usually the upgradient well(s)) and work downgradient in order of least to most contaminated wells thereafter.

Conduct the slug tests on undisturbed wells. If a test is conducted on a well that has recently been pumped for water-sampling purposes, the measured water level must be within 0.1 ft of the static water level before sampling or the slug test must not be conducted within 24 hours of sampling, whichever occurs first.

At least one week should elapse between the completion and development of a well and the performance of the aquifer slug test.

When the slug test is performed with an electronic data logger and pressure transducer, store all data internally on the logger. Download the data as soon as possible after the test to ensure that the data were collected properly. Maintain a hard copy printout of the data in the files as a back up in case of electronic data loss or failure.

This document was prepared by Weston Solutions, Inc., expressly for U.S. EPA. It shall not be released or disclosed in whole or in part without the express, written permission of U.S. EPA.

The time required for a slug test is a function of the volume of the slug, the hydraulic conductivity of the formation, and the type of well completion. The slug volume should be large enough that a sufficient number of water level measurements can be made before the water level returns to equilibrium conditions, yet not so large that water flow is impeded or a suction is caused on slug withdrawal. The length of the test may range from seconds to several hours, but is typically in the range of minutes.

Before beginning the slug test, enter the required information into the electronic data logger. The type of information may vary, depending on the model used. When using different models, consult the operator's manual for the proper data-entry sequence to be used.

3.2.2 Aquifer Slug Test Procedure

To complete a slug test in the field, the following steps will be performed:

- Determine if the screened section of the well and the filter pack are fully saturated. Note in the logbook or on the Slug Test Information Sheet if the screen or the filter pack is not saturated.

- Unpack the data logging equipment. Examine it for visible damage. Check the operation of the data logging equipment. Record the results of the equipment check in the logbook.

- Pad the edges of both the inner and outer well casings with several layers of duct tape to protect transducer cables from sharp edges.

- Connect the transducer to the data logger.

- Measure out a length of transducer cable sufficient to lower the transducer to a point approximately 10 feet below the water level measured in the well. The transducer should not be lowered to a depth greater than 1 foot above the measured bottom of the well to avoid being clogged with sediment.

- Securely tape the transducer cable with duct tape to the outside of the well's protective casing.

- Complete the Slug Test Information Form and enter the required information into the electronic data logger. The type of information

This document was prepared by Weston Solutions, Inc., expressly for U.S. EPA. It shall not be released or disclosed in whole or in part without the express, written permission of U.S. EPA.

required by the logger may vary depending on the model used. Consult the data logger manual for the proper data entry sequence to be used. Typically, the following items must be entered:

- Station ID or well numbers.
- Test and step numbers.
- Date and time.
- Scale factor and off set for each transducer.
- Sampling rate.
- Initial water level.

- Attach a disposable rope to a slug of known volume. Measure and mark a length of rope sufficient to lower the top of the slug below the initially measured depth to water. Mark a point on the rope corresponding to where the bottom of the slug will be suspended just above the initial (top of) water level. Tie an attachment loop in the end of the rope.

- Lower the slug into the well to the marked point where the bottom of the slug is suspended just above the initial water level.

- Begin taking data on the electronic logger and lower the slug quickly and smoothly to displace and raise the water level to conduct a falling-head slug test. It is important to remove or add the volumes as quickly and smoothly as possible because the accurate analysis depends on an instantaneous change in water volume in the well.

- Continue measuring and recording depth-time measurements until the water level returns to a minimum 90 percent of pretest equilibrium conditions, or if a sufficient number of water level measurements have been made to clearly show a trend on a plot of the data showing recovery versus the logarithm of time. Generally, ten to thirty minutes is adequate.

- Reset the data logger data collection schedule and quickly and smoothly remove the slug from the water until it is at a point where the slug bottom is just above the initially measured water level (i.e., lower marked point on the rope) to conduct a rising-head slug test. Secure the rope to the outer casing and repeat the preceding step.

- Stop the data logger operation and remove all equipment from the well. Relock the well.

This document was prepared by Weston Solutions, Inc., expressly for U.S. EPA. It shall not be released or disclosed in whole or in part without the express, written permission of U.S. EPA.

- Connect a field printer to the data logger and generate a hard copy of the results of the slug test just conducted (if possible). Download data from the slug test onto a floppy disk if a portable computer is available at the well site. If no computer is available at the well site, download the data at the earliest opportunity, but before the capacity of the logger is exceeded.

- Review the recorded data (if possible) to determine whether additional testing is required. If adequate information has been recorded, remove the transducer and slug from the well.

- Decontaminate the slug, the transducer cable, and any other equipment used in the well for the test. Do not reuse rope between wells.

3.3 Post Operation

3.3.1 Field

- Ensure that all equipment is accounted for, decontaminated, and ready for shipment.

- Make sure all slug test well locations are properly identified and readily visible.

3.3.2 Office

- Deliver the original GEOLIS$_{TM}$ forms, HARC Slug Test Information Sheet and field notebook to the Project Manager (or his designee). The original field documents should be copied and filed.

- Follow the QA/QC regimen established for the data. This should include documentation of all corrections or changes to the field forms, GDMS output files, reports or graphics whenever they are made. Field personnel should review these changes for accuracy at appropriate times during the QA/QC process.

- Inventory equipment and supplies. Return equipment to the equipment manager and report incidents of malfunction or damage. If necessary, have the data logger or pressure transducers sent to the factory for re-calibration.

This document was prepared by Weston Solutions, Inc., expressly for U.S. EPA. It shall not be released or disclosed in whole or in part without the express, written permission of U.S. EPA.

- Analyze the slug test data using appropriate software packages or graphical solution methods. If the well screen was not fully saturated, do not analyze the falling-head test.

4.0 DOCUMENTATION

4.1 Logbook

Record pertinent information into the field logbook. Provide a complete description of the slug test procedure, including any variation of this procedure. The Field Team Leader will review the completed field logbook entries for correctness and completeness.

4.2 GEOLIS™

Appropriate GEOLIS™ Forms will need to be completed as specified in Section 3.2 of this document. Detailed procedures for completing GEOLIS™ forms can be found in the GEOLIS™ Logging Reference Manual. Be sure to use the most current version of this manual as it is periodically updated as the GEOLIS™ system is expanded and improved. The manual includes reference materials (i.e., tables, charts, diagrams, figures) pertinent to evaluation and definition of the various fields present on the forms as well as examples of completed forms.

4.3 HARC

Appropriate HARC Sheets will need to be completed as specified in Section 3.2 of this document. All data will be entered in the HARC data archive program, and the resulting archive data files will be saved on floppy disk and delivered to the project manager. Detailed procedures for completing HARC Sheets and using the program can be found in the HARC Manual. Be sure to use the most current version of this manual.

4.4 Aquifer Testing Design and Quality Assurance

- Aquifer testing situations vary widely, therefore, no universal procedure can be recommended. However, a work plan should be implemented before any aquifer testing operation is attempted. Any of the aquifer testing methods described here should allow for representative aquifer characterization if the test is performed properly and the test is appropriate for the aquifer tested.

- A stringent quality assurance project plan should be outlined before any aquifer testing. This should include, but not be limited to, determination of

This document was prepared by Weston Solutions, Inc., expressly for U.S. EPA. It shall not be released or disclosed in whole or in part without the express, written permission of U.S. EPA.

the type of test employed, implementation of manual water level measurements to calibrate electronic data loggers, and proper field documentation of field procedures.

5.0 INTERPRETATION

If there are questions regarding the interpretations or the applicability of items in this operating practice, the Project Manager should be consulted. In the absence of the Project Manager, contact your Technical Group Leader.

6.0 REFERENCES

Barker, J.A. and J.H. Black. 1983. "Slug Tests in Fissured Aquifers." WRR, vol. 19, no. 6, p. 1558-1564

Black, J.H. and K.L. Kipp, Jr. 1977. "The Significance and Prediction of Observation Well Response Delay in Semiconfined Aquifer-Test Analysis." Ground Water, vol. 15, no. 6,p. 446-451.

Bower, H. 1989. "The Bower and Rice Slug Test - An Update." Ground Water, vol. 27, no. 3, p. 304-309.

Bower, H. 1978. "Groundwater Hydrology." New Your: McGraw-Hill Book Company.

Bower, H. and R.C. Rice. 1980. "A Slug Test for Determining the Hydraulic Properties of Tight Formations." WRR, vol 16, no. 1, p. 233-238.

Bower, H. and R.C. Rice, 1976. "A Slug Test for Determining Hydraulic Conductivity of Unconfined Aquifers with Completely or Partially Penetrating Wells." WRR, vol. 12, no. 3, p. 423-428.

Bredehoeft, J.F. and I.S. Papadopulos. 1980. "A Method for Determining the Hydraulic Properties of Tight Formations." WRR, vol. 16, no. 1, no. 1, p 233-238

Chapuis, R.P. 1989. Shape Factors for Permeability Tests in Boreholes and Piezometers." Ground Water, vol. 27, no. 5, p. 647-654.

Chirlin, G. R. 1989. "A critique of the Hvorslev Method for Slug Test Analysis: The Fully Penetrating Well." GWMR, vol. 9, no. 2, p.130-138.

This document was prepared by Weston Solutions, Inc., expressly for U.S. EPA. It shall not be released or disclosed in whole or in part without the express, written permission of U.S. EPA.

Chu, W., Strecker, E.W., and D.P. Lettenmaier. 1987. "An Evaluation of Data Requirements for Groundwater Contaminant Transport Modeling." WRR, vol. 23, no. 3, p. 408-424.

Cooper, Jr., H.H., J.D. Bredehoeft, and S.S. Papadopulos. 1967. "Response of a Finite-Diameter Well to an Instantaneous Charge of Water." WRR, vol. 13, no. 1, p. 263-269.

DOI. N.d. "Ground Water Manual." U.S. Department of the Interior publication. Washington, D.C.: U.S. Government Printing Office.

Earlougher, R.C. 1977. Advances in Well Test Analyzis. Houston, Texas: Society of Petroleum Engineers of AIME.

Faust, C.R. and J.W. Mercer. 1984. "Evaluation of Slug Tests in Wells Containing a Finite Thickness Skin." WRR, vol. 20, no. 4, p. 504-506.

Ferris, J.G. and D.B. Knowles. 1954. "The Slug Test for Estimating Transmissivity." U.S. Geological Survey Groundwater Note 26.

Hoeksema, R.J. and P.K. Kitanidis. 1985. "Analysis of the Spatial Structure of Properties of Selected Aquifers." WRR, vol. 21, no. 4, p. 563-572.

Hvorslev, M.J. 1951. "Time Lag and Soil Permeability in Ground-Water Observations." 50. U.S. Army Corps of engineers, Bulletin No. 36. Washington, D.C.

Kabala, Z.J., Pinder, G.F., and P.C.D. Milly. 1985. "Analysis of Well-Aquifer Response to a Slug Test." WRR, Vol. 21, no. 9, p. 1433-1436.

Karasaki, K., Long, J.C.S., and P.A. Witherspoon. 1988. "Analytical Models of Slug Tests." WRR, vol. 24, no. 1, p. 115-126.

Kemblowski, M.W. and C.L. Klein. 1988. "An Automated Numerical Evaluation of Slug Test Data." Ground Water, vol. 26, no. 4, p.435-438.

Kipp, K.L. 1985. "type Curve Analysis of Inertial Effects in the Response of a Well to a Slug Test." WRR, vol. 21, no. 9, p. 1397-1408.

Kufs, C. and R. Scheinfeld. 1987. "Ground Water Monitoring System Design" in Ground Water Monitoring Seminar Series - Technical Papers, CERI - 87-7, U.S. EPA Center for Environmental Research Information.

This document was prepared by Weston Solutions, Inc., expressly for U.S. EPA. It shall not be released or disclosed in whole or in part without the express, written permission of U.S. EPA.

Leap, D.I. 1984. "A Simple Pneumatic Device and technique for Performing Rising Water Level Slug Test." GWMR, vol. 4, no. 4, p. 141-146.

Lohman, S.W. 1972. "Ground-Water Hydraulics." 70. U.S. Geological Survey Paper 708. Washington, D.C.: U.S. Government Printing Office.

McElwee, C.D., Butler, J.J., Liu, W., and G.C.Bohling. 1980. "Effects of Partial Penetration, Anistropy, Boundaries, and Well Skin on Slug Test." (Abstract). EOS, vol. 71, no. 17, p. 505.

Moench, A.F. and P.A. Hsieh. 1985. Comment on "Evaluation of Slug Tests in Wells Containing a Finite-Thickness Skin" by C.R. Faust and J.W. Mercer. WRR, vol. 21, no. 9 p. 1459-1461.

Marschall, P. and B. Barczewski. 1989. The Analysis of Slug tests in the Frequency Domain." Wrr, vol. 25, no. 11, p. 2388-2396.

National Water Well Association. 1989. Design and Analysis of Aquifer Tests. Short course material.

Neuman, S.P. 1972. "Theory of Flow in Unconfined Aquifers Considering Delayed Response of the Water Table." WRR, vol. 8, no. 4, p. 1031.

Neuzil, C.E. 1982. "On Conducting the Modified "Slug Test in Tight Formations." WRR, vol. 18, no.2, p. 439-441.

Olson, R.E. and D.E. Daniel. 1981. "Measurement of the Hydraulic Conductivity of Fine-Grained Soils." P. 18-64 in Permeability and Groundwater Contaminant Transport. T.F. Zimmie and C.O. Riggs (eds.) American Society for Testing and Materials.

Pandit, N.S. and R.F. Miner, 1986. "Interpretation of Slug Test Data." Ground Water vol. 24, no. 6, p. 743-749.

Papadopulos, S.S., J.D. bredehoeft, and H.H. Cooper, Jr. 1973. "On the Analysis of Slug Test Data." WRR, vol. 9, no.4, p. 1087-1089.

Patterson, R.J. and J.F. Devlin. 1985. "An Improved Method for Slug Tests in Small-Diameter Piezometers." Ground Water, vol. 23, no. 6, p. 804-805.

Ramey, H.J., Agarwal, R.G., and I. Martin. 1975. "Analysis of "Slug Test" or DST Flow Period Data." J. Can. Pet. Technol., vol. 14, no. 1, p. 37-47.

This document was prepared by Weston Solutions, Inc., expressly for U.S. EPA. It shall not be released or disclosed in whole or in part without the express, written permission of U.S. EPA.

Sageev, A. 1986. "Slug Test Analysis." WRR, vol. 22, no. 8, p. 1323-1333.

Walton, William C. 1970. Groundwater Resource Evaluation, New York: McGraw-Hill Book Company.

Van Der Kamp, G. 1976. "Determining Aquifer Transmissivity by Means of Well Response Tests: the Underdamped Case." WRR, vol. 12, no. 1, p. 71-77.

Wang, C. and R.E. Williams. 1984. "Aquifer Testing, Mathematical Modeling, and regulatory Risk. " Ground Water, vol. 22, no. 3, p. 285-296.

Widdowson, M.A. 1990. "An Analysis Technique for Multi-Level and Partially Penetrating Slug Test Data (Abstract)." EOS, vol. 71, no. 17, p 505.

Attachments: 3

This document was prepared by Weston Solutions, Inc., expressly for U.S. EPA. It shall not be released or disclosed in whole or in part without the express, written permission of U.S. EPA.

ATTACHMENT 1

EQUIPMENT AND SUPPLIES CHECKLIST FOR CONDUCTING SLUG TESTS

EQUIPMENT AND SUPPLIES CHECKLIST

FOR CONDUCTING SLUG TESTS

____ Water pressure transducers

____ Electronic data logger

____ Electric water level indicator (optional)

____ Weighted steel tapes (with divisions to one-hundredth of a foot) with popper (optional)

____ Steel tape (subdivided into tenths of feet) and blue surveyor's chalk (optional)

____ Stainless steel, Teflon, or PVC slug of a known volume

____ Watch or stopwatch with second hand

____ Duct tape

____ Semi-log graph paper (if required) and straight edge

____ Appropriate references and calculator

____ Slug Test Information Forms

____ Non water-soluble black ink marking pens

____ Rope (1/8 to 3/16 inch in diameter)

____ Portable personal computer (optional)

____ Portable field printer and accessories (optional)

____ Field notebook

____ Clean cloth and plastic sheeting

Note: 1 Refer to Health and Safety Plan for Protective and air monitoring equipment.

ATTACHMENT 2

GEOLIS™ FORMS AND SLUG TEST INFORMATION SHEET

GEOLIS Location Identification Form

GEOLIS Location Identification Form

CLIENT: _____
PROJECT NAME / No.: _____
PROJECT LOCATION: _____
SITE NAME / No. : _____
BOREHOLE / WELL ID: _____
BEGIN DATE: _____
END DATE: _____
LOGGER: _____

QUALITY LEVEL: 1 - 2 - 3
UNIT SYSTEM: ENGLISH - METRIC

LOCATION TYPE: BOR - PIZ - WEL - PIT - _____

TEST PIT: LENGTH: _____ FT/M WIDTH: _____ FT/M

BEDROCK CONFIRMED: NOT - SUS - SPS - AUG - COR - CUT

TOTAL DEPTH: _____ FT/M BGS

DEPTH TO BEDROCK: _____ FT/M BGS

SITE SKETCH

BOREHOLE DIAMETER No.1: _____ IN/CM

INTERVAL: _____ TO _____ FT/M BGS

METHOD: HSA SSA BKA JET
DRT RRT COR DAW
CBT DCD DHH
OTHER : _____

FLUID: AIR - WATER - MUD - FOAM - NONE

BOREHOLE DIAMETER No.2: _____ IN/CM

INTERVAL: _____ TO _____ FT/M BGS

METHOD: HSA SSA BKA JET
DRT RRT COR DAW
CBT DCD DHH
OTHER : _____

FLUID: AIR - WATER - MUD - FOAM - NONE

BOREHOLE DIAMETER No.3: _____ IN/CM

INTERVAL: _____ TO _____ FT/M BGS

METHOD: HSA SSA BKA JET
DRT RRT COR DAW
CBT DCD DHH
OTHER : _____

FLUID: AIR - WATER - MUD - FOAM - NONE

DRILLING COMPANY: _____
DRILLER: _____
DRILL RIG TYPE: _____

	ESTIMATED	SURVEYED
SURFACE ELEVATION:	_____	_____
N. COORDINATE:	_____	_____
E. COORDINATE.	_____	_____

WELL PERMIT No.: _____

HOLE ABANDONED ? YES - NO (IF YES DESCRIBE IN COMMENTS)
WELL INSTALLED ? YES - NO
WELL CLUSTER ? YES - NO No. OF WELLS: _____
WELL NEST ? YES - NO No. OF WELLS: _____

PUMPS INSTALLED ? YES - NO

	TYPE	DEPTH
PURGE:	_____	_____
SAMPLE:	_____	_____

BOREHOLE TESTING

BOREHOLE GEOPHYSICS ? YES - NO
SLUG TESTS ? YES - NO
PACKER TESTS ? YES - NO
PUMPING TESTS ? YES - NO

COMMENTS: _____

DATA ENTRY BY:	QC REVIEW BY:	QA REVIEW BY:
DATE ENTERED:	REVIEW DATE:	REVIEW DATE:
QC REPORTS PRINTED ? YES - NO	APPROVED WITH - WITHOUT REVISIONS	APPROVED WITH - WITHOUT REVISIONS

COPYRIGHT © 1991 by Roy F. Weston, Inc.

G021291T

GEOLIS Notes and Sketches Form

GEOLIS Notes and Sketches Form

COMPANY: _____ LOCATION NO.: _____

CLIENT: _____ DATE: _____

PROJECT: _____ LOGGER: _____

SITE: _____ SIGNATURE: _____

COPYRIGHT © 1991 by Roy F. Weston, Inc. G121291T

Slug Test Information Sheet

SLUG TEST INFORMATION SHEET

Client/Site: _____ Date: _____

Name: _____

Data logger used: SE2000 SE1000 Other: _____ Signature: _____

Datalogger Serial #: _____

DATALOGGER INPUT #	WELL #	DEPTH TO WATER/TIME	TRANSDUCER INFORMATION					SLUG LENGTH	SLUG DIAMETER
			SERIAL #	PSI	SCALE FACTOR	OFFSET	LINEARITY		

TEST #/ STEP #	COMPUTER FILE I.D.	TEST TYPE (fh,rh)	DATE / TIME		COMMENTS
			START	END	

DATALOGGER INPUT #	WELL #	DEPTH TO WATER/TIME	TRANSDUCER INFORMATION					SLUG LENGTH	SLUG DIAMETER
			SERIAL #	PSI	SCALE FACTOR	OFFSET	LINEARITY		

TEST #/ STEP #	COMPUTER FILE I.D.	TEST TYPE (fh,rh)	DATE / TIME		COMMENTS
			START	END	

DATALOGGER INPUT #	WELL #	DEPTH TO WATER/TIME	TRANSDUCER INFORMATION					SLUG LENGTH	SLUG DIAMETER
			SERIAL #	PSI	SCALE FACTOR	OFFSET	LINEARITY		

TEST #/ STEP #	COMPUTER FILE I.D.	TEST TYPE (fh,rh)	DATE / TIME		COMMENTS
			START	END	

DATALOGGER INPUT #	WELL #	DEPTH TO WATER/TIME	TRANSDUCER INFORMATION					SLUG LENGTH	SLUG DIAMETER
			SERIAL #	PSI	SCALE FACTOR	OFFSET	LINEARITY		

TEST #/ STEP #	COMPUTER FILE I.D.	TEST TYPE (fh,rh)	DATE / TIME		COMMENTS
			START	END	

ATTACHMENT 3

FIELD LOGBOOK REQUIREMENTS

FIELD LOGBOOK REQUIREMENTS

Field logbooks will contain the following:

- Name and location of site and work order number
- Weather information, especially occurrence of precipitation
- Date(s) and times of slug test events
- Name and affiliation of Field Team Leader
- Names and affiliations of aquifer evaluators
- Field observations
- Field screening readings, if measured
- Summary of equipment preparation and operation procedures

SOP FOR LOW-FLOW GROUNDWATER SAMPLING

SOP FOR LOW-FLOW GROUNDWATER SAMPLING

1. Background

This SOP describes the materials and procedures for sampling of groundwater in wells using low-flow methodology. This methodology is typically used for two reasons:

- to preserve volatile organic compounds (VOCs) in the sample; and
- to reduce the content of non-mobile, non-colloidal suspended solids in the sample, thereby eliminating the need for sample filtration.

2. Materials

The following materials, as required, will be made available during low-flow groundwater sampling activities:1

- Personal protective equipment and other health and safety-related equipment, as required by the Health & Safety Plan;
- Cleaning equipment (as required in the Standard Operating Procedure for Equipment Cleaning);
- Photoionization detector (PID) to measure headspace vapors (optional);
- Appropriate forms and field note sheets;
- Keys for wells;
- Electronic water level probe;
- Watch (to record time of day);
- Low-flow bladder or other submersible pump;
- Flow-through cell for use with field water quality meters;
- Sample containers; and
- Meters for field water quality parameters (pH, conductivity, temperature, and turbidity).

3. Well Purging and Field Parameter Monitoring Procedures

a. Don personal protective equipment (as required by Health & Safety Plan).

b. Thoroughly decontaminate submersible pump if a non-dedicated submersible pump is used. If a dedicated submersible pump is used, skip this step.

c. To reduce the potential for cross-contamination, wells should be sampled from cleanest to most impacted based on the previous sampling results.

d. The pump or tubing will be lowered carefully into the well to minimize mixing of stagnant water in the casing above the screen and to minimize the re-suspension of

This document was prepared by Weston Solutions, Inc., expressly for U.S. EPA. It shall not be released or disclosed in whole or in part without the express, written permission of U.S. EPA.

solids which may have collected at the bottom of the well. The pump should not be allowed to touch the bottom of the well. Any solid that are re-suspended during pump/tubing installation will be allowed to resettle for five minutes before beginning purging and sampling.

e. Consistent with low-flow (micropurge) protocols, the wells should be purged and sampled at rates which do not lower the water surface in the well (as measured with an electric probe during purging). Purge rates between 150 and 500 milliliters per minute (mL/min) or 0.15 and 0.5 L/min are desirable.

   If the soil surrounding the well has a low hydraulic conductivity, it may be impractical to completely avoid lowering of the water surface in the well. If this is the case, the lowering of the water table should be kept to less than a few inches at most. It may be necessary to turn off the pump and allow some recharge to occur before proceeding. In addition, any water level drawdown should be noted in the field notes. Water level measurement (depth to water) should be taken regularly at intervals from 30 seconds to five minutes (depending on flow rate, more frequently for higher flow rates) to confirm that the water level is not being lowered.

f. Flow rates should be regulated and can be calibrated by using a stopwatch and measuring the time needed to fill a container of known volume. Purge rates should be recorded at regular intervals in the field notes.

g. A flow-through cell should be used for monitoring field parameters (conductivity, pH, temperature, and turbidity). The specific equipment and methodology used to monitor field parameters during purging should be described in the field notes. Manufacturer's calibration procedures should be followed for the specific instrument(s) used to monitor field parameters.

h. Field parameters, purge rates, and depth to water measurements should be recorded at regular intervals during well purging. Five to fifteen minute intervals or after every well volume extracted are recommended.

i. Pump discharge tubing should be placed at or near the bottom of the flow-through cell.

j. A record of purging and groundwater sampling should be kept for each well. At a minimum, the log should include the following information: well number, data and time of purge, purging method and rate, volume of water evacuated from the well, description of the water produced, post-purge water level, the total time required for purging and records of field analytical measurements.

This document was prepared by Weston Solutions, Inc., expressly for U.S. EPA. It shall not be released or disclosed in whole or in part without the express, written permission of U.S. EPA.

k. Purging should be conducted at each well until the field parameters stabilize. Three successive readings shall be within ±0.1 pH unit, ±3% for conductivity, ± 1°C for temperature, and ±10 percent for turbidity.

l. Purged groundwater should be containerized for future handling in accordance with the field sampling plan.

4. Low-Flow Groundwater Sampling Procedures

a. Groundwater samples should be collected directly from the pump discharge tubing directly into laboratory supplied, pre-preserved glass or plastic bottleware. Water should be directed against the inner wall of the bottle to minimize aeration of the sample.

b. All bottles should be filled completely, leaving no headspace in the bottle.

c. Trip blanks, field blanks, and duplicate samples were collected at a frequency prescribed in the site Quality Assurance Project Plan (QAPP).

d. Chain-of-custody documentation should be prepared at the end of each sampling event and included in the packaged samples. Sample delivery to the laboratory should be expedited, thereby avoiding violation of sampling holding times.

5. Disposal Methods

Personal protective equipment (e.g., gloves, disposable clothing) and other disposable equipment resulting from cleaning and sampling procedures will be placed in plastic bags and appropriately contained for proper disposal.

6. Quality Assurance/Quality Control

Quality Assurance/Quality Control (QA/QC) protocols, as described in the site QAPP, should be followed during all sampling events.

This document was prepared by Weston Solutions, Inc., expressly for U.S. EPA. It shall not be released or disclosed in whole or in part without the express, written permission of U.S. EPA.

GROUNDWATER SAMPLING LOG

Project Code: **Task:** **Well I.D.**
Date: **Sampled by:**
Sampling Time: **Recorded by:**
Weather: **Replicate No.**

Instrument Identification

	PID	Water-Level Meter	Water Quality Meter(s)
Serial #			

Purging Information

Casing Material: **Purge Method (circle one)** submersible centrifugal bailer
Casing Diameter: **Screen Interval:** **From:** **To:**
Total Depth: **Pump Intake Setting:**
Depth to Water: **Volumes to be Purged:**
Water Column **Total Volume Purged:**
Gallons/Foot: **Pump On:** **Off:**

Field Parameter Measurements

Time	Minutes Elapsed	Rate ml/min	Water Purged	Depth to Water	REDOX (mV)	pH (SI units)	Conductivty (µmhos/cm)	Temp (°C)	Dissolved Oxygen	Comments

Observations During Sampling

Well Condition: **Purge Water Disposal:**
Color: **Turbidity (qualitative):**
Odor: **Other (OVA, HNU, etc.):**

This document was prepared by Weston Solutions, Inc., expressly for U.S. EPA. It shall not be released or disclosed in whole or in part without the express, written permission of U.S. EPA.

SOP FOR OPERATION AND MAINTENANCE OF HNU PHOTOIONIZATION DETECTOR

SOP FOR OPERATION AND MAINTENANCE OF HNU PHOTOIONIZATION DETECTOR

1.0 INTRODUCTION

The purpose of this Standard Operating Procedure (SOP) is to provide Weston Solutions, Inc. (WESTON®), personnel with a general step-by-step guide to familiarize the reader with the field calibration and use of the HNU. For maintenance and additional calibration information, refer to the instrument manual.

2.0 DESCRIPTION

The HNU portable photoionizer detects the concentration of organic gases as well as a few inorganic gases. The basis for detection is the ionization of gaseous species. Ambient air is drawn into the probe by a small fan. The incoming gas molecules are subjected to ultraviolet (UV) radiation, which is energetic enough to ionize many gaseous compounds. Each molecule is transformed by the UV light into charged ion pairs, creating a current between two electrodes. Every molecule has an ionization potential (IP), which is the energy required to remove an electron from the molecule, leaving a positively charged ion and a free electron. The ionization potential of a given molecule is measured in electron volts (eV).

Three probes are available for use with the HNU. Each probe possesses a lamp capable of producing UV light of a certain electron voltage; the energies available in the probes are 9.5 eV, 10.2 eV and 11.7 eV. All three detect many aromatic and large molecule hydrocarbons. The 10.2 eV and 11.7 eV probes will also detect some smaller organic molecules and some halogenated hydrocarbons. The 10.2 eV probe is most often used in environmental response work, because it is far more durable than the 11.7 eV probe, and detects a wider range of compounds than the 9.5 eV probe.

The primary HNU calibration gas is isobutylene. Benzene was originally used, however its carcinogenic potential has required the change to isobutylene, which is safer and produces a very similar response curve. A span potentiometer located on the face of the instrument can be adjusted to allow the HNU to provide increased response for a given probe during calibration (thus enhancing accuracy). The span setting for calibration with the 10.2 eV probe is 9.8, for the 11.7 eV probe it is 5.0, and for the 9.5 eV probe it is 1.0. If the instrument does not read at or very near the value of the standard gas at the above span settings, some routine maintenance or cleaning may be necessary (Section 4). While the primary use of the HNU is that of a screening tool that displays the (relative) concentration of all organic compounds (in combination) in air, some qualification of the contaminants can be made by

This document was prepared by Weston Solutions, Inc., expressly for U.S. EPA. It shall not be released or disclosed in whole or in part without the express, written permission of U.S. EPA.

noting the instrument response while using the different probes. For example, the HNU may show no response with the 9.5 eV probe, but a notable deflection while using the 10.2 eV probe (thus "limiting" the possibility of contaminants to those having an IP above 9.5 eV). NOTE: The HNU will not detect methane.

The HNU is simple to operate, relatively durable and has good sensitivity to a variety of compounds. It has a lower detection limit in the low-parts-per-million range. The response time is rapid, reaching 90% of the indicated concentration within three seconds.

When transporting the HNU to the field, it must be remembered that the calibration gas is a compressed gas, and shipment must be in compliance with 49 CFR Parts 100-177. Isobutylene is classified as a non-flammable gas, UN #1556, and the proper shipping name is COMPRESSED GAS. It must be placed in a properly labeled container, and shipped by cargo aircraft only.

The HNU is certified by Factory Mutual for use in Class I, Division 2, Groups A, B, C and D. It is not intrinsically safe, however, and should always be used in conjunction with a combustible gas indicator/0_2 meter (MSA 260 or Gastech Gastechtor, for example).

- Features:

  * PID detector
  * Detector option 9.5 eV, 10.2 eV or 11.7 eV
  * Gas sampling rate: 500 L/min
  * Field calibration capabilities
  * Powered by internal (rechargeable) battery or 120v AC

- Control Topography

  Function Switch

  * Off: instrument power
  * Batt: status of the battery charge
  * Standby: power saver, used for "0" adjustment
  * Range: 0-20, 0-200 and 0-2000

  Zero Adjustment: use with the Standby function to electronically zero the instrument
  Span Control

  * Set at 1.00 for 9.5 eV probe
  * Set at 9.80 for 10.2 eV probe

This document was prepared by Weston Solutions, Inc., expressly for U.S. EPA. It shall not be released or disclosed in whole or in part without the express, written permission of U.S. EPA.

* Set at 5.00 for 11.7 eV probe

Meter reading should match the calibration gas standard at the above settings (printed on the cal-gas bottle); minor span adjustments may be made in the field. An instrument requiring repeated or major span adjustments may require cleaning or internal calibration, and should not be used.

- Field Limitations:

The instrument should not be used in areas of extreme humidity, in rain-threatening conditions, or in areas of possible contamination. Wrap the body of the probe (leaving the intake and exhaust parts open) and the instrument itself in plastic.

Do not use this instrument for headspace analysis where the possibility of drawing liquid into the probe exists.

Do not attempt to calibrate the instrument if it is cold, and the environment is warm and/or humid. Moisture condensing within the probe will produce erroneous readings.

In an unknown situation, always use the HNU in conjunction with a CGI/0_2 meter.

The instrument's response to various compounds is based upon its sensitivity to them; therefore, readings on the instrument are not reported in parts per million but relative deflection (i.e., 72 units vs 72 ppm).

The HNU will not respond to methane, nor will it respond to compounds having a higher IP than the probe's rating. Ionization potentials for various compounds can be found in several publications, including the NIOSH Pocket Guide to Chemical Hazards.

The instrument readings may be affected by overhead power lines and/or nearby radio transmissions.

3.0 OPERATION

Start-up:

- Allow the instrument to equilibrate to the ambient temperature.
- Attach the probe of choice to the instrument by aligning the "tooth" in the probe-plug with the notch in the instrument receptacle, pressing the plug onto

This document was prepared by Weston Solutions, Inc., expressly for U.S. EPA. It shall not be released or disclosed in whole or in part without the express, written permission of U.S. EPA.

the receptacle and turning the outer ring on the plug clockwise until a click is felt or heard. This will signify the probe is properly locked in place. The act of plugging in the probe will simultaneously depress the high-voltage interlock (small red button), which is located adjacent to the receptacle. This button must be depressed in order for the instrument to operate or charge (some HNU models may not require the high-voltage interlock to be depressed for charging, but some do; to assure charging, always plug in a probe).

- Set the FUNCTION switch to the BATTERY CHECK position. The needle should move into the area of the green arc, or beyond. If the needle will not move all the way to the green arc, or the red LED comes on, recharge the battery. The charger plugs into a small receptacle at the top of the instrument.

- Zero the instrument by turning the FUNCTION switch to STANDBY and adjusting the ZERO potentiometer to a setting that aligns the needle with "0" on the dial. Wait a few minutes to see if the needle drifts; if it does, readjust accordingly.

- Check to see that the SPAN potentiometer is set to the appropriate setting for the probe of choice.

- Set the FUNCTION switch to the range appropriate to the concentration of the calibration gas (see cal-gas label for concentration and span setting).

- Briefly look down the end of the probe to ensure the UV lamp is lit; a purple glow should be seen. Listen to ensure the fan within the probe is operating. If either the fan or lamp do not operate, or operate erratically, do not use the instrument (see Section 4).

Calibration:

- Screw-on the HNU regulator to the cal-gas bottle. Check the gauge to assure the bottle contains at least 100 pounds of pressure; if not, get a new bottle. The regulator should step-down the flow from the bottle so that it may be directly attached to the probe via Tygon tubing and not affect the normal flow rate of the probe fan during calibration (a change in flow rate will alter the sound that the fan makes). If it does not step-down sufficiently, or if the user so chooses for other reasons, cal-gas may be fed into a Tedlar bag, and the bag's contents used for calibration.

- Attach the probe end to the cal-gas bottle, or Tedlar bag and open the valve. Allow the instrument to stabilize for 15-30 seconds and note the reading.

This document was prepared by Weston Solutions, Inc., expressly for U.S. EPA. It shall not be released or disclosed in whole or in part without the express, written permission of U.S. EPA.

If the reading is not exact, but is within 5-10% of the standard and the operator is bench-calibrating the instruments, the bulb and ionization chamber should be cleaned (Section 4). If the reading remains in error after cleaning, minor internal adjustment may be necessary.

If the reading is within 5-10% of the standard and the operator is in the field, minor adjustment of the SPAN potentiometer is allowable. The instrument should not be dismantled for cleaning or adjustment in the field. All variation in instrument reading and span adjustment should be noted in the instrument log.

If the instrument is reading erratically, or cannot be adjusted to read within the allowable range of error, it should be red-tagged and repaired. Do not use the instrument until it is working properly.

After the HNU is calibrated, it should be turned to STANDBY until used, this will prolong battery-life while retaining the calibration and zero settings. If the instrument is turned off it must be recalibrated prior to use.

Log all calibrated data, date, time, weather and operator in the instrument logbook.

Field Survey Use:

- Position the command post/operations center well outside the area of suspected contamination.

- Assure the instrument is calibrated according to the above directions, and is in good working order.

- Set the FUNCTION switch to 0-20 range and note the background reading in the logbook. Nearby vehicles or operating machinery may affect the background levels (if unusual background readings are noted, check to be sure the area is clean and upwind of the area of suspected contamination).

- Proceed slowly toward the area of suspected contamination, sweeping the probe slowly back and forth. Keep both an eye on the HNU and on the terrain, physical hazards are as dangerous as chemical hazards. If flammable materials are suspected, this survey should be in conjunction with a CGI/0_2 meter.

- If any sustained readings above background are detected, the operator should be in Level C PPE. If sustained readings of 5 units above background are

This document was prepared by Weston Solutions, Inc., expressly for U.S. EPA. It shall not be released or disclosed in whole or in part without the express, written permission of U.S. EPA.

encountered, the operator should be in Level B PPE. Readings of 500 units or more above background require Level A PPE. All readings should be noted in the air monitoring log (include the probe ID number, location, calibration data, weather conditions, date, time and operator's name).

- If the instrument is used for extended periods, the calibration should be rechecked along with the battery condition every few hours. The HNU should operate for at least 8-10 hours on a full charge.

- When field work is complete, set the FUNCTION switch to OFF and disconnect the probe. Wipe any visible dirt from the instrument with a damp paper towel. Replace the HNU in its travel case.

4.0 MAINTENANCE AND TROUBLESHOOTING

Cleaning:

- The outside of the instrument and probes should be wiped off with a damp, soft towel.

- The 10.2 eV probe lamp is accessible by unscrewing the two screws at the forward end of the probe and carefully lifting off the black cap. The lamp face should be gently wiped with a Kimwipe (or equivalent) moistened with water.

  The 11.7 eV lamp is accessed in the same fashion, but is only to be cleaned with freon or a chlorinated organic solvent do not use water or water miscible cleaners (acetone, methanol) on the 11.7 eV lamp.

  If a UV lamp is to be replaced, it can be removed at this point by tilting the probe down and allowing the bulb to (carefully) drop into the operator's hand. A new bulb is then inserted into the opening and pressed into place. Clean the bulb after replacement.

  The ion chamber is a white, circular (Teflon) apparatus found in the black cap that was removed in the first step above. Carefully remove it and blow out any visible dirt and debris. The ion chamber may be soaked/swirled in methanol, or wiped with a methanol soaked swab to clean it. The ion chamber must be completely dry before reassembling.

- When reassembling the probe, assure that all "0" rings are back in place and that the small pins on the back of the ion chamber are aligned with the proper receptacles on the lamp housing.

Troubleshooting:

This document was prepared by Weston Solutions, Inc., expressly for U.S. EPA. It shall not be released or disclosed in whole or in part without the express, written permission of U.S. EPA.

- Assure the battery is charged sufficiently to give proper readings (within the green arc).

- A dirty bulb will (generally) cause lower than expected readings during calibration.

- A dirty ion chamber can cause higher than expected readings during calibration.

- A short in the probe - to - instrument cable can cause erratic needle behavior. If the needle seems to jump at random intervals, jiggle the cable to see if the behavior can be reduced; if so red-tag the probe and have it repaired.

- If cleaning of the bulb and/or ion chamber does not lead to accurate calibration, internal span adjustment can be made. This adjustment should only be performed by a trained technician, however, the steps are as follows:

  1) Unscrew the large screw located at the center of the bottom side of the case.

  2) Remove the instrument from the case, place it on a table and locate the span adjustment screw (top center of the circuit board, below the "zeroing knob").

  3) With the instrument on and attached to a calibration source, set the SPAN knob (on the instrument face) to 9.8, or whatever is appropriate for the probe in use. Without touching other areas of the circuit board, use a jeweler's screwdriver to adjust the screw slowly in either direction to see which direction moves the needle toward the desired reading. Set the needle at the desired reading, which should correspond to the label on the cal-gas bottle. Allow the instrument to run for a few seconds to assure a steady reading. Replace the instrument in its protective case.

     If this instrument cannot be calibrated and/or gives unstable readings after completion of the above, it should be red-tagged and repaired.

5.0 REFERENCES

HNU Systems, 1975. *Instruction Manual for Model PI101 Photoionization Analyzer.*

US Code of Federal Regulations, 49 CFR Parts 100-177, Transportation.

US Environmental Protection Agency, 1984. *Characterization of Hazardous Waste*

This document was prepared by Weston Solutions, Inc., expressly for U.S. EPA. It shall not be released or disclosed in whole or in part without the express, written permission of U.S. EPA.

Sites - A Methods Manual: Volume II, Available Sampling Methods, Second Edition. US EPA Report, EPA-600/4 - 84 - 076, Environmental Monitoring Systems Laboratory, Office of Research and Development, Las Vegas, Nevada.

This document was prepared by Weston Solutions, Inc., expressly for U.S. EPA. It shall not be released or disclosed in whole or in part without the express, written permission of U.S. EPA.

SOP FOR GEOPROBE BLADDER PUMP

GEOPROBE® MODEL MB470 MECHANICAL BLADDER PUMP

STANDARD OPERATING PROCEDURE

Technical Bulletin No. MK3013

PREPARED: November, 2003

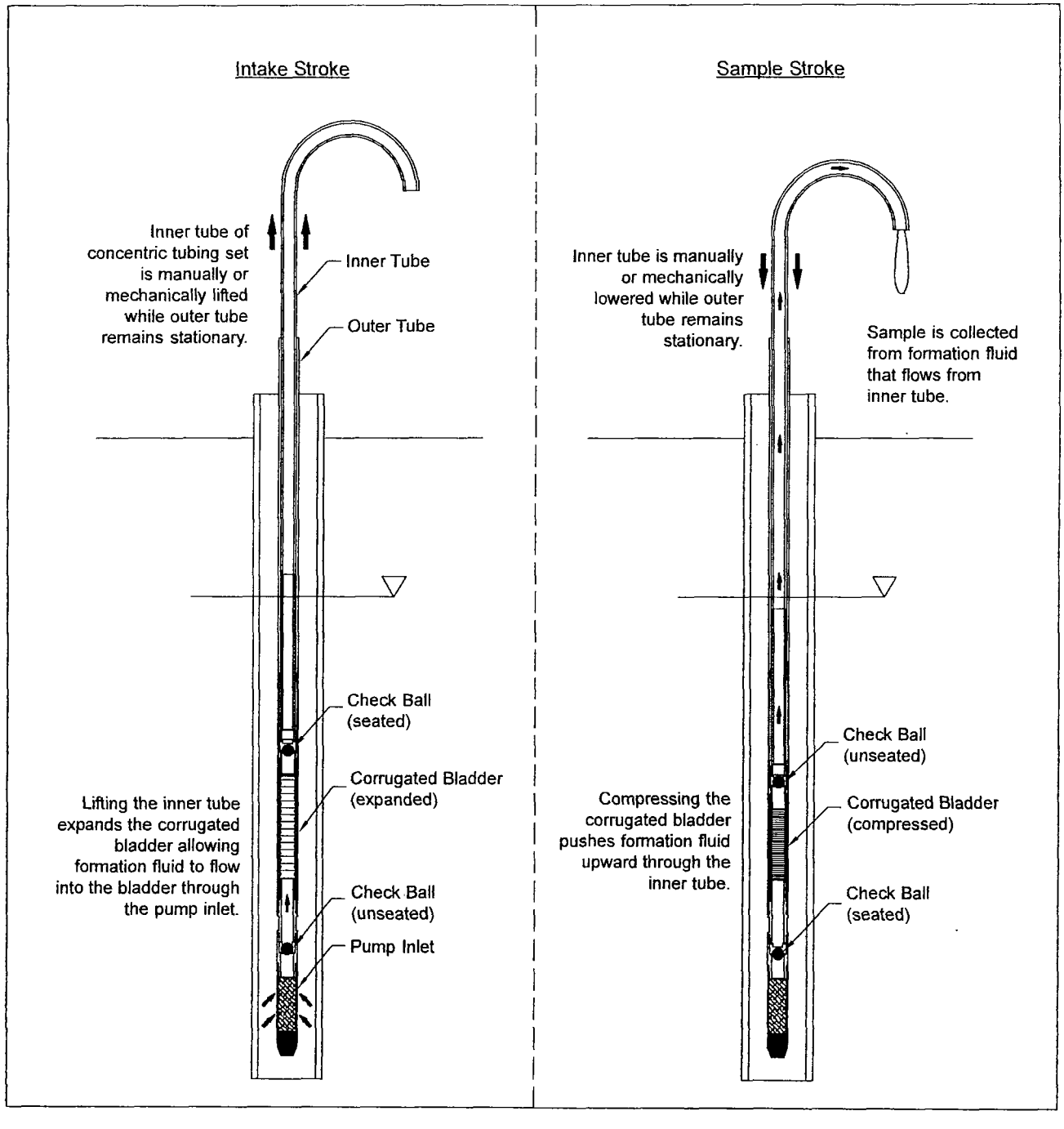

INTAKE AND SAMPLE STROKES OF THE MB470 MECHANICAL BLADDER PUMP

Geoprobe Systems®

Geoprobe® and Geoprobe Systems®, Macro-Core® and Direct Image® are Registered Trademarks of Kejr, Inc., Salina, Kansas

COPYRIGHT© 2003 by Kejr, Inc.
ALL RIGHTS RESERVED.
No part of this publication may be reproduced or transmitted in any form or by any means, electronic or mechanical, including photocopy, recording, or any information storage and retrieval system, without written permission from Kejr, Inc.

1.0 OBJECTIVE

The objective of this document is to provide guidance on how to collect a representative sample of the subsurface formation fluid utilizing the Geoprobe® Model MB470 Mechanical Bladder Pump.

2.0 BACKGROUND

2.1 Definitions

Geoprobe®*: A brand name of high quality, hydraulically-powered machines that utilize both static force and percussion to advance sampling and logging tools into the subsurface. The Geoprobe® brand name refers to both machines and tools manufactured by Geoprobe Systems®, Salina, Kansas. Geoprobe® tools are used to perform soil core and soil gas sampling, groundwater sampling and testing, soil conductivity and contaminant logging, grouting, and materials injection.
**Geoprobe® and Geoprobe Systems® are registered trademarks of Kejr, Inc., Salina, Kansas.*

MB470 Mechanical Bladder Pump (MBP):** A device for obtaining high-quality, low-turbidity samples from groundwater monitoring wells and direct push installed groundwater samplers as small as .5 inches (13 mm) inside diameter (ID). The MBP may be used to meet requirements of the low-flow sampling protocol (Puls and Barcelona 1996, ASTM 2003). Through participation in a U.S. EPA Environmental Technology Verification study, it was confirmed that the MB470 can provide representative samples (EPA 2003).
***U.S. and International Patents Pending.*

Within the MB470 pump body, a corrugated Teflon® fluorinated ethylene propylene (FEP) bladder is mechanically compressed and expanded to push groundwater to the surface through a concentric tubing set. Check valves above and below the bladder control flow direction. The outer tube of the concentric tubing set holds the pump body in place while the inner tube is used to actuate the bladder and transmit water to the surface. The pump body and internal components are made of stainless steel with an outside diameter (OD) of .47 inches (12 mm) and an overall length of 26.75 inches (679 mm) with an inlet screen assembly installed.

2.2 MBP System Components

The three basic components of the Model MB470 Mechanical Bladder Pump system are the pump, concentric tubing set, and actuator.

Pump

All pump components (Fig. 2.1) are made of stainless steel material with the exception of the three fluorosilicone O-rings and the Teflon® bladder.

Beginning at the downhole end of the pump, either a Bullet Nose Intake (P/N 20675) or Inlet Screen Assembly (P/N 20725) may be used as determined by project requirements. The screen assembly includes a 60 mesh wire screen with an actual screen length of 6 inches (152 mm). The bullet nose intake is open at the leading end and provides no filtering effect.

Above the intake/inlet, the pump body contains the corrugated bladder and check balls that physically move groundwater to the surface for purging and sampling. As the top of the bladder is extended, the expanding action of the bladder draws groundwater into the bladder through the intake/inlet. Compressing the bladder then pushes the groundwater up through the connected inner tube of the concentric tubing set. Check balls at the Upper and Lower Bladder Adapters (P/N 20679 and 20677) control groundwater flow through the bladder.

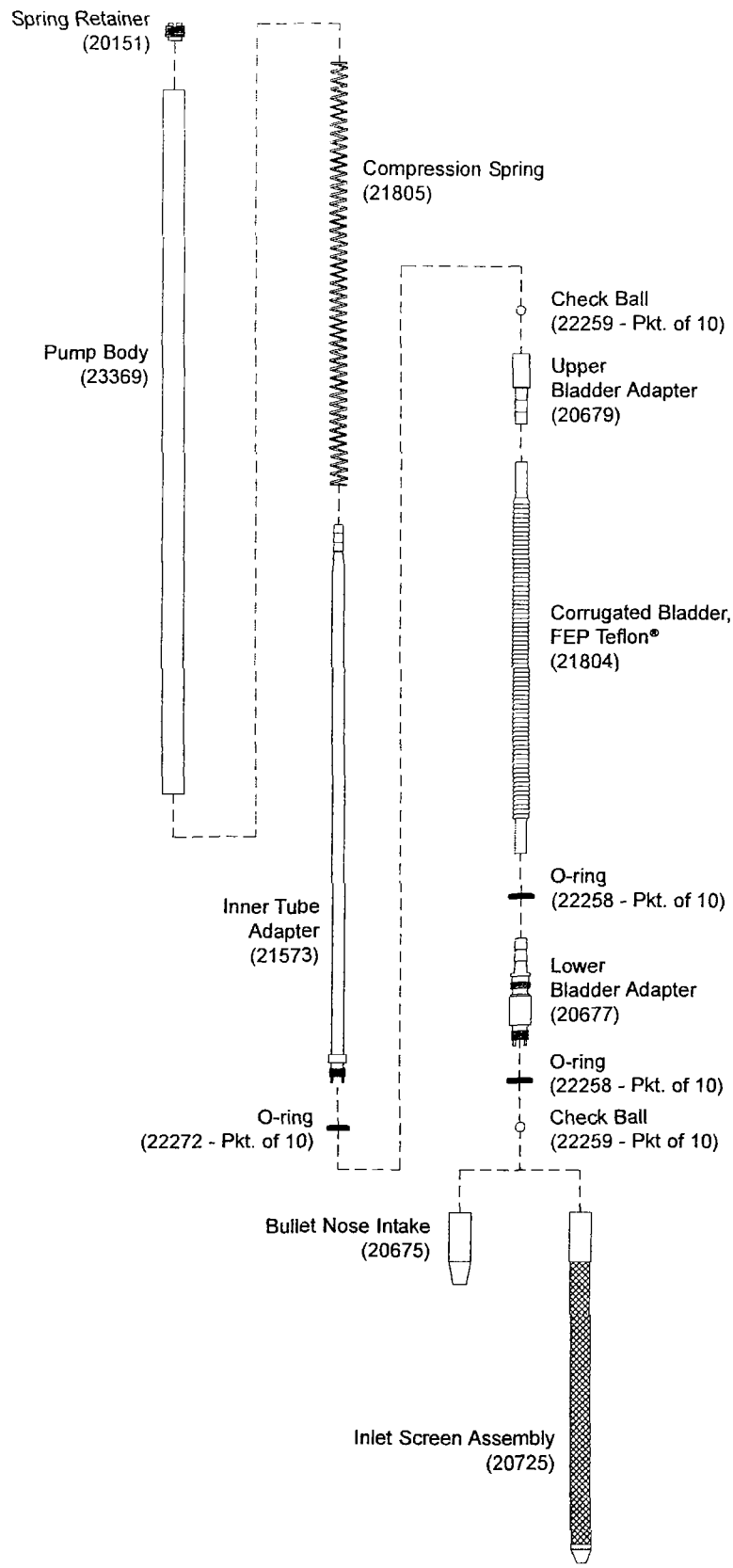

Figure 2.1: Components of MB470 Pump.

The lower end of the corrugated bladder is secured to the pump body by the Lower Bladder Adapter (P/N 20677). The top of the bladder is attached to the inner tube of the concentric tubing set by the Upper Bladder Adapter (P/N 20679) and Inner Tube Adapter (P/N 21573). During operation of the pump, the inner tube is raised and lowered to expand and contract the bladder to move formation fluid to ground surface.

Concentric Tubing Set

A concentric tubing set for the MB470 Mechanical Bladder Pump commonly consists of .19-inch (5 mm) ID / .25-inch (6 mm) OD Teflon® fluorinated ethylene propylene (FEP) tubing surrounded by .31-inch (8 mm) ID / .44-inch (11 mm) OD high-density polyethylene (HDPE) tubing. Where allowed by project requirements, other materials (e.g. low-density polyethylene (LDPE) tubing) may be utilized in place of the Teflon® inner tubing.

Available lengths for the concentric tubing set are 50 and 100 feet (15.2 and 30.5 m). Custom lengths may be assembled from 500-foot rolls of appropriate tubing sizes and materials, some of which are listed on Page 6.

Refer to the magnified view in Figure 2.2. The inner tube of the concentric tubing set is attached to the Inner Tube Adapter (P/N 21573) during assembly of the MB470 pump. The outer tube is then threaded inside the top end of the pump body. Once lowered down the sampler or monitoring well, the outer tube is held stationary either manually or by attachment to a mechanical actuator. The inner tube is raised and lowered by hand or through use of the mechanical actuator to expand and compress the pump bladder. Formation fluid is thus drawn into the pump bladder and then pushed to ground surface.

Actuator

Actuators provide the physical means of holding the outer tube of the concentric tubing set stationary while cycling the inner tube up-and-down. Actuator kits are available for manually or mechanically powering the MB470 pump.

For the manual actuator shown in Figure 2.2, the outer tube of the concentric tubing set is attached to the probe rods using two adapters. The inner tubing is raised and lowered by hand to obtain the groundwater sample. Refer to Section 4.4 for more actuator options.

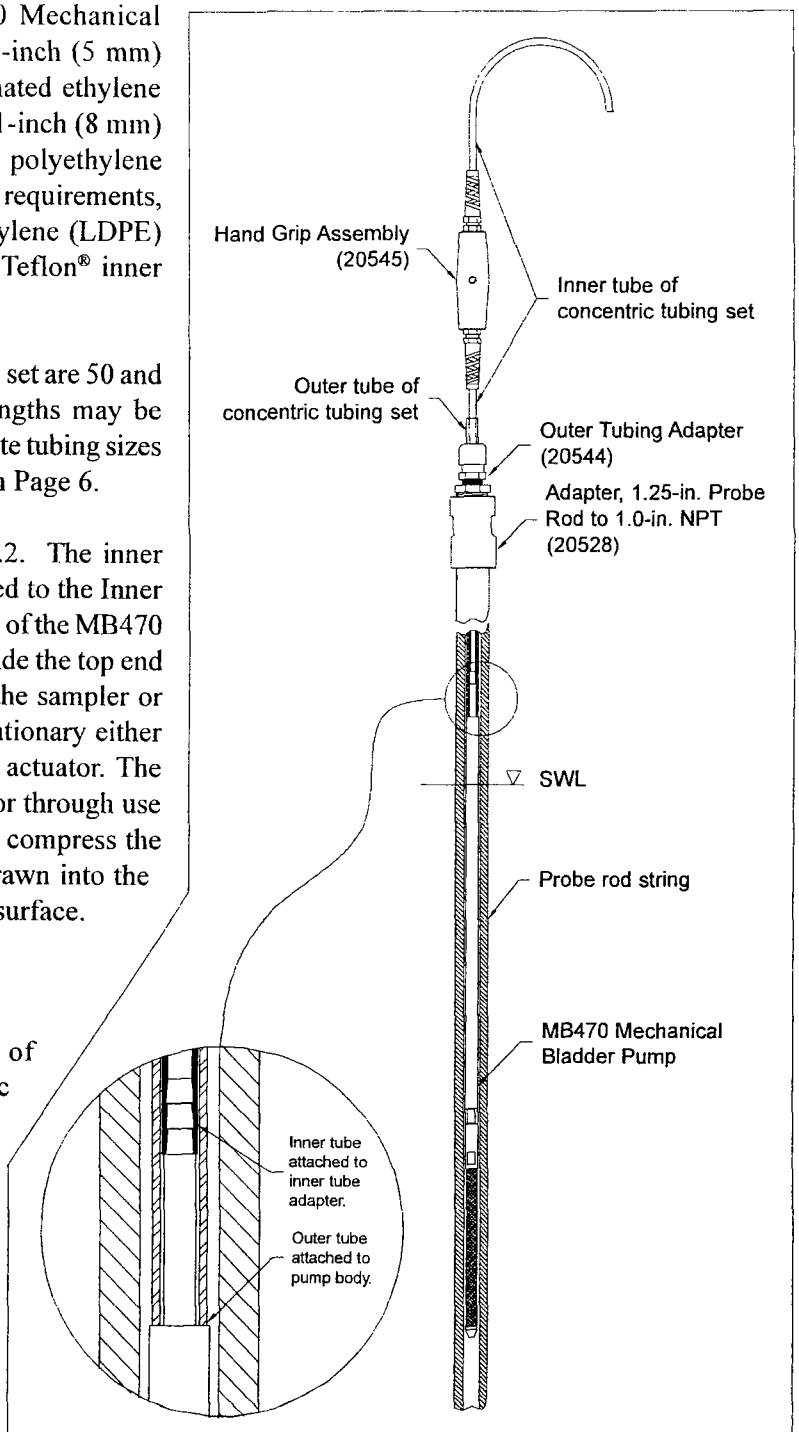

Figure 2.2: MB470 Mechanical Bladder Pump and manual actuator as used in a direct push installed groundwater sampler.

3.0 REQUIRED EQUIPMENT

The following equipment is required to collect representative groundwater samples using the Model MB470 Mechanical Bladder Pump. Refer to Figure 3.1 for identification of the specified parts.

Pump Components	Quantity	Part Number
Mechanical Bladder Pump	-1-	MB470
Service Parts Kit, for MB470 Pump	-1-	MB7500
Includes: O-ring Pick	-1-	AT102
Corrugated Bladder, Teflon® FEP	-3-	21804
Compression Spring, Stainless Steel (SS)	-1-	21805
O-rings for Lower Bladder Adapter (#5-585 Fluorosilicone), Pkg. of 10	-1-	22258
O-rings for Inner Tube Adapter (#010 Fluorosilicone), Pkg. of 10	-1-	22272
Check Balls (7/32-in. diameter), SS, Pkg. of 10	-1-	22259
MBP Assembly Tool	-1-	20456
MBP Cleaning Brush Kit	-1-	MB7300
MBP Assembly Tool	-1-	20456

Tubing Options	Quantity	Part Number
Concentric Tubing Set, HDPE (outer)/FEP (inner), .44-in. OD x 50-ft. length	Variable	MB5050
Concentric Tubing Set, HDPE/FEP, .44-in. OD - 100-ft. length	Variable	MB5100
Concentric Tubing Set, HDPE/LDPE, .44-in. OD - 50-ft. length	Variable	MB5051
Concentric Tubing Set, HDPE/LDPE, .44-in. OD - 100-ft. length	Variable	MB5101
LDPE Tubing, .19-in. ID x .25-in. OD - 100-ft. length	Variable	TB171L
LDPE Tubing, .19-in. ID x .25-in. OD - 500-ft. length	Variable	TB17L
Teflon® FEP Tubing, .19-in. ID x .25-in. OD - 50-ft. length	Variable	TB17T
Teflon® FEP Tubing, .19-in. ID x .25-in. OD - 100-ft. length	Variable	TB171T
Teflon® FEP Tubing, .19-in. ID x .25-in. OD - 500-ft. length	Variable	TB175T
HDPE Tubing, .31-in. ID x .44-in. OD - 50-ft. length	Variable	TB31H
HDPE Tubing, .31-in. ID x .44-in. OD - 100-ft. length	Variable	TB311H
HDPE Tubing, .31-in. ID x .44-in. OD - 500-ft. length	Variable	TB315H

Actuators	Quantity	Part Number
Manual Actuator Kit	-1-	MB7000
Includes: Hand Grip Assembly	-1-	20545
Outer Tubing Grip	-1-	22758
Outer Tubing Adapter	-1-	20544
Mechanical Actuator Assembly	-1-	MB6000
Well Mount Kit (for use with MB6000)	-1-	MB7200

Adapters for Use with Actuators	Quantity	Part Number
MBP PVC Riser Adapter Kit	-1-	MB7100
Includes: PVC Extension, 1.0-in. NPT Pin x 1.0-in. NPT Pin - 12-in. Length	-1-	17560
PVC Coupling, 1.0-in. NPT Box x 1.0-in. NPT Box	-1-	21145
Adapter, 2.0-in. PVC to 1.0-in. NPT Pin	-1-	22759
O-rings for 2.0-in. PVC to 1.0-in. NPT Pin Adapter, pkg. of 25	-1-	22313
Adapter, 1.0-in. PVC to 1.0-in. NPT Pin	-1-	17558
O-rings for 1.0-in. PVC to 1.0-in. NPT Pin Adapter, pkg. of 25	-1-	13942
Adapter, 0.75-in. PVC to 17558 Adapter (0.75-in. PVC requires 2 adapters)	-1-	19424
O-rings for 0.75-in. PVC to 17558 Adapter, pkg. of 25	-1-	13196
Adapter, 0.5-in. PVC to 17558 Adapter (0.5-in. PVC requires 2 adapters)	-1-	17559
O-rings for 0.5-in. PVC to 17558 Adapter, pkg. of 25	-1-	GW1555R
Adapter, Geoprobe® 1.0-in. Probe Rod Pin to 1.0-in. NPT Pin	-1-	20527
Adapter, Geoprobe® 1.25-in. Probe Rod Pin to 1.0-in. NPT Pin	-1-	20528
Adapter, Geoprobe® 1.5-in. Probe Rod Pin to 1.0-in. NPT Pin	-1-	20529

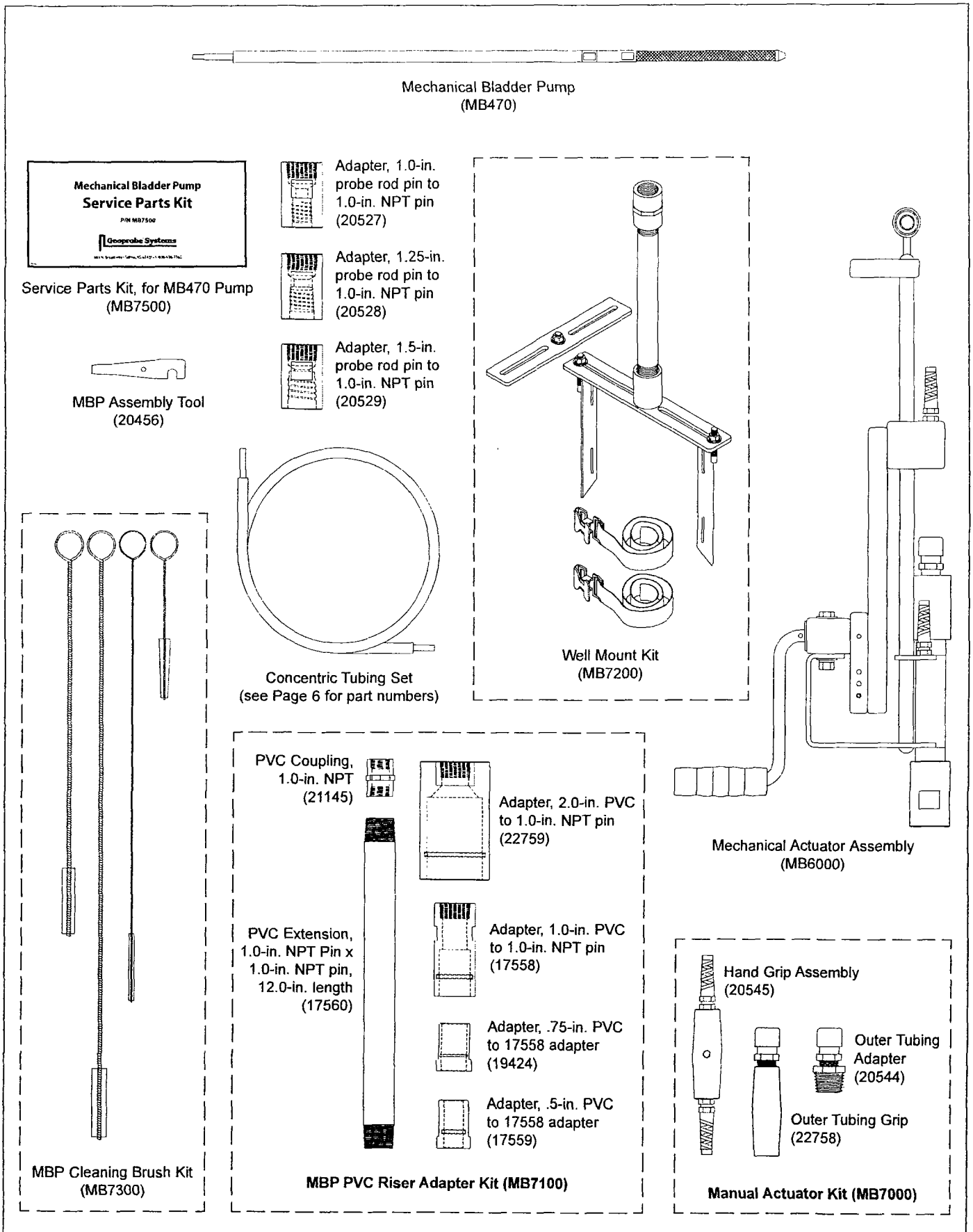

Figure 3.1: MB470 Mechanical Bladder Pump parts and accessories.

4.0 OPERATION

Use and operation of the MB470 Mechanical Bladder Pump may be divided into five main steps:

- ***Assembling the Pump***
- ***Selecting and installing the concentric tubing set***
- ***Selecting and installing the actuator***
- ***Purging and sampling***
- ***Decontaminating the Pump***

4.1 Assembling the Pump

This section identifies the procedures for assembling the components of the MB470 Mechanical Bladder Pump and performing a leak check on the corrugated bladder. Refer to Figure 4.1 for parts identification.

1. Ensure that all metal parts are clean and free of burrs that may damage the pump threads or the corrugated bladder during assembly.

2. Install two fluorosilicone O-rings (22258) on the Lower Bladder Adapter (20677). Note that these are the larger of the two sizes of O-rings used with the MB470 pump.

3. Lubricate the O-ring of the lower bladder adapter and inside the Bullet Nose Intake (20675) with DI water. Place a Check Ball (22259) in the bullet nose intake and thread the intake onto the lower bladder adapter.

NOTE: The bullet nose intake is used here to make it easier to leak check the pump later in this procedure. After the leak check has been performed, the bullet nose intake may be replaced with a Screen Inlet Assembly (20725) if desired.

4. Install a fluorosilicone O-ring (22272) on the lower end of the Inner Tube Adapter (21573). Note that this is the smaller of the two sizes of O-rings used with the MB470 pump.

5. Lubricate the O-ring of the inner tube adapter and inside the Upper Bladder Adapter (20679) with DI water. Thread the upper bladder adapter onto the inner tube adapter.

NOTE: A check ball must be installed in the upper bladder adapter after performing the leak check in Step 7.

6. Install the Teflon® FEP Corrugated Bladder (21804):

   - The bladder should be installed with the corrugations pointing "up" (toward the upper bladder adapter/ inner tube adapter) as indicated in Figure 4.2.
   - Firmly push and rotate the lower cuff of the bladder over the barbed end of the lower bladder adapter.
   - Firmly push and rotate the upper cuff of the bladder over the barbed end of the upper bladder adapter.
   - Both ends of the bladder should be fully seated on the adapter barbs.

CAUTION: Although firmness is required during installation of the bladder, avoid crushing, kinking, or twisting the bladder corrugations to prevent damage.

7. Perform a leak check on the corrugated bladder before fully assembling the pump components to ensure that the bladder is free of defects. (Leak check procedure is given on opposite page.)

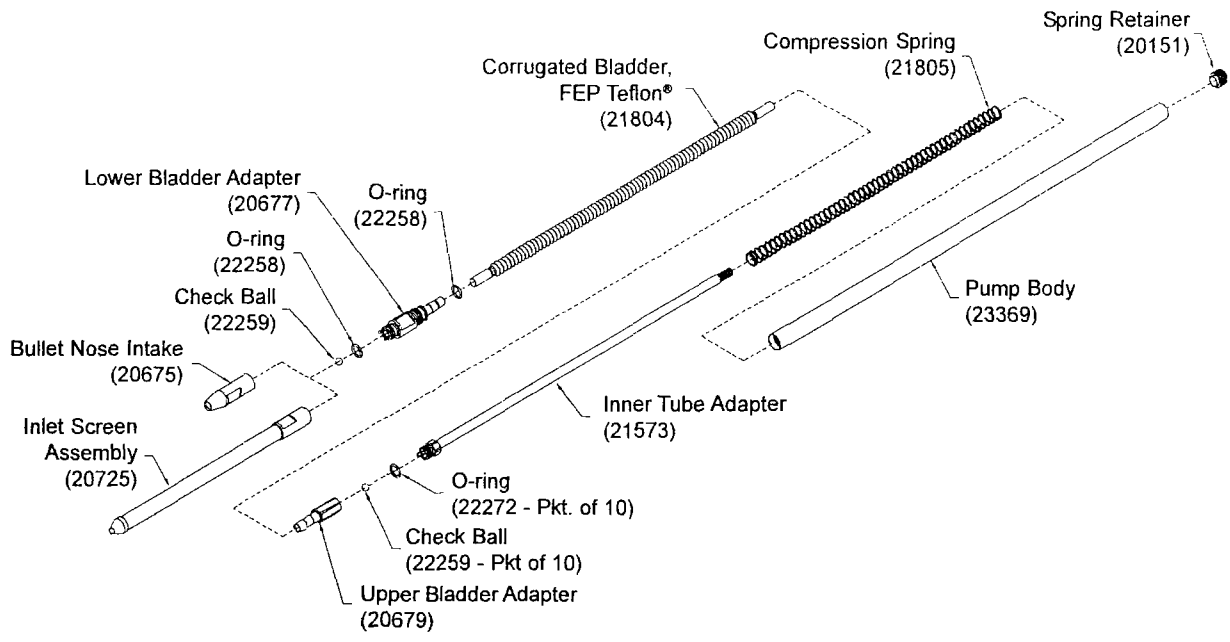

Figure 4.1: Isometric exploded view of the MB470 Mechanical Bladder Pump.

Leak check the corrugated bladder as follows:

- Completely submerge the bladder and lower end of the inner tube adapter in a clean beaker or small bucket of distilled or DI water.
- Firmly blow into the open end of the inner tube adapter. Leaks in the bladder or assembled parts will be indicated by bubbles.
- If leaks are found, replace the faulty O-ring(s) or bladder. Retest to ensure that all leakage has stopped.
- Once the pump has passed the leak test, unthread the upper bladder adapter from the inner tube adapter. Place a Check Ball (22259) in the upper bladder adapter and reinstall it in the inner tube adapter.
- Replace the bullet nose intake with an Inlet Screen Assembly (20725) if desired. Remember to include the check ball when installing the inlet screen.

8. The Pump Body (23369) is internally threaded at each end. Threads run all the way to the end of the pump body at the upper end, but stop .25 inches (6 mm) from the end at the lower end of the pump body to permit an O-ring seal.

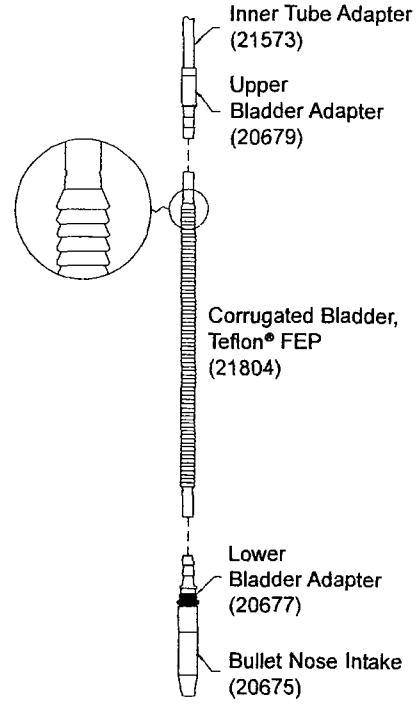

Figure 4.2: Bladder corrugations should point "up".

Thread the Spring Retainer (20151) into the top of the pump body. Install the retainer with the slotted end out to allow use of a medium slotted screw driver or the MBP Assembly Tool (20456) to thread or unthread the retainer.

(continued on following page)

9. Place the Compression Spring (21805) over the top of the inner tube adapter. Slide the spring completely onto the adapter until it contacts the hex fitting.

10. Slide the lower end of the pump body over the top of the inner tube adapter and pump spring. The inner tube adapter will slip through the spring retainer and extend approximately 3 inches (75 mm) from the top of the pump body.

11. The lower bladder adapter is now threaded into the pump body to complete the assembly process.

    - Lubricate the O-ring on the lower bladder adapter and inside the lower end of the pump body with DI water.
    - Grasp the pump body with one hand and the lower bladder adapter with the other hand.
    - Gently compress the spring and bladder into the pump body.
    - Thread the lower bladder adapter into the pump body. Use care to avoid cutting or pinching the O-ring while threading the parts together. The O-ring will no longer be visible when the adapter is fully seated.

Assembly of the MB470 Mechanical Bladder Pump is now complete.

4.2 Selecting and Installing the Concentric Tubing Set

Selecting the Concentric Tubing Material and Length

The outer tube of the concentric tubing set commonly consists of .44-inch OD x .31-inch ID (11 mm x 8 mm) HDPE material. Inner tube material options are FEP Teflon® or LDPE with both having dimensions of .25-inch OD x .19-inch ID (6 mm x 5 mm). Teflon® FEP inner tubes provide higher sample quality compared to LDPE due to the chemical properties of the two materials. Teflon® FEP also has a lower coefficient of friction for smoother actuation of the bladder and less resistance to operation, especially at greater depths.

While Teflon® FEP exhibits relatively good chemical inertness, it will absorb and desorb some volatile organic contaminants (Parker & Ranney 1998). Because of this, ambient groundwater should be purged through the pump and tubing system for a period of time to achieve equilibrium between the bladder and tubing and sample fluid. The period of time may vary for different volatile organic compounds (VOCs), but if low flow sampling (Puls and Barcelona 1996, ASTM 2003) is conducted, chemical equilibrium may be achieved by the time the monitored water quality parameters (DO, ORP, turbidity, etc.) have stabilized.

Preassembled concentric tubing sets are available from Geoprobe Systems® in lengths of 50 and 100 feet (15.2 and 30.5 m). The user may choose to assemble sets of custom lengths from separate rolls of inner and outer tubing in preparation for the sampling event or while on-site. Be careful to keep the tubing clean while inserting the inner tube into the outer tube.

When long tubing sets are required, it may be wise to use clean PVC riser pipe to protect the tubing during assembly. Simply thread PVC riser sections together, placing them on the shop floor or along the ground surface. Cap one end of the casing to keep dirt and debris out during assembly. Determine the length of the outer tube required and make the PVC casing about the same length. Slide the outer tube into the PVC casing and cut to the desired length. Slide the inner tube into the outer tube. Cut the inner tube three or more feet longer than the outer tube to complete the concentric tubing set.

Keep all tubing stored in clean airtight bags or containers so that dirt, dust, and cross contamination are not a concern or problem. No matter how clean the pump is, sample quality will suffer if the tubing is dirty. Be sure the tubing is of clean, quality material and is not marked with inks that may contribute to cross contamination.

Installing the Concentric Tubing Set on the MB470 Pump

The concentric tubing set is attached to the mechanical bladder pump by pushing the inner tube onto the hose barb on the end of the inner tube adapter and then threading the outer tube into the pump body.

1. Push the inner tube of the concentric tubing set onto the hose barb on the end of the inner tube adapter (Fig. 4.3). Fully seat the tube on the adapter such that the tube engages all three barbs. Take care not to kink or otherwise damage the tubing.

2. Before installing the outer tube, unthread the lower bladder adapter from the pump body and lay the partially disassembled pump on a clean, level surface. This step is recommended so that the bladder is not twisted or damaged as the outer tubing is installed.

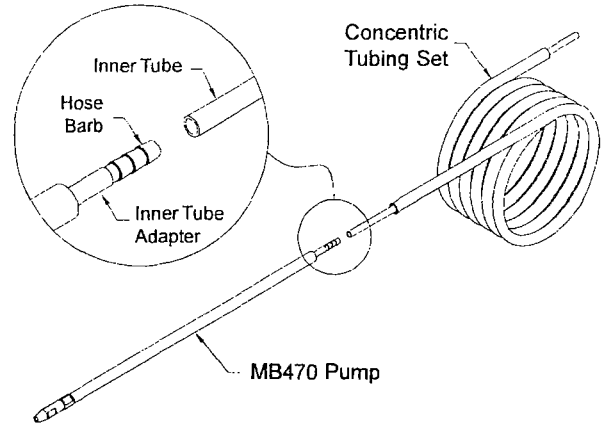

Figure 4.3: Fully seat the inner tube onto the hose barbs of the inner tube adapter.

3. Push and thread the outer tube into the top end of the pump body (Fig. 4.4). The outer tube should be threaded about 0.75 inches (19 mm) into the pump body until it butts against the spring retainer. Remember to take care not to kink or otherwise damage the tubing during installation.

4. Rotate the lower bladder adapter counterclockwise one or two revolutions to minimize torque on the bladder when threading the adapter into the pump body. Now reinstall the lower bladder adapter and inner tube adapter into the lower end of the pump body.

   The pump and tubing set are now assembled and ready for installation into the monitoring well or sampler.

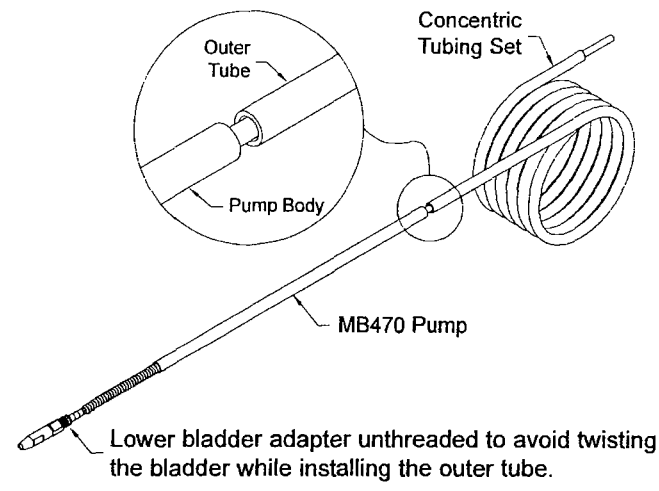

Figure 4.4: Thread the outer tube of the concentric tubing set into the pump body.

NOTE: Friction between the inner and outer tubes may make it difficult to attach the pump with the tubing set coiled. To overcome this problem, attach the pump while the concentric tubing is unrolled in the PVC riser sections as described at the bottom of Page 10.

The user may also choose to lower the concentric tubing set partway down the tool string or well, attach the pump to the exposed end of the tubing, retrieve the tubing set, and install the pump for purging or sampling. If this technique is used, **take great care to avoid dropping the tubing set down the well or tool string during attachment of the pump.**

4.3 Selecting and Installing the Actuator

Operating the mechanical bladder pump requires holding the outer tube of the concentric tubing set stationary while moving the inner tube up-and-down. Although this maneuver is possible by simply holding the outer tube in one hand and moving the inner tube with the other hand, an actuator makes operation of the pump significantly easier.

NOTE: The tubing set must be completely unrolled for the inner tube to slide freely within the outer tube.

This section identifies the available actuator options. Methods by which the actuators attach to the concentric tubing set and are installed on the monitoring well or tool string are also addressed.

Handheld Manual Actuator

The handheld actuator option is the first step above simply grasping the inner and outer tube by hand. With this option, a Hand Grip Assembly (20545) and Outer Tubing Grip (22758) are installed on the concentric tubing set (Fig. 4.5). Sampling or purging is accomplished by physically holding the outer tubing grip in one hand while raising and lowering the hand grip assembly with the other hand. A handheld actuator may be used to purge or collect samples through probe rods from a groundwater sampler as well as from a permanent monitoring well.

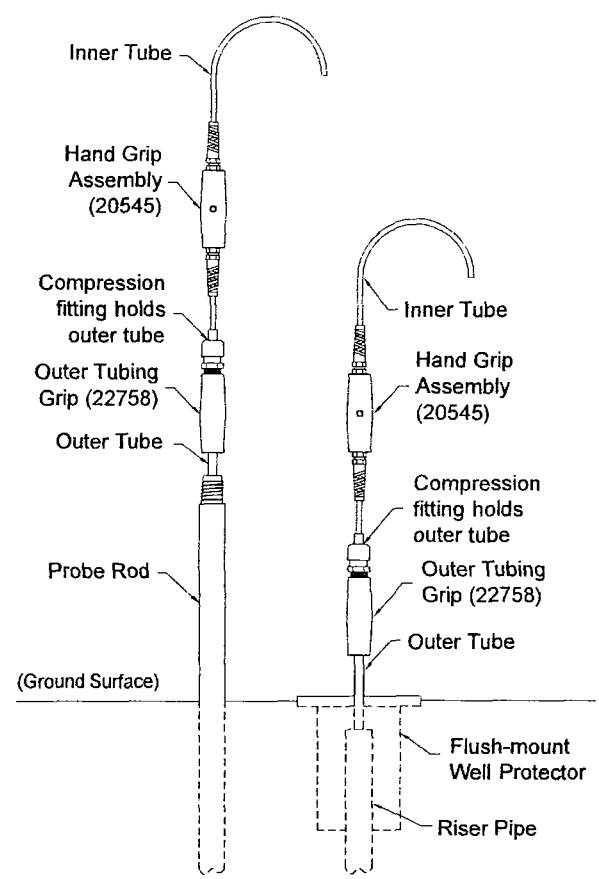

Figure 4.5: Handheld actuator parts for use with groundwater samplers and monitoring wells.

Installation of the handheld actuator is described below.

1. Determine the depth to which the pump inlet will be installed as measured from the top probe rod or riser pipe with a weighted tape or water lever meter.

2. The distance from the pump inlet to the top of the tool string or riser pipe (from Step 1) may now be marked on the outer tube. Obtain an assembled MB470 Mechanical Bladder Pump (Section 4.1) with a concentric tubing set installed as instructed in Section 4.2. Beginning from the pump inlet, measure the appropriate distance along the outer tube and mark it with electrical tape or a suitable marker. The tubing set will be installed such that this mark is aligned with the top of the probe rods or riser.

3. Leading with the end opposite the compression fitting, slide the outer tubing grip over the top end of the tubing set. It may be necessary to loosen the fitting slightly (Fig. 4.6) to allow installation.

4. Position the grip with the lower end even with, or slightly above the line marked on the outer tube in Step 2. The specific location of the grip should be determined by operator preference. The important thing is that the pump inlet is maintained at the appropriate level during sampling as indicated by the mark on the outer tube.

5. Secure the grip to the outer tube by tightening the large nut of the compression fitting (Fig. 4.6) until it is "hand tight". Do not overtighten as this may damage the plastic fitting.

6. Carefully cut off the excess outer tube leaving approximately .25 inches (6 mm) above the compression fitting. (Note that the inner tube is not cut at this location). Now measure and cut the inner tube leaving it approximately 3 feet (1 m) longer than the outer tube.

7. Slide the hand grip assembly over the inner tube and position it 1-2 inches (25-51 mm) above the outer tubing grip as shown in Figure 4.6. It may be necessary to first loosen the two compression fittings to allow installation over the inner tube.

8. Secure the hand grip by tightening the two compression fittings. Take care not to overtighten and damage the fittings. Also avoid kinking the inner tube while completing this step

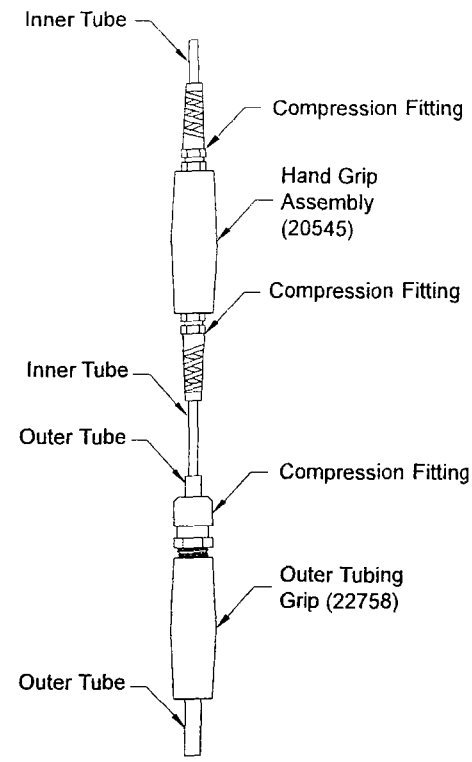

Figure 4.6: Close-up view of hand grip and outer tubing grip.

To operate the mechanical bladder pump with the handheld actuator, simply insert the pump into the probe rod string or monitoring well. Lower the pump and concentric tubing set until the mark on the outer tube (measured and marked previously in Step 2, Page 12) is aligned with the top of the probe rod string or well riser. Initiate pump flow by holding the outer tubing grip stationary with one hand while cycling the hand grip assembly up-and-down with the other hand. A pump stroke of up to approximately 6 inches (150 mm) is recommended.

Anchored Manual Actuator

The anchored actuator option is similar to the handheld actuator in that the mechanical bladder pump is cycled by physically raising and lowering the inner tube using the Hand Grip Assembly (20545). But while the handheld actuator requires a second hand to hold the outer tube, the anchored actuator option utilizes adapters to mechanically secure the outer tubing to the top probe rod or riser pipe as shown in Figure 4.7.

Installation of the mechanical bladder pump with the anchored actuator option is reviewed in this section for both probe rod and well riser applications.

1. The outer tube of the concentric tubing set is connected to the top probe rod or well riser using an Outer Tubing Adapter (20544) plus additional adapters as determined by the size of rod or riser onto which the actuator is to be installed.

   Referring to Table 4.1, select the appropriate adapter(s) for your size of probe rod or well riser. Illustrations and complete descriptions of the various adapters are presented in Table 4.2 and Figures 4.8 - 4.10. Note that .5-inch and 0.75-inch riser pipe each require two PVC adapters in addition to the outer tubing adapter.

2. Assemble the adapters by threading the outer tubing adapter into the probe rod or well riser adapter.

   As illustrated in Figure 4.8, two adapters are required to attach the outer tubing adapter to .5-inch and .75-inch riser pipe. After threading the outer tubing adapter into the 1.0-inch PVC to 1.0-inch NPT Adapter (17558), either a .5-inch PVC adapter (19424) or .75-inch PVC adapter (17559) is then installed in the remaining end of the 1.0-inch PVC adapter.

3. Determine the depth to which the pump inlet will be installed as measured from the top probe rod or riser pipe with a weighted tape or water lever meter.

4. The distance from the pump inlet to the top of the tool string or riser pipe (from Step 3) is now marked on the outer tube:

   Obtain an assembled MB470 Mechanical Bladder Pump (Section 4.1) with a concentric tubing set installed as instructed in Section 4.2. Beginning from the pump inlet, measure the appropriate distance along the outer tube and mark it with electrical tape or a suitable marker. The tubing set will be installed such that this mark is aligned with the top of the probe rods or riser.

5. Slide the assembled adapters (from Step 2) over the top end of the tubing set leading with the end opposite the compression fitting. See Figure 4.7 for adapter orientation. It may be necessary to loosen the compression fitting slightly to allow installation.

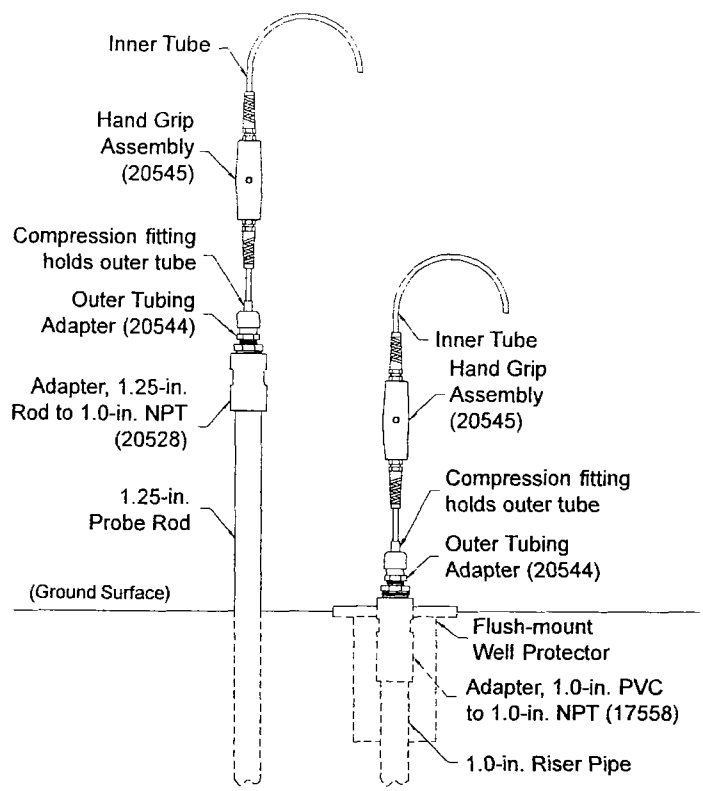

Figure 4.7: Manual actuator parts for use with groundwater samplers and monitoring wells. (Part numbers specified for 1.25-inch probe rods and 1.0-inch riser pipe.)

6. Position the adapters such that the line marked on the outer tube in Step 4 will be even with the top of the probe rod or well riser when the pump is installed on the tool string or riser.

7. Secure the adapters to the outer tube by tightening the large nut of the compression fitting (Fig. 4.7) until it is "hand tight". Do not overtighten as this may damage the plastic fitting.

Size	Probe Rod Adapters	Monitoring Well Riser Adapters
.5-inch	na	17559, 17558, and 20544
.75-inch	na	19424, 17558, and 20544
1.0-inch	20527 and 20544	17558 and 20544
1.25-inch	20528 and 20544	na
1.5-inch	20529 and 20544	na
2.0-inch	na	22759 and 20544

Table 4.1: Part numbers for the adapters required to attach the outer tube to various probe rods and PVC riser pipe.

8. Carefully cut off the excess outer tube leaving approximately .25 inches (6 mm) above the compression fitting. (Note that the inner tube is not cut at this location). Now measure and cut the inner tube leaving it approximately 3 feet (1 m) longer than the outer tube.

9. Slide the hand grip assembly over the inner tube and position it 1-2 inches (25-51 mm) above the outer tubing grip as shown previously in Figure 4.6. It may be necessary to first loosen the two compression fittings to allow installation over the inner tube.

10. Secure the hand grip by tightening the two compression fittings until they are hand tight. Do not overtighten the plastic fittings as damage may result.

Illustration	Part Number	Description
	20544	Outer Tubing Adapter
	20527	Adapter, 1.0-in. probe rod pin to 1.0-in. NPT pin
	20528	Adapter, 1.25-in. probe rod pin to 1.0-in. NPT pin
	20529	Adapter, 1.5-in. probe rod pin to 1.0-in. NPT pin
	17558	Adapter, 2.0-in. PVC to 1.0-in. NPT Pin
	17559	Adapter, 1.0-in. PVC to 1.0-in. NPT Pin
	19424	Adapter, .75-in. PVC to 17558 Adapter
	22759	Adapter, .5-in. PVC to 17558 Adapter

Table 4.2: Adapters for attaching the outer tube to probe rods and PVC riser pipe.

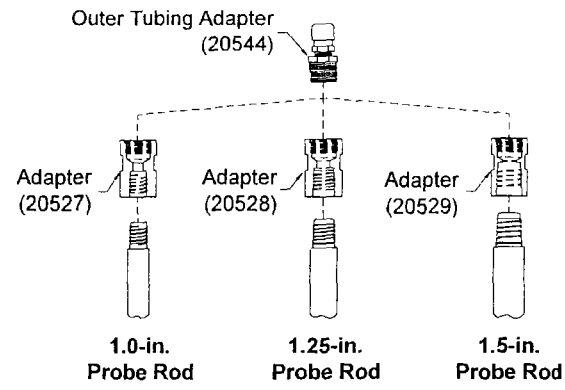

Figure 4.8: Adapters for attaching the outer tube to 1.0-, 1.25-, and 1.5-inch probe rods.

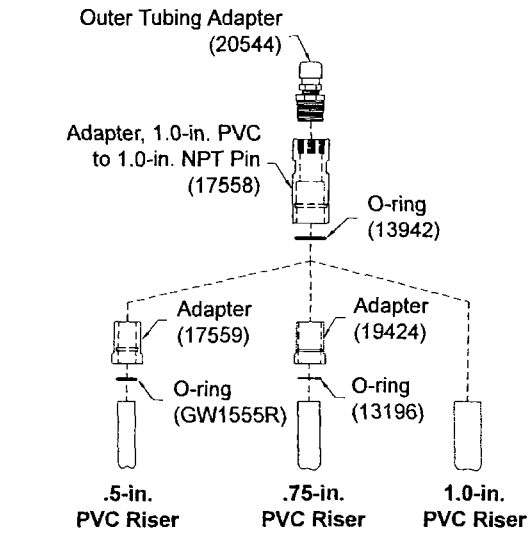

Figure 4.9: Adapters for attaching the outer tube to .5-, .75-, and 1.0-inch PVC riser pipe.

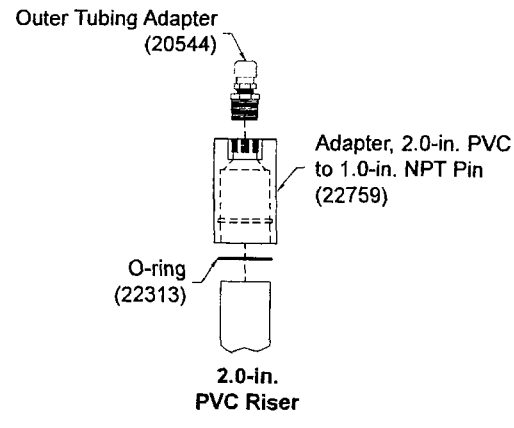

Figure 4.10: Adapters for attaching the outer tube to 2.0-inch PVC riser pipe.

11. Lower the mechanical bladder pump down the probe rods or well riser. Secure the outer tubing adapter by threading it onto the top probe rod or sliding it over the top of the well riser.

    The mechanical bladder pump is now ready for purging and/or sampling.

Operation of the mechanical bladder pump with a manual actuator is limited to simply raising and lowering the hand grip assembly using a stroke length up to 6 inches (152 mm). This action extends and retracts the pump bladder to push formation fluid to the ground surface through the inner tube of the concentric tubing set. The outer tube is attached to the probe rod string or well riser by adapters and is thus held stationary while the pump is actuated.

Mechanical Actuator

The third actuator option for the MB470 Mechanical Bladder Pump is a Mechanical Actuator Assembly (MB6000, Figure 4.10). Rather than physically raising and lowering the inner tube to cycle the pump, the operator simply rotates the handle on the side of mechanical actuator. The actuator assembly converts this rotational action to vertical movement of the inner tube which cycles the pump. The operator may also choose to manually raise and lower the inner tube by disconnecting the side handle and utilizing the T-handle at the top of the assembly.

An advantage of the mechanical actuator option is that it requires little physical input to operate the pump. This translates to minimal operator fatigue when purging or sampling from multiple wells during the day.

The mechanical actuator assembly may be installed directly on a probe rod string (Fig. 4.10) or attached to a flush-mount or aboveground well protector using a Well Mount Kit (MB7200) as shown in Figures 4.11 and 4.12. Installation and operation of the mechanical actuator are described below.

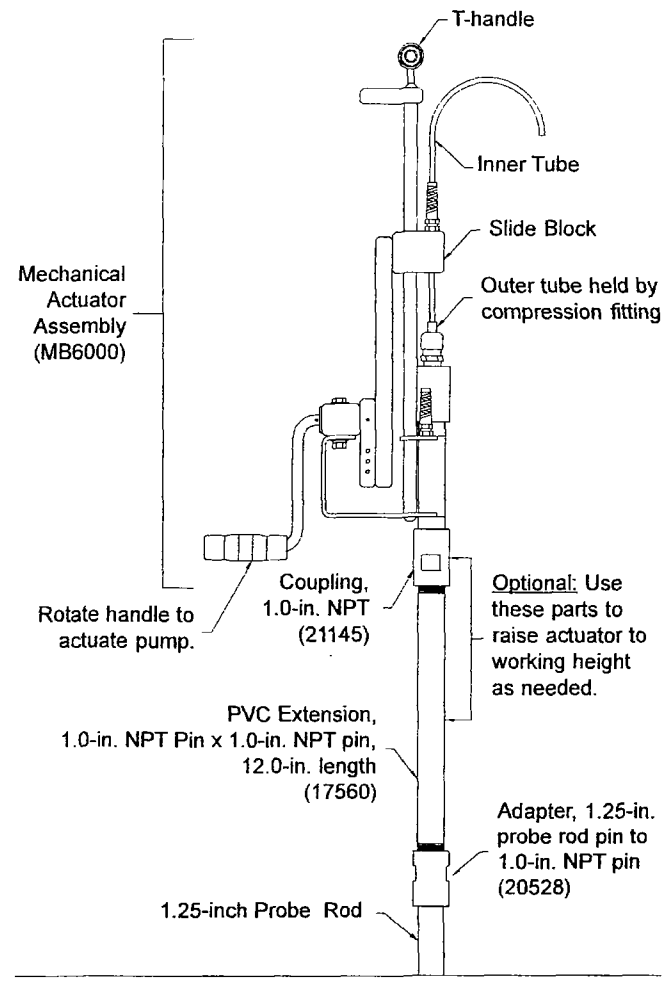

Figure 4.10: Mechanical actuator option for the MB470 Mechanical Bladder Pump (parts shown for attachment to 1.25-inch probe rods).

1. Determine the depth to which the pump inlet will be installed as measured from the top of the probe rods or well protector with a weighted tape or water level meter.

2. The distance from the pump inlet to the top of the tool string or well protector (from Step 1) may now be marked on the outer tube:

   Obtain an assembled MB470 Mechanical Bladder Pump (Section 4.1) with a concentric tubing set installed as instructed in Section 4.2. Beginning from the pump inlet, measure the appropriate distance along the outer tube and mark it with electrical tape or a suitable marker. The tubing set will be installed such that this mark is aligned with the top of the probe rods or well protector.

3. ***For monitoring wells only:*** Install a Well Mount Kit (MB7200, Figure 3.1) on the well protector. The well mount is strapped onto aboveground well protectors as shown in Figure 4.11 and bolted onto flush-mount well protectors as shown in Figure 4.12. Note that the cross adapter is used for flush-mount protectors that utilize three bolts on the cover (Fig. 4.12) or when the well riser is significantly off center in the protector.

4. Lower the pump and concentric tubing set down the probe rod string or through the well mount into the riser pipe. Stop when the mark on the outer tube (from Step 2) is near the top of the probe rods or well protector.

5. ***For probe rods only:*** Referring to Table 4.2, select the appropriate Probe Rod Pin to 1.0-inch NPT Pin Adapter (20527, 20528, or 20529) to attach the actuator to the top probe rod. Thread this adapter (and a 12-inch extension if additional height is needed) into the actuator as shown on the completed assembly in Figure 4.10.

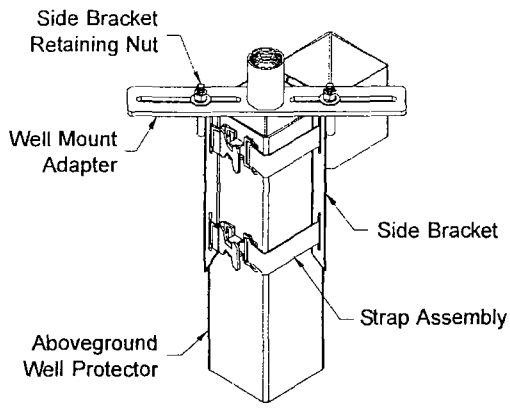

Figure 4.11: Well Mount Kit installed on an aboveground well protector. (Kit may also be used with round protectors.)

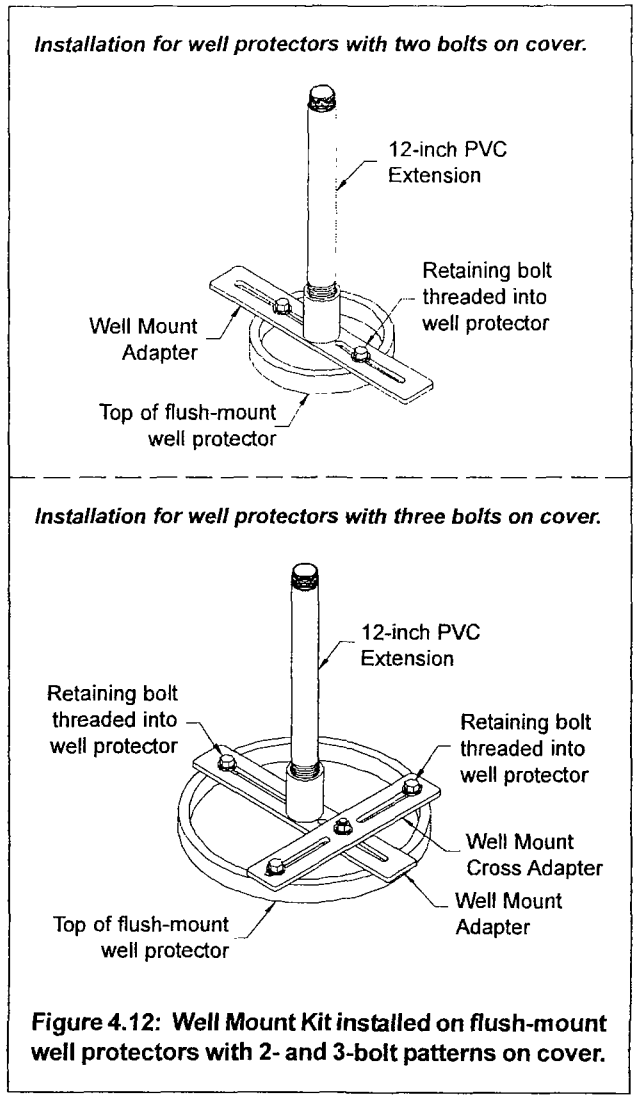

Figure 4.12: Well Mount Kit installed on flush-mount well protectors with 2- and 3-bolt patterns on cover.

6. Insert the top end of the concentric tubing set through the lower end of the mechanical actuator assembly. Feed the tubing set through the actuator and out the compression fitting identified in Figure 4.10.

   For probe rods only: The mark on the outer tube (Step 2) will not be visible once the actuator is installed on the probe rods. To allow for this, position the tubing within the actuator such that the mark will be at the top of the rods when the actuator is installed. Now mark the outer tube at the compression fitting of the actuator assembly for reference later in the installation procedure.

7. Thread the mechanical actuator onto the top probe rod or well mount until all connections are hand tight.

8. Verify the position of the outer tube by observing the mark placed on the tube in Step 2 or 6. Tighten the compression fitting (hand tight) to secure the tubing. Do not overtighten as this may damage the fitting.

9. Carefully cut off the excess outer tube leaving approximately .25 inches (6 mm) above the compression fitting. (Note that the inner tube is not cut at this location).

10. Taking care not to kink the inner tube, insert the inner tube up through the compression fitting on the actuator slide block (see Fig. 4.10 for identification of slide block). It may help to raise the slide block during this step.

    With the slide block fully lowered, gently pull up on the inner tube to remove slack. Do not pull so far that the pump spring is compressed. Tighten the compression fitting to secure the inner tube. Again, do not overtighten as this may damage the plastic fitting.

11. Cut the inner tube leaving it approximately 3 feet (1 m) longer than the outer tube. You may choose to insert the end of the inner tube through the top of the compression fitting on the side of the actuator. This will limit movement of the tube outlet while operating the pump

    The mechanical bladder pump is ready for operation by rotating the side handle of the mechanical actuator or disconnecting the side handle linkage and manually raising and lowering the T-handle.

4.4 Purging and Sampling

The MB470 Mechanical Bladder pump was designed to provide an economical and efficient method to conduct the low flow sampling protocol (Puls and Barcelona 1996, ASTM 2003), Nielsen and Nielsen 2002). The basis of this protocol is that a sampling flow rate of 500 ml/min or less for 2-inch wells (100 to 200 ml/min for smaller diameter direct push wells) generally provides a sample of higher quality that is more representative than sampling at high flow rates (e.g. several liters or gallons per minute). Higher quality samples for volatile organic compounds are obtained because the water being sampled is subjected to less physical and chemical stress so that loss of these analytes does not occur. Additionally, higher quality samples for inorganic analytes (e.g. lead, hexavalent chromium, etc.) are obtained because the low flow sampling method minimizes turbidity that can cause significant bias for these sensitive analytes.

To obtain the most representative samples, the monitoring well or temporary groundwater sampler should be developed before sampling is conducted. Development may consist of simple surging and purging with an inertial pump for temporary samplers depending on the data quality objectives (Geoprobe® 2002). However, more elaborate methods may be required for some monitoring wells (ASTM 2001).

To meet the full requirements of the low flow sampling protocol, field parameters of the pre-sample purge water (temperature, pH, specific conductance, ORP, DO, and turbidity) should be monitored using an in-line flow cell. Once these parameters have stabilized, the samples are then collected in clean, preserved sample containers appropriate for the analytes of concern. Pre-sample purging may be completed in as little as 10 to 20 minutes in adequately developed small-diameter wells with as little as 5 to 10 liters of water generated. In larger diameter wells that have not been adequately developed, a significantly longer purge time and volume may be required.

4.5 Decontaminating the Pump

Decontamination of the pump may be performed in two general ways. For the highest integrity samples the pump should be fully disassembled for thorough decontamination (decon) and the bladder and O-rings replaced. If the pump is being used as a portable pump for sampling multiple locations daily, the pump may be decontaminated while assembled. Review and understand the sampling and data quality objectives for your project before selecting the appropriate decontamination procedure . (For further information on data quality objectives see EPA 1997, or Geoprobe® 2002). The concentric tubing set should be replaced between each sampling location to minimize the potential for cross contamination. If possible, sample from background or low concentration wells to higher concentration wells to minimize the chance for cross contamination.

Disassemble for Decontamination

Simply reverse the procedures described in Section 4.1 to disassemble the pump and concentric tubing set. Place the disassembled pump in a clean beaker or small bucket of water. Use distilled water for highest level of decon. Add Alconox soap (or similar cleaning agent) to the water. Thoroughly clean and brush all inside and outside surfaces. The MBP Cleaning Brush Kit (MB7300) includes four small-diameter brushes selected specifically to clean inside the various pump components. Double rinse all parts with distilled or deionized (DI) water and allow to air dry. Reassemble the pump using a new bladder and O-rings.

Review ASTM Practice D5088 for further guidance and detail on decon procedures. Additional decontamination may be obtained by drying the disassembled pump in a clean drying oven at about 95°C (203°F). This will provide additional assurance that volatile contaminants are removed from pump surfaces.

Decontamination of Assembled Pump

While this method will not provide the assurance of the highest quality samples it may be preferred when lower sample quality is acceptable (For further information on data quality objectives see EPA 1997, or Geoprobe® 2002). When initial site assessments are conducted it is often desirable to obtain many samples at a reasonably modest cost so as to adequately characterize a site. This decon procedure will help reduce the per sample cost while providing acceptable sample quality for many site assessments.

Remove the concentric tubing set from the pump and discard. Submerge the pump in clean soapy water and pump several volumes of water through the pump. Thoroughly wash the exterior of the pump removing all visible dirt or stains. Rinse and transfer the pump to a container of clean tap water or deionized water. Again pump multiple volumes of water through the pump and wash the pump exterior to remove all soap. A second rinse is recommended. Allow the pump to air dry. Again, drying the fully assembled pump in a clean drying oven at about 95°C (203°F) will further remove any volatiles from pump surfaces.

Rinsate Samples

Regularly collect rinsate samples from the pump following decontamination and submit the samples for analysis for the analytes of concern . This will provide another level of quality control and assurance that samples meet the site-specific data quality objectives. Pump clean distilled water through the pump and collect the fluid in an appropriate preserved container. Store, ship and handle rinsate samples in the same manner as field samples.

5.0 REFERENCES

American Society of Testing and Materials (ASTM), 2003. D6771-02 Standard Practice for Low-Flow Purging and Sampling for Wells and Devices Used for Ground-Water Quality Investigations. ASTM, West Conshocken, PA. (www.astm.org)

American Society of Testing and Materials (ASTM), 2001. D-5521 Standard Guide for Development of Ground-Water Monitoring Wells in Granular Aquifers. ASTM, West Conshocken, PA. (www.astm.org)

American Society of Testing and Materials (ASTM), 1999. D-5088 Standard Practice for Decontamination of Field Equipment Used at Nonradioactive Waste Sites. ASTM, West Conshocken, PA. (www.astm.org)

U.S. Environmental Protection Agency (EPA), 2003. Environmental Technology Verification Report: Geoprobe Inc., Mechanical Bladder Pump Model MB470. Office of Research and Development, Washington, D.C. EPA/ 600R-03/086. August.

U.S. Environmental Protection Agency (EPA), 1997. Expedited Site Assessment Tools for Underground Storage Tank Sites: A Guide for Regulators. Office of Solid Waste and Emergency Response. EPA 510-B-97-001. March.

Geoprobe®, 2002. Groundwater Quality and Turbidity vs. Low Flow. Geoprobe Systems®, Salina, KS. May.

Nielsen, David M., and Gillian L. Nielsen, 2002. Technical Guidance on Low-Flow Purging & Sampling and Minimum-Purge Sampling: Second Edition. The Nielsen Environmental Field School, Galena, OH. April.

Parker, Louise V. and Thomas A. Renney, 1998. Sampling Trace-Level Organic Solutes with Polymeric Tubing, Part 2. Dynamic Studies. Groundwater Monitoring & Remediation (GWMR) Vol. XVIII No. 1, pages 148-155. Winter.

Puls, Robert W., and Michael J. Barcelona, 1996. Ground Water Issue: Low-Flow (Minimal Drawdown) Ground Water Sampling Procedures. EPA/540/S-95/504. April.

Equipment and tool specifications, including weights, dimensions, materials, and operating specifications included in this brochure are subject to change without notice. Where specifications are critical to your application, please consult Geoprobe Systems®.

Geoprobe® Systems

A DIVISION OF KEJR, INC.

-Corporate Offices-
601 N. Broadway • Salina, KS 67401
1-800-436-7762 • Fax 785-825-2097
www.geoprobe.com

SOP FOR GEOPROBE MACRO-CORE SAMPLER

GEOPROBE MACRO-CORE® SOIL SAMPLER

STANDARD OPERATING PROCEDURE

Technical Bulletin No. 95-8500

PREPARED: November, 1995

REVISED: September, 1998

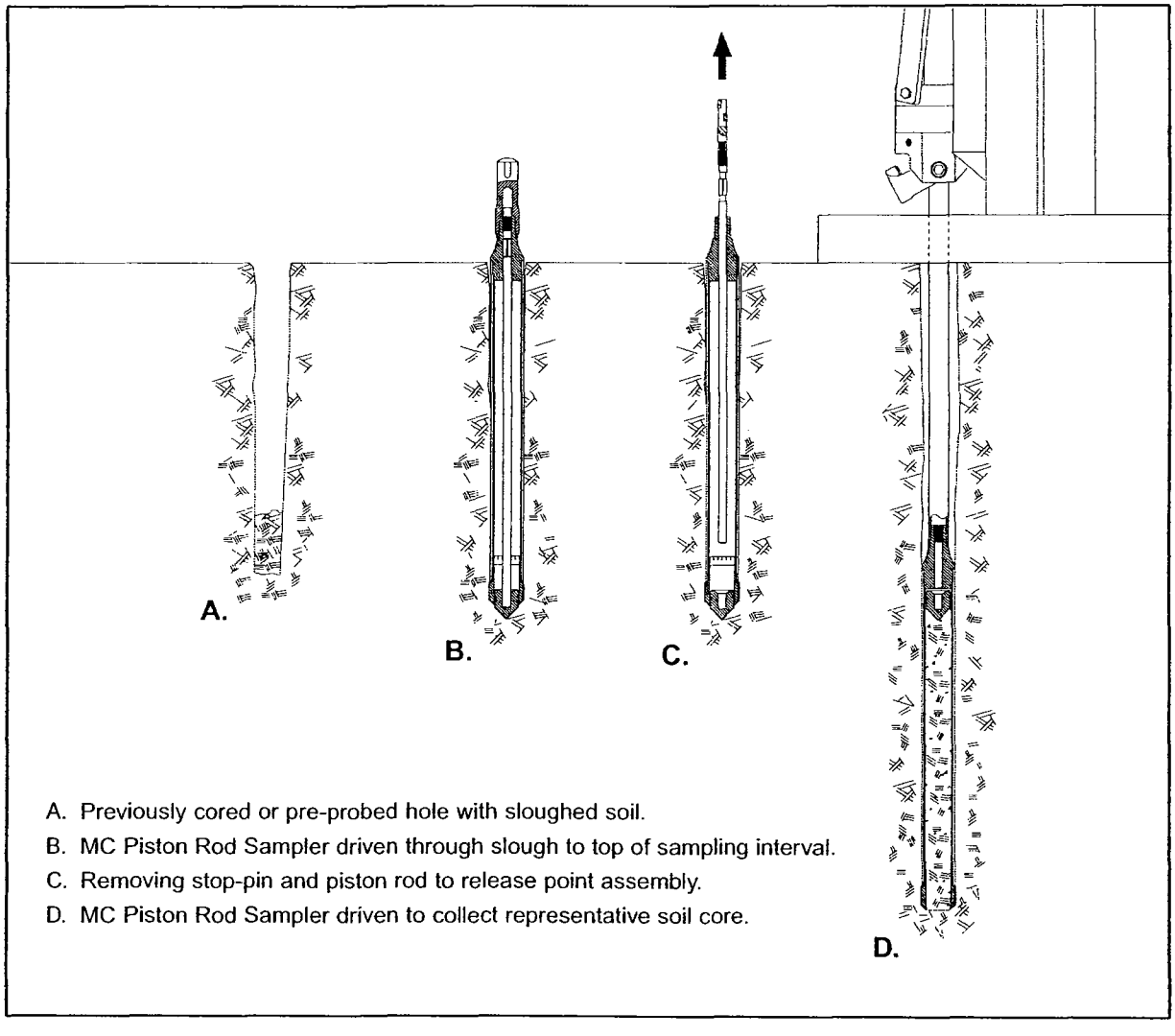

OPERATION OF MACRO-CORE® PISTON ROD SOIL SAMPLING SYSTEM

Geoprobe® Systems

A DIVISION OF KEJR, INC.

Geoprobe® is a Registered Trademark of Kejr, Inc., Salina, Kansas

Macro-Core® is a Registered Trademark of Kejr, Inc., Salina, Kansas

Macro-Core® and Large Bore Soil Samplers manufactured under US Patent 5,606,139.

Macro-Core® Closed-Piston Drive Point manufactured under US Patent 5,542,481

COPYRIGHT© 1995, 1996, 1997, 1998 by Kejr, Inc.
ALL RIGHTS RESERVED.
No part of this publication may be reproduced or transmitted in any form or by any means, electronic or mechanical, including photocopy, recording, or any information storage and retrieval system, without permission in writing from Kejr, Inc.

1.0 OBJECTIVE

The objective of this procedure is to collect a representative soil sample at depth and recover it for visual inspection and/or chemical analysis.

2.0 BACKGROUND

2.1 Definitions

Geoprobe®*: A brand name of high quality, hydraulically-powered machines that utilize both static force and percussion to advance sampling and logging tools into the subsurface.
* *Geoprobe® is a registered trademark of Kejr, Inc., Salina, Kansas*

Macro-Core® Soil Sampler*: A solid barrel, direct push device for collecting continuous core samples of unconsolidated materials at depth. Although other lengths are available, the standard Macro-Core® Sampler has an assembled length of approximately 52 inches (1321 mm) with an outside diameter (OD) of 2.2 inches (56 mm). Collected samples measure up to 1300 ml in volume in the form of a 1.5-inch x 45-inch (38 mm x 1143 mm) core contained inside a removable liner. The Macro-Core® Sampler may be used in an open-tube or closed-point configuration.
* *Macro-Core® is a registered trademark of Kejr, Inc., Salina, Kansas*

Liner: A removable/replaceable, thin-walled tube inserted inside the Macro-Core® sample tube for the purpose of containing and storing soil samples. While other lengths are available, the standard Macro-Core® Liner is 1.75 inches OD x 46 inches long (44 mm x 1168 mm). Liner materials include stainless steel, Teflon®, PVC, and PETG.

2.2 Discussion

In this procedure, an assembled Macro-Core® Soil Sampler is driven one sampling interval into the subsurface and then retrieved using a Geoprobe soil probing machine. The collected soil core is removed from the sampler along with the used liner. After decon, the Macro-Core® sampler is reassembled using a new liner. The clean sampler is then advanced back down the same hole to collect the next soil core. The Macro-Core® Sampler may be used as an open-tube or closed-point sampler.

The Macro-Core® Soil Sampler is most commonly used as an open-tube sampler (Fig. 2.1A). In this configuration, coring starts at the ground surface with a sampler that is open at the leading end. The sampler is driven into the subsurface and then pulled from the ground to retrieve the first soil core. In stable soils, an open-tube sampler is advanced back down the same hole to collect the next core.

In unstable soils which tend to collapse into the core hole, the Macro-Core® Sampler can be equipped with a piston rod point assembly (Fig. 2.1B). The point fits firmly into the cutting shoe and is held in place by a piston rod and stop-pin. The MC Piston Rod System prevents collapsed soil from entering the sampler as it is advanced to the bottom of an existing hole, thus ensuring collection of a reprentative sample.

The Macro-Core® Piston Rod Sampler is not designed to be driven through undisturbed soil. A probe hole must be opened above the sampling interval either by removing continuous soil cores with an open-tube sampler, or by advancing a Macro-Core® Pre-Probe to depth.

Once a hole is opened to the appropriate depth, an assembled MC Piston Rod Sampler is advanced through any slough material to the top of the next sampling interval. Extension rods are inserted through the probe

rod string and threaded onto the MC Stop-Pin Assembly. When unthreaded, the stop-pin is removed from the tool string with the extension rods. (MC Piston rod is removed with stop-pin if MC Stop-Pin Coupler is utilized). With the point assembly now released, the tool string is driven into the subsurface to fill the sampler with soil. The point assembly is later retrieved from the sampler with the liner and soil core.

Loose soils may fall from the bottom of the sampler as it is retrieved from depth. The MC Core Catcher (Fig. 3.1) alleviates this problem. Excellent results are obtained when the core catcher is used with saturated sands and other non-cohesive soils. A core catcher should not be used with tight soils as it may actually inhibit sample recovery. Constructed of PVC, the core catcher is suitable for use with all Geoprobe liners.

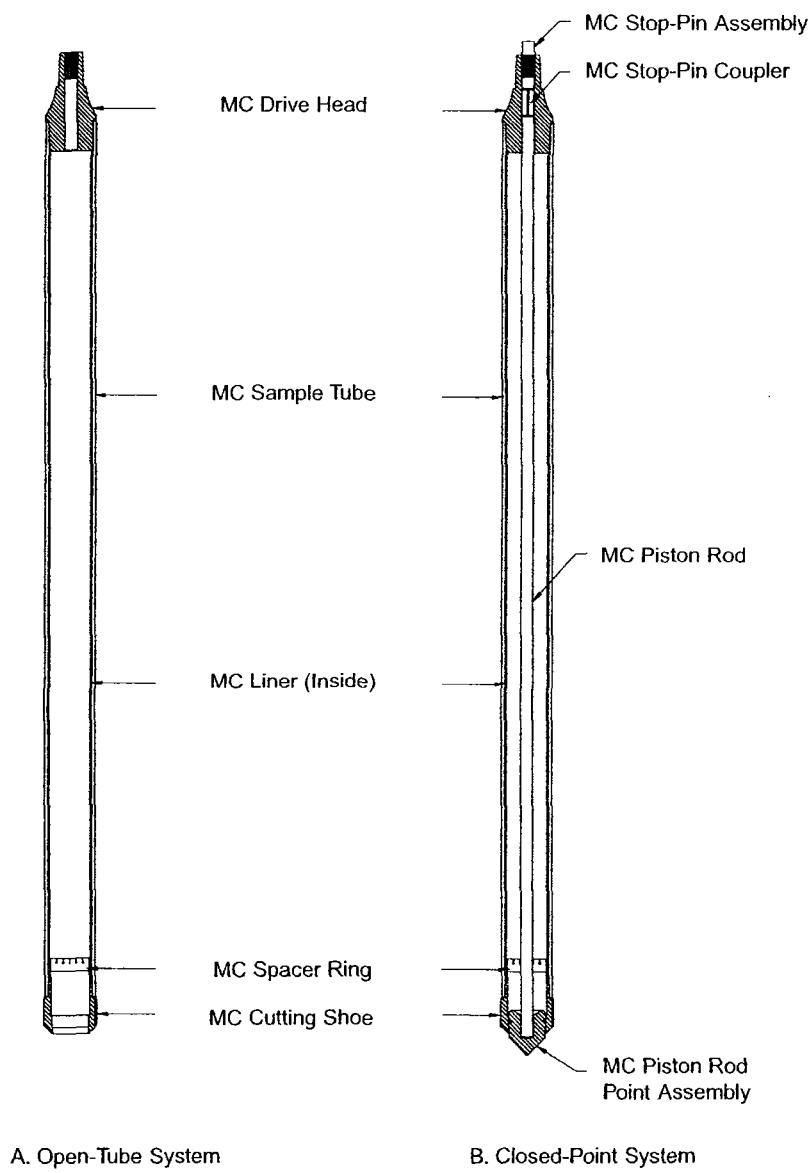

FIGURE 2.1
Macro-Core® Soil Sampler Configurations

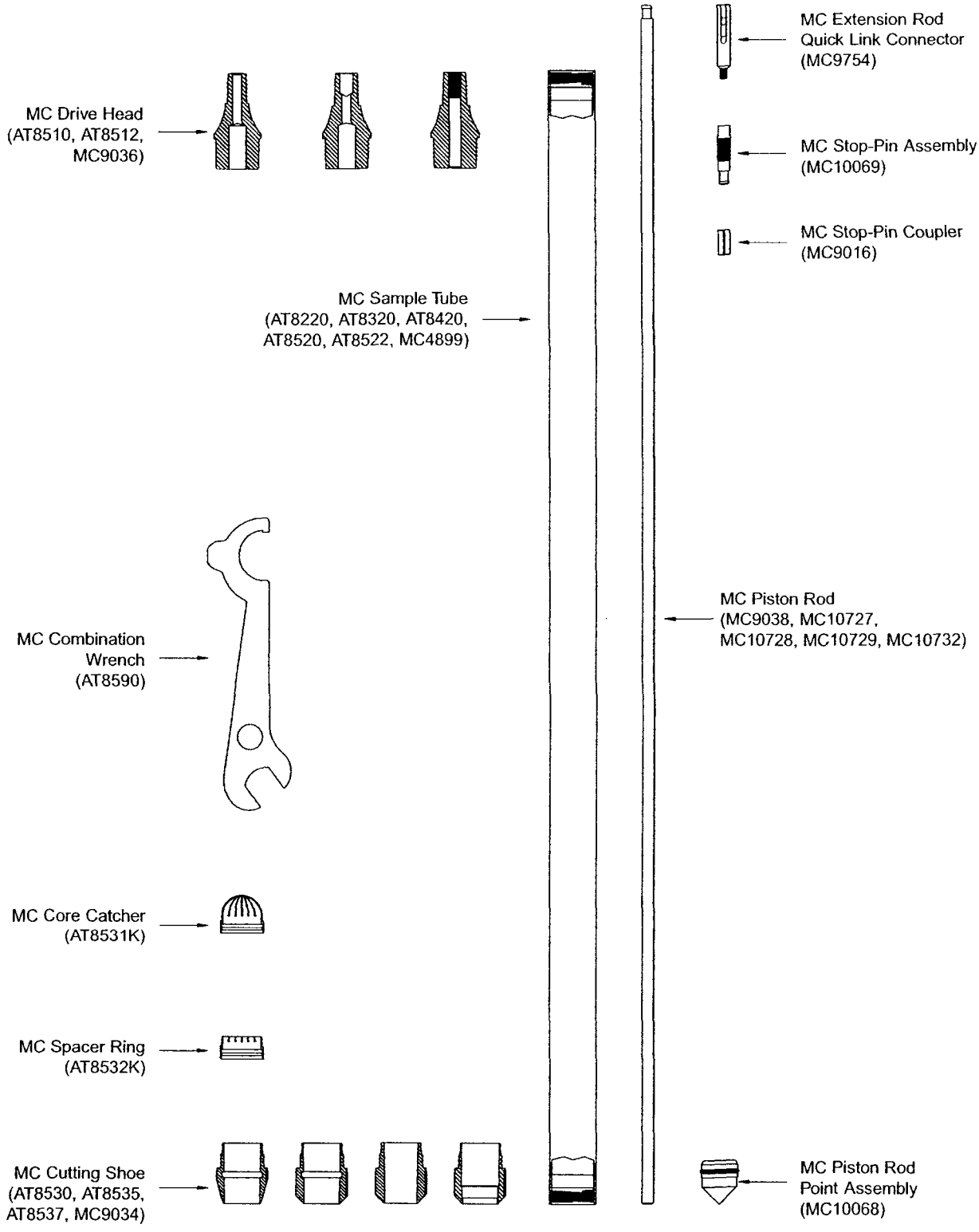

FIGURE 3.1
Macro-Core® Soil Sampler Parts

3.0 REQUIRED EQUIPMENT

The following equipment is used to recover samples using the Geoprobe Macro-Core® Soil Sampler and probing system. Although many options are available (sampler length, liner material, etc.), the basic sampler configuration does not change. Refer to Figure 3.1 (previous page) to view the major components of the Macro-Core® sampler.

MACRO-CORE® SAMPLER PARTS	PART NUMBER
MC Drive Head, for use with 1.0-inch probe rods	AT8510
MC Drive Head, for use with 1.25-inch probe rods	AT8512
MC Sample Tube, 24-inch, unplated	AT8220
MC Sample Tube, 36-inch, unplated	AT8320
MC Sample Tube, 1-meter, unplated	AT8420
MC Sample Tube, 48-inch, Ni-plated	AT8520
MC Sample Tube, 48-inch, unplated	AT8522
MC Sampler Tube, 60-inch, unplated	MC4889
MC Cutting Shoe, standard	AT8530
MC Cutting Shoe, heavy-duty	AT8535
MC Cutting Shoe, 0.125 inches undersized	AT8537
MC Combination Wrench	AT8590
Nylon Brush for MC Sample Tubes	BU700

MACRO-CORE® PISTON ROD SYSTEM PARTS	PART NUMBER
O-Rings for MC Stop-Pin (pkg. of 25)	AT6312R
O-Rings for MC Piston Rod Point (pkg. of 25)	DT4070R
MC Stop-Pin Coupler (pkg. of 5)	MC9016
MC Cutting Shoe, for use with piston rod point	MC9034
MC Drive Head, for use with 1.25-inch probe rods and stop-pin	MC9036
MC Piston Rod, 48-inch	MC9038
MC Extension Rod Quick Link Connector	MC9754
MC Piston Rod Point Assembly	MC10068
MC Stop-Pin Assembly	MC10069
MC Piston Rod/Stop-Pin Assembly, 48-inch	MC10070
MC Piston Rod, 60-inch	MC10727
MC Piston Rod, 36-inch	MC10728
MC Piston Rod, 24-inch	MC10729
MC Piston Rod, 1-meter	MC10732
MC Piston Rod/Stop-Pin Assembly, 60-inch	MC11881
MC Piston Rod/Stop-Pin Assembly, 36-inch	MC12028
MC Piston Rod/Stop-Pin Assembly, 24-inch	MC12029
MC Piston Rod/Stop-Pin Assembly, 1-meter	MC12030
MC Quick Link Kit	MC12131

MACRO-CORE® LINERS AND ACCESSORIES	PART NUMBER
MC Stainless Steel Liner Assembly, 48-inch	AT7235
MC Teflon® Liner Assembly, 48-inch	AT724
MC PETG Liner, thin-wall, 48-inch, (box of 66)	AT725K
MC Vinyl End Caps (66 pair)	AT726K
MC Heavy-Duty PETG Liner Assembly, 48-inch (box of 66)	AT825K
MC PVC Liner Assembly, clear, 24-inch (box of 66)	AT922K
MC PVC Liner Assembly, clear, 36-inch (box of 66)	AT923K
MC PVC Liner Assembly, clear, 1-meter (box of 66)	AT924K
MC PVC Liner Assembly, clear, 48-inch (box of 66)	AT925K
MC Liner Cutter Kit	AT8000K
MC Liner Cutting Tool*	AT8010
MC Liner Cutter Holder*	AT8020
MC Liner Cutter Blades (pkg. of 5)*	AT8030
MC Liner Circular Cutting Tool	AT8050
MC Core Catchers (pkg. of 25)	AT8531K
MC Spacer Rings (pkg. of 25)	AT8532K
MC PVC Liner Assembly, clear, 60-inch (box of 66)	11984

GEOPROBE TOOLS**	PART NUMBER
Drive Cap, for use with 1.25-inch probe rods	AT1200
Slotted Drive Cap, for use with 1.25-inch probe rods	AT1202
Pull Cap, for use with 1.25-inch probe rods	AT1204
Probe Rod, 1.25 inches x 36 inches	AT1236
Probe Rod, 1.25 inches x 1 meter	AT1239
Probe Rod, 1.25 inches x 48 inches	AT1248
Probe Rod, 1.25 inches x 60 inches	AT1260
MC Pre-Probe, 2-inch OD	AT1247
MC Pre-Probe, 2.5-inch OD	AT1242
MC Pre-Probe, 3-inch OD	AT1252
Extension Rod, 36-inch	AT67
Extension Rod, 48-inch	AT671
Extension Rod, 1-meter	AT675
Extension Rod Coupler	AT68
Extension Rod Handle	AT69
Extension Rod Quick Links	AT694K
Machine Vise	FA300

ADDITIONAL TOOLS

Combination Wrench, 1/2-inch (or) Adjustable Wrench
Pipe Wrenches (2)

*The items are included in the MC Liner Cutter Kit (AT8000K).
**Geoprobe tools and accessories are also available for use with 1.0-inch OD (outside diameter) probe rods.

4.0 OPERATION

Size and material options have resulted in an extensive list of Macro-Core® part numbers. To simplify the instructions presented in this document, part numbers are listed in the illustrations only. Refer to Pages 6 and 7 for a complete parts listing.

4.1 Decontamination

Before and after each use, thoroughly clean all parts of the soil sampling system according to project requirements. A new, clean liner is recommended for each sample if using PETG, PVC, or Teflon® liners.

Stainless Steel Liners from Geoprobe Systems are cleaned at the factory with an agitated detergent bath at a temperature of approximately 180 degrees F. After rinsing with 180-degree tap water, the liner is air dried, wrapped in PVC outer cladding, and capped with vinyl end caps.

Thoroughly clean the sampler before assembly, not only to remove contaminants but also to ensure correct operation. Dirty threads complicate assembly and may lead to sampler failure. Sand is particularly troublesome as it can bind liners in the sample tube resulting in wasted time and lost samples.

4.2 Field Blank

It is suggested that a field blank be taken on a representative sample liner prior to starting a project and at regular intervals during extended projects. Liners can become contaminated in storage. A field blank will prove that the liners do not carry contaminates which can be transferred to soil samples. The following information is offered as an example method which may be used to take a field blank. Make the appropriate modifications for the specific analytes of interest to the investigation.

Example Procedure:

REQUIRED EQUIPMENT

MC Liner ..... (1)
MC Vinyl End Caps ..... (2)
Distilled Water ..... (100 ml)
VOA Vial (or other appropriate sample container) ..... (1)

1. Place a vinyl end cap on one end of the liner.

2. Pour 100 milliliters of distilled water (or other suitable extracting fluid) into the liner.

3. Place a vinyl end cap on the open end of the liner.

4. From the vertical position, repeatedly invert the liner so that the distilled water contacts the entire inner surface. Repeat this step for one minute.

5. Remove one end cap from the liner, empty contents into an appropriate sample container, and cap the container.

6. Perform analysis on the extract water for the analytes of interest to the investigation.

4.3 Open-Tube Sampler Assembly

1a. **(With MC Core Catcher)** Place the open end of an MC Core Catcher over the threaded end of an MC Cutting Shoe as shown in Figure 4.1. Apply pressure to the core catcher until it snaps into the machined groove on the cutting shoe.

NOTE: AT725K (thin-wall PETG) liners have a swedged end which is generally slipped directly over the groove in the cutting shoe (Fig. 4.2). To use a core catcher with these liners, cut approximately 0.25 inches (6 mm) of material from the swedged end of the liner and proceed to Step 2.

1b. **(Without MC Core Catcher)** Push the base of an MC Spacer Ring onto the threaded end of a cutting shoe until it snaps into place (Fig. 4.3).

NOTE: With the exception of AT-725K (thin-wall PETG) liners, all liners must utilize either a spacer ring or core catcher. PETG liners have a swedged end which slides directly over the end of the cutting shoe. Attach the liner to the cutting shoe (Fig. 4.2) before proceeding to Step 2.

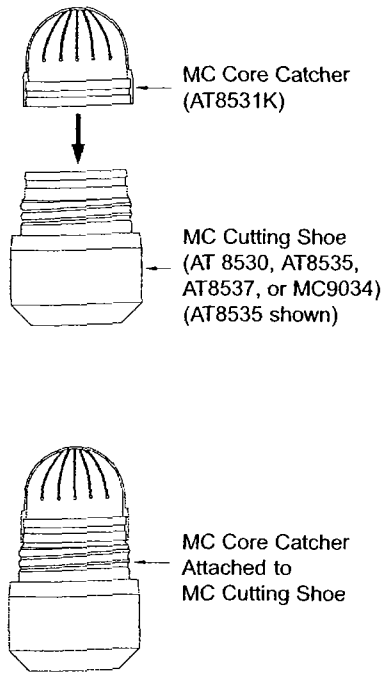

FIGURE 4.1
Core Catcher Attachment

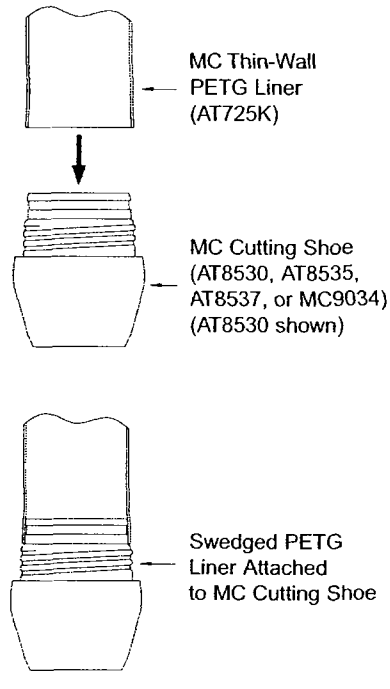

FIGURE 4.2
Thin-Wall Liner Attachment

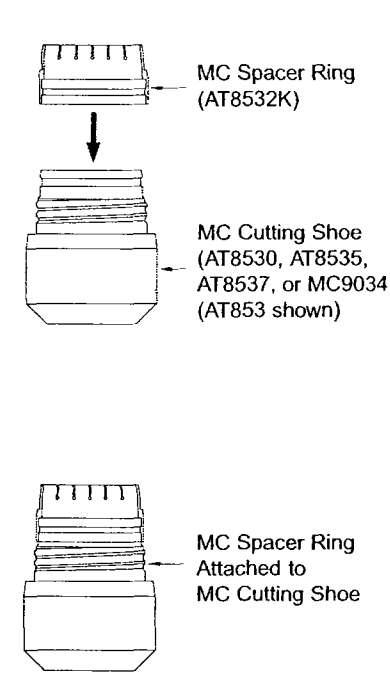

FIGURE 4.3
Spacer Ring Attachment

Refer to Figure 4.4 for identification of sampler parts and assembly sequence

2. Thread the cutting shoe into one end of an MC Sample Tube (Fig. 4.5). Tighten shoe with MC Combination Wrench (Fig. 4.6) until end of sample tube contacts machined shoulder of cutting shoe.

3. Insert a liner into the opposite end of the sample tube (Figure 4.7). The liner is all ready installed if using thin-wall PETG liners (AT725K) without an MC Core Catcher.

4. Thread an MC Drive Head into the top of the sample tube (Fig. 4.8) and securely tighten with the MC Combination Wrench (Fig. 4.9). Ensure that the end of the sample tube contacts the machined shoulder of the drive head.

Sampler Assembly is Complete.

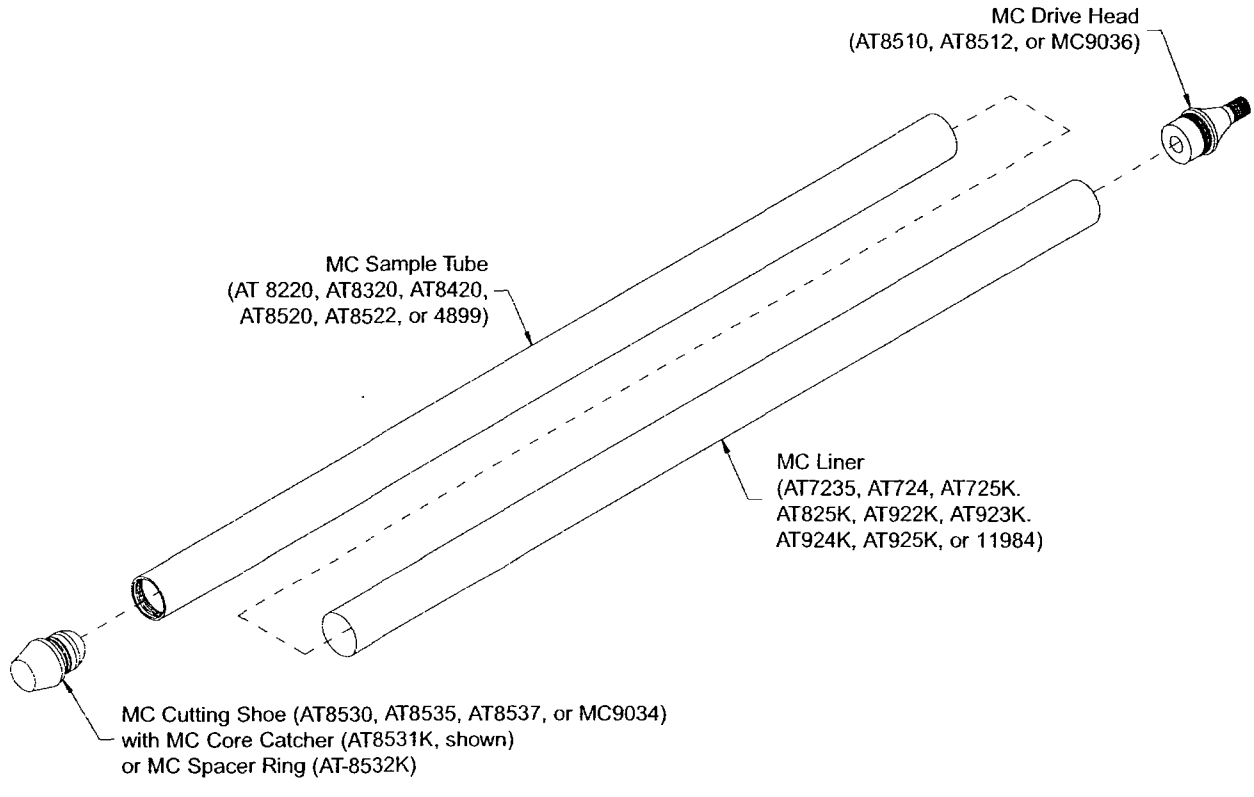

FIGURE 4.4
Macro-Core® Open-Tube Sampler Assembly

Figure 4.5. Thread an MC Cutting Shoe (shown with MC Core Catcher) into either end of a MC Sample Tube.

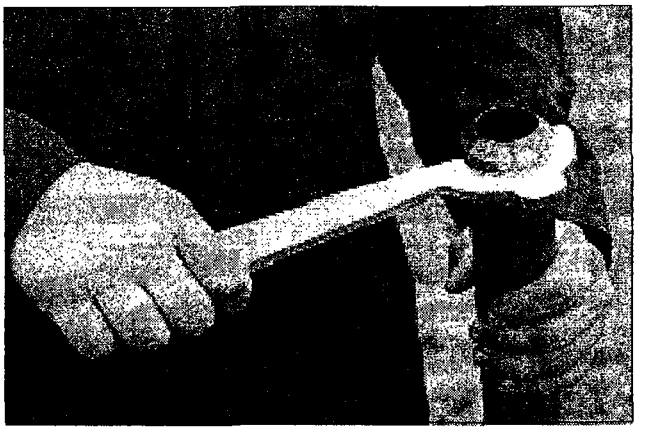

Figure 4.6. Tighten MC Cutting Shoe with MC Combination Wrench.

Figure 4.7. Insert liner into opposite end of MC Sample Tube.

Figure 4.8. Thread MC Drive Head into top of MC Sample Tube.

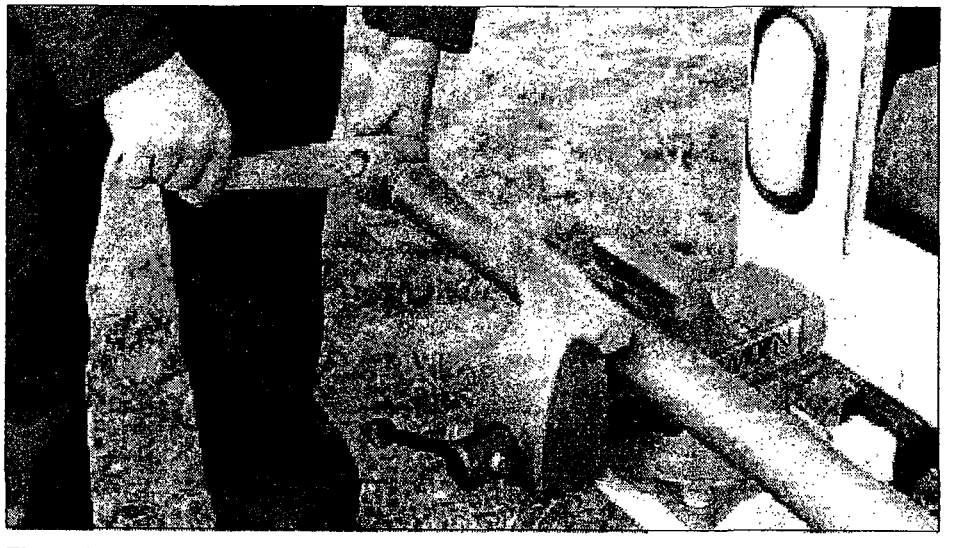

Figure 4.9. Tighten MC Drive Head with MC Combination Wrench. A vise is often used to hold the MC Sample Tube during this step.

4.4 Stop-Pin Coupler

The Stop-Pin Coupler attaches the Stop-Pin to the Piston Rod (Fig. 4.10). When connected together, these three parts form the Stop-Pin/Piston Rod Assembly. All three items may be ordered either individually or together as one complete assembly. Refer to Section 3.0 for specific assembly and item part numbers.

It is not always necessary to use the stop-pin coupler with the MC Piston Rod System. The coupler allows the piston rod to be removed from the sampler along with the stop-pin so that sample recovery is not hindered by the weight of the piston rod. If you find that recovery is not a problem with the formation you are sampling (such as clays), do not use the stop-pin coupler.

If sampling in formations where sample recovery may be a problem (such as loose sands), the stop-pin coupler is highly recommended. Removing the piston rod with the stop-pin significantly reduces the amount of tooling weight that the soil core must support as the sampler is driven. Sample compression is also reduced when the stop-pin coupler is utilized.

Instructions for connecting the stop-pin coupler to the stop-pin and piston rod are given below.

1. Hold a piston rod in vertical position with leading end resting on a solid surface.

2. Place a Stop-Pin Coupler on top of the Piston Rod and tap with a hammer to seat (Fig. 4.11).

3. Snap a Stop-Pin into the coupler using a hammer or 12-inch probe rod and drive cap (Fig. 4.12).

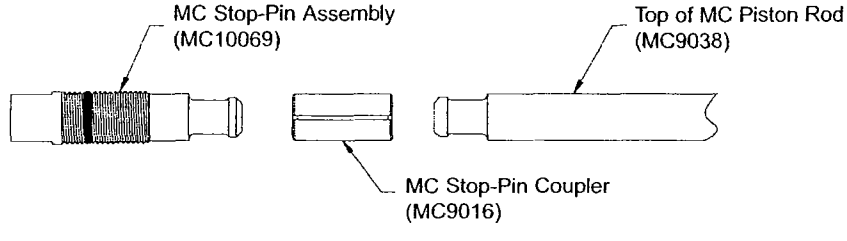

FIGURE 4.10
MC Stop-Pin Coupler Attaches MC Stop-Pin to MC Piston Rod

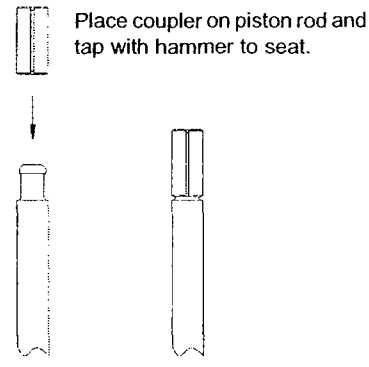

FIGURE 4.11
Tap Stop-Pin Coupler onto Piston Rod

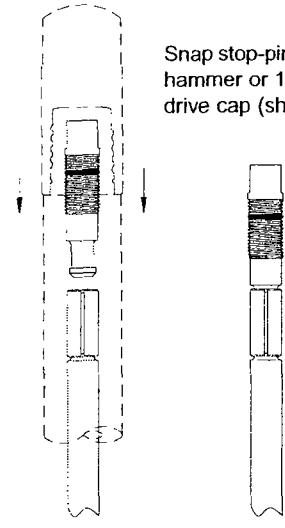

FIGURE 4.12
Tap Stop-Pin into Coupler with Probe Rod

4.5 MC Piston Rod Sampler (closed-point system) Assembly

The MC Piston Rod System seals the leading end of the sampler with a point assembly that is held in place with a piston rod and stop-pin. Once advanced to the top of the sampling interval, the stop-pin is removed with extension rods that are inserted down through the probe rod string. The piston rod will be extracted along with the stop-pin if a stop-pin coupler was used. Refer to Section 4.4 for help in determining when a stop-pin coupler is needed.

NOTE: The MC Piston Rod System requires an MC9036 MC Drive Head and an MC9034 MC Cutting Shoe. No other Macro-Core® drive heads or cutting shoes are compatible with this system. The larger 1.25-inch OD Probe Rods are also required to operate MC Piston Rod System.

1. Install an O-ring in the machined groove on the piston rod point (Fig. 4.13). Lubricate the O-ring with a small amount of deionized water.

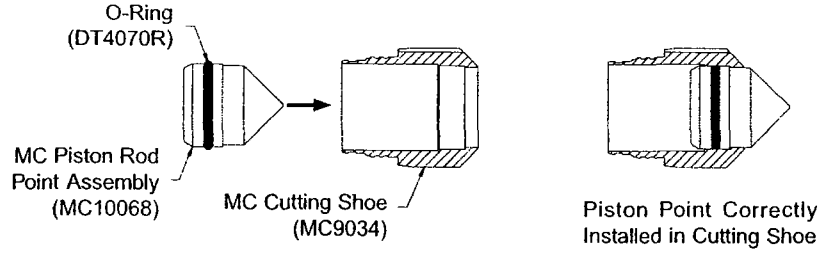

FIGURE 4.13
Installation of MC Piston Rod Point Assembly in MC Cutting Shoe

2. Push the piston rod point completely into the cutting shoe as shown in Figure 4.13.

3a. **(With MC Core Catcher)** Place the open end of a core catcher over the threaded end of the cutting shoe as shown in Figure 4.14. Apply pressure to the core catcher until it snaps into the machined groove on the cutting shoe.

NOTE: AT725K (thin-wall PETG) liners have a swedged end that is slipped directly over the groove in the cutting shoe (Fig. 4.15). To use a core catcher with these liners, simply cut approximately 0.25 inches (6 mm) of material from the swedged end of the liner and continue to Step 4.

3b. **(Without Core Catcher)** Push the base of an MC Spacer Ring onto the threaded end of the cutting shoe until it snaps into place (Fig. 4.16).

NOTE: With the exception of AT725K (thin-wall PETG) liners, all liners must utilize either a spacer ring or core catcher. Thin-wall liners have a swedged end which slides directly over the end of the cutting shoe. If using thin-wall liners, attach the liner to the cutting shoe (Fig. 4.15) before proceeding.

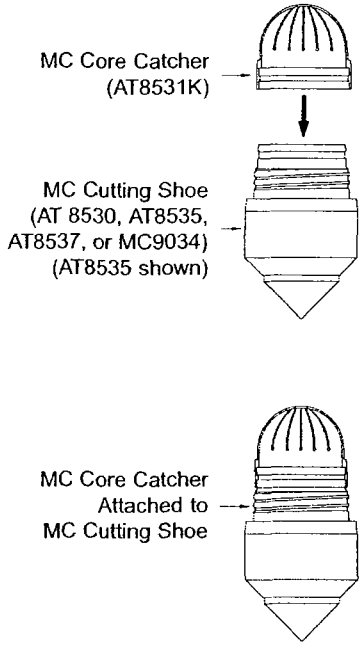

FIGURE 4.14
Core Catcher Attachment With Point Assembly

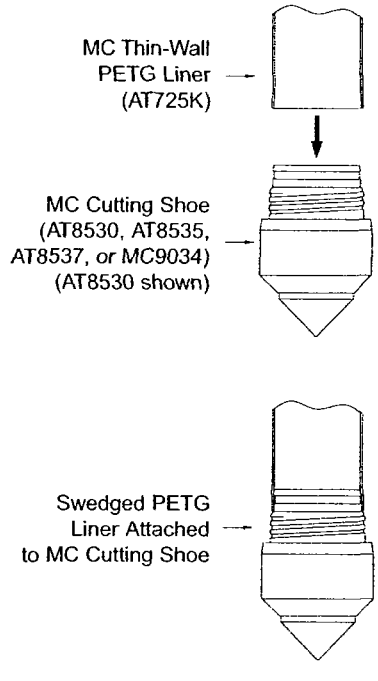

FIGURE 4.15
Thin-Wall Liner Attachment With Point Assembly

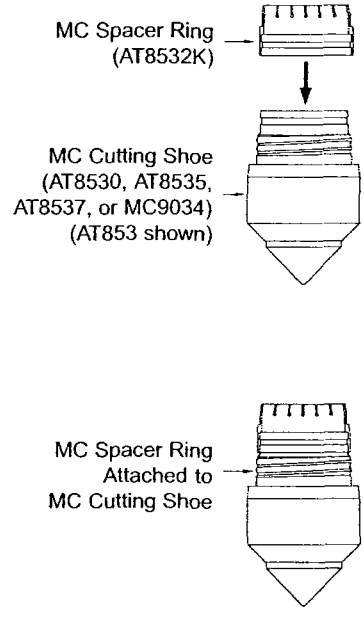

FIGURE 4.16
Spacer Ring Attachment With Point Assembly

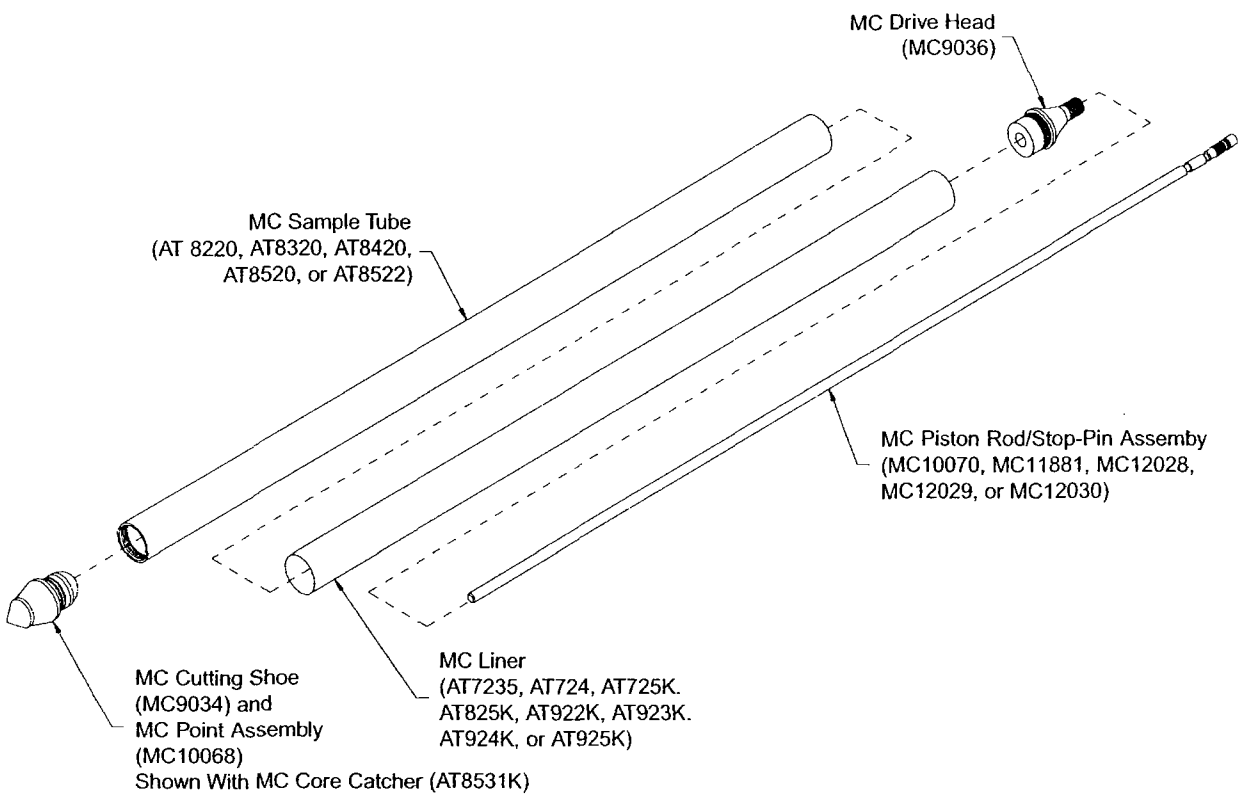

FIGURE 4.17
Macro-Core® Closed-Point Sampler Assembly

Refer to Figure 4.17 for identification of sampler parts and assembly sequence

4. Thread the cutting shoe (with point) into one end of an MC Sample Tube. Tighten until the end of the sample tube contacts the machined shoulder of the cutting shoe.

5. Insert an appropriate MC Liner into the sample tube (Fig. 4.18). The liner is all ready installed if using thin-wall PETG liners without a core catcher.

6. Thread an MC Drive Head into the top of the sample tube (Fig. 4.19) and securely tighten with the combination wrench (Fig. 4.20) until the end of the sample tube contacts the machined shoulder of the drive head.

(continued on Page 16)

Figure 4.18. Insert liner into opposite end of MC Sample Tube.

Figure 4.19. Thread MC Drive Head into top of MC Sample Tube.

Figure 4.20. Tighten MC Drive Head with MC Combination Wrench. A vise is often used to hold the MC Sample Tube during this step.

7. Insert an MC Piston Rod/Stop-Pin Assembly through the drive head until the stop-pin threads contact the top of the drive head (Fig. 4.21). Ensure that an O-ring has been placed on the stop-pin.

   The leading end of the piston rod may hangup on the core catcher during assembly. When this happens, raise the assembly 6-8 inches above the core catcher and then allow the assembly to fall back down into the sampler. This should allow the piston rod to pass through the fingers of the core catcher.

   Note: The MC Stop-Pin Coupler may be omitted under certain sampling conditions. Refer to Section 4.4 for information regarding when a coupler is needed and instructions for coupler installation.

8. Thread the stop-pin into the drive head (left-hand threads) with an adjustable or 1/2-inch combination wrench. Fully tighten the stop-pin and then back it off slightly (~10 degrees). This avoids locking the stop-pin threads and allows it to later be unthreaded from the ground surface with extension rods.

Sampler Assembly is Complete.

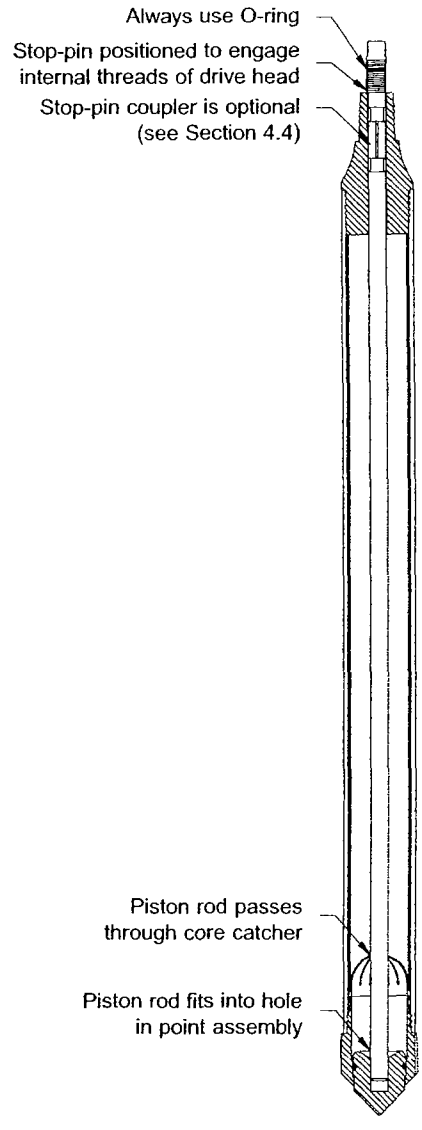

FIGURE 4.21
MC Piston Rod/Stop-Pin Assembly Installs Through MC Drive Head

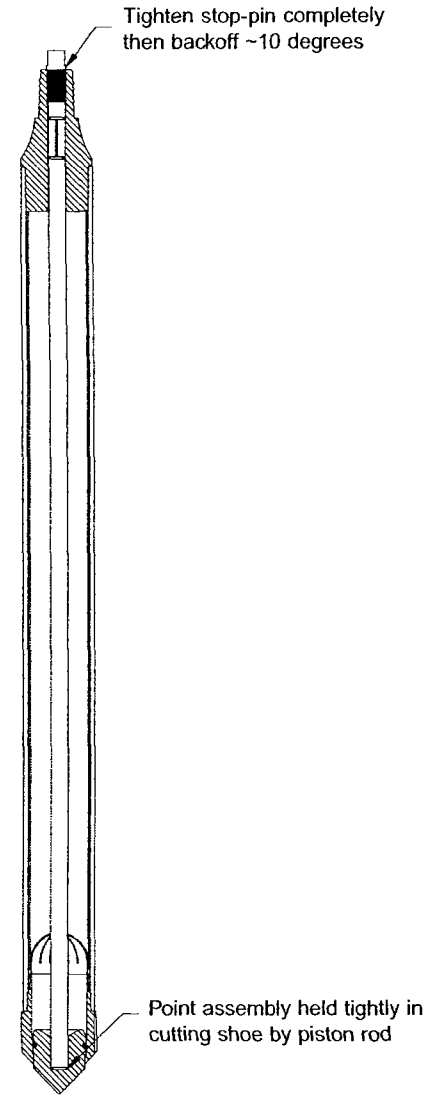

FIGURE 4.22
Thread MC Stop-Pin tachment with Piston Assembly

4.6 Pilot Hole

A pilot hole prevents excessive sampler wear in tough soils and saves time when a discrete soil core is desired. The pilot hole is created by driving a 2.0-, 2.5-, or 3.0-inch MC Pre-Probe (see Section 3.0 for part numbers) to the top of the sampling interval. Soil surfaces containing gravel, asphalt, hard sands, or rubble should be pre-probed to reduce wear on the cutting shoe and to avoid damage to the sampler. To save time when collecting a discrete soil core, pre-probe to the sampling interval rather than coring to depth with the sampler.

4.7 Open-Tube Sampling

The Macro-Core® Open-Tube Sampler is used to gather continuous soil cores beginning from ground surface. A representative soil sample is obtained by driving the assembled sampler one sampling interval into the subsurface through undisturbed soil. Upon retrieving the sampler, the liner and soil core are removed. The sampler is then properly decontaminated, reassembled with a new liner, and inserted back down the same hole to collect the next soil core.

Instructions for operationg of the Open-Tube Macro-Core® Sampler are given in this section.

1. Thread a Drive Cap (AT1200) onto the drive head of an assembled Open-Tube Macro-Core® Sampler as shown in Figure 4.23. (Refer to Section 4.3 for sampler assembly).

2. Raise the probe unit hammer assembly to its highest position by fully extending the probe cylinder.

3. Position the MC Sampler for driving as shown in Figure 4.24. Place the sampler directly under the hammer with the cutting shoe centered between the toes of the probe foot. The sampler should now be parallel to the probe derrick. Step back from the unit and visually check sampler alignment.

4. Apply static weight and hammer percussion to advance the sampler until the drive head reaches the ground surface (Fig. 4.25A)

   NOTE: Activate hammer percussion whenever collecting soil. Percussion helps shear the soil at the leading end of the sampler so that it moves into the sample tube for increased recovery.

5. Raise the hammer assembly a few inches to provide access to the top of the sampler.

6. Remove the drive cap and thread a Pull Cap (AT1204) onto the sampler drive head.

7. Lower the hammer assembly and hook the hammer latch over the pull cap (Fig. 4.26). Raise the hammer assembly to pull the sampler completely out of the ground.

8. Procede to Section 4.9 for instructions on recovering the soil core from the MC Sampler.

To sample consecutive soil cores, advance a clean sampler down the previously opened hole (Fig. 4.25B) to the top of the next sampling interval (Fig. 4.25C). Drive the tool string the length of the sampler to collect the next soil core (Fig. 4.25D). Switch to an MC Piston Rod Sampler if excessive side slough is encountered.

NOTE: Use caution when advancing or retrieving the sampler within an open hole. Low side friction may allow the sampler and probe rods to drop down the hole when released. To prevent equipment loss, hold onto the tool string with a pipe wrench when needed.

Figure 4.23. Thread drive cap onto sampler drive head.

Figure 4.24 MC Sampler positioned for driving into subsurface.

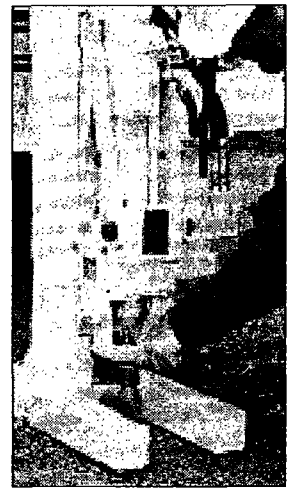

Figure 4.26. Hook hammer latch onto pull cap.

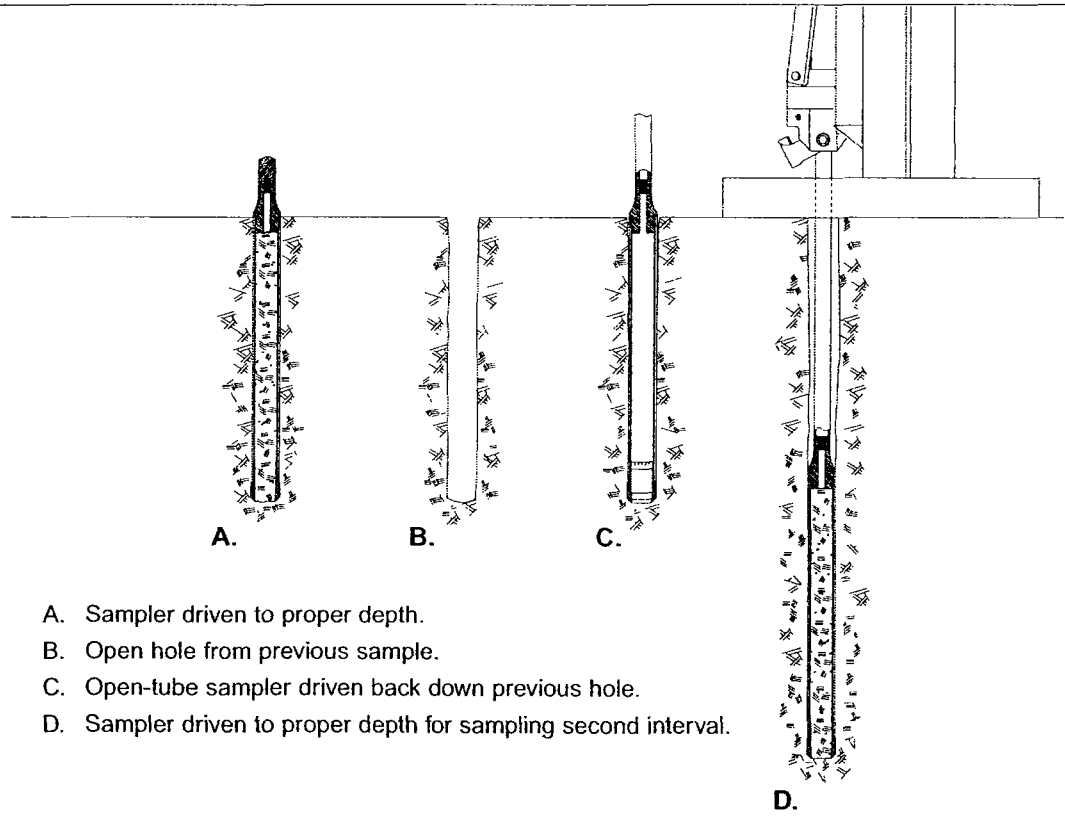

A. Sampler driven to proper depth.
B. Open hole from previous sample.
C. Open-tube sampler driven back down previous hole.
D. Sampler driven to proper depth for sampling second interval.

FIGURE 4.25
Phases of Macro-Core® Open-Tube Soil Sampling

4.8 Closed-Point Sampling with the MC Piston Rod System

Material collapsing from the probe hole sidewall can make it difficult to collect representative soil cores from significant depths with an open-tube sampler. To overcome this problem, the Macro-Core® Sampler can be equipped with a point assembly that is held tightly in the cutting shoe with a piston rod and threaded stop-pin. This allows the sealed sampler to pass through the slough material and then opened at the appropriate sampling interval. Intructions for sampling with the MC Piston Rod System are given in this section.

NOTE: The MC Piston Rod System is designed for continuous core sampling. A probe hole must be opened above the sampling interval either by removing soil with an open-tube Macro-Core® Sampler or by preprobing to depth. Never drive the MC Piston Rod System through undisturbed soil.

1. Attach a Slotted Drive Cap (AT1202) to the drive head of an assembled MC Piston Rod Sampler as shown in Figure 4.27. (Refer to Section 4.5 for sampler assembly.)

   NOTE: The MC Stop-Pin extends slightly from the top of the MC Drive Head. A slotted drive cap is therefore required to allow room for the stop-pin (Fig. 4.27). A standard drive cap may be used once probe rods are added to the tool string.

2. Raise the probe unit hammer assembly to its highest position by fully extending the probe cylinder.

3. Place the leading end of the MC Sampler into the **previously opened hole** (Fig. 4.28A).

4. Advance the sampler down the open hole for the full stroke of the probe machine.

   NOTE: Use caution when advancing the sampler down an open hole. Low side friction may allow the sampler and probe rods to drop down the hole when released. To prevent equipment loss, hold onto the tool string with a pipe wrench when needed.

5. Remove the slotted drive cap and thread a probe rod onto the MC Drive Head. Thread a standard Drive Cap (AT1200) onto the probe rod.

6. Continue advancing the sampler and adding probe rods to the tool string until the desired sampling interval is reached (Fig. 4.28B).

7. Raise the hammer assembly and retract the probe derrick to gain access to the top probe rod.

8. Remove the drive cap and insert extension rods down the inside of the probe rod string. A male Extension Rod Quick Link and an MC Extension Rod Quick Link Connector should be placed on the leading end of the extension rod string (Fig. 4.29) if an MC Stop-Pin Coupler was used during assembly. Nothing is placed on the leading extension rod if a stop-pin coupler was not used.

   Use Extension Rod Couplers or Extension Rod Quick Links (Fig. 4.30) to connect extension rods together until the leading rod contacts the stop-pin . Use an Extension Rod Jig (Fig. 4.30) to hold the down-hole rods while adding more rods to the string.

9. Attach an Extension Rod Handle (Fig. 4.30) to the rod string and slowly rotate the handle clockwise to engage the stop-pin threads. The rods will become harder to turn when the stop-pin threads are fully engaged. Pull up on the rod string to ensure that it is connected to the stop-pin. Continue rotating and periodically lifting the extension rods until the stop-pin is completely unthreaded from the drive head.

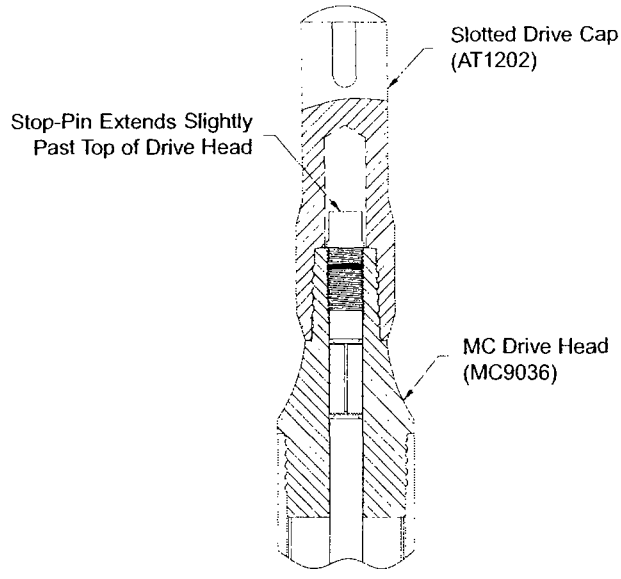

FIGURE 4.27
Slotted Drive Cap Accomodates Stop-Pin

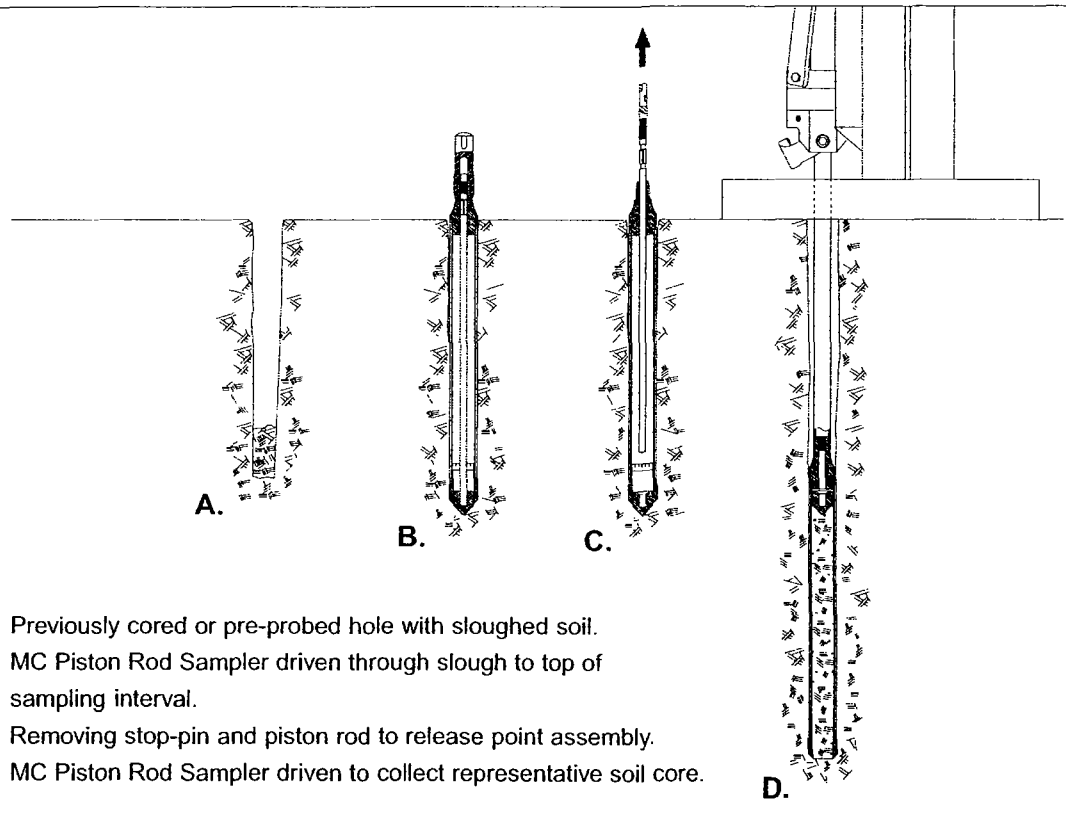

A. Previously cored or pre-probed hole with sloughed soil.
B. MC Piston Rod Sampler driven through slough to top of sampling interval.
C. Removing stop-pin and piston rod to release point assembly.
D. MC Piston Rod Sampler driven to collect representative soil core.

FIGURE 4.28
Phases of Macro-Core® Closed-Point (Piston Rod System) Sampling

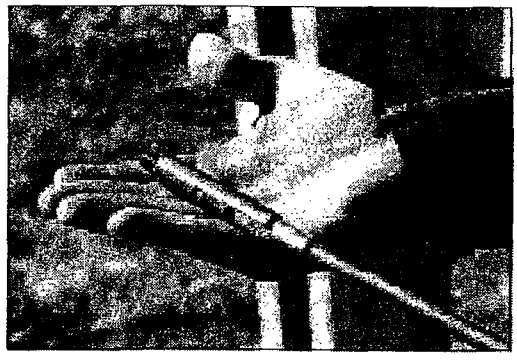

Figure 4.29. Use an MC Extension Rod Quick Link Connector if stop-pin coupler was used in sampler.

NOTE: If the stop-pin is excessively difficult to unthread, pull the entire tool string up approximately 2 inches. This should relieve the force exerted on the point assembly and make releasing the stop-pin much easier.

10. Lift and remove extension rods until the stop-pin is visible above the drive head (Fig. 4.28-C). The stop-pin and piston rod will both be removed from the sampler if a stop-pin coupler was used during assembly (Fig. 4.31-A). Only the stop-pin will be connected to the last extension rod if a coupler was not used (Fig. 4.31-B). Remove the extension rod and stop-pin if the piston rod is not attached.

11. If the piston rod is attached to the stop-pin, carefully unhook the extension rod and male quick link from the MC Extension Rod Quick Link Connector (Fig. 4.31-A). Take care not to deform the stop-pin coupler when removing the extension rod. Now remove the piston rod from inside the tool string.

12. Thread the Drive Cap (AT1200) onto a probe rod and then attach the probe rod to the tool string.

13. Completely raise the probe unit hammer assembly and reposition the probe derrick over the tool string.

14. Apply static weight and hammer percussion to advance the tool string the length of the sampler and collect the soil core (Fig. 4.28-D).

NOTE: Activate hammer percussion whenever collecting soil. Percussion helps shear the soil at the leading end of the sampler so that it moves into the sample tube for increased recovery.

15. Raise the hammer assembly a few inches to provide access to the top of the tool string.

16. Remove the drive cap and thread a Pull Cap (AT1204) onto the top probe rod.

17. Lower the hammer assembly and hook the hammer latch over the pull cap. Raise the hammer assembly to pull the first probe rod out of the ground. Remove the rod and place the pull cap on the next rod of the tool string. Continue pulling probe rods until the MC Sampler is brought to the ground surface.

NOTE: Use caution when retrieving the MC Sampler from depth. Low side friction may allow the sampler and probe rods to drop down the hole when released. To prevent equipment loss, hold onto the tool string with a pipe wrench when needed.

18. Procede to Section 4.9 for instructions on recovering the soil core from the MC Sampler.

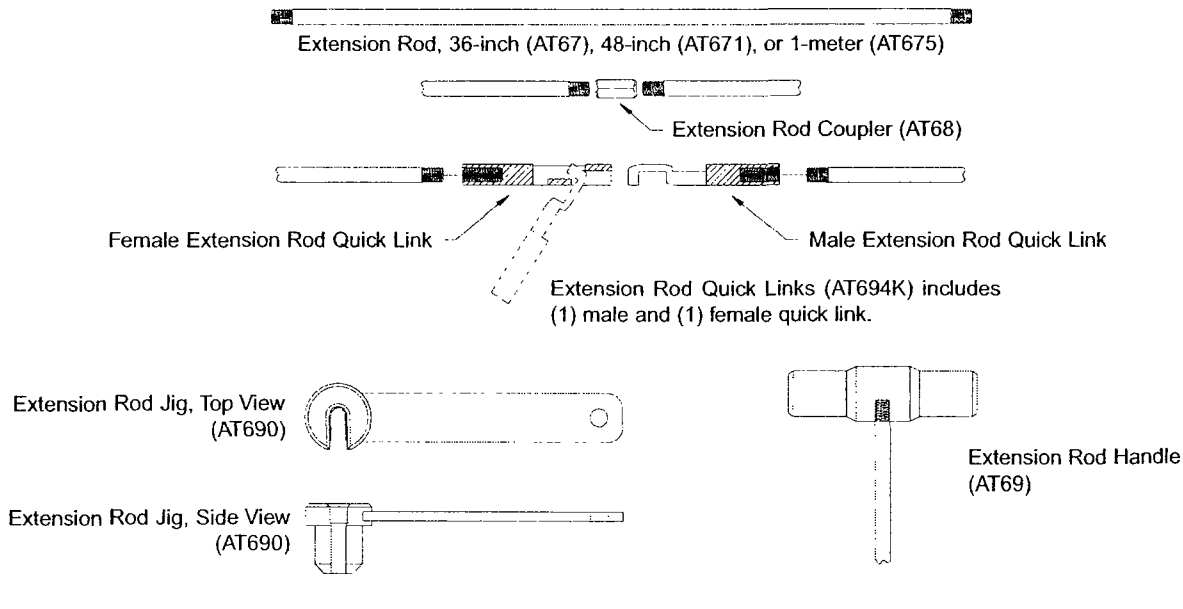

FIGURE 4.30
Extension Rods and Accessories

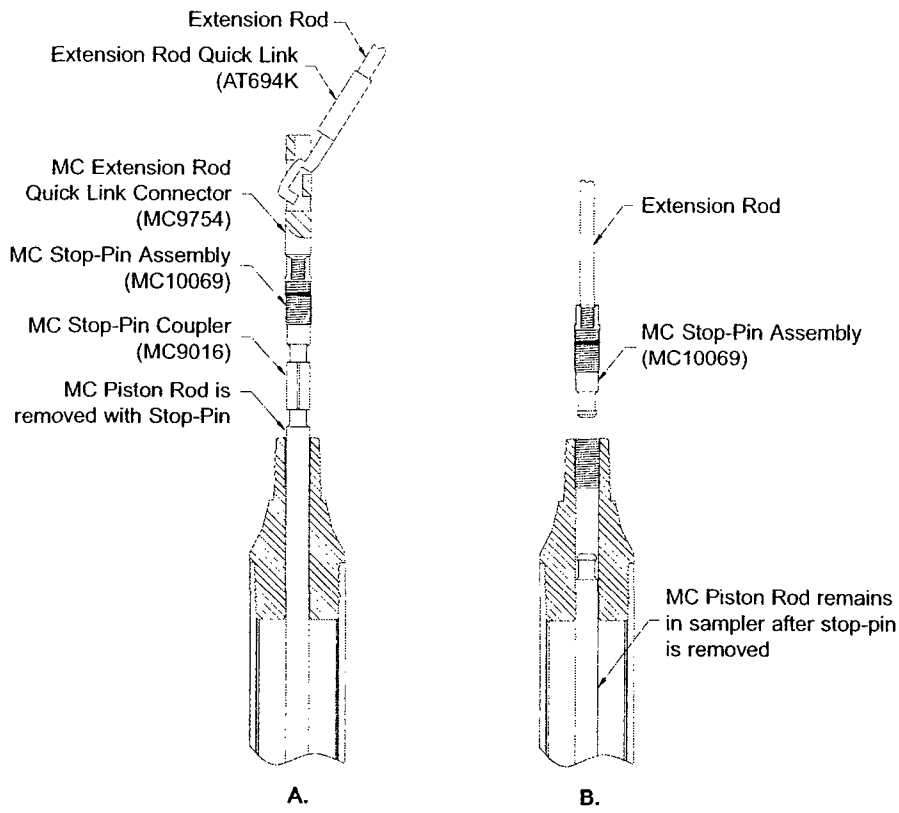

FIGURE 4.31
MC Piston Rod is Removed With Stop-Pin if Stop-Pin Coupler was Used

4.9 Soil Core Recovery

The soil sample is easily removed from the Macro-Core® Sampler by unthreading the cutting shoe and pulling out the liner. A few sharp taps on the cutting shoe with the combination wrench will often loosen the threads sufficiently to allow removal by hand. If needed, the exterior of the cutting shoe features a notch for attaching the combination wrench to loosen tight threads (Fig. 4.32). With the cutting shoe removed (Fig. 4.33), simply pull the liner and soil core from the sample tube (Fig. 4.34).

If the closed-point sampler is used, the MC Piston Rod Point Assembly is now retrieved from the end of the liner (Fig. 4.35). Secure the soil sample by placing a vinyl end cap on each end of the liner.

Undisturbed soil samples can be obtained from Teflon®, PVC, and PETG liners by splitting the liner. Geoprobe offers two tools for cutting sample liners. The MC Liner Cutter Kit (AT8000K) is used to make longitudinal cuts in the liner and includes a tool that holds the liner for cutting (Fig. 4.36). The MC Liner Circular Cutting Tool (AT8050) is used to segment the liner by cutting around the outside circumference of the liner (Fig. 4.37).

Figure 4.32. Loosening the MC Cutting Shoe with the MC Combination Wrench.

Figure 4.33. Removing MC Cutting Shoe and liner from MC Sampler Tube.

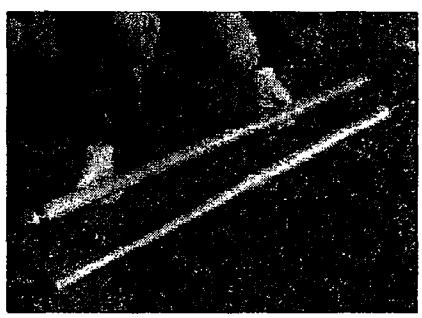

Figure 4.34. Macro-Core® liner filled with soil core.

Figure 4.35. MC Piston Rod Point Assembly is retrieved from top of liner.

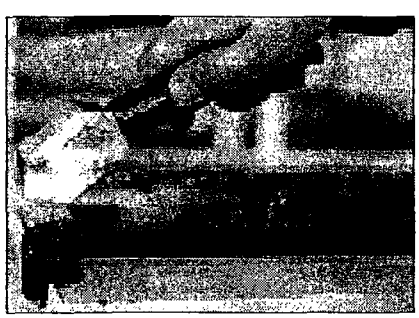

Figure 4.36. MC Liner Cutter makes two longitudinal cuts in polymer liners.

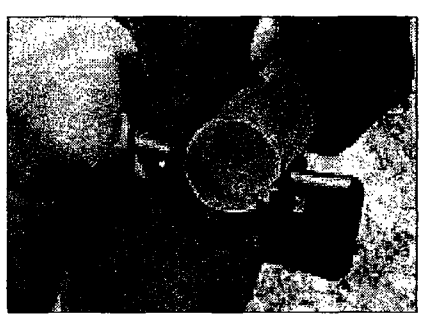

Figure 4.37. MC Circular Cutting Tool cuts around the outside of MC liner.

4.10 MC Piston Rod Sampler Tips

Macro-Core® Samplers are available in lengths of 24 inches, 36 inches, 1 meter, 48 inches, and 60 inches. This means that MC Sample Tubes, MC Liners, MC Piston Rods and MC Piston Rod/Stop-Pin Assemblies are also available in these five sizes. Keep this in mind when ordering Macro-Core® parts to ensure that the items you receive are of the appropriate length.

During development of the MC Piston Rod System, it was common for operators to remove the MC Piston Rod/Stop-Pin assembly from inside the probe rods with the last extension rod still threaded onto the stop-

pin. The MC Stop-Pin Coupler is not designed to withstand the considerable side load placed on it by the extension rod and is easily damaged if the extension rod is allowed to swing around unsupported. The MC Quick Link Connector was developed to prevent damage to the coupler by allowing the last extension rod to be disconnected from the piston rod/stop-pin assembly before removing the assembly from the probe rods. Always use the quick link connector whenever the sampler is assembled with a stop-pin coupler.

4.11 Tips to Maximize Sampling Productivity

The following suggestions are based on the collective experiences of Geoprobe operators:

1. Organize your truck or van. Assign storage areas to all tools and equipment for easy location. Transport sample tubes, piston rods, extension rods, probe rods, and liners in racks. Above all, minimize the number of items lying loose in the back of the vehicle.

2. Take three or four samplers to the field. This allows the collection of several samples before stopping to clean and decontaminate the equipment. A system is sometimes used where one individual operates the probe while another marks the soil cores and decontaminates the used samplers.

3. A machine vise is recommended. With the sampler held in a vise, the operator has both hands free to remove the cutting shoe (Fig. 4.38), drive head, and sample liner (Fig. 4.39). Cleanup is also easier with both hands free. Geoprobe offers an optional Machine Vise (FA300) that mounts directly on the probe derrick (Fig. 4.40).

4. Extension Rod Quick Links (Fig. 4.41) are real time savers. A good method for deploying extension rods is to assemble sections of up to three rods using threaded connnectors. Each section is then connected with Quick Links so that up to three rods can be added or removed from the string at once.

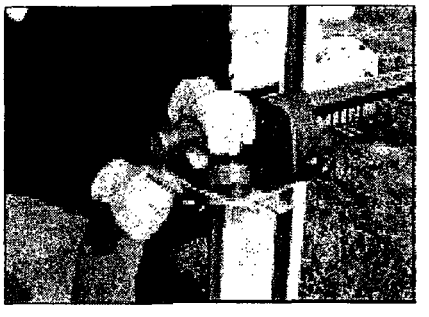

Figure 4.38. Removing MC Cutting Shoe with sample tube held in machine vise.

Figure 4.39. Removing filled liner with sample tube held in machine vise.

Figure 4.40. Machine vise mounted directly on Geoprobe Soil Probing Unit.

Figure 4.41. Using Extension Rod Quick Links to connect Extension Rods.

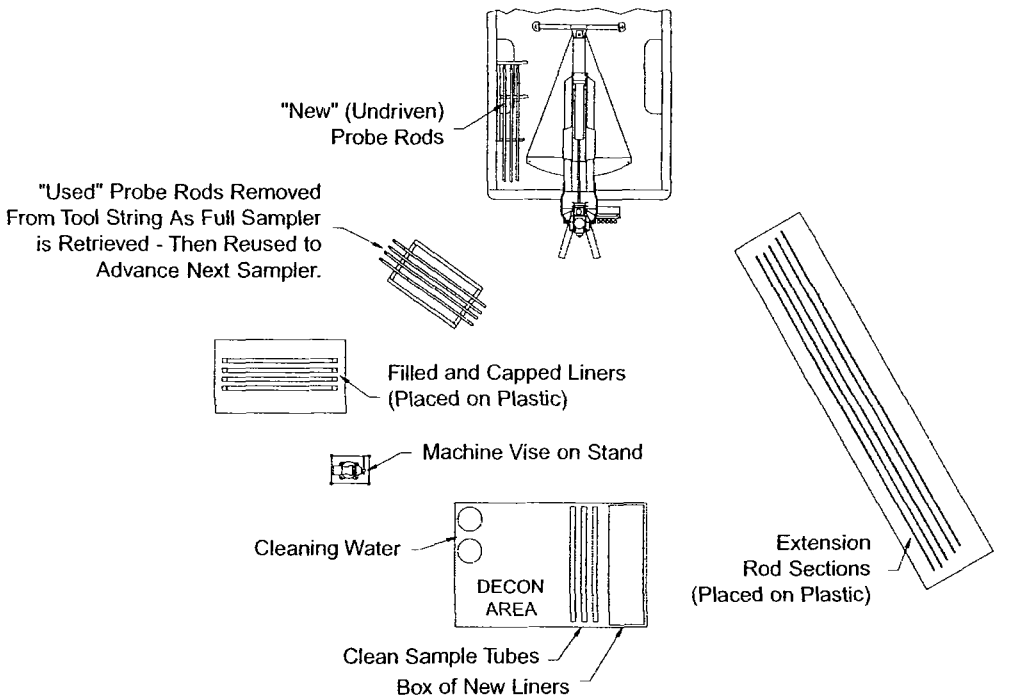

FIGURE 4.42
Equipment Layout Example to Maximize Sampling Productivity.

5. When releasing the stop-pin, a pair of locking pliers can be used to turn the extension rods. Locking pliers may be quicker and easier to install than the extension rod handle.

6. Organize your worksite. Practice with the sampler to identify a comfortable setup and then use this layout whenever sampling. An example layout is shown in Figure 4.42.

   A collapsible table or stand is handy to hold decontaminated sampler tubes and liners. Equipment may also be protected from contamination by placing it on a sheet of plastic on the ground.

   Instead of counting probe rods for each trip in-and-out of the probe hole, identify separate locations for "new" rods and "used" rods. Collect the first sample from the open hole using "new" rods. As each probe rod is removed during sampler retrieval, place it in the "used" rod location. Now advance a clean sampler back down the same hole using all of the rods from the "used" location. Add one "new" rod to the string and then drive the tools to collect the next soil core. Once again, remove each probe rod and place it in the "used" rod location as the sampler is retrieved. Repeat this cycle using all the "used" rods to reach the bottom of the probe hole, and one "new" rod to fill the sampler.

7. Cleanup is very important from the standpoint of operation as well as decontamination. Remove all dirt and grit from the threads of the drive head, cutting shoe, and sample tube with a nylon brush (BU700). Without sufficient cleaning, the cutting shoe and drive head will not thread completely onto the sample tube. The threads may be damaged if the sampler is driven in this condition.

Ensure that all soil is removed from inside the sample tube. Sand particles are especially troublesome as they can bind liners in the sampler. Full liners are difficult to remove under such conditions. In extreme cases the soil sample must be removed from the liner before it can be freed from the sample tube.

8. Although MC Drive Heads are available for open-tube sampling with 1.0-inch OD probe rods, 1.25-inch rods are recommended for the Macro-Core® Sampler. The larger rod diameter limits downhole deflection of the tool string and ultimately provides a more durable system. The double-lead thread design also makes the 1.25-inch rods thread together faster than previous 1-inch probe rods.

9. The Heavy-Duty MC Cutting Shoe (AT8535) is machined with more material at the critical wear areas. It can be used in place of the Standard MC Cutting Shoe (AT8530) and is designed to lengthen service life under tough probing conditions.

   Expansive clays and coarse sands can "grab" and collapse liners as the sample tube is filled with soil. A 1/8-inch Undersized MC Cutting Shoe (AT8537) helps alleviate this problem. The smaller core (1.375 inches OD) allows expanding clays and coarse sands to travel past the liner without binding.

   The standard, heavy-duty, and undersized cutting shoes will not accept the MC Piston Rod Point Assembly (MC10068). Only the MC9034 cutting shoe is compatible with the MC Piston Rod System.

10. Maximize the thread life of the sample tube by varying the ends in which the drive head and cutting shoe are installed. The dynamic forces developed while driving the sampler are such that the threads at the drive head wear more quickly than at the cutting shoe. Regularly switching ends will maintain relatively even wear on the sample tube.

5.0 REFERENCES

Geoprobe Systems, September, 1997, "97-98 Tools and Equipment Catalog."

Geoprobe Systems, May, 1995, "1995-96 Tools and Equipment Catalog."

Equipment and tool specifications, including weights, dimensions, materials, and operating specifications included in this brochure are subject to change without notice. Where specifications are critical to your application, please consult Geoprobe Systems 1-800-436-7762.

COPYRIGHT© 1995, 1996. 1997, 1998 by Kejr, Inc.
ALL RIGHTS RESERVED.
No part of this publication may be reproduced or transmitted in any form or by any means, electronic or mechanical, including photocopy, recording, or any information storage and retrieval system, without permission in writing from Kejr, Inc.

Geoprobe® Systems

A DIVISION OF KEJR, INC.

Corporate Headquarters
601 N. Broadway • Salina, Kansas 67401 • 1-800-GEOPROBE (1-800-436-7762) • Fax (785) 825-2097

Eastern Regional Office
Lewes, Delaware • (302) 645-0550 • Fax (302) 645-6054

Midwest Regional Office
Nashville, Indiana • (812) 988-8840 • Fax (812) 988-8841

Southcentral Regional Office
St Amant, Louisiana • (225) 675-6395 • Tel/Fax (225) 644-2815

Southeastern Regional Office
Palm City, Florida • (561) 286-1566 • Fax (561) 286-2035

Western Regional Office
Reedley, California • (559) 637-1696 • Fax (559) 637-1796

SOP FOR PASSIVE SOIL GAS SURVEY

Memorandum

To: Mr. Joe Ruiz
Weston Solutions

From: Harry O'Neill
Beacon Environmental Services, Inc.

Date: September 8, 2006

Subject: Passive Soil-Gas Survey
Ellsworth Industrial Park, Downers Grove, IL
Supporting documentation in response to Request for Proposal dated September 5, 2006

Beacon Environmental Services, Inc. (BEACON) has submitted to WESTON a proposal on September 7, 2006, in response to the subject RFP dated September 5, 2006. Information provided in and accompanying this memorandum supply the information and documentation requested in the RFP.

Below are the requests from the RFP, followed by the information.

1) **Standard operating procedure for installation, removal, handling, and shipping of samples**

   BEACON's SOPs for the collection of passive soil-gas samples are provided as **Attachment 1** to this memorandum.

2) **Standard operating procedures for laboratory analysis**

   BEACON's SOPs for the analysis of passive soil-gas samples are provided as **Attachment 2** to this memorandum. A more detailed Quality Assurance Program Plan is available upon request.

3) **Analytical method information (turn-around-times (TAT), detection limits, container requirements, reporting limits, etc.)**

   TAT and Schedule:
   BEACON will supply WESTON with Field Kits within three (3) business days of notice to proceed.
   Samplers will remain in the field for three to 10 days, with the exact time determined by WESTON and BEACON when site information and project objectives are discussed.
   Following retrieval of samplers, WESTON will overnight the samplers to BEACON for analysis.
   BEACON will provide electronically analytical data to WESTON within five (5) business days of receipt of samples at the laboratory.
   Within 10 days of receipt of samples, BEACON will issue a final survey report with supporting documentation.

   Detection limits and Reporting Limits:
   The reporting limit for each compound is 25 nanograms, but the actual method detection limit (MDL) for each targeted compound is less than five (5) nanograms.

Container requirements:
BEACON provides the vials and all required return shipment materials necessary for WESTON to return the passive soil-gas samplers to BEACON. Further information is discussed in the attached field procedure SOPs.

4) **BEACON's Contact Information**

Function	Contact	Position	Contact Info
Laboratory Contact	Steven Thornley	Laboratory Director	410-838-8780 x112
Sample Manager	Ryan Schneider	Operations Manager	410-838-8780 x111
Quality Assurance Officer	Harry O'Neill	President	410-838-8780 x113

ATTACHMENT 1

STANDARD OPERATING PROCEDURES FOR THE COLLECTION OF PASSIVE SOIL-GAS SAMPLES

BEACON'S

FIELD KIT GUIDE
FOR
PASSIVE SOIL-GAS INVESTIGATIONS

[PLEASE READ ENTIRE GUIDE BEFORE STARTING SURVEY]

www.beacon-usa.com

I. General Information

A. BEACON is furnishing this kit to **WESTON SOLUTIONS** specifically for use on the **Ellsworth Industrial Park Site in Downers Grove, IL**. Install the passive soil-gas samplers **as soon as possible** and **contact BEACON for a retrieval schedule**. If deployment of the devices is delayed, please contact us as soon as possible. BEACON's phone number is (800) 878-5510.

B. It is also essential that, prior to returning the Kit to BEACON, WESTON SOLUTIONS verify that caps are tight on the Passive Soil-Gas (PSG) Samplers and that the Samplers are sealed individually in the small Sampler Bags and also in the larger Return Shipment Bag, with an adsorbent pak.

C. ***Before going to the field*** please inventory the contents of the Kit, checking them against the enclosed list to verify item counts and to become familiar with all components. (Because the components are thoroughly cleaned prior to shipment, the inventory should be conducted without opening the plastic bags.) Note that Trip Blanks are to remain sealed throughout the Survey.

D. Upon receipt of the Field Kit, BEACON requests that WESTON SOLUTIONS sign and date the enclosed Chain-of-Custody Form to document receipt of the Kit. The Field Deployment Report is to be completed during the course of the survey.

E. Following completion of the survey, fill out the Chain-of-Custody Form with the following information: (i) Field Sample IDs, (ii) the name and contact phone number of the person submitting the samples, (iii) the unique number of the custody seal that will be used, and (iv) signature and date of person relinquishing samples. The Chain-of-Custody Form and Field Deployment Report are to be returned with the Field Kit to BEACON. If possible, retain photocopies for your record. Next, pack the Samplers, tools, containers, sampling caps, and requisite documentation in the Field Kit.

Note: Place the Return Shipment Bag, which contains the individually bagged PSG Samplers, in the upper tray and place the tools in the lower compartment of the Kit so they do not damage the Samplers. One trip blank should be included with each Return Shipment Bag.

Affix the tug-tight custody seal to the latch on the Field Kit, pack it in its original cardboard shipping container, and call FedEx (1-800-238-5355) for overnight shipment to:

Beacon Environmental Services, Inc.
Attn: Sample Receiving
323 Williams Street, Suite D
Bel Air, MD 21014
Ph: 410-838-8780

NOTE: **DO NOT PACK IN THE KIT OR SHIPPING BOX STYRENE PEANUTS, NEWSPAPER, OR OTHER MATERIALS THAT COULD CONTAMINATE THE SAMPLES. PLEASE AVOID SMOKING WHILE HANDLING SAMPLERS. NO PRESERVATIVES OR ICE ARE NECESSARY FOR SHIPPING.**

II. Contents

A. This Field Kit contains the components needed for a **95**-point soil-gas survey, plus sufficient additional cartridges for **3** trip blanks (vial labeled **Trip-1, Trip-2, and Trip-3**, not to be opened), and **8** extra Samplers for use in the event of breakage or accidental contamination. In addition, **4** extra transport vials are provided in case a Sampler Vial breaks during retrieval. Assuming that instructions are followed, due care is exercised in QA/QC procedures, and timing schedules are observed, the Kit provides users with an extremely accurate and reliable soil-gas system. **Do not open bags until deployment.**

Code/Item		Quantity
(1)	BEACON PSG SAMPLERS	**106**
(2)	EXTRA TRANSPORT VIALS	**4**
(3)	SAMPLING CAPS (in container)	**103**
(4)	CAP STORAGE CONTAINERS	**2**
(5)	TAPPING DOWELS	**2**
(6)	12″ LENGTHS OF COPPER PIPE	**103**
(7)	WIRE CUTTERS	**2**
(8)	GAUZE CLOTHS	**103**
(9)	COPPER PIPE CUTTER	**2**
(10)	SCRATCH AWL	**2**
(11)	VISE GRIPS	**2**
(12)	3" x 4" PLASTIC SAMPLER BAGS (for return shipment of samples)	**103**
(13)	12" x 12" PLASTIC RETURN SHIPMENT BAG	**3**

B. In addition to the materials found in the kit, field teams will need:

- NITRILE GLOVES
- CLEAN TOWEL
- HAMMER
- ELECTRIC ROTARY HAMMER DRILL WITH 1¼" to 1½" DIAMETER BIT WITH AT LEAST 12 INCHES OF CUTTING LENGTH
- OPTIONAL – ½"-DIAMETER BIT WITH 36 INCHES OF CUTTING LENGTH
- BALL-POINT PEN and CLIPBOARD
- PIN FLAGS, WOODEN STAKES, or OTHER LOCATION MARKERS
- FLAGGING TAPE
- BOX OF ALUMINUM FOIL

C. Additional materials necessary only for deployment through asphalt or concrete:

- DRY CONCRETE MORTAR MIX and ASSOCIATED EQUIPMENT (for temporary patching of the sample holes) including:
  SMALL PAIL, WATER, SMALL PLASTIC PUTTY KNIFE
- CHISEL or SCREWDRIVER (to remove the temporary patch)
- ASPHALT COLD PATCH or CEMENT (for final repair of the sample holes)

III. Instructions

A. GENERAL:

Deployment and retrieval of PSG Samplers requires only one person. Separate step-by-step procedures are detailed below for sampling through vegetation or bare soils and for sampling in areas

covered by asphalt, concrete, or gravel. **Keep exposure of sample cartridges to ambient air to a minimum.**

Note: Do not deploy Samplers within 10 feet of a monitoring well, penetrometer, hydropunch shaft, or other intrusive sampling apparatus that potentially creates a preferential pathway for gases.

REMEMBER:

- **TRIP BLANKS ARE NOT TO BE OPENED.**

B. SAMPLER DEPLOYMENT:

Note: Each Sampler contains two sets of adsorbent cartridges. BEACON will analyze one set per Sampler; however, the second set in each Sampler can be analyzed as a field sample duplicate. WESTON SOLUTIONS will note at which locations, if any, duplicates are to be analyzed by writing separate entries corresponding to the sample location followed by the letter "D" (*i.e,* 3, 3-D, 4, 4-D) on the Chain-of-Custody Form. It is not necessary to alter the deployment pattern to have the duplicate samples analyzed. There is an additional per sample charge for analysis of any duplicates.

Vegetation or Bare Soils:

1. At each survey point, clear vegetation as necessary and drill a 1¼"- to 1½"-diameter hole, using a rotary hammer drill or comparable equipment, to a depth of 12 inches. As an option, the hole may be advanced to a greater depth using a ½" drill bit to extend the hole to a three foot depth.

2. When the hole has been completed, take a 12-inch length of ¾"-inside-diameter copper pipe and lower it into the sample hole, being careful not to touch the inside of the pipe. Any portion of the pipe above grade is cut flush with the ground surface, using the copper pipe cutter. With the tapping dowel and a hammer, push or tap the pipe one inch into the base of the drilled hole (see **attached figure**).

3. Remove one of the PSG Samplers (a glass vial containing two sets of ***hydrophobic*** adsorbent cartridges) and unwind the retrieval wire wrapped around it. Holding the capped end of the vial in one hand, pull the wire tight (to straighten it) with the other hand. Remove the solid cap on the Sampler Vial and replace it with a Sampling Cap (a one-hole cap with a screen meshing insert). Place the solid cap in the Field Kit.

Note: At each sampling location, verify that the (black) sampling cap is on the vial before installing the Sampler.

4. Lower the Sampler, open-end down, into the copper pipe approximately six inches so that the retrieval wire sticks out of the hole. Cover the open end of the pipe with a balled up **wad** of aluminum foil, pressing it tightly on top of the pipe with the tapping dowel. Next, cover the hole to grade with local soils or sand, leaving the end of the wire exposed above the surface of the ground. Using the hammer, collapse the soils above the Sampler. **Coil the wire and lay it flat on the ground surface. [Note: Tying a ribbon of flagging tape around the coiled wire will make it easier to locate the Sampler during retrieval.]** Place the solid cap in the Cap Storage Container. Clearly mark the sample location with a pin flag or wooden stake.

5. Close the Field Kit, and on the Field Deployment Report record: (a) sample-point number; (b) date and time of emplacement (to nearest minute); and (c) other relevant information (*e.g.*, soil type, vegetation, proximity to potential source areas). Be sure to mark the sample location and take detailed notes (*i.e.*, compass bearings and distances from fixed reference points).

6. Move to next location.

Concrete, Asphalt, or Gravel Covered Areas:

1. At each survey point, drill a 1¼"- to 1½"-diameter hole through the asphalt/concrete/gravel to bare soil using a rotary hammer drill or comparable equipment. This hole should be approximately 12 inches deep. As an option, the hole may be advanced to a greater depth using a ½" drill bit to extend the hole to a three foot depth.

2. When the hole through concrete/asphalt/gravel has been completed, take a 12-inch length of ¾"-inside-diameter copper pipe and lower it into the sample hole, being careful not to touch the inside of the pipe. Any portion of pipe above grade is cut flush with the ground surface, using the copper pipe cutter. With the tapping dowel and a hammer, push or tap the pipe one inch into the base of the drilled hole (see **attached figure**).

3. Remove one of the PSG Samplers (a glass vial containing two sets of ***hydrophobic*** adsorbent cartridges) and unwind the retrieval wire wrapped around it. Holding the capped end of the vial in one hand, pull the wire tight (to straighten it) with the other hand. Remove the solid cap on the Sampler Vial and replace it with a Sampling Cap (a one-hole cap with a screen meshing insert). Place the solid cap in the Field Kit.

Note: At each sampling location, verify that the (black) sampling cap is on the vial before installing the Sampler.

4. Lower the Sampler, open-end down, into the copper pipe approximately six inches.

If sampling through asphalt or concrete, bend the end of the wire over the top of the pipe so that the coil of wire hangs over the top and outside of the pipe. Next, plug the top of the hole with a wad of aluminum foil. Using the tapping dowel, push down the aluminum foil so it forms a seal on the copper pipe and rests ¼" below the surfacing. Cover the hole to grade with a **¼" thick** concrete patch. [**Note**: A ¼" thick patch is all that is required. If it is thicker it will be difficult to remove during retrieval.] Next, place the solid cap in the Cap Storage Container.

If sampling through gravel, extend the retrieval wire out of the pipe and plug the pipe with a wad of aluminum foil. Using the tapping dowel, push down the aluminum foil so it forms a seal on the copper pipe. Bend the wire over the aluminum foil plug and while the wire is extended out of the hole, cover the aluminum foil with local soil or sand. **Coil the wire and lay it flat on the ground surface.** Next, place the solid cap in the Cap Storage Container.

If a hole deeper than 12 inches is created, it will be necessary to use more than one wad of aluminum foil. In these situations, extend the wire out of the pipe. While holding onto the wire, plug the top of the pipe and hole loosely with as many wads as needed. Before inserting the last wad of foil, bend the wire so it rests below the uppermost wad of foil. This will make it easy to retrieve the Sampler during retrieval.

5. Close the Field Kit, and on the Field Deployment Report record: (a) sample-point number; (b) date and time of emplacement (to nearest minute); (c) type of surfacing and approximate thickness; and (d) other relevant information (*e.g.*, surfacing material, proximity to potential source areas). Be sure to mark the sample location and take detailed notes (*i.e.*, compass bearings and distances from fixed reference points).

6. Move to next location.

C. SAMPLER RETRIEVAL:

Prior to retrieving samples, seal each Trip Blank in a 3"x4" Sampler Bag, and place the bagged Trip Blank in a separate larger bag marked "Return Shipment Bag." One trip blank should be included with each Return Shipment Bag. Stow the sampler blocks, with the Transport vials and extra samplers, in the lower compartment of the kit. The sampler blocks are to be returned to BEACON's lab along with the samples.

Note: Each Sampler contains two sets of adsorbent cartridges. BEACON will analyze one set per Sampler; however, the second set in each Sampler can be analyzed as a field sample duplicate. WESTON SOLUTIONS will note at which locations, if any, duplicates are to be analyzed by writing separate entries corresponding to the sample location followed by the letter "D" (*i.e,* 3, 3-D, 4, 4-D) on the Chain-of-Custody Form. It is not necessary to alter the deployment pattern to have the duplicate samples analyzed. There is an additional per sample charge for analysis of any duplicates.

Vegetation or Bare Soils:

1. At each sample location open the Field Kit and place it and the wire cutters within easy reach. Remove a square of gauze cloth and place it and a clean towel on the open Kit. Remove a solid cap from the Cap Storage Container and place it on the Kit, also.

2. Remove the aluminum foil plug, using vise grips and the scratch awl, if necessary, and retrieve the Sampler from the hole.

3. Holding the Sampler upright, clean the sides of the vial with the clean towel (especially close to the Sampling Cap). Remove the Sampling Cap, cut the wire from the vial with the wire cutters, and clean the vial threads completely with the gauze cloth.
[**Note**: **Completely remove the wire to ensure the cap fits tight on the vial and no soil is returned in the field kit.**]

4. Firmly screw the solid cap on the Sampler Vial and clean the vial completely with the gauze cloth. With a **ballpoint pen** record the sample number, corresponding to the sample location, on the cap's label. [**Note**: Do not use a Sharpie marker.]

5. Return the sampling cap to the Sampling Cap container. Place the sealed and labeled Sampler Vial in the smaller 3" x 4" plastic Sampler Bag. Then place the individually bagged and labeled sampler into the larger bag labeled "Return Shipment Bag."

Note: Each sampler must be individually bagged and placed in a Return Shipment Bag, with approximately 40 samplers and one trip blank per Return Shipment Bag.

6. On the Field Deployment Report, record: (a) date and time of retrieval (to nearest minute); and (b) any other relevant information.

7. After all samples have been retrieved, verify that the caps on each Sampler are sealed tightly and that the seals on the Sampler Bags are closed. Verify that all Samplers are stored in the Return Shipment Bags, which contains an adsorbent pak. Seal the Return Shipment Bags and place them in the upper tray of the Field Kits, and place the provided tools and materials in the lower compartment of the Field Kits.

<u>Note</u>: **It is not necessary to return the gauze pads or the wire with the Field Kit, but return *all* the other materials and equipment (blocks, extra samplers, tools, containers, sampling caps, *etc.*).**

<u>Asphalt, Concrete, or Gravel:</u>

1. At each sample point covered by gravel, clear away the soil or sand to expose the aluminum-foil plug. For those locations covered by asphalt or concrete, use a small chisel and hammer to remove the concrete patch to expose the aluminum foil.

2. Next, open the Field Kit and place it and the wire cutters within easy reach. Remove a square of gauze cloth and place it and a clean towel on the open Kit. Remove a solid cap from the Cap Storage Container and place it on the Kit, also.

3. While securely holding onto the retrieval wire, remove the aluminum-foil plug, using the scratch awl, as necessary. Holding the Sampler upright, clean the sides of the vial with the clean towel (especially close to the Sampling Cap). Remove the Sampling Cap, cut all the wire from the vial with the wire cutters, and clean the vial threads completely with gauze cloth.
[**Note**: **Completely remove the wire to ensure the cap fits tight on the vial and no soil is returned in the field kit.**]

4. Firmly screw the solid cap on the Sampler Vial and clean the vial completely with the gauze cloth. With a **ballpoint pen** record the sample number, corresponding to the sample location, on the cap's label. [**Note**: Do not use a Sharpie marker.]

5. Return the sampling cap to the Sampling Cap container. Place the sealed and labeled Sampler Vial in the smaller 3" x 4" plastic Sampler Bag. Then place the individually bagged and labeled sampler into the larger bag labeled "Return Shipment Bag."

Note: Each sampler must be individually bagged and placed in a Return Shipment Bag, with approximately 40 samplers and one trip blank per Return Shipment Bag.

6. On the Field Deployment Report, record: (a) date and time of retrieval (to nearest minute); and (b) any other relevant information. Return the sampling cap to the Sampling Cap container.

7. After all samples have been retrieved, verify that the caps on each Sampler are sealed tightly and that the seals on the Sampler Bags are closed. Verify that all Samplers are stored in the Return Shipment Bags, which contains an adsorbent pak. Seal the Return Shipment Bags and place them in the upper tray of the Field Kits, and place the provided tools and materials in the lower compartment of the Field Kits.

<u>Note</u>: **It is not necessary to return the used copper pipes, wire, or the gauze pads with the Field Kit, but return *all* the other materials and equipment (blocks, tools, containers, unused copper pipes, sampling caps, *etc.*).**

8. Fill sampling holes to grade with an asphalt cold patch or cement.

IV. Forms

The Field Kit also contains a **Chain-of-Custody Form** and a **Field Deployment Report**.

A. The Chain-of-Custody Form is to be completed in accordance with **Section I**.

B. The Field Deployment Report is to be filled out during the Survey as indicated in **Section III**.

BEACON PASSIVE SAMPLER

DEPLOYMENT THROUGH SOILS

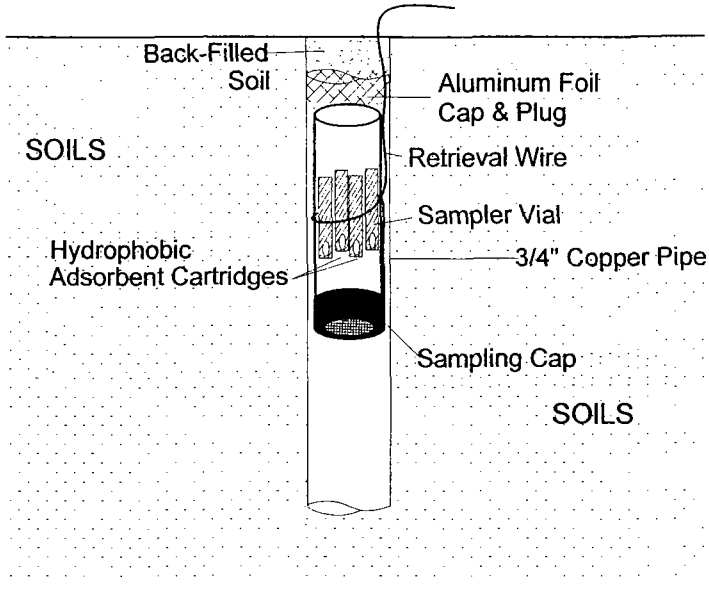

DEPLOYMENT THROUGH AN ASPHALT/CONCRETE CAP

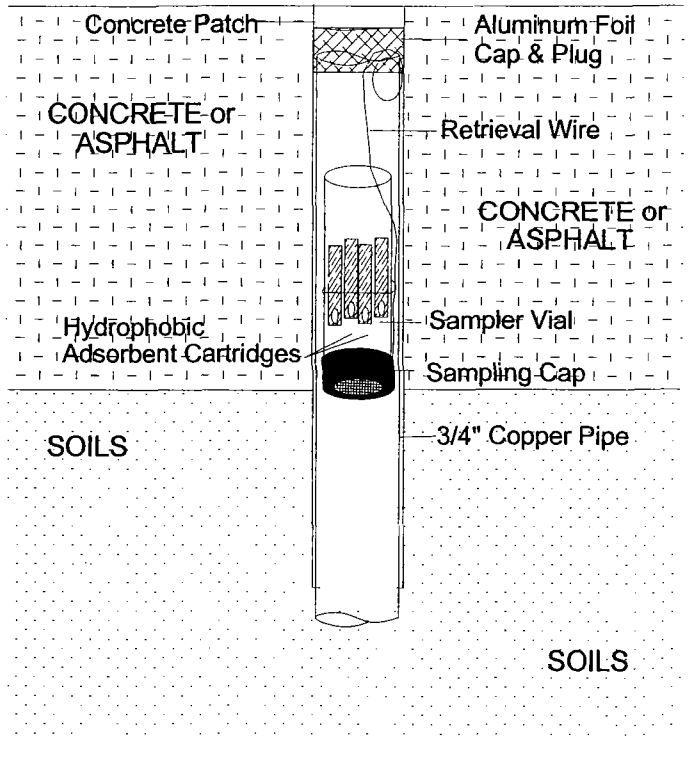

ATTACHMENT 2

STANDARD OPERATING PROCEDURES FOR THE ANALYSIS OF PASSIVE SOIL-GAS SAMPLES

Following are laboratory procedures used with BEACON Passive Soil-Gas Surveys, a screening technology for expedited site investigation. After exposure, adsorbent cartridges from the passive samplers are analyzed using U.S. EPA Method 8260B as described in the Solid Waste Manual (SW-846), a capillary gas chromatographic/mass spectrometric method, modified to accommodate high temperature thermal desorption of the adsorbent cartridges. This procedure is summarized as follows:

A. The adsorbent cartridges are loaded with *internal standards* and *surrogates* prior to loading the autosampler with the cartridges. The loaded cartridges are purged in a helium flow. Then the cartridges are thermally desorbed in a helium flow onto a focusing trap. Any analytes in the helium stream are adsorbed onto a focusing trap.

B. Following trap focusing, the trap is thermally desorbed onto a DB-VRX 60m, 0.25 mm ID, 1.40 micron filament thickness capillary column.

C. The GC/MS is scanned between 35 and 270 Atomic Mass Units (AMU) at 3.12 scans per second.

D. BFB tuning criteria and the *initial five-point calibration* procedures are those stated in method SW846-8260B. System performance and calibration check criteria are met prior to analysis of samples. A laboratory method blank is analyzed after the daily standard to determine that the system is contaminant-free.

E. The instrumentation used for these analyses includes:

- Agilent 6890-5973 Gas Chromatograph/Mass Spectrometer;
- Markes Unity thermal desorber;
- Markes UltrA autosampler; and
- Markes Mass Flow Controller Module.