EPA Region 5 Records Ctr.
283007

American Chemical Service, Inc. NPL Site

Operations and Maintenance Manual for the Perimeter Ground Water Containment System and the Barrier Wall and Associated Extraction System.

Volume 4—As-Builts

June 1998

American Chemical Service, Inc. NPL Site
Perimeter Groundwater Containment System,
Barrier Wall, Barrier Wall Extraction System and
Groundwater Treatment System

VICINITY MAP

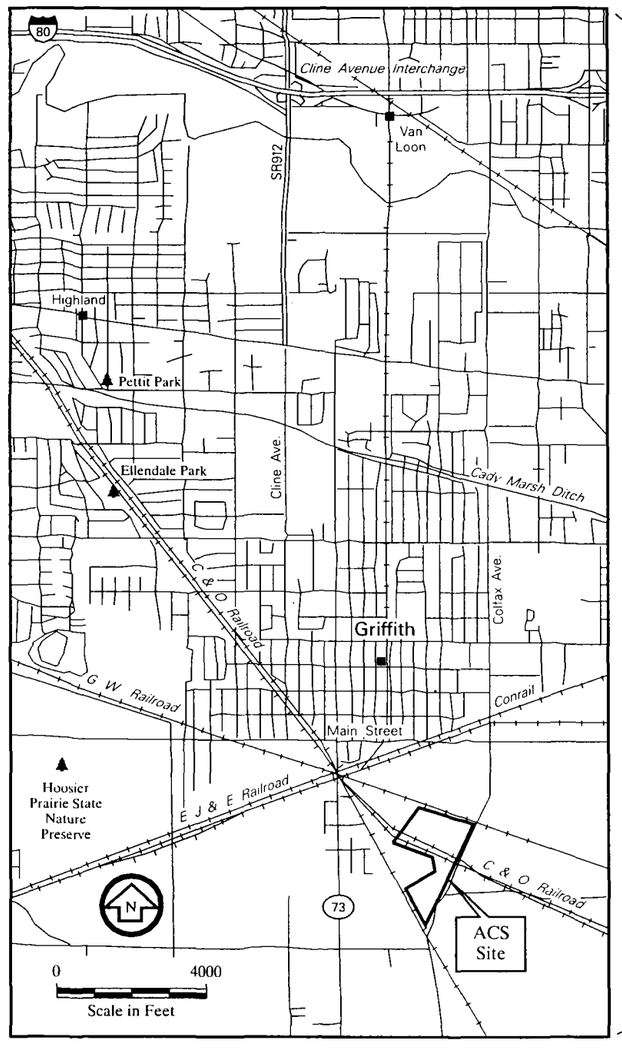

SITE LOCATION MAP

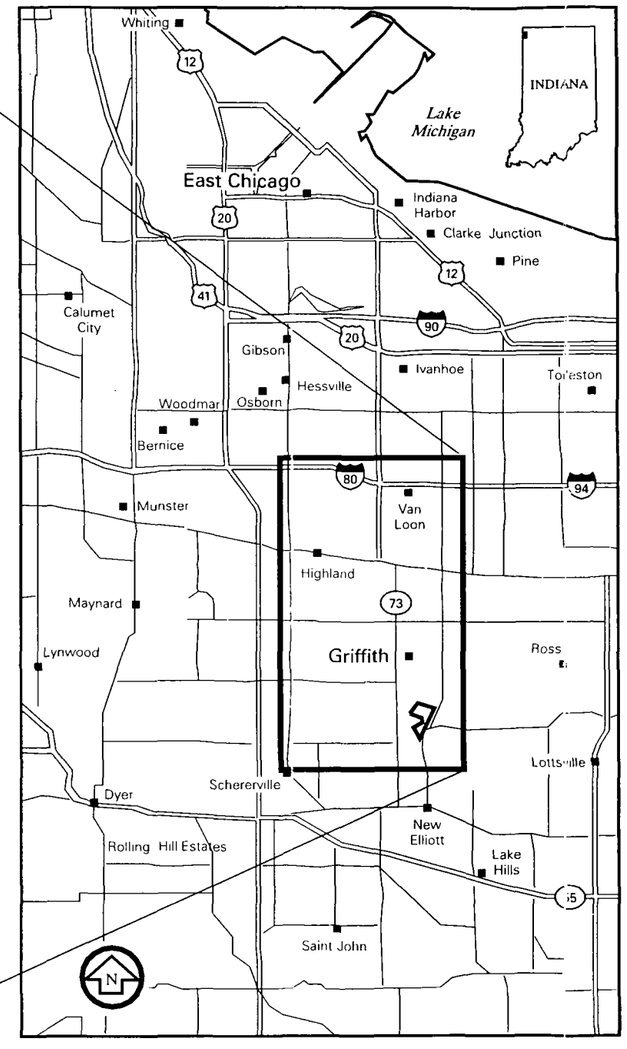

AS - BUILT

REV	DATE	BY	DESCRIPTION

SCALE:

WARNING
0 1/2 1
IF THIS BAR DOES NOT MEASURE 1" THEN DRAWING IS NOT TO SCALE.

DESIGNED
DRAWN
CHECKED

SUBMITTED
PROJECT ENGINEER R. C. E. NO. DATE
MONTGOMERY WATSON CONSULTING ENGINEERS, INC. R. C. E. NO. DATE

MONTGOMERY WATSON
Salt Lake City

APPROVED DATE
APPROVED ~~Utah~~ DATE

AMERICAN CHEMICAL SERVICE, INC. GRIFFITH, INDIANA
PERIMETER GROUNDWATER CONTAINMENT SYSTEM & BARRIER WALL EXTRACTION SYSTEM
TITLE SHEET, LOCATION MAP

SHEET G-1

01-JUN-1998 11:56 $$$$$$$$$$$$$$$direl y/filename$$$$$$$$$$$$$$

American Chemical Service, Inc. NPL Site
Perimeter Groundwater Containment System,
Barrier Wall, Barrier Wall Extraction System and
Groundwater Treatment System

INDEX OF DRAWINGS

General

G-1	Title Sheet, Location map
G-2	Index of Drawings
G-3	General Notes, Symbols and Legend
G-4	Standard Abbreviations

Civil

C-1	Overall Site Plan
C-2	Area 1 Site Plan
C-3	Area 2 Site Plan
C-4	Treatment Building and Peroxide Storage Tank Site Plan
C-5	Civil Details

Barrier Wall

1	Barrier Wall Plan and Miscellaneous Details
2	Barrier Wall Sections and Miscellaneous Details
3	Sectional Elevations
4	Barrier Wall Panel Placement

Treatment Building

T1.1	Title Sheet
A1.1	Elevations
A1.2	Elevations
A2.1	Floor Plan
A3.1	Reflected Ceiling Plan
A4.1	Foundation Plan
A4.2	Details
A4.3	Foundation Details
A6.1	Wall Sections
A6.2	Wall Sections & Bathroom Elevations
A8.1	Door & Room Finish Schedules
E1.1	Power Plan
E1.2	Lighting Plan
M1.1	Mechanical Plan
P1.1	Plumbing Plan
PME1.1	Plumbing Mechanical & Electrical Details

Test Building #1

0	Cover sheet
1A	Anchor Bolt
1B	Anchor Bolt
2	Frame Elevation
3	Frame Elevation
4	Frame Elevation
5	Frame Elevation
6	Frame Elevation
7	Frame Elevation
8	Roof Primary
9	Roof Secondary
10	Roof Sheeting
11	Wall secondary
12	Wall Sheeting
13	Wall Secondary
14	Wall Sheeting
15	Wall Secondary
16	Wall Sheeting
17	Wall Secondary
18	Wall Sheeting

Mechanical

M1	Process Piping Layout
M2	Chemical Piping
M3	Trapeze Hangers
M4	Flow Schematic

Electrical and Instrumentation

0	Title Sheet
1	Tanks T1 & T2 Interface & Control
2	Tanks T3 & T4 Interface & Control
3	Tanks T5, T6, & T7 Interface & Control
4	Tanks T8 & T9 Interface & Control
5	Floor Sump
6	Chemical Feed Pumps Interface & Control
7	Chemical Feed Pumps Interface & Control
8	Air Diaphragm Pumps Comp. Interconnect & Control
9	Extraction Trench Pump Control Panels & Interface
9A	Extraction Trench Control Continued
9B	Influent Flow Meters
10	Filter Press Interface
11	Lamella Control Panel & Interface
11A	LCP-3 Continued
12	Lamella Interface Continued
13	Lamella Clarifier Panel
14	Level Switch Mounting
15	Final Effluent Detail
16	Master Control Panel
16A	Master Control Panel
17	Power One-Line Diagram
18	Panel Board Schedules
19	Conduit Floor Plan
20	Conduit & Wire Schedule
21	Pump & Mixer Wiring
22	Pump & Mixer Wiring Continued
23	Pump VFD Wiring
24	Variable Speed Drive
25	Panel Light Wiring
26	Bill of Material
27	PLC I/O Schedule
27A	PLC I/O Schedule Continued
27B	Conduit Schedule
27C	UV Unit Electrical Installation
27D	Unit PLC Interface

AS - BUILT

REV DATE: BY DESCRIPTION	SCALE:	WARNING 0 1/2 1 IF THIS BAR DOES NOT MEASURE 1" THEN DRAWING IS NOT TO SCALE.	DESIGNED / DRAWN / CHECKED	SUBMITTED: PROJECT ENGINEER, R. C. E. NO., DATE; MONTGOMERY WATSON CONSULTING ENGINEERS, INC., R. C. E. NO., DATE	MONTGOMERY WATSON Salt Lake City, Utah	APPROVED / DATE; APPROVED / DATE	AMERICAN CHEMICAL SERVICE, INC. GRIFFITH, INDIANA; PERIMETER GROUNDWATER CONTAINMENT SYSTEM & BARRIER WALL EXTRACTION SYSTEM; INDEX OF DRAWINGS.	SHEET G-2

JOB No. SCALE No.

- CONTOUR LINE, FINISHED GRADE (123)
- CONTOUR LINE, EXISTING GRADE (123)
- FINISHED ELEVATION (123.20)
- EXISTING ELEVATION (123.20)
- EXISTING CUT OR FILL SLOPE (TOP, TOE)
- NEW A.C. PAVING
- EXISTING A.C. PAVING
- COMPACTED SOIL
- NATURAL GROUND
- GRAVEL ROAD
- CONCRETE
- PEA GRAVEL
- WATER SURFACE
- RAILING
- CENTERLINE 19/32"
- PROPERTY LINE
- NEW STRUCTURE OR FACILITY
- EXISTING STRUCTURE OR FACILITY
- FUTURE STRUCTURE OR FACILITY
- NEW FENCE
- EXISTING FENCE
- RAILROAD
- NEW UTILITY POLE
- EXISTING UTILITY POLE
- NEW TELEPHONE OR POWER BOX
- EXISTING TELEPHONE OR POWER BOX
- EXISTING LIGHT POLE
- POST OR OBJECT
- SIGN POST
- CONCRETE DIVIDER
- TREE LINE
- LIMITS OF CONSTRUCTION
- NEW CANAL
- EXISTING CANAL
- EXISTING WATER
- OVERHEAD POWER LINE (P)
- WATER LINE (W)
- GAS LINE (G)
- TELEPHONE LINE (T)
- SEWER LINE (S)
- STORM DRAIN (D)
- EXISTING PROCESS LINE (ABOVE GROUND) (PL)
- UNDER GROUND ELECTRIC LINE (E)
- EFFLUENT LINE (EFF)
- INFLUENT LINE (INFL)
- AIR SUPPLY (A)

- NEW FIRE HYDRANT (FH)
- MANHOLE (MH)
- WALL CLEANOUT (WCO)
- FLOOR CLEANOUT (FCO)
- CLEANOUT TO GRADE (COTG)
- BLOW OFF ASSEMBLY
- HUB DRAIN
- FLOOR DRAIN
- FLOOR SINK
- DRAIN TRAP
- NEW PIEZOMETER
- EXISTING PIEZOMETER
- SECTION CORNER
- SOIL BORING
- BENCH MARK
- VAULT OR JUNCTION STRUCTURE
- CHANGE IN PIPING MATERIAL
- ROUND OR DIAMETER
- SQUARE
- AT
- ANGLE
- PIPE CALLOUT — 2" HDPE-AIR — PIPE SIZE AND TYPE/FLUID ABBREVIATION
- EQUIPMENT NUMBER — ME-2
- BACKWATER VALVE
- BACKFLOW PREVENTER
- STOP GATE
- SLIDE GATE
- SLUICE GATE

AS - BUILT

- GATE VALVE, BURIED WITH VALVE BOX
- BUTTERFLY VALVE, BURIED WITH VALVE BOX
- ECCENTRIC PLUG VALVE, BURIED WITH VALVE BOX
- LUBRICATED PLUG VALVE, BURIED WITH VALVE BOX
- GATE VALVE
- BUTTERFLY VALVE
- ECCENTRIC PLUG VALVE
- LUBRICATED PLUG VALVE
- GLOBE VALVE
- BALL VALVE
- DIAPHRAGM VALVE
- CHECK VALVE (OR)
- PRESSURE REGULATING VALVE
- BACK-PRESSURE VALVE
- MOTOR OPERATOR FOR VALVES (M = ELECTRIC, P = PNEUMATIC, H = HYDRAULIC)
- TEMPERATURE CONTROL VALVE (T)
- SOLENOID VALVE (S)
- MULTIPORT VALVE - 3 WAY
- MULTIPORT VALVE - 4 WAY
- FLOAT OPERATED VALVE
- NEEDLE VALVE
- PRESSURE RELIEF VALVE
- ANGLE VALVE
- HOSE BIBB (H/B)
- BUBBLER LEVEL CONTROL
- CENTRIFUGAL OR TURBINE PUMP OR FAN
- METERING PUMP
- AIR DIAPHRAGM, POSITIVE DISPLACEMENT PUMP
- BLOWER OR COMPRESSOR
- INJECTOR OR EDUCTOR
- FLAME ARRESTER
- AIR VACUUM AND AIR RELEASE ASSEMBLY
- THERMOMETER
- PIPE ANCHOR

- ROOM THERMOSTAT
- PRESSURE GAUGE
- PRESSURE GAUGE WITH DIAPHRAGM SEAL
- PRESSURE SWITCH
- PRESSURE SWITCH WITH DIAPHRAGM SEAL
- FLANGED FITTING
- WELDED FITTING
- MECHANICAL-TYPE FITTING (GROOVED)
- SCREWED, SOCKET-WELD, BELL AND SPIGOT OR HUBLESS FITTING
- SLEEVE-TYPE COUPLING
- FLANGED ADAPTER COUPLING
- FLANGED ADAPTER - SET SCREW TYPE
- EXPANSION JOINT
- MECHANICAL TYPE COUPLING
- FLEXIBLE COUPLING
- UNION
- QUICK DISCONNECT COUPLER
- CAPPED END OR PLUGGED END
- BLIND FLANGE
- REDUCER OR INCREASER
- CUT PIPE
- STRAINER
- DRAIN
- FLOW TUBE
- MAGNETIC METER (M M)
- DENSITY METER (D M)
- PROPELLER METER OR PADDLE METER (P M)
- ORIFICE PLATE AND FLANGES
- ROTAMETER
- CONDENSATE TRAP (T)
- PIPE SUPPORT (IN PLAN ONLY)
- CATCH BASIN (CB)
- PULSATION DAMPENER
- AREA DRAIN (AD)
- NIC — EQUIPMENT, ITEMS OR DETAILS NOT PRETAINING TO THIS CONTRACT OR PROJECT ARE SHOWN THUS WITH THE NIC = NOT IN CONTRACT

SECTION IDENTIFICATION

(1) SECTION CUT SHOWN ON DRAWING AS:

SECTION NUMBER

G-2

SHEET NUMBER WHERE THE SECTION DRAWING IS LOCATED. SEE NOTE 1

(2) ON SHEET NUMBER G-2 THIS SECTION IS IDENTIFIED AS:

SECTION NUMBER

SECTION 2 / G-1

SCALE: AS DESIGNATED. SEE NOTE 2

DRAWING ON WHICH THE SECTION CUT IS SHOWN

DETAIL IDENTIFICATION

(1) DETAIL IDENTIFICATION SHOWN ON DRAWING AS:

DETAIL LETTER

A / C-2

THE DETAIL NAME IS OPTIONAL AND LOCATED HERE, FOLLOWING DETAIL CALLOUT

SHEET NUMBER WHERE THE DETAIL DRAWING IS LOCATED. SEE NOTE 1

(2) ON DRAWING NUMBER GC-1 THIS DETAIL IDENTIFIED AS:

DETAIL LETTER

DETAIL NAME A / C-1

SCALE: AS DESIGNATED. SEE NOTE 2

NOTES:

(1) IF PLAN AND SECTION (OR DETAIL CALL-OUT AND DETAIL) ARE SHOWN ON SAME DRAWING, DRAWING NUMBER IS REPLACED BY A HORIZ. LINE.

(2) IF SECTION AND/OR DETAILS ARE THE SAME SCALE AND ON THE SAME DRAWING, SEE TITLE BLOCK AT "SCALE:"; THE SCALE TEXT AT CALLOUT SHALL BE OMITTED.

REV	DATE	BY	DESCRIPTION

SCALE: NONE

WARNING: 0 ½ 1 — IF THIS BAR DOES NOT MEASURE 1" THEN DRAWING IS NOT TO SCALE.

DESIGNED V. AGRAWAL
DRAWN N. HUNTER
CHECKED R. SCHLICHER

SUBMITTED
PROJECT ENGINEER R. C. E. NO. DATE
MONTGOMERY WATSON CONSULTING ENGINEERS, INC. R. C. E. NO. DATE

MONTGOMERY WATSON
Salt Lake City, Utah

APPROVED DATE
APPROVED DATE

AMERICAN CHEMICAL SERVICE, INC. GRIFFITH, INDIANA
BARRIER WALL EXTRACTION SYSTEM
GENERAL NOTES, SYMBOLS AND LEGEND

SHEET G-3 OF SHEETS

genlbw_g02.dgn
01-JUN-1998 13:32
i:\gener_chemlbw\

AB	ANCHOR BOLT
ABBR	ABBREVIATION
AC	ACTIVATED CARBON OR ASPHALT CONCRETE
A/C	AIR CONDITIONING
ACFM	ACTUAL CUBIC FEET PER MINUTE
ACOUS	ACOUSTIC OR ACOUSTICAL
ACP	ASPHALTIC CONCRETE PAVEMENT
AER	AERATION
AG	AGRICULTURAL
[illegible]	[illegible]
ALUM	ALUMINUM
AMB	AMBIENT
ANSI	AMERICAN NATIONAL STANDARDS INSTITUTE (FORMERLY ASA)
API	AMERICAN PETROLEUM INSTITUTE
APPD	APPROVED
APPROX	APPROXIMATE
ARCH	ARCHITECTURAL
ASME	AMERICAN SOCIETY OF MECHANICAL ENGINEERS
ASTM	AMERICAN SOCIETY FOR TESTING AND MATERIAL
ASSY	ASSEMBLY
ATM	ATMOSPHEREOCI
AVAR	AIR VACUUM AND AIR RELEASE VALVE
AWWA	AMERICAN WATER WORKS ASSOCIATION
BC	BEGIN CURVE OR BOLT CIRCLE
BCR	BEGIN CURB RETURN
BD	BOARD
BF	BLIND FLANGE
BFP	BACK FLOW PREVENTER
BHP	BRAKE HORSEPOWER
BLDG	BUILDING
BLD FLG	BLIND FLANGE
BLK	BLACK OR BLOCK
BLKG	BLOCKING
BM	BEAM OR BENCH MARK
BO	BLOW-OFF ASSEMBLY
BOD	BIOCHEMICAL OXYGEN DEMAND
BOT	BOTTOM
BPV	BACK PRESSURE VALVE
B & S	BELL AND SPIGOT
BSMT	BASEMENT
BTU	BRITISH THERMAL UNIT
BTUH	BRITISH THERMAL UNIT PER HOUR
BTWN	BETWEEN
BTWN CTR	BETWEEN CENTERS
BV	BUTTERFLY VALVE
BVC	BEGIN VERTICAL CURVE
BWV	BACK WATER VALVE
C	CELSIUS
CAP	CAPACITY
CB	CATCH BASIN
CC	CENTER TO CENTER
CD	CEILING DIFFUSER
CFH	CUBIC FEET PER HOUR
CFM	CUBIC FEET PER MINUTE
CFS	CUBIC FEET PER SECOND
CHEM	CHEMICAL
CHK V	CHECK VALVE
CHKD PL	CHECKERED PLATE
CI	CAST IRON
CL	CENTERLINEPLA
CLR	CLEAR OR CLEARANCE
CLG	CEILING
CM	CENTIMETERLEA
CML & C	CEMENT MORTAR LINED AND COATED
CMP	CORRUGATED METAL PIPE
CMU	CONCRETE MASONRY UNITS
CO	CLEANOUT
COL	COLUMN
CONC	CONCRETE OR CONCENTRIC
CONN	CONNECTIONR C
CONSTR	CONSTRUCTION OR CONSTRUCT
CONT	CONTINUED OR CONTINUOUS
CONTR	CONTRACTOROR
COMP	COMPRESSOR···
COTG	CLEAN-OUT TO GRADE
CPLG	COUPLING
CS	CARBON STEEL
CT	CERAMIC TILE
CT STL	CAST STEELLE
CTSK	COUNTERSUNK
CTR	CENTER
CU	CUBIC
CYL	CYLINDER
CW	CONTAMINATED WATER
CWO	CHAIN WHEEL OPERATOR
DET	DETAIL
DF	DRINKING FOUNTAIN
DG	DOOR GRILLE
DI	DUCTILE IRON
DIA	DIAMETER
DIAPH	DIAPHRAGM
DISCH	DISCHARGE
DISP	DISPENSER
DN	DOWN OR DECANT
DO	DISSOLVED OXYGEN
DR	DOOR OR DRAIN
DS	DRENCH SHOWER AND EYE WASH
DWG	DRAWING
DIFF	DIFFUSER
DIFRTL	DIFFERENTIAL
E	EAST
EA	EACH
EC	END CURVE
ECC	ECCENTRIC
ECR	END CURB RETURN
EF	EACH FACE ETU
EFF	EFFLUENT
EG	EXHAUST GRILLE
EL	ELEVATION
ELEC	ELECTRICAL OR ELECTRONIC
ENG	ENGINE
EQ	EQUAL
EQUIP	EQUIPMENT
EVAP	EVAPORATOR OR
EVC	END VERTICAL CURVE
EW	EACH WAY OR EXTRACTION WELL
EWH	EYE WASH
EXH	EXHAUST
EXHF	EXHAUST FAN
EX-HY	EXTRA HEAVY
EXIST	EXISTING
EXP JT	EXPANSION JOINT
EXT	EXTERIOR OR EXTENSION
F	FAHRENHEIT
FABR	FABRICATION, FABRICATE OR FABRICATED
FAI	FRESH AIR INTAKE
FB	FLAT BAR INT
FCO	FLOOR CLEANOUT
FD	FLOOR DRAIN
FD BK	FIELD BOOKNOU
FDR	FEEDER
FE	FINAL EFFLUENT
FEXT	FIRE EXTINGUISHER
FF	FLAT FACE OR FAR FACE
F TO F	FACE TO FACE
FG	FINISHED GRADE
FH	FIRE HYDRANT
FIG	FIGURE
FIN	FINISH OR FINISHED
FL	FLOWLINE
FLEX	FLEXIBLE
FLOCC	FLOCCULATOR OR FLOCCULATION
FLG	FLANGE
FLGD	FLANGED
FLR	FLOOR
FLR BM	FLOOR BEAMR O
FMH	FLEXIBLE METAL HOSE
FOC	FACE OF CONCRETE
FOM	FACE OF MASONRY
FOS	FACE OF STUDS
FOW	FACE OF WALL
FPC	FLEXIBLE PIPE COUPLING
FPM	FEET PER MINUTE
FPS	FEET PER SECOND
FRP	FIBERGLASS REINFORCED PLASTIC
FS	FAR SIDE, FLOOR SINK, FINISHED SURFACE, FORGED STEEL OR FROTH SPRAY
FT	FEET OR FOOT
FTG	FOOTING
FUT	FUTURE
GA	GAGE OR GAUGE
GAL	GALLON
GALV	GALVANIZEDUGE
GEN	GENERAL OR GENERATOR
GFA	GROOVED FLANGE ADAPTER
GI	GALVANIZED IRON
GLV	GLOBE VALVE
GPD	GALLONS PER DAY
GPH	GALLONS PER HOUR
GPM	GALLONS PER MINUTE
GRD	GRADE OR GROUND
GR BRK	GRADE BREAK OR GRADE CHANGE
GV	GATE VALVE
GYP	GYPSUM
H	HEIGHT
H/B	HOSE BIBB
HDPE	HIGH DENSITY POLYETHYLENE
HDR	HEADER
HEX	HEXAGONAL
Hg	MERCURY
HORIZ	HORIZONTALTUR
HP	HORSEPOWER
HPR	HIGH PRESSURE
HR	HEATING RETURN OR HOUR
HTG	HEATING
HTR	HEATER
H & V	HEATING AND VENTILATING
HVAC	HEATING, VENTILATING AND AIR CONDITIONING
HWO	HANDWHEEL OPERATED
HYD	HYDRAULIC OR HYDRANT
ICFM	INLET CUBIC FEET PER MINUTE
ID	INSIDE DIAMETER
IF	INSIDE FACE
IN	INCH
INFL	INFLUENT
INSL	INSULATION OR INSULATED
INSTR	INSTRUMENT OR INSTRUMENTATION
INV	INVERT
IP	IRON PIPE
IPS	IRON PIPE SIZE
IRRIG	IRRIGATION
JAN	JANITOR
JT	JOINT
KG	KILOGRAM
KM	KILOMETER
KV	KILOVOLT
KW	KILOWATT
KWH	KILOWATT HOUR
L	LITER OR LENGTH
LAV	LAVATORY
LB	POUND
LEV	LEVEL
LG	LONG
LO	LEVER OPERATED
LP	LIGHT POLEATE
LPV	LUBRICATED PLUG VALVE
LT	LEFT
LWR	LOWER
LGTH	LENGTH
M	METER
MAG	MAGNETIC
MAN	MANUAL
MACH	MACHINE
MAX	MAXIMUM
MCC	MOTOR CONTROL CENTER
MECH	MECHANICALROL
MFR	MANUFACTURER
MGD	MILLION GALLONS PER DAY
MH	MANHOLE
MI	MALLEABLE IRON
MIN	MINIMUM OR MINUTE
MISC	MISCELLANEOUS
MK	MARK
MO	MOTOR OPERATED OR MASONRY OPENING
MOD	MODEL
MS	MOP SINK
MTC	MECHANICAL-TYPE COUPLING
MTD	MOUNTED
MTL	MATERIAL OR METAL
MTR	MOTOR
N	NORTH
NBS	NATIONAL BUREAU OF STANDARDS
NC	NORMALLY CLOSED
NEMA	NATIONAL ELECTRICAL MANUFACTURERS ASSOCIATION
NFPA	NATIONAL FIRE PROTECTION ASSOCIATION
NF	NEAR FACE
NIC	NOT IN CONTRACT
NO	NUMBER OR NORMALLY OPEN
NPS	NOMINAL PIPE SIZE (FORMERLY I.P.S.)
NPT	NATIONAL PIPE THREAD
NRS	NON-RISING STEM
NS	NEAR SIDE ST
NTS	NOT TO SCALE
OC	OVER-CROSSING OR ON CENTER
OD	OUTSIDE DIAMETER
OF	OVERFLOW OR OUTSIDE FACE
OH	OVER HEAD
OPER	OPERATOR OR OPERATING
OPNG	OPENING
OS & Y	OUTSIDE SCREW AND YOKE
OZ	OUNCE
P	POLE OR PAGE
PAVMT	PAVEMENT
PC	PRIMARY CLARIFIER OR PORTLAND CEMENT
PCOTG	PRESSURE CLEANOUT TO GRADE
PE	POLYELECTROLYTE OR POLYMER
PEF	PLANT EFFLUENT
PG	PRESSURE GAGE
pH	HYDROGEN ION CONCENTRATION
PI	PLANT INFLUENT OR POINT OF INTERSECTION
PL	PLATE, PROPERTY LINE OR PLACE
PLAS	PLASTER OR PLASTIC
PNEU	PNEUMATIC
PP	POWER POLE
PLT	PLANT
PPD	POUNDS PER DAY
PPH	POUNDS PER HOUR
PPM	PARTS PER MILLION
PR	PAIR
PRE	PREVIOUS
PRESS	PRESSURE
PRV	PRESSURE REGULATING, RELIEF OR REDUCING VALVE
PS	PRESSURE SWITCH
PSF	POUNDS PER SQUARE FOOT
PSI	POUNDS PER SQUARE INCH
PSIA	POUNDS PER SQUARE INCH ABSOLUTE
PSIG	POUNDS PER SQUARE INCH GAUGE
PTDF	PRESSURE TREATED DOUGLAS FIR
PV	PLUG VALVE
PVC	POLYVINYL CHLORIDE
PW	POTABLE WATER
R	RADIUS OR RISER
RAG	RETURN AIR GRILLE
RC	REINFORCED CONCRETE
RCP	REINFORCED CONCRETE PIPE
RD	ROOF DRAIN, ROUND, OR ROAD
RDWD	REDWOOD
RED	REDUCER OR REDUCING
REF	REFERENCE OR REFER
REG	REGULATINGHIC
REIN	REINFORCE OR REINFORCED
RE-STL	REINFORCING STEEL
REQD	REQUIRED
RET	RETURN
REV	REVISION
RM	ROOM
ROS	RATE OF SLOPE
RPM	REVOLUTIONS PER MINUTE OR REINFORCED PLASTIC MORTAR
RR	RAILROAD
RT	RIGHT
R/W	RIGHT OF WAY
RWL	RAINWATER LEADER
S	SOUTH, SCUM, SINK, SECOND, SEWER OR SLOPE
SA	SAMPLE
SC	SPARE CHEMICAL OR SECONDARY CLARIFIER
SCD	SCREWED
SCFM	STANDARD CUBIC FEET PER MINUTE
SCH	SCHEDULE
SCHED	SCHEDULE
SDR	STORM DRAINS
SEC	SECONDARY
SECT	SECTION
SER	SERIES
SER SK	SERVICE SINK
SETT	SETTLING
SH	SHOWER
SHT	SHEET
SIM	SIMILAR
SL	SLUDGE OR SLOPE
SP	STATIC PRESSURE
SPECS	SPECIFICATIONS
SQ	SQUARE
SS	SANITARY SEWER
SSU	SECONDS SAYBOLT UNIVERSAL
STA	STATION
STC	SLEEVE-TYPE COUPLING
STD	STANDARD
STL	STEEL
STN	STAINLESS
STR TRD	STAIR TREAD
STRUCT	STRUCTURAL OR STRUCTURE
SUCT	SUCTION
SV	SOLENOID VALVE
SWR	SIDEWALL REGISTER
SYM	SYMMETRICAL OR SYMBOL
SYS	SYSTEM
T	THERMOSTAT OR TANGENT
TB	TACK BOARD OR
T & B	TOP AND BOTTOM
TBC	TOP BACK OF CURB
TBE	THREAD BOTH ENDS
TBM	TEMPORARY BENCH MARK
TC	TOP OF CURB
TDH	TOTAL DYNAMIC HEAD
T & G	TONGUE AND GROOVE
THK	THICK OR THICKNESS
THR'D	THREADED
THRHLD	THRESHOLD
TK	TANK
TOE	THREAD ONE END
TOG	TOP OF GRATING
TOS	TOP OF STEEL
TOW	TOP OF WALL
TP	TELEPHONE POLE OR TELEGRAPH POLE
TRANS	TRANSITION OR TRANSMITTER
TV	THERMOSTATIC VALVE
TW	THERMOMETER WELL OR TREATED WATER
TYP	TYPICAL
UBC	UNIFORM BUILDING CODE
UC	UNDER-CROSSING
UG	UNDERGROUND
UGC	UNDERGROUND CONDUIT
UH	UNIT HEATER
UL	UNDERWRITERS LABORATORIES
UNO	UNLESS NOTED OTHERWISE
UP	UTILITY POLE
UR	URINAL
V	VACUUM, VALVE VERTICAL, VENT, VOLT OR VOLUME
VAR	VARIES OR VARIABLE
VCP	VITRIFIED CLAY PIPE
VERT	VERTICAL
VOL	VOLUME
VTC	VENT TO CEILING
VTR	VENT THROUGH ROOF
W	WEST, WATER OR WIDTH
W/	WITH
WC	WATER COLUMN OR WATER CLOSET
WCO	WALL CLEANOUT
WD	WOOD
WOG	WATER, OIL, GAS
W/O	WITHOUT
WS	WATER SURFACE
WSCOT	WAINSCOT
WSTP	WATER STOPACE
WT	WEIGHT
WWM	WELDED WIRE MESH
XS	EXTRA STRONG
YD	YARD

NOTES:

ELECTRICAL ABBREVIATIONS SHOWN ON ELECTRICAL SHEETS

INSTRUMENTATION ABBREVIATIONS SHOWN ON INSTRUMENTATION SHEET

ADDITIONAL ABBREVIATIONS CONFORM TO ANSI STANDARD ABBREVIATIONS Z 32.13

AS - BUILT

REV	DATE	BY	DESCRIPTION

SCALE: NONE

WARNING: 0 ½ 1 — IF THIS BAR DOES NOT MEASURE 1" THEN DRAWING IS NOT TO SCALE.

DESIGNED RF HEATON
DRAWN N HUNTER
CHECKED RJ SCHLICHER

SUBMITTED
PROJECT ENGINEER — R. C. E. NO. — DATE
MONTGOMERY WATSON CONSULTING ENGINEERS, INC. — R. C. E. NO. — DATE

MONTGOMERY WATSON
Salt Lake City, Utah

APPROVED — DATE
APPROVED — DATE

AMERICAN CHEMICAL SERVICE, INC. GRIFFITH, INDIANA
PERIMETER GROUNDWATER CONTAINMENT SYSTEM

STANDARD ABBREVIATIONS

SHEET G-4 OF SHEETS

01-JUN-1998 13:36 $$$$$$$$$directory/filename$$$$$$$$$$$

GENERAL NOTES:

1. BASE MAP DEVELOPED FROM AN AERIAL SURVEY MAP OF THE SITE FLOWN ON MARCH 8, 1994 BY GEONEX CHICAGO AERIAL SURVEY, INC.

2. VERTICAL DATUM IS U.S.G.S. DATUM. CONTOUR INTERVAL IS 2 FEET.

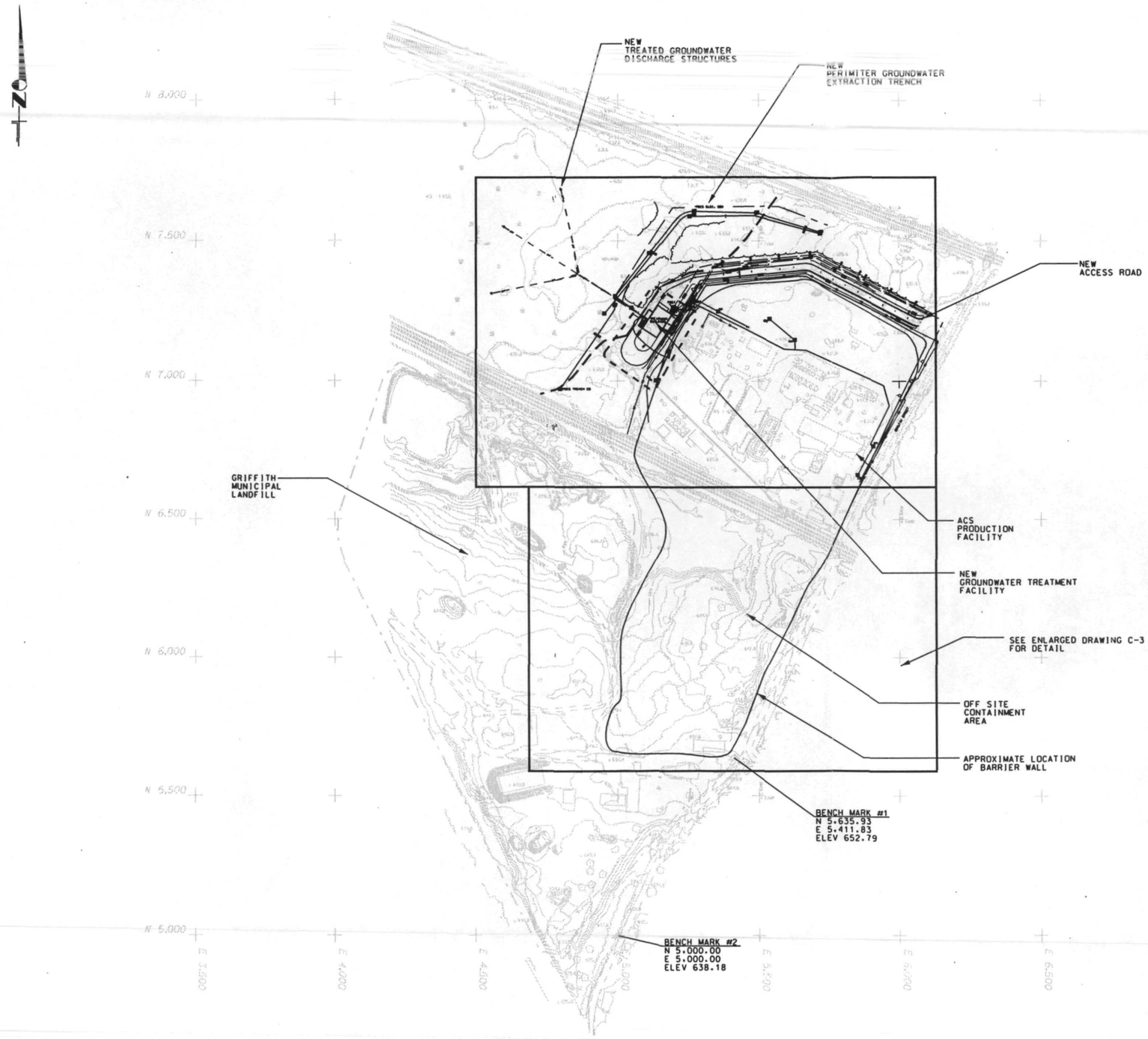

AS - BUILT

REV	DATE	BY	DESCRIPTION

SCALE:

WARNING
0 1/2 1
IF THIS BAR DOES NOT MEASURE 1" THEN DRAWING IS NOT TO SCALE.

DESIGNED
DRAWN
CHECKED

SUBMITTED
PROJECT ENGINEER R. C. E. NO. DATE
MONTGOMERY WATSON CONSULTING ENGINEERS, INC. R. C. E. NO. DATE

Salt Lake City, Utah

APPROVED DATE
APPROVED DATE

AMERICAN CHEMICAL SERVICE, INC. GRIFFITH, INDIANA
PERIMETER GROUNDWATER CONTAINMENT SYSTEM & BARRIER WALL EXTRACTION SYSTEM

OVERALL SITE PLAN

SHEET C-1

01-JUN-1998 13:44 $$$$$$$$$$$$$directory/filename$$$$$$$$$$$$$$

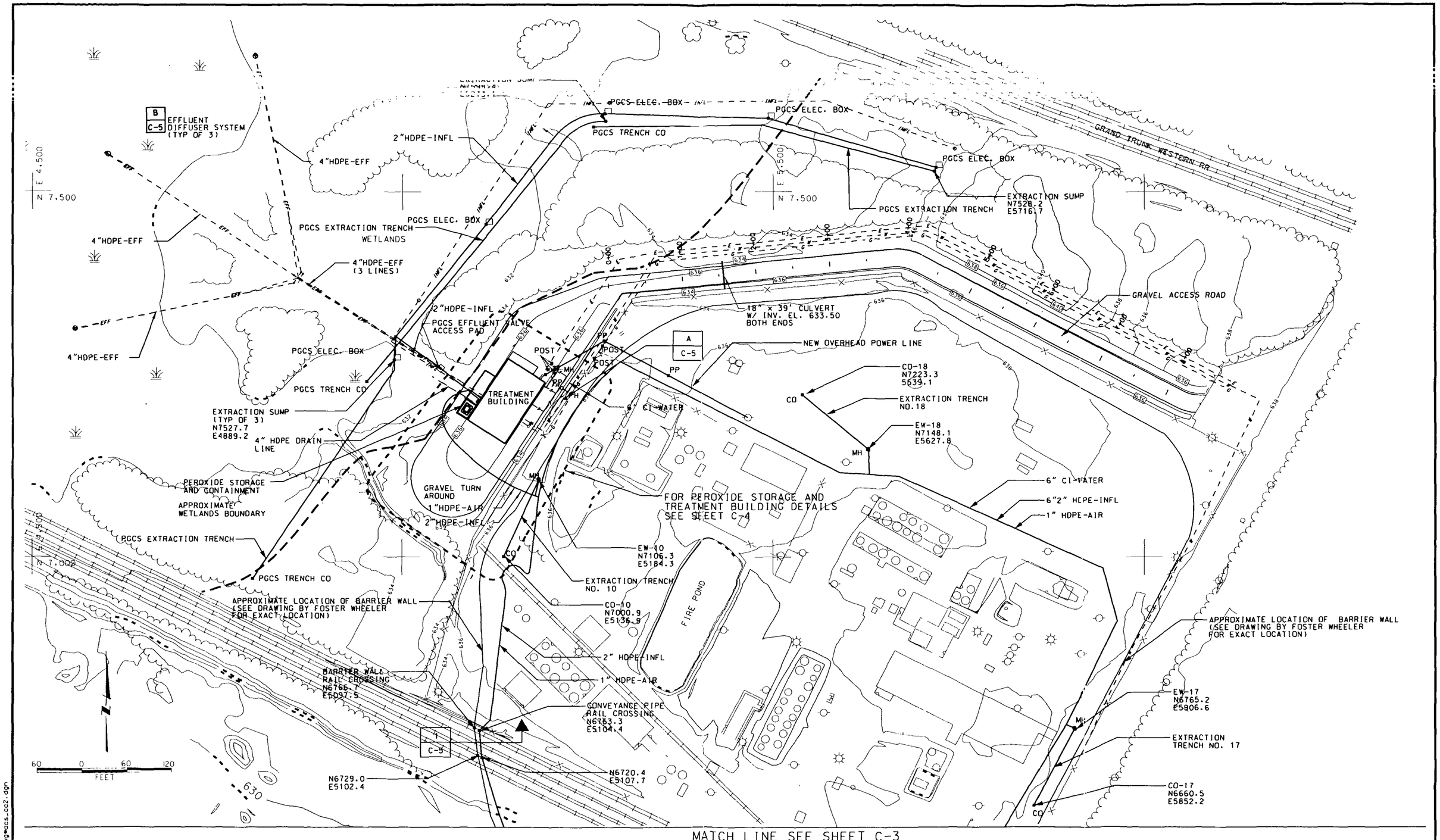

MATCH LINE SEE SHEET C-3

AS - BUILT

REV	DATE	BY	DESCRIPTION

SCALE:

WARNING: 0 1/2 1 — IF THIS BAR DOES NOT MEASURE 1" THEN DRAWING IS NOT TO SCALE.

DESIGNED ____ DRAWN ____ CHECKED ____

SUBMITTED — PROJECT ENGINEER — R. C. E. NO. — DATE

MONTGOMERY WATSON CONSULTING ENGINEERS, INC. — R. C. E. NO. — DATE

MONTGOMERY WATSON
Salt Lake City, Utah

APPROVED ____ DATE
APPROVED ____ DATE

AMERICAN CHEMICAL SERVICE, INC. GRIFFITH, INDIANA
PERIMETER GROUNDWATER CONTAINMENT SYSTEM & BARRIER WALL EXTRACTION SYSTEM

AREA 1 SITE PLAN

SHEET C-2

29-JUN-1998 13:23 ::\amer_chem\acs_dwg\acs_cc2.dgn

MATCH LINE SEE SHEET C-2

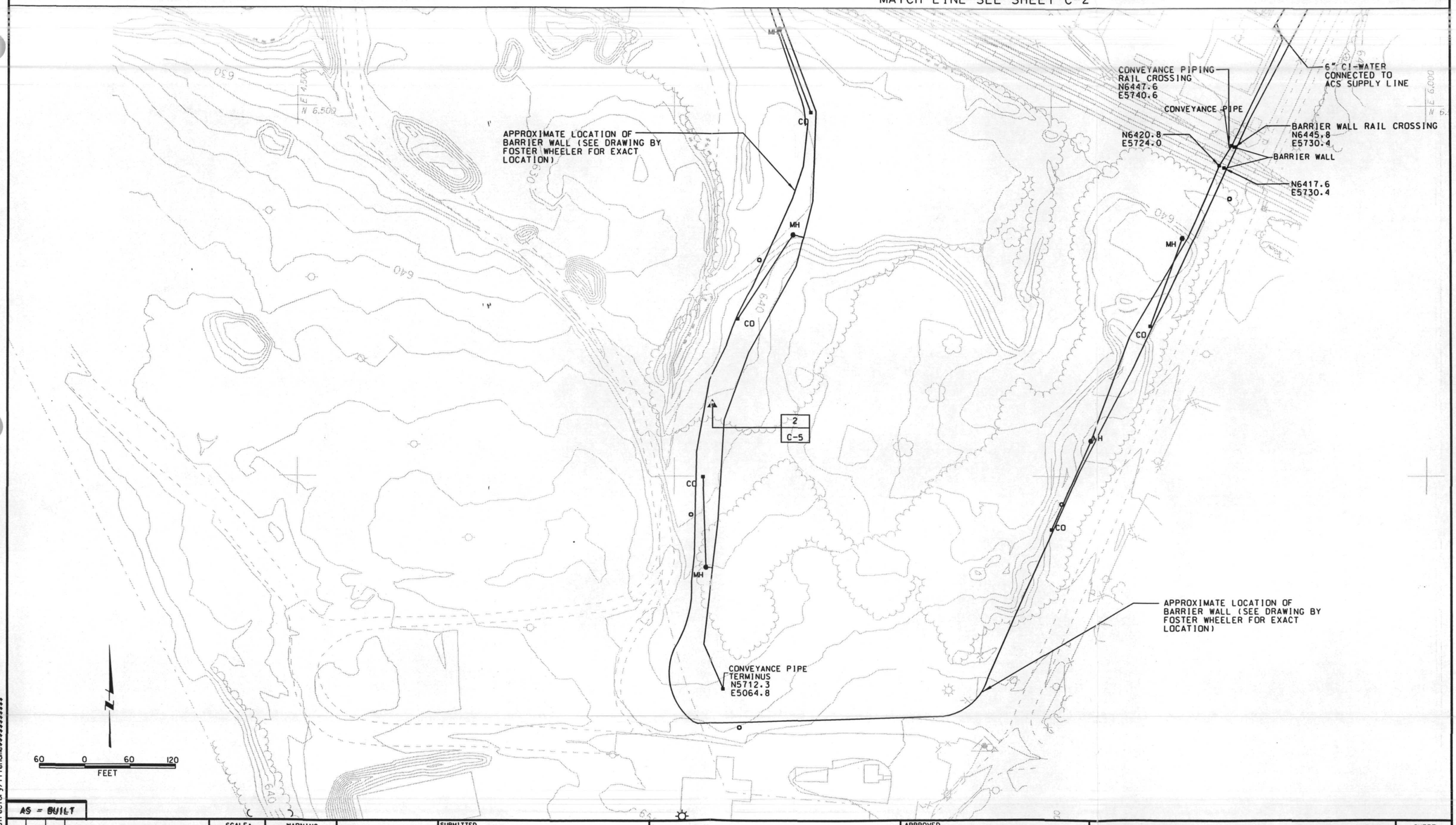

AS - BUILT

REV	DATE	BY	DESCRIPTION

SCALE:

WARNING 0 1/2 1 IF THIS BAR DOES NOT MEASURE 1" THEN DRAWING IS NOT TO SCALE.

DESIGNED
DRAWN
CHECKED

SUBMITTED
PROJECT ENGINEER R. C. E. NO. DATE
MONTGOMERY WATSON CONSULTING ENGINEERS, INC. R. C. E. NO. DATE

Salt Lake City, Utah

APPROVED DATE
APPROVED DATE

AMERICAN CHEMICAL SERVICE, INC. GRIFFITH, INDIANA
PERIMETER GROUNDWATER CONTAINMENT SYSTEM
AREA 2 SITE PLAN

SHEET C-3 OF SHEETS

01-JUN-1998 14:02 $$$$$$$$$$$$directory/filename$$$$$$$$$$$$$

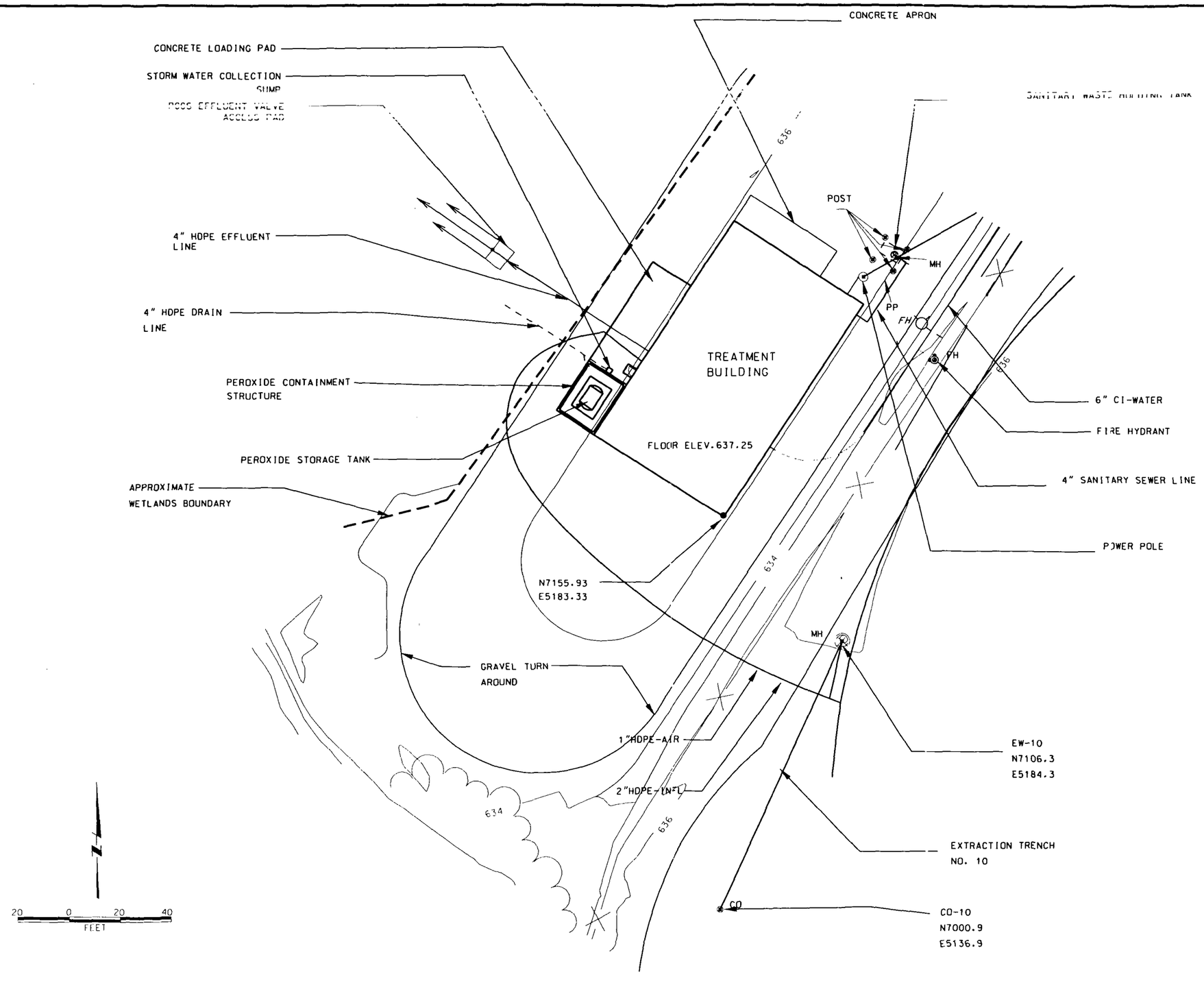

FILE No. aes.c03.dgn (01/30/96)

JOB No.

REV	DATE	BY	DESCRIPTION

BUILT

SCALE:

WARNING
0 1/2 1
IF THIS BAR DOES NOT MEASURE 1" THEN DRAWING IS NOT TO SCALE.

DESIGNED
DRAWN
CHECKED

SUBMITTED
PROJECT ENGINEER R. C. E. NO. DATE
MONTGOMERY WATSON CONSULTING ENGINEERS, INC. R. C. E. NO. DATE

MONTGOMERY WATSON
Salt Lake City, Utah

APPROVED DATE
APPROVED DATE

AMERICAN CHEMICAL SERVICE, INC. GRIFFITH, INDIANA
PERIMETER GROUNDWATER CONTAINMENT SYSTEM & BARRIER WALL EXTRACTION SYSTEM

TREATMENT BUILDING AND PEROXIDE STORAGE TANK SITE PLAN

SHEET C-4

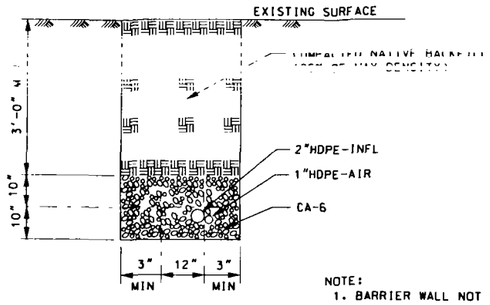

NOTE:
1. BARRIER WALL NOT SHOWN.
2. FILTER FABRIC TO BE INSTALLED WITH AN OVERLAP.

RAILWAY CROSSING TRENCH SECTION | 1 / C-2
SCALE: NONE

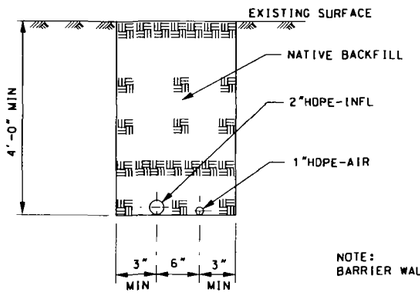

NOTE:
BARRIER WALL NOT SHOWN.

CONVEYANCE PIPE TRENCH SECTION | 2 / C-3
SCALE: NONE

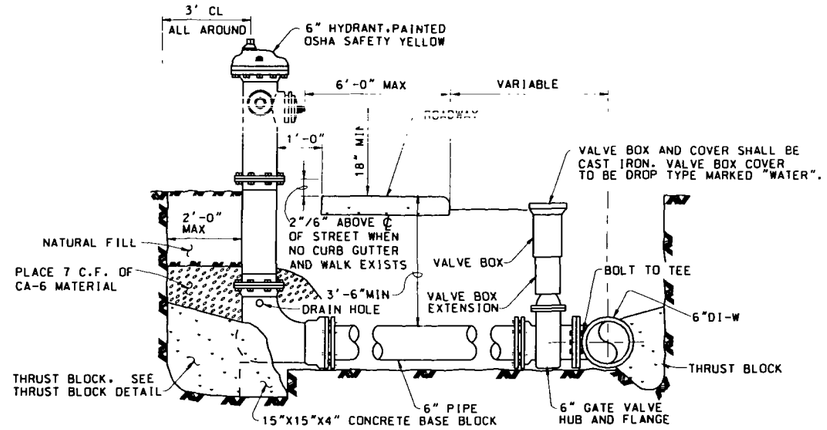

WATER MAIN	THRUST BLOCK SIZE (BEARING AREA AGAINST TRENCH WALL)
6"	2.0 S.F.
8"	3.3 S.F.
10"	5.4 S.F.
12"	7.7 S.F.

HYDRANT NOTES:
1. HYDRANTS SHALL BE 6" COMPRESSION TYPE. BREAKAWAY SECTIONS AT GROUND LEVEL. 5¼" MAIN VALVE OPENING. 2 2½" PORTS - 1- 4½" INSIDE STEAMER PORT W/ NATIONAL STANDARDS THREADS 4- PER INCH.
2. HYDRANTS SHALL BE HOODED UNTIL OPERATIONAL.
3. HYDRANT SHALL BE MARKED AS POTABLE.

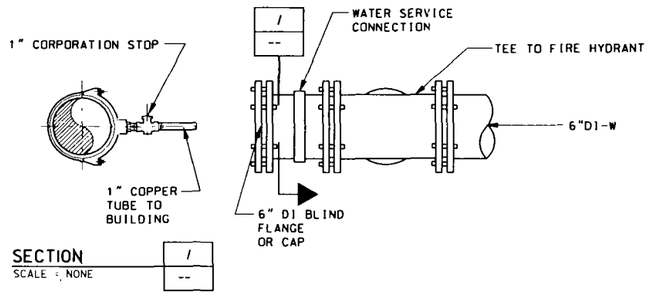

SECTION | 1 / --
SCALE: NONE

HYDRANT DETAIL | A / C-2
SCALE: NONE

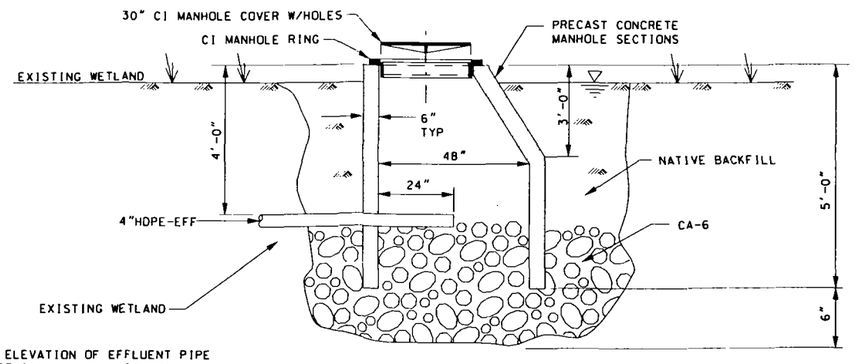

NOTE:
INVERT ELEVATION OF EFFLUENT PIPE SHALL BE SAME FOR ALL STRUCTURES.

DISCHARGE STRUCTURE DETAIL | B / C-2
SCALE: NONE

AS - BUILT

REV	DATE	BY	DESCRIPTION

SCALE:

WARNING
0 ½ 1
IF THIS BAR DOES NOT MEASURE 1" THEN DRAWING IS NOT TO SCALE.

DESIGNED
DRAWN
CHECKED

SUBMITTED
PROJECT ENGINEER R. C. E. NO. DATE
MONTGOMERY WATSON CONSULTING ENGINEERS, INC. R. C. E. NO. DATE

MONTGOMERY WATSON
Salt Lake City, Utah

APPROVED DATE
APPROVED DATE

AMERICAN CHEMICAL SERVICE, INC. GRIFFITH, INDIANA
PERIMETER GROUNDWATER CONTAINMENT SYSTEM & BARRIER WALL EXTRACTION SYSTEM

CIVIL DETAILS

SHEET C-5

29-JUN-1998 13:38 i:\amer_chemaug\civ\aug_c05.dgn

NOTES:

1. BASE MAP DEVELOPED FROM AN AERIAL SURVEY MAP OF THE SITE FLOWN ON MARCH 8, 1994 BY GEONEX CHICAGO AERIAL SURVEY, INC.
2. VERTICAL DATUM IS U.S.G.S. DATUM. CONTOUR INTERVAL IS 2 FEET.
3. SOIL BORINGS PERFORMED JANUARY 17, 1996 THROUGH FEBRUARY 12, 1996 BY ENVIRONMENTAL AND FOUNDATION DRILLING. ADDITIONAL BORINGS WERE COMPLETED BY HORIZONTAL TECHNOLOGIES INC. IN JULY 1996.
4. SOIL BORING ELEVATIONS AND LOCATIONS SURVEYED ON FEBRUARY 12, AND 16, 1996 BY AREA SURVEY.
5. BARRIER WALL LOCATION/ALIGNMENT SHOWN IS BASED ON RESULTS OF SOIL BORING DATA AVAILABLE. LOCATION WILL BE FINALIZED IN FIELD.
6. THE GROUND, SLAB AND LINER ELEVATIONS ARE APPROXIMATE AND ARE FOR GUIDANCE ONLY. ACTUAL ELEVATIONS WILL BE AS PER FIELD.
7. FOR BARRIER WALL SECTIONS SEE DRAWING HT-GR-02.
8. BARRIER WALL SHALL BE INSTALLED IN ACCORDANCE WITH APPLICABLE FEDERAL, STATE AND LOCAL REGULATIONS AND AS SPECIFIED IN THE CONTRACT DOCUMENTS.
9. SITE HEALTH AND SAFETY PLAN SHALL BE IMPLEMENTED DURING PERFORMANCE OF ALL WORK ON THE PROJECT.
10. FOR ADDITIONAL NOTES SEE DRAWING HT-GR-02 AND HT-GR-03.
11. PROVIDE SILT FENCE AS NEEDED TO MINIMIZE DISTURBANCE OF EXISTING DRAINAGE SWALES. REFER TO SPECIFICATION SECTION 02220.
12. EXCAVATIONS REQUIRING DEWATERING AND SHORING SHALL REFER TO SPECIFICATION SECTION 02223.
13. LOCATIONS OF STATIONS/MARKERS ARE REVISED BASED ON THE AS-BUILT CONDITIONS.
14. LOCATIONS OF THE BARRIER WALL ARE SHOWN BASED ON FIELD MEASUREMENTS FROM PRESIDSLY SURVEYED SITE FEATURES.
15. SEE CERTIFICATION REPORT FOR BARRIER WALL ELEVATIONS.

REFERENCE DRAWING

HT-GR-02	BARRIER WALL SECTIONS AND MISCELLANEOUS DETAILS
HT-GR-03	SECTIONAL ELEVATIONS
HT-GR-04	PANEL LOCATIONS

LEGEND

- PILOT TEST CELL
- RAILROAD TRACK
- TOPOGRAPHIC CONTOUR
- FENCE LINE
- UNDERGROUND ELECTRIC LINE
- OVERHEAD POWER LINE
- WATER LINE
- GAS LINE
- TELEPHONE LINE
- SEWER LINE
- STORM DRAIN
- ABOVE GROUND PROCESS LINE

REV	REVISION DESCRIPTION	PREPARED	CHECKED	APPROVED	DATE
	RECORD DRAWINGS	JR	JG		3/98
0	CERTIFIED FOR CONSTRUCTION	HB	JG		

THIS DRAWING CREATED ON AUTOCAD. DO NOT MODIFY MANUALLY.

THIS DOCUMENT IS THE PROPERTY OF FOSTER WHEELER ENVIRONMENTAL CORPORATION, AND IS TO BE RETURNED UPON REQUEST. IT MAY NOT BE REPRODUCED, COPIED, USED, OR MADE PUBLIC IN WHOLE OR IN PART, NOR USED FOR OTHER PURPOSES THAN THE PURPOSE FOR WHICH SUBMITTED WITHOUT WRITTEN PERMISSION OF FOSTER WHEELER ENVIRONMENTAL CORPORATION - THE PROJECT.

MONTGOMERY WATSON CONSTRUCTORS, INC
ADDISON, IL
HORIZONTAL TECHNOLOGIES INC.
CAPE CORAL, FL
AMERICAN CHEMICAL SERVICE, INC.
NPL SITE,
GRIFFITH, IN

BARRIER WALL
PLAN AND MISCELLANEOUS DETAILS

FOSTER WHEELER ENVIRONMENTAL CORPORATION
LYNDHURST, NEW JERSEY

DEPT	DESIGNED	PREPARED	CHECKED	APPROVED	DATE
CE	SB/BD	JR	JG		

DAT: G. MATTSON
F.E. NO. 80900.516

SCALE	DRAWING NUMBER	SH.	OF	REV
1"=60'-0"	HT-GR-01	1	1	0

CAD FILE NAME: F:\PEOPLE\BLUME\HCS\SHT1.DWG DATE: 3/19/98

FWE1B12.DWG

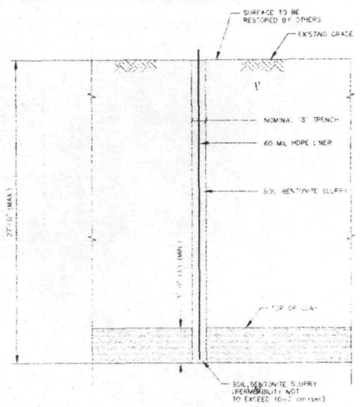

TYPICAL BARRIER WALL SECTION
FOR WALL DEPTHS LESS THAN 27'-0"
SCALE N.T.S.

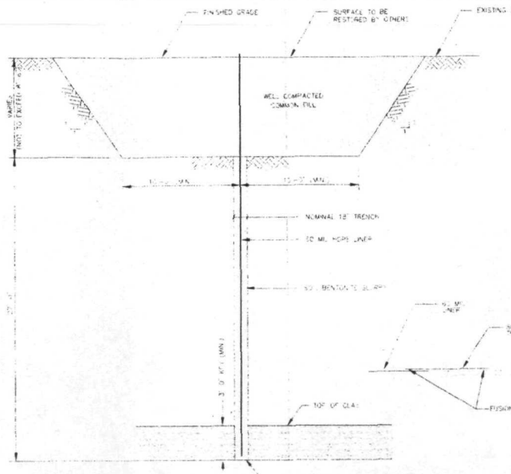

TYPICAL BARRIER WALL SECTION
FOR WALL DEPTHS GREATER THAN 27'-0"
SCALE N.T.S.

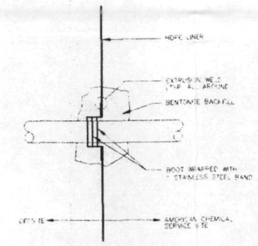

TYPICAL UTILITY CONNECTION DETAIL
SCALE N.T.S.

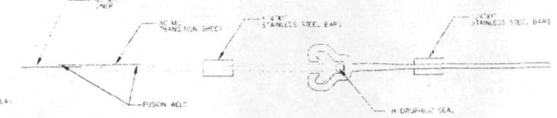

TYPICAL INTERSECTION HDPE JOINT
SCALE N.T.S.

NOTES:

1. THE EXCAVATION AND BACKFILL WAS PERFORMED IN ACCORDANCE WITH SECTION 02221 EXCAVATING, BACKFILLING AND COMPACTING.
2. BARRIER WALL WAS INSTALLED IN ACCORDANCE WITH SPECIFICATION SECTION 02168 BARRIER WALL.
3. FOR LOCATION/ORIENTATION OF BARRIER WALL SEE DRAWING HT-GR-01.
4. FOR EXISTING/FINISHED GRADES SEE BARRIER WALL ELEVATIONS TABLE IN CERTIFICATION REPORT.
5. IN AREAS WHERE UNSTABLE SOILS ARE ENCOUNTERED SHORING OR CUTTING TO A MORE STABLE SLOPE WAS PROVIDED.

REFERENCE DRAWING:

HT-GR-01 BARRIER WALL PLAN AND MISCELLANEOUS DETAILS
HT-GR-03 SECTIONAL ELEVATIONS

REFERENCE SPECIFICATION SECTIONS

01505 MOBILIZATION AND DEMOBILIZATION
02130 SITE PREPARATION
02221 UTILITY PIPE CONNECTIONS
02168 BARRIER WALL
02221 EXCAVATING, BACKFILLING AND COMPACTING
02267 HIGH DENSITY POLYETHYLENE LINER

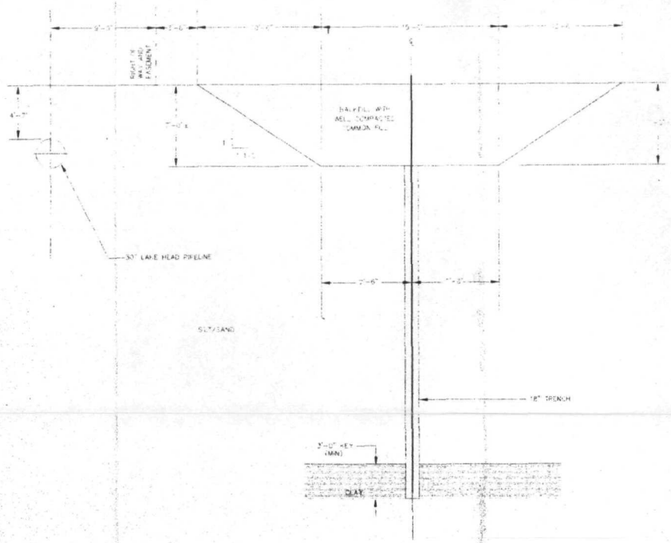

SECT D-D
SCALE N.T.S.

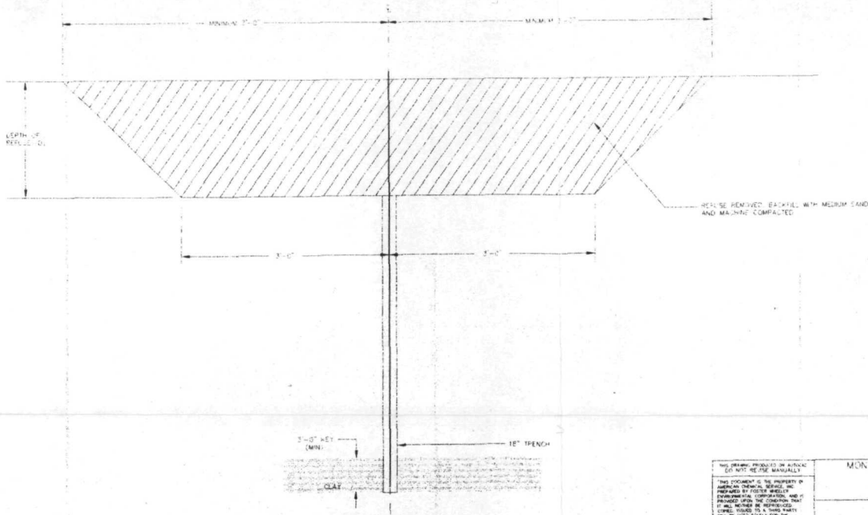

SECT E-E
(TYPICAL SECTION IN REFUSE AREA)
SECTION SIMILAR WHERE BENCHING REQUIRED
SCALE N.T.S.

NOTE: ELEVATIONS OF THE BENCH AREA SHALL BE AS INDICATED BY THE BARRIER WALL ELEVATIONS TABLE

REV	REVISION DESCRIPTION	PREPARED	CHECKED	APPROVED	DATE
	RECORD DRAWINGS	JG	JG		5/99
0	CERTIFIED FOR CONSTRUCTION	JRD	JG		

THIS DRAWING PRODUCED ON AUTOCAD DO NOT REVISE MANUALLY

THIS DOCUMENT IS THE PROPERTY OF AMERICAN CHEMICAL SERVICE, INC. PREPARED BY FOSTER WHEELER ENVIRONMENTAL CORPORATION. WHICH PROVIDES UPON THE CONDITION THAT IT IS NOT TO BE COPIED, LOANED, ISSUED TO A THIRD PARTY WILL BE USED SOLELY FOR THE PURPOSE FOR WHICH IT WAS ISSUED AND SOLELY FOR THE EXECUTION OR REVIEW OF THE ENGINEERING AND CONSTRUCTION OF THE PROJECT.

MONTGOMERY WATSON CONSTRUCTORS, INC.
ADDISON, IL
HORIZONTAL TECHNOLOGIES INC.
CAPE CORAL, FL
AMERICAN CHEMICAL SERVICE, INC.
NPL SITE
GRIFFITH, IN

BARRIER WALL
SECTIONS AND
MISCELLANEOUS DETAILS

FOSTER WHEELER ENVIRONMENTAL CORPORATION
LINDENHURST, NEW JERSEY

DEPT	DESIGNED	PREPARED	CHECKED	APPROVED	DATE
CE	SB/BD	JR/DSW	JG		

GAIL G. MATTSON
P.E. NO. 60900316

SCALE: AS NOTED
DRAWING NUMBER: HT-GR-02
SH. 1 OF 1
REV 0

FWG1R12.DWG

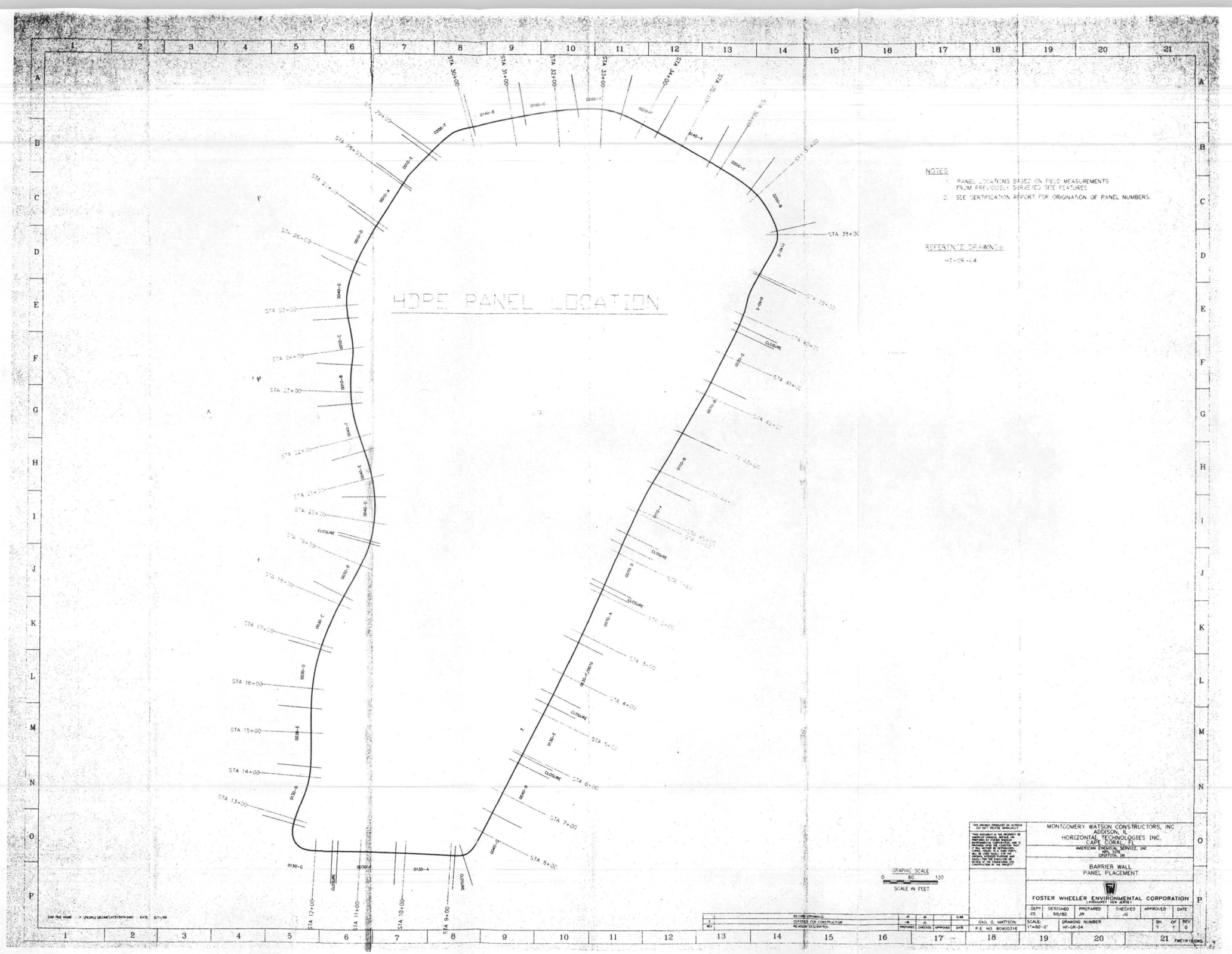
HDPE PANEL LOCATION
STA 39+00
STA 40+00
STA 41+00
STA 42+00
STA 43+00
STA 44+00
STA 45+00
STA 46+00
STA 47+00
STA 48+00
STA 1+00
STA 2+00
STA 3+00
STA 4+00
STA 5+00
STA 6+00
STA 7+00
STA 8+00
STA 9+00
STA 10+00
STA 11+00
STA 12+00
STA 13+00
STA 14+00
STA 15+00
STA 16+00
STA 17+00
STA 18+00
STA 19+00
STA 20+00
STA 21+00
STA 22+00
STA 23+00
STA 24+00
STA 25+00
STA 26+00
STA 27+00
STA 28+00
STA 29+00
STA 30+00
STA 31+00
STA 32+00
STA 33+00
STA 34+00
STA 35+00
STA 36+00
STA 37+00
STA 38+00
CLOSURE
0130-A
0130-B
0130-C
0130-D
0130-E
0130-F
0140-A
0140-B
0140-C
0140-D
0140-E
0140-F
0140-G
0140-H
0010-A
0010-B
0010-C
0010-D
0010-E
0010-F
0010-G
0010-H
0020-A
0020-B
0020-C
0020-D
0020-E
0020-F
0020-G
0020-H
0020-I
0020-J
0020-K
0020-L
0020-M
0020-N
0020-O
0020-P
0020-Q
0020-R
0020-S
0020-T
0020-U
0020-V
0020-W
0020-X
0020-Y
0020-Z
0020-AA
0020-AB
0020-AC
0020-AD
0020-AE
0020-AF
0020-AG
0020-AH
0020-AI
0020-AJ
0020-AK
0020-AL
0020-AM
0020-AN
0020-AO
0020-AP
0020-AQ
0020-AR
0020-AS
0020-AT
0020-AU
0020-AV
0020-AW
0020-AX
0020-AY
0020-AZ
0020-BA
0020-BB
0020-BC
0020-BD
0020-BE
0020-BF
0020-BG
0020-BH
0020-BI
0020-BJ
0020-BK
0020-BL
0020-BM
0020-BN
0020-BO
0020-BP
0020-BQ
0020-BR
0020-BS
0020-BT
0020-BU
0020-BV
0020-BW
0020-BX
0020-BY
0020-BZ
0020-CA
0020-CB
0020-CC
0020-CD
0020-CE
0020-CF
0020-CG
0020-CH
0020-CI
0020-CJ
0020-CK
0020-CL
0020-CM
0020-CN
0020-CO
0020-CP
0020-CQ
0020-CR
0020-CS
0020-CT
0020-CU
0020-CV
0020-CW
0020-CX
0020-CY
0020-CZ
0020-DA
0020-DB
0020-DC
0020-DD
0020-DE
0020-DF
0020-DG
0020-DH
0020-DI
0020-DJ
0020-DK
0020-DL
0020-DM
0020-DN
0020-DO
0020-DP
0020-DQ
0020-DR
0020-DS
0020-DT
0020-DU
0020-DV
0020-DW
0020-DX
0020-DY
0020-DZ
0020-EA
0020-EB
0020-EC
0020-ED
0020-EE
0020-EF
0020-EG
0020-EH
0020-EI
0020-EJ
0020-EK
0020-EL
0020-EM
0020-EN
0020-EO
0020-EP
0020-EQ
0020-ER
0020-ES
0020-ET
0020-EU
0020-EV
0020-EW
0020-EX
0020-EY
0020-EZ
0020-FA
0020-FB
0020-FC
0020-FD
0020-FE
0020-FF
0020-FG
0020-FH
0020-FI
0020-FJ
0020-FK
0020-FL
0020-FM
0020-FN
0020-FO
0020-FP
0020-FQ
0020-FR
0020-FS
0020-FT
0020-FU
0020-FV
0020-FW
0020-FX
0020-FY
0020-FZ
0020-GA
0020-GB
0020-GC
0020-GD
0020-GE
0020-GF
0020-GG
0020-GH
0020-GI
0020-GJ
0020-GK
0020-GL
0020-GM
0020-GN
0020-GO
0020-GP
0020-GQ
0020-GR
0020-GS
0020-GT
0020-GU
0020-GV
0020-GW
0020-GX
0020-GY
0020-GZ
0020-HA
0020-HB
0020-HC
0020-HD
0020-HE
0020-HF
0020-HG
0020-HH
0020-HI
0020-HJ
0020-HK
0020-HL
0020-HM
0020-HN
0020-HO
0020-HP
0020-HQ
0020-HR
0020-HS
0020-HT
0020-HU
0020-HV
0020-HW
0020-HX
0020-HY
0020-HZ
0020-IA
0020-IB
0020-IC
0020-ID
0020-IE
0020-IF
0020-IG
0020-IH
0020-II
0020-IJ
0020-IK
0020-IL
0020-IM
0020-IN
0020-IO
0020-IP
0020-IQ
0020-IR
0020-IS
0020-IT
0020-IU
0020-IV
0020-IW
0020-IX
0020-IY
0020-IZ
0020-JA
0020-JB
0020-JC
0020-JD
0020-JE
0020-JF
0020-JG
0020-JH
0020-JI
0020-JJ
0020-JK
0020-JL
0020-JM
0020-JN
0020-JO
0020-JP
0020-JQ
0020-JR
0020-JS
0020-JT
0020-JU
0020-JV
0020-JW
0020-JX
0020-JY
0020-JZ
0020-KA
0020-KB
0020-KC
0020-KD
0020-KE
0020-KF
0020-KG
0020-KH
0020-KI
0020-KJ
0020-KK
0020-KL
0020-KM
0020-KN
0020-KO
0020-KP
0020-KQ
0020-KR
0020-KS
0020-KT
0020-KU
0020-KV
0020-KW
0020-KX
0020-KY
0020-KZ
0020-LA
0020-LB
0020-LC
0020-LD
0020-LE
0020-LF
0020-LG
0020-LH
0020-LI
0020-LJ
0020-LK
0020-LL
0020-LM
0020-LN
0020-LO
0020-LP
0020-LQ
0020-LR
0020-LS
0020-LT
0020-LU
0020-LV
0020-LW
0020-LX
0020-LY
0020-LZ
0020-MA
0020-MB
0020-MC
0020-MD
0020-ME
0020-MF
0020-MG
0020-MH
0020-MI
0020-MJ
0020-MK
0020-ML
0020-MM
0020-MN
0020-MO
0020-MP
0020-MQ
0020-MR
0020-MS
0020-MT
0020-MU
0020-MV
0020-MW
0020-MX
0020-MY
0020-MZ
0020-NA
0020-NB
0020-NC
0020-ND
0020-NE
0020-NF
0020-NG
0020-NH
0020-NI
0020-NJ
0020-NK
0020-NL
0020-NM
0020-NN
0020-NO
0020-NP
0020-NQ
0020-NR
0020-NS
0020-NT
0020-NU
0020-NV
0020-NW
0020-NX
0020-NY
0020-NZ
0020-OA
0020-OB
0020-OC
0020-OD
0020-OE
0020-OF
0020-OG
0020-OH
0020-OI
0020-OJ
0020-OK
0020-OL
0020-OM
0020-ON
0020-OO
0020-OP
0020-OQ
0020-OR
0020-OS
0020-OT
0020-OU
0020-OV
0020-OW
0020-OX
0020-OY
0020-OZ
0020-PA
0020-PB
0020-PC
0020-PD
0020-PE
0020-PF
0020-PG
0020-PH
0020-PI
0020-PJ
0020-PK
0020-PL
0020-PM
0020-PN
0020-PO
0020-PP
0020-PQ
0020-PR
0020-PS
0020-PT
0020-PU
0020-PV
0020-PW
0020-PX
0020-PY
0020-PZ
0020-QA
0020-QB
0020-QC
0020-QD
0020-QE
0020-QF
0020-QG
0020-QH
0020-QI
0020-QJ
0020-QK
0020-QL
0020-QM
0020-QN
0020-QO
0020-QP
0020-QQ
0020-QR
0020-QS
0020-QT
0020-QU
0020-QV
0020-QW
0020-QX
0020-QY
0020-QZ
0020-RA
0020-RB
0020-RC
0020-RD
0020-RE
0020-RF
0020-RG
0020-RH
0020-RI
0020-RJ
0020-RK
0020-RL
0020-RM
0020-RN
0020-RO
0020-RP
0020-RQ
0020-RR
0020-RS
0020-RT
0020-RU
0020-RV
0020-RW
0020-RX
0020-RY
0020-RZ
0020-SA
0020-SB
0020-SC
0020-SD
0020-SE
0020-SF
0020-SG
0020-SH
0020-SI
0020-SJ
0020-SK
0020-SL
0020-SM
0020-SN
0020-SO
0020-SP
0020-SQ
0020-SR
0020-SS
0020-ST
0020-SU
0020-SV
0020-SW
0020-SX
0020-SY
0020-SZ
0020-TA
0020-TB
0020-TC
0020-TD
0020-TE
0020-TF
0020-TG
0020-TH
0020-TI
0020-TJ
0020-TK
0020-TL
0020-TM
0020-TN
0020-TO
0020-TP
0020-TQ
0020-TR
0020-TS
0020-TT
0020-TU
0020-TV
0020-TW
0020-TX
0020-TY
0020-TZ
0020-UA
0020-UB
0020-UC
0020-UD
0020-UE
0020-UF
0020-UG
0020-UH
0020-UI
0020-UJ
0020-UK
0020-UL
0020-UM
0020-UN
0020-UO
0020-UP
0020-UQ
0020-UR
0020-US
0020-UT
0020-UU
0020-UV
0020-UW
0020-UX
0020-UY
0020-UZ
0020-VA
0020-VB
0020-VC
0020-VD
0020-VE
0020-VF
0020-VG
0020-VH
0020-VI
0020-VJ
0020-VK
0020-VL
0020-VM
0020-VN
0020-VO
0020-VP
0020-VQ
0020-VR
0020-VS
0020-VT
0020-VU
0020-VV
0020-VW
0020-VX
0020-VY
0020-VZ
0020-WA
0020-WB
0020-WC
0020-WD
0020-WE
0020-WF
0020-WG
0020-WH
0020-WI
0020-WJ
0020-WK
0020-WL
0020-WM
0020-WN
0020-WO
0020-WP
0020-WQ
0020-WR
0020-WS
0020-WT
0020-WU
0020-WV
0020-WW
0020-WX
0020-WY
0020-WZ
0020-XA
0020-XB
0020-XC
0020-XD
0020-XE
0020-XF
0020-XG
0020-XH
0020-XI
0020-XJ
0020-XK
0020-XL
0020-XM
0020-XN
0020-XO
0020-XP
0020-XQ
0020-XR
0020-XS
0020-XT
0020-XU
0020-XV
0020-XW
0020-XX
0020-XY
0020-XZ
0020-YA
0020-YB
0020-YC
0020-YD
0020-YE
0020-YF
0020-YG
0020-YH
0020-YI
0020-YJ
0020-YK
0020-YL
0020-YM
0020-YN
0020-YO
0020-YP
0020-YQ
0020-YR
0020-YS
0020-YT
0020-YU
0020-YV
0020-YW
0020-YX
0020-YY
0020-YZ
0020-ZA
0020-ZB
0020-ZC
0020-ZD
0020-ZE
0020-ZF
0020-ZG
0020-ZH
0020-ZI
0020-ZJ
0020-ZK
0020-ZL
0020-ZM
0020-ZN
0020-ZO
0020-ZP
0020-ZQ
0020-ZR
0020-ZS
0020-ZT
0020-ZU
0020-ZV
0020-ZW
0020-ZX
0020-ZY
0020-ZZ
0030-A
0030-B
0030-C
0030-D
0030-E
0030-F
0040-A
0040-B
0040-C
0040-D
0040-E
0040-F
0040-G
0040-H
0010-A
0010-B
0010-C
0010-D
0010-E
0010-F
0010-G
0010-H
0010-I
0010-J
0010-K
0010-L
0010-M
0010-N
0010-O
0010-P
0010-Q
0010-R
0010-S
0010-T
0010-U
0010-V
0010-W
0010-X
0010-Y
0010-Z
0010-AA
0010-AB
0010-AC
0010-AD
0010-AE
0010-AF
0010-AG
0010-AH
0010-AI
0010-AJ
0010-AK
0010-AL
0010-AM
0010-AN
0010-AO
0010-AP
0010-AQ
0010-AR
0010-AS
0010-AT
0010-AU
0010-AV
0010-AW
0010-AX
0010-AY
0010-AZ
0010-BA
0010-BB
0010-BC
0010-BD
0010-BE
0010-BF
0010-BG
0010-BH
0010-BI
0010-BJ
0010-BK
0010-BL
0010-BM
0010-BN
0010-BO
0010-BP
0010-BQ
0010-BR
0010-BS
0010-BT
0010-BU
0010-BV
0010-BW
0010-BX
0010-BY
0010-BZ
0010-CA
0010-CB
0010-CC
0010-CD
0010-CE
0010-CF
0010-CG
0010-CH
0010-CI
0010-CJ
0010-CK
0010-CL
0010-CM
0010-CN
0010-CO
0010-CP
0010-CQ
0010-CR
0010-CS
0010-CT
0010-CU
0010-CV
0010-CW
0010-CX
0010-CY
0010-CZ
0010-DA
0010-DB
0010-DC
0010-DD
0010-DE
0010-DF
0010-DG
0010-DH
0010-DI
0010-DJ
0010-DK
0010-DL
0010-DM
0010-DN
0010-DO
0010-DP
0010-DQ
0010-DR
0010-DS
0010-DT
0010-DU
0010-DV
0010-DW
0010-DX
0010-DY
0010-DZ
0010-EA
0010-EB
0010-EC
0010-ED
0010-EE
0010-EF
0010-EG
0010-EH
0010-EI
0010-EJ
0010-EK
0010-EL
0010-EM
0010-EN
0010-EO
0010-EP
0010-EQ
0010-ER
0010-ES
0010-ET
0010-EU
0010-EV
0010-EW
0010-EX
0010-EY
0010-EZ
0010-FA
0010-FB
0010-FC
0010-FD
0010-FE
0010-FF
0010-FG
0010-FH
0010-FI
0010-FJ
0010-FK
0010-FL
0010-FM
0010-FN
0010-FO
0010-FP
0010-FQ
0010-FR
0010-FS
0010-FT
0010-FU
0010-FV
0010-FW
0010-FX
0010-FY
0010-FZ
0010-GA
0010-GB
0010-GC
0010-GD
0010-GE
0010-GF
0010-GG
0010-GH
0010-GI
0010-GJ
0010-GK
0010-GL
0010-GM
0010-GN
0010-GO
0010-GP
0010-GQ
0010-GR
0010-GS
0010-GT
0010-GU
0010-GV
0010-GW
0010-GX
0010-GY
0010-GZ
0010-HA
0010-HB
0010-HC
0010-HD
0010-HE
0010-HF
0010-HG
0010-HH
0010-HI
0010-HJ
0010-HK
0010-HL
0010-HM
0010-HN
0010-HO
0010-HP
0010-HQ
0010-HR
0010-HS
0010-HT
0010-HU
0010-HV
0010-HW
0010-HX
0010-HY
0010-HZ
0010-IA
0010-IB
0010-IC
0010-ID
0010-IE
0010-IF
0010-IG
0010-IH
0010-II
0010-IJ
0010-IK
0010-IL
0010-IM
0010-IN
0010-IO
0010-IP
0010-IQ
0010-IR
0010-IS
0010-IT
0010-IU
0010-IV
0010-IW
0010-IX
0010-IY
0010-IZ
0010-JA
0010-JB
0010-JC
0010-JD
0010-JE
0010-JF
0010-JG
0010-JH
0010-JI
0010-JJ
0010-JK
0010-JL
0010-JM
0010-JN
0010-JO
0010-JP
0010-JQ
0010-JR
0010-JS
0010-JT
0010-JU
0010-JV
0010-JW
0010-JX
0010-JY
0010-JZ
0010-KA
0010-KB
0010-KC
0010-KD
0010-KE
0010-KF
0010-KG
0010-KH
0010-KI
0010-KJ
0010-KK
0010-KL
0010-KM
0010-KN
0010-KO
0010-KP
0010-KQ
0010-KR
0010-KS
0010-KT
0010-KU
0010-KV
0010-KW
0010-KX
0010-KY
0010-KZ
0010-LA
0010-LB
0010-LC
0010-LD
0010-LE
0010-LF
0010-LG
0010-LH
0010-LI
0010-LJ
0010-LK
0010-LL
0010-LM
0010-LN
0010-LO
0010-LP
0010-LQ
0010-LR
0010-LS
0010-LT
0010-LU
0010-LV
0010-LW
0010-LX
0010-LY
0010-LZ
0010-MA
0010-MB
0010-MC
0010-MD
0010-ME
0010-MF
0010-MG
0010-MH
0010-MI
0010-MJ
0010-MK
0010-ML
0010-MM
0010-MN
0010-MO
0010-MP
0010-MQ
0010-MR
0010-MS
0010-MT
0010-MU
0010-MV
0010-MW
0010-MX
0010-MY
0010-MZ
0010-NA
0010-NB
0010-NC
0010-ND
0010-NE
0010-NF
0010-NG
0010-NH
0010-NI
0010-NJ
0010-NK
0010-NL
0010-NM
0010-NN
0010-NO
0010-NP
0010-NQ
0010-NR
0010-NS
0010-NT
0010-NU
0010-NV
0010-NW
0010-NX
0010-NY
0010-NZ
0010-OA
0010-OB
0010-OC
0010-OD
0010-OE
0010-OF
0010-OG
0010-OH
0010-OI
0010-OJ
0010-OK
0010-OL
0010-OM
0010-ON
0010-OO
0010-OP
0010-OQ
0010-OR
0010-OS
0010-OT
0010-OU
0010-OV
0010-OW
0010-OX
0010-OY
0010-OZ
0010-PA
0010-PB
0010-PC
0010-PD
0010-PE
0010-PF
0010-PG
0010-PH
0010-PI
0010-PJ
0010-PK
0010-PL
0010-PM
0010-PN
0010-PO
0010-PP
0010-PQ
0010-PR
0010-PS
0010-PT
0010-PU
0010-PV
0010-PW
0010-PX
0010-PY
0010-PZ
0010-QA
0010-QB
0010-QC
0010-QD
0010-QE
0010-QF
0010-QG
0010-QH
0010-QI
0010-QJ
0010-QK
0010-QL
0010-QM
0010-QN
0010-QO
0010-QP
0010-QQ
0010-QR
0010-QS
0010-QT
0010-QU
0010-QV
0010-QW
0010-QX
0010-QY
0010-QZ
0010-RA
0010-RB
0010-RC
0010-RD
0010-RE
0010-RF
0010-RG
0010-RH
0010-RI
0010-RJ
0010-RK
0010-RL
0010-RM
0010-RN
0010-RO
0010-RP
0010-RQ
0010-RR
0010-RS
0010-RT
0010-RU
0010-RV
0010-RW
0010-RX
0010-RY
0010-RZ
0010-SA
0010-SB
0010-SC
0010-SD
0010-SE
0010-SF
0010-SG
0010-SH
0010-SI
0010-SJ
0010-SK
0010-SL
0010-SM
0010-SN
0010-SO
0010-SP
0010-SQ
0010-SR
0010-SS
0010-ST
0010-SU
0010-SV
0010-SW
0010-SX
0010-SY
0010-SZ
0010-TA
0010-TB
0010-TC
0010-TD
0010-TE
0010-TF
0010-TG
0010-TH
0010-TI
0010-TJ
0010-TK
0010-TL
0010-TM
0010-TN
0010-TO
0010-TP
0010-TQ
0010-TR
0010-TS
0010-TT
0010-TU
0010-TV
0010-TW
0010-TX
0010-TY
0010-TZ
0010-UA
0010-UB
0010-UC
0010-UD
0010-UE
0010-UF
0010-UG
0010-UH
0010-UI
0010-UJ
0010-UK
0010-UL
0010-UM
0010-UN
0010-UO
0010-UP
0010-UQ
0010-UR
0010-US
0010-UT
0010-UU
0010-UV
0010-UW
0010-UX
0010-UY
0010-UZ
0010-VA
0010-VB
0010-VC
0010-VD
0010-VE
0010-VF
0010-VG
0010-VH
0010-VI
0010-VJ
0010-VK
0010-VL
0010-VM
0010-VN
0010-VO
0010-VP
0010-VQ
0010-VR
0010-VS
0010-VT
0010-VU
0010-VV
0010-VW
0010-VX
0010-VY
0010-VZ
0010-WA
0010-WB
0010-WC
0010-WD
0010-WE
0010-WF
0010-WG
0010-WH
0010-WI
0010-WJ
0010-WK
0010-WL
0010-WM
0010-WN
0010-WO
0010-WP
0010-WQ
0010-WR
0010-WS
0010-WT
0010-WU
0010-WV
0010-WW
0010-WX
0010-WY
0010-WZ
0010-XA
0010-XB
0010-XC
0010-XD
0010-XE
0010-XF
0010-XG
0010-XH
0010-XI
0010-XJ
0010-XK
0010-XL
0010-XM
0010-XN
0010-XO
0010-XP
0010-XQ
0010-XR
0010-XS
0010-XT
0010-XU
0010-XV
0010-XW
0010-XX
0010-XY
0010-XZ
0010-YA
0010-YB
0010-YC
0010-YD
0010-YE
0010-YF
0010-YG
0010-YH
0010-YI
0010-YJ
0010-YK
0010-YL
0010-YM
0010-YN
0010-YO
0010-YP
0010-YQ
0010-YR
0010-YS
0010-YT
0010-YU
0010-YV
0010-YW
0010-YX
0010-YY
0010-YZ
0010-ZA
0010-ZB
0010-ZC
0010-ZD
0010-ZE
0010-ZF
0010-ZG
0010-ZH
0010-ZI
0010-ZJ
0010-ZK
0010-ZL
0010-ZM
0010-ZN
0010-ZO
0010-ZP
0010-ZQ
0010-ZR
0010-ZS
0010-ZT
0010-ZU
0010-ZV
0010-ZW
0010-ZX
0010-ZY
0010-ZZ
0130-A
0130-B
0130-C
0130-D
0130-E
0130-F
0140-A
0140-B
0140-C
0140-D
0140-E
0140-F
0140-G
0140-H
0010-A
0010-B
0010-C
0010-D
0010-E
0010-F
0010-G
0010-H
0020-A
0020-B
0020-C
0020-D
0020-E
0020-F
0020-G
0020-H
0020-I
0020-J
0020-K
0020-L
0020-M
0020-N
0020-O
0020-P
0020-Q
0020-R
0020-S
0020-T
0020-U
0020-V
0020-W
0020-X
0020-Y
0020-Z
0020-AA
0020-AB
0020-AC
0020-AD
0020-AE
0020-AF
0020-AG
0020-AH
0020-AI
0020-AJ
0020-AK
0020-AL
0020-AM
0020-AN
0020-AO
0020-AP
0020-AQ
0020-AR
0020-AS
0020-AT
0020-AU
0020-AV
0020-AW
0020-AX
0020-AY
0020-AZ
0020-BA
0020-BB
0020-BC
0020-BD
0020-BE
0020-BF
0020-BG
0020-BH
0020-BI
0020-BJ
0020-BK
0020-BL
0020-BM
0020-BN
0020-BO
0020-BP
0020-BQ
0020-BR
0020-BS
0020-BT
0020-BU
0020-BV
0020-BW
0020-BX
0020-BY
0020-BZ
0020-CA
0020-CB
0020-CC
0020-CD
0020-CE
0020-CF
0020-CG
0020-CH
0020-CI
0020-CJ
0020-CK
0020-CL
0020-CM
0020-CN
0020-CO
0020-CP
0020-CQ
0020-CR
0020-CS
0020-CT
0020-CU
0020-CV
0020-CW
0020-CX
0020-CY
0020-CZ
0020-DA
0020-DB
0020-DC
0020-DD
0020-DE
0020-DF
0020-DG
0020-DH
0020-DI
0020-DJ
0020-DK
0020-DL
0020-DM
0020-DN
0020-DO
0020-DP
0020-DQ
0020-DR
0020-DS
0020-DT
0020-DU
0020-DV
0020-DW
0020-DX
0020-DY
0020-DZ
0020-EA
0020-EB
0020-EC
0020-ED
0020-EE
0020-EF
0020-EG
0020-EH
0020-EI
0020-EJ
0020-EK
0020-EL
0020-EM
0020-EN
0020-EO
0020-EP
0020-EQ
0020-ER
0020-ES
0020-ET
0020-EU
0020-EV
0020-EW
0020-EX
0020-EY
0020-EZ
0020-FA
0020-FB
0020-FC
0020-FD
0020-FE
0020-FF
0020-FG
0020-FH
0020-FI
0020-FJ
0020-FK
0020-FL
0020-FM
0020-FN
0020-FO
0020-FP
0020-FQ
0020-FR
0020-FS
0020-FT
0020-FU
0020-FV
0020-FW
0020-FX
0020-FY
0020-FZ
0020-GA
0020-GB
0020-GC
0020-GD
0020-GE
0020-GF
0020-GG
0020-GH
0020-GI
0020-GJ
0020-GK
0020-GL
0020-GM
0020-GN
0020-GO
0020-GP
0020-GQ
0020-GR
0020-GS
0020-GT
0020-GU
0020-GV
0020-GW
0020-GX
0020-GY
0020-GZ
0020-HA
0020-HB
0020-HC
0020-HD
0020-HE
0020-HF
0020-HG
0020-HH
0020-HI
0020-HJ
0020-HK
0020-HL
0020-HM
0020-HN
0020-HO
0020-HP
0020-HQ
0020-HR
0020-HS
0020-HT
0020-HU
0020-HV
0020-HW
0020-HX
0020-HY
0020-HZ
0020-IA
0020-IB
0020-IC
0020-ID
0020-IE
0020-IF
0020-IG
0020-IH
0020-II
0020-IJ
0020-IK
0020-IL
0020-IM
0020-IN
0020-IO
0020-IP
0020-IQ
0020-IR
0020-IS
0020-IT
0020-IU
0020-IV
0020-IW
0020-IX
0020-IY
0020-IZ
0020-JA
0020-JB
0020-JC
0020-JD
0020-JE
0020-JF
0020-JG
0020-JH
0020-JI
0020-JJ
0020-JK
0020-JL
0020-JM
0020-JN
0020-JO
0020-JP
0020-JQ
0020-JR
0020-JS
0020-JT
0020-JU
0020-JV
0020-JW
0020-JX
0020-JY
0020-JZ
0020-KA
0020-KB
0020-KC
0020-KD
0020-KE
0020-KF
0020-KG
0020-KH
0020-KI
0020-KJ
0020-KK
0020-KL
0020-KM
0020-KN
0020-KO
0020-KP
0020-KQ
0020-KR
0020-KS
0020-KT
0020-KU
0020-KV
0020-KW
0020-KX
0020-KY
0020-KZ
0020-LA
0020-LB
0020-LC
0020-LD
0020-LE
0020-LF
0020-LG
0020-LH
0020-LI
0020-LJ
0020-LK
0020-LL
0020-LM
0020-LN
0020-LO
0020-LP
0020-LQ
0020-LR
0020-LS
0020-LT
0020-LU
0020-LV
0020-LW
0020-LX
0020-LY
0020-LZ
0020-MA
0020-MB
0020-MC
0020-MD
0020-ME
0020-MF
0020-MG
0020-MH
0020-MI
0020-MJ
0020-MK
0020-ML
0020-MM
0020-MN
0020-MO
0020-MP
0020-MQ
0020-MR
0020-MS
0020-MT
0020-MU
0020-MV
0020-MW
0020-MX
0020-MY
0020-MZ
0020-NA
0020-NB
0020-NC
0020-ND
0020-NE
0020-NF
0020-NG
0020-NH
0020-NI
0020-NJ
0020-NK
0020-NL
0020-NM
0020-NN
0020-NO
0020-NP
0020-NQ
0020-NR
0020-NS
0020-NT
0020-NU
0020-NV
0020-NW
0020-NX
0020-NY
0020-NZ
0020-OA
0020-OB
0020-OC
0020-OD
0020-OE
0020-OF
0020-OG
0020-OH
0020-OI
0020-OJ
0020-OK
0020-OL
0020-OM
0020-ON
0020-OO
0020-OP
0020-OQ
0020-OR
0020-OS
0020-OT
0020-OU
0020-OV
0020-OW
0020-OX
0020-OY
0020-OZ
0020-PA
0020-PB
0020-PC
0020-PD
0020-PE
0020-PF
0020-PG
0020-PH
0020-PI
0020-PJ
0020-PK
0020-PL
0020-PM
0020-PN
0020-PO
0020-PP
0020-PQ
0020-PR
0020-PS
0020-PT
0020-PU
0020-PV
0020-PW
0020-PX
0020-PY
0020-PZ
0020-QA
0020-QB
0020-QC
0020-QD
0020-QE
0020-QF
0020-QG
0020-QH
0020-QI
0020-QJ
0020-QK
0020-QL
0020-QM
0020-QN
0020-QO
0020-QP
0020-QQ
0020-QR
0020-QS
0020-QT
0020-QU
0020-QV
0020-QW
0020-QX
0020-QY
0020-QZ
0020-RA
0020-RB
0020-RC
0020-RD
0020-RE
0020-RF
0020-RG
0020-RH
0020-RI
0020-RJ
0020-RK
0020-RL
0020-RM
0020-RN
0020-RO
0020-RP
0020-RQ
0020-RR
0020-RS
0020-RT
0020-RU
0020-RV
0020-RW
0020-RX
0020-RY
0020-RZ
0020-SA
0020-SB
0020-SC
0020-SD
0020-SE
0020-SF
0020-SG
0020-SH
0020-SI
0020-SJ
0020-SK
0020-SL
0020-SM
0020-SN
0020-SO
0020-SP
0020-SQ
0020-SR
0020-SS
0020-ST
0020-SU
0020-SV
0020-SW
0020-SX
0020-SY
0020-SZ
0020-TA
0020-TB
0020-TC
0020-TD
0020-TE
0020-TF
0020-TG
0020-TH
0020-TI
0020-TJ
0020-TK
0020-TL
0020-TM
0020-TN
0020-TO
0020-TP
0020-TQ
0020-TR
0020-TS
0020-TT
0020-TU
0020-TV
0020-TW
0020-TX
0020-TY
0020-TZ
0020-UA
0020-UB
0020-UC
0020-UD
0020-UE
0020-UF
0020-UG
0020-UH
0020-UI
0020-UJ
0020-UK
0020-UL
0020-UM
0020-UN
0020-UO
0020-UP
0020-UQ
0020-UR
0020-US
0020-UT
0020-UU
0020-UV
0020-UW
0020-UX
0020-UY
0020-UZ
0020-VA
0020-VB
0020-VC
0020-VD
0020-VE
0020-VF
0020-VG
0020-VH
0020-VI
0020-VJ
0020-VK
0020-VL
0020-VM
0020-VN
0020-VO
0020-VP
0020-VQ
0020-VR
0020-VS
0020-VT
0020-VU
0020-VV
0020-VW
0020-VX
0020-VY
0020-VZ
0020-WA
0020-WB
0020-WC
0020-WD
0020-WE
0020-WF
0020-WG
0020-WH
0020-WI
0020-WJ
0020-WK
0020-WL
0020-WM
0020-WN
0020-WO
0020-WP
0020-WQ
0020-WR
0020-WS
0020-WT
0020-WU
0020-WV
0020-WW
0020-WX
0020-WY
0020-WZ
0020-XA
0020-XB
0020-XC
0020-XD
0020-XE
0020-XF
0020-XG
0020-XH
0020-XI
0020-XJ
0020-XK
0020-XL
0020-XM
0020-XN
0020-XO
0020-XP
0020-XQ
0020-XR
0020-XS
0020-XT
0020-XU
0020-XV
0020-XW
0020-XX
0020-XY
0020-XZ
0020-YA
0020-YB
0020-YC
0020-YD
0020-YE
0020-YF
0020-YG
0020-YH
0020-YI
0020-YJ
0020-YK
0020-YL
0020-YM
0020-YN
0020-YO
0020-YP
0020-YQ
0020-YR
0020-YS
0020-YT
0020-YU
0020-YV
0020-YW
0020-YX
0020-YY
0020-YZ
0020-ZA
0020-ZB
0020-ZC
0020-ZD
0020-ZE
0020-ZF
0020-ZG
0020-ZH
0020-ZI
0020-ZJ
0020-ZK
0020-ZL
0020-ZM
0020-ZN
0020-ZO
0020-ZP
0020-ZQ
0020-ZR
0020-ZS
0020-ZT
0020-ZU
0020-ZV
0020-ZW
0020-ZX
0020-ZY
0020-ZZ
0030-A
0030-B
0030-C
0030-D
0030-E
0030-F
0040-A
0040-B
0040-C
0040-D
0040-E
0040-F
0040-G
0040-H
STA 12+00
STA 11+00
STA 10+00
STA 9+00
STA 8+00
STA 7+00
STA 6+00
STA 5+00
STA 4+00
STA 3+00
STA 2+00
STA 1+00
STA 48+00
STA 47+00
STA 46+00
STA 45+00
STA 44+00
STA 43+00
STA 42+00
STA 41+00
STA 40+00
STA 39+00
STA 38+00
STA 37+00
STA 36+00
STA 35+00
STA 34+00
STA 33+00
STA 32+00
STA 31+00
STA 30+00
STA 29+00
STA 28+00
STA 27+00
STA 26+00
STA 25+00
STA 24+00
STA 23+00
STA 22+00
STA 21+00
STA 20+00
STA 19+00
STA 18+00
STA 17+00
STA 16+00
STA 15+00
STA 14+00
STA 13+00
CLOSURE
GRAPHIC SCALE
0 60 120
SCALE IN FEET
NOTES:
1. PANEL LOCATIONS BASED ON FIELD MEASUREMENTS FROM PREVIOUSLY SURVEYED SITE FEATURES.
2. SEE CERTIFICATION REPORT FOR ORIGINATION OF PANEL NUMBERS.
REFERENCE DRAWINGS
HT-GR-L4
MONTGOMERY WATSON CONSTRUCTORS, INC
ADDISON, IL
HORIZONTAL TECHNOLOGIES INC.
CAPE CORAL, FL
AMERICAN CHEMICAL SERVICE, INC
NPL SITE
GRIFFITH, IN
BARRIER WALL
PANEL PLACEMENT
FOSTER WHEELER ENVIRONMENTAL CORPORATION
LYNDHURST, NEW JERSEY
DEPT CE
DESIGNED SB/BD
PREPARED JR
CHECKED JG
APPROVED
DATE
GAIL G. MATTSON
P.E. NO. 80900316
SCALE: 1"=50'-0"
DRAWING NUMBER: HT-GR-04
SH. 1 OF 1
REV 0
FWE1R13.DWG
CAD FILE NAME: F:\PEOPLE\BLAKE\ACT\SHTA.DWG DATE: 3/11/98
5 RECORD DRAWINGS JG JG 1/98
REV CERTIFIED FOR CONSTRUCTION HB JG
REVISION DESCRIPTION PREPARED CHECKED APPROVED DATE

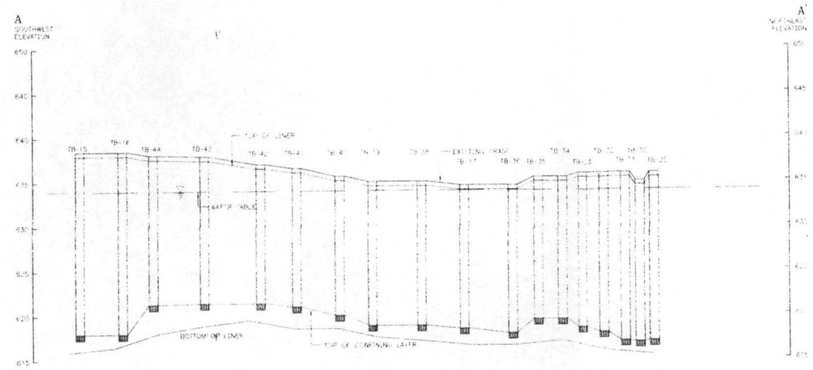

SECTION A-A'

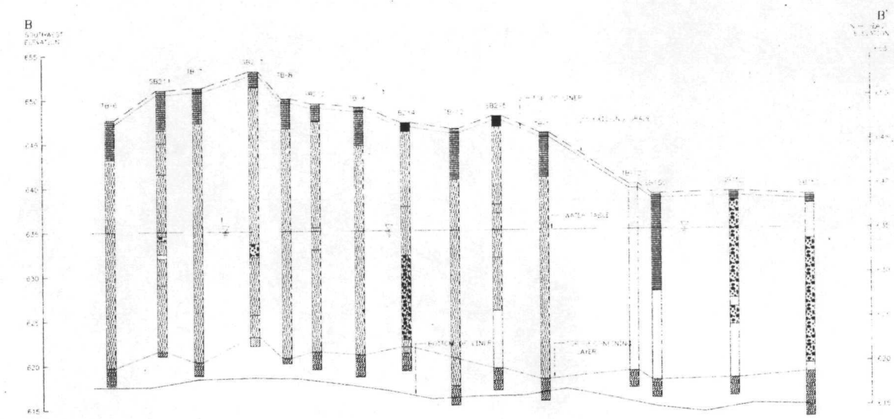

SECTION B-B'

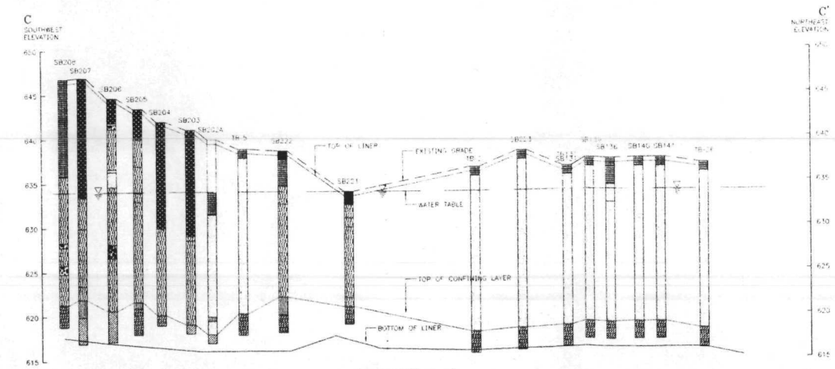

SECTION C-C'

LEGEND

SILTY SAND (SM) MAY ALSO INCLUDE SP-SM AND SW-SM

SAND, SAND GRAVEL WITH LOW SILT AND CLAY CONTENT (SP, SP-SM, SW, SW-SM) MAY ALSO INCLUDE SW-SM, SW-SC, SW-GC, SP-SM, SP-SC, SM AND SP-SC (SP-SC)

SAND AND GRAVEL WITH SOME SILT (SM-GM) MAY ALSO INCLUDE SW-SM, SW-GM, SP-SM, SP-GM AND GM-GM

FILL

WATER TABLE

NOTES

1. THE TRENCH LINER ARE BELOW THE WATER TABLE IN MANY LOCATIONS. ACCORDINGLY, DEWATERING WILL BE REQUIRED DURING CONSTRUCTION.

2. THE LOCATIONS OF EXCAVATION SHOWN ON THE DRAWINGS ARE BASED ON THE PRELIMINARY DESIGN. MINOR CHANGES MAY HAVE BEEN MADE DURING FINAL DESIGN. THE LOCATION OF EXCAVATION AT CONSTRUCTION MAY VARY FROM THE LOCATION SHOWN. REFER TO THE APPROVED FINAL DESIGN DRAWINGS FOR THE ACTUAL EXCAVATION LOCATION.

3. EXISTING GROUND SURFACE WAS MEASURED FROM MARKS MARKED ON THE CENTER OF THE TRENCH LINER LOCATION.

4. EXISTING GROUND SURFACE WAS TAKEN FROM MONTGOMERY WATSON PLANS AND SURVEYED PLANS AND FROM ADDITIONAL SURVEY BY HORIZONTAL TECHNOLOGIES, INC.

5. ELEVATIONS ARE SHOWN IN REFERENCE TO USGS DATUM.

6. WATER TABLE ELEVATIONS ARE AN AVERAGE WATER LEVEL THAT WAS ESTIMATED FROM WATER LEVELS OBSERVED DURING THE RE-DRILL PHASE OF THE DATED DECEMBER 13, 1990 BY MONTGOMERY WATSON.

7. THE BORING ELEVATIONS ON APRIL 17, 1996 THROUGH FEBRUARY 13, 1996 IN ENVIRONMENTAL AND FOUNDATION DRILLING AND IN JULY 1996 BY HART CROWSER.

8. THE BORING ELEVATIONS AND LOCATIONS OBTAINED IN FEBRUARY 1996 AND IN JULY 1996 ARE IN ABSOLUTE TERMS BY AREA SURVEY.

9. ALL BORINGS ARE ALIGNED AND LOCATIONS TO 0.1 FEET FROM ABOVE FEET UNCERTAINTY.

10. SECTION B-B' AREA WAS RELOADED AFTER BENCHING FINAL GRADE AFTER BENCHING IS SHOWN AS EXISTING GRADE.

CROSS SECTION SCALE

0 100 200

SCALE IN FEET
VERTICAL EXAGGERATION TWENTY TIMES

REV	REVISION DESCRIPTION	PREPARED	CHECKED	APPROVED	DATE
	RECORD DRAWINGS	HB	JG		3/98
0	CERTIFIED FOR CONSTRUCTION	HB	JG		

THIS DRAWING PRODUCED ON AUTOCAD DO NOT REVISE MANUALLY

THIS DOCUMENT IS THE PROPERTY OF AMERICAN CHEMICAL SERVICE, INC. PREPARED BY FOSTER WHEELER ENVIRONMENTAL CORPORATION AND IS PROVIDED WITH THE UNDERSTANDING THAT IT WILL NEITHER BE REPRODUCED, NOR ITS CONTENTS DISCLOSED, NOR WILL BE USED FOR ANY PURPOSE OTHER THAN THE ORIGINAL INTENDED PURPOSE AND THE PROJECT FOR WHICH IT WAS PREPARED AND DELIVERED, AND THE CONSTRUCTION OF THE PROJECT.

MONTGOMERY WATSON CONSTRUCTORS, INC.
ADDISON, IL
HORIZONTAL TECHNOLOGIES INC.
CAPE CORAL, IN
AMERICAN CHEMICAL SERVICE, INC.
NPL SITE
GRIFFITH, IN

SECTIONAL ELEVATIONS

FOSTER WHEELER ENVIRONMENTAL CORPORATION
HIGHLAND, NEW JERSEY

DEPT	DESIGNED	PREPARED	CHECKED	APPROVED	DATE
CE	SB/BD	HB	JG		

GAIL G. WATSON
P.E. NO. 60900316

SCALE	DRAWING NUMBER	SH.	OF	REV
NONE	HT-GR-03	1	1	0

20 FWGTM12.DWG

CAD FILE NAME F:\PEOPLE\BLANE\ACS\GTSLINE DATE 3/9/98

TREATMENT BUILDING
AMERICAN CHEMICAL SERVICE, INC.

GRIFFITH, INDIANA

BUILDING STATISTICS

BUILDING USE GROUP :	B, DIVISION 4
CONSTRUCTION TYPE :	TYPE II, N
BUILDING AREA:	6,080.25 S.F.

CODES:
BUILDING CODE: 1991 UBC

DRAWING INDEX

T1.1	TITLE SHEET & BLDG. STATS
A1.1	EAST & WEST ELEVATIONS
A1.2	NORTH & SOUTH ELEVATIONS
A2.1	FLOOR PLAN
A3.1	REFLECTED CEILING PLAN
A4.1	FOUNDATION PLAN
A4.2	FOUNDATION DETAILS
A4.3	PIER DETAILS
A5.1	WALL SECTIONS
A5.2	WALL SECTIONS & BATHROOM ELEVATIONS
A6.1	DOOR SCHEDULE, ROOM FINISH SCHEDULE & DETAILS
P1.1	PLUMBING PLAN
M1.1	MECHANICAL PLAN
E1.1	POWER PLAN
E1.2	LIGHTING PLAN
PME1.1	PLUMBING, MECHANICAL, ELECTRICAL NOTES & DETAILS

TREATMENT BUILDING
AMERICAN CHEMICAL SERVICE, INC.
GRIFFITH, INDIANA

MONTGOMERY WATSON
Salt Lake City, Utah

Custom Steel Buildings, Inc.
23988 E. LINCOLN HWY. / LYNWOOD, ILLINOIS 60411
PH. (708)758-0675

PRELIMINARY	4/12/96
ISSUED FOR PERMIT	4/19/96
ISSUED FOR PERMIT	5/8/96
ISSUED FOR CONSTRUCTION	6/13/96
1 NO CHANGES	8/29/96

PROJECT NO.	96-173
DRAWN BY	MSJ
TITLE SHEET	
T1.1	
# OF	TOTAL SHEETS

P:\96-173\T1-1.DWG

© COPYRIGHT 1996

TREATMENT BUILDING
AMERICAN CHEMICAL SERVICE, INC.

GRIFFITH, INDIANA

BUILDING STATISTICS

BUILDING USE GROUP :	B, DIVISION 4
CONSTRUCTION TYPE :	TYPE II, N
BUILDING AREA:	6,080.25 S.F.
CODES:	
BUILDING CODE:	1991 UBC

DRAWING INDEX

T1.1	TITLE SHEET & BLDG. STATS
A1.1	EAST & WEST ELEVATIONS
A1.2	NORTH & SOUTH ELEVATIONS
A2.1	FLOOR PLAN
A3.1	REFLECTED CEILING PLAN
A4.1	FOUNDATION PLAN
A4.2	FOUNDATION DETAILS
A4.3	PIER DETAILS
A6.1	WALL SECTIONS
A6.2	WALL SECTIONS & BATHROOM ELEVATIONS
A8.1	DOOR SCHEDULE, ROOM FINISH SCHEDULE & DETAILS
P1.1	PLUMBING PLAN
M1.1	MECHANICAL PLAN
E1.1	POWER PLAN
E1.2	LIGHTING PLAN
PME1.1	PLUMBING, MECHANICAL, ELECTRICAL NOTES & DETAILS

TREATMENT BUILDING
AMERICAN CHEMICAL SERVICE, INC.
GRIFFITH, INDIANA

MONTGOMERY WATSON
Salt Lake City, Utah

Custom Steel Buildings, Inc.
21800 E. LINCOLN HWY. / LYNWOOD, ILLINOIS 60411
PH. (708)758-6276

PRELIMINARY	4/2/98
ISSUED FOR PERMIT	4/16/98
ISSUED FOR PERMIT	5/8/98
ISSUED FOR CONSTRUCTION	6/13/98
1 NO CHANGES	8/28/98

PROJECT NO.	98-173
DRAWN BY	MSJ
TITLE SHEET	
T1.1	
8 OF	TOTAL SHEETS

P:\98-173\T1-1.DWG

© COPYRIGHT 1998

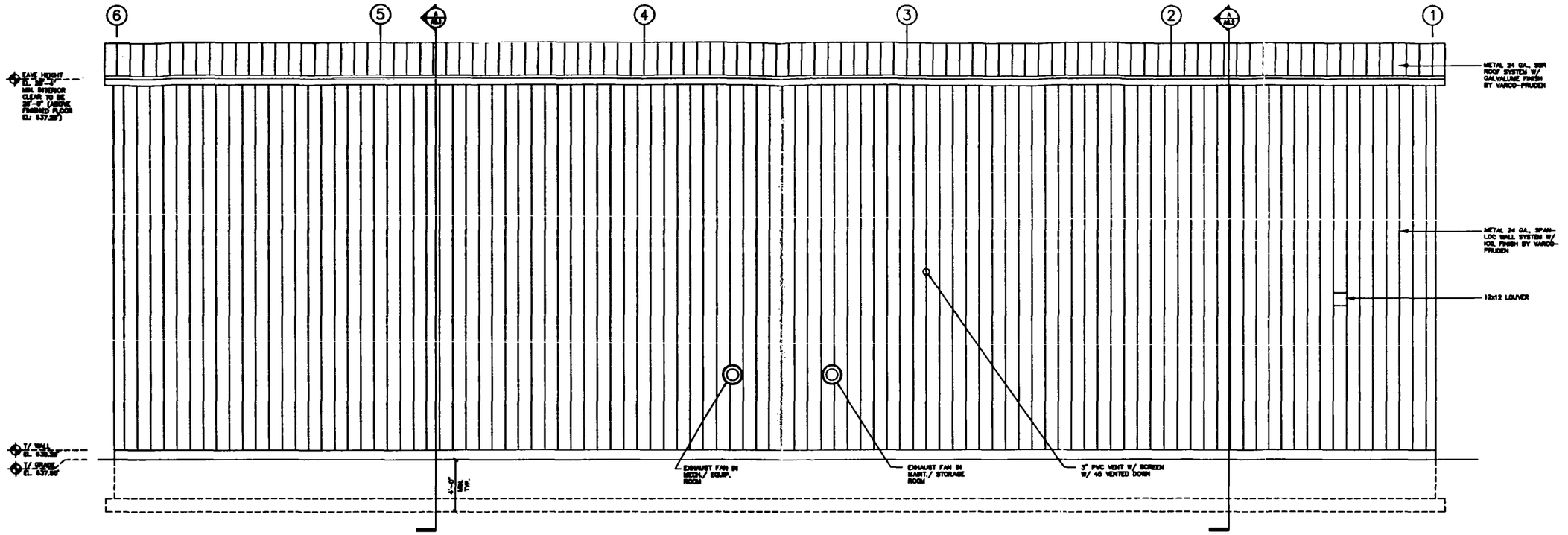

EAST ELEVATION

SCALE: 1/4" = 1'-0"

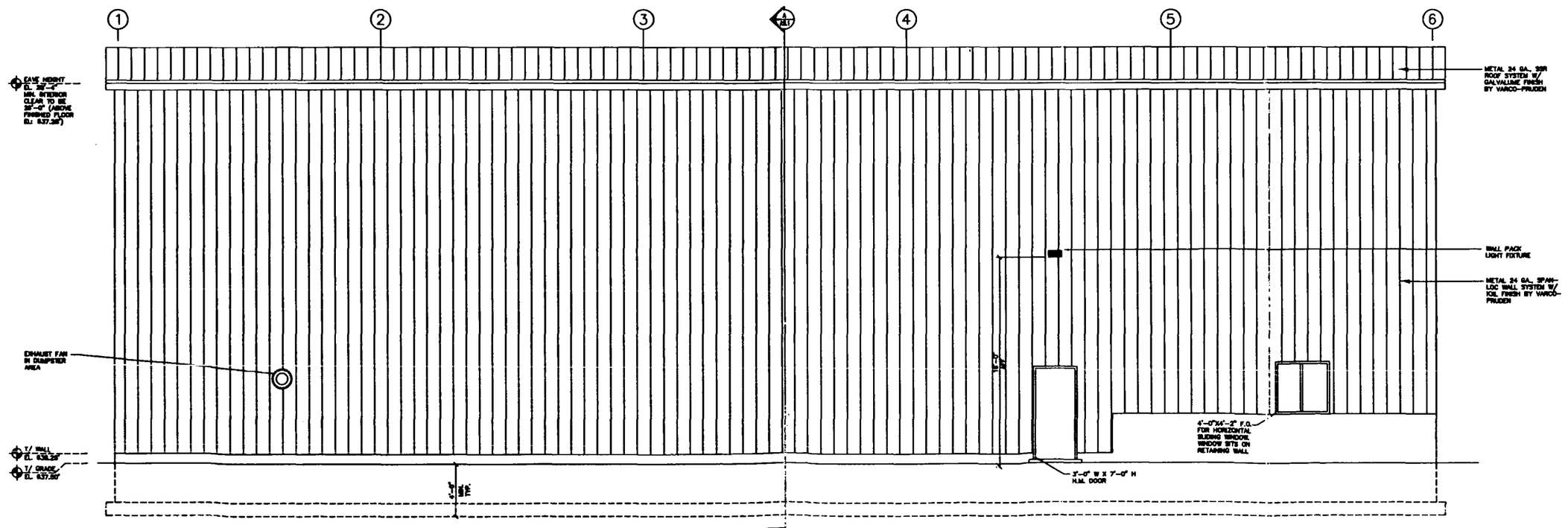

WEST ELEVATION

SCALE: 1/4" = 1'-0"

P:\98-173\A1-1.DWG

© COPYRIGHT 1998

TREATMENT BUILDING
AMERICAN CHEMICAL SERVICE, INC.
GRIFFITH, INDIANA

MONTGOMERY WATSON
Salt Lake City, Utah

Custom Steel Buildings, Inc.
2988 E. LINCOLN HWY. / LYNWOOD, ILLINOIS 60411
PH. (708)758-5878

PRELIMINARY	4/3/98
ISSUED FOR PERMIT	4/16/98
ISSUED FOR PERMIT	5/8/98
ISSUED FOR CONSTRUCTION	6/13/98
NO CHANGES	8/28/98

PROJECT NO.	98-173
DRAWN BY	MSJ
ELEVATIONS	
A1.1	
# OF TOTAL SHEETS	

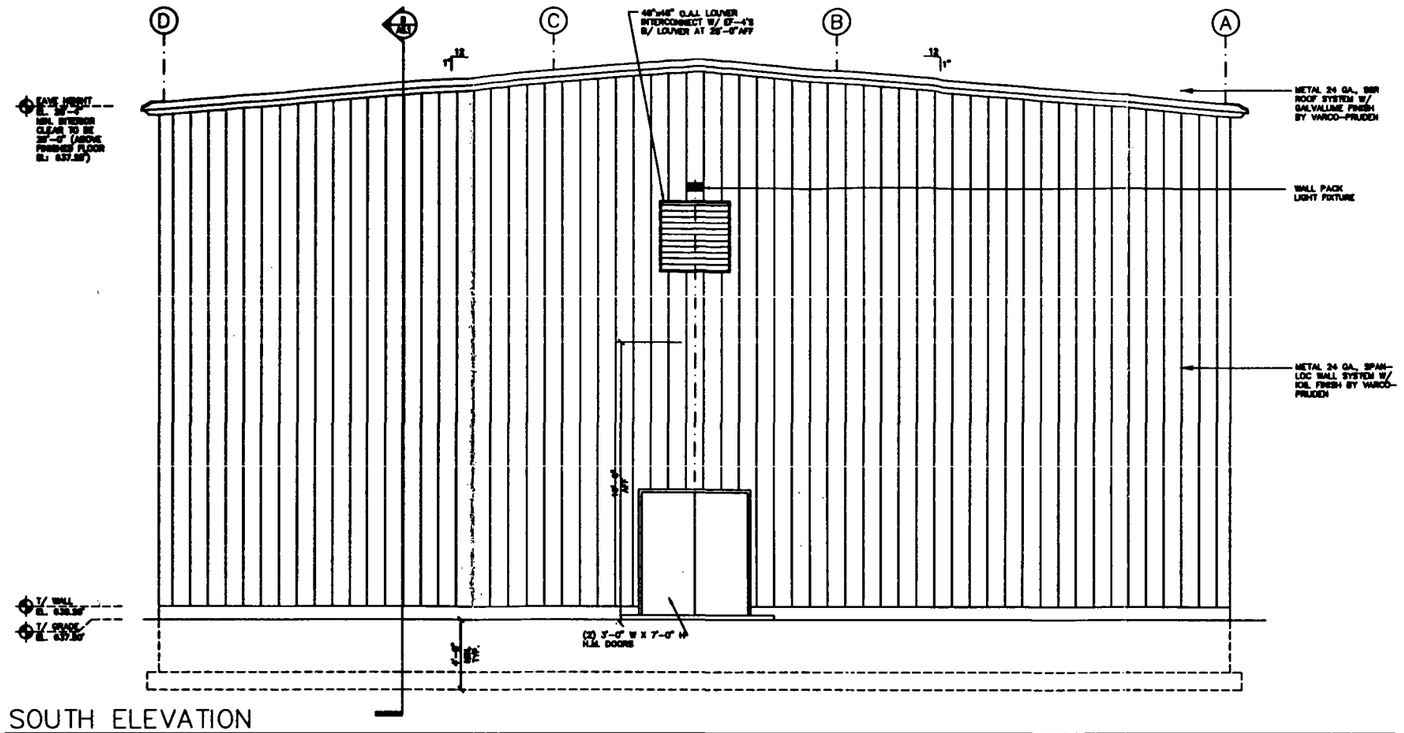

SOUTH ELEVATION

SCALE: 1/4" = 1'-0"

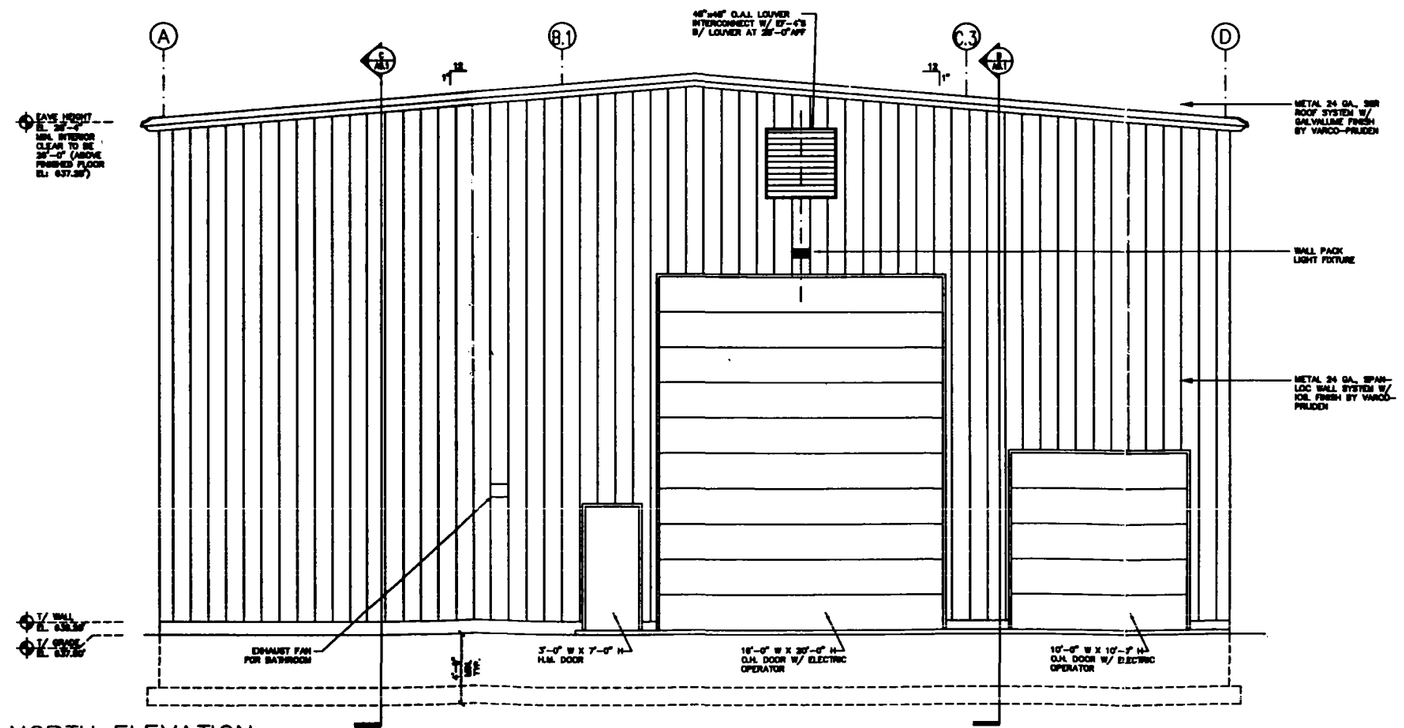

NORTH ELEVATION

SCALE: 1/4" = 1'-0"

TREATMENT BUILDING
AMERICAN CHEMICAL SERVICE, INC.
GRIFFITH, INDIANA

MONTGOMERY WATSON
Salt Lake City, Utah

Custom Steel Buildings, Inc.
ERWIN E. LINCOLN WAY / VARNOLD, ILLINOIS 60441
PH. (708)739-6575

PRELIMINARY	4/12/96
ISSUED FOR PERMIT	4/19/96
ISSUED FOR PERMIT	5/8/96
ISSUED FOR CONSTRUCTION	9/13/96
⚠ NO CHANGES	9/26/96

PROJECT NO.	96-173
DRAWN BY	MSJ
ELEVATIONS	
A1.2	
# OF	TOTAL SHEETS

P:\96-173\A1-2.DWG

© COPYRIGHT 1996

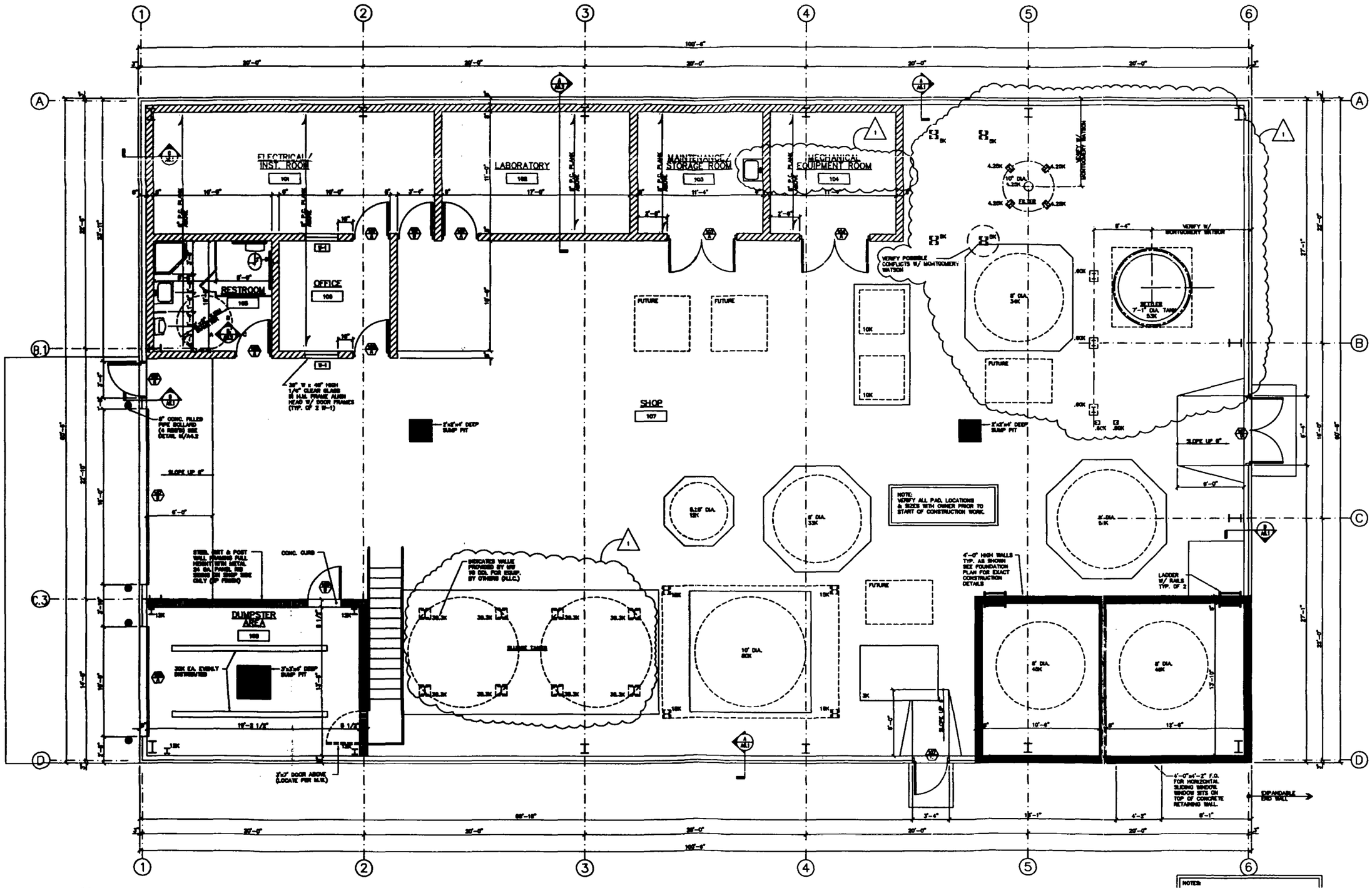

FLOOR PLAN

NOTES:

1. LOADS INDICATED FOR EQUIPMENT & MEZZ. SUPPORT WAS PROVIDED BY MONTGOMERY WATSON. MONTGOMERY WATSON TO VERIFY THAT ALL LOADS HAVE BEEN PROPERLY INDICATED PRIOR TO START OF WORK.
2. ALL EQUIPMENT & MEZZ. SUPPORT SYSTEM, DESIGN & INSTALL IS NOT PART OF DGL SCOPE OF WORK & IS NOT PART OF THIS BUILDING CONTRACT.

© COPYRIGHT 1998

TREATMENT BUILDING
AMERICAN CHEMICAL SERVICE, INC.
GRIFFITH, INDIANA

MONTGOMERY WATSON
Salt Lake City, Utah

Custom Steel Buildings, Inc.
2999 E. LINCOLN HWY. / LANSING, ILLINOIS 60411
PH. (708)799-4575

PRELIMINARY	4/12/98
ISSUED FOR PERMIT	4/14/98
ISSUED FOR PERMIT	5/8/98
ISSUED FOR CONSTRUCTION	6/11/98
REVISED	6/26/98

PROJECT NO.	98-173
DRAWN BY	MSJ
FLOOR PLAN	
A2.1	
# OF TOTAL SHEETS	

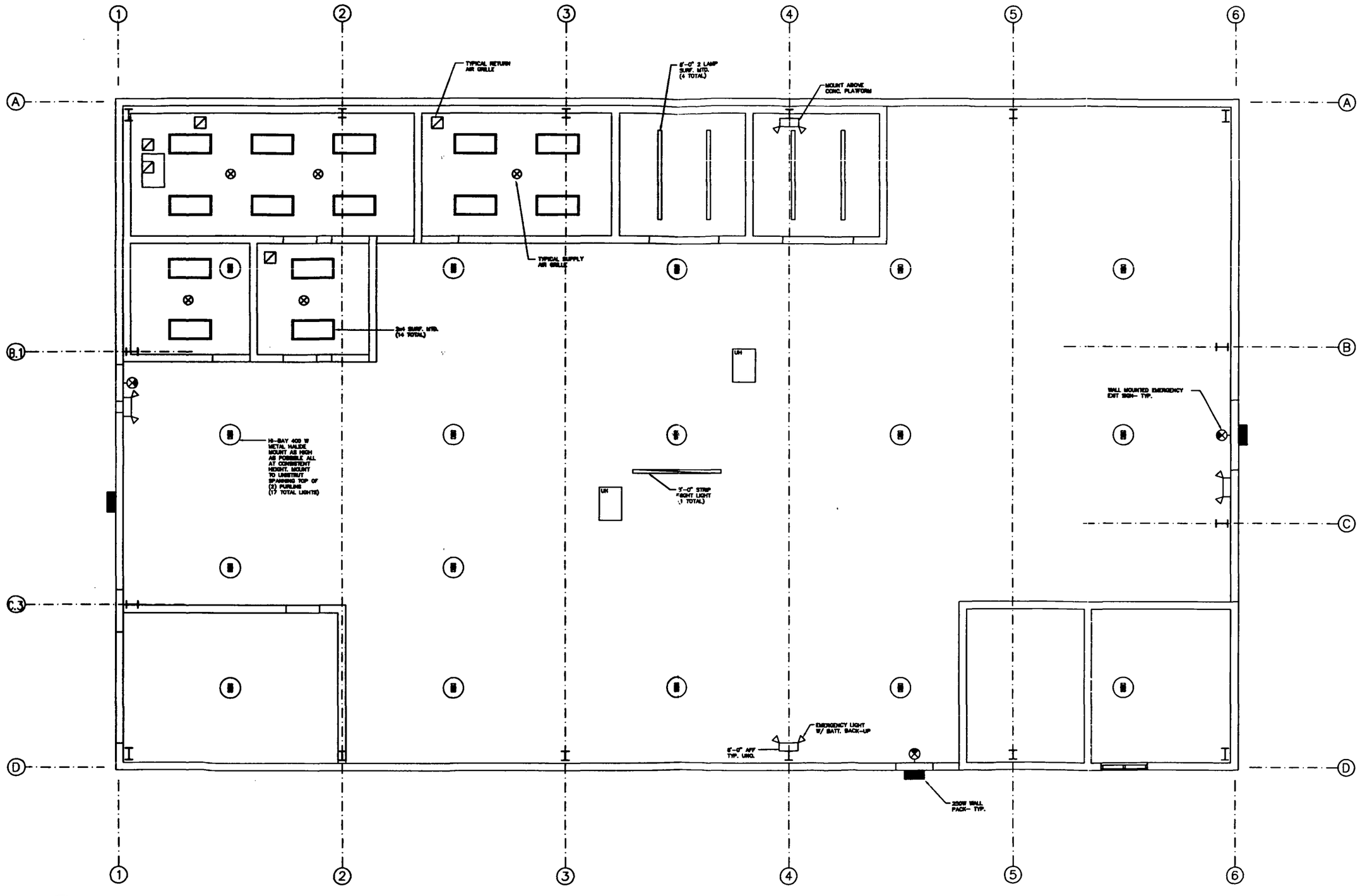

REFLECTED CEILING PLAN

SCALE: 1/4" = 1'-0"

TREATMENT BUILDING
AMERICAN CHEMICAL SERVICE, INC.
GRIFFITH, INDIANA

MONTGOMERY WATSON
Salt Lake City, Utah

Custom Steel Buildings, Inc.
3900 E. LINCOLN HWY. / LYNWOOD, ILLINOIS 60411
PH. (708)758-6575

ISSUED FOR PERMIT	4/16/98
ISSUED FOR PERMIT	5/8/98
ISSUED FOR CONSTRUCTION	6/15/98
NO CHANGES	8/28/98

PROJECT NO.	98-173
DRAWN BY	MSJ
REFLECTED CEILING PLAN	
A3.1	
# OF TOTAL SHEETS	

© COPYRIGHT 1998

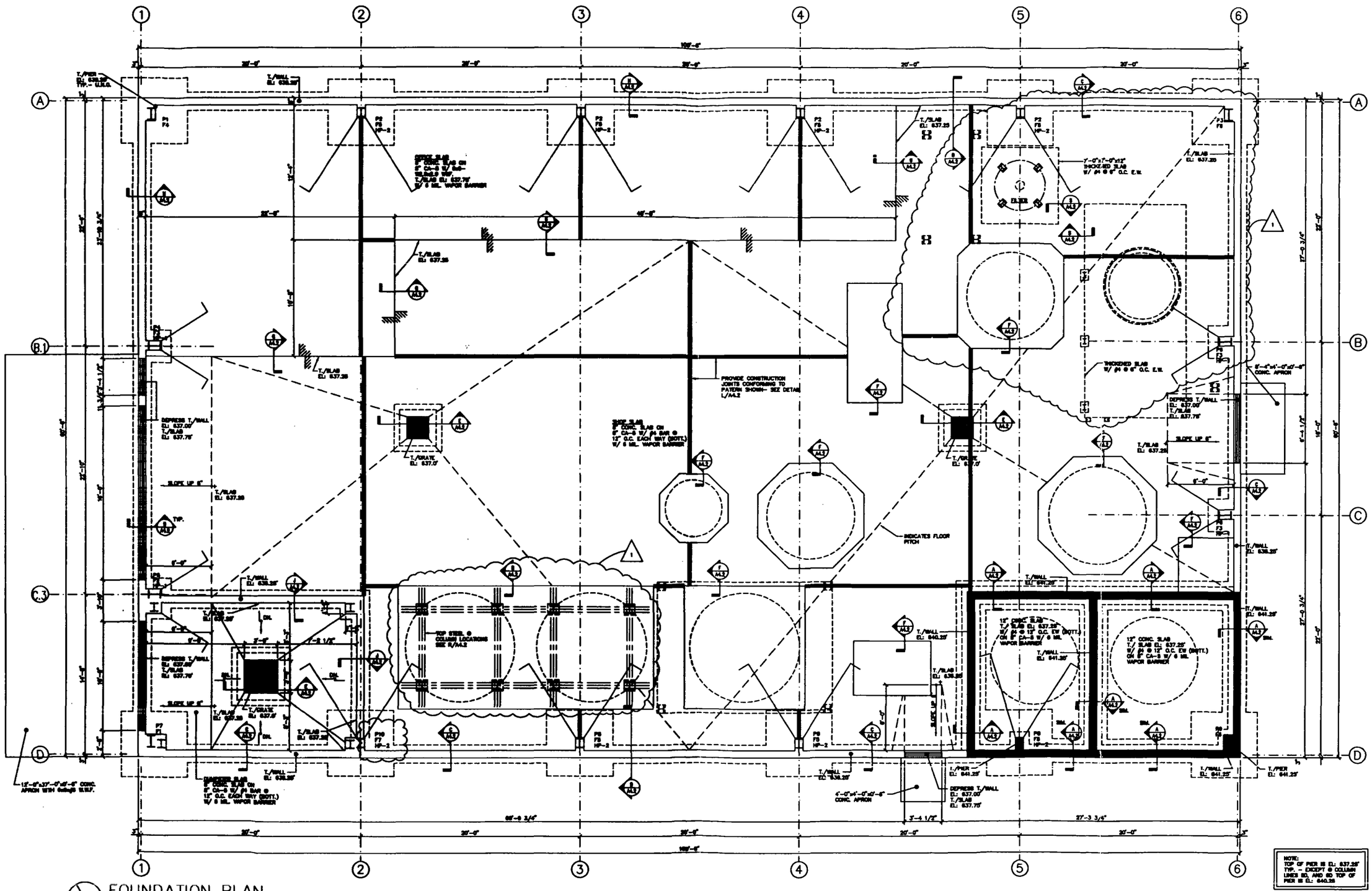

FOUNDATION PLAN

NOTE:
TOP OF PIER IS EL: 637.25' TYP. - EXCEPT @ COLUMN LINES B3, AND B5 TOP OF PIER IS EL: 640.25

SLAB NOTE:
THE SLAB AS BEEN DESIGNED USING A SAFE SOIL BEARING VALUE OF 2,500 PSF AT ENTIRE SLAB AREA- NOTIFY ARCHITECT IF SOIL BEARING OF DESIGNED VALUE IS NOT ACHIEVED.

SCALE: 1/4" = 1'-0"

© COPYRIGHT 1998

TREATMENT BUILDING
AMERICAN CHEMICAL SERVICE, INC.
GRIFFITH, INDIANA

MONTGOMERY WATSON
Salt Lake City, Utah

Custom Steel Buildings, Inc.
2988 E. LINCOLN HWY. / LYNWOOD, ILLINOIS 60411
PH. (708)758-6575

PRELIMINARY	4/2/98
ISSUED FOR PERMIT	4/10/98
REVISED FOR PERMIT	5/8/98
REVISED FOOTING 3D	5/13/98
ISSUED FOR CONSTRUCTION	5/13/98
1 REVISED	5/29/98

PROJECT NO.	98-173
DRAWN BY	MSJ
FOUNDATION PLAN	
A4.1	
# OF	TOTAL SHEETS

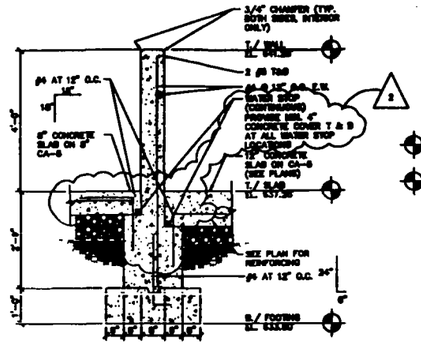

A WALL/ SLAB
@ STORAGE TANKS
SCALE: 1/2" = 1'-0"

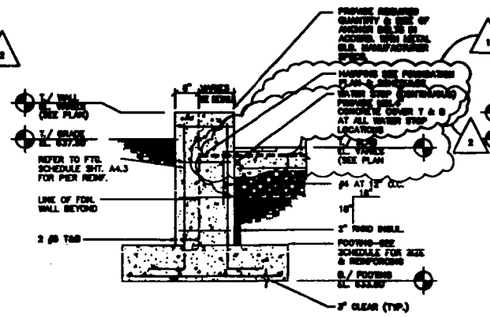

B TYP. PIER DETAIL
SCALE: 1/2" = 1'-0"

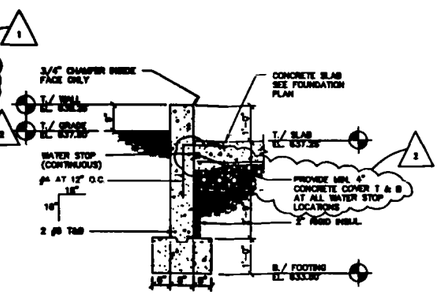

C TYP. EXTERIOR WALL
@ SHOP & DUMPSTER AREA
SCALE: 1/2" = 1'-0"

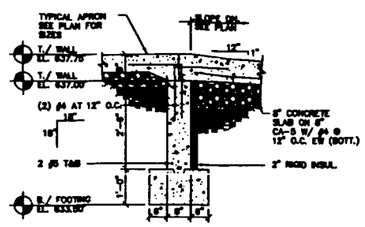

D DETAIL
@ DEPRESSED WALL FOR DOORS
SCALE: 1/2" = 1'-0"

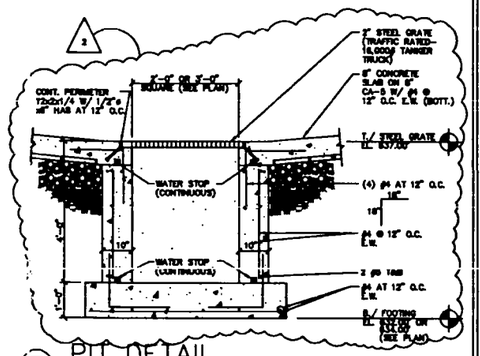

E PIT DETAIL
SCALE: 1/2" = 1'-0"

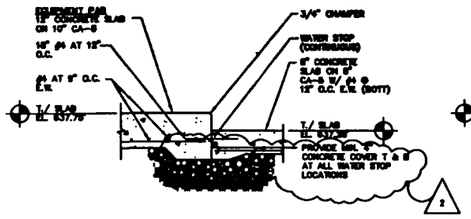

F EQUIPMENT PAD
SCALE: 1/2" = 1'-0"

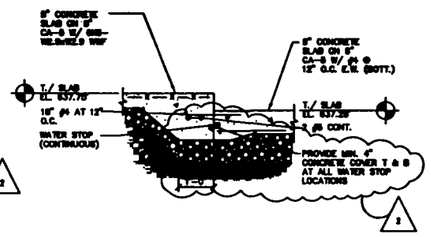

G SLAB STEP DETAIL
SCALE: 1/2" = 1'-0"

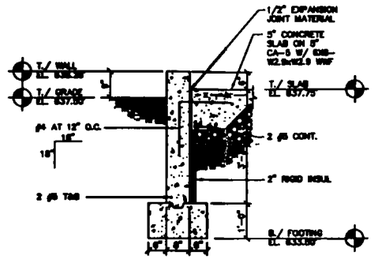

H TYP. EXTERIOR WALL
@ OFFICES
SCALE: 1/2" = 1'-0"

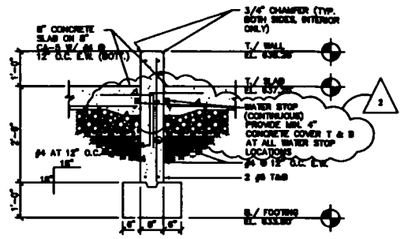

J WALL/ SLAB
@ DUMPSTER
SCALE: 1/2" = 1'-0"

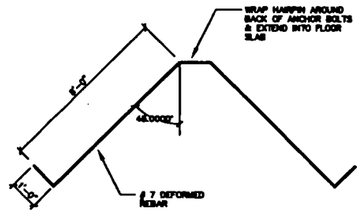

K HAIRPIN DETAIL (HP-2)
SCALE: 1/2" = 1'-0"

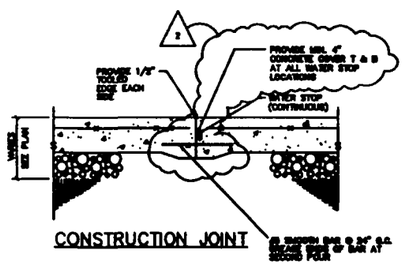

CONSTRUCTION JOINT

L SLAB JOINT DETAILS
SCALE: 1/2" = 1'-0"

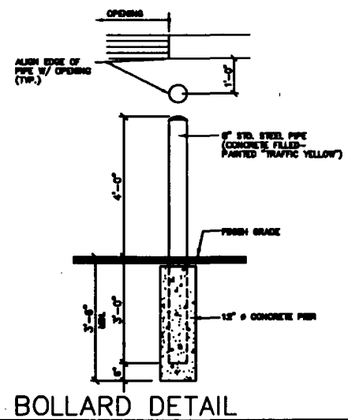

M BOLLARD DETAIL
SCALE: 1/2" = 1'-0"

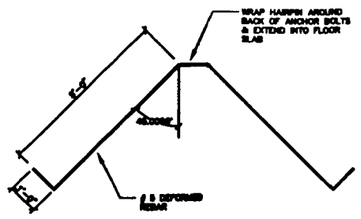

N HAIRPIN DETAIL (HP-1)
SCALE: 1/2" = 1'-0"

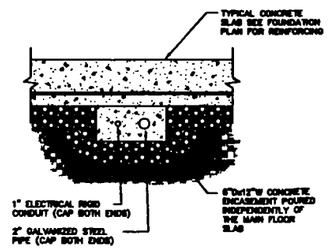

P ENCASED PIPING DETAIL
SCALE: 1" = 1'-0"

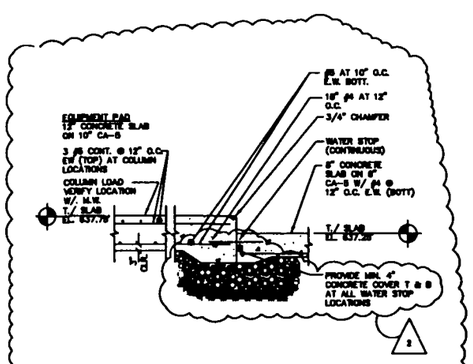

R SLUDGE TANK PAD
SCALE: 1" = 1'-0"

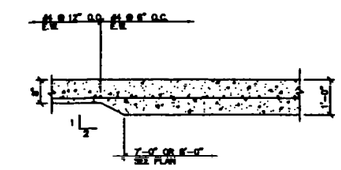

S THICKENED SLAB DETAIL
SCALE: 1" = 1'-0"

TREATMENT BUILDING
AMERICAN CHEMICAL SERVICE, INC.
GRIFFITH, INDIANA

MONTGOMERY WATSON
Salt Lake City, Utah

Custom Steel Buildings, Inc.
2988 E. LINCOLN HWY. / LANSING, ILLINOIS 60438
PH. (708)895-6275

PRELIMINARY	4/7/98
ISSUED FOR PERMIT	4/15/98
ISSUED FOR PERMIT	5/8/98
REVISED AS NOTED	5/13/98
ISSUED FOR CONSTRUCTION	6/13/98
1 REVISED	6/29/98
2 REVISED WATER STOP	8/27/98

PROJECT NO.	96-173
DRAWN BY	MSJ
DETAILS	
A4.2	
# OF TOTAL SHEETS	

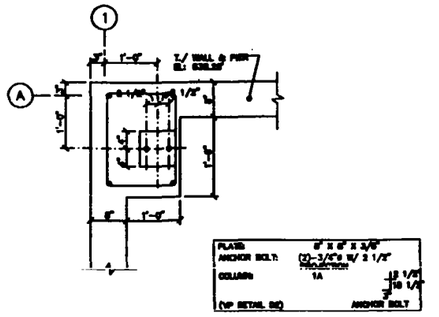

(A) PIER DETAIL – P1

SCALE : 3/4" = 1'-0"

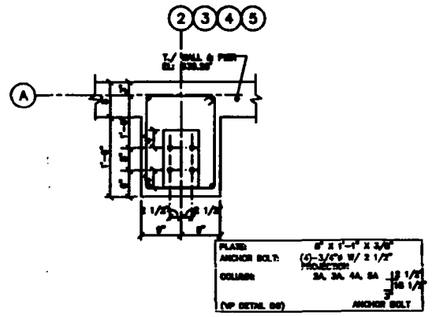

(B) PIER DETAIL – P2

SCALE : 3/4" = 1'-0"

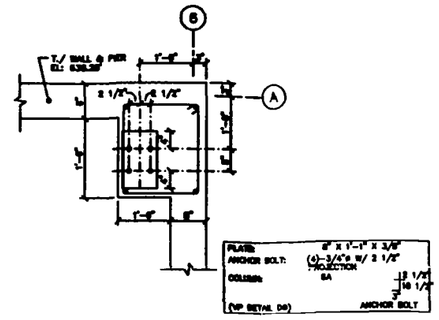

(C) PIER DETAIL – P3

SCALE : 3/4" = 1'-0"

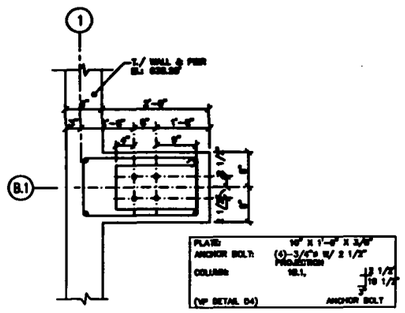

(D) PIER DETAIL – P4

SCALE : 3/4" = 1'-0"

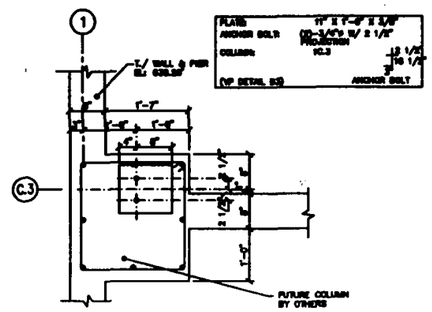

(E) PIER DETAIL – P5

SCALE : 3/4" = 1'-0"

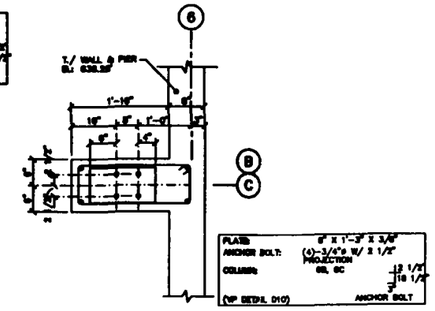

(F) PIER DETAIL – P6

SCALE : 3/4" = 1'-0"

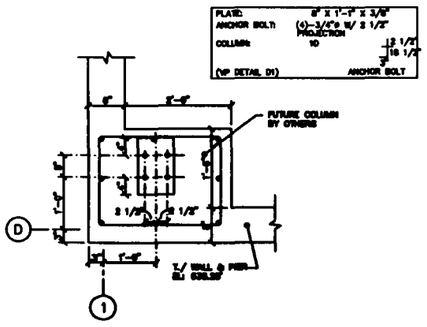

(G) PIER DETAIL – P7

SCALE : 3/4" = 1'-0"

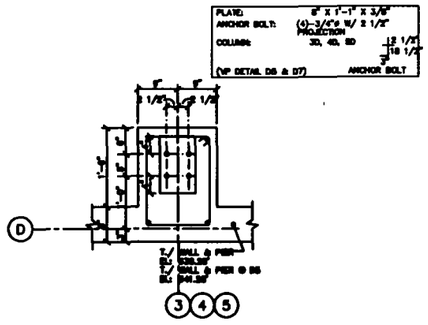

(H) PIER DETAIL – P8

SCALE : 3/4" = 1'-0"

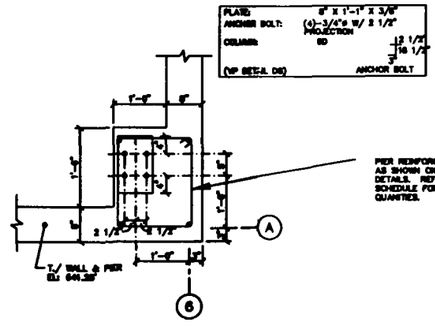

(J) PIER DETAIL – P9

SCALE : 3/4" = 1'-0"

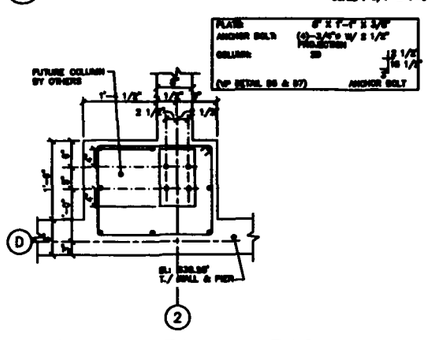

(K) PIER DETAIL – P10

SCALE : 3/4" = 1'-0"

FOOTING SCHEDULE

MK	VERT. UP	VERT. DN.	HORIZ. OUT	FOOTING SIZE	REINFORCING	PIER REINFORCING	HAIRPINS
F1	8.7	20.8	8.8	8'-0" X 1'-0" X 1'-0"	8 #8 EW BOTT.	8/#4,3 8 @	NONE
F2	13.8	28.3	6.4	8'-0" X 1'-0" X 1'-0"	8 #8 EW BOTT.	8/#4,3 8 @	HP-1
F3	6.2	11.1	7.8	4'-0" X 1'-0" X 1'-0"	8 #4 EW BOTT.	8/#4,3 4 @ VERT.	HP-1
F4	2.9	3.9	3	3'-0" X 1'-0" X 1'-0"	NONE	8/#4,3 4 @	NONE
F5	15.7	28.8	13.4	8'-0" X 1'-0" X 1'-0"	7 #8 EW BOTT.	8/#4,3 4 @	HP-2
F6	13.8	27.4	12.2	8'-0" X 1'-0" X 1'-0"	8 #8 EW BOTT.	8/#4,3 4 @	NONE
F7	15.7	28.8	13.4	8'-0" X 1'-0" X 1'-0"	7 #8 EW BOTT.	8/#4,3 8 @	NONE

1. FOOTINGS HAVE BEEN DESIGNED FOR A SAFE SOIL BEARING PRESSURE OF 2500 PSF. IF SOILS OF THIS VALUE ARE NOT FOUND AT THE DESIGNED FOOTING ELEVATIONS, NOTIFY THE ARCHITECT PRIOR TO PROCEEDING.
2. ALL CONCRETE SHALL HAVE A 28 DAY COMPRESSIVE STRENGTH OF 3000 PSI.
3. ALL REINFORCING STEEL SHALL BE GRADE 60. PROVIDE CORNER BARS AT ALL WALL CORNERS AND INTERSECTIONS.
4. THE VALUES IN THE ABOVE SCHEDULE ARE MAXIMUM ALLOWABLE LOADS IN KIPS. NOTIFY THE ARCHITECT IF ACTUAL METAL BUILDING FOUNDATION REACTIONS ARE GREATER.
5. THE CONCRETE FOOTINGS AND PIERS DETAILS AND SIZES SHOULD BE VARIFIED BY THE METAL BUILDING SUPPLIER/CONTRACTOR PRIOR TO THE START OF CONSTRUCTION. NOTIFY ARCHITECT IF DISCREPANCIES EXIST.

NOTE:
PROVIDE 5 #3 (TOP) IN ALL COLUMN FOOTINGS

1

© COPYRIGHT 1998

TREATMENT BUILDING
AMERICAN CHEMICAL SERVICE, INC.
GRIFFITH, INDIANA

MONTGOMERY WATSON
Salt Lake City, Utah

Custom Steel Buildings, Inc.
3166B E. LINCOLN WAY, / LYNWOOD, ILLINOIS 60411
PH. (708)758-6576

ISSUED FOR PERMIT	4/15/98
ISSUED FOR PERMIT	5/8/98
REVISED AS NOTED	5/13/98
ISSUED FOR CONSTRUCTION	5/13/98
1 REVISED	5/28/98

PROJECT NO.	98-173
DRAWN BY	MSJ

FOUNDATION DETAILS

A4.3

OF TOTAL SHEETS

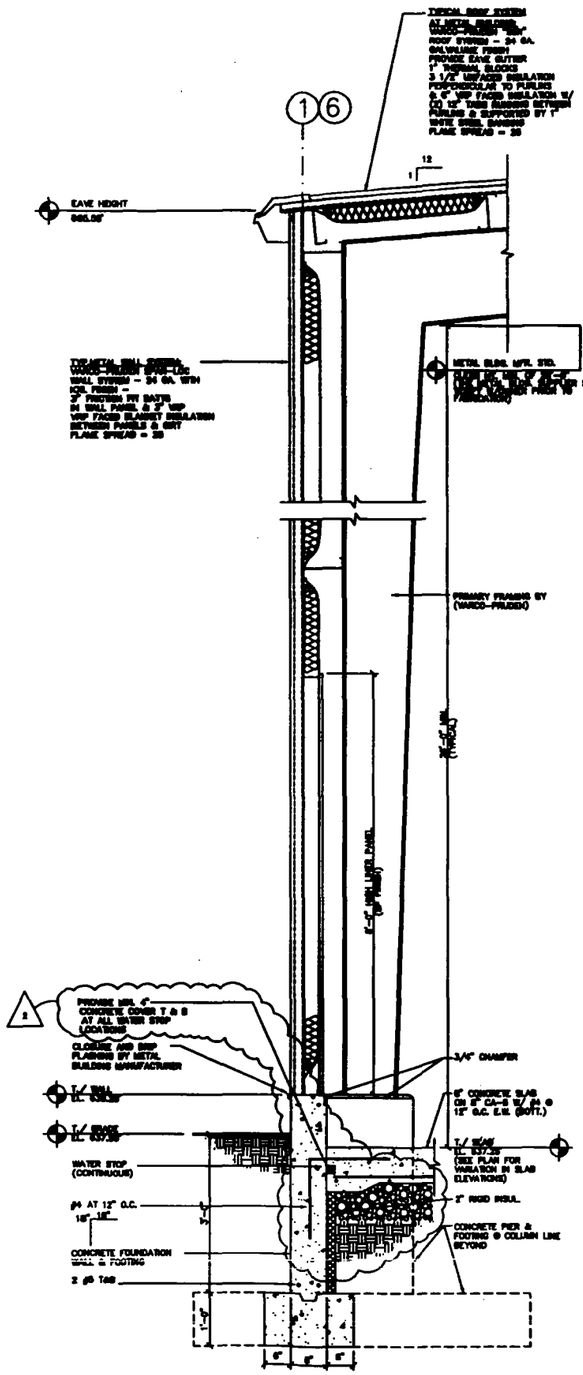

A TYP. SIDE WALL SECTION

SCALE: 3/4" = 1'-0"

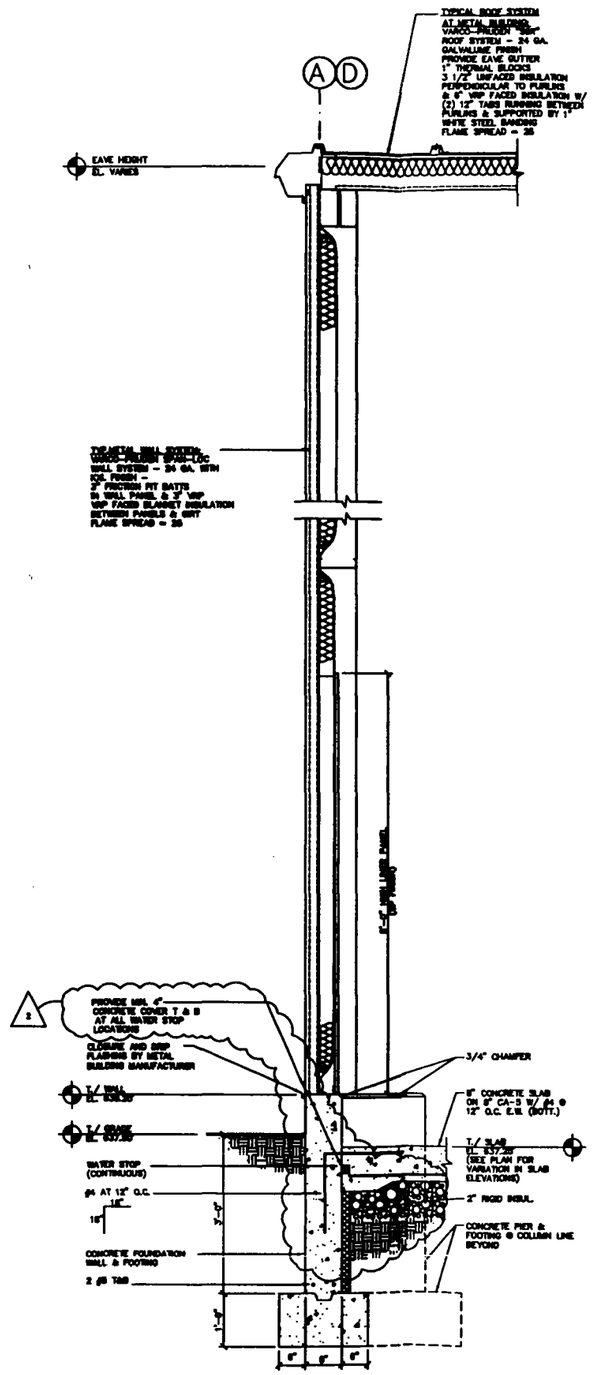

B TYP. END WALL SECTION

SCALE: 3/4" = 1'-0"

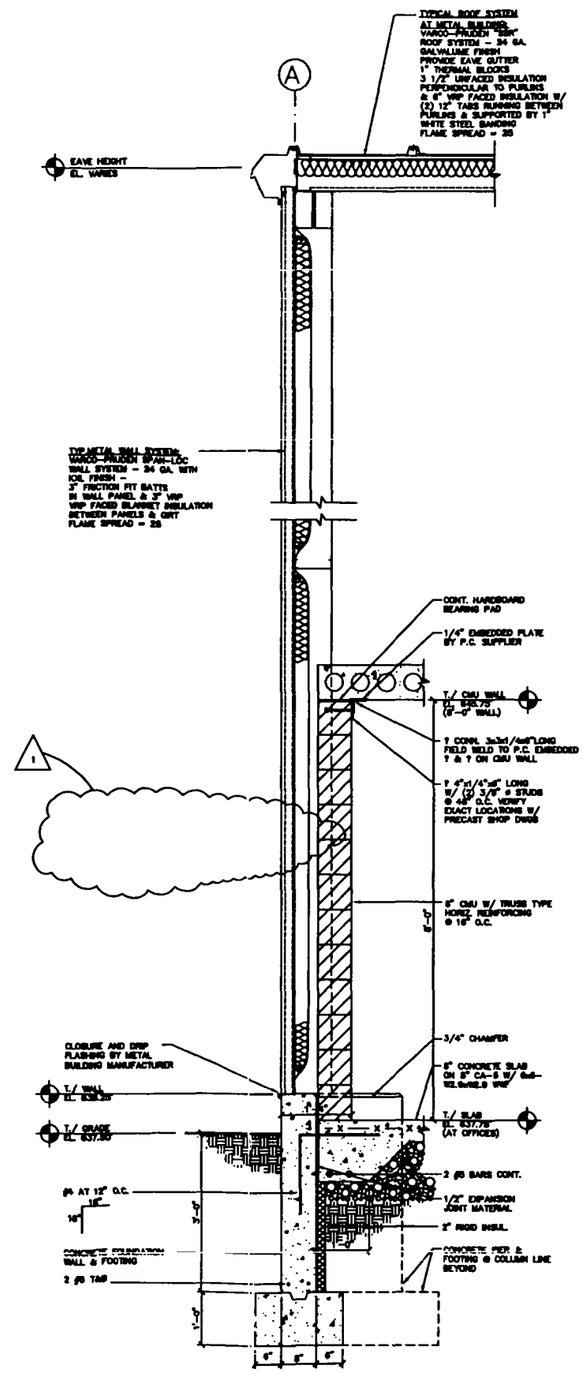

C TYP. END WALL SECTION
(AT CONCRETE PLANK)

SCALE: 3/4" = 1'-0"

P:\98-173\A6-1.DWG

© COPYRIGHT 1998

TREATMENT BUILDING
AMERICAN CHEMICAL SERVICE, INC.
GRIFFITH, INDIANA

MONTGOMERY WATSON
Salt Lake City, Utah

Custom Steel Buildings, Inc.
21895 E. LINCOLN HWY. / LANSING, ILLINOIS 60438
PH. (708)758-0275

PRELIMINARY	4/2/98
ISSUED FOR PERMIT	4/16/98
ISSUED FOR PERMIT	5/8/98
ISSUED FOR CONSTRUCTION	6/11/98
REVISED	6/29/98
REVISED WATERSTOP	8/27/98

PROJECT NO.	98-173
DRAWN BY	MSJ

WALL SECTIONS

A6.1

OF TOTAL SHEETS

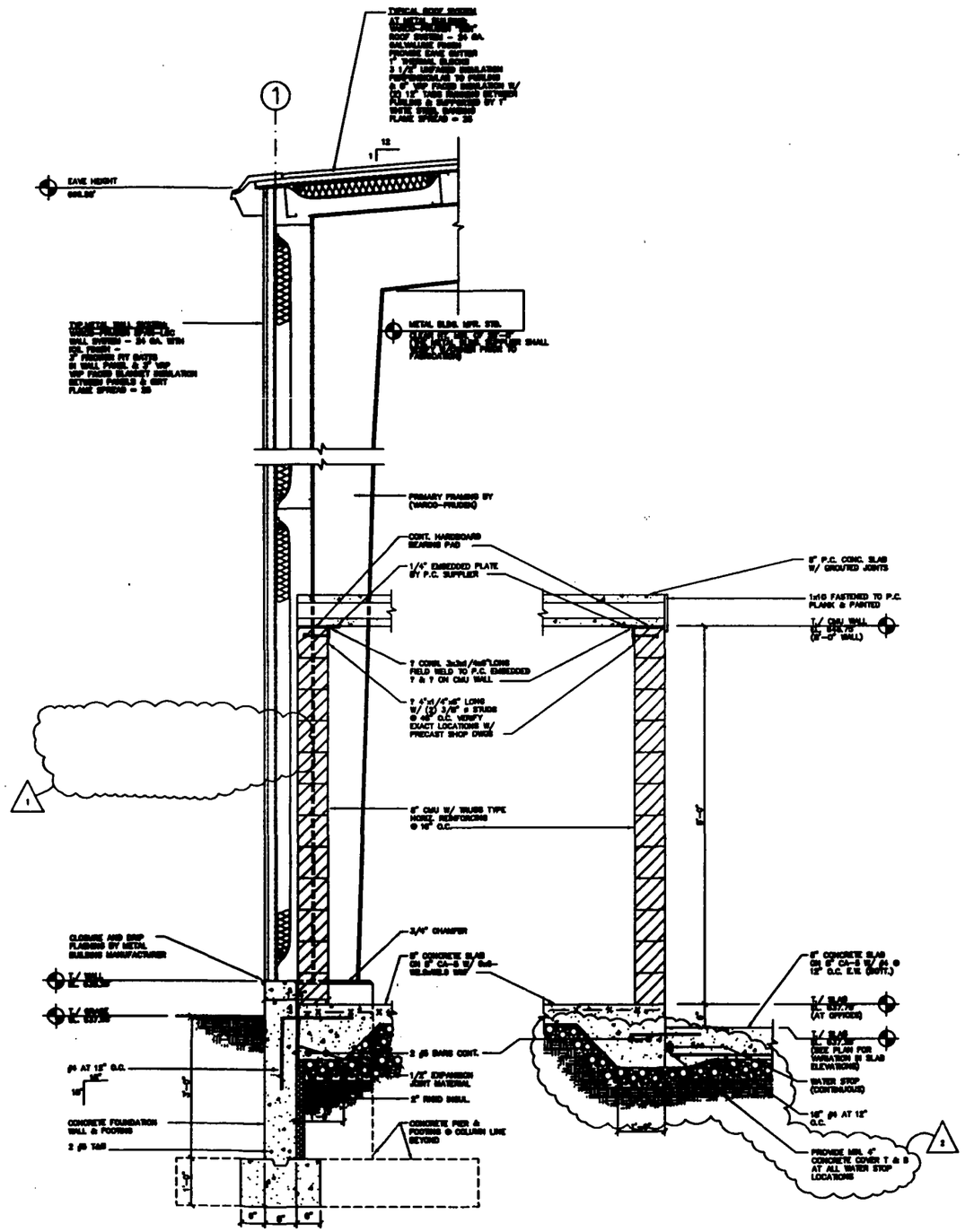

A TYP. SIDE WALL SECTION
(AT CONCRETE PLANS)

SCALE: 3/4" = 1'-0"

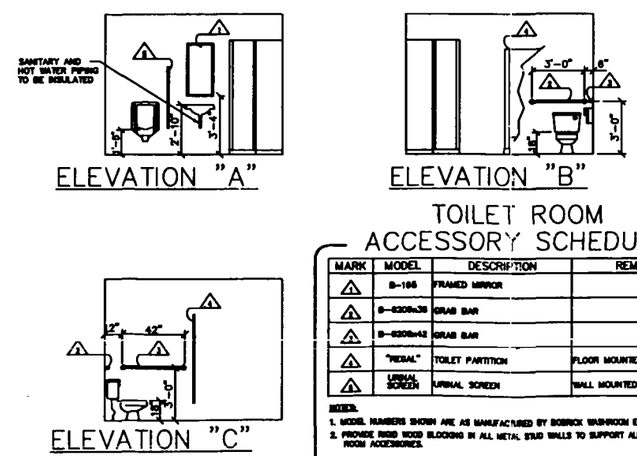

TOILET ROOM ACCESSORY SCHEDULE

MARK	MODEL	DESCRIPTION	REMARKS
1	B-165	FRAMED MIRROR	
2	B-6206x36	GRAB BAR	
3	B-6206x42	GRAB BAR	
4	"REGAL"	TOILET PARTITION	FLOOR MOUNTED
5	URINAL SCREEN	URINAL SCREEN	WALL MOUNTED

NOTES:
1. MODEL NUMBERS SHOWN ARE AS MANUFACTURED BY BOBRICK WASHROOM EQUIPMENT, INC
2. PROVIDE RIGID WOOD BLOCKING IN ALL METAL STUD WALLS TO SUPPORT ALL TOILET ROOM ACCESSORIES.

B RESTROOM ELEVATIONS

SCALE: 1/4" = 1'-0"

TREATMENT BUILDING
AMERICAN CHEMICAL SERVICE, INC.
GRIFFITH, INDIANA

MONTGOMERY WATSON
Salt Lake City, Utah

Custom Steel Buildings, Inc.
2900 E. LINCOLN HWY. / LYNWOOD, ILLINOIS 60411
PH. (708)758-6570

ISSUED FOR PERMIT 4/18/98
ISSUED FOR CONSTRUCTION 8/13/98
1 REVISED 8/28/98
2 REVISED WATERSTOP 8/27/98

PROJECT NO. 98-173
DRAWN BY MSJ
WALL SECTION & BATHROOM ELEVATIONS
A6.2
OF TOTAL SHEETS

P:\98-173\A6-2.DWG

© COPYRIGHT 1998

DOOR TYPES

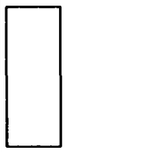

(A) SINGLE FLUSH DOOR

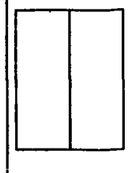

(B) DOUBLE FLUSH DOOR

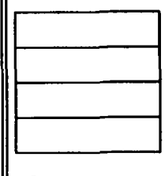

(G)

(H)

SILL TYPES

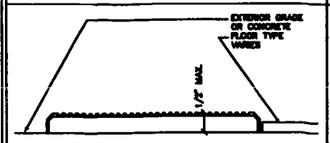

(E) -

SCALE: 1/2"=1'-0"

DOOR DETAILS

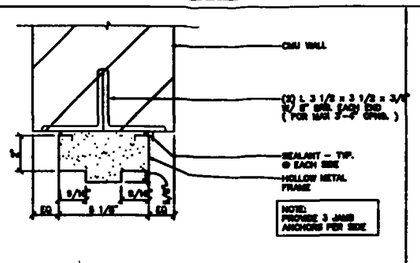

(A) JAMB

SCALE: 3"=1'-0"

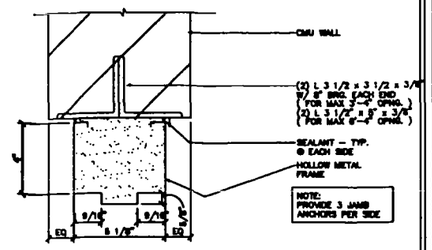

(B) HEAD

SCALE: 3"=1'-0"

DOOR SCHEDULE

MK.	DOOR TYPE	DOOR SIZE	DOOR THK.	DOOR MATL.	FRAME JAMB	FRAME HEAD	FRAME SILL	FRAME MATL.	HDWR.	FIRE	REMARKS
101A	A	3'-0" x 7'-0"	1 3/4"	HM	A	B	–	HM	1		
101B	A	3'-0" x 7'-0"	1 3/4"	HM	A	B	–	HM	1	B LABEL	
102A	A	3'-0" x 7'-0"	1 3/4"	HM	A	B	–	HM	1	B LABEL	
103A	B	PR 3'-0" x 7'-0"	1 3/4"	HM	A	B	–	HM	2	B LABEL	
104A	B	PR 3'-0" x 7'-0"	1 3/4"	HM	A	B	–	HM	2	B LABEL	
105A	A	3'-0" x 7'-0"	1 3/4"	HM	A	B	–	HM	5	B LABEL	
106A	A	3'-0" x 7'-0"	1 3/4"	HM	A	B	–	HM	1	B LABEL	
107A	A	3'-0" x 7'-0"	1 3/4"	HM	BY. MFR.	BY. MFR.	E	HM	3		
107B	G	16'-0" x 20'-0"	–	INSUL. STL.	BY. MFR.	BY. MFR.	–	STL.	6		6' HIGH LIFT
107C	A	3'-0" x 7'-0"	1 3/4"	HM	BY. MFR.	BY. MFR.	E	HM	3		
107D	B	PR 3'-0" x 7'-0"	1 3/4"	HM	BY. MFR.	BY. MFR.	E	HM	7		
108A	G	10'-0" x 10'-0"	–	INSUL. STL.	BY. MFR.	BY. MFR.	–	STL.	6		FULL VERTICAL LIFT
108B	A	3'-0" x 7'-0"	1 3/4"	HM	BY. MFR.	BY. MFR.	E	HM	1		

HARDWARE SCHEDULE

HDW SET 1
- 1 1/2 PAIR BUTTS
- 1 LEVER LOCKSET – OFFICE FUNCTION
- 1 CLOSER SURFACE MOUNTED
- 3 SILENCERS

HDW SET 2 (DOUBLE DOOR)
- 3 PAIR BUTTS
- 1 LEVER LOCKSET
- 2 SILENCERS
- 2 CLOSERS – SURFACE MOUNTED
- 1 SET FLUSH BOLTS
- 1 DUMMY TRIM

HDW SET 3 (EXT. DOOR)
- 1 1/2 PAIR BUTTS
- 1 LEVER LOCKSET
- 3 SILENCERS
- 1 SET WEATHERSTRIPPING
- 1 CLOSER – SURFACE MOUNTED
- 1 THRESHOLD

HDW SET 4
- 1 1/2 PAIR BUTTS
- 1 PULL – KAWNEER ARCHITECT SERIES CO-9
- 1 PUSH – KAWNEER ARCHITECT SERIES CP-2
- 1 DEADBOLT WITH THUMBTURN
- 3 SILENCERS
- 1 KICKPLATE – 12" x DW LESS 1"

HDW SET 5
- 1 1/2 PAIR BUTTS
- 1 LEVER LATCHSET
- 3 SILENCERS
- 1 CLOSER – SURFACE MOUNTED
- 1 THRESHOLD
- 1 SET WEATHERSTRIPPING

HDW SET 6

ALL TRACKS AND HARDWARE BY DOOR MANUFACTURER

HDW SET 7 (DOUBLE DOOR)
- 3 PAIR BUTTS
- 1 LEVER LOCKSET
- 2 SILENCERS
- 2 CLOSERS – SURFACE MOUNTED
- 1 SET FLUSH BOLTS
- 1 DUMMY TRIM
- 1 SET WEATHERSTRIPPING
- 1 THRESHOLD

HDW SET 8
- 1 1/2 PAIR BUTTS
- 1 PULL – KAWNEER ARCHITECT SERIES CO-9
- 1 PUSH – KAWNEER ARCHITECT SERIES CP-2
- 3 SILENCERS
- 1 KICKPLATE – 12" x DW LESS 1"
- 1 CLOSERS – SURFACE MOUNTED
- 1 THRESHOLD
- 1 SET WEATHERSTRIPPING
- 1 CYLINDER W/ THUMBTURN

MANUFACTURER & FINISHES

ITEM	MFR.	MODEL	FINISH
BUTTS	STANLEY	BALL BEARING 5 KNUCKLE	626 or 605 VERIFY W/ OWNER
LOCKSET	SCHLAGE	D-SERIES W/ RHODES LEVER	626 or 605 VERIFY W/ OWNER
CLOSER	LCN	SURFACE MOUNTED	626 or 605 VERIFY W/ OWNER
THRESHOLD	REESE	VARIES (MAX 1/2" H.)	ALUMINUM
H.M. FRAME	----	16ga. WELDED	PAINTED
H.M. DOOR	----	18ga. FACES	PAINTED

ROOM FINISH SCHEDULE

MK.	ROOM	FLOOR: CARPET CPT-1	FLOOR: VINYL COMP. TILE VCT-1	FLOOR: Bd CERAMIC TILE CT-1	FLOOR: EXPOSED CONSTRUCTION	FLOOR: SPECIAL FLOOR VARIES REFER TO C.S.B. SPECS	BASE: 2 1/2" HIGH COVED VB-1	BASE: EXPOSED CONSTRUCTION	WALL: PAINTED GYB. PNT-1	WALL: PAINTED CMU PNT-2	WALL: EXPOSED CONSTRUCTION	CEILING: 2x4 ACOUSTICAL CEILING TILE ACT-1	CEILING: PAINTED CONCRETE	CEILING: EXPOSED CONSTRUCTION	REMARKS
101	ELECTRICAL/ DIST. ROOM					•		•		•			•		
102	LABORATORY					•		•		•			•		
103	WAREHOUSE/ STORAGE ROOM					•		•		•			•		
104	MECH. ROOM					•		•		•			•		
105	RESTROOM					•		•		•			•		
106	OFFICE					•		•		•			•		
107	SHOP					•		•			•			•	NOTE 1
108	DUMPSTER AREA					•		•			•			•	

NOTES:

1. PAINT INTERIOR BLOCK WALLS ONLY, SHOP SIDE LEFT EXPOSED

© COPYRIGHT 1994

TREATMENT BUILDING
AMERICAN CHEMICAL SERVICE, INC.
GRIFFITH, INDIANA

MONTGOMERY WATSON
Salt Lake City, Utah

Custom Steel Buildings, Inc.
25005 E. LINCOLN HWY. / LANSING, ILLINOIS 60411
PH. (708)758-8575

1/13/95	ISSUED FOR PERMIT
5/8/95	ISSUED FOR PERMIT
6/13/95	ISSUED FOR CONSTRUCTION
6/26/95	1 NO CHANGES

PROJECT NO.	95-173
DRAWN BY	MSJ

DOOR & ROOM FINISH SCHEDULES

A8.1

OF TOTAL SHEETS

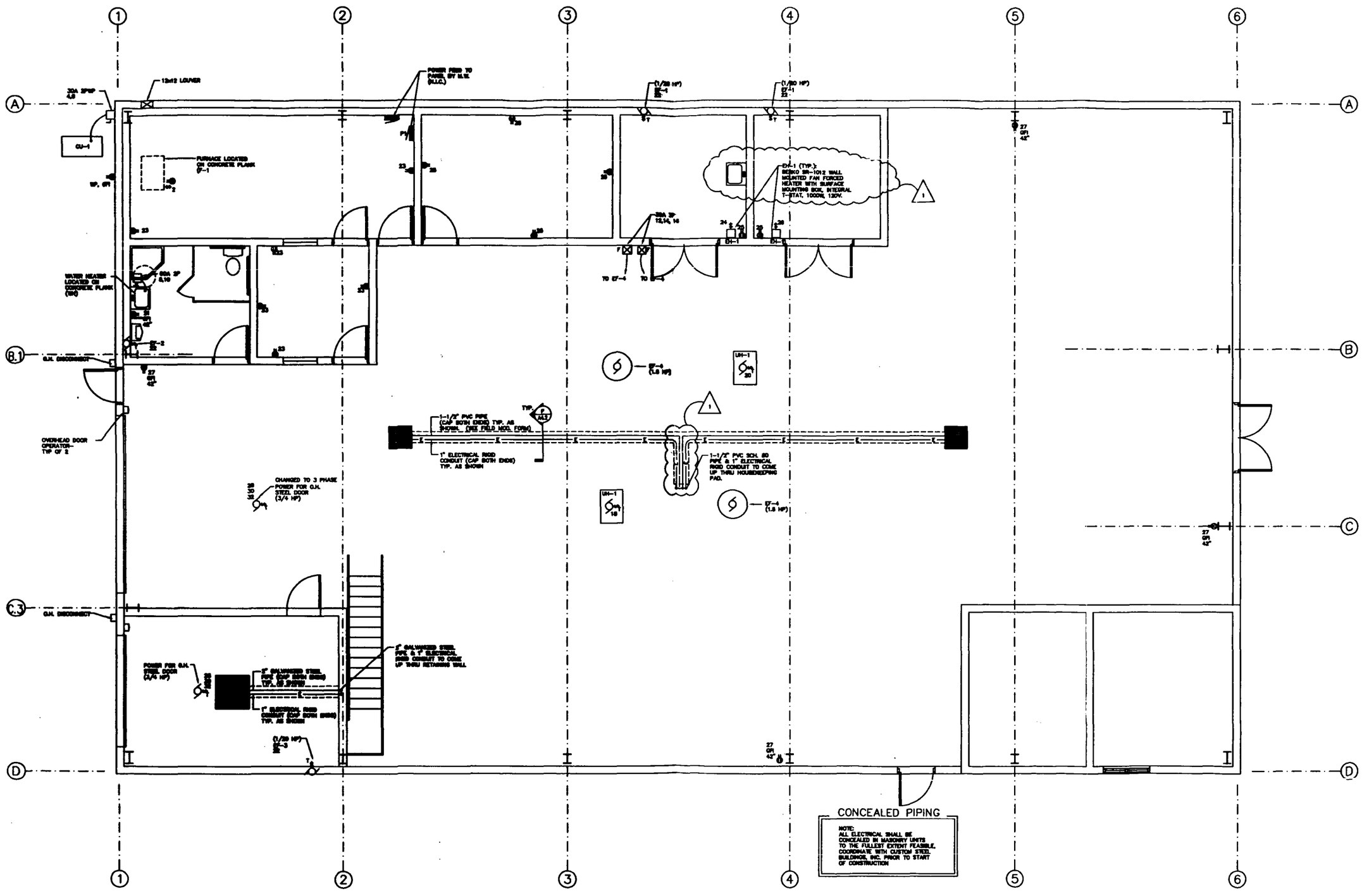

POWER PLAN

SCALE: 1/4" = 1'-0"

TREATMENT BUILDING
AMERICAN CHEMICAL SERVICE, INC.
GRIFFITH, INDIANA

MONTGOMERY WATSON
Salt Lake City, Utah

Custom Steel Buildings, Inc.
3088 E. LINCOLN HWY. / LYNWOOD, ILLINOIS 60411
PH. (708)758-4070

4/19/96	ISSUED FOR PERMIT
5/8/96	ISSUED FOR PERMIT
5/13/96	ISSUED FOR CONSTRUCTION
5/29/96	REVISED

PROJECT NO.	96-173
DRAWN BY	MSJ
POWER PLAN	
E1.1	
# OF TOTAL SHEETS	

© COPYRIGHT 1996

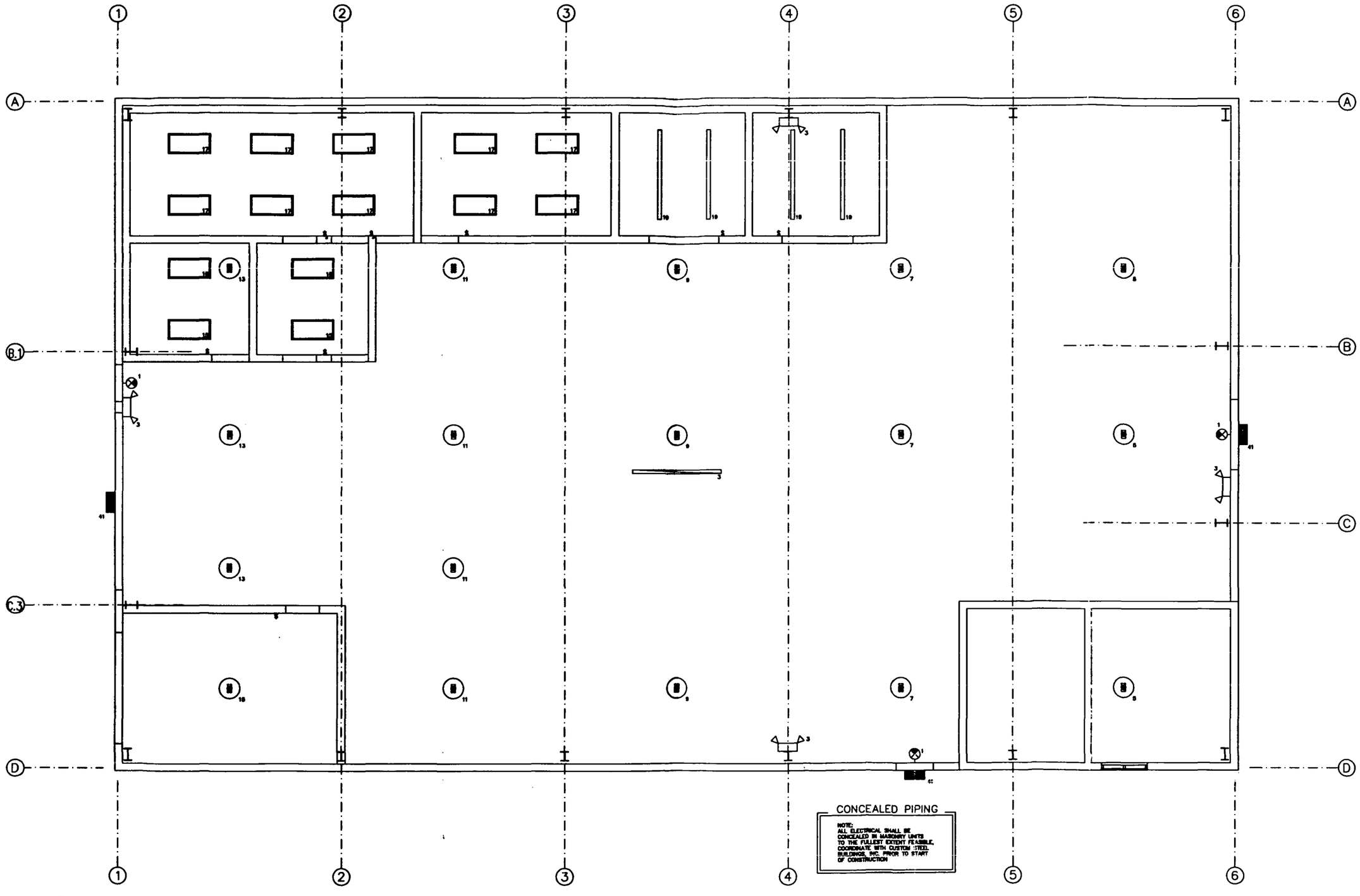

LIGHTING PLAN

SCALE: 1/4" = 1'-0"

TREATMENT BUILDING
AMERICAN CHEMICAL SERVICE, INC.
GRIFFITH, INDIANA

MONTGOMERY WATSON
Salt Lake City, Utah

Custom Steel Buildings, Inc.
2989 E. LINCOLN HWY. / LYNWOOD, ILLINOIS 60411
PH. (708)758-6275

ISSUED FOR PERMIT	4/16/98
ISSUED FOR PERMIT	5/5/98
ISSUED FOR CONSTRUCTION	6/13/98
1 NO CHANGES	6/26/98

PROJECT NO.	98-173
DRAWN BY	MSJ
LIGHTING PLAN	
E1.2	
# OF TOTAL SHEETS	

© COPYRIGHT 1998

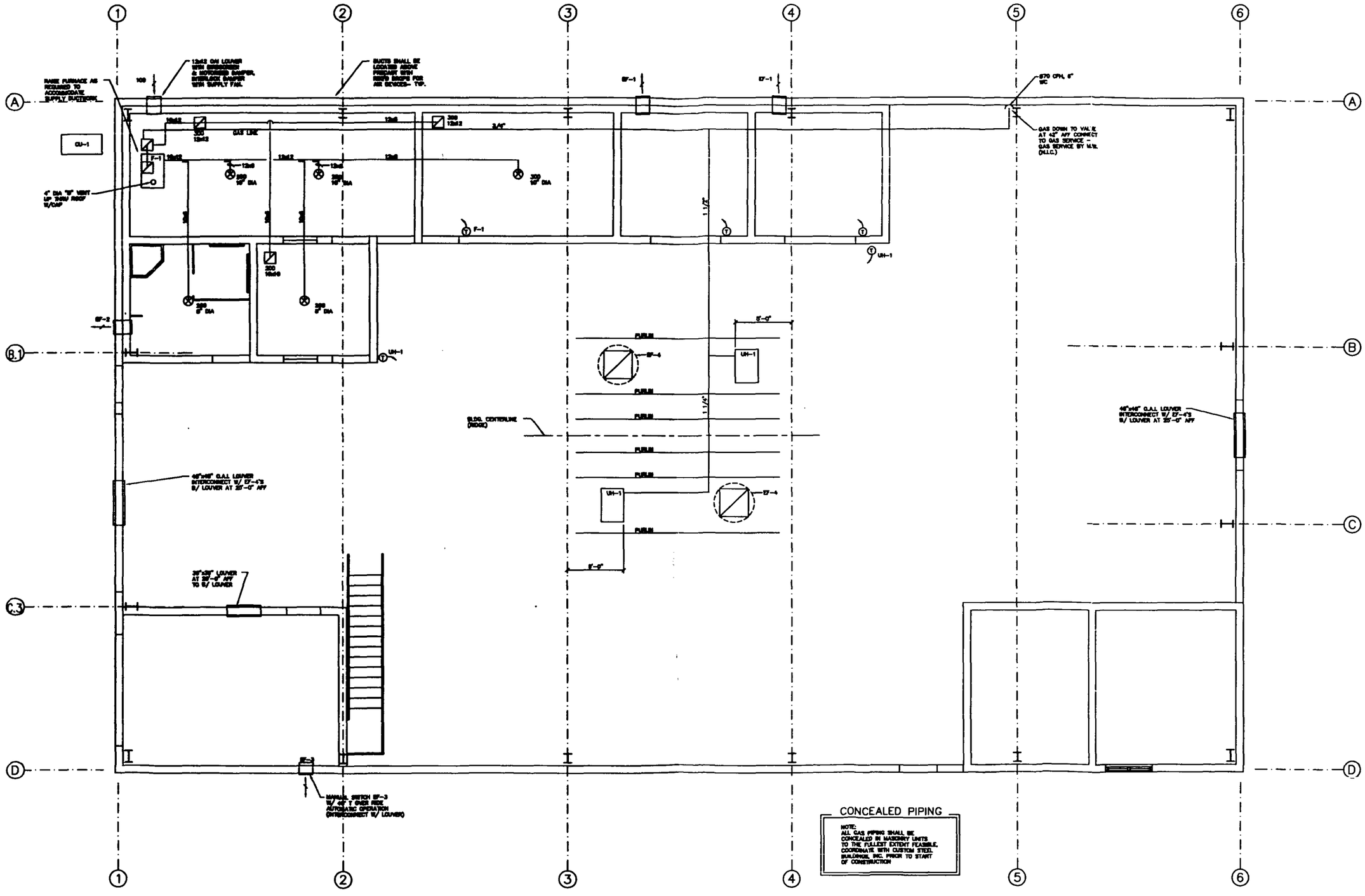

CONCEALED PIPING

NOTE:
ALL GAS PIPING SHALL BE CONCEALED IN MASONRY UNITS TO THE FULLEST EXTENT FEASIBLE. COORDINATE WITH CUSTOM STEEL BUILDINGS, INC. PRIOR TO START OF CONSTRUCTION

MECHANICAL PLAN

SCALE: 1/4" = 1'-0"

TREATMENT BUILDING
AMERICAN CHEMICAL SERVICE, INC.
GRIFFITH, INDIANA

MONTGOMERY WATSON
Salt Lake City, Utah

Custom Steel Buildings, Inc.
2988 E. LINCOLN HWY. / LYNWOOD, ILLINOIS 60411
PH. (708)758-5670

4/10/96	ISSUED FOR PERMIT
5/9/96	ISSUED FOR PERMIT
6/13/96	ISSUED FOR CONSTRUCTION
6/26/96	1 NO CHANGES

PROJECT NO.	96-173
DRAWN BY	MSJ
MECHANICAL PLAN	
M1.1	
# OF TOTAL SHEETS	

© COPYRIGHT 1996

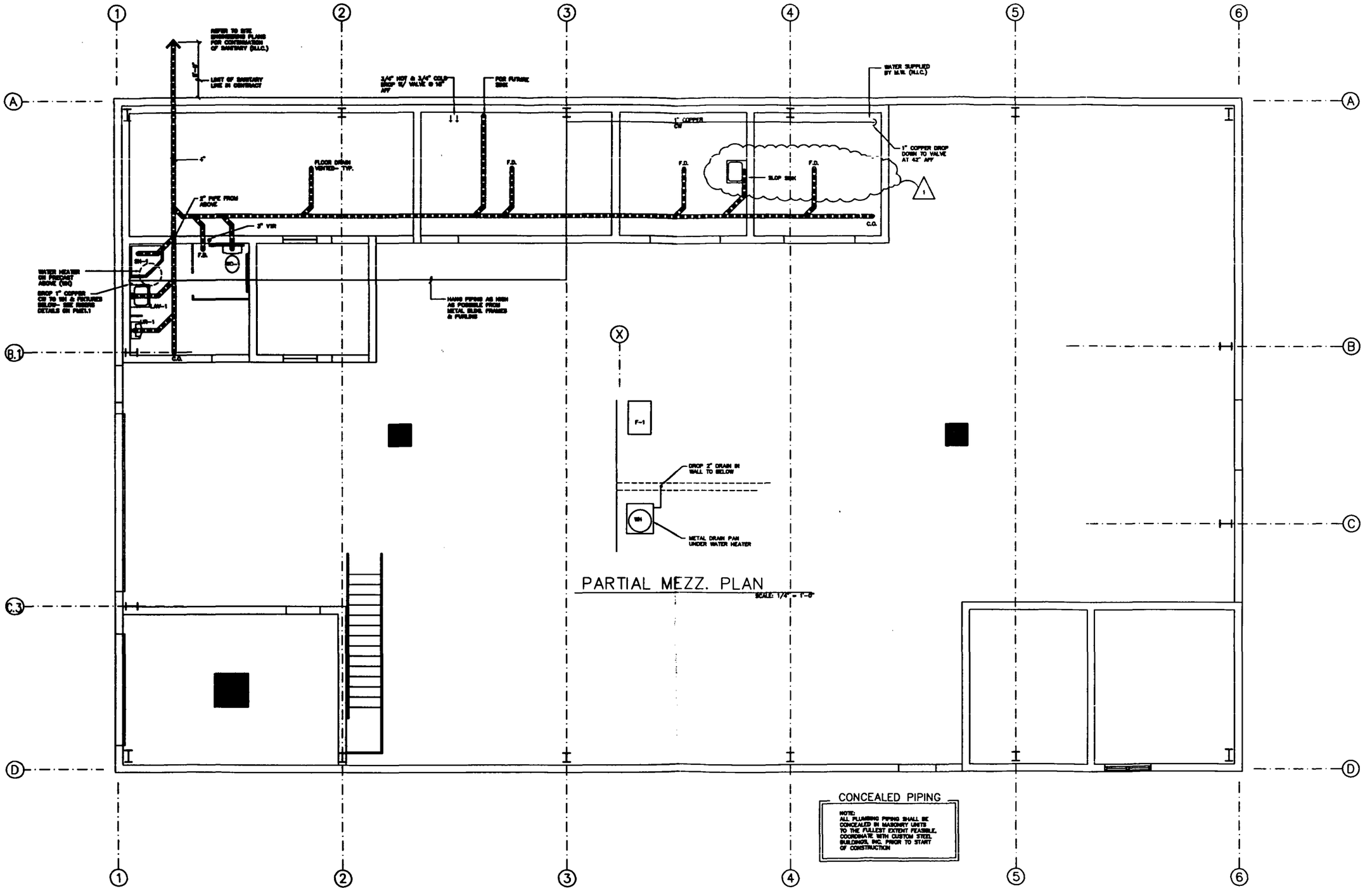

TREATMENT BUILDING
AMERICAN CHEMICAL SERVICE, INC.
GRIFFITH, INDIANA

MONTGOMERY WATSON
Salt Lake City, Utah

Custom Steel Buildings, Inc.
2988 E. LINCOLN HWY. / LYNWOOD, ILLINOIS 60411
PH. (708)758-5575

4/15/98	ISSUED FOR PERMIT
5/5/98	ISSUED FOR PERMIT
6/13/98	ISSUED FOR CONSTRUCTION
6/26/98	1 REVISED

PROJECT NO.	98-173
DRAWN BY	MSJ
PLUMBING PLAN	
P1.1	
# OF TOTAL SHEETS	

© COPYRIGHT 1998

DESCRIPTION OF WORK – MECHANICAL

PROVIDE COMPLETE HEATING, VENTILATING, AIR CONDITIONING AND EXHAUST SYSTEMS READY FOR USE AS ITEMIZED, BUT NOT LIMITED TO, AS FOLLOWS:

SPLIT SYSTEM HVAC EQUIPMENT

EXHAUST FANS

LOUVERS AND DAMPERS

DUCTWORK AND AIR DEVICES

THERMAL INSULATION

MECHANICAL CONTROLS AND CONTROL WIRING.

RELATED WORK BY OTHER TRADES

ELECTRIC POWER WIRING

ELECTRIC HEATERS

RELATED WORK BY OTHERS

GAS SERVICE INTO THE BUILDING

MECHANICAL NOTES

WORK SHALL BE PERFORMED IN ACCORDANCE WITH CODES AND AUTHORITIES HAVING JURISDICTION.

WORK SHALL BE PERFORMED IN A NEAT WORKMANLIKE MANNER.

PROCURE AND PAY FOR REQUIRED PERMITS AND INSPECTIONS

THIS TRADE SHALL DO ITS OWN CUTTING AND PATCHING – TRENCHING AND BACKFILLING.

CONFER WITH THE OTHER TRADES IN THE COORDINATION OF THIS WORK FOR CLEARANCES, CHASES, RECESSES AND OPENINGS REQUIRED.

PROPOSAL PRICE SHALL INCLUDE SPECIFIED MATERIALS ONLY. SHOULD THE CONTRACTOR WISH TO SUBSTITUTE MATERIALS, EQUIPMENT OR MANUFACTURERS, IT SHALL BE DONE BY STATING EACH SUBSTITUTION AND ITS PRICE ADJUSTMENT.

THESE DRAWINGS ARE TO BE USED FOR BIDDING ONLY. ROUGH-IN AND FINAL CONNECTION SHALL BE MADE FROM APPROVED EQUIPMENT DRAWINGS ONLY.

GAS PIPING SHALL BE BLACK STEEL WITH MALLEABLE FITTINGS. PROVIDE GAS COCK, UNION AND DIRT LEG AT EVERY CONNECTION. PIPING 2-1/2" AND LARGER SHALL BE WELDED. TEST GAS PIPING AT 25 PSI – REPAIR LEAKS AND RETEST.

INSULATE SUPPLY AND RETURN DUCTS WITH 1 1/2" THICK FIBERGLASS INSULATION WITH FACTORY APPLIED FIBERGLASS REINFORCED ALUMINUM FOIL FACING. INSULATION SHALL BE WRAPPED TIGHT WITH JOINTS ABUTTED. SEAL JOINTS VAPOR TIGHT WITH HEAT SENSITIVE OR PRESSURE SENSITIVE TAPE.

DUCTS SHALL BE CONSTRUCTED AS INSTALLED IN ACCORDANCE WITH RECOMMENDATIONS SET FORTH IN SMACNA MANUAL.

SEAL TRANSVERSE DUCT JOINTS IN ACCORD WITH SMACNA CLASS "C".

PROVIDE TYPE "B" GAS VENTS FOR FURNACE AND UNIT HEATERS. VENT SHALL PENETRATE ROOF WITH TALL FLASHING CONE AND STORM COLLAR. TERMINATE WITH CAP.

PROVIDE SPLITTER DAMPERS AT EVERY SUPPLY DUCT BRANCH. SPLITTERS ABOVE INACCESSIBLE CEILINGS SHALL HAVE EXTENDED ARMS OR REMOTE OPERATORS.

ELECTRICAL CHARACTERISTICS ARE 120/208V/3PH/4W.

IDENTIFICATION: STENCIL HVAC UNITS AND EXHAUST FANS WITH 4" HIGH X 3/4" THICK LETTERS WITH THE INDICATED UNIT NUMBERS. PROVIDE 3/4" HIGH WHITE FACED MICARTA WITH BLACK LETTERS AT EACH HVAC UNIT THERMOSTAT WITH UNIT NUMBERS.

CURBS SHALL BE INSULATED AND PROVIDED WITH NAILERS, CANTS, AND 18 GA. GALVANIZED STEEL SHELL AND BASE PLATE.

DESCRIPTION OF WORK – ELECTRICAL

PROVIDE COMPLETE ELECTRICAL SYSTEMS READY FOR USE AS ITEMIZED, BUT NOT LIMITED TO, AS FOLLOWS:

PANEL, BREAKERS, CONDUIT, WIRING AND BRANCH CIRCUITS CONNECTING FIXTURES, DEVICES AND EQUIPMENT.

LIGHTING FIXTURES AND LAMPS.

FUSES, DISCONNECTS, STARTERS (EXCEPT WHERE PART OF OEM), DEVICES, PLATES AND OTHER REQUIRED EQUIPMENT.

ELECTRIC HEATERS.

RELATED WORK BY OTHER TRADES

TEMPERATURE CONTROL WIRING

RELATED WORK BY OTHERS

ELECTRIC SERVICE INTO THE BUILDING

ELECTRIC NOTES

WORK SHALL BE PERFORMED IN ACCORDANCE WITH CODES AND AUTHORITIES HAVING JURISDICTION.

WORK SHALL BE PERFORMED IN A NEAT AND WORKMANLIKE MANNER.

PROCURE AND PAY FOR REQUIRED PERMITS AND INSPECTIONS.

THIS TRADE SHALL DO ITS OWN CUTTING AND PATCHING – TRENCHING AND BACKFILLING.

CONFER WITH THE OTHER TRADES IN THE COORDINATION OF THIS WORK FOR CLEARANCES, CHASES, RECESSES AND OPENINGS REQUIRED.

PROPOSAL PRICE SHALL INCLUDE SPECIFIED MATERIALS ONLY. SHOULD THE CONTRACTOR WISH TO SUBSTITUTE MATERIALS, EQUIPMENT OR MANUFACTURERS, IT SHALL BE DONE BY STATING EACH SUBSTITUTION AND ITS PRICE ADJUSTMENT.

THESE DRAWINGS ARE TO BE USED FOR BIDDING ONLY. ROUGH-IN AND FINAL CONNECTION SHALL BE MADE FROM APPROVED EQUIPMENT DRAWINGS ONLY. SIZE AND TYPE OF EQUIPMENT BRANCH OVERCURRENT PROTECTIVE DEVICE(S) SHALL BE AS RECOMMENDED BY THE EQUIPMENT MANUFACTURERS – FIELD VERIFY MOCP, ETC.

WIRE SHALL HAVE 600 VOLT INSULATION, NOT LESS THAN #12 EXCEPT FOR CONTROLS, BE COPPER CONDUCTOR TYPE TW FOR #10 AND SMALLER, AND THW, XHHW OR THHN FOR WIRE #8 AND LARGER. WIRE SHALL BE COPPER – NO ALUMINUM OR COPPER CLAD.

CONDUIT IN GROUND, EXPOSED TO WEATHER, IN SLABS ON GRADE AND WHERE REQUIRED BY CODE, SHALL BE HOT DIPPED GALVANIZED INTERMEDIATE METAL CONDUIT WITH WATERPROOF FITTINGS AND APPROVED COMPOUND. CONDUIT ELSEWHERE SHALL BE EMT WITH COMPRESSION OR SET SCREW FITTINGS.

PROVIDE TYPED PANEL SCHEDULE FOR EACH PANEL.

DEVICES SHALL BE BLACK AND PLATES SHALL BE BRUSHED STAINLESS STEEL.

LAMPS:

FLUORESCENT – WARM WHITE (2800 LUMEN)

DEVICES:

LEVITON 5501 – SWITCHES LESS THAN 10 AMPS
LEVITON 5521 – SWITCHES MORE THAN 10 AMPS
LEVITON 5362 – RECEPTACLES (15A)
LEVITON 5362 – RECEPTACLES (20A)

P:\98-173\PME1-1.DWG

MOUNTING HEIGHTS

SWITCHES 4'-0" AFF
RECEPTACLES 1'-3" AFF (INDOOR) INCLUDING TELEPHONE OUTLETS

IDENTIFY DISCONNECTS, STARTERS, PANELS, AND SWITCHES WITH FACED BLACK LETTERED MICARTA PLATE 3/4" HIGH WITH 1/4" LETTERING. SWITCHES IN GROUPS OF 2 OR LESS NEED NOT BE IDENTIFIED.

STARTERS SHALL BE ELECTRICALLY OPERATED WITH O/L PROTECTION ON EVERY PHASE LINE. SWITCHES SHALL BE SQUARE D HEAVY DUTY WITH BUSSMAN DUAL ELEMENT FUSES AS REQUIRED.

PANEL AND CIRCUIT BREAKERS SHALL BE SQUARE D. PROVIDE COPPER BUS AND BOLT-ON BRANCH BREAKERS. PROVIDE SWITCHING DUTY BREAKERS FOR LIGHTING CIRCUITS SWITCHED AT THE PANEL.

PROVIDE A COMPLETE ELECTRICALLY SUPERVISED AUTOMATIC FIRE ALARM SYSTEM INCLUDING WIRING TO INDOOR BELL AND OUTDOOR BELL, WIRING OF WATER FLOW ALARM, TAMPER SWITCHES, AND "CITY TIE". EQUIPMENT SHALL BE SIMPLEX. DUCT DETECTORS SHALL SHUT DOWN MECHANICAL EQUIPMENT.

TELEPHONE OUTLETS SHALL BE 4" BOX WITH SINGLE GANG COVER AND 3/4" EC EXTENDING TO 8'-0" AFF OR ABOVE PRECAST DECK.

OUTDOOR EQUIPMENT SHALL BE NEMA 3R AND FLEXIBLE CONNECTIONS MADE WITH GRAY LIQUID TIGHT FLEXIBLE METAL CONDUIT.

PLUMBING – DESCRIPTION OF WORK

PROVIDE COMPLETE PLUMBING SYSTEM READY FOR USE AS ITEMIZED, BUT NOT LIMITED TO, AS FOLLOWS:

WASTE AND VENT PIPING SYSTEM WITH CONNECTION TO EVERY FIXTURE AND DEVICE.

HOT AND COLD WATER PIPING SYSTEM WITH CONNECTION TO EVERY FIXTURE AND DEVICE.

GAS PIPING SYSTEM WITH CONNECTION TO EVERY PIECE OF EQUIPMENT REQUIRING GAS.

PLUMBING FIXTURES AND DEVICES.

THERMAL INSULATION.

DOMESTIC WATER SERVICE AND METERING.

RELATED WORK BY OTHER TRADES

ELECTRICAL POWER WIRING.

PLUMBING NOTES

THE PLUMBING CONTRACTOR SHALL INCLUDE ALL NECESSARY LABOR, MATERIALS, AND EQUIPMENT REQUIRED FOR A COMPLETE AND OPERABLE INSTALLATION OF ALL WATER AND SEWERAGE SYSTEMS.

WORK SHALL BE PERFORMED IN ACCORDANCE WITH CODES AND AUTHORITIES HAVING JURISDICTION.

WORK SHALL BE PERFORMED IN A NEAT WORKMANLIKE MANNER.

PROCURE REQUIRED PERMITS AND INSPECTIONS.

THIS TRADE SHALL DO ITS OWN CUTTING AND PATCHING – TRENCHING AND BACKFILLING.

CONFER WITH THE OTHER TRADES IN THE COORDINATION OF THIS WORK FOR CLEARANCES, CHASES, RECESSES AND OPENINGS REQUIRED.

PROPOSAL SHALL INCLUDE SPECIFIED MATERIALS ONLY. SHOULD THE CONTRACTOR WISH TO SUBSTITUTE MATERIALS, EQUIPMENT OR MANUFACTURERS, IT SHALL BE DONE BY STATING EACH SUBSTITUTION AND ITS PRICE ADJUSTMENT.

THESE DRAWINGS ARE TO BE USED FOR BIDDING ONLY. ROUGH-IN AND FINAL CONNECTION SHALL BE MADE FROM APPROVED EQUIPMENT DRAWINGS ONLY.

PROVIDE ESCUTCHEON PLATES AT WALLS OF FINISHED AREAS.

FIXTURE AND EQUIPMENT CONNECTIONS SHALL BE MADE WITH CP SUPPLIES WITH STOPS. EXPOSED WASTE PIPING SHALL BE CHROME PLATED.

FLASH VENTS THRU ROOF WITH PRE-ENGINEERED BUILDING MANUFACTURERS STANDARDS VENT FLASHING

PIPING MATERIALS:
WATER PIPING ABOVE GROUND: TYPE L COPPER W/LEAD FREE JOINTS.

WATER PIPING BELOW GROUND: TYPE K COPPER WITH SIL-FOS SOLDER JOINTS OR CEMENT LINED DUCTILE IRON WITH PUSH JOINTS.

SUSPENDED WASTE: VENTS CODE APPROVED PIPE AND FITTINGS (NO DWV COPPER).

BURIED WASTE: CAST IRON WITH DRAINAGE FITTINGS.

GAS PIPING: BLACK STEEL WITH MALLEABLE FITTINGS. PROVIDE GAS COCK, UNION AND DIRT LEG AT EVERY CONNECTION. PIPING 2-1/2" AND LARGER SHALL BE WELDED. TEST GAS PIPING AT 25 PSI – REPAIR LEAKS AND RETEST.

INSULATE SUSPENDED HOT WATER AND COLD WATER PIPING WITH 1/2" THICK FIBERGLASS SECTIONAL PIPE INSULATION WITH FLAME RETARDANT JACKET. INSULATE EXPOSED WASTE AND HOT WATER PIPING BELOW WHEELCHAIR LAVATORIES.

PROVIDE FREEZPROOF HOSE BIBS WHERE INDICATED ON DRAWINGS WITH VACUUM BREAKERS. INTERIOR HOSE BIBS ALSO TO HAVE VACUUM BREAKERS.

PROVIDE CLEAN-OUTS IN WASTE AND SOIL LINE FOR EACH CHANGE OF DIRECTION GREATER THAN 45 DEGREES AND AT TOP OF EACH STACK.

ALL WATER PIPES TO FIXTURES SHALL BE VALVED.

DO NOT INSTALL WATER SUPPLY LINES OR HORIZONTAL DRAIN LINES IN WALLS ADJACENT TO UNHEATED SPACES.

DISINFECTION:
WATER PIPING SHALL BE DISINFECTED USING LIQUID CHLORINE THAT HAS A RESIDUAL LEVEL OF 25 PPM AFTER 24 HOURS. AFTER ACCEPTANCE, FLUSH SYSTEM UNTIL CHLORINE IS REMOVED. PROVIDE NECESSARY FILL, DRAIN AND TEST VALVES TO ACCOMPLISH THE DISINFECTION.

PANEL SCHEDULE — MARK P1

LOAD		VA	P	A	CKT	CKT	A	P	VA	LOAD	
EXIT	L	75	1	20	1	2	15	1	600	FURNACE	P
[illegible]	L	200	1	20	3	4	30		3750	CONDENSING UNIT (3Ø)	P
SHOP	L	1440	1	20	5	6		2	–	–	
SHOP	L	1440	1	20	7	8	40		6000	WATER HEATER (3Ø)	P
SHOP	L	1440	1	20	9	10		3	–	–	
SHOP	L	1440	1	20	11	12	20		4300	(3) EF-4	P
SHOP	L	1440	1	20	13	14			–	–	
DUMPSTER, TOIL, OFFICE	L	900	1	20	15	16		3	–	–	
ELEC, LAB	L	1200	1	20	17	18	20	1	840	UH-1	P
[illegible]	L	640	1	20	19	20	20	1	840	UH-1	P
TOILET	R	180	1	20	21	22	20	1	[illegible]	(3) EF-1, EF-2, EF-3	P
OFFICE, [illegible]	R	1000	1	20	23	24	20	1	1000	SH-1	P
LAB, STOR, [illegible]	R	1080	1	20	25	26	20	1	1000	SH-1	P
SHOP (3Ø)	R	720	1	20	27	28	20	1	1000	O/H DOOR	P
O/H DOOR	P	1000	1	20	29	30					
					31	32					
					33	34					
					35	36					
					37	38					
					39	40					
OUTDOOR	L	540	1	20	41	42					

TOTAL LOAD : [illegible] VA BALANCED LOAD: [illegible] AMP
SERVICE : [illegible] V 3 Ø 4 W MAINS : [illegible]

NOTES:
1. PROVIDE HACR BREAKER.
2. UH-1'S AND SH-1'S AT 0%, REMAINDER AT 100%

LIGHT FIXTURE SCEDULE

HIGH BAY
LUMARK [illegible]-400- TPPH WITH 400W MH LAMP.

SURFACE WRAP
METALUX [illegible]-LE3 WITH (3) F40T12/ WM LAMPS.

2 LAMP STRIP
METALUX [illegible]-240-LE3 WITH (4) F40T12/ WM LAMPS.

WALL PACK
LUMARK [illegible]-250 WITH INTEGRAL PHOTOCELL AND 250W HPS LAMP.

PLUMBING SCHEDULE

SH-1 SHOWER UNIT
FLORESTONE MODEL 36-4W – ACRYLIC 1 PIECE SHOWER BASE AND WALLS, WHITE, SLIP RESISTANT FLOOR & PVC NON CAULK DRAIN. PROVIDE MOEN 8326 SINGLE HANDLE PRESSURE BALANCING SHOWER VALVE WITH HAF.

LAV-1 WALL MOUNTED LAV.
MANSFIELD MODEL 2016C WHITE VITREOUS CHINA WITH SYMMONS "SCOT" S-60-H FAUCET WITH STRAINER WITH HW PIPE & WASTE INSULATION

UR-1 – WALL MOUNTED URINAL
WALL MOUNTED URINAL, MANSFIELD MODEL 416, WHITE WITH FLUSH VALVE.

WC-1 FLOOR MOUNTED WATER CLOSET
MANSFIELD "HIGH LAND" MODEL 118-38, WHITE WITH OPEN SOLID PLASTIC SEAT.

WH-1 30 GAL ELECTRIC WATER HEATER.

MECHANICAL SCHEDULE

EF-4
LOREN COOK TYPE ACE-B 225C8B ROOF MOUNTED VENTILATOR WITH CURB, BDD, BIRDSCREEN, DISCONNECT, 1.5 HP MOTOR, 6000 CFM AT 1/8" ESP.

F-1/CU-1
CARRIER 58RAV070-12 GAS FIRED DOWNFLOW FURNACE WITH 60/56 MBH IN/OUT, 1" T/A FILTERS, T-STAT, 1/3 HP, 1200 CFM AT .5" ESP.

CARRIER CD5AXA036 NOMINAL 3 TON COOLING COIL.

CARRIER 38TJA036-3 NOMINAL 3 TON 11.0 SEER CONDENSING UNIT.

PROVIDE INTERCONNECTING REFRIGERANT PIPING PER MANUFACTURERS RECOMMENDATIONS.

PROVIDE ANGLE-IRON FRAME SECURED TO FOUNDATION WALL FOR MOUNTING CONDENSING UNIT NEXT TO BUILDING.

MECHANICAL EQUIPMENT SCHEDULE

UH-1
REZNOR FE-400 GAS-FIRED UNIT HEATER WITH SPARK IGNITION, T-STAT, 400/320 MBH IN/OUT, 6" DIA VENT, 300 LBS.

EF-1
LOREN COOK TYPE SPD 100P18D WALL MOUNTED FAN WITH 200 CFM AT 1/8" ESP, 1/20 HP MOTORIZED LOUVER, FSC, AND T-STAT CONTROL. FAN SHALL TURN ON WHEN TEMP EXCEEDS 90 DEG F.

EF-2
BROAN 505 WALL MOUNTED FAN WITH FSC, 200 CFM.

EF-3
LOREN COOK TYPE SPD 100P18D WALL MOUNTED FAN WITH 600 CFM AT 1/8" ESP, 1/20 HP MOTOR MOTORIZED LOUVER, FSC, AND T-STAT OVERRIDE.

AIR DEVICES (TITUS UNO)

SUPPLY TMRA W/OBD.
RETURN 350RL W/OBD.

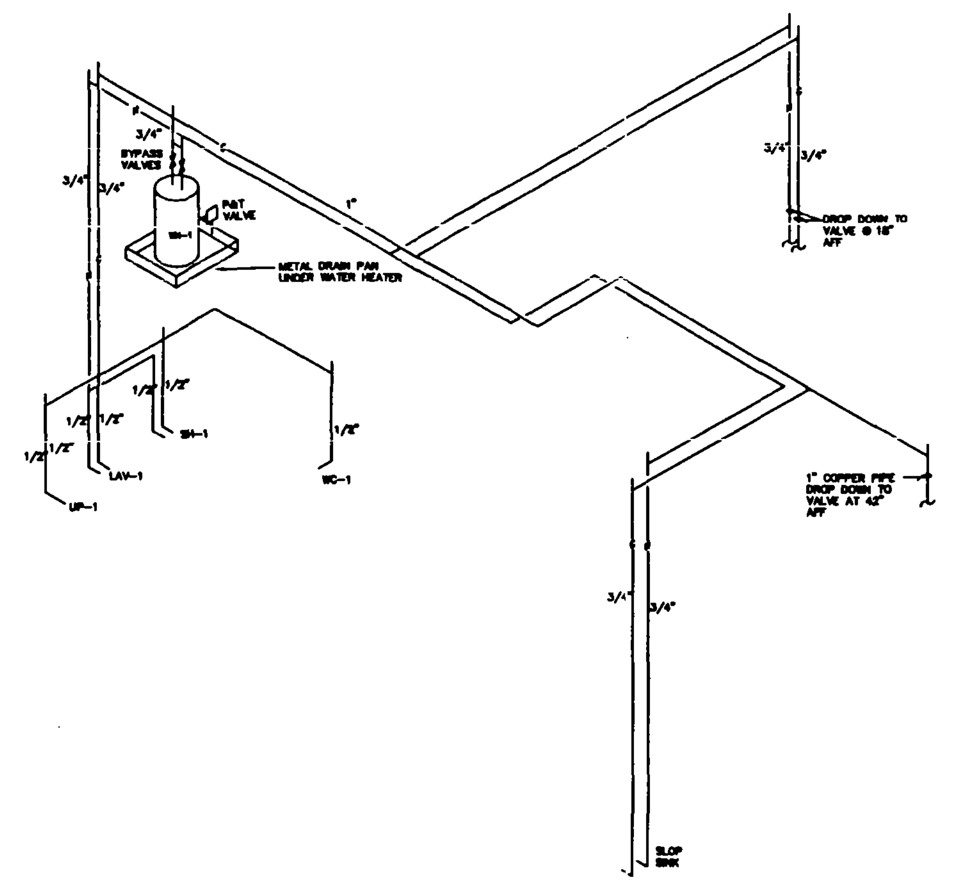

SUPPLY RISER DIAGRAM

NOT TO SCALE

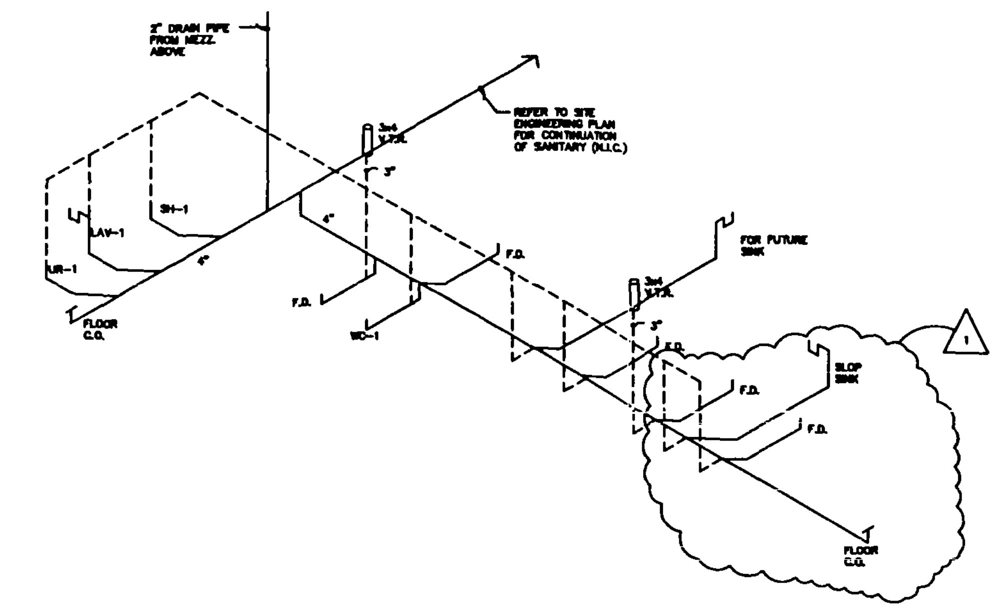

WASTE RISER DIAGRAM

NOT TO SCALE

© COPYRIGHT 1998

TREATMENT BUILDING
AMERICAN CHEMICAL SERVICE, INC.
GRIFFITH, INDIANA

MONTGOMERY WATSON
Salt Lake City, Utah

Custom Steel Buildings, Inc.
21600 E. LINCOLN HWY. / LYNWOOD, ILLINOIS 60411
PH. (708)758-5878

ISSUED FOR PERMIT	4/15/98
ISSUED FOR PERMIT	5/8/98
ISSUED FOR CONSTRUCTION	5/13/98
1 REVISED	8/26/98

PROJECT NO. 98-173
DRAWN BY MSJ
PLUMBING, MECHANICAL & ELECTRICAL DETAILS
PME1.1
OF TOTAL SHEETS

Varco-Pruden Buildings

A United Dominion Company

PERMIT DRAWINGS
ANY CHANGES MAY EFFECT PRICE AND DELIVERY DATE.

FOR PERMIT USE

MBMA

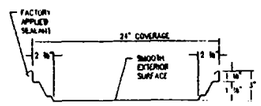

STANDING SEAM ROOF PANELS (SSR)

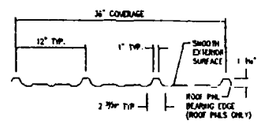

PANEL RIB ROOF & WALL PANELS (PR)

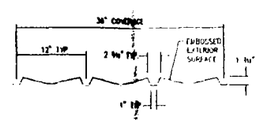

VEE RIB WALL PANELS (VR)

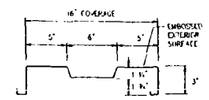

SPAN LOC WALL PANELS (SL)

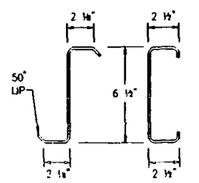

6 1/2" GIRTS / PURLINS

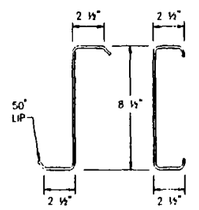

8 1/2" GIRTS / PURLINS

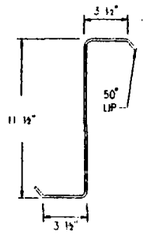

11 1/2" PURLINS

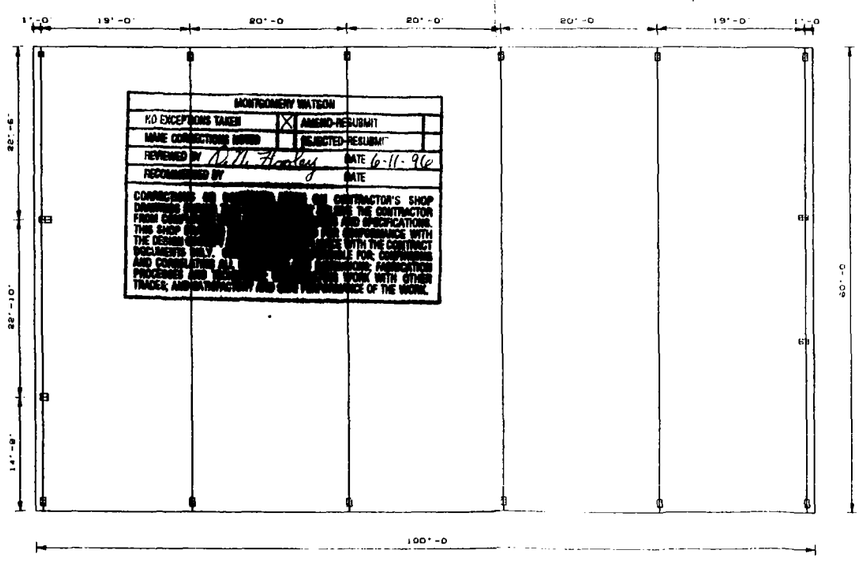

GENERAL NOTES

1. MATERIALS

	ASTM DESIGNATION	
STRUCTURAL STEEL PLATE	A529 OR A572	Fy= 50 KSI (GRADE 50)
COLD FORMED LIGHT GAGE SHAPES	A570	Fy= 55 KSI (GRADE 55)
BRACE RODS	A572	GRADE 65, UNLESS NOTED
HOT ROLLED MILL SHAPES	A36 OR A572	Fy= 36 KSI OR 50 KSI
ROOF AND WALL SHEETS	A446	Fy= 50 KSI (GRADE D)
BOLTS	A307 AND A325	A307, UNLESS NOTED

2. STRUCTURAL PRIMER

SHOP PRIMER PAINT IS A RUST INHIBITIVE PRIMER AND IS VARCO-PRUDEN COLOR TAHITIAN BRONZE. THIS PAINT IS NOT INTENDED FOR LONG TERM EXPOSURE TO THE ELEMENTS.

3. A325 BOLT TIGHTENING REQUIREMENTS

ALL HIGH STRENGTH BOLTS ARE A325-N UNLESS SPECIFICALLY NOTED OTHERWISE.

STRUCTURAL BOLTS SHALL BE TIGHTENED BY THE TURN-OF-THE-NUT METHOD IN ACCORDANCE WITH THE NINTH EDITION, AISC "SPECIFICATION FOR STRUCTURAL JOINTS USING ASTM A325 OR A490 BOLTS" PER SECTION 8D.1. A325 BOLTS MAY BE INSTALLED WITHOUT WASHERS WHEN TIGHTENED BY THE TURN-OF-THE-NUT METHOD.

ALL HIGH STRENGTH BOLTS, EXCEPT AS NOTED OTHERWISE, ARE SUBJECT TO DIRECT TENSION AND MAY REQUIRE INSPECTION AS DEFINED BY THE APPLICABLE BUILDING CODE OR STANDARD. IT IS THE RESPONSIBILITY OF THE ERECTOR TO ASSURE PROPER TIGHTNESS.

4. BUILDER / CONTRACTOR RESPONSIBILITIES

VARCO-PRUDEN'S STANDARD PRODUCT SPECIFICATIONS APPLY AND UNLESS STIPULATED OTHERWISE IN THE CONTRACT DOCUMENTS, VARCO-PRUDEN'S DESIGN, FABRICATION, QUALITY CRITERIA STANDARDS, AND TOLERANCES WILL GOVERN THE WORK. (A VARCO-PRUDEN SPECIFICATION BOOKLET IS AVAILABLE UPON REQUEST)

IN CASE OF DISCREPANCIES BETWEEN VARCO-PRUDEN STRUCTURAL PLANS AND PLANS FOR OTHER TRADES, THE VARCO-PRUDEN PLANS SHALL GOVERN.

IT IS THE RESPONSIBILITY OF THE BUILDER / CONTRACTOR TO OBTAIN APPROPRIATE APPROVALS AND NECESSARY PERMITS FROM CITY, COUNTY, STATE, OR FEDERAL AGENCIES, AS REQUIRED.

APPROVAL OF VARCO-PRUDEN DRAWINGS CONSTITUTES THE BUILDER / CONTRACTOR'S ACCEPTANCE OF THE VARCO-PRUDEN INTERPRETATION OF THE CONTRACT PURCHASE ORDER.

ONCE THE BUILDER / CONTRACTOR OR A/E FIRM HAS SIGNED VARCO-PRUDEN APPROVAL PAPERWORK, CHANGES FROM THE PURCHASE ORDER BY THE BUILDER WILL BE BILLED TO THE BUILDER / CONTRACTOR FOR MATERIAL, ENGINEERING, AND HANDLING FEES. SUCH CHANGES MAY CAUSE THE PROJECT TO BE MOVED FROM THE FABRICATION AND / OR SHIPPING SCHEDULE. A PENALTY FEE MAY BE CHARGED IF THE PROJECT MUST BE MOVED FROM THE FABRICATION AND / OR SHIPPING SCHEDULE, AS LONG AS VARCO-PRUDEN DESIGN AND DETAILING APPROACH COMPLIES WITH THE PURCHASE ORDER.

THE BUILDER / CONTRACTOR OR A/E FIRM ARE RESPONSIBLE FOR THE OVERALL PROJECT COORDINATION. ALL INTERFACE AND COMPATIBILITY CONCERNING ANY MATERIALS NOT FURNISHED BY VARCO-PRUDEN ARE TO BE CONSIDERED AND COORDINATED BY THE BUILDER / CONTRACTOR OR A/E FIRM. UNLESS SPECIFIC DESIGN CRITERIA CONCERNING THIS INTERFACE BETWEEN MATERIALS IS FURNISHED AS PART OF THE PURCHASE ORDER, VARCO-PRUDEN ASSUMPTIONS WILL GOVERN.

THE BUILDER / CONTRACTOR IS RESPONSIBLE TO INSURE THAT ALL OTHER PROJECT PLANS AND SPECIFICATIONS COMPLY WITH THE APPLICABLE REQUIREMENTS OF ANY GOVERNING BUILDING AUTHORITY. SUPPLYING SEALED ENGINEERING DESIGN DATA AND DRAWINGS FOR THE VARCO-PRUDEN BUILDING DOES NOT IMPLY OR CONSTITUTE AN AGREEMENT THAT VARCO-PRUDEN OR ITS DESIGN ENGINEER IS ACTING AS THE ENGINEER OF RECORD OR DESIGN PROFESSIONAL FOR THE CONSTRUCTION PROJECT. THESE DRAWINGS AND DESIGN DATA ARE SEALED AS TO THE STRUCTURAL SYSTEM FURNISHED BY VARCO-PRUDEN, IN COMPLIANCE WITH ALL REQUIREMENTS OF THE PURCHASE ORDER.

THE BUILDER / CONTRACTOR IS RESPONSIBLE FOR SETTING OF ANCHOR BOLTS AND ERECTION OF STEEL BUILDING COMPONENTS IN ACCORDANCE WITH VARCO-PRUDEN "FOR CONSTRUCTION" DRAWINGS. TEMPORARY SUPPORTS OR BRACING REQUIRED FOR THE BUILDING ERECTION WILL BE THE RESPONSIBILITY OF THE ERECTOR TO DETERMINE, FURNISH, AND INSTALL.

5. VARCO-PRUDEN IS AN APPROVED FABRICATOR WITH THE FOLLOWING CERTIFICATIONS:

AISC MB (ALL PLANTS)
ICBO FA-240 (CA PLANT ONLY)
CITY OF SEATTLE (CA PLANT ONLY)
CITY OF LOS ANGELES RPC 1 FABRICATOR (CA PLANT ONLY)
CANADIAN WELDING BUREAU DIVISION I (CA & WI PLANTS ONLY)

TERRY L. RENNISTON
REGISTERED
No. 18270
STATE OF INDIANA
PROFESSIONAL ENGINEER

Building Code:	SIUBC
Live Ld(V.O Trib Red):	30.0 psf
Coll. Ld (Gravity):	10.0 psf
Coll. Ld (Uplift):	0.0 psf
Wind Speed:	85.0 mph
Wind Exp. Cat.:	C
Ground Snow:	30.0 psf
Roof Snow:	30.0 psf
Snow Exp. Cat.:	B
Seismic Zone:	1
Building Use Cat.:	4
Auxiliary Loads	NONE

THIS DRAWING, INCLUDING THE INFORMATION HEREON, REMAINS THE PROPERTY OF VARCO-PRUDEN BUILDINGS, A UNITED DOMINION COMPANY. IT IS PROVIDED SOLELY FOR USE ON THE BUILDING DESCRIBED IN THE APPLICABLE PURCHASE ORDER AND SHALL NOT BE MODIFIED, REPRODUCED OR USED FOR ANY OTHER PURPOSE WITHOUT PRIOR WRITTEN APPROVAL OF VARCO-PRUDEN BUILDINGS.

THE GENERAL CONTRACTOR AND/OR CRANE OPERATOR IS SOLELY RESPONSIBLE FOR ACCURATE, GOOD QUALITY WORKMANSHIP IN ERECTING THE BUILDING IN COMPLIANCE WITH THIS DRAWING, DETAILS REFERENCED IN THIS DRAWING, ALL APPLICABLE VARCO-PRUDEN ERECTION GUIDES, AND SUPPORTING MEMBERS NECESSARY TO PROPER ERECTION, INCLUDING THE CORRECT USE OF TEMPORARY BRACING.

COVER SHEET

BUILDER	Custom Steel Buildings, Inc.
CUSTOMER	Montgomery Watson
LOCATION	Griffith, IN
PROJECT NAME	3001 - American Chem. Service
BLDG NAME	Test Bldg. #1

QUOTE NO: ND96023579-001
ORDER NO: ND96031016-00
DATE: 05.03.96
TIME: 15:27
REV: 0

MBMA

VARCO PRUDEN BUILDINGS
A United Dominion Company

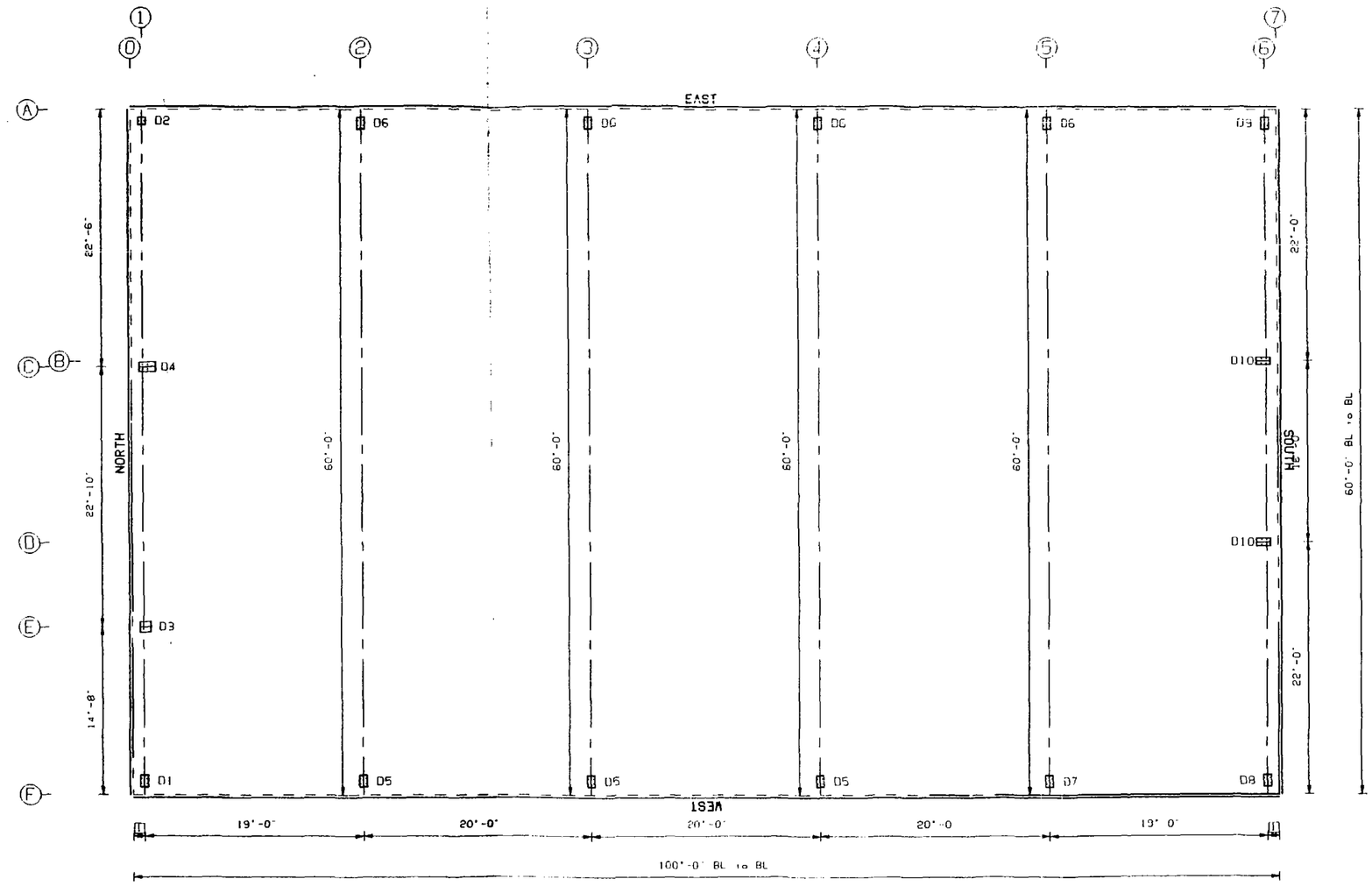

VARCO-PRUDEN IS NOT RESPONSIBLE FOR DESIGN OF FOUNDATION UNDER FLOOR SLAB.

REGISTERED PROFESSIONAL ENGINEER No. 18270 STATE OF INDIANA

[1] 1'-0"

Finished Floor Elevation = 100'-0" (Unless Otherwise Noted)

On: u153.w. Project: 25 Bldg: 1 Plane: 1

THIS DRAWING IS SEALED ONLY AS TO THE COMPONENTS FURNISHED BY VARCO-PRUDEN

MND 5/3/96

1. CONCRETE, GROUT, ANCHOR BOLTS, AND ANY OTHER EMBEDDED ITEMS ARE TO BE FURNISHED BY OTHERS
2. ANCHOR BOLT DIAMETERS WERE DETERMINED BY ALLOWABLE SHEAR AND TENSION PER AISC SPECIFICATIONS (FY = 36 KSI). ANCHOR BOLT LENGTH AND METHOD OF TRANSFERRING FORCES FROM ANCHOR BOLTS TO FOOTINGS ARE TO BE DETERMINED BY OTHERS.
3. DESIGN LOADS AND REACTIONS ARE FURNISHED ON OTHER DOCUMENTS.
4. FOUNDATION MUST BE LEVEL, SQUARE, AND SMOOTH. ANCHOR BOLTS MUST BE ACCURATELY PLACED AS SHOWN ON THIS DRAWING OR STEEL WILL NOT FIT.

Building Code:	91UBC
Live Ld(N/O Trib Red):	30.0 psf
Coll. Ld (gravity):	10.0 psf
Coll. Ld (uplift):	0.0 psf
Wind Speed:	85.0 mph
Wind Exp. Cat.:	C
Ground Snow:	30.0 psf
Roof Snow:	30.0 psf
Snow Exp. Cat.:	B
Seismic Zone:	1
Building Use Cat.:	4
Auxiliary Loads:	NONE

THIS DRAWING, INCLUDING THE INFORMATION HEREON, REMAINS THE PROPERTY OF VARCO-PRUDEN BUILDINGS, A UNITED DOMINION COMPANY.
IT IS PROVIDED FOR ERECTING THE BUILDING DESCRIBED IN THE APPLICABLE PURCHASE ORDER AND SHALL NOT BE MODIFIED, REPRODUCED OR USED FOR ANY OTHER PURPOSE WITHOUT PRIOR WRITTEN APPROVAL OF VARCO-PRUDEN BUILDINGS. THE GENERAL CONTRACTOR AND/OR ERECTOR IS SOLELY RESPONSIBLE FOR ACCURATE, GOOD QUALITY WORKMANSHIP IN ERECTING THIS BUILDING IN CONFORMANCE WITH THIS DRAWING, DETAILS REFERENCED IN THIS DRAWING, ALL APPLICABLE VARCO-PRUDEN ERECTION DETAILS AND ALL INDUSTRY STANDARDS PERTAINING TO PROPER ERECTION, INCLUDING THE CORRECT USE OF TEMPORARY BRACING.

REV	DATE	BY	DESC.
1	5/10/96	RDK	NOTE & BASE PLATE ELEVATION

SCALE: NTS

Anchor Bolt

BUILDER: Custom Steel Buildings, Inc.
CUSTOMER: Montgomery Watson
LOCATION: Griffith, IN
PROJECT: 3001 - American Chem. Service
BUILDING: Test Bldg. #1

QUOTE # 1D96023579-001
JOB # 1D96031016-01
DATE 5/3/96
TIME 5:54
DRAW/CHECK RDK.
PAGE 1A OF

MBMA METAL BUILDING MFG ASSN

VARCO-PRUDEN BUILDINGS A UNITED DOMINION COMPANY

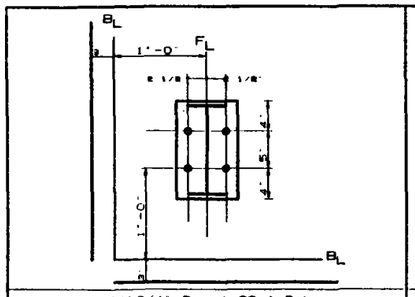

(4)3/4" Dia.A-36 A.Bolts
Plate L=1'-1" W=9" T=3/8"
Elevation= 101'-0"
D1

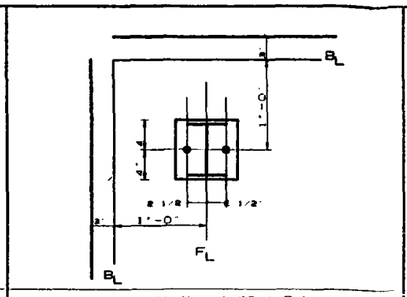

(2)3/4" Dia.A-36 A.Bolts
Plate L=8" W=8" T=3/8"
Elevation= 101'-0"
D2

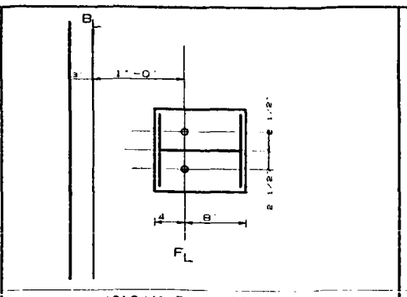

(2)3/4" Dia.A-36 A.Bolts
Plate L=1'-0" W=11" T=3/8"
Elevation= 101'-0"
D3

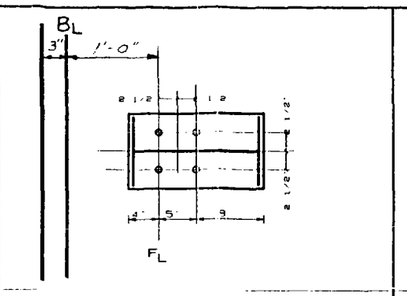

(4)3/4" Dia.A-36 A.Bolts
Plate L=1'-6" W=10" T=3/8"
Elevation= 101'-0
D4

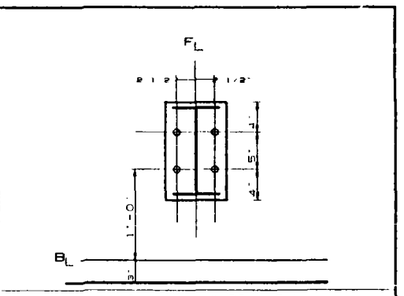

(4)3/4" Dia.A-36 A.Bolts
Plate L=1'-1" W=9" T=3/8"
Elevation= 101'-0"
D5

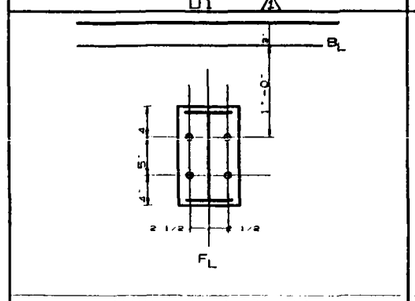

(4)3/4" Dia.A-36 A.Bolts
Plate L=1'-1" W=9" T=3/8"
Elevation= 101'-0"
D6

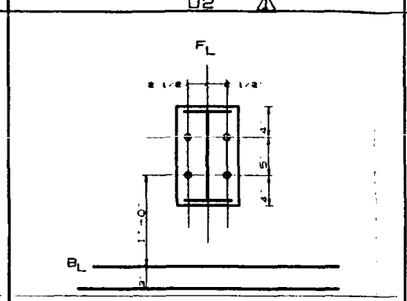

(4)3/4" Dia.A-36 A.Bolts
Plate L=1'-1" W=9" T=3/8"
Elevation= 101'-0"
D7

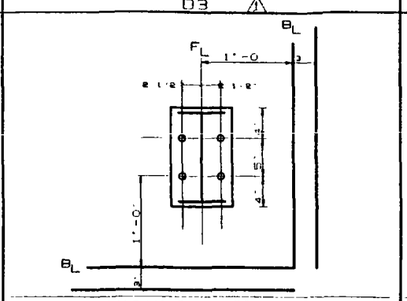

(4)3/4" Dia.A-36 A.Bolts
Plate L=1'-1" W=9" T=3/8"
Elevation= 101'-0"
D8

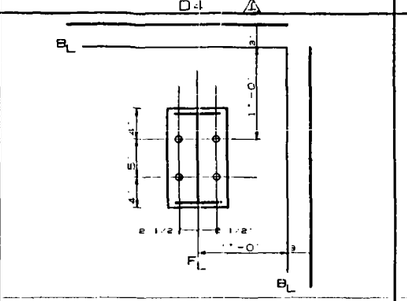

(4)3/4" Dia.A-36 A.Bolts
Plate L=1'-1" W=9" T=3/8"
Elevation= 101'-0"
D9

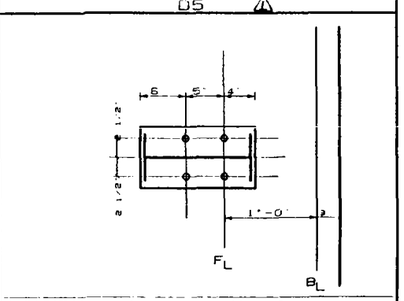

(4)3/4" Dia.A-36 A.Bolts
Plate L=1'-3" W=9" T=3/8"
Elevation= 101'-0"
D10

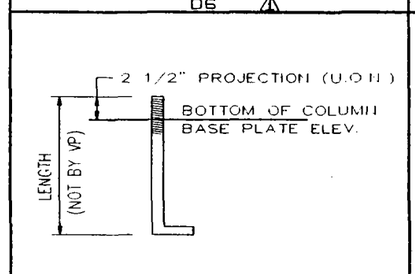

TYPICAL ANCHOR
BOLT PROJECTION

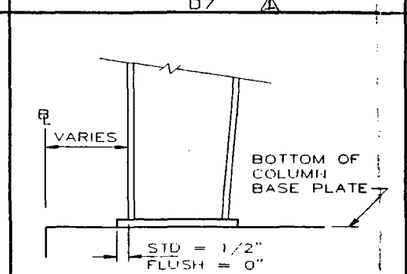

TYPICAL COLUMN
BASE PLATE DETAIL

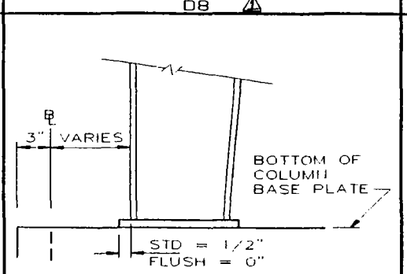

TYP. COLUMN @ SPAN LOC
BASE PLATE DETAIL

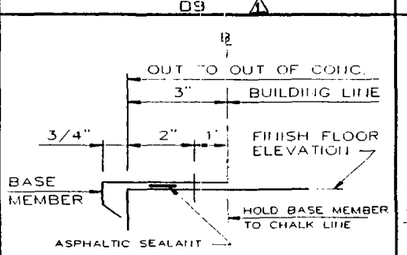

THE BL TO BL DIMENSIONS ON THE
ANCHOR BOLT PLAN DON'T INCLUDE
THE 3" SPAN LOC CONCRETE LEDGE.

SPAN LOC LEDGE DETAIL

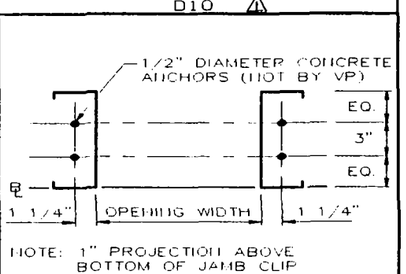

NOTE: 1" PROJECTION ABOVE
BOTTOM OF JAMB CLIP

FRAMED OPENING DETAIL

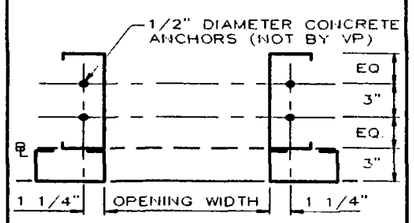

NOTE: 1" PROJECTION ABOVE
BOTTOM OF JAMB CLIP

FRAMED OPENING DETAIL
AT SPAN LOC WALLS

On: u153.wr Project: 25 Bldg: 1 Plane: 1

THIS DRAWING IS SEALED ONLY AS TO THE COMPONENTS FURNISHED BY VARCO-PRUDEN

1. CONCRETE, GROUT, ANCHOR BOLTS, AND ANY OTHER EMBEDDED ITEMS ARE TO BE FURNISHED BY OTHERS
2. ANCHOR BOLT DIAMETERS WERE DETERMINED BY ALLOWABLE SHEAR AND TENSION PER AISC SPECIFICATIONS (FT = 36 KSI). ANCHOR BOLT LENGTH AND METHOD OF TRANSFERRING FORCES FROM ANCHOR BOLTS TO FOOTINGS ARE TO BE DETERMINED BY OTHERS.
3. DESIGN LOADS AND REACTIONS ARE FURNISHED ON OTHER DOCUMENTS.
4. FOUNDATION MUST BE LEVEL, SQUARE, AND SMOOTH. ANCHOR BOLTS MUST BE ACCURATELY PLACED AS SHOWN ON THIS DRAWING OR STEEL WILL NOT FIT.

Building Code:	91UBC
Live Ld(V/O Trib Red):	30.0 psf
Coll. Ld (gravity):	10.0 psf
Coll. Ld (uplift):	0.0 psf
Wind Speed:	85.0 mph
Wind Exp. Cat.:	C
Ground Snow:	30.0 psf
Roof Snow:	30.0 psf
Snow Exp. Cat.:	3
Seismic Zone:	1
Building Use Cat.:	4
Auxiliary Loads:	NONE

THIS DRAWING, INCLUDING THE INFORMATION HEREON, REMAINS THE PROPERTY OF VARCO-PRUDEN BUILDINGS, A UNITED DOMINION COMPANY. IT IS PROVIDED FOR ERECTING THE BUILDING DESCRIBED IN THE APPLICABLE PURCHASE ORDER AND SHALL NOT BE MODIFIED, REPRODUCED OR USED FOR ANY OTHER PURPOSE WITHOUT PRIOR WRITTEN APPROVAL OF VARCO-PRUDEN BUILDINGS. THE GENERAL CONTRACTOR AND/OR ERECTOR IS SOLELY RESPONSIBLE FOR ACCURATE, GOOD QUALITY WORKMANSHIP IN ERECTING THIS BUILDING IN CONFORMANCE WITH THIS DRAWING. DETAILS REFERENCED IN THIS DRAWING, ALL APPLICABLE VARCO-PRUDEN ERECTION DETAILS AND ALL INDUSTRY STANDARDS PERTAINING TO PROPER ERECTION, INCLUDING THE CORRECT USE OF TEMPORARY BRACING.

REV.	DATE	BY	DESC.
A	5/30/96	RDK	BASE PLATE ELEVATION

SCALE: NTS

Anchor Bolt

BIDDER: Custom Steel Buildings, Inc.
CUSTOMER: Montgomery Watson
LOCATION: Griffith, IN
PROJECT: SOUT - American Chem. Service
BUILDING: Test Bldg. #1

QUOTE #: ND9G023579-001
JOB #: ND9631016-C1
DATE: 5/3/96
TIME: 5:54
DRAWN/CHECK: RDK
PAGE: 1B OF

MBMA METAL BUILDING HOLDERS ASSN.

VARCO-PRUDEN BUILDINGS
A UNITED DOMINION COMPANY

PRIMARY FRAMING SIZE CHART

PART-NO	FLG THK	X	WD	WEB THK	DEPTH START/END	APPROX.SHIP LENGTH
FL1CX1	1/4	X	5.0	.134	24.1/12.0	27.7
FL1RBX2	1/4	X	5.0	.134	20.9/21.0	12.4
	3/16	X	5.0	.134	20.9/9.1	15.1
FL1RBX3	3/16	X	5.0	.134	9.0/9.0	17.5
	3/16	X	5.0	.134	9.0/18.0	10.5
FL1CX4	3/16	X	5.0	.134	18.1/7.0	27.7
FL1C15	5/16	X	9.5	.164	11.0/11.0	27.1
FL1C16	5/16	X	9.0	.164	17.0/17.0	28.7

A325 BOLT CONNECTION CHART

No	Qty	Diameter	Length
1	12	3/4"	2"
2	4	3/4"	1 3/4"
3	4	3/4"	1 3/4"
4	4	1/2"	1 1/2"
5	4	1/2"	1 1/2"

FRAME CLEARANCES

Vertical Clearance Under Frame at FL1CX1 = 26'-1 1/8"
Vertical Clearance Under Frame at FL1CX4 = 26'-3 5/8"
Horizontal Clearance Between FL1CX1 & FL1CX4 = 55'-1"
Finished Floor Elevation = 100'-0" (Unless Otherwise Noted)

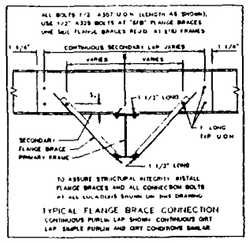

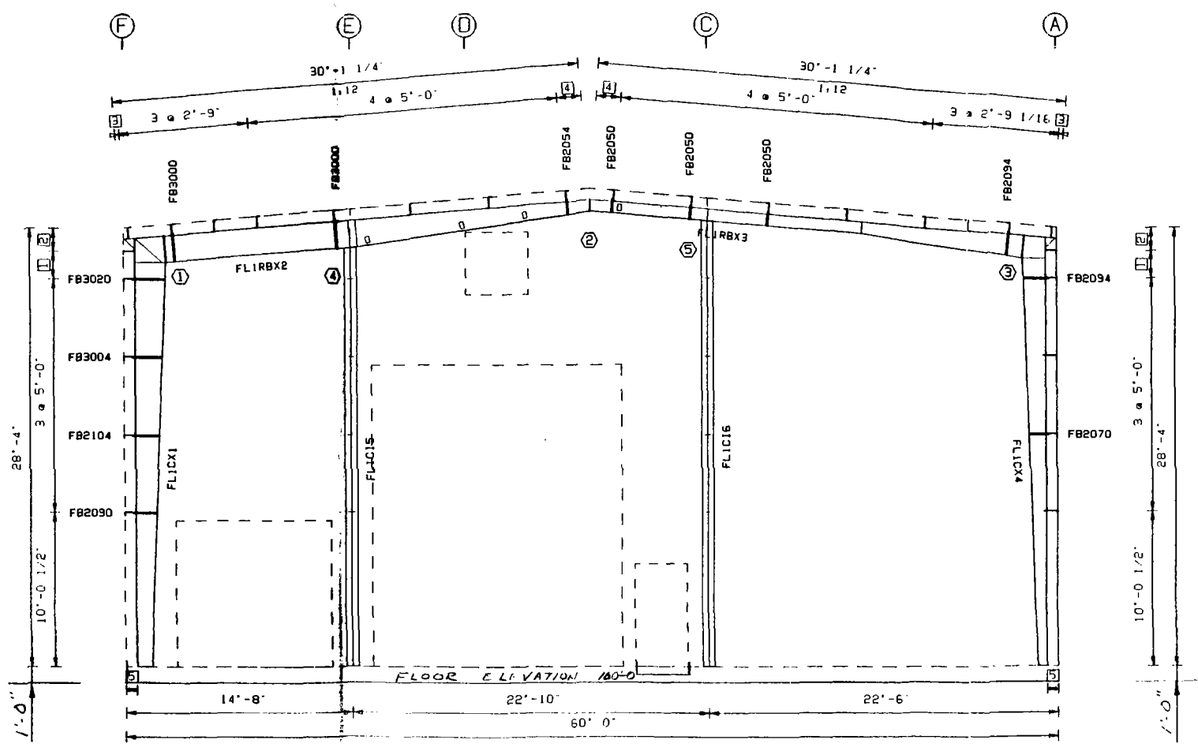

5 8 1/2"
4 1'-6 11/16"
3 3 7/16"
2 1'-6"
1 1'-9 1/2"

Elevation at Frame Line 1

Dwg u153.wl Project 25 Bldg 1 Plane 8

THIS DRAWING IS SEALED ONLY AS TO THE COMPONENTS FURNISHED BY VARCO-PRUDEN

1. A325 HIGH STRENGTH BOLTS SHALL BE TIGHTENED IN ACCORDANCE WITH THE NOVEMBER 13, 1985, ALLOWABLE STRESS DESIGN "SPECIFICATION FOR STRUCTURAL JOINTS USING ASTM A325 OR A490 BOLTS" SECTION 8.(d)(1) "TURN-OF-NUT TIGHTENING".
2. USE 1/2" DIA. A307 BOLTS FOR PURLIN TO FRAME, GIRT TO FRAME, AND GIRT TO CLIP CONNECTIONS UNLESS NOTED OTHERWISE. SEE JOB DETAILS FOR BOLT LENGTHS.
3. INSTALLATION OF ADEQUATE TEMPORARY BRACING FOR USE UNTIL CONSTRUCTION IS COMPLETE, IS THE RESPONSIBILITY OF THE ERECTOR.

Building Code:	91UBC
Live Ld(V/O T-16 Red)	30.0 psf
Coll. Ld (gravity):	10.0 psf
Coll. Ld (uplift):	0.0 psf
Wind Speed:	85.0 mph
Wind Exp. Cat.:	C
Ground Snow:	30.0 psf
Roof Snow:	30.0 psf
Snow Exp. Cat.:	3
Seismic Zone:	1
Building Use Cat.:	4
Auxiliary Loads	NONE

THIS DRAWING, INCLUDING THE INFORMATION HEREON, REMAINS THE PROPERTY OF VARCO-PRUDEN BUILDINGS, A UNITED DOMINION COMPANY. IT IS PROVIDED FOR ERECTING THE BUILDING DESCRIBED IN THE APPLICABLE PURCHASE ORDER AND SHALL NOT BE MODIFIED, REPRODUCED OR USED FOR ANY OTHER PURPOSE WITHOUT PRIOR WRITTEN APPROVAL OF VARCO-PRUDEN BUILDINGS. THE GENERAL CONTRACTOR AND/OR ERECTOR IS SOLELY RESPONSIBLE FOR ACCURATE, GOOD QUALITY WORKMANSHIP IN ERECTING THIS BUILDING IN CONFORMANCE WITH THIS DRAWING, DETAILS REFERENCED IN THIS DRAWING, ALL APPLICABLE VARCO-PRUDEN ERECTION DETAILS AND ALL INDUSTRY STANDARDS PERTAINING TO PROPER ERECTION, INCLUDING THE CORRECT USE OF TEMPORARY BRACING.

Frame Elevation

REV.	DATE	BY	DESC.

SCALE: NTS

BUYER: Custom Steel Buildings, Inc.
CUSTOMER: Montgomery Watson
LOCATION: Griffith, IN
PROJECT: 3001 - American Chem. Service
BUILDING: Test Bldg. #1

QUOTE #: HD96023579-001
MBMA METAL BLDG MFG ASSN
VARCO-PRUDEN BUILDINGS, A UNITED DOMINION COMPANY

JOB #: HD9631016-01
DATE: 5/3/96
TIME: 1:43
DRAW/CHECK: RDL
PAGE 2 OF

REGISTERED PROFESSIONAL ENGINEER No. 18270 STATE OF INDIANA

PRIMARY FRAMING SIZE CHART

PART-NO	FLG THK	X	WD	WEB THK	DEPTH START/END	APPROX.SHIP LENGTH
CX7	1/2	X	6.0	.134	12.0/27.9	25.0
FL2RBX8	3/8	X	6.0	.164	33.1/13.0	14.4
	5/16	X	6.0	.134	12.9/27.1	15.0
FL2RBX9	5/16	X	6.0	.134	27.1/13.0	15.0
	3/8	X	6.0	.164	13.0/33.1	14.4
CX7	1/2	X	6.0	.134	12.0/27.9	25.0

A325 BOLT CONNECTION CHART

No	Qty	Diameter	Length
1	8	1 1/4"	4"
2	10	3/4"	2"
3	8	1 1/4"	4"

FRAME CLEARANCES

Vertical Clearance Under Frame at CX7 = 25'-0 1/2"

Finished Floor Elevation = 100'-0" (Unless Otherwise Noted)

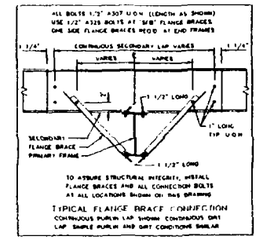

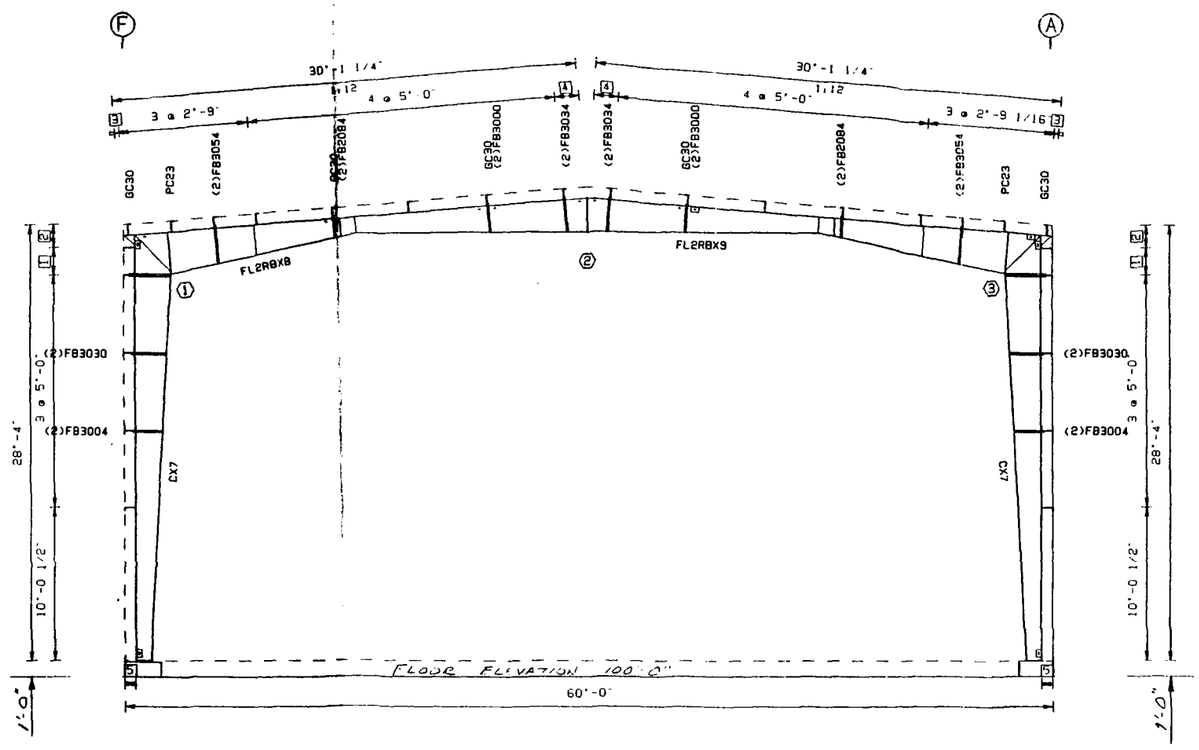

5 8 1/2"
4 1'-6 11/16"
3 3 7/16"
2 1'-6"
1 1'-9 1/2"

Elevation at Frame Line 2

Out u153.wl Project 25 Bldg 1 Plane 9

THIS DRAWING IS SEALED ONLY AS TO THE COMPONENTS FURNISHED BY VARCO-PRUDEN

1. A325 HIGH STRENGTH BOLTS SHALL BE TIGHTENED IN ACCORDANCE WITH THE NOVEMBER 13, 1995, ALLOWABLE STRESS DESIGN "SPECIFICATION FOR STRUCTURAL JOINTS USING ASTM A325 OR A490 BOLTS" SECTION 8.(d)(1) "TURN-OF-NUT TIGHTENING".
2. USE 1/2" DIA. A307 BOLTS FOR PURLIN TO FRAME, GIRT TO FRAME, AND GIRT TO CLIP CONNECTIONS UNLESS NOTED OTHERWISE. SEE JOB DETAILS FOR BOLT LENGTHS.
3. INSTALLATION OF ADEQUATE TEMPORARY BRACING FOR USE UNTIL CONSTRUCTION IS COMPLETE, IS THE RESPONSIBILITY OF THE ERECTOR.

Building Code:	91UBC
Live Ld(V/O Trib Rad)	30.0 psf
Coll. Ld (gravity):	10.0 psf
Coll. Ld (uplift):	0.0 psf
Wind Speed:	85.0 mph
Wind Exp. Cat.:	C
Ground Snow:	30.0 psf
Roof Snow:	30.0 psf
Snow Exp. Cat.:	3
Seismic Zone:	1
Building Use Cat.:	4
Auxiliary Loads	NONE

THIS DRAWING, INCLUDING THE INFORMATION HEREON, REMAINS THE PROPERTY OF VARCO-PRUDEN BUILDINGS, A UNITED DOMINION COMPANY. IT IS PROVIDED FOR ERECTING THE BUILDING DESCRIBED IN THE APPLICABLE PURCHASE ORDER AND SHALL NOT BE MODIFIED, REPRODUCED OR USED FOR ANY OTHER PURPOSE WITHOUT PRIOR WRITTEN APPROVAL OF VARCO-PRUDEN BUILDINGS. THE GENERAL CONTRACTOR AND/OR ERECTOR IS SOLELY RESPONSIBLE FOR ACCURATE, GOOD QUALITY WORKMANSHIP IN ERECTING THIS BUILDING IN CONFORMANCE WITH THIS DRAWING, DETAILS REFERENCED IN THIS DRAWING, ALL APPLICABLE VARCO-PRUDEN ERECTION DETAILS AND ALL INDUSTRY STANDARDS PERTAINING TO PROPER ERECTION, INCLUDING THE CORRECT USE OF TEMPORARY BRACING.

REV	DATE	BY	DESC.

SCALE NTS

Frame Elevation

BUILDER: Custom Steel Buildings, Inc.
CUSTOMER: Montgomery Watson
LOCATION: Griffith, IN
PROJECT: 3001 - American Chem. Service
BUILDING: Test Bldg. #1

QUOTE # N096023579-001

MBMA METAL BUILDING AGENT

VARCO-PRUDEN BUILDINGS
A UNITED DOMINION COMPANY

JOB NO. N09631016-01
DATE 5/3/96
TIME 1:44
DRAW/CHECK RDK
PAGE 3 OF

REGISTERED No. 18270 STATE OF INDIANA PROFESSIONAL ENGINEER

PRIMARY FRAMING SIZE CHART

PART-NO	FLG	THK	X	WD	WEB THK	DEPTH START/END	APPROX.SHIP LENGTH
CX11	3/8		X	6.0	.188	12.0/30.9	24.9
FL3RBX12	3/8		X	5.0	.188	35.1/14.0	14.4
	5/16		X	5.0	.134	13.9/27.1	15.0
FL3RBX13	5/16		X	5.0	.134	27.1/14.0	15.0
	3/8		X	5.0	.188	14.0/35.1	14.4
CX11	3/8		X	6.0	.188	12.0/30.9	24.9

A325 BOLT CONNECTION CHART

No	Qty	Diameter	Length
1	18	3/4"	2 3/4"
2	10	3/4"	2"
3	18	3/4"	2 3/4"

FRAME CLEARANCES

Vertical Clearance Under Frame at CX11 = 24'-11 1/8"

Finished Floor Elevation = 100'-0" (Unless Otherwise Noted)

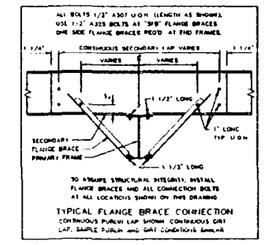

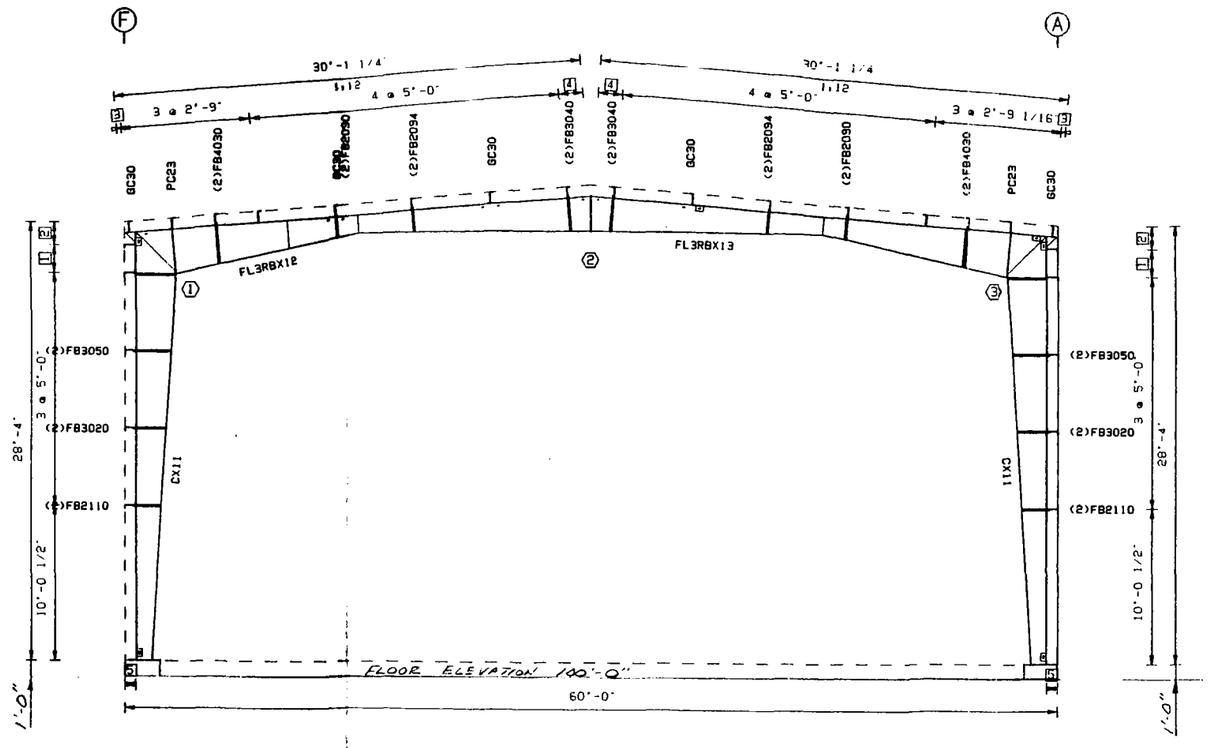

5 8 1/2"

4 1'-6 11/16"

3 7/16"

2 1'-6"

1 1'-9 1/2"

Elevation at Frame Line 3

On: w153.wl Project 25 Bldg: 1 Plane: 10

THIS DRAWING IS SEALED ONLY AS TO THE COMPONENTS FURNISHED BY VARCO-PRUDEN

1. A325 HIGH STRENGTH BOLTS SHALL BE TIGHTENED IN ACCORDANCE WITH THE NOVEMBER 13, 1985, ALLOWABLE STRESS DESIGN "SPECIFICATION FOR STRUCTURAL JOINTS USING ASTM A325 OR A490 BOLTS" SECTION 8.(d)(1) "TURN-OF-NUT TIGHTENING".
2. USE 1/2" DIA. A307 BOLTS FOR PURLIN TO FRAME, GIRT TO FRAME, AND GIRT TO CLIP CONNECTIONS UNLESS NOTED OTHERWISE. SEE JOB DETAILS FOR BOLT LENGTHS.
3. INSTALLATION OF ADEQUATE TEMPORARY BRACING FOR USE UNTIL CONSTRUCTION IS COMPLETE, IS THE RESPONSIBILITY OF THE ERECTOR.

Building Code:	91UBC
Live Ld(V/O Trib Red):	30.0 psf
Coll. Ld (gravity):	10.0 psf
Coll. Ld (uplift):	0.0 psf
Wind Speed:	85.0 mph
Wind Exp. Cat.:	C
Ground Snow:	30.0 psf
Roof Snow:	30.0 psf
Snow Exp. Cat.:	B
Seismic Zone:	1
Building Use Cat.:	4
Auxiliary Loads:	NONE

THIS DRAWING, INCLUDING THE INFORMATION HEREON, REMAINS THE PROPERTY OF VARCO-PRUDEN BUILDINGS, A UNITED DOMINION COMPANY. IT IS PROVIDED FOR ERECTING THE BUILDING DESCRIBED IN THE APPLICABLE PURCHASE ORDER AND SHALL NOT BE MODIFIED, REPRODUCED OR USED FOR ANY OTHER PURPOSE WITHOUT PRIOR WRITTEN APPROVAL OF VARCO-PRUDEN BUILDINGS. THE GENERAL CONTRACTOR AND/OR ERECTOR IS SOLELY RESPONSIBLE FOR ACCURATE, GOOD QUALITY WORKMANSHIP IN ERECTING THIS BUILDING IN CONFORMANCE WITH THIS DRAWING. DETAILS REFERENCED IN THIS DRAWING, ALL APPLICABLE VARCO-PRUDEN ERECTION DETAILS AND ALL INDUSTRY STANDARDS PERTAINING TO PROPER ERECTION, INCLUDING THE CORRECT USE OF TEMPORARY BRACING.

REV.	DATE	BY	DESC.

SCALE NTS

Frame Elevation

BUILDER: Custom Steel Buildings, Inc.

CUSTOMER: Montgomery Watson

LOCATION: Griffith, IN

PROJECT: 9001 - American Chem. Service

BUILDING: Test Bldg. #1

QUOTE # ND96023579-001

MBMA METAL BLDG MFG ASSN

VARCO-PRUDEN BUILDINGS A UNITED DOMINION COMPANY

JOB ND9631016-01

DATE 5/3/96

TIME 1:44

DRAW/CHECK RDK

PAGE 4 OF

REGISTERED No. 18270 STATE OF INDIANA PROFESSIONAL ENGINEER

PRIMARY FRAMING SIZE CHART

PART-NO	FLG THK	X	WD	WEB THK	DEPTH START/END	APPROX.SHIP LENGTH
CX15	3/8	x	6.0	.164	12.0/33.9	25.1
FL4RBX16	5/16	x	5.0	.188	33.1/14.0	14.4
	5/16	x	5.0	.134	14.0/28.1	15.0
FL4RBX17	5/16	x	5.0	.134	28.1/14.0	15.0
	5/16	x	5.0	.188	14.0/33.1	14.4
CX15	3/8	x	6.0	.164	12.0/33.9	25.1

A325 BOLT CONNECTION CHART

No	Qty	Diameter	Length
1	18	3/4"	2 1/2"
2	12	3/4"	2"
3	18	3/4"	2 1/2"

FRAME CLEARANCES

Vertical Clearance Under Frame at CX15 = 25'-1 7/16"

Finished Floor Elevation = 100'-0" (Unless Otherwise Noted)

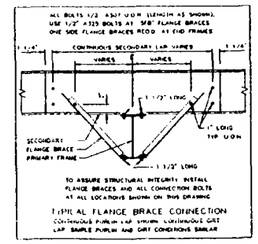

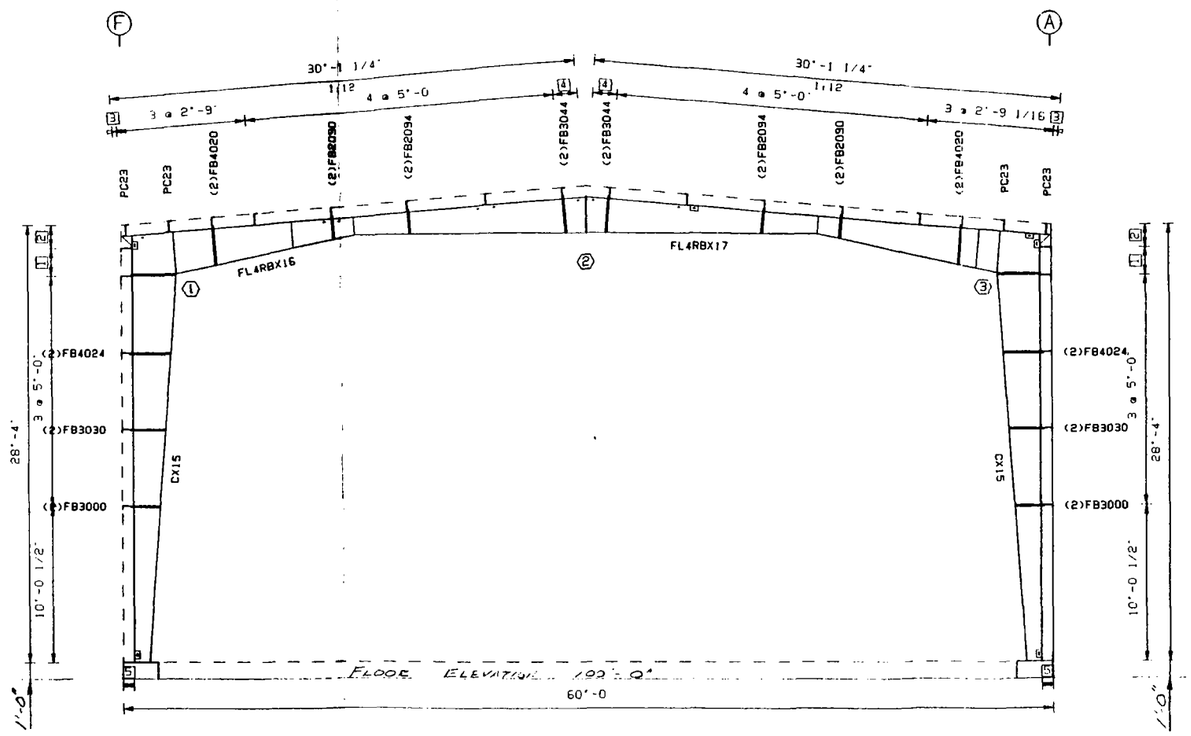

[5] 8 1/2"

[4] 1'-6 11/16"

[3] 3 7/16"

[2] 1'-6"

[1] 1'-9 1/2"

Elevation at Frame Line 4

Dwg u153.wl Project 25 Bldg: 1 Plane: 11

THIS DRAWING IS SEALED ONLY AS TO THE COMPONENTS FURNISHED BY VARCO-PRUDEN

1. A325 HIGH STRENGTH BOLTS SHALL BE TIGHTENED IN ACCORDANCE WITH THE NOVEMBER 13, 1985, ALLOWABLE STRESS DESIGN SPECIFICATION FOR STRUCTURAL JOINTS USING ASTM A325 OR A490 BOLTS' SECTION 8.(d)(1) 'TURN-OF-NUT TIGHTENING'.
2. USE 1/2" DIA. A307 BOLTS FOR PURLIN TO FRAME, GIRT TO FRAME, AND GIRT TO CLIP CONNECTIONS UNLESS NOTED OTHERWISE. SEE JOB DETAILS FOR BOLT LENGTHS.
3. INSTALLATION OF ADEQUATE TEMPORARY BRACING FOR USE UNTIL CONSTRUCTION IS COMPLETE, IS THE RESPONSIBILITY OF THE ERECTOR.

Building Code:	91UBC
Live Ld(V/O Trib Red):	30.0 psf
Coll. Ld (gravity):	10.0 psf
Coll. Ld (uplift):	0.0 psf
Wind Speed:	85.0 mph
Wind Exp. Cat.:	C
Ground Snow:	30.0 psf
Roof Snow:	30.0 psf
Snow Exp. Cat.:	3
Seismic Zone:	1
Building Use Cat.:	4
Auxiliary Loads	NONE

THIS DRAWING, INCLUDING THE INFORMATION HEREON, REMAINS THE PROPERTY OF VARCO-PRUDEN BUILDINGS, A UNITED DOMINION COMPANY. IT IS PROVIDED FOR ERECTING THE BUILDING DESCRIBED IN THE APPLICABLE PURCHASE ORDER AND SHALL NOT BE MODIFIED, REPRODUCED OR USED FOR ANY OTHER PURPOSE WITHOUT PRIOR WRITTEN APPROVAL OF VARCO-PRUDEN BUILDINGS. THE GENERAL CONTRACTOR AND/OR ERECTOR IS SOLELY RESPONSIBLE FOR ACCURATE, GOOD QUALITY WORKMANSHIP IN ERECTING THIS BUILDING IN CONFORMANCE WITH THIS DRAWING, DETAILS REFERENCED IN THIS DRAWING, ALL APPLICABLE VARCO-PRUDEN ERECTION DETAILS AND ALL INDUSTRY STANDARDS PERTAINING TO PROPER ERECTION, INCLUDING THE CORRECT USE OF TEMPORARY BRACING.

Frame Elevation

REV.	DATE	BY	DESC.

SCALE NTS

BUILT BY: Custom Steel Buildings, Inc.

CUSTOMER: Montgomery Watson

LOCATION: Griffith, IN

PROJECT: 3001 - American Chem. Service

BUILDING: Test Bldg. #1

QUOTE # ND960235/9-001

MBMA METAL BLDG MFG ASSN.

VARCO-PRUDEN BUILDINGS A UNITED DOMINION COMPANY

JOB # ND9631016-01

DATE 5/3/96

TIME 1:45

DRAW/CHECK RDK

PAGE 5 OF

PRIMARY FRAMING SIZE CHART

PART-NO	FLG THK	X	WD	WEB THK	DEPTH START/END	APPROX.SHIP LENGTH
FL5CX19	3/8	X	6.0	.164	12.0/32.9	22.1
FL5RBX20	5/16	X	5.0	.188	33.1/13.0	14.4
	5/16	X	5.0	.134	13.0/26.1	15.0
FL5RBX21	5/16	X	5.0	.134	26.1/13.0	15.0
	5/16	X	5.0	.188	13.0/37.1	14.4
FL5CX22	3/8	X	6.0	.188	12.0/31.9	24.8

A325 BOLT CONNECTION CHART

No	Qty	Diameter	Length
1	16	3/4"	2 1/2"
2	10	3/4"	2"
3	18	3/4"	2 1/2"

FRAME CLEARANCES

Vertical Clearance Under Frame at FL5CX19 = 25'-1 3/8"
Vertical Clearance Under Frame at FL5CX22 = 24'-9 1/4"
Horizontal Clearance Between FL5CX19 & FL5CX22 = 53'-2 3/16"
Finished Floor Elevation = 100'-0" (Unless Otherwise Noted)

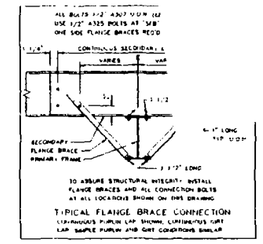

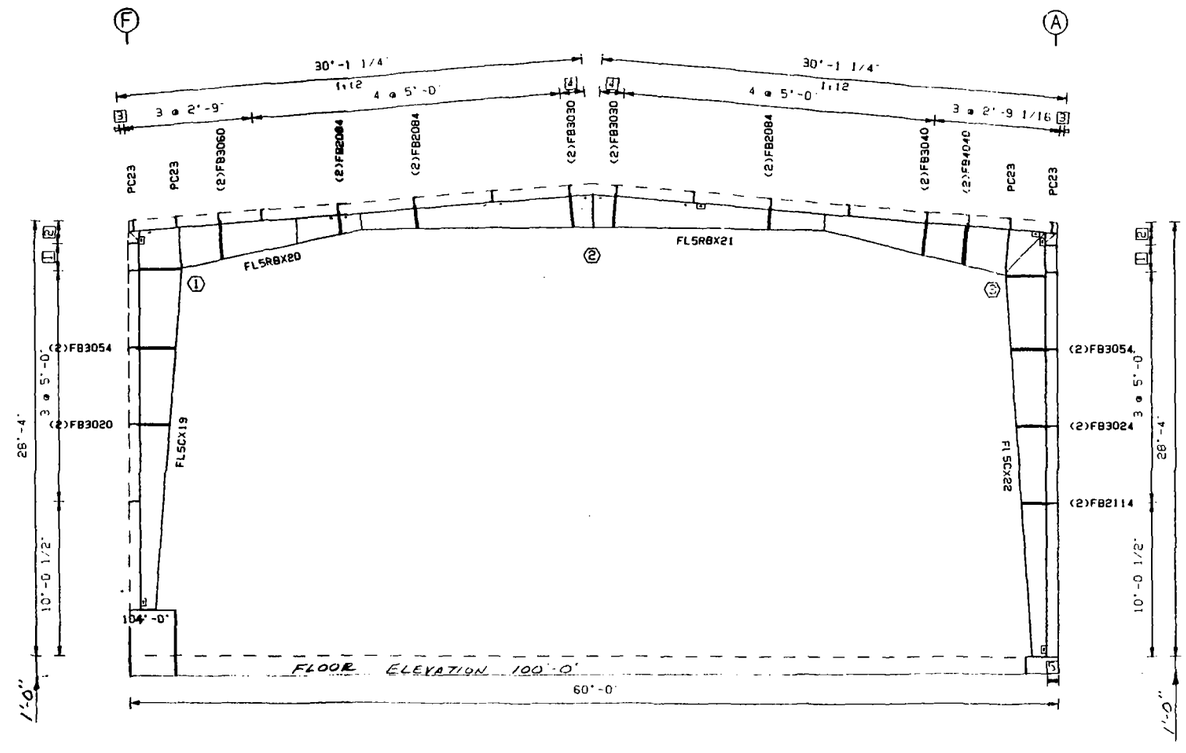

5 8 1/2"
4 1'-6 11/16"
3 3 7/16"
2 1'-6"
1 1'-9 1/2"

Elevation at Frame Line 5

Onl u153.wl Projkgl 25 Bldgl 1 Planel 12

THIS DRAWING IS SEALED ONLY AS TO THE COMPONENTS FURNISHED BY VARCO-PRUDEN

1. A325 HIGH STRENGTH BOLTS SHALL BE TIGHTENED IN ACCORDANCE WITH THE NOVEMBER 13, 1985, ALLOWABLE STRESS DESIGN "SPECIFICATION FOR STRUCTURAL JOINTS USING ASTM A325 OR A490 BOLTS" SECTION 8.(d)(1) "TURN-OF-NUT TIGHTENING".
2. USE 1/2" DIA. A307 BOLTS FOR PURLIN TO FRAME, GIRT TO FRAME, AND GIRT TO CLIP CONNECTIONS UNLESS NOTED OTHERWISE. SEE JOB DETAILS FOR BOLT LENGTHS.
3. INSTALLATION OF ADEQUATE TEMPORARY BRACING FOR USE UNTIL CONSTRUCTION IS COMPLETE, IS THE RESPONSIBILITY OF THE ERECTOR.

Building Code:	91UBC
Live Ld(W/O Tr-b Red):	30.0 psf
Coll. Ld (gravity):	10.0 psf
Coll. Ld (uplift):	0.0 psf
Wind Speed:	85.0 mph
Wind Exp. Cat.:	C
Ground Snow:	30.0 psf
Roof Snow:	30.0 psf
Snow Exp. Cat.:	3
Seismic Zone:	1
Building Use Cat.:	4
Auxiliary Loads	NONE

THIS DRAWING, INCLUDING THE INFORMATION HEREON, REMAINS THE PROPERTY OF VARCO-PRUDEN BUILDINGS, A UNITED DOMINION COMPANY. IT IS PROVIDED FOR ERECTING THE BUILDING DESCRIBED IN THE APPLICABLE PURCHASE ORDER AND SHALL NOT BE MODIFIED, REPRODUCED OR USED FOR ANY OTHER PURPOSE WITHOUT PRIOR WRITTEN APPROVAL OF VARCO-PRUDEN BUILDINGS. THE GENERAL CONTRACTOR AND/OR ERECTOR IS SOLELY RESPONSIBLE FOR ACCURATE, GOOD QUALITY WORKMANSHIP IN ERECTING THIS BUILDING IN CONFORMANCE WITH THIS DRAWING. DETAILS REFERENCED IN THIS DRAWING, ALL APPLICABLE VARCO-PRUDEN ERECTION DETAILS AND ALL INDUSTRY STANDARDS PERTAINING TO PROPER ERECTION, INCLUDING THE CORRECT USE OF TEMPORARY BRACING.

Frame Elevation

REV.	DATE	BY	DESC

SCALE NTS

BUILDING: Curran Steel Buildings, Inc.
CUSTOMER: Montgomery Watson
LOCATION: Griffith, IN
PROJECT: 3001 - American Chem. Service
BUILDING: Test Bldg. #1

QUOTE # N006023579-001
JOB # N09E31016-01
DATE 5/3/96
TIME 1:45
DRAW. CHECK RDK
PAGE 6 OF

MBMA METAL BLDG MFG ASSN

VARCO-PRUDEN BUILDINGS
A UNITED DOMINION COMPANY

REGISTERED PROFESSIONAL ENGINEER No. 17270 STATE OF INDIANA

PRIMARY FRAMING SIZE CHART

PART-NO	FLG THK	X	WD	WEB THK	DEPTH START/END	APPROX.SHIP LENGTH
FL6CX23	3/8	X	6.0	.164	12.0/31.9	22.4
FL6RBX24	3/8	X	5.0	.164	30.1/14.0	14.4
	5/16	X	5.0	.134	13.9/28.1	15.0
FL6RBX25	5/16	X	5.0	.134	28.1/12.0	15.0
	5/16	X	5.0	.188	12.0/36.1	14.4
FL6CX26	3/8	X	6.0	.188	12.0/32.9	24.9
FL6C127	3/16	X	6.0	.134	14.0/14.0	27.6
FL6C128	3/16	X	6.0	.134	14.0/14.0	27.7

A325 BOLT CONNECTION CHART

No	Qty	Diameter	Length
1	18	3/4"	2 1/2"
2	12	3/4"	2"
3	18	3/4"	2 1/2"

FRAME CLEARANCES

Vertical Clearance Under Frame at FL6CX23 = 25'-4 3/8"
Vertical Clearance Under Frame at FL6CX26 = 24'-10 3/8"
Horizontal Clearance Between FL6CX23 & FL6CX26 = 53'-2 3/16"
Finished Floor Elevation = 100'-0" (Unless Otherwise Noted)

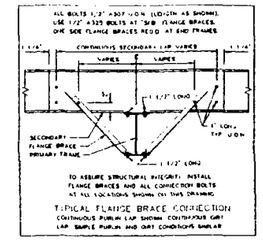

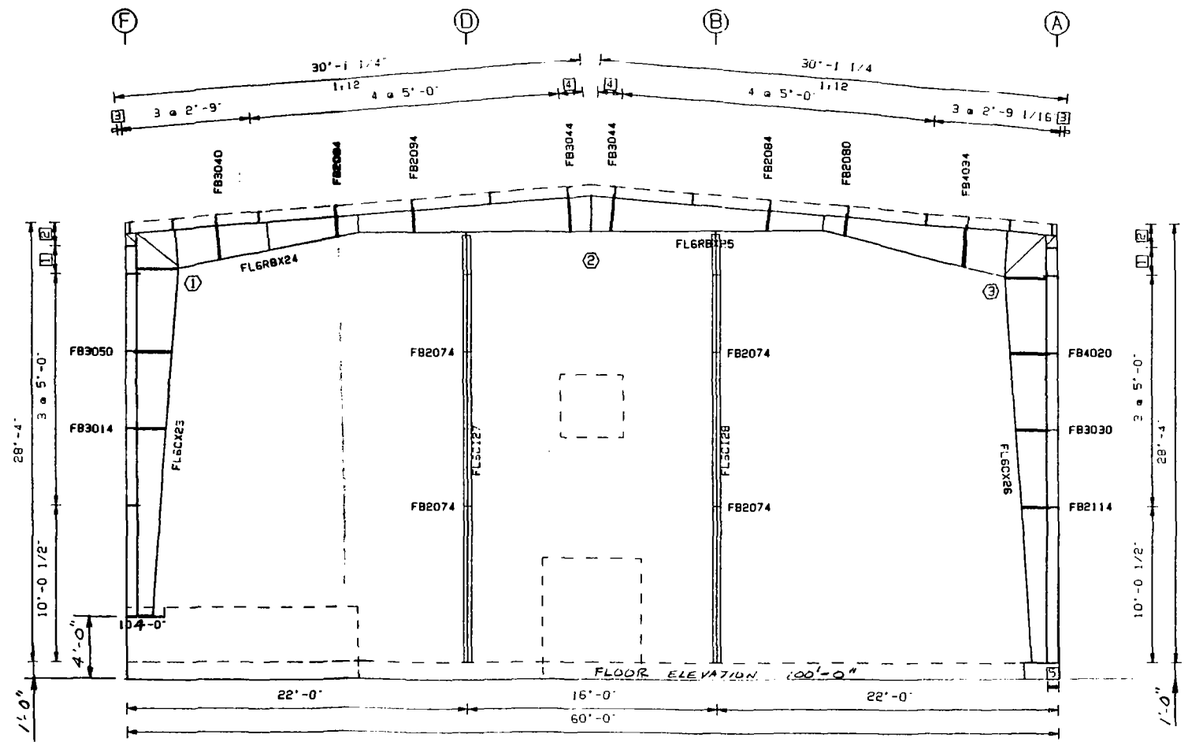

5 8 1/2"
4 1'-6 11/16"
3 3 7/16"
2 1'-6"
1 1'-9 1/2"

Elevation at Frame Line 6

Dwg: u153.el Project: 25 Bldg: 1 Planes: 13

THIS DRAWING IS SEALED ONLY AS TO THE COMPONENTS FURNISHED BY VARCO-PRUDEN

1. A325 HIGH STRENGTH BOLTS SHALL BE TIGHTENED IN ACCORDANCE WITH THE NOVEMBER 13, 1985, ALLOWABLE STRESS DESIGN "SPECIFICATION FOR STRUCTURAL JOINTS USING ASTM A325 OR A490 BOLTS" SECTION 8.(d)(1) "TURN-OF-NUT TIGHTENING".
2. USE 1/2" DIA. A307 BOLTS FOR PURLIN TO FRAME, GIRT TO FRAME, AND GIRT TO CLIP CONNECTIONS UNLESS NOTED OTHERWISE. SEE JOB DETAILS FOR BOLT LENGTHS.
3. INSTALLATION OF ADEQUATE TEMPORARY BRACING FOR USE UNTIL CONSTRUCTION IS COMPLETE, IS THE RESPONSIBILITY OF THE ERECTOR.

Building Code:	91UBC
Live Ld(V/O Tri-B Rad)	30.0 psf
Coll. Ld (gravity):	10.0 psf
Coll. Ld (uplift):	0.0 psf
Wind Speed:	85.0 mph
Wind Exp. Cat.:	C
Ground Snow:	30.0 psf
Roof Snow:	30.0 psf
Snow Exp. Cat.:	3
Seismic Zone:	1
Building Use Cat.:	4
Auxiliary Loads	NONE

THIS DRAWING, INCLUDING THE INFORMATION HEREON, REMAINS THE PROPERTY OF VARCO-PRUDEN BUILDINGS, A UNITED DOMINION COMPANY. IT IS PROVIDED FOR ERECTING THE BUILDING DESCRIBED IN THE APPLICABLE PURCHASE ORDER AND SHALL NOT BE MODIFIED, REPRODUCED OR USED FOR ANY OTHER PURPOSE WITHOUT PRIOR WRITTEN APPROVAL OF VARCO-PRUDEN BUILDINGS. THE GENERAL CONTRACTOR AND/OR ERECTOR IS ENTITLED REASONABLE AND ADEQUATE, GOOD QUALITY WORKMANSHIP IN ERECTING THIS BUILDING IN CONFORMANCE WITH THIS DRAWING. DETAILS REFERENCED IN THIS DRAWING, ALL APPLICABLE VARCO-PRUDEN ERECTION DETAILS AND ALL INDUSTRY STANDARDS PERTAINING TO PROPER ERECTION, INCLUDING THE CORRECT USE OF TEMPORARY BRACING.

REV.	DATE	BY	DESC.

SCALE: NTS

Frame Elevation

BUILDER: Custom Steel Buildings, Inc.
CUSTOMER: Montgomery Watson
LOCATION: Griffith, IN
PROJECT: 3001 - American Chem. Service
BUILDING: Test Bldg. #1

QUOTE #: ND96023573-001
JOB #: ND96310161-01
DATE: 5/3/96
TIME: 1:43
DRAW/CHECK: RDK
PAGE 7 OF

MBMA METAL BLDG MFG ASSN

VARCO-PRUDEN BUILDINGS
A UNITED DOMINION COMPANY

REGISTERED PROFESSIONAL ENGINEER
NO. 13370
STATE OF INDIANA
L. FERGUSTON

ROD BRACING		
MARK	LENGTH	DIA
6ROD1	23'-9 13/16'	0 1/2"
6ROD2	21'-4 3/8"	0 3/8"
6ROD3	22'-6 11/16'	0 3/8"
6ROD4	22'-8 1/8"	0 3/8"
7ROD2	21'-4 3/8"	0 3/8"
7ROD5	30'-2"	0 1/2"

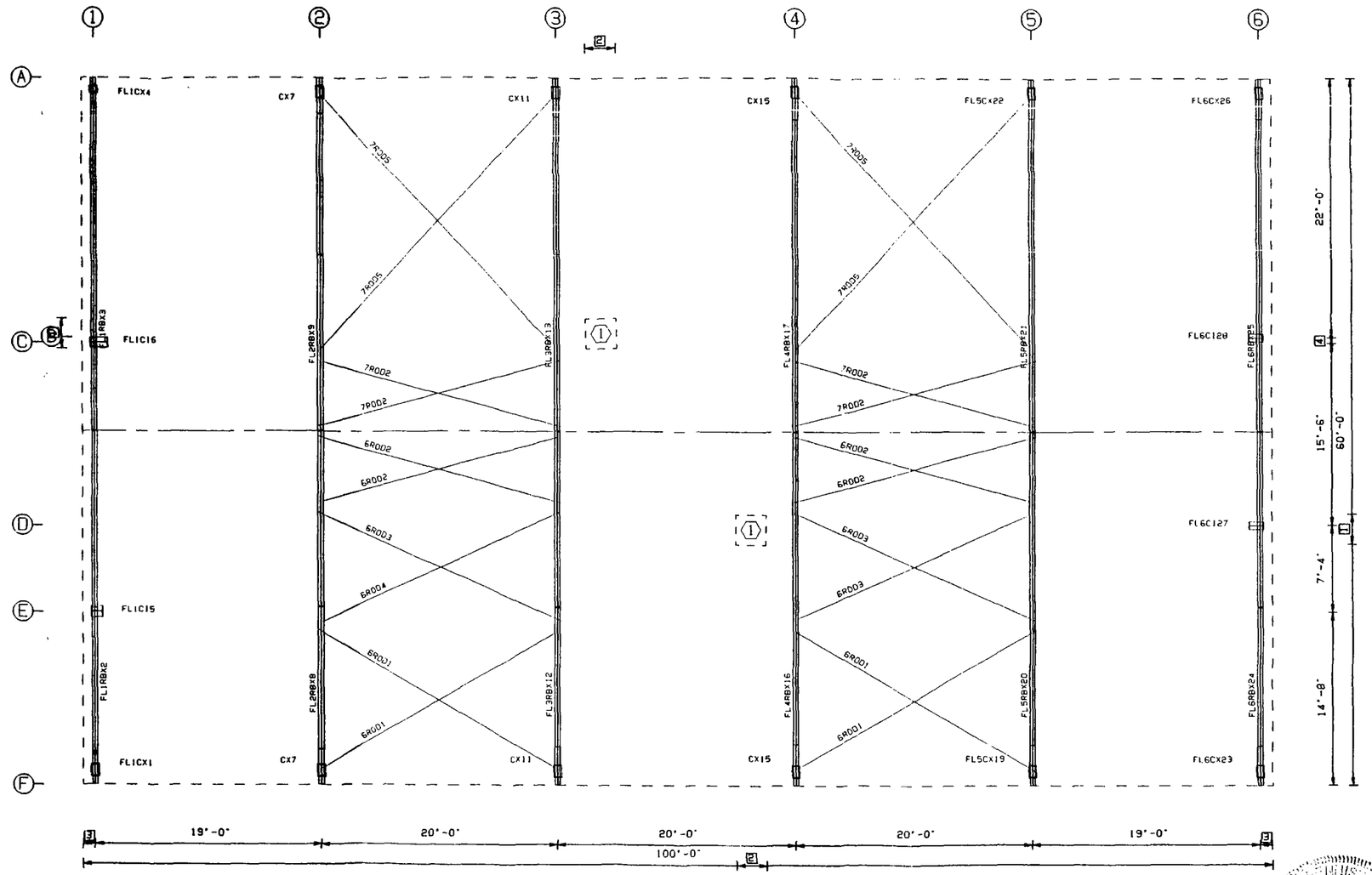

4 6"

3 1'-0"

2 2'-6 1/2"

1 2'-6 3/8"

On: u153.wl Project: 25 Bldg: 1 Plane: 6.7

THIS DRAWING IS SEALED ONLY AS TO THE COMPONENTS FURNISHED BY VARCO-PRUDEN

1. A325 HIGH STRENGTH BOLTS SHALL BE TIGHTENED IN ACCORDANCE WITH THE NOVEMBER 13, 1985, ALLOWABLE STRESS DESIGN SPECIFICATION FOR STRUCTURAL JOINTS USING ASTM A325 OR A490 BOLTS" SECTION 8.(d)(1) "TURN-OF-NUT TIGHTENING".
2. USE 1/2" DIA. A307 BOLTS FOR PURLIN TO FRAME, GIRT TO FRAME, AND GIRT TO CLIP CONNECTIONS UNLESS NOTED OTHERWISE. SEE JOB DETAILS FOR BOLT LENGTHS.
3. INSTALLATION OF ADEQUATE TEMPORARY BRACING FOR USE UNTIL CONSTRUCTION IS COMPLETE, IS THE RESPONSIBILITY OF THE ERECTOR.

Building Code:	91UBC
Live Ld(V/O Trib Red):	30.0 psf
Coll. Ld (gravity):	10.0 psf
Coll. Ld (uplift):	0.0 psf
Wind Speed:	85.0 mph
Wind Exp. Cat.:	C
Ground Snow:	30.0 psf
Roof Snow:	30.0 psf
Snow Exp. Cat.:	3
Seismic Zone:	1
Building Use Cat.:	4
Auxiliary Loads	NONE

THIS DRAWING INCLUDING THE INFORMATION HEREON, REMAINS THE PROPERTY OF VARCO-PRUDEN BUILDINGS, A UNITED DOMINION COMPANY.
IT IS PROVIDED FOR ERECTING THE BUILDING DESCRIBED IN THE APPLICABLE PURCHASE ORDER AND SHALL NOT BE MODIFIED, REPRODUCED OR USED FOR ANY OTHER PURPOSE WITHOUT PRIOR WRITTEN APPROVAL OF VARCO-PRUDEN BUILDINGS. THE GENERAL CONTRACTOR AND/OR ERECTOR IS SOLELY RESPONSIBLE FOR ACCURATE, GOOD QUALITY WORKMANSHIP IN ERECTING THIS BUILDING IN CONFORMANCE WITH THIS DRAWING. DETAILS REFERENCED IN THIS DRAWING ALL APPLICABLE VARCO-PRUDEN ERECTION DETAILS AND ALL INDUSTRY STANDARDS PERTAINING TO PROPER ERECTION, INCLUDING THE CORRECT USE OF TEMPORARY BRACING.

Roof Primary

REV.	DATE	BY	DESC.

SCALE NTS

BUILDER: Custom Steel Buildings, Inc.
CUSTOMER: Montgomery Watson
LOCATION: Griffith, IN
PROJECT: 3001 - American Chem. Service
BUILDING: Test Bldg. #1

QUOTE # MD96023579-001

MBMA METAL BLDG MFG ASSN.

VARCO-PRUDEN BUILDINGS A UNITED DOMINION COMPANY

JOB # MD96310116-01
DATE 5/3/96
TIME 1:45
DRAW/CHECK RDL
PAGE 8 OF

REGISTERED No 19270 STATE OF INDIANA PROFESSIONAL ENGINEER

SECONDARY			
MARK	LENGTH	THK	DEPTH
ZP115	23'-2 1/2"	.059	8.5
ZP78	23'-7"	.092	8.5
ZP79	23'-2 1/2"	.065	8.5
ZP80	25'-2 1/2"	.065	8.5
ZP83	21'-7"	.092	8.5
ZP84	23'-2 1/2"	.073	8.5

FRAMED OPENINGS					
FO#	-LOC-	MARK	LENGTH	THK	DEPTH
1	HEADR	CW109	2'-6 1/2"	.059	
1	JAMBL	CW107	4'-5"	.059	
1	JAMBR	CW107	4'-5"	.059	8.5
1	SILL	CW109	2'-6 1/2"	.059	

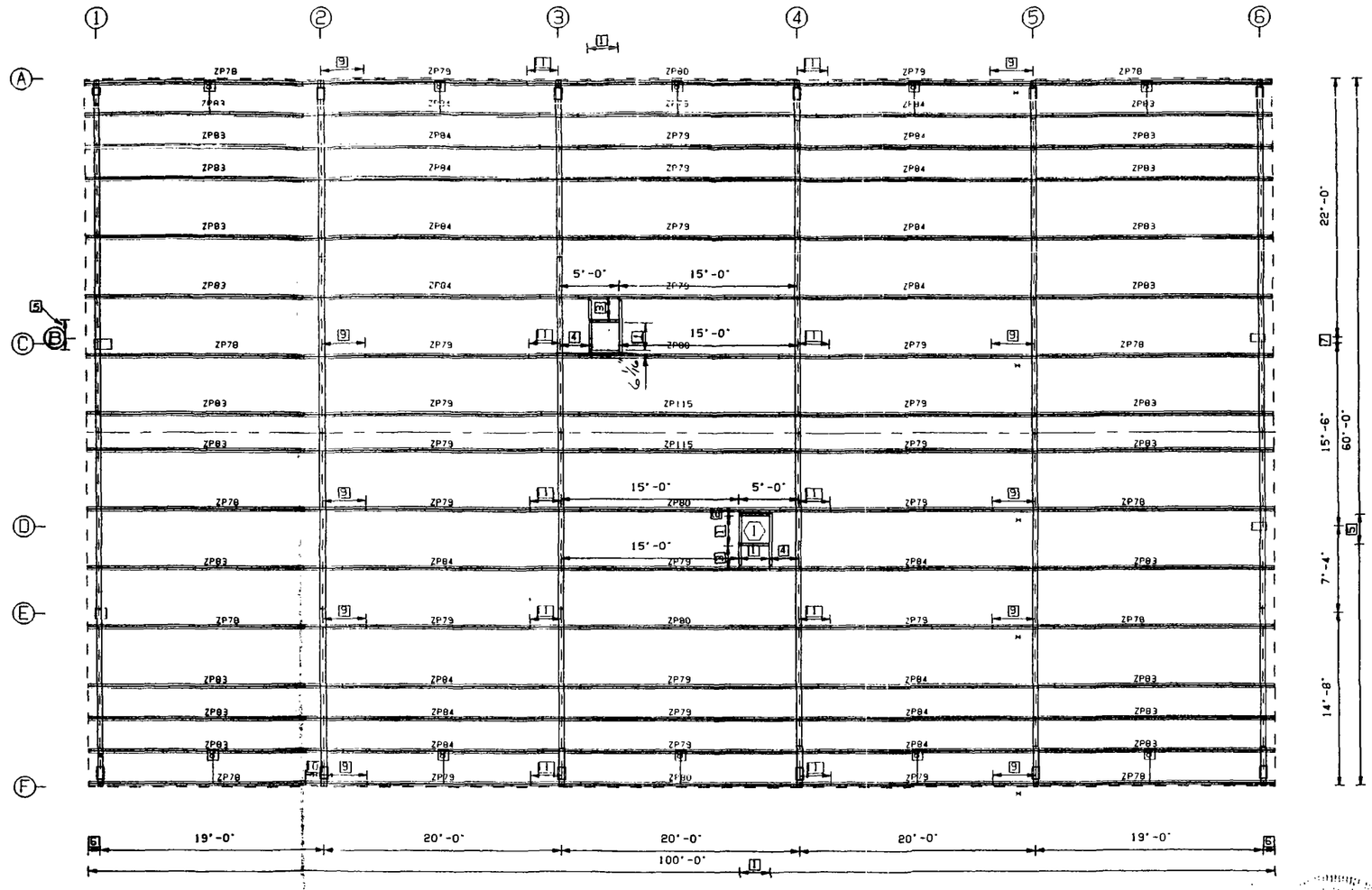

1 2'-7 1/4"
0 1'-7 1/4" (TYP. LAP)
9 3'-7 1/4"
8 PSM02077
7 6"
6 1'-0"
5 2'-6 3/8"
4 2'-5 1/2"
3 1'-11 7/16"
2 6 1/16"
1 2'-6 1/2"

On: u153.el Projkyl 25 Bldg: 1 Planes 6,7

THIS DRAWING IS SEALED ONLY AS TO THE COMPONENTS FURNISHED BY VARCO-PRUDEN

1. UNLESS NOTED, USE 1/2" DIAMETER A-307 BOLTS FOR PURLIN LAP, PURLIN TO FRAME, FLANGE BRACE TO FRAME, AND FLANGE BRACE TO PURLIN CONNECTIONS. SEE JOB DETAILS FOR BOLT LENGTHS.
2. WIND, FLANGE, AND PURLIN BRACING ARE AN INTEGRAL PART OF THE ROOF STRUCTURAL SYSTEM AND SHOULD BE PROPERLY INSTALLED PRIOR TO ERECTION OF WALL AND ROOF SHEETS. REMOVAL OR ALTERATION OF ROOF BRACING WITHOUT PRIOR AUTHORIZATION IS PROHIBITED
3. WHEN SAG ANGLE SLOTS IN ADJACENT PURLINS DO NOT ALIGN OR ARE OMITTED, FIELD-BEND A SAG ANGLE TAB AND ATTACH TO PURLIN WITH A SELF-DRILLING STRUCTURAL FASTENER.
4. SAG ANGLES ARE NOT REQUIRED IN BAYS THAT ARE 16' OR LESS.

* Denotes A325 Secondary to Frame Connection

Building Code:	UBC
Live Ld(W/O Trib Red):	30.0 psf
Coll. Ld (gravity):	10.0 psf
Coll. Ld (uplift):	0.0 psf
Wind Speed:	85.0 mph
Wind Exp. Cat.:	C
Ground Snow:	30.0 psf
Roof Snow:	30.0 psf
Snow Exp. Cat.:	3
Seismic Zone:	1
Building Use Cat.:	4
Auxiliary Loads	NONE

THIS DRAWING, INCLUDING THE INFORMATION HEREON, REMAINS THE PROPERTY OF VARCO-PRUDEN BUILDINGS A UNITED DOMINION COMPANY. IT IS PROVIDED FOR ERECTING THE BUILDING DESCRIBED IN THE APPLICABLE PURCHASE ORDER AND SHALL NOT BE MODIFIED, REPRODUCED OR USED FOR ANY OTHER PURPOSE WITHOUT PRIOR WRITTEN APPROVAL OF VARCO-PRUDEN BUILDINGS. THE GENERAL CONTRACTOR AND/OR ERECTOR IS SOLELY RESPONSIBLE FOR ACCURATE, GOOD QUALITY WORKMANSHIP IN ERECTING THIS BUILDING IN CONFORMANCE WITH THIS DRAWING. DETAILS REFERENCED IN THIS DRAWING, ALL APPLICABLE VARCO-PRUDEN ERECTION DETAILS AND ALL INDUSTRY STANDARDS PERTAINING TO PROPER ERECTION, INCLUDING THE CORRECT USE OF TEMPORARY BRACING.

Roof Secondary

REV	DATE	BY	DESC

SCALE NTS

BUILDER: Custom Steel Buildings, Inc.
CUSTOMER: Montgomery Watson
LOCATION: Griffith, IN
PROJECT: 3001 - American Chem. Service
BUILDING: Test Bldg. #1

QUOTE # N096023579-001

MBMA METAL BLDG MFG ASSN

VARCO-PRUDEN BUILDINGS A UNITED DOMINION COMPANY

JOB # N096316016-01
DATE 5/3/96
TIME 11:45
DRAW/CHECK RDK
PAGE 1 OF

REGISTERED PROFESSIONAL ENGINEER STATE OF INDIANA

SHEETING				
MARK	LENGTH	THK	COLOR	(FINISH)
SSR1	29'-11 1/2"	24	Standard Color	(GALVM)
SSR2	20'-11 1/4"	24	Standard Color	(GALVM)
SSR3	6'-5 3/4"	24	Standard Color	(GALVM)

INSULATION					
MARK	LENGTH	WIDTH	THICK	TYPE	FACING
BLK2	33'-0"	3'-0"	3 1/2"	BLK	NONE
BLK1	32'-0"	5'-0"	6"	BLK	PSKVR
BLK4	30'-0"	3'-0"	3 1/2"	BLK	NONE
BLK3	23'-0"	5'-0"	6"	BLK	PSKVR

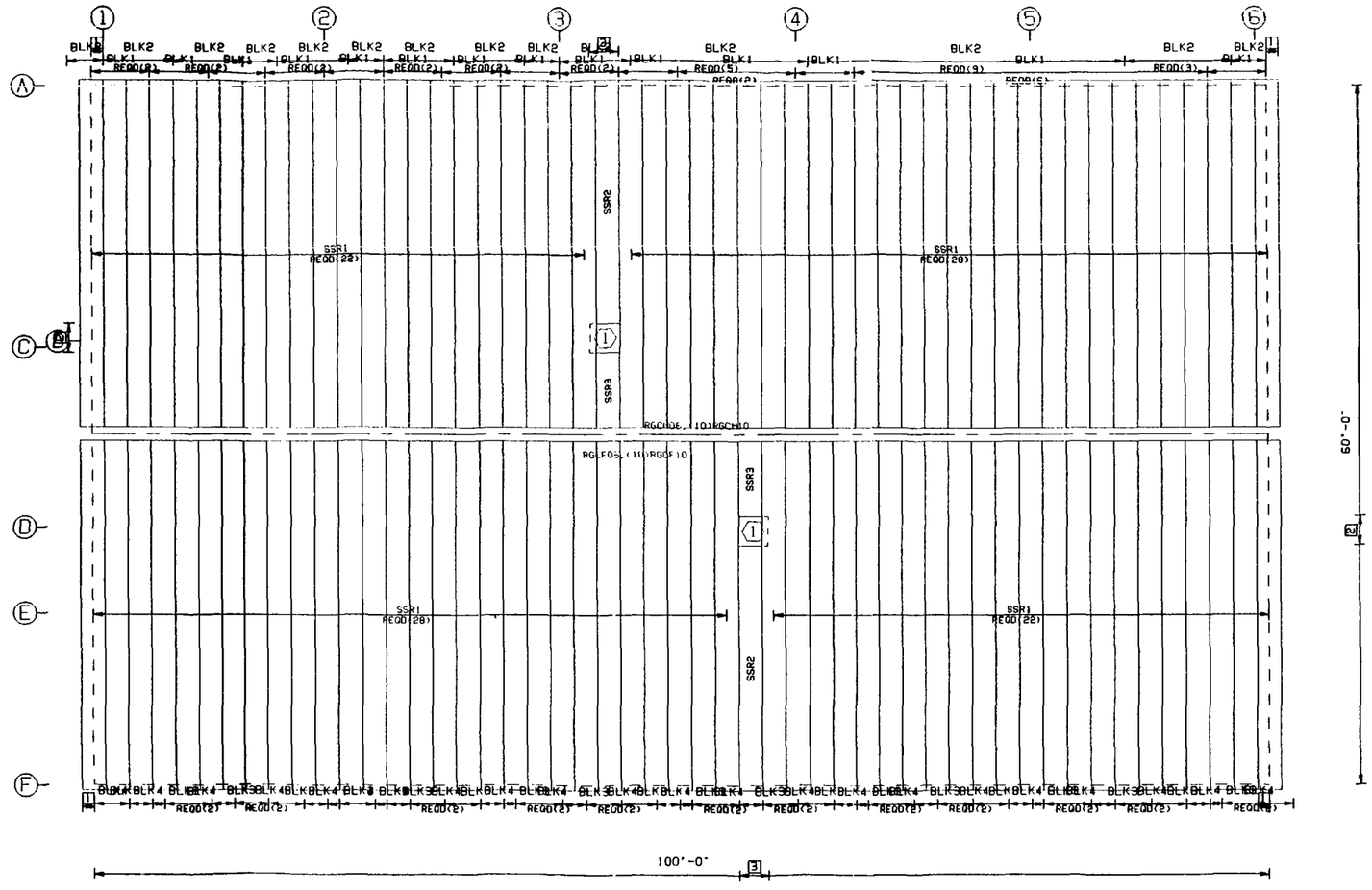

[3] 2'-6 1/2"

[2] 2'-6 3/8"

[1] Start Panel Dim. 1'-1 3/4" (Cut Dim.= 1'-2 3/4")

Dir u153.wi Project 25 Bldg: 1 Planet 6.7

THIS DRAWING IS SEALED ONLY AS TO THE COMPONENTS FURNISHED BY VARCO-PRUDEN

1. Install Sheeting From Left to Right.
2. PRE-DRILLING 1/8" DIAMETER HOLES FOR ROOF STRUCTURAL FASTENERS MAY BE REQUIRED AT 11 GAGE PURLINS, NESTED PURLINS, PURLIN LAP LOCATIONS, AND/OR SECONDARY STRUCTURAL BEAMS
3. ROOF SHEETS ARE AN INTEGRAL PART OF THE STRUCTURAL SYSTEM. REMOVAL OR ALTERATION WITHOUT PRIOR AUTHORIZATION IS PROHIBITED.
4. SEE JOB DETAILS FOR SHEETING AND TRIM FASTENER SPECIFICATION.

Building Code:	91UBC
Live Ld(W/O Trib Red):	30.0 psf
Coll. Ld (gravity):	10.0 psf
Coll. Ld (uplift):	0.0 psf
Wind Speed:	85.0 mph
Wind Exp. Cat.:	C
Ground Snow:	30.0 psf
Roof Snow:	30.0 psf
Snow Exp. Cat.:	3
Seismic Zone:	1
Building Use Cat.:	4
Auxiliary Loads	NONE

THIS DRAWING, INCLUDING THE INFORMATION HEREON, REMAINS THE PROPERTY OF VARCO-PRUDEN BUILDINGS, A UNITED DOMINION COMPANY. IT IS PROVIDED FOR ERECTING THE BUILDING DESCRIBED IN THE APPLICABLE PURCHASE ORDER AND SHALL NOT BE MODIFIED, REPRODUCED OR USED FOR ANY OTHER PURPOSE WITHOUT PRIOR WRITTEN APPROVAL OF VARCO-PRUDEN BUILDINGS. THE GENERAL CONTRACTOR AND/OR ERECTOR IS SOLELY RESPONSIBLE FOR ACCURATE, GOOD QUALITY WORKMANSHIP IN ERECTING THIS BUILDING IN CONFORMANCE WITH THIS DRAWING. DETAILS REFERENCED IN THIS DRAWING, ALL APPLICABLE VARCO-PRUDEN ERECTION DETAILS AND ALL INDUSTRY STANDARDS PERTAINING TO PROPER ERECTION, INCLUDING THE CORRECT USE OF TEMPORARY BRACING.

Roof Sheeting

REV.	DATE	BY	DESC.

SCALE NTS

BUILDER: Custom Steel Buildings, Inc.

CUSTOMER: Montgomery Watson

LOCATION: Griffith, IN

PROJECT: 3001 - American Chem. Service

BUILDING: Test Bldg. #1

QUOTE # ND96023579-001

MBMA METAL BLDG MFG ASSN

VARCO-PRUDEN BUILDINGS A UNITED DOMINION COMPANY

JOB # ND96031016-01

DATE 5/3/96

TIME 1:45

DRAN/CHECK RDZ

PAGE 10 OF

SECONDARY MARK	LENGTH	THK	DEPTH
ZG15	21'-7"	.059	8.5
ZG16	23'-2 1/2"	.059	8.5

ROD BRACING MARK	LENGTH	DIA
3ROD6	33'-10 11/16"	0 3/4"

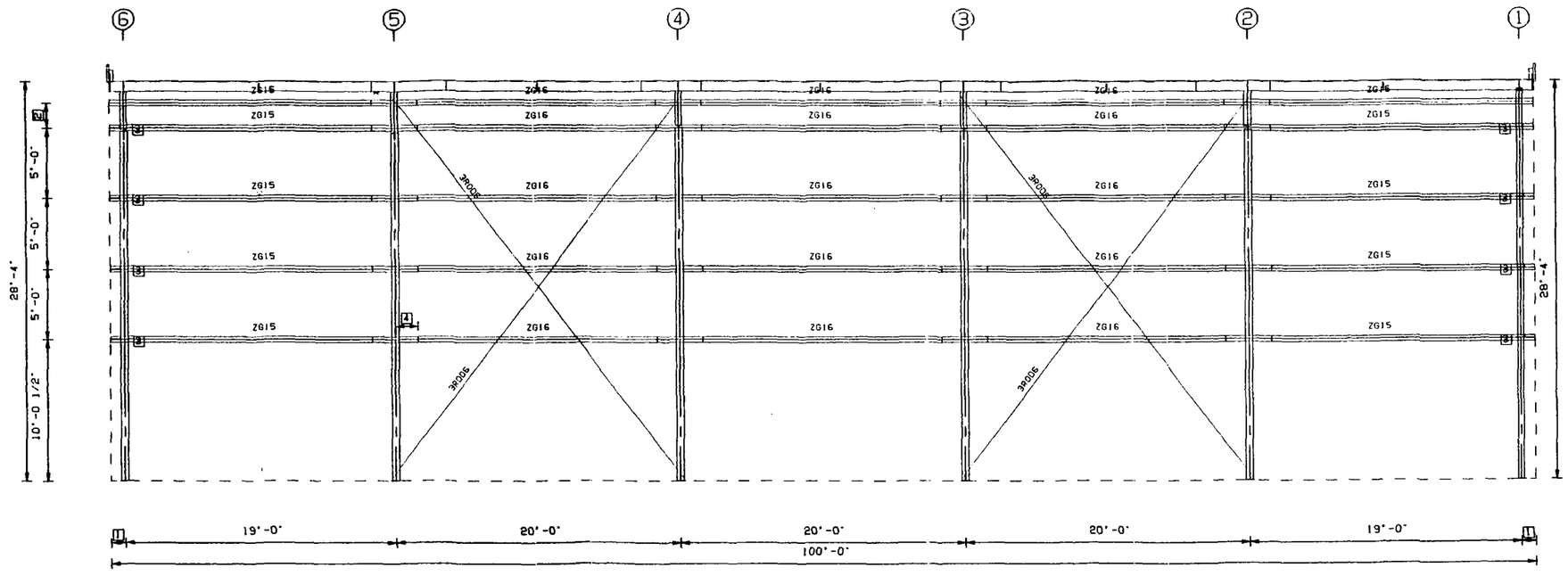

WALL ELEVATION AT EAST

[4] 1'-7 1/4" (TYP. LAP)

[3] GCC072084

[2] 1'-9 1/2"

[1] 1'-0"

Job: u153.w1 Project 25 Bldg: 1 Plane: 3

THIS DRAWING IS SEALED ONLY AS TO THE COMPONENTS FURNISHED BY VARCO-PRUDEN

1. UNLESS NOTED, USE 1/2" DIAMETER A-307 BOLTS FOR GIRT LAP, GIRT TO FRAME, FLANGE BRACE TO FRAME, FLANGE BRACE TO GIRT, JAMB AND HEADER CONNECTIONS. SEE JOB DETAILS FOR BOLT LENGTHS.
2. WIND AND FLANGE BRACING ARE AN INTEGRAL PART OF THE WALL STRUCTURAL SYSTEM AND SHOULD BE PROPERLY INSTALLED PRIOR TO ERECTION OF WALL AND ROOF SHEETS. REMOVAL OR ALTERATION OF WALL BRACING WITHOUT PRIOR AUTHORIZATION IS PROHIBITED

.* Denotes A325 Secondary to Frame Connection

Building Code:	91UBC
Live Ld(V/O Trib Rad)	30.0 psf
Coll. Ld (gravity):	10.0 psf
Coll. Ld (uplift):	0.0 psf
Wind Speed:	85.0 mph
Wind Exp. Cat.:	C
Ground Snow:	30.0 psf
Roof Snow:	30.0 psf
Snow Exp. Cat.:	B
Seismic Zone:	1
Building Use Cat.:	4
Auxiliary Loads	NONE

THIS DRAWING, INCLUDING THE INFORMATION HEREON, REMAINS THE PROPERTY OF VARCO-PRUDEN BUILDINGS, A UNITED DOMINION COMPANY. IT IS PROVIDED FOR ERECTING THE BUILDING DESCRIBED IN THE APPLICABLE PURCHASE ORDER AND SHALL NOT BE MODIFIED, REPRODUCED OR USED FOR ANY OTHER PURPOSE WITHOUT PRIOR WRITTEN APPROVAL OF VARCO PRUDEN BUILDINGS. THE GENERAL CONTRACTOR AND/OR ERECTOR IS SOLELY RESPONSIBLE FOR ACCURATE, GOOD QUALITY WORKMANSHIP IN ERECTING THIS BUILDING IN CONFORMANCE WITH THIS DRAWING, DETAILS REFERENCED IN THIS DRAWING, ALL APPLICABLE VARCO PRUDEN ERECTION DETAILS AND ALL INDUSTRY STANDARDS PERTAINING TO PROPER ERECTION, INCLUDING THE CORRECT USE OF TEMPORARY BRACING.

Wall Secondary

REV	DATE	BY	DESC.

SCALE: NTS

BUILDER: Custom Steel Buildings, Inc.
CUSTOMER: Montgomery Watson
LOCATION: Griffith, IN
PROJECT: 3001 American Chem Service
BUILDING: Test Bldg. #1

QUOTE # ND9602357 9-001

MBMA METAL BLDG MFG ASSN

VARCO-PRUDEN BUILDINGS A UNITED DOMINION COMPANY

JOB # ND9631016-01
DATE 5/3/96
TIME 1:47
DRAWN BY RDK
PAGE 11 OF

SHEETING			
MARK	LENGTH	THK	COLOR (FINISH)
SL1	28'-4 1/4"	24	Classic Beige (KXL)

INSULATION					
MARK	LENGTH	WIDTH	THICK	TYPE	FACING
FF5	29'-0"	1'-4"	3"	FF	NONE
BLK6	30'-0"	3'-0"	3"	BLK	PSKVR

TRIM			
FD#	MARK	LENGTH	COLOR (FINISH)
	DE1		Classic Beige (SP)
	DN1		
	DS10	10'-0"	Classic Beige (SP)
	DST1		Classic Beige (SP)
	EQ201	20'-3"	Patrician Bronze (KXL)
	PCA10A	10'-3"	Patrician Bronze (KXL)
	SCF10	10'-3"	Classic Beige (KXL)
	SCF20	20'-3"	Classic Beige (KXL)

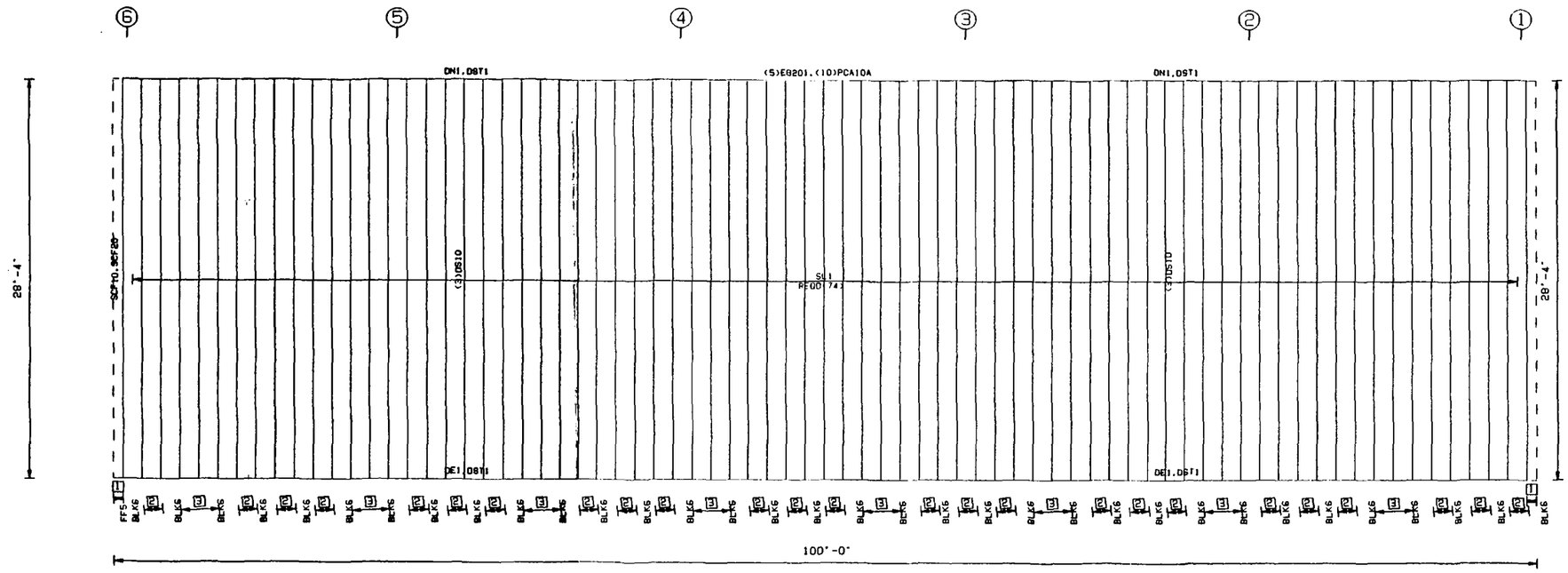

WALL ELEVATION AT EAST

[3] (3)FF5

[2] (2)FF5

[1] Start Panel Dim. 8" (Cut Dim.= 8")

Dwl v153.w1 Project 25 Bldg: 1 Plane: 3

THIS DRAWING IS SEALED ONLY AS TO THE COMPONENTS FURNISHED BY VARCO-PRUDEN

1. Install Sheeting From Left to Right
2. WALL SHEETS ARE AN INTEGRAL PART OF THE STRUCTURAL SYSTEM. REMOVAL OR ALTERATION WITHOUT PRIOR AUTHORIZATION IS PROHIBITED.
3. SEE JOB DETAILS FOR SHEETING AND TRIM FASTENER SPECIFICATION.
2. PRE-DRILLING 1/8" DIAMETER HOLES FOR WALL STRUCTURAL FASTENERS MAY BE REQUIRED AT 11 GAGE GIRTS, NESTED GIRTS, GIRT LAP LOCATIONS, AND/OR SECONDARY STRUCTURAL BEAMS

Building Code:	91UBC
Live Ld(V/O Trib Red):	30.0 psf
Coll. Ld (gravity):	10.0 psf
Coll. Ld (uplift):	0.0 psf
Wind Speed:	85.0 mph
Wind Exp. Cat.:	C
Ground Snow:	30.0 psf
Roof Snow:	30.0 psf
Snow Exp. Cat.:	B
Seismic Zone:	1
Building Use Cat.:	4
Auxiliary Loads:	NONE

THIS DRAWING, INCLUDING THE INFORMATION HEREON, REMAINS THE PROPERTY OF VARCO-PRUDEN BUILDINGS, A UNITED DOMINION COMPANY. IT IS PROVIDED FOR ERECTING THE BUILDING DESCRIBED IN THE APPLICABLE PURCHASE ORDER AND SHALL NOT BE MODIFIED, REPRODUCED OR USED FOR ANY OTHER PURPOSE WITHOUT PRIOR WRITTEN APPROVAL OF VARCO-PRUDEN BUILDINGS. THE GENERAL CONTRACTOR AND/OR ERECTOR IS SOLELY RESPONSIBLE FOR ACCURATE, GOOD QUALITY WORKMANSHIP IN ERECTING THIS BUILDING IN CONFORMANCE WITH THIS DRAWING, DETAILS REFERENCED IN THIS DRAWING, ALL APPLICABLE VARCO-PRUDEN ERECTION DETAILS AND ALL INDUSTRY STANDARDS PERTAINING TO PROPER ERECTION, INCLUDING THE CORRECT USE OF TEMPORARY BRACING

Wall Sheeting

REV.	DATE	BY	DESC.

SCALE: NTS

BUILDER: Custom Steel Buildings, Inc.

CUSTOMER: Montgomery Watson

LOCATION: Griffith, IN

PROJECT: 3001 - American Chem. Service

BUILDING: Test Bldg. #1

QUOTE - ND96023579-001

MBMA METAL BLDG MFG ASSN

VARCO-PRUDEN BUILDINGS A UNITED DOMINION COMPANY

JOB: ND9631016-01

DATE: 5/3/96

TIME: 1:47

DRAW/CHECK: RDK

PAGE: 12 OF

REGISTERED NO 10270 STATE OF INDIANA PROFESSIONAL ENGINEER

SECONDARY MARK	LENGTH	THK	DEPTH
ZG15	21'-7"	.059	0.5
ZG16	23'-2 1/2"	.059	0.5

FRAMED OPENINGS FO#	-LOC-	MARK	LENGTH	THK	DEPTH
1	HEADR	CW162	3'-4"	.059	
1	JAMBL	CW158	10'-3"	.059	
1	JAMBR	CW158	10'-3"	.059	0.5
2	HEADR	CW177	4'-0"	.059	
2	JAMBL	CW173	9'-9"	.059	0.5
2	JAMBR	CW173	9'-9"	.059	
2	SILL	CW177	4'-0"	.059	

ROD BRACING MARK	LENGTH	DIA
SRODG	33'-10 11/16"	0 3/4"
SROD7	31'-6 9/16"	0 3/4"

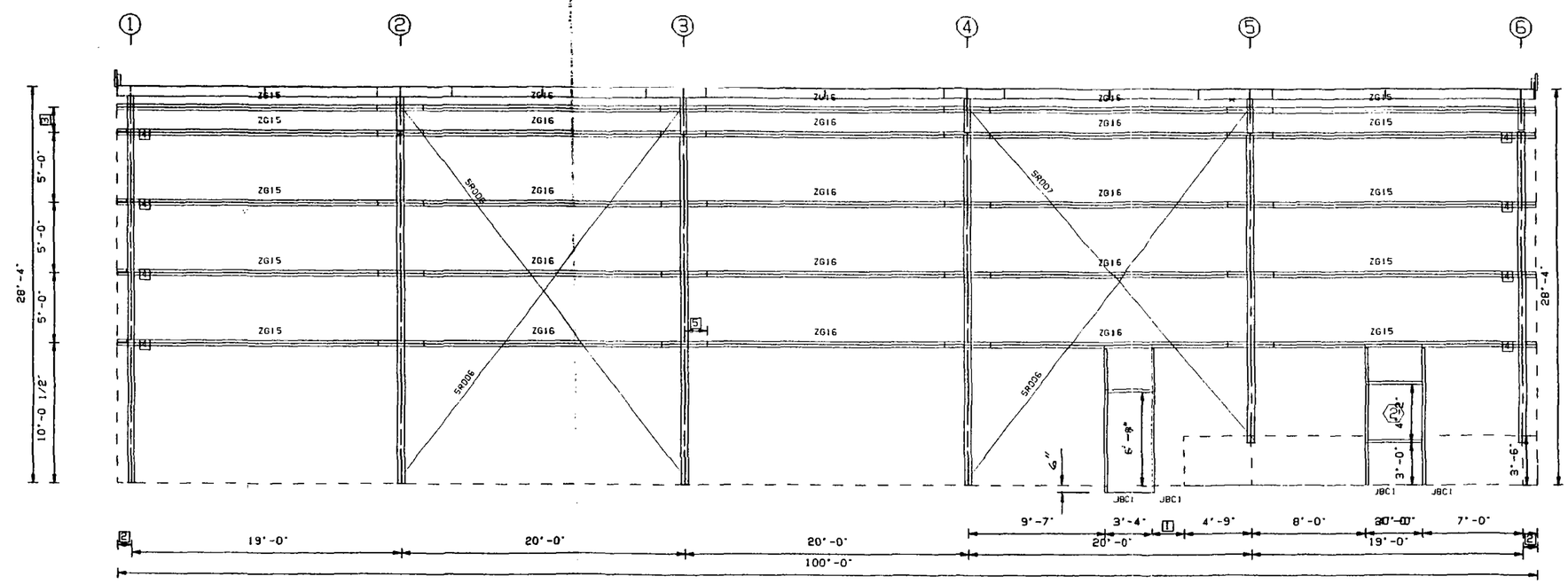

WALL ELEVATION AT WEST

5 1'-7 1/4" (TYP. LAP)
4 GCC072084
3 1'-9 1/2"
2 1'-0"
1 2'-4"

On: u153.wl Project 25 Bldg: 1 Plane: 5

THIS DRAWING IS SEALED ONLY AS TO THE COMPONENTS FURNISHED BY VARCO-PRUDEN

1. UNLESS NOTED, USE 1/2" DIAMETER A-307 BOLTS FOR GIRT LAP, GIRT TO FRAME, FLANGE BRACE TO FRAME, FLANGE BRACE TO GIRT, JAMB AND HEADER CONNECTIONS. SEE JOB DETAILS FOR BOLT LENGTHS.
2. WIND AND FLANGE BRACING ARE AN INTEGRAL PART OF THE WALL STRUCTURAL SYSTEM AND SHOULD BE PROPERLY INSTALLED PRIOR TO ERECTION OF WALL AND ROOF SHEETS. REMOVAL OR ALTERATION OF WALL BRACING WITHOUT PRIOR AUTHORIZATION IS PROHIBITED
- Denotes A325 Secondary to Frame Connection

Building Code:	91UBC
Live Ld(V/O Tmb Rad)	30.0 psf
Coll. Ld (gravity):	10.0 psf
Coll. Ld (uplift):	0.0 psf
Wind Speed:	85.0 mph
Wind Exp. Cat.:	C
Ground Snow:	30.0 psf
Roof Snow:	30.0 psf
Snow Exp. Cat.:	3
Seismic Zone:	1
Building Use Cat.:	4
Auxiliary Loads	NONE

THIS DRAWING, INCLUDING THE INFORMATION HEREON, REMAINS THE PROPERTY OF VARCO-PRUDEN BUILDINGS, A UNITED DOMINION COMPANY. IT IS PROVIDED FOR ERECTING THE BUILDING DESCRIBED IN THE APPLICABLE PURCHASE ORDER AND SHALL NOT BE MODIFIED, REPRODUCED OR USED FOR ANY OTHER PURPOSE WITHOUT PRIOR WRITTEN APPROVAL OF VARCO-PRUDEN BUILDINGS. THE GENERAL CONTRACTOR AND/OR ERECTOR IS SOLELY RESPONSIBLE FOR ACCURATE, GOOD QUALITY WORKMANSHIP IN ERECTING THIS BUILDING IN CONFORMANCE WITH THIS DRAWING. DETAILS REFERENCED IN THIS DRAWING, ALL APPLICABLE VARCO-PRUDEN ERECTION DETAILS AND ALL INDUSTRY STANDARDS PERTAINING TO PROPER ERECTION, INCLUDING THE CORRECT USE OF TEMPORARY BRACING.

REV.	DATE	BY	DESC.

SCALE NTS

Wall Secondary

BUYER: Custom Steel Buildings, Inc.
CUSTOMER: Montgomery Watson
LOCATION: Griffith, IN
PROJECT: 3001 - American Chem Service
BUILDING: Test Bldg. #1

QUOTE # HD96023579-001

MBMA METAL BLDG INFO ASSN

VARCO-PRUDEN BUILDINGS A UNITED DOMINION COMPANY

JOB # HD9631016-01
DATE 5/3/96
TIME 1:47
DRAW/CHECK EDK
PAGE 13 OF

REGISTERED No. 10270 STATE OF INDIANA PROFESSIONAL ENGINEER

SHEETING			
MARK	LENGTH	THK	COLOR (FINISH)
SL1	28'-4 1/4"	24	Classic Beige (KXL)
SL2	24'-10 1/4"	24	Classic Beige (KXL)
SL3	21'-8 1/4"	24	Classic Beige (KXL)
SL4	21'-2 1/4"	24	Classic Beige (KXL)

INSULATION					
MARK	LENGTH	WIDTH	THICK	TYPE	FACING
FF5	29'-0"	1'-4"	3"	FF	NONE
BLK6	30'-0"	3'-0"	3"	BLK	PSKVR
FF2	22'-0"	1'-4"	3"	FF	NONE
FF3	25'-0"	1'-4"	3"	FF	NONE
BLK5	26'-0"	3' 0"	3"	BLK	PSKVR
FF4	4'-0"	1'-4"	3"	FF	NONE
FF1	21'-0"	1'-4"	3"	FF	NONE

TRIM			
FO#	MARK	LENGTH	COLOR (FINISH)
	DE1		Classic Beige (SP)
	DN1		
	DS10	10'-0"	Classic Beige (SP)
	DS11		Classic Beige (SP)
	EG201	20'-3	Patriction Bronze (KXL)
	PCA10A	10'-3"	Patriction Bronze (KXL)
	SCF10	10'-3	Classic Beige (KXL)
	SCF20	20'-3	Classic Beige (KXL)

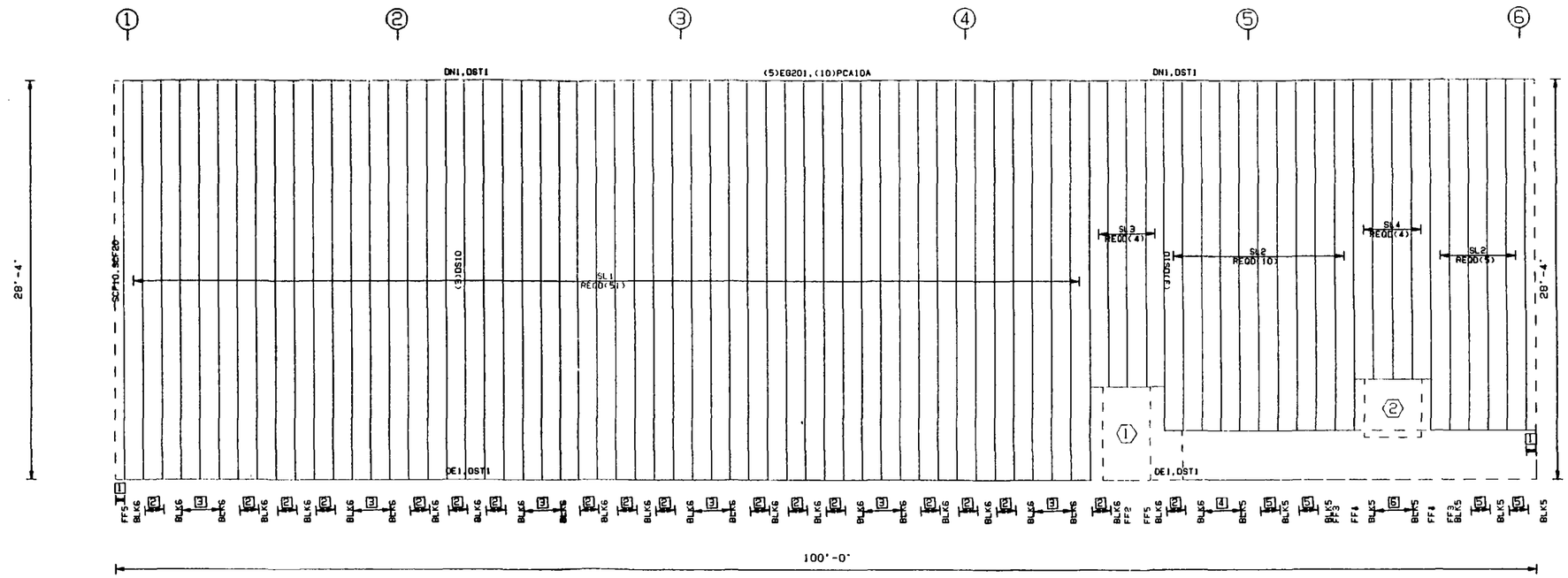

WALL ELEVATION AT WEST

6 (3)FF1

5 (2)FF3

4 (3)FF3

3 (3)FF5

2 (2)FF5

1 Start Panel Dim. 8" (Cut Dim.= 8")

Dnt u153.wl Projkt 25 Bldg: 1 Planet 5

THIS DRAWING IS SEALED ONLY AS TO THE COMPONENTS FURNISHED BY VARCO-PRUDEN

1. Install Sheeting From Left to Right
2. WALL SHEETS ARE AN INTEGRAL PART OF THE STRUCTURAL SYSTEM. REMOVAL OR ALTERATION WITHOUT PRIOR AUTHORIZATION IS PROHIBITED.
3. SEE JOB DETAILS FOR SHEETING AND TRIM FASTENER SPECIFICATION.
2. PRE-DRILLING 1/8 DIAMETER HOLES FOR WALL STRUCTURAL FASTENERS MAY BE REQUIRED AT 11 GAGE GIRTS, NESTED GIRTS, GIRT LAP LOCATIONS, AND/OR SECONDARY STRUCTURAL BEAMS

Building Code:	91UBC
Live Ld(W/O Trib Red)	30.0 psf
Coll. Ld (gravity):	10.0 psf
Coll. Ld (uplift):	0.0 psf
Wind Speed:	85.0 mph
Wind Exp. Cat.:	C
Ground Snow:	30.0 psf
Roof Snow:	30.0 psf
Snow Exp. Cat.:	3
Seismic Zone:	1
Building Use Cat.:	4
Auxiliary Loads	NONE

THIS DRAWING, INCLUDING THE INFORMATION HEREON, REMAINS THE PROPERTY OF VARCO-PRUDEN BUILDINGS, A UNITED DOMINION COMPANY. IT IS PROVIDED FOR ERECTING THE BUILDING DESCRIBED IN THE APPLICABLE PURCHASE ORDER AND SHALL NOT BE MODIFIED, REPRODUCED OR USED FOR ANY OTHER PURPOSE WITHOUT PRIOR WRITTEN APPROVAL OF VARCO-PRUDEN BUILDINGS. THE GENERAL CONTRACTOR AND/OR ERECTOR IS SOLELY RESPONSIBLE FOR ACCURATE, GOOD QUALITY WORKMANSHIP IN ERECTING THIS BUILDING IN CONFORMANCE WITH THIS DRAWING, DETAILS REFERENCED IN THIS DRAWING, ALL APPLICABLE VARCO-PRUDEN ERECTION DETAILS AND ALL INDUSTRY STANDARDS PERTAINING TO PROPER ERECTION, INCLUDING THE CORRECT USE OF TEMPORARY BRACING.

REV.	DATE	BY	DESC.

SCALE NTS

Wall Sheeting

BUILDER: Custom Steel Buildings, Inc.

CUSTOMER: Montgomery Watson

LOCATION: Griffith, IN

PROJECT: 3001 - American Chem. Service

BUILDING: Test Bldg. #1

QUOTE # ND96023573 001

MBMA METAL BLDG MFG ASSN

VARCO-PRUDEN BUILDINGS A UNITED DOMINION COMPANY

JOB # ND96J1016-C1

DATE 5/3/96

TIME 1:47

DRAW/CHECK RDK

PAGE 14 OF

REGISTERED No 18270 STATE OF INDIANA PROFESSIONAL ENGINEER

SECONDARY			
MARK	LENGTH	THK	DEPTH
ZG40	22'-10 1/2"	.082	8.5
ZG41	19'-2 1/2"	.059	8.5
ZG43	21'-3"	.072	8.5
ZG44	5'-8 1/4"	.059	8.5
ZG47	22'-10 1/2"	.059	8.5

FRAMED OPENINGS					
FO#	-LOC-	MARK	LENGTH	THK	DEPTH
1	HEADR	17CW167	6'-4"	.059	8.5
1	JAMBL	CV158	10'-3"	.059	
1	JAMBR	CV158	10'-3"	.059	
2	HEADR	CV181	4'-0 1/2"	.059	
2	JAMBL	CV179	9'-5"	.059	8.5
2	JAMBR	CV179	9'-5"	.059	
2	SILL	CV181	4'-0 1/2"	.059	8.5

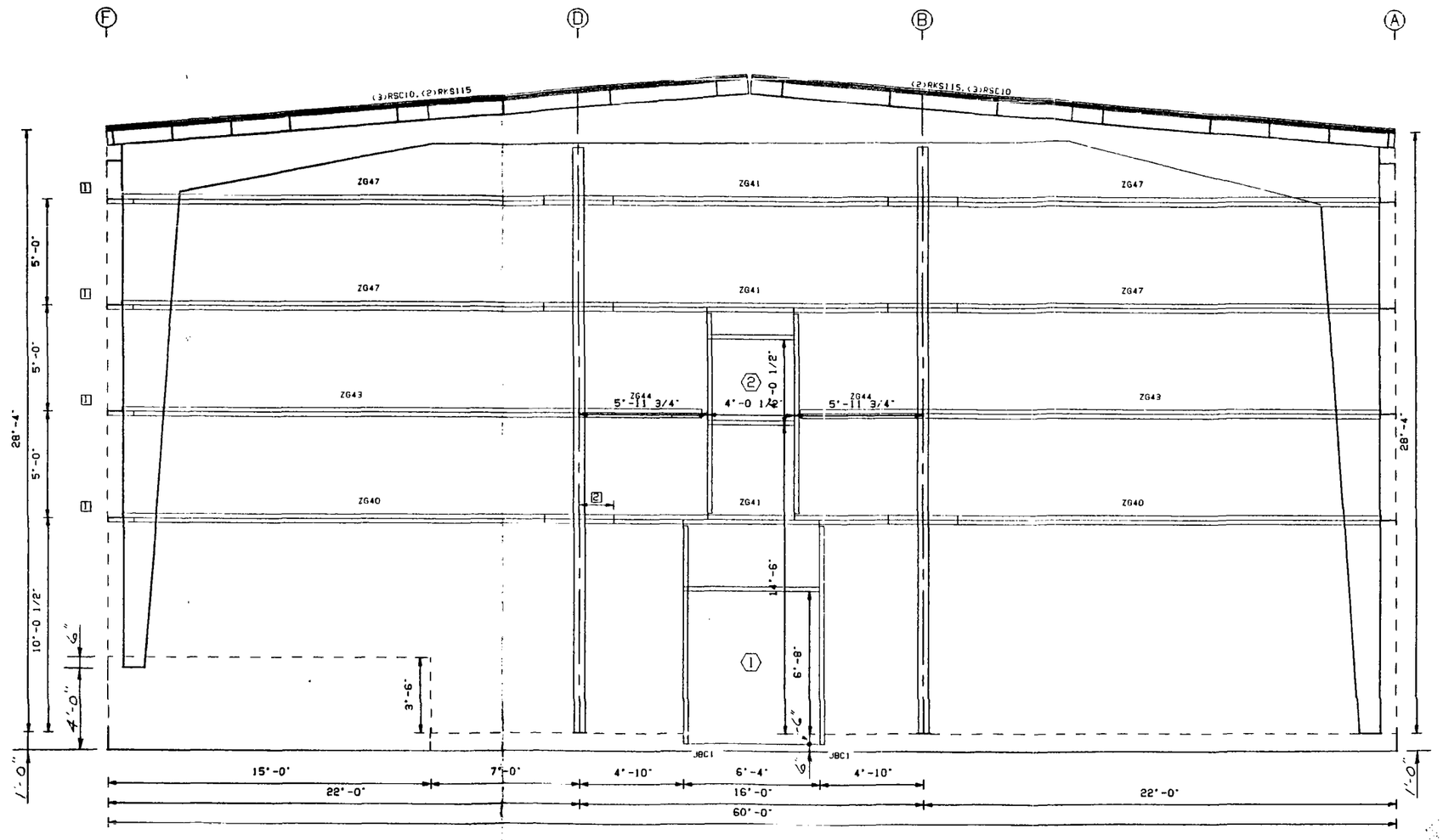

WALL ELEVATION AT SOUTH

2 1'-7 1/4" (TYP. LAP)

1 GFA102

REGISTERED No.18270 STATE OF INDIANA PROFESSIONAL ENGINEER

Unit 0153.wl Project 25 Bldg: 1 Plane: 4

THIS DRAWING IS SEALED ONLY AS TO THE COMPONENTS FURNISHED BY VARCO-PRUDEN

1. UNLESS NOTED, USE 1/2" DIAMETER A-307 BOLTS FOR GIRT LAP, GIRT TO FRAME, FLANGE BRACE TO FRAME, FLANGE BRACE TO GIRT, JAMB AND HEADER CONNECTIONS. SEE JOB DETAILS FOR BOLT LENGTHS.
2. WIND AND FLANGE BRACING ARE AN INTEGRAL PART OF THE WALL STRUCTURAL SYSTEM AND SHOULD BE PROPERLY INSTALLED PRIOR TO ERECTION OF WALL AND ROOF SHEETS. REMOVAL OR ALTERATION OF WALL BRACING WITHOUT PRIOR AUTHORIZATION IS PROHIBITED

Building Code:	91UBC
Live Ld(W/O Trib Rsd)	30.0 psf
Coll. Ld (gravity):	10.0 psf
Coll. Ld (uplift):	0.0 psf
Wind Speed:	85.0 mph
Wind Exp. Cat.:	C
Ground Snow:	30.0 psf
Roof Snow:	30.0 psf
Snow Exp. Cat.:	2
Seismic Zone:	1
Building Use Cat.:	4
Auxiliary Loads	NONE

THIS DRAWING, INCLUDING THE INFORMATION HEREON, REMAINS THE PROPERTY OF VARCO-PRUDEN BUILDINGS, A UNITED DOMINION COMPANY. IT IS PROVIDED FOR ERECTING THE BUILDING DESCRIBED IN THE APPLICABLE PURCHASE ORDER AND SHALL NOT BE MODIFIED, REPRODUCED OR USED FOR ANY OTHER PURPOSE WITHOUT PRIOR WRITTEN APPROVAL OF VARCO-PRUDEN BUILDINGS. THE GENERAL CONTRACTOR AND/OR ERECTOR IS SOLELY RESPONSIBLE FOR ACCURATE, GOOD QUALITY WORKMANSHIP IN ERECTING THIS BUILDING IN CONFORMANCE WITH THIS DRAWING, DETAILS REFERENCED IN THIS DRAWING, ALL APPLICABLE VARCO-PRUDEN ERECTION DETAILS AND ALL INDUSTRY STANDARDS PERTAINING TO PROPER ERECTION, INCLUDING THE CORRECT USE OF TEMPORARY BRACING.

Wall Secondary

REV.	DATE	BY	DESC.

SCALE: NTS

BUILDER: Custom Steel Buildings, Inc.
CUSTOMER: Montgomery Watson
LOCATION: Griffith, IN
PROJECT: 3001 - American Chem. Service
BUILDING: Test Bldg. #1

QUOTE # ND9602B579-001

MBMA METAL BLDG MFG ASSN

VARCO-PRUDEN BUILDINGS A UNITED DOMINION COMPANY

JOB # ND9631016 01
DATE 5/3/96
TIME 1:47
DRAW/CHECK RDK
PAGE 15 OF

SHEETING			
MARK	LENGTH	THK	COLOR (FINISH)
SL10	29'-2 1/16"	24	Classic Beige (KXL)
SL11	28'-11 7/16"	24	Classic Beige (KXL)
SL12	28'-8 3/4"	24	Classic Beige (KXL)
SL13	28'-6 1/16"	24	Classic Beige (KXL)
SL14	28'-3 7/16"	24	Classic Beige (KXL)
SL15	24'-9 7/16"	24	Classic Beige (KXL)
SL16	25'-0 1/16"	24	Classic Beige (KXL)
SL17	25'-2 3/4"	24	Classic Beige (KXL)
SL18	25'-5 7/16"	24	Classic Beige (KXL)
SL19	25'-8 1/16"	24	Classic Beige (KXL)
SL20	25'-10 3/4"	24	Classic Beige (KXL)
SL21	23'-7 7/16"	24	Classic Beige (KXL)
SL22	7'-10"	24	Classic Beige (KXL)
SL23	11'-11 9/16"	24	Classic Beige (KXL)
SL24	12'-0 15/16"	24	Classic Beige (KXL)
SL5	29'-4 3/4"	24	Classic Beige (KXL)

SHEETING			
MARK	LENGTH	THK	COLOR (FINISH)
SL6	29'-7 7/16"	24	Classic Beige (KXL)
SL7	29'-10 1/16"	24	Classic Beige (KXL)
SL8	30'-0 3/4"	24	Classic Beige (KXL)
SL9	30'-3 7/16"	24	Classic Beige (KXL)

INSULATION					
MARK	LENGTH	WIDTH	THICK	TYPE	FACING
FF3	25'-0	1'-4"	3"	FF	NONE
BLK5	26'-0	3'-0"	3"	BLK	PSKVR
BLK8	27'-0"	3'-0"	3"	BLK	PSKVR
FF8	26'-0"	1'-4"	3"	FF	NONE
FF9	30'-0"	1' 4"	3"	FF	NONE
BLK9	31'-0"	3'-0"	3"	BLK	PSKVR
BLK10	32'-0"	3'-0"	3"	BLK	PSKVR
FF10	31'-0"	1'-4"	3"	FF	NONE
FF4	4'-0"	1'-4"	3"	FF	NONE
FF6	12'-0"	1'-4"	3"	FF	NONE
FF11	15'-0"	1'-4"	3"	FF	NONE
BLK7	25'-0"	3'-0"	3"	BLK	PSKVR
FF7	8'-0"	1'-4"	3"	FF	NONE
FF5	29'-0"	1'-4"	3"	FF	NONE
BLK6	30'-0"	3'-0"	3"	BLK	PSKVR

TRIM			
FO#	MARK	LENGTH	COLOR (FINISH)
	BS1		Patrician Bronze (KXL)
	GGC1		Patrician Bronze (KXL)
	PCC1		Patrician Bronze (SP)
	PPC1		Patrician Bronze (SP)
	PRF1		Patrician Bronze (KXL)
	RFR10	10'-0"	Patrician Bronze (KXL)
	RKF16	16'-3"	Patrician Bronze (KXL)
	RKF20	20'-3"	Patrician Bronze (KXL)
	SCF05	5'-3	Classic Beige (KXL)
	SCF20	20'-3"	Classic Beige (KXL)
	SCT0320	20'-3"	Classic Beige (KXL)
	SCT0420	20'-3"	Classic Beige (KXL)
	SCT0710	10'-3"	Classic Beige (KXL)
	SCT0805	5'-3"	Classic Beige (KXL)

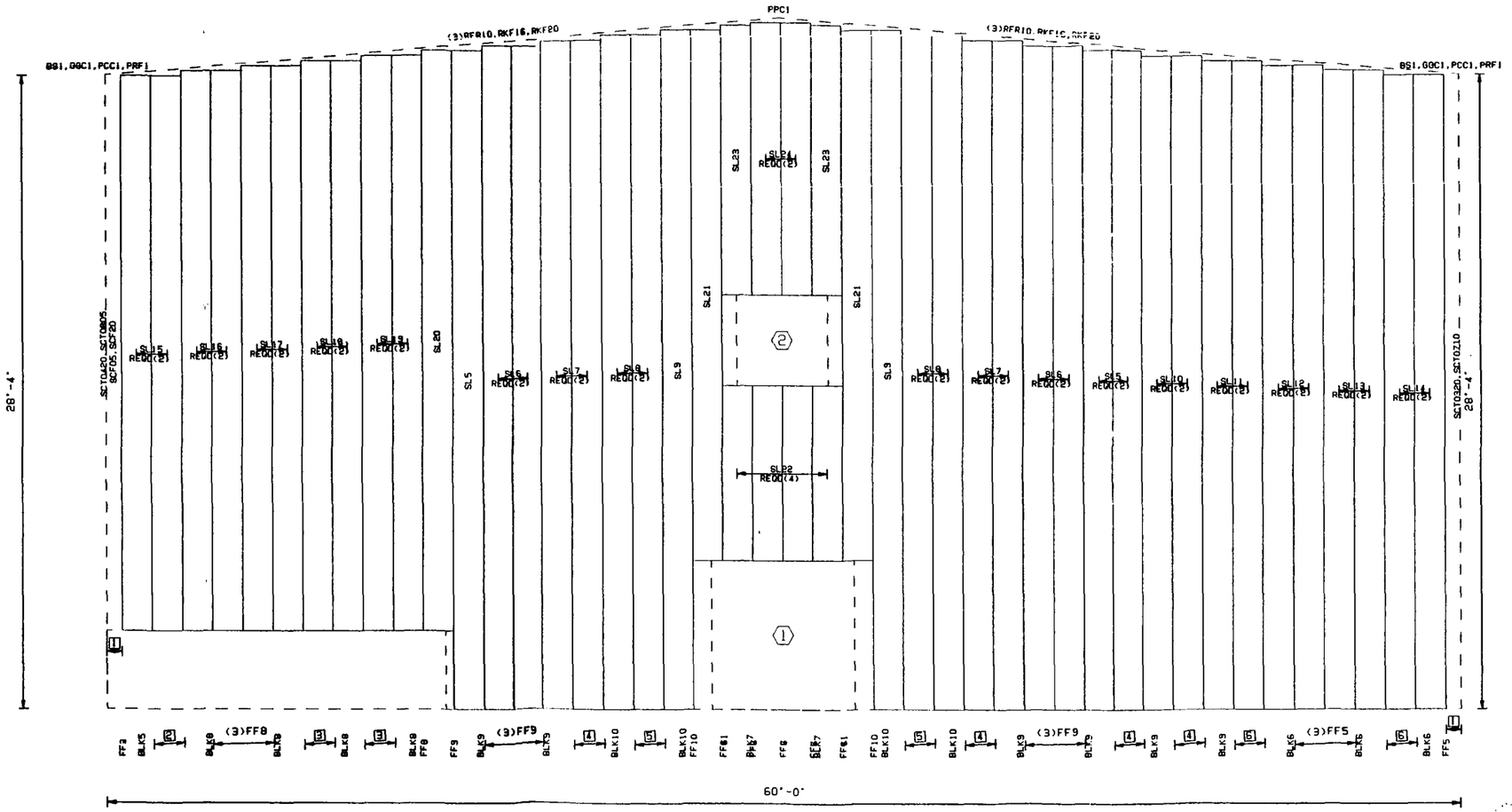

WALL ELEVATION AT SOUTH

5 (2)FF5
5 (2)FF10
4 (2)FF9
3 (2)FF8
2 (2)FF3
1 Start Panel Dim. 8" (Cut Dim.= 8")

REGISTERED No. 18270 STATE OF INDIANA PROFESSIONAL ENGINEER

Dwg: u153.wl Project 25 Bldg: 1 Panel: 4

THIS DRAWING IS SEALED ONLY AS TO THE COMPONENTS FURNISHED BY VARCO-PRUDEN

1. Install Sheeting From Left to Right
2. WALL SHEETS ARE AN INTEGRAL PART OF THE STRUCTURAL SYSTEM REMOVAL OR ALTERATION WITHOUT PRIOR AUTHORIZATION IS PROHIBITED.
3. SEE JOB DETAILS FOR SHEETING AND TRIM FASTENER SPECIFICATION.
2. PRE-DRILLING 1/8 DIAMETER HOLES FOR WALL STRUCTURAL FASTENERS MAY BE REQUIRED AT 11 GAGE GIRTS, NESTED GIRTS, GIRT LAP LOCATIONS, AND/OR SECONDARY STRUCTURAL BEAMS

Building Code:	91UBC
Live Ld(W/O Tab Red):	30.0 psf
Coll. Ld (gravity):	10.0 psf
Coll. Ld (uplift):	0.0 psf
Wind Speed:	85.0 mph
Wind Exp. Cat.:	C
Ground Snow:	30.0 psf
Roof Snow:	30.0 psf
Snow Exp. Cat.:	3
Seismic Zone:	1
Building Use Cat.:	4
Auxiliary Loads	NONE

THIS DRAWING, INCLUDING THE INFORMATION HEREON, REMAINS THE PROPERTY OF VARCO-PRUDEN BUILDINGS, A UNITED DOMINION COMPANY.
IT IS PROVIDED FOR ERECTING THE BUILDING DESCRIBED IN THE APPLICABLE PURCHASE ORDER AND SHALL NOT BE MODIFIED, REPRODUCED OR USED FOR ANY OTHER PURPOSE WITHOUT PRIOR WRITTEN APPROVAL OF VARCO-PRUDEN BUILDINGS.
THE GENERAL CONTRACTOR AND/OR ERECTOR IS SOLELY RESPONSIBLE FOR ACCURATE, GOOD QUALITY WORKMANSHIP IN ERECTING THIS BUILDING IN CONFORMANCE WITH THIS DRAWING, DETAILS REFERENCED IN THIS DRAWING, ALL APPLICABLE VARCO-PRUDEN ERECTION DETAILS AND ALL INDUSTRY STANDARDS PERTAINING TO PROPER ERECTION, INCLUDING THE CORRECT USE OF TEMPORARY BRACING.

Wall Sheeting

REV.	DATE	BY	DESC.

SCALE: NTS

BUILDER: Custom Steel Buildings, Inc.
CUSTOMER: Montgomery Watson
LOCATION: Griffith, IN
PROJECT: 3001 - American Chem. Service
BUILDING: Isar Bldg. #1

QUOTE # ND96023579-001

MBMA METAL BLDG MFG ASSN

VARCO PRUDEN BUILDINGS A UNITED DOMINION COMPANY

JOB # ND9631016-01
DATE 5/3/96
TIME 11:47
DRAW/CHECK RDK
PAGE 16 OF

SECONDARY MARK	LENGTH	THK	DEPTH
2Z00	21'-9"	.120	8.5
2Z010	13'-11"	.059	8.5
2Z011	21'-9"	.072	8.5
2Z012	11'-2"	.059	8.5
2Z013	7'-0 1/2"	.059	8.5
2Z014	13'-11"	.059	8.5
2Z02	2'-0"	.059	8.5
2Z03	2'-3"	.059	8.5
2Z04	21'-9"	.082	8.5
2Z06	14'-9 1/2"	.073	8.5
2Z07	23'-4 1/2"	.059	8.5
2Z08	6'-7 1/2"	.059	8.5
Z01	5'-0"	.059	8.5

FO#	-LOC-	MARK	LENGTH	THK	DEPTH
1	HEADR	CV162	3'-4"	.059	
1	JAMBL	CV158	10'-3"	.059	8.5
1	JAMBR	CV159	10'-3"	.059	
2	HEADR	15CV208	15'-11 1/2"	.059	8.5
2	JAMBL	15CV204	4'-4 5/16"	.059	
2	JAMBL	15FBV202	24'-9"	.062	
2	JAMBR	15CV207	8'-5"	.059	
2	JAMBR	15FBV205	24'-9"	.065	8.5
3	HEADR	16CV201	10'-0"	.059	8.5
3	JAMBL	CV195	14'-9"	.059	
3	JAMBL	CV197	4'-5"	.059	8.5
3	JAMBR	CV195	14'-9"	.059	
3	JAMBR	CV197	4'-5"	.059	
4	HEADR	CV181	4'-0 1/2"	.059	8.5
4	JAMBL	23CV183	9'-9 1/8"	.059	
4	JAMBR	23CV184	9'-1 13/16"	.059	

FO#	-LOC-	MARK	LENGTH	THK	DEPTH
4	SILL	CV181	4'-0 1/2"	.059	

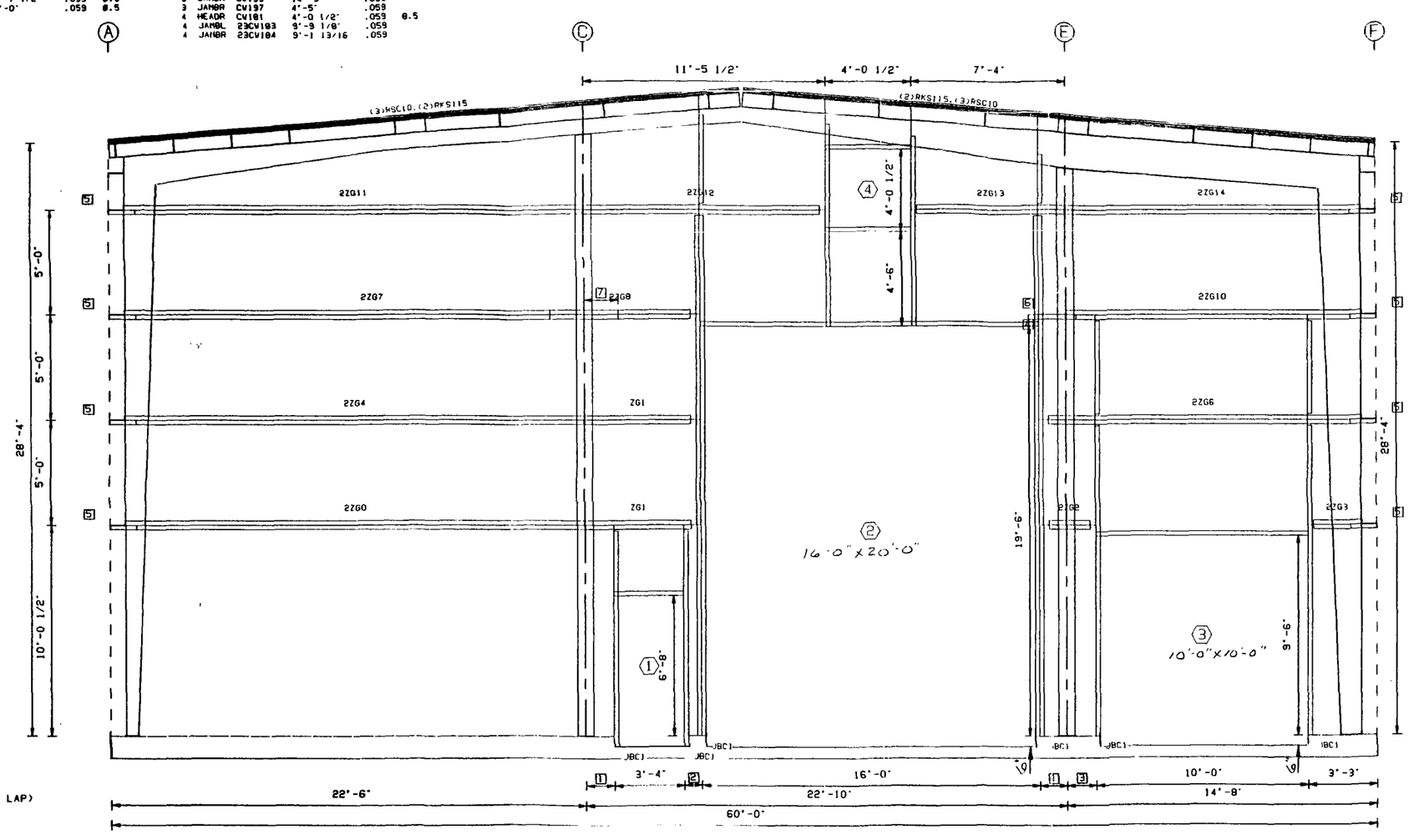

WALL ELEVATION AT NORTH

7 1'-7 1/4" (TYP. LAP)
6 GFA204
5 GFA102
4 JCP052094
3 1'-5"
2 10"
1 1'-4"

Dwg u153.wl Project 25 Bldg: 1 Plane: 2

THIS DRAWING IS SEALED ONLY AS TO THE COMPONENTS FURNISHED BY VARCO-PRUDEN

1. UNLESS NOTED, USE 1/2" DIAMETER A-307 BOLTS FOR GIRT LAP, GIRT TO FRAME, FLANGE BRACE TO FRAME, FLANGE BRACE TO GIRT, JAMB AND HEADER CONNECTIONS. SEE JOB DETAILS FOR BOLT LENGTHS.
2. WIND AND FLANGE BRACING ARE AN INTEGRAL PART OF THE WALL STRUCTURAL SYSTEM AND SHOULD BE PROPERLY INSTALLED PRIOR TO ERECTION OF WALL AND ROOF SHEETS. REMOVAL OR ALTERATION OF WALL BRACING WITHOUT PRIOR AUTHORIZATION IS PROHIBITED

Building Code:	91UBC
Live Ld(W/O Tilt Roof):	30.0 psf
Coll. Ld (gravity):	10.0 psf
Coll. Ld (uplift):	0.0 psf
Wind Speed:	85.0 mph
Wind Exp. Cat.:	C
Ground Snow:	30.0 psf
Roof Snow:	30.0 psf
Snow Exp. Cat.:	3
Seismic Zone:	1
Building Use Cat.:	4
Auxiliary Loads:	NONE

THIS DRAWING, INCLUDING THE INFORMATION HEREON, REMAINS THE PROPERTY OF VARCO-PRUDEN BUILDINGS, A UNITED DOMINION COMPANY. IT IS PROVIDED FOR ERECTING THE BUILDING DESCRIBED IN THE APPLICABLE PURCHASE ORDER AND SHALL NOT BE MODIFIED, REPRODUCED OR USED FOR ANY OTHER PURPOSE WITHOUT PRIOR WRITTEN APPROVAL OF VARCO-PRUDEN BUILDINGS. THE GENERAL CONTRACTOR AND/OR ERECTOR IS SOLELY RESPONSIBLE FOR ACCURATE, GOOD QUALITY WORKMANSHIP IN ERECTING THIS BUILDING IN CONFORMANCE WITH THIS DRAWING. DETAILS REFERENCED IN THIS DRAWING, ALL APPLICABLE VARCO-PRUDEN ERECTION DETAILS AND ALL INDUSTRY STANDARDS PERTAINING TO PROPER ERECTION, INCLUDING THE CORRECT USE OF TEMPORARY BRACING.

REV.	DATE	BY	DESC.

SCALE NTS

Wall Secondary

BUILDER: Custom Steel Buildings, Inc.
CUSTOMER: Montgomery Watson
LOCATION: Griffith, IN
PROJECT: 9001 - American Chem. Service
BUILDING: Test Bldg. #1

QUOTE # HD96023579-001

MBMA METAL BLDG MFG ASSN

VARCO-PRUDEN BUILDINGS A UNITED DOMINION COMPANY

JOB # HD9631016-01
DATE 5/3/96
TIME 1:46
DRAW/CHECK RDL
PAGE 17 OF

REGISTERED No 10200 STATE OF INDIANA PROFESSIONAL ENGINEER

SHEETING			
MARK	LENGTH	THK	COLOR (FINISH)
SL10	29'-2 1/16"	24	Classic Beige (KXL)
SL11	28'-11 7/16"	24	Classic Beige (KXL)
SL12	28'-8 3/4"	24	Classic Beige (KXL)
SL13	28'-6 1/16"	24	Classic Beige (KXL)
SL14	28'-3 7/16"	24	Classic Beige (KXL)
SL21	23'-7 7/16"	24	Classic Beige (KXL)
SL25	23'-4 3/4"	24	Classic Beige (KXL)
SL26	19'-8 1/16"	24	Classic Beige (KXL)
SL27	19'-5 7/16"	24	Classic Beige (KXL)
SL28	19'-2 3/4"	24	Classic Beige (KXL)
SL29	19'-0 1/16"	24	Classic Beige (KXL)
SL30	18'-9 7/16"	24	Classic Beige (KXL)
SL31	11'-0 1/16"	24	Classic Beige (KXL)
SL32	4'-6"	24	Classic Beige (KXL)
SL33	10'-4 1/16"	24	Classic Beige (KXL)
SL34	10'-1 7/16"	24	Classic Beige (KXL)
SL35	9'-10 3/4"	24	Classic Beige (KXL)
SL36	2'-4 1/4"	24	Classic Beige (KXL)
SL37	2'-2 15/16"	24	Classic Beige (KXL)
SL38	2'-1 9/16"	24	Classic Beige (KXL)
SL39	2'-0 1/4"	24	Classic Beige (KXL)
SL40	1'-9 9/16"	24	Classic Beige (KXL)
SL5	29'-4 3/4"	24	Classic Beige (KXL)
SL6	29'-7 7/16"	24	Classic Beige (KXL)
SL7	29'-10 1/16"	24	Classic Beige (KXL)
SL8	30'-0 3/4"	24	Classic Beige (KXL)

INSULATION					
MARK	LENGTH	WIDTH	THICK	TYPE	FACING
FF5	29'-0"	1'-4"	3"	FF	NONE
BLK6	30'-0"	3'-0"	3"	BLK	PSKVR
BLK9	31'-0"	3'-0"	3"	BLK	PSKVR
FF9	30'-0"	1'-4"	3"	FF	NONE
BLK10	32'-0"	3'-0"	3"	BLK	PSKVR
FF10	31'-0"	1'-4"	3"	FF	NONE
FF17	24'-0"	1'-4"	3"	FF	NONE
BLK7	25'-0"	3'-0"	3"	BLK	PSKVR
FF6	18'-0"	1'-4"	3"	FF	NONE
BLK11	13'-0"	3'-0"	3"	BLK	PSKVR
FF14	11'-0"	1'-4"	3"	FF	NONE
BLK12	12'-0"	3'-0"	3"	BLK	PSKVR
FF15	5'-0"	1'-4"	3"	FF	NONE
FF16	3'-0"	1'-4"	3"	FF	NONE
FF12	20'-0"	1'-4"	3"	FF	NONE
FF18	10'-0"	1'-4"	3"	FF	NONE
BLK13	21'-0"	3'-0"	3"	BLK	PSKVR
FF13	19'-0"	1'-4"	3"	FF	NONE

TRIM		
FO# MARK	LENGTH	COLOR (FINISH)
BS1		Patriction Bronze (KXL)
GGC1		Patriction Bronze (KXL)
PCC1		Patriction Bronze (SP)
PPC1		Patriction Bronze (SP)
PRF1		Patriction Bronze (KXL)
RFR10	10'-0"	Patriction Bronze (KXL)
RKF16	16'-3"	Patriction Bronze (KXL)
RKF20	20'-3"	Patriction Bronze (KXL)
SCF10	10'-3"	Classic Beige (KXL)
SCF20	20'-3"	Classic Beige (KXL)
SC10120	20'-3	Classic Beige (KXL)
SC10220	20'-3"	Classic Beige (KXL)
SC10510	10'-3"	Classic Beige (KXL)
SC10610	10'-3"	Classic Beige (KXL)

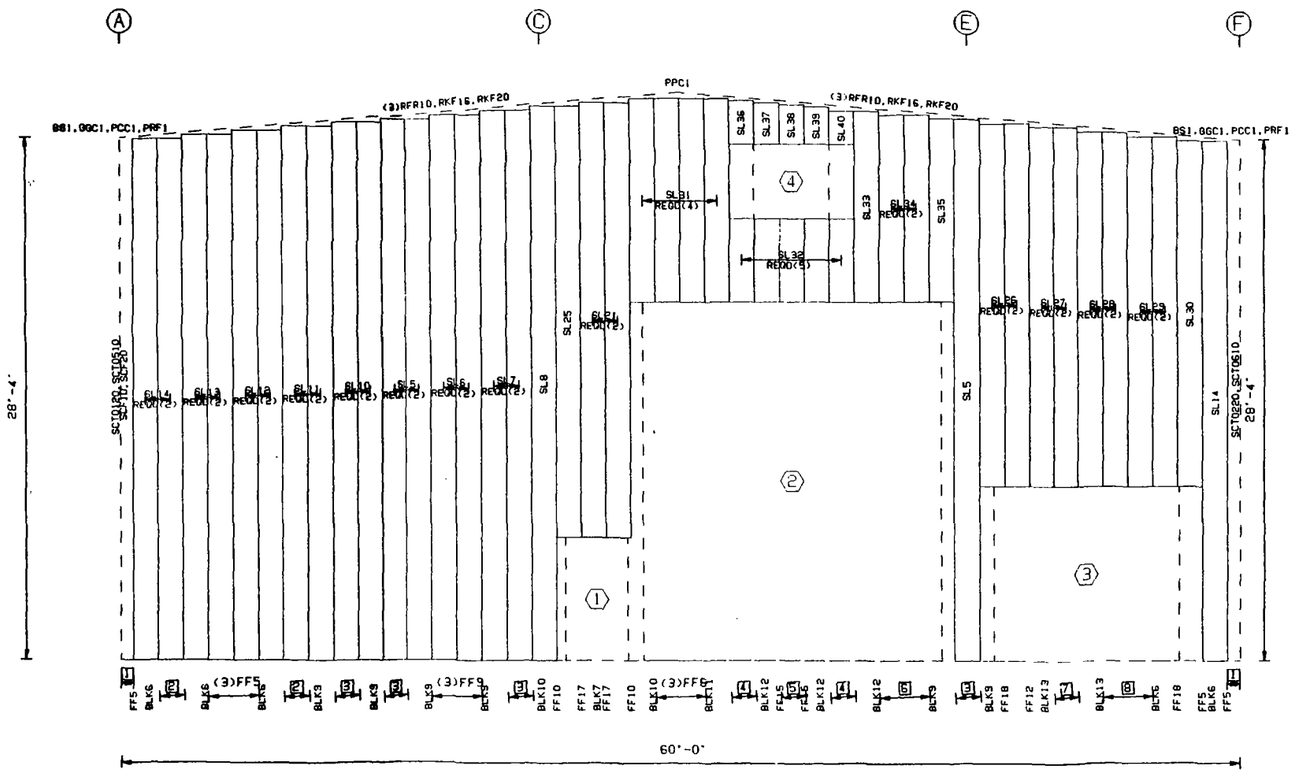

WALL ELEVATION AT NORTH

8 (3)FF12
7 (2)FF12
6 (3)FF14
5 (2)FF16
4 (2)FF14
3 (2)FF9
2 (2)FF5
1 Start Panel Dim. 8" (Cut Dim.= 8")

Ohi u153.wl Projkyl 25 Bldgl 1 Planel 2

THIS DRAWING IS SEALED ONLY AS TO THE COMPONENTS FURNISHED BY VARCO-PRUDEN

1. Install Sheeting From Left to Right
2. WALL SHEETS ARE AN INTEGRAL PART OF THE STRUCTURAL SYSTEM. REMOVAL OR ALTERATION WITHOUT PRIOR AUTHORIZATION IS PROHIBITED.
3. SEE JOB DETAILS FOR SHEETING AND TRIM FASTENER SPECIFICATION.
2. PRE-DRILLING 1/8" DIAMETER HOLES FOR WALL STRUCTURAL FASTENERS MAY BE REQUIRED AT 11 GAGE GIRTS, NESTED GIRTS, GIRT LAP LOCATIONS, AND/OR SECONDARY STRUCTURAL BEAMS

Building Code:	91UBC
Live Ld(W/O Trib Red):	30.0 psf
Coll. Ld (gravity):	10.0 psf
Coll. Ld (uplift):	0.0 psf
Wind Speed:	85.0 mph
Wind Exp. Cat.:	C
Ground Snow:	30.0 psf
Roof Snow:	30.0 psf
Snow Exp. Cat.:	3
Seismic Zone:	1
Building Use Cat.:	4
Auxiliary Loads	NONE

THIS DRAWING, INCLUDING THE INFORMATION HEREON, REMAINS THE PROPERTY OF VARCO-PRUDEN BUILDINGS, A UNITED DOMINION COMPANY. IT IS PROVIDED FOR ERECTING THE BUILDING DESCRIBED IN THE APPLICABLE PURCHASE ORDER AND SHALL NOT BE MODIFIED, REPRODUCED OR USED FOR ANY OTHER PURPOSE WITHOUT PRIOR WRITTEN APPROVAL OF VARCO-PRUDEN BUILDINGS. THE GENERAL CONTRACTOR AND OR ERECTOR IS SOLELY RESPONSIBLE FOR ACCURATE, GOOD QUALITY WORKMANSHIP IN ERECTING THIS BUILDING IN CONFORMANCE WITH THIS DRAWING. DETAILS REFERENCED IN THIS DRAWING, ALL APPLICABLE VARCO-PRUDEN ERECTION DETAILS AND ALL INDUSTRY STANDARDS PERTAINING TO PROPER ERECTION, INCLUDING THE CORRECT USE OF TEMPORARY BRACING.

REV.	DATE	BY	DESC.

SCALE NTS

Wall Sheeting

BUILDER: Custom Steel Buildings, Inc.
CUSTOMER: Montgomery Watson
LOCATION: Griffith, IN
PROJECT: 3001 - American Chem. Service
BUILDING: Test Bldg. #1

QUOTE # N096023579-001

MBMA METAL BLDG MFG ASSN

VARCO PRUDEN BUILDINGS A UNITED DOMINION COMPANY

JOB # N096310016-01
DATE 5/3/96
TIME 1:46
DRAW/CHECK KDE
PAGE 18 OF

REGISTERED No 10749 STATE OF INDIANA PROFESSIONAL ENGINEER

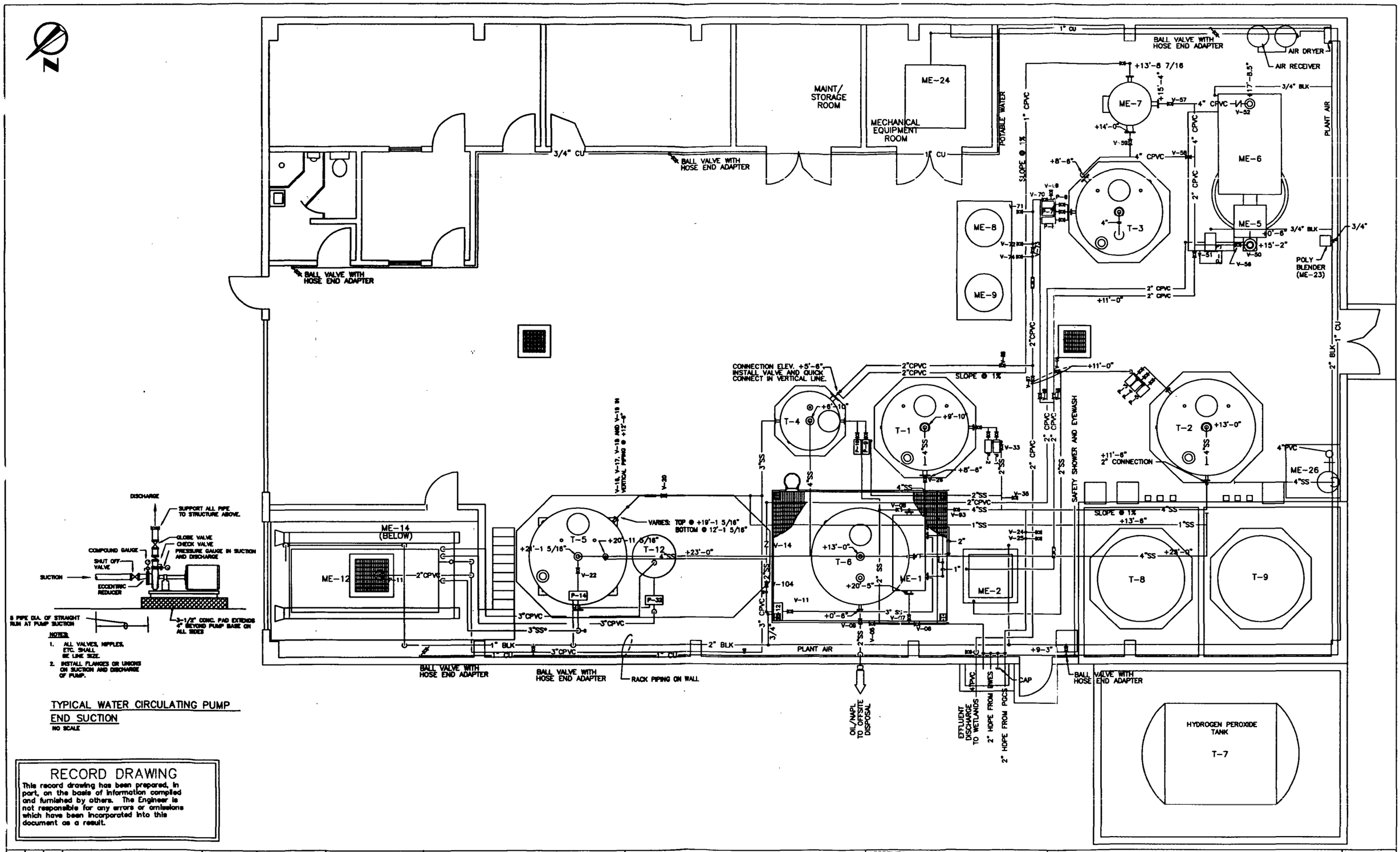

TYPICAL WATER CIRCULATING PUMP
END SUCTION
NO SCALE

RECORD DRAWING

This record drawing has been prepared, in part, on the basis of information compiled and furnished by others. The Engineer is not responsible for any errors or omissions which have been incorporated into this document as a result.

REV	DATE	BY	DESCRIPTION

SCALE: 1/4" = 1'-0"

WARNING: 0 1/2 1 — IF THIS BAR DOES NOT MEASURE 1" THEN DRAWING IS NOT TO SCALE.

DESIGNED BOC
DRAWN BOC
CHECKED BOC

SUBMITTED
PROJECT ENGINEER R. C. E. NO. DATE
MONTGOMERY WATSON CONSULTING ENGINEERS, INC. R. C. E. NO. DATE

MONTGOMERY WATSON
Salt Lake City, Utah

APPROVED DATE
APPROVED DATE

AMERICAN CHEMICAL SERVICE, INC. GRIFFITH, INDIANA
PERIMETER GROUNDWATER CONTAINMENT SYSTEM
PROCESS PIPING LAYOUT

SHEET M1 OF 4 SHEETS

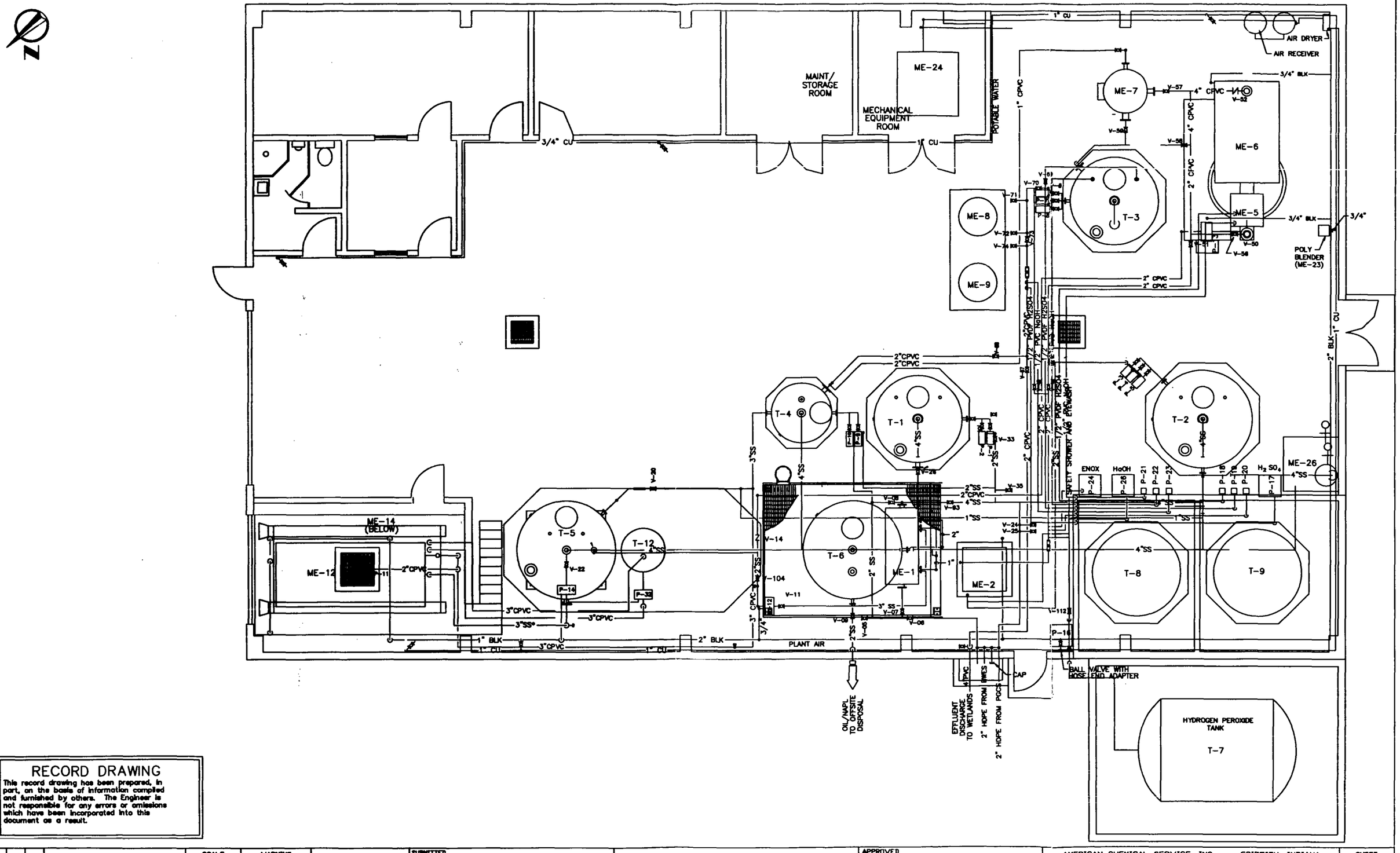

RECORD DRAWING

This record drawing has been prepared, in part, on the basis of information compiled and furnished by others. The Engineer is not responsible for any errors or omissions which have been incorporated into this document as a result.

REV	DATE	BY	DESCRIPTION

SCALE: 1/4" = 1'-0"

WARNING: 0 1/2 1 — IF THIS BAR DOES NOT MEASURE 1" THEN DRAWING IS NOT TO SCALE.

DESIGNED BOC
DRAWN BOC
CHECKED BOC

SUBMITTED
PROJECT ENGINEER R. C. E. No. DATE
MONTGOMERY WATSON CONSULTING ENGINEERS, INC. R. C. E. No. DATE

MONTGOMERY WATSON
Salt Lake City, Utah

APPROVED DATE
APPROVED DATE

AMERICAN CHEMICAL SERVICE, INC. GRIFFITH, INDIANA
PERIMETER GROUNDWATER CONTAINMENT SYSTEM

CHEMICAL PIPING

SHEET M2 OF 4 SHEETS

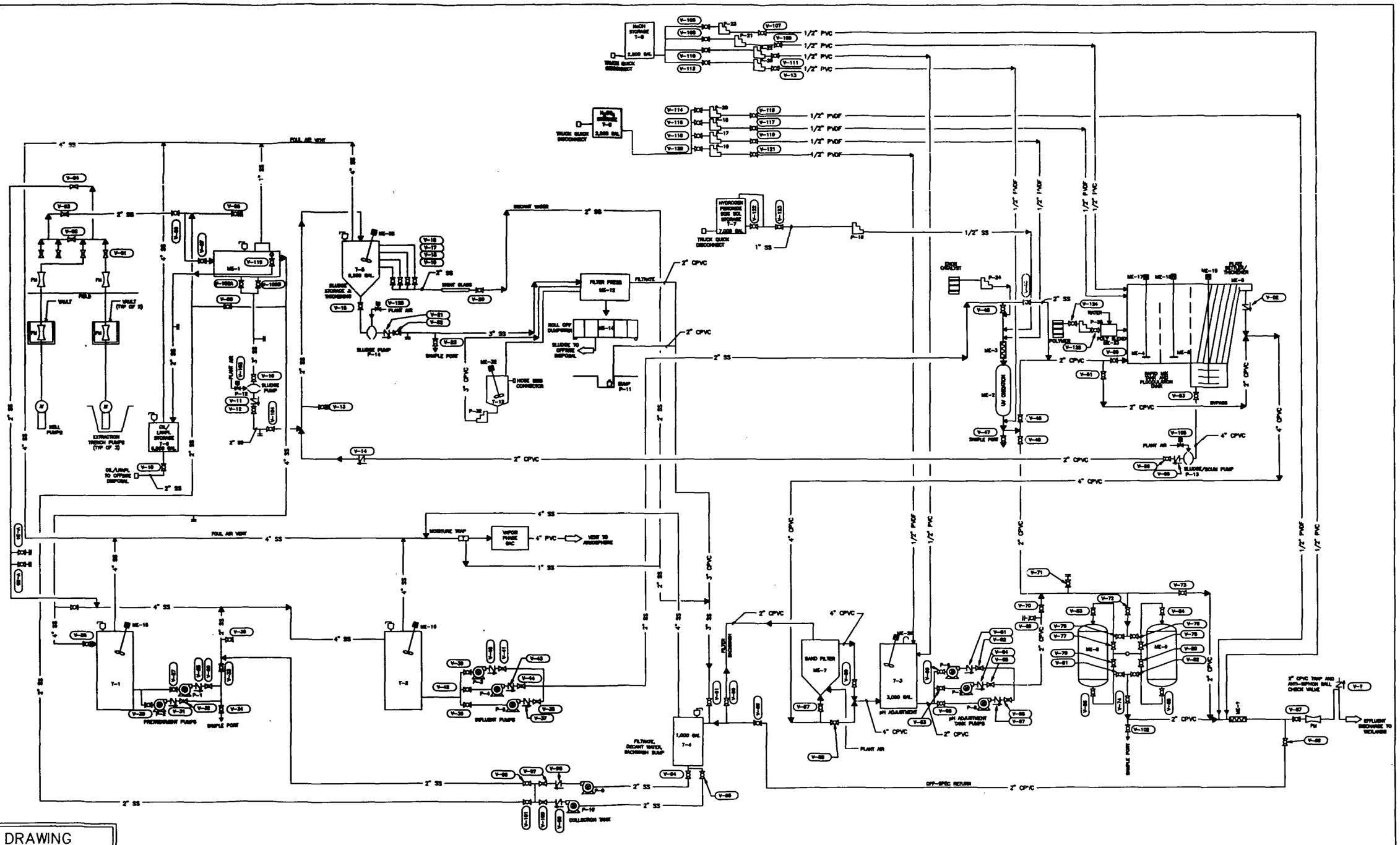

RECORD DRAWING

This record drawing has been prepared, in part, on the basis of information compiled and furnished by others. The Engineer is not responsible for any errors or omissions which have been incorporated into this document as a result.

REV	DATE	BY	DESCRIPTION

SCALE: NONE

WARNING: 0 1/2 1 — IF THIS BAR DOES NOT MEASURE 1" THEN DRAWING IS NOT TO SCALE.

DESIGNED
DRAWN
CHECKED

SUBMITTED
PROJECT ENGINEER R. C. E. NO. DATE
MONTGOMERY WATSON CONSULTING ENGINEERS, INC. R. C. E. NO. DATE

MONTGOMERY WATSON
Salt Lake City, Utah

APPROVED DATE
APPROVED DATE

AMERICAN CHEMICAL SERVICE, INC. GRIFFITH, INDIANA
PERIMETER GROUNDWATER CONTAINMENT SYSTEM

FLOW SCHEMATIC

SHEET M4 OF 4 SHEETS

SETPOINTS ARE NOT INCLUDED ON THE DRAWINGS. THEY WERE INITIALLY ESTABLISHED DURING STARTUP AND TESTOUT OF THE SYSTEMS, BUT THEY ARE CHANGED BY THE OPERATORS AS NEEDED TO ACCOMMODATE THE PARTICULAR OPERATING CONFIGURATION AND FLOWRATE.

ELECTRICAL & INSTRUMENTATION DRAWINGS

Made especially for:

AMERICAN CHEMICAL SERVICE, NPL SITE

PERIMETER GROUNDWATER CONTAINMENT & TREATMENT SYSTEM

SHEET	DESCRIPTION
1	TANKS T1 & T2 INTERFACE CONTROL
2	TANKS T3 & T4 INTERFACE CONTROL
3	TANKS T5, T6, & T7 INTERFACE CONTROL
4	TANKS T8 & T9 INTERFACE CONTROL
5	FLOOR SUMPS
6	CHEMICAL FEED PUMPS & CONTROL
7	CHEMICAL FEED PUMPS & CONTROL CONTINUED
8	AIR DIAPHRAM PUMPS – AIR COMPRESSOR INTERFACE & CONTROL
9	EXTRACTION TRENCH PUMP CONTROL PANELS & INTERFACE
9A	EXTRACTION TRENCH CONTROL CONTINUED
9B	INFLUENT FLOW METERS
.0	FILTER PRESS INTERFACE
11	LAMELLA CONTROL PANEL & INTERFACE
11A	LCP–3 CONTINUED
12	LAMELLA INTERFACE CONTINUED
13	LAMELLA CLARIFIER PANEL
14	LEVEL SWITCH MOUNTING
15	FINAL EFFLUENT DETAIL
16	MASTER CONTROL PANEL
16A	MCP ANNUNCIATOR LIGHTS

SHEET	DESCRIPTION
17	POWER ONE–LINE DIAGRAM
18	PANEL BOARD SCHEDULES
19	CONDUIT FLOOR PLAN
20	CONDUIT & WIRE SCHEDULE
21	PUMP & MIXER WIRING
22	PUMP & MIXER WIRING CONTINUED
23	PUMP VFD WIRING
24	VARIABLE SPEED DRIVE
25	PANEL LIGHT WIRING
26	BILL OF MATERIAL
27	PLC I/O SCHEDULE
27A	PLC I/O SCHEDULE CONTINUED
27B	CONDUIT SCHEDULE
27C	UV UNIT ELECTRICAL INSTALLATION
27D	UV UNIT PLC INTERFACE

PRECISION
CONTROL SYSTEMS

PRECISION
CONTROL SYSTEMS OF INDIANAPOLIS
7141 W. MORRIS ST. INDPLS, IN 46241
TEL. (317) 241-3000
FAX. (317) 247-6837

ELECTRICAL & INSTRUMENTATION DRAWINGS
Made especially for:
AMERICAN CHEMICAL SERVICE, NPL SITE
PERIMETER GROUNDWATER CONTAINMENT & TREATMENT SYSTEM
EC: PRECISION ENGR: WATSON CONTR: BOWEN

TITLE SHEET

CODE	REVISION	BY	DATE
1	AS–BUILTS	JMS	01/09/97

SHEET: 0 OF: 27
JOB#: P6927
ENG: TOW
DRW: JMS
REL: 12/05/96

SIEBE ENVIROMENTAL CONTROLS

Tank T-1

The pretreatment tank is equipped with level switches to provide operating range control for the tank mixer motor, pre-treatment pump, and a high-high level alarm at the master control panel. When tank level is between LSL-1 and LSH-1, the mixer motor and lead pre-treatment pump is started by the PLC. If the tank level drops below LSL-1, then the PLC stops the mixer and operating pump(s). If the tank level rises to LSHH-1, then the PLC starts the lag pre-treatment pump. If the tank level rises to LAH-1, an alarm is sounded at the master control panel and the PLC stops all trench extraction pumps. On LAH-1 alarm, the tank level must drop below LSH-1 before the extraction pumps are re-started. The pre-treatment pumps are automatically alternated on successive starts. If the lead pump fails, the lag pump will automatically be started and issue an alarm.

Equalization Tank T-2

Tank level indicating transmitter LE/LIT-2 will transmit the continuous tank level via a 4-20mA signal to the PLC (4mA = 10" of water, 20mA = ??). When the water level is between ____ft and ____ft, the tank mixer and lead pump are started. All (3) influent pumps (P3, P4, & P5) are equipped with variable speed drives so once the pump is started, it is modulated via the PLC to maintain the flow rate setpoint as reported by the UV oxidation unit. The PLC then place the lead pump to maintain the GPM flow through the UV oxidation unit magnetic (10GPM min.) flow meter. The magnetic flow meter reports a 4-20mA signal to the PLC. If the lead pump is unable to maintain UV unit flow setpoint (for any reason), then the lag pump is automatically started. When the lag pump is started, the PLC will automatically ramp down the lead pump speed to match the lag speed, and the pump speeds are ramped up and down together. If both pumps speed drops below ____Hertz, indicating a reduced flow requirement, then the lag pump is stopped (first on - first off). Pump P5 is alternated similarly with P3 & P4 in a first on - first off fashion to equalize run time. If the tank level drops below ___in. of water, then the influent pumps and mixer are stopped. If the tank level rises above ____in., then the pre-treatment pumps, extraction pumps, and collection pumps are stopped. A high level alarm shall be annunciated on the operators terminal, and the alarm must be manually reset on the terminal before the system will resume auto operation. On high level alarm the tank level must drop below _____in. before the pumps will resume operation. On high Ph adjustment tank level of (____ft.), or UV oxidation unit failure, the pumps will be shutdown.

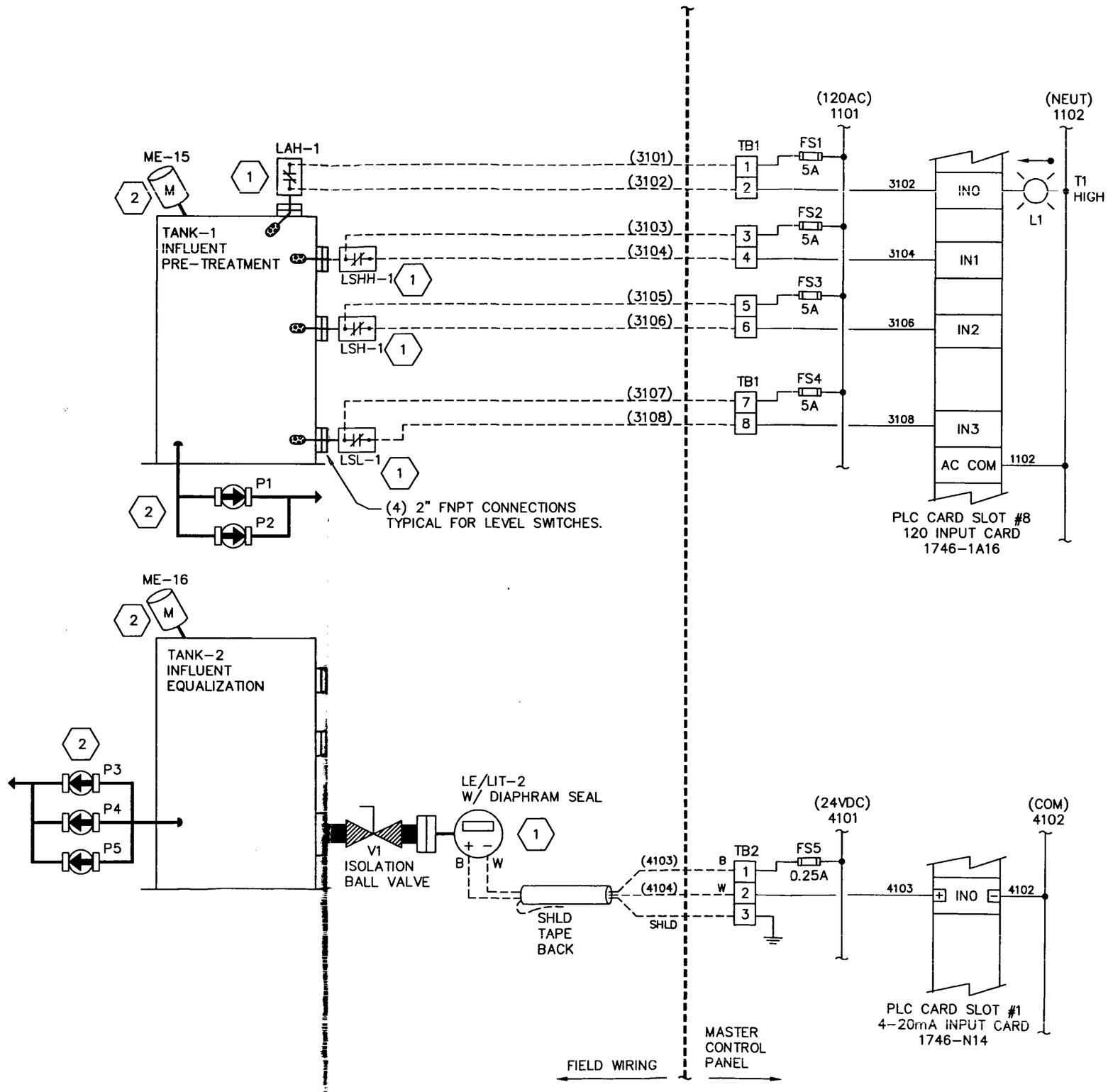

PLAN NOTES:

1. FOR DETAIL INSTRUMENT MOUNTING & OPERATION SEE BINDER SECTION #1 & #4.
2. SEE MIXER AND PUMP WIRING DETAILS ON SHEET #17 & #21.

PRECISION
CONTROL SYSTEMS OF INDIANAPOLIS
7141 W. MORRIS ST. INDPLS, IN 46241
TEL. (317) 241-3000
FAX. (317) 247-6837

ELECTRICAL & INSTRUMENTATION DRAWINGS
Made especially for:
AMERICAN CHEMICAL SERVICE, NPL SITE
PERIMETER GROUNDWATER CONTAINMENT & TREATMENT SYSTEM
EC: PRECISION | ENGR: WATSON | CONTR: BOWEN

TITLE: TANKS T1 & T2 INTERFACE & CONTROL

CODE	REVISION	BY	DATE

SHEET: 1 OF: 27
JOB#: P6927
ENG: TOW
DRW: JMS
REL: 12/05/96

SEQUENCE OF CONTROL

Tank–3 pH Adjustment

'el indicating transmitter LE/LIT–3 transmits a 4–20mA ,nal to the PLC to report the continuous tank level (4mA = ___ft., 20mA = ___ft.). Ph indicating transmitter, PH–3, transmits a 4–20mA signal to the PLC to continuously report tank Ph (4mA = 0Ph; 20mA = 14Ph). When the tank level is between __ft and __ft., the PLC starts the mixer and lead pump. Pump speed is modulated via a variable speed drive to maintain a tank level setpoint of __ft. If the lead pump can not maintain setpoint, then lag pump starts. When the lag pump is started the PLC will automatically ramp down the lead pump to match the lag speed. Then the PLC will maintain equal pump speed and ramp both VSD's up and down together. When the (2) pumps' speed drop below ___Hz., indicating a reduced flow requirement, the lag pump is stopped. Pumps P6, P7, and P8 are alternated on successive starts where the lag becomes the lead each time and the lead is stopped (first on – first off). If the tank level drops __ft., then P6, P7, and P8 are stopped and the mixer is stopped. If the tank level rises above ___ft., then the influent pumps P3, P4, and P5 are stopped, and a high level alarm is annunciated at the operator's panel. On a high level alarm, the tank level must drop below __ft. before the pumps will resume operation.

The PLC will maintain the Ph at 7.5 by AUTOMATICALLY injecting NAOH if the Ph is below setpoint, and H2SO4 if the Ph is above setpoint. High and low Ph alarms of 8.5 and 6.5 respectively are reported to operator's terminal.

Tank–4 Process Sump

When tank level rises above LSH–4, the lead pump (P9 or P10) is started and run until the tank level drops below LSL–4. On successive starts, the pumps are alternated. If one pump fails, an alarm is displayed at the operator's terminal and the other pump AUTO STARTS. If tank level rises above LSHH–4, an alarm is issued at the operator's terminal.

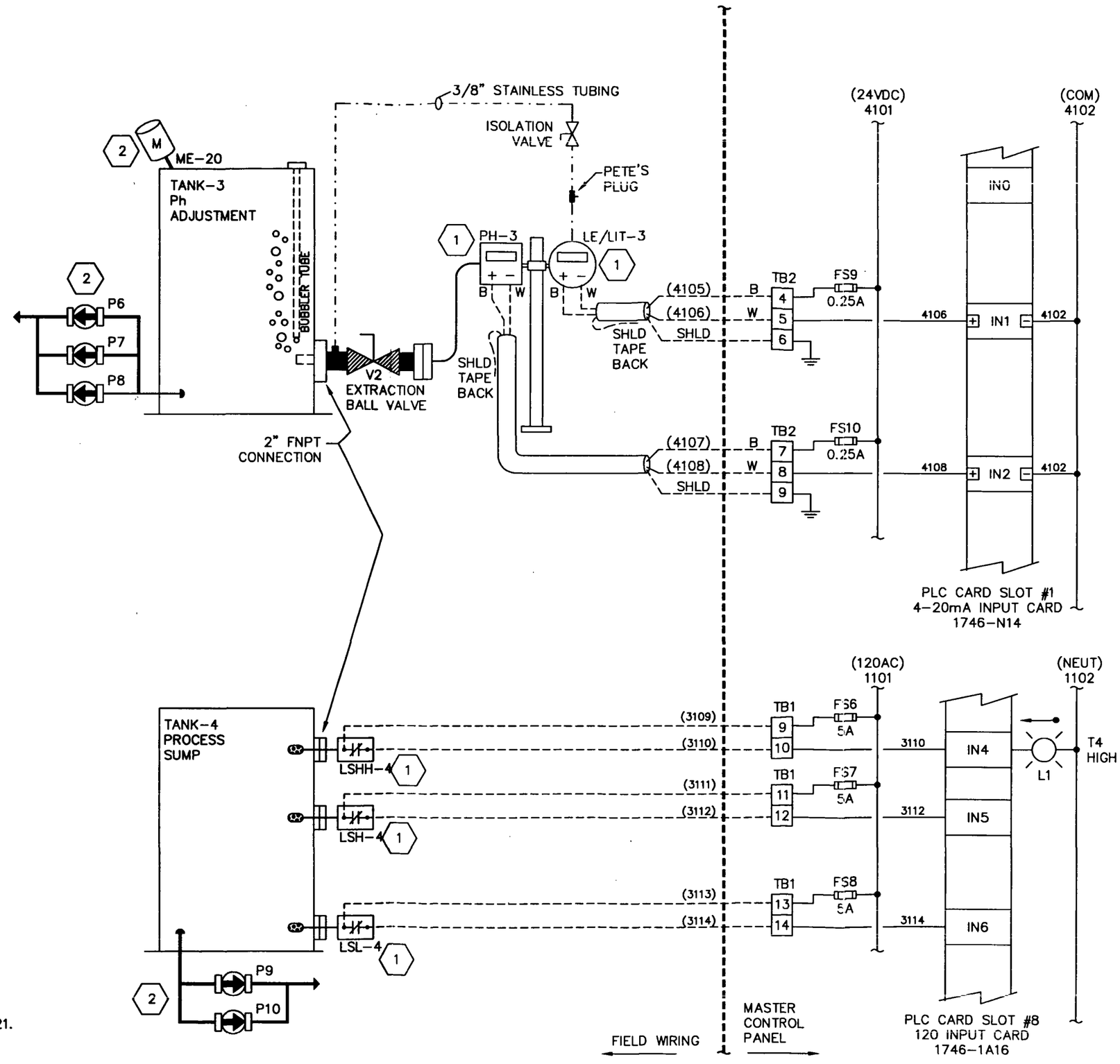

PLAN NOTES:

FOR DETAIL INSTRUMENT MOUNTING & OPERATION SEE BINDER SECTION #1 & #4.

(2) SEE MIXER AND PUMP WIRING DETAILS ON SHEET #17 & #21.

PRECISION
CONTROL SYSTEMS OF INDIANAPOLIS
7141 W. MORRIS ST. INDPLS, IN 46241
TEL. (317) 241-3000 FAX. (317) 247-6837

ELECTRICAL & INSTRUMENTATION DRAWINGS
Made especially for:
AMERICAN CHEMICAL SERVICE, NPL SITE
PERIMETER GROUNDWATER CONTAINMENT & TREATMENT SYSTEM
EC: PRECISION | ENGR: WATSON | CONTR: BOWEN

TITLE: TANKS T3 & T4 INTERFACE & CONTROL

CODE	REVISION	BY	DATE
1	AS-BUILTS	JMS	01/09/97

JOB#: P6927
ENG: TOW
DRW: JMS
REL: 12/05/96

SHEET: 2 OF: 27

SEQUENCE OF CONTROL

Tank-5 Sludge Storage & Thickening

The operation of sludge pumps P14 & P15 is manually ated from the local start/stop operators station ation. When the tank sludge level reaches level switch LAH-5, an alarm is issued at the control panel indicating it is time to process sludge. At this time, the operator manually starts P14 or P15 to transfer sludge to the filter press. When the sludge is above LSL-5, mixer ME-22 is AUTOMATICALLY ENERGIZED.

Tank-6 Oil Storage

If oil level rises above LSH-6, an alarm is issued to notify the operator's terminal that it is time to empty the tank.

Tank-7 Peroxide Storage

If fluid level drops below LSL-7, an alarm message will be issued to the operators terminal to notify that it is time to refill peroxide tank.

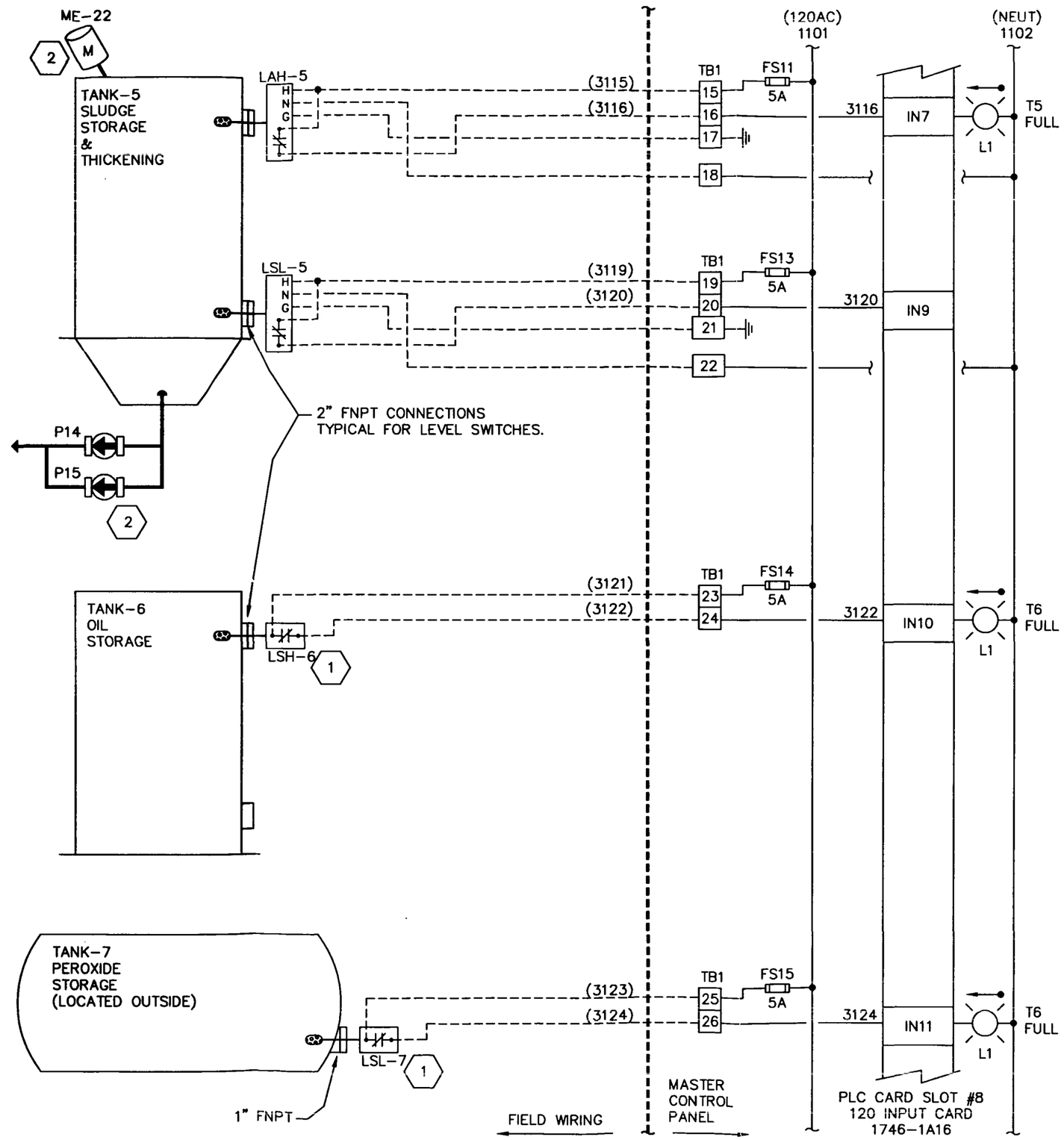

PLAN NOTES:

1. FOR DETAIL INSTRUMENT MOUNTING & OPERATION SEE BINDER SECTION #4.
2. SEE MIXER AND PUMP WIRING DETAILS ON SHEET #17 & #21.

PRECISION
CONTROL SYSTEMS OF INDIANAPOLIS
7141 W. MORRIS ST. INDPLS, IN 46241
TEL. (317) 241-3000
FAX. (317) 247-6837

ELECTRICAL & INSTRUMENTATION DRAWINGS
Made especially for:
AMERICAN CHEMICAL SERVICE, NPL SITE
PERIMETER GROUNDWATER CONTAINMENT & TREATMENT SYSTEM
EC: PRECISION | ENGR: WATSON | CONTR: BOWEN

FILE: TANKS T5, T6, & T7 INTERFACE & CONTROL

CODE	REVISION	BY	DATE

SHEET: 3 OF: 27
JOB#: P6927
ENG: TOW
DRW: JMS
REL: 12/05/96

SEQUENCE OF CONTROL

Tank-8 NaOH storage

If tank level drops below LSL-8, an alarm is issued at the operator's terminal indicating it is time to refill the tank.

Tank-9 H_2SO_2 Storage

If the tank level drops below LSL-9, an alarm is issued at the operator's terminal it is time to refill the tank.

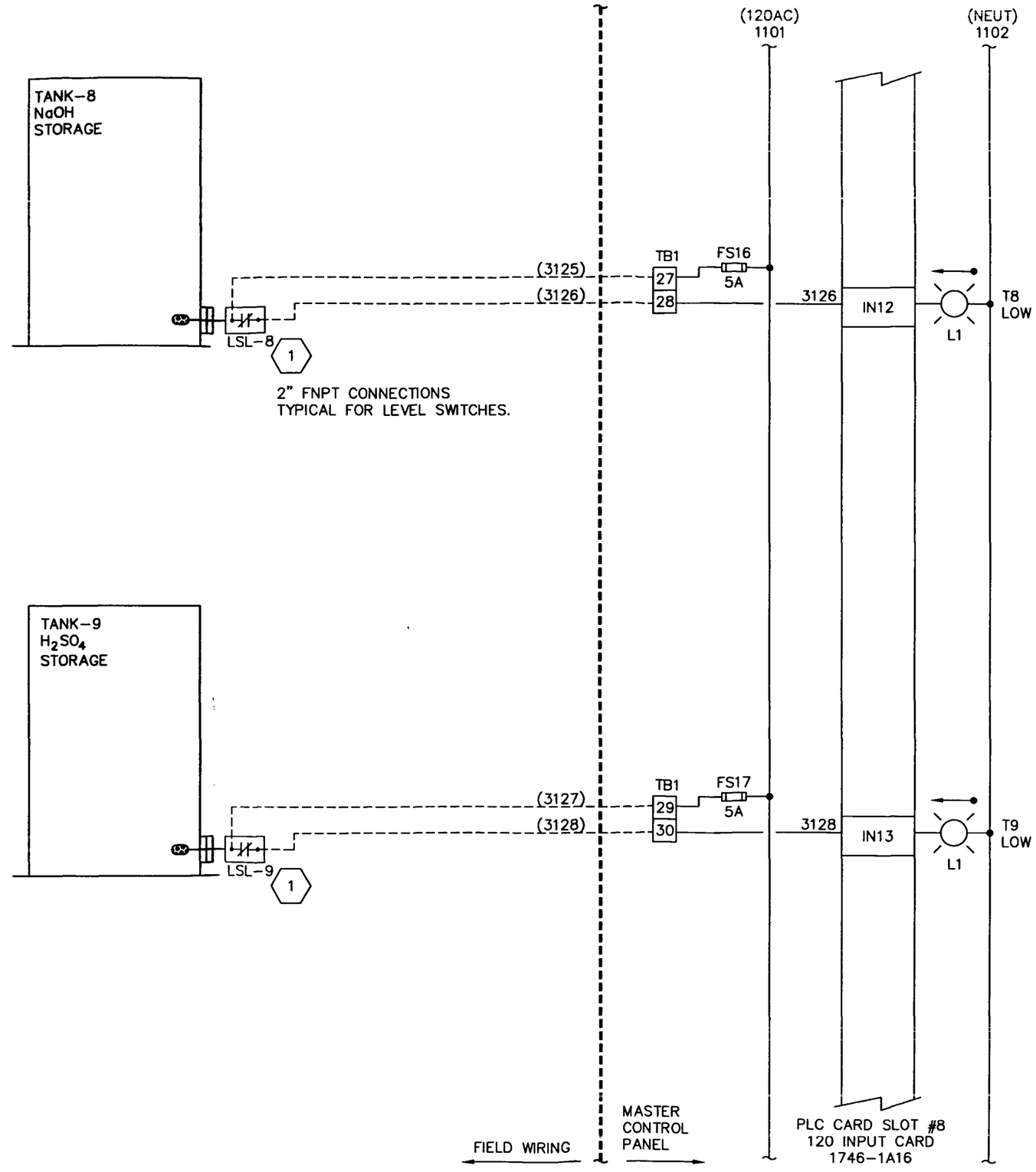

PLAN NOTES:

1. FOR DETAIL INSTRUMENT MOUNTING & OPERATION SEE BINDER SECTION #4.

PRECISION
CONTROL SYSTEMS OF INDIANAPOLIS
7141 W. MORRIS ST. INDPLS, IN 46241
TEL. (317) 241-3000
FAX. (317) 247-6837

ELECTRICAL & INSTRUMENTATION DRAWINGS
Made especially for:
AMERICAN CHEMICAL SERVICE, NPL SITE
PERIMETER GROUNDWATER CONTAINMENT & TREATMENT SYSTEM
EC: PRECISION ENGR: WATSON CONTR: BOWEN

TITLE: TANKS T8 & T9 INTERFACE & CONTROL

CODE	REVISION	BY	DATE
1	AS-BUILTS	JMS	01/09/97

SHEET: 4 OF: 27
JOB#: P6927
ENG: TOW
DRW: JMS
REL: 12/05/96

SEQUENCE OF CONTROL

Floor Sump Pump P-11

Pump P-11 is a self-contained unit with internal float switches to cycle pump ON/OFF to keep sump dewatered. Unit is self contain and automatic. No connection to PLC system.

SEQUENCE OF CONTROL

Process Area Floor Sumps

These (2) sumps have high level float switches LSH-10A & LSH-10B respective that alarm the operators terminal if the self contained sump pump package fails. The sump pump cycles from its internal float switches, and there is no other connection.

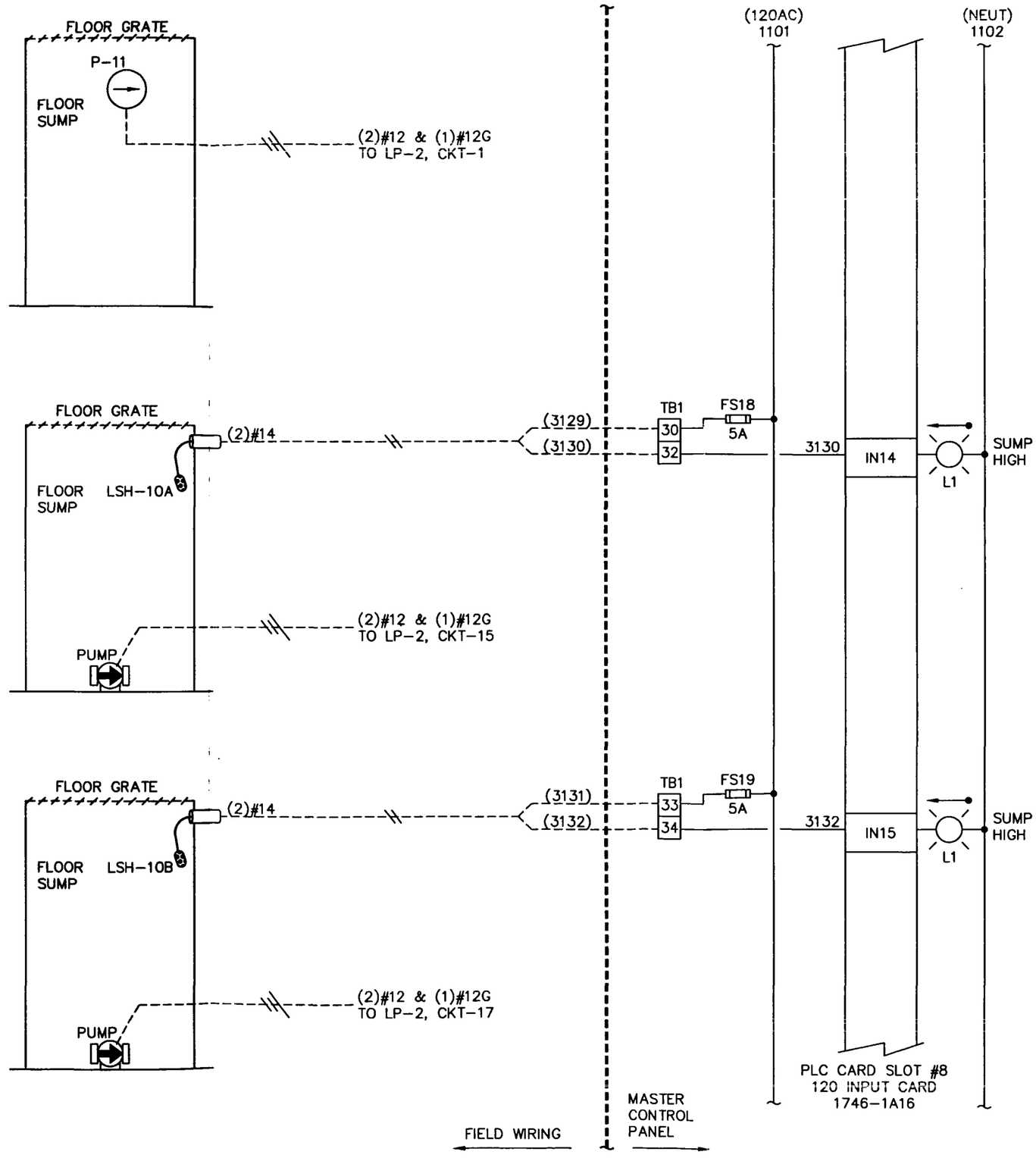

PRECISION
CONTROL SYSTEMS OF INDIANAPOLIS
7141 W. MORRIS ST. INDPLS, IN 46241
TEL. (317) 241-3000
FAX. (317) 247-6837

ELECTRICAL & INSTRUMENTATION DRAWINGS
Made especially for:
AMERICAN CHEMICAL SERVICE, NPL SITE
PERIMETER GROUNDWATER CONTAINMENT & TREATMENT SYSTEM
EC: PRECISION | ENGR: WATSON | CONTR: BOWEN

TITLE: FLOOR SUMP

CODE	REVISION	BY	DATE
1	AS-BUILTS	JMS	01/09/97

SHEET: 5 OF: 27
JOB#: P6927
ENG: TOW
DRW: JMS
REL: 12/05/96

SEQUENCE OF CONTROL

H_2SO_4 Chemical Pumps & NaOH Chemical Pumps

Pump P19 & P22 serve the pH adjustment tank. The pH sensors in the pH adjustable tank will automatically reset the dosing rate of P19 & P22 to maintain the adjustable setpoint of _____pH units. The 4–20mA output signal from the PLC will adjust the dosing rate. The stroke length is adjustable from the manual control on the front of the pump. If the pH adjustment or tank mixer pumps are stopped, P19 and P22 are stopped.

Pumps P20 and 23 serve to treat the final effluent discharge. Final effluent discharge sensor PH–801 transmits a 4–20mA signal to the PLC. The PLC resets its 4–20mA output signals to P20 and P32 to maintain the adjustable setpoint of ____ pH units. The 4–20mA signal from the PLC will adjust the dosing rate and the stroke length is adjustable from the manual control on the front of the pump. If pH adjustment tank pumps P6, P7, & P8 are stopped, then P20 and P23 are stopped.

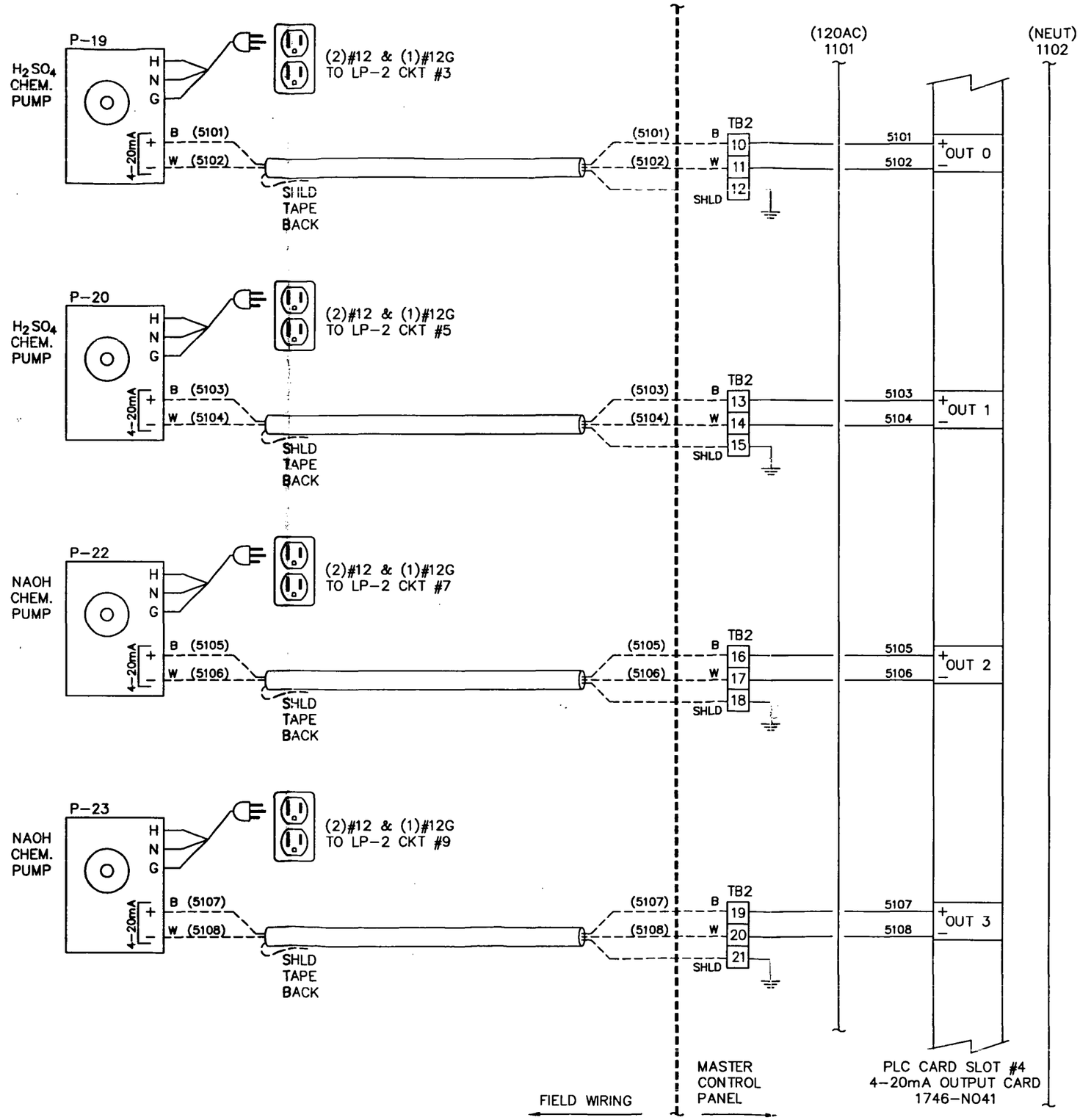

PRECISION
CONTROL SYSTEMS OF INDIANAPOLIS
7141 W. MORRIS ST. INDPLS, IN 46241
TEL. (317) 241–3000
FAX. (317) 247–6837

ELECTRICAL & INSTRUMENTATION DRAWINGS
Made especially for:
AMERICAN CHEMICAL SERVICE, NPL SITE
PERIMETER GROUNDWATER CONTAINMENT & TREATMENT SYSTEM
EC: PRECISION | ENGR: WATSON | CONTR: BOWEN

CHEMICAL FEED PUMPS INTERFACE & CONTROL

CODE	REVISION	BY	DATE

SHEET: 6 OF: 27
JOB #: P6927
ENG: TOW
DRW: JMS
REL: 12/05/96

SEQUENCE OF CONTROL

NaOH & H_2SO_4 Chemical Pumps

NaOH & H_2SO_4 Chemical pumps P-18 and P-21 serve to treat the rapid mix tank. The pH transmitter in the rapid mix tank transmits a 4-20mA signal to the PLC (4Ma = 0pH; 20mA = 14pH). The PLC resets its 4-20mA output signals to P-18 and P-21 to maintain the adjustable setpoint of ____pH units. The 4-20mA signal will affect the dosing rate. Stroke length is adjustable from the manual control on the face of the pump. If influent flow to the clarifier is stopped P-18 and P-21 are stopped. The operator's terminal is annunciated if the pH exceeds ____pH or drops below _____pH.

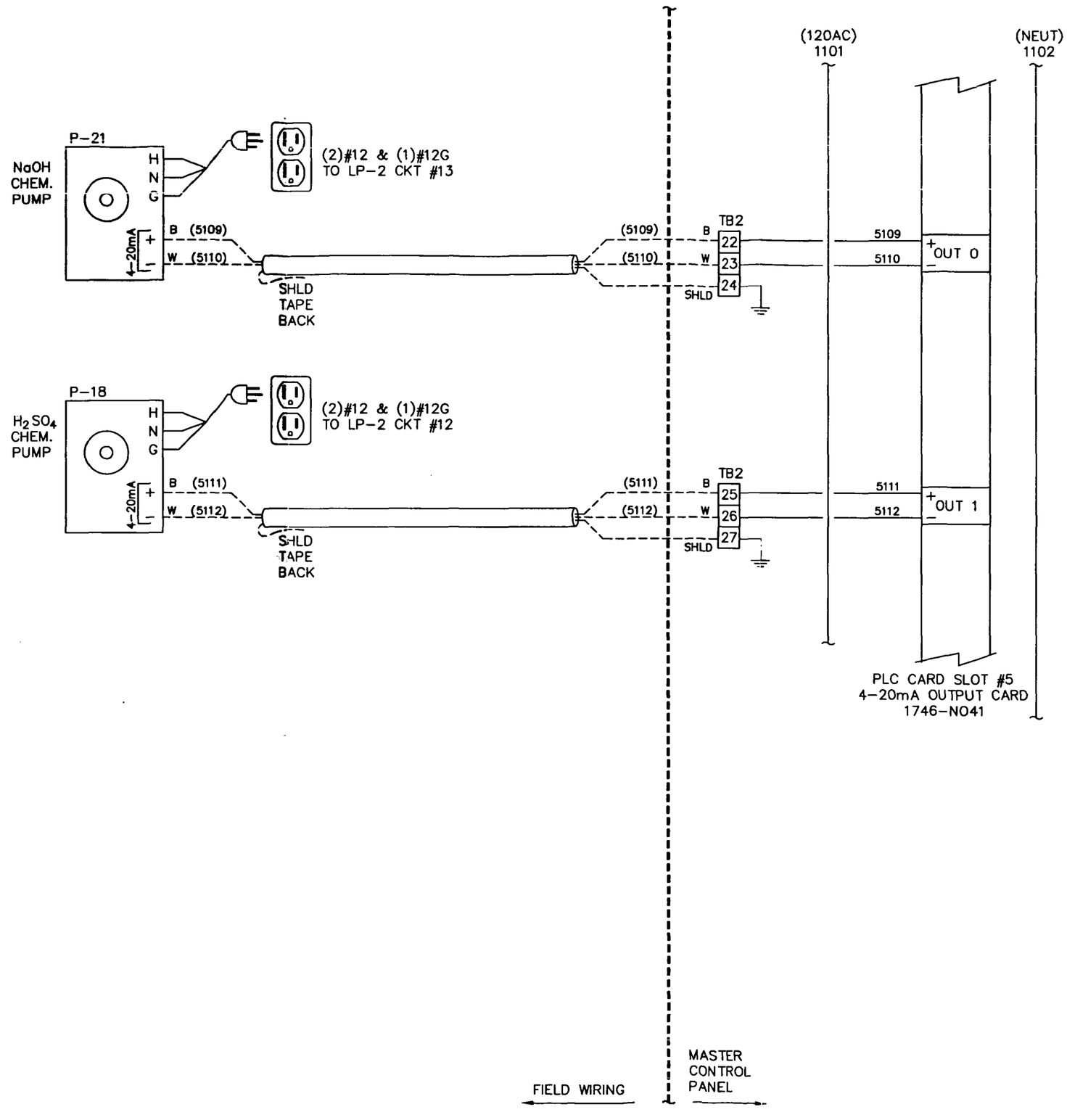

PRECISION
CONTROL SYSTEMS OF INDIANAPOLIS
7141 W. MORRIS ST. INDPLS, IN 46241
TEL. (317) 241-3000
FAX. (317) 247-6837

ELECTRICAL & INSTRUMENTATION DRAWINGS
Made especially for:
AMERICAN CHEMICAL SERVICE, NPL SITE
PERIMETER GROUNDWATER CONTAINMENT & TREATMENT SYSTEM
EC: PRECISION | ENGR: WATSON | CONTR: BOWEN

TITLE: CHEMICAL FEED PUMPS INTERFACE & CONTROL

CODE	REVISION	BY	DATE

SHEET: 7 OF: 27
JOB#: P6927
ENG: TOW
DRW: JMS
REL: 12/05/96

SEQUENCE OF CONTROL

Air Diaphragm Pump P–12

P–12 is used to transfer sludge collected from the phase separator ME–1 to the sludge storage tank T–5, based upon a user adjustable recycle timer in the PLC.

Air Diaphragm pump P–13

P–13 is used to transfer sludge collected from the Lamella Clarifier ME–6 to the sludge storage tank T–5, based upon a user adjustable recycle timer in the PLC.

Control Air Compressor

Pressure switch PS–701 alerts the operators terminal if the control air supply drops below a user adjustable setpoint.

PLAN NOTES:

( ) HOA SWITCH IS PEDESTAL MOUNTED IN CLOSE PROXIMITY TO REPECTIVE PUMP.

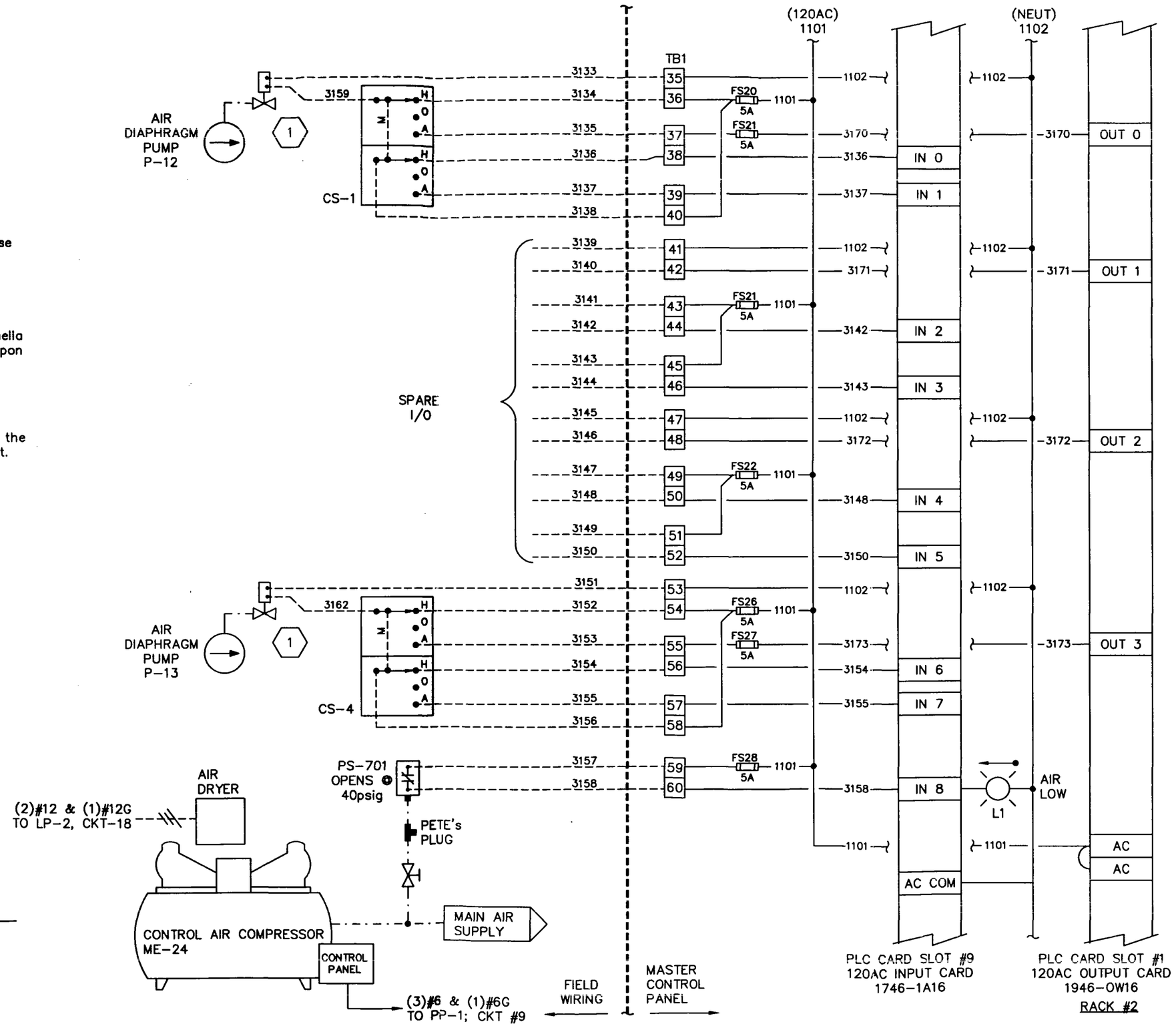

PRECISION
CONTROL SYSTEMS OF INDIANAPOLIS
7141 W. MORRIS ST. INDPLS, IN 46241
TEL. (317) 241–3000 FAX. (317) 247–6837

ELECTRICAL & INSTRUMENTATION DRAWINGS
Made especially for:
AMERICAN CHEMICAL SERVICE, NPL SITE
PERIMETER GROUNDWATER CONTAINMENT & TREATMENT SYSTEM
EC: PRECISION ENGR: WATSON CONTR: BOWEN

TITLE: AIR DIAPHRAM PUMPS; COMP. INTERCONNECT & CONTROL

CODE	REVISION	BY	DATE
1	AS–BUILTS	JMS	01/09/97

JOB#: P6927
ENG: TOW
DRW: JMS
REL: 12/05/96

SHEET: 8 OF: 27

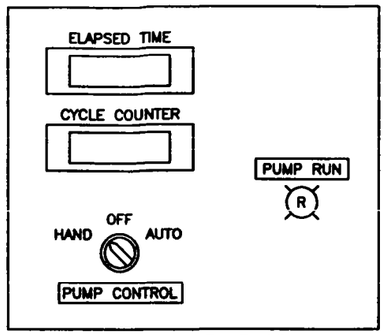

MCC STARTER PANEL FACE

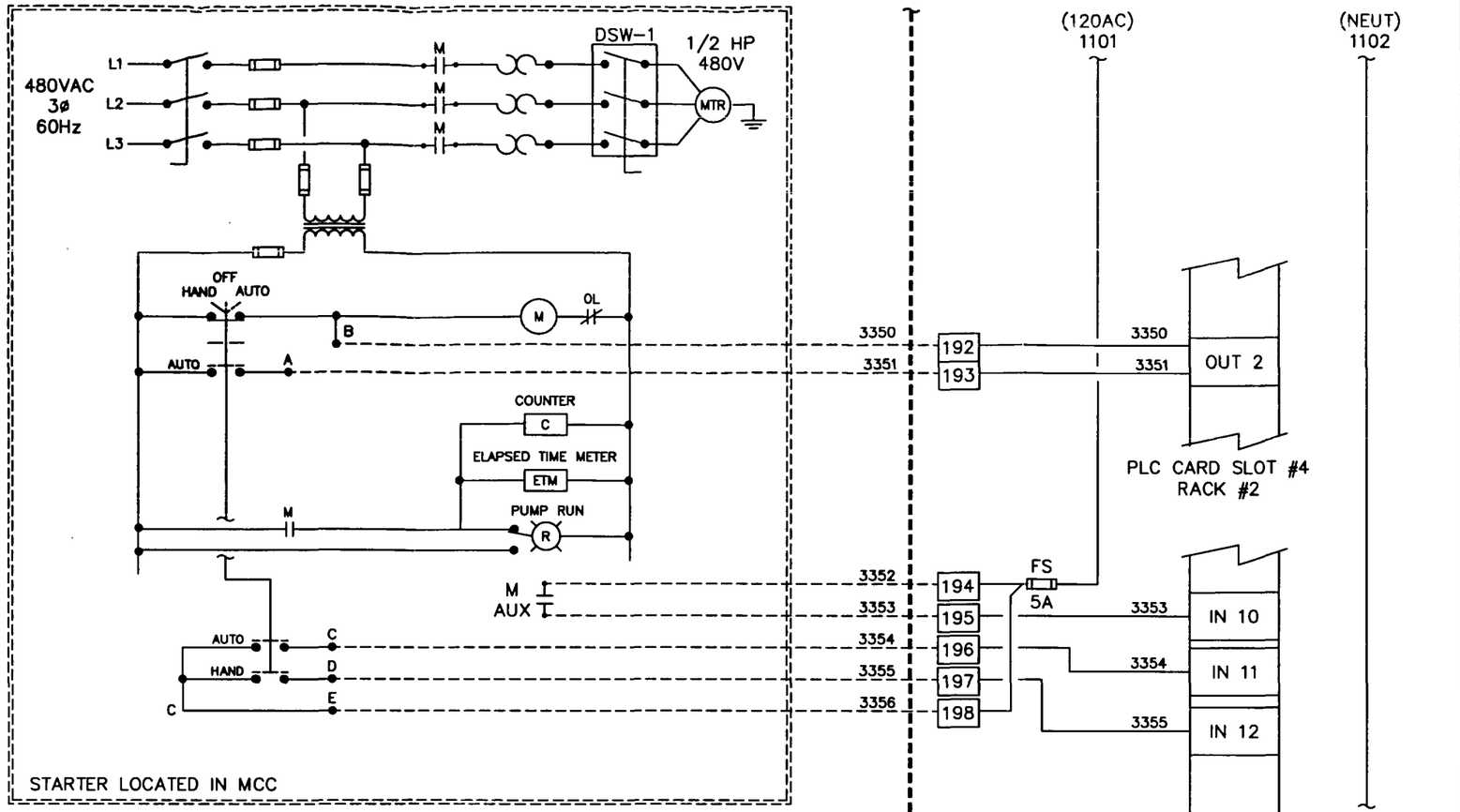

P6927 9B TYPICAL EXTRACTION SUMP PUMP MOTOR CONTROL DIAGRAM

TYPICAL OF THREE(3) SUMPS PGCS SUMP #1 SHOWN

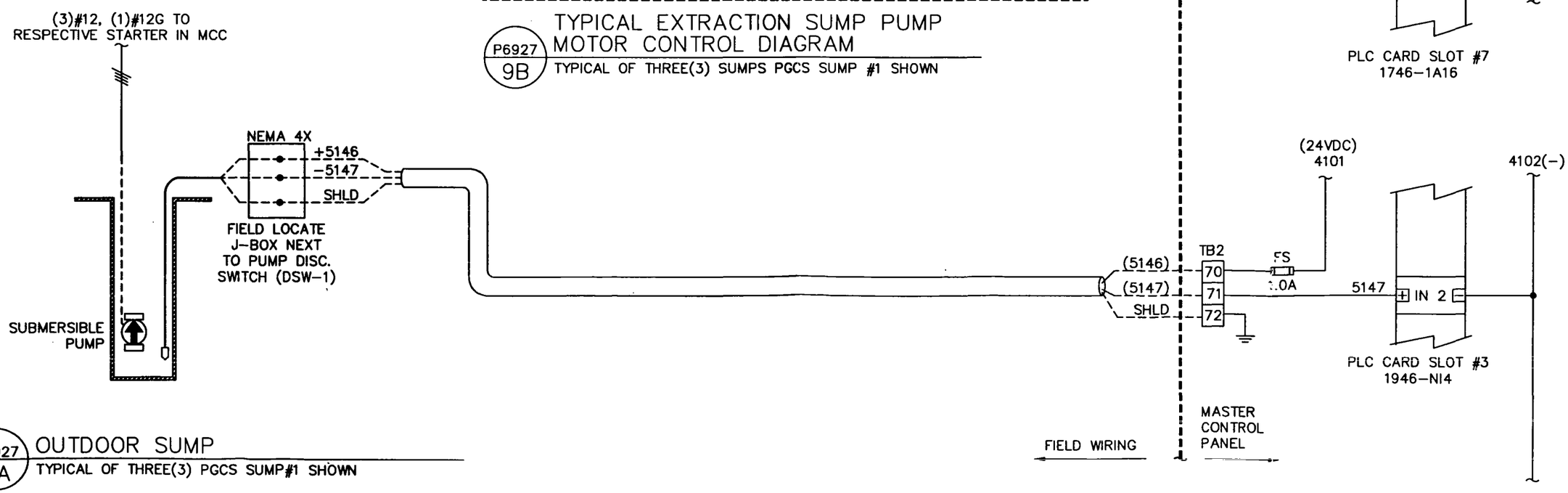

P6927 9A OUTDOOR SUMP

TYPICAL OF THREE(3) PGCS SUMP#1 SHOWN

PRECISION
CONTROL SYSTEMS OF INDIANAPOLIS
7141 W. MORRIS ST.
INDPLS, IN 46241
TEL. (317) 241-3000
FAX. (317) 247-6837

ELECTRICAL & INSTRUMENTATION DRAWINGS
Made especially for:
AMERICAN CHEMICAL SERVICE, NPL SITE
PERIMETER GROUNDWATER CONTAINMENT & TREATMENT SYSTEM
EC: PRECISION ENGR: WATSON CONTR: BOWEN

EXTRACTION TRENCH PUMP
CNTRL PANELS & INTERFACE

CODE	REVISION	BY	DATE
1	AS-BUILTS	JMS	01/09/97

SHEET: 9 OF: 27
JOB#: P6927
ENG: TOW
DRW: JMS
REL: 12/05/96

SEQUENCE OF CONTROL

EXTRACTION TRENCH:

Submersible level transmitter LT-1 sends a 4-20mA signal to the PLC to indicate the waer level in the well. The PLC will automatically start the well. The PLC will automatically start the pump if the well level rises above the user adjustable setpoint of ___ft. The PLC will automatically stop the pump if the well level falls below the user adj. setpoint of ___ft. If the well level rises above a user adj. high limit of ___ft., an alarm is issued at the operator's terminal to indicate a well pump problem.

An elapsed time meter and cycle counter are located on each pump motor starter to indicate the number of pump starts and associated total run time.

Magnetic flow meter and cycle counter are installed on the (2) main influent lines lines to display flow rate and totalization values.

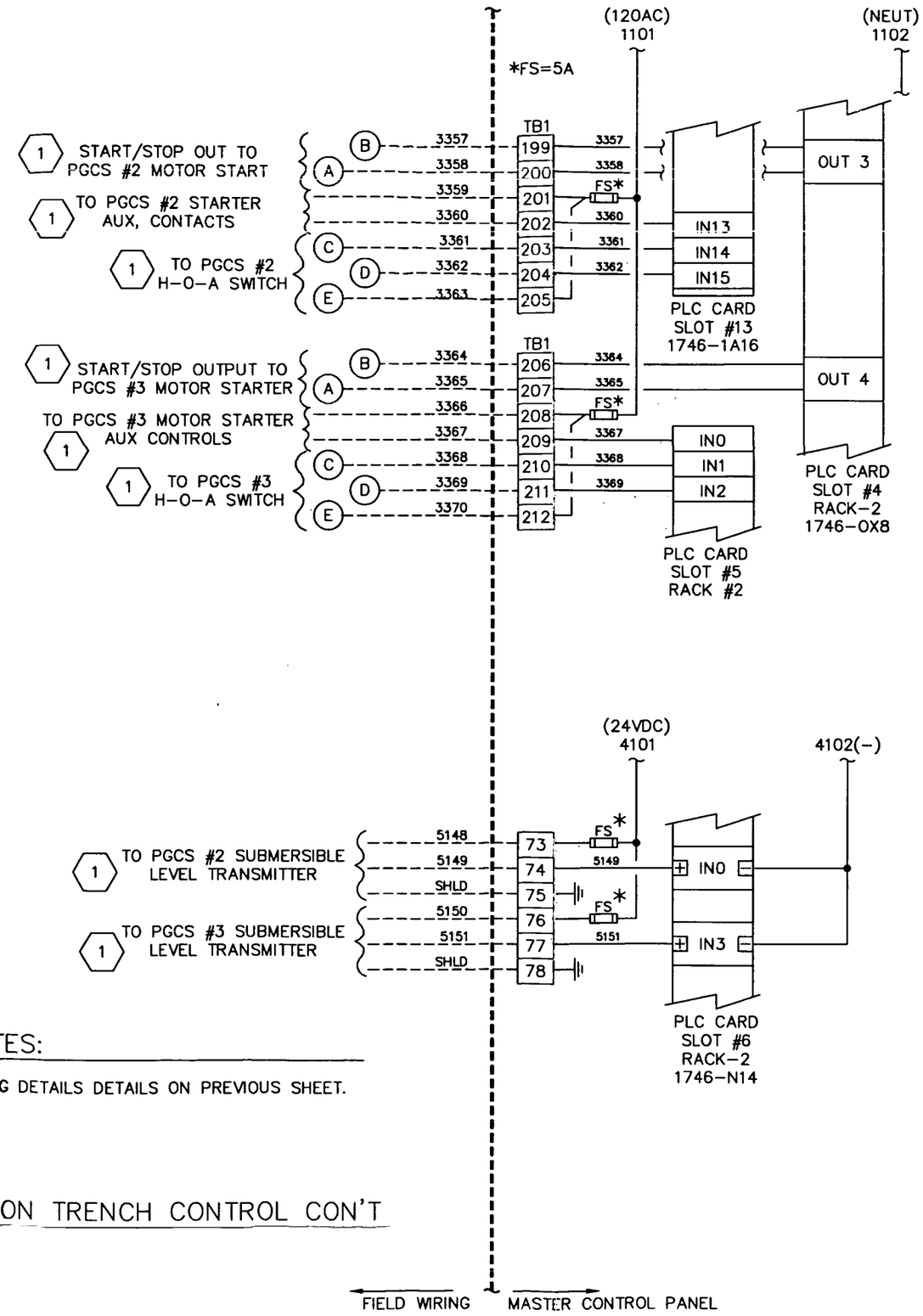

PLAN NOTES:

1 SEE WIRING DETAILS DETAILS ON PREVIOUS SHEET.

P6927 9A/A EXTRACTION TRENCH CONTROL CON'T

PRECISION
CONTROL SYSTEMS OF INDIANAPOLIS
7141 W. MORRIS ST. INDPLS, IN 46241
TEL. (317) 241-3000 FAX. (317) 247-6837

ELECTRICAL & INSTRUMENTATION DRAWINGS
Made especially for:
AMERICAN CHEMICAL SERVICE, NPL SITE
PERIMETER GROUNDWATER CONTAINMENT & TREATMENT SYSTEM
EC: PRECISION | ENGR: WATSON | CONTR: BOWEN

TITLE: EXTRACTION TRENCH CONTROL CON'T

CODE	REVISION	BY	DATE
1	AS-BUILTS	JMS	01/09/97

SHEET: 9A OF: 27
JOB#: P6927
ENG: TOW
DRW: JMS
REL: 12/05/96
SIEBE ENVIROMENTAL CONTROLS

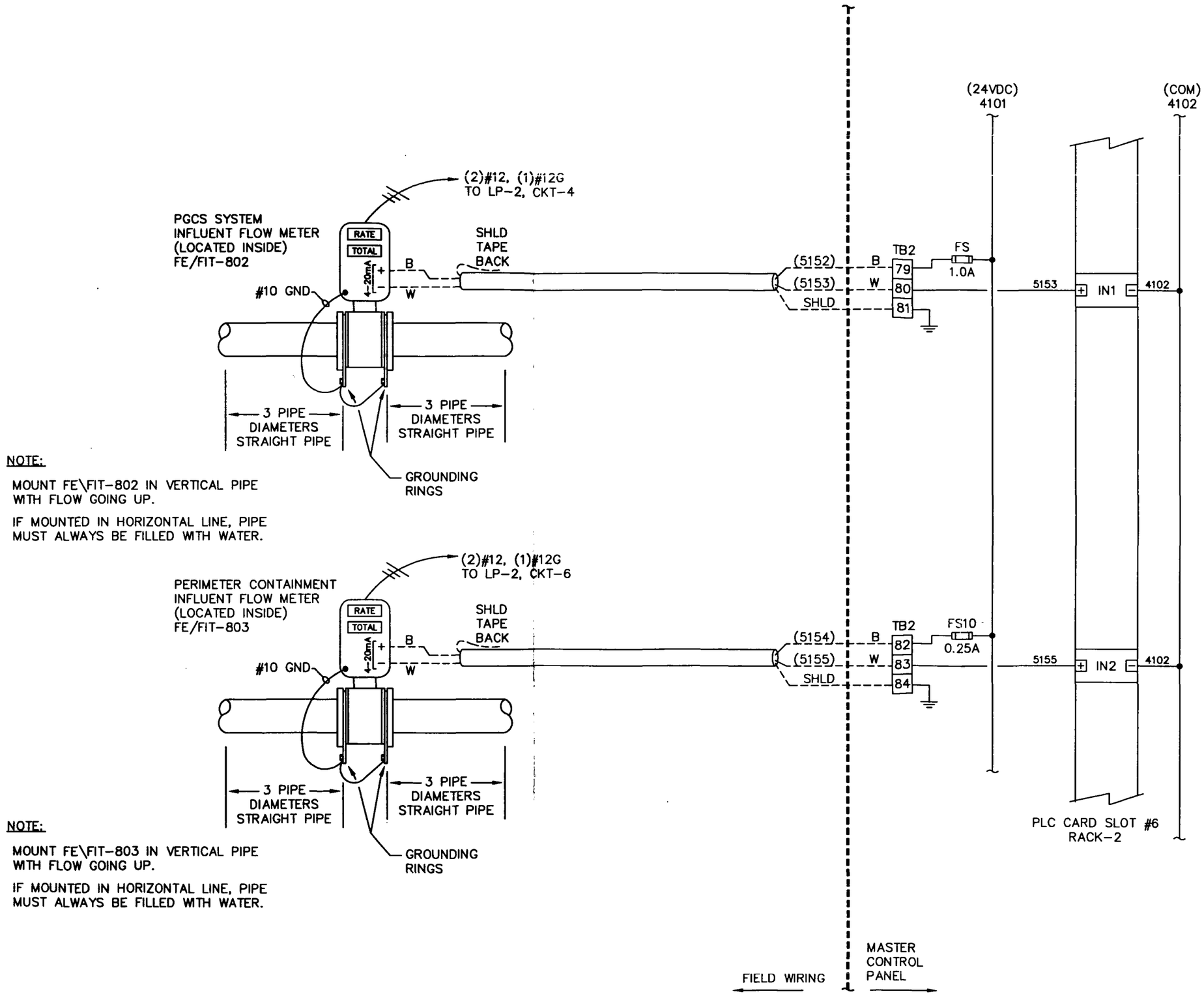

PRECISION
CONTROL SYSTEMS OF INDIANAPOLIS
7141 W. MORRIS ST. INDPLS, IN 46241
TEL. (317) 241-3000
FAX. (317) 247-6837

ELECTRICAL & INSTRUMENTATION DRAWINGS
Made especially for:
AMERICAN CHEMICAL SERVICE, NPL SITE
PERIMETER GROUNDWATER CONTAINMENT & TREATMENT SYSTEM
EC: PRECISION | ENGR: WATSON | CONTR: BOWEN

INFLUENT FLOW METERS

CODE	REVISION	BY	DATE

SHEET: 9B OF: 27
JOB#: P6927
ENG: TOW
DRW: JMS
REL: 12/05/96

SEQUENCE OF CONTROL

Filter Press

The entire operation of the Filter Press will be manually controlled by the LCP, located by the unit. The LCP will control the operating sequence of the dewatering process, and also the support systems: feed pumps, diatomaceous earth mixing and feed system, polymer feed system, and all other ancillary equipment. On a low-level signal from the sludge storage and thickening tank, the filter press will shutdown.

The operators terminal will display the following filter press conditions for informational purposes:

1. Press closed
2. Press not closed
3. Feed
4. Air blow
5. Cycle complete
6. Precoat
7. Core blow

; PLC system will time & date stamp when the above conditions occure.

If the filter press is in operation, the PLC locks-out P14 & P15 from running.

* Costomer Contacts – Notes 1, 2, & 3.

3 – Costomer contacts 1 & 2 come with factory jumpers. They must be removed to install costomer contacts.

4 – CUSTOMER-1 contact closed allows the filtration cycle to be started by the FILTRATION START pushbutton. (Ex. – Feed tank high level)

5 – CUSTOMER-2 contact closed allows the feed pump to run. If the contact is opened, feed stops and air blow starts. (Ex. – Feed tank low level)

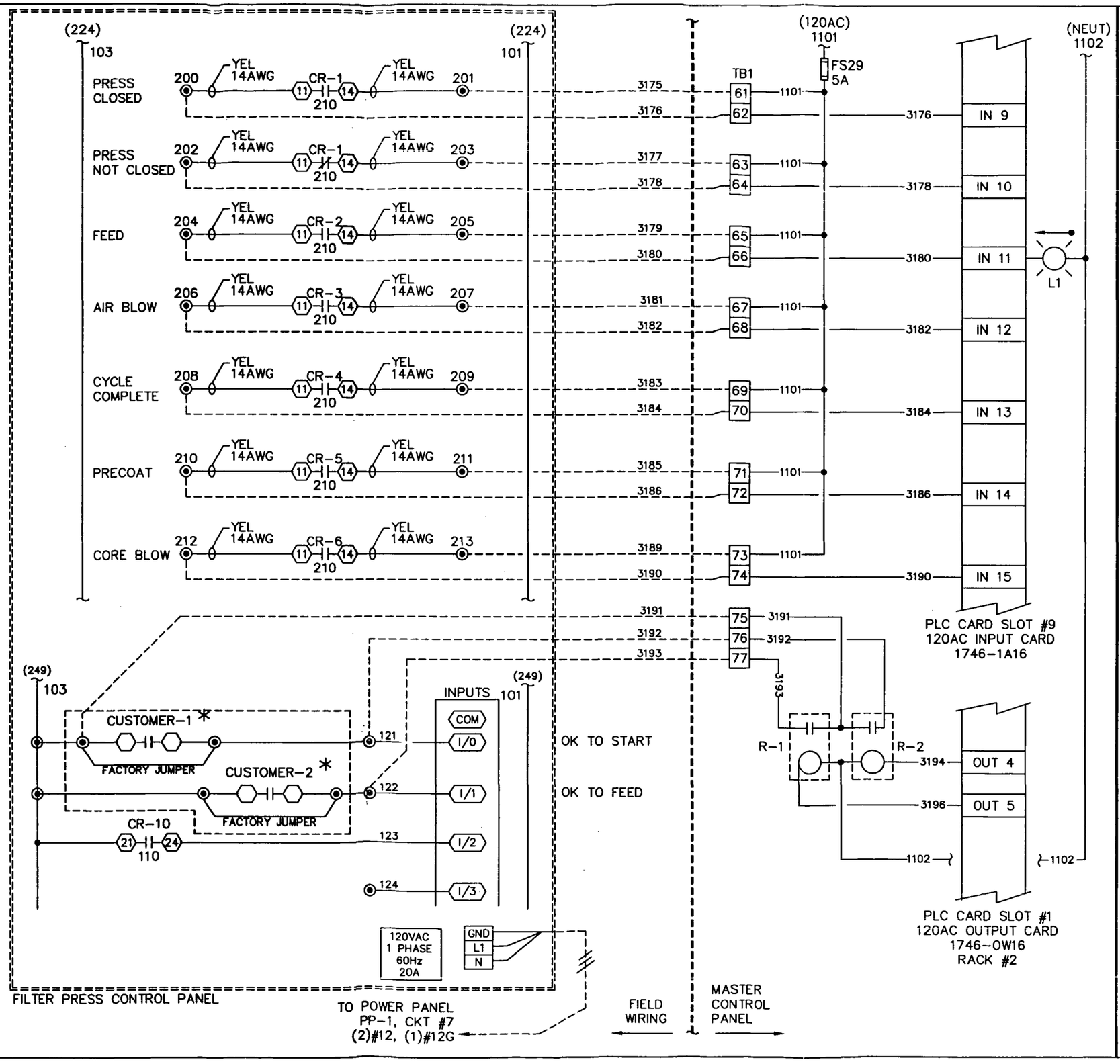

PRECISION
CONTROL SYSTEMS OF INDIANAPOLIS
7141 W. MORRIS ST. INDPLS, IN 46241
TEL. (317) 241-3000
FAX. (317) 247-6837

ELECTRICAL & INSTRUMENTATION DRAWINGS
Made especially for:
AMERICAN CHEMICAL SERVICE, NPL SITE
PERIMETER GROUNDWATER CONTAINMENT & TREATMENT SYSTEM
ENGR: WATSON | CONTR: BOWEN
EC: PRECISION

FILTER PRESS INTERFACE

CODE	REVISION	BY	DATE
1	AS-BUILTS	JMS	01/09/97

JOB#: P6927
ENG: TOW
DRW: JMS
REL: 12/05/96

SHEET: 10 OF: 27

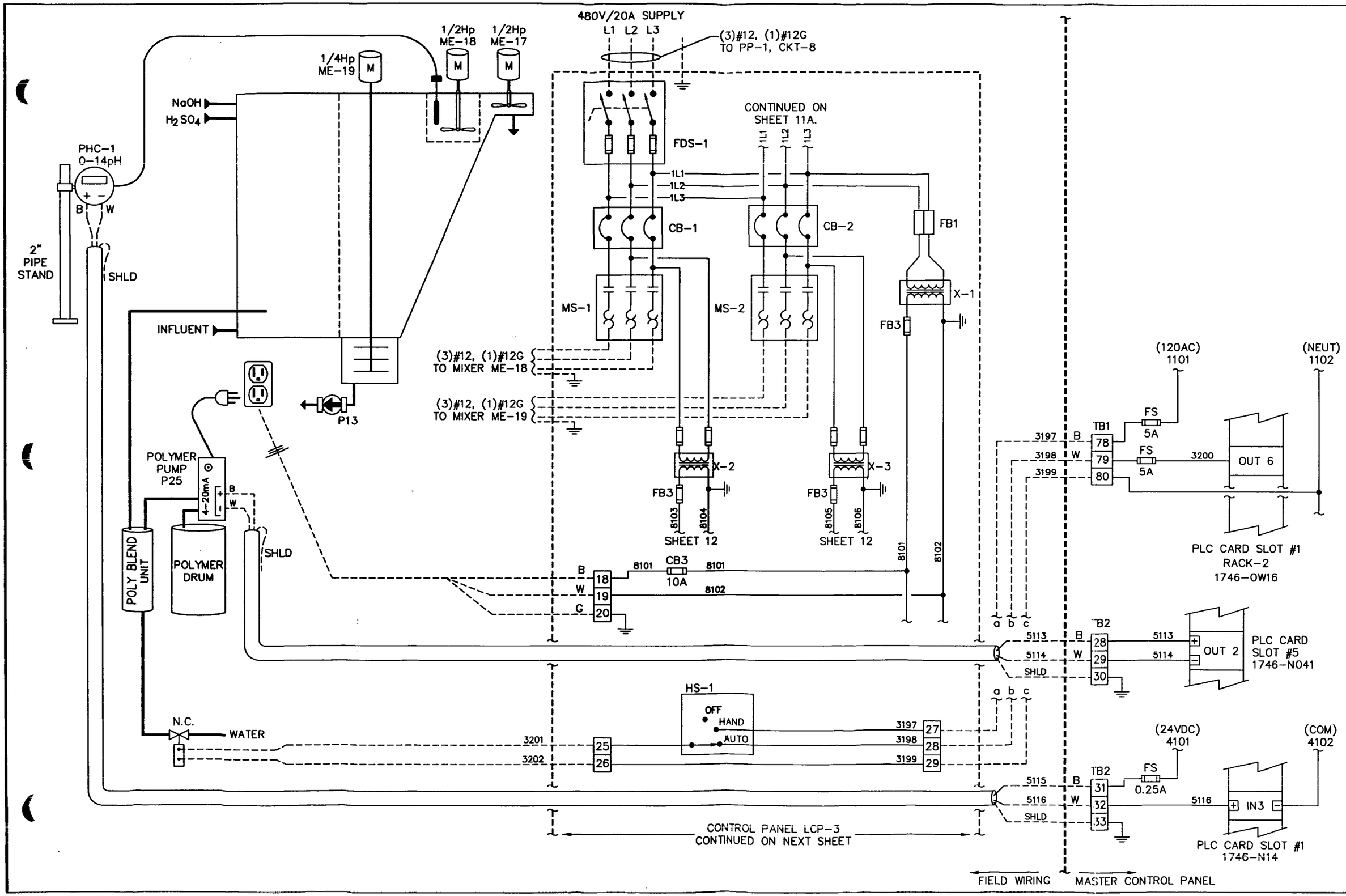

PRECISION
CONTROL SYSTEMS OF INDIANAPOLIS
7141 W. MORRIS ST. INDPLS, IN 46241
TEL. (317) 241-3000
FAX. (317) 247-6837

ELECTRICAL & INSTRUMENTATION DRAWINGS
Made especially for:
AMERICAN CHEMICAL SERVICE, NPL SITE
PERIMETER GROUNDWATER CONTAINMENT & TREATMENT SYSTEM
EC: PRECISION ENGR: WATSON CONTR: BOWEN

LAMELLA CONTROL PANEL & INTERFACE

CODE	REVISION	BY	DATE
1	AS-BUILTS	JMS	01/09/97

SHEET: 11 OF: 27
JOB#: P6927
ENG: TOW
DRW: JMS
REL: 12/05/96

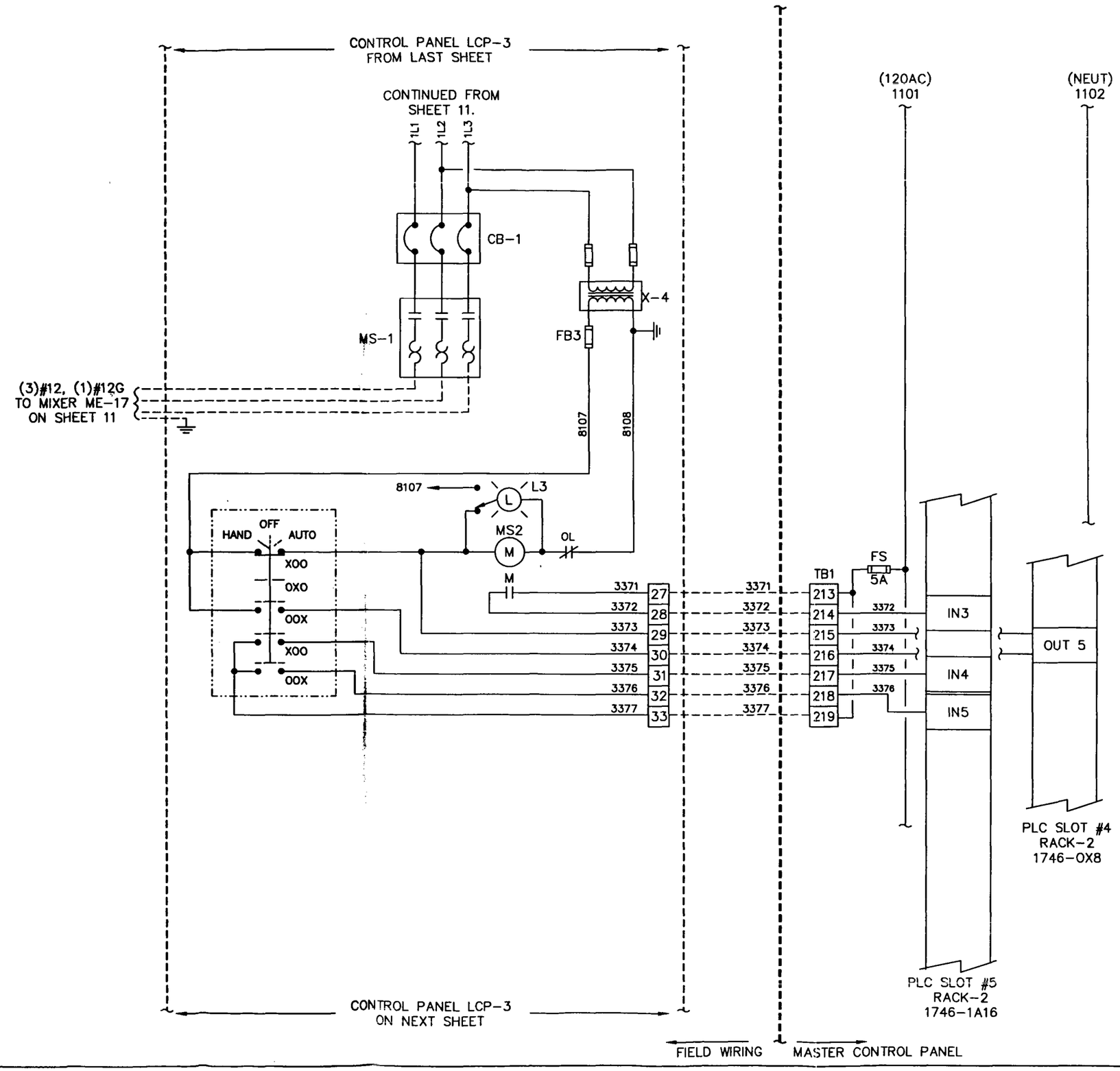

PRECISION
CONTROL SYSTEMS OF INDIANAPOLIS
7141 W. MORRIS ST. INDPLS, IN 46241
TEL. (317) 241-3000
FAX. (317) 247-6837

ELECTRICAL & INSTRUMENTATION DRAWINGS
Made especially for:
AMERICAN CHEMICAL SERVICE, NPL SITE
PERIMETER GROUNDWATER CONTAINMENT & TREATMENT SYSTEM
EC: PRECISION | ENGR: WATSON | CONTR: BOWEN

TITLE: LCP-3 CONTINUED

CODE	REVISION	BY	DATE
1	AS-BUILTS	JMS	01/09/97

JOB#: P6927
ENG: TOW
DRW: JMS
REL: 12/05/96

SHEET: 11A
OF: 27

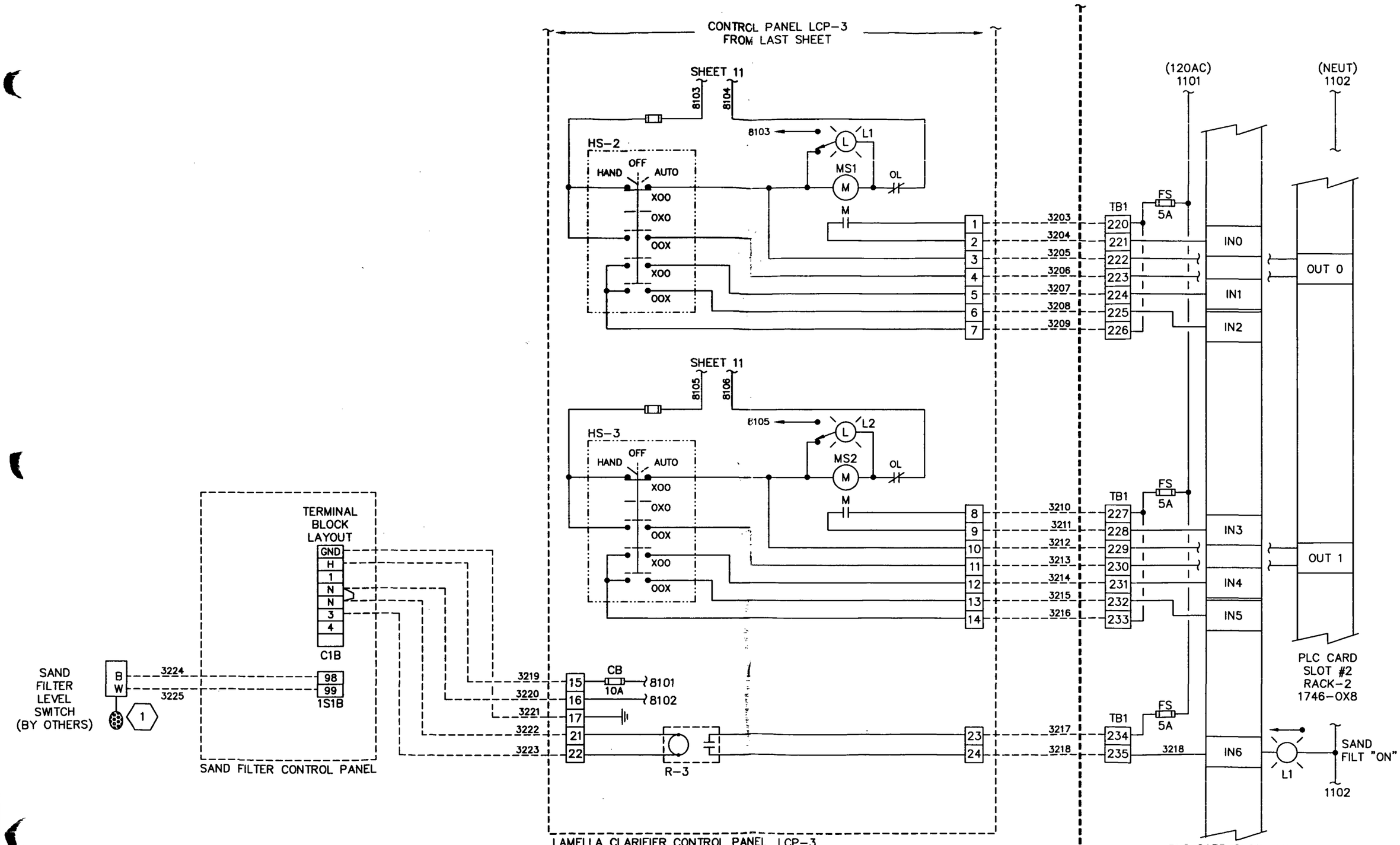

PLAN NOTES:

(1) SEE LEVEL MOUNTING DETAIL ON SHEET 13.

PRECISION
CONTROL SYSTEMS OF INDIANAPOLIS
7141 W. MORRIS ST. INDPLS, IN 46241
TEL. (317) 241-3000
FAX. (317) 247-6837

ELECTRICAL & INSTRUMENTATION DRAWINGS
Made especially for:
AMERICAN CHEMICAL SERVICE, NPL SITE
PERIMETER GROUNDWATER CONTAINMENT & TREATMENT SYSTEM
EC: PRECISION | ENGR: WATSON | CONTR: BOWEN

TITLE: LAMELLA INTERFACE CONTINUED

CODE	REVISION	BY	DATE
1	AS-BUILTS	JMS	01/09/97

SHEET: 12 OF: 27
JOB#: P6927
ENG: TOW
DRW: JMS
REL: 12/05/96

SEQUENCE OF CONTROL

Any time process flow is detected by the UV system flow meter, the clarifier mixers ME-17, 18, & 19 are started and the water solenoid valve to the polyblend unit is opened. Polymer is automatically injected into the rapid mix tank via chemical pump P-25 which is controlled from the PLC. The PLC resets the polymer according to the following influent flow as detected by the UV flow meter.

FLOW	POLYMER
___GPM	4mA
___GPM	20mA

If the influent flow discontinues, then the water solenoid valve is closed and chem pump P-25 stopped.

The pH sensor PH-C-1 delivers a 4-20mA signal to the PLC which automatically injects acid & base to maintain an adjustable pH setpoint of _____. High and low pH alarms of ___ and ___ are annunciated at the operators terminal.

The sand filter contains an internal level switch (supplied by filter mfr) that automatically enables/disables filter air flow upon detectoin of water flow. Sand filter run status is reported to the operator's terminal.

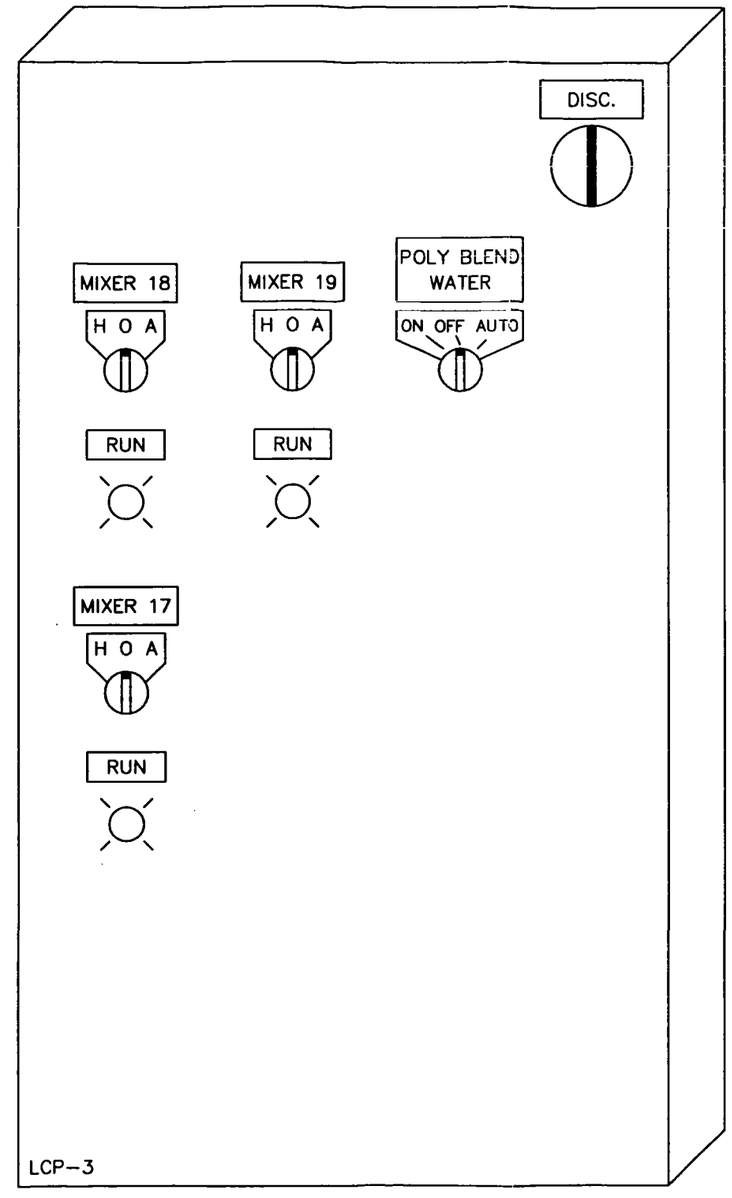

LAMELLA CLARIFIER CONTROL PANEL LCP-3 PANEL FACE

PRECISION
CONTROL SYSTEMS OF INDIANAPOLIS
7141 W. MORRIS ST. INDPLS, IN 46241
TEL. (317) 241-3000
FAX. (317) 247-6837

ELECTRICAL & INSTRUMENTATION DRAWINGS
Made especially for:
AMERICAN CHEMICAL SERVICE, NPL SITE
PERIMETER GROUNDWATER CONTAINMENT & TREATMENT SYSTEM
EC: PRECISION | ENGR: WATSON | CONTR: BOWEN

TITLE: LAMELLA CLARIFIER PANEL

CODE	REVISION	BY	DATE

SHEET: 13 OF: 27
JOB#: P6927
ENG: TOW
DRW: JMS
REL: 12/05/96

This drawing and all apurtenant matter contains information proprietary to PARKSON CORPORATION and is loaned subject to return upon demand and may not be reproduced,copied,bonded,revealed,nor used for any purpose other than that for which it is specifically furnished without expressed written consent of PARKSON CORPORATION.

CONTRACTOR NOTE:
USE FLEXIBLE CONDUIT TO ALLOW FOR VERTICAL ADJUSTMENT

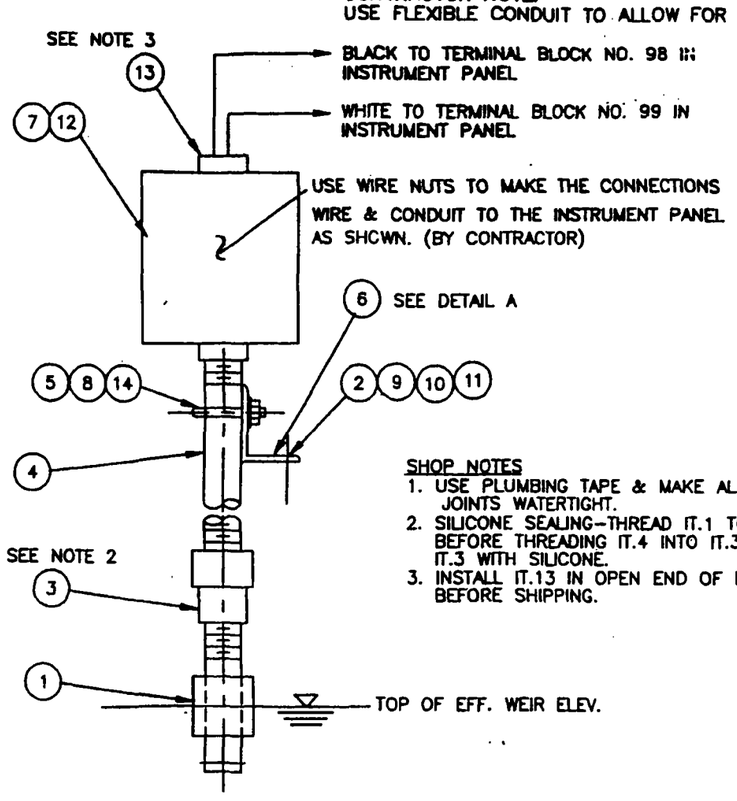

ASSEMBLY

SHOP NOTES
1. USE PLUMBING TAPE & MAKE ALL JOINTS WATERTIGHT.
2. SILICONE SEALING-THREAD IT.1 TO IT.3. BEFORE THREADING IT.4 INTO IT.3 FILL IT.3 WITH SILICONE.
3. INSTALL IT.13 IN OPEN END OF BOX BEFORE SHIPPING.

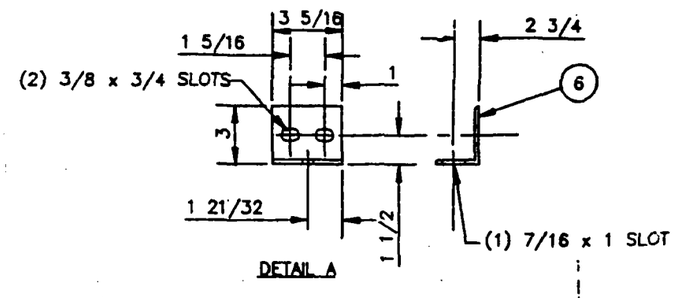

DETAIL A

Item	Qty.	Description	Reference	Mat'l	Remarks
14	2	FLATWASHER	1/4	316 SS	
13	1	PLUG	PRESS FIT	PLASTIC	NIAGRA-203
12	1	COVER,BLANK W/GASKET		CAST ALUM.	GRAYBAR 36
11	1	LOCKWASHER	3/8	316 SS	
10	1	FLATWASHER	3/8	316 SS	
9	1	NUT	3/8	316 SS	
8	2	LOCKWASHER	1/4	316 SS	
7	1	JUNCTION BOX	(2) 1/2 OUTLETS	CAST ALUM.	GRAYBAR 36
6	1	ANGLE	4x3x1/4x3 5/16	316 SS	
5	1	U-BOLT FOR 1/2 PIPE	1/4-20	316 SS	GRAINGER-CAT# 8896121
4	1	PIPE, TBE	1/2 SCH 40 x 20	316 SS	
3	1	RED. COUPLING	1/2 NPTx 1/4 NPT	316 SS	150#
2	1	BOLT, HEX	3/8-16x1 1/2	316 SS	
1	1	LEVEL SWITCH 1/4 NPT	ALS-11900 P/N A01907	316 SS	W/2'-6 NO.18 AWG WIRE

Revision	By	Chk'd	Date
IT.1 PART NO. WAS 01901 INCREASED WIRE LGH.	WAN	PAT	11-7-94
ADD CUSTOMER NOTE IT.4 WAS 12 LG.	HDH		
IT.1 PART NO. WAS 01907	HDH		1-13-94
	HDH	DMF	11-11-93

PARKSON CORPORATION

DynaSand FILTER
LEVEL SWITCH

Drawn By	Checked By	Approved By	Micro. Rev.	CAD
WAN	HDH	RPH	E	
Date 1-4-93	Date 1-4-93	Date 1-4-93	Date 11-9-94	Scale NTS

Location

Dwg. No. 1F-2213 Rev. E

1F-2028

PRECISION
CONTROL SYSTEMS OF INDIANAPOLIS
7141 W. MORRIS ST. INDPLS, IN 46241
TEL. (317) 241-3000
FAX. (317) 247-6837

ELECTRICAL & INSTRUMENTATION DRAWINGS
Made especially for:
AMERICAN CHEMICAL SERVICE, NPL SITE
PERIMETER GROUNDWATER CONTAINMENT & TREATMENT SYSTEM
ENGR: WATSON CONTR: BOWEN
EC PRECISION

LEVEL SWITCH MOUNTING

CODE	REVISION	BY	DATE

SHEET: 14 OF: 27
JOB#: P6927
ENG: TOW
DRW: JMS
REL: 12/05/96

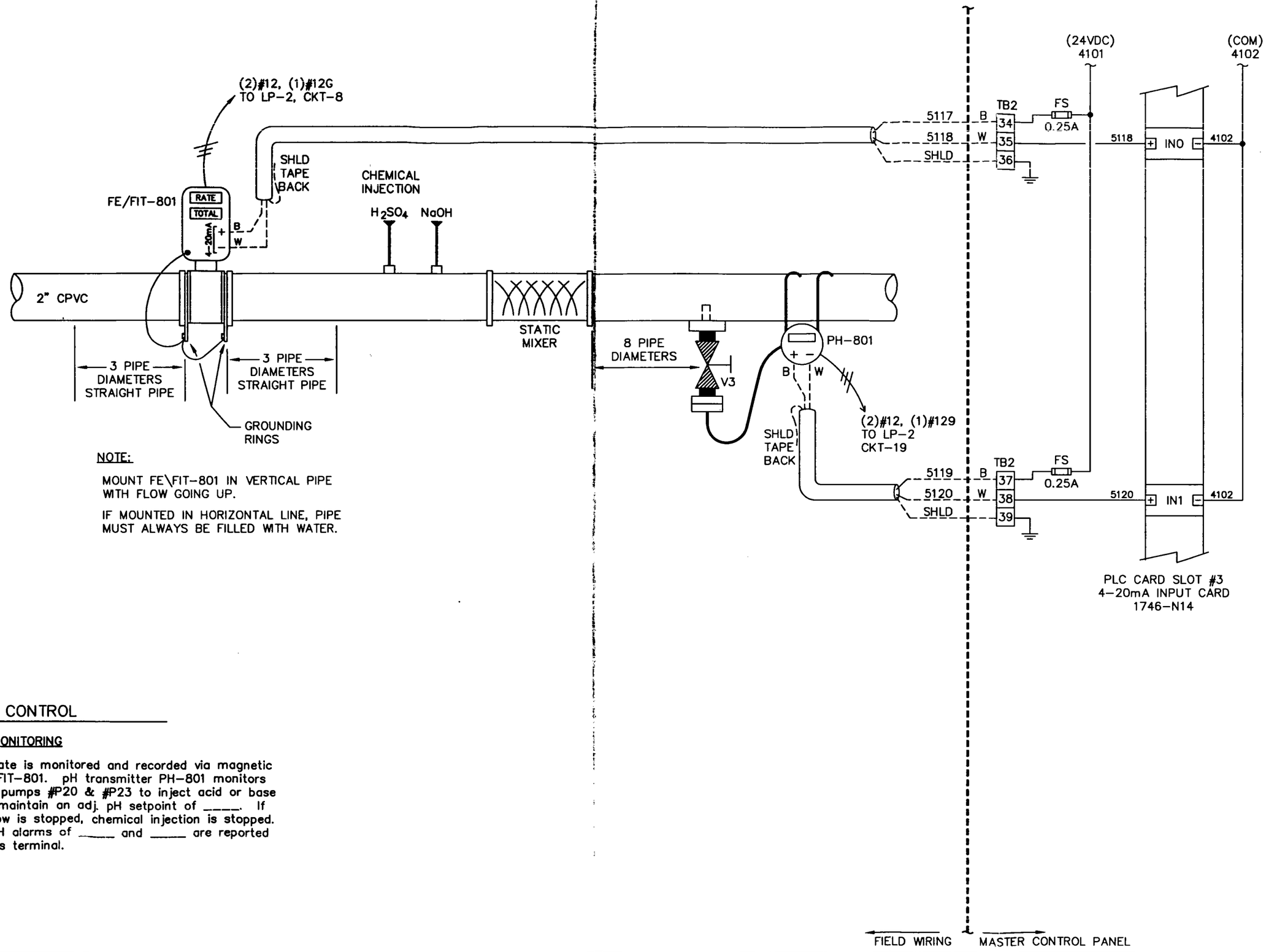

NOTE:

MOUNT FE\FIT-801 IN VERTICAL PIPE WITH FLOW GOING UP.

IF MOUNTED IN HORIZONTAL LINE, PIPE MUST ALWAYS BE FILLED WITH WATER.

SEQUENCE OF CONTROL

FINAL EFFLUENT MONITORING

The final flow rate is monitored and recorded via magnetic flow meter FE/FIT-801. pH transmitter PH-801 monitors pH and signals pumps #P20 & #P23 to inject acid or base as required to maintain an adj. pH setpoint of _____. If final effluent flow is stopped, chemical injection is stopped. High and low pH alarms of _____ and _____ are reported at the operators terminal.

PRECISION
CONTROL SYSTEMS OF INDIANAPOLIS
7141 W. MORRIS ST. INDPLS, IN 46241
TEL. (317) 241-3000
FAX. (317) 247-6837

ELECTRICAL & INSTRUMENTATION DRAWINGS
Made especially for:
AMERICAN CHEMICAL SERVICE, NPL SITE
PERIMETER GROUNDWATER CONTAINMENT & TREATMENT SYSTEM
EC: PRECISION | ENGR: WATSON | CONTR: BOWEN

TITLE: FINAL EFFLUENT DETAIL

CODE	REVISION	BY	DATE
1	AS-BUILTS	JMS	01/09/97

SHEET: 15 OF: 27
JOB#: P6927
ENG: TOW
DR'W: JMS
REL: 12/05/96

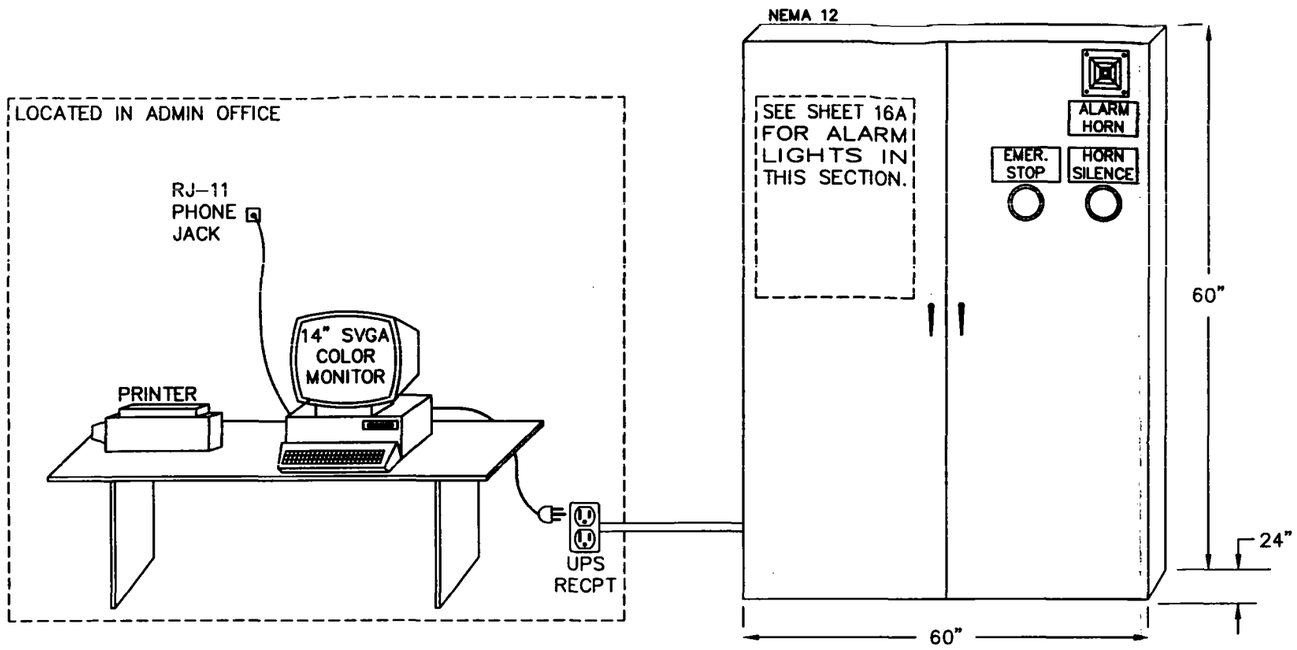

P6927 16A MASTER CONTROL PANEL EXTERIOR
TYPICAL OF ONE(1) SYSTEM

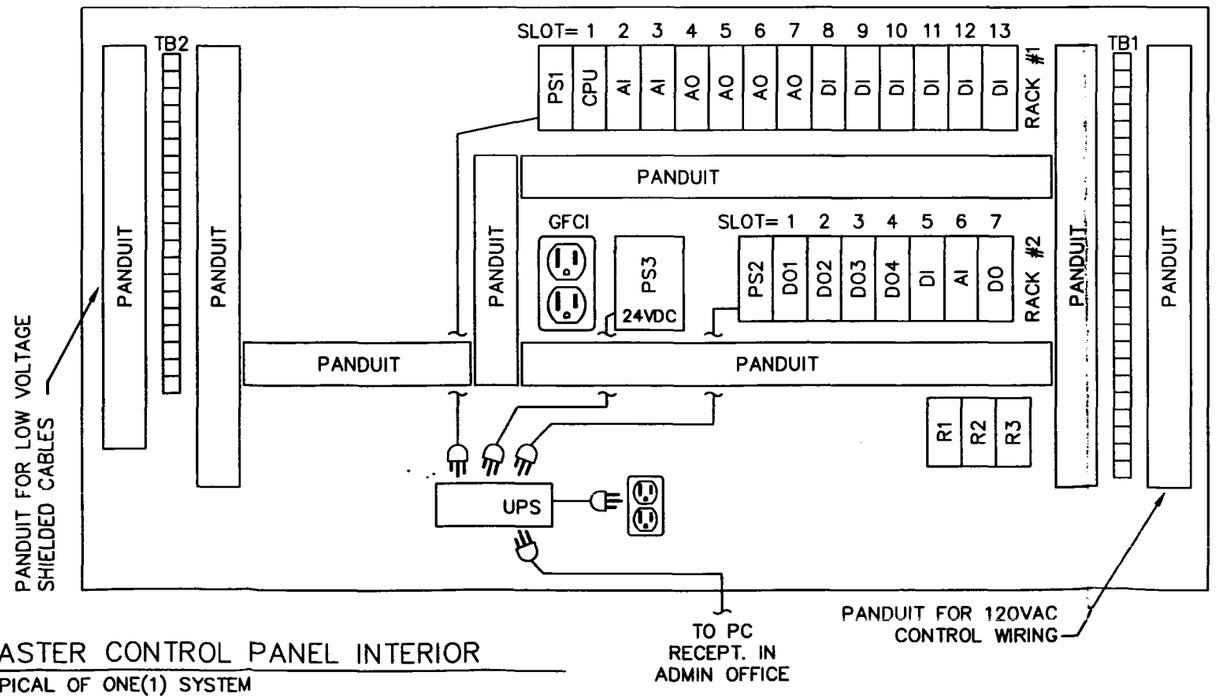

P6927 16B MASTER CONTROL PANEL INTERIOR
TYPICAL OF ONE(1) SYSTEM

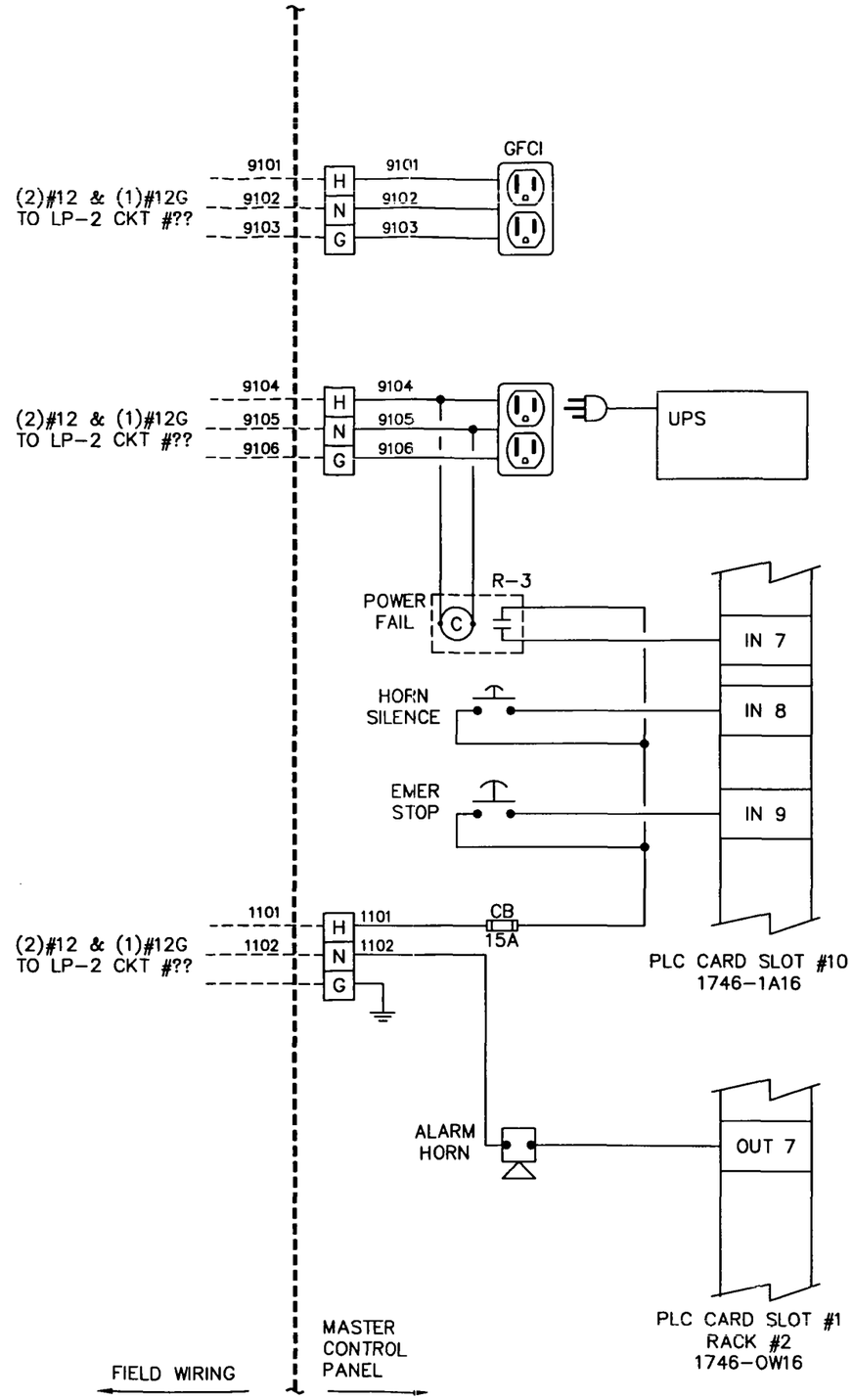

P6927 16C MASTER CONTROL PANEL MISC. WIRING
TYPICAL OF ONE(1) SYSTEM

PRECISION
CONTROL SYSTEMS OF INDIANAPOLIS
7141 W. MORRIS ST. INDPLS, IN 46241
TEL. (317) 241-3000
FAX. (317) 247-6837

ELECTRICAL & INSTRUMENTATION DRAWINGS
Made especially for:
AMERICAN CHEMICAL SERVICE, NPL SITE
PERIMETER GROUNDWATER CONTAINMENT & TREATMENT SYSTEM
EC: PRECISION | ENGR: WATSON | CONTR: BOWEN

TITLE: MASTER CONTROL PANEL

CODE	REVISION	BY	DATE

SHEET: 16 OF: 27
JOB#: P6927
ENG: TOW
DRW: JMS
REL: 12/05/96

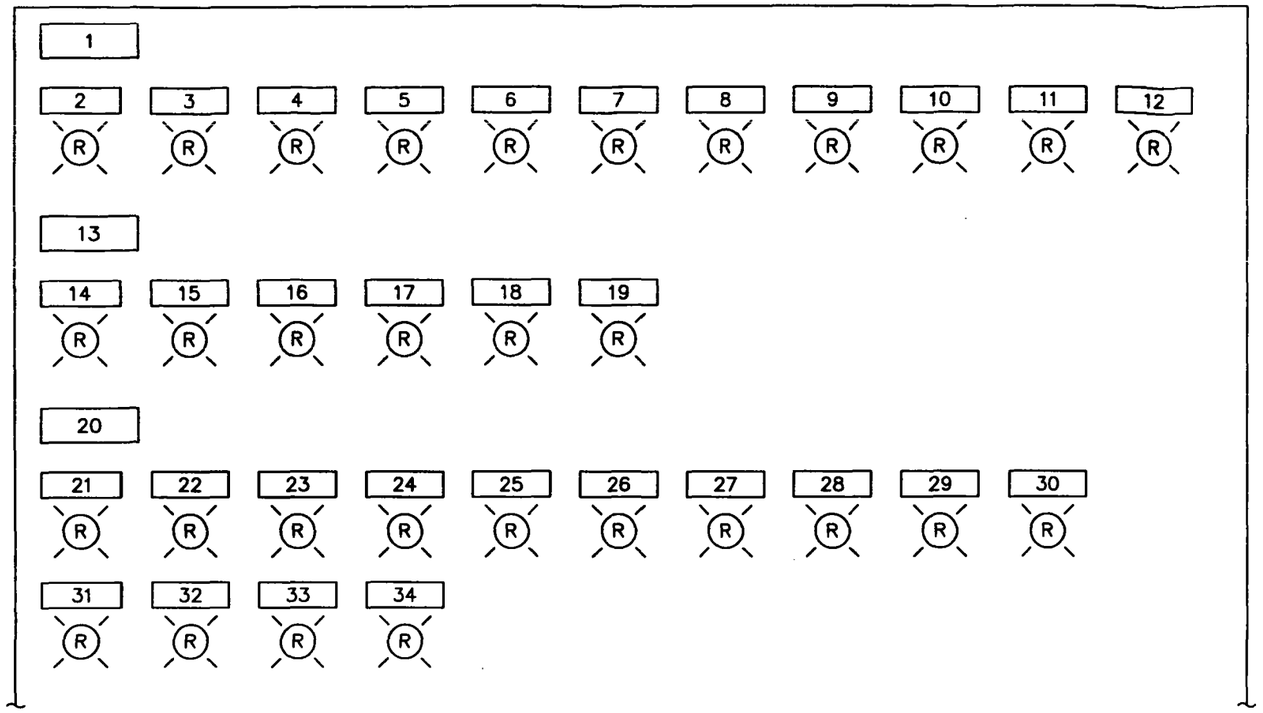

MASTER CONTROL ANNUNCIATOR LIGHTS

16A/A TYPICAL OF ONE(1) SYSTEM

TAG #	TAG LEGEND
1	TANK LEVEL ALARM LIGHT IS EXTINGUISHED ON ALARM
2	TANK-1 HIGH LEVEL
3	TANK-2 HIGH LEVEL
4	TANK-3 HIGH LEVEL
5	TANK-4 HIGH LEVEL
6	TANK-5 HIGH LEVEL
7	TANK-6 HIGH LEVEL
8	TANK-7 LOW LEVEL
9	TANK-8 LOW LEVEL
10	TANK-9 LOW LEVEL
11	SUMP 10A HIGH LEVEL
12	SUMP 10B HIGH LEVEL
13	SYSTEM pH ALARMS LIGHT "ON" WHEN ALARM
14	CLARIFIER HIGH pH
15	CLARIFIER LOW ALARM
16	FINAL EFFLUENT HIGH pH
17	FINAL EFFLUENT LOW pH
18	TANK-3 HIGH pH
19	TANK-3 LOW pH
20	RUN STATUS INDICATORS LIGHT ON WHEN RUNNING
21	PUMP P-12 RUN STATUS
22	PUMP P-13 RUN STATUS
23	PUMP P-14 RUN STATUS
24	PUMP P-15 RUN STATUS
25	FILTER PRESS RUN STATUS
26	UV UNIT RUN STATUS
27	SAND FILTER RUN STATUS
28	AIR COMPRESSOR LOSS OF PRESSURE
29	CHEMICAL PUMP P18 RUN STATUS
30	CHEMICAL PUMP P19 RUN STATUS
31	CHEMICAL PUMP P20 RUN STATUS
32	CHEMICAL PUMP P21 RUN STATUS
33	CHEMICAL PUMP P22 RUN STATUS
34	CHEMICAL PUMP P23 RUN STATUS

SEQUENCE OF CONTROL

The Master Control Panel is a Nema 12 enclosure housing an Allen-Bradley SLC-504 PLC system, and colorgraphic PC running Intelluiton F1XDCMAX software. The PC, PLC, and 24VDC power supply are protected by a Best UPS. The enclosure face has a window kit to view the color display. An external Nema 4x keyboard is availiable for all operator interaction. All system I/O is assigned to continuous trend logs so the entire plant can be viewed over time. A HP laser jet printer prints logs and alarms. The full PC capability is remotely accessed by using PC Anywhere software. The colorgraphic screens will schematically depict the plant flow diagram with realtime variables superimposed.

The emergency stop button will stop the entire plant operation IF depressed. The alarm horn is programmable to cnnuciate user selectable alarms.

PRECISION
CONTROL SYSTEMS OF INDIANAPOLIS
7141 W. MORRIS ST. INDPLS, IN 46241
TEL. (317) 241-3000
FAX. (317) 247-6837

ELECTRICAL & INSTRUMENTATION DRAWINGS
Made especially for:
AMERICAN CHEMICAL SERVICE, NPL SITE
PERIMETER GROUNDWATER CONTAINMENT & TREATMENT SYSTEM
EC: PRECISION ENGR: WATSON CONTR: BOWEN

MASTER CONTROL PANEL

CODE	REVISION	BY	DATE

SHEET: 16A OF: 27
JOB#: P6927
ENG: TOW
DRW: JMS
REL: 12/05/96

POWER ONE LINE DIAGRAM

NOTES:

1. 1" C, 3#12, 1#12G
2. 1" C, 3#6, 1#6G
3. 1-1/2" C, 3#2, 1#2G
4. 1" C, 3#6, 1#6G
5. 3" C, 4-250MCM, 1#1/0G
6. 45KVA, 480/208-120V, 3PH, 60HZ

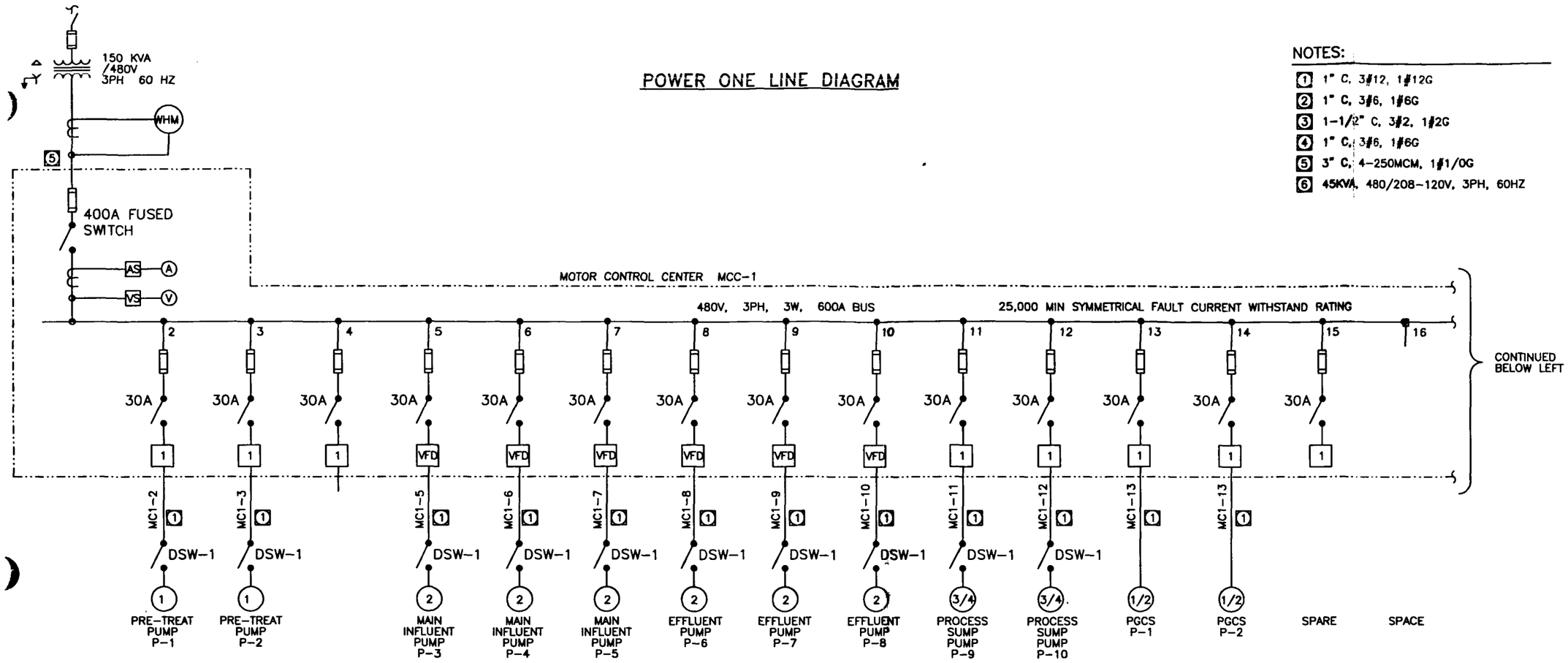

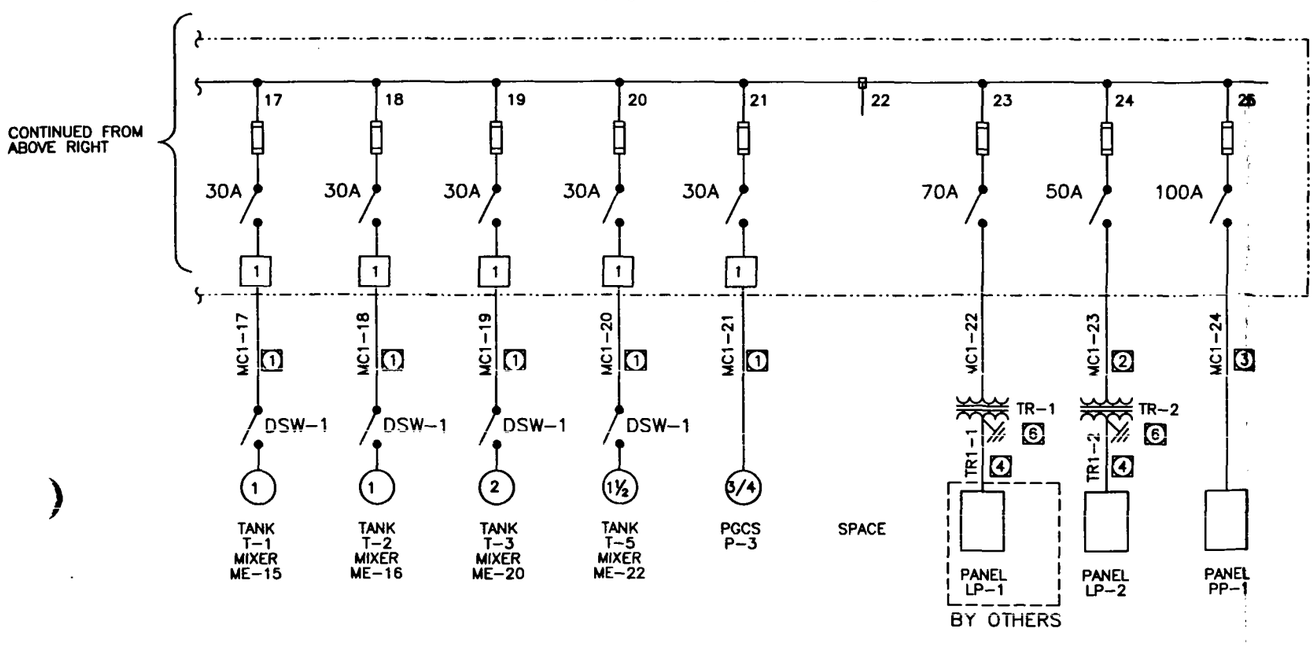

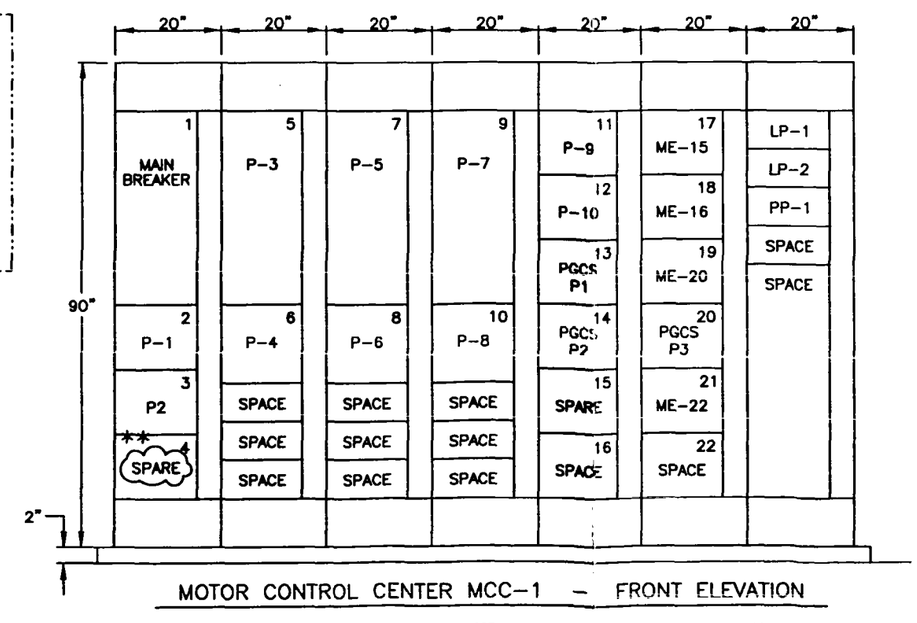

MOTOR CONTROL CENTER MCC-1 – FRONT ELEVATION

PRECISION
CONTROL SYSTEMS OF INDIANAPOLIS
7141 W. MORRIS ST. INDPLS, IN 46241
TEL. (317) 241-3000
FAX. (317) 247-6837

ELECTRICAL & INSTRUMENTATION DRAWINGS
Made especially for:
AMERICAN CHEMICAL SERVICE, NPL SITE
PERIMETER GROUNDWATER CONTAINMENT & TREATMENT SYSTEM
EC: PRECISION ENGR: WATSON CONTR: BOWEN

POWER ONE-LINE DIAGRAM

CODE	REVISION	BY	DATE
1	AS-BUILTS	JMS	01/09/97

SHEET: 17 OF: 27
JOB#: P6927
ENG: TOW
DRW: JMS
REL: 12/05/96

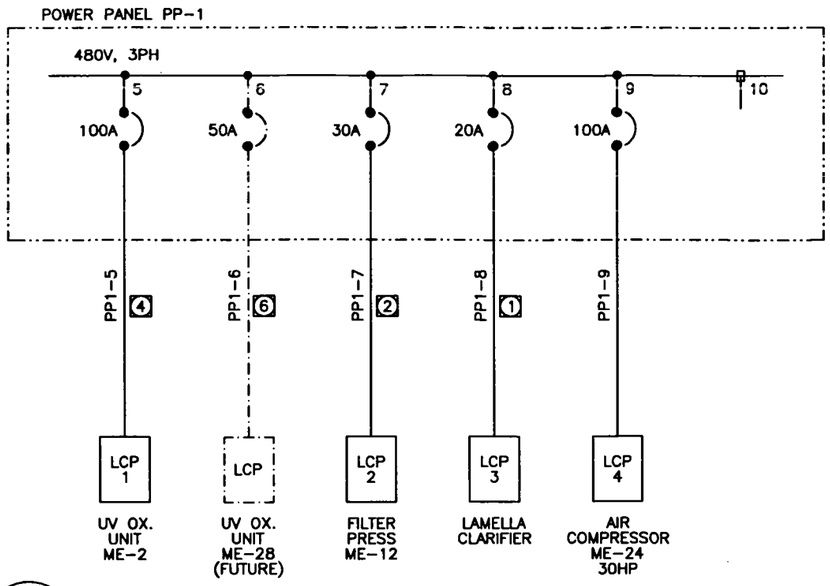

P6927
18A

PANEL PP-1 ONE LINE DIAGRAM

TYPICAL OF ONE(1) SYSTEM

NOTES:

1. 1" C, 3#12, 1#12G
2. 1" C, 3#10, 1#10G
3. 1-1/2" C, 3#2, 1#2G
4. 1-1/2" C, 3#8, 1#8G
5. 1" C.O.
6. 1-1/4" C.O.

120-208 VOLTS 3 Ø 4 W — 50A MAIN BREAKER

PANELBOARD LP-2 — LOCATION

FEED TOP — MTG SURFACE

LOAD DESCRIPTION	VOLT AMPERE ØA	ØB	ØC	LTG	REC	MIS	CIR	BKR		BKR	CIR	MIS	REC	LTG	VOLT AMPERE ØA	ØB	ØC	LOAD DESCRIPTION
P-11	860						1	20			2							ME-1
P-19		700					3	20		20	4					300		FIT-802
P-20			700				5	20		20	6						500	FIT-803
P-22	700						7	20		20	8				500			FIT-801
P-23		700					9	20		20	10					800		MCP
ME-11			700				11	20		20	12						700	P-18
P-21	700						13	20		20	14				800			MCP
SUMP PUMP 10A		860					15	20		20	16					800		MCP
SUMP PUMP 10B			860				17	20		20	18						60	AIR DRYER
PH-801	201						19	20			20							
							21				22							
							23				24							
							25				26							
							27				28							
							29				30							
							31				32							
							33				34							
							35				36							
							37				38							
							39				40							
							41				42							
							TOTAL				TOTAL							
	PHASE TOTAL			TOTAL LOAD														
				KVA (AMP)														

PRECISION
CONTROL SYSTEMS OF INDIANAPOLIS
7141 W. MORRIS ST. INDPLS, IN 46241
TEL. (317) 241-3000
FAX. (317) 247-6837

ELECTRICAL & INSTRUMENTATION DRAWINGS
Made especially for:
AMERICAN CHEMICAL SERVICE, NPL SITE
PERIMETER GROUNDWATER CONTAINMENT & TREATMENT SYSTEM
EC: PRECISION ENGR: WATSON CONTR: BOWEN

TITLE: PANEL BOARD SCHEDULES

CODE	REVISION	BY	DATE
1	AS-BUILTS	JMS	01/09/97

SHEET: 18 OF: 27
JOB#: P6927
ENG: TOW
DRW: JMS
REL: 12/05/96

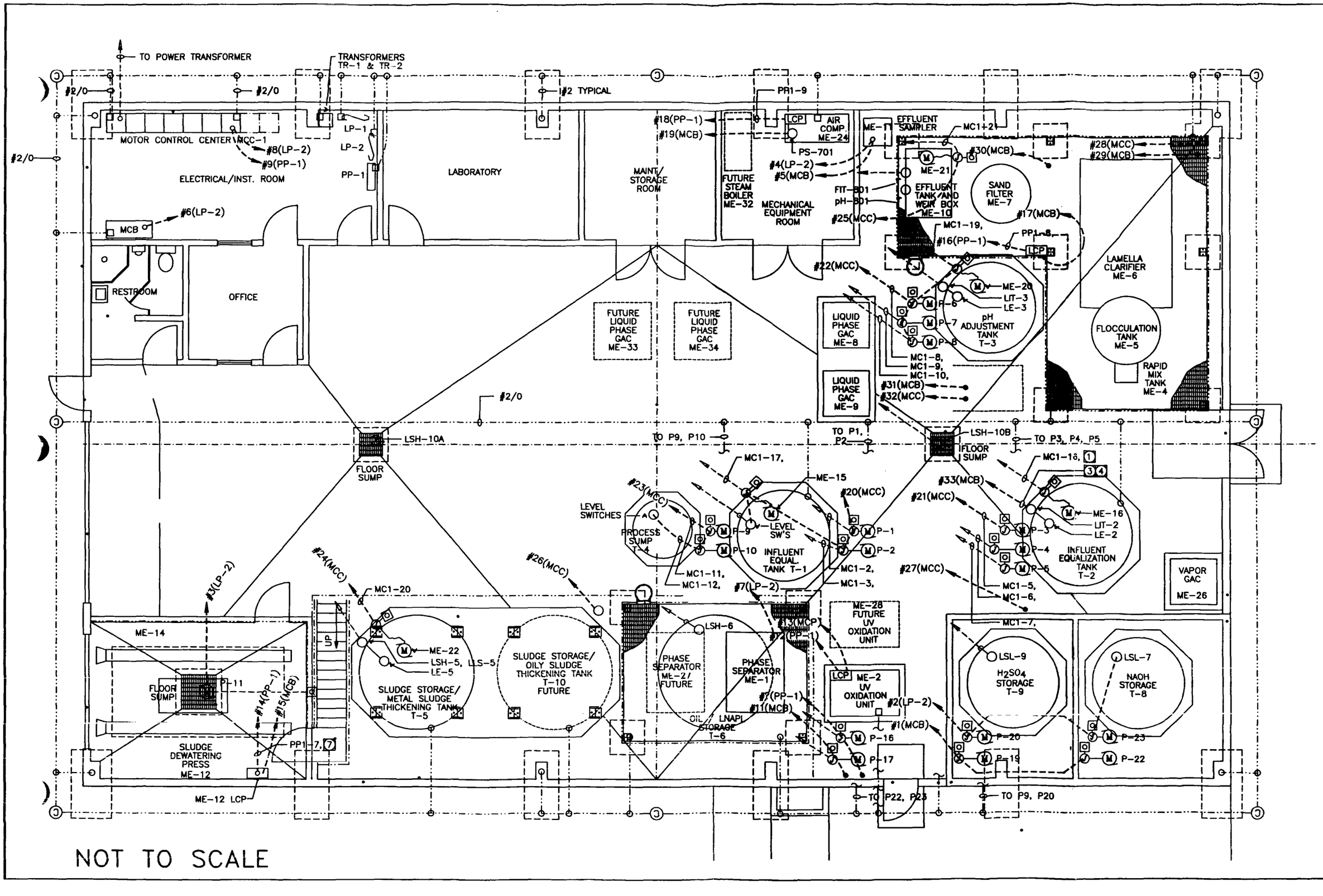

NOT TO SCALE

PRECISION
CONTROL SYSTEMS OF INDIANAPOLIS
7141 W. MORRIS ST. INDPLS, IN 46241
TEL. (317) 241-3000
FAX. (317) 247-6837

ELECTRICAL & INSTRUMENTATION DRAWINGS
Made especially for:
AMERICAN CHEMICAL SERVICE, NPL SITE
PERIMETER GROUNDWATER CONTAINMENT & TREATMENT SYSTEM
EC: PRECISION | ENGR: WATSON | CONTR: BOWEN

CONDUIT FLOOR PLAN

CODE	REVISION	BY	DATE

SHEET: 19 OF: 27
JOB#: P6927
ENG: TOW
DRW: JMS
REL: 12/05/96

CONDU WIRE SCHEDULE

CONDUIT#	FROM	TO	TYPE
1	MCB	SIGNAL FOR P-19, 20, 22, 23	(4) #18/2 SHLD CABLE
2	LP-2	POWER FOR P-19, 20, 22, 23	(6) #12 & (1) #12G
3	LP-2	POWER SUMP P-11	(2) #12 & (1) #12G
4	LP-2	POWER FOR ME-11	(2) #12 & (1) #12G ---- COMBINE #18
5	MCB	SIGNAL FOR ME-11	(1) 18/2 SHLD CABLE
6	LP-2	MCB	(2) #12 & (1) #12G & (6) #14
7	LP-2	ME-1	(6) #14; (2) #14 MCB; (2) #12 & (1) #12G
8	MCC	LP-2	(3) #10 & (1) #10G
9	MCC	PP-1	(3) #2 & (1) #2G
10	PP-1 XFORM	PGCS PUMPS 1 & 2	(6) #10; (1) #10G; & (4) #14 MCB
11	MCB	PGCS PUMPS	(4) 18/2 SHIELD
12	PP-1	LCP ME-2	(3) #8 & (1) # 8G
13	MCB	LCP ME-2	(4) 18/2 SHLD CABLE
14	PP-1	ME-12 LCP	(3) #10; (1) #10G; & (8) #14MCB
15	MCB	ME-12 LCP	(2) 18/2 SHIELDED CABLE
16	PP-1	ME-4, 5, 6 LCP	(3) #12 & (1) #12G
17	MCB	ME-4, 5, 6 LCP	(20) #14 & (1) #14G
18	PP-1	ME-24 LCP	(3) #10 & (1) #10G
19	MCB	ME-24 PS-701	(2) #14 COMBINE W/CONDUIT #18
20	MCC-1	P-1, P-2	(9) #12; (1) #12G; (17) #14 MCB; & (9) #14
21	MCC-1	P-3, 4, & 5	(12) #12; (1) #12G; (12) #14 MCB; & (12) #14
22	MCC-1	P-6, 7, & 8	(12) #12; (1) #12G; (12) #14 MCB; & (12) #14
23	MCC-1	P-9 & 10	(6) #12; (1) #12G; (14) #14 MCB; & (6) #14
24	MCC-1	ME-22 & LE-5	(3) #12; (1) #12G; (6) #14 MCB; & (3) #14
25	MCC-1	ME-21	(3) #12; (1) #12G; (5) #14 MCB; & (3) #14
26	MCC	FUTURE T-10	X
27	MCC	CHEM. SECONDARY CONTAINMENT	X
28	MCC	FUTURE BLD. ADD.	X
29	MCB	FUTURE BLD. ADD.	X
30	MCB	CLARIFIER ME-6 & ME-10	(7) 18/2 SHIELDED
31	MCB	PH & LEVEL PROBE	(2) 18/2 SHIELDED
32	MCC	FUTURE T-3	X
33	MCB	T-2 LE-2	(1) 18/2 SHIELDED
34	MCB	PP-1 & LP-2	X
35	MCC	PP-1 & LP-2	X
36	MCC	MCB	X
37	MCC	MCB	X
38	MCC	MCB	X
39	MCC	MCB	X
40	MCB	FLOOR SUMPS	(4) #14
41	MCB	PP-1 & LP-2	X

PRECISION
CONTROL SYSTEMS OF INDIANAPOLIS
7141 W. MORRIS ST.
INDPLS, IN 46241
TEL. (317) 241-3000
FAX. (317) 247-6837

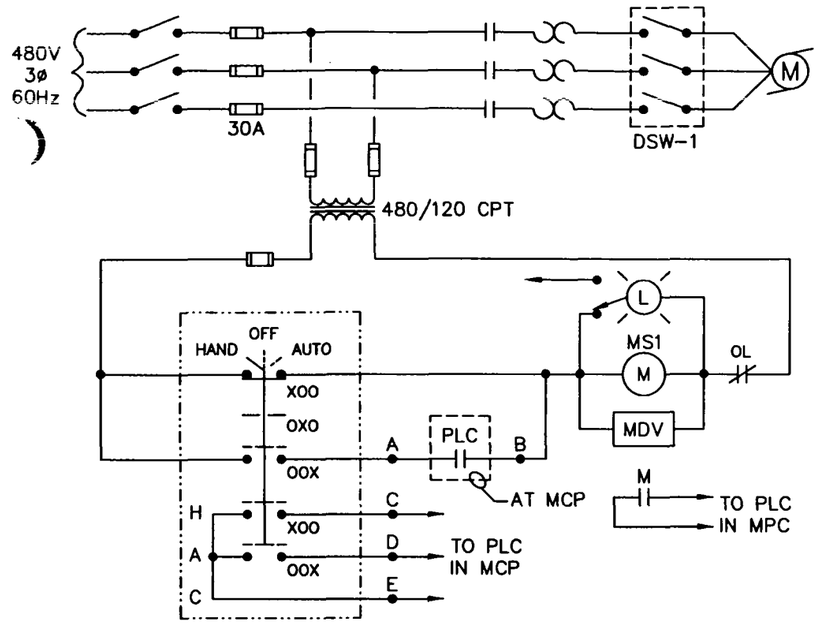

P6927 21A MOTOR CONTROL SCHEMATIC

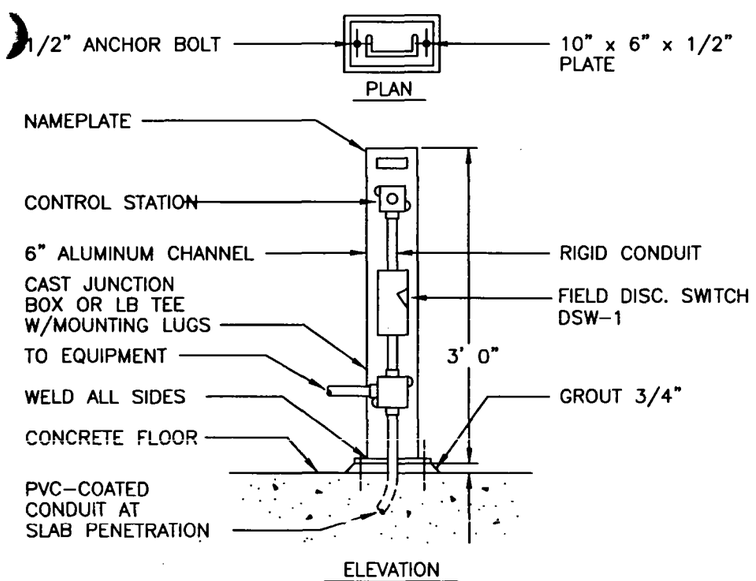

PEDESTAL MOUNTED CONTROL STATION

A
NEW

P6927 21B PEDESTAL MOUNTED CONTROL STATION
FOR ALL FVNR STARTERS IN MCC

NOTE:

An individual 2-pole Hand/Off/Auto switch is field located at each motor. The H/O/A switch indicates its position to the PLC. The other set of contacts are hardwired to their respective motor starter.

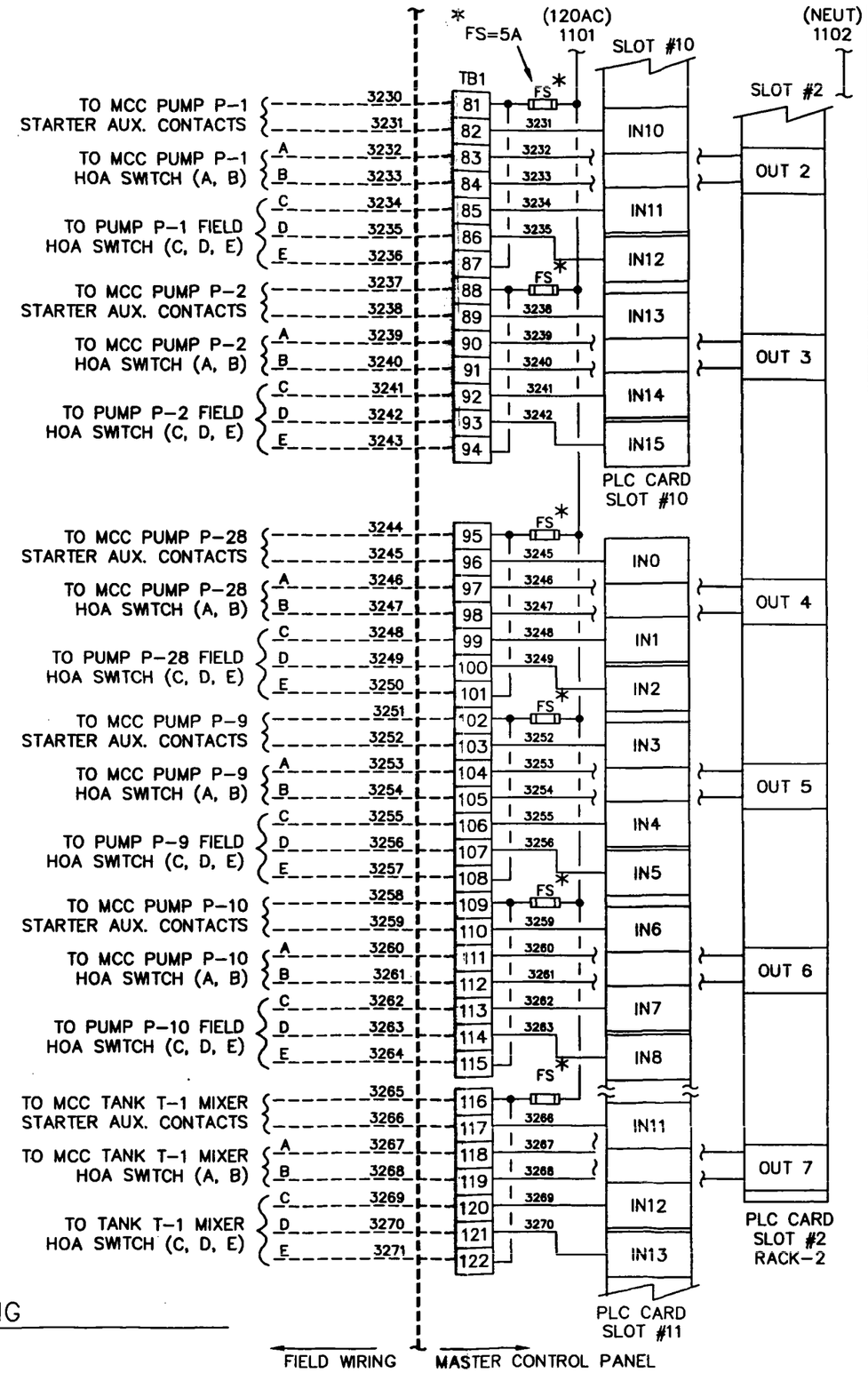

P6927 21C PUMP & MIXER WIRING

PRECISION
CONTROL SYSTEMS OF INDIANAPOLIS
7141 W. MORRIS ST. INDPLS, IN 46241
TEL. (317) 241-3000 FAX. (317) 247-6837

ELECTRICAL & INSTRUMENTATION DRAWINGS
Made especially for:
AMERICAN CHEMICAL SERVICE, NPL SITE
PERIMETER GROUNDWATER CONTAINMENT & TREATMENT SYSTEM
EC: PRECISION ENGR: WATSON CONTR: BOWEN

TITLE: PUMP & MIXER WIRING

CODE	REVISION	BY	DATE
1	AS-BUILTS	JMS	01/09/97

SHEET: 21 OF: 27
JOB#: P6927
ENG: TOW
DRW: JMS
REL: 12/05/96

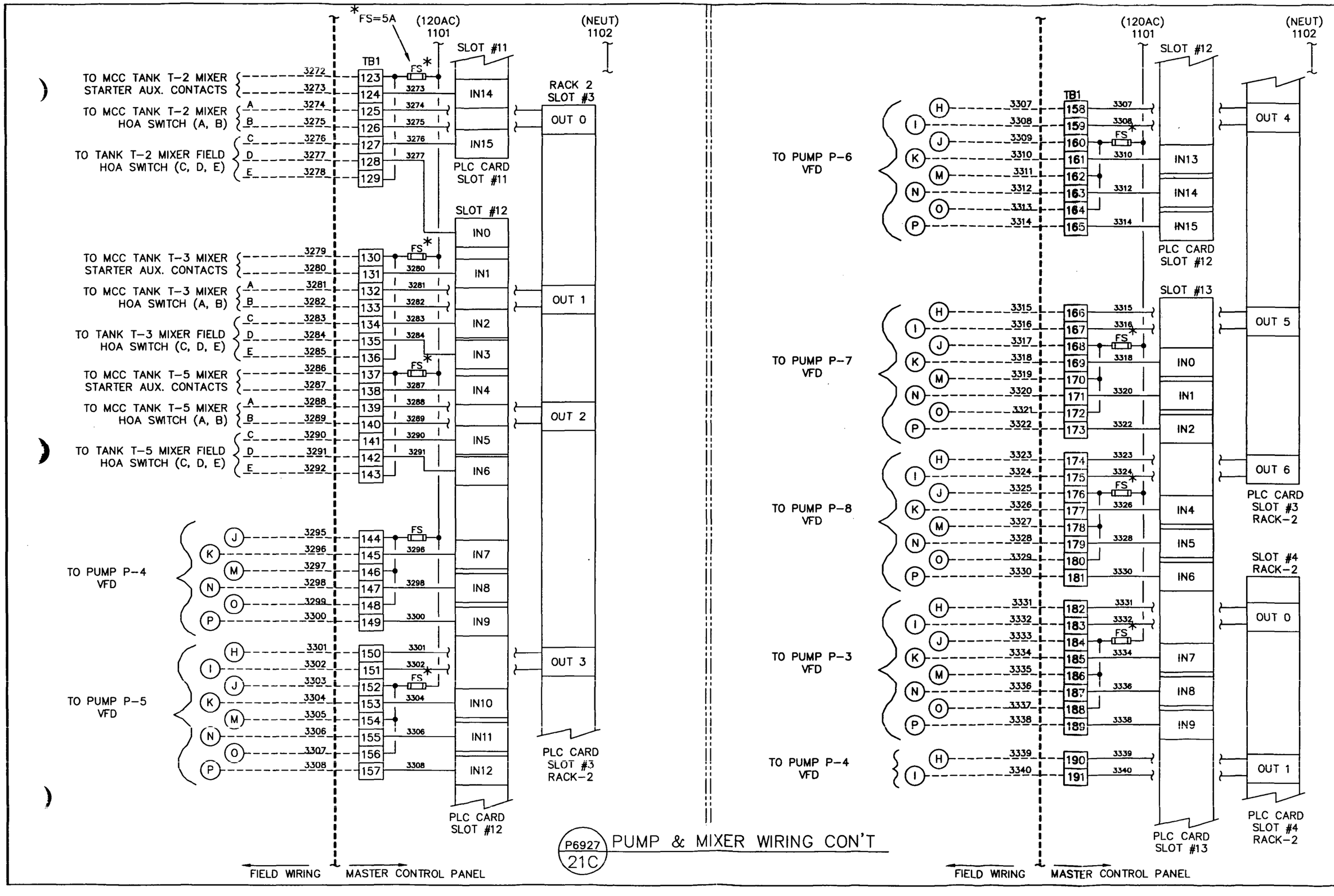

P6927 21C PUMP & MIXER WIRING CON'T

PRECISION
CONTROL SYSTEMS OF INDIANAPOLIS
7141 W. MORRIS ST. INDPLS, IN 46241
TEL. (317) 241-3000
FAX. (317) 247-6837

ELECTRICAL & INSTRUMENTATION DRAWINGS
Made especially for:
AMERICAN CHEMICAL SERVICE, NPL SITE
PERIMETER GROUNDWATER CONTAINMENT & TREATMENT SYSTEM
EC: PRECISION ENGR: WATSON CONTR: BOWEN

TITLE: PUMP & MIXER WIRING CON'T

CODE	REVISION	BY	DATE
1	AS-BUILTS	JMS	01/09/97

SHEET: 22 OF: 27
JOB#: P6927
ENG: TOW
DRW: JMS
REL: 12/05/96

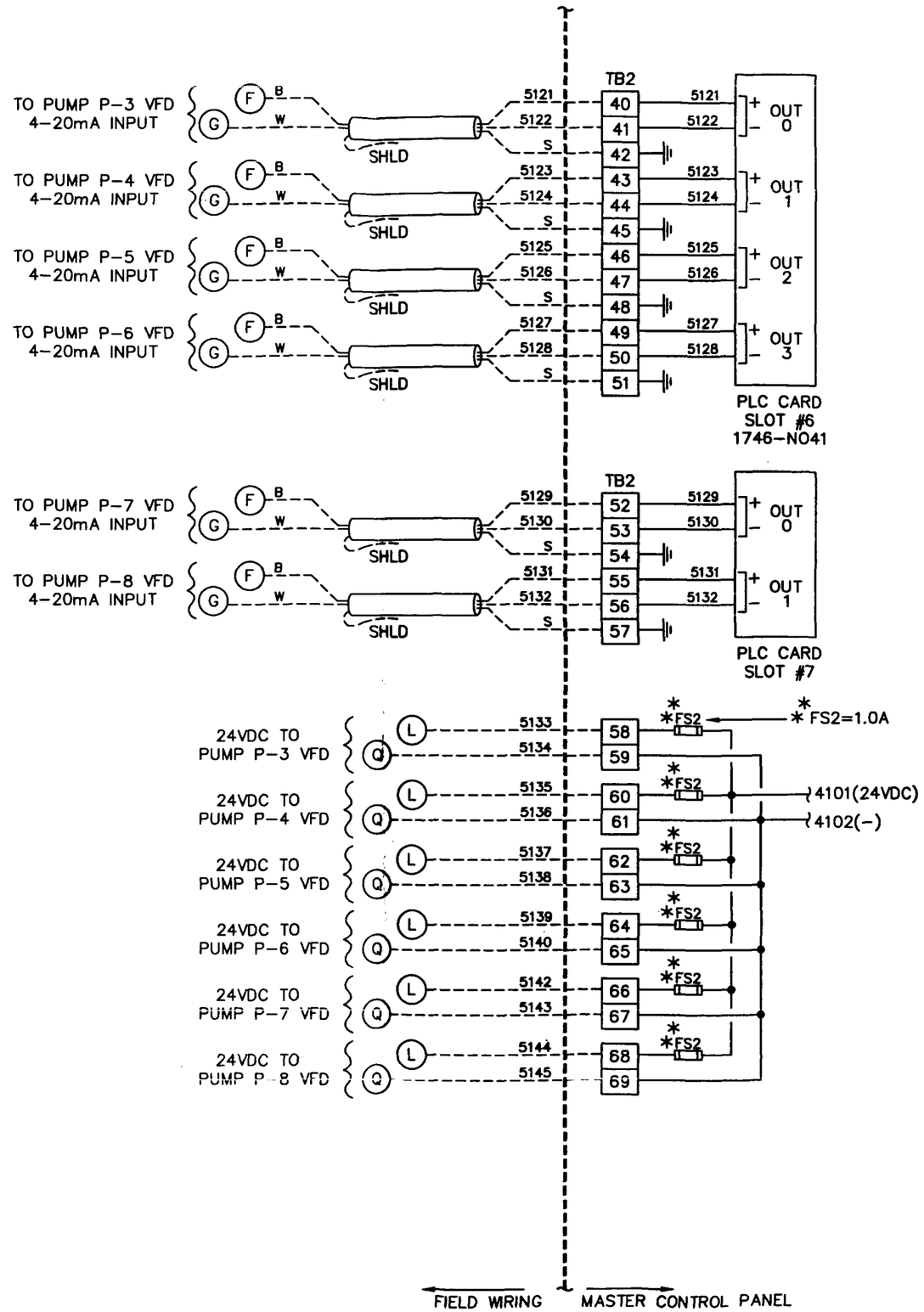

PRECISION
CONTROL SYSTEMS OF INDIANAPOLIS
7141 W. MORRIS ST. INDPLS, IN 46241
TEL. (317) 241-3000
FAX. (317) 247-6837

ELECTRICAL & INSTRUMENTATION DRAWINGS
Made especially for:
AMERICAN CHEMICAL SERVICE, NPL SITE
PERIMETER GROUNDWATER CONTAINMENT & TREATMENT SYSTEM
EC: PRECISION | ENGR: WATSON | CONTR: BOWEN

PUMP VFD WIRING

CODE	REVISION	BY	DATE

SHEET: 23 OF: 27
JOB#: P6927
ENG: TOW
DRW: JMS
REL: 12/05/95

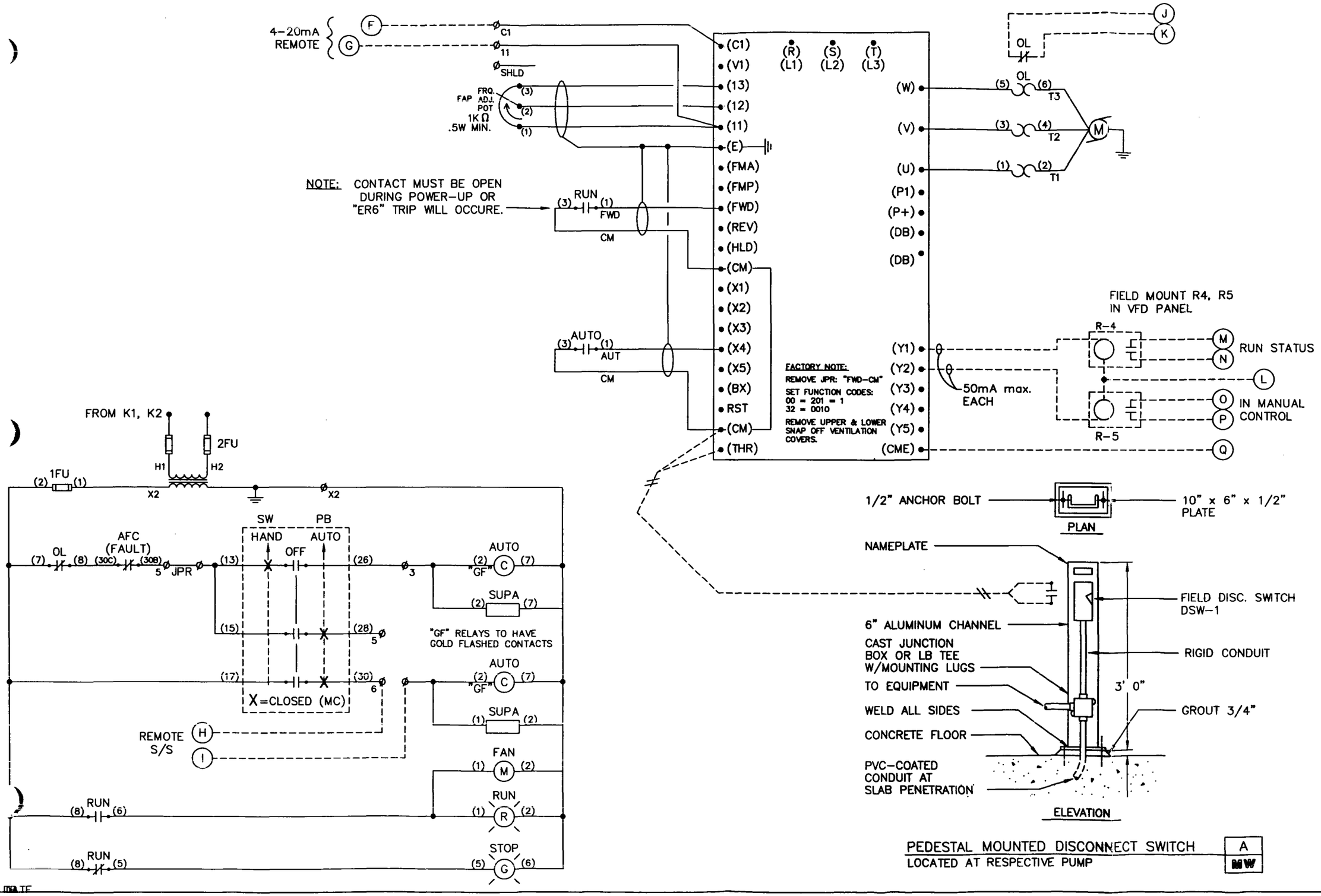

PEDESTAL MOUNTED DISCONNECT SWITCH
LOCATED AT RESPECTIVE PUMP

A
NEW

PRECISION
CONTROL SYSTEMS OF INDIANAPOLIS
7141 W. MORRIS ST. INDPLS, IN 46241
TEL. (317) 241-3000
FAX. (317) 247-6837

ELECTRICAL & INSTRUMENTATION DRAWINGS
Made especially for:
AMERICAN CHEMICAL SERVICE, NPL SITE
PERIMETER GROUNDWATER CONTAINMENT & TREATMENT SYSTEM
EC: PRECISION | ENGR: WATSON | CONTR: BOWEN

TITLE: VARIABLE SPEED DRIVE

CODE	REVISION	BY	DATE
1	AS-BUILTS	JMS	01/09/97

SHEET: 24 OF: 27
JOB#: P6927
ENG: TOW
DRW: JMS
REL: 12/05/96

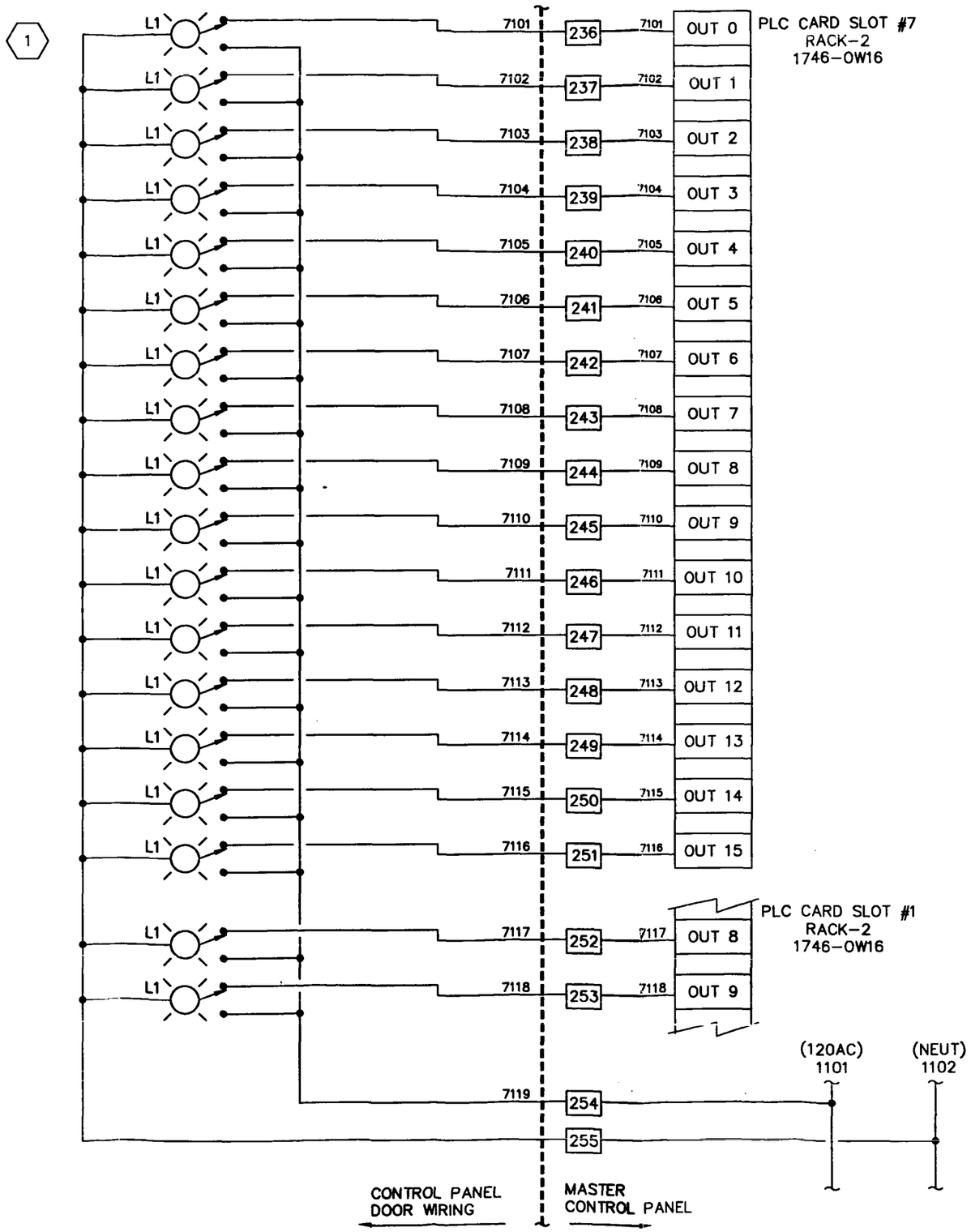

PLAN NOTES:

(1) SEE SHEET 27 FOR TAG DESCRIPTIONS OF ALL LIGHTS.

P6927 25A PANEL LIGHT WIRING

TYPICAL OF ONE(1) SYSTEM

PRECISION
CONTROL SYSTEMS OF INDIANAPOLIS
7141 W. MORRIS ST. INDPLS, IN 46241
TEL. (317) 241-3000
FAX. (317) 247-6837

ELECTRICAL & INSTRUMENTATION DRAWINGS
Made especially for:
AMERICAN CHEMICAL SERVICE, NPL SITE
PERIMETER GROUNDWATER CONTAINMENT & TREATMENT SYSTEM
EC: PRECISION ENGR: WATSON CONTR: BOWEN

PANEL LIGHT WIRING

CODE	REVISION	BY	DATE
1	AS-BUILTS	JMS	01/09/97

JOB#: P6927
ENG: TOW
DRW: JMS
REL: 12/05/96

SHEET: 25 OF: 27

BILL OF MATERIALS

DEVICE	QTY.	PART #	DESCRIPTION
LAH-1	1	L4-SS-TOP	WE Anderson Level Switch
LSHH-1	1	L4-SS	WE Anderson Level Switch
LSH-1	1	L4-SS	WE Anderson Level Switch
LSL-1	1	L4-SS	WE Anderson Level Switch
LE/LIT-2	1	341GD1S2B12R313	Moore Pressure Transmitter
V1	1	–	Apollo Stainless Ball Valve
PH-3	1	3081-01-07	Rosemount Ph Transmitter, 2-wire with infrared remote
V2	1	–	Apollo Stainless Ball Valve
LE/LIT-3	1	341GD1S2B12R313	Moore Pressure Transmitter
PRV-1	1	62VA	Flow Control Regulator
LSHH-4	1	L4-SS	WE Anderson Level Switch
LSH-4	1	L4-SS	WE Anderson Level Switch
LSL-4	1	L4-SS	WE Anderson Level Switch
LAH-5	1	Z-TRON	Drexelbrook, Rf level probe
LAH-5	1	Z-TRON	Drexelbrook, Rf level probe
LSH-6	1	L4-SS	WE Anderson Level
LSL-7	1	L4-SS	WE Anderson Level
LSL-8	1	L4-SS	WE Anderson Level
LSL-9	1	L4-SS	WE Anderson Level
LSH-10A,B	2	LV652	Float Ball Switch
CS-X	22	CR104 Series	GE DPDT H/O/A Switch, NEMA 4X
PS-701	1	DA-31-153-7	Mercoid Pressure Switch
R1,R2	2	RH1B-UAC-120	Relay, 120V SPDT, IDEC
X1,X2,X3,X4	4	9070-KF75D1	Transformer, Square-D
MS-1,2,3	3	509-BOB	Starter, Nema 1, AB
CB-1,2,3	3	FAL36007-12M	Cuircuit Breaker, Square D
DS-1	1	1494V-DR633	Fused Disconnect Switch, AB
CB-3	1	–	IP Circuit Breaker, AB
PHC-1	1	3081-01-07	Transmitter, pH, Rosemount
HS-1,2,3,4	4	800H-JR2B	Switch, 3-pos., NEMA 4X, AB
R3	1	RH1B-UAC-120	Relay, 120V, 10A, IDEC
L1,2	2	800H-PRT16R	Pilot Light, Push-to test, 120V, AB
FS-X	50	1492-H7	Fused Switch, AB
TB1	260	1492-UM2	Terminal block, AB
TB2	100	1492-UMG4	Geounded Terminal Block, AB
LCP-3	1	4550422408	Enclosure, Stainless Steel 4X
FE/FIT-801,2,3	3	10D1472AM12PT29KD3	Magnet flow meter, F&P
PH-801	1	3081-01-07	Transmitter, pH, Rosemount
ENC-1	1	12FS-726024DD	Enclosure, NEMA 12

BILL OF MATERIALS CONTINUED

DEVICE	QTY.	PART #	DESCRIPTION
UPS	1	ME Series	Uninterruptable power suppy, Best
PC	1	–	133 MHz Pentium w/14" SVGA
PLC System			
-RACK 1	1	1746-A13	13 Slot Rack, AB
-RACK 2	1	1746-A7	7 Slot Rack, AB
-PS1	1	1746-P4	Power Supply, ABV
-PS2	1	1746-P2	Power Supply, AB
-CPU	1	SLC/504	SLC/504 CPU
-AI	3	1746-N14	4-Current Input
-AO	4	1746-NO14	4-Current Output
-DI	7	1746-1A16	16-120V Inputs
-DO	4	1746-OW16/1746-OX8	16/8 120V Outputs
PS3	1	SLS-12-051	Sola 24VDC Power Supply
GFCI	1	–	Ground Fault Recepticle
Printer	1	HP682C	HP 682C Laserjet Printer with Floor Stand
AH-1	1		Alarm Bell, Federal Signal
PB-1	1		Push Button, Flush Head
PB-2	1		Push Button, Emergency Stop Mushroom head
MCC	1	8000 Line	Motor Control, GE 8000 Series
TR-2	1	9T23B3871	Transformer, GE
LP-2	1	AQ (101)	Power Panel 120/240, 50A, GE
PP-1	1	AD (101)	Power Dist. Panel, 100A, 480V, GE
DSW-1	18	–	Field Disconnect Switch, 30A, NEMA 4X, GE
R4,5	12	RH1B-UAC-24DC	Relay, SPDT, 24VDC, 10A, IDEC
L3	31	800E-DL5RX10	Pilot light, push to test, IEC, AB

PRECISION
CONTROL SYSTEMS OF INDIANAPOLIS
7141 W. MORRIS ST.
INDPLS, IN 46241
TEL. (317) 241-3000
FAX. (317) 247-6837

ELECTRICAL & INSTRUMENTATION DRAWINGS
Made especially for:
AMERICAN CHEMICAL SERVICE, NPL SITE
PERIMETER GROUNDWATER CONTAINMENT & TREATMENT SYSTEM
EC: PRECISION | ENGR: WATSON | CONTR: BOWEN

BILL OF MATERIALS

CODE	REVISION	BY	DATE

SHEET: 26 OF: 27
JOB#: P6927
ENG: TOW
DRW: JMS
REL: 12/05/96

RACK#	SLOT#	I/O	FIELD DEVICE CONNECTION	SOFTWARE ADDRESS
1	1	–	5/04 CPU	
1	2	0	TANK-2 LEVEL LE/LIT-2	
	1746-N14	1	TANK-3 LEVEL LE/LIT-3	
		2	TANK-3 pH PH-3	
		3	CLARIFIER pH PHC-1	
1	3	0	FINAL EFFLUENT FLOW FE/FIT-801	
	1746-N14	1	FINAL EFFLUENT pH PH-801	
		2	PGCS WELL LEVEL LT-1	
		3	UV UNIT FLOW SIGNAL	
1	4	0	CHEM PUMP P-19	
	1746-NO41	1	CHEM PUMP P-20	
		2	CHEM PUMP P-22	
		3	CHEM PUMP P-23	
1	5	0	CHEM PUMP P-21	
	1746-NO41	1	CHEM PUMP P-18	
		2	CLARIFIER POLYMER PUMP	
		3	SPARE	
1	6	0	P3 VFD SPEED	
	1746-NO41	1	P4 VFD SPEED	
		2	P5 VFD SPEED	
		3	P6 VFD SPEED	
1	7	0	P7 VFD SPEED	
	1746-NO41	1	P8 VFD SPEED	
		2	SPARE	
		3	SPARE	
1	8	0	TANK #1 LEVEL SWITCH LAH-1	
	1746-1A16	1	TANK #1 LEVEL SWITCH LSHH-1	
		2	TANK #1 LEVEL SWITCH LSH-1	
		3	TANK #1 LEVEL SWITCH LSL-1	
		4	TANK #4 LEVEL SWITCH LSHH-4	
		5	TANK #4 LEVEL SWITCH LSH-4	
		6	TANK #4 LEVEL SWITCH LSL-4	
		7	TANK #5 LEVEL SWITCH LAH-5	
		8	SPARE	
		9	TANK #5 LEVEL SWITCH LSL-5	
		10	TANK #6 LEVEL SWITCH LSH-6	
		11	TANK #7 LEVEL SWITCH LSL-7	
		12	TANK #8 LEVEL SWITCH LSL-8	
		13	TANK #9 LEVEL SWITCH LSL-9	
		14	FLOOR SUMP SWITCH LSH-10A	
		15	FLOOR SUMP SWITCH LSH-10B	
1	9	0	P-12 HOA SWITCH (HAND)	
	1746-1A16	1	P-12 HOA SWITCH (AUTO)	
		2	P-14 START PUSH BUTTON	
		3	P-14 STOP PUSH BUTTON	
		4	P-15 START PUSH BUTTON	
		5	P-15 STOP PUSH BUTTON	
		6	P-13 HOA SWITCH (HAND)	
		7	P-13 HOA SWITCH (AUTO)	
		8	AIR COMPRESSOR SWITCH PS-701	
		9	FILTER PREESS "CLOSED" SIGNAL	
		10	FILTER PRESS "NOT CLOSED" SIGNAL	
		11	FILTER PRESS "FEED" SIGNAL	
		12	FILTER PRESS "AIR BLOW" SIGNAL	
		13	FILTER PRESS "CYCLE COMPLETE" SIGNAL	
		14	FILTER PRESS "PRECOAT" SIGNAL	
		15	FILTER PRESS "CORE BLOW" SIGNAL	

RACK#	SLOT#	I/O	FIELD DEVICE CONNECTION	SOFTWARE ADDRESS
1	10	0	CLARIFIER ME-18 RUN STATUS	
	1746-1A16	1	CLARIFIER ME-18 HOA SWITCH (HAND)	
		2	CLARIFIER ME-18 HOA SWITCH (AUTO)	
		3	CLARIFIER ME-19 RUN STATUS	
		4	CLARIFIER ME-19 HOA SWITCH (HAND)	
		5	CLARIFIER ME-19 HOA SWITCH (AUTO)	
		6	SAND FILTER RUN STATUS	
		7	POWER FAILURE ALARM RELAY	
		8	HORN SILENCE PUSH BUTTON	
		9	EMER STOP PUSH BUTTON	
		10	P-1 RUN STATUS	
		11	P-1 HOA SWITCH (HAND)	
		12	P-1 HOA SWITCH (AUTO)	
		13	P-2 RUN STATUS	
		14	P-2 HOA SWITCH (HAND)	
		15	P-2 HOA SWITCH (AUTO)	
1	11	0	P-28 RUN STATUS	
	1746-1A16	1	P-28 HOA SWITCH (HAND)	
		2	P-28 HOA SWITCH (AUTO)	
		3	P-9 RUN STATUS	
		4	P-9 HOA SWITCH (HAND)	
		5	P-9 HOA SWITCH (AUTO)	
		6	P-10 RUN STATUS	
		7	P-10 HOA SWITCH (HAND)	
		8	P-10 HOA SWITCH (AUTO)	
		9	UV UNIT RUN STATUS	
		10	SPARE	
		11	TANK T1 MIXER RUN STATUS	
		12	TANK T1 MIXER HOA SWITCH (HAND)	
		13	TANK T1 MIXER HOA SWITCH (AUTO)	
		14	TANK T2 MIXER RUN STATUS	
		15	TANK T2 MIXER HOA SWITCH (HAND)	
1	12	0	TANK T2 MIXER HOA SWITCH (AUTO)	
	1746-1A16	1	TANK T3 MIXER RUN STATUS	
		2	TANK T3 MIXER HOA SWITCH (HAND)	
		3	TANK T3 MIXER HOA SWITCH (AUTO)	
		4	TANK T5 MIXER RUN STATUS	
		5	TANK T5 MIXER HOA SWITCH (HAND)	
		6	TANK T5 MIXER HOA SWITCH (AUTO)	
		7	P-4 VFD FAULT	
		8	P-4 VFD RUN STATUS	
		9	P-4 "MANUAL" STATUS	
		10	P-5 VFD FAULT	
		11	P-5 VFD RUN STATUS	
		12	P-5 "MANUAL" STATUS	
		13	P-6 VFD FAULT	
		14	P-6 VFD RUN STATUS	
		15	P-6 "MANUAL" STATUS	
1	13	0	P-7 VFD FAULT	
	1746-1A16	1	P-7 VFD RUN STATUS	
		2	P-7 "MANUAL" STATUS	
		3	SPARE	
		4	P-8 VFD FAULT	
		5	P-8 VFD RUN STATUS	
		6	P-8 "MANUAL" STATUS	
		7	P-3 VFD FAULT	
		8	P-3 VFD RUN STATUS	
		9	P-3 "MANUAL" STATUS	
		10	PGCS P-1 RUN STATUS	
		11	PGCS P-1 HOA SWITCH (AUTO)	
		12	PGCS P-1 HOA SWITCH (HAND)	
		13	PGCS P-2 RUN STATUS	
		14	PGCS P-2 HOA SWITCH (AUTO)	
		15	PGCS P-2 HOA SWITCH (HAND)	

PRECISION
CONTROL SYSTEMS OF INDIANAPOLIS
7141 W. MORRIS ST. INDPLS, IN 46241
TEL. (317) 241-3000
FAX. (317) 247-6837

ELECTRICAL & INSTRUMENTATION DRAWINGS
Made especially for:
AMERICAN CHEMICAL SERVICE, NPL SITE
PERIMETER GROUNDWATER CONTAINMENT & TREATMENT SYSTEM
EC: PRECISION | ENGR: WATSON | CONTR: BOWEN

TITLE: PLC I/O SCHEDULE

CODE	REVISION	BY	DATE

JOB#: P6927
ENG: TOW
DRW: JMS
REL: 12/05/96

RACK#	SLOT#	I/O	FIELD DEVICE CONNECTION	SOFTWARE ADDRESS
2	1	0	P12 S/S	
	1746-OW16	1	P14 S/S	
		2	P15 S/S	
		3	P13 S/S	
		4	FILTER PRESS "OK" TO START	
		5	FILTER PRESS "OK" TO FEED	
		6	CLARIFIER POLYBLEND SOLENOID S/S	
		7	CONTROL PANEL ALARM HORN	
		8	CHEMICAL PUMP P22 RUN LIGHT	
		9	CHEMICAL PUMP P23 RUN LIGHT	
		10	SPARE	
		11	SPARE	
		12	SPARE	
		13	SPARE	
		14	SPARE	
		15	SPARE	
2	2	0	CLARIFIER ME-18 S/S	
	1746-OX8	1	CLARIFIER ME-19 S/S	
		2	P-1 S/S	
		3	P-2 S/S	
		4	P-28 S/S	
		5	P-9 S/S	
		6	P-10 S/S	
		7	TANK T1 MIXER S/S	
2	3	0	TANK T2 MIXER S/S	
	1746-OX8	1	TANK T3 MIXER S/S	
		2	TANK T5 MIXER S/S	
		3	P5 VFD S/S	
		4	P6 VFD S/S	
		5	P7 VFD S/S	
		6	P8 VFD S/S	
		7	SPARE	
2	4	0	P3 VFD S/S	
	1746-OX8	1	P4 VFD S/S	
		2	PGCS P-1 S/S	
		3	PGCS P-2 S/S	
		4	PGCS P-3 S/S	
		5	CLARIFIER ME-17 S/S	
		6	SPARE	
		7	SPARE	
2	5	0	PGCS P-3 RUN STATUS	
	17461A16	1	PGCS P-3 HOA SWITCH (AUTO)	
		2	PGCS P-3 HOA SWITCH (HAND)	
		3	CLARIFIER ME-17 RUN STATUS	
		4	CLARIFIER ME-17 HOA SWITCH (AUTO)	
		5	CLARIFIER ME-17 HOA SWITCH (HAND)	
		6	SPARE	
		7	SPARE	
		8	SPARE	
		9	SPARE	
		10	SPARE	
		11	SPARE	
		12	SPARE	
		13	SPARE	
		14	SPARE	
		15	SPARE	

RACK#	SLOT#	I/O	FIELD DEVICE CONNECTION	SOFTWARE ADDRESS
2	6	0	PGCS WELL 2 LEVEL LT-2	
	1746N14	1	PGCS WELL 2 LEVEL LT-3	
		2	PGCS INFLUENT FLOW FE/FIT-802	
		3	BARRIER INFLUENT FLOW FE/FIT-803	
2	7	0	PUMP P12 RUN STATUS LIGHT	
	1746-OW16	1	PUMP P13 RUN STATUS LIGHT	
		2	PUMP P14 RUN STATUS LIGHT	
		3	PUMP P15 RUN STATUS LIGHT	
		4	TANK-2 HIGH LEVEL ALARM LIGHT	
		5	CLARIFIER HIGH pH ALARM LIGHT	
		6	CLARIFIER LOW pH ALARM LIGHT	
		7	TANK-3 HIGH pH ALARM LIGHT	
		8	TANK-3 LOW pH ALARM LIGHT	
		9	TANK-3 HIGH LEVEL ALARM LIGHT	
		10	FINAL EFFLUENT HIGH pH ALARM LIGHT	
		11	FINAL EFFLUENT LOW pH ALARM LIGHT	
		12	CHEM. PUMP P18 RUN LIGHT	
		13	CHEM. PUMP P19 RUN LIGHT	
		14	CHEM. PUMP P20 RUN LIGHT	
		15	CHEM. PUMP P21 RUN LIGHT	

PRECISION
CONTROL SYSTEMS OF INDIANAPOLIS
7141 W. MORRIS ST.
INDPLS, IN 46241
TEL. (317) 241-3000
FAX. (317) 247-6837

ELECTRICAL & INSTRUMENTATION DRAWINGS
Made especially for:
AMERICAN CHEMICAL SERVICE, NPL SITE
PERIMETER GROUNDWATER CONTAINMENT & TREATMENT SYSTEM
EC: PRECISION ENGR: WATSON CONTR: BOWEN

PLC I/O SCHEDULE CON'T

CODE	REVISION	BY	DATE

SHEET: 27A OF: 27
JOB#: P6927
ENG: TOW
DRW: JMS
REL: 12/05/96

CONDUIT	FROM / IO	WIRE FUNCTION	WIRE NUMBERS	WIRE SIZE & QUANTITY
CONDUIT #1	MAIN AC SUPPLY FROM CUSTOMER	480V, 60Hz, 80A	L1, L2, GND	2 x 4 awg & GND RW90 (or equivalent)
CONDUIT #2	FROM PLC PANEL TO CUSTOMER'S INTERLOCKS DRY CONTACT RATED FOR 5A, 120V SEE SHEET 4	INFLUENT SOLENOID VALVE YS-1066 EFFLUENT SOLENOID VALVE YS-1866 SYSTEM WARNING YS-1085 SYSTEM SHUTDOWN YS-1087 FLOW SIGNAL 4-20mA	9, Y36 9, Y37 RY3A, RY3B RY4A, RY4B WX7+, WX7A	8 x 16 awg 1 OF 2-CORE SHIELDED CABLE, 18 awg
CONDUIT #3	FROM RAYOX SKID TO PEROXIDE METERING PUMP SKID (NOT SHOWN)	120V TO METERING PUMP PEROXIDE LOW FLOW SW PEROXIDE AUTO BLEED PEROXIDE PULSE SIGNAL 24Vdc, 0Vdc	P171, N, GND X20 Y30 Y14 4, g	1 OF 3-CORE SHIELDED CABLE, 16 awg 5 x 16 awg
CONDUIT #4	FROM RAYOX SKID TO CAUSTIC METERING PUMP SKID (NOT SHOWN)	120V TO METERING PUMP CAUSTIC PULSE SIGNAL 0Vdc	P172, N, GND Y33 9	1 OF 3-CORE SHIELDED CABLE, 16 awg 2 x 16 awg
CONDUIT #5	FROM RAYOX SKID TO ACID METERING PUMP SKID (NOT SHOWN)	120V TO METERING PUMP ACID PULSE SIGNAL 0Vdc	P173, N, GND Y14 9	1 OF 3-CORE SHIELDED CABLE, 16 awg 2 x 16 awg
CONDUIT #6	FROM RAYOX SKID TO ENOX METERING PUMP SKID (NOT SHOWN)	120V TO METERING PUMP ENOX LOW FLOW SW ENOX AUTO BLEED ENOX PULSE SIGNAL 24Vdc, 0Vdc	P174, N, GND X21 Y16 Y17 4, 9	1 OF 3-CORE SHIELDED CABLE, 16 awg 5 x 16 awg
CONDUIT #7	FROM PLC PANEL TO INFLUENT pH PROBE	INFLUENT pH SIGNAL	4, WX31	1 OF 2-CORE SHIELDED CABLE, 16 awg
CONDUIT #8	FROM PLC PANEL TO EFFLUENT pH PROBE	EFFLUENT pH SIGNAL	4, WX41	1 OF 2-CORE SHIELDED CABLE, 18 awg
CONDUIT #9	FROM PLC PANEL TO ACID SOLENOID VALVE	CONTROL SIGNAL	Y32, 9	2 x 16 awg & GROUND

PRECISION
CONTROL SYSTEMS OF INDIANAPOLIS
7141 W. MORRIS ST. INDPLS, IN 46241
TEL. (317) 241-3000
FAX. (317) 247-6837

ELECTRICAL & INSTRUMENTATION DRAWINGS
Made especially for:
AMERICAN CHEMICAL SERVICE, NPL SITE
PERIMETER GROUNDWATER CONTAINMENT & TREATMENT SYSTEM
DSGN: PRECISION ENGR: WATSON CONTR: BOWEN

TITLE: CONDUIT SCHEDULE

CODE	REVISION	BY	DATE

SHEET: 27B OF: 27
JOB#: P6927
ENG: TOW
DRW: JMS
REL: 12/05/96

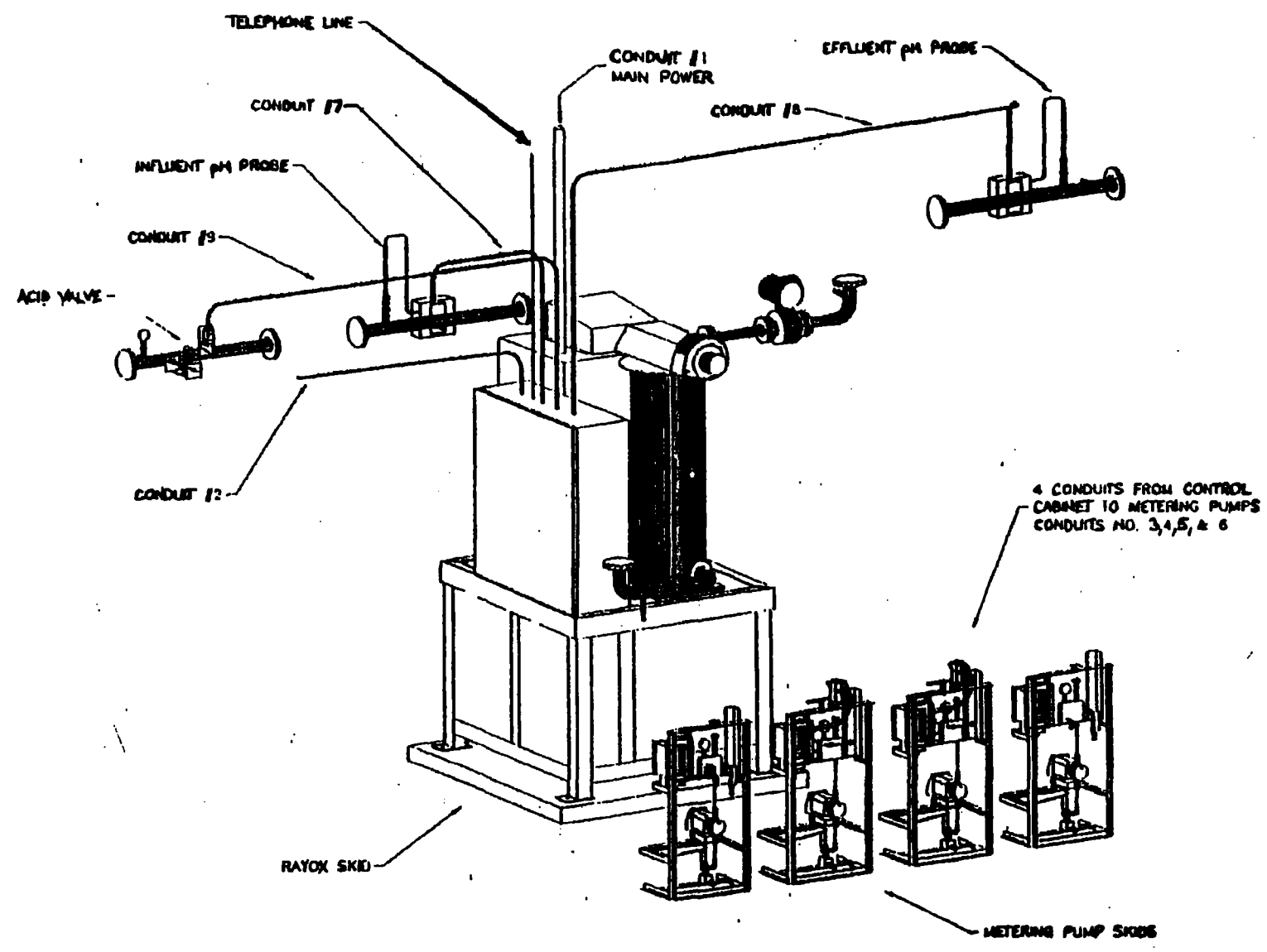

P6927 27C/A UV UNIT ELECTRICAL INSTALLATION

TYPICAL OF ONE(1) SYSTEM

PRECISION
CONTROL SYSTEMS OF INDIANAPOLIS
7141 W. MORRIS ST. INDPLS, IN 46241
TEL. (317) 241-3000
FAX. (317) 247-6837

ELECTRICAL & INSTRUMENTATION DRAWINGS
Made especially for:
AMERICAN CHEMICAL SERVICE, NPL SITE
PERIMETER GROUNDWATER CONTAINMENT & TREATMENT SYSTEM
BY: PRECISION ENGR: WATSON CONTR: BOWEN

UV UNIT ELECTRICAL INSTALLATION

CODE	REVISION	BY	DATE

SHEET: 27C OF: 27
JOB#: P6927
ENG: TOW
DRW: JMS
REL: 12/05/96

SEQUENCE OF CONTROL

The UV unit comes with a manufacturers self-contained PLC based control system. However, the primary plant PLC in the electrical room monitors the following items in the UV unit control panel.

1. *System run status*
2. Flowmeter flow rate 4mA=0GPM, 20mA=60GPM

The primary PLC will indicate if the UV unit is operating. For safety reasons, the UV unit is manually enabled to run at the UV control panel. The primary PLC also monitors the flow signal from the UV unit. The PLC uses this signal to maintain a minimum (adj.) flow rate through the unit of 10GPM.

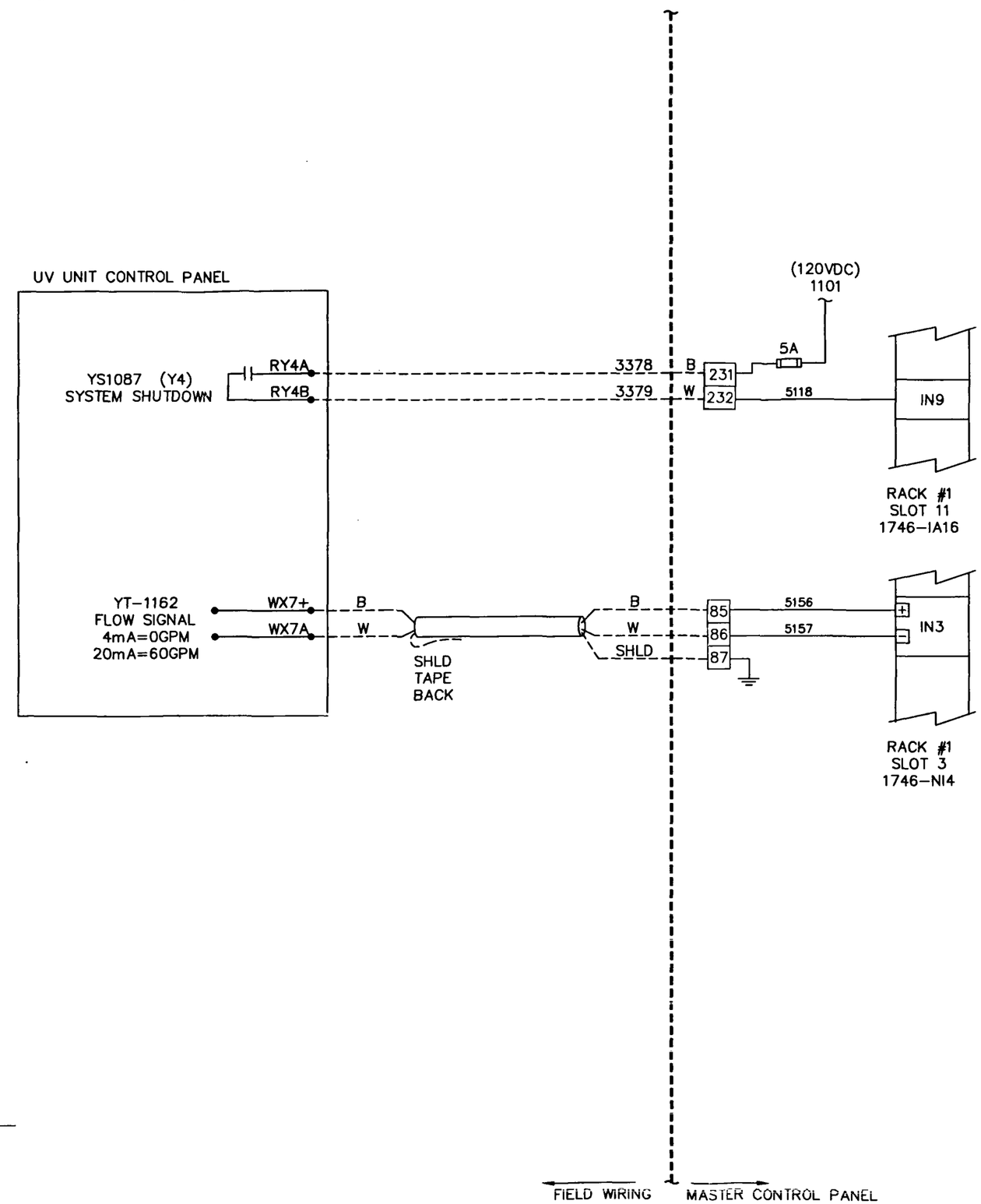

P6927 27D/A UV UNIT PLC INTERFACE
TYPICAL OF ONE(1) SYSTEM

PRECISION
CONTROL SYSTEMS OF INDIANAPOLIS
7141 W. MORRIS ST. INDPLS, IN 46241
TEL. (317) 241-3000 FAX. (317) 247-6837

ELECTRICAL & INSTRUMENTATION DRAWINGS
Made especially for:
AMERICAN CHEMICAL SERVICE, NPL SITE
PERIMETER GROUNDWATER CONTAINMENT & TREATMENT SYSTEM
DISC: PRECISION ENGR: WATSON CONTR: BOWEN

TITLE: UV UNIT PLC INTERFACE

CODE	REVISION	BY	DATE

SHEET: 27D OF: 27
JOB#: P6927
ENG: TOW
DRW: JMS
REL: 12/05/96