OFF-SITE CONTAINMENT AREA AND KAPICA-PAZMEY AREA IN-SITU SOIL VAPOR EXTRACTION SYSTEMS CONSTRUCTION COMPLETION REPORT

AMERICAN CHEMICAL SERVICE, INC.
NPL SITE
GRIFFITH, INDIANA

MWH File No. 2090601

Prepared For:

American Chemical Service NPL Site RD/RA Executive Committee
Griffith, Indiana

Prepared By:

MWH Americas, Inc.
175 West Jackson Boulevard, Suite 1900
Chicago, Illinois 60604

March 2004

MWH

EPA Region 5 Records Ctr.
268186

OFF-SITE CONTAINMENT AREA AND KAPICA-PAZMEY AREA IN-SITU SOIL VAPOR EXTRACTION SYSTEMS CONSTRUCTION COMPLETION REPORT

AMERICAN CHEMICAL SERVICE NPL SITE GRIFFITH, INDIANA

MWH File No. 2090601

Prepared For:

American Chemical Service NPL Site RD/RA Executive Committee
Griffith, Indiana

Prepared by: _____ MARCH 10, 2004
Robert A. Adams, P.E. — Date
Senior Engineer

Approved by: _____ March 10, 2004
Peter Vagt, Ph.D., CPG — Date
Project Manager

TABLE OF CONTENTS

SECTION **PAGE**

ACRONYMS AND ABBREVIATIONS iii
1.0 INTRODUCTION 1
1.1 Site Background 1
1.2 In-Situ Soil Vapor Extraction System Objectives 2
1.3 System Description 2
1.4 Scope of Work 3
2.0 SUMMARY OF CONSTRUCTION ACTIVITIES 4
2.1 ISVE Well and Air Sparge Point Installation 4
2.1.1 Well Construction 4
2.1.2 Contaminated Soils Handling 5
2.1.3 Quality Control 5
2.1.4 Health And Safety 5
2.2 Construction of ISVE System Blower Shed 6
2.2.1 Foundation 6
2.2.2 Blower Shed 7
2.2.3 Conveyance Piping Manifold 8
2.2.4 Blower 9
2.2.5 Entrained Water Knockout Tank 9
2.2.6 Transfer Pump 10
2.2.7 Quality Control 10
2.3 Conveyance Piping Installation 10
2.3.1 Trench Construction 10
2.3.2 Pipe Installation 11
2.3.3 Pressure Testing 11
2.3.4 Connection to Wells 11
2.3.5 Backfill and Compaction 12
2.3.6 Contaminated Soils Handling 13
2.3.7 Material Testing and Quality Control 13
2.3.8 Health and Safety 14
2.4 Installation of Thermal Oxidizer/Scrubber System 14
2.4.1 Thermal Oxidizer 15
2.4.2 Scrubber 16
2.4.3 Control Panel 17
2.4.4 System Operation 18
2.4.5 Startup 18
2.5 Controls and Instrumentation 19
2.5.1 Motor Control Center 20
2.5.2 Programmable Logic Controller 20
3.0 REFERENCES 21

TABLES

Table 1 ISVE Well and Air Sparge Point Construction Details

FIGURES

Figure C-1 Site Map
Figure C-2 ISVE Wells and AS Point Locations
Figure C-3 Blower Shed Foundation
Figure C-4 Conveyance Piping Layout
Figure C-5 Details

APPENDICES

Appendix A Sequence of Construction Activities
Appendix B Photograph Log
Appendix C Boring Logs and Well Construction Diagrams
Appendix D ISVE Well/Air Sparge Point Material Specifications
Appendix E Blower Shed Concrete Testing Results
Appendix F As-Built Drawings
Appendix G Blower Shed Equipment and Material Specifications
Appendix H Conveyance Piping Clay Compaction Testing Results
Appendix I Conveyance Piping Material Specifications
Appendix J Thermal Oxidizer/Scrubber System Equipment and Material Specifications
Appendix K Sequence of Operation for Thermal Oxidizer/Scrubber
Appendix L Control and Instrumentation Equipment Specifications

ACRONYMS AND ABBREVIATIONS

ACS	American Chemical Services, Inc.
AS	Air sparge
Boart Longyear	Boart Longyear Company
BWES	Barrier Wall Extraction System
CCR	Construction Completion Report
Durr	Durr Environmental, Inc.
Fliteway	Fliteway Technologies, Inc.
GWTP	Groundwater Treatment Plant
"H_20	Inches of water
HASP	Health and Safety Plan
HDPE	High-density polyethylene
HIS	Heritage Industrial Services, L.L.C.
hp	Horsepower
ISVE	In-situ Vapor Extraction System
K-P Area	Kapica-Pazmey Area
LEL	Lower explosive limit
mA	Milliamps
MCC	Motor Control Center
NEC	National Electric Code
NIPSCO	Northern Indiana Public Service Company
NPL	National Priorities List
OFCA	Off-Site Containment Area
ONCA	On-Site Containment Area
Patrick Engineering	Patrick Engineering, Inc.
PID	Photo-ionization detector
PLC	Programmable Logic Controller
PPE	Personal Protection Equipment
psi	Pounds per square inch
PSVP	Performance Standard Verification Plan
PVC	Polyvinyl chloride
ROD	Record of Decision
SCADA	Supervisory Control and Data Acquisition
SCBA	Self-contained Breathing Apparatus
scfm	Standard cubic feet per minute
SVOC	Semi-volatile Organic Compound
U.S. EPA	United States Environmental Protection Agency
UV	Ultraviolet
VFD	Variable Frequency Drive
VOC	Volatile organic compound

1.0 INTRODUCTION

This Construction Completion Report (CCR) summarizes the construction of the In-Situ Soil Vapor Extraction (ISVE) systems in the Off-Site Containment Area (OFCA) and Kapica-Pazmey Area (K-P Area) of the American Chemical Service, Inc. (ACS) National Priorities List (NPL) Site in Griffith, Indiana Area from July 2001 to July 2002. The United States Environmental Protection Agency (U.S. EPA) Consent Decree identification numbers for the construction of these systems are 2.a. and 2.b., respectively.

1.1 SITE BACKGROUND

The ACS NPL Site is an operating chemical manufacturing facility. Past operations have impacted five land disposal areas: the On-Site Containment Area (ONCA), the Still Bottoms Pond Area, the Treatment Lagoon, the OFCA, and the K-P Area. The OFCA and K-P Area comprise approximately one-half of the 30-acre site and together they are referred to as the Off-Site Area. Because both areas lie within the Off-Site Area and the systems share common components, the ISVE system will be referred to as the Off-Site Area ISVE system within this report. A site map is shown on Figure C-1.

In 1997, MWH installed a 4,400-foot long continuous perimeter barrier wall around the ONCA, the ACS operating facility, the OFCA and the K-P Area. The barrier wall encloses the contamination source areas at the Site. MWH installed a Separation Barrier Wall within the perimeter barrier wall from January to February 2001. The Separation Barrier Wall provides vertical, hydraulic separation of groundwater minimizing migration of contaminated groundwater from the On-Site Area to the Off-Site Area. The separation wall is keyed into a clay layer approximately 20 feet below ground surface. Figure C-1 shows the locations of the Separation Barrier Wall and the original Barrier Wall installed along the perimeter of the site.

A groundwater extraction system was installed to maintain hydraulic capture inside the barrier wall inside the contained area. This system is referred to as the Barrier Wall Extraction System (BWES). The system is comprised of ten extraction trenches. Extraction wells were installed at the end of each trench to collect the groundwater. One of the main objectives of the BWES is to dewater the On- and Off-Site Areas to allow for effective operation of the ISVE systems. Water collected by the BWES is treated at the on-site Groundwater Treatment Plant (GWTP).

Further information regarding the history of the ACS NPL Site is available in the *Final Remedial Design Report* (MWH, August 1999).

1.2 IN-SITU SOIL VAPOR EXTRACTION SYSTEM OBJECTIVES

Since the barrier wall already contains the source areas at the Site, the primary objective of ISVE at the ACS Site is reduction of mobile volatile organic compounds (VOCs) in the source areas by extracting VOCs and, to some extent, semivolatile organic compounds (SVOCs). Implementation of ISVE technology is consistent with the objectives of the Final Remedy for the ACS Site, as defined in the Record of Decision (ROD), to address the principle threat by reducing the risk of exposure to contaminated vapors and reducing the potential migration of mobile contaminants to the groundwater.

Applying ISVE to the source areas will decrease the mobile contaminants within the barrier wall. This reduction, in conjunction with the barrier wall and groundwater pump and treat system, will further reduce the potential for off-site contaminant migration.

In addition, ISVE will reduce the opportunity for vapor contact through the ground surface by reducing the vapors in the subsurface and minimize the VOC loading in the GWTP by removing VOCs before they dissolve into the groundwater.

The objective of the air sparge system in the Off-Site Area is to address areas of VOC contamination that are below the target water level. Air injected by the air sparge system induces volatilization and introduces oxygen into the groundwater to promote biodegradation. When used in conjunction with ISVE, the volatiles produced by sparging will be collected by the ISVE system.

Further discussion regarding the design of the ISVE system is available in the *Final Remedial Design Report* (MWH, August 1999).

1.3 SYSTEM DESCRIPTION

The Off-Site Area ISVE system consists of the following major components:

- Forty-two ISVE wells (12 located in the K-P Area and 30 in the OFCA)
- Conveyance piping
- Vacuum blower system
- Condensate removal system
- Extracted vapor treatment system
- Controls and Instrumentation

The ISVE blower provides a vacuum at the ISVE wells and pulls the extracted vapors to the blower shed via the conveyance piping. In the blower shed, the individual conveyance pipes merge into a header system and are directed through the condensate removal system. During initial operation of the ISVE system, extracted soil vapor is likely to include entrained groundwater. As dewatering in the Off-Site Area progresses and much of the subsurface moisture is removed, the quantity of entrained groundwater is expected to decrease.

A knockout tank with a demister removes entrained water collected with the extracted vapors. The collected water (condensate) is pumped to the GWTP for treatment.

The extracted vapors are then treated by the thermal oxidizer/scrubber system located at the GWTP to remove the contaminants from the vapor stream prior to discharge to the atmosphere. The thermal oxidizer heats the air stream to a temperature high enough to combust the volatile contaminants of the vapor stream. The scrubber removes the byproduct of the combustion process, hydrochloric acid gas, before the treated air is discharged to the atmosphere. Air sampling is conducted regularly as outlined in the Performance Standard Verification Plan (PSVP) (MWH, June 1999) and has confirmed the released air does not contain any contaminants at unacceptable concentrations.

1.4 SCOPE OF WORK

This report documents the completion of the following tasks in accordance with EPA-approved design specifications:

- **Installation of ISVE and Air Sparge Points.** Forty-two ISVE wells and three air sparge (AS) points were installed in the Off-Site Area. Twelve ISVE wells (SVE-1 through SVE-12) were installed in the K-P Area; thirty ISVE wells (SVE-13 through SVE-42) were installed in the OFCA. The air sparge points are designated as AS-7 through AS-9.

- **Construction of the ISVE System Blower Shed.** A blower shed was installed in the Off-Site Area to house the vacuum blower system and condensate removal system.

- **Installation of Conveyance Piping.** Conveyance piping was installed to connect each ISVE well and air sparge point to the piping manifold in the blower shed. Air and condensate conveyance piping also runs from the blower shed to the GWTP. Installation of this piping is detailed in the Barrier Wall Extraction System Off-Site Area Upgrades Construction Completion Report (MWH, March 2003).

- **Installation of Thermal Oxidizer/Scrubber System.** To treat the high concentrations of contaminants in the vapor stream anticipated during the initial operation of the ISVE system, a thermal oxidizer and scrubber were installed at the GWTP.

- **Installation of Controls and Instrumentation.** The ISVE system required installation of controls and instrumentation and integration of the ISVE system operation with the operation of the GWTP.

The Gantt chart in Appendix A summarizes dates and durations for each of these components.

2.0 SUMMARY OF CONSTRUCTION ACTIVITIES

2.1 ISVE WELL AND AIR SPARGE POINT INSTALLATION

The ISVE wells and air sparge points were installed in the Off-Site Area to meet the objectives detailed in Section 1.2.

MWH selected Boart Longyear Company (Boart Longyear) of Schofield, Wisconsin to install the wells. The work was conducted from August 27, 2001 to September 20, 2001.

Figure C-2 shows the locations of the wells. A photographic log of the construction of the ISVE wells and air sparge points is included in Photographs 1 through 11 of Appendix B. Boring logs and well construction diagrams prepared by Boart Longyear are included in Appendix C. Copies of the drillers' Indiana Well Driller's Licenses are included in Appendix D.

2.1.1 Well Construction

The drilling locations were surveyed by Area Survey, Inc. of Orland Park, Illinois prior to Boart Longyear's mobilization to the site. Each location was marked with a stake labeled with the well identification.

Two drill rigs, a track-mounted Diedrich-50 rig and a wheel-mounted all-terrain rig, were used to install the 42 ISVE wells and three air sparge points.

Ten-inch diameter boreholes for ISVE well locations were drilled to the specified depth using 6¼-inch inside diameter hollow-stem augers. Geologic characteristics and evidence of free product, if present at the drilling location, were noted.

The ISVE wells were installed to depths ranging from 15 to 25 feet. Installation depths are included on Table 1. The ISVE wells were constructed of 4-inch diameter, 304 stainless steel with screen lengths of 10 or 15 feet. The riser pipe for the wells extended four to six feet above the ground surface (top of clay component of interim cover). Expandable well plugs were installed to seal each well to the atmosphere after installation.

A coarse sand filter pack was installed to 12 inches above the screen. Bentonite chips were installed to approximately one foot above the filter pack and then hydrated. The chips were allowed to hydrate for approximately 10 minutes to ensure the formation of a bentonite seal immediately above the filter pack. The remainder of the annular space was then filled with bentonite grout to the ground surface. (Please note that not all of the well installation logs included in Appendix C indicate the use of bentonite grout.)

Construction details for the ISVE wells are summarized in Table 1. A detailed drawing of a typical ISVE well is included as one of the details on Figure C-5.

At each air sparge point location, an eight-inch diameter borehole was drilled to a depth of 30 feet below ground surface using a hollow-stem auger.

The air sparge points were installed to approximately 29 feet below ground surface. The points were constructed of 2-inch diameter, 304 stainless steel with a screen length of two feet. Construction details for the air sparge points are summarized in Table 1. A detailed drawing of a typical air sparge point is included in Figure C-5.

2.1.2 Contaminated Soils Handling

During drilling, plastic sheets were placed around each drilling location to prevent contaminated soils from contacting the ground surface. Drilling cuttings and the plastic sheets were collected and stored in a rolloff box. At the end of the drilling activities, the contents of the rolloff box were placed in the Fire Pond located in the On-Site Area. The Fire Pond was subsequently covered and included in the On-Site Area ISVE system (to be documented in a future CCR).

2.1.3 Quality Control

Material testing and quality control measures were followed in accordance with the *Construction Quality Assurance Plan* (Montgomery Watson, June 1999) to assure that the ISVE wells and air sparge points met the performance requirements. The following quality control measures were executed prior to and during construction:

- Submittal of manufacturer specifications and approval of construction materials,
- Verification of filter pack depth, and
- Verification of well operation.

Manufacturer specifications for the materials used during construction were submitted to and approved by MWH prior to construction. The manufacturer's specification sheets are included in Appendix D.

MWH personnel provided full time oversight to inspect the construction of the wells. The inspections included verification that the approved materials were used, verifications that the materials were not damaged or compromised during installation, verification that the proper documentation was completed, and that the wells were constructed to the proper depths and dimensions. Well depths and dimensions were verified by auger depth. The depth of the filter pack above the top of the screen was verified using a tape measure.

2.1.4 Health and Safety

The work associated with the installation of the ISVE wells and air sparge points was performed in accordance with the site-specific Health and Safety Plan (HASP) and Boart Longyear's HASP submitted to MWH prior to mobilizing to the site.

Prior to beginning work each day, Toolbox Safety Meetings were held with all work crews on site that day. The Boart Longyear project manager or the MWH Site Health and Safety

Officer conducted the meetings. Topics at the meetings included identification of the various work crews on site, safety concerns related to the day's activities, general health and safety subjects, and site- and activity-specific protocols.

An exclusion zone was set up at a minimum 30-foot radius around each drilling location. The exclusion zone was expanded if necessary based on air monitoring results. In areas where the drill rigs were relatively close together, a larger exclusion zone was established to encompass both rigs. A contamination reduction zone was set up adjacent to the exclusion zone for personnel decontamination.

Boart Longyear monitored concentrations of VOCs in worker breathing zones and in areas adjacent to the activities using a photoionization detector (PID). Combustible gases, lower explosive limit, and oxygen levels were also monitored regularly. MWH personnel were on site throughout the construction activities and conducted regular quality assurance air monitoring along the perimeter of the exclusion zone.

Because of the potential for elevated contaminant concentrations, Boart Longyear personnel performed the work in Level B personal protective equipment (PPE). At a minimum, this included Tyvek protective overalls, plastic boot covers, inner gloves, outer chemical resistant gloves, full-face supplied air respirator, and hard hat. The air was supplied by a cascade air system. A 30-minute self-contained breathing apparatus (SCBA) was available near the work area for emergency situations. All personnel using respirators were required to have current fit testing certification.

2.2 CONSTRUCTION OF ISVE SYSTEM BLOWER SHED

The blower shed houses the mechanical equipment for the ISVE system, including the vacuum blower, the entrained water knockout tank, the groundwater pump, and the ISVE piping manifold.

MWH selected Fliteway Technologies, Inc. (Fliteway) of Greendale, Wisconsin to construct the blower shed. Ryan Construction of Merrillville, Indiana constructed the building foundation slab and installed additional piping to the manifold inside the building. The blower shed was constructed off site and delivered to the site on September 25, 2001. The blower was installed in the shed in December 2001.

A photographic log of the installation of the blower shed is included in Photographs 17 through 20 in Appendix B.

2.2.1 Foundation

In preparation for the construction of the building foundation slab, MWH installed transition piping at the blower shed location. The transition piping consisted of high-density polyethylene (HDPE) 90-degree, pipe sweeps. The sweeps connect the piping manifold inside the blower shed to the conveyance piping installed to each ISVE well. Section 2.3 provides details of the conveyance pipe installation. MWH mounted 42 three-inch diameter

sweeps for the ISVE wells and three, two-inch diameter sweeps for the air sparge points during the week of August 27, 2001. Austgen Electric, Inc. of Griffith, Indiana installed electrical conduits from a power pole along Colfax Avenue to the blower shed and from the blower shed to the vicinity of extraction well EW-20C. Both conduits were terminated at an elevation above the future blower shed foundation. These conduits contain the electrical power lines for the blower shed and Off-Site Area BWES pumps.

Ryan Construction of Merrillville, Indiana constructed the foundation slab. The subbase for the concrete floating slab foundation consisted of a 12-inch thick layer of CA-6 aggregate. A 6-mil, plastic vapor barrier was placed over the subbase.

The slab is 14 feet by 36 feet by 12 inches thick with a two-foot thick perimeter footing. The slab was constructed of concrete with a compressive strength of over 4,000 pounds per square inch (psi) and was reinforced with No. 5 reinforcing bars spaced 12 inches apart. Reinforcing bars (No. 5) were also placed along the perimeter footing. An HDPE embedment strip was installed around the outer edge of the slab. As part of the final cover construction in the Off-Site Area, a polyethylene flexible membrane liner was attached to the embedment strip. An 18-inch by 18-inch by 3.75-inch deep sump was formed into the center of the slab. An as-built drawing of the slab is included as Figure C-3.

Embedment of the HDPE liner into the concrete slab is a modification of the slab detail included in the Final Remedial Design Report. This detail showed the HDPE being continuous beneath the slab. The modification was made to accommodate construction scheduling and logistics. The U.S. EPA approved this modification on August 8, 2001.

On September 6, 2001, the concrete was poured to form the slab. The concrete was poured around the HDPE sweeps and electrical conduits. During the concrete installation, three cylinder samples of concrete were collected. These were tested for compressive strength by Great Lakes Soils and Environmental of Burr Ridge, Illinois after 4, 14, and 28 days. The final 28 day compressive strength test, conducted on October 4, 2001, demonstrated that the concrete had a compressive strength of 4,706 psi (greater than the original minimum requirement of 4,000 psi). Test results are included in Appendix E.

On September 20, 2001, U.S. Floor Corporation of Skokie, Illinois applied a protective coating to the concrete. The coating, Rock Tred Agua-Rock Clear Part-A, is designed to protect the concrete in the event of leakage from the condensate removal system. The coating is also ultraviolet (UV) resistant.

2.2.2 Blower Shed

The blower shed was prefabricated off site at Fliteway's facility in Greendale, Wisconsin. It was transported to the ACS site and placed on top of the foundation by crane on September 25, 2001. The structure was constructed to conform to all applicable building codes.

The blower shed has a 32 foot long, 10 foot wide, and 8½ foot high steel tube frame on a base frame constructed of 10-inch steel C-channels. The roof is pitched one foot from the

front to the rear. The building has a ½-inch plywood exterior, R13 insulation in the walls and ceiling, and exterior vinyl siding.

The building is divided into an equipment room (24-foot by 10-foot) with equipment rated for potentially hazardous environments and a non-rated control room (8-foot by 10-foot) for electrical and control equipment. All equipment installed in the equipment room was installed and wired per National Electric Code (NEC) Class 1, Division 2 Hazardous Location requirements.

A six-foot wide by eight-foot tall commercial steel double door was installed on the front of the building for access to the equipment room. A separate, three-foot wide by eight-foot tall steel personnel door allows access to the electrical/control room.

The building ventilation system consisted of two ventilation fans and louvered vents. The wall-mounted hazardous location fans, one in each section of the building, are controlled by thermostat.

The building is heated by two heaters, one in each section of the building. An electric convection heater certified for use in NEC Class 1, Division 2 locations was installed in the equipment room.

Three 100-watt interior lights rated for hazardous locations were installed in the equipment room. An exterior light with a light-sensitive photo eye that provides automatic dusk-to-dawn operation was installed above the access door.

2.2.3 Conveyance Piping Manifold

The system piping manifold, located in the equipment room, was constructed of six-inch diameter Schedule 80 polyvinyl chloride (PVC) pipes. The manifold was comprised of five header branches. Each of the riser pipes installed in the foundation slab connected to one of these five branches. Two of these headers (KP-1 and KP-2) connected to the riser pipes corresponding to the K-P Area wells (SVE-1 through SVE-12). The other three headers (OFCA-1, OFCA-2, and OFCA-3) connected to the riser pipes corresponding to the OFCA wells (SVE-13 through SVE-42). Another six-inch diameter pipe branch allowed ambient air into the vacuum system.

Six-inch diameter manual butterfly valves were installed on each branch to control flow. The blower effluent piping was connected to an eight-inch diameter HDPE pipe that runs approximately 1,400 feet to the GWTP where it was connected to the thermal oxidizer. During fresh air operation, the blower effluent stream can be diverted to the atmosphere through a discharge pipe that leads to the building exterior.

Pitot tubes and Dwyer Capsuhelic flow meters were installed on headers KP-1 and KP-2, the ambient air header, the influent pipe to the entrained water knockout tank, and the blower effluent pipe. The Capsuhelic flow meters transmit the differential pressure in the pipe to the programmable logic controller (PLC).

Six-inch diameter, Universal-brand silencers were installed on the ambient air header and on the blower effluent pipe. A six-inch diameter, 10-micron in-line filter was installed between the knockout tank and the blower. A Dwyer Magnehelic gauge was installed to measure the differential pressure across the filter element.

A Kunkle vacuum relief valve was installed on the inlet side of the blower. A Kunkle pressure relief valve was installed on the blower outlet pipe. Two Dwyer temperature gauges were installed on the blower influent and effluent piping.

Ryan Construction installed an additional three-inch diameter pipe to supplement the six-inch diameter ambient air header. A solenoid valve with an ASAHI/America Quarter Master Electric Actuator controls flow through the pipe. Austgen Electric installed a Rosemount Series 2088 pressure transducer on the blower effluent piping to measure the pressure at this point and transmit the information to the PLC.

Flexible, clear, reinforced PVC hose was used to connect the riser pipes and the manifold system. Ryan Construction installed the hose in January 2002. Each riser pipe has a three-inch diameter, Valterra-brand gate valve, a Dwyer vacuum gauge and a sample port. MWH installed fittings on each riser pipe to facilitate the insertion of a pitot tube for flow measurement.

2.2.4 Blower

The ISVE system blower is 30-horsepower, positive displacement blower (Hibon Model No. H/V 815). The blower is rated for 1,000 standard cubic feet per minute (scfm) at a vacuum of 95 inches of water ("H_2O) and a discharge pressure of 23"H_2O.

The blower was installed in the blower shed during the week of December 17, 2001. The blower was mounted on a steel frame.

The blower was coated with an acrylic urethane coating to provide chemical and abrasion resistance to critical blower parts.

2.2.5 Entrained Water Knockout Tank

A 500-gallon (250-gallon fluid capacity) stainless steel knockout tank is located in the equipment room. The tank has a removable top cover and an internal demister pad. The tank originally housed three stainless steel, explosion-proof level switches (a low, high, and a high-high) to control operation of the transfer pump. A sight glass installed on the exterior of the tank allows visual observation of the water level in the tank. A drain port with a manual ball valve is located near the base of the tank.

During initial operation of the ISVE system, excessive buildup of entrained product and sediment caused the level switches to malfunction. Fliteway changed the configuration of the level switches during the week of May 27, 2002. The new configuration included the installation of another sight glass that isolated the level switches on the exterior of the tank.

2.2.6 Transfer Pump

A Moyno-brand progressive cavity, explosion-proof pump with a one-horsepower motor is mounted next to the knockout tank. The pump transfers water from the knockout tank to tank T-102 located in the GWTP.

2.2.7 Quality Control

Material testing and quality control measures were taken in accordance with the *Construction Quality Assurance Plan* (Montgomery Watson, June 1999) to assure that the ISVE wells and air sparge points met the applicable performance requirements.

Manufacturer specifications for the materials used during construction were submitted to and approved by MWH prior to construction. The manufacturer's specification sheets are included in Appendix G.

2.3 CONVEYANCE PIPING INSTALLATION

Conveyance piping was installed to connect the ISVE wells and air sparge points to the pipe sweeps installed within the blower shed foundation.

MWH selected Heritage Industrial Services, L.L.C. (HIS) of Indianapolis, Indiana to install the conveyance piping. HIS began installation of the underground piping on November 28, 2001. HIS demobilized from the site on December 21, 2001 after completing the installation. HIS mobilized to the site an additional three times (in April, May, and July 2002) to complete the work.

A Photograph Log of the installation of the conveyance piping is included in photographs 21 through 36 in Appendix B.

2.3.1 Trench Construction

The installation of the conveyance piping began with construction of trenches between the blower shed and the ISVE wells and air sparge points. In general, the trenches were excavated to approximately one foot below the ground surface using a Kobelco excavator. This depth corresponded to the bottom of the clay cover. In the area near wells SVE-35 through SVE-42, this depth was increased to up to 1½ feet below ground surface to maintain a constant slope back to the well.

To reduce the amount of entrained water collected in the knockout tank in the blower shed, the trenches were sloped toward the well when possible. This allows the water to drain back to the wells in the conveyance piping. As discussed in the Final Remedial Design Report, because the ground surface elevation in the K-P Area is higher than the blower shed, piping to the ISVE wells in that area could not be sloped towards the wells. As a result, the collection of entrained water near the blower shed is monitored during system operation to ensure flow is not restricted.

The piping trenches were constructed with four main trunks (three in the OFCA and one in the K-P Area). From the main trunk trench, individual trenches branched off toward each of the ISVE wells or air sparge points. Figure C-4 shows the layout of the piping trenches.

2.3.2 Pipe Installation

The conveyance piping and pipe fittings installed include three-inch diameter (ISVE) and two-inch diameter (air sparge) SDR 11 Plexco Perfomance Pipe 1000 Series HDPE pipe, supplied by Forrer Supply Co., Inc. of Germantown, Wisconsin.
The piping was fused via the thermal butt-fusion technique using a hydraulic fusion machine. Procedures for fusion of the piping and fittings conformed to the specifications of the piping manufacturer.

The pipe was first fused to the end of the pipe sweeps installed within the foundation of the blower shed. The pipe sweeps were numbered to coordinate the routing of the piping along the trenches. Pipe sections were fused together and run to each ISVE well and air sparge point. The runs were designed and installed to minimize pipe crossovers and low points in the pipe runs that would result in areas where condensate could collect and minimize air flow. At each ISVE well and air sparge point, an HDPE flange adapter with a stainless steel backup ring was fused on the end of the pipe.

Typical details of the pipe-to-well connections are shown on Figure C-5.

2.3.3 Pressure Testing

Each pipe was then pressure tested to verify the integrity of the pipe and the pipe welds. An air compressor was connected to either the flange connection at the well end of the pipe or at the termination inside the blower shed. A blind flange was attached to the other end. A pressure of 50 psi was applied to the pipe. This pressure was held for a minimum of five minutes. MWH personnel observed each of the pressure tests. In each test, the pressure remained constant in the sealed pipe for five minutes indicating the piping was free of any leaks.

2.3.4 Connection to Wells

Once pressure testing was completed, a three-inch diameter hole was drilled into the stainless steel casing of each ISVE well and a two-inch diameter hole was drilled into the casing of each air sparge point. Because of concerns of explosive atmospheres in the well and potential sparking from the drilling, the atmosphere in each well was inerted by continuously injecting pressurized air into the well. To do this, an inflatable "muni-ball" was lowered into the well immediately below the drilling point. The "muni-ball" was inflated to 20 psi. An air compressor continuously forced fresh air into the space above the "muni-ball" during the connection activities. The atmosphere inside the well was monitored for oxygen level and lower explosive limit (LEL) using an Industrial Scientific Combustible Gas Indicator and for total organic vapors using a Thermal Environmental Instruments PID. Readings indicated the sealing and purging of the well was successful in eliminating potentially explosive conditions.

The conveyance pipe was then attached to the well using a stainless steel saddle. The saddle assembly consisted of the saddle, a 12-inch long, stainless steel pipe nipple, and a stainless steel flange. This flange was attached to the backup ring connected to the HDPE conveyance pipe. Photographs 31 and 32 in Appendix B show assembled saddle connections.

After initial installation of the saddles, the clay around the saddles was removed and the connection bolts were inspected to confirm they were tightened to a torque level of 100 foot-pounds (ft-lbs). Bolts that had not been tightened sufficiently were tightened to 100 ft-lbs.

2.3.5 Backfill and Compaction

Following the installation of the piping and connection to the well, the excavated clay was then backfilled over the pipe using a John Deere 450 bulldozer. In areas where contaminated soil beneath the clay was encountered during excavation of the trench, the contaminated soil was placed into the trench prior to backfilling the clay. In areas near the blower shed where placement of the clay beneath the pipes was not possible, the space beneath the piping was filled with quick-setting concrete (Photograph 36 in Appendix B). This provided a stable base for the piping and the clay that was subsequently reinstalled and recompacted on top of the piping.

The clay backfill at each well location was compacted using an Ingersoll-Rand Pro Pac Series 70 vibratory smooth-drum roller.

Upon backfill and compaction of the clay layer, Patrick Engineering, Inc. (Patrick Engineering) of Lisle, Illinois, a subcontractor of HIS, tested the clay to determine if the compaction and optimum moisture standards were met. Patrick Engineering first collected a Proctor sample of the clay to determine the density and optimum moisture content. This sample indicated compaction standards were a minimum 95% of the Maximum Proctor Density of 110.8 pounds per cubic foot (pcf) at zero to plus two percent (0 to +2%) of the optimum moisture content of 17.4%.

Compaction and moisture testing was performed along the trenches. Patrick Engineering was on site on December 21, 2001 to test the compaction and moisture content of the clay. At this time, testing was conducted only in the OFCA. Compaction was not yet completed in the K-P Area. Several tests in the OFCA failed to meet moisture requirements or compaction density. HIS decided to delay until spring 2002 to correct the failed areas and to complete compaction in the K-P Area.

HIS made two attempts (on April 11, 2002 and May 22, 2002) to meet clay compaction specifications without disturbing the clay layer. However, because these attempts were unsuccessful in meeting specifications at all test locations, HIS returned to the site in July 2002 to remove and stockpile the top six inches of clay. The bottom six inches of clay were not removed because removal might damage the embedded pipes. The stockpiled clay and the reopened trench were wetted and the clay was replaced in the trench. The clay was then recompacted and tested by Patrick Engineering. Patrick Engineering first collected a sample of the clay to determine that the maximum Proctor Density and optimum moisture

content (OMC) were 110.8 pounds per cubic feet (pcf) and 17.4%, respectively. The required compaction standards for the backfilled material were a minimum density of 95% of the maximum Proctor Density (≥ 105.3 pcf) at zero to plus 2% of the OMC (17.4% to 19.4%). The test locations, typically spaced every 50 feet, were selected by the MWH Field Engineer to ensure that the results were representative of HIS's compaction efforts. Compaction results are included in Appendix H.

Following the replacement of the clay by HIS, the integrity of the HDPE piping was verified by pressure testing.

2.3.6 Contaminated Soils Handling

In areas where the trench cut into native soils beneath the clay layer, the native soils were separated from the clay and placed on plastic sheets. The stockpile was covered with plastic sheeting to prevent precipitation from contacting these materials that had potential to contain contaminated soils. After the piping was laid in the trench, the native soils were placed back into the trench above the pipes. Clay was then backfilled over the native soils.

2.3.7 Material Testing and Quality Control

Material testing and quality control measures were followed in accordance with the *Construction Quality Assurance Plan* (Montgomery Watson, June 1999) to assure that the piping met the performance requirements. The following quality control measures were executed prior to and during construction:

- Submittal of manufacturer specifications and approval of construction materials,
- Observation of thermal butt fusion process,
- Verification of integrity of HDPE pipe via pressure testing,
- Testing of compaction and moisture content of the clay, and
- Torque testing of the well saddle bolts.

Manufacturer specifications for the materials used during construction were submitted to and approved by MWH prior to construction. The manufacturer's specification sheets are included in Appendix I.

MWH regularly inspected the thermal butt-fusion process to verify construction procedures were being followed. During cold weather, particular attention was paid to the temperature of the welding equipment to ensure it was maintained at or above the recommended temperature.

The integrity of the pipe welds and connections was verified by pressure testing. Pressurized air was directed to each of the lines until the pressure in the pipe was 50 psi. This pressure was held for a minimum of 3 minutes at each location. MWH personnel observed the pressure tests, which were completed for all piping by December 21, 2001 and performed again in July 2002.

Upon backfill and compaction of the clay layer, Patrick Engineering tested the clay to determine if hydraulic conductivity standards were met. Compaction standards were a

- minimum 95% of the Maximum Proctor Density at zero to plus two percent (0 to +2%) of optimum moisture content. Patrick Engineering collected a Proctor sample of the clay at ACS to determine the density and optimum moisture content. Compaction tests performed in July 2002 indicated the standards had been achieved. The compaction testing results are included in Appendix H.

Tightening of the bolts on the well saddles was performed using a torque wrench. MWH observed this process to confirm the torque applied was 100 ft-lbs.

2.3.8 Health and Safety

The work associated with the installation of the conveyance piping was performed in accordance with the site-specific HASP and the HASP submitted to MWH by HIS prior to mobilizing to the site.

Toolbox Safety Meetings were held each morning with all personnel on site for the day prior to beginning work. The HIS project manager or the MWH Site Health and Safety Officer conducted the meetings. Topics discussed at the meetings included identification of the various work crews on site, safety concerns inherent to the day's activities, general health and safety subjects, and site-specific safety protocols.

Regular air monitoring was conducted throughout the excavation of the trenches and connection to the wells. HIS continuously monitored concentrations of VOCs in worker breathing zones and in areas adjacent to the activities using a PID. When drilling into the well casing, the atmosphere inside the well was monitored for oxygen level and LEL using an Industrial Scientific Combustible Gas Indicator and for total organic vapors using a Thermal Environmental Instruments PID. Personal protective equipment (PPE) was worn as required and in accordance with the HASPs. MWH personnel were on site throughout the construction activities and conducted regular air monitoring along the perimeter of the work areas.

2.4 INSTALLATION OF THERMAL OXIDIZER/SCRUBBER SYSTEM

A recuperative thermal oxidizer and scrubber system was installed at the GWTP to treat the vapors from the Off-Site Area ISVE system.

The thermal oxidizer uses high temperature and an adequate residence time in its combustion chamber to combust the VOCs contained in the influent air stream. A recuperative-type oxidizer utilizes a heat exchange system to transfer heat from the combustion chamber effluent to the influent air stream.

The byproduct of the combustion of the chlorinated VOCs contained in the vapor stream is hydrochloric acid gas. This acid gas is removed by the scrubber prior to discharge of the air to the atmosphere. The scrubber first reduces (or "quenches") the temperature of the air stream using a water mist. At the quench section, a portion of the hydrochloric acid is absorbed by the water. The gases exit the quench section and enter a countercurrent

absorption column. A water mist is applied to the top of the absorption column through a nozzle. The remaining acid vapors are absorbed into the water. The packing effectively increases the available surface area and enhances the absorption process.

MWH selected Durr Environmental, Inc. (Durr) of Plymouth, Michigan to construct the thermal oxidizer and scrubber system for off-gas treatment.

Photographs 37 through 49 in Appendix B show the installation of the oxidizer is included. Manufacturer specification sheets for thermal oxidizer and scrubber equipment are located in Appendix J.

2.4.1 Thermal Oxidizer

Following fabrication of the system in Durr's Wixom, Michigan facility, the thermal oxidizer and scrubber units were delivered to the site on February 7, 2002. The units were placed in position using a crane on February 7, 2002. The oxidizer was placed outside the south end of the GWTP building next to the existing catalytic oxidizer unit. The scrubber was placed inside the GWTP building.

Ryan Construction of Merrillville, Indiana completed the on-site assembly of the system on February 15, 2002.
The thermal oxidizer rests on a structural steel skid fabricated from tube steel.

The influent piping constructed of eight-inch diameter HDPE pipe extends from the Off-Site Area and terminates at a manifold located in the southeast corner of the GWTP. The HDPE pipe was connected to the thermal oxidizer by eight-inch diameter PVC pipe. A Dwyer Model 2020 pressure gauge and a Dwyer Model 605 Magnehelic differential pressure-indicating transmitter with an averaging pitot tube assembly were installed on the influent piping. These instruments control the speed of the VFD and subsequently the process blower.

The influent pipe is connected to the damper assembly adjacent to the process blower. The damper assembly includes a six-inch diameter fresh air damper and an eight-inch diameter isolation damper. The dampers are controlled by electric actuators manufactured by Remote Control, Inc.

A forced draft process blower pushes air flow through the oxidizer/scrubber system. This blower is a 1,200-cfm, 7.5-horsepower (hp) American Fan Company blower with a 316L stainless steel impeller. The blower is controlled by a variable frequency drive (VFD) that modulates the speed of the blower to maintain near static pressure in the influent piping.

A shell-and-tube heat exchanger preheats the process air before it enters the oxidizer's combustion chamber. The heat exchanger is constructed of ¾-inch diameter Inconel tubes through which the cool influent air flows. The exhaust air from the combustion chamber flows over the outside of the tubes.

The combustion chamber is constructed of 10-gauge Hastelloy C276 plate and stainless steel supports. The chamber is continuously welded for an airtight construction. It is lined with four-inch thick Harbison Walker Ultra Green 45 castable refractory and insulated with ¼-inch thick Therma-Fiber K-FAC SR hardboard.

The temperature in the combustion chamber is controlled by a natural gas burner system. The existing gas supply at the GWTP was extended to the location of the new thermal oxidizer. A flow meter showing total flow tracks the system's natural gas consumption. The temperature is maintained at the set point (approximately 1,700°F) by a Honeywell UDC1000 Micro-Pro controller. This controller modulates the firing rate of the Eclipse TJ100 burner through a series of control valves, regulating valves, and pressure switches on the gas train and by a modulating combustion air valve. The combustion air valve regulates air flow from the combustion blower to the burner. The combustion blower is a 250-cfm, 2-hp, American Fan Company blower. A Honeywell C7061 Ultraviolet Flame Detector verifies the existence and measures the strength of the flame.

A flanged connection was included on the oxidizer to allow a portion of the combustion chamber effluent air stream to bypass the heat exchanger. Ryan Construction installed a duct and valve to connect the combustion chamber directly to the heat exchanger effluent duct. This allows the operator to increase, if necessary, the loading capacity of the chamber by reducing the amount of heat in the combustion chamber influent.

Thermocouples are installed in the combustion chamber and heat exchanger to monitor temperatures throughout the unit. The thermocouples are 12-inch long, Watlow Gordon dual-element thermocouples with an Alloy 600 sheath.

2.4.2 Scrubber

Heated air exits the oxidizer through an 18-inch diameter duct constructed of Hastelloy C276. Flow enters the scrubber system through the quench header where the temperature of the air is reduced by a spray bar constructed of AL6XN alloy. The spray bar is fitted with one 30° BETE Fog-brand spray nozzle.

The main structure of the scrubber is constructed of AL6XN alloy. A sump at the base of the structure stores recirculation water. Above the sump, the absorption column houses the packing media. The recirculation spray headers, makeup spray headers, mist eliminator and stack are installed above the absorption column.

A Goulds Model 3298 centrifugal pump circulates the water from the scrubber sump up to the recirculation spray headers and the quench spray header. Two recirculation spray headers are constructed of AL6XN alloy pipe and are fitted with a total of four 90° BETE Fog-brand spray nozzles. The spray pattern allows for a 50% overlap. The water is sprayed down across the top of the packing media where the hydrochloric acid gas is absorbed by the water. The packing media is Norton IMTP, 1½-inch nominal diameter, 316 stainless steel rings. The packing is installed in the scrubber to a vertical thickness of 6 feet and ensures intimate mixing of the process air with the recirculation water.

The two makeup water spray headers (similar fabrication to the recirculation spray headers) are located near the top of the scrubber structure. These headers spray fresh water on the underside of the mist eliminator to remove the potential deposits. The mist eliminator is a Munters-brand, vane-style mist eliminator constructed of Inconel 625. It removes water droplets from the air stream prior to discharge of the treated air through the scrubber stack.

The system exhaust stack, mounted directly on the scrubber, is constructed of 12-inch diameter, AL6XN alloy pipe. The stack was installed to a height of 35 feet above grade.

The water level in the sump is monitored by a Rosemount Analytical Model 3051 Smart differential pressure transducer. The sump has an overflow pipe located immediately below the quench header.

Recirculation flow is measured by a Rosemount Analytical Model 8800C Smart Vortex Water Flow Meter.

The hydrochloric acid transferred to the scrubber water is neutralized by the addition of sodium hydroxide via a LMI/Milton Roy caustic metering pump. This pump transfers the sodium hydroxide from the existing storage tank (Tank T-8). The pumping rate is controlled by a Rosemount Analytical Model 54e pH/ORP HART Analyzer/Controller. The pH analyzer (sensor) is mounted in an isolated pipe loop.

The continuous neutralization of the hydrochloric acid in the scrubber water produces sodium chloride. The concentration of sodium chloride is measured by a Rosemount Analytical Model 54e C Conductivity/Resistivity Analyzer/Controller. When this concentration rises above a setpoint, the controller directs a solenoid valve to open, releasing water from the scrubber system to the gravity phase separator tank (T-101) where it enters the treatment process of the GWTP. This is called the blowdown process. The volume of blowdown water is tracked by a totalizing flow meter. Makeup water is added to the scrubber via another solenoid valve. The effluent water from the GWTP is used as makeup water in the scrubber unit.

Similar to the thermal oxidizer, the temperature in the scrubber is measured by a 12-inch long, Watlow Gordon dual element thermocouple with an Alloy 600 sheath.

2.4.3 Control Panel

The control panel for the thermal oxidizer/scrubber system is mounted inside the south wall of the GWTP. The main components, mounted inside a NEMA 12 Hoffman enclosure, include:

- An Allen-Bradley SLC 5/05 PLC capable of transmitting data to the GWTP Supervisory Control and Data Acquisition (SCADA).
- The General Electric/Fuji VFD.

- A Honeywell Truline circular chart recorder with three inputs. System parameters recorded on the charts are combustion chamber temperature, scrubber temperature, and air flow.

- Three Honeywell UDC1000 Temperature controllers (two for combustion chamber temperature, one for scrubber temperature). These display system temperatures and allow the user to change temperature setpoints.

- A Honeywell 7800 Series Relay Module. This unit functions with the flame detector as the burner management system.

- Eagle HP5 Timer (0- to 30-minute range) controls the purge of the combustion chamber.

2.4.4 System Operation

Operation of the thermal oxidizer/scrubber system is interlocked with the operation of the ISVE blower and its components. A description of system operation is included in the Sequence of Operation provided by Durr (Appendix K).

2.4.5 Startup

A Durr technician was on site from February 17 to March 14, 2002 to supervise the installation, check out, inspect, prepare the system for process gas flow, and perform the initial startup. Durr also provided system operation training to MWH personnel.

The following issues/complications were identified and addressed during the startup of the system:

- Several flange connections in and around the scrubber unit were noted to leak water due to an insufficient gasket material. The gaskets were replaced with Unifrax Ceramic Fiber Paper gaskets and sealed with Fluorodyn Caulk made with Viton from Thermodyn Corporation.

- On April 19, 2002, leaks in various welds and gaskets on the thermal oxidizer were observed. The unit was shut down immediately after the leaks were located and documented. Ryan Construction repaired the defective welds. The original gaskets were replaced with Unifrax Ceramic Fiber Paper.

- A system malfunction on March 21, 2002 resulted in an acidic pH condition within the scrubber unit. Simultaneously, the water level in the scrubber sump rose to a level above the overflow pipe and the water spilled onto the GWTP floor. MWH inspected the scrubber and determined the pH probe was broken. The probe was replaced.

- Operation of the caustic addition pump was initially reconfigured with a simple pump on/off control. Control of the pump was changed to automatic demand-based proportional control (via a 4-20 milliamps [mA] signal between the controller and pump).

- The PLC was not initially capable of receiving and transmitting temperature data from the system thermocouples. The thermocouples were hardwired directly to the UDC1000 controllers. To correct this, Durr installed an additional input card capable of reading thermocouple data.

- The differential pressure switch originally installed on the process air inlet to the heat exchanger was the incorrect model. Durr replaced the switch with the correct model.

- The original UV flame scanner was faulty and was replaced with a Honeywell C7061 Ultraviolet Flame Detector.

- The initial configuration of the overflow pipe allowed vapors to escape the unit. The pipe was reconfigured to remedy this situation.

- The recirculation pump was not functioning properly. Inspection by a professional service shop revealed the pump impellers were cracked. The pump was refurbished and reinstalled.

- The actuator batteries for the influent dampers are charged during normal system operation (when process vapors are delivered to the unit). However, lengthy downtimes resulted in the batteries losing their charge and had to repeatedly be recharged.

The Durr technician returned to the site on March 25, 2002 and April 2, 2002 to continue troubleshooting the system. Normal system operation began on April 1, 2002.

2.5 CONTROLS AND INSTRUMENTATION

MWH contracted Austgen Electric of Griffith, Indiana to install electrical power, control wiring, the motor control center and the PLC for the ISVE system.

Electric power was routed from a power pole located on Colfax Road adjacent to the Off-Site Area. Northern Indiana Public Service Company (NIPSCO) completed the installation of the power pole and a metering box on November 8, 2001. Midwest Environmental Inc. of Hammond, Indiana then buried an electrical conduit between the new power pole and control box in the Off-Site Area on November 7, 2001. On November 15, 2001, Austgen installed a 400-Amp, 480/277-Volt electrical line in the conduit. The location of the conduit run is shown on Figure C-4.

As-built drawings prepared by Austgen are included as Appendix F. Manufacturer specifications for the major control and electrical equipment were submitted to and approved by MWH prior to construction. The manufacturer's specification sheets are included in Appendix L.

2.5.1 Motor Control Center

The motor control center (MCC) for the ISVE system equipment was installed by Austgen Electric on November 15, 2001. The MCC is housed in the control room of the blower shed. The MCC also contains disconnects and starters for pumps that have been installed in some of the BWES extraction wells in the Off-Site Area.

2.5.2 Programmable Logic Controller

The ISVE system PLC is housed in the control room of the blower shed. Austgen Electric installed the PLC in February 2001. The PLC is an Allen-Bradley SLC5/05 1747-L553 controller with Allen-Bradley 1746 Series Input/Output modules. The PLC has an interface touchscreen mounted on the exterior of the panel. The touchscreen is a Maple Systems HMI1520C PLC Controller Interface. In addition to allowing the operator to start and stop the ISVE blower, the screen displays the following ISVE system parameters:

- Thermal oxidizer chamber temperature
- Differential pressures as measured by pitot tubes on various system headers
- Pressure at the effluent of the ISVE blower
- Run status of transfer pump, ISVE blower, and thermal oxidizer

The PLC is connected to the GWTP's SCADA system via a fiber optic cable. All system data can also be viewed via the GWTP SCADA computer. Control of the ISVE blower is also available at the SCADA computer.

3.0 REFERENCES

MWH. *Construction Quality Assurance Plan* (CQAP). June, 1999.

MWH. *Final Remedial Design Report.* August, 1999.

Hanson Engineering. *Final Slurry Wall Design, Separation Barrier Wall Installation.* January 6, 2001.

MWH. *Operation and Maintenance Manual for the Groundwater Treatment Plant.* February 2002.

MWH. *Separation Barrier Wall Installation Construction Completion Report.* March, 2002.

CAD/RAA/jmf/PJV/jmf/CAD/jmf
J:\209\0601 ACS\0110 ISVE Off-Site\ISVE CCR\Off-Site ISVE CCR FINAL.doc

Table 1
ISVE Well and Air Sparge Point Construction Details
ACS NPL Site
Griffith, Indiana

Well ID	Location		Top of Casing Elevation (ft. amsl)	Total Depth of Well[1] (ft.)	Length of Screen (ft.)	Bottom of Screen Elevation (ft. amsl)	Ground Surface Elevation (ft. amsl)
	Northing	Easting					
SVE-1	5757.2	5065.3	654.3	25.4	15	628.9	651.1
SVE-2	5781.2	5099.7	655.2	25.4	15	629.8	652.1
SVE-3	5800.5	5141.4	655.6	25.4	15	630.2	652.7
SVE-4	5762.0	5148.0	656.2	25.4	15	630.8	652.9
SVE-5	5713.5	5070.9	654.6	25.4	15	629.2	651.4
SVE-6	5729.6	5118.9	656.2	25.4	15	630.8	652.9
SVE-7	5720.9	5160.2	657.0	25.4	15	631.6	653.5
SVE-8	5744.8	5200.1	656.9	25.4	15	631.5	653.6
SVE-9	5754.9	5241.7	656.8	30.4	15	626.4	654.2
SVE-10	5798.4	5293.7	656.4	30.4	15	626.0	654.1
SVE-11	5792.2	5242.3	655.3	30.4	15	624.9	653.0
SVE-12	5785.2	5181.6	655.7	25.4	15	630.3	652.6
SVE-13	6028.8	5254.8	654.7	25.4	10	629.3	651.6
SVE-14	6070.3	5237.7	654.3	25.4	10	628.9	651.4
SVE-15	6065.2	5200.6	653.2	25.4	15	627.8	650.0
SVE-16	6120.3	5209.7	652.6	25.4	15	627.2	649.9
SVE-17	6162.6	5172.8	652.0	25.4	15	626.6	648.4
SVE-18	6196.9	5219.6	653.1	25.4	10	627.7	649.7
SVE-19	6225.3	5170.8	651.8	25.4	15	626.4	648.0
SVE-20	6262.4	5172.7	650.3	25.4	15	624.9	647.1
SVE-21	6292.1	5204.4	648.7	25.4	15	623.3	645.8
SVE-22	6116.3	5277.8	653.4	25.4	10	628.0	650.2
SVE-23	6155.7	5250.5	653.8	25.4	10	628.4	650.7
SVE-24	6159.7	5291.7	653.0	25.4	10	627.6	649.8
SVE-25	6204.1	5268.1	653.1	25.4	15	627.7	650.0
SVE-26	6244.7	5225.1	652.3	25.4	15	626.9	650.1
SVE-27	6255.6	5272.2	652.6	25.4	10	627.2	649.2
SVE-28	6300.3	5258.4	650.5	25.4	15	625.1	646.8
SVE-29	6295.2	5311.1	651.2	25.4	15	625.8	647.7
SVE-30	6053.6	5297.1	653.3	25.4	10	627.9	649.8
SVE-31	6004.8	5307.4	652.9	25.4	15	627.5	649.5
SVE-32	6026.1	5341.3	651.7	25.4	10	626.3	648.4
SVE-33	6068.0	5358.7	650.4	25.4	10	625.0	647.0
SVE-34	6095.7	5323.8	652.1	25.4	10	626.7	648.9
SVE-35	6119.4	5378.3	649.5	25.4	10	624.1	645.8
SVE-36	6142.6	5336.9	651.8	25.4	10	626.4	648.9
SVE-37	6166.8	5381.0	651.5	25.4	10	626.1	647.1
SVE-38	6199.7	5330.2	653.5	25.4	10	628.1	650.7
SVE-39	6208.1	5387.1	651.9	25.4	15	626.5	648.3
SVE-40	6244.6	5321.2	652.5	20.4	10	632.1	649.1
SVE-41	6247.3	5380.0	652.9	25.4	15	627.5	648.7
SVE-42	6288.2	5356.0	651.9	25.4	15	626.5	648.5
AS-7	6228.4	5243.1	652.2	32.1	2.2	620.1	649.7
AS-8	6229.0	5305.1	651.8	32.1	2.2	619.7	649.5
AS-9	6230.1	5367.2	651.2	32.1	2.2	619.1	648.5

Notes:
1 Measured from Top of Casing.
SVE-1 through SVE-12 are located in the K-P Area.
SVE-13 through SVE-42 and AS-7 through AS-9 are located in the OFCA.

NA = Not available
ft = feet
ft amsl = feet above mean sea level

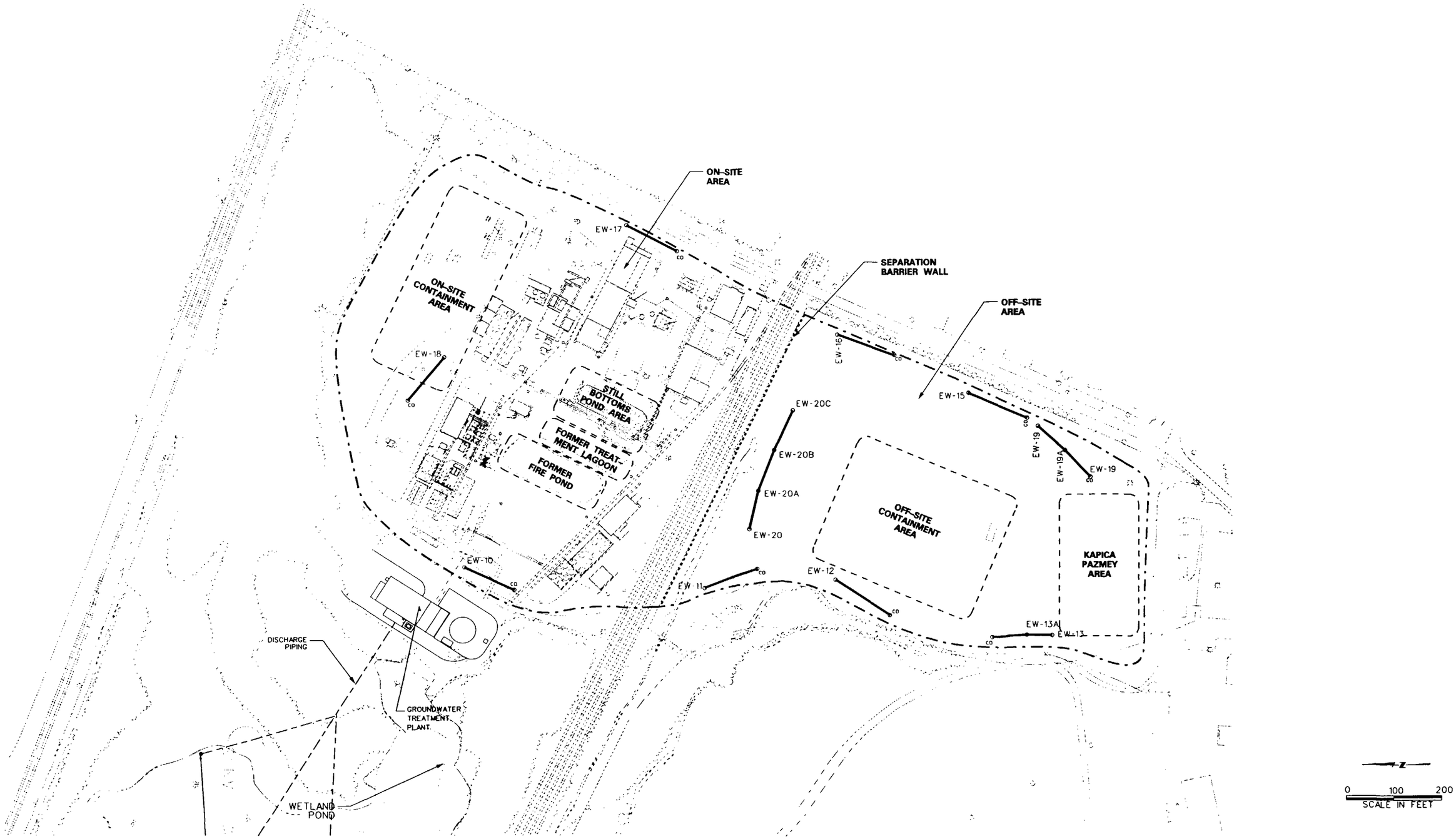

REV	DATE	BY	DESCRIPTION	SCALE		SUBMITTED BY					
				AS SHOWN	DESIGNED RAA DRAWN RC CHECKED RAA	ROBERT A. ADAMS (PROJECT MANAGER)	LICENSE NO.	DATE	MWH	OFF-SITE AREA ISVE SYSTEM CONSTRUCTION COMPLETION REPORT AMERICAN CHEMICAL SERVICE SUPERFUND SITE GRIFFITH, INDIANA	SITE MAP	FIGURE C-1
						(COMPANY OFFICER)	LICENSE NO	DATE				

File: J:/209/ ...S/0110 ISVE Off-Site/Drawings/SITE MAP C-1.dgn Plot Date: $$$$date$$$$ $$time$$

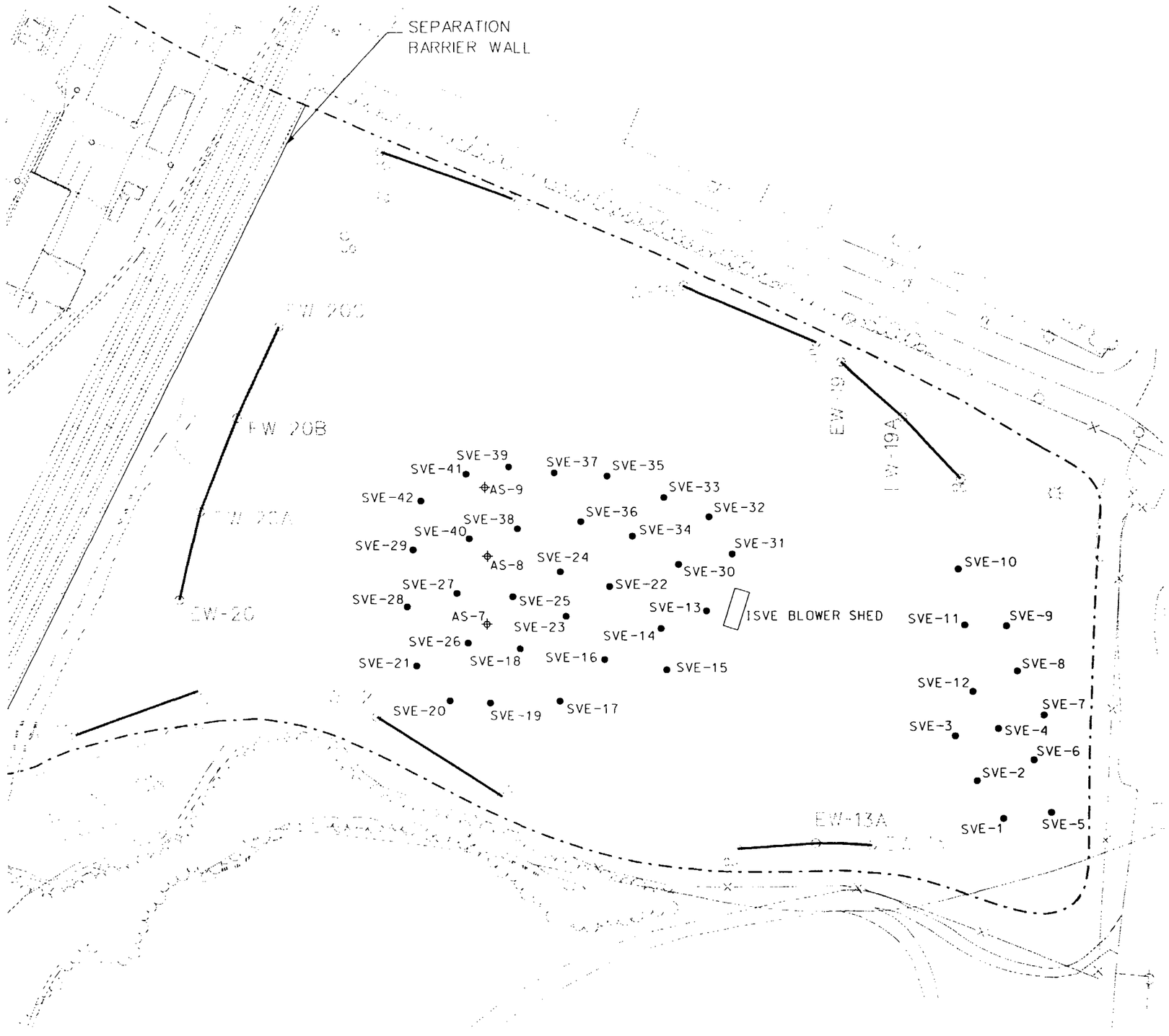

N

0 50 100
SCALE IN FEET

LEGEND:

AS-8 ⊕ AIR SPARGE POINT

SVE-22 ● SOIL VAPOR EXTRACTION WELL

ISVE WELL AND SPACE POINT CONSTRUCTION DETAILS

Well ID	Location		Top of Casing Elevation	Total Depth of Well	Length of Screen	Bottom of Screen Elevation	Ground Surface Elevation
	Northing	Easting	(ft. amsl)	(ft.)	(ft.)	(ft. amsl)	(ft. amsl)
SVE-1	5757.2	5065.3	654.3	25.4	15	628.9	651.1
SVE-2	5781.2	5099.7	655.2	25.4	15	629.8	652.1
SVE-3	5800.5	5141.4	655.6	25.4	15	630.2	652.7
SVE-4	5762.0	5148.0	656.2	25.4	15	630.8	652.9
SVE-5	5713.5	5070.9	654.6	25.4	15	629.2	651.4
SVE-6	5729.6	5118.9	656.2	25.4	15	630.8	652.9
SVE-7	5720.9	5160.2	657.0	25.4	15	631.6	653.5
SVE-8	5744.8	5200.1	656.9	25.4	15	631.5	653.6
SVE-9	5754.9	5241.7	656.8	30.4	15	626.4	654.2
SVE-10	5798.4	5293.7	656.4	30.4	15	626.0	654.1
SVE-11	5792.2	5242.3	655.3	30.4	15	624.9	653.0
SVE-12	5785.2	5181.6	655.7	25.4	15	630.3	652.6
SVE-13	6028.8	5254.8	654.7	25.4	10	629.3	651.6
SVE-14	6070.3	5237.7	654.3	25.4	10	628.9	651.4
SVE-15	6055.2	5200.6	653.2	25.4	15	627.8	650.0
SVE-16	6120.3	5209.7	652.6	25.4	15	627.2	649.9
SVE-17	6162.6	5172.8	652.0	25.4	15	626.6	648.4
SVE-18	6196.9	5219.6	653.1	25.4	10	627.7	649.7
SVE-19	6225.3	5170.8	651.8	25.4	15	626.4	648.0
SVE-20	6262.4	5172.7	650.3	25.4	15	624.9	647.1
SVE-21	6292.1	5204.4	648.7	25.4	15	623.3	645.8
SVE-22	6116.3	5277.8	653.4	25.4	10	628.0	650.2
SVE-23	6155.7	5250.5	653.8	25.4	10	628.4	650.7
SVE-24	6159.7	5291.7	653.0	25.4	10	627.6	649.8
SVE-25	6204.1	5268.1	653.1	25.4	15	627.7	650.0
SVE-26	6244.7	5225.1	652.3	25.4	15	626.9	650.1
SVE-27	6255.6	5272.2	652.6	25.4	10	627.2	649.2
SVE-28	6300.3	5258.4	650.5	25.4	15	625.1	646.8
SVE-29	6295.2	5311.1	651.2	25.4	15	625.8	647.7
SVE-30	6053.6	5297.1	653.3	25.4	10	627.9	649.8
SVE-31	6004.8	5307.4	652.9	25.4	15	627.5	649.5
SVE-32	6028.1	5341.3	651.7	25.4	10	626.3	648.4
SVE-33	6088.0	5358.7	650.4	25.4	10	625.0	647.0
SVE-34	6095.7	5323.8	652.1	25.4	10	626.7	648.9
SVE-35	6119.4	5378.3	649.5	25.4	10	624.1	645.8
SVE-36	6142.6	5336.9	651.8	25.4	10	626.4	648.9
SVE-37	6166.8	5381.0	651.5	25.4	10	626.1	647.1
SVE-38	6199.7	5330.2	653.5	25.4	10	628.1	650.7
SVE-39	6208.1	5387.1	651.9	25.4	15	626.5	648.3
SVE-40	6244.6	5321.2	652.5	20.4	10	632.1	649.1
SVE-41	6247.3	5380.0	652.9	25.4	15	627.5	648.7
SVE-42	6288.2	5356.0	651.9	25.4	15	626.5	648.5
AS-7	6228.4	5243.1	652.2	32.1	2.2	620.1	649.7
AS-8	6229.0	5305.1	651.8	32.1	2.2	619.7	649.5
AS-9	6230.1	5367.2	651.2	32.1	2.2	619.1	648.5

File: J:/209/ /S/0110 ISVE Off-Site/Drawings/WELL LOCATIONS C-2.dgn Plot Date: $$$$date$$$$ $$time$$

REV	DATE	BY	DESCRIPTION

SCALE: AS SHOWN

DESIGNED CAD
DRAWN CAD
CHECKED

SUBMITTED BY
ROBERT A. ADAMS (PROJECT MANAGER) LICENSE NO. DATE
(COMPANY OFFICER) LICENSE NO DATE

MWH

OFF-SITE AREA ISVE SYSTEM
CONSTRUCTION COMPLETION REPORT
AMERICAN CHEMICAL SERVICE SUPERFUND SITE
GRIFFITH, INDIANA

ISVE WELL AND AS POINT LOCATIONS

FIGURE C-2

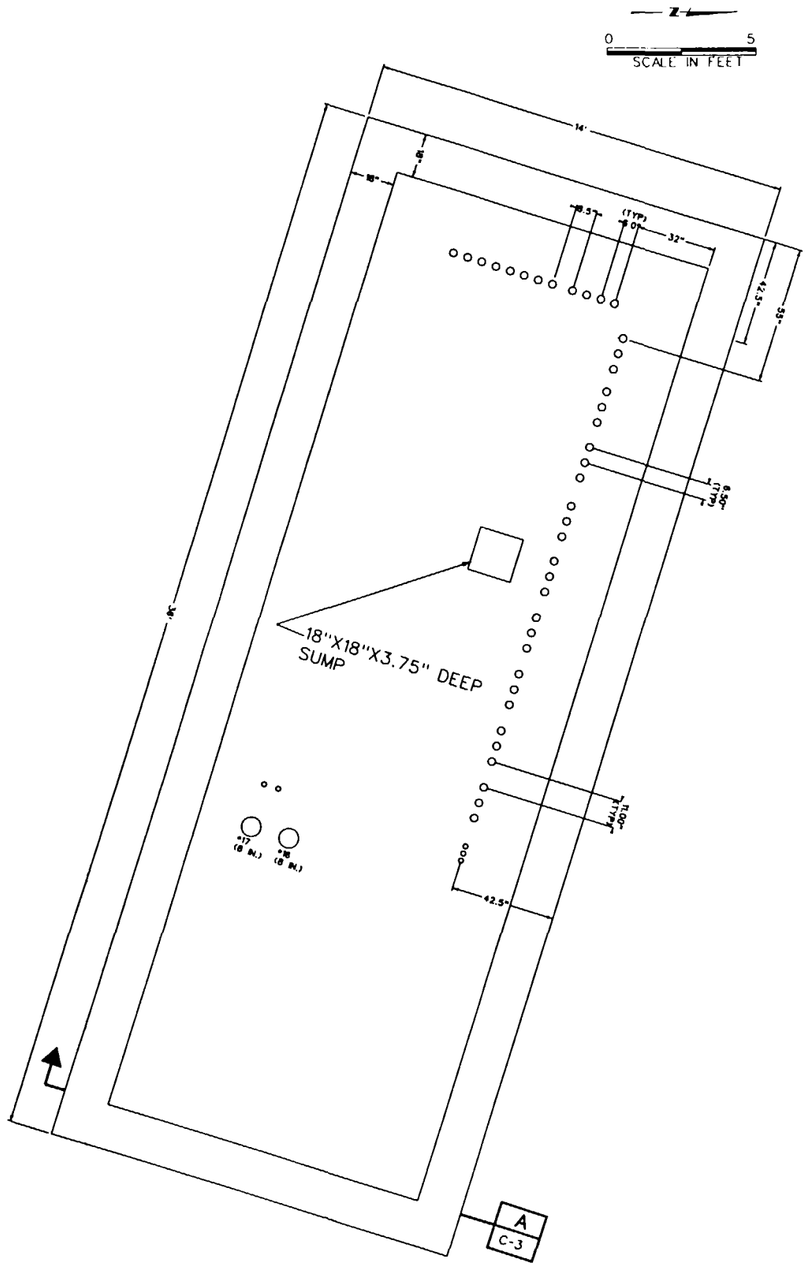

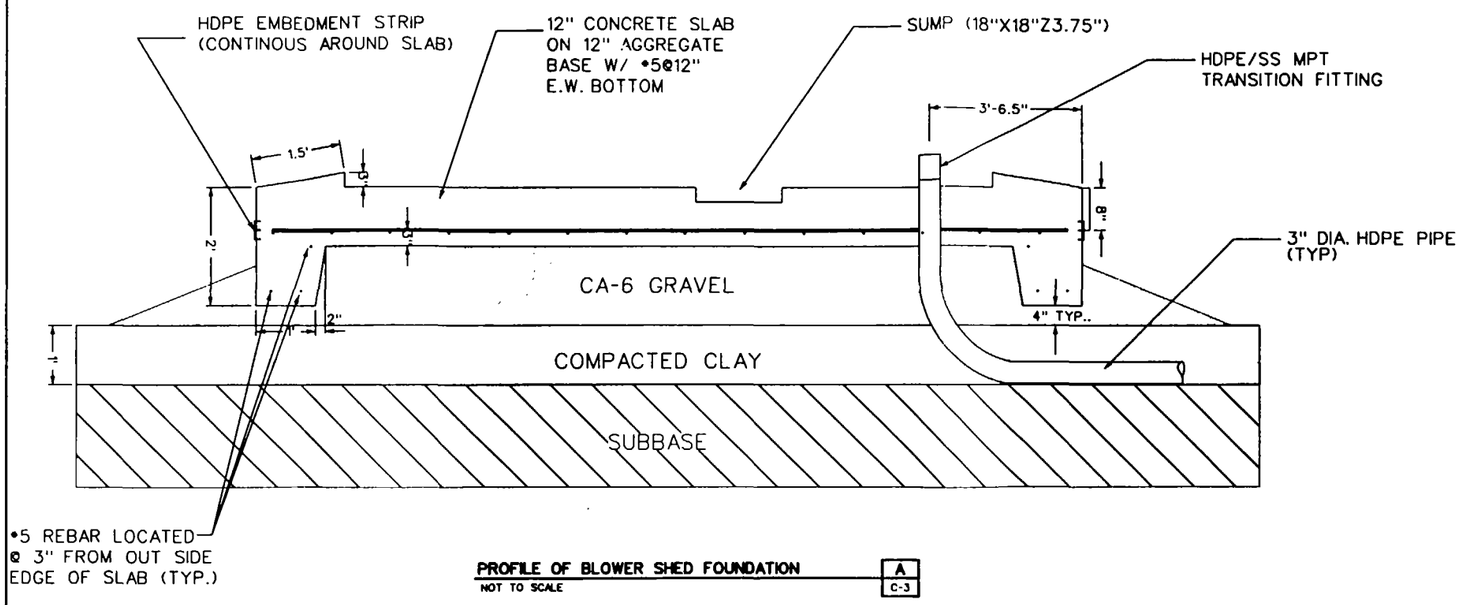

PROFILE OF BLOWER SHED FOUNDATION A C-3
NOT TO SCALE

0 2.5
SCALE IN FEET

File: J:/209/0601 ACS/0110 ISVE Off-Site/Drawings/BLOWER SHED FOUNDATION C-3.dgn Plot Date: 09-DEC-2003 09:31

REV	DATE	BY	DESCRIPTION

SCALE: AS SHOWN

DESIGNED CAD
DRAWN CAD
CHECKED

SUBMITTED BY
ROBERT A. ADAMS (PROJECT MANAGER) LICENSE NO. DATE
(COMPANY OFFICER) LICENSE NO. DATE

MWH

OFF-SITE AREA ISVE SYSTEM
CONSTRUCTION COMPLETION REPORT
AMERICAN CHEMICAL SERVICE SUPERFUND SITE
GRIFFITH, INDIANA

BLOWER SHED FOUNDATION

FIGURE C-3

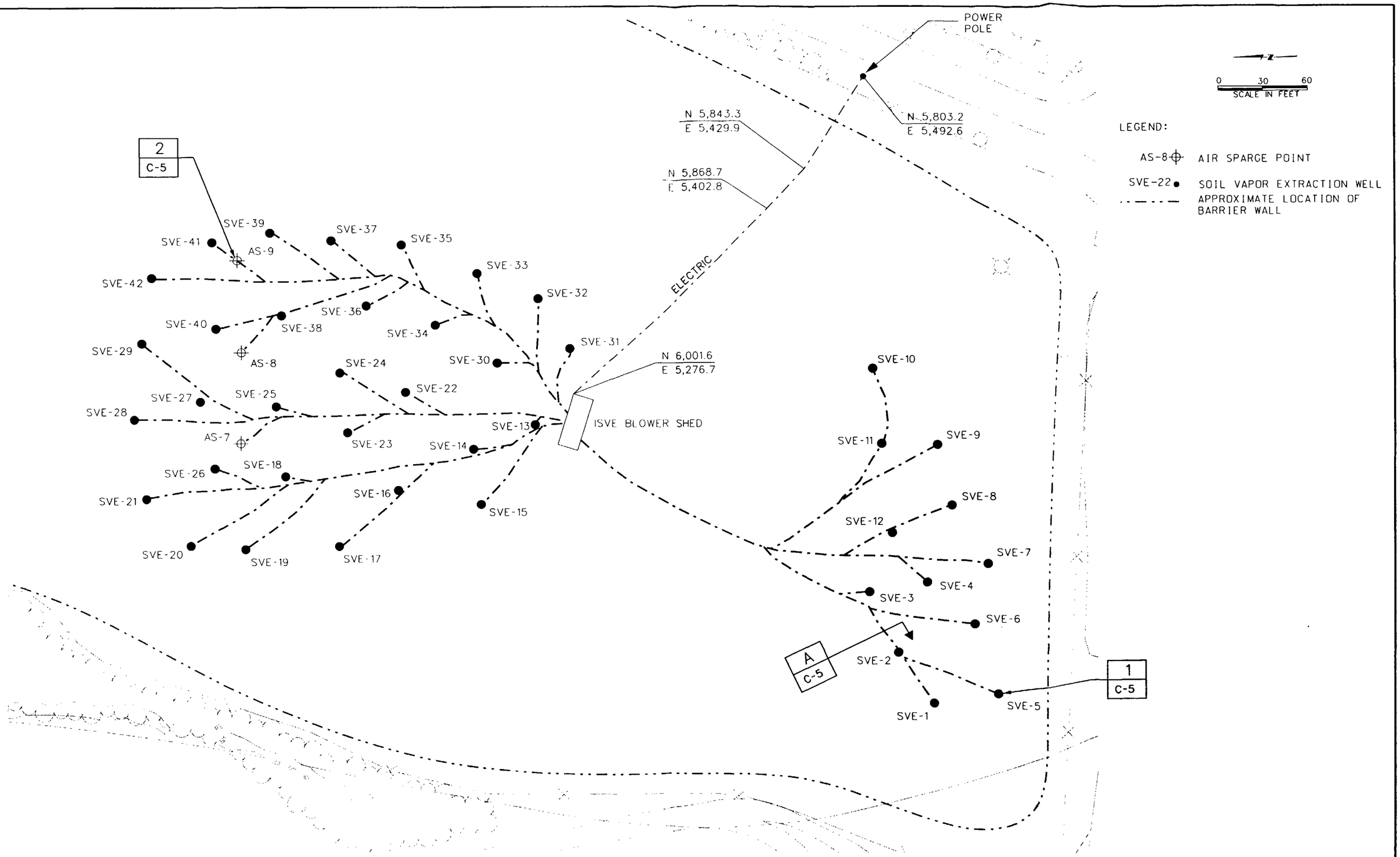

REV	DATE	BY	DESCRIPTION	SCALE	DESIGNED CAD	SUBMITTED BY	MWH	OFF-SITE AREA ISVE SYSTEM CONSTRUCTION COMPLETION REPORT AMERICAN CHEMICAL SERVICE SUPERFUND SITE GRIFFITH, INDIANA	CONVEYANCE PIPING LAYOUT	FIGURE
				AS SHOWN	DRAWN CAD	ROBERT A. ADAMS (PROJECT MANAGER) LICENSE NO. DATE				C-4
					CHECKED	(COMPANY OFFICER) LICENSE NO. DATE				

File: J:/209/ JS/0110 ISVE Off-Site/Drawings/CONVEYANCE PIPING C-5.dgn Plot Date: $$ $$$$$ $$time$$

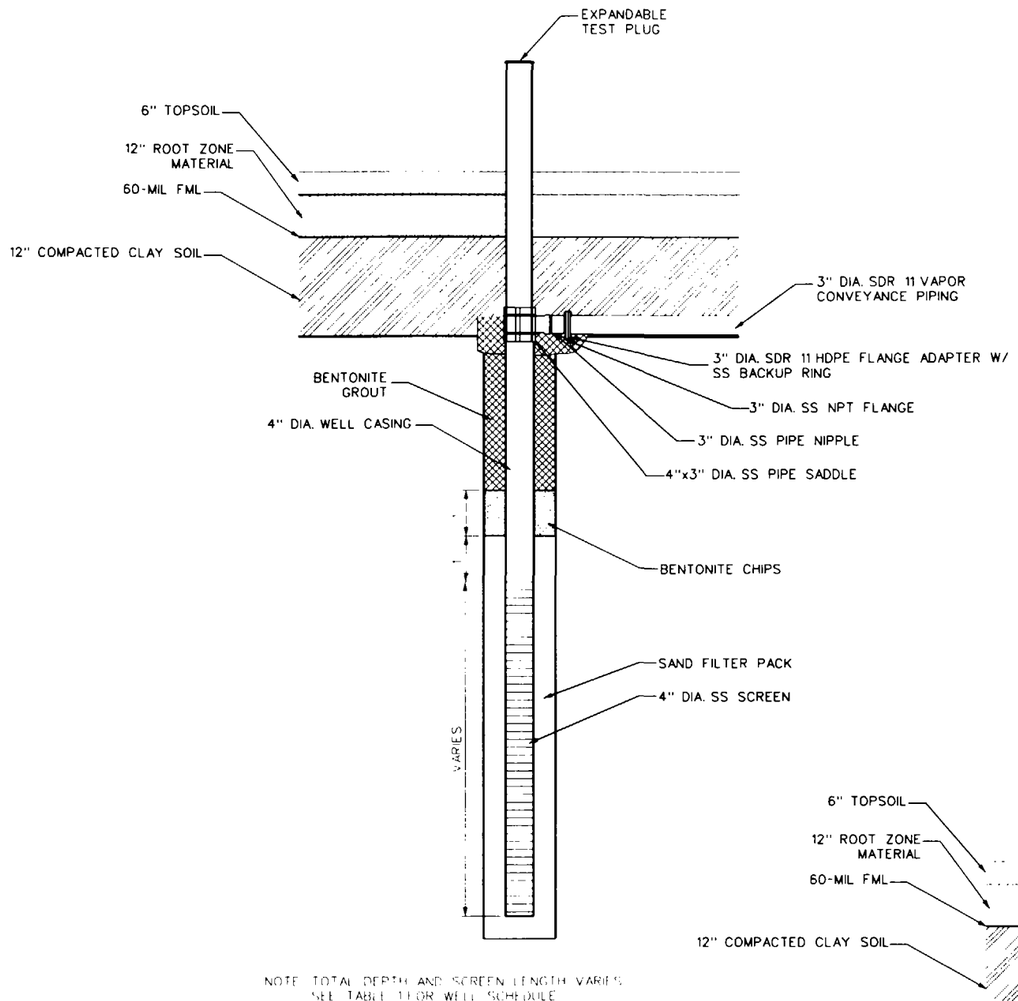

NOTE TOTAL DEPTH AND SCREEN LENGTH VARIES SEE TABLE 1 FOR WELL SCHEDULE

SOIL VAPOR EXTRACTION WELL FINAL CONSTRUCTION — 1 / C-4

NOT TO SCALE

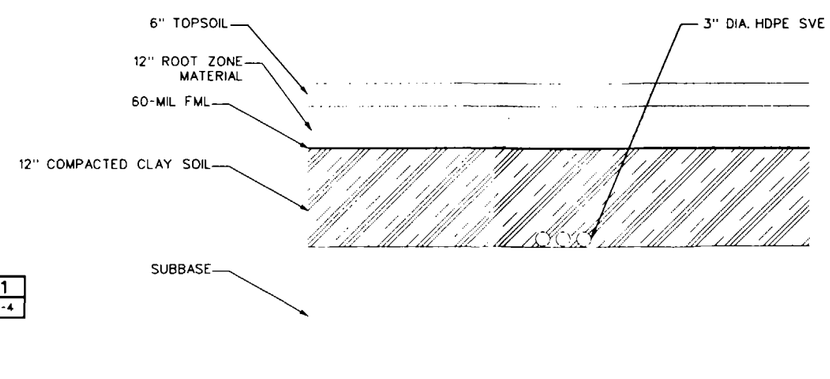

TYPICAL PIPING RUN — A / C-4

NOT TO SCALE

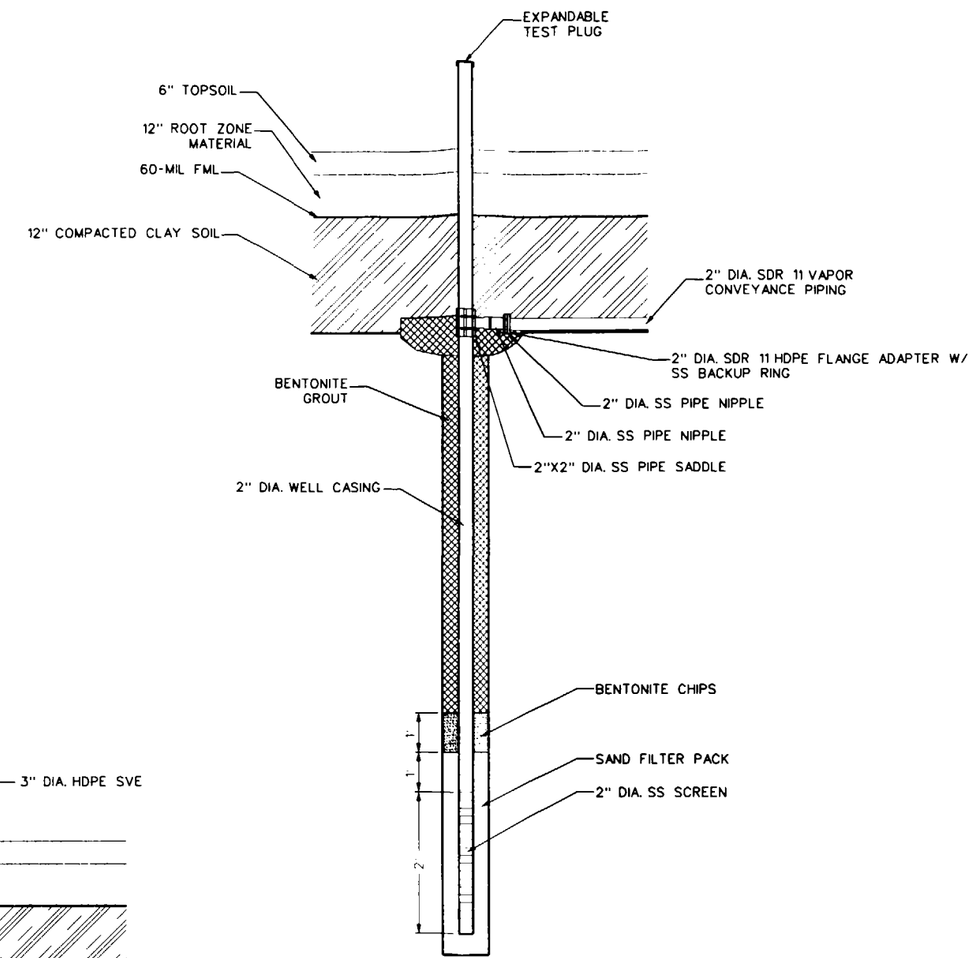

NOTE TOTAL DEPTH OF AIR SPARGE POINTS VARIES SEE TABLE 1 FOR WELL SCHEDULE

AIR SPARGE POINT FINAL CONSTRUCTION — 2 / C-4

NOT TO SCALE

REV	DATE	BY	DESCRIPTION

SCALE: AS SHOWN

DESIGNED CAD
DRAWN CAD
CHECKED

SUBMITTED BY
ROBERT A. ADAMS (PROJECT MANAGER) LICENSE NO. DATE
(COMPANY OFFICER) LICENSE NO DATE

MWH

OFF-SITE AREA ISVE SYSTEM
CONSTRUCTION COMPLETION REPORT
AMERICAN CHEMICAL SERVICE SUPERFUND SITE
GRIFFITH, INDIANA

DETAILS

FIGURE C-5

Plot Date: 03-MAR-2004

File: J:\209... ACS OTU ISVE CH Site Drawings\DETAILS C-5.dgn

APPENDIX A

Sequence of Construction Activities

Sequence of Construction Activities
ISVE System - Off-Site Area
ACS NPL Site - Griffith, Indiana

ID	Task Name
1	**ISVE Well Installation - Boart Longyear**
2	Mobilization
3	Installation of ISVE wells in K-P Area
4	Installation of ISVE wells in OFCA
5	Installation of AS points
6	Demobilization
7	
8	**Conveyance Pipe Installation - Heritage Industrial Services**
9	Mobilization
10	Trenching
11	Pipe Installation
12	Initial backfill and compaction of clay
13	Compaction testing (in OFCA only)
14	Pressure testing
15	Demobilization
16	Recompaction/testing of clay (first attempt)
17	Recompaction/testing of clay (second attempt)
18	Reinstallation and recompaction of clay (testing completed)
19	
20	**Blower Shed Construction - Fliteway/Ryan**
21	Concrete pad construction
22	Pipe sweep assembly prepared
23	Concrete pour
24	Pad coated
25	28-day compressive strength test passed
26	Blower shed delivered and placed on foundation
27	Piping manifold completed (inc. installation of blower)
28	Knockout level switches reconfigured
29	
30	***Thermal Oxidizer/Scrubber System Installation - Durr***
31	Components delivered/placed
32	System assembly
33	System startup
34	
35	**Controls and Instrumentation Installation**
36	Blower shed MCC installed
37	Power to Off-Site Area installed
38	Blower shed PLC installed
39	GWTP SCADA System updated

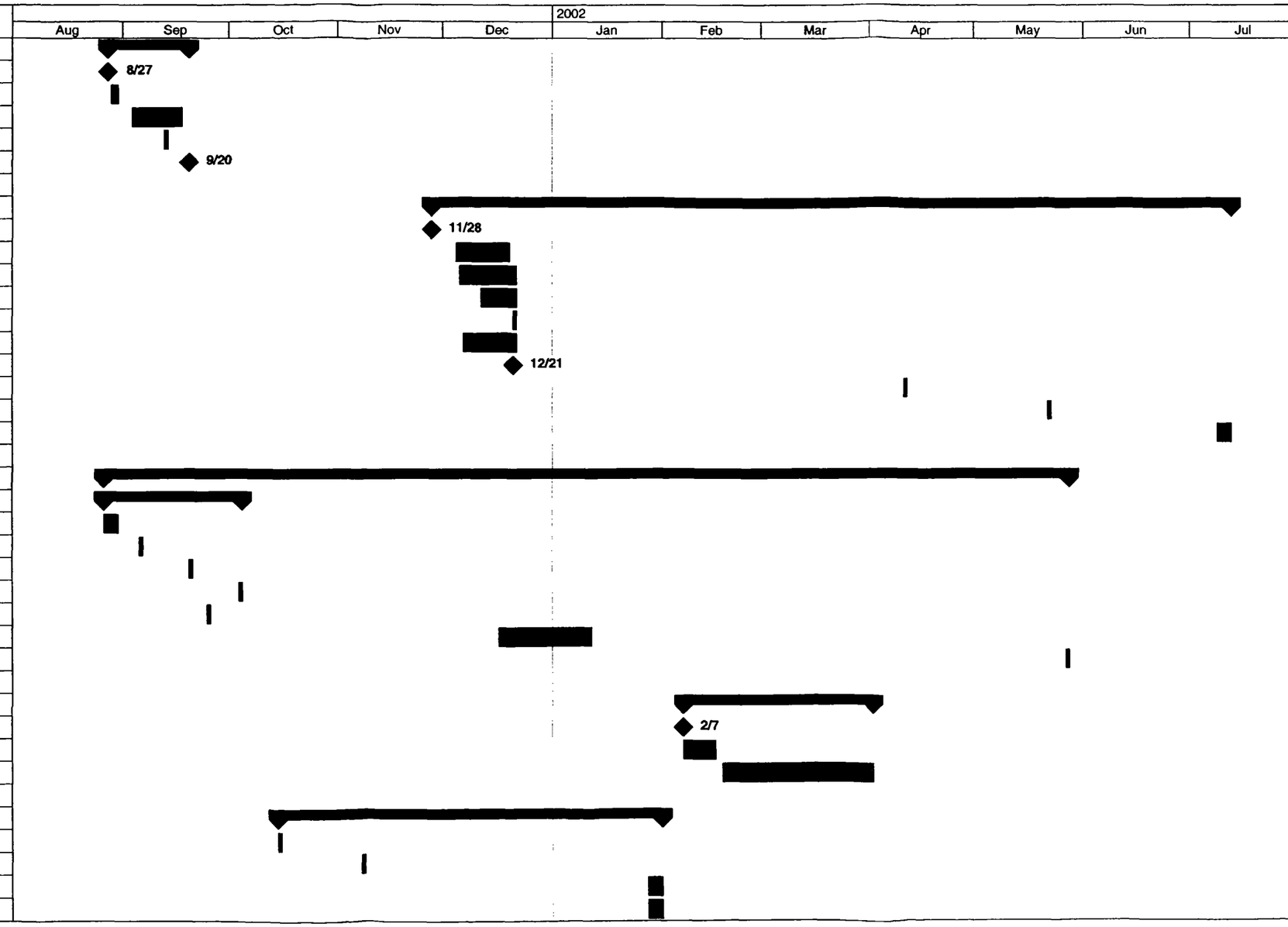

Project: Off-site ISVE CCR Schedule
Date: Tue 4/29/03

Task | Progress | Summary | External Tasks | Deadline
Split | Milestone | Project Summary | External Milestone

APPENDIX B

Photograph Log

PHOTOGRAPH LOG
IN-SITU SOIL VAPOR EXTRACTION SYSTEM:
OFF-SITE AREA
CONSTRUCTION COMPLETION REPORT

PHOTO NO.	CONTRACTOR	DESCRIPTION
1	Boart Longyear	Locations of ISVE wells were surveyed and staked
2	Boart Longyear	Screening a soil sample with a PID during ISVE well installation
3	Boart Longyear	ISVE well installation
4	Boart Longyear	Adding an auger flight during ISVE well installation
5	Boart Longyear	Drilling personnel in Level B PPE
6	Boart Longyear	MWH personnel recording geologic characteristics of a soil sample
7	Boart Longyear	Drill cuttings were placed on plastic sheet during drilling
8	Boart Longyear	Drill cuttings, plastic sheets, and PPE were collected in a rolloff box and covered
9	Boart Longyear	Large fans were used to ventilate work area
10	Boart Longyear	Personnel decontamination
11	Boart Longyear	Exclusion zone and personnel decontamination area
12	MWH	Assembly of pipe sweeps in preparation for construction of concrete foundation for blower shed
13	MWH	Assembly of pipe sweeps in preparation for construction of concrete foundation for blower shed
14	MWH	Concrete pour for blower shed foundation
15	MWH	Concrete pour for blower shed foundation
16	MWH	MWH personnel collect a concrete sample for compressive strength testing
17	Fliteway	Delivery of the blower shed
18	Fliteway	Placement of the blower shed on the finished foundation.
19	Fliteway	Interior of blower shed
20	Fliteway	View of blower shed looking north
21	Heritage	Fusion of HDPE piping to end of pipe sweeps near blower shed
22	Heritage	Conveyance piping installed near blower shed
23	Heritage	Trenching within the clay layer
24	Heritage	Completed trench excavation
25	Heritage	Piping laid into trench
26	Heritage	HDPE pipe fusion process
27	Heritage	Pressure testing of HDPE pipe
28	Heritage	Coring through ISVE well casing
29	Heritage	Assembly of pipe saddle around ISVE well casing
30	Heritage	Connection of pipe saddle to HDPE conveyance piping
31	Heritage	Completed connection of conveyance piping to ISVE well
32	Heritage	Completed connection of conveyance piping to ISVE well
33	Heritage	Partial backfill of conveyance piping trench
34	Heritage	Regrading of clay layer within ISVE well field
35	Heritage	Compaction of clay layer with smooth-drum roller
36	Heritage	Placement of Quik-crete beneath pipes near blower shed
37	Durr	Delivery and placement of thermal oxidizer
38	Durr	Delivery and placement of scrubber
39	Durr	Thermal oxidizer
40	Durr	Thermal oxidizer gas train
41	Durr	Pressure and flow gauges installed on influent vapor pipe
42	Durr	Thermal oxidizer process blower
43	Durr	Upper section of scrubber
44	Durr	Scrubber
45	Durr	Scrubber system piping

PHOTO NO.	CONTRACTOR	DESCRIPTION
46	Durr	An individual piece of scrubber packing
47	Durr	Scrubber packing installed
48	Durr	Thermal oxidizer/scrubber system control panel (front)
49	Durr	Thermal oxidizer/scrubber system control panel (inside)

1. Locations of ISVE wells were surveyed and staked

2. Screening a soil sample with a PID during ISVE well installation

3. ISVE well installation

4. Removing an auger flight during ISVE well installation

5. Drilling personnel in Level B PPE

6. MWH personnel recording geologic characteristics of a soil sample

7. Drill cuttings were placed on plastic sheet during drilling

8. Drill cuttings, plastic sheets, and PPE were collected in a rolloff box and covered

9. Large fans were used to ventilate work area

10. Personnel decontamination

11. Exclusion zone and personnel decontamination area

12. Assembly of pipe sweeps in preparation for construction of concrete foundation for blower shed

13. Assembly of pipe sweeps in preparation for construction of concrete foundation for blower shed

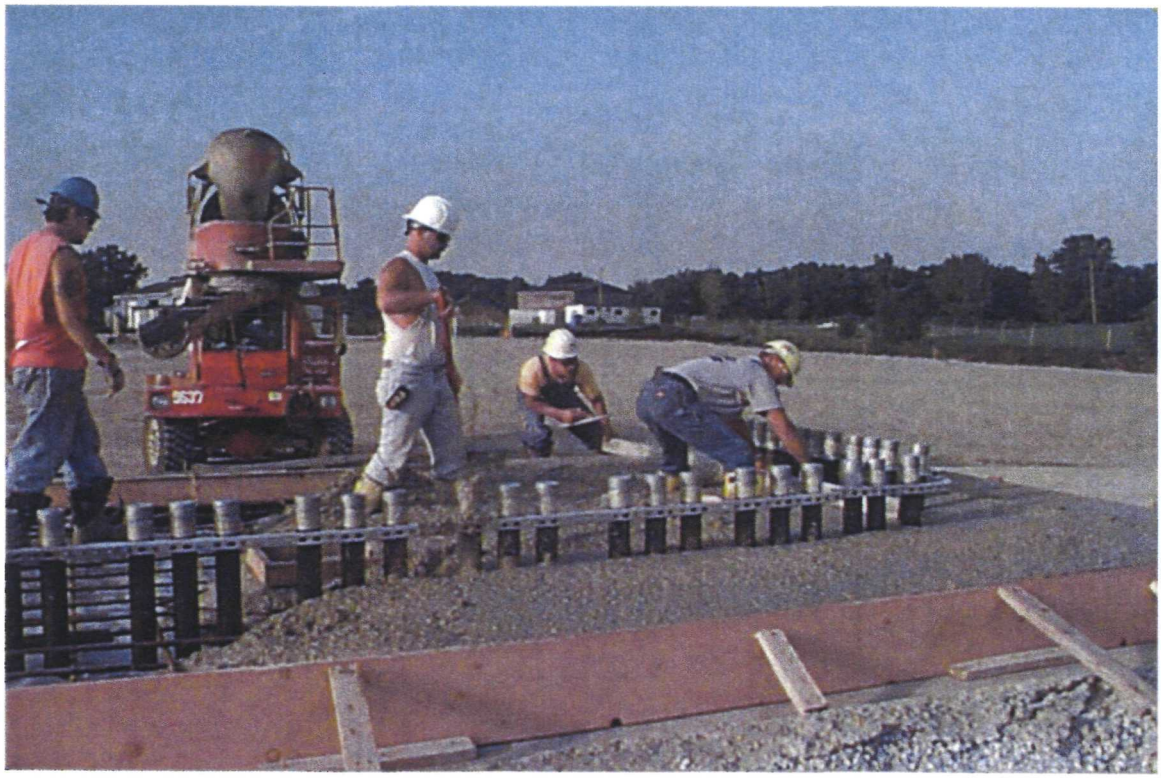

14. Concrete pour for blower shed foundation

15. Concrete pour for blower shed foundation

16. MWH personnel collect a concrete sample for compressive strength testing.

17. Delivery of the blower shed

18. Placement of the blower shed on the finished foundation

19. Interior of blower shed

20. View of blower shed looking north

21. Fusion of HDPE piping to end of pipe sweeps near blower shed

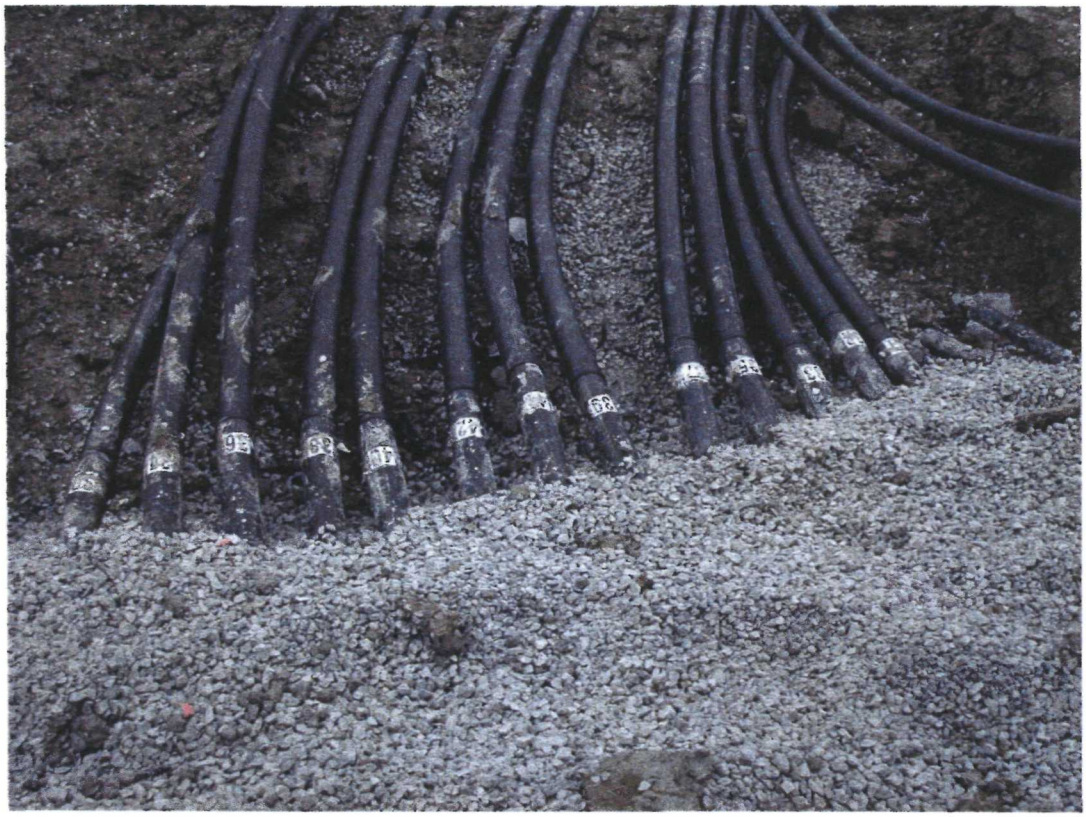

22. Conveyance piping installed near blower shed

23. Trenching within the clay layer

24. Completed trench excavation

25. Piping laid into trench

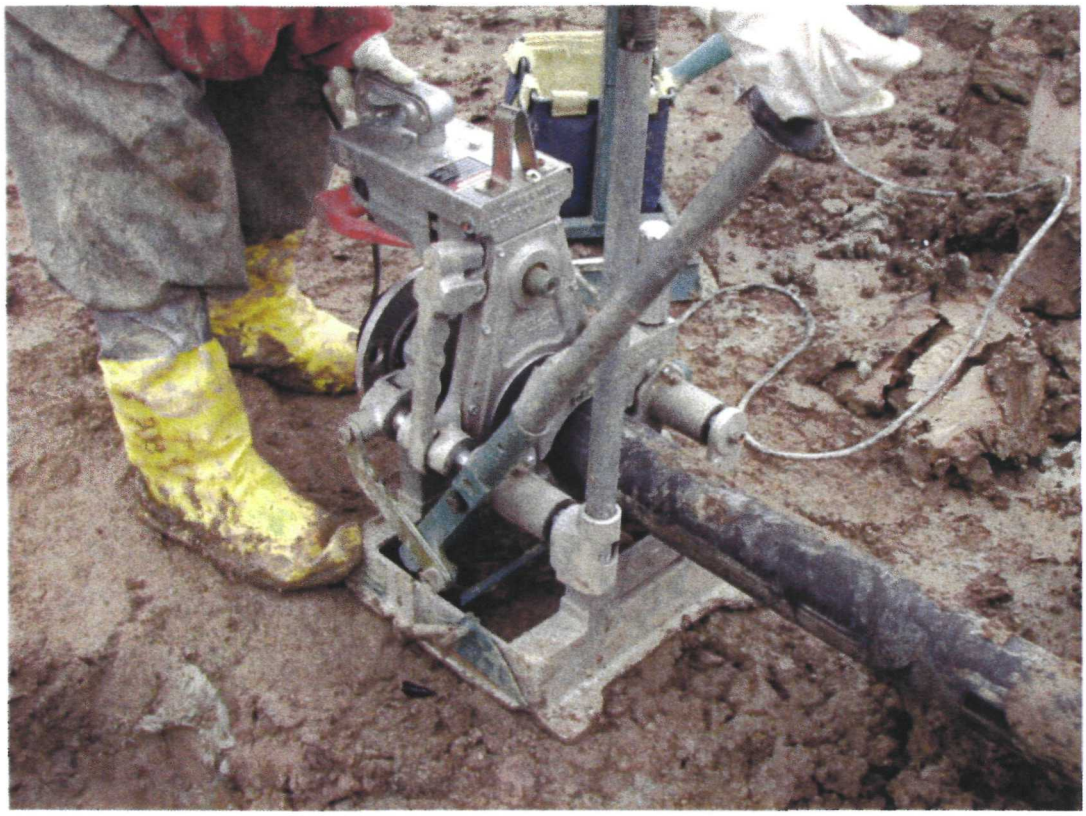

26. HDPE pipe fusion process

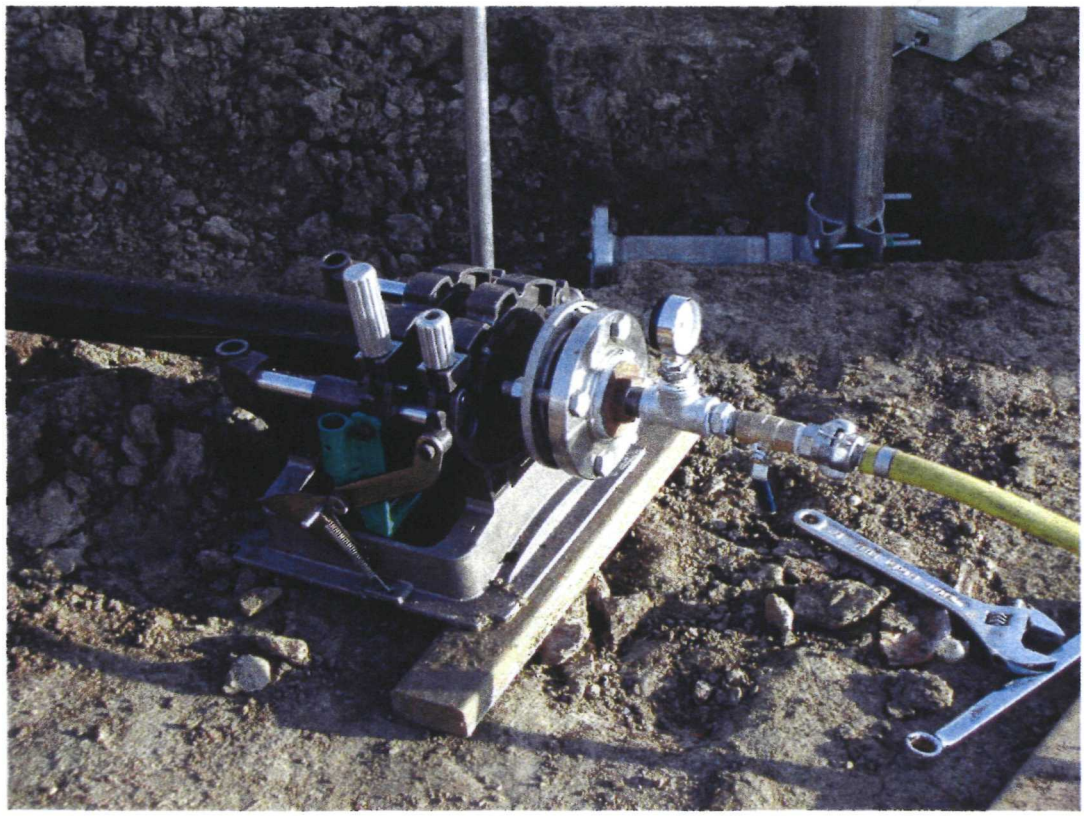

27. Pressure testing of HDPE pipe

28. Coring through ISVE well casing

29. Assembly of pipe saddle around ISVE well casing

30. Connection of pipe saddle to HDPE conveyance piping

31. Completed connection of conveyance piping to ISVE well

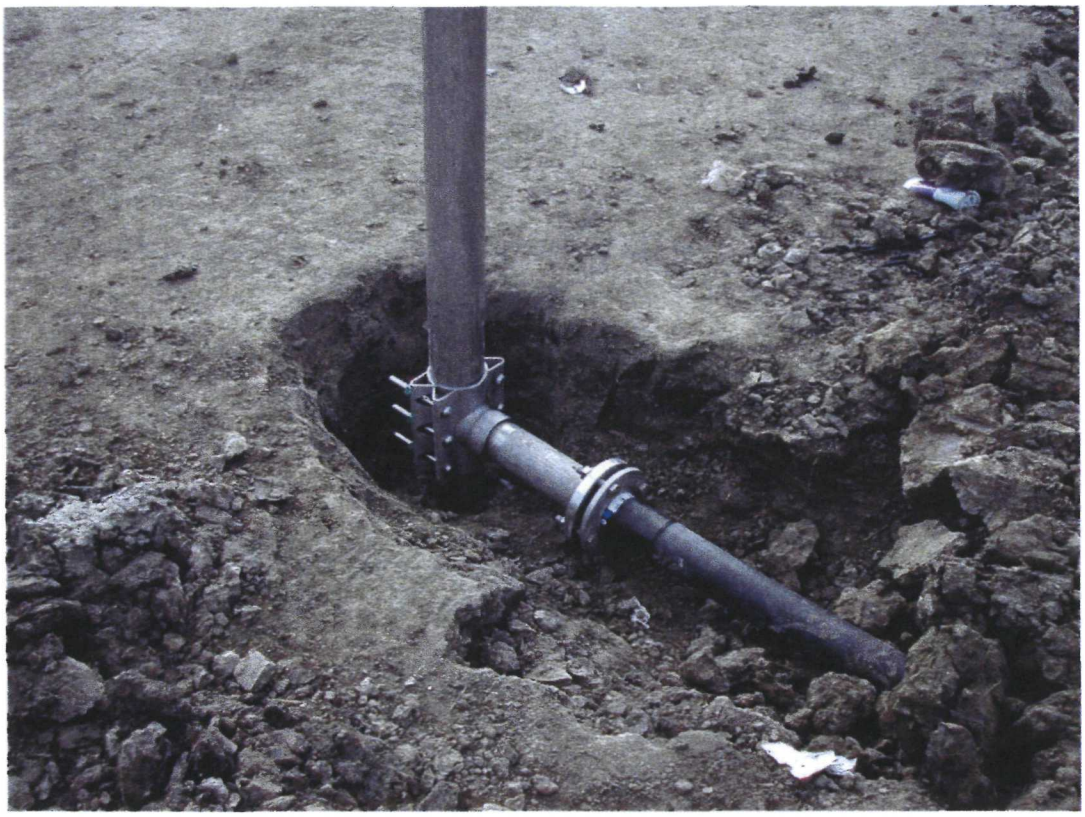

32. Completed connection of conveyance piping to ISVE well

33. Partial backfill of conveyance piping trench

34. Regrading of clay layer within ISVE well field

35. Compaction of clay layer with smooth-drum roller

36. Placement of Quik-crete beneath pipes near blower shed

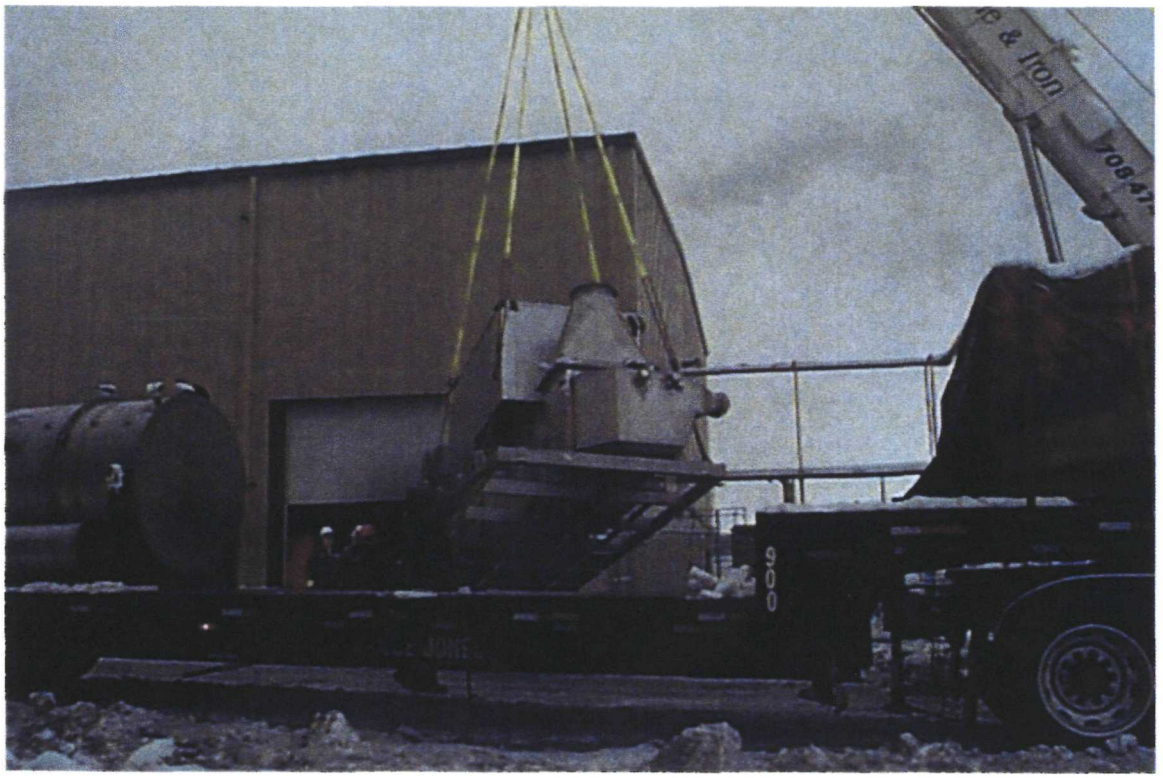

37. Delivery and placement of thermal oxidizer

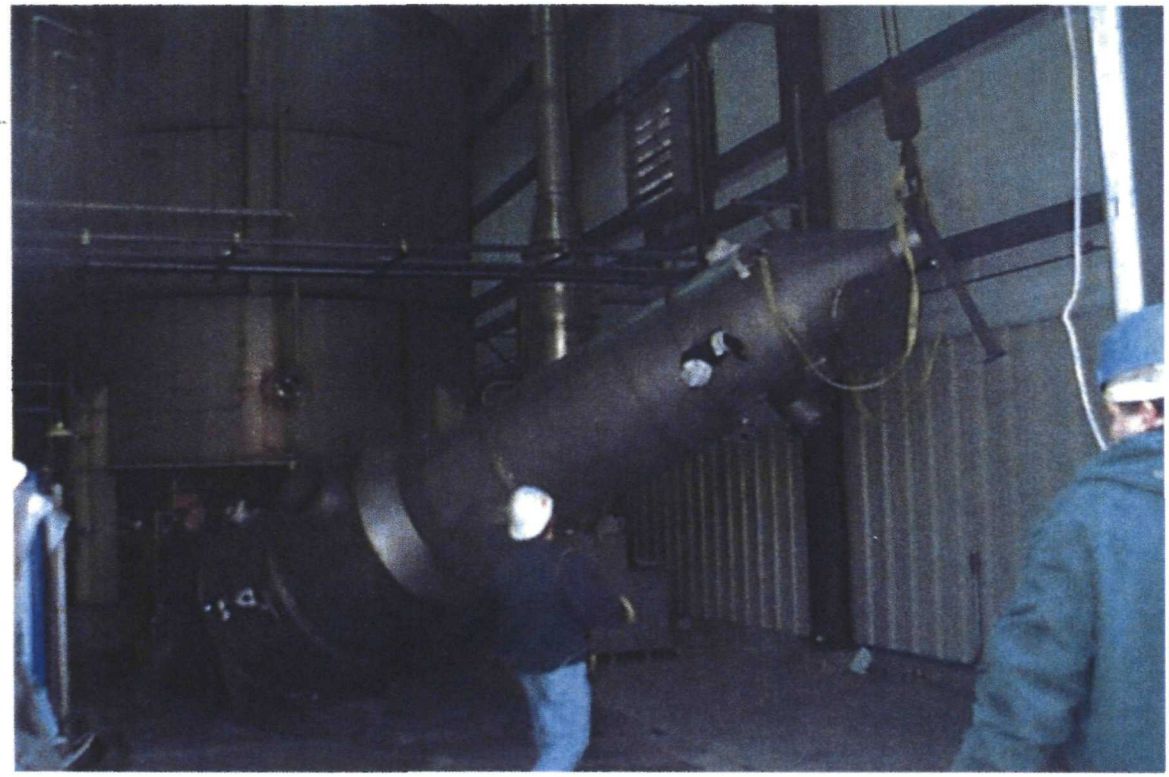

38. Delivery and placement of scrubber

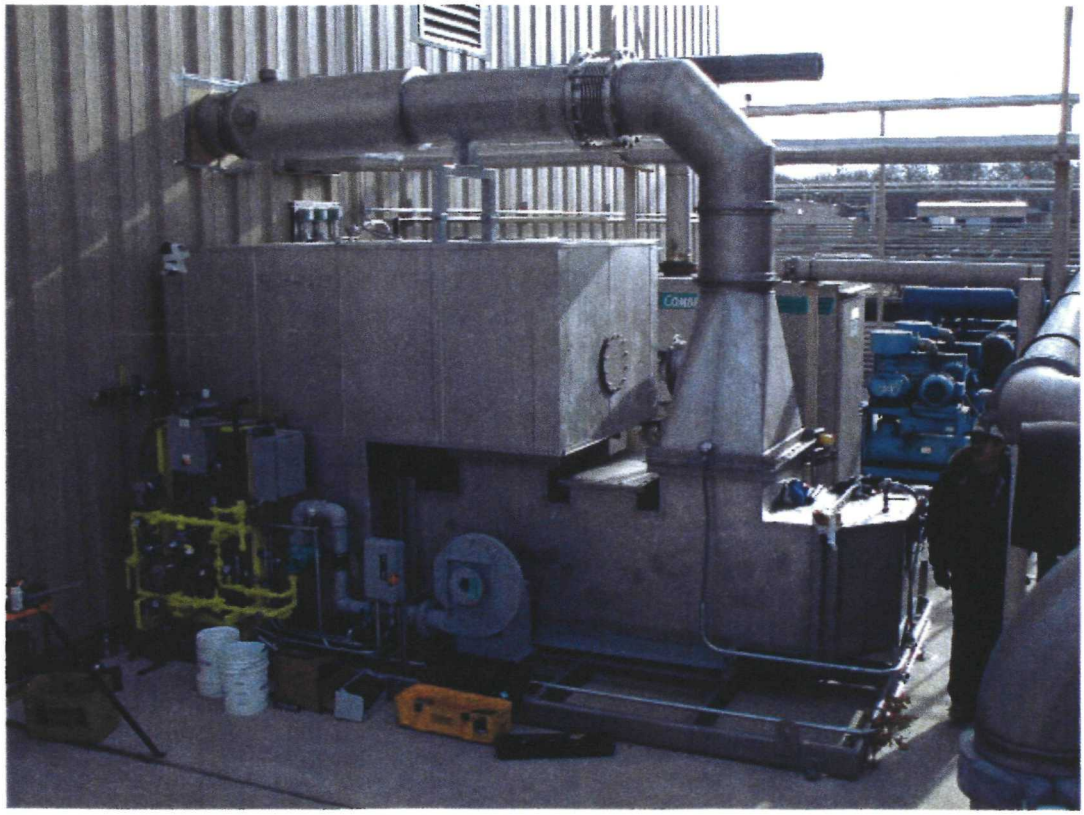

39. Thermal oxidizer

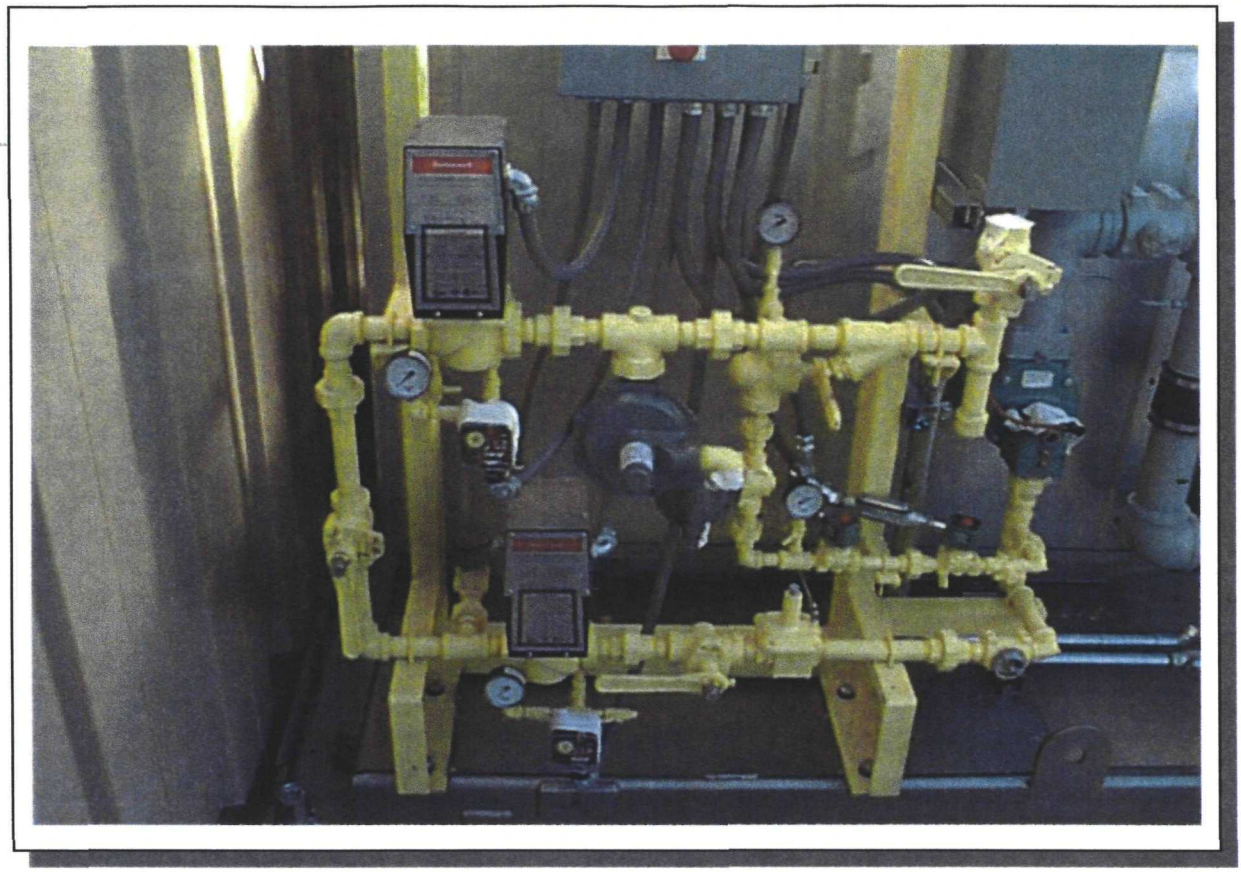

40. Thermal oxidizer gas train

41. Pressure and flow gauges installed on influent vapor pipe

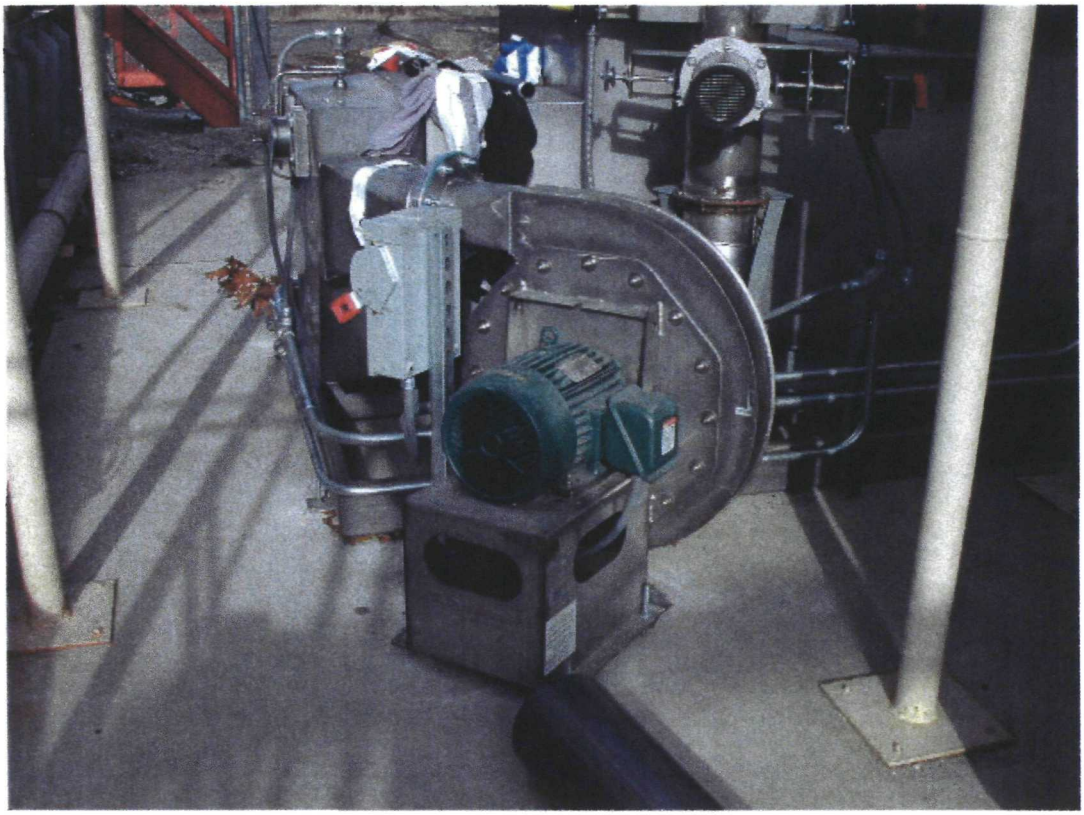

42. Thermal oxidizer process blower

43. Upper section of scrubber

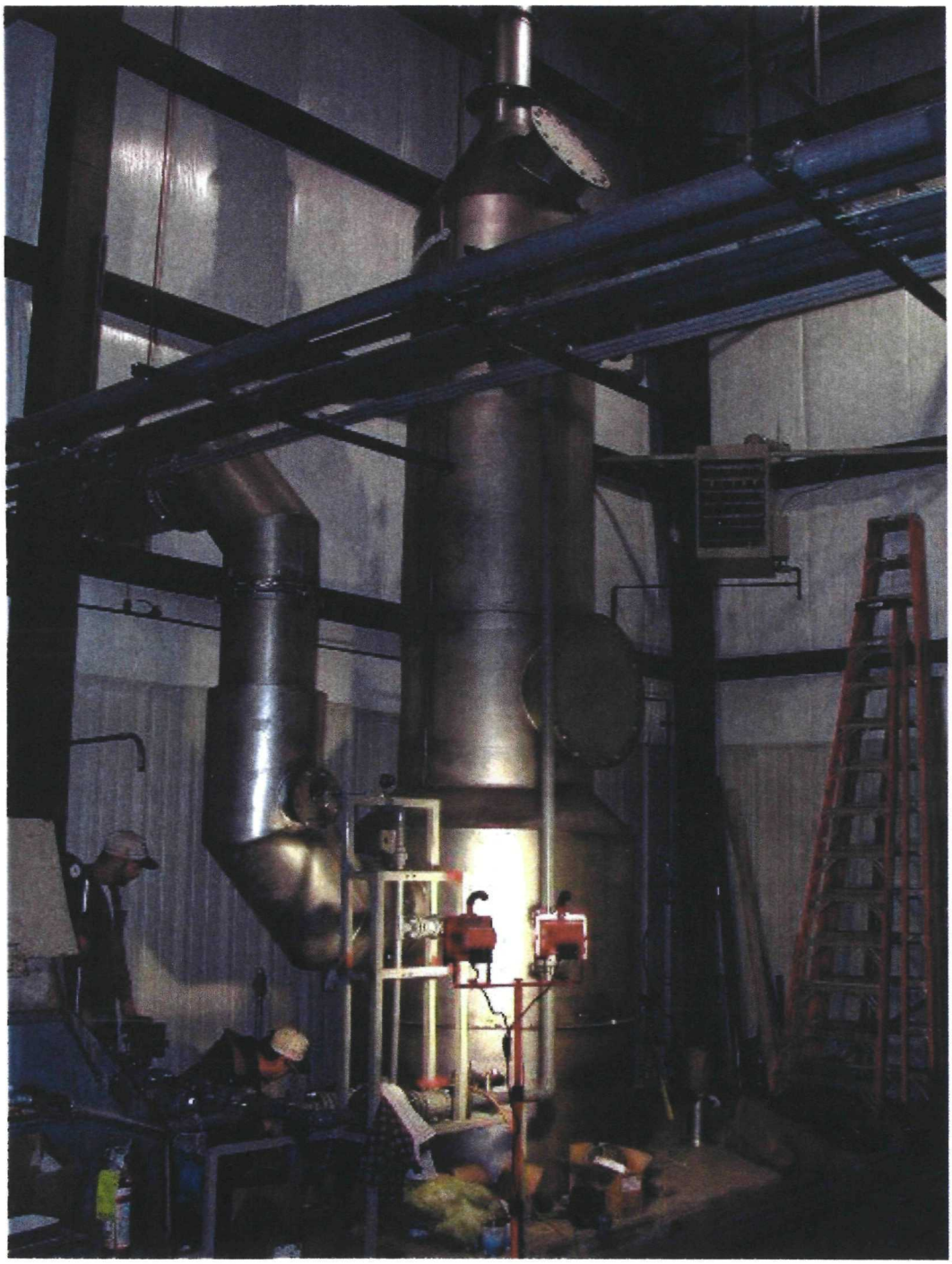

44. Scrubber

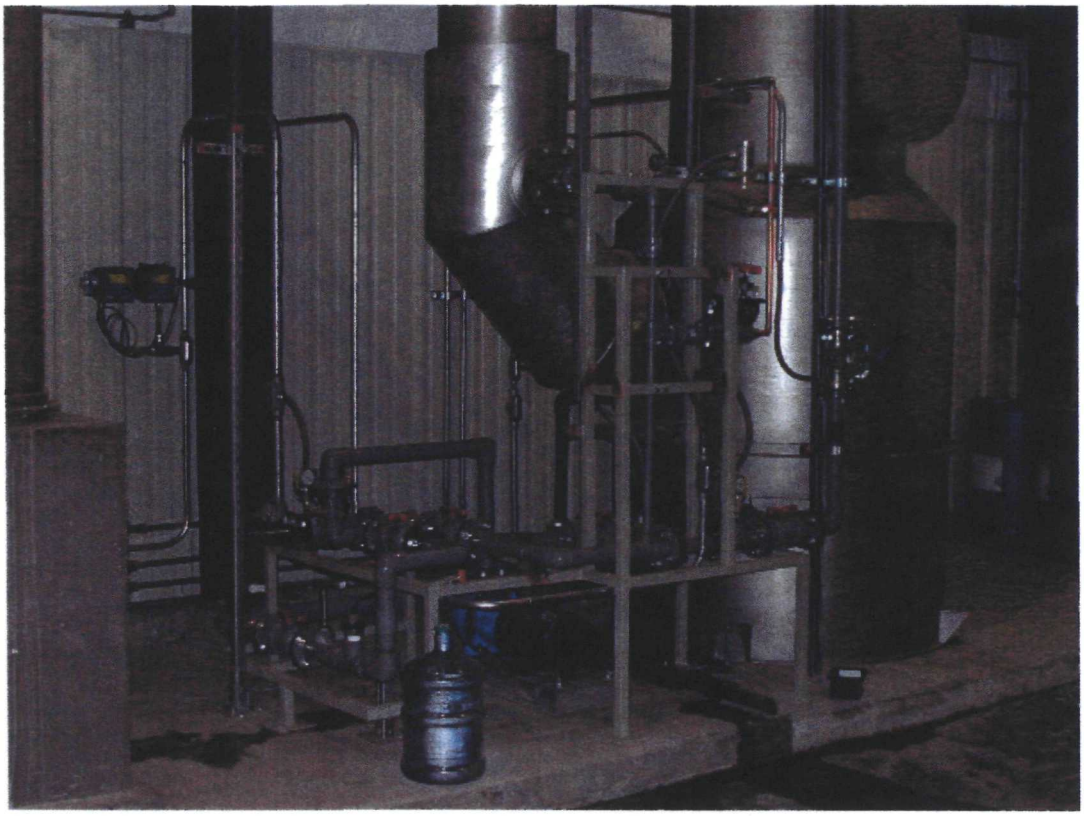

45. Scrubber system piping

46. An individual piece of scrubber packing

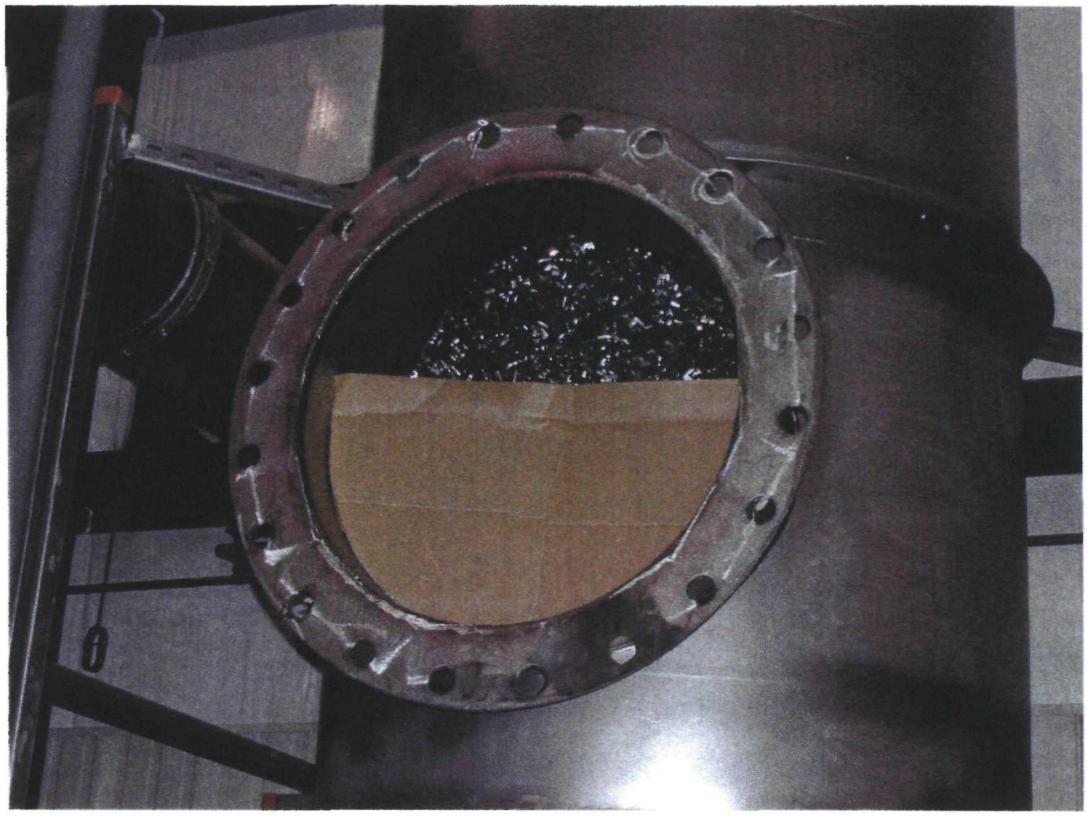

47. Scrubber packing installed

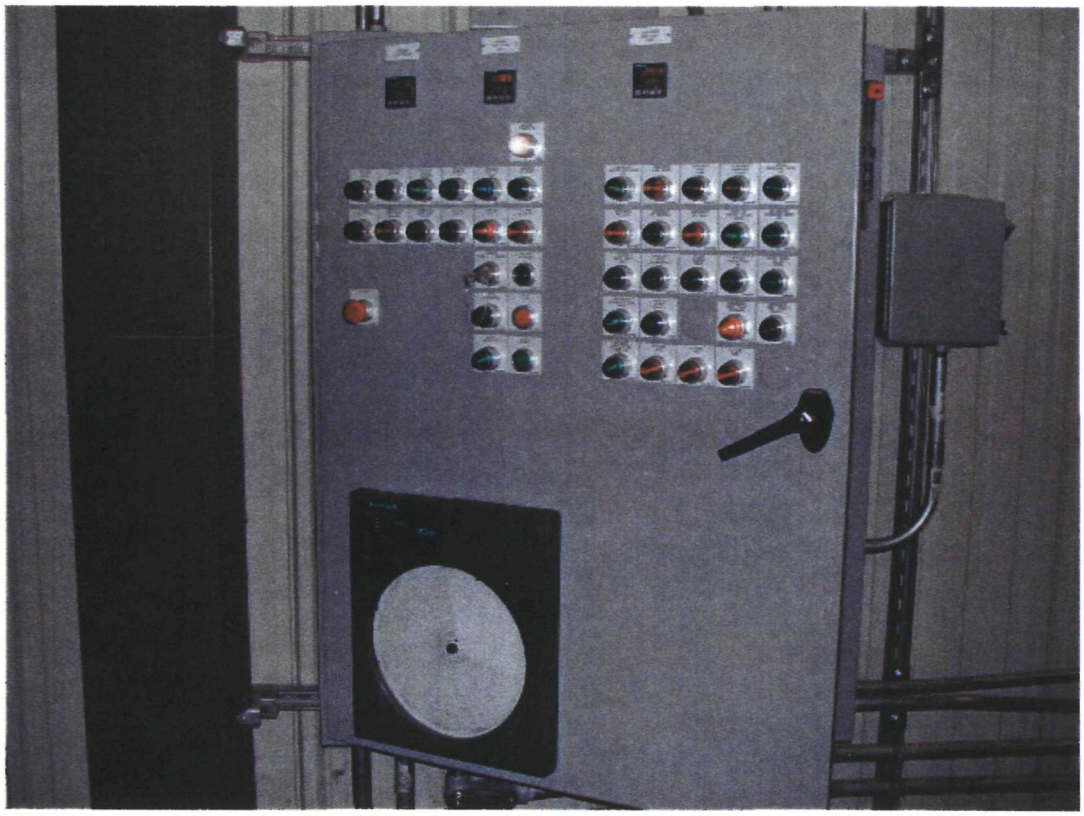

48. Thermal oxidizer/scrubber system control panel (front)

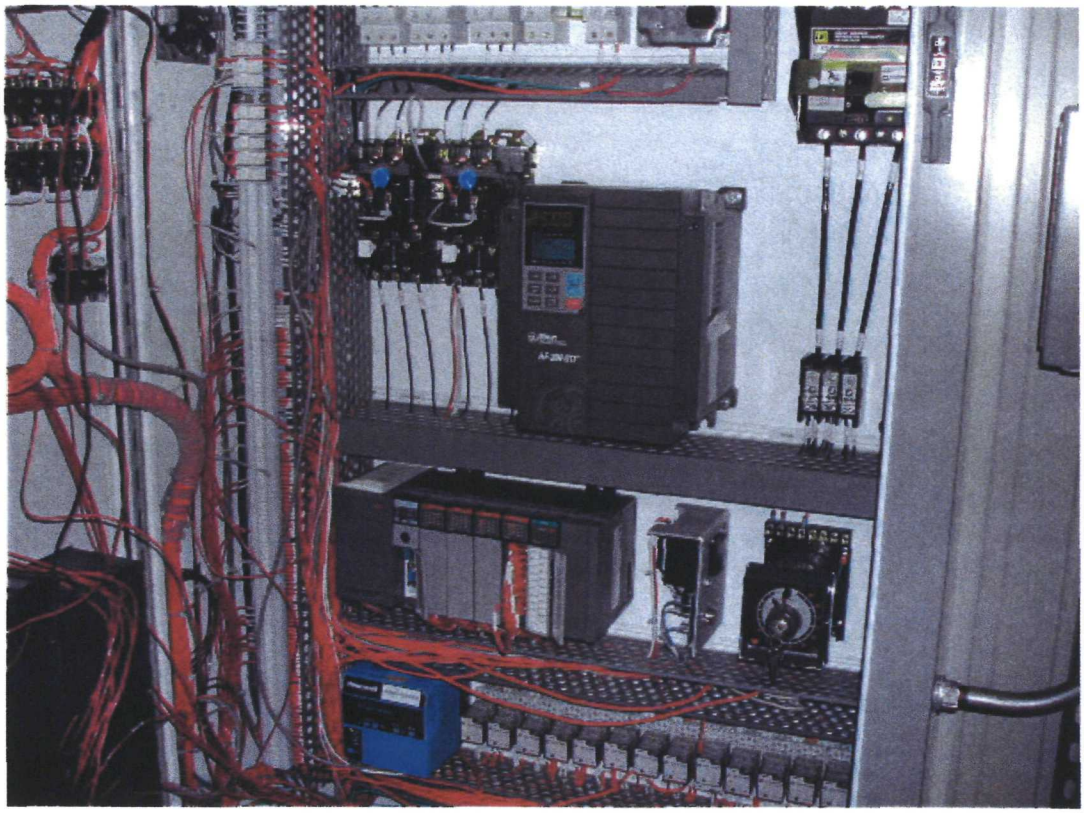

49. Thermal oxidizer/scrubber system control panel (inside)

APPENDIX C

Boring Logs and Well Construction Diagrams

- Air Sparge Wells
- ISVE Wells

Air Sparge Wells

SOIL BORING LOG INFORMATION

Form 4400-122 Rev. 5-97

Route To: Watershed/Wastewater ☐ Waste Management ☐ Remediation/Redevelopment ☐ Other ☐

Facility/Project Name	License/Permit/Monitoring Number	Boring Number
American Chemical Service, Inc.		AS-7

Boring Drilled By (Firm name and name of crew chief)	Date Drilling Started	Date Drilling Completed	Drilling Method
Boart Longyear - R. Fischer	9/13/2001	9/13/2001	4 1/4 HSA

WI Unique Well No.	DNR Well ID No.	Common Well Name	Final Static Water Level	Surface Elevation	Borehole Diameter
		AS-7			8.0 Inches

Boring Location or Local Grid Origin (Check if estimated: ☐)
State Plane S / C / N
1/4 of 1/4 of Section , T N, R
Lat. ° ' "
Long. ° ' "
Local Grid Location (If applicable)
Feet ☐ N ☐ S Feet ☐ E ☐ W

Facility ID	County	County Code	Civil Town/City/ or Village
3410-1812	Lake		Griffith, IN

Sample: Number and Type	Length Att. & Recovered (in)	Blow Counts	Depth In Feet	Soil/Rock Description And Geologic Origin For Each Major Unit	U S C S	Graphic Log	Well Diagram	PID/FID	Soil Properties: Compressive Strength	Moisture Content	Liquid Limit	Plasticity Index	P 200	RQD/ Comments
				EARTH DRILL										
			1											
			2											
			3											
			4											
			5											
			6											
			7											
			8											
			9											
			10											
			11											
			12											

I hereby certify that the information on this form is true and correct to the best of my knowledge.

Signature	Firm	
	Boart Longyear Company 101 Alderson Street Schofield, WI 54476	Tel: 715-359-7090 Fax: 715-355-5715

SOIL BORING LOG INFORMATION SUPPLEMENT

Form 4400-122A Rev. 5-97

Boring Number AS-7 Use only as an attachment to Form 4400-122.

Sample Number and Type	Length Att. & Recovered (in)	Blow Counts	Depth In Feet	Soil/Rock Description And Geologic Origin For Each Major Unit	U S C S	Graphic Log	Well Diagram	PID/FID	Soil Properties: Compressive Strength	Moisture Content	Liquid Limit	Plasticity Index	P 200	RQD/ Comments
			13											
			14											
			15											
			16											
			17											
			18											
			19											
			20											
			21											
			22											
			23											
			24											
			25	Blk Silty SAND										
1 SS	24 12	4 9 9 11	26							W				
			27											
2 SS	24 21	6 11 13 17	28							M				
				Gry SAND										
				Gry Brn CLAY										
			29	EOB 29.0' Well Set 28'										

Route To: Watershed/Wastewater ☐ Waste Management ☐ Remediation/Redevelopment ☐ Other ☐

MONITORING WELL CONSTRUCTION

Form 4400-113A Rev. 6-97

Facility/Project Name: American Chemical Service, Inc.	Local Grid Location of Well: ____ ft. ☐N. ☐S. ____ ft. ☐E. ☐W.	Well Name: AS-7
Facility License, Permit or Monitoring No.	Grid Origin Location (Check if estimated: ☐) Lat. ___° ___' ___" Long. ___° ___' ___" or	Wis. Unique Well No. / DNR Well Number
Facility ID: 3410-1812	St. Plane ____ ft. N, ____ ft. E. S/C/N	Date Well Installed: 09/13/2001
Type of Well: Well Code 62/as	Section Location of Waste/Source: ___ 1/4 of ___ 1/4 of Sec. ___, T. ___ N, R. ___ ☐E ☐W	Well Installed By: (Person's Name and Firm): R. Fischer
Distance Well Is From Waste/Source Boundary ft.	Location of Well Relative to Waste/Source: u ☐ Upgradient s ☐ Sidegradient d ☐ Downgradient n ☐ Not Known	Boart Longyear

A. Protective pipe, top elevation ____ ft. MSL

B. Well casing, top elevation ____ ft. MSL

C. Land surface elevation ____ ft. MSL

D. Surface seal, bottom ____ ft. MSL or 0.0 ft.

12. USC classification of soil near screen:
GP ☐ GM ☐ GC ☐ GW ☐ SW ☐ SP ☐
SM ☐ SC ☐ ML ☐ MH ☐ CL ☐ CH ☐
Bedrock ☐

13. Sieve analysis attached? ☐ Yes ☐ No

14. Drilling method used: Rotary ☐ 5 0
Hollow Stem Auger ☒ 4 1
____ Other ☐ __

15. Drilling fluid used: Water ☐ 0 2 Air ☐ 0 1
Drilling Mud ☐ 0 3 None ☒ 9 9

16. Drilling additives used? ☐ Yes ☒ No

Describe ____

17. Source of water (attach analysis):

____

E. Bentonite seal, top ____ ft. MSL or 21.5 ft.

F. Fine sand, top ____ ft. MSL or na ft.

G. Filter pack, top ____ ft. MSL or 23.5 ft.

H. Screen joint, top ____ ft. MSL or 25.5 ft.

I. Well bottom ____ ft. MSL or 28.0 ft.

J. Filter pack, bottom ____ ft. MSL or 29.0 ft.

K. Borehole, bottom ____ ft. MSL or 29.0 ft.

L. Borehole, diameter 8.0 in.

M. O.D. well casing 2.46 in.

N. I.D. well casing 2.00 in.

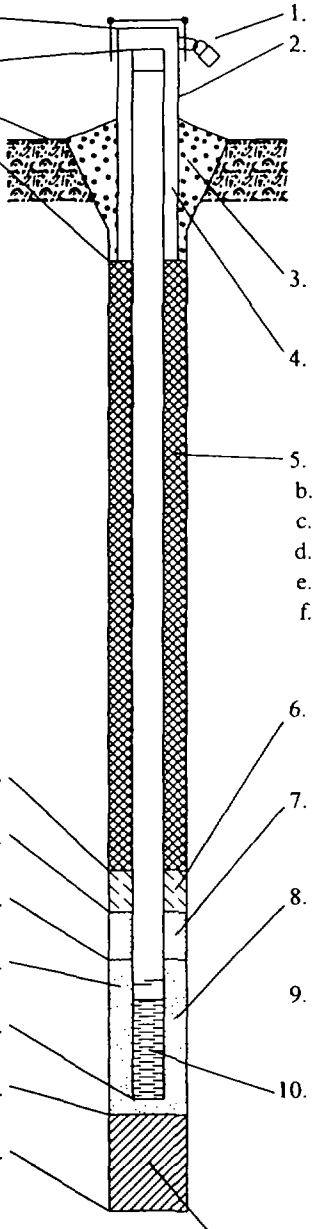

1. Cap and lock? ☒ Yes ☐ No

2. Protective cover pipe:
a. Inside diameter: ____ in.
b. Length: ____ ft.
c. Material: Steel ☐ 0 4
na Other ☒ __
d. Additional protection? ☐ Yes ☒ No
If yes, describe: ____

3. Surface seal: Bentonite ☒ 3 0
Concrete ☐ 0 1
____ Other ☐ __

4. Material between well casing and protective pipe:
Bentonite ☐ 3 0
na Other ☒ __

5. Annular space seal: a. Granular Bentonite ☐ 3 3
b. ____ Lbs/gal mud weight . Bentonite-sand slurry ☐ 3 5
c. X Lbs/gal mud weight . . . Bentonite slurry ☒ 3 1
d. ____ % Bentonite . . . Bentonite-cement grout ☐ 5 0
e. ____ Ft^3 volume added for any of the above
f. How installed: Tremie ☐ 0 1
Tremie pumped ☐ 0 2
Gravity ☒ 0 8

6. Bentonite seal: a. Bentonite granules ☐ 3 3
b. ☐ 1/4 in. ☒ 3/8 in. ☐ 1/2 in. Bentonite pellets ☒ 3 2
c. ____ Other ☐ __

7. Fine sand material: Manufacturer, product name and mesh size
a. na __
b. Volume added ____ ft^3

8. Filter pack material: Manufacturer, product name and mesh size
a. #5 Global __
b. Volume added ____ ft^3

9. Well casing: Flush threaded PVC schedule 40 ☐ 2 3
Flush threaded PVC schedule 80 ☐ 2 4
Stainless Steel Other ☒ __

10. Screen material: Stainless Steel __
a. Screen Type: Factory cut ☐ 1 1
Continuous slot ☒ 0 1
____ Other ☐ __
b. Manufacturer Johnson
c. Slot size: 0.010 in.
d. Slotted length: 2.5 ft.

11. Backfill material (below filter pack): None ☒ 1 4
____ Other ☐ __

I hereby certify that the information on this form is true and correct to the best of my knowledge.

Signature	Firm: Boart Longyear Company 101 Alderson Street Schofield, WI 54476	Tel: 715-359-7090 Fax: 715-355-5715

SOIL BORING LOG INFORMATION

Form 4400-122 Rev. 5-97

Route To: Watershed/Wastewater ☐ Waste Management ☐ Remediation/Redevelopment ☐ Other ☐

Facility/Project Name	License/Permit/Monitoring Number	Boring Number
American Chemical Service, Inc.		AS-8

Boring Drilled By (Firm name and name of crew chief)	Date Drilling Started	Date Drilling Completed	Drilling Method
Boart Longyear - J. Berthold	9/13/2001	9/13/2001	4 1/4 HSA

WI Unique Well No.	DNR Well ID No.	Common Well Name	Final Static Water Level	Surface Elevation	Borehole Diameter
		AS-8			8.0 Inches

Boring Location or Local Grid Origin (Check if estimated: ☐)
State Plane S/C/N
1/4 of 1/4 of Section , T N, R
Lat. ___ ° ___ ' ___ "
Long. ___ ° ___ ' ___ "
Local Grid Location (If applicable)
Feet ☐ N ☐ S Feet ☐ E ☐ W

Facility ID	County	County Code	Civil Town/City/ or Village
3410-1812	Lake		Griffith, IN

Sample: Number and Type	Length Att. & Recovered (in)	Blow Counts	Depth In Feet	Soil/Rock Description And Geologic Origin For Each Major Unit	U S C S	Graphic Log	Well Diagram	PID/FID	Soil Properties: Compressive Strength	Moisture Content	Liquid Limit	Plasticity Index	P 200	RQD/ Comments
				EARTH DRILL										
			1											
			2											
			3											
			4											
			5											
			6											
			7											
			8											
			9											
			10											
			11											
			12											

I hereby certify that the information on this form is true and correct to the best of my knowledge.

Signature

Firm Boart Longyear Company
101 Alderson Street Schofield, WI 54476
Tel: 715-[illegible] 7090
Fax: 715- [illegible] 715

SOIL BORING LOG INFORMATION SUPPLEMENT

Form 4400-122A Rev. 5-97

Boring Number AS-8 Use only as an attachment to Form 4400-122.

Sample Number and Type	Sample Length Att. & Recovered (in)	Blow Counts	Depth In Feet	Soil/Rock Description And Geologic Origin For Each Major Unit	U S C S	Graphic Log	Well Diagram	PID/FID	Soil Properties: Compressive Strength	Moisture Content	Liquid Limit	Plasticity Index	P 200	RQD/ Comments
			13											
			14											
			15											
			16											
			17											
			18											
			19											
			20											
			21											
			22											
			23											
			24											
1 SS	24 24	5 4 5 7	25 26	Blk SAND (Strong Odor)						W				
			27											
2 SS	24 24	4 4 18 50	28 29							W				
			30	Brn CLAY EOB 30.0' Well Set 29.0'										

Route To: Watershed/Wastewater ☐ Waste Management ☐ Remediation/Redevelopment ☐ Other ☐

MONITORING WELL CONSTRUCTION

Form 4400-113A Rev. 6-97

Facility/Project Name: American Chemical Service, Inc.	Local Grid Location of Well: ____ ft. ☐ N. ☐ S. ____ ft. ☐ E. ☐ W.	Well Name: AS-8
Facility License, Permit or Monitoring No.	Grid Origin Location (Check if estimated: ☐) Lat. ___ ° ___ ' ___ " Long. ___ ° ___ ' ___ " or	Wis. Unique Well No / DNR Well Number
Facility ID: 3410-1812	St. Plane ____ ft. N, ____ ft. E. S/C/N	Date Well Installed: 09/13/2001
Type of Well: Well Code 62/as	Section Location of Waste/Source: ____ 1/4 of ____ 1/4 of Sec. ____, T. ____ N, R. ____ ☐ E ☐ W	Well Installed By: (Person's Name and Firm): J. Berthold
Distance Well Is From Waste/Source Boundary ft.	Location of Well Relative to Waste/Source: u ☐ Upgradient s ☐ Sidegradient d ☐ Downgradient n ☐ Not Known	Boart Longyear

A. Protective pipe, top elevation ____ ft. MSL

B. Well casing, top elevation ____ ft. MSL

C. Land surface elevation ____ ft. MSL

D. Surface seal, bottom ____ ft. MSL or 0.0 ft.

12. USC classification of soil near screen:
GP ☐ GM ☐ GC ☐ GW ☐ SW ☐ SP ☐
SM ☐ SC ☐ ML ☐ MH ☐ CL ☐ CH ☐
Bedrock ☐

13. Sieve analysis attached? ☐ Yes ☐ No

14. Drilling method used: Rotary ☐ 5 0
Hollow Stem Auger ☒ 4 1
____ Other ☐ __

15. Drilling fluid used: Water ☐ 0 2 Air ☐ 0 1
Drilling Mud ☐ 0 3 None ☒ 9 9

16. Drilling additives used? ☐ Yes ☒ No

Describe ____

17. Source of water (attach analysis):

____

E. Bentonite seal, top ____ ft. MSL or 23.5 ft.

F. Fine sand, top ____ ft. MSL or na ft.

G. Filter pack, top ____ ft. MSL or 25.5 ft.

H. Screen joint, top ____ ft. MSL or 26.5 ft.

I. Well bottom ____ ft. MSL or 29.0 ft.

J. Filter pack, bottom ____ ft. MSL or 30.0 ft.

K. Borehole, bottom ____ ft. MSL or 30.0 ft.

L. Borehole, diameter 8.0 in.

M. O.D. well casing 2.46 in.

N. I.D. well casing 2.00 in.

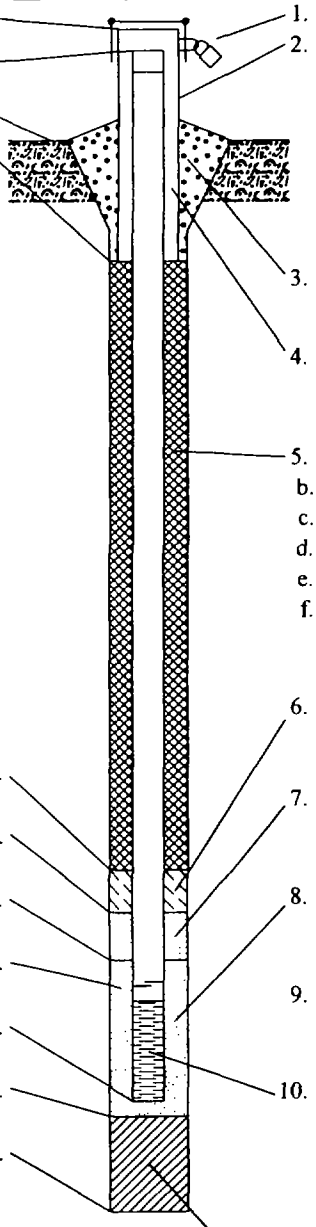

1. Cap and lock? ☒ Yes ☐ No

2. Protective cover pipe:
a. Inside diameter: ____ in.
b. Length: ____ ft.
c. Material: Steel ☐ 0 4
na Other ☒ __
d. Additional protection? ☐ Yes ☒ No
If yes, describe: ____

3. Surface seal: Bentonite ☒ 3 0
Concrete ☐ 0 1
____ Other ☐ __

4. Material between well casing and protective pipe:
Bentonite ☐ 3 0
na Other ☒ __

5. Annular space seal: a. Granular Bentonite ☐ 3 3
b. ____ Lbs/gal mud weight . Bentonite-sand slurry ☐ 3 5
c. X Lbs/gal mud weight . . . Bentonite slurry ☒ 3 1
d. ____ % Bentonite . . . *Bentonite-cement grout* ☐ 5 0
e. ____ Ft^3 volume added for any of the above
f. How installed: Tremie ☐ 1
Tremie pumped ☐ 0 2
Gravity ☒ 0 8

6. Bentonite seal: a. Bentonite granules ☒ 3 3
b. ☐ 1/4 in. ☐ 3/8 in. ☐ 1/2 in. Bentonite pellets ☐ 3 2
c. ____ Other ☐ __

7. Fine sand material: Manufacturer, product name and mesh size
a. na
b. Volume added ____ ft^3

8. Filter pack material: Manufacturer, product name and mesh size
a. #5 Global
b. Volume added ____ ft^3

9. Well casing: Flush threaded PVC schedule 40 ☐ 2 3
Flush threaded PVC schedule 80 ☐ 2 4
Stainless Steel Other ☒ __

10. Screen material: Stainless Steel
a. Screen Type: Factory cut ☐ 1 1
Continuous slot ☒ 0 1
____ Other ☐ __
b. Manufacturer Johnson
c. Slot size: 0.100 in.
d. Slotted length: 2.0 ft.

11. Backfill material (below filter pack): None ☒ 1 4
____ Other ☐ __

I hereby certify that the information on this form is true and correct to the best of my knowledge.

Signature	Firm: Boart Longyear Company 101 Alderson Street Schofield, WI 54476	Tel: 715-3[illegible] [illegible]090 Fax: 715-355-5715

SOIL BORING LOG INFORMATION

Form 4400-122 Rev. 5-97

Route To: Watershed/Wastewater ☐ Waste Management ☐ Remediation/Redevelopment ☐ Other ☐

Facility/Project Name	License/Permit/Monitoring Number	Boring Number
American Chemical Service, Inc.		AS-9

Boring Drilled By (Firm name and name of crew chief)	Date Drilling Started	Date Drilling Completed	Drilling Method
Boart Longyear - D. Morris	9/13/2001	9/13/2001	4 1/4 HSA

WI Unique Well No.	DNR Well ID No.	Common Well Name	Final Static Water Level	Surface Elevation	Borehole Diameter
		AS-9			8.0 Inches

Boring Location or Local Grid Origin (Check if estimated: ☐)
State Plane S / C / N
1/4 of 1/4 of Section , T N, R
Lat. ° ' "
Long. ° ' "
Local Grid Location (If applicable)
Feet ☐ N ☐ S Feet ☐ E ☐ W

Facility ID	County	County Code	Civil Town/City/ or Village
3410-1812	Lake		Griffith, IN

Sample: Number and Type	Length Att. & Recovered (in)	Blow Counts	Depth In Feet	Soil/Rock Description And Geologic Origin For Each Major Unit	U S C S	Graphic Log	Well Diagram	PID/FID	Soil Properties: Compressive Strength	Moisture Content	Liquid Limit	Plasticity Index	P 200	RQD/ Comments
				EARTH DRILL										
			1											
			2											
			3											
			4											
			5											
			6											
			7											
			8											
			9											
			10											
			11											
			12											

I hereby certify that the information on this form is true and correct to the best of my knowledge.

Signature	Firm	
	Boart Longyear Company 101 Alderson Street Schofield, WI 54476	Tel: 715-359-7090 Fax: 715-355-5715

SOIL BORING LOG INFORMATION SUPPLEMENT

Form 4400-122A Rev. 5-97

Boring Number AS-9 Use only as an attachment to Form 4400-122.

Sample Number and Type	Sample Length Att. & Recovered (in)	Blow Counts	Depth In Feet	Soil/Rock Description And Geologic Origin For Each Major Unit	U S C S	Graphic Log	Well Diagram	PID/FID	Soil Properties: Compressive Strength	Moisture Content	Liquid Limit	Plasticity Index	P 200	RQD/ Comments
			13											
			14											
			15											
			16											
			17											
			18											
			19											
			20											
			21											
			22											
			23											
			24											
1 SS	24 19	1 1 2 3	25 26	Blk SAND (Strong Odor)						W				
2 SS	24 8	10 12 14 16	27 28	Blk SAND						W				
				Gry CLAY										
			29	EOB 29.0' Well Set 28.0'										

Route To: Watershed/Wastewater ☐ Waste Management ☐ Remediation/Redevelopment ☐ Other ☐

MONITORING WELL CONSTRUCTION
Form 4400-113A Rev. 6-97

Facility/Project Name: American Chemical Service, Inc.	Local Grid Location of Well: ____ ft. ☐N. ☐S. ____ ft. ☐E. ☐W.	Well Name: AS-9
Facility License, Permit or Monitoring No.	Grid Origin Location (Check if estimated: ☐) Lat. ° ' " Long. ° ' " or	Wis. Unique Well No / DNR Well Number
Facility ID: 3410-1812	St. Plane ____ ft. N, ____ ft. E. S/C/N	Date Well Installed: 09/13/2001
Type of Well: Well Code 62/as	Section Location of Waste/Source: ____ 1/4 of ____ 1/4 of Sec. ____, T. ____ N, R. ____ ☐E ☐W	Well Installed By: (Person's Name and Firm): D. Morris, Boart Longyear
Distance Well Is From Waste/Source Boundary ft.	Location of Well Relative to Waste/Source: u ☐ Upgradient s ☐ Sidegradient d ☐ Downgradient n ☐ Not Known	

A. Protective pipe, top elevation ____ ft. MSL

B. Well casing, top elevation ____ ft. MSL

C. Land surface elevation ____ ft. MSL

D. Surface seal, bottom ____ ft. MSL or 0.0 ft.

12. USC classification of soil near screen:
GP ☐ GM☐ GC ☐ GW☐ SW☐ SP ☐
SM☐ SC ☐ ML☐ MH☐ CL ☐ CH ☐
Bedrock☐

13. Sieve analysis attached? ☐ Yes ☐ No

14. Drilling method used: Rotary ☐ 5 0
Hollow Stem Auger ☒ 4 1
____ Other ☐ __

15. Drilling fluid used: Water ☐ 0 2 Air ☐ 0 1
Drilling Mud ☐ 0 3 None ☒ 9 9

16. Drilling additives used? ☐ Yes ☒ No

Describe____

17. Source of water (attach analysis):

____

E. Bentonite seal, top ____ ft. MSL or 22.5 ft.

F. Fine sand, top ____ ft. MSL or na ft.

G. Filter pack, top ____ ft. MSL or 24.5 ft.

H. Screen joint, top ____ ft. MSL or 25.5 ft.

I. Well bottom ____ ft. MSL or 28.0 ft.

J. Filter pack, bottom ____ ft. MSL or 29.0 ft.

K. Borehole, bottom ____ ft. MSL or 29.0 ft.

L. Borehole, diameter 8.0 in.

M. O.D. well casing 2.46 in.

N. I.D. well casing 2.00 in.

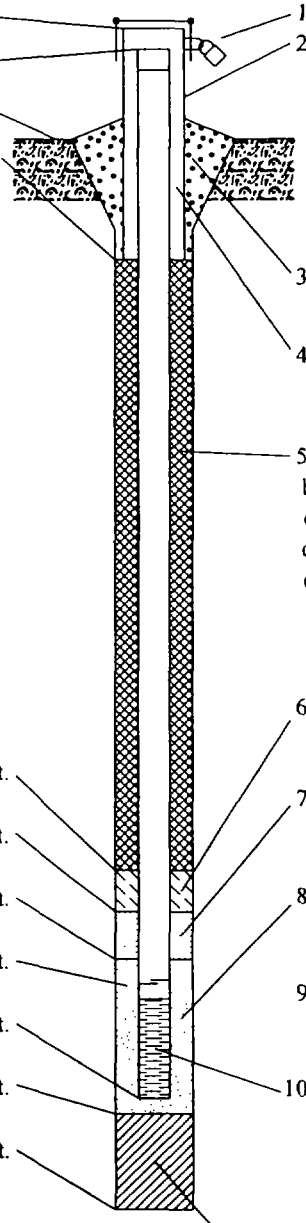

1. Cap and lock? ☒ Yes ☐ No
2. Protective cover pipe:
a. Inside diameter: ____ in.
b. Length: ____ ft.
c. Material: Steel ☐ 0 4
na Other ☒ __
d. Additional protection? ☐ Yes ☒ No
If yes, describe:____
3. Surface seal: Bentonite ☒ 3 0
Concrete ☐ 0 1
____ Other ☐ __
4. Material between well casing and protective pipe:
Bentonite ☐ 3 0
na Other ☒ __
5. Annular space seal: a. Granular Bentonite ☐ 3 3
b. ____Lbs/gal mud weight . Bentonite-sand slurry ☐ 3 5
c. X Lbs/gal mud weight . . . Bentonite slurry ☒ 3 1
d. ____% Bentonite . . . Bentonite-cement grout ☐ 5 0
e. ____Ft^3 volume added for any of the above
f. How installed: Tremie ☐ 0 1
Tremie pumped ☐ 0 2
Gravity ☒ 0 8
6. Bentonite seal: a. Bentonite granules ☒ 3 3
b. ☐ 1/4 in. ☐ 3/8 in. ☐ 1/2 in. Bentonite pellets ☐ 3 2
c.____ Other ☐ __
7. Fine sand material: Manufacturer, product name and mesh siz
a. na __
b. Volume added ____ ft^3
8. Filter pack material: Manufacturer, product name and mesh si
a. #5 Global __
b. Volume added ____ ft^3
9. Well casing: Flush threaded PVC schedule 40 ☐ 2 3
Flush threaded PVC schedule 80 ☐ 2 4
Stainless Steel Other ☒ __
10. Screen material: Stainless Steel __
a. Screen Type: Factory cut ☐ 1 1
Continuous slot ☒ 0 1
____ Other ☐ __
b. Manufacturer Johnson
c. Slot size: 0.100 in.
d. Slotted length: 2.0 ft.
11. Backfill material (below filter pack): None ☒ 1 4
____ Other ☐ __

I hereby certify that the information on this form is true and correct to the best of my knowledge.

Signature

Firm: Boart Longyear Company
101 Alderson Street Schofield, WI 54476

Tel: 715-359-7090
Fax: 715-355-5715

ISVE Wells

SOIL BORING LOG INFORMATION

Form 4400-122 Rev. 5-97

Route To: Watershed/Wastewater ☐ Waste Management ☐ Remediation/Redevelopment ☐ Other ☐

Facility/Project Name	License/Permit/Monitoring Number	Boring Number
American Chemical Service, Inc.		SVE- 1

Boring Drilled By (Firm name and name of crew chief)	Date Drilling Started	Date Drilling Completed	Drilling Method
Boart Longyear - D. Morris	8/29/2001	8/29/2001	6 1/4 HSA

WI Unique Well No.	DNR Well ID No.	Common Well Name	Final Static Water Level	Surface Elevation	Borehole Diameter
		SVE-1			10.0 Inches

Boring Location or Local Grid Origin (Check if estimated: ☐)
State Plane S / C / N
1/4 of 1/4 of Section , T N, R
Lat. ° ' "
Long. ° ' "
Local Grid Location (If applicable)
Feet ☐ N ☐ S Feet ☐ E ☐ W

Facility ID	County	County Code	Civil Town/City/ or Village
3410-1812	Lake		Griffith, IN

Sample Number and Type	Length Att. & Recovered (in)	Blow Counts	Depth In Feet	Soil/Rock Description And Geologic Origin For Each Major Unit	USCS	Graphic Log	Well Diagram	PID/FID	Compressive Strength	Moisture Content	Liquid Limit	Plasticity Index	P 200	RQD/ Comments
				EARTH DRILL										
			1											
			2											
			3											
			4											
1 SS	24 20	5 5 9 7	5	Blk SAND and SILT						D				
			6											
			7											
			8											
			9											
			10											
2 SS	24	50 9 6	11	Gry SAND and SILT						W				
			12											

I hereby certify that the information on this form is true and correct to the best of my knowledge.

Signature

Firm Boart Longyear Company
101 Alderson Street Schofield, WI 54476

Tel: 715-359-7090
Fax: 715-355-5715

SOIL BORING LOG INFORMATION SUPPLEMENT

Form 4400-122A Rev. 5-97

Boring Number SVE- 1 Use only as an attachment to Form 4400-122.

Sample Number and Type	Length Att. & Recovered (in)	Blow Counts	Depth In Feet	Soil/Rock Description And Geologic Origin For Each Major Unit	U S C S	Graphic Log	Well Diagram	PID/FID	Soil Properties: Compressive Strength	Moisture Content	Liquid Limit	Plasticity Index	P 200	RQD/ Comments
		12												
			13											
			14											
			15											
			16											
			17											
3 SS	24 20	10 9 9 7	18 19											
			20	EOB 20.0' Well Set 20.0'										

Route To: Watershed/Wastewater ☐ Waste Management ☐ Remediation/Redevelopment ☐ Other ☐

MONITORING WELL CONSTRUCTION

Form 4400-113A Rev. 6-97

Facility/Project Name: American Chemical Service, Inc.	Local Grid Location of Well: ____ ft. ☐ N. ☐ S. ____ ft. ☐ E. ☐ W.	Well Name: SVE-1
Facility License, Permit or Monitoring No.	Grid Origin Location (Check if estimated: ☐) Lat. ___° ___' ___" Long. ___° ___' ___" or	Wis. Unique Well No / DNR Well Number
Facility ID: 3410-1812	St. Plane ____ ft. N, ____ ft. E. S/C/N	Date Well Installed: 08/29/2001
Type of Well: Well Code 57/sv	Section Location of Waste/Source: ___ 1/4 of ___ 1/4 of Sec. ___, T. ___ N, R. ___ ☐ E ☐ W	Well Installed By: (Person's Name and Firm): D. Morris
Distance Well Is From Waste/Source Boundary ft.	Location of Well Relative to Waste/Source: u ☐ Upgradient s ☐ Sidegradient d ☐ Downgradient n ☐ Not Known	Boart Longyear

A. Protective pipe, top elevation ____ ft. MSL

B. Well casing, top elevation ____ ft. MSL

C. Land surface elevation ____ ft. MSL

D. Surface seal, bottom ____ ft. MSL or 0.0 ft.

12. USC classification of soil near screen:
GP ☐ GM ☐ GC ☐ GW ☐ SW ☐ SP ☐
SM ☐ SC ☐ ML ☐ MH ☐ CL ☐ CH ☐
Bedrock ☐

13. Sieve analysis attached? ☐ Yes ☐ No

14. Drilling method used: Rotary ☐ 5 0
Hollow Stem Auger ☒ 4 1
____ Other ☐ __

15. Drilling fluid used: Water ☐ 0 2 Air ☐ 0 1
Drilling Mud ☐ 0 3 None ☒ 9 9

16. Drilling additives used? ☐ Yes ☒ No

Describe ____

17. Source of water (attach analysis):

____

E. Bentonite seal, top ____ ft. MSL or 2.0 ft.

F. Fine sand, top ____ ft. MSL or na ft.

G. Filter pack, top ____ ft. MSL or 4.0 ft.

H. Screen joint, top ____ ft. MSL or 5.0 ft.

I. Well bottom ____ ft. MSL or 20.0 ft.

J. Filter pack, bottom ____ ft. MSL or 20.0 ft.

K. Borehole, bottom ____ ft. MSL or 20.0 ft.

L. Borehole, diameter 10.0 in.

M. O.D. well casing 4.50 in.

N. I.D. well casing 4.00 in.

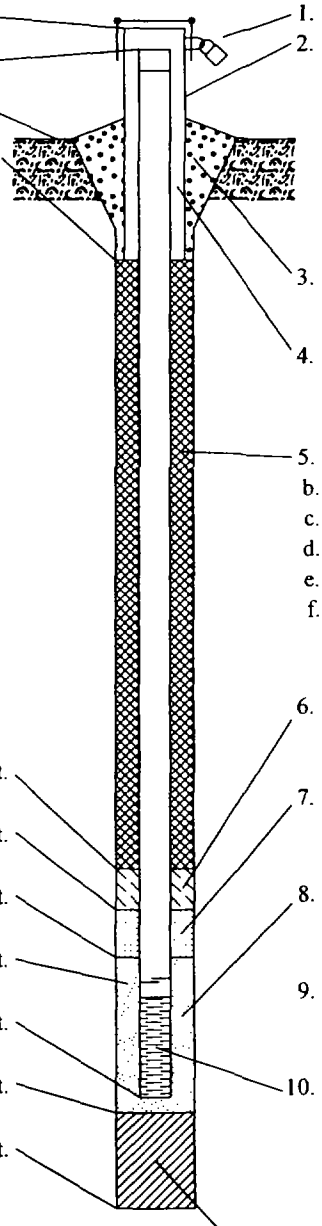

1. Cap and lock? ☒ Yes ☐ No

2. Protective cover pipe:
a. Inside diameter: ____ in.
b. Length: ____ ft.
c. Material: Steel ☐ 0 4
na Other ☒ __
d. Additional protection? ☐ Yes ☒ No
If yes, describe: ____

3. Surface seal: Bentonite ☒ 3 0
Concrete ☐ 0 1
____ Other ☐ __

4. Material between well casing and protective pipe:
Bentonite ☐ 3 0
na Other ☒ __

5. Annular space seal: a. Granular Bentonite ☒ 3 3
b. ____ Lbs/gal mud weight . Bentonite-sand slurry ☐ 3 5
c. ____ Lbs/gal mud weight . . . Bentonite slurry ☐ 3 1
d. ____ % Bentonite . . . Bentonite-cement grout ☐ 5 0
e. ____ Ft^3 volume added for any of the above
f. How installed: Tremie ☐ 0 1
Tremie pumped ☐ 0 2
Gravity ☒ 0 8

6. Bentonite seal: a. Bentonite granules ☒ 3 3
b. ☐ 1/4 in. ☐ 3/8 in. ☐ 1/2 in. Bentonite pellets ☐ 3 2
c. ____ Other ☐ __

7. Fine sand material: Manufacturer, product name and mesh siz
a. na __
b. Volume added ____ ft^3

8. Filter pack material: Manufacturer, product name and mesh si
a. #5 Global __
b. Volume added ____ ft^3

9. Well casing: Flush threaded PVC schedule 40 ☐ 2 3
Flush threaded PVC schedule 80 ☐ 2 4
Stainless Steel Other ☒ __

10. Screen material: Stainless Steel __
a. Screen Type: Factory cut ☐ 1 1
Continuous slot ☒ 0 1
____ Other ☐ __
b. Manufacturer Johnson
c. Slot size: 0.020 in.
d. Slotted length: 15.0 ft.

11. Backfill material (below filter pack): None ☒ 1 4
____ Other ☐ __

hereby certify that the information on this form is true and correct to the best of my knowledge.

ignature	Firm: Boart Longyear Company 101 Alderson Street Schofield, WI 54476	Tel: 715-359-7090 Fax: 715-355-5715

SOIL BORING LOG INFORMATION

Form 4400-122 Rev. 5-97

Route To: Watershed/Wastewater ☐ Waste Management ☐ Remediation/Redevelopment ☐ Other ☐

Facility/Project Name	License/Permit/Monitoring Number	Boring Number
American Chemical Service, Inc.		SVE- 2

Boring Drilled By (Firm name and name of crew chief)	Date Drilling Started	Date Drilling Completed	Drilling Method
Boart Longyear - J. Berthold	8/29/2001	8/29/2001	6 1/4 HSA

WI Unique Well No.	DNR Well ID No.	Common Well Name	Final Static Water Level	Surface Elevation	Borehole Diameter
		SVE-2			10.0 Inches

Boring Location or Local Grid Origin (Check if estimated: ☐)
State Plane S / C / N
1/4 of 1/4 of Section , T N, R
Lat. ° ' "
Long. ° ' "
Local Grid Location (If applicable)
Feet ☐ N ☐ S Feet ☐ E ☐ W

Facility ID	County	County Code	Civil Town/City/ or Village
3410-1812	Lake		Griffith, IN

Sample Number and Type	Length Att. & Recovered (in)	Blow Counts	Depth In Feet	Soil/Rock Description And Geologic Origin For Each Major Unit	U S C S	Graphic Log	Well Diagram	PID/FID	Compressive Strength	Moisture Content	Liquid Limit	Plasticity Index	P 200	RQD/ Comments
				EARTH DRILL										
			1											
			2											
			3											
			4											
1 SS	24 16	2 4 3 4	5	Blk Silty SAND w/Metal Debris						M				
			6											
			7											
			8											
			9											
			10											
2 SS	24 14	4 6 3	11	Blk SAND						M				
			12											

I hereby certify that the information on this form is true and correct to the best of my knowledge.

Signature	Firm	
	Boart Longyear Company 101 Alderson Street Schofield, WI 54476	Tel: 715-359-7090 Fax: 715-[illegible] 715

SOIL BORING LOG INFORMATION SUPPLEMENT

Form 4400-122A Rev. 5-97

Boring Number SVE- 2 Use only as an attachment to Form 4400-122.

Sample Number and Type	Length Att. & Recovered (in)	Blow Counts	Depth In Feet	Soil/Rock Description And Geologic Origin For Each Major Unit	U S C S	Graphic Log	Well Diagram	PID/FID	Soil Properties: Compressive Strength	Moisture Content	Liquid Limit	Plasticity Index	P 200	RQD/ Comments
		5												
			13											
			14											
			15											
			16											
			17											
3 SS	24 15	9 3 7 4	18	Blk Clayey SILT						W				
			19											
			20											
			21	EOB 21.0' Well Set 20.0'										

Route To: Watershed/Wastewater ☐ Waste Management ☐ Remediation/Redevelopment ☐ Other ☐

MONITORING WELL CONSTRUCTION

Form 4400-113A Rev. 6-97

Facility/Project Name: American Chemical Service, Inc.	Local Grid Location of Well: ____ ft. ☐ N. ☐ S. ____ ft. ☐ E. ☐ W.	Well Name: SVE-2
Facility License, Permit or Monitoring No.	Grid Origin Location (Check if estimated: ☐) Lat. ___ ° ___ ' ___ " Long. ___ ° ___ ' ___ " or	Wis. Unique Well No / DNR Well Number
Facility ID: 3410-1812	St. Plane ____ ft. N, ____ ft. E. S/C/N	Date Well Installed: 08/29/2001
Type of Well: Well Code 57/sv	Section Location of Waste/Source: ___ 1/4 of ___ 1/4 of Sec. ___, T. ___ N, R. ___ ☐ E ☐ W	Well Installed By: (Person's Name and Firm): J. Berthold
Distance Well Is From Waste/Source Boundary ft.	Location of Well Relative to Waste/Source: u ☐ Upgradient s ☐ Sidegradient d ☐ Downgradient n ☐ Not Known	Boart Longyear

A. Protective pipe, top elevation ____ ft. MSL

B. Well casing, top elevation ____ ft. MSL

C. Land surface elevation ____ ft. MSL

D. Surface seal, bottom ____ ft. MSL or 0.0 ft.

12. USC classification of soil near screen:
GP ☐ GM ☐ GC ☐ GW ☐ SW ☐ SP ☐
SM ☐ SC ☐ ML ☐ MH ☐ CL ☐ CH ☐
Bedrock ☐

13. Sieve analysis attached? ☐ Yes ☐ No

14. Drilling method used: Rotary ☐ 5 0
Hollow Stem Auger ☒ 4 1
____ Other ☐ __

15. Drilling fluid used: Water ☐ 0 2 Air ☐ 0 1
Drilling Mud ☐ 0 3 None ☒ 9 9

16. Drilling additives used? ☐ Yes ☒ No

Describe ____

17. Source of water (attach analysis):

____

E. Bentonite seal, top ____ ft. MSL or 3.0 ft.

F. Fine sand, top ____ ft. MSL or na ft.

G. Filter pack, top ____ ft. MSL or 4.0 ft.

H. Screen joint, top ____ ft. MSL or 5.0 ft.

I. Well bottom ____ ft. MSL or 20.0 ft.

J. Filter pack, bottom ____ ft. MSL or 21.0 ft.

K. Borehole, bottom ____ ft. MSL or 21.0 ft.

L. Borehole, diameter 10.0 in.

M. O.D. well casing 4.50 in.

N. I.D. well casing 4.00 in.

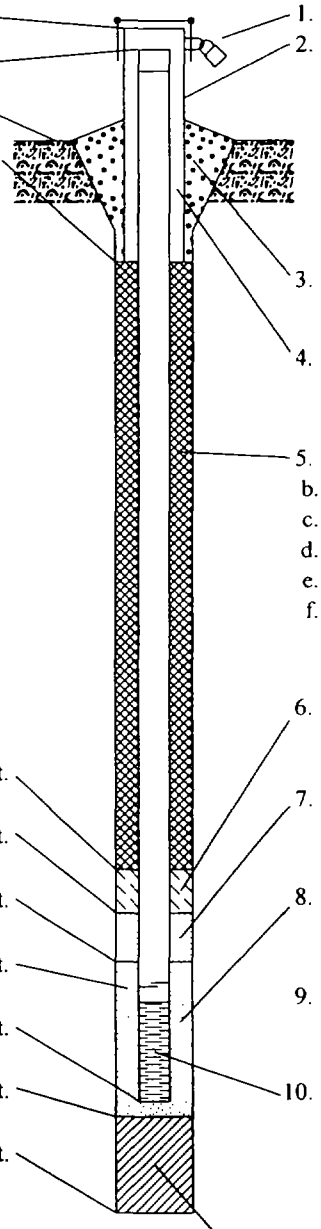

1. Cap and lock? ☒ Yes ☐ No
2. Protective cover pipe:
   a. Inside diameter: ____ in.
   b. Length: ____ ft.
   c. Material: Steel ☐ 0 4
   na Other ☒ __
   d. Additional protection? ☐ Yes ☒ No
   If yes, describe: ____
3. Surface seal: Bentonite ☒ 3 0
   Concrete ☐ 0 1
   ____ Other ☐ __
4. Material between well casing and protective pipe:
   Bentonite ☐ 3 0
   na Other ☒ __
5. Annular space seal: a. Granular Bentonite ☒ 3 3
   b. ____ Lbs/gal mud weight . Bentonite-sand slurry ☐ 3 5
   c. ____ Lbs/gal mud weight . . . Bentonite slurry ☐ 3 1
   d. ____ % Bentonite . . . Bentonite-cement grout ☐ 5 0
   e. ____ Ft^3 volume added for any of the above
   f. How installed: Tremie ☐ 1
   Tremie pumped ☐ 0 2
   Gravity ☒ 0 8
6. Bentonite seal: a. Bentonite granules ☒ 3 3
   b. ☐ 1/4 in. ☐ 3/8 in. ☐ 1/2 in. Bentonite pellets ☐ 3 2
   c. ____ Other ☐ __
7. Fine sand material: Manufacturer, product name and mesh siz
   a. na
   b. Volume added ____ ft^3
8. Filter pack material: Manufacturer, product name and mesh si
   a. #5 Global
   b. Volume added ____ ft^3
9. Well casing: Flush threaded PVC schedule 40 ☐ 2 3
   Flush threaded PVC schedule 80 ☐ 2 4
   Stainless Steel Other ☒ __
10. Screen material: Stainless Steel
   a. Screen Type: Factory cut ☐ 1 1
   Continuous slot ☒ 0 1
   ____ Other ☐ __
   b. Manufacturer Johnson
   c. Slot size: 0.020 in.
   d. Slotted length: 15.0 ft.
11. Backfill material (below filter pack): None ☒ 1 4
   ____ Other ☐ __

I hereby certify that the information on this form is true and correct to the best of my knowledge.

Signature	Firm: Boart Longyear Company 101 Alderson Street Schofield, WI 54476	Tel: 715-3_ _ 090 Fax: 715-355-5715

SOIL BORING LOG INFORMATION

Form 4400-122 Rev. 5-97

Route To: Watershed/Wastewater ☐ Waste Management ☐ Remediation/Redevelopment ☐ Other ☐

Facility/Project Name	License/Permit/Monitoring Number	Boring Number
American Chemical Service, Inc.		SVE- 3

Boring Drilled By (Firm name and name of crew chief)	Date Drilling Started	Date Drilling Completed	Drilling Method
Boart Longyear - D. Morris	8/30/2001	8/30/2001	6 1/4 HSA

WI Unique Well No.	DNR Well ID No.	Common Well Name	Final Static Water Level	Surface Elevation	Borehole Diameter
		SVE-3			10.0 Inches

Boring Location or Local Grid Origin (Check if estimated: ☐)
State Plane S / C / N
1/4 of 1/4 of Section , T N, R
Lat. ° ' "
Long. ° ' "
Local Grid Location (If applicable)
Feet ☐ N ☐ S Feet ☐ E ☐ W

Facility ID	County	County Code	Civil Town/City/ or Village
3410-1812	Lake		Griffith, IN

Sample: Number and Type	Length Att. & Recovered (in)	Blow Counts	Depth In Feet	Soil/Rock Description And Geologic Origin For Each Major Unit	U S C S	Graphic Log	Well Diagram	PID/FID	Soil Properties: Compressive Strength	Moisture Content	Liquid Limit	Plasticity Index	P 200	RQD/ Comments
				EARTH DRILL										
			1											
			2											
			3											
			4											
			5											
			6											
			7											
			8											
			9											
			10											
			11											
			12											

I hereby certify that the information on this form is true and correct to the best of my knowledge.

Signature [signature] Firm Boart Longyear Company
101 Alderson Street Schofield, WI 54476
Tel: 715-359-709(
Fax: 715-355-5715

SOIL BORING LOG INFORMATION SUPPLEMENT

Form 4400-122A Rev. 5-97

Boring Number SVE- 3 Use only as an attachment to Form 4400-122.

Sample Number and Type	Sample Length Att. & Recovered (in)	Blow Counts	Depth In Feet	Soil/Rock Description And Geologic Origin For Each Major Unit	U S C S	Graphic Log	Well Diagram	PID/FID	Soil Properties: Compressive Strength	Moisture Content	Liquid Limit	Plasticity Index	P 200	RQD/ Comments
			13											
			14											
			15											
			16											
			17											
1 SS	24 15	5 7 9 5	18 19 20	Br Clayey SAND w/Some Silt						W				
				EOB 20.5' Well Set 20.0'										

Route To: Watershed/Wastewater ☐ Waste Management ☐ Remediation/Redevelopment ☐ Other ☐

MONITORING WELL CONSTRUCTION
Form 4400-113A Rev. 6-97

Facility/Project Name American Chemical Service, Inc.	Local Grid Location of Well _____ft. ☐N. ☐S. _____ft. ☐E. ☐W.	Well Name SVE-3
Facility License, Permit or Monitoring No.	Grid Origin Location (Check if estimated ☐) Lat. ___° ___' ___" Long. ___° ___' ___" or	Wis. Unique Well No / DNR Well Number
Facility ID 3410-1812	St. Plane _____ ft. N, _____ ft. E. S/C/N	Date Well Installed 08/30/2001
Type of Well Well Code 57/sv	Section Location of Waste/Source ____1/4 of ____ 1/4 of Sec. ____, T. ____ N, R. ____ ☐E ☐W	Well Installed By: (Person's Name and Firm D. Morris
Distance Well Is From Waste/Source Boundary ft.	Location of Well Relative to Waste/Source u ☐ Upgradient s ☐ Sidegradient d ☐ Downgradient n ☐ Not Known	Boart Longyear

A. Protective pipe, top elevation _____ ft. MSL

B. Well casing, top elevation _____ ft. MSL

C. Land surface elevation _____ ft. MSL

D. Surface seal, bottom _____ ft. MSL or 0.0 ft.

12. USC classification of soil near screen:
GP ☐ GM☐ GC ☐ GW☐ SW☐ SP ☐
SM☐ SC ☐ ML☐ MH☐ CL ☐ CH ☐
Bedrock☐

13. Sieve analysis attached? ☐ Yes ☐ No

14. Drilling method used: Rotary ☐ 5 0
Hollow Stem Auger ☒ 4 1
_____ Other ☐ _ _

15. Drilling fluid used: Water ☐ 0 2 Air ☐ 0 1
Drilling Mud ☐ 0 3 None ☒ 9 9

16. Drilling additives used? ☐ Yes ☒ No

Describe_____

17. Source of water (attach analysis):
_____

E. Bentonite seal, top _____ ft. MSL or 2.0 ft.

F. Fine sand, top _____ ft. MSL or na ft.

G. Filter pack, top _____ ft. MSL or 4.0 ft.

H. Screen joint, top _____ ft. MSL or 5.0 ft.

I. Well bottom _____ ft. MSL or 20.0 ft.

J. Filter pack, bottom _____ ft. MSL or 20.5 ft.

K. Borehole, bottom _____ ft. MSL or 20.5 ft.

L. Borehole, diameter 10.0 in.

M. O.D. well casing 4.50 in.

N. I.D. well casing 4.00 in.

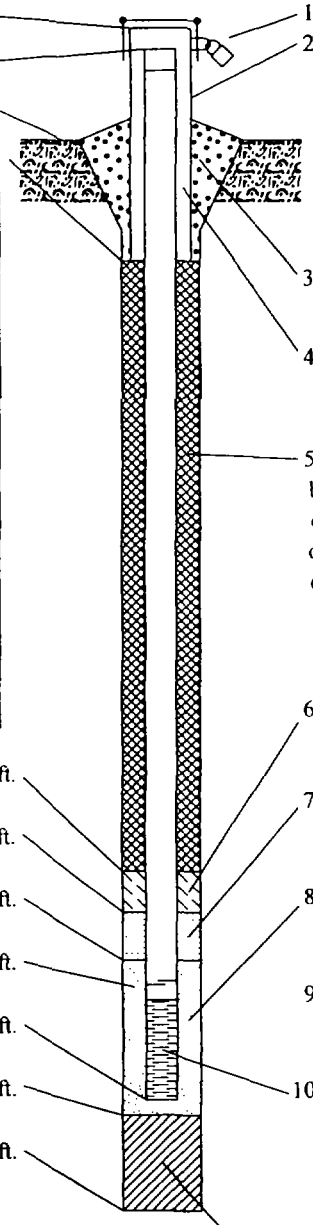

1. Cap and lock? ☐ Yes ☒ No
2. Protective cover pipe:
a. Inside diameter: _____ in.
b. Length: _____ ft.
c. Material: Steel ☐ 0 4
na Other ☒ _ _
d. Additional protection? ☐ Yes ☒ No
If yes, describe:_____
3. Surface seal: Bentonite ☒ 3 0
Concrete ☐ 0 1
_____ Other ☐
4. Material between well casing and protective pipe:
Bentonite ☐ 3 0
na Other ☒ _ _
5. Annular space seal: a. Granular Bentonite ☐ 3 3
b. _____Lbs/gal mud weight . Bentonite-sand slurry ☐ 3 5
c. _____Lbs/gal mud weight . . . Bentonite slurry ☐ 3 1
d. _____% Bentonite . . . Bentonite-cement grout ☐ 5 0
e. _____Ft^3 volume added for any of the above
f. How installed: Tremie ☐ 0 1
Tremie pumped ☐ 0 2
Gravity ☒ 0 8
6. Bentonite seal: a. Bentonite granules ☐ 3 3
b. ☐1/4 in. ☒3/8 in. ☐1/2 in. Bentonite pellets ☒ 3 2
c._____ Other ☐
7. Fine sand material: Manufacturer, product name and mesh siz
a. na
b. Volume added _____ ft^3
8. Filter pack material: Manufacturer, product name and mesh si
a. #5 Global
b. Volume added _____ ft^3
9. Well casing: Flush threaded PVC schedule 40 ☐ 2 3
Flush threaded PVC schedule 80 ☐ 2 4
Stainless Steel Other ☒
10. Screen material: Stainless Steel
a. Screen Type: Factory cut ☐ 1 1
Continuous slot ☒ 0 1
_____ Other ☐
b. Manufacturer Johnson
c. Slot size: 0.020 in.
d. Slotted length: 15.0 ft.
11. Backfill material (below filter pack): None ☐ 1 4
#5 Global Other ☒

I hereby certify that the information on this form is true and correct to the best of my knowledge.

Signature

Firm Boart Longyear Company
101 Alderson Street Schofield, WI 54476

Tel: 715-359-7090
Fax: 715-355-5715

SOIL BORING LOG INFORMATION

Form 4400-122 Rev. 5-97

Route To: Watershed/Wastewater ☐ Waste Management ☐ Remediation/Redevelopment ☐ Other ☐

Facility/Project Name	License/Permit/Monitoring Number	Boring Number
American Chemical Service, Inc.		SVE- 4

Boring Drilled By (Firm name and name of crew chief)	Date Drilling Started	Date Drilling Completed	Drilling Method
Boart Longyear - D. Morris	8/29/2001	8/29/2001	6 1/4 HSA

WI Unique Well No.	DNR Well ID No.	Common Well Name	Final Static Water Level	Surface Elevation	Borehole Diameter
		SVE-4			10.0 Inches

Boring Location or Local Grid Origin (Check if estimated: ☐)
State Plane S / C / N
1/4 of 1/4 of Section , T N, R
Lat. ___ ° ___ ' ___ "
Long. ___ ° ___ ' ___ "
Local Grid Location (If applicable)
☐ N ☐ E
Feet ☐ S Feet ☐ W

Facility ID	County	County Code	Civil Town/City/ or Village
3410-1812	Lake		Griffith, IN

Sample Number and Type	Length Att. & Recovered (in)	Blow Counts	Depth In Feet	Soil/Rock Description And Geologic Origin For Each Major Unit	U S C S	Graphic Log	Well Diagram	PID/FID	Compressive Strength	Moisture Content	Liquid Limit	Plasticity Index	P 200	RQD/ Comments
				EARTH DRILL										
			1											
			2											
			3											
			4											
1 SS	24 10	1 3 6 7	5	Blk F SAND w/Sm Gravel						M				
			6											
			7											
			8											
			9											
			10											
2 SS	24 4	1 3 4	11	Blk Silty CLAY w/Glass						W				
			12											

I hereby certify that the information on this form is true and correct to the best of my knowledge.

Signature

Firm Boart Longyear Company
101 Alderson Street Schofield, WI 54476
Tel: 715-[illegible] 7090
Fax: 715-[illegible] 5715

SOIL BORING LOG INFORMATION SUPPLEMENT

Form 4400-122A Rev. 5-97

Boring Number SVE- 4 Use only as an attachment to Form 4400-122.

Sample Number and Type	Sample Length Att. & Recovered (in)	Blow Counts	Depth In Feet	Soil/Rock Description And Geologic Origin For Each Major Unit	U S C S	Graphic Log	Well Diagram	PID/FID	Soil Properties: Compressive Strength	Moisture Content	Liquid Limit	Plasticity Index	P 200	RQD/ Comments
		6												
			13											
			14											
			15											
			16											
			17											
			18											
3 SS	24 10	6 9 10 12		Drk Br Med SAND w/Silt						W				
			19											
			20											
			21	EOB 21.0' Well Set 20.0'										

Route To: Watershed/Wastewater ☐ Waste Management ☐ Remediation/Redevelopment ☐ Other ☐

MONITORING WELL CONSTRUCTION
Form 4400-113A Rev. 6-97

Facility/Project Name: American Chemical Service, Inc.	Local Grid Location of Well: ____ ft. ☐N. ☐S. ____ ft. ☐E. ☐W.	Well Name: SVE-4
Facility License, Permit or Monitoring No.	Grid Origin Location (Check if estimated: ☐) Lat. ° ' " Long. ° ' " or	Wis. Unique Well No / DNR Well Number
Facility ID: 3410-1812	St. Plane ____ ft. N, ____ ft. E. S/C/N	Date Well Installed: 08/29/2001
Type of Well: Well Code 57/sv	Section Location of Waste/Source: ____ 1/4 of ____ 1/4 of Sec. ____, T. ____ N, R. ____ ☐E ☐W	Well Installed By: (Person's Name and Firm): D. Morris
Distance Well Is From Waste/Source Boundary ft.	Location of Well Relative to Waste/Source: u ☐ Upgradient s ☐ Sidegradient d ☐ Downgradient n ☐ Not Known	Boart Longyear

A. Protective pipe, top elevation ____ ft. MSL

B. Well casing, top elevation ____ ft. MSL

C. Land surface elevation ____ ft. MSL

D. Surface seal, bottom ____ ft. MSL or 0.0 ft.

12. USC classification of soil near screen:
GP ☐ GM ☐ GC ☐ GW ☐ SW ☐ SP ☐
SM ☐ SC ☐ ML ☐ MH ☐ CL ☐ CH ☐
Bedrock ☐

13. Sieve analysis attached? ☐ Yes ☐ No

14. Drilling method used: Rotary ☐ 5 0
Hollow Stem Auger ☒ 4 1
____ Other ☐ __

15. Drilling fluid used: Water ☐ 0 2 Air ☐ 0 1
Drilling Mud ☐ 0 3 None ☒ 9 9

16. Drilling additives used? ☐ Yes ☒ No

Describe ____

17. Source of water (attach analysis):

____

E. Bentonite seal, top ____ ft. MSL or 2.0 ft.

F. Fine sand, top ____ ft. MSL or na ft.

G. Filter pack, top ____ ft. MSL or 4.0 ft.

H. Screen joint, top ____ ft. MSL or 5.0 ft.

I. Well bottom ____ ft. MSL or 20.0 ft.

J. Filter pack, bottom ____ ft. MSL or 21.0 ft.

K. Borehole, bottom ____ ft. MSL or 21.0 ft.

L. Borehole, diameter 10.0 in.

M. O.D. well casing 4.50 in.

N. I.D. well casing 4.00 in.

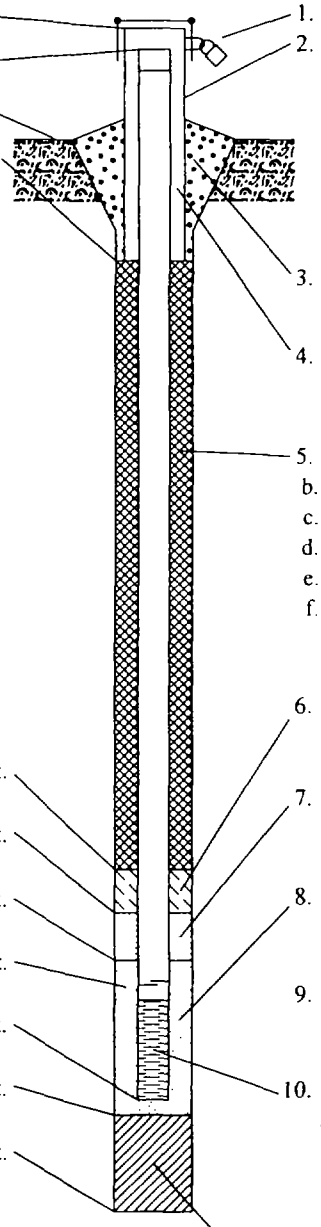

1. Cap and lock? ☐ Yes ☒ No
2. Protective cover pipe:
a. Inside diameter: ____ in.
b. Length: ____ ft.
c. Material: Steel ☐ 0 4
na Other ☒ __
d. Additional protection? ☐ Yes ☒ No
If yes, describe: ____
3. Surface seal: Bentonite ☐ 3 0
Concrete ☐ 0 1
____ Other ☐ __
4. Material between well casing and protective pipe:
Bentonite ☐ 3 0
na Other ☒ __
5. Annular space seal: a. Granular Bentonite ☐ 3 3
b. ____ Lbs/gal mud weight . Bentonite-sand slurry ☐ 3 5
c. ____ Lbs/gal mud weight . . . Bentonite slurry ☐ 3 1
d. ____ % Bentonite . . . Bentonite-cement grout ☐ 5 0
e. ____ Ft^3 volume added for any of the above
f. How installed: Tremie 1
Tremie pumped ☐ 0 2
Gravity ☒ 0 8
6. Bentonite seal: a. Bentonite granules ☐ 3 3
b. ☐ 1/4 in. ☒ 3/8 in. ☐ 1/2 in. Bentonite pellets ☒ 3 2
c. ____ Other ☐ __
7. Fine sand material: Manufacturer, product name and mesh siz
a. na __
b. Volume added ____ ft^3
8. Filter pack material: Manufacturer, product name and mesh si
a. #5 Global __
b. Volume added ____ ft^3
9. Well casing: Flush threaded PVC schedule 40 ☐ 2 3
Flush threaded PVC schedule 80 ☐ 2 4
Stainless Steel Other ☒ __
10. Screen material: Stainless Steel __
a. Screen Type: Factory cut ☐ 1 1
Continuous slot ☒ 0 1
____ Other ☐ __
b. Manufacturer Johnson
c. Slot size: 0.020 in.
d. Slotted length: 15.0 ft.
11. Backfill material (below filter pack): None ☐ 1 4
#5 Global Other ☒ __

I hereby certify that the information on this form is true and correct to the best of my knowledge.

Signature

Firm Boart Longyear Company
101 Alderson Street Schofield, WI 54476

Tel: 715-3[illegible]090
Fax: 715-355-5715

SOIL BORING LOG INFORMATION

Form 4400-122 Rev. 5-97

Route To: Watershed/Wastewater ☐ Waste Management ☐ Remediation/Redevelopment ☐ Other ☐

Facility/Project Name	License/Permit/Monitoring Number	Boring Number
American Chemical Service, Inc.		SVE- 5

Boring Drilled By (Firm name and name of crew chief)	Date Drilling Started	Date Drilling Completed	Drilling Method
Boart Longyear - D. Morris	8/29/2001	8/29/2001	6 1/4 HSA

WI Unique Well No.	DNR Well ID No.	Common Well Name	Final Static Water Level	Surface Elevation	Borehole Diameter
		SVE-5			10.0 Inches

Boring Location or Local Grid Origin (Check if estimated: ☐)
State Plane S / C / N
1/4 of 1/4 of Section , T N, R
Lat. ___ ° ___ ' ___ "
Long. ___ ° ___ ' ___ "
Local Grid Location (If applicable)
Feet ☐ N ☐ S Feet ☐ E ☐ W

Facility ID	County	County Code	Civil Town/City/ or Village
3410-1812	Lake		Griffith, IN

Sample Number and Type	Length Att. & Recovered (in)	Blow Counts	Depth In Feet	Soil/Rock Description And Geologic Origin For Each Major Unit	U S C S	Graphic Log	Well Diagram	PID/FID	Soil Properties: Compressive Strength	Moisture Content	Liquid Limit	Plasticity Index	P 200	RQD/ Comments
				EARTH DRILL										
			1											
			2											
			3											
			4											
1 SS	24 4	1 1 1 3	5							M				
			6											
			7											
			8											
			9											
			10											
2 SS	24 4	8 8 9	11							W				
			12											

I hereby certify that the information on this form is true and correct to the best of my knowledge.

Signature

Firm Boart Longyear Company
101 Alderson Street Schofield, WI 54476
Tel: 715-359-7090
Fax: 715-355-5715

SOIL BORING LOG INFORMATION SUPPLEMENT

Form 4400-122A Rev. 5-97

Boring Number SVE- 5 Use only as an attachment to Form 4400-122.

Sample Number and Type	Length Att. & Recovered (in)	Blow Counts	Depth In Feet	Soil/Rock Description And Geologic Origin For Each Major Unit	U S C S	Graphic Log	Well Diagram	PID/FID	Soil Properties: Compressive Strength	Moisture Content	Liquid Limit	Plasticity Index	P 200	RQD/ Comments
		14												
			13											
			14											
			15											
			16											
			17											
			18	Blk Silty SAND						W				
3 SS	24 19	1 1 1 3	19											
			20											
			21	EOB 21.0' Well Set 20.0'										

Route To: Watershed/Wastewater ☐ Waste Management ☐ Remediation/Redevelopment ☐ Other ☐

MONITORING WELL CONSTRUCTION

Form 4400-113A Rev. 6-97

Facility/Project Name: American Chemical Service, Inc.	Local Grid Location of Well: ____ ft. ☐N. ☐S. ____ ft. ☐E. ☐W.	Well Name: SVE-5
Facility License, Permit or Monitoring No.	Grid Origin Location (Check if estimated: ☐) Lat. ___° ___' ___" Long. ___° ___' ___" or	Wis. Unique Well No / DNR Well Number
Facility ID: 3410-1812	St. Plane ____ ft. N, ____ ft. E. S/C/N	Date Well Installed: 08/29/2001
Type of Well: Well Code 57/sv	Section Location of Waste/Source: ___ 1/4 of ___ 1/4 of Sec. ___, T. ___ N, R. ___ ☐E ☐W	Well Installed By: (Person's Name and Firm): D. Morris
Distance Well Is From Waste/Source Boundary ft.	Location of Well Relative to Waste/Source: u ☐ Upgradient s ☐ Sidegradient d ☐ Downgradient n ☐ Not Known	Boart Longyear

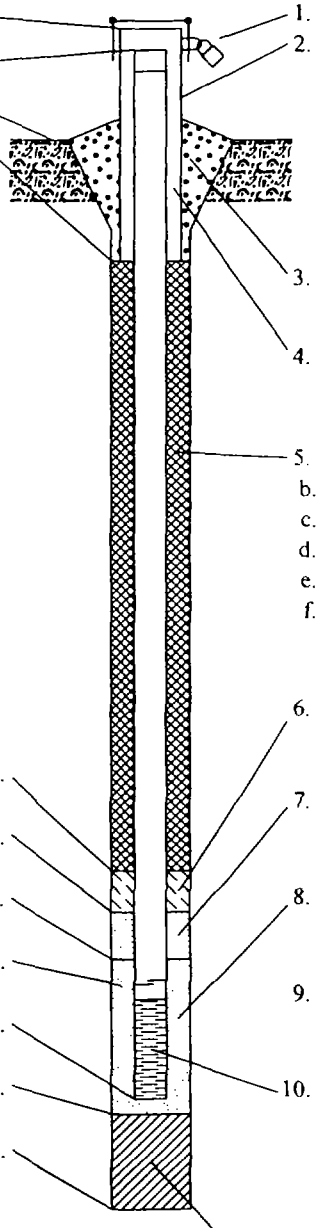

A. Protective pipe, top elevation ____ ft. MSL

B. Well casing, top elevation ____ ft. MSL

C. Land surface elevation ____ ft. MSL

D. Surface seal, bottom ____ ft. MSL or 0.0 ft.

12. USC classification of soil near screen:
GP ☐ GM☐ GC ☐ GW☐ SW☐ SP ☐
SM☐ SC ☐ ML☐ MH☐ CL ☐ CH ☐
Bedrock☐

13. Sieve analysis attached? ☐ Yes ☐ No

14. Drilling method used: Rotary ☐ 5 0
Hollow Stem Auger ☒ 4 1
____ Other ☐ __

15. Drilling fluid used: Water ☐ 0 2 Air ☐ 0 1
Drilling Mud ☐ 0 3 None ☒ 9 9

16. Drilling additives used? ☐ Yes ☒ No

Describe____

17. Source of water (attach analysis):

____

E. Bentonite seal, top ____ ft. MSL or 2.0 ft.

F. Fine sand, top ____ ft. MSL or na ft.

G. Filter pack, top ____ ft. MSL or 4.0 ft.

H. Screen joint, top ____ ft. MSL or 5.0 ft.

I. Well bottom ____ ft. MSL or 20.0 ft.

J. Filter pack, bottom ____ ft. MSL or 20.0 ft.

K. Borehole, bottom ____ ft. MSL or 21.0 ft.

L. Borehole, diameter 10.0 in.

M. O.D. well casing 4.50 in.

N. I.D. well casing 4.00 in.

1. Cap and lock? ☐ Yes ☒ No

2. Protective cover pipe:
a. Inside diameter: ____ in.
b. Length: ____ ft.
c. Material: Steel ☐ 0 4
na Other ☒ __
d. Additional protection? ☐ Yes ☒ No
If yes, describe:____

3. Surface seal: Bentonite ☒ 3 0
Concrete ☐ 0 1
____ Other ☐ __

4. Material between well casing and protective pipe:
Bentonite ☐ 3 0
na Other ☒ __

5. Annular space seal: a. Granular Bentonite ☐ 3 3
b. ____Lbs/gal mud weight . Bentonite-sand slurry ☐ 3 5
c. ____Lbs/gal mud weight . . . Bentonite slurry ☐ 3 1
d. ____% Bentonite . . . Bentonite-cement grout ☐ 5 0
e. ____Ft^3 volume added for any of the above
f. How installed: Tremie ☐ 0 1
Tremie pumped ☐ 0 2
Gravity ☒ 0 8

6. Bentonite seal: a. Bentonite granules ☐ 3 3
b. ☐ 1/4 in. ☒ 3/8 in. ☐ 1/2 in. Bentonite pellets ☒ 3 2
c. ____ Other ☐ __

7. Fine sand material: Manufacturer, product name and mesh size
a. na __
b. Volume added ____ ft^3

8. Filter pack material: Manufacturer, product name and mesh size
a. #5 Global __
b. Volume added ____ ft^3

9. Well casing: Flush threaded PVC schedule 40 ☐ 2 3
Flush threaded PVC schedule 80 ☐ 2 4
Stainless Steel Other ☒ __

10. Screen material: Stainless Steel __
a. Screen Type: Factory cut ☐ 1 1
Continuous slot ☒ 0 1
____ Other ☐ __
b. Manufacturer Johnson
c. Slot size: 0.020 in.
d. Slotted length: 15.0 ft.

11. Backfill material (below filter pack): None ☐ 1 4
#5 Global Other ☒ __

ereby certify that the information on this form is true and correct to the best of my knowledge.

gnature

Firm: Boart Longyear Company
101 Alderson Street Schofield, WI 54476

Tel: 715-359-7090
Fax: 715-355-5715

SOIL BORING LOG INFORMATION

Form 4400-122 Rev. 5-97

Route To: Watershed/Wastewater ☐ Waste Management ☐ Remediation/Redevelopment ☐ Other ☐

Facility/Project Name	License/Permit/Monitoring Number	Boring Number
American Chemical Service, Inc.		SVE- 6

Boring Drilled By (Firm name and name of crew chief)	Date Drilling Started	Date Drilling Completed	Drilling Method
Boart Longyear - R. Fischer	8/29/2001	8/29/2001	4 1/4 HSA

WI Unique Well No.	DNR Well ID No.	Common Well Name	Final Static Water Level	Surface Elevation	Borehole Diameter
		SVE-6			10.0 Inches

Boring Location or Local Grid Origin (Check if estimated: ☐)
State Plane S / C / N
1/4 of 1/4 of Section , T N, R
Lat. ° ' "
Long. ° ' "
Local Grid Location (If applicable)
Feet ☐ N ☐ S Feet ☐ E ☐ W

Facility ID	County	County Code	Civil Town/City/ or Village
3410-1812	Lake		Griffith, IN

Sample Number and Type	Length Att. & Recovered (in)	Blow Counts	Depth In Feet	Soil/Rock Description And Geologic Origin For Each Major Unit	U S C S	Graphic Log	Well Diagram	PID/FID	Compressive Strength	Moisture Content	Liquid Limit	Plasticity Index	P 200	RQD/ Comments
				EARTH DRILL										
			1											
			2											
			3											
			4											
			5											
1 SS	24 20	1 4 6 8	6	Dk Gry Silty SAND						M				
			7											
			8											
			9											
			10											
			11											
2 SS	24 4	6 6 10	12	Blk Silty SAND						M				

I hereby certify that the information on this form is true and correct to the best of my knowledge.

Signature

Firm Boart Longyear Company
101 Alderson Street Schofield, WI 54476

Tel: 715-[illegible] 7090
Fax: 715- 715

SOIL BORING LOG INFORMATION SUPPLEMENT

Form 4400-122A Rev. 5-97

Boring Number SVE- 6 Use only as an attachment to Form 4400-122.

Sample Number and Type	Length Att. & Recovered (in)	Blow Counts	Depth In Feet	Soil/Rock Description And Geologic Origin For Each Major Unit	U S C S	Graphic Log	Well Diagram	PID/FID	Soil Properties: Compressive Strength	Moisture Content	Liquid Limit	Plasticity Index	P 200	RQD/ Comments
		6												
			13											
			14											
			15											
			16											
			17											
			18											
3 SS	24 14	2 2 4 6		Brn Silty SAND						M				
			19											
			20											
			21	EOB 21.0' Well Set 20.0'										

Route To: Watershed/Wastewater ☐ Waste Management ☐ Remediation/Redevelopment ☐ Other ☐

MONITORING WELL CONSTRUCTION
Form 4400-113A Rev. 6-97

Facility/Project Name: American Chemical Service, Inc.	Local Grid Location of Well: ____ ft. ☐ N. ☐ S. ____ ft. ☐ E. ☐ W.	Well Name: SVE-6
Facility License, Permit or Monitoring No.	Grid Origin Location (Check if estimated: ☐) Lat. ° ' " Long. ° ' " or St. Plane ____ ft. N, ____ ft. E. S/C/N	Wis. Unique Well No / DNR Well Number
Facility ID: 3410-1812	Section Location of Waste/Source: ____ 1/4 of ____ 1/4 of Sec. ____, T. ____ N, R. ____ ☐ E ☐ W	Date Well Installed: 08/29/2001
Type of Well: Well Code 57/sv	Location of Well Relative to Waste/Source: u ☐ Upgradient s ☐ Sidegradient d ☐ Downgradient n ☐ Not Known	Well Installed By: (Person's Name and Firm): R. Fischer, Boart Longyear
Distance Well Is From Waste/Source Boundary ____ ft.		

A. Protective pipe, top elevation ____ ft. MSL

B. Well casing, top elevation ____ ft. MSL

C. Land surface elevation ____ ft. MSL

D. Surface seal, bottom ____ ft. MSL or 0.0 ft.

12. USC classification of soil near screen:
GP ☐ GM ☐ GC ☐ GW ☐ SW ☐ SP ☐
SM ☐ SC ☐ ML ☐ MH ☐ CL ☐ CH ☐
Bedrock ☐

13. Sieve analysis attached? ☐ Yes ☐ No

14. Drilling method used: Rotary ☐ 5 0
Hollow Stem Auger ☒ 4 1
____ Other ☐ __

15. Drilling fluid used: Water ☐ 0 2 Air ☐ 0 1
Drilling Mud ☐ 0 3 None ☒ 9 9

16. Drilling additives used? ☐ Yes ☒ No

Describe ____

17. Source of water (attach analysis):
____

E. Bentonite seal, top ____ ft. MSL or 3.0 ft.

F. Fine sand, top ____ ft. MSL or na ft.

G. Filter pack, top ____ ft. MSL or 4.0 ft.

H. Screen joint, top ____ ft. MSL or 5.0 ft.

I. Well bottom ____ ft. MSL or 20.0 ft.

J. Filter pack, bottom ____ ft. MSL or 21.0 ft.

K. Borehole, bottom ____ ft. MSL or 21.0 ft.

L. Borehole, diameter 10.0 in.

M. O.D. well casing 4.50 in.

N. I.D. well casing 4.00 in.

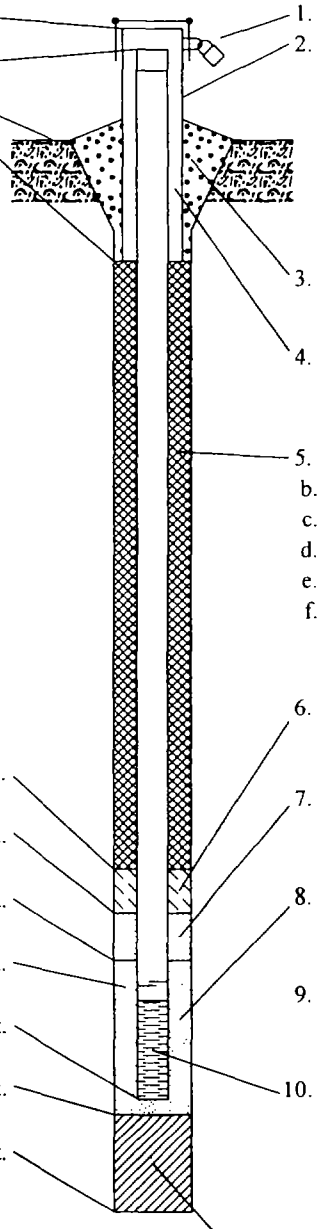

1. Cap and lock? ☒ Yes ☐ No
2. Protective cover pipe:
a. Inside diameter: ____ in.
b. Length: ____ ft.
c. Material: Steel ☐ 0 4
na Other ☒ __
d. Additional protection? ☐ Yes ☒ No
If yes, describe: ____
3. Surface seal: Bentonite ☒ 3 0
Concrete ☐ 0 1
____ Other ☐ __
4. Material between well casing and protective pipe:
Bentonite ☐ 3 0
na Other ☒ __
5. Annular space seal: a. Granular Bentonite ☐ 3 3
b. ____ Lbs/gal mud weight . Bentonite-sand slurry ☐ 3 5
c. ____ Lbs/gal mud weight . . . Bentonite slurry ☐ 3 1
d. ____ % Bentonite . . . Bentonite-cement grout ☐ 5 0
e. ____ Ft^3 volume added for any of the above
f. How installed: Tremie 1
Tremie pumped ☐ 0 2
Gravity ☒ 0 8
6. Bentonite seal: a. Bentonite granules ☒ 3 3
b. ☐ 1/4 in. ☐ 3/8 in. ☐ 1/2 in. Bentonite pellets ☐ 3 2
c. ____ Other ☐ __
7. Fine sand material: Manufacturer, product name and mesh siz
a. na __
b. Volume added ____ ft^3
8. Filter pack material: Manufacturer, product name and mesh si
a. #5 Global __
b. Volume added ____ ft^3
9. Well casing: Flush threaded PVC schedule 40 ☐ 2 3
Flush threaded PVC schedule 80 ☐ 2 4
Stainless Steel Other ☒ __
10. Screen material: Stainless Steel __
a. Screen Type: Factory cut ☐ 1 1
Continuous slot ☒ 0 1
____ Other ☐ __
b. Manufacturer Johnson
c. Slot size: 0.020 in.
d. Slotted length: 15.0 ft.
11. Backfill material (below filter pack): None ☒ 1 4
____ Other ☐ __

I hereby certify that the information on this form is true and correct to the best of my knowledge.

Signature	Firm: Boart Longyear Company, 101 Alderson Street Schofield, WI 54476	Tel: 715-5. /090 Fax: 715-355-5715

SOIL BORING LOG INFORMATION

Form 4400-122 Rev. 5-97

Route To: Watershed/Wastewater ☐ Waste Management ☐ Remediation/Redevelopment ☐ Other ☐

Facility/Project Name	License/Permit/Monitoring Number	Boring Number
American Chemical Service, Inc.		SVE- 7

Boring Drilled By (Firm name and name of crew chief)	Date Drilling Started	Date Drilling Completed	Drilling Method
Boart Longyear - J. Berthold	8/29/2001	8/29/2001	6 1/4 HSA

WI Unique Well No.	DNR Well ID No.	Common Well Name	Final Static Water Level	Surface Elevation	Borehole Diameter
		SVE-7			10.0 Inches

Boring Location or Local Grid Origin (Check if estimated: ☐)
State Plane S / C / N
1/4 of 1/4 of Section , T N, R
Lat. ___ ° ___ ' ___ "
Long. ___ ° ___ ' ___ "
Local Grid Location (If applicable) ☐ N ☐ E Feet ☐ S Feet ☐ W

Facility ID	County	County Code	Civil Town/City/ or Village
3410-1812	Lake		Griffith, IN

Sample Number and Type	Length Att. & Recovered (in)	Blow Counts	Depth In Feet	Soil/Rock Description And Geologic Origin For Each Major Unit	U S C S	Graphic Log	Well Diagram	PID/FID	Soil Properties: Compressive Strength	Moisture Content	Liquid Limit	Plasticity Index	P 200	RQD/ Comments
				EARTH DRILL										
			1											
			2											
			3											
			4											
			5	Blk Gravelly SAND w/Fill										
1 SS	24 22	4 8 8 5	6							M				
			7											
			8											
			9											
			10											
			11	GRAVEL and SAND										
2 SS	24 10	4 4 5	12							M				

I hereby certify that the information on this form is true and correct to the best of my knowledge.

Signature [signature] Firm Boart Longyear Company
101 Alderson Street Schofield, WI 54476
Tel: 715-359-7090
Fax: 715-355-5715

SOIL BORING LOG INFORMATION SUPPLEMENT

Form 4400-122A Rev. 5-97

Boring Number SVE- 7 Use only as an attachment to Form 4400-122.

Sample Number and Type	Length Att. & Recovered (in)	Blow Counts	Depth In Feet	Soil/Rock Description And Geologic Origin For Each Major Unit	U S C S	Graphic Log	Well Diagram	PID/FID	Soil Properties: Compressive Strength	Moisture Content	Liquid Limit	Plasticity Index	P 200	RQD/ Comments
		7												
			13											
			14											
			15											
			16											
			17											
			18	Gry Silty SAND						M				
3 SS	24 16	7 6 4 6	19											
			20											
			21	EOB 21.0' Well Set 20.0'										

Route To: Watershed/Wastewater ☐ Waste Management ☐ Remediation/Redevelopment ☐ Other ☐

MONITORING WELL CONSTRUCTION
Form 4400-113A Rev. 6-97

Facility/Project Name: American Chemical Service, Inc.	Local Grid Location of Well: ____ ft. ☐N. ☐S. ____ ft. ☐E. ☐W.	Well Name: SVE-7
Facility License, Permit or Monitoring No.	Grid Origin Location (Check if estimated: ☐) Lat. ° ' " Long. ° ' " or	Wis. Unique Well No. / DNR Well Number
Facility ID: 3410-1812	St. Plane ____ ft. N, ____ ft. E. S/C/N	Date Well Installed: 08/29/2001
Type of Well: Well Code 11/mw	Section Location of Waste/Source: ____ 1/4 of ____ 1/4 of Sec. ____, T. ____ N, R. ____ ☐E ☐W	Well Installed By: (Person's Name and Firm): J. Berthold
Distance Well Is From Waste/Source Boundary ____ ft.	Location of Well Relative to Waste/Source: u ☐ Upgradient s ☐ Sidegradient d ☐ Downgradient n ☐ Not Known	Boart Longyear

A. Protective pipe, top elevation ____ ft. MSL

B. Well casing, top elevation ____ ft. MSL

C. Land surface elevation ____ ft. MSL

D. Surface seal, bottom ____ ft. MSL or 0.0 ft.

12. USC classification of soil near screen:
GP ☐ GM ☐ GC ☐ GW ☐ SW ☐ SP ☐
SM ☐ SC ☐ ML ☐ MH ☐ CL ☐ CH ☐
Bedrock ☐

13. Sieve analysis attached? ☐ Yes ☐ No

14. Drilling method used: Rotary ☐ 5 0
Hollow Stem Auger ☒ 4 1
____ Other ☐ __

15. Drilling fluid used: Water ☐ 0 2 Air ☐ 0 1
Drilling Mud ☐ 0 3 None ☒ 9 9

16. Drilling additives used? ☐ Yes ☒ No

Describe ____

17. Source of water (attach analysis):
____

E. Bentonite seal, top ____ ft. MSL or 2.0 ft.

F. Fine sand, top ____ ft. MSL or na ft.

G. Filter pack, top ____ ft. MSL or 4.0 ft.

H. Screen joint, top ____ ft. MSL or 5.0 ft.

I. Well bottom ____ ft. MSL or 20.0 ft.

J. Filter pack, bottom ____ ft. MSL or 21.0 ft.

K. Borehole, bottom ____ ft. MSL or 21.0 ft.

L. Borehole, diameter 10.0 in.

M. O.D. well casing 4.50 in.

N. I.D. well casing 4.00 in.

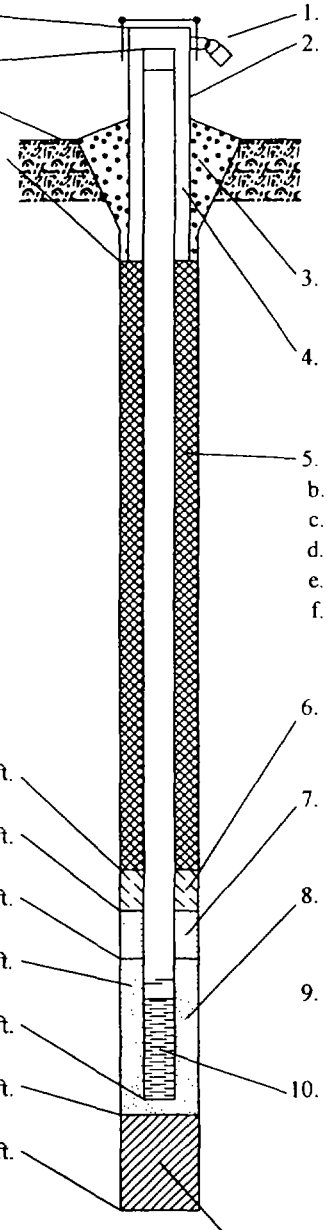

1. Cap and lock? ☒ Yes ☐ No
2. Protective cover pipe:
a. Inside diameter: ____ in.
b. Length: ____ ft.
c. Material: Steel ☐ 0 4
na Other ☒ __
d. Additional protection? ☐ Yes ☒ No
If yes, describe: ____
3. Surface seal: Bentonite ☒ 3 0
Concrete ☐ 0 1
____ Other ☐ __
4. Material between well casing and protective pipe:
Bentonite ☐ 3 0
na Other ☒ __
5. Annular space seal: a. Granular Bentonite ☐ 3 3
b. ____ Lbs/gal mud weight . Bentonite-sand slurry ☐ 3 5
c. ____ Lbs/gal mud weight . . . Bentonite slurry ☐ 3 1
d. ____ % Bentonite . . . Bentonite-cement grout ☐ 5 0
e. ____ Ft^3 volume added for any of the above
f. How installed: Tremie ☐ 0 1
Tremie pumped ☐ 0 2
Gravity ☒ 0 8
6. Bentonite seal: a. Bentonite granules ☒ 3 3
b. ☐ 1/4 in. ☐ 3/8 in. ☐ 1/2 in. Bentonite pellets ☐ 3 2
c. ____ Other ☐ __
7. Fine sand material: Manufacturer, product name and mesh siz
a. na __
b. Volume added ____ ft^3
8. Filter pack material: Manufacturer, product name and mesh s
a. #5 Global __
b. Volume added ____ ft^3
9. Well casing: Flush threaded PVC schedule 40 ☐ 2 3
Flush threaded PVC schedule 80 ☐ 2 4
Stainless Steel Other ☒ __
10. Screen material: Stainless Steel __
a. Screen Type: Factory cut ☐ 1 1
Continuous slot ☒ 0 1
____ Other ☐ __
b. Manufacturer Johnson
c. Slot size: 0.020 in
d. Slotted length: 15.0 ft
11. Backfill material (below filter pack): None ☒ 1 4
____ Other ☐ __

I hereby certify that the information on this form is true and correct to the best of my knowledge.

Signature ____ Firm: Boart Longyear Company, 101 Alderson Street Schofield, WI 54476 Tel: 715-359-7090 Fax: 715-355-5715

SOIL BORING LOG INFORMATION

Form 4400-122 Rev. 5-97

Route To: Watershed/Wastewater ☐ Waste Management ☐ Remediation/Redevelopment ☐ Other ☐

Facility/Project Name	License/Permit/Monitoring Number	Boring Number
American Chemical Service, Inc.		SVE- 8

Boring Drilled By (Firm name and name of crew chief)	Date Drilling Started	Date Drilling Completed	Drilling Method
Boart Longyear - D. Morris	8/30/2001	8/30/2001	6 1/4 HSA

WI Unique Well No.	DNR Well ID No.	Common Well Name	Final Static Water Level	Surface Elevation	Borehole Diameter
		SVE-8			10.0 Inches

Boring Location or Local Grid Origin (Check if estimated: ☐)
State Plane S / C / N
1/4 of 1/4 of Section , T N, R
Lat. ___ ° ___ ' ___ "
Long. ___ ° ___ ' ___ "
Local Grid Location (If applicable)
Feet ☐ N ☐ S Feet ☐ E ☐ W

Facility ID	County	County Code	Civil Town/City/ or Village
3410-1812	Lake		Griffith, IN

Sample: Number and Type	Length Att. & Recovered (in)	Blow Counts	Depth In Feet	Soil/Rock Description And Geologic Origin For Each Major Unit	U S C S	Graphic Log	Well Diagram	PID/FID	Soil Properties: Compressive Strength	Moisture Content	Liquid Limit	Plasticity Index	P 200	RQD/ Comments
				EARTH DRILL										
			1											
			2											
			3											
			4											
			5											
			6											
			7											
			8											
			9											
			10											
			11											
			12											

I hereby certify that the information on this form is true and correct to the best of my knowledge.

Signature [signature] Firm Boart Longyear Company
101 Alderson Street Schofield, WI 54476
Tel: 715-359-7090
Fax: 715-3[illegible]15

SOIL BORING LOG INFORMATION SUPPLEMENT

Form 4400-122A Rev. 5-97

Boring Number SVE- 8 Use only as an attachment to Form 4400-122.

Sample Number and Type	Sample Length Att. & Recovered (in)	Blow Counts	Depth In Feet	Soil/Rock Description And Geologic Origin For Each Major Unit	U S C S	Graphic Log	Well Diagram	PID/FID	Soil Properties: Compressive Strength	Moisture Content	Liquid Limit	Plasticity Index	P 200	RQD/ Comments
			13											
			14											
			15											
			16											
			17											
1 SS	24 3	2 5 2 6	18 19 20	Blk Silty SAND										
				EOB 20.5' Well Set 20.0'										

Route To: Watershed/Wastewater ☐ Waste Management ☐ Remediation/Redevelopment ☐ Other ☐

MONITORING WELL CONSTRUCTION

Form 4400-113A Rev. 6-97

Facility/Project Name: American Chemical Service, Inc.	Local Grid Location of Well: ____ ft. ☐N. ☐S. ____ ft. ☐E. ☐W.	Well Name: SVE-8
Facility License, Permit or Monitoring No.	Grid Origin Location (Check if estimated: ☐) Lat. ° ' " Long. ° ' " or	Wis. Unique Well No. / DNR Well Number
Facility ID: 3410-1812	St. Plane ____ ft. N, ____ ft. E. S/C/N	Date Well Installed: 08/30/2001
Type of Well: Well Code 57/sv	Section Location of Waste/Source: ____ 1/4 of ____ 1/4 of Sec. ____, T. ____ N, R. ____ ☐E ☐W	Well Installed By: (Person's Name and Firm) D. Morris
Distance Well Is From Waste/Source Boundary ft.	Location of Well Relative to Waste/Source: u ☐ Upgradient s ☐ Sidegradient d ☐ Downgradient n ☐ Not Known	Boart Longyear

A. Protective pipe, top elevation ____ ft. MSL

B. Well casing, top elevation ____ ft. MSL

C. Land surface elevation ____ ft. MSL

D. Surface seal, bottom ____ ft. MSL or 0.0 ft.

12. USC classification of soil near screen:
GP ☐ GM ☐ GC ☐ GW ☐ SW ☐ SP ☐
SM ☐ SC ☐ ML ☐ MH ☐ CL ☐ CH ☐
Bedrock ☐

13. Sieve analysis attached? ☐ Yes ☐ No

14. Drilling method used: Rotary ☐ 50
Hollow Stem Auger ☒ 41
____ Other ☐ __

15. Drilling fluid used: Water ☐ 02 Air ☐ 01
Drilling Mud ☐ 03 None ☒ 99

16. Drilling additives used? ☐ Yes ☒ No

Describe ____

17. Source of water (attach analysis):
____

E. Bentonite seal, top ____ ft. MSL or 2.0 ft.

F. Fine sand, top ____ ft. MSL or na ft.

G. Filter pack, top ____ ft. MSL or 4.0 ft.

H. Screen joint, top ____ ft. MSL or 5.0 ft.

I. Well bottom ____ ft. MSL or 20.0 ft.

J. Filter pack, bottom ____ ft. MSL or 20.5 ft.

K. Borehole, bottom ____ ft. MSL or 20.5 ft.

L. Borehole, diameter 10.0 in.

M. O.D. well casing 4.50 in.

N. I.D. well casing 4.00 in.

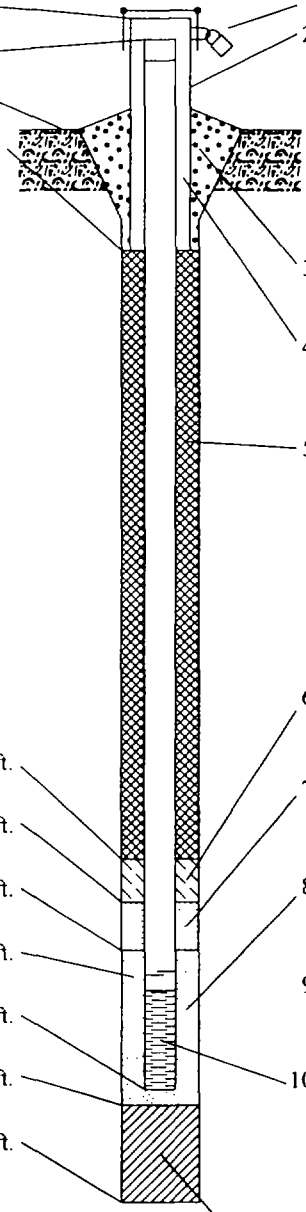

1. Cap and lock? ☐ Yes ☒ No

2. Protective cover pipe:
a. Inside diameter: ____ in.
b. Length: ____ ft.
c. Material: Steel ☐ 04
na Other ☒ __
d. Additional protection? ☐ Yes ☒ No
If yes, describe: ____

3. Surface seal: Bentonite ☒ 30
Concrete ☐ 01
____ Other ☐ __

4. Material between well casing and protective pipe:
Bentonite ☐ 30
na Other ☒ __

5. Annular space seal: a. Granular Bentonite ☐ 33
b. ____ Lbs/gal mud weight . Bentonite-sand slurry ☐ 35
c. ____ Lbs/gal mud weight . . . Bentonite slurry ☐ 31
d. ____ % Bentonite . . . Bentonite-cement grout ☐ 50
e. ____ Ft^3 volume added for any of the above
f. How installed: Tremie ☐ 1
Tremie pumped ☐ 02
Gravity ☒ 08

6. Bentonite seal: a. Bentonite granules ☐ 33
b. ☐ 1/4 in. ☒ 3/8 in. ☐ 1/2 in. Bentonite pellets ☒ 32
c. ____ Other ☐ __

7. Fine sand material: Manufacturer, product name and mesh size
a. na
b. Volume added ____ ft^3

8. Filter pack material: Manufacturer, product name and mesh size
a. #5 Global
b. Volume added ____ ft^3

9. Well casing: Flush threaded PVC schedule 40 ☐ 23
Flush threaded PVC schedule 80 ☐ 24
Stainless Steel Other ☒ __

10. Screen material: Stainless Steel
a. Screen Type: Factory cut ☐ 11
Continuous slot ☒ 01
____ Other ☐ __
b. Manufacturer Johnson
c. Slot size: 0.020 in.
d. Slotted length: 15.0 ft.

11. Backfill material (below filter pack): None ☒ 14
____ Other ☐ __

I hereby certify that the information on this form is true and correct to the best of my knowledge.

Signature	Firm: Boart Longyear Company 101 Alderson Street Schofield, WI 54476	Tel: 715-3: 090 Fax: 715-355-5715

SOIL BORING LOG INFORMATION

Form 4400-122 Rev. 5-97

Route To: Watershed/Wastewater ☐ Waste Management ☐ Remediation/Redevelopment ☐ Other ☐

Facility/Project Name	License/Permit/Monitoring Number	Boring Number
American Chemical Service, Inc.		SVE- 9

Boring Drilled By (Firm name and name of crew chief)	Date Drilling Started	Date Drilling Completed	Drilling Method
Boart Longyear - J. Berthold	8/30/2001	8/30/2001	6 1/4 HSA

WI Unique Well No.	DNR Well ID No.	Common Well Name	Final Static Water Level	Surface Elevation	Borehole Diameter
		SVE-9			10.0 Inches

Boring Location or Local Grid Origin (Check if estimated: ☐)
State Plane S / C / N
1/4 of 1/4 of Section , T N, R

Lat. ° ' "
Long. ° ' "

Local Grid Location (If applicable)
☐ N ☐ E
Feet ☐ S Feet ☐ W

Facility ID	County	County Code	Civil Town/City/ or Village
3410-1812	Lake		Griffith, IN

Sample: Number and Type	Length Att. & Recovered (in)	Blow Counts	Depth In Feet	Soil/Rock Description And Geologic Origin For Each Major Unit	U S C S	Graphic Log	Well Diagram	PID/FID	Soil Properties: Compressive Strength	Moisture Content	Liquid Limit	Plasticity Index	P 200	RQD/ Comments
				EARTH DRILL										
			1											
			2											
			3											
			4											
			5											
			6											
			7											
			8											
			9											
			10											
			11											
			12											

I hereby certify that the information on this form is true and correct to the best of my knowledge.

Signature

Firm Boart Longyear Company
101 Alderson Street Schofield, WI 54476
Tel: 715-359-7090
Fax: 715-355-5715

SOIL BORING LOG INFORMATION SUPPLEMENT

Form 4400-122A Rev. 5-97

Boring Number SVE- 9 Use only as an attachment to Form 4400-122.

Sample Number and Type	Sample Length Att. & Recovered (in)	Blow Counts	Depth In Feet	Soil/Rock Description And Geologic Origin For Each Major Unit	U S C S	Graphic Log	Well Diagram	PID/FID	Soil Properties: Compressive Strength	Moisture Content	Liquid Limit	Plasticity Index	P 200	RQD/ Comments
			13											
			14											
			15											
			16											
			17											
			18											
			19											
			20											
			21											
			22											
1 SS	24 13	7 8 8 10	23 24 25	Gry Silty SAND						W				
				EOB 25.5' Well Set 25.0'										

Route To: Watershed/Wastewater ☐ Waste Management ☐ Remediation/Redevelopment ☐ Other ☐

MONITORING WELL CONSTRUCTION

Form 4400-113A Rev. 6-97

Facility/Project Name: American Chemical Service, Inc.	Local Grid Location of Well: ____ ft. ☐ N. ☐ S. ____ ft. ☐ E. ☐ W.	Well Name: SVE-9
Facility License, Permit or Monitoring No.	Grid Origin Location (Check if estimated: ☐) Lat. ° ' " Long. ° ' " or	Wis. Unique Well No / DNR Well Number
Facility ID: 3410-1812	St. Plane ____ ft. N, ____ ft. E. S/C/N	Date Well Installed: 08/30/2001
Type of Well: Well Code 57/sv	Section Location of Waste/Source: ____ 1/4 of ____ 1/4 of Sec. ____, T. ____ N, R. ____ ☐ E ☐ W	Well Installed By: (Person's Name and Firm) J. Berthold
Distance Well Is From Waste/Source Boundary ft.	Location of Well Relative to Waste/Source: u ☐ Upgradient s ☐ Sidegradient d ☐ Downgradient n ☐ Not Known	Boart Longyear

A. Protective pipe, top elevation ____ ft. MSL

B. Well casing, top elevation ____ ft. MSL

C. Land surface elevation ____ ft. MSL

D. Surface seal, bottom ____ ft. MSL or 0.0 ft.

12. USC classification of soil near screen:
GP ☐ GM ☐ GC ☐ GW ☐ SW ☐ SP ☐
SM ☐ SC ☐ ML ☐ MH ☐ CL ☐ CH ☐
Bedrock ☐

13. Sieve analysis attached? ☐ Yes ☐ No

14. Drilling method used: Rotary ☐ 5 0
Hollow Stem Auger ☒ 4 1
____ Other ☐ __

15. Drilling fluid used: Water ☐ 0 2 Air ☐ 0 1
Drilling Mud ☐ 0 3 None ☒ 9 9

16. Drilling additives used? ☐ Yes ☒ No

Describe ____

17. Source of water (attach analysis):
____

E. Bentonite seal, top ____ ft. MSL or 7.0 ft.

F. Fine sand, top ____ ft. MSL or na ft.

G. Filter pack, top ____ ft. MSL or 9.0 ft.

H. Screen joint, top ____ ft. MSL or 10.0 ft.

I. Well bottom ____ ft. MSL or 25.0 ft.

J. Filter pack, bottom ____ ft. MSL or 25.5 ft.

K. Borehole, bottom ____ ft. MSL or 25.5 ft.

L. Borehole, diameter 10.0 in.

M. O.D. well casing 4.50 in.

N. I.D. well casing 4.00 in.

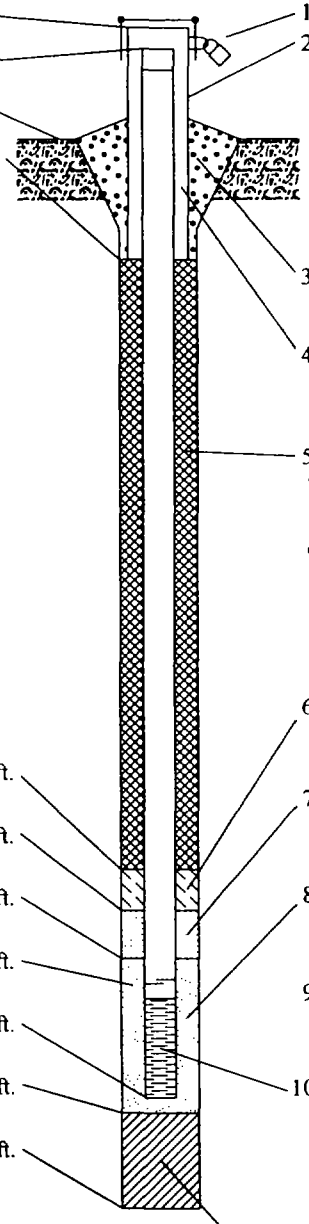

1. Cap and lock? ☒ Yes ☐ No
2. Protective cover pipe:
a. Inside diameter: ____ in.
b. Length: ____ ft.
c. Material: Steel ☐ 0 4
na Other ☒ __
d. Additional protection? ☐ Yes ☒ No
If yes, describe: ____
3. Surface seal: Bentonite ☒ 3 0
Concrete ☐ 0 1
____ Other ☐ __
4. Material between well casing and protective pipe:
Bentonite ☐ 3 0
na Other ☒ __
5. Annular space seal: a. Granular Bentonite ☐ 3 3
b. ____ Lbs/gal mud weight . Bentonite-sand slurry ☐ 3 5
c. ____ Lbs/gal mud weight . . . Bentonite slurry ☐ 3 1
d. ____ % Bentonite . . . Bentonite-cement grout ☐ 5 0
e. ____ Ft^3 volume added for any of the above
f. How installed: Tremie ☐ 0 1
Tremie pumped ☐ 0 2
Gravity ☒ 0 8
6. Bentonite seal: a. Bentonite granules ☒ 3 3
b. ☐ 1/4 in. ☐ 3/8 in. ☐ 1/2 in. Bentonite pellets ☐ 3 2
c. ____ Other ☐ __
7. Fine sand material: Manufacturer, product name and mesh siz
a. na __
b. Volume added ____ ft^3
8. Filter pack material: Manufacturer, product name and mesh si
a. #5 Global
b. Volume added ____ ft^3
9. Well casing: Flush threaded PVC schedule 40 ☐ 2 3
Flush threaded PVC schedule 80 ☐ 2 4
Stainless Steel Other ☒
10. Screen material: Stainless Steel
a. Screen Type: Factory cut ☐ 1 1
Continuous slot ☒ 0 1
____ Other ☐
b. Manufacturer Johnson
c. Slot size: 0.020 in.
d. Slotted length: 15.0 ft.
11. Backfill material (below filter pack): None ☒ 1 4
____ Other ☐

'hereby certify that the information on this form is true and correct to the best of my knowledge.

gnature

Firm Boart Longyear Company
101 Alderson Street Schofield, WI 54476

Tel: 715-359-7090
Fax: 715-355-5715

SOIL BORING LOG INFORMATION

Form 4400-122 Rev. 5-97

Route To: Watershed/Wastewater ☐ Waste Management ☐ Remediation/Redevelopment ☐ Other ☐

Facility/Project Name	License/Permit/Monitoring Number	Boring Number
American Chemical Service, Inc.		SVE-10

Boring Drilled By (Firm name and name of crew chief)	Date Drilling Started	Date Drilling Completed	Drilling Method
Boart Longyear - J. Berthold	8/30/2001	8/30/2001	6 1/4 HSA

WI Unique Well No.	DNR Well ID No	Common Well Name	Final Static Water Level	Surface Elevation	Borehole Diameter
		SVE-10			10.0 Inches

Boring Location or Local Grid Origin (Check if estimated: ☐)
State Plane S / C / N
1/4 of 1/4 of Section , T N, R
Lat. ° ' "
Long. ° ' "
Local Grid Location (If applicable)
Feet ☐ N ☐ S Feet ☐ E ☐ W

Facility ID	County	County Code	Civil Town/City/ or Village
3410-1812	Lake		Griffith, IN

Sample: Number and Type	Length Att. & Recovered (in)	Blow Counts	Depth In Feet	Soil/Rock Description And Geologic Origin For Each Major Unit	U S C S	Graphic Log	Well Diagram	PID/FID	Soil Properties: Compressive Strength	Moisture Content	Liquid Limit	Plasticity Index	P 200	RQD/ Comments
				EARTH DRILL										
			1											
			2											
			3											
			4											
			5											
			6											
			7											
			8											
			9											
			10											
			11											
			12											

I hereby certify that the information on this form is true and correct to the best of my knowledge.

Signature [signature] Firm Boart Longyear Company
101 Alderson Street Schofield, WI 54476
Tel: 715-359-7090
Fax: 715-3 15

Boring Number SVE-10 Use only as an attachment to Form 4400-122.

Sample Number and Type	Sample Length Att. & Recovered (in)	Blow Counts	Depth In Feet	Soil/Rock Description And Geologic Origin For Each Major Unit	U S C S	Graphic Log	Well Diagram	PID/FID	Soil Properties: Compressive Strength	Moisture Content	Liquid Limit	Plasticity Index	P 200	RQD/ Comments
			13											
			14											
			15											
			16											
			17											
			18											
			19											
			20											
			21											
			22											
1 SS	24 24	7 7 6 5	23 24	Gry Silty SAND						M				
			25	Br F SAND										
				EOB 25.5' Well Set 25.0'										

Route To: Watershed/Wastewater ☐ Waste Management ☐ Remediation/Redevelopment ☐ Other ☐

MONITORING WELL CONSTRUCTION

Form 4400-113A Rev. 6-97

Facility/Project Name: American Chemical Service, Inc.	Local Grid Location of Well: ____ ft. ☐N. ☐S. ____ ft. ☐E. ☐W.	Well Name: SVE-10
Facility License, Permit or Monitoring No.	Grid Origin Location (Check if estimated: ☐) Lat. ___° ___' ___" Long. ___° ___' ___" or	Wis. Unique Well No. / DNR Well Number
Facility ID: 3410-1812	St. Plane ____ ft. N, ____ ft. E. S/C/N	Date Well Installed: 08/30/2001
Type of Well: Well Code 57/sv	Section Location of Waste/Source: ____ 1/4 of ____ 1/4 of Sec. ____, T. ____ N, R. ____ ☐E ☐W	Well Installed By: (Person's Name and Firm): J. Berthold
Distance Well Is From Waste/Source Boundary ft.	Location of Well Relative to Waste/Source: u ☐ Upgradient s ☐ Sidegradient d ☐ Downgradient n ☐ Not Known	Boart Longyear

A. Protective pipe, top elevation ____ ft. MSL

B. Well casing, top elevation ____ ft. MSL

C. Land surface elevation ____ ft. MSL

D. Surface seal, bottom ____ ft. MSL or 0.0 ft.

12. USC classification of soil near screen:
GP ☐ GM ☐ GC ☐ GW ☐ SW ☐ SP ☐
SM ☐ SC ☐ ML ☐ MH ☐ CL ☐ CH ☐
Bedrock ☐

13. Sieve analysis attached? ☐ Yes ☐ No

14. Drilling method used: Rotary ☐ 5 0
Hollow Stem Auger ☒ 4 1
____ Other ☐ __

15. Drilling fluid used: Water ☐ 0 2 Air ☐ 0 1
Drilling Mud ☐ 0 3 None ☒ 9 9

16. Drilling additives used? ☐ Yes ☒ No

Describe ____

17. Source of water (attach analysis):

____

E. Bentonite seal, top ____ ft. MSL or 7.0 ft.

F. Fine sand, top ____ ft. MSL or na ft.

G. Filter pack, top ____ ft. MSL or 9.0 ft.

H. Screen joint, top ____ ft. MSL or 10.0 ft.

I. Well bottom ____ ft. MSL or 25.0 ft.

J. Filter pack, bottom ____ ft. MSL or 25.5 ft.

K. Borehole, bottom ____ ft. MSL or 25.5 ft.

L. Borehole, diameter 10.0 in.

M. O.D. well casing 4.50 in.

N. I.D. well casing 4.00 in.

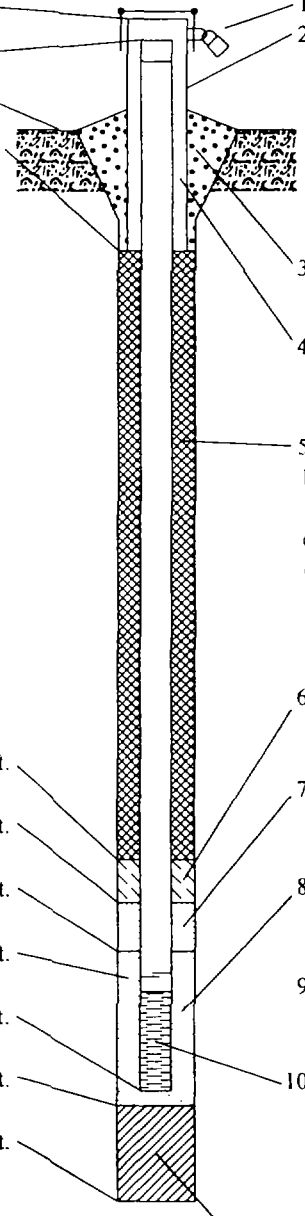

1. Cap and lock? ☒ Yes ☐ No
2. Protective cover pipe:
a. Inside diameter: ____ in.
b. Length: ____ ft.
c. Material: Steel ☐ 0 4
na Other ☒ __
d. Additional protection? ☐ Yes ☒ No
If yes, describe: ____
3. Surface seal: Bentonite ☒ 3 0
Concrete ☐ 0 1
____ Other ☐ __
4. Material between well casing and protective pipe:
Bentonite ☐ 3 0
na Other ☒ __
5. Annular space seal: a. Granular Bentonite ☐ 3 3
b. ____ Lbs/gal mud weight . Bentonite-sand slurry ☐ 3 5
c. ____ Lbs/gal mud weight . . . Bentonite slurry ☐ 3 1
d. ____ % Bentonite . . . Bentonite-cement grout ☐ 5 0
e. ____ Ft^3 volume added for any of the above
f. How installed: Tremie ☐ 1
Tremie pumped ☐ 0 2
Gravity ☒ 0 8
6. Bentonite seal: a. Bentonite granules ☒ 3 3
b. ☐ 1/4 in. ☐ 3/8 in. ☐ 1/2 in. Bentonite pellets ☐ 3 2
c. ____ Other ☐ __
7. Fine sand material: Manufacturer, product name and mesh size
a. na __
b. Volume added ____ ft^3
8. Filter pack material: Manufacturer, product name and mesh size
a. #5 Global __
b. Volume added ____ ft^3
9. Well casing: Flush threaded PVC schedule 40 ☐ 2 3
Flush threaded PVC schedule 80 ☐ 2 4
Stainless Steel Other ☒ __
10. Screen material: Stainless Steel __
a. Screen Type: Factory cut ☐ 1 1
Continuous slot ☒ 0 1
____ Other ☐ __
b. Manufacturer Johnson
c. Slot size: 0.020 in.
d. Slotted length: 15.0 ft.
11. Backfill material (below filter pack): None ☒ 1 4
____ Other ☐ __

I hereby certify that the information on this form is true and correct to the best of my knowledge.

Signature	Firm: Boart Longyear Company 101 Alderson Street Schofield, WI 54476	Tel: 715-3 090 Fax: 715-355-5715

SOIL BORING LOG INFORMATION

Form 4400-122 Rev. 5-97

Route To: Watershed/Wastewater ☐ Waste Management ☐ Remediation/Redevelopment ☐ Other ☐

Facility/Project Name	License/Permit/Monitoring Number	Boring Number
American Chemical Service, Inc.		SVE-11

Boring Drilled By (Firm name and name of crew chief)	Date Drilling Started	Date Drilling Completed	Drilling Method
Boart Longyear - D. Morris	8/30/2001	8/30/2001	6 1/4 HSA

WI Unique Well No.	DNR Well ID No.	Common Well Name	Final Static Water Level	Surface Elevation	Borehole Diameter
		SVE-11			10.0 Inches

Boring Location or Local Grid Origin (Check if estimated: ☐)
State Plane S / C / N
1/4 of 1/4 of Section , T N, R

Lat. ___ ° ___ ' ___ "
Long. ___ ° ___ ' ___ "

Local Grid Location (If applicable)
Feet ☐ N ☐ S Feet ☐ E ☐ W

Facility ID	County	County Code	Civil Town/City/ or Village
3410-1812	Lake		Griffith, IN

Sample: Number and Type	Length Att. & Recovered (in)	Blow Counts	Depth In Feet	Soil/Rock Description And Geologic Origin For Each Major Unit	U S C S	Graphic Log	Well Diagram	PID/FID	Soil Properties: Compressive Strength	Moisture Content	Liquid Limit	Plasticity Index	P 200	RQD/ Comments
				EARTH DRILL										
			1											
			2											
			3											
			4											
			5											
			6											
			7											
			8											
			9											
			10											
			11											
			12											

I hereby certify that the information on this form is true and correct to the best of my knowledge.

Signature

Firm Boart Longyear Company
101 Alderson Street Schofield, WI 54476
Tel: 715-359-7090
Fax: 715-355-5715

SOIL BORING LOG INFORMATION SUPPLEMENT

Form 4400-122A Rev. 5-97

Boring Number SVE-11 Use only as an attachment to Form 4400-122.

Sample Number and Type	Sample Length Att. & Recovered (in)	Blow Counts	Depth In Feet	Soil/Rock Description And Geologic Origin For Each Major Unit	U S C S	Graphic Log	Well Diagram	PID/FID	Soil Properties: Compressive Strength	Moisture Content	Liquid Limit	Plasticity Index	P 200	RQD/ Comments
			13											
			14											
			15											
			16											
			17											
			18											
			19											
			20											
			21											
			22											
1 SS	24 10	8 20 30 36	23 24	Brn Silty SAND						W				
			25	F SAND										
				EOB 25.5' Well Set 25.0'										

Route To: Watershed/Wastewater ☐ Waste Management ☐ Remediation/Redevelopment ☐ Other ☐

MONITORING WELL CONSTRUCTION
Form 4400-113A Rev. 6-97

Facility/Project Name: American Chemical Service, Inc.	Local Grid Location of Well: ____ ft. ☐N. ☐S. ____ ft. ☐E. ☐W.	Well Name: SVE-11
Facility License, Permit or Monitoring No.	Grid Origin Location (Check if estimated: ☐) Lat. ° ' " Long. ° ' " or	Wis. Unique Well No / DNR Well Number
Facility ID: 3410-1812	St. Plane ____ ft. N, ____ ft. E. S/C/N	Date Well Installed: 08/30/2001
Type of Well: Well Code 57/sv	Section Location of Waste/Source: ____ 1/4 of ____ 1/4 of Sec. ____, T. ____ N. R. ____ ☐E ☐W	Well Installed By: (Person's Name and Firm): D. Morris
Distance Well Is From Waste/Source Boundary ft.	Location of Well Relative to Waste/Source: u ☐ Upgradient s ☐ Sidegradient d ☐ Downgradient n ☐ Not Known	Boart Longyear

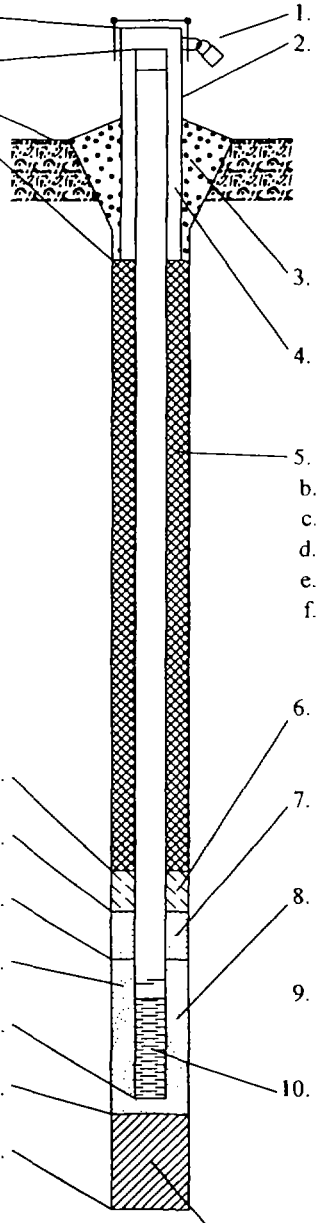

A. Protective pipe, top elevation ____ ft. MSL

B. Well casing, top elevation ____ ft. MSL

C. Land surface elevation ____ ft. MSL

D. Surface seal, bottom ____ ft. MSL or 0.0 ft.

12. USC classification of soil near screen:
GP ☐ GM ☐ GC ☐ GW ☐ SW ☐ SP ☐
SM ☐ SC ☐ ML ☐ MH ☐ CL ☐ CH ☐
Bedrock ☐

13. Sieve analysis attached? ☐ Yes ☐ No

14. Drilling method used: Rotary ☐ 50
Hollow Stem Auger ☒ 41
____ Other ☐ __

15. Drilling fluid used: Water ☐ 02 Air ☐ 01
Drilling Mud ☐ 03 None ☒ 99

16. Drilling additives used? ☐ Yes ☒ No

Describe ____

17. Source of water (attach analysis):
____

E. Bentonite seal, top ____ ft. MSL or 7.0 ft.

F. Fine sand, top ____ ft. MSL or na ft.

G. Filter pack, top ____ ft. MSL or 9.0 ft.

H. Screen joint, top ____ ft. MSL or 10.0 ft.

I. Well bottom ____ ft. MSL or 25.0 ft.

J. Filter pack, bottom ____ ft. MSL or 25.5 ft.

K. Borehole, bottom ____ ft. MSL or 25.5 ft.

L. Borehole, diameter 10.0 in.

M. O.D. well casing 4.50 in.

N. I.D. well casing 4.00 in.

1. Cap and lock? ☒ Yes ☐ No
2. Protective cover pipe:
a. Inside diameter: ____ in.
b. Length: ____ ft.
c. Material: Steel ☐ 04
na Other ☒ __
d. Additional protection? ☐ Yes ☒ No
If yes, describe: ____
3. Surface seal: Bentonite ☒ 30
Concrete ☐ 01
____ Other ☐
4. Material between well casing and protective pipe:
Bentonite ☐ 30
na Other ☒
5. Annular space seal: a. Granular Bentonite ☐ 33
b. ____ Lbs/gal mud weight . Bentonite-sand slurry ☐ 35
c. ____ Lbs/gal mud weight . . . Bentonite slurry ☐ 31
d. ____ % Bentonite . . . Bentonite-cement grout ☐ 50
e. ____ Ft^3 volume added for any of the above
f. How installed: Tremie ☐ 01
Tremie pumped ☐ 02
Gravity ☒ 08
6. Bentonite seal: a. Bentonite granules ☒ 33
b. ☐ 1/4 in. ☐ 3/8 in. ☐ 1/2 in. Bentonite pellets ☐ 32
c. ____ Other ☐
7. Fine sand material: Manufacturer, product name and mesh siz
a. na
b. Volume added ____ ft^3
8. Filter pack material: Manufacturer, product name and mesh s
a. #5 Global
b. Volume added ____ ft^3
9. Well casing: Flush threaded PVC schedule 40 ☐ 23
Flush threaded PVC schedule 80 ☐ 24
Stainless Steel Other ☒
10. Screen material: Stainless Steel
a. Screen Type: Factory cut ☐ 11
Continuous slot ☒ 01
____ Other ☐
b. Manufacturer Johnson
c. Slot size: 0.020 in.
d. Slotted length: 15.0 ft.
11. Backfill material (below filter pack): None ☒ 14
____ Other ☐

I hereby certify that the information on this form is true and correct to the best of my knowledge.

Signature

Firm: Boart Longyear Company
101 Alderson Street Schofield, WI 54476

Tel: 715-359-7090
Fax: 715-355-5715

SOIL BORING LOG INFORMATION

Form 4400-122 Rev. 5-97

Route To: Watershed/Wastewater ☐ Waste Management ☐ Remediation/Redevelopment ☐ Other ☐

Facility/Project Name	License/Permit/Monitoring Number	Boring Number
American Chemical Service, Inc.		SVE-12

Boring Drilled By (Firm name and name of crew chief)	Date Drilling Started	Date Drilling Completed	Drilling Method
Boart Longyear - R. Fischer	8/30/2001	8/30/2001	6 1/4 HSA

WI Unique Well No.	DNR Well ID No.	Common Well Name	Final Static Water Level	Surface Elevation	Borehole Diameter
		SVE-12			10.0 Inches

Boring Location or Local Grid Origin (Check if estimated: ☐)
State Plane S / C / N
1/4 of 1/4 of Section , T N, R
Lat. ° ' "
Long. ° ' "
Local Grid Location (If applicable)
Feet ☐ N ☐ S Feet ☐ E ☐ W

Facility ID	County	County Code	Civil Town/City/ or Village
3410-1812	Lake		Griffith, IN

Sample: Number and Type	Length Att. & Recovered (in)	Blow Counts	Depth In Feet	Soil/Rock Description And Geologic Origin For Each Major Unit	U S C S	Graphic Log	Well Diagram	PID/FID	Soil Properties: Compressive Strength	Moisture Content	Liquid Limit	Plasticity Index	P 200	RQD/ Comments
				EARTH DRILL										
			1											
			2											
			3											
			4											
			5											
			6											
			7											
			8											
			9											
			10											
			11											
			12											

I hereby certify that the information on this form is true and correct to the best of my knowledge.

Signature	Firm	
	Boart Longyear Company 101 Alderson Street Schofield, WI 54476	Tel: 715-[illegible] 7090 Fax: 715- 715

SOIL BORING LOG INFORMATION SUPPLEMENT

Form 4400-122A Rev. 5-97

Boring Number SVE-12 Use only as an attachment to Form 4400-122.

Sample Number and Type	Sample Length Att. & Recovered (in)	Blow Counts	Depth In Feet	Soil/Rock Description And Geologic Origin For Each Major Unit	U S C S	Graphic Log	Well Diagram	PID/FID	Soil Properties: Compressive Strength	Moisture Content	Liquid Limit	Plasticity Index	P 200	RQD/ Comments
			13											
			14											
			15											
			16											
			17											
			18											
1 SS	24 12	6 6 4 2	19	Brn Silty SAND						W				
			20											
				EOB 20.5' Well Set 20.0'										

Route To: Watershed/Wastewater ☐ Waste Management ☐ Remediation/Redevelopment ☐ Other ☐

MONITORING WELL CONSTRUCTION
Form 4400-113A Rev. 6-97

Facility/Project Name: American Chemical Service, Inc.	Local Grid Location of Well: ____ ft. ☐ N. ☐ S. ____ ft. ☐ E. ☐ W.	Well Name: SVE-12
Facility License, Permit or Monitoring No.	Grid Origin Location (Check if estimated: ☐) Lat. ___ ° ___ ' ___ " Long. ___ ° ___ ' ___ " or St. Plane ____ ft. N, ____ ft. E. S/C/N	Wis. Unique Well No. / DNR Well Number
Facility ID: 3410-1812	Section Location of Waste/Source: ____ 1/4 of ____ 1/4 of Sec. ____, T. ____ N, R. ____ ☐ E ☐ W	Date Well Installed: 08/30/2001
Type of Well: Well Code 57/sv	Location of Well Relative to Waste/Source: u ☐ Upgradient s ☐ Sidegradient d ☐ Downgradient n ☐ Not Known	Well Installed By: (Person's Name and Firm): R. Fischer, Boart Longyear
Distance Well Is From Waste/Source Boundary ____ ft.		

A. Protective pipe, top elevation ____ ft. MSL

B. Well casing, top elevation ____ ft. MSL

C. Land surface elevation ____ ft. MSL

D. Surface seal, bottom ____ ft. MSL or 0.0 ft.

12. USC classification of soil near screen:
GP ☐ GM ☐ GC ☐ GW ☐ SW ☐ SP ☐
SM ☐ SC ☐ ML ☐ MH ☐ CL ☐ CH ☐
Bedrock ☐

13. Sieve analysis attached? ☐ Yes ☐ No

14. Drilling method used: Rotary ☐ 5 0
Hollow Stem Auger ☒ 4 1
____ Other ☐ __

15. Drilling fluid used: Water ☐ 0 2 Air ☐ 0 1
Drilling Mud ☐ 0 3 None ☒ 9 9

16. Drilling additives used? ☐ Yes ☒ No

Describe ____

17. Source of water (attach analysis):
____

E. Bentonite seal, top ____ ft. MSL or 2.0 ft.

F. Fine sand, top ____ ft. MSL or na ft.

G. Filter pack, top ____ ft. MSL or 4.0 ft.

H. Screen joint, top ____ ft. MSL or 5.0 ft.

I. Well bottom ____ ft. MSL or 20.0 ft.

J. Filter pack, bottom ____ ft. MSL or 20.5 ft.

K. Borehole, bottom ____ ft. MSL or 20.5 ft.

L. Borehole, diameter 10.0 in.

M. O.D. well casing 4.50 in.

N. I.D. well casing 4.00 in.

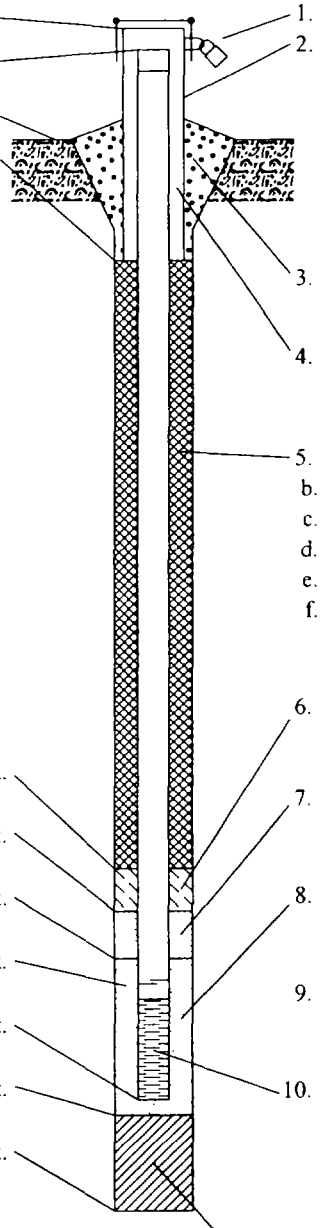

1. Cap and lock? ☒ Yes ☐ No
2. Protective cover pipe:
a. Inside diameter: ____ in.
b. Length: ____ ft.
c. Material: Steel ☐ 0 4
na Other ☒ __
d. Additional protection? ☐ Yes ☒ No
If yes, describe: ____
3. Surface seal: Bentonite ☒ 3 0
Concrete ☐ 0 1
____ Other ☐ __
4. Material between well casing and protective pipe:
Bentonite ☐ 3 0
na Other ☒ __
5. Annular space seal: a. Granular Bentonite ☐ 3 3
b. ____ Lbs/gal mud weight . Bentonite-sand slurry ☐ 3 5
c. ____ Lbs/gal mud weight . . . Bentonite slurry ☐ 3 1
d. ____ % Bentonite . . . Bentonite-cement grout ☐ 5 0
e. ____ Ft^3 volume added for any of the above
f. How installed: Tremie 1
Tremie pumped ☐ 0 2
Gravity ☒ 0 8
6. Bentonite seal: a. Bentonite granules ☒ 3 3
b. ☐ 1/4 in. ☐ 3/8 in. ☐ 1/2 in. Bentonite pellets ☐ 3 2
c. ____ Other ☐ __
7. Fine sand material: Manufacturer, product name and mesh size
a. na
b. Volume added ____ ft^3
8. Filter pack material: Manufacturer, product name and mesh size
a. #5 Global
b. Volume added ____ ft^3
9. Well casing: Flush threaded PVC schedule 40 ☐ 2 3
Flush threaded PVC schedule 80 ☐ 2 4
Stainless Steel Other ☒ __
10. Screen material: Stainless Steel
a. Screen Type: Factory cut ☐ 1 1
Continuous slot ☒ 0 1
____ Other ☐ __
b. Manufacturer Johnson
c. Slot size: 0.020 in.
d. Slotted length: 15.0 ft.
11. Backfill material (below filter pack): None ☒ 1 4
____ Other ☐ __

I hereby certify that the information on this form is true and correct to the best of my knowledge.

Signature	Firm: Boart Longyear Company, 101 Alderson Street Schofield, WI 54476	Tel: 715-3. .090 Fax: 715-355-5715

SOIL BORING LOG INFORMATION

Form 4400-122 Rev. 5-97

Route To: Watershed/Wastewater ☐ Waste Management ☐ Remediation/Redevelopment ☐ Other ☐

Facility/Project Name	License/Permit/Monitoring Number	Boring Number
American Chemical Service, Inc.		SVE-13

Boring Drilled By (Firm name and name of crew chief)	Date Drilling Started	Date Drilling Completed	Drilling Method
Boart Longyear - D. Morris	9/11/2001	9/11/2001	6 1/4 HSA

WI Unique Well No.	DNR Well ID No.	Common Well Name	Final Static Water Level	Surface Elevation	Borehole Diameter
		SVE-13			10.0 Inches

Boring Location or Local Grid Origin (Check if estimated: ☐)
State Plane S/C/N
1/4 of 1/4 of Section , T N, R
Lat. ° ' "
Long. ° ' "
Local Grid Location (If applicable)
☐ N ☐ E
Feet ☐ S Feet ☐ W

Facility ID	County	County Code	Civil Town/City/ or Village
3410-1812	Lake		Griffith, IN

Sample: Number and Type	Length Att. & Recovered (in)	Blow Counts	Depth In Feet	Soil/Rock Description And Geologic Origin For Each Major Unit	U S C S	Graphic Log	Well Diagram	PID/FID	Soil Properties: Compressive Strength	Moisture Content	Liquid Limit	Plasticity Index	P 200	RQD/ Comments
				EARTH DRILL										
			1											
			2											
			3											
			4											
			5											
			6											
			7											
			8											
			9											
			10											
			11											
			12											

I hereby certify that the information on this form is true and correct to the best of my knowledge.

Signature [signature] Firm Boart Longyear Company
101 Alderson Street Schofield, WI 54476
Tel: 715-359-7090
Fax: 715-355-5715

SOIL BORING LOG INFORMATION SUPPLEMENT

Form 4400-122A Rev. 5-97

Boring Number SVE-13 Use only as an attachment to Form 4400-122.

Sample Number and Type	Length Att. & Recovered (in)	Blow Counts	Depth In Feet	Soil/Rock Description And Geologic Origin For Each Major Unit	U S C S	Graphic Log	Well Diagram	PID/FID	Soil Properties: Compressive Strength	Moisture Content	Liquid Limit	Plasticity Index	P 200	RQD/ Comments
			13											
			14											
			15											
			16											
			17											
1 SS	24 6	5 7 9 10	18	Gry Silty SAND						W				
			19											
			20											
			21	EOB 21.0' Well Set 20.0'										

Route To: Watershed/Wastewater ☐ Waste Management ☐ Remediation/Redevelopment ☐ Other ☐

MONITORING WELL CONSTRUCTION

Form 4400-113A Rev. 6-97

Facility/Project Name: American Chemical Service, Inc.	Local Grid Location of Well: ____ ft. ☐N. ☐S. ____ ft. ☐E. ☐W.	Well Name: SVE-13
Facility License, Permit or Monitoring No.	Grid Origin Location (Check if estimated: ☐) Lat. ___° ___' ___" Long. ___° ___' ___" or	Wis. Unique Well No / DNR Well Number
Facility ID: 3410-1812	St. Plane ____ ft. N, ____ ft. E. S/C/N	Date Well Installed: 09/11/2001
Type of Well: Well Code 57/sv	Section Location of Waste/Source: ___ 1/4 of ___ 1/4 of Sec. ___, T. ___ N, R. ___ ☐E ☐W	Well Installed By: (Person's Name and Firm): D. Morris
Distance Well Is From Waste/Source Boundary ft.	Location of Well Relative to Waste/Source: u ☐ Upgradient s ☐ Sidegradient d ☐ Downgradient n ☐ Not Known	Boart Longyear

A. Protective pipe, top elevation ____ ft. MSL

B. Well casing, top elevation ____ ft. MSL

C. Land surface elevation ____ ft. MSL

D. Surface seal, bottom ____ ft. MSL or 0.0 ft.

12. USC classification of soil near screen:
GP ☐ GM☐ GC ☐ GW☐ SW☐ SP ☐
SM ☐ SC ☐ ML ☐ MH☐ CL ☐ CH ☐
Bedrock ☐

13. Sieve analysis attached? ☐ Yes ☐ No

14. Drilling method used: Rotary ☐ 5 0
Hollow Stem Auger ☒ 4 1
____ Other ☐ __

15. Drilling fluid used: Water ☐ 0 2 Air ☐ 0 1
Drilling Mud ☐ 0 3 None ☒ 9 9

16. Drilling additives used? ☐ Yes ☒ No

Describe ____

17. Source of water (attach analysis):

E. Bentonite seal, top ____ ft. MSL or 7.0 ft.

F. Fine sand, top ____ ft. MSL or na ft.

G. Filter pack, top ____ ft. MSL or 9.0 ft.

H. Screen joint, top ____ ft. MSL or 10.0 ft.

I. Well bottom ____ ft. MSL or 20.0 ft.

J. Filter pack, bottom ____ ft. MSL or 21.0 ft.

K. Borehole, bottom ____ ft. MSL or 21.0 ft.

L. Borehole, diameter 10.0 in.

M. O.D. well casing 4.50 in.

N. I.D. well casing 4.00 in.

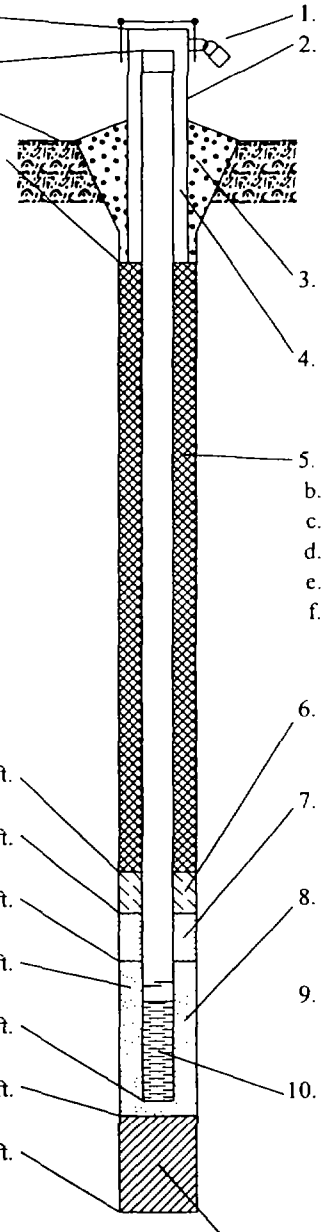

1. Cap and lock? ☐ Yes ☒ No

2. Protective cover pipe:
a. Inside diameter: ____ in.
b. Length: ____ ft.
c. Material: Steel ☐ 0 4
na Other ☒ __
d. Additional protection? ☐ Yes ☒ No
If yes, describe: ____

3. Surface seal: Bentonite ☐ 3 0
Concrete ☐ 0 1
____ Other ☐ __

4. Material between well casing and protective pipe:
Bentonite ☐ 3 0
na Other ☒ __

5. Annular space seal: a. Granular Bentonite ☐ 3 3
b. ____ Lbs/gal mud weight . Bentonite-sand slurry ☐ 3 5
c. ____ Lbs/gal mud weight . . . Bentonite slurry ☐ 3 1
d. ____ % Bentonite . . . Bentonite-cement grout ☐ 5 0
e. ____ Ft^3 volume added for any of the above
f. How installed: Tremie ☐ 0 1
Tremie pumped ☐ 0 2
Gravity ☒ 0 8

6. Bentonite seal: a. Bentonite granules ☐ 3 3
b. ☐ 1/4 in. ☒ 3/8 in. ☐ 1/2 in. Bentonite pellets ☒ 3 2
c. ____ Other ☐ __

7. Fine sand material: Manufacturer, product name and mesh siz
a. na __
b. Volume added ____ ft^3

8. Filter pack material: Manufacturer, product name and mesh si
a. #5 Global __
b. Volume added ____ ft^3

9. Well casing: Flush threaded PVC schedule 40 ☐ 2 3
Flush threaded PVC schedule 80 ☐ 2 4
Stainless Steel Other ☒ __

10. Screen material: Stainless Steel __
a. Screen Type: Factory cut ☐ 1 1
Continuous slot ☒ 0 1
____ Other ☐ __
b. Manufacturer Johnson
c. Slot size: 0.020 in.
d. Slotted length: 10.0 ft.

11. Backfill material (below filter pack): None ☒ 1 4
____ Other ☐ __

'hereby certify that the information on this form is true and correct to the best of my knowledge.

gnature

Firm: Boart Longyear Company
101 Alderson Street Schofield, WI 54476

Tel: 715-359-7090
Fax: 715-355-5715

SOIL BORING LOG INFORMATION

Form 4400-122 Rev. 5-97

Route To: Watershed/Wastewater ☐ Waste Management ☐ Remediation/Redevelopment ☐ Other ☐

Facility/Project Name	License/Permit/Monitoring Number	Boring Number
American Chemical Service, Inc.		SVE-14

Boring Drilled By (Firm name and name of crew chief)	Date Drilling Started	Date Drilling Completed	Drilling Method
Boart Longyear - D. Morris	9/11/2001	9/11/2001	6 1/4 HSA

WI Unique Well No.	DNR Well ID No.	Common Well Name	Final Static Water Level	Surface Elevation	Borehole Diameter
		SVE-14			10.0 Inches

Boring Location or Local Grid Origin (Check if estimated: ☐)
State Plane S / C / N
1/4 of 1/4 of Section , T N, R
Lat. ° ' "
Long. ° ' "
Local Grid Location (If applicable)
Feet ☐ N ☐ S Feet ☐ E ☐ W

Facility ID	County	County Code	Civil Town/City/ or Village
3410-1812	Lake		Griffith, IN

Sample: Number and Type	Length Att. & Recovered (in)	Blow Counts	Depth In Feet	Soil/Rock Description *And Geologic Origin For* Each Major Unit	U S C S	Graphic Log	Well Diagram	PID/FID	Soil Properties: Compressive Strength	Moisture Content	Liquid Limit	Plasticity Index	P 200	RQD/ Comments
				EARTH DRILL										
			1											
			2											
			3											
			4											
			5											
			6											
			7											
			8											
			9											
			10											
			11											
			12											

I hereby certify that the information on this form is true and correct to the best of my knowledge.

Signature

Firm Boart Longyear Company
101 Alderson Street Schofield, WI 54476
Tel: 715-3[illegible] 7090
Fax: 715-[illegible] 715

SOIL BORING LOG INFORMATION SUPPLEMENT

Form 4400-122A Rev. 5-97

oring Number SVE-14 Use only as an attachment to Form 4400-122.

Sample Number and Type	Sample Length Att. & Recovered (in)	Blow Counts	Depth In Feet	Soil/Rock Description And Geologic Origin For Each Major Unit	U S C S	Graphic Log	Well Diagram	PID/FID	Soil Properties: Compressive Strength	Moisture Content	Liquid Limit	Plasticity Index	P 200	RQD/ Comments
			13											
			14											
			15											
			16											
			17											
1 SS	24 3	5 7 9 9	18	Gry Silty SAND						W				
			19											
			20											
			21	EOB 21.0' Well Set 20.0'										

Route To: Watershed/Wastewater ☐ Remediation/Redevelopment ☐ Waste Management ☐ Other ☐

MONITORING WELL CONSTRUCTION

Form 4400-113A Rev. 6-97

Facility/Project Name American Chemical Service, Inc.	Local Grid Location of Well ____ ft. ☐ N. ☐ S. ____ ft. ☐ E. ☐ W.	Well Name SVE-14
Facility License, Permit or Monitoring No.	Grid Origin Location (Check if estimated: ☐) Lat. ___ ° ___ ' ___ " Long. ___ ° ___ ' ___ " or	Wis. Unique Well No / DNR Well Number
Facility ID 3410-1812	St. Plane ____ ft. N, ____ ft. E. S/C/N	Date Well Installed 09/11/2001
Type of Well Well Code 57/sv	Section Location of Waste/Source ____ 1/4 of ____ 1/4 of Sec. ____ T. ____ N, R. ____ ☐ E ☐ W	Well Installed By: (Person's Name and Firm D. Morris
Distance Well Is From Waste/Source Boundary ft.	Location of Well Relative to Waste/Source u ☐ Upgradient s ☐ Sidegradient d ☐ Downgradient n ☐ Not Known	Boart Longyear

A. Protective pipe, top elevation ____ ft. MSL

B. Well casing, top elevation ____ ft. MSL

C. Land surface elevation ____ ft. MSL

D. Surface seal, bottom ____ ft. MSL or 0.0 ft.

12. USC classification of soil near screen:
GP ☐ GM ☐ GC ☐ GW ☐ SW ☐ SP ☐
SM ☐ SC ☐ ML ☐ MH ☐ CL ☐ CH ☐
Bedrock ☐

13. Sieve analysis attached? ☐ Yes ☐ No

14. Drilling method used: Rotary ☐ 5 0
Hollow Stem Auger ☒ 4 1
____ Other ☐ __

15. Drilling fluid used: Water ☐ 0 2 Air ☐ 0 1
Drilling Mud ☐ 0 3 None ☒ 9 9

16. Drilling additives used? ☐ Yes ☒ No

Describe ____

17. Source of water (attach analysis):

____

E. Bentonite seal, top ____ ft. MSL or 7.0 ft.

F. Fine sand, top ____ ft. MSL or na ft.

G. Filter pack, top ____ ft. MSL or 9.0 ft.

H. Screen joint, top ____ ft. MSL or 10.0 ft.

I. Well bottom ____ ft. MSL or 20.0 ft.

J. Filter pack, bottom ____ ft. MSL or 21.0 ft.

K. Borehole, bottom ____ ft. MSL or 21.0 ft.

L. Borehole, diameter 10.0 in.

M. O.D. well casing 4.50 in.

N. I.D. well casing 4.00 in.

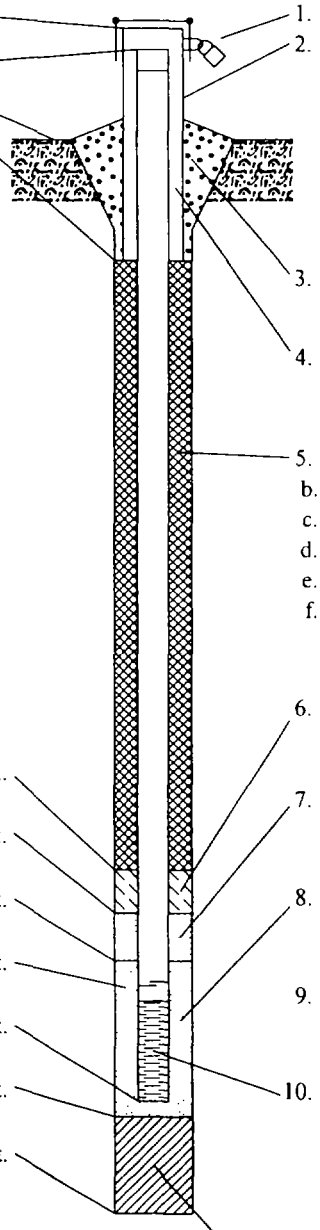

1. Cap and lock? ☒ Yes ☐ No
2. Protective cover pipe:
a. Inside diameter: ____ in.
b. Length: ____ ft.
c. Material: Steel ☐ 0 4
na Other ☒ __
d. Additional protection? ☐ Yes ☒ No
If yes, describe: ____
3. Surface seal: Bentonite ☒ 3 0
Concrete ☐ 0 1
____ Other ☐ __
4. Material between well casing and protective pipe:
Bentonite ☐ 3 0
na Other ☒ __
5. Annular space seal: a. Granular Bentonite ☐ 3 3
b. ____ Lbs/gal mud weight . Bentonite-sand slurry ☐ 3 5
c. ____ Lbs/gal mud weight . . . Bentonite slurry ☐ 3 1
d. ____ % Bentonite . . . Bentonite-cement grout ☐ 5 0
e. ____ Ft^3 volume added for any of the above
f. How installed: Tremie 1
Tremie pumped ☐ 0 2
Gravity ☒ 0 8
6. Bentonite seal: a. Bentonite granules ☐ 3 3
b. ☐ 1/4 in. ☒ 3/8 in. ☐ 1/2 in. Bentonite pellets ☒ 3 2
c. ____ Other ☐ __
7. Fine sand material: Manufacturer, product name and mesh siz
a. na __
b. Volume added ____ ft^3
8. Filter pack material: Manufacturer, product name and mesh si
a. #5 Global __
b. Volume added ____ ft^3
9. Well casing: Flush threaded PVC schedule 40 ☐ 2 3
Flush threaded PVC schedule 80 ☐ 2 4
Stainless Steel Other ☒
10. Screen material: Stainless Steel
a. Screen Type: Factory cut ☐ 1 1
Continuous slot ☒ 0 1
____ Other ☐
b. Manufacturer Johnson
c. Slot size: 0.020 in.
d. Slotted length: 10.0 ft.
11. Backfill material (below filter pack): None ☒ 1 4
____ Other ☐

I hereby certify that the information on this form is true and correct to the best of my knowledge.

Signature

Firm Boart Longyear Company
101 Alderson Street Schofield, WI 54476

Tel: 715-3 090
Fax: 715-355-5715

SOIL BORING LOG INFORMATION

Form 4400-122 Rev. 5-97

Route To: Watershed/Wastewater ☐ Waste Management ☐ Remediation/Redevelopment ☐ Other ☐

Facility/Project Name	License/Permit/Monitoring Number	Boring Number
American Chemical Service, Inc.		SVE-15

Boring Drilled By (Firm name and name of crew chief)	Date Drilling Started	Date Drilling Completed	Drilling Method
Boart Longyear - R. Fischer	9/11/2001	9/11/2001	6 1/4 HSA

WI Unique Well No.	DNR Well ID No.	Common Well Name	Final Static Water Level	Surface Elevation	Borehole Diameter
		SVE-15			10.0 Inches

Boring Location or Local Grid Origin (Check if estimated. ☐)
State Plane S/C/N
1/4 of 1/4 of Section , T N, R
Lat. ° ' "
Long. ° ' "
Local Grid Location (If applicable)
Feet ☐ N ☐ S Feet ☐ E ☐ W

Facility ID	County	County Code	Civil Town/City/ or Village
3410-1812	Lake		Griffith, IN

Sample Number and Type	Length Att. & Recovered (in)	Blow Counts	Depth In Feet	Soil/Rock Description And Geologic Origin For Each Major Unit	U S C S	Graphic Log	Well Diagram	PID/FID	Soil Properties: Compressive Strength	Moisture Content	Liquid Limit	Plasticity Index	P 200	RQD/ Comments
				EARTH DRILL										
			1											
			2											
			3											
			4											
			5											
			6											
			7											
			8											
			9											
			10											
			11											
			12											

I hereby certify that the information on this form is true and correct to the best of my knowledge.

Signature

Firm Boart Longyear Company
101 Alderson Street Schofield, WI 54476
Tel: 715-359-7090
Fax: 715-355-5715

SOIL BORING LOG INFORMATION SUPPLEMENT

Form 4400-122A Rev. 5-97

Boring Number SVE-15 Use only as an attachment to Form 4400-122.

Sample Number and Type	Sample Length Att. & Recovered (in)	Blow Counts	Depth In Feet	Soil/Rock Description And Geologic Origin For Each Major Unit	U S C S	Graphic Log	Well Diagram	PID/FID	Soil Properties: Compressive Strength	Moisture Content	Liquid Limit	Plasticity Index	P 200	RQD/ Comments
			13											
			14											
			15											
			16											
			17											
1 SS	24 10	6 5 7 9	18 19 20	Drk Gry Silty SAND						W				
			21	EOB 21.0' Well Set 20.0'										

Route To: Watershed/Wastewater ☐ Waste Management ☐ Remediation/Redevelopment ☐ Other ☐

MONITORING WELL CONSTRUCTION
Form 4400-113A Rev. 6-97

Facility/Project Name: American Chemical Service, Inc.	Local Grid Location of Well: ____ ft. ☐N. ☐S. ____ ft. ☐E. ☐W.	Well Name: SVE-15
Facility License, Permit or Monitoring No.	Grid Origin Location (Check if estimated: ☐) Lat. ° ' " Long. ° ' " or	Wis. Unique Well No. / DNR Well Number
Facility ID: 3410-1812	St. Plane ____ ft. N, ____ ft. E. S/C/N	Date Well Installed: 09/11/2001
Type of Well: Well Code 57/sv	Section Location of Waste/Source: ____ 1/4 of ____ 1/4 of Sec. ____, T. ____ N, R. ____ ☐E ☐W	Well Installed By: (Person's Name and Firm) R. Fischer
Distance Well Is From Waste/Source Boundary ft.	Location of Well Relative to Waste/Source: u ☐ Upgradient s ☐ Sidegradient d ☐ Downgradient n ☐ Not Known	Boart Longyear

A. Protective pipe, top elevation ____ ft. MSL

B. Well casing, top elevation ____ ft. MSL

C. Land surface elevation ____ ft. MSL

D. Surface seal, bottom ____ ft. MSL or 0.0 ft.

12. USC classification of soil near screen:
GP ☐ GM ☐ GC ☐ GW ☐ SW ☐ SP ☐
SM ☐ SC ☐ ML ☐ MH ☐ CL ☐ CH ☐
Bedrock ☐

13. Sieve analysis attached? ☐ Yes ☐ No

14. Drilling method used: Rotary ☐ 5 0
Hollow Stem Auger ☒ 4 1
____ Other ☐ __

15. Drilling fluid used: Water ☐ 0 2 Air ☐ 0 1
Drilling Mud ☐ 0 3 None ☒ 9 9

16. Drilling additives used? ☐ Yes ☒ No

Describe ____

17. Source of water (attach analysis):
____

E. Bentonite seal, top ____ ft. MSL or 2.0 ft.

F. Fine sand, top ____ ft. MSL or na ft.

G. Filter pack, top ____ ft. MSL or 4.0 ft.

H. Screen joint, top ____ ft. MSL or 5.0 ft.

I. Well bottom ____ ft. MSL or 20.0 ft.

J. Filter pack, bottom ____ ft. MSL or 20.0 ft.

K. Borehole, bottom ____ ft. MSL or 21.0 ft.

L. Borehole, diameter 10.0 in.

M. O.D. well casing 4.50 in.

N. I.D. well casing 4.00 in.

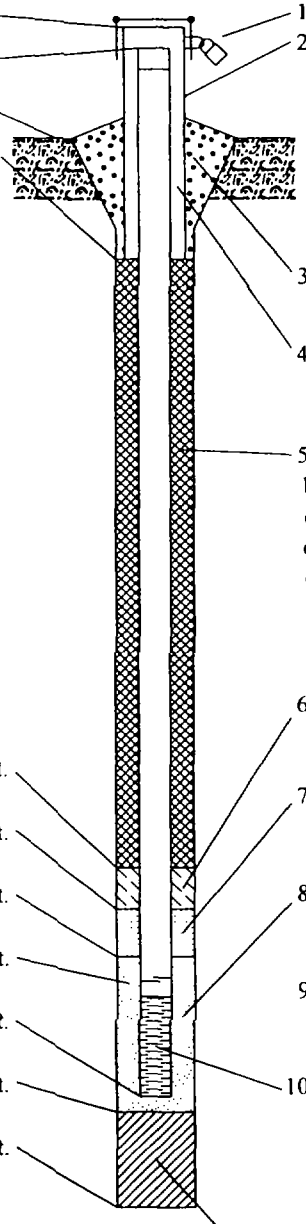

1. Cap and lock? ☒ Yes ☐ No
2. Protective cover pipe:
a. Inside diameter: ____ in.
b. Length: ____ ft.
c. Material: Steel ☐ 0 4
na Other ☒ __
d. Additional protection? ☐ Yes ☒ No
If yes, describe: ____
3. Surface seal: Bentonite ☒ 3 0
Concrete ☐ 0 1
____ Other ☐ __
4. Material between well casing and protective pipe:
Bentonite ☐ 3 0
na Other ☒ __
5. Annular space seal: a. Granular Bentonite ☐ 3 3
b. ____ Lbs/gal mud weight . Bentonite-sand slurry ☐ 3 5
c. ____ Lbs/gal mud weight . . . Bentonite slurry ☐ 3 1
d. ____ % Bentonite . . . Bentonite-cement grout ☐ 5 0
e. ____ Ft^3 volume added for any of the above
f. How installed: Tremie ☐ 0 1
Tremie pumped ☐ 0 2
Gravity ☒ 0 8
6. Bentonite seal: a. Bentonite granules ☐ 3 3
b. ☐ 1/4 in. ☒ 3/8 in. ☐ 1/2 in. Bentonite pellets ☒ 3 2
c. ____ Other ☐ __
7. Fine sand material: Manufacturer, product name and mesh siz
a. na __
b. Volume added ____ ft^3
8. Filter pack material: Manufacturer, product name and mesh si
a. #5 Global
b. Volume added ____ ft^3
9. Well casing: Flush threaded PVC schedule 40 ☐ 2 3
Flush threaded PVC schedule 80 ☐ 2 4
Stainless Steel Other ☒
10. Screen material: Stainless Steel
a. Screen Type: Factory cut ☐ 1 1
Continuous slot ☒ 0 1
____ Other ☐
b. Manufacturer Johnson
c. Slot size: 0.020 in.
d. Slotted length: 15.0 ft.
11. Backfill material (below filter pack): None ☒ 1 4
____ Other ☐

ereby certify that the information on this form is true and correct to the best of my knowledge.

nature	Firm: Boart Longyear Company 101 Alderson Street Schofield, WI 54476	Tel: 715-359-7090 Fax: 715-355-5715

SOIL BORING LOG INFORMATION

Form 4400-122 Rev. 5-97

Route To: Watershed/Wastewater ☐ Waste Management ☐ Remediation/Redevelopment ☐ Other ☐

Facility/Project Name	License/Permit/Monitoring Number	Boring Number
American Chemical Service, Inc.		SVE-16

Boring Drilled By (Firm name and name of crew chief)	Date Drilling Started	Date Drilling Completed	Drilling Method
Boart Longyear - D. Morris	9/11/2001	9/11/2001	6 1/4 HSA

WI Unique Well No.	DNR Well ID No.	Common Well Name	Final Static Water Level	Surface Elevation	Borehole Diameter
		SVE-16			10.0 Inches

Boring Location or Local Grid Origin (Check if estimated: ☐)
State Plane S / C / N
1/4 of 1/4 of Section , T N, R
Lat. ° ' "
Long. ° ' "
Local Grid Location (If applicable)
Feet ☐ N ☐ S Feet ☐ E ☐ W

Facility ID	County	County Code	Civil Town/City/ or Village
3410-1812	Lake		Griffith, IN

Sample Number and Type	Length Att. & Recovered (in)	Blow Counts	Depth In Feet	Soil/Rock Description And Geologic Origin For Each Major Unit	U S C S	Graphic Log	Well Diagram	PID/FID	Soil Properties: Compressive Strength	Moisture Content	Liquid Limit	Plasticity Index	P 200	RQD/ Comments
				EARTH DRILL										
			1											
			2											
			3											
			4											
			5											
			6											
			7											
			8											
			9											
			10											
			11											
			12											

I hereby certify that the information on this form is true and correct to the best of my knowledge.

Signature

Firm Boart Longyear Company
101 Alderson Street Schofield, WI 54476
Tel: 715-[illegible] 7090
Fax: 715-[illegible] 715

SOIL BORING LOG INFORMATION SUPPLEMENT

Form 4400-122A Rev. 5-97

oring Number SVE-16 Use only as an attachment to Form 4400-122.

Sample Number and Type	Sample Length Att. & Recovered (in)	Blow Counts	Depth In Feet	Soil/Rock Description And Geologic Origin For Each Major Unit	U S C S	Graphic Log	Well Diagram	PID/FID	Soil Properties: Compressive Strength	Moisture Content	Liquid Limit	Plasticity Index	P 200	RQD/ Comments
			13											
			14											
			15											
			16											
			17											
1 SS	24 20	6 7 9 11	18 19 20	Drk Gry Silty SAND w/Debris						W				
				EOB 20.5' Well Set 20.0'										

Route To: Watershed/Wastewater ☐ Waste Management ☐ Remediation/Redevelopment ☐ Other ☐

MONITORING WELL CONSTRUCTION
Form 4400-113A Rev. 6-97

Facility/Project Name: American Chemical Service, Inc.	Local Grid Location of Well: ____ ft. ☐ N. ☐ S. ____ ft. ☐ E. ☐ W.	Well Name: SVE-16
Facility License, Permit or Monitoring No.	Grid Origin Location (Check if estimated: ☐) Lat. ___ ° ___ ' ___ " Long. ___ ° ___ ' ___ " or	Wis. Unique Well No / DNR Well Number
Facility ID: 3410-1812	St. Plane ____ ft. N, ____ ft. E. S/C/N	Date Well Installed: 09/11/2001
Type of Well: Well Code 57/sv	Section Location of Waste/Source: ___ 1/4 of ___ 1/4 of Sec. ___ T. ___ N, R. ___ ☐ E ☐ W	Well Installed By: (Person's Name and Firm): D. Morris
Distance Well Is From Waste/Source Boundary ___ ft.	Location of Well Relative to Waste/Source: u ☐ Upgradient s ☐ Sidegradient d ☐ Downgradient n ☐ Not Known	Boart Longyear

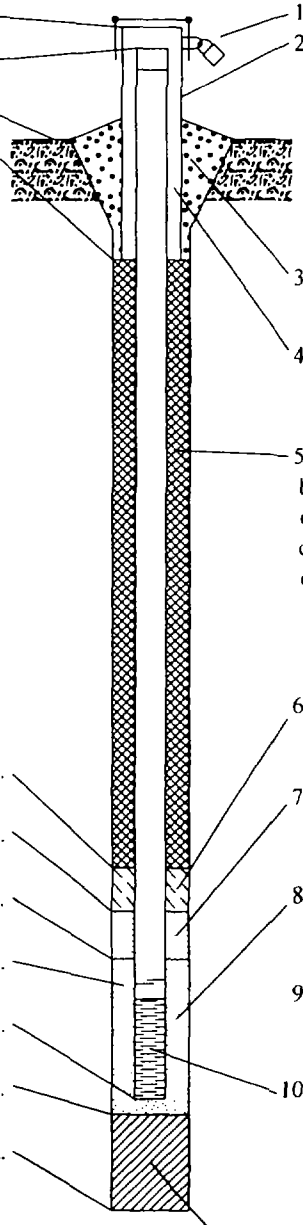

A. Protective pipe, top elevation ____ ft. MSL

B. Well casing, top elevation ____ ft. MSL

C. Land surface elevation ____ ft. MSL

D. Surface seal, bottom ____ ft. MSL or 0.0 ft.

12. USC classification of soil near screen:
GP ☐ GM ☐ GC ☐ GW ☐ SW ☐ SP ☐
SM ☐ SC ☐ ML ☐ MH ☐ CL ☐ CH ☐
Bedrock ☐

13. Sieve analysis attached? ☐ Yes ☐ No

14. Drilling method used: Rotary ☐ 5 0
Hollow Stem Auger ☒ 4 1
____ Other ☐ __

15. Drilling fluid used: Water ☐ 0 2 Air ☐ 0 1
Drilling Mud ☐ 0 3 None ☒ 9 9

16. Drilling additives used? ☐ Yes ☒ No

Describe ____

17. Source of water (attach analysis):
____

E. Bentonite seal, top ____ ft. MSL or 2.0 ft.

F. Fine sand, top ____ ft. MSL or na ft.

G. Filter pack, top ____ ft. MSL or 4.0 ft.

H. Screen joint, top ____ ft. MSL or 5.0 ft.

I. Well bottom ____ ft. MSL or 20.0 ft.

J. Filter pack, bottom ____ ft. MSL or 20.5 ft.

K. Borehole, bottom ____ ft. MSL or 20.5 ft.

L. Borehole, diameter 10.0 in.

M. O.D. well casing 4.50 in.

N. I.D. well casing 4.00 in.

1. Cap and lock? ☐ Yes ☒ No

2. Protective cover pipe:
a. Inside diameter: ____ in.
b. Length: ____ ft.
c. Material: Steel ☐ 0 4
na Other ☒ __
d. Additional protection? ☐ Yes ☒ No
If yes, describe: ____

3. Surface seal: Bentonite ☒ 3 0
Concrete ☐ 0 1
____ Other ☐ __

4. Material between well casing and protective pipe:
Bentonite ☐ 3 0
na Other ☒ __

5. Annular space seal: a. Granular Bentonite ☐ 3 3
b. ____ Lbs/gal mud weight . Bentonite-sand slurry ☐ 3 5
c. ____ Lbs/gal mud weight . . . Bentonite slurry ☐ 3 1
d. ____ % Bentonite . . . Bentonite-cement grout ☐ 5 0
e. ____ Ft^3 volume added for any of the above
f. How installed: Tremie ☐
Tremie pumped ☐ 0 2
Gravity ☒ 0 8

6. Bentonite seal: a. Bentonite granules ☒ 3 3
b. ☐ 1/4 in. ☐ 3/8 in. ☐ 1/2 in. Bentonite pellets ☐ 3 2
c. ____ Other ☐ __

7. Fine sand material: Manufacturer, product name and mesh size
a. na
b. Volume added ____ ft^3

8. Filter pack material: Manufacturer, product name and mesh size
a. #5 Global
b. Volume added ____ ft^3

9. Well casing: Flush threaded PVC schedule 40 ☐ 2 3
Flush threaded PVC schedule 80 ☐ 2 4
Stainless Steel Other ☒ __

10. Screen material: Stainless Steel
a. Screen Type: Factory cut ☐ 1 1
Continuous slot ☒ 0 1
____ Other ☐ __
b. Manufacturer Johnson
c. Slot size: 0.020 in.
d. Slotted length: 15.0 ft.

11. Backfill material (below filter pack): None ☒ 1 4
____ Other ☐ __

I hereby certify that the information on this form is true and correct to the best of my knowledge.

Signature [signature] Firm Boart Longyear Company
101 Alderson Street Schofield, WI 54476
Tel: 715-3[illegible]090
Fax: 715-355-5715

SOIL BORING LOG INFORMATION

Form 4400-122 Rev. 5-97

Route To: Watershed/Wastewater ☐ Waste Management ☐ Remediation/Redevelopment ☐ Other ☐

Facility/Project Name	License/Permit/Monitoring Number	Boring Number
American Chemical Service, Inc.		SVE-17

Boring Drilled By (Firm name and name of crew chief)	Date Drilling Started	Date Drilling Completed	Drilling Method
Boart Longyear - R. Fischer	9/11/2001	9/11/2001	6 1/4 HSA

WI Unique Well No.	DNR Well ID No.	Common Well Name	Final Static Water Level	Surface Elevation	Borehole Diameter
		SVE-17			10.0 Inches

Boring Location or Local Grid Origin (Check if estimated: ☐)
State Plane S / C / N
1/4 of 1/4 of Section , T N, R
Lat. ° ' "
Long. ° ' "
Local Grid Location (If applicable)
Feet ☐ N ☐ S Feet ☐ E ☐ W

Facility ID	County	County Code	Civil Town/City/ or Village
3410-1812	Lake		Griffith, IN

Sample Number and Type	Length Att. & Recovered (in)	Blow Counts	Depth In Feet	Soil/Rock Description And Geologic Origin For Each Major Unit	U S C S	Graphic Log	Well Diagram	PID/FID	Soil Properties: Compressive Strength	Moisture Content	Liquid Limit	Plasticity Index	P 200	RQD/ Comments
				EARTH DRILL										
			1											
			2											
			3											
			4											
			5											
			6											
			7											
			8											
			9											
			10											
			11											
			12											

I hereby certify that the information on this form is true and correct to the best of my knowledge.

Signature

Firm Boart Longyear Company
101 Alderson Street Schofield, WI 54476
Tel: 715-359-7090
Fax: 715-355-5715

SOIL BORING LOG INFORMATION SUPPLEMENT

Form 4400-122A Rev. 5-97

Boring Number SVE-17 Use only as an attachment to Form 4400-122.

Sample Number and Type	Sample Length Att. & Recovered (in)	Blow Counts	Depth In Feet	Soil/Rock Description And Geologic Origin For Each Major Unit	U S C S	Graphic Log	Well Diagram	PID/FID	Soil Properties: Compressive Strength	Moisture Content	Liquid Limit	Plasticity Index	P 200	RQD/ Comments
			13											
			14											
			15											
			16											
			17											
1 SS	24 20	1 7 9 10	18	Gry Clayey SAND						W				
			19	Gry Silty SAND										
			20											
				EOB 20.5' Well Set 20.0'										

Route To: Watershed/Wastewater ☐ Waste Management ☐ Remediation/Redevelopment ☐ Other ☐

MONITORING WELL CONSTRUCTION
Form 4400-113A Rev. 6-97

Facility/Project Name American Chemical Service, Inc.	Local Grid Location of Well ☐ N. ☐ S. _____ ft. ☐ E. ☐ W. _____ ft.	Well Name SVE-17
F[illegible]ty License, Permit or Monitoring No.	Grid Origin Location (Check if estimated: ☐) Lat. ° ' " Long. ° ' " or	Wis. Unique Well No / DNR Well Number
Facility ID 3410-1812	St. Plane _____ ft. N, _____ ft. E. S/C/N	Date Well Installed 09/11/2001
Type of Well Well Code 57/sv	Section Location of Waste/Source ____ 1/4 of ____ 1/4 of Sec. ____, T. ____ N, R. ____ ☐ E ☐ W	Well Installed By: (Person's Name and Firm J. Berthold
Distance Well Is From Waste/Source Boundary ft.	Location of Well Relative to Waste/Source u ☐ Upgradient s ☐ Sidegradient d ☐ Downgradient n ☐ Not Known	Boart Longyear

A. Protective pipe, top elevation _____ ft. MSL

B. Well casing, top elevation _____ ft. MSL

C. Land surface elevation _____ ft. MSL

D. Surface seal, bottom _____ ft. MSL or 0.0 ft.

12. USC classification of soil near screen:
GP ☐ GM☐ GC ☐ GW☐ SW☐ SP ☐
SM☐ SC ☐ ML☐ MH☐ CL ☐ CH ☐
Bedrock☐

13. Sieve analysis attached? ☐ Yes ☐ No

14. Drilling method used: Rotary ☐ 5 0
Hollow Stem Auger ☒ 4 1
_____ Other ☐ _ _

15. Drilling fluid used: Water ☐ 0 2 Air ☐ 0 1
Drilling Mud ☐ 0 3 None ☒ 9 9

16. Drilling additives used? ☐ Yes ☒ No

Describe_____

17. Source of water (attach analysis):
_____

E. Bentonite seal, top _____ ft. MSL or 2.0 ft.

F. Fine sand, top _____ ft. MSL or na ft.

G. Filter pack, top _____ ft. MSL or 4.0 ft.

H. Screen joint, top _____ ft. MSL or 5.0 ft.

I. Well bottom _____ ft. MSL or 20.0 ft.

J. Filter pack, bottom _____ ft. MSL or 20.5 ft.

K. Borehole, bottom _____ ft. MSL or 20.5 ft.

L. Borehole, diameter 10.0 in.

M. O.D. well casing 4.50 in.

N. I.D. well casing 4.00 in.

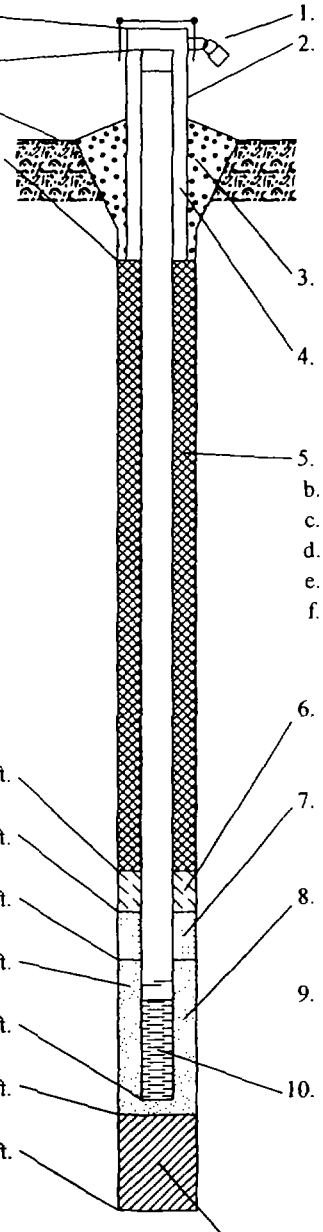

1. Cap and lock? ☐ Yes ☒ No
2. Protective cover pipe:
a. Inside diameter: _____ in.
b. Length: _____ ft.
c. Material: Steel ☐ 0 4
na Other ☒ _ _
d. Additional protection? ☐ Yes ☒ No
If yes, describe:_____
3. Surface seal: Bentonite ☒ 3 0
Concrete ☐ 0 1
_____ Other ☐ _ _
4. Material between well casing and protective pipe:
Bentonite ☐ 3 0
na Other ☒ _ _
5. Annular space seal: a. Granular Bentonite ☐ 3 3
b. _____Lbs/gal mud weight . Bentonite-sand slurry ☐ 3 5
c. _____Lbs/gal mud weight . . . Bentonite slurry ☐ 3 1
d. _____% Bentonite . . . Bentonite-cement grout ☐ 5 0
e. _____Ft^3 volume added for any of the above
f. How installed: Tremie ☐ 0 1
Tremie pumped ☐ 0 2
Gravity ☒ 0 8
6. Bentonite seal: a. Bentonite granules ☒ 3 3
b. ☐ 1/4 in. ☐ 3/8 in. ☐ 1/2 in. Bentonite pellets ☐ 3 2
c._____ Other ☐ _ _
7. Fine sand material: Manufacturer, product name and mesh siz
a. na _ _
b. Volume added _____ ft^3
8. Filter pack material: Manufacturer, product name and mesh si
a. #5 Global
b. Volume added _____ ft^3
9. Well casing: Flush threaded PVC schedule 40 ☐ 2 3
Flush threaded PVC schedule 80 ☐ 2 4
Stainless Steel Other ☒
10. Screen material: Stainless Steel
a. Screen Type: Factory cut ☐ 1 1
Continuous slot ☒ 0 1
_____ Other ☐
b. Manufacturer Johnson
c. Slot size: 0.020 in.
d. Slotted length: 15.0 ft.
11. Backfill material (below filter pack): None ☒ 1 4
_____ Other ☐

[illegible]ereby certify that the information on this form is true and correct to the best of my knowledge.

[illegible]gnature [signature] Firm Boart Longyear Company
101 Alderson Street Schofield, WI 54476
Tel: 715-359-7090
Fax: 715-355-5715

SOIL BORING LOG INFORMATION

Form 4400-122 Rev. 5-97

Route To: Watershed/Wastewater ☐ Waste Management ☐ Remediation/Redevelopment ☐ Other ☐

Facility/Project Name	License/Permit/Monitoring Number	Boring Number
American Chemical Service, Inc.		SVE-18

Boring Drilled By (Firm name and name of crew chief)	Date Drilling Started	Date Drilling Completed	Drilling Method
Boart Longyear - J. Berthold	9/6/2001	9/6/2001	6 1/4 HSA

WI Unique Well No.	DNR Well ID No	Common Well Name	Final Static Water Level	Surface Elevation	Borehole Diameter
		SVE-18			10.0 Inches

Boring Location or Local Grid Origin (Check if estimated: ☐)
State Plane S / C / N
1/4 of 1/4 of Section , T N, R
Lat. ° ' "
Long. ° ' "
Local Grid Location (If applicable)
Feet ☐ N ☐ S Feet ☐ E ☐ W

Facility ID	County	County Code	Civil Town/City/ or Village
3410-1812	Lake		Griffith, IN

Sample: Number and Type	Length Att. & Recovered (in)	Blow Counts	Depth In Feet	Soil/Rock Description And Geologic Origin For Each Major Unit	U S C S	Graphic Log	Well Diagram	PID/FID	Soil Properties: Compressive Strength	Moisture Content	Liquid Limit	Plasticity Index	P 200	RQD/ Comments
				EARTH DRILL										
			1											
			2											
			3											
			4											
			5											
			6											
			7											
			8											
			9											
			10											
			11											
			12											

I hereby certify that the information on this form is true and correct to the best of my knowledge.

Signature

Firm Boart Longyear Company
101 Alderson Street Schofield, WI 54476
Tel: 715-? 7090
Fax: 715-. 715

SOIL BORING LOG INFORMATION SUPPLEMENT

Form 4400-122A Rev. 5-97

oring Number SVE-18 Use only as an attachment to Form 4400-122.

Sample Number and Type	Sample Length Att. & Recovered (in)	Blow Counts	Depth In Feet	Soil/Rock Description And Geologic Origin For Each Major Unit	U S C S	Graphic Log	Well Diagram	PID/FID	Soil Properties: Compressive Strength	Moisture Content	Liquid Limit	Plasticity Index	P 200	RQD/ Comments
			13											
			14											
			15											
			16											
			17											
1 SS	24 20	2 3 4 5	18 19 20	Blk Silty SAND						W				
				EOB 20.5' Well Set 20.0'										

Route To: Watershed/Wastewater ☐ Waste Management ☐ Remediation/Redevelopment ☐ Other ☐

MONITORING WELL CONSTRUCTION
Form 4400-113A Rev. 6-97

Facility/Project Name: American Chemical Service, Inc.	Local Grid Location of Well: ____ ft. ☐ N. ☐ S. ____ ft. ☐ E. ☐ W.	Well Name: SVE-18
Facility License, Permit or Monitoring No.	Grid Origin Location (Check if estimated: ☐) Lat. ° ' " Long. ° ' " or St. Plane ____ ft. N, ____ ft. E. S/C/N	Wis. Unique Well No / DNR Well Number
Facility ID: 3410-1812		Date Well Installed: 09/06/2001
Type of Well: Well Code 57/sv	Section Location of Waste/Source: ____ 1/4 of ____ 1/4 of Sec. ____, T. ____ N, R. ____ ☐ E ☐ W	Well Installed By: (Person's Name and Firm) J. Berthold
Distance Well Is From Waste/Source Boundary ft.	Location of Well Relative to Waste/Source: u ☐ Upgradient s ☐ Sidegradient d ☐ Downgradient n ☐ Not Known	Boart Longyear

A. Protective pipe, top elevation ____ ft. MSL

B. Well casing, top elevation ____ ft. MSL

C. Land surface elevation ____ ft. MSL

D. Surface seal, bottom ____ ft. MSL or 0.0 ft.

12. USC classification of soil near screen:
GP ☐ GM ☐ GC ☐ GW ☐ SW ☐ SP ☐
SM ☐ SC ☐ ML ☐ MH ☐ CL ☐ CH ☐
Bedrock ☐

13. Sieve analysis attached? ☐ Yes ☐ No

14. Drilling method used: Rotary ☐ 5 0
Hollow Stem Auger ☒ 4 1
____ Other ☐ _ _

15. Drilling fluid used: Water ☐ 0 2 Air ☐ 0 1
Drilling Mud ☐ 0 3 None ☒ 9 9

16. Drilling additives used? ☐ Yes ☒ No

Describe ____

17. Source of water (attach analysis):

E. Bentonite seal, top ____ ft. MSL or 7.0 ft.

F. Fine sand, top ____ ft. MSL or na ft.

G. Filter pack, top ____ ft. MSL or 9.0 ft.

H. Screen joint, top ____ ft. MSL or 10.0 ft.

I. Well bottom ____ ft. MSL or 20.0 ft.

J. Filter pack, bottom ____ ft. MSL or 20.5 ft.

K. Borehole, bottom ____ ft. MSL or 20.5 ft.

L. Borehole, diameter 10.0 in.

M. O.D. well casing 4.50 in.

N. I.D. well casing 4.00 in.

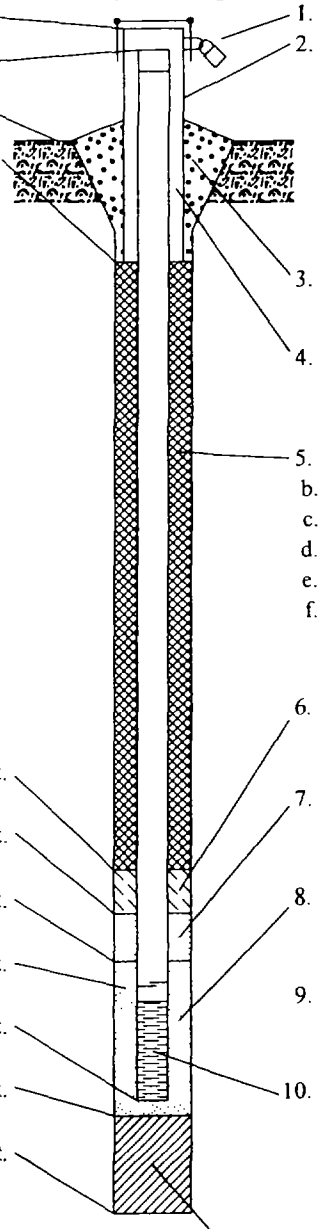

1. Cap and lock? ☒ Yes ☐ No
2. Protective cover pipe:
a. Inside diameter: ____ in.
b. Length: ____ ft.
c. Material: Steel ☐ 0 4
na Other ☒ _ _
d. Additional protection? ☐ Yes ☒ No
If yes, describe: ____
3. Surface seal: Bentonite ☒ 3 0
Concrete ☐ 0 1
____ Other ☐ _ _
4. Material between well casing and protective pipe:
Bentonite ☐ 3 0
na Other ☒ _ _
5. Annular space seal: a. Granular Bentonite ☐ 3 3
b. ____ Lbs/gal mud weight . Bentonite-sand slurry ☐ 3 5
c. ____ Lbs/gal mud weight . . . Bentonite slurry ☐ 3 1
d. ____ % Bentonite . . . Bentonite-cement grout ☐ 5 0
e. ____ Ft^3 volume added for any of the above
f. How installed: Tremie ☐ 1
Tremie pumped ☐ 0 2
Gravity ☒ 0 8
6. Bentonite seal: a. Bentonite granules ☒ 3 3
b. ☐ 1/4 in. ☐ 3/8 in. ☐ 1/2 in. Bentonite pellets ☐ 3 2
c. ____ Other ☐ _ _
7. Fine sand material: Manufacturer, product name and mesh size
a. na _ _
b. Volume added ____ ft^3
8. Filter pack material: Manufacturer, product name and mesh size
a. #5 Global _ _
b. Volume added ____ ft^3
9. Well casing: Flush threaded PVC schedule 40 ☐ 2 3
Flush threaded PVC schedule 80 ☐ 2 4
Stainless Steel Other ☒ _ _
10. Screen material: Stainless Steel _ _
a. Screen Type: Factory cut ☐ 1 1
Continuous slot ☒ 0 1
____ Other ☐ _ _
b. Manufacturer Johnson
c. Slot size: 0.020 in.
d. Slotted length: 10.0 ft.
11. Backfill material (below filter pack): None ☒ 1 4
____ Other ☐ _ _

I hereby certify that the information on this form is true and correct to the best of my knowledge.

Signature	Firm: Boart Longyear Company 101 Alderson Street Schofield, WI 54476	Tel: 715-3_ .090 Fax: 715-355-5715

SOIL BORING LOG INFORMATION

Form 4400-122 Rev. 5-97

Route To: Watershed/Wastewater ☐ Waste Management ☐ Remediation/Redevelopment ☐ Other ☐

Facility/Project Name	License/Permit/Monitoring Number	Boring Number
American Chemical Service, Inc.		SVE-19

Boring Drilled By (Firm name and name of crew chief)	Date Drilling Started	Date Drilling Completed	Drilling Method
Boart Longyear - R. Fischer	9/12/2001	9/12/2001	6 1/4 HSA

WI Unique Well No.	DNR Well ID No.	Common Well Name	Final Static Water Level	Surface Elevation	Borehole Diameter
		SVE-19			10.0 Inches

Boring Location or Local Grid Origin (Check if estimated: ☐)
State Plane S / C / N
1/4 of 1/4 of Section , T N, R
Lat. ° ' "
Long. ° ' "
Local Grid Location (If applicable)
Feet ☐ N ☐ S Feet ☐ E ☐ W

Facility ID	County	County Code	Civil Town/City/ or Village
3410-1812	Lake		Griffith, IN

Sample: Number and Type	Sample: Length Att. & Recovered (in)	Blow Counts	Depth In Feet	Soil/Rock Description And Geologic Origin For Each Major Unit	U S C S	Graphic Log	Well Diagram	PID/FID	Soil Properties: Compressive Strength	Moisture Content	Liquid Limit	Plasticity Index	P 200	RQD/ Comments
				EARTH DRILL										
			1											
			2											
			3											
			4											
			5											
			6											
			7											
			8											
			9											
			10											
			11											
			12											

I hereby certify that the information on this form is true and correct to the best of my knowledge.

Signature

Firm Boart Longyear Company
101 Alderson Street Schofield, WI 54476
Tel: 715-359-7090
Fax: 715-355-5715

SOIL BORING LOG INFORMATION SUPPLEMENT

Form 4400-122A Rev. 5-97

Boring Number SVE-19 Use only as an attachment to Form 4400-122.

Sample Number and Type	Sample Length Att. & Recovered (in)	Blow Counts	Depth In Feet	Soil/Rock Description And Geologic Origin For Each Major Unit	U S C S	Graphic Log	Well Diagram	PID/FID	Soil Properties: Compressive Strength	Moisture Content	Liquid Limit	Plasticity Index	P 200	RQD/ Comments
			13											
			14											
			15											
			16											
			17											
1 SS	24 20	5 4 3 1	18 19	DEBRIS						W				
			20	EOB 20.0' Well Set 20.0'										

Route To: Watershed/Wastewater ☐ Waste Management ☐ Remediation/Redevelopment ☐ Other ☐

MONITORING WELL CONSTRUCTION

Form 4400-113A Rev. 6-97

Facility/Project Name: American Chemical Service, Inc.	Local Grid Location of Well: ____ ft. ☐ N. ☐ S. ____ ft. ☐ E. ☐ W.	Well Name: SVE-19
Facility License, Permit or Monitoring No.	Grid Origin Location (Check if estimated: ☐) Lat. ___° ___' ___" Long. ___° ___' ___" or	Wis. Unique Well No / DNR Well Number
Facility ID: 3410-1812	St. Plane ____ ft. N, ____ ft. E. S/C/N	Date Well Installed: 09/17/2001
Type of Well: Well Code 57/sv	Section Location of Waste/Source: ___ 1/4 of ___ 1/4 of Sec. ___, T. ___ N, R. ___ ☐ E ☐ W	Well Installed By: (Person's Name and Firm): R. Fischer
Distance Well Is From Waste/Source Boundary ft.	Location of Well Relative to Waste/Source: u ☐ Upgradient s ☐ Sidegradient d ☐ Downgradient n ☐ Not Known	Boart Longyear

A. Protective pipe, top elevation ____ ft. MSL

B. Well casing, top elevation ____ ft. MSL

C. Land surface elevation ____ ft. MSL

D. Surface seal, bottom ____ ft. MSL or 0.0 ft.

12. USC classification of soil near screen:
GP ☐ GM ☐ GC ☐ GW ☐ SW ☐ SP ☐
SM ☐ SC ☐ ML ☐ MH ☐ CL ☐ CH ☐
Bedrock ☐

13. Sieve analysis attached? ☐ Yes ☐ No

14. Drilling method used: Rotary ☐ 5 0
Hollow Stem Auger ☒ 4 1
____ Other ☐ __

15. Drilling fluid used: Water ☐ 0 2 Air ☐ 0 1
Drilling Mud ☐ 0 3 None ☒ 9 9

16. Drilling additives used? ☐ Yes ☒ No

Describe ____

17. Source of water (attach analysis):
____

E. Bentonite seal, top ____ ft. MSL or 2.0 ft.

F. Fine sand, top ____ ft. MSL or na ft.

G. Filter pack, top ____ ft. MSL or 4.0 ft.

H. Screen joint, top ____ ft. MSL or 5.0 ft.

I. Well bottom ____ ft. MSL or 20.0 ft.

J. Filter pack, bottom ____ ft. MSL or 20.0 ft.

K. Borehole, bottom ____ ft. MSL or 20.0 ft.

L. Borehole, diameter 10.0 in.

M. O.D. well casing 4.50 in.

N. I.D. well casing 4.00 in.

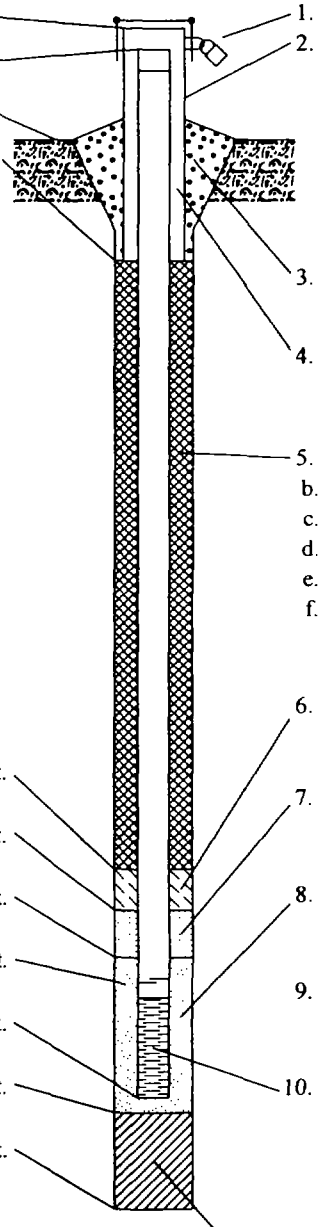

1. Cap and lock? ☒ Yes ☐ No
2. Protective cover pipe:
a. Inside diameter: ____ in.
b. Length: ____ ft.
c. Material: Steel ☐ 0 4
na Other ☒ __
d. Additional protection? ☐ Yes ☒ No
If yes, describe: ____
3. Surface seal: Bentonite ☐ 3 0
Concrete ☐ 0 1
____ Other ☐ __
4. Material between well casing and protective pipe:
Bentonite ☐ 3 0
na Other ☒ __
5. Annular space seal: a. Granular Bentonite ☐ 3 3
b. ____ Lbs/gal mud weight . Bentonite-sand slurry ☐ 3 5
c. ____ Lbs/gal mud weight . . . Bentonite slurry ☐ 3 1
d. ____ % Bentonite . . . Bentonite-cement grout ☐ 5 0
e. ____ Ft^3 volume added for any of the above
f. How installed: Tremie ☐ 0 1
Tremie pumped ☐ 0 2
Gravity ☒ 0 8
6. Bentonite seal: a. Bentonite granules ☐ 3 3
b. ☐ 1/4 in. ☒ 3/8 in. ☐ 1/2 in. Bentonite pellets ☒ 3 2
c. ____ Other ☐ __
7. Fine sand material: Manufacturer, product name and mesh siz
a. na
b. Volume added ____ ft^3
8. Filter pack material: Manufacturer, product name and mesh si
a. #5 Global
b. Volume added ____ ft^3
9. Well casing: Flush threaded PVC schedule 40 ☐ 2 3
Flush threaded PVC schedule 80 ☐ 2 4
Stainless Steel Other ☒
10. Screen material: Stainless Steel
a. Screen Type: Factory cut ☐ 1 1
Continuous slot ☒ 0 1
____ Other ☐
b. Manufacturer Johnson
c. Slot size: 0.010 in.
d. Slotted length: 15.0 ft.
11. Backfill material (below filter pack): None ☐ 1 4
#5 Global Other ☒

ereby certify that the information on this form is true and correct to the best of my knowledge.

gnature

Firm: Boart Longyear Company
101 Alderson Street Schofield, WI 54476
Tel: 715-359-7090
Fax: 715-355-5715

SOIL BORING LOG INFORMATION

Form 4400-122 Rev. 5-97

Route To: Watershed/Wastewater ☐ Waste Management ☐
Remediation/Redevelopment ☐ Other ☐

Facility/Project Name	License/Permit/Monitoring Number	Boring Number
American Chemical Service, Inc.		SVE-20

Boring Drilled By (Firm name and name of crew chief)	Date Drilling Started	Date Drilling Completed	Drilling Method
Boart Longyear - D. Morris	9/12/2001	9/12/2001	6 1/4 HSA

WI Unique Well No.	DNR Well ID No.	Common Well Name	Final Static Water Level	Surface Elevation	Borehole Diameter
		SVE-20			10.0 Inches

Boring Location or Local Grid Origin (Check if estimated: ☐)
State Plane S / C / N
1/4 of 1/4 of Section , T N, R
Lat. ° ' "
Long. ° ' "
Local Grid Location (If applicable)
☐ N ☐ E
Feet ☐ S Feet ☐ W

Facility ID	County	County Code	Civil Town/City/ or Village
3410-1812	Lake		Griffith, IN

Sample: Number and Type	Length Att. & Recovered (in)	Blow Counts	Depth In Feet	Soil/Rock Description And Geologic Origin For Each Major Unit	U S C S	Graphic Log	Well Diagram	PID/FID	Soil Properties: Compressive Strength	Moisture Content	Liquid Limit	Plasticity Index	P 200	RQD/ Comments
				EARTH DRILL										
			1											
			2											
			3											
			4											
			5											
			6											
			7											
			8											
			9											
			10											
			11											
			12											

I hereby certify that the information on this form is true and correct to the best of my knowledge.

Signature

Firm Boart Longyear Company
101 Alderson Street Schofield, WI 54476

Tel: 715-359-7090
Fax: 715- 715

SOIL BORING LOG INFORMATION SUPPLEMENT

Form 4400-122A Rev 5-97

Boring Number SVE-20 Use only as an attachment to Form 4400-122.

Sample Number and Type	Length Att. & Recovered (in)	Blow Counts	Depth In Feet	Soil/Rock Description And Geologic Origin For Each Major Unit	U S C S	Graphic Log	Well Diagram	PID/FID	Soil Properties: Compressive Strength	Moisture Content	Liquid Limit	Plasticity Index	P 200	RQD/ Comments
			13											
			14											
			15											
			16											
			17											
1 SS	24 11	1 5 3 7	18	Gry Silty SAND						W				
			19											
			20											
			21	EOB 21.0' Well Set 20.0'										

Route To: Watershed/Wastewater ☐ Waste Management ☐ Remediation/Redevelopment ☐ Other ☐

MONITORING WELL CONSTRUCTION

Form 4400-113A Rev. 6-97

Facility/Project Name: American Chemical Service, Inc.	Local Grid Location of Well: ____ ft. ☐ N. ☐ S. ____ ft. ☐ E. ☐ W.	Well Name: SVE-20
Facility License, Permit or Monitoring No.	Grid Origin Location (Check if estimated: ☐) Lat. ___ ° ___ ' ___ " Long. ___ ° ___ ' ___ " or	Wis. Unique Well No / DNR Well Number
Facility ID: 3410-1812	St. Plane ____ ft. N, ____ ft. E. S/C/N	Date Well Installed: 09/12/2001
Type of Well: Well Code 57/sv	Section Location of Waste/Source: ___ 1/4 of ___ 1/4 of Sec. ___, T. ___ N, R. ___ ☐ E ☐ W	Well Installed By: (Person's Name and Firm) R. Fischer
Distance Well Is From Waste/Source Boundary ft.	Location of Well Relative to Waste/Source: u ☐ Upgradient s ☐ Sidegradient d ☐ Downgradient n ☐ Not Known	Boart Longyear

A. Protective pipe, top elevation ____ ft. MSL

B. Well casing, top elevation ____ ft. MSL

C. Land surface elevation ____ ft. MSL

D. Surface seal, bottom ____ ft. MSL or 0.0 ft.

12. USC classification of soil near screen:
GP ☐ GM ☐ GC ☐ GW ☐ SW ☐ SP ☐
SM ☐ SC ☐ ML ☐ MH ☐ CL ☐ CH ☐
Bedrock ☐

13. Sieve analysis attached? ☐ Yes ☐ No

14. Drilling method used: Rotary ☐ 5 0
Hollow Stem Auger ☒ 4 1
____ Other ☐ __

15. Drilling fluid used: Water ☐ 0 2 Air ☐ 0 1
Drilling Mud ☐ 0 3 None ☒ 9 9

16. Drilling additives used? ☐ Yes ☒ No

Describe ____

17. Source of water (attach analysis):

____

E. Bentonite seal, top ____ ft. MSL or 3.0 ft.

F. Fine sand, top ____ ft. MSL or na ft.

G. Filter pack, top ____ ft. MSL or 4.0 ft.

H. Screen joint, top ____ ft. MSL or 5.0 ft.

I. Well bottom ____ ft. MSL or 20.0 ft.

J. Filter pack, bottom ____ ft. MSL or 21.0 ft.

K. Borehole, bottom ____ ft. MSL or 21.0 ft.

L. Borehole, diameter 10.0 in.

M. O.D. well casing 4.50 in.

N. I.D. well casing 4.00 in.

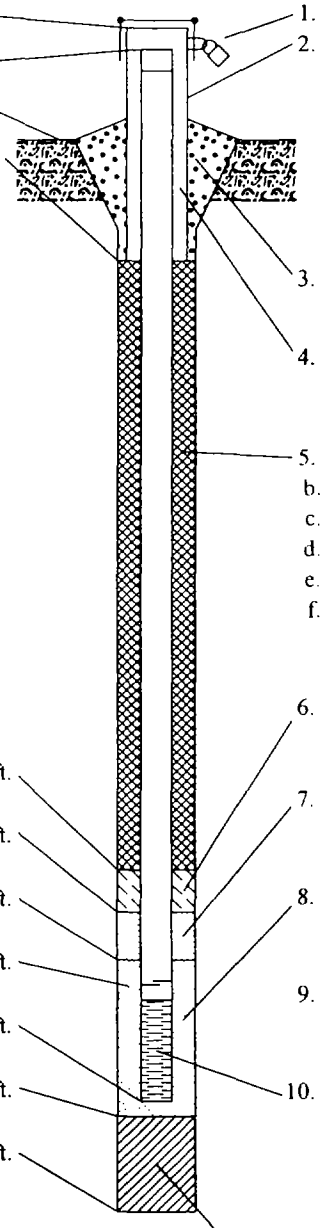

1. Cap and lock? ☐ Yes ☒ No

2. Protective cover pipe:
a. Inside diameter: ____ in.
b. Length: ____ ft.
c. Material: Steel ☐ 0 4
na Other ☒ __
d. Additional protection? ☐ Yes ☒ No
If yes, describe: ____

3. Surface seal: Bentonite ☒ 3 0
Concrete ☐ 0 1
____ Other ☐

4. Material between well casing and protective pipe:
Bentonite ☐ 3 0
na Other ☒

5. Annular space seal: a. Granular Bentonite ☐ 3 3
b. ____ Lbs/gal mud weight . Bentonite-sand slurry ☐ 3 5
c. ____ Lbs/gal mud weight . . . Bentonite slurry ☐ 3 1
d. ____ % Bentonite . . . Bentonite-cement grout ☐ 5 0
e. ____ Ft^3 volume added for any of the above
f. How installed: Tremie 1
Tremie pumped ☐ 0 2
Gravity ☒ 0 8

6. Bentonite seal: a. Bentonite granules ☒ 3 3
b. ☐ 1/4 in. ☐ 3/8 in. ☐ 1/2 in. Bentonite pellets ☐ 3 2
c. ____ Other ☐

7. Fine sand material: Manufacturer, product name and mesh siz
a. na
b. Volume added ____ ft^3

8. Filter pack material: Manufacturer, product name and mesh si
a. #5 Global
b. Volume added ____ ft^3

9. Well casing: Flush threaded PVC schedule 40 ☐ 2 3
Flush threaded PVC schedule 80 ☐ 2 4
Stainless Steel Other ☒

10. Screen material: Stainless Steel
a. Screen Type: Factory cut ☐ 1 1
Continuous slot ☒ 0 1
____ Other ☐
b. Manufacturer Johnson
c. Slot size: 0.020 in.
d. Slotted length: 15.0 ft.

11. Backfill material (below filter pack): None ☒ 1 4
____ Other ☐

I hereby certify that the information on this form is true and correct to the best of my knowledge.

Signature	Firm: Boart Longyear Company, 101 Alderson Street Schofield, WI 54476 — Tel: 715-3 .090, Fax: 715-355-5715

SOIL BORING LOG INFORMATION

Form 4400-122 Rev. 5-97

Route To: Watershed/Wastewater ☐ Waste Management ☐ Remediation/Redevelopment ☐ Other ☐

Facility/Project Name	License/Permit/Monitoring Number	Boring Number
American Chemical Service, Inc.		SVE-21

Boring Drilled By (Firm name and name of crew chief)	Date Drilling Started	Date Drilling Completed	Drilling Method
Boart Longyear - D. Morris	9/12/2001	9/12/2001	6 1/4 HSA

WI Unique Well No.	DNR Well ID No.	Common Well Name	Final Static Water Level	Surface Elevation	Borehole Diameter
		SVE-21			10.0 Inches

Boring Location or Local Grid Origin (Check if estimated: ☐)
State Plane S / C / N
1/4 of 1/4 of Section , T N, R
Lat. ° ' "
Long. ° ' "
Local Grid Location (If applicable)
☐ N ☐ E
Feet ☐ S Feet ☐ W

Facility ID	County	County Code	Civil Town/City/ or Village
3410-1812	Lake		Griffith, IN

Sample: Number and Type	Length Att. & Recovered (in)	Blow Counts	Depth In Feet	Soil/Rock Description And Geologic Origin For Each Major Unit	U S C S	Graphic Log	Well Diagram	PID/FID	Soil Properties: Compressive Strength	Moisture Content	Liquid Limit	Plasticity Index	P 200	RQD/ Comments
				EARTH DRILL										
			1											
			2											
			3											
			4											
			5											
			6											
			7											
			8											
			9											
			10											
			11											
			12											

I hereby certify that the information on this form is true and correct to the best of my knowledge.

Signature

Firm Boart Longyear Company
101 Alderson Street Schofield, WI 54476
Tel: 715-359-7090
Fax: 715-355-5715

SOIL BORING LOG INFORMATION SUPPLEMENT

Form 4400-122A Rev. 5-97

Boring Number SVE-21 Use only as an attachment to Form 4400-122.

Sample Number and Type	Sample Length Att. & Recovered (in)	Blow Counts	Depth In Feet	Soil/Rock Description And Geologic Origin For Each Major Unit	U S C S	Graphic Log	Well Diagram	PID/FID	Soil Properties: Compressive Strength	Moisture Content	Liquid Limit	Plasticity Index	P 200	RQD/ Comments
			13											
			14											
			15											
			16											
			17											
1 SS	24 3	2 4 1 3	18	Gry Silty SAND w/Debris						W				
			19											
			20											
			21	EOB 21.0' Well Set 20.0'										

Route To: Watershed/Wastewater ☐ Waste Management ☐ Remediation/Redevelopment ☐ Other ☐

MONITORING WELL CONSTRUCTION
Form 4400-113A Rev. 6-97

Facility/Project Name: American Chemical Service, Inc.	Local Grid Location of Well: ____ ft. ☐N. ☐S. ____ ft. ☐E. ☐W.	Well Name: SVE-21
Facility License, Permit or Monitoring No.	Grid Origin Location (Check if estimated: ☐) Lat. ___° ___' ___" Long. ___° ___' ___" or	Wis. Unique Well No / DNR Well Number
Facility ID: 3410-1812	St. Plane ____ ft. N, ____ ft. E. S/C/N	Date Well Installed: 09/12/2001
Type of Well: Well Code 57/sv	Section Location of Waste/Source: ___ 1/4 of ___ 1/4 of Sec. ___, T. ___ N, R. ___ ☐E ☐W	Well Installed By: (Person's Name and Firm): D. Morris
Distance Well Is From Waste/Source Boundary ft.	Location of Well Relative to Waste/Source: u ☐ Upgradient s ☐ Sidegradient d ☐ Downgradient n ☐ Not Known	Boart Longyear

A. Protective pipe, top elevation ____ ft. MSL

B. Well casing, top elevation ____ ft. MSL

C. Land surface elevation ____ ft. MSL

D. Surface seal, bottom ____ ft. MSL or 0.0 ft.

12. USC classification of soil near screen:
GP ☐ GM☐ GC ☐ GW☐ SW☐ SP ☐
SM☐ SC ☐ ML☐ MH☐ CL ☐ CH ☐
Bedrock☐

13. Sieve analysis attached? ☐ Yes ☐ No

14. Drilling method used: Rotary ☐ 5 0
Hollow Stem Auger ☒ 4 1
____ Other ☐ _ _

15. Drilling fluid used: Water ☐ 0 2 Air ☐ 0 1
Drilling Mud ☐ 0 3 None ☒ 9 9

16. Drilling additives used? ☐ Yes ☒ No

Describe ____

17. Source of water (attach analysis):

E. Bentonite seal, top ____ ft. MSL or 2.0 ft.

F. Fine sand, top ____ ft. MSL or na ft.

G. Filter pack, top ____ ft. MSL or 4.0 ft.

H. Screen joint, top ____ ft. MSL or 5.0 ft.

I. Well bottom ____ ft. MSL or 20.0 ft.

J. Filter pack, bottom ____ ft. MSL or 21.0 ft.

K. Borehole, bottom ____ ft. MSL or 21.0 ft.

L. Borehole, diameter 10.0 in.

M. O.D. well casing 4.50 in.

N. I.D. well casing 4.00 in.

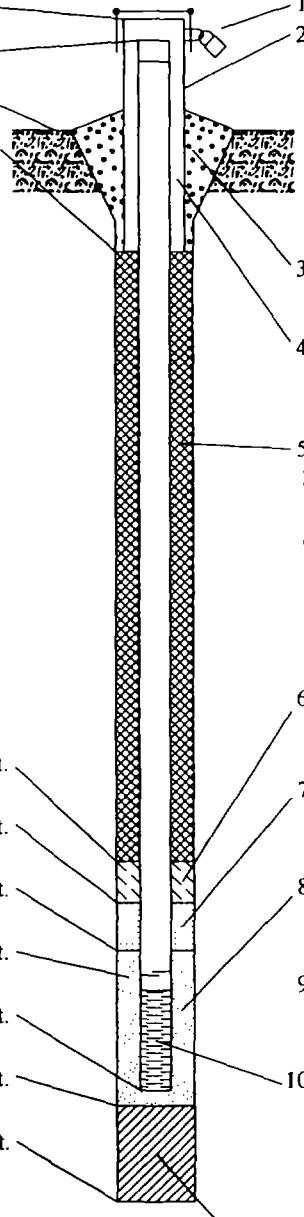

1. Cap and lock? ☐ Yes ☒ No

2. Protective cover pipe:
a. Inside diameter: ____ in.
b. Length: ____ ft.
c. Material: Steel ☐ 0 4
na Other ☒
d. Additional protection? ☐ Yes ☒ No
If yes, describe: ____

3. Surface seal: Bentonite ☒ 3 0
Concrete ☐ 0 1
____ Other ☐

4. Material between well casing and protective pipe:
Bentonite ☐ 3 0
na Other ☒

5. Annular space seal: a. Granular Bentonite ☐ 3 3
b. ____ Lbs/gal mud weight . Bentonite-sand slurry ☐ 3 5
c. ____ Lbs/gal mud weight . . . Bentonite slurry ☐ 3 1
d. ____ % Bentonite . . . Bentonite-cement grout ☐ 5 0
e. ____ Ft^3 volume added for any of the above
f. How installed: Tremie ☐ 0 1
Tremie pumped ☐ 0 2
Gravity ☒ 0 8

6. Bentonite seal: a. Bentonite granules ☒ 3 3
b. ☐ 1/4 in. ☐ 3/8 in. ☐ 1/2 in. Bentonite pellets ☐ 3 2
c. ____ Other ☐

7. Fine sand material: Manufacturer, product name and mesh siz
a. na
b. Volume added ____ ft^3

8. Filter pack material: Manufacturer, product name and mesh si
a. #5 Global
b. Volume added ____ ft^3

9. Well casing: Flush threaded PVC schedule 40 ☐ 2 3
Flush threaded PVC schedule 80 ☐ 2 4
Stainless Steel Other ☒

10. Screen material: Stainless Steel
a. Screen Type: Factory cut ☐ 1 1
Continuous slot ☒ 0 1
____ Other ☐
b. Manufacturer Johnson
c. Slot size: 0.020 in.
d. Slotted length: 15.0 ft.

11. Backfill material (below filter pack): None ☒ 1 4
____ Other ☐

hereby certify that the information on this form is true and correct to the best of my knowledge.

Signature

Firm: Boart Longyear Company
101 Alderson Street Schofield, WI 54476

Tel: 715-359-7090
Fax: 715-355-5715

SOIL BORING LOG INFORMATION

Form 4400-122 Rev. 5-97

Route To: Watershed/Wastewater ☐ Waste Management ☐
Remediation/Redevelopment ☐ Other ☐

Facility/Project Name	License/Permit/Monitoring Number	Boring Number
American Chemical Service, Inc.		SVE-22

Boring Drilled By (Firm name and name of crew chief)	Date Drilling Started	Date Drilling Completed	Drilling Method
Boart Longyear - D. Morris	9/5/2001	9/5/2001	6 1/4 HSA

WI Unique Well No.	DNR Well ID No.	Common Well Name	Final Static Water Level	Surface Elevation	Borehole Diameter
		SVE-22			10.0 Inches

Boring Location or Local Grid Origin (Check if estimated: ☐)
State Plane S / C / N
1/4 of 1/4 of Section , T N, R
Lat. ° ' "
Long. ° ' "
Local Grid Location (If applicable)
☐ N ☐ E
Feet ☐ S Feet ☐ W

Facility ID	County	County Code	Civil Town/City/ or Village
3410-1812	Lake		Griffith, IN

Sample: Number and Type	Length Att. & Recovered (in)	Blow Counts	Depth In Feet	Soil/Rock Description And Geologic Origin For Each Major Unit	U S C S	Graphic Log	Well Diagram	PID/FID	Soil Properties: Compressive Strength	Moisture Content	Liquid Limit	Plasticity Index	P 200	RQD/ Comments
				EARTH DRILL										
			1											
			2											
			3											
			4											
			5											
			6											
			7											
			8											
			9											
			10											
			11											
			12											

I hereby certify that the information on this form is true and correct to the best of my knowledge.

Signature
Firm Boart Longyear Company
101 Alderson Street Schofield, WI 54476
Tel: 715-[illegible] 7090
Fax: 715-[illegible]715

SOIL BORING LOG INFORMATION SUPPLEMENT

Form 4400-122A Rev. 5-97

Boring Number SVE-22 Use only as an attachment to Form 4400-122.

Sample Number and Type	Sample Length Att. & Recovered (in)	Blow Counts	Depth In Feet	Soil/Rock Description And Geologic Origin For Each Major Unit	U S C S	Graphic Log	Well Diagram	PID/FID	Soil Properties: Compressive Strength	Moisture Content	Liquid Limit	Plasticity Index	P 200	RQD/ Comments
			13											
			14											
			15											
			16											
			17											
			18											
1 SS	24 24	3 6 5 9	19	Blk Silty SAND										
			20											
				EOB 20.5' Well Set 20.0'										

Route To: Watershed/Wastewater ☐ Waste Management ☐ Remediation/Redevelopment ☐ Other ☐

MONITORING WELL CONSTRUCTION
Form 4400-113A Rev. 6-97

Facility/Project Name: American Chemical Service, Inc.	Local Grid Location of Well: ____ ft. ☐ N. ☐ S. ____ ft. ☐ E. ☐ W.	Well Name: SVE-22
Facility License, Permit or Monitoring No.	Grid Origin Location (Check if estimated: ☐) Lat. ° ' " Long. ° ' " or St. Plane ____ ft. N, ____ ft. E. S/C/N	Wis. Unique Well No. / DNR Well Number
Facility ID: 3410-1812		Date Well Installed: 09/05/2001
Type of Well: Well Code 57/sv	Section Location of Waste/Source: ____ 1/4 of ____ 1/4 of Sec. ____, T. ____ N, R. ____ ☐ E ☐ W	Well Installed By: (Person's Name and Firm) D. Morris; Boart Longyear
Distance Well Is From Waste/Source Boundary ft.	Location of Well Relative to Waste/Source: u ☐ Upgradient s ☐ Sidegradient d ☐ Downgradient n ☐ Not Known	

A. Protective pipe, top elevation ____ ft. MSL

B. Well casing, top elevation ____ ft. MSL

C. Land surface elevation ____ ft. MSL

D. Surface seal, bottom ____ ft. MSL or 0.0 ft.

12. USC classification of soil near screen:
GP ☐ GM ☐ GC ☐ GW ☐ SW ☐ SP ☐
SM ☐ SC ☐ ML ☐ MH ☐ CL ☐ CH ☐
Bedrock ☐

13. Sieve analysis attached? ☐ Yes ☐ No

14. Drilling method used: Rotary ☐ 5 0
Hollow Stem Auger ☒ 4 1
____ Other ☐ __

15. Drilling fluid used: Water ☐ 0 2 Air ☐ 0 1
Drilling Mud ☐ 0 3 None ☒ 9 9

16. Drilling additives used? ☐ Yes ☒ No

Describe ____

17. Source of water (attach analysis):

____

E. Bentonite seal, top ____ ft. MSL or 7.0 ft.

F. Fine sand, top ____ ft. MSL or na ft.

G. Filter pack, top ____ ft. MSL or 9.0 ft.

H. Screen joint, top ____ ft. MSL or 10.0 ft.

I. Well bottom ____ ft. MSL or 20.0 ft.

J. Filter pack, bottom ____ ft. MSL or 20.5 ft.

K. Borehole, bottom ____ ft. MSL or 20.5 ft.

L. Borehole, diameter 10.0 in.

M. O.D. well casing 4.50 in.

N. I.D. well casing 4.00 in.

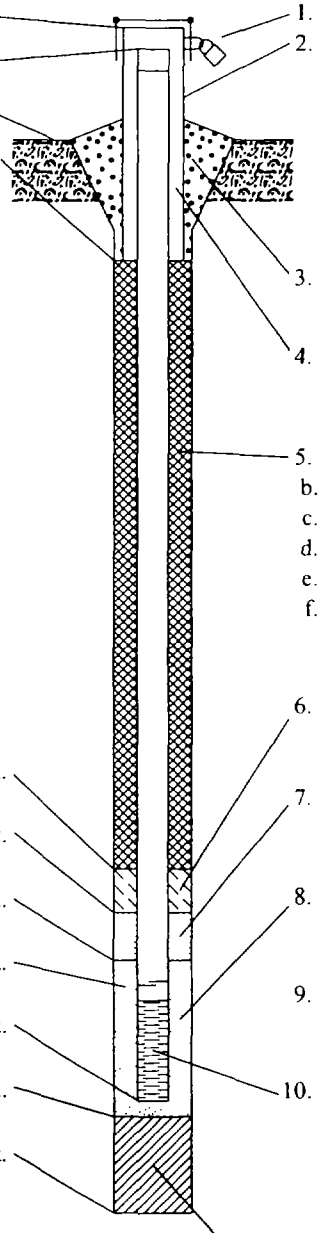

1. Cap and lock? ☒ Yes ☐ No
2. Protective cover pipe:
a. Inside diameter: ____ in.
b. Length: ____ ft.
c. Material: Steel ☐ 0 4
na Other ☒ __
d. Additional protection? ☐ Yes ☒ No
If yes, describe: ____
3. Surface seal: Bentonite ☒ 3 0
Concrete ☐ 0 1
____ Other ☐ __
4. Material between well casing and protective pipe:
Bentonite ☐ 3 0
na Other ☒ __
5. Annular space seal: a. Granular Bentonite ☐ 3 3
b. ____ Lbs/gal mud weight . Bentonite-sand slurry ☐ 3 5
c. ____ Lbs/gal mud weight . . . Bentonite slurry ☐ 3 1
d. ____ % Bentonite . . . Bentonite-cement grout ☐ 5 0
e. ____ Ft^3 volume added for any of the above
f. How installed: Tremie ☐ 1
Tremie pumped ☐ 0 2
Gravity ☒ 0 8
6. Bentonite seal: a. Bentonite granules ☒ 3 3
b. ☐ 1/4 in. ☐ 3/8 in. ☐ 1/2 in. Bentonite pellets ☐ 3 2
c. ____ Other ☐ __
7. Fine sand material: Manufacturer, product name and mesh size
a. na __
b. Volume added ____ ft^3
8. Filter pack material: Manufacturer, product name and mesh size
a. #5 Global __
b. Volume added ____ ft^3
9. Well casing: Flush threaded PVC schedule 40 ☒ 2 3
Flush threaded PVC schedule 80 ☐ 2 4
____ Other ☐ __
10. Screen material: Stainless Steel __
a. Screen Type: Factory cut ☐ 1 1
Continuous slot ☒ 0 1
____ Other ☐ __
b. Manufacturer Johnson
c. Slot size: 0.020 in.
d. Slotted length: 10.0 ft.
11. Backfill material (below filter pack): None ☒ 1 4
____ Other ☐ __

I hereby certify that the information on this form is true and correct to the best of my knowledge.

Signature: [signature]	Firm: Boart Longyear Company, 101 Alderson Street Schofield, WI 54476	Tel: 715-3.. /090 Fax: 715-355-5715

SOIL BORING LOG INFORMATION

Form 4400-122 Rev. 5-97

Route To: Watershed/Wastewater ☐ Waste Management ☐ Remediation/Redevelopment ☐ Other ☐

Facility/Project Name	License/Permit/Monitoring Number	Boring Number
American Chemical Service, Inc.		SVE-23

Boring Drilled By (Firm name and name of crew chief)	Date Drilling Started	Date Drilling Completed	Drilling Method
Boart Longyear - D. Morris	9/6/2001	9/6/2001	6 1/4 HSA

WI Unique Well No.	DNR Well ID No.	Common Well Name	Final Static Water Level	Surface Elevation	Borehole Diameter
		SVE-23			10.0 Inches

Boring Location or Local Grid Origin (Check if estimated: ☐)
State Plane S / C / N
1/4 of 1/4 of Section , T N, R
Lat. ° ' "
Long. ° ' "
Local Grid Location (If applicable)
Feet ☐ N ☐ S Feet ☐ E ☐ W

Facility ID	County	County Code	Civil Town/City/ or Village
3410-1812	Lake		Griffith, IN

Sample: Number and Type	Length Att. & Recovered (in)	Blow Counts	Depth In Feet	Soil/Rock Description And Geologic Origin For Each Major Unit	U S C S	Graphic Log	Well Diagram	PID/FID	Soil Properties: Compressive Strength	Moisture Content	Liquid Limit	Plasticity Index	P 200	RQD/ Comments
				EARTH DRILL										
			1											
			2											
			3											
			4											
			5											
			6											
			7											
			8											
			9											
			10											
			11											
			12											

I hereby certify that the information on this form is true and correct to the best of my knowledge.

Signature	Firm	
	Boart Longyear Company 101 Alderson Street Schofield, WI 54476	Tel: 715-359-7090 Fax: 715-355-5715

SOIL BORING LOG INFORMATION SUPPLEMENT

Form 4400-122A Rev. 5-97

Boring Number SVE-23 Use only as an attachment to Form 4400-122.

Sample Number and Type	Sample Length Att. & Recovered (in)	Blow Counts	Depth In Feet	Soil/Rock Description And Geologic Origin For Each Major Unit	U S C S	Graphic Log	Well Diagram	PID/FID	Soil Properties: Compressive Strength	Moisture Content	Liquid Limit	Plasticity Index	P 200	RQD/ Comments
			13											
			14											
			15											
			16											
			17											
1 SS	24 24	2 5 6 9	18 19 20	Gry Silty SAND						W				
				EOB 20.5' Well Set 20.0'										

Route To: Watershed/Wastewater ☐ Waste Management ☐ Remediation/Redevelopment ☐ Other ☐

MONITORING WELL CONSTRUCTION

Form 4400-113A Rev. 6-97

Facility/Project Name: American Chemical Service, Inc.	Local Grid Location of Well: ____ ft. ☐ N. ☐ S. ____ ft. ☐ E. ☐ W.	Well Name: SVE-23
Facility License, Permit or Monitoring No.	Grid Origin Location (Check if estimated: ☐) Lat. ° ' " Long. ° ' " or	Wis. Unique Well No / DNR Well Number
Facility ID: 3410-1812	St. Plane ____ ft. N, ____ ft. E. S/C/N	Date Well Installed: 09/06/2001
Type of Well: Well Code 57/sv	Section Location of Waste/Source: ____ 1/4 of ____ 1/4 of Sec. ____, T. ____ N, R. ____ ☐ E ☐ W	Well Installed By: (Person's Name and Firm): D. Morris
Distance Well Is From Waste/Source Boundary ft.	Location of Well Relative to Waste/Source: u ☐ Upgradient s ☐ Sidegradient d ☐ Downgradient n ☐ Not Known	Boart Longyear

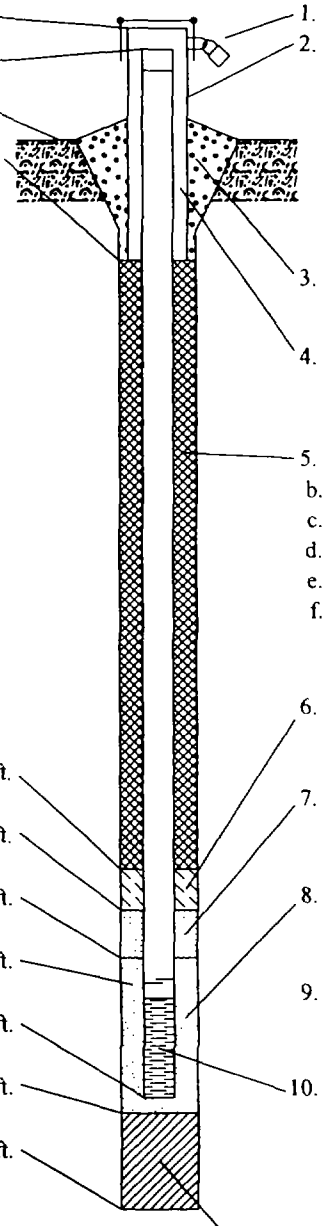

A. Protective pipe, top elevation ____ ft. MSL

B. Well casing, top elevation ____ ft. MSL

C. Land surface elevation ____ ft. MSL

D. Surface seal, bottom ____ ft. MSL or 0.0 ft.

12. USC classification of soil near screen:
GP ☐ GM ☐ GC ☐ GW ☐ SW ☐ SP ☐
SM ☐ SC ☐ ML ☐ MH ☐ CL ☐ CH ☐
Bedrock ☐

13. Sieve analysis attached? ☐ Yes ☐ No

14. Drilling method used: Rotary ☐ 5 0
Hollow Stem Auger ☒ 4 1
____ Other ☐ _ _

15. Drilling fluid used: Water ☐ 0 2 Air ☐ 0 1
Drilling Mud ☐ 0 3 None ☒ 9 9

16. Drilling additives used? ☐ Yes ☒ No

Describe____

17. Source of water (attach analysis):
____

E. Bentonite seal, top ____ ft. MSL or 7.0 ft.

F. Fine sand, top ____ ft. MSL or na ft.

G. Filter pack, top ____ ft. MSL or 9.0 ft.

H. Screen joint, top ____ ft. MSL or 10.0 ft.

I. Well bottom ____ ft. MSL or 20.0 ft.

J. Filter pack, bottom ____ ft. MSL or 20.5 ft.

K. Borehole, bottom ____ ft. MSL or 20.5 ft.

L. Borehole, diameter 10.0 in.

M. O.D. well casing 4.50 in.

N. I.D. well casing 4.00 in.

1. Cap and lock? ☒ Yes ☐ No

2. Protective cover pipe:
a. Inside diameter: ____ in.
b. Length: ____ ft.
c. Material: Steel ☐ 0 4
na Other ☒ _ _
d. Additional protection? ☐ Yes ☒ No
If yes, describe:____

3. Surface seal: Bentonite ☐ 3 0
Concrete ☐ 0 1
____ Other ☐ _ _

4. Material between well casing and protective pipe:
Bentonite ☐ 3 0
na Other ☒ _ _

5. Annular space seal: a. Granular Bentonite ☐ 3 3
b. ____ Lbs/gal mud weight . Bentonite-sand slurry ☐ 3 5
c. ____ Lbs/gal mud weight . . . Bentonite slurry ☐ 3 1
d. ____ % Bentonite . . . Bentonite-cement grout ☐ 5 0
e. ____ Ft^3 volume added for any of the above
f. How installed: Tremie ☐ 0 1
Tremie pumped ☐ 0 2
Gravity ☒ 0 8

6. Bentonite seal: a. Bentonite granules ☐ 3 3
b. ☐ 1/4 in. ☒ 3/8 in. ☐ 1/2 in. Bentonite pellets ☒ 3 2
c. ____ Other ☐ _ _

7. Fine sand material: Manufacturer, product name and mesh siz
a. na _ _
b. Volume added ____ ft^3

8. Filter pack material: Manufacturer, product name and mesh si
a. #5 Global
b. Volume added ____ ft^3

9. Well casing: Flush threaded PVC schedule 40 ☐ 2 3
Flush threaded PVC schedule 80 ☐ 2 4
Stainless Steel Other ☒

10. Screen material: Stainless Steel
a. Screen Type: Factory cut ☐ 1 1
Continuous slot ☒ 0 1
____ Other ☐
b. Manufacturer Johnson
c. Slot size: 0.020 in.
d. Slotted length: 10.0 ft.

11. Backfill material (below filter pack): None ☒ 1 4
____ Other ☐

I hereby certify that the information on this form is true and correct to the best of my knowledge.

Signature

Firm: Boart Longyear Company
101 Alderson Street Schofield, WI 54476

Tel: 715-359-7090
Fax: 715-355-5715

SOIL BORING LOG INFORMATION

Form 4400-122 Rev. 5-97

Route To: Watershed/Wastewater ☐ Waste Management ☐ Remediation/Redevelopment ☐ Other ☐

Facility/Project Name	License/Permit/Monitoring Number	Boring Number
American Chemical Service, Inc.		SVE-24

Boring Drilled By (Firm name and name of crew chief)	Date Drilling Started	Date Drilling Completed	Drilling Method
Boart Longyear - J. Berthold	9/4/2001	9/4/2001	6 1/4 HSA

WI Unique Well No.	DNR Well ID No.	Common Well Name	Final Static Water Level	Surface Elevation	Borehole Diameter
		SVE-24			10.0 Inches

Boring Location or Local Grid Origin (Check if estimated: ☐)

State Plane S / C / N

1/4 of 1/4 of Section , T N, R

Lat. ___ ° ___ ' ___ "

Long. ___ ° ___ ' ___ "

Local Grid Location (If applicable)

Feet ☐ N ☐ S Feet ☐ E ☐ W

Facility ID	County	County Code	Civil Town/City/ or Village
3410-1812	Lake		Griffith, IN

Sample Number and Type	Length Att. & Recovered (in)	Blow Counts	Depth In Feet	Soil/Rock Description And Geologic Origin For Each Major Unit	U S C S	Graphic Log	Well Diagram	PID/FID	Soil Properties: Compressive Strength	Moisture Content	Liquid Limit	Plasticity Index	P 200	RQD/ Comments
				EARTH DRILL										
			1											
			2											
			3											
			4											
			5											
			6											
			7											
			8											
			9											
			10											
			11											
			12											

I hereby certify that the information on this form is true and correct to the best of my knowledge.

Signature

Firm Boart Longyear Company
101 Alderson Street Schofield, WI 54476

Tel: 715- 7090
Fax: 715- 5715

SOIL BORING LOG INFORMATION SUPPLEMENT

Form 4400-122A Rev. 5-97

oring Number SVE-24 Use only as an attachment to Form 4400-122.

Sample Number and Type	Sample Length Att. & Recovered (in)	Blow Counts	Depth In Feet	Soil/Rock Description And Geologic Origin For Each Major Unit	U S C S	Graphic Log	Well Diagram	PID/FID	Soil Properties: Compressive Strength	Moisture Content	Liquid Limit	Plasticity Index	P 200	RQD/ Comments
			13											
			14											
			15											
			16											
			17											
1 SS	24 20	3 3 5 9	18	Gry Silty SAND						W				
			19											
			20											
				EOB 20.5' Well Set 20.0'										

Route To: Watershed/Wastewater ☐ Waste Management ☐ Remediation/Redevelopment ☐ Other ☐

MONITORING WELL CONSTRUCTION

Form 4400-113A Rev. 6-97

Facility/Project Name: American Chemical Service, Inc.	Local Grid Location of Well: ____ ft. ☐ N. ☐ S. ____ ft. ☐ E. ☐ W.	Well Name: SVE-24
Facility License, Permit or Monitoring No.	Grid Origin Location (Check if estimated: ☐) Lat. ___ ° ___ ' ___ " Long. ___ ° ___ ' ___ " or	Wis. Unique Well No / DNR Well Number
Facility ID: 3410-1812	St. Plane ____ ft. N, ____ ft. E. S/C/N	Date Well Installed: 09/04/2001
Type of Well: Well Code 57/sv	Section Location of Waste/Source: ___ 1/4 of ___ 1/4 of Sec. ___, T. ___ N, R. ___ ☐ E ☐ W	Well Installed By: (Person's Name and Firm): J. Berthold
Distance Well Is From Waste/Source Boundary ft.	Location of Well Relative to Waste/Source: u ☐ Upgradient s ☐ Sidegradient d ☐ Downgradient n ☐ Not Known	Boart Longyear

A. Protective pipe, top elevation ____ ft. MSL

B. Well casing, top elevation ____ ft. MSL

C. Land surface elevation ____ ft. MSL

D. Surface seal, bottom ____ ft. MSL or 0.0 ft.

12. USC classification of soil near screen:
GP ☐ GM ☐ GC ☐ GW ☐ SW ☐ SP ☐
SM ☐ SC ☐ ML ☐ MH ☐ CL ☐ CH ☐
Bedrock ☐

13. Sieve analysis attached? ☐ Yes ☐ No

14. Drilling method used: Rotary ☐ 5 0
Hollow Stem Auger ☒ 4 1
____ Other ☐ __

15. Drilling fluid used: Water ☐ 0 2 Air ☐ 0 1
Drilling Mud ☐ 0 3 None ☒ 9 9

16. Drilling additives used? ☐ Yes ☒ No

Describe ____

17. Source of water (attach analysis):

____

E. Bentonite seal, top ____ ft. MSL or 7.0 ft.

F. Fine sand, top ____ ft. MSL or na ft.

G. Filter pack, top ____ ft. MSL or 9.0 ft.

H. Screen joint, top ____ ft. MSL or 10.0 ft.

I. Well bottom ____ ft. MSL or 20.0 ft.

J. Filter pack, bottom ____ ft. MSL or 20.5 ft.

K. Borehole, bottom ____ ft. MSL or 20.5 ft.

L. Borehole, diameter 10.0 in.

M. O.D. well casing 4.50 in.

N. I.D. well casing 4.00 in.

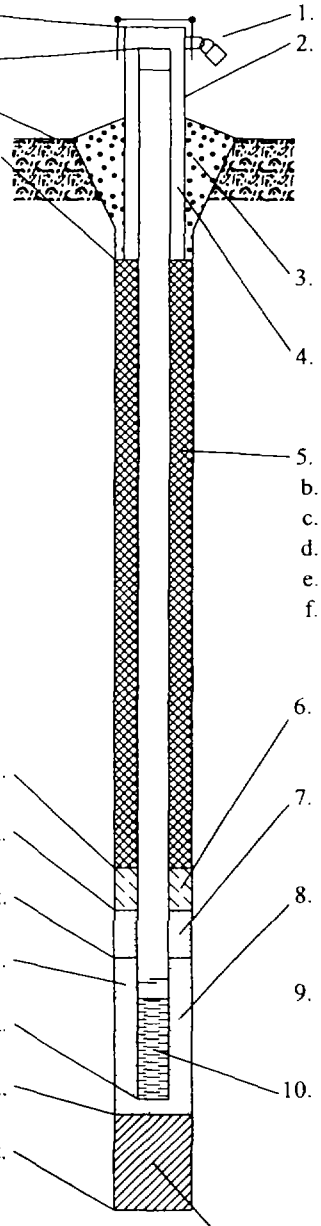

1. Cap and lock? ☒ Yes ☐ No
2. Protective cover pipe:
a. Inside diameter: ____ in.
b. Length: ____ ft.
c. Material: Steel ☐ 0 4
na Other ☒ __
d. Additional protection? ☐ Yes ☒ No
If yes, describe: ____
3. Surface seal: Bentonite ☒ 3 0
Concrete ☐ 0 1
____ Other ☐ __
4. Material between well casing and protective pipe:
Bentonite ☐ 3 0
na Other ☒ __
5. Annular space seal: a. Granular Bentonite ☐ 3 3
b. ____ Lbs/gal mud weight . Bentonite-sand slurry ☐ 3 5
c. ____ Lbs/gal mud weight . . . Bentonite slurry ☐ 3 1
d. ____ % Bentonite . . . Bentonite-cement grout ☐ 5 0
e. ____ Ft^3 volume added for any of the above
f. How installed: Tremie ☐ 1
Tremie pumped ☐ 0 2
Gravity ☒ 0 8
6. Bentonite seal: a. Bentonite granules ☒ 3 3
b. ☐ 1/4 in. ☐ 3/8 in. ☐ 1/2 in. Bentonite pellets ☐ 3 2
c. ____ Other ☐ __
7. Fine sand material: Manufacturer, product name and mesh size
a. na __
b. Volume added ____ ft^3
8. Filter pack material: Manufacturer, product name and mesh size
a. #5 Global __
b. Volume added ____ ft^3
9. Well casing: Flush threaded PVC schedule 40 ☐ 2 3
Flush threaded PVC schedule 80 ☐ 2 4
Stainless Steel Other ☒ __
10. Screen material: Stainless Steel __
a. Screen Type: Factory cut ☐ 1 1
Continuous slot ☒ 0 1
____ Other ☐ __
b. Manufacturer Johnson
c. Slot size: 0.020 in.
d. Slotted length: 10.0 ft.
11. Backfill material (below filter pack): None ☒ 1 4
____ Other ☐ __

I hereby certify that the information on this form is true and correct to the best of my knowledge.

Signature

Firm: Boart Longyear Company
101 Alderson Street Schofield, WI 54476

Tel: 715-3 090
Fax: 715-355-5715

SOIL BORING LOG INFORMATION

Form 4400-122 Rev. 5-97

Route To: Watershed/Wastewater ☐ Waste Management ☐ Remediation/Redevelopment ☐ Other ☐

Facility/Project Name	License/Permit/Monitoring Number	Boring Number
American Chemical Service, Inc.		SVE-25

Boring Drilled By (Firm name and name of crew chief)	Date Drilling Started	Date Drilling Completed	Drilling Method
Boart Longyear - J. Berthold	9/12/2001	9/12/2001	6 1/4 HSA

WI Unique Well No	DNR Well ID No	Common Well Name	Final Static Water Level	Surface Elevation	Borehole Diameter
		SVE-25			10.0 Inches

Boring Location or Local Grid Origin (Check if estimated: ☐)
State Plane S / C / N
1/4 of 1/4 of Section , T N, R

Lat. ___ ° ___ ' ___ "
Long. ___ ° ___ ' ___ "

Local Grid Location (If applicable)
Feet ☐ N ☐ S Feet ☐ E ☐ W

Facility ID	County	County Code	Civil Town/City/ or Village
3410-1812	Lake		Griffith, IN

Sample: Number and Type	Sample: Length Att. & Recovered (in)	Blow Counts	Depth In Feet	Soil/Rock Description And Geologic Origin For Each Major Unit	U S C S	Graphic Log	Well Diagram	PID/FID	Soil Properties: Compressive Strength	Moisture Content	Liquid Limit	Plasticity Index	P 200	RQD/ Comments
				EARTH DRILL										
			1											
			2											
			3											
			4											
			5											
			6											
			7											
			8											
			9											
			10											
			11											
			12											

I hereby certify that the information on this form is true and correct to the best of my knowledge.

Signature [signature] Firm Boart Longyear Company
101 Alderson Street Schofield, WI 54476
Tel: 715-359-7090
Fax: 715-355-5715

SOIL BORING LOG INFORMATION SUPPLEMENT

Form 4400-122A Rev. 5-97

Boring Number SVE-25 Use only as an attachment to Form 4400-122.

Sample Number and Type	Length Att. & Recovered (in)	Blow Counts	Depth In Feet	Soil/Rock Description And Geologic Origin For Each Major Unit	U S C S	Graphic Log	Well Diagram	PID/FID	Soil Properties: Compressive Strength	Moisture Content	Liquid Limit	Plasticity Index	P 200	RQD/ Comments
			13											
			14											
			15											
			16											
			17											
1 SS	24 20	4 5 2 5	18	Gry SILT and SAND						W				
			19											
			20											
			21	EOB 21.0' Well Set 20.0'										

Route To: Watershed/Wastewater ☐ Waste Management ☐ Remediation/Redevelopment ☐ Other ☐

MONITORING WELL CONSTRUCTION
Form 4400-113A Rev. 6-97

Facility/Project Name: American Chemical Service, Inc.	Local Grid Location of Well: ____ ft. ☐N. ☐S. ____ ft. ☐E. ☐W.	Well Name: SVE-25
Facility License, Permit or Monitoring No.	Grid Origin Location (Check if estimated: ☐) Lat. ___ ° ___ ' ___ " Long. ___ ° ___ ' ___ " or	Wis. Unique Well No / DNR Well Number
Facility ID: 3410-1812	St. Plane ____ ft. N, ____ ft. E. S/C/N	Date Well Installed: 09/12/2001
Type of Well: Well Code 57/sv	Section Location of Waste/Source: ___ 1/4 of ___ 1/4 of Sec. ___, T. ___ N, R. ___ ☐E ☐W	Well Installed By: (Person's Name and Firm): J. Berthold
Distance Well Is From Waste/Source Boundary ft.	Location of Well Relative to Waste/Source: u ☐ Upgradient s ☐ Sidegradient d ☐ Downgradient n ☐ Not Known	Boart Longyear

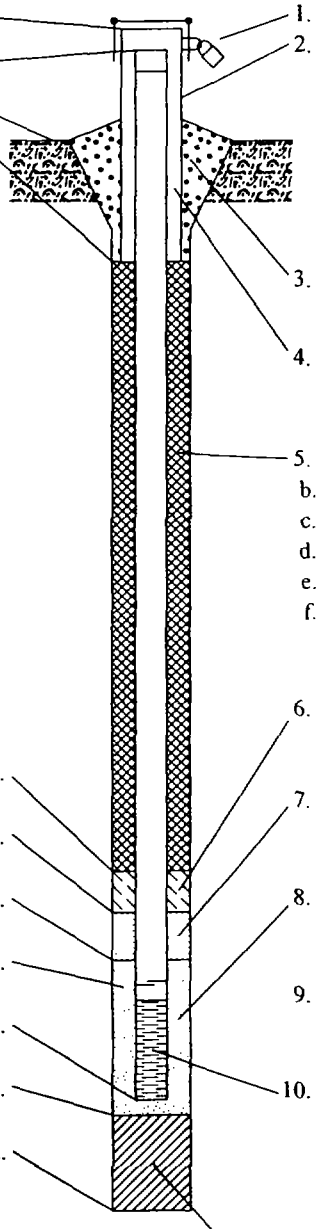

A. Protective pipe, top elevation ____ ft. MSL

B. Well casing, top elevation ____ ft. MSL

C. Land surface elevation ____ ft. MSL

D. Surface seal, bottom ____ ft. MSL or 0.0 ft.

12. USC classification of soil near screen:
GP ☐ GM☐ GC ☐ GW☐ SW☐ SP ☐
SM☐ SC ☐ ML☐ MH☐ CL ☐ CH ☐
Bedrock☐

13. Sieve analysis attached? ☐ Yes ☐ No

14. Drilling method used: Rotary ☐ 5 0
Hollow Stem Auger ☒ 4 1
____ Other ☐ __

15. Drilling fluid used: Water ☐ 0 2 Air ☐ 0 1
Drilling Mud ☐ 0 3 *None* ☒ 9 9

16. Drilling additives used? ☐ Yes ☒ No

Describe____

17. Source of water (attach analysis):

____

E. Bentonite seal, top ____ ft. MSL or 2.0 ft.

F. Fine sand, top ____ ft. MSL or na ft.

G. Filter pack, top ____ ft. MSL or 4.0 ft.

H. Screen joint, top ____ ft. MSL or 5.0 ft.

I. Well bottom ____ ft. MSL or 20.0 ft.

J. Filter pack, bottom ____ ft. MSL or 21.0 ft.

K. Borehole, bottom ____ ft. MSL or 21.0 ft.

L. Borehole, diameter 10.0 in.

M. O.D. well casing 4.50 in.

N. I.D. well casing 4.00 in.

1. Cap and lock? ☒ Yes ☐ No
2. Protective cover pipe:
a. Inside diameter: ____ in.
b. Length: ____ ft.
c. Material: Steel ☐ 0 4
na Other ☒ __
d. Additional protection? ☐ Yes ☒ No
If yes, describe:____
3. Surface seal: Bentonite ☒ 3 0
Concrete ☐ 0 1
____ Other ☐ __
4. Material between well casing and protective pipe:
Bentonite ☐ 3 0
na Other ☒ __
5. Annular space seal: a. Granular Bentonite ☐ 3 3
b. ____Lbs/gal mud weight . Bentonite-sand slurry ☐ 3 5
c. ____*Lbs/gal mud weight* . . . *Bentonite slurry* ☐ 3 1
d. ____% Bentonite . . . Bentonite-cement grout ☐ 5 0
e. ____Ft^3 volume added for any of the above
f. How installed: Tremie ☐ 0 1
Tremie pumped ☐ 0 2
Gravity ☒ 0 8
6. Bentonite seal: a. Bentonite granules ☒ 3 3
b. ☐1/4 in. ☐3/8 in. ☐1/2 in. Bentonite pellets ☐ 3 2
c.____ Other ☐ __
7. Fine sand material: Manufacturer, product name and mesh size
a. na __
b. Volume added____ ft^3
8. Filter pack material: Manufacturer, product name and mesh size
a. #5 Global __
b. Volume added____ ft^3
9. Well casing: Flush threaded PVC schedule 40 ☐ 2 3
Flush threaded PVC schedule 80 ☐ 2 4
Stainless Steel Other ☒ __
10. Screen material: Stainless Steel __
a. Screen Type: Factory cut ☐ 1 1
Continuous slot ☒ 0 1
____ Other ☐ __
b. Manufacturer Johnson
c. Slot size: 0.020 in.
d. Slotted length: 15.0 ft.
11. Backfill material (below filter pack): None ☒ 1 4
____ Other ☐ __

ereby certify that the information on this form is true and correct to the best of my knowledge.

gnature

Firm Boart Longyear Company
101 Alderson Street Schofield, WI 54476

Tel: 715-359-7090
Fax: 715-355-5715

SOIL BORING LOG INFORMATION

Form 4400-122 Rev. 5-97

Route To: Watershed/Wastewater ☐ Waste Management ☐ Remediation/Redevelopment ☐ Other ☐

Facility/Project Name	License/Permit/Monitoring Number	Boring Number
American Chemical Service, Inc.		SVE-26

Boring Drilled By (Firm name and name of crew chief)	Date Drilling Started	Date Drilling Completed	Drilling Method
Boart Longyear - R. Fischer	9/12/2001	9/12/2001	6 1/4 HSA

WI Unique Well No.	DNR Well ID No.	Common Well Name	Final Static Water Level	Surface Elevation	Borehole Diameter
		SVE-26			10.0 Inches

Boring Location or Local Grid Origin (Check if estimated: ☐)
State Plane S/C/N
1/4 of 1/4 of Section , T N, R
Lat. ° ' "
Long. ° ' "
Local Grid Location (If applicable)
Feet ☐ N ☐ S Feet ☐ E ☐ W

Facility ID	County	County Code	Civil Town/City/ or Village
3410-1812	Lake		Griffith, IN

Sample Number and Type	Length Att. & Recovered (in)	Blow Counts	Depth In Feet	Soil/Rock Description And Geologic Origin For Each Major Unit	U S C S	Graphic Log	Well Diagram	PID/FID	Soil Properties: Compressive Strength	Moisture Content	Liquid Limit	Plasticity Index	P 200	RQD/ Comments
				EARTH DRILL										
			1											
			2											
			3											
			4											
			5											
			6											
			7											
			8											
			9											
			10											
			11											
			12											

I hereby certify that the information on this form is true and correct to the best of my knowledge.

Signature

Firm Boart Longyear Company
101 Alderson Street Schofield, WI 54476
Tel: 715-[illegible] 709[illegible]
Fax: 715 [illegible]5715

SOIL BORING LOG INFORMATION SUPPLEMENT

Form 4400-122A Rev. 5-97

oring Number SVE-26 Use only as an attachment to Form 4400-122.

Sample Number and Type	Sample Length Att. & Recovered (in)	Blow Counts	Depth In Feet	Soil/Rock Description And Geologic Origin For Each Major Unit	U S C S	Graphic Log	Well Diagram	PID/FID	Soil Properties: Compressive Strength	Moisture Content	Liquid Limit	Plasticity Index	P 200	RQD/ Comments
			13											
			14											
			15											
			16											
			17											
1 SS	24 15	7 5 4 7	18 19 20	Gry Silty SAND w/Some Gravel						W				
			21	EOB 21.0' Well Set 20.0'										

Route To: Watershed/Wastewater ☐ Waste Management ☐ Remediation/Redevelopment ☐ Other ☐

MONITORING WELL CONSTRUCTION

Form 4400-113A Rev. 6-97

Facility/Project Name: American Chemical Service, Inc.	Local Grid Location of Well: ____ ft. ☐ N. ☐ S. ____ ft. ☐ E. ☐ W.	Well Name: SVE-26
Facility License, Permit or Monitoring No.	Grid Origin Location (Check if estimated: ☐) Lat. ___° ___' ___" Long. ___° ___' ___" or	Wis. Unique Well No / DNR Well Number
Facility ID: 3410-1812	St. Plane ____ ft. N, ____ ft. E. S/C/N	Date Well Installed: 09/12/2001
Type of Well: Well Code 57/sv	Section Location of Waste/Source: ___ 1/4 of ___ 1/4 of Sec. ___, T. ___ N, R. ___ ☐ E ☐ W	Well Installed By: (Person's Name and Firm): R. Fischer
Distance Well Is From Waste/Source Boundary ft.	Location of Well Relative to Waste/Source: u ☐ Upgradient s ☐ Sidegradient d ☐ Downgradient n ☐ Not Known	Boart Longyear

A. Protective pipe, top elevation ____ ft. MSL

B. Well casing, top elevation ____ ft. MSL

C. Land surface elevation ____ ft. MSL

D. Surface seal, bottom ____ ft. MSL or 0.0 ft.

12. USC classification of soil near screen:
GP ☐ GM ☐ GC ☐ GW ☐ SW ☐ SP ☐
SM ☐ SC ☐ ML ☐ MH ☐ CL ☐ CH ☐
Bedrock ☐

13. Sieve analysis attached? ☐ Yes ☐ No

14. Drilling method used: Rotary ☐ 5 0
Hollow Stem Auger ☒ 4 1
____ Other ☐ __

15. Drilling fluid used: Water ☐ 0 2 Air ☐ 0 1
Drilling Mud ☐ 0 3 None ☒ 9 9

16. Drilling additives used? ☐ Yes ☒ No

Describe ____

17. Source of water (attach analysis):

____

E. Bentonite seal, top ____ ft. MSL or 2.0 ft.

F. Fine sand, top ____ ft. MSL or na ft.

G. Filter pack, top ____ ft. MSL or 4.0 ft.

H. Screen joint, top ____ ft. MSL or 5.0 ft.

I. Well bottom ____ ft. MSL or 20.0 ft.

J. Filter pack, bottom ____ ft. MSL or 21.0 ft.

K. Borehole, bottom ____ ft. MSL or 21.0 ft.

L. Borehole, diameter 10.0 in.

M. O.D. well casing 4.50 in.

N. I.D. well casing 4.00 in.

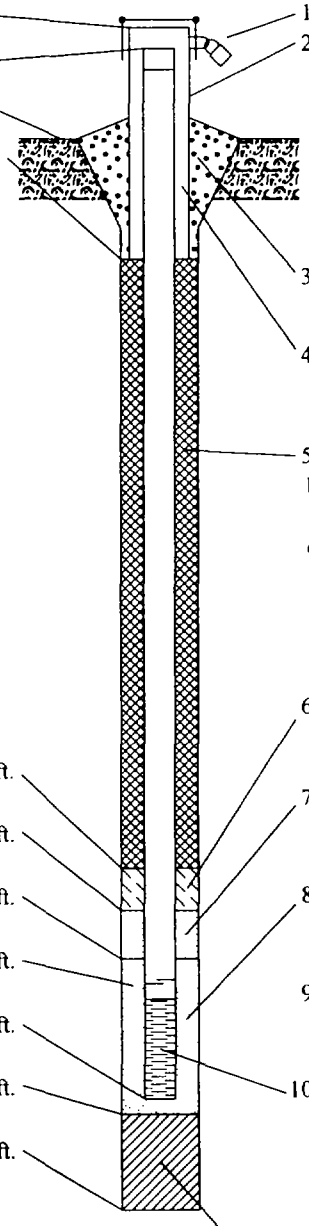

1. Cap and lock? ☐ Yes ☒ No

2. Protective cover pipe:
a. Inside diameter: ____ in.
b. Length: ____ ft.
c. Material: Steel ☐ 0 4
na Other ☒ __
d. Additional protection? ☐ Yes ☒ No
If yes, describe: ____

3. Surface seal: Bentonite ☒ 3 0
Concrete ☐ 0 1
____ Other ☐ __

4. Material between well casing and protective pipe:
Bentonite ☐ 3 0
na Other ☒ __

5. Annular space seal: a. Granular Bentonite ☐ 3 3
b. ____ Lbs/gal mud weight . Bentonite-sand slurry ☐ 3 5
c. ____ Lbs/gal mud weight . . . Bentonite slurry ☐ 3 1
d. ____ % Bentonite . . . Bentonite-cement grout ☐ 5 0
e. ____ Ft^3 volume added for any of the above
f. How installed: Tremie [1
Tremie pumped ☐ 0 2
Gravity ☒ 0 8

6. Bentonite seal: a. Bentonite granules ☒ 3 3
b. ☐ 1/4 in. ☐ 3/8 in. ☐ 1/2 in. Bentonite pellets ☐ 3 2
c. ____ Other ☐ __

7. Fine sand material: Manufacturer, product name and mesh size
a. na __
b. Volume added ____ ft^3

8. Filter pack material: Manufacturer, product name and mesh size
a. #5 Global __
b. Volume added ____ ft^3

9. Well casing: Flush threaded PVC schedule 40 ☐ 2 3
Flush threaded PVC schedule 80 ☐ 2 4
Stainless Steel Other ☒ __

10. Screen material: Stainless Steel __
a. Screen Type: Factory cut ☐ 1 1
Continuous slot ☒ 0 1
____ Other ☐ __
b. Manufacturer Johnson
c. Slot size: 0.020 in.
d. Slotted length: 15.0 ft.

11. Backfill material (below filter pack): None ☒ 1 4
____ Other ☐ __

I hereby certify that the information on this form is true and correct to the best of my knowledge.

Signature	Firm: Boart Longyear Company 101 Alderson Street Schofield, WI 54476	Tel: 715-3. 090 Fax: 715-355-5715

SOIL BORING LOG INFORMATION

Form 4400-122 Rev. 5-97

Route To: Watershed/Wastewater ☐ Waste Management ☐ Remediation/Redevelopment ☐ Other ☐

Facility/Project Name	License/Permit/Monitoring Number	Boring Number
American Chemical Service, Inc.		SVE-27

Boring Drilled By (Firm name and name of crew chief)	Date Drilling Started	Date Drilling Completed	Drilling Method
Boart Longyear - D. Morris	9/4/2001	9/4/2001	6 1/4 HSA

WI Unique Well No.	DNR Well ID No.	Common Well Name	Final Static Water Level	Surface Elevation	Borehole Diameter
		SVE-27			10.0 Inches

Boring Location or Local Grid Origin (Check if estimated: ☐)
State Plane S/C/N
1/4 of 1/4 of Section , T N, R
Lat. ___ ° ___ ' ___ "
Long. ___ ° ___ ' ___ "
Local Grid Location (If applicable)
Feet ☐ N ☐ S Feet ☐ E ☐ W

Facility ID	County	County Code	Civil Town/City/ or Village
3410-1812	Lake		Griffith, IN

Sample: Number and Type	Length Att. & Recovered (in)	Blow Counts	Depth In Feet	Soil/Rock Description And Geologic Origin For Each Major Unit	U S C S	Graphic Log	Well Diagram	PID/FID	Soil Properties: Compressive Strength	Moisture Content	Liquid Limit	Plasticity Index	P 200	RQD/ Comments
				EARTH DRILL										
			1											
			2											
			3											
			4											
			5											
			6											
			7											
			8											
			9											
			10											
			11											
			12											

I hereby certify that the information on this form is true and correct to the best of my knowledge.

Signature

Firm Boart Longyear Company
101 Alderson Street Schofield, WI 54476

Tel: 715-359-7090
Fax: 715-355-5715

SOIL BORING LOG INFORMATION SUPPLEMENT

Form 4400-122A Rev. 5-97

Boring Number SVE-27 Use only as an attachment to Form 4400-122.

Sample Number and Type	Sample Length Att. & Recovered (in)	Blow Counts	Depth In Feet	Soil/Rock Description And Geologic Origin For Each Major Unit	U S C S	Graphic Log	Well Diagram	PID/FID	Soil Properties: Compressive Strength	Moisture Content	Liquid Limit	Plasticity Index	P 200	RQD/ Comments
			13											
			14											
			15											
			16											
			17											
1 SS	24 20	7 18 17 19	18 19 20	Dk Gry Silty SAND						W				
			21	EOB 21.0' Well Set 20.0'										

Route To: Watershed/Wastewater ☐ Waste Management ☐ Remediation/Redevelopment ☐ Other ☐

MONITORING WELL CONSTRUCTION

Form 4400-113A Rev. 6-97

Facility/Project Name: American Chemical Service, Inc.	Local Grid Location of Well: ____ ft. ☐N. ☐S. ____ ft. ☐E. ☐W.	Well Name: SVE-27
Facility License, Permit or Monitoring No.	Grid Origin Location (Check if estimated: ☐) Lat. ___ ° ___ ' ___ " Long. ___ ° ___ ' ___ " or	Wis. Unique Well No / DNR Well Number
Facility ID: 3410-1812	St. Plane ____ ft. N, ____ ft. E. S/C/N	Date Well Installed: 09/04/2001
Type of Well: Well Code 57/sv	Section Location of Waste/Source: ____ 1/4 of ____ 1/4 of Sec. ____, T. ____ N, R. ____ ☐E ☐W	Well Installed By: (Person's Name and Firm): D. Morris
Distance Well Is From Waste/Source Boundary ft.	Location of Well Relative to Waste/Source: u ☐ Upgradient s ☐ Sidegradient d ☐ Downgradient n ☐ Not Known	Boart Longyear

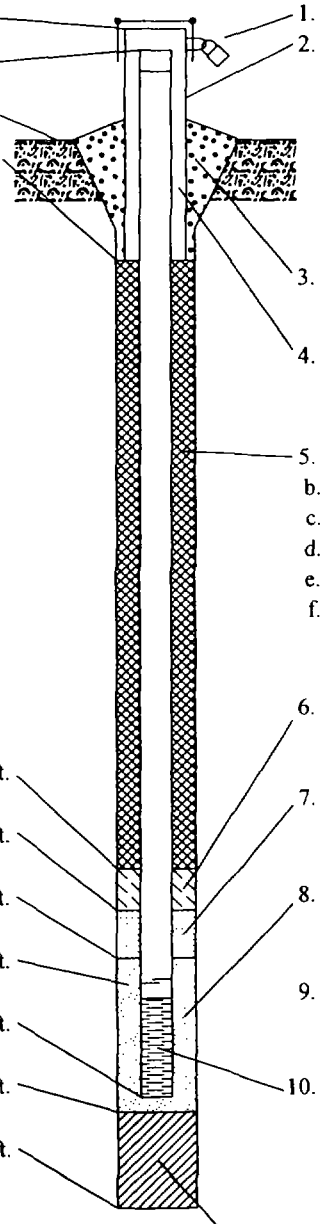

A. Protective pipe, top elevation ____ ft. MSL

B. Well casing, top elevation ____ ft. MSL

C. Land surface elevation ____ ft. MSL

D. Surface seal, bottom ____ ft. MSL or 0.0 ft.

12. USC classification of soil near screen:
GP ☐ GM ☐ GC ☐ GW ☐ SW ☐ SP ☐
SM ☐ SC ☐ ML ☐ MH ☐ CL ☐ CH ☐
Bedrock ☐

13. Sieve analysis attached? ☐ Yes ☐ No

14. Drilling method used: Rotary ☐ 5 0
Hollow Stem Auger ☒ 4 1
____ Other ☐ _ _

15. Drilling fluid used: Water ☐ 0 2 Air ☐ 0 1
Drilling Mud ☐ 0 3 None ☒ 9 9

16. Drilling additives used? ☐ Yes ☒ No

Describe ____

17. Source of water (attach analysis):
____

E. Bentonite seal, top ____ ft. MSL or 7.0 ft.

F. Fine sand, top ____ ft. MSL or na ft.

G. Filter pack, top ____ ft. MSL or 9.0 ft.

H. Screen joint, top ____ ft. MSL or 10.0 ft.

I. Well bottom ____ ft. MSL or 20.0 ft.

J. Filter pack, bottom ____ ft. MSL or 21.0 ft.

K. Borehole, bottom ____ ft. MSL or 21.0 ft.

L. Borehole, diameter 10.0 in.

M. O.D. well casing 4.50 in.

N. I.D. well casing 4.00 in.

1. Cap and lock? ☒ Yes ☐ No

2. Protective cover pipe:
a. Inside diameter: ____ in.
b. Length: ____ ft.
c. Material: Steel ☐ 0 4
na Other ☒ _ _
d. Additional protection? ☐ Yes ☒ No
If yes, describe: ____

3. Surface seal: Bentonite ☒ 3 0
Concrete ☐ 0 1
____ Other ☐ _ _

4. Material between well casing and protective pipe:
Bentonite ☐ 3 0
na Other ☒ _ _

5. Annular space seal: a. Granular Bentonite ☐ 3 3
b. ____ Lbs/gal mud weight . Bentonite-sand slurry ☐ 3 5
c. ____ Lbs/gal mud weight . . . Bentonite slurry ☐ 3 1
d. ____ % Bentonite . . . Bentonite-cement grout ☐ 5 0
e. ____ Ft^3 volume added for any of the above
f. How installed: Tremie ☐ 0 1
Tremie pumped ☐ 0 2
Gravity ☒ 0 8

6. Bentonite seal: a. Bentonite granules ☒ 3 3
b. ☐ 1/4 in. ☐ 3/8 in. ☐ 1/2 in. Bentonite pellets ☐ 3 2
c. ____ Other ☐ _ _

7. Fine sand material: Manufacturer, product name and mesh size
a. na
b. Volume added ____ ft^3

8. Filter pack material: Manufacturer, product name and mesh size
a. #5 Global
b. Volume added ____ ft^3

9. Well casing: Flush threaded PVC schedule 40 ☐ 2 3
Flush threaded PVC schedule 80 ☐ 2 4
Stainless Steel Other ☒

10. Screen material: Stainless Steel
a. Screen Type: Factory cut ☐ 1 1
Continuous slot ☒ 0 1
____ Other ☐
b. Manufacturer Johnson
c. Slot size: 0.020 in.
d. Slotted length: 10.0 ft.

11. Backfill material (below filter pack): None ☒ 1 4
____ Other ☐

ereby certify that the information on this form is true and correct to the best of my knowledge.

Signature

Firm: Boart Longyear Company
101 Alderson Street Schofield, WI 54476

Tel: 715-359-7090
Fax: 715-355-5715

SOIL BORING LOG INFORMATION

Form 4400-122 Rev. 5-97

Route To: Watershed/Wastewater ☐ Waste Management ☐
Remediation/Redevelopment ☐ Other ☐

Facility/Project Name	License/Permit/Monitoring Number	Boring Number
American Chemical Service, Inc.		SVE-28

Boring Drilled By (Firm name and name of crew chief)	Date Drilling Started	Date Drilling Completed	Drilling Method
Boart Longyear - D. Morris	9/12/2001	9/12/2001	6 1/4 HSA

WI Unique Well No.	DNR Well ID No.	Common Well Name	Final Static Water Level	Surface Elevation	Borehole Diameter
		SVE-28			10.0 Inches

Boring Location or Local Grid Origin (Check if estimated: ☐)
State Plane S / C / N
1/4 of 1/4 of Section , T N, R
Lat. ° ' "
Long. ° ' "
Local Grid Location (If applicable)
Feet ☐ N ☐ S Feet ☐ E ☐ W

Facility ID	County	County Code	Civil Town/City/ or Village
3410-1812	Lake		Griffith, IN

Sample Number and Type	Length Att. & Recovered (in)	Blow Counts	Depth In Feet	Soil/Rock Description And Geologic Origin For Each Major Unit	U S C S	Graphic Log	Well Diagram	PID/FID	Soil Properties: Compressive Strength	Moisture Content	Liquid Limit	Plasticity Index	P 200	RQD/ Comments
				EARTH DRILL										
			1											
			2											
			3											
			4											
			5											
			6											
			7											
			8											
			9											
			10											
			11											
			12											

I hereby certify that the information on this form is true and correct to the best of my knowledge.

Signature	Firm	
	Boart Longyear Company 101 Alderson Street Schofield, WI 54476	Tel: 715-[illegible] 7090 Fax: 715-[illegible]715

SOIL BORING LOG INFORMATION SUPPLEMENT

Form 4400-122A Rev. 5-97

Boring Number SVE-28 Use only as an attachment to Form 4400-122.

Sample Number and Type	Sample Length Att. & Recovered (in)	Blow Counts	Depth In Feet	Soil/Rock Description And Geologic Origin For Each Major Unit	U S C S	Graphic Log	Well Diagram	PID/FID	Soil Properties: Compressive Strength	Moisture Content	Liquid Limit	Plasticity Index	P 200	RQD/ Comments
			13											
			14											
			15											
			16											
			17											
1 SS	24 16	1 1 5 2	18	Gry Silty SAND										
			19											
			20											
				EOB 20.5' Well Set 20.0'										

Route To: Watershed/Wastewater ☐ Waste Management ☐ Remediation/Redevelopment ☐ Other ☐

MONITORING WELL CONSTRUCTION
Form 4400-113A Rev. 6-97

Facility/Project Name: American Chemical Service, Inc.	Local Grid Location of Well: ____ ft. ☐N. ☐S. ____ ft. ☐E. ☐W.	Well Name: SVE-28
Facility License, Permit or Monitoring No.	Grid Origin Location (Check if estimated: ☐) Lat. ° ' " Long. ° ' " or	Wis. Unique Well No / DNR Well Number
Facility ID: 3410-1812	St. Plane ____ ft. N, ____ ft. E. S/C/N	Date Well Installed: 09/12/2001
Type of Well: Well Code 57/sv	Section Location of Waste/Source: ____ 1/4 of ____ 1/4 of Sec. ____, T. ____ N, R. ____ ☐E ☐W	Well Installed By: (Person's Name and Firm): D. Morris
Distance Well Is From Waste/Source Boundary ft.	Location of Well Relative to Waste/Source: u ☐ Upgradient s ☐ Sidegradient d ☐ Downgradient n ☐ Not Known	Boart Longyear

A. Protective pipe, top elevation ____ ft. MSL

B. Well casing, top elevation ____ ft. MSL

C. Land surface elevation ____ ft. MSL

D. Surface seal, bottom ____ ft. MSL or 0.0 ft.

12. USC classification of soil near screen:
GP ☐ GM☐ GC ☐ GW☐ SW☐ SP ☐
SM☐ SC ☐ ML☐ MH☐ CL ☐ CH ☐
Bedrock☐

13. Sieve analysis attached? ☐ Yes ☐ No

14. Drilling method used: Rotary ☐ 5 0
Hollow Stem Auger ☒ 4 1
____ Other ☐ __

15. Drilling fluid used: Water ☐ 0 2 Air ☐ 0 1
Drilling Mud ☐ 0 3 None ☒ 9 9

16. Drilling additives used? ☐ Yes ☒ No

Describe____

17. Source of water (attach analysis):

____

E. Bentonite seal, top ____ ft. MSL or 2.0 ft.

F. Fine sand, top ____ ft. MSL or na ft.

G. Filter pack, top ____ ft. MSL or 4.0 ft.

H. Screen joint, top ____ ft. MSL or 5.0 ft.

I. Well bottom ____ ft. MSL or 20.0 ft.

J. Filter pack, bottom ____ ft. MSL or 20.5 ft.

K. Borehole, bottom ____ ft. MSL or 20.5 ft.

L. Borehole, diameter 10.0 in.

M. O.D. well casing 4.50 in.

N. I.D. well casing 4.00 in.

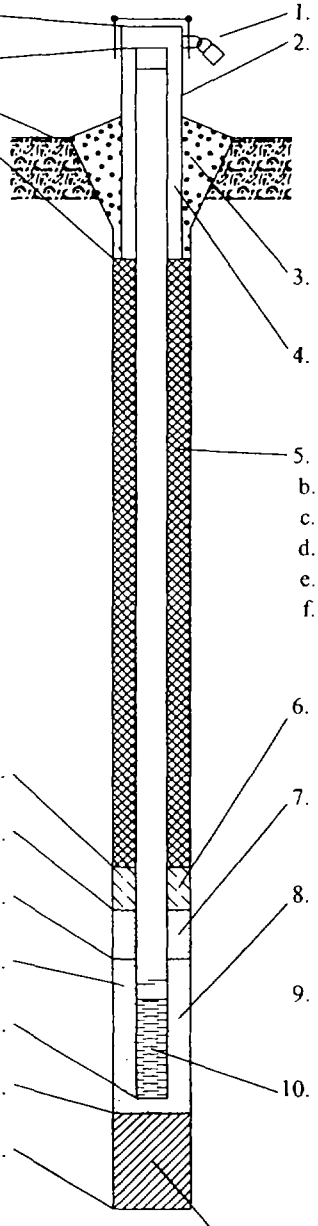

1. Cap and lock? ☐ Yes ☒ No
2. Protective cover pipe:
a. Inside diameter: ____ in.
b. Length: ____ ft.
c. Material: Steel ☐ 0 4
____ na ____ Other ☒ __
d. Additional protection? ☐ Yes ☒ No
If yes, describe:____
3. Surface seal: Bentonite ☒ 3 0
Concrete ☐ 0 1
____ Other ☐ __
4. Material between well casing and protective pipe:
Bentonite ☐ 3 0
____ na ____ Other ☒ __
5. Annular space seal: a. Granular Bentonite ☐ 3 3
b. ____Lbs/gal mud weight . Bentonite-sand slurry ☐ 3 5
c. ____Lbs/gal mud weight . . . Bentonite slurry ☐ 3 1
d. ____% Bentonite . . . Bentonite-cement grout ☐ 5 0
e. ____Ft^3 volume added for any of the above
f. How installed: Tremie 1
Tremie pumped ☐ 0 2
Gravity ☒ 0 8
6. Bentonite seal: a. Bentonite granules ☒ 3 3
b. ☐1/4 in. ☐3/8 in. ☐1/2 in. Bentonite pellets ☐ 3 2
c. ____ Other ☐ __
7. Fine sand material: Manufacturer, product name and mesh siz
a. ____ na ____ __
b. Volume added ____ ft^3
8. Filter pack material: Manufacturer, product name and mesh si
a. ____ #5 Global ____ __
b. Volume added ____ ft^3
9. Well casing: Flush threaded PVC schedule 40 ☐ 2 3
Flush threaded PVC schedule 80 ☐ 2 4
____ Stainless Steel ____ Other ☒ __
10. Screen material: ____ Stainless Steel ____ __
a. Screen Type: Factory cut ☐ 1 1
Continuous slot ☒ 0 1
____ Other ☐ __
b. Manufacturer ____ Johnson ____
c. Slot size: 0.020 in.
d. Slotted length: 15.0 ft.
11. Backfill material (below filter pack): None ☒ 1 4
____ Other ☐ __

I hereby certify that the information on this form is true and correct to the best of my knowledge.

Signature

Firm Boart Longyear Company
101 Alderson Street Schofield, WI 54476

Tel: 715-3 ,090
Fax: 715-355-5715

SOIL BORING LOG INFORMATION

Form 4400-122 Rev. 5-97

Route To: Watershed/Wastewater ☐ Waste Management ☐ Remediation/Redevelopment ☐ Other ☐

Facility/Project Name	License/Permit/Monitoring Number	Boring Number
American Chemical Service, Inc.		SVE-29

Boring Drilled By (Firm name and name of crew chief)	Date Drilling Started	Date Drilling Completed	Drilling Method
Boart Longyear - D. Morris	9/12/2001	9/12/2001	6 1/4 HSA

WI Unique Well No.	DNR Well ID No.	Common Well Name	Final Static Water Level	Surface Elevation	Borehole Diameter
		SVE-29			10.0 Inches

Boring Location or Local Grid Origin (Check if estimated: ☐)
State Plane S / C / N
1/4 of 1/4 of Section , T N, R
Lat. ___ ° ___ ' ___ "
Long. ___ ° ___ ' ___ "
Local Grid Location (If applicable)
Feet ☐ N ☐ S Feet ☐ E ☐ W

Facility ID	County	County Code	Civil Town/City/ or Village
3410-1812	Lake		Griffith, IN

Sample Number and Type	Length Att. & Recovered (in)	Blow Counts	Depth In Feet	Soil/Rock Description And Geologic Origin For Each Major Unit	U S C S	Graphic Log	Well Diagram	PID/FID	Soil Properties: Compressive Strength	Moisture Content	Liquid Limit	Plasticity Index	P 200	RQD/ Comments
				EARTH DRILL										
			1											
			2											
			3											
			4											
			5											
			6											
			7											
			8											
			9											
			10											
			11											
			12											

I hereby certify that the information on this form is true and correct to the best of my knowledge.

Signature

Firm Boart Longyear Company
101 Alderson Street Schofield, WI 54476
Tel: 715-359-7090
Fax: 715-355-5715

SOIL BORING LOG INFORMATION SUPPLEMENT

Form 4400-122A Rev. 5-97

Boring Number SVE-29 Use only as an attachment to Form 4400-122.

Sample Number and Type	Sample Length Att. & Recovered (in)	Blow Counts	Depth In Feet	Soil/Rock Description And Geologic Origin For Each Major Unit	U S C S	Graphic Log	Well Diagram	PID/FID	Soil Properties: Compressive Strength	Moisture Content	Liquid Limit	Plasticity Index	P 200	RQD/ Comments
			13											
			14											
			15											
			16											
			17											
1 SS	24 22	4 6 10 3	18	Dk Gry Silty CLAY						W				
			19											
			20											
			21	EOB 21.0' Well Set 20.0'										

Route To: Watershed/Wastewater ☐ Waste Management ☐ Remediation/Redevelopment ☐ Other ☐

MONITORING WELL CONSTRUCTION
Form 4400-113A Rev. 6-97

Facility/Project Name: American Chemical Service, Inc.	Local Grid Location of Well: ____ ft. ☐N. ☐S. ____ ft. ☐E. ☐W.	Well Name: SVE-29
Facility License, Permit or Monitoring No.	Grid Origin Location (Check if estimated: ☐) Lat. ___° ___' ___" Long. ___° ___' ___" or	Wis. Unique Well No. / DNR Well Number
Facility ID: 3410-1812	St. Plane ____ ft. N, ____ ft. E. S/C/N	Date Well Installed: 09/12/2001
Type of Well: Well Code 57/sv	Section Location of Waste/Source: ___ 1/4 of ___ 1/4 of Sec. ___, T. ___ N, R. ___ ☐E ☐W	Well Installed By: (Person's Name and Firm): D. Morris
Distance Well Is From Waste/Source Boundary ft.	Location of Well Relative to Waste/Source: u ☐ Upgradient s ☐ Sidegradient d ☐ Downgradient n ☐ Not Known	Boart Longyear

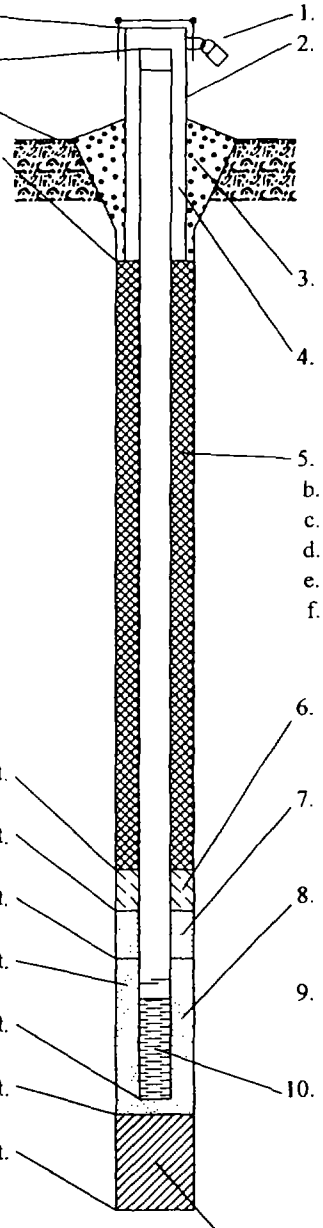

A. Protective pipe, top elevation ____ ft. MSL

B. Well casing, top elevation ____ ft. MSL

C. Land surface elevation ____ ft. MSL

D. Surface seal, bottom ____ ft. MSL or 0.0 ft.

12. USC classification of soil near screen:
GP ☐ GM ☐ GC ☐ GW ☐ SW ☐ SP ☐
SM ☐ SC ☐ ML ☐ MH ☐ CL ☐ CH ☐
Bedrock ☐

13. Sieve analysis attached? ☐ Yes ☐ No

14. Drilling method used: Rotary ☐ 50
Hollow Stem Auger ☒ 41
____ Other ☐ __

15. Drilling fluid used: Water ☐ 02 Air ☐ 01
Drilling Mud ☐ 03 None ☒ 99

16. Drilling additives used? ☐ Yes ☒ No

Describe ____

17. Source of water (attach analysis):
____

E. Bentonite seal, top ____ ft. MSL or 2.0 ft.

F. Fine sand, top ____ ft. MSL or na ft.

G. Filter pack, top ____ ft. MSL or 4.0 ft.

H. Screen joint, top ____ ft. MSL or 5.0 ft.

I. Well bottom ____ ft. MSL or 20.0 ft.

J. Filter pack, bottom ____ ft. MSL or 21.0 ft.

K. Borehole, bottom ____ ft. MSL or 21.0 ft.

L. Borehole, diameter 10.0 in.

M. O.D. well casing 4.50 in.

N. I.D. well casing 4.00 in.

1. Cap and lock? ☒ Yes ☐ No

2. Protective cover pipe:
a. Inside diameter: ____ in.
b. Length: ____ ft.
c. Material: Steel ☐ 04
na Other ☒ __
d. Additional protection? ☐ Yes ☒ No
If yes, describe: ____

3. Surface seal: Bentonite ☒ 30
Concrete ☐ 01
____ Other ☐

4. Material between well casing and protective pipe:
Bentonite ☐ 30
na Other ☒ __

5. Annular space seal: a. Granular Bentonite ☐ 33
b. ____ Lbs/gal mud weight . Bentonite-sand slurry ☐ 35
c. ____ Lbs/gal mud weight . . . Bentonite slurry ☐ 31
d. ____ % Bentonite . . . Bentonite-cement grout ☐ 50
e. ____ Ft^3 volume added for any of the above
f. How installed: Tremie ☐ 01
Tremie pumped ☐ 02
Gravity ☒ 08

6. Bentonite seal: a. Bentonite granules ☒ 33
b. ☐ 1/4 in. ☐ 3/8 in. ☐ 1/2 in. Bentonite pellets ☐ 32
c. ____ Other ☐

7. Fine sand material: Manufacturer, product name and mesh size
a. na
b. Volume added ____ ft^3

8. Filter pack material: Manufacturer, product name and mesh size
a. #5 Global
b. Volume added ____ ft^3

9. Well casing: Flush threaded PVC schedule 40 ☐ 23
Flush threaded PVC schedule 80 ☐ 24
Stainless Steel Other ☒

10. Screen material: Stainless Steel
a. Screen Type: Factory cut ☐ 11
Continuous slot ☒ 01
____ Other ☐
b. Manufacturer Johnson
c. Slot size: 0.020 in.
d. Slotted length: 15.0 ft.

11. Backfill material (below filter pack): None ☒ 14
____ Other ☐

ereby certify that the information on this form is true and correct to the best of my knowledge.

Signature

Firm: Boart Longyear Company
101 Alderson Street Schofield, WI 54476

Tel: 715-359-7090
Fax: 715-355-5715

SOIL BORING LOG INFORMATION

Form 4400-122 Rev. 5-97

Route To: Watershed/Wastewater ☐ Waste Management ☐
Remediation/Redevelopment ☐ Other ☐

Facility/Project Name	License/Permit/Monitoring Number	Boring Number
American Chemical Service, Inc.		SVE-30

Boring Drilled By (Firm name and name of crew chief)	Date Drilling Started	Date Drilling Completed	Drilling Method
Boart Longyear - D. Morris	9/10/2001	9/10/2001	6 1/4 HSA

WI Unique Well No.	DNR Well ID No.	Common Well Name	Final Static Water Level	Surface Elevation	Borehole Diameter
		SVE-30			10.0 Inches

Boring Location or Local Grid Origin (Check if estimated: ☐)
State Plane S / C / N
1/4 of 1/4 of Section , T N, R
Lat. ___ ° ___ ' ___ "
Long. ___ ° ___ ' ___ "
Local Grid Location (If applicable)
Feet ☐ N ☐ S Feet ☐ E ☐ W

Facility ID	County	County Code	Civil Town/City/ or Village
3410-1812	Lake		Griffith, IN

Sample: Number and Type	Length Att. & Recovered (in)	Blow Counts	Depth In Feet	Soil/Rock Description And Geologic Origin For Each Major Unit	U S C S	Graphic Log	Well Diagram	PID/FID	Soil Properties: Compressive Strength	Moisture Content	Liquid Limit	Plasticity Index	P 200	RQD/ Comments
				EARTH DRILL										
			1											
			2											
			3											
			4											
			5											
			6											
			7											
			8											
			9											
			10											
			11											
			12											

I hereby certify that the information on this form is true and correct to the best of my knowledge.

Signature	Firm	
	Boart Longyear Company 101 Alderson Street Schofield, WI 54476	Tel: 715-[illegible] 7090 Fax: 715-[illegible] 715

SOIL BORING LOG INFORMATION SUPPLEMENT

Form 4400-122A Rev. 5-97

oring Number SVE-30 Use only as an attachment to Form 4400-122.

Sample Number and Type	Sample Length Att. & Recovered (in)	Blow Counts	Depth In Feet	Soil/Rock Description And Geologic Origin For Each Major Unit	U S C S	Graphic Log	Well Diagram	PID/FID	Soil Properties: Compressive Strength	Moisture Content	Liquid Limit	Plasticity Index	P 200	RQD/ Comments
			13											
			14											
			15											
			16											
			17											
			18											
1 SS	24 16	1 1 1 1	19	Gry Silty SAND						W				
			20											
				EOB 20.5' Well Set 20.0'										

Route To: Watershed/Wastewater ☐ Waste Management ☐ Remediation/Redevelopment ☐ Other ☐

MONITORING WELL CONSTRUCTION

Form 4400-113A Rev. 6-97

Facility/Project Name: American Chemical Service, Inc.	Local Grid Location of Well: ____ ft. ☐ N. ☐ S. ____ ft. ☐ E. ☐ W.	Well Name: SVE-30
Facility License, Permit or Monitoring No.	Grid Origin Location (Check if estimated: ☐) Lat. ___ ° ___ ' ___ " Long. ___ ° ___ ' ___ " or	Wis. Unique Well No. / DNR Well Number
Facility ID: 3410-1812	St. Plane ____ ft. N, ____ ft. E. S/C/N	Date Well Installed: 09/30/2001
Type of Well: Well Code 57/sv	Section Location of Waste/Source: ___ 1/4 of ___ 1/4 of Sec. ___, T. ___ N, R. ___ ☐ E ☐ W	Well Installed By: (Person's Name and Firm) D. Morris
Distance Well Is From Waste/Source Boundary ft.	Location of Well Relative to Waste/Source: u ☐ Upgradient s ☐ Sidegradient d ☐ Downgradient n ☐ Not Known	Boart Longyear

A. Protective pipe, top elevation ____ ft. MSL

B. Well casing, top elevation ____ ft. MSL

C. Land surface elevation ____ ft. MSL

D. Surface seal, bottom ____ ft. MSL or 0.0 ft.

12. USC classification of soil near screen:
GP ☐ GM ☐ GC ☐ GW ☐ SW ☐ SP ☐
SM ☐ SC ☐ ML ☐ MH ☐ CL ☐ CH ☐
Bedrock ☐

13. Sieve analysis attached? ☐ Yes ☐ No

14. Drilling method used: Rotary ☐ 5 0
Hollow Stem Auger ☒ 4 1
____ Other ☐ __

15. Drilling fluid used: Water ☐ 0 2 Air ☐ 0 1
Drilling Mud ☐ 0 3 None ☒ 9 9

16. Drilling additives used? ☐ Yes ☒ No

Describe ____

17. Source of water (attach analysis):

____

E. Bentonite seal, top ____ ft. MSL or 7.0 ft.

F. Fine sand, top ____ ft. MSL or na ft.

G. Filter pack, top ____ ft. MSL or 9.0 ft.

H. Screen joint, top ____ ft. MSL or 10.0 ft.

I. Well bottom ____ ft. MSL or 20.0 ft.

J. Filter pack, bottom ____ ft. MSL or 20.5 ft.

K. Borehole, bottom ____ ft. MSL or 20.5 ft.

L. Borehole, diameter 10.0 in.

M. O.D. well casing 4.50 in.

N. I.D. well casing 4.00 in.

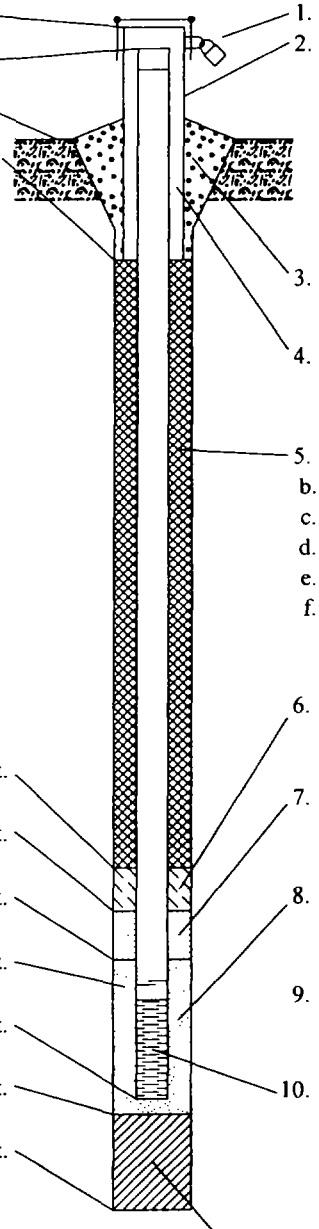

1. Cap and lock? ☒ Yes ☐ No

2. Protective cover pipe:
a. Inside diameter: ____ in.
b. Length: ____ ft.
c. Material: Steel ☐ 0 4
na Other ☒
d. Additional protection? ☐ Yes ☒ No
If yes, describe: ____

3. Surface seal: Bentonite ☒ 3 0
Concrete ☐ 0 1
____ Other ☐

4. Material between well casing and protective pipe:
Bentonite ☐ 3 0
na Other ☒

5. Annular space seal: a. Granular Bentonite ☐ 3 3
b. ____ Lbs/gal mud weight . Bentonite-sand slurry ☐ 3 5
c. ____ Lbs/gal mud weight . . . Bentonite slurry ☐ 3 1
d. ____ % Bentonite . . . Bentonite-cement grout ☐ 5 0
e. ____ Ft^3 volume added for any of the above
f. How installed: Tremie 1
Tremie pumped ☐ 0 2
Gravity ☒ 0 8

6. Bentonite seal: a. Bentonite granules ☒ 3 3
b. ☐ 1/4 in. ☐ 3/8 in. ☐ 1/2 in. Bentonite pellets ☐ 3 2
c. ____ Other ☐

7. Fine sand material: Manufacturer, product name and mesh siz
a. na
b. Volume added ____ ft^3

8. Filter pack material: Manufacturer, product name and mesh si
a. #5 Global
b. Volume added ____ ft^3

9. Well casing: Flush threaded PVC schedule 40 ☐ 2 3
Flush threaded PVC schedule 80 ☐ 2 4
Stainless Steel Other ☒

10. Screen material: Stainless Steel
a. Screen Type: Factory cut ☐ 1 1
Continuous slot ☒ 0 1
____ Other ☐
b. Manufacturer Johnson
c. Slot size: 0.020 in.
d. Slotted length: 10.0 ft.

11. Backfill material (below filter pack): None ☒ 1 4
____ Other ☐

I hereby certify that the information on this form is true and correct to the best of my knowledge.

Signature	Firm: Boart Longyear Company 101 Alderson Street Schofield, WI 54476	Tel: 715-3 090 Fax: 715-355-5715

SOIL BORING LOG INFORMATION

Form 4400-122 Rev. 5-97

Route To: Watershed/Wastewater ☐ Waste Management ☐ Remediation/Redevelopment ☐ Other ☐

Facility/Project Name	License/Permit/Monitoring Number	Boring Number
American Chemical Service, Inc.		SVE-31

Boring Drilled By (Firm name and name of crew chief)	Date Drilling Started	Date Drilling Completed	Drilling Method
Boart Longyear - D. Morris	9/11/2001	9/11/2001	6 1/4 HSA

WI Unique Well No.	DNR Well ID No	Common Well Name	Final Static Water Level	Surface Elevation	Borehole Diameter
		SVE-31			10.0 Inches

Boring Location or Local Grid Origin (Check if estimated: ☐)
State Plane S / C / N
1/4 of 1/4 of Section , T N, R
Lat. ___° ___' ___"
Long. ___° ___' ___"
Local Grid Location (If applicable)
Feet ☐ N ☐ S Feet ☐ E ☐ W

Facility ID	County	County Code	Civil Town/City/ or Village
3410-1812	Lake		Griffith, IN

Sample: Number and Type	Length Att. & Recovered (in)	Blow Counts	Depth In Feet	Soil/Rock Description And Geologic Origin For Each Major Unit	U S C S	Graphic Log	Well Diagram	PID/FID	Soil Properties: Compressive Strength	Moisture Content	Liquid Limit	Plasticity Index	P 200	RQD/ Comments
				EARTH DRILL										
			1											
			2											
			3											
			4											
			5											
			6											
			7											
			8											
			9											
			10											
			11											
			12											

I hereby certify that the information on this form is true and correct to the best of my knowledge.

Signature	Firm	
	Boart Longyear Company 101 Alderson Street Schofield, WI 54476	Tel: 715-359-709(Fax: 715-355-571!

SOIL BORING LOG INFORMATION SUPPLEMENT

Form 4400-122A Rev. 5-97

Boring Number SVE-31 Use only as an attachment to Form 4400-122.

Sample Number and Type	Sample Length Att. & Recovered (in)	Blow Counts	Depth In Feet	Soil/Rock Description And Geologic Origin For Each Major Unit	U S C S	Graphic Log	Well Diagram	PID/FID	Soil Properties: Compressive Strength	Moisture Content	Liquid Limit	Plasticity Index	P 200	RQD/ Comments
			13											
			14											
			15											
			16											
			17											
1 SS	24 20	1 1 6 8	18	Gry Silty SAND w/Some Debris						W				
			19											
			20											
				EOB 20.5' Well Set 20.0'										

Route To: Watershed/Wastewater ☐ Waste Management ☐ Remediation/Redevelopment ☐ Other ☐

MONITORING WELL CONSTRUCTION
Form 4400-113A Rev. 6-97

Facility/Project Name: American Chemical Service, Inc.	Local Grid Location of Well: ____ ft. ☐N. ☐S. ____ ft. ☐E. ☐W.	Well Name: SVE-31
Facility License, Permit or Monitoring No.	Grid Origin Location (Check if estimated: ☐) Lat. ° ' " Long. ° ' " or	Wis. Unique Well No. / DNR Well Number
Facility ID: 3410-1812	St. Plane ____ ft. N, ____ ft. E. S/C/N	Date Well Installed: 09/11/2001
Type of Well: Well Code 57/sv	Section Location of Waste/Source: ____ 1/4 of ____ 1/4 of Sec. ____, T. ____ N, R. ____ ☐E ☐W	Well Installed By: (Person's Name and Firm): D. Morris
Distance Well Is From Waste/Source Boundary ____ ft.	Location of Well Relative to Waste/Source: u ☐ Upgradient s ☐ Sidegradient d ☐ Downgradient n ☐ Not Known	Boart Longyear

A. Protective pipe, top elevation ____ ft. MSL

B. Well casing, top elevation ____ ft. MSL

C. Land surface elevation ____ ft. MSL

D. Surface seal, bottom ____ ft. MSL or 0.0 ft.

12. USC classification of soil near screen:
GP ☐ GM☐ GC ☐ GW☐ SW☐ SP ☐
SM☐ SC ☐ ML☐ MH☐ CL ☐ CH ☐
Bedrock☐

13. Sieve analysis attached? ☐ Yes ☐ No

14. Drilling method used: Rotary ☐ 5 0
Hollow Stem Auger ☒ 4 1
____ Other ☐ __

15. Drilling fluid used: Water ☐ 0 2 Air ☐ 0 1
Drilling Mud ☐ 0 3 None ☒ 9 9

16. Drilling additives used? ☐ Yes ☒ No

Describe____

17. Source of water (attach analysis):
____

E. Bentonite seal, top ____ ft. MSL or 2.0 ft.

F. Fine sand, top ____ ft. MSL or na ft.

G. Filter pack, top ____ ft. MSL or 4.0 ft.

H. Screen joint, top ____ ft. MSL or 5.0 ft.

I. Well bottom ____ ft. MSL or 20.0 ft.

J. Filter pack, bottom ____ ft. MSL or 20.5 ft.

K. Borehole, bottom ____ ft. MSL or 20.5 ft.

L. Borehole, diameter 10.0 in.

M. O.D. well casing 4.50 in.

N. I.D. well casing 4.00 in.

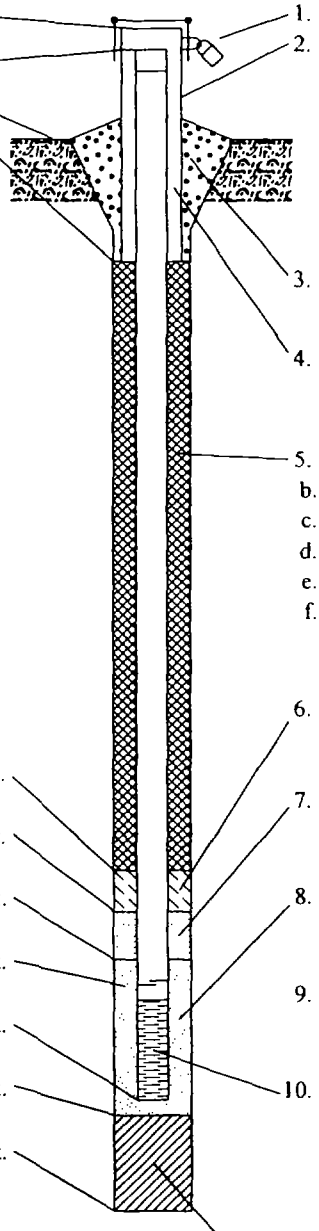

1. Cap and lock? ☒ Yes ☐ No
2. Protective cover pipe:
a. Inside diameter: ____ in.
b. Length: ____ ft.
c. Material: Steel ☐ 0 4
na Other ☒ __
d. Additional protection? ☐ Yes ☒ No
If yes, describe:____
3. Surface seal: Bentonite ☒ 3 0
Concrete ☐ 0 1
____ Other ☐
4. Material between well casing and protective pipe:
Bentonite ☐ 3 0
na Other ☒
5. Annular space seal: a. Granular Bentonite ☐ 3 3
b. ____Lbs/gal mud weight . Bentonite-sand slurry ☐ 3 5
c. ____Lbs/gal mud weight . . . Bentonite slurry ☐ 3 1
d. ____% Bentonite . . . Bentonite-cement grout ☐ 5 0
e. ____Ft^3 volume added for any of the above
f. How installed: Tremie ☐ 0 1
Tremie pumped ☐ 0 2
Gravity ☒ 0 8
6. Bentonite seal: a. Bentonite granules ☐ 3 3
b. ☐ 1/4 in. ☒ 3/8 in. ☐ 1/2 in. Bentonite pellets ☒ 3 2
c. ____ Other ☐
7. Fine sand material: Manufacturer, product name and mesh siz
a. ba
b. Volume added ____ ft^3
8. Filter pack material: Manufacturer, product name and mesh si
a. #5 Global
b. Volume added ____ ft^3
9. Well casing: Flush threaded PVC schedule 40 ☐ 2 3
Flush threaded PVC schedule 80 ☐ 2 4
Stainless Steel Other ☒
10. Screen material: Stainless Steel
a. Screen Type: Factory cut ☐ 1 1
Continuous slot ☒ 0 1
____ Other ☐
b. Manufacturer Johnson
c. Slot size: 0.020 in.
d. Slotted length: 15.0 ft.
11. Backfill material (below filter pack): None ☒ 1 4
____ Other ☐

ereby certify that the information on this form is true and correct to the best of my knowledge.

Signature

Firm: Boart Longyear Company
101 Alderson Street Schofield, WI 54476

Tel: 715-359-7090
Fax: 715-355-5715

SOIL BORING LOG INFORMATION

Form 4400-122 Rev. 5-97

Route To: Watershed/Wastewater ☐ Waste Management ☐ Remediation/Redevelopment ☐ Other ☐

Facility/Project Name	License/Permit/Monitoring Number	Boring Number
American Chemical Service, Inc.		SVE-32

Boring Drilled By (Firm name and name of crew chief)	Date Drilling Started	Date Drilling Completed	Drilling Method
Boart Longyear - J. Berthold	9/10/2001	9/10/2001	6 1/4 HSA

WI Unique Well No.	DNR Well ID No.	Common Well Name	Final Static Water Level	Surface Elevation	Borehole Diameter
		SVE-32			10.0 Inches

Boring Location or Local Grid Origin (Check if estimated: ☐)
State Plane S / C / N
1/4 of 1/4 of Section , T N, R
Lat. ° ' "
Long. ° ' "
Local Grid Location (If applicable)
Feet ☐ N ☐ S Feet ☐ E ☐ W

Facility ID	County	County Code	Civil Town/City/ or Village
3410-1812	Lake		Griffith, IN

Sample: Number and Type	Length Att. & Recovered (in)	Blow Counts	Depth In Feet	Soil/Rock Description And Geologic Origin For Each Major Unit	U S C S	Graphic Log	Well Diagram	PID/FID	Soil Properties: Compressive Strength	Moisture Content	Liquid Limit	Plasticity Index	P 200	RQD/ Comments
				EARTH DRILL										
			1											
			2											
			3											
			4											
			5											
			6											
			7											
			8											
			9											
			10											
			11											
			12											

I hereby certify that the information on this form is true and correct to the best of my knowledge.

Signature

Firm Boart Longyear Company
101 Alderson Street Schofield, WI 54476
Tel: 715-[illegible] 7090
Fax: 715-[illegible] 715

SOIL BORING LOG INFORMATION SUPPLEMENT

Form 4400-122A Rev. 5-97

Boring Number SVE-32 Use only as an attachment to Form 4400-122.

Sample Number and Type	Length Att. & Recovered (in)	Blow Counts	Depth In Feet	Soil/Rock Description And Geologic Origin For Each Major Unit	U S C S	Graphic Log	Well Diagram	PID/FID	Soil Properties: Compressive Strength	Moisture Content	Liquid Limit	Plasticity Index	P 200	RQD/ Comments
			13											
			14											
			15											
			16											
			17											
1 SS	24 21	8 5 5 8	18 19 20	Gry Silty SAND						W				
				EOB 20.5' Well Set 20.0'										

Route To: Watershed/Wastewater ☐ Waste Management ☐ Remediation/Redevelopment ☐ Other ☐

MONITORING WELL CONSTRUCTION

Form 4400-113A Rev. 6-97

Facility/Project Name: American Chemical Service, Inc.	Local Grid Location of Well: ____ ft. ☐ N. ☐ S. ____ ft. ☐ E. ☐ W.	Well Name: SVE-32
Facility License, Permit or Monitoring No.	Grid Origin Location (Check if estimated: ☐) Lat. ° ' " Long. ° ' " or	Wis. Unique Well No. / DNR Well Number
Facility ID: 3410-1812	St. Plane ____ ft. N, ____ ft. E. S/C/N	Date Well Installed: 09/10/2001
Type of Well: Well Code 57/sv	Section Location of Waste/Source: ____ 1/4 of ____ 1/4 of Sec. ____, T. ____ N, R. ____ ☐ E ☐ W	Well Installed By: (Person's Name and Firm) J. Berthold
Distance Well Is From Waste/Source Boundary ____ ft.	Location of Well Relative to Waste/Source: u ☐ Upgradient s ☐ Sidegradient d ☐ Downgradient n ☐ Not Known	Boart Longyear

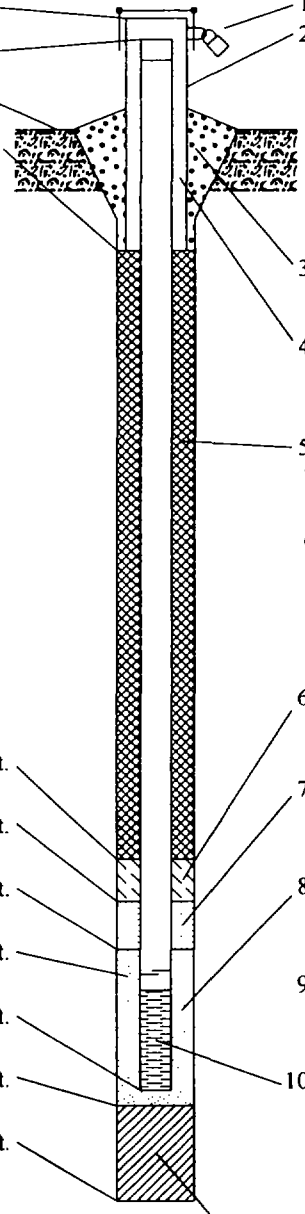

A. Protective pipe, top elevation ____ ft. MSL

B. Well casing, top elevation ____ ft. MSL

C. Land surface elevation ____ ft. MSL

D. Surface seal, bottom ____ ft. MSL or 0.0 ft.

12. USC classification of soil near screen:
GP ☐ GM ☐ GC ☐ GW ☐ SW ☐ SP ☐
SM ☐ SC ☐ ML ☐ MH ☐ CL ☐ CH ☐
Bedrock ☐

13. Sieve analysis attached? ☐ Yes ☐ No

14. Drilling method used: Rotary ☐ 50 Hollow Stem Auger ☒ 41 ____ Other ☐ __

15. Drilling fluid used: Water ☐ 02 Air ☐ 01 Drilling Mud ☐ 03 None ☒ 99

16. Drilling additives used? ☐ Yes ☒ No

Describe ____

17. Source of water (attach analysis): ____

E. Bentonite seal, top ____ ft. MSL or 7.0 ft.

F. Fine sand, top ____ ft. MSL or na ft.

G. Filter pack, top ____ ft. MSL or 9.0 ft.

H. Screen joint, top ____ ft. MSL or 10.0 ft.

I. Well bottom ____ ft. MSL or 20.0 ft.

J. Filter pack, bottom ____ ft. MSL or 20.5 ft.

K. Borehole, bottom ____ ft. MSL or 20.5 ft.

L. Borehole, diameter 10.0 in.

M. O.D. well casing 4.50 in.

N. I.D. well casing 4.00 in.

1. Cap and lock? ☒ Yes ☐ No

2. Protective cover pipe:
a. Inside diameter: ____ in.
b. Length: ____ ft.
c. Material: na — Steel ☐ 04 Other ☒
d. Additional protection? ☐ Yes ☒ No
If yes, describe: ____

3. Surface seal: Bentonite ☒ 30 Concrete ☐ 01 ____ Other ☐

4. Material between well casing and protective pipe: na — Bentonite ☐ 30 Other ☒

5. Annular space seal: a. Granular Bentonite ☐ 33
b. ____ Lbs/gal mud weight . Bentonite-sand slurry ☐ 35
c. ____ Lbs/gal mud weight . . . Bentonite slurry ☐ 31
d. ____ % Bentonite . . . Bentonite-cement grout ☐ 50
e. ____ Ft^3 volume added for any of the above
f. How installed: Tremie 1 Tremie pumped ☐ 02 Gravity ☒ 08

6. Bentonite seal: a. Bentonite granules ☐ 33
b. ☐ 1/4 in. ☒ 3/8 in. ☐ 1/2 in. Bentonite pellets ☒ 32
c. ____ Other ☐

7. Fine sand material: Manufacturer, product name and mesh siz
a. na
b. Volume added ____ ft^3

8. Filter pack material: Manufacturer, product name and mesh si
a. #5 Global
b. Volume added ____ ft^3

9. Well casing: Flush threaded PVC schedule 40 ☐ 23 Flush threaded PVC schedule 80 ☐ 24 Stainless Steel Other ☒

10. Screen material: Stainless Steel
a. Screen Type: Factory cut ☐ 11 Continuous slot ☒ 01 ____ Other ☐
b. Manufacturer Johnson
c. Slot size: 0.020 in
d. Slotted length: 10.0 ft

11. Backfill material (below filter pack): None ☒ 14 ____ Other ☐

I hereby certify that the information on this form is true and correct to the best of my knowledge.

Signature

Firm: Boart Longyear Company
101 Alderson Street Schofield, WI 54476

Tel: 715-3 090
Fax: 715-355-5715

SOIL BORING LOG INFORMATION

Form 4400-122 Rev. 5-97

Route To: Watershed/Wastewater ☐ Waste Management ☐ Remediation/Redevelopment ☐ Other ☐

Facility/Project Name	License/Permit/Monitoring Number	Boring Number
American Chemical Service, Inc.		SVE-33

Boring Drilled By (Firm name and name of crew chief)	Date Drilling Started	Date Drilling Completed	Drilling Method
Boart Longyear - D. Morris	9/6/2001	9/6/2001	6 1/4 HSA

WI Unique Well No.	DNR Well ID No.	Common Well Name	Final Static Water Level	Surface Elevation	Borehole Diameter
		SVE-33			10.0 Inches

Boring Location or Local Grid Origin (Check if estimated: ☐)
State Plane S / C / N
1/4 of 1/4 of Section , T N, R
Lat. ° ' "
Long. ° ' "
Local Grid Location (If applicable)
Feet ☐ N ☐ S Feet ☐ E ☐ W

Facility ID	County	County Code	Civil Town/City/ or Village
3410-1812	Lake		Griffith, IN

Sample: Number and Type	Length Att. & Recovered (in)	Blow Counts	Depth In Feet	Soil/Rock Description And Geologic Origin For Each Major Unit	U S C S	Graphic Log	Well Diagram	PID/FID	Soil Properties: Compressive Strength	Moisture Content	Liquid Limit	Plasticity Index	P 200	RQD/ Comments
				EARTH DRILL										
			1											
			2											
			3											
			4											
			5											
			6											
			7											
			8											
			9											
			10											
			11											
			12											

I hereby certify that the information on this form is true and correct to the best of my knowledge.

Signature

Firm Boart Longyear Company
101 Alderson Street Schofield, WI 54476
Tel: 715-359-7090
Fax: 715-355-5715

SOIL BORING LOG INFORMATION SUPPLEMENT

Form 4400-122A Rev. 5-97

Boring Number SVE-33 Use only as an attachment to Form 4400-122.

Sample									Soil Properties					
Number and Type	Length Att. & Recovered (in)	Blow Counts	Depth In Feet	Soil/Rock Description And Geologic Origin For Each Major Unit	U S C S	Graphic Log	Well Diagram	PID/FID	Compressive Strength	Moisture Content	Liquid Limit	Plasticity Index	P 200	RQD/ Comments
			13											
			14											
			15											
			16											
			17											
			18											
			19											
			20											
			21	EOB 21.0' Well Set 20.0'										

Route To: Watershed/Wastewater ☐ Waste Management ☐ Remediation/Redevelopment ☐ Other ☐

MONITORING WELL CONSTRUCTION
Form 4400-113A Rev. 6-97

Facility/Project Name: American Chemical Service, Inc.	Local Grid Location of Well: ____ ft. ☐N. ☐S. ____ ft. ☐E. ☐W.	Well Name: SVE-33
Facility License, Permit or Monitoring No.	Grid Origin Location (Check if estimated: ☐) Lat. ___° ___' ___" Long. ___° ___' ___" or	Wis. Unique Well No / DNR Well Number
Facility ID: 3410-1812	St. Plane ____ ft. N, ____ ft. E. S/C/N	Date Well Installed: 09/06/2001
Type of Well: Well Code 57/sv	Section Location of Waste/Source: ___ 1/4 of ___ 1/4 of Sec. ___, T. ___ N, R. ___ ☐E ☐W	Well Installed By: (Person's Name and Firm): D. Morris
Distance Well Is From Waste/Source Boundary ft.	Location of Well Relative to Waste/Source: u ☐ Upgradient s ☐ Sidegradient d ☐ Downgradient n ☐ Not Known	Boart Longyear

A. Protective pipe, top elevation ____ ft. MSL

B. Well casing, top elevation ____ ft. MSL

C. Land surface elevation ____ ft. MSL

D. Surface seal, bottom ____ ft. MSL or 0.0 ft.

12. USC classification of soil near screen:
GP ☐ GM☐ GC ☐ GW☐ SW☐ SP ☐
SM☐ SC ☐ ML☐ MH☐ CL ☐ CH ☐
Bedrock ☐

13. Sieve analysis attached? ☐ Yes ☐ No

14. Drilling method used: Rotary ☐ 5 0
Hollow Stem Auger ☒ 4 1
____ Other ☐ __

15. Drilling fluid used: Water ☐ 0 2 Air ☐ 0 1
Drilling Mud ☐ 0 3 None ☒ 9 9

16. Drilling additives used? ☐ Yes ☒ No

Describe ____

17. Source of water (attach analysis):

E. Bentonite seal, top ____ ft. MSL or 7.0 ft.

F. Fine sand, top ____ ft. MSL or na ft.

G. Filter pack, top ____ ft. MSL or 9.0 ft.

H. Screen joint, top ____ ft. MSL or 10.0 ft.

I. Well bottom ____ ft. MSL or 20.0 ft.

J. Filter pack, bottom ____ ft. MSL or 21.0 ft.

K. Borehole, bottom ____ ft. MSL or 21.0 ft.

L. Borehole, diameter 10.0 in.

M. O.D. well casing 4.50 in.

N. I.D. well casing 4.00 in.

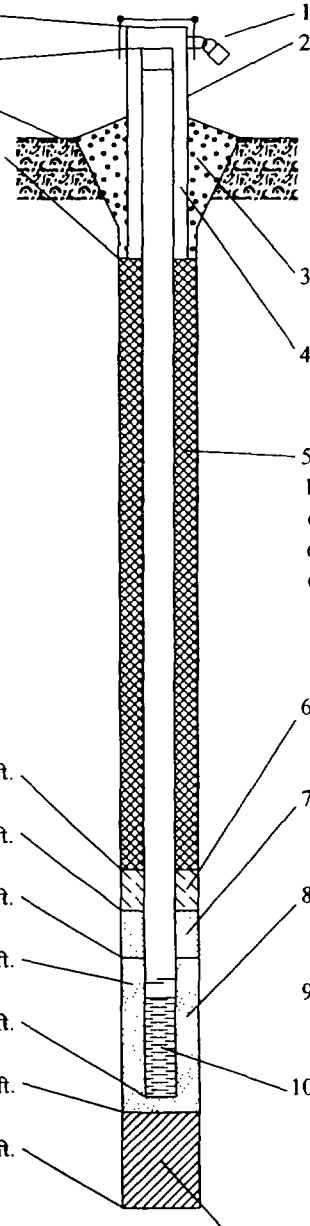

1. Cap and lock? ☒ Yes ☐ No
2. Protective cover pipe:
a. Inside diameter: ____ in.
b. Length: ____ ft.
c. Material: Steel ☐ 0 4
na Other ☒
d. Additional protection? ☐ Yes ☒ No
If yes, describe: ____
3. Surface seal: Bentonite ☒ 3 0
Concrete ☐ 0 1
____ Other ☐
4. Material between well casing and protective pipe:
Bentonite ☐ 3 0
na Other ☒
5. Annular space seal: a. Granular Bentonite ☐ 3 3
b. ____ Lbs/gal mud weight . Bentonite-sand slurry ☐ 3 5
c. ____ Lbs/gal mud weight . . . Bentonite slurry ☐ 3 1
d. ____ % Bentonite . . . Bentonite-cement grout ☐ 5 0
e. ____ Ft^3 volume added for any of the above
f. How installed: Tremie ☐ 0 1
Tremie pumped ☐ 0 2
Gravity ☒ 0 8
6. Bentonite seal: a. Bentonite granules ☒ 3 3
b. ☐ 1/4 in. ☐ 3/8 in. ☐ 1/2 in. Bentonite pellets ☐ 3 2
c. ____ Other ☐
7. Fine sand material: Manufacturer, product name and mesh siz
a. na
b. Volume added ____ ft^3
8. Filter pack material: Manufacturer, product name and mesh si
a. #5 Global
b. Volume added ____ ft^3
9. Well casing: Flush threaded PVC schedule 40 ☐ 2 3
Flush threaded PVC schedule 80 ☐ 2 4
Stainless Steel Other ☒
10. Screen material: Stainless Steel
a. Screen Type: Factory cut ☐ 1 1
Continuous slot ☒ 0 1
____ Other ☐
b. Manufacturer Johnson
c. Slot size: 0.020 in.
d. Slotted length: 10.0 ft.
11. Backfill material (below filter pack): None ☒ 1 4
____ Other ☐

I hereby certify that the information on this form is true and correct to the best of my knowledge.

Signature: [signature] Firm: Boart Longyear Company, 101 Alderson Street Schofield, WI 54476 Tel: 715-359-7090 Fax: 715-355-5715

SOIL BORING LOG INFORMATION

Form 4400-122 Rev. 5-97

Route To: Watershed/Wastewater ☐ Waste Management ☐ Remediation/Redevelopment ☐ Other ☐

Facility/Project Name	License/Permit/Monitoring Number	Boring Number
American Chemical Service, Inc.		SVE-34

Boring Drilled By (Firm name and name of crew chief)	Date Drilling Started	Date Drilling Completed	Drilling Method
Boart Longyear - J. Berthold	9/5/2001	9/5/2001	6 1/4 HSA

WI Unique Well No.	DNR Well ID No.	Common Well Name	Final Static Water Level	Surface Elevation	Borehole Diameter
		SVE-34			10.0 Inches

Boring Location or Local Grid Origin (Check if estimated: ☐)
State Plane S / C / N
1/4 of 1/4 of Section , T N, R
Lat. ° ' "
Long. ° ' "
Local Grid Location (If applicable)
Feet ☐ N ☐ S Feet ☐ E ☐ W

Facility ID	County	County Code	Civil Town/City/ or Village
3410-1812	Lake		Griffith, IN

Sample Number and Type	Length Att. & Recovered (in)	Blow Counts	Depth In Feet	Soil/Rock Description And Geologic Origin For Each Major Unit	U S C S	Graphic Log	Well Diagram	PID/FID	Soil Properties: Compressive Strength	Moisture Content	Liquid Limit	Plasticity Index	P 200	RQD/ Comments
				EARTH DRILL										
			1											
			2											
			3											
			4											
			5											
			6											
			7											
			8											
			9											
			10											
			11											
			12											

I hereby certify that the information on this form is true and correct to the best of my knowledge.

Signature

Firm Boart Longyear Company
101 Alderson Street Schofield, WI 54476
Tel: 715- 709(
Fax: 715- 5715

SOIL BORING LOG INFORMATION SUPPLEMENT

Form 4400-122A Rev. 5-97

Boring Number SVE-34 Use only as an attachment to Form 4400-122.

Sample Number and Type	Sample Length Att. & Recovered (in)	Blow Counts	Depth In Feet	Soil/Rock Description And Geologic Origin For Each Major Unit	U S C S	Graphic Log	Well Diagram	PID/FID	Soil Properties: Compressive Strength	Moisture Content	Liquid Limit	Plasticity Index	P 200	RQD/ Comments
			13											
			14											
			15											
			16											
			17											
			18											
1 SS	24 19	1 1 2 2	19	Tan Gry Silty SAND						W				
			20	EOB 20.0' Well Set 20.0'										

Route To: Watershed/Wastewater ☐ Waste Management ☐ Remediation/Redevelopment ☐ Other ☐

MONITORING WELL CONSTRUCTION
Form 4400-113A Rev. 6-97

Facility/Project Name: American Chemical Service, Inc.	Local Grid Location of Well: ____ ft. ☐N. ☐S. ____ ft. ☐E. ☐W.	Well Name: SVE-34
Facility License, Permit or Monitoring No.	Grid Origin Location (Check if estimated: ☐) Lat. ___° ___' ___" Long. ___° ___' ___" or	Wis. Unique Well No / DNR Well Number
Facility ID: 3410-1812	St. Plane ____ ft. N, ____ ft. E. S/C/N	Date Well Installed: 09/05/2001
Type of Well: Well Code 57/sv	Section Location of Waste/Source: ___1/4 of ___ 1/4 of Sec. ___, T. ___ N, R. ___ ☐E ☐W	Well Installed By: (Person's Name and Firm): D. Morris
Distance Well Is From Waste/Source Boundary ft.	Location of Well Relative to Waste/Source: u ☐ Upgradient s ☐ Sidegradient d ☐ Downgradient n ☐ Not Known	Boart Longyear

A. Protective pipe, top elevation ____ ft. MSL

B. Well casing, top elevation ____ ft. MSL

C. Land surface elevation ____ ft. MSL

D. Surface seal, bottom ____ ft. MSL or 0.0 ft.

12. USC classification of soil near screen:
GP ☐ GM☐ GC ☐ GW☐ SW☐ SP ☐
SM☐ SC ☐ ML☐ MH☐ CL ☐ CH ☐
Bedrock☐

13. Sieve analysis attached? ☐ Yes ☐ No

14. Drilling method used: Rotary ☐ 5 0
Hollow Stem Auger ☒ 4 1
____ Other ☐ __

15. Drilling fluid used: Water ☐ 0 2 Air ☐ 0 1
Drilling Mud ☐ 0 3 None ☒ 9 9

16. Drilling additives used? ☐ Yes ☒ No

Describe____

17. Source of water (attach analysis):

E. Bentonite seal, top ____ ft. MSL or 6.0 ft.

F. Fine sand, top ____ ft. MSL or na ft.

G. Filter pack, top ____ ft. MSL or 8.0 ft.

H. Screen joint, top ____ ft. MSL or 10.0 ft.

I. Well bottom ____ ft. MSL or 20.0 ft.

J. Filter pack, bottom ____ ft. MSL or 20.0 ft.

K. Borehole, bottom ____ ft. MSL or 20.0 ft.

L. Borehole, diameter 10.0 in.

M. O.D. well casing 4.50 in.

N. I.D. well casing 4.00 in.

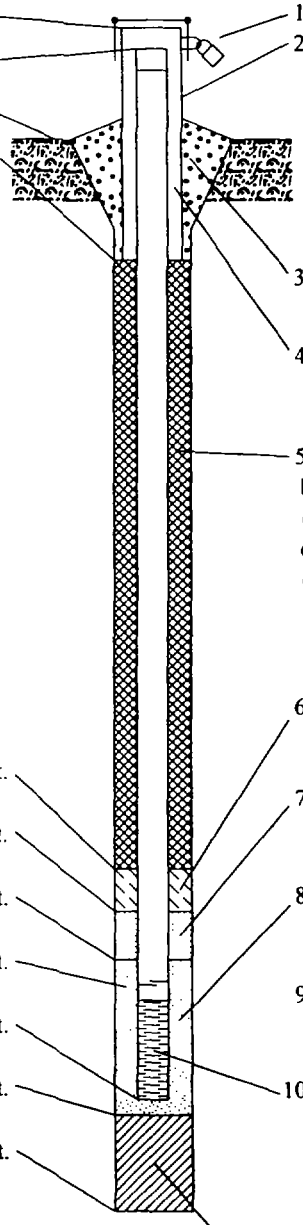

1. Cap and lock? ☒ Yes ☐ No
2. Protective cover pipe:
a. Inside diameter: ____ in.
b. Length: ____ ft.
c. Material: Steel ☐ 0 4
na Other ☒ __
d. Additional protection? ☐ Yes ☒ No
If yes, describe:____
3. Surface seal: Bentonite ☒ 3 0
Concrete ☐ 0 1
____ Other ☐ __
4. Material between well casing and protective pipe:
Bentonite ☐ 3 0
na Other ☒ __
5. Annular space seal: a. Granular Bentonite ☐ 3 3
b. ____Lbs/gal mud weight . Bentonite-sand slurry ☐ 3 5
c. ____Lbs/gal mud weight . . . Bentonite slurry ☐ 3 1
d. ____% Bentonite . . . Bentonite-cement grout ☐ 5 0
e. ____Ft^3 volume added for any of the above
f. How installed: Tremie ☐ __
Tremie pumped ☐ 0 2
Gravity ☒ 0 8
6. Bentonite seal: a. Bentonite granules ☐ 3 3
b. ☐1/4 in. ☒3/8 in. ☐1/2 in. Bentonite pellets ☒ 3 2
c.____ Other ☐ __
7. Fine sand material: Manufacturer, product name and mesh size
a. na
b. Volume added ____ ft^3
8. Filter pack material: Manufacturer, product name and mesh size
a. #5 Global
b. Volume added ____ ft^3
9. Well casing: Flush threaded PVC schedule 40 ☐ 2 3
Flush threaded PVC schedule 80 ☐ 2 4
Stainless Steel Other ☒
10. Screen material: Stainless Steel
a. Screen Type: Factory cut ☐ 1 1
Continuous slot ☒ 0 1
____ Other ☐
b. Manufacturer Johnson
c. Slot size: 0.020 in.
d. Slotted length: 10.0 ft.
11. Backfill material (below filter pack): None ☒ 1 4
____ Other ☐

I hereby certify that the information on this form is true and correct to the best of my knowledge.

Signature	Firm: Boart Longyear Company, 101 Alderson Street Schofield, WI 54476	Tel: 715-3[illegible]090 Fax: 715-355-5715

SOIL BORING LOG INFORMATION

Form 4400-122 Rev. 5-97

Route To: Watershed/Wastewater ☐ Waste Management ☐ Remediation/Redevelopment ☐ Other ☐

Facility/Project Name	License/Permit/Monitoring Number	Boring Number
American Chemical Service, Inc.		SVE-35

Boring Drilled By (Firm name and name of crew chief)	Date Drilling Started	Date Drilling Completed	Drilling Method
Boart Longyear - J. Berthold	9/6/2001	9/6/2001	6 1/4 HSA

WI Unique Well No.	DNR Well ID No.	Common Well Name	Final Static Water Level	Surface Elevation	Borehole Diameter
		SVE-35			10.0 Inches

Boring Location or Local Grid Origin (Check if estimated: ☐)
State Plane S/C/N
1/4 of 1/4 of Section , T N, R
Lat. ° ' "
Long. ° ' "
Local Grid Location (If applicable)
☐ N ☐ E
Feet ☐ S Feet ☐ W

Facility ID	County	County Code	Civil Town/City/ or Village
3410-1812	Lake		Griffith, IN

Sample: Number and Type	Length Att. & Recovered (in)	Blow Counts	Depth In Feet	Soil/Rock Description And Geologic Origin For Each Major Unit	U S C S	Graphic Log	Well Diagram	PID/FID	Soil Properties: Compressive Strength	Moisture Content	Liquid Limit	Plasticity Index	P 200	RQD/ Comments
				EARTH DRILL										
			1											
			2											
			3											
			4											
			5											
			6											
			7											
			8											
			9											
			10											
			11											
			12											

I hereby certify that the information on this form is true and correct to the best of my knowledge.

Signature	Firm	
	Boart Longyear Company 101 Alderson Street Schofield, WI 54476	Tel: 715-359-7090 Fax: 715-355-5715

SOIL BORING LOG INFORMATION SUPPLEMENT

Form 4400-122A Rev. 5-97

Boring Number SVE-35 Use only as an attachment to Form 4400-122.

Sample Number and Type	Sample Length Att. & Recovered (in)	Blow Counts	Depth In Feet	Soil/Rock Description And Geologic Origin For Each Major Unit	U S C S	Graphic Log	Well Diagram	PID/FID	Soil Properties: Compressive Strength	Moisture Content	Liquid Limit	Plasticity Index	P 200	RQD/ Comments
			13											
			14											
			15											
			16											
			17											
1 SS	24 20	1 1 1 4	18	Gry Silty SAND						W				
			19											
			20											
				EOB 20.5' Well Set 20.0'										

Route To: Watershed/Wastewater ☐ Waste Management ☐ Remediation/Redevelopment ☐ Other ☐

MONITORING WELL CONSTRUCTION
Form 4400-113A Rev. 6-97

Facility/Project Name: American Chemical Service, Inc.	Local Grid Location of Well: ____ ft. ☐N. ☐S. ____ ft. ☐E. ☐W.	Well Name: SVE-35
F ility License, Permit or Monitoring No.	Grid Origin Location (Check if estimated: ☐) Lat. ___° ___' ___" Long. ___° ___' ___" or	Wis. Unique Well No / DNR Well Number
Facility ID: 3410-1812	St. Plane ____ ft. N, ____ ft. E. S/C/N	Date Well Installed: 09/06/2001
Type of Well: Well Code 57/sv	Section Location of Waste/Source: ___1/4 of ___ 1/4 of Sec. ___, T. ___ N, R. ___ ☐E ☐W	Well Installed By: (Person's Name and Firm): J. Berthold
Distance Well Is From Waste/Source Boundary ft.	Location of Well Relative to Waste/Source: u ☐ Upgradient s ☐ Sidegradient d ☐ Downgradient n ☐ Not Known	Boart Longyear

A. Protective pipe, top elevation ____ ft. MSL

B. Well casing, top elevation ____ ft. MSL

C. Land surface elevation ____ ft. MSL

D. Surface seal, bottom ____ ft. MSL or 0.0 ft.

12. USC classification of soil near screen:
GP ☐ GM☐ GC ☐ GW☐ SW☐ SP ☐
SM☐ SC ☐ ML☐ MH☐ CL ☐ CH ☐
Bedrock☐

13. Sieve analysis attached? ☐ Yes ☐ No

14. Drilling method used: Rotary ☐ 5 0
Hollow Stem Auger ☒ 4 1
____ Other ☐ __

15. Drilling fluid used: Water ☐ 0 2 Air ☐ 0 1
Drilling Mud ☐ 0 3 None ☒ 9 9

16. Drilling additives used? ☐ Yes ☒ No

Describe____

17. Source of water (attach analysis):
____

E. Bentonite seal, top ____ ft. MSL or 7.0 ft.

F. Fine sand, top ____ ft. MSL or na ft.

G. Filter pack, top ____ ft. MSL or 9.0 ft.

H. Screen joint, top ____ ft. MSL or 10.0 ft.

I. Well bottom ____ ft. MSL or 20.0 ft.

J. Filter pack, bottom ____ ft. MSL or 20.5 ft.

K. Borehole, bottom ____ ft. MSL or 20.5 ft.

L. Borehole, diameter 10.0 in.

M. O.D. well casing 4.50 in.

N. I.D. well casing 4.00 in.

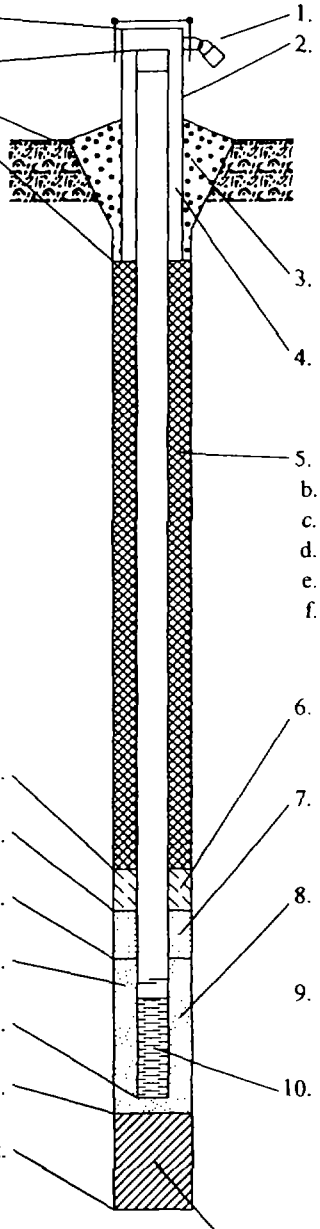

1. Cap and lock? ☐ Yes ☒ No
2. Protective cover pipe:
a. Inside diameter: ____ in.
b. Length: ____ ft.
c. Material: Steel ☐ 0 4
na Other ☒ __
d. Additional protection? ☐ Yes ☒ No
If yes, describe:____
3. Surface seal: Bentonite ☒ 3 0
Concrete ☐ 0 1
____ Other ☐ __
4. Material between well casing and protective pipe:
Bentonite ☐ 3 0
na Other ☒ __
5. Annular space seal: a. Granular Bentonite ☐ 3 3
b. ____Lbs/gal mud weight . Bentonite-sand slurry ☐ 3 5
c. ____Lbs/gal mud weight . . . Bentonite slurry ☐ 3 1
d. ____% Bentonite . . . Bentonite-cement grout ☐ 5 0
e. ____Ft^3 volume added for any of the above
f. How installed: Tremie ☐ 0 1
Tremie pumped ☐ 0 2
Gravity ☒ 0 8
6. Bentonite seal: a. Bentonite granules ☒ 3 3
b. ☐1/4 in. ☐3/8 in. ☐1/2 in. Bentonite pellets ☐ 3 2
c.____ Other ☐ __
7. Fine sand material: Manufacturer, product name and mesh siz
a. na __
b. Volume added____ ft^3
8. Filter pack material: Manufacturer, product name and mesh si
a. #5 Global __
b. Volume added____ ft^3
9. Well casing: Flush threaded PVC schedule 40 ☐ 2 3
Flush threaded PVC schedule 80 ☐ 2 4
Stainless Steel Other ☒ __
10. Screen material: Stainless Steel __
a. Screen Type: Factory cut ☐ 1 1
Continuous slot ☒ 0 1
____ Other ☐ __
b. Manufacturer Johnson
c. Slot size: 0.020 in.
d. Slotted length: 10.0 ft
11. Backfill material (below filter pack): None ☒ 1 4
____ Other ☐ __

ıereby certify that the information on this form is true and correct to the best of my knowledge.

ɔignature [signature] Firm Boart Longyear Company
101 Alderson Street Schofield, WI 54476
Tel: 715-359-7090
Fax: 715-355-5715

SOIL BORING LOG INFORMATION

Form 4400-122 Rev. 5-97

Route To: Watershed/Wastewater ☐ Waste Management ☐ Remediation/Redevelopment ☐ Other ☐

Facility/Project Name	License/Permit/Monitoring Number	Boring Number
American Chemical Service, Inc.		SVE-36

Boring Drilled By (Firm name and name of crew chief)	Date Drilling Started	Date Drilling Completed	Drilling Method
Boart Longyear - J. Berthold	9/5/2001	9/5/2001	6 1/4 HSA

WI Unique Well No.	DNR Well ID No.	Common Well Name	Final Static Water Level	Surface Elevation	Borehole Diameter
		SVE-36			10.0 Inches

Boring Location or Local Grid Origin (Check if estimated: ☐)

State Plane S / C / N

1/4 of 1/4 of Section , T N, R

Lat. ° ' "

Long. ° ' "

Local Grid Location (If applicable)

☐ N ☐ E

Feet ☐ S Feet ☐ W

Facility ID	County	County Code	Civil Town/City/ or Village
3410-1812	Lake		Griffith, IN

Sample: Number and Type	Length Att. & Recovered (in)	Blow Counts	Depth In Feet	Soil/Rock Description And Geologic Origin For Each Major Unit	U S C S	Graphic Log	Well Diagram	PID/FID	Soil Properties: Compressive Strength	Moisture Content	Liquid Limit	Plasticity Index	P 200	RQD/ Comments
				EARTH DRILL										
			1											
			2											
			3											
			4											
			5											
			6											
			7											
			8											
			9											
			10											
			11											
			12											

I hereby certify that the information on this form is true and correct to the best of my knowledge.

Signature

Firm Boart Longyear Company
101 Alderson Street Schofield, WI 54476

Tel: 715- 7090
Fax: 715- 5715

SOIL BORING LOG INFORMATION SUPPLEMENT

Form 4400-122A Rev. 5-97

oring Number SVE-36 Use only as an attachment to Form 4400-122.

Sample Number and Type	Sample Length Att. & Recovered (in)	Blow Counts	Depth In Feet	Soil/Rock Description And Geologic Origin For Each Major Unit	U S C S	Graphic Log	Well Diagram	PID/FID	Soil Properties: Compressive Strength	Moisture Content	Liquid Limit	Plasticity Index	P 200	RQD/ Comments
			13											
			14											
			15											
			16											
			17											
			18											
1 SS	24 16	5 7 7 10	19	Tan Gry Silty SAND						W				
			20											
				EOB 20.5' Well Set 20.0'										

Route To: Watershed/Wastewater ☐ Waste Management ☐ Remediation/Redevelopment ☐ Other ☐

MONITORING WELL CONSTRUCTION
Form 4400-113A Rev. 6-97

Facility/Project Name: American Chemical Service, Inc.	Local Grid Location of Well: ____ ft. ☐N. ☐S. ____ ft. ☐E. ☐W.	Well Name: SVE-36
Facility License, Permit or Monitoring No.	Grid Origin Location (Check if estimated: ☐) Lat. ° ' " Long. ° ' " or	Wis. Unique Well No / DNR Well Number
Facility ID: 3410-1812	St. Plane ____ ft. N, ____ ft. E. S/C/N	Date Well Installed: 09/05/2001
Type of Well: Well Code 57/sv	Section Location of Waste/Source: ____ 1/4 of ____ 1/4 of Sec. ____, T. ____ N, R. ____ ☐E ☐W	Well Installed By: (Person's Name and Firm) J. Berthold
Distance Well Is From Waste/Source Boundary ft.	Location of Well Relative to Waste/Source: u ☐ Upgradient s ☐ Sidegradient d ☐ Downgradient n ☐ Not Known	Boart Longyear

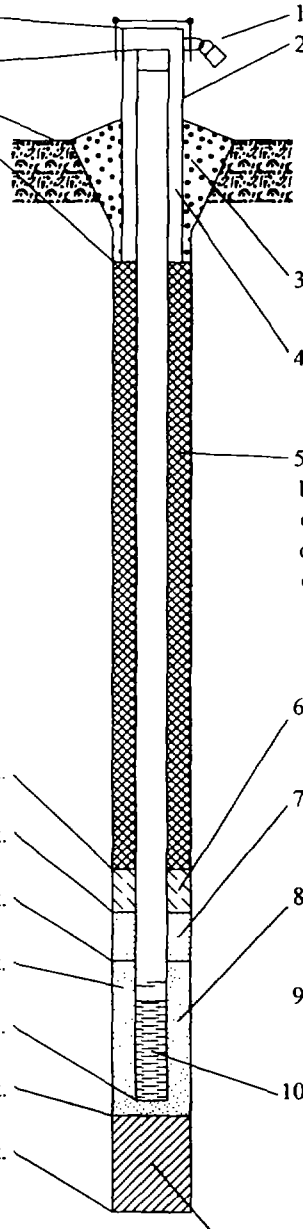

A. Protective pipe, top elevation ____ ft. MSL

B. Well casing, top elevation ____ ft. MSL

C. Land surface elevation ____ ft. MSL

D. Surface seal, bottom ____ ft. MSL or 0.0 ft.

12. USC classification of soil near screen:
GP ☐ GM☐ GC ☐ GW☐ SW☐ SP ☐
SM ☐ SC ☐ ML☐ MH☐ CL ☐ CH ☐
Bedrock☐

13. Sieve analysis attached? ☐ Yes ☐ No

14. Drilling method used: Rotary ☐ 5 0
Hollow Stem Auger ☒ 4 1
____ Other ☐ __

15. Drilling fluid used: Water ☐ 0 2 Air ☐ 0 1
Drilling Mud ☐ 0 3 None ☒ 9 9

16. Drilling additives used? ☐ Yes ☒ No

Describe____

17. Source of water (attach analysis):
____

E. Bentonite seal, top ____ ft. MSL or 7.0 ft.

F. Fine sand, top ____ ft. MSL or na ft.

G. Filter pack, top ____ ft. MSL or 9.0 ft.

H. Screen joint, top ____ ft. MSL or 10.0 ft.

I. Well bottom ____ ft. MSL or 20.0 ft.

J. Filter pack, bottom ____ ft. MSL or 20.5 ft.

K. Borehole, bottom ____ ft. MSL or 20.5 ft.

L. Borehole, diameter 10.0 in.

M. O.D. well casing 4.50 in.

N. I.D. well casing 4.00 in.

1. Cap and lock? ☒ Yes ☐ No
2. Protective cover pipe:
a. Inside diameter: ____ in.
b. Length: ____ ft.
c. Material: Steel ☐ 0 4
na Other ☒
d. Additional protection? ☐ Yes ☒ No
If yes, describe:____
3. Surface seal: Bentonite ☒ 3 0
Concrete ☐ 0 1
____ Other ☐
4. Material between well casing and protective pipe:
Bentonite ☐ 3 0
na Other ☒
5. Annular space seal: a. Granular Bentonite ☐ 3 3
b. ____Lbs/gal mud weight . Bentonite-sand slurry ☐ 3 5
c. ____Lbs/gal mud weight . . . Bentonite slurry ☐ 3 1
d. ____% Bentonite . . . Bentonite-cement grout ☐ 5 0
e. ____Ft^3 volume added for any of the above
f. How installed: Tremie ☐
Tremie pumped ☐ 0 2
Gravity ☒ 0 8
6. Bentonite seal: a. Bentonite granules ☒ 3 3
b. ☐1/4 in. ☐3/8 in. ☐1/2 in. Bentonite pellets ☐ 3 2
c. ____ Other ☐
7. Fine sand material: Manufacturer, product name and mesh size
a. na
b. Volume added ____ ft^3
8. Filter pack material: Manufacturer, product name and mesh size
a. #5 Global
b. Volume added ____ ft^3
9. Well casing: Flush threaded PVC schedule 40 ☐ 2 3
Flush threaded PVC schedule 80 ☐ 2 4
Stainless Steel Other ☒
10. Screen material: Stainless Steel
a. Screen Type: Factory cut ☐ 1 1
Continuous slot ☒ 0 1
____ Other ☐
b. Manufacturer Johnson
c. Slot size: 0.020 in.
d. Slotted length: 10.0 ft.
11. Backfill material (below filter pack): None ☒ 1 4
____ Other ☐

I hereby certify that the information on this form is true and correct to the best of my knowledge.

Signature: [signature]

Firm: Boart Longyear Company
101 Alderson Street Schofield, WI 54476

Tel: 715-35[illegible]090
Fax: 715-355-5715

SOIL BORING LOG INFORMATION

Form 4400-122 Rev. 5-97

Route To: Watershed/Wastewater ☐ Waste Management ☐ Remediation/Redevelopment ☐ Other ☐

Facility/Project Name	License/Permit/Monitoring Number	Boring Number
American Chemical Service, Inc.		SVE-37

Boring Drilled By (Firm name and name of crew chief)	Date Drilling Started	Date Drilling Completed	Drilling Method
Boart Longyear - J. Berthold	9/5/2001	9/5/2001	6 1/4 HSA

WI Unique Well No.	DNR Well ID No.	Common Well Name	Final Static Water Level	Surface Elevation	Borehole Diameter
		SVE-37			10.0 Inches

Boring Location or Local Grid Origin (Check if estimated: ☐)
State Plane S/C/N
1/4 of 1/4 of Section , T N, R
Lat. ___ ° ___ ' ___ "
Long. ___ ° ___ ' ___ "

Local Grid Location (If applicable)
☐ N ☐ E
Feet ☐ S Feet ☐ W

Facility ID	County	County Code	Civil Town/City/ or Village
3410-1812	Lake		Griffith, IN

Sample Number and Type	Length Att. & Recovered (in)	Blow Counts	Depth In Feet	Soil/Rock Description And Geologic Origin For Each Major Unit	U S C S	Graphic Log	Well Diagram	PID/FID	Soil Properties: Compressive Strength	Moisture Content	Liquid Limit	Plasticity Index	P 200	RQD/ Comments
				EARTH DRILL										
			1											
			2											
			3											
			4											
			5											
			6											
			7											
			8											
			9											
			10											
			11											
			12											

I hereby certify that the information on this form is true and correct to the best of my knowledge.

Signature	Firm	
	Boart Longyear Company 101 Alderson Street Schofield, WI 54476	Tel: 715-359-709(Fax: 715-355-571!

SOIL BORING LOG INFORMATION SUPPLEMENT

Form 4400-122A Rev. 5-97

Boring Number SVE-37 Use only as an attachment to Form 4400-122.

Sample Number and Type	Sample Length Att. & Recovered (in)	Blow Counts	Depth In Feet	Soil/Rock Description And Geologic Origin For Each Major Unit	U S C S	Graphic Log	Well Diagram	PID/FID	Soil Properties: Compressive Strength	Moisture Content	Liquid Limit	Plasticity Index	P 200	RQD/ Comments
			13											
			14											
			15											
			16											
			17											
1 SS	24 20	3 5 5 6	18 19 20	Gry Silty SAND w/Trc Clay						W				
				EOB 20.5' Well Set 19.0'										

Route To: Watershed/Wastewater ☐ Waste Management ☐ Remediation/Redevelopment ☐ Other ☐

MONITORING WELL CONSTRUCTION

Form 4400-113A Rev. 6-97

Facility/Project Name: American Chemical Service, Inc.	Local Grid Location of Well: ____ ft. ☐ N. ☐ S. ____ ft. ☐ E. ☐ W.	Well Name: SVE-37
Facility License, Permit or Monitoring No.	Grid Origin Location (Check if estimated: ☐) Lat. ___ ° ___ ' ___ " Long. ___ ° ___ ' ___ " or	Wis. Unique Well No / DNR Well Number
Facility ID: 3410-1812	St. Plane ____ ft. N, ____ ft. E. S/C/N	Date Well Installed: 09/05/2001
Type of Well: Well Code 57/sv	Section Location of Waste/Source: ____ 1/4 of ____ 1/4 of Sec. ____, T. ____ N, R. ____ ☐ E ☐ W	Well Installed By: (Person's Name and Firm): J. Berthold
Distance Well Is From Waste/Source Boundary ____ ft.	Location of Well Relative to Waste/Source: u ☐ Upgradient s ☐ Sidegradient d ☐ Downgradient n ☐ Not Known	Boart Longyear

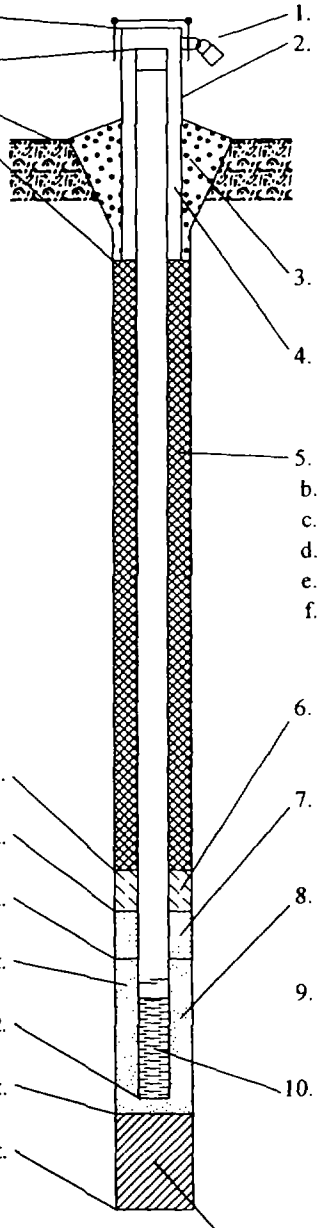

A. Protective pipe, top elevation ____ ft. MSL

B. Well casing, top elevation ____ ft. MSL

C. Land surface elevation ____ ft. MSL

D. Surface seal, bottom ____ ft. MSL or 0.0 ft.

12. USC classification of soil near screen:
GP ☐ GM ☐ GC ☐ GW ☐ SW ☐ SP ☐
SM ☐ SC ☐ ML ☐ MH ☐ CL ☐ CH ☐
Bedrock ☐

13. Sieve analysis attached? ☐ Yes ☐ No

14. Drilling method used: Rotary ☐ 5 0
Hollow Stem Auger ☒ 4 1
____ Other ☐ __

15. Drilling fluid used: Water ☐ 0 2 Air ☐ 0 1
Drilling Mud ☐ 0 3 None ☒ 9 9

16. Drilling additives used? ☐ Yes ☒ No

Describe ____

17. Source of water (attach analysis):

____

E. Bentonite seal, top ____ ft. MSL or 6.0 ft.

F. Fine sand, top ____ ft. MSL or na ft.

G. Filter pack, top ____ ft. MSL or 8.0 ft.

H. Screen joint, top ____ ft. MSL or 9.0 ft.

I. Well bottom ____ ft. MSL or 19.0 ft.

J. Filter pack, bottom ____ ft. MSL or 20.0 ft.

K. Borehole, bottom ____ ft. MSL or 20.5 ft.

L. Borehole, diameter 10.0 in.

M. O.D. well casing 4.50 in.

N. I.D. well casing 4.00 in.

1. Cap and lock? ☒ Yes ☐ No

2. Protective cover pipe:
a. Inside diameter: ____ in.
b. Length: ____ ft.
c. Material: Steel ☐ 0 4
na Other ☒ __
d. Additional protection? ☐ Yes ☒ No
If yes, describe: ____

3. Surface seal: Bentonite ☒ 3 0
Concrete ☐ 0 1
____ Other ☐ __

4. Material between well casing and protective pipe:
Bentonite ☐ 3 0
na Other ☒ __

5. Annular space seal: a. Granular Bentonite ☐ 3 3
b. ____ Lbs/gal mud weight . Bentonite-sand slurry ☐ 3 5
c. ____ Lbs/gal mud weight . . . Bentonite slurry ☐ 3 1
d. ____ % Bentonite . . . Bentonite-cement grout ☐ 5 0
e. ____ Ft^3 volume added for any of the above
f. How installed: Tremie ☐ 0 1
Tremie pumped ☐ 0 2
Gravity ☒ 0 8

6. Bentonite seal: a. Bentonite granules ☒ 3 3
b. ☐ 1/4 in. ☐ 3/8 in. ☐ 1/2 in. Bentonite pellets ☐ 3 2
c. ____ Other ☐ __

7. Fine sand material: Manufacturer, product name and mesh siz
a. na
b. Volume added ____ ft^3

8. Filter pack material: Manufacturer, product name and mesh si
a. #5 Global
b. Volume added ____ ft^3

9. Well casing: Flush threaded PVC schedule 40 ☐ 2 3
Flush threaded PVC schedule 80 ☐ 2 4
Stainless Steel Other ☒ __

10. Screen material: Stainless Steel
a. Screen Type: Factory cut ☐ 1 1
Continuous slot ☒ 0 1
____ Other ☐ __
b. Manufacturer Johnson
c. Slot size: 0.020 in.
d. Slotted length: 10.0 ft.

11. Backfill material (below filter pack): None ☒ 1 4
____ Other ☐ __

I hereby certify that the information on this form is true and correct to the best of my knowledge.

Signature

Firm: Boart Longyear Company
101 Alderson Street Schofield, WI 54476

Tel: 715-359-7090
Fax: 715-355-5715

SOIL BORING LOG INFORMATION

Form 4400-122 Rev. 5-97

Route To: Watershed/Wastewater ☐ Waste Management ☐ Remediation/Redevelopment ☐ Other ☐

Facility/Project Name	License/Permit/Monitoring Number	Boring Number
American Chemical Service, Inc.		SVE-38

Boring Drilled By (Firm name and name of crew chief)	Date Drilling Started	Date Drilling Completed	Drilling Method
Boart Longyear - D. Morris	9/5/2001	9/5/2001	6 1/4 HSA

WI Unique Well No.	DNR Well ID No.	Common Well Name	Final Static Water Level	Surface Elevation	Borehole Diameter
		SVE-38			10.0 Inches

Boring Location or Local Grid Origin (Check if estimated: ☐)
State Plane S / C / N
1/4 of 1/4 of Section , T N, R
Lat. ° ' "
Long. ° ' "
Local Grid Location (If applicable)
Feet ☐ N ☐ S Feet ☐ E ☐ W

Facility ID	County	County Code	Civil Town/City/ or Village
3410-1812	Lake		Griffith, IN

Sample: Number and Type	Length Att. & Recovered (in)	Blow Counts	Depth In Feet	Soil/Rock Description And Geologic Origin For Each Major Unit	U S C S	Graphic Log	Well Diagram	PID/FID	Soil Properties: Compressive Strength	Moisture Content	Liquid Limit	Plasticity Index	P 200	RQD/ Comments
				EARTH DRILL										
			1											
			2											
			3											
			4											
			5											
			6											
			7											
			8											
			9											
			10											
			11											
			12											

I hereby certify that the information on this form is true and correct to the best of my knowledge.

Signature

Firm Boart Longyear Company
101 Alderson Street Schofield, WI 54476
Tel: 715-[illegible]-7090
Fax: 715-[illegible]5715

SOIL BORING LOG INFORMATION SUPPLEMENT

Form 4400-122A Rev. 5-97

oring Number SVE-38 Use only as an attachment to Form 4400-122.

Sample Number and Type	Sample Length Att. & Recovered (in)	Blow Counts	Depth In Feet	Soil/Rock Description And Geologic Origin For Each Major Unit	U S C S	Graphic Log	Well Diagram	PID/FID	Soil Properties: Compressive Strength	Moisture Content	Liquid Limit	Plasticity Index	P 200	RQD/ Comments
			13											
			14											
			15											
			16											
			17											
1 SS	24 21	6 8 13 15	18	Tan Silty SAND w/Trc Gravel						W				
			19											
			20	EOB 20.0' Well Set 20.0'										

Route To: Watershed/Wastewater ☐ Remediation/Redevelopment ☐ Waste Management ☐ Other ☐

MONITORING WELL CONSTRUCTION

Form 4400-113A Rev. 6-97

Facility/Project Name: American Chemical Service, Inc.	Local Grid Location of Well: ____ ft. ☐N. ☐S. ____ ft. ☐E. ☐W.	Well Name: SVE-38
Facility License, Permit or Monitoring No.	Grid Origin Location (Check if estimated: ☐) Lat. ° ' " Long. ° ' " or	Wis. Unique Well No / DNR Well Number
Facility ID: 3410-1812	St. Plane ____ ft. N, ____ ft. E. S/C/N	Date Well Installed: 09/05/2001
Type of Well: Well Code 57/sv	Section Location of Waste/Source: ____ 1/4 of ____ 1/4 of Sec. ____, T. ____ N, R. ____ ☐E ☐W	Well Installed By: (Person's Name and Firm) J. Berthold
Distance Well Is From Waste/Source Boundary ft.	Location of Well Relative to Waste/Source: u ☐ Upgradient s ☐ Sidegradient d ☐ Downgradient n ☐ Not Known	Boart Longyear

A. Protective pipe, top elevation ____ ft. MSL

B. Well casing, top elevation ____ ft. MSL

C. Land surface elevation ____ ft. MSL

D. Surface seal, bottom ____ ft. MSL or 0.0 ft.

12. USC classification of soil near screen:
GP ☐ GM☐ GC ☐ GW☐ SW☐ SP ☐
SM☐ SC ☐ ML☐ MH☐ CL ☐ CH ☐
Bedrock☐

13. Sieve analysis attached? ☐ Yes ☐ No

14. Drilling method used: Rotary ☐ 5 0
Hollow Stem Auger ☒ 4 1
____ Other ☐ __

15. Drilling fluid used: Water ☐ 0 2 Air ☐ 0 1
Drilling Mud ☐ 0 3 None ☒ 9 9

16. Drilling additives used? ☐ Yes ☒ No

Describe____

17. Source of water (attach analysis):

____

E. Bentonite seal, top ____ ft. MSL or 7.0 ft.

F. Fine sand, top ____ ft. MSL or na ft.

G. Filter pack, top ____ ft. MSL or 9.0 ft.

H. Screen joint, top ____ ft. MSL or 10.0 ft.

I. Well bottom ____ ft. MSL or 20.0 ft.

J. Filter pack, bottom ____ ft. MSL or 20.0 ft.

K. Borehole, bottom ____ ft. MSL or 20.0 ft.

L. Borehole, diameter 10.0 in.

M. O.D. well casing 4.50 in.

N. I.D. well casing 4.00 in.

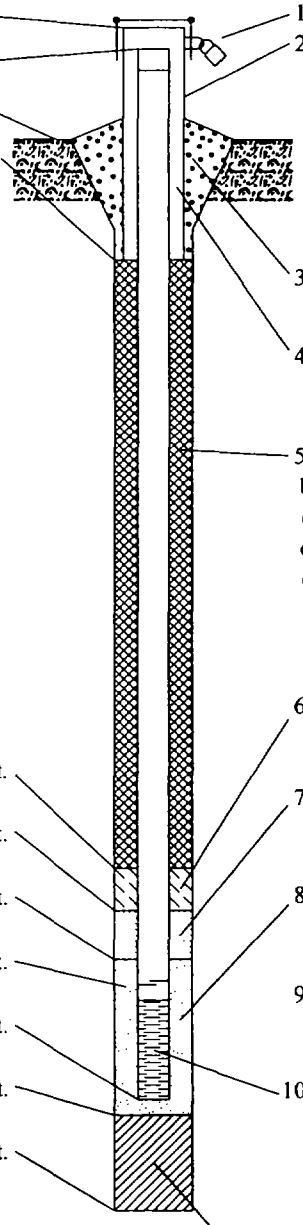

1. Cap and lock? ☒ Yes ☐ No

2. Protective cover pipe:
a. Inside diameter: ____ in.
b. Length: ____ ft.
c. Material: Steel ☐ 0 4
____ na ____ Other ☒
d. Additional protection? ☐ Yes ☒ No
If yes, describe:____

3. Surface seal: Bentonite ☒ 3 0
Concrete ☐ 0 1
____ Other ☐

4. Material between well casing and protective pipe:
Bentonite ☐ 3 0
____ na ____ Other ☒

5. Annular space seal: a. Granular Bentonite ☐ 3 3
b. ____Lbs/gal mud weight . Bentonite-sand slurry ☐ 3 5
c. ____Lbs/gal mud weight . . . Bentonite slurry ☐ 3 1
d. ____% Bentonite . . . Bentonite-cement grout ☐ 5 0
e. ____Ft^3 volume added for any of the above
f. How installed: Tremie 1
Tremie pumped ☐ 0 2
Gravity ☒ 0 8

6. Bentonite seal: a. Bentonite granules ☒ 3 3
b. ☐1/4 in. ☐3/8 in. ☐1/2 in. Bentonite pellets ☐ 3 2
c. ____ Other ☐

7. Fine sand material: Manufacturer, product name and mesh siz
a. ____ na ____
b. Volume added ____ ft^3

8. Filter pack material: Manufacturer, product name and mesh si
a. ____ #5 Global ____
b. Volume added ____ ft^3

9. Well casing: Flush threaded PVC schedule 40 ☒ 2 3
Flush threaded PVC schedule 80 ☐ 2 4
____ Other ☐

10. Screen material: ____
a. Screen Type: Factory cut ☐ 1 1
Continuous slot ☐ 0 1
____ Other ☐
b. Manufacturer ____ Johnson ____
c. Slot size: 0.020 in.
d. Slotted length: ____ ft.

11. Backfill material (below filter pack): None ☒ 1 4
____ Other ☐

I hereby certify that the information on this form is true and correct to the best of my knowledge.

Signature

Firm Boart Longyear Company
101 Alderson Street Schofield, WI 54476

Tel: 715-3 .090
Fax: 715-355-5715

SOIL BORING LOG INFORMATION

Form 4400-122 Rev. 5-97

Route To: Watershed/Wastewater ☐ Waste Management ☐ Remediation/Redevelopment ☐ Other ☐

Facility/Project Name	License/Permit/Monitoring Number	Boring Number
American Chemical Service, Inc.		SVE-39

Boring Drilled By (Firm name and name of crew chief)	Date Drilling Started	Date Drilling Completed	Drilling Method
Boart Longyear - D. Morris	9/12/2001	9/12/2001	6 1/4 HSA

WI Unique Well No.	DNR Well ID No.	Common Well Name	Final Static Water Level	Surface Elevation	Borehole Diameter
		SVE-39			10.0 Inches

Boring Location or Local Grid Origin (Check if estimated: ☐)
State Plane S / C / N
1/4 of 1/4 of Section , T N, R
Lat. ___ ° ___ ' ___ "
Long. ___ ° ___ ' ___ "
Local Grid Location (If applicable)
Feet ☐ N ☐ S Feet ☐ E ☐ W

Facility ID	County	County Code	Civil Town/City/ or Village
3410-1812	Lake		Griffith, IN

Sample Number and Type	Length Att. & Recovered (in)	Blow Counts	Depth In Feet	Soil/Rock Description And Geologic Origin For Each Major Unit	U S C S	Graphic Log	Well Diagram	PID/FID	Soil Properties: Compressive Strength	Moisture Content	Liquid Limit	Plasticity Index	P 200	RQD/ Comments
				EARTH DRILL										
			1											
			2											
			3											
			4											
			5											
			6											
			7											
			8											
			9											
			10											
			11											
			12											

I hereby certify that the information on this form is true and correct to the best of my knowledge.

Signature

Firm Boart Longyear Company
101 Alderson Street Schofield, WI 54476
Tel: 715-359-709(
Fax: 715-355-571:

SOIL BORING LOG INFORMATION SUPPLEMENT

Form 4400-122A Rev. 5-97

Boring Number SVE-39 Use only as an attachment to Form 4400-122.

Sample Number and Type	Sample Length Att. & Recovered (in)	Blow Counts	Depth In Feet	Soil/Rock Description And Geologic Origin For Each Major Unit	U S C S	Graphic Log	Well Diagram	PID/FID	Soil Properties: Compressive Strength	Moisture Content	Liquid Limit	Plasticity Index	P 200	RQD/ Comments
			13											
			14											
			15											
			16											
			17											
1 SS	24 20	1 3 7 5	18 19 20	Gry Silty SAND w/Gravel						W				
			21	EOB 21.0' Well Set 20.0'										

Route To: Watershed/Wastewater ☐ Waste Management ☐ Remediation/Redevelopment ☐ Other ☐

MONITORING WELL CONSTRUCTION

Form 4400-113A Rev. 6-97

Facility/Project Name: American Chemical Service, Inc.	Local Grid Location of Well: ____ ft. ☐N. ☐S. ____ ft. ☐E. ☐W.	Well Name: SVE-39
Facility License, Permit or Monitoring No.	Grid Origin Location (Check if estimated: ☐) Lat. ___° ___' ___" Long. ___° ___' ___" or	Wis. Unique Well No. / DNR Well Number
Facility ID: 3410-1812	St. Plane ____ ft. N, ____ ft. E. S/C/N	Date Well Installed: 09/12/2001
Type of Well: Well Code 57/sv	Section Location of Waste/Source: ___ 1/4 of ___ 1/4 of Sec. ___, T. ___ N, R. ___ ☐E ☐W	Well Installed By: (Person's Name and Firm): D. Morris
Distance Well Is From Waste/Source Boundary ft.	Location of Well Relative to Waste/Source: u ☐ Upgradient s ☐ Sidegradient d ☐ Downgradient n ☐ Not Known	Boart Longyear

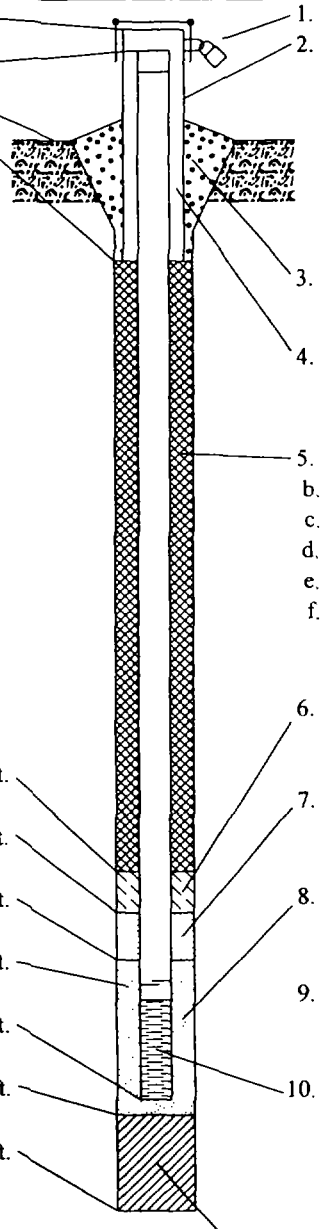

A. Protective pipe, top elevation ____ ft. MSL

B. Well casing, top elevation ____ ft. MSL

C. Land surface elevation ____ ft. MSL

D. Surface seal, bottom ____ ft. MSL or 0.0 ft.

12. USC classification of soil near screen:
GP ☐ GM☐ GC ☐ GW☐ SW☐ SP ☐
SM☐ SC ☐ ML☐ MH☐ CL ☐ CH ☐
Bedrock☐

13. Sieve analysis attached? ☐ Yes ☐ No

14. Drilling method used: Rotary ☐ 5 0
Hollow Stem Auger ☒ 4 1
____ Other ☐ __

15. Drilling fluid used: Water ☐ 0 2 Air ☐ 0 1
Drilling Mud ☐ 0 3 None ☒ 9 9

16. Drilling additives used? ☐ Yes ☒ No

Describe ____

17. Source of water (attach analysis):

____

E. Bentonite seal, top ____ ft. MSL or 2.0 ft.

F. Fine sand, top ____ ft. MSL or na ft.

G. Filter pack, top ____ ft. MSL or 4.0 ft.

H. Screen joint, top ____ ft. MSL or 5.0 ft.

I. Well bottom ____ ft. MSL or 20.0 ft.

J. Filter pack, bottom ____ ft. MSL or 21.0 ft.

K. Borehole, bottom ____ ft. MSL or 21.0 ft.

L. Borehole, diameter 10.0 in.

M. O.D. well casing 4.50 in.

N. I.D. well casing 4.00 in.

1. Cap and lock? ☒ Yes ☐ No

2. Protective cover pipe:
a. Inside diameter: ____ in.
b. Length: ____ ft.
c. Material: Steel ☐ 0 4
na Other ☒ __
d. Additional protection? ☐ Yes ☒ No
If yes, describe: ____

3. Surface seal: Bentonite ☒ 3 0
Concrete ☐ 0 1
____ Other ☐ __

4. Material between well casing and protective pipe:
Bentonite ☐ 3 0
na Other ☒ __

5. Annular space seal: a. Granular Bentonite ☐ 3 3
b. ____Lbs/gal mud weight . Bentonite-sand slurry ☐ 3 5
c. ____Lbs/gal mud weight . . . Bentonite slurry ☐ 3 1
d. ____% Bentonite . . . Bentonite-cement grout ☐ 5 0
e. ____Ft^3 volume added for any of the above
f. How installed: Tremie ☐ 0 1
Tremie pumped ☐ 0 2
Gravity ☒ 0 8

6. Bentonite seal: a. Bentonite granules ☒ 3 3
b. ☐ 1/4 in. ☐ 3/8 in. ☐ 1/2 in. Bentonite pellets ☐ 3 2
c. ____ Other ☐ __

7. Fine sand material: Manufacturer, product name and mesh size
a. na __
b. Volume added ____ ft^3

8. Filter pack material: Manufacturer, product name and mesh si
a. #5 Global __
b. Volume added ____ ft^3

9. Well casing: Flush threaded PVC schedule 40 ☐ 2 3
Flush threaded PVC schedule 80 ☐ 2 4
Stainless Steel Other ☒ __

10. Screen material: Stainless Steel __
a. Screen Type: Factory cut ☐ 1 1
Continuous slot ☒ 0 1
____ Other ☐ __
b. Manufacturer Johnson
c. Slot size: 0.020 in.
d. Slotted length: 15.0 ft.

11. Backfill material (below filter pack): None ☒ 1 4
____ Other ☐ __

I hereby certify that the information on this form is true and correct to the best of my knowledge.

Signature [signature] Firm Boart Longyear Company
101 Alderson Street Schofield, WI 54476
Tel: 715-359-7090
Fax: 715-355-5715

SOIL BORING LOG INFORMATION

Form 4400-122 Rev. 5-97

Route To: Watershed/Wastewater ☐ Waste Management ☐ Remediation/Redevelopment ☐ Other ☐

Facility/Project Name	License/Permit/Monitoring Number	Boring Number
American Chemical Service, Inc.		SVE-40

Boring Drilled By (Firm name and name of crew chief)	Date Drilling Started	Date Drilling Completed	Drilling Method
Boart Longyear - J. Berthold	9/4/2001	9/4/2001	6 1/4 HSA

WI Unique Well No.	DNR Well ID No.	Common Well Name	Final Static Water Level	Surface Elevation	Borehole Diameter
		SVE-40			10.0 Inches

Boring Location or Local Grid Origin (Check if estimated: ☐)
State Plane S / C / N
1/4 of 1/4 of Section , T N, R
Lat. ___ ° ___ ' ___ "
Long. ___ ° ___ ' ___ "
Local Grid Location (If applicable)
Feet ☐ N ☐ S Feet ☐ E ☐ W

Facility ID	County	County Code	Civil Town/City/ or Village
3410-1812	Lake		Griffith, IN

Sample: Number and Type	Length Att. & Recovered (in)	Blow Counts	Depth In Feet	Soil/Rock Description And Geologic Origin For Each Major Unit	U S C S	Graphic Log	Well Diagram	PID/FID	Soil Properties: Compressive Strength	Moisture Content	Liquid Limit	Plasticity Index	P 200	RQD/ Comments
				EARTH DRILL										
			1											
			2											
			3											
			4											
			5											
			6											
			7											
			8											
			9											
			10											
			11											
			12											

I hereby certify that the information on this form is true and correct to the best of my knowledge.

Signature [signature] Firm Boart Longyear Company
101 Alderson Street Schofield, WI 54476
Tel: 715-250-7090
Fax: 715 571:

SOIL BORING LOG INFORMATION SUPPLEMENT

Form 4400-122A Rev. 5-97

oring Number SVE-40 Use only as an attachment to Form 4400-122.

Sample									Soil Properties					
Number and Type	Length Att. & Recovered (in)	Blow Counts	Depth In Feet	Soil/Rock Description And Geologic Origin For Each Major Unit	U S C S	Graphic Log	Well Diagram	PID/FID	Compressive Strength	Moisture Content	Liquid Limit	Plasticity Index	P 200	RQD/ Comments
1 SS	24 24		13	Tan Silty SAND						W				
			14											
			15											
			16	EOB 16.0' Well Set 15.0'										

Route To: Watershed/Wastewater ☐ Waste Management ☐ Remediation/Redevelopment ☐ Other ☐

MONITORING WELL CONSTRUCTION
Form 4400-113A Rev. 6-97

Facility/Project Name: American Chemical Service, Inc.	Local Grid Location of Well: ____ ft. ☐N. ☐S. ____ ft. ☐E. ☐W.	Well Name: SVE-40
Facility License, Permit or Monitoring No.	Grid Origin Location (Check if estimated: ☐) Lat. ___° ___' ___" Long. ___° ___' ___" or	Wis. Unique Well No / DNR Well Number
Facility ID: 3410-1812	St. Plane ____ ft. N, ____ ft. E. S/C/N	Date Well Installed: 09/04/2001
Type of Well: Well Code 57/sv	Section Location of Waste/Source: ___ 1/4 of ___ 1/4 of Sec. ___, T. ___ N, R. ___ ☐E ☐W	Well Installed By: (Person's Name and Firm): J. Berthold, Boart Longyear
Distance Well Is From Waste/Source Boundary ft.	Location of Well Relative to Waste/Source: u ☐ Upgradient s ☐ Sidegradient d ☐ Downgradient n ☐ Not Known	

A. Protective pipe, top elevation ____ ft. MSL

B. Well casing, top elevation ____ ft. MSL

C. Land surface elevation ____ ft. MSL

D. Surface seal, bottom ____ ft. MSL or 0.0 ft.

12. USC classification of soil near screen:
GP ☐ GM☐ GC ☐ GW☐ SW☐ SP ☐
SM ☐ SC ☐ ML☐ MH☐ CL ☐ CH ☐
Bedrock☐

13. Sieve analysis attached? ☐ Yes ☐ No

14. Drilling method used: Rotary ☐ 5 0
Hollow Stem Auger ☒ 4 1
____ Other ☐ __

15. Drilling fluid used: Water ☐ 0 2 Air ☐ 0 1
Drilling Mud ☐ 0 3 None ☒ 9 9

16. Drilling additives used? ☐ Yes ☒ No

Describe____

17. Source of water (attach analysis):

____

E. Bentonite seal, top ____ ft. MSL or 2.0 ft.

F. Fine sand, top ____ ft. MSL or na ft.

G. Filter pack, top ____ ft. MSL or 4.0 ft.

H. Screen joint, top ____ ft. MSL or 5.0 ft.

I. Well bottom ____ ft. MSL or 15.0 ft.

J. Filter pack, bottom ____ ft. MSL or 16.0 ft.

K. Borehole, bottom ____ ft. MSL or 16.0 ft.

L. Borehole, diameter 10.0 in.

M. O.D. well casing 4.50 in.

N. I.D. well casing 4.00 in.

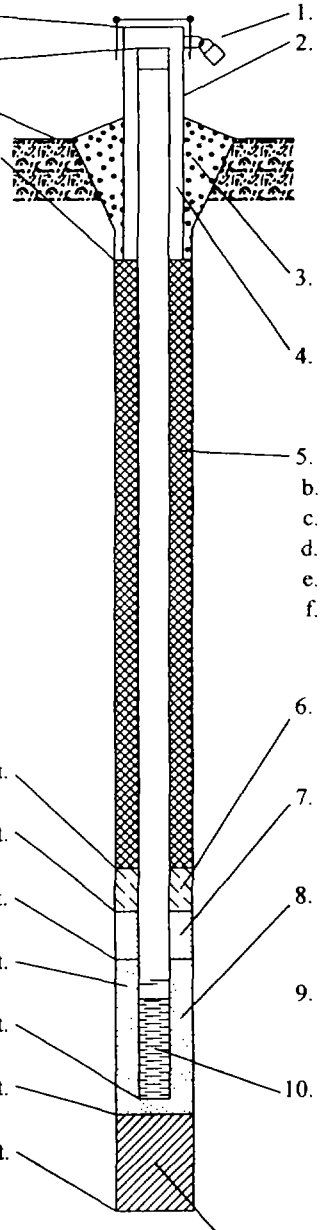

1. Cap and lock? ☒ Yes ☐ No
2. Protective cover pipe:
a. Inside diameter: ____ in.
b. Length: ____ ft.
c. Material: Steel ☐ 0 4
na Other ☒
d. Additional protection? ☐ Yes ☒ No
If yes, describe:____
3. Surface seal: Bentonite ☒ 3 0
Concrete ☐ 0 1
____ Other ☐
4. Material between well casing and protective pipe:
Bentonite ☐ 3 0
na Other ☒
5. Annular space seal: a. Granular Bentonite ☐ 3 3
b. ____Lbs/gal mud weight . Bentonite-sand slurry ☐ 3 5
c. ____Lbs/gal mud weight . . . Bentonite slurry ☐ 3 1
d. ____% Bentonite . . . Bentonite-cement grout ☐ 5 0
e. ____Ft^3 volume added for any of the above
f. How installed: Tremie ☐ 1
Tremie pumped ☐ 0 2
Gravity ☒ 0 8
6. Bentonite seal: a. Bentonite granules ☒ 3 3
b. ☐1/4 in. ☐3/8 in. ☐1/2 in. Bentonite pellets ☐ 3 2
c. ____ Other ☐
7. Fine sand material: Manufacturer, product name and mesh size
a. na
b. Volume added ____ ft^3
8. Filter pack material: Manufacturer, product name and mesh si
a. #5 Global
b. Volume added ____ ft^3
9. Well casing: Flush threaded PVC schedule 40 ☐ 2 3
Flush threaded PVC schedule 80 ☐ 2 4
Stainless Steel Other ☒
10. Screen material: Stainless Steel
a. Screen Type: Factory cut ☐ 1 1
Continuous slot ☒ 0 1
____ Other ☐
b. Manufacturer Johnson
c. Slot size: 0.020 in.
d. Slotted length: 10.0 ft.
11. Backfill material (below filter pack): None ☒ 1 4
____ Other ☐

I hereby certify that the information on this form is true and correct to the best of my knowledge.

Signature

Firm Boart Longyear Company
101 Alderson Street Schofield, WI 54476
Tel: 715-3 .090
Fax: 715-355-5715

SOIL BORING LOG INFORMATION

Form 4400-122 Rev. 5-97

Route To: Watershed/Wastewater ☐ Waste Management ☐ Remediation/Redevelopment ☐ Other ☐

Facility/Project Name	License/Permit/Monitoring Number	Boring Number
American Chemical Service, Inc.		SVE-41

Boring Drilled By (Firm name and name of crew chief)	Date Drilling Started	Date Drilling Completed	Drilling Method
Boart Longyear - R. Fischer	9/12/2001	9/12/2001	6 1/4 HSA

WI Unique Well No.	DNR Well ID No.	Common Well Name	Final Static Water Level	Surface Elevation	Borehole Diameter
		SVE-41			10.0 Inches

Boring Location or Local Grid Origin (Check if estimated: ☐)
State Plane S / C / N
1/4 of 1/4 of Section , T N, R
Lat. ___ ° ___ ' ___ "
Long. ___ ° ___ ' ___ "
Local Grid Location (If applicable)
Feet ☐ N ☐ S Feet ☐ E ☐ W

Facility ID	County	County Code	Civil Town/City/ or Village
3410-1812	Lake		Griffith, IN

Sample: Number and Type	Length Att. & Recovered (in)	Blow Counts	Depth In Feet	Soil/Rock Description And Geologic Origin For Each Major Unit	U S C S	Graphic Log	Well Diagram	PID/FID	Soil Properties: Compressive Strength	Moisture Content	Liquid Limit	Plasticity Index	P 200	RQD/ Comments
				EARTH DRILL										
			1											
			2											
			3											
			4											
			5											
			6											
			7											
			8											
			9											
			10											
			11											
			12											

I hereby certify that the information on this form is true and correct to the best of my knowledge.

Signature	Firm	
	Boart Longyear Company 101 Alderson Street Schofield, WI 54476	Tel: 715-359-7090 Fax: 715-355-5715

SOIL BORING LOG INFORMATION SUPPLEMENT

Form 4400-122A Rev. 5-97

Boring Number SVE-41 Use only as an attachment to Form 4400-122.

Sample Number and Type	Sample Length Att. & Recovered (in)	Blow Counts	Depth In Feet	Soil/Rock Description And Geologic Origin For Each Major Unit	U S C S	Graphic Log	Well Diagram	PID/FID	Soil Properties: Compressive Strength	Moisture Content	Liquid Limit	Plasticity Index	P 200	RQD/ Comments
			13											
			14											
			15											
			16											
			17											
			18											
1 SS	24 14	1 1 5 9	19	Blk Silty SAND						W				
			20											
			21	EOB 21.0' Well Set 20.0'										

Route To: Watershed/Wastewater ☐ Waste Management ☐ Remediation/Redevelopment ☐ Other ☐

MONITORING WELL CONSTRUCTION
Form 4400-113A Rev. 6-97

Facility/Project Name American Chemical Service, Inc.	Local Grid Location of Well ☐ N. ☐ S. _____ ft. ☐ E. ☐ W. _____ ft.	Well Name SVE-41
F ility License, Permit or Monitoring No.	Grid Origin Location (Check if estimated: ☐) Lat. ° ' " Long. ° ' " or	Wis. Unique Well No / DNR Well Number
Facility ID 3410-1812	St. Plane _____ ft. N, _____ ft. E. S/C/N	Date Well Installed 09/12/2001
Type of Well Well Code 57/sv	Section Location of Waste/Source ____ 1/4 of ____ 1/4 of Sec. ____, T. ____ N, R. ____ ☐ E ☐ W	Well Installed By: (Person's Name and Firm R. Fischer
Distance Well Is From Waste/Source Boundary ft.	Location of Well Relative to Waste/Source u ☐ Upgradient s ☐ Sidegradient d ☐ Downgradient n ☐ Not Known	Boart Longyear

A. Protective pipe, top elevation _____ ft. MSL

B. Well casing, top elevation _____ ft. MSL

C. Land surface elevation _____ ft. MSL

D. Surface seal, bottom _____ ft. MSL or 0.0 ft.

12. USC classification of soil near screen:
GP ☐ GM ☐ GC ☐ GW ☐ SW ☐ SP ☐
SM ☐ SC ☐ ML ☐ MH ☐ CL ☐ CH ☐
Bedrock ☐

13. Sieve analysis attached? ☐ Yes ☐ No

14. Drilling method used: Rotary ☐ 5 0
Hollow Stem Auger ☒ 4 1
_____ Other ☐ _ _

15. Drilling fluid used: Water ☐ 0 2 Air ☐ 0 1
Drilling Mud ☐ 0 3 None ☒ 9 9

16. Drilling additives used? ☐ Yes ☒ No

Describe _____

17. Source of water (attach analysis):
_____

E. Bentonite seal, top _____ ft. MSL or 2.0 ft.

F. Fine sand, top _____ ft. MSL or na ft.

G. Filter pack, top _____ ft. MSL or 4.0 ft.

H. Screen joint, top _____ ft. MSL or 5.0 ft.

I. Well bottom _____ ft. MSL or 20.0 ft.

J. Filter pack, bottom _____ ft. MSL or 21.0 ft.

K. Borehole, bottom _____ ft. MSL or 21.0 ft.

L. Borehole, diameter 10.0 in.

M. O.D. well casing 4.50 in.

N. I.D. well casing 4.00 in.

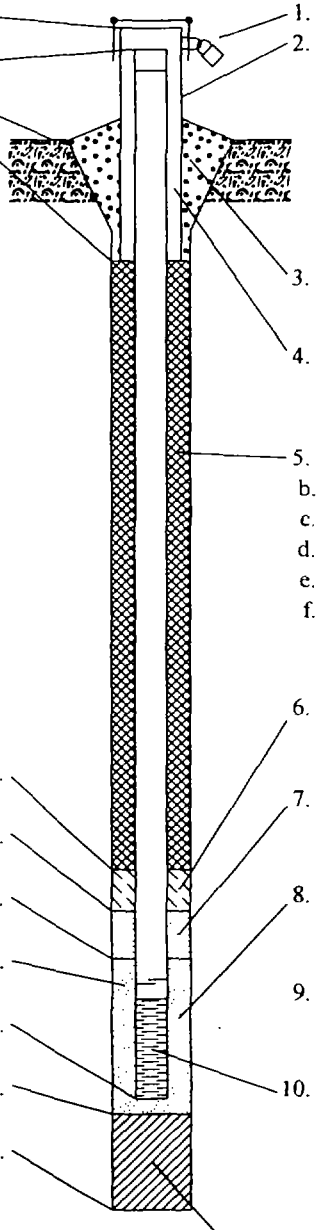

1. Cap and lock? ☒ Yes ☐ No
2. Protective cover pipe:
a. Inside diameter: _____ in.
b. Length: _____ ft.
c. Material: Steel ☐ 0 4
na Other ☒ [illegible]
d. Additional protection? ☐ Yes ☒ No
If yes, describe: _____
3. Surface seal: Bentonite ☒ 3 0
Concrete ☐ 0 1
_____ Other ☐ [illegible]
4. Material between well casing and protective pipe:
Bentonite ☐ 3 0
na Other ☒ [illegible]
5. Annular space seal: a. Granular Bentonite ☐ 3 3
b. _____ Lbs/gal mud weight . Bentonite-sand slurry ☐ 3 5
c. _____ Lbs/gal mud weight . . . Bentonite slurry ☐ 3 1
d. _____ % Bentonite . . . Bentonite-cement grout ☐ 5 0
e. _____ Ft^3 volume added for any of the above
f. How installed: Tremie ☐ 0 1
Tremie pumped ☐ 0 2
Gravity ☒ 0 8
6. Bentonite seal: a. Bentonite granules ☒ 3 3
b. ☐ 1/4 in. ☐ 3/8 in. ☐ 1/2 in. Bentonite pellets ☐ 3 2
c. _____ Other ☐ [illegible]
7. Fine sand material: Manufacturer, product name and mesh siz
a. na [illegible]
b. Volume added _____ ft^3
8. Filter pack material: Manufacturer, product name and mesh si
a. #5 Global [illegible]
b. Volume added _____ ft^3
9. Well casing: Flush threaded PVC schedule 40 ☐ 2 3
Flush threaded PVC schedule 80 ☐ 2 4
Stainless Steel Other ☒ [illegible]
10. Screen material: Stainless Steel [illegible]
a. Screen Type: Factory cut ☐ 1 1
Continuous slot ☒ 0 1
_____ Other ☐ [illegible]
b. Manufacturer Johnson
c. Slot size: 0.020 in.
d. Slotted length: 15.0 ft.
11. Backfill material (below filter pack): None ☒ 1 4
_____ Other ☐ [illegible]

ereby certify that the information on this form is true and correct to the best of my knowledge.

ignature	Firm Boart Longyear Company 101 Alderson Street Schofield, WI 54476	Tel: 715-359-7090 Fax: 715-355-5715

SOIL BORING LOG INFORMATION

Form 4400-122 Rev. 5-97

Route To: Watershed/Wastewater ☐ Waste Management ☐ Remediation/Redevelopment ☐ Other ☐

Facility/Project Name	License/Permit/Monitoring Number	Boring Number
American Chemical Service, Inc.		SVE-42

Boring Drilled By (Firm name and name of crew chief)	Date Drilling Started	Date Drilling Completed	Drilling Method
Boart Longyear - D. Morris	9/12/2001	9/12/2001	6 1/4 HSA

WI Unique Well No.	DNR Well ID No.	Common Well Name	Final Static Water Level	Surface Elevation	Borehole Diameter
		SVE-42			10.0 Inches

Boring Location or Local Grid Origin (Check if estimated: ☐)
State Plane S / C / N
1/4 of 1/4 of Section , T N, R
Lat. ° ' "
Long. ° ' "
Local Grid Location (If applicable)
Feet ☐ N ☐ S Feet ☐ E ☐ W

Facility ID	County	County Code	Civil Town/City/ or Village
3410-1812	Lake		Griffith, IN

Sample Number and Type	Length Att. & Recovered (in)	Blow Counts	Depth In Feet	Soil/Rock Description And Geologic Origin For Each Major Unit	U S C S	Graphic Log	Well Diagram	PID/FID	Soil Properties: Compressive Strength	Moisture Content	Liquid Limit	Plasticity Index	P 200	RQD/ Comments
				EARTH DRILL										
			1											
			2											
			3											
			4											
			5											
			6											
			7											
			8											
			9											
			10											
			11											
			12											

I hereby certify that the information on this form is true and correct to the best of my knowledge.

Signature

Firm Boart Longyear Company
101 Alderson Street Schofield, WI 54476

Tel: 715-[illegible]-709[illegible]
Fax: 715 [illegible]5715

SOIL BORING LOG INFORMATION SUPPLEMENT

Form 4400-122A Rev. 5-97

oring Number SVE-42 Use only as an attachment to Form 4400-122.

Sample Number and Type	Sample Length Att. & Recovered (in)	Blow Counts	Depth In Feet	Soil/Rock Description And Geologic Origin For Each Major Unit	U S C S	Graphic Log	Well Diagram	PID/FID	Soil Properties: Compressive Strength	Moisture Content	Liquid Limit	Plasticity Index	P 200	RQD/ Comments
			13											
			14											
			15											
			16											
			17											
1 SS	24 20	5 6 9 10	18 19 20	Gry Silty SAND						W				
			21	EOB 21.0' Well Set 20.0'										

Route To: Watershed/Wastewater ☐ Waste Management ☐ Remediation/Redevelopment ☐ Other ☐

MONITORING WELL CONSTRUCTION

Form 4400-113A Rev. 6-97

Facility/Project Name: American Chemical Service, Inc.	Local Grid Location of Well: ____ ft. ☐ N. ☐ S. ____ ft. ☐ E. ☐ W.	Well Name: SVE-42
Facility License, Permit or Monitoring No.	Grid Origin Location (Check if estimated: ☐) Lat. ___ ° ___ ' ___ " Long. ___ ° ___ ' ___ " or	Wis. Unique Well No / DNR Well Number
Facility ID: 3410-1812	St. Plane ____ ft. N, ____ ft. E. S/C/N	Date Well Installed: 09/12/2001
Type of Well: Well Code 57/sv	Section Location of Waste/Source: ___ 1/4 of ___ 1/4 of Sec. ___, T. ___ N, R. ___ ☐ E ☐ W	Well Installed By: (Person's Name and Firm): D. Morris
Distance Well Is From Waste/Source Boundary ft.	Location of Well Relative to Waste/Source: u ☐ Upgradient s ☐ Sidegradient d ☐ Downgradient n ☐ Not Known	Boart Longyear

A. Protective pipe, top elevation ____ ft. MSL

B. Well casing, top elevation ____ ft. MSL

C. Land surface elevation ____ ft. MSL

D. Surface seal, bottom ____ ft. MSL or 0.0 ft.

12. USC classification of soil near screen:
GP ☐ GM ☐ GC ☐ GW ☐ SW ☐ SP ☐
SM ☐ SC ☐ ML ☐ MH ☐ CL ☐ CH ☐
Bedrock ☐

13. Sieve analysis attached? ☐ Yes ☐ No

14. Drilling method used: Rotary ☐ 5 0
Hollow Stem Auger ☒ 4 1
____ Other ☐ __

15. Drilling fluid used: Water ☐ 0 2 Air ☐ 0 1
Drilling Mud ☐ 0 3 None ☒ 9 9

16. Drilling additives used? ☐ Yes ☒ No

Describe ____

17. Source of water (attach analysis):

____

E. Bentonite seal, top ____ ft. MSL or 2.0 ft.

F. Fine sand, top ____ ft. MSL or na ft.

G. Filter pack, top ____ ft. MSL or 4.0 ft.

H. Screen joint, top ____ ft. MSL or 5.0 ft.

I. Well bottom ____ ft. MSL or 20.0 ft.

J. Filter pack, bottom ____ ft. MSL or 21.0 ft.

K. Borehole, bottom ____ ft. MSL or 21.0 ft.

L. Borehole, diameter 10.0 in.

M. O.D. well casing 4.50 in.

N. I.D. well casing 4.00 in.

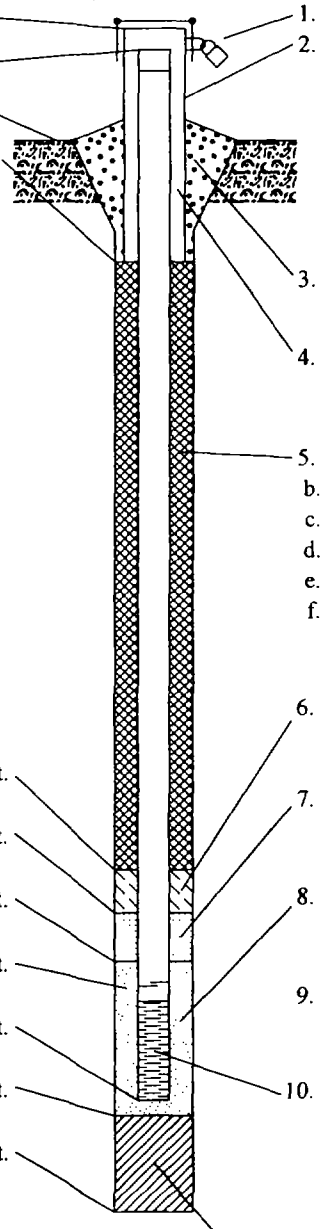

1. Cap and lock? ☒ Yes ☐ No

2. Protective cover pipe:
a. Inside diameter: ____ in.
b. Length: ____ ft.
c. Material: Steel ☐ 0 4
na Other ☒
d. Additional protection? ☐ Yes ☒ No
If yes, describe: ____

3. Surface seal: Bentonite ☒ 3 0
Concrete ☐ 0 1
____ Other ☐

4. Material between well casing and protective pipe:
Bentonite ☐ 3 0
na Other ☒

5. Annular space seal: a. Granular Bentonite ☐ 3 3
b. ____ Lbs/gal mud weight . Bentonite-sand slurry ☐ 3 5
c. ____ Lbs/gal mud weight . . . Bentonite slurry ☐ 3 1
d. ____ % Bentonite . . . Bentonite-cement grout ☐ 5 0
e. ____ Ft^3 volume added for any of the above
f. How installed: Tremie ☐ 1
Tremie pumped ☐ 0 2
Gravity ☒ 0 8

6. Bentonite seal: a. Bentonite granules ☐ 3 3
b. ☐ 1/4 in. ☒ 3/8 in. ☐ 1/2 in. Bentonite pellets ☒ 3 2
c. ____ Other ☐

7. Fine sand material: Manufacturer, product name and mesh siz
a. na
b. Volume added ____ ft^3

8. Filter pack material: Manufacturer, product name and mesh si
a. #5 Global
b. Volume added ____ ft^3

9. Well casing: Flush threaded PVC schedule 40 ☐ 2 3
Flush threaded PVC schedule 80 ☐ 2 4
Stainless Steel Other ☒

10. Screen material: Stainless Steel
a. Screen Type: Factory cut ☐ 1 1
Continuous slot ☒ 0 1
____ Other ☐
b. Manufacturer Johnson
c. Slot size: 0.020 in.
d. Slotted length: 15.0 ft.

11. Backfill material (below filter pack): None ☒ 1 4
____ Other ☐

I hereby certify that the information on this form is true and correct to the best of my knowledge.

Signature	Firm: Boart Longyear Company, 101 Alderson Street Schofield, WI 54476 — Tel: 715-3__ 090, Fax: 715-355-5715

APPENDIX D

ISVE Well/Air Sparge Point Material Specifications

- Well Screen and Riser Pipe
  (with Material Certificate of Compliance)
- Filter Pack
- Drillers' Licenses
- Bentonite Grout and Chips

MANUFACTURER'S PRODUCT SPECIFICATIONS

Well Screen and Riser Pipe (with Material Certificate of Compliance)

7/17/2001

WELL SCREEN SUBMITTAL DATA

CLIENT: Global Drilling Suppliers, Inc.
PROJECT: Indiana Project/Dale Walker

Material		304 Stainless		
Nom Size	4	PS	*100*	*mm*
Estimated Total Well Depth	30	ft	*9*	*meters*
Estimated Feet of Screen	550	ft	*168*	*meters*
Design Slot Size	0.020	in	*0.5*	*mm*
Approx. Outside Diameter	4.63	in	*118*	*mm*
Screen Barrel Inside Diameter	4.27	in	*108*	*mm*
Approx. Clear ID at Fittings	4.15	in	*105*	*mm*
Approx. Weight Per Ft	3	lbs	*1*	*kg*
Wire Width	0.089	in	*2.3*	*mm*
Wire Height	0.075	in	*1.9*	*mm*
Calc. Collapse Strength *	103	PSI	*7*	*kg/sq.cm*
Open Area	16.3%			
Intake Area	32	sq.in./ft	*677*	*sq.cm./meter*
Transmitting Capacity-at 0.1 ft/sec	10	gpm/ft	*2*	*lps/meter*
Support Rod Diam	0.089	in	*2.3*	*mm*
No Rods	28			
Cross Sectional Rod Area	0.24	sq.in.	*1.53*	*sq.cm.*
Design Yield Strength	30,000	PSI	*2,109*	*kg/sq.cm*
Calc.Tensile Strength *	6,000	lbs	*2,700*	*kg*
Max.Recomended Hang Wt. *	3,000	lbs	*1,400*	*kg*
Critical Compression Load **	6,400	lbs	*2,900*	*kg*

* A broad range of site conditions can impact the physical strength requirements for a successful screen installation. Consult US Filter/Johnson Screens with questions regarding the parameters presented above as they relate to your specific requirements.

** Vertical weight on screen that should not be exceeded without use of ridgid centralizers!

Prepared by Don Baron
Subject to US Filter/Johnson Screens
Standard Terms and Conditions

Stainless Steel Riser
Pipe Specifications

GENERAL: The Riser Pipe and fittings are manufactured from 304 stainless steel ASTM Type A312 material. The pipe roundness, wall thickness, and straightness meet ASTM specifications.

STRENGTH: Schedule 5 midbody Riser Pipe is required for the following minimum strength requirements:

COLLAPSE PRESSURE: 386 psi

TENSILE STRENGTH: 8,300 lbs. of hanging weight

COLUMN STRENGTH: 12,000 lbs.

FITTINGS: Schedule 40 flush thread fittings are welded to the Schedule _____ Riser Pipe. The fittings are compatible to ASTM F480 thread form, and are square to the pipe body within .015" for 2" PS, .020" for 4" PS or .030" for 6" PS screen. A Viton O-ring is on the male end.

MATERIAL: The Riser Pipe and fittings are Type 304 stainless steel ASTM Type A312 material.

FINISH: The Riser Pipe surface is cleaned to remove oils, grease, paint, dirt and any manufacturer's markings that could alter the chemistry of the sample. Mill stamp ASTM identification information does not need to be removed.

The product is completely incased in an individual 7 mil thick polyethylene protection wrapper with sealed ends.

DOCUMENTATION: If required, the manufacturer will provide documentation that the screen meets the specifications. Examples are material certificate of compliance, test results for strength or leak test requirements, inspection records for dimensions, cleaning process used and its acceptance criteria.

Stainless Steel Vee-Wire®
Monitoring Screen Specifications

GENERAL: The product is Vee-Wire® screen with a continuous slot widening inwardly to minimize clogging. The surface wire is helicall wrapped over a circular array of internal rods. Using electrical resistance welding, each wire a rod juncture is fusion welded under water. The opening is selected based on a sieve analysis of waterbearing sediments or the selected filter pa

STRENGTH: The screen meets the followin minimum strength requirements:

COLLAPSE PRESSURE: 103 psi at 0.020" slot

TENSILE STRENGTH: 3000 lbs. of hanging weight

WIRE/ROD WELD: 100 lbs. tensile strength

DIAMETER: The nominal screen outside diameter is 4.63 inches, and is round within 0.030 inches. The clear inside diameter is 4.27 inches.

The screen body is straight to within 1/16" ove a 5' length.

SLOT: The required slot opening is 0.020 inches, with a ±.002 inch tolerance. The minimum open area is _____ sq. in./ft. of screen.

FITTINGS: Fittings are welded to the screen body. Flush threads are compatible with the ASTM F480 specification, including a Viton O-ring on the male end. Fittings are squa to screen body within .015" for 2" PS, .020" fo 4" PS or .030" for 6" PS screens.

MATERIAL: Screen and fittings are Type 304 stainless steel material.

FINISH: The screen surface is free of oils, grease, paint, dirt, and any manufacturer's markings that could alter the chemistry of the sample. The product is free of burrs.

The product is completely incased in an individual 7 mil thick polyethylene protective wrapper with sealed ends.

DOCUMENTATION: If required, the manufacturer will provide documentation that the screen meets the specifications. Examples are material certificate of compliance, test resu for strength or leak test requirements, inspectio records for dimensions, cleaning process used and its acceptance criteria.

USF JOHNSON SCREENS

JOHNSON SCREENS
P.O. BOX 64118
ST. PAUL, MN 55164

TELEPHONE 651-636-3900
FACSIMILE 651-638-3122

August 15, 2001

MATERIAL CERTIFICATE OF COMPLIANCE

Global Drilling Suppliers Inc.
12101 Centron Place
Cincinnati, OH 45240-1704

Customer's Purchase Order or Contract No.: 3004862

U.S. Filter/Johnson Screens Sales Order No.: 113367-SO

Work Order Number: 2315621, 2315647, 2315655, 2315663, 2315639

Parent Item: SDSENV – SS V-Wire Screen, SS Casing, and SS Plug

Drawing Number: N/A

Material: 304

State of Indiana Specification: Code 312-IAC-13-8-3

U.S. Filter/Johnson Screens hereby certifies that all material and/or processes used in the manufacture of the above part numbers conforms to material and/or manufacturing specifications detailed on U.S. Filter/Johnson Screens drawings and/or other specifications listed above and are in accordance with the manufacturing provisions of the order. Stock components may have been used to assemble the products on this order; therefore, material traceability of each component may not be available.

By: Denise C. Frette
Authorized Representative
U.S. Filter/Johnson Screens

VIVENDI water company

MANUFACTURER'S PRODUCT SPECIFICATIONS

Filter Pack

GLOBAL QUARTZ SILICA FILTER PACK

Sieve Analysis by Best Sand, Jan., 1998

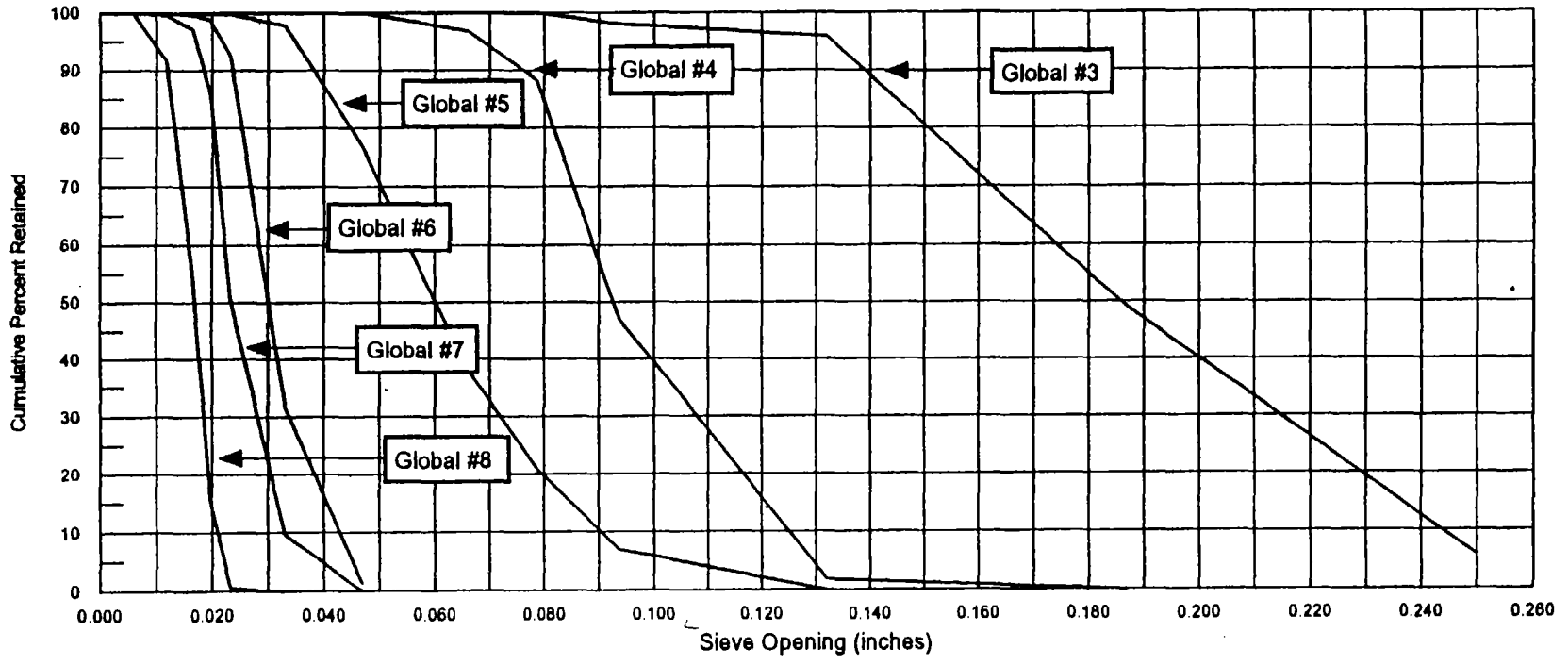

GLOBAL DRILLING SUPLIERS, INC.
12101 Centron Place
Cincinati, Ohio 45246 USA
TEL: 513-671-8700 / FAX: 513-671-8705
http://www.globaldrilsup.com

revised 1-98

Global Quartz Silica Filter Sand:

NSF - approved
Washed & dried; will not freeze up.
EZ-carry 50 lb plastic bags
Bulk tonnage available

99% pure silica
Uniformity Coeff. less than 1.70
Each 50 lb bag = approx. 0.5 cu. ft.

Best Sand Corporation

Global #5

Product Analysis Report

1/25/99

Sieve Analysis:

Sieve Size	% Retained	% Cumulative	% Passing
6 Mesh	0.1	0.1	99.9
8 Mesh	7.0	7.1	92.9
10 Mesh	13.6	20.7	79.3
12 Mesh	15.4	36.1	63.9
16 Mesh	40.5	76.6	23.4
20 Mesh	21.0	97.6	2.4
30 Mesh	2.1	99.7	0.3
40 Mesh	0.2	99.9	0.1
50 Mesh	0.0	99.9	0.1
100 Mesh	0.0	99.9	0.1
Pan	0.0	99.9	0.1
E.S.		0.99	
U.C.		1.57	

Customer: Current Product Average

I certify that this load conforms to the above specifications: ***W. Nevison***

FAIRMOUNT MINERALS

BEST SAND • BESTONE • FAIRMOUNT ABRASIVES • GARICK • MOBILE ABRASIVES • SANTROL • STAN BLAST
TECHNISAND • WEDRON SILICA • WEXFORD SAND • WISCONSIN INDUSTRIAL SAND

P.O. BOX 177 • WEDRON, IL 60557
800/281-9876

MATERIAL SAFETY DATA SHEET

Date: November 17, 2000 **Supersedes:** August 1, 1999

I. PRODUCT IDENTIFICATION

Trade Name as Labeled: Silica or Lake Sand; all grades
Chemical Name and Formula: Silica, mainly in the form of quartz; SiO_2

II. HAZARDOUS INGREDIENTS

CAS Number: 14808-60-7
Chemical Name: Quartz
Percent: >90

ACGIH-TLV: 0.1 mg/m^3
OSHA-PEL: 10 mg/m^3 / % SiO_2 + 2

(Exposure limits are for respirable fraction.)

NIOSH recommends a Permissible Exposure Limit (PEL) of 0.05 mg/m^3 respirable free silica. ACGIH-TLV and OSHA PEL are not interchangeable limit values.

III. PHYSICAL PROPERTIES

Vapor Density: Not applicable.
Specific Gravity: 2.65
Solubility in Water: Insoluble.
Vapor Pressure: 10mm @ 1730°C

Melting Point: 1710°C
Boiling Point: 2230°C
Evaporation Rate: None.
Appearance and Color: White to tan; odorless.

IV. FIRE AND EXPLOSION

Flash Point: Does not flash.
Flammable Limits in Air: None
Unusual Fire Fighting Procedures: None.
Unusual Fire and Explosion Hazards: None.

Auto-ignition Temperature: None.
Fire Extinguishing Materials: Non-combustible. May be used to extinguish fires.

V. HEALTH HAZARD INFORMATION

Symptoms of Overexposure:

Inhaled: Shortness of breath, coughing, reduced pulmonary function. ***PROLONGED INHALATION OF RESPIRABLE SILICA WILL RESULT IN PERMANENT LUNG DAMAGE, SILICOSIS.***

Contact with Eyes or Skin: Eye irritation.

Swallowed: May cause gastrointestinal discomfort. Give one or two glasses of water. If discomfort persists, see a physician.

First Aid: Emergency procedures.

Eye Contact: Wash with water for at least fifteen (15) minutes. If irritation or redness persists see a physician.

Skin Contact: Wash with soap and water. If irritation persists see a physician.
Inhaled: Remove to fresh air at once. Apply artificial respiration if having breathing difficulties.
Suspected Cancer Agent: Yes. **Federal OSHA:** No **NTP:** Yes **IARC:** Yes
NTP: Respirable crystalline silica has been listed in the Sixth Annual Report on Carcinogens.
IARC: Monographs on the Evaluation of the Carcinogenic Risk of Chemical to Humans (vol. 68, 1997) concludes that there is sufficient evidence in humans for the carcinogenicity of inhaled crystalline silica in the forms of quartz and cristobalite (Group 1) in certain industrial circumstances, but that carcinogenicity may be dependent on inherent characteristics of the crystalline silica or on external factors affecting is biological activity or distribution of its polymorphs.

VI. Reactivity Data

Stability: Stable.
Hazardous Polymerization: Will not occur.
Incompatibility (materials to avoid): CIF3, MnF3, OF2
Hazardous Decomposition Products: None.

VII. Spill, Leak, and Disposal Procedures

Spill Response Procedures (including employee protection measures): Clean up using approved, dustless methods (water or vacuum) to minimize generation of respirable silica particles.
Waste Disposal: Dispose of in a facility approved for silica.

VIII. Special Handling Information

Ventilation and Engineering Controls: Local mechanical to reduce respirable silica to below safe levels.
Respiratory Protection (Type): Use NIOSH approved equipment. Positive pressure supplied air-type recommended. Appropriate respiratory protection for respirable particulates is based on consideration of air borne workplace concentrations and duration of exposure arising from the intended end use. Please refer to the most recent standards of ANSI (Z88.2), OSHA (29CFR 1910.134), MSHA (30 CFR Parts 56 & 57), and NIOSH RDL. If you are unsure as to the type of respirator to be used please consult your employer.
Eye Protection (Type): Safety glasses.
Gloves (Specify Material): Not normally required.
Other Protective Clothing and Equipment: Not normally required.
Work Practices, Hygienic Practices: Clean up spills promptly. Do not engage in activities that will generate respirable silica particles.
Other Handling and Storage Requirements: Avoid generating dust. No special storage requirements. Train all exposed persons in all sections of this MSDS and the proper handling of silica before they work with this product.

See OSHA Hazard Communication Rule CFR 1910.1200, 1915.99, 1917.28 and 1928.21, state, local worker, or community "Right to Know" laws and regulations. We recommend that smoking be prohibited in all areas where respirators must be used. Warn your employees (and your customer users in case of resale) by posting and other means of the hazard and OSHA precautions to be used. Provide training about the OSHA precautions.

IX. Other Information

H.M.I.S. Rating:

Health Hazard Rating	1*	Flammability Hazard Rating	0
Reactivity Hazard Rating	0	Personal Protective Equipment	E**

D.O.T.: Not regulated.
SARA Title III: Not listed.
**Chronic exposure to respirable size silica will result in silicosis. **Comply with special OSHA respiratory protection if sandblasting.*

MANUFACTURER'S PRODUCT SPECIFICATIONS

Drillers' Licenses

To be placed on the certificate
State Form 42016 (2-96)

DEPARTMENT OF NATURAL RESOURCES
WATER WELL DRILLING LICENSE
Division of Water

Michael S. Magnin

is entitled to operate well drilling equipment or engage in the drilling of wells Pursuant to I.C. 25-39.

Certificate Number	Expiration Date
1473	Dec. 31, 2001
Receipt Number	Signature
191251	

DEPARTMENT OF NATURAL RESOURCES
WATER WELL DRILLING LICENSE

Division of Water

Daniel L. Harrison

is entitled to operate well drilling equipment or engage in the drilling of wells Pursuant to I.C. 25-39.

Certificate Number	Expiration Date
1687	Dec. 31, 2001
Receipt Number 191251	Signature

To be carried by Driller

Attn: Stephanie

DEPARTMENT OF NATURAL RESOURCES
WATER WELL DRILLING LICENSE

Division of Water

Larry W. Erdman

is entitled to operate well drilling equipment or engage in the drilling of wells Pursuant to I.C. 25-39.

Certificate Number	Expiration Date
1338	Dec. 31, 2001
Receipt Number	**Signature**
191389	

To be placed on the certificate
State Form 42016 (2-96)

DEPARTMENT OF NATURAL RESOURCES
WATER WELL DRILLING LICENSE
Division of Water

William J. Zamow

is entitled to operate well drilling equipment or engage in the drilling of wells Pursuant to I.C. 25-39.

Certificate Number	Expiration Date
1340	Dec. 31, 2001
Receipt Number	Signature
191480	

DIS

To be placed on the certificate
State Form 42016 (2-96)

DEPARTMENT OF NATURAL RESOURCES
WATER WELL DRILLING LICENSE

Division of Water

Alan J. Thomas

is entitled to operate well drilling equipment or engage in the drilling of wells Pursuant to I.C. 25-39.

Certificate Number	Expiration Date
1807	Dec. 31, 2001
Receipt Number	Signature
191251	

MANUFACTURER'S PRODUCT SPECIFICATIONS

Bentonite Grout and Chips

CETCO

COLLOID ENVIRONMENTAL TECHNOLOGIES COMPANY

TECHNICAL DATA SHEET

PureGold® Grout

NSF®

Description: PureGold Grout is an easy mixing, single component, organic free, high solids bentonite clay grout. It was engineered to form a contaminant resistant seal without effecting groundwater chemistry. PureGold Grout is a technically superior replacement for traditional cement grouts.

Recommended Use: PureGold Grout should be used in sealing of the annular space of monitoring wells to control contaminate infiltration and preserve ambient groundwater quality.

Characteristics:

- Contaminant free. All 116 priority pollutants tested for were below CLP detection limits
- Chemically stable. Results from TCLP Metals Analysis are below RCRA limits for hazardous constituents
- pH range from 5-6 standard units
- Low permeability, laboratory test results range from $1x10^{-7}$ to $1x10^{-9}$ cm/sec
- Generates no heat during mixing or curing and will not damage well casing
- Remains flexible, maintains putty-like consistency over time and will rehydrate.

Mixing and Application: PureGold Grout should be mixed with a paddle mixer or a mud rotary recirculation system and pumped with a positive displacement pump. It can be mixed in a slurry up to 30% solids. PureGold Grout remains placeable for up to two hours and sets in eight hours.

To achieve a 30% solids slurry, add one 50 lb. bag of grout 14 gals. of fresh water. This ratio will yield approximately 2.2 cu. ft.

Bulk Density: 75.55 lbs./ft.^{3} when mixed with water to a 30% solids grout.

Packaging: 50 lb. multiwall, waterresistant bags, 48 bags per pallet. All pallets are shrinkwrapped.

1350 W. Shure Drive • Arlington Heights, Illinois 60004-1440 • (847) 392-5800 • FAX (847) 506-6150
A wholly owned subsidiary of AMCOL International

The information and data contained herein are believed to be accurate and reliable. CETCO makes no warranty of any kind and accepts no responsibility for the results obtained through application of this information.

Printed on recycled paper

COLLOID ENVIRONMENTAL TECHNOLOGIES COMPANY
1350 West Shure Drive • Arlington Heights, IL 60004-1440 • USA
(847) 392-5800 • Fax (847) 506-6150
http://www.cetco.com

MATERIAL SAFETY DATA SHEET **May be used to comply with OSHA's Hazard Communication Standard, 29 CFR 1910.1200. Standard must be consulted for specific requirements.**

PRODUCT NAME: PUREGOLD GROUT

Section I MANUFACTURER'S INFORMATION

MANUFACTURER'S NAME AND ADDRESS:

CETCO – ***Drilling Products Group***
1500 West Shure Drive
Arlington Heights, Illinois 60004

Telephone Number: 847-392-5800 / E-mail: www.cetco.com
Emergency Contact *CHEMTREC*: 800-424-9300
Date Prepared: March 30, 1999

Section II HAZARDOUS INGREDIENTS/IDENTITY INFORMATION

HAZARDOUS COMPONENTS: (Specific Chemical Identity: Common Names(s))	OSHA PEL	ACGIH TLV	Other Limits Recommended	% (optional)
Crystalline Quartz: CAS# 14808-60-7			*	< 6%
Respirable Crystalline Quartz:			NIOSH	< 2%
Present (TWA)	0.1 mg/m^3	0.1 mg/m^3	50 ug/m^3	
Proposed (TWA)		50.0 ug/m^3		
Nuisance Dust:				
Respirable	5 mg/m^3	5 mg/m^3		
Total Dust	15 mg/m^3	10 mg/m^3		

*** WARNING:** This product contains a small amount of crystalline silica, which may cause delayed respiratory disease if inhaled over a prolonged period of time. Avoid breathing dust. Use NIOSH/MSHA approved respirator where TLV for crystalline silica (Quartz) may be exceeded. IARC Monographs on the evaluation of the Carcinogenic Risk of Chemicals to Humans (volume 68, 1997) concludes that crystalline silica is carcinogenic to humans in the form of quartz. IARC classification 1.

The small quantities of crystalline silica (quartz) found in this product are, under normal conditions, naturally coated with an unremovable layer of amorphous silica and/or bentonite clay. IARC (vol. 68, 1997, pg. 191-192) has stated that crystalline silica (quartz) can differ in toxicity depending on the minerals with which it is combined, citing studies in IARC (vol. 42, 1987, p. 86) which stated that the toxic effect of crystalline silica (quartz) is reduced by the "protective effect...due mainly to clay minerals..."

National Institute for Occupational Safety and Health (NIOSH) has recommended that the permissible exposure limit be changed to 50 micrograms respirable free silica per cubic meter of air (0.05 mg/ m^3) as determined by a full shift sample up to a 10 hour working day, 40 hours per week. *See*: 1974 NIOSH criteria for a recommended Standard for Occupational Exposure to Crystalline Silica should be consulted for more detailed information.

PEL - OSHA Permissible Exposure Limit.
TLV - American Conference of Governmental Industrial Hygienists (ACGIH) Threshold Limit Value.
TWA - 8 hour time weighted average

Note: The Permissible Exposure Limits (PEL) reported above are the pre - 1989 limits that were reinstated by OSHA June 30, 1993 following a decision by the United States Circuit Court of Appeals for the 11th Circuit. Federal OSHA is now enforcing these PELs. More restrictive exposure limits may be enforced by some other jurisdictions.

COLLOID ENVIRONMENTAL TECHNOLOGIES COMPANY
1350 West Shure Drive • Arlington Heights, IL 60004-1440 • USA
(847) 392-5800 • Fax (847) 506-6150
http://www.cetco.com

PRODUCT NAME: PUREGOLD GROUT

Section II HAZARDOUS INGREDIENTS/IDENTITY INFORMATION CONT.

PRODUCT IDENTIFICATION:

Chemical Name: Dry Mixture of Inorganic Mineral Compounds.

NFPA/HMIS: Health - 2, Fire - 0, Reactivity - 0, Specific Hazard - *See Section VI.*

Shipping Class: Not Regulated (DOT / 49CFR, IMDG, ICAO / IATA).

Section III PHYSICAL/CHEMICAL CHARACTERISTICS

Boiling Point:	Not Applicable.	**Specific Gravity** (H_2O = 1):	2.5
Vapor Pressure (mm Hg.):	Not Applicable.	**Melting Point:**	1400°F
Vapor Density (AIR = 1):	Not Applicable.	**Evaporation Rate** (Butyl Acetate = 1):	Not Applicable.
lubility in Water:	Negligible.		
Appearance and Odor:	Tan or beige to light gray colored powder to fine granules, odorless.		

Section IV FIRE AND EXPLOSION HAZARD DATA

Flash Point (*Method Used*):	Not Available.		
Flammable Limits:	Not Available.	**LEL** - NA.	**UEL** - NA.
Extinguishing Media:	Not Applicable.		
Special Fire Fighting Procedure:	Not Applicable.		
Unusual Fire/Explosion Hazards:	Product may pose possible dust explosion under *extremely rare* circumstances or conditions.		

Section V REACTIVITY DATA

Stability: Unstable - ; Stable - X

Conditions to Avoid - None Known.

Incompatibility (*Materials to Avoid*): Powerful oxidizing agents such as fluorine, chlorine trifluoride, manganese trioxide, etc.

Hazardous Decomposition or By-products: Silica will dissolve in hydrofluoric acid producing a corrosive gas, silicon tetrafluoride.

azardous Polymerization: May Occur - ; Will Not Occur - X

Conditions to Avoid - None Known.

COLLOID ENVIRONMENTAL TECHNOLOGIES COMPANY
1350 West Shure Drive • Arlington Heights, IL 60004-1440 • USA
(847) 392-5800 • Fax (847) 506-6150
http://www.cetco.com

PRODUCT NAME: PUREGOLD GROUT

Section VI HEALTH HAZARD DATA

Route(s) of Entry: Inhalation? Yes Skin? No Ingestion? No

Health Hazards (Acute and Chronic):

Inhalation: Breathing silica dust may not cause noticeable injury or illness even though permanent lung damage may be occurring. Inhalation of dust may have the following serious chronic health effects:

Silicosis: Excessive inhalation of respirable crystalline silica dust may cause a progressive, disabling and sometimes-fatal lung disease called silicosis. Symptoms include cough, shortness of breath, wheezing, non-specific chest illness and reduced pulmonary function. Smoking exacerbates this disease. Individuals with silicosis are predisposed to develop tuberculosis.

Cancer Status: The International Agency for Research on Cancer has determined that crystalline silica inhaled in the form of quartz or cristobalite from occupational sources is carcinogenic to humans (Group 1 - carcinogenic to humans). Refer to *IARC Monograph 68, Silica, Some Silicates and Organic Fibers* (published in June 1997) in conjunction with the use of these materials. The National Toxicology Program classifies respirable crystalline silica as "reasonably anticipated to be a carcinogen". For further information *See:* "Adverse effects of Crystalline Silica Exposure" published by the American Thoracic Society Medical Section of the American Lung Association, American Journal of Respiratory and Critical Care Medicine, Volume 155, page 761-765, 1997.

'her Data with Possible Relevance to Human Health: The small quantities of crystalline silica (quartz) found in this product are, ıder normal conditions, naturally coated with an unremovable layer of amorphous silica and/or bentonite clay. IARC (Vol. 68, 1997, pg. 191-192) has stated that crystalline silica (quartz) can differ in toxicity depending on the minerals with which it is ɔmbined, citing studies in IARC (Vol. 42, 1987 pg. 86) which stated that the toxic effect of crystalline silica (quartz) is reduced by ıe "protective effect....due mainly to clay minerals...".

Carcinogenicity: NTP? No IARC Monographs? Yes OSHA Regulated? No

Signs and Symptoms of Exposure: Excessive inhalation of generated dust may result in shortness of breath and reduced pulmonary function.

Medical Conditions Generally Aggravated by Exposure: Individuals with respiratory disease, including but not limited to, asthma and bronchitis, or subject to eye irritation should not be exposed to respirable crystalline silica (quartz) dust.

Emergency and First Aid Procedures:

Eyes & Skin:	Flush with water.
Gross Inhalation of Dust:	Remove to fresh air; give oxygen or artificial respiration if necessary; seek medical attention.
Ingestion:	If large amounts are swallowed, get immediate medical attention.

Section VII PRECAUTIONS FOR SAFE HANDLING AND USE

Steps to be Taken in Case Material is Released or Spilled: Vacuum if possible to avoid generating airborne dust. Avoid breathing dust. Wear an approved respirator. Avoid adding water; product will become slippery when wet.

Waste Disposal Method: Bury in an approved sanitary landfill, in accordance with federal, state and local regulations.

. recautions to Be Taken in Handling and Storing: Avoid breathing dust, use NIOSH/MSHA approved respirator where TLV 'imits for Crystalline Silica may be exceeded.

Other Precautions: Slippery when wet.

CETCO
COLLOID ENVIRONMENTAL TECHNOLOGIES COMPANY
1350 West Shure Drive • Arlington Heights, IL 60004-1440 • USA
(847) 392-5800 • Fax (847) 506-6150
http://www.cetco.com

PRODUCT NAME: PUREGOLD GROUT

Section VIII CONTROL MEASURES

Respiratory Protection: Use appropriate respiratory protection for respirable particulate based on consideration of airborne workplace concentration and duration of exposure arising from intended end use. Refer to the most recent standards of ANSI (z88.2) OSHA (29 CFR 1910.134), MSHA (30 CFR Parts 56 and 57) and NIOSH Respirator Decision Logic.

Ventilation: Use local exhaust as required to maintain exposures below applicable occupational exposure limits (*See Section II*). See also ACGIH "Industrial Ventilation – A Manual for Recommend Practice", (*current edition*).

Protective Gloves: Not Required.

Eye Protection: Recommended.

Other Protective Clothing or Equipment: None.

Work/Hygienic Practices: Use good housekeeping practices.

ction IX REGULATORY INFORMATION

ARA 311/312: Hazard Categories for SARA Section 311/312 Reporting: Chronic Health
SARA 313: This product contains the following chemicals subject to annual release reporting requirements under the SARA section 313 (40 CFR 372): None

CERCLA section 103 Reportable Quantity: None

California Proposition 65: *This product contains the following substances known to the state of California to cause cancer and/or reproductive harm: This product contains crystalline silica (respirable); however, the user should note that the small quantities of crystalline silica (quartz) found in this product are, under normal conditions, naturally coated with an unremovable layer of amorphous silica and/or bentonite clay. IARC (Vol. 68, 1997, pg. 191-192) has stated that crystalline silica (quartz) can differ in toxicity depending on the minerals with which it is combined. Citing studies in IARC (Vol. 42, 1987, p. 86) which stated that the toxic effect of crystalline silica (quartz) is reduced by the "protective effect....due mainly to clay minerals...".*

Toxic Substances Control Act: All of the components of this product are listed on the EPA TSCA Inventory or are exempt from notification requirements.

Canadian Environmental Protection Act: All the components of this product are listed on the Canadian Domestic Substances List or exempt from notification requirements.

European Inventory of Commercial Chemical Substances: All the components of this product are listed on the EINECS Inventory or exempt from notification requirements. (The EINECS number for Quartz: 231-545-5)
European Community Labeling Classification: Harmful (Xn)
European Community Risk and Safety Phrases: R40, R48, S22

Japan MITI: All the components of this product are existing chemical substances as defined in the Chemical Substance Control Law.

Australian Inventory of Chemical Substances: All the components of this product are listed on the AICS Inventory or exempt from notification requirements.

Canadian WHMIS Classification: Class D, Division 2, Subdivision A (Very Toxic Material causing other Toxic Effects)

F-+PA Hazard Rating:	Health: 2	Fire: 0	Reactivity: 0
HMIS Hazard Rating:	Health: *	Fire: 0	Reactivity: 0

***Warning** - Chronic health effect possible - inhalation of silica dust may cause lung injury/disease (silicosis). Take appropriate measures to avoid breathing dust. *See Section II.*

COLLOID ENVIRONMENTAL TECHNOLOGIES COMPANY
1350 West Shure Drive • Arlington Heights, IL 60004-1440 • USA
(847) 392-5800 • Fax (847) 506-6150
http://www.cetco.com

PRODUCT NAME: PUREGOLD GROUT

Section IX REGULATORY INFORMATION CONT.

REFERENCES:

Registry for Toxic Effects of Chemical Substances (RTECS), 1995.

Patty's Industrial Hygiene and Toxicology.

NTP Seventh Annual Report on Carcinogens, 1994.

IARC Monograph Volume 68, Silica, Some Silicates and Organic Fibers, 1997.

The information herein has been compiled from sources believed to be reliable and is accurate to the best of our knowledge. However, CETCO cannot give any guarantees regarding information from other sources, and expressly does not make any warranties, nor assumes any liability, for its use.

CETCO

COLLOID ENVIRONMENTAL TECHNOLOGIES COMPANY

TECHNICAL DATA SHEET

PureGold® Medium Chips

NSF®

Description: PureGold Chips are natural sodium bentonite screened to 1/4" to 3/8" in size.

Recommended Use: For sealing shallow boreholes, decommissioning wells, providing an interface between bentonite grouts and cement and as a backfill for grounding rod installations.

Characteristics:

- Chemically stable - results from TCLP Metals Analysis are below RCRA limits for hazardous constituents
- Provides a high solids clay seal
- Prevents infiltration of surface contamination
- Provides a permanent flexible seal
- Can be used to seal abandoned boreholes, conductor pipe and seismic shot holes
- Forms a low resistivity contact to grounding rods

Mixing and Application: Bagged material should be screened of fines before placement. Pour PureGold Chips slowly down hole to prevent bridging or binding in the unsaturated zone, water should be added at two foot intervals to assure adequate hydration.

Application Matrix

Hole Dia. (In.)	2	4	6	8	10	12	14
Approximate Lbs. Chips/Linear Foot	2	6	14	25	38	55	75

Bulk Density: 69.25 lbs./ft^3

Packaging: 50 lb. multi-wall, water-resistant bags, 48 bags per pallet. All pallets are shrinkwrapped.

1350 W. Shure Drive • Arlington Heights, Illinois 60004-1440 • (847) 392-5800 • FAX (847) 506-6150
A wholly owned subsidiary of AMCOL International

The information and data contained herein are believed to be accurate and reliable. CETCO makes no warranty of any kind and accepts no responsibility for the results obtained through application of this information.

Printed on recycled paper

CETCO
COLLOID ENVIRONMENTAL TECHNOLOGIES COMPANY
1350 West Shure Drive • Arlington Heights, IL 60004-1440 • USA
(847) 392-5800 • Fax (847) 506-6150
http://www.cetco.com

PRODUCT NAME: PUREGOLD MEDIUM CHIPS

Section I MANUFACTURER'S INFORMATION

MANUFACTURER'S NAME & ADDRESS:

CETCO – *Drilling Products Group*
1350 West Shure Drive
Arlington Heights, IL 60004

Telephone Number: 847-392-5800 E-mail: www.cetco.com
EMERGENCY CONTACT: CHEMTREC 800-424-9300
Date Prepared: February 23, 1999

Section II HAZARDOUS INGREDIENTS/IDENTITY INFORMATION

HAZARDOUS COMPONENTS: (Specific Chemical Identity: Common Names(s))		OSHA PEL	ACGIH TLV	Other Limits Recommended	% (optional)
Crystalline Quartz	CAS# 14808-60-7			*	< 6%
Respirable Crystalline Quartz				NIOSH	< 2%
Present (TWA)		0.1 mg/m^3	0.1 mg/m^3	50 ug/m^3	
Proposed (TWA)			50.0 ug/m^3		
Nuisance Dust:					
Respirable		5 mg/m^3	5 mg/m^3		
Total Dust		15 mg/m^3	10 mg/m^3		

*** WARNING:** This product contains a small amount of crystalline silica, which may cause delayed respiratory disease if inhaled over a prolonged period of time. Avoid breathing dust. Use NIOSH/MSHA approved respirator where TLV for crystalline silica (Quartz) may be exceeded. IARC Monographs on the evaluation of the Carcinogenic Risk of Chemicals to Humans (volume 68, 1997) concludes that crystalline silica is carcinogenic to humans in the form of quartz. IARC classification 1.

The small quantities of crystalline silica (quartz) found in this product are, under normal conditions, naturally coated with an unremovable layer of amorphous silica and/or bentonite clay. IARC (vol. 68, 1997, pg. 191-192) has stated that crystalline silica (quartz) can differ in toxicity depending on the minerals with which it is combined, citing studies in IARC (vol. 42, 1987, p. 86) which stated that the toxic effect of crystalline silica (quartz) is reduced by the "protective effect...due mainly to clay minerals..."

National Institute for Occupational Safety and Health (NIOSH) has recommended that the permissible exposure limit be changed to 50 micrograms respirable free silica per cubic meter of air (0.05 mg/ m^3) as determined by a full shift sample up to a 10 hour working day, 40 hours per week. See: 1974 NIOSH criteria for a recommended Standard for Occupational Exposure to Crystalline Silica should be consulted for more detailed information.

PEL - OSHA Permissible Exposure Limit.
TLV - American Conference of Governmental Industrial Hygienists (ACGIH) Threshold Limit Value.
TWA - 8 hour time weighted average

Note: The Permissible Exposure Limits (PEL) reported above are the pre - 1989 limits that were reinstated by OSHA June 30, 1993 following a decision by the United States Circuit Court of Appeals for the 11th Circuit. Federal OSHA is now enforcing these PELs. More restrictive exposure limits may be enforced by some other jurisdictions.

COLLOID ENVIRONMENTAL TECHNOLOGIES COMPANY
1350 West Shure Drive • Arlington Heights, IL 60004-1440 USA
(847) 392-5800 • Fax (847) 506-6150
http://www.cetco.com

PRODUCT NAME: PUREGOLD MEDIUM CHIPS

Section II HAZARDOUS INGREDIENTS/IDENTITY INFORMATION CONT.

PRODUCT IDENTIFICATION:

Chemical Name: Dry Mixture of Clay Silicate Compounds.
NFPA/HMIS: Health - 2, Fire - 0, Reactivity - 0, Specific Hazard - See Section VI
DOT Class: Not Regulated (49 CFR / IMDG)

Section III PHYSICAL/CHEMICAL CHARACTERISTICS

Boiling Point	- Not Applicable	**Specific Gravity** (H_2O = 1)	- 2.5
Vapor Pressure (mm Hg.)	- Not Applicable	**Melting Point**	- Not Applicable
Vapor Density (AIR = 1)	- Not Applicable	**Evaporation Rate** (Butyl Acetate = 1)	- Not Applicable
Solubility in Water	- Negligible		
Appearance and Odor	- Pale gray to buff chips, odorless.		

Section IV FIRE AND EXPLOSION HAZARD DATA

Flash Point (Method Used)	- Not Available	
Flammable Limits	- Not Available	LEL - NA UEL - NA
Extinguishing Media	- Not Applicable	
Special Fire Fighting Procedures	- Not Applicable	
Unusual Fire/Explosion Hazards	- Not Applicable	

Section V REACTIVITY DATA

Stability Unstable -
Stable - X

Conditions to Avoid - None Known

Incompatibility (Materials to Avoid) - Powerful oxidizing agents such as fluorine, chlorine trifluoride, manganese trioxide, etc.

Hazardous Decomposition or By-products - Silica will dissolve in hydrofluoric acid producing a corrosive gas, silicon tetrafluoride.

Hazardous Polymerization May Occur -
Will Not Occur - X

Conditions to Avoid - None Known

CETCO
COLLOID ENVIRONMENTAL TECHNOLOGIES COMPANY
1350 West Shure Drive • Arlington Heights, IL 60004-1440 USA
(847) 392-5800 • Fax (847) 506-6150
http://www.cetco.com

PRODUCT NAME: PUREGOLD MEDIUM CHIPS

Section VI HEALTH HAZARD DATA

Route(s) of Entry: **Inhalation?** Yes **Skin?** No **Ingestion?** No

Health Hazards (Acute and Chronic):

Inhalation: Breathing silica dust may not cause noticeable injury or illness even though permanent lung damage may be occurring. Inhalation of dust may have the following serious chronic health effects:

Silicosis: Excessive inhalation of respirable crystalline silica dust may cause a progressive, disabling and sometimes-fatal lung disease called silicosis. Symptoms include cough, shortness of breath, wheezing, non-specific chest illness and reduced pulmonary function. Smoking exacerbates this disease. Individuals with silicosis are predisposed to develop tuberculosis.

Cancer Status: The International Agency for Research on Cancer has determined that crystalline silica inhaled in the form of quartz or cristobalite from occupational sources is carcinogenic to humans (Group 1 - carcinogenic to humans). Refer to IARC Monograph 68, Silica, Some Silicates and Organic Fibers (published in June 1997) in conjunction with the use of these materials. The National Toxicology Program classifies respirable crystalline silica as "reasonably anticipated to be a carcinogen". For further information See: "Adverse effects of Crystalline Silica Exposure" published by the American Thoracic Society Medical Section of the American Lung Association, American Journal of Respiratory and Critical Care Medicine, Volume 155, page 761-765, 1997.

Other Data with Possible Relevance to Human Health:

The small quantities of crystalline silica (quartz) found in this product are, under normal conditions, naturally coated with an unremovable layer of amorphous silica and/or bentonite clay. IARC (Vol. 68, 1997, pp. 191-192) has stated that crystalline silica (quartz) can differ in toxicity depending on the minerals with which it is combined, citing studies in IARC (Vol. 42, 1987 pg. 86) which stated that the toxic effect of crystalline silica (quartz) is reduced by the "protective effect....due mainly to clay minerals...".

Carcinogenicity: NTP? No IARC Monographs? Yes OSHA Regulated? No

Signs and Symptoms of Exposure:

Excessive inhalation of generated dust may result in shortness of breath and reduced pulmonary function.

Medical Conditions Generally Aggravated by Exposure:

Individuals with respiratory disease, including but not limited to, asthma and bronchitis, or subject to eye irritation should not be exposed to respirable crystalline silica (quartz) dust.

Emergency and First Aid Procedures:

Eyes & Skin: Flush with water.
Gross Inhalation of Dust: Remove to fresh air; give oxygen or artificial respiration if necessary; seek medical attention.
Ingestion: If large amounts are swallowed, get immediate medical attention.

Section VII PRECAUTIONS FOR SAFE HANDLING AND USE

Steps to be Taken in Case Material is Released or Spilled: Vacuum if possible to avoid generating airborne dust. Avoid breathing dust. Wear an approved respirator. Avoid adding water; product will become slippery when wet.
Waste Disposal Method: Bury in an approved sanitary landfill, in accordance with federal, state and local regulations.
Precautions to Be Taken in Handling and Storing: Avoid breathing dust, use NIOSH/MSHA approved respirator where TLV limits for Crystalline Silica may be exceeded.
Other Precautions: Slippery when wet.

CETCO
COLLOID ENVIRONMENTAL TECHNOLOGIES COMPANY
1350 West Shure Drive • Arlington Heights, IL 60004-1440 • USA
(847) 392-5800 • Fax (847) 506-6150
http://www.cetco.com

PRODUCT NAME: PUREGOLD MEDIUM CHIPS

Section VIII CONTROL MEASURES

Respiratory Protection: Use appropriate respiratory protection for respirable particulate based on consideration of airborne workplace concentration and duration of exposure arising from intended end use. Refer to the most recent standards of ANSI (z88.2) OSHA (29 CFR 1910.134), MSHA (30 CFR Parts 56 and 57) and NIOSH Respirator Decision Logic.

Ventilation: Use local exhaust as required to maintain exposures below applicable occupational exposure limits (See Section II). See also ACGIH "Industrial Ventilation – A Manual for Recommend Practice", (current edition).

Protective Gloves - Not Required
Eye Protection - Recommended

Other Protective Clothing or Equipment - None
Work/Hygienic Practices - Use good housekeeping practices.

Section IX REGULATORY INFORMATION

SARA 311/312: Hazard Categories for SARA Section 311/312 Reporting: Chronic Health

SARA 313: This product contains the following chemicals subject to annual release reporting requirements under the SARA section 313 (40 CFR 372): None

CLA section 103 Reportable Quantity: None

California Proposition 65: *This product contains the following substances known to the state of California to cause cancer and/or reproductive harm: This product contains crystalline silica (respirable); however, the user should note that the small quantities of crystalline silica (quartz) found in this product are, under normal conditions, naturally coated with an unremovable layer of amorphous silica and/or bentonite clay. IARC (Vol. 68, 1997, pg. 191-192) has stated that crystalline silica (quartz) can differ in toxicity depending on the minerals with which it is combined. Citing studies in IARC (Vol. 42, 1987, p. 86) which stated that the toxic effect of crystalline silica (quartz) is reduced by the "protective effect....due mainly to clay minerals...".*

Toxic Substances Control Act: All of the components of this product are listed on the EPA TSCA Inventory or are exempt from notification requirements.

European Inventory of Commercial Chemical Substances: All the components of this product are listed on the EINECS Inventory or exempt from notification requirements. (The EINECS number for Quartz: 231-545-5)

Canadian Environmental Protection Act: All the components of this product are listed on the Canadian Domestic Substances List or exempt from notification requirements.

Japan MITI: All the components of this product are existing chemical substances as defined in the Chemical Substance Control Law.

Australian Inventory of Chemical Substances: All the components of this product are listed on the AICS Inventory or exempt from notification requirements.

Canadian WHMIS Classification: Class D, Division 2, Subdivision A (Very Toxic Material causing other Toxic Effects)

European Community Labeling Classification: Harmful (Xn)

European Community Risk and Safety Phrases: R40, R48, S22

NFPA Hazard Rating: Health: 1 Fire: 0 Reactivity: 0

HMIS Hazard Rating: Health: * Fire: 0 Reactivity: 0

Warning - Chronic health effect possible - inhalation of silica dust may cause lung injury/disease (silicosis). Take appropriate measures to avoid breathing dust. See Section II.

CETCO
COLLOID ENVIRONMENTAL TECHNOLOGIES COMPANY
1350 West Shure Drive • Arlington Heights, IL 60004-1440 • USA
(847) 392-5800 • Fax (847) 506-6150
http://www.cetco.com

PRODUCT NAME: *PUREGOLD MEDIUM CHIPS*

Section IX REGULATORY INFORMATION CONT.

References: Registry for Toxic Effects of Chemical Substances (RTECS), 1995
Patty's Industrial Hygiene and Toxicology
NTP Seventh Annual Report on Carcinogens, 1994
IARC Monograph Volume 68, Silica, Some Silicates and Organic Fibers, 1997

The information herein has been compiled from sources believed to be reliable and is accurate to the best of ·ır knowledge. However, CETCO cannot give any guarantees regarding information from other sources, and expressly does not make any warranties, nor assumes any liability, for its use.

APPENDIX E

Blower Shed Concrete Testing Results

Great Lakes Soil & Environmental Consultants, Inc. 333 Shore Drive, Burr Ridge, IL 60521 Ph: (630) 321-0944 Fax: (630) 321-0945	**CONCRETE CYLINDER COMPRESSIVE STRENGTH TEST REPORT**

Project	ACS Superfund Site-Field and Laboratory Testing Services						
Client	Montgomery Watson Harza, Attn: Travis Klingforth						
File No.	2205	**Set No.**	1	**Report Print Date**	**10/4/2001**	**Qc By**	SB

Specifications

Mix Design #				
Strength Spec.	4000	**psi at**	28	**Days**
Slump Range From		**to**		**inches**
Air Content Range From		**to**		**%**

Supplier & Sub Information

Concrete Subcontractor	
Concrete Supplier	

Field Test Data

Field Test Date:	9/6/01	**Time Tested:**		**Field Testing By:**	Cont.
Location of Use:					
Truck No.		**Ambient Temperature**		**°F**	
Ticket No.		**Concrete Temperature**		**°F**	
Load Size, cu. Yd.		**Final Slump**		**in.**	
		Final Air Content		**%**	

Laboratory Test Data

Date Received:	**9/8/2001**						**No. of Specimens:**	3
Lab Number	15591	15592	15593					
Specimen Area, in^2	28.29	28.29	28.29					
Specimen Age	4	14	28					
Test Date	9/10/2001	9/20/2001	10/4/2001					
Tested By	JM	JM	JM					
Actual Strength, psi	**3054**	**3579**	**4706**					
Type of Failure	**Shear**	**Shear**	**Shear**					
Test Result	**N/A**	**Pass**	**Pass**					

Miscelleneous Information

Equipment Serial #	TMI 15096

Remarks

APPENDIX F

As-Built Drawings

Montgomery Watson

American Chemical Offsite Expansion

Griffith, Indiana

Austgen Electric Inc.

801 East Main Street
Griffith, IN 46319
219-924-7528
www.austgen.com

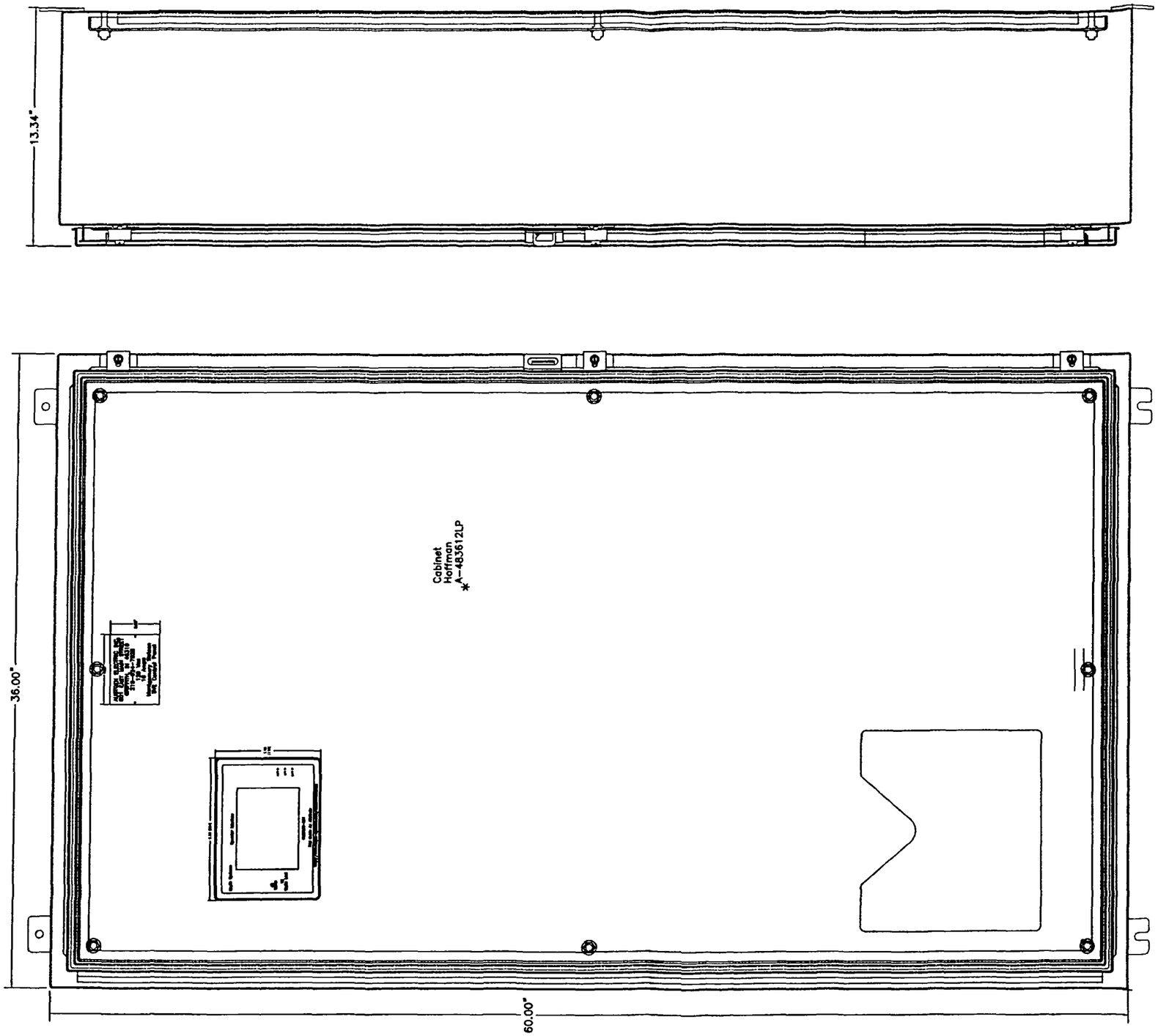

Terminals Legend

Terminal (+)

Reference Tag

PLC-I/O

Remote

Local

Austgen Electric Inc.
801 East Main Street
Griffith, IN 46319

DATE	REVISION	BY	CH'D

Panel SVE

JOB # 11015-01 DATE: 8-1-02

FILE M:\Drawings\Montgomery Watson\OFF-SITE EXPANSION\Blower-build-control\

CUSTOMER: Montgomery Watson

TITLE: Offsite Blower Control

DRAWN BY: RF SHEET OF 10

DRAWING NO. 11.dwg

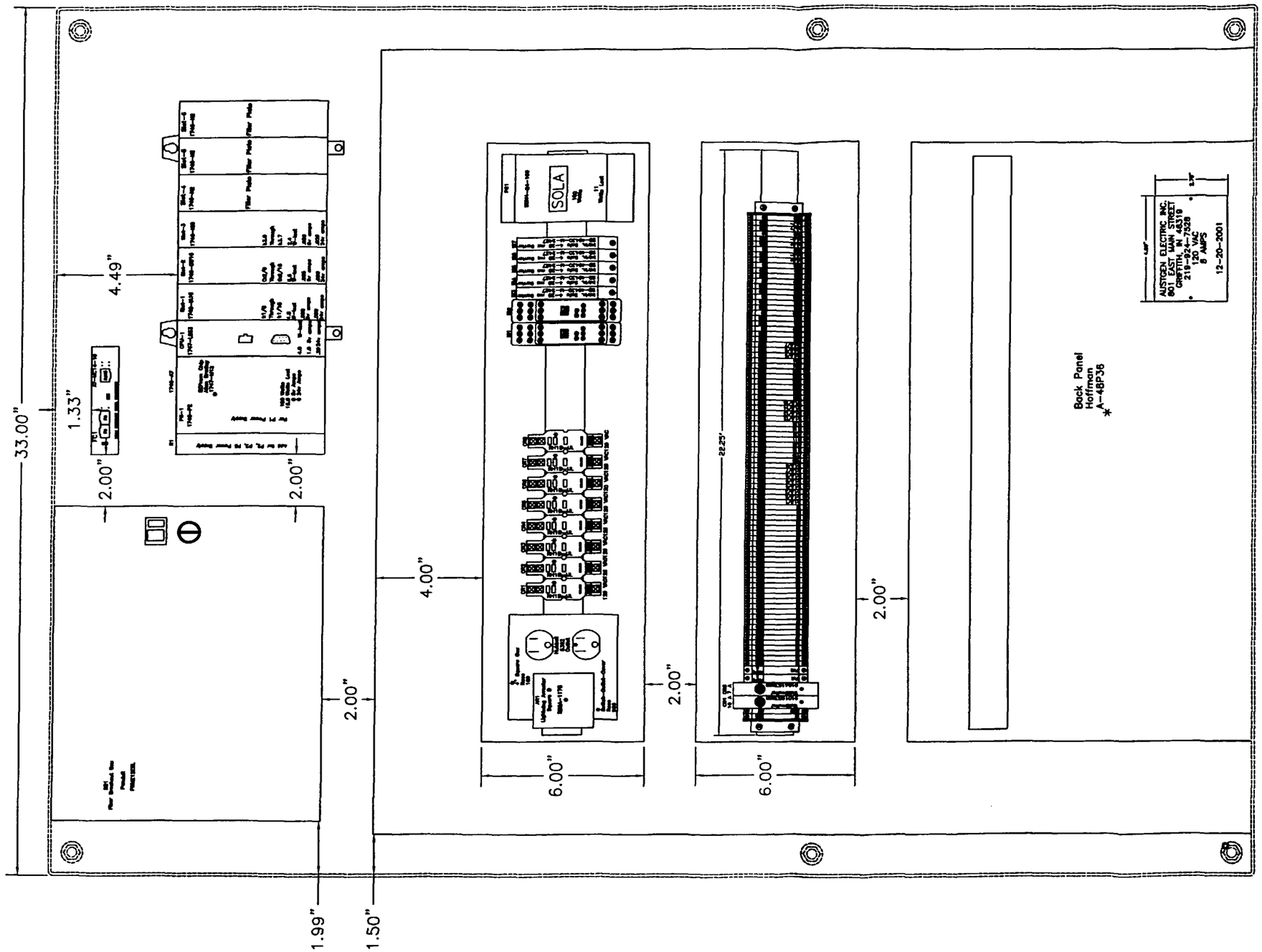

Terminals Legend

Terminal

Remote

Reference Tag

Local

PLC-I/O

Austgen Electric Inc.
801 East Main Street
Griffith, IN 46319

DATE	REVISION	BY	CH'D

Panel SVE

JOB # 11015-01 DATE: 8-1-02

FILE M:\Drawings\Montgomery Watson\OFF-SITE EXPANSION\Blower-build-control\

Customer: Montgomery Watson

Title Offsite Blower Control

DRAWN BY: RF Total Sheets 10

Drawing No. 2.dwg

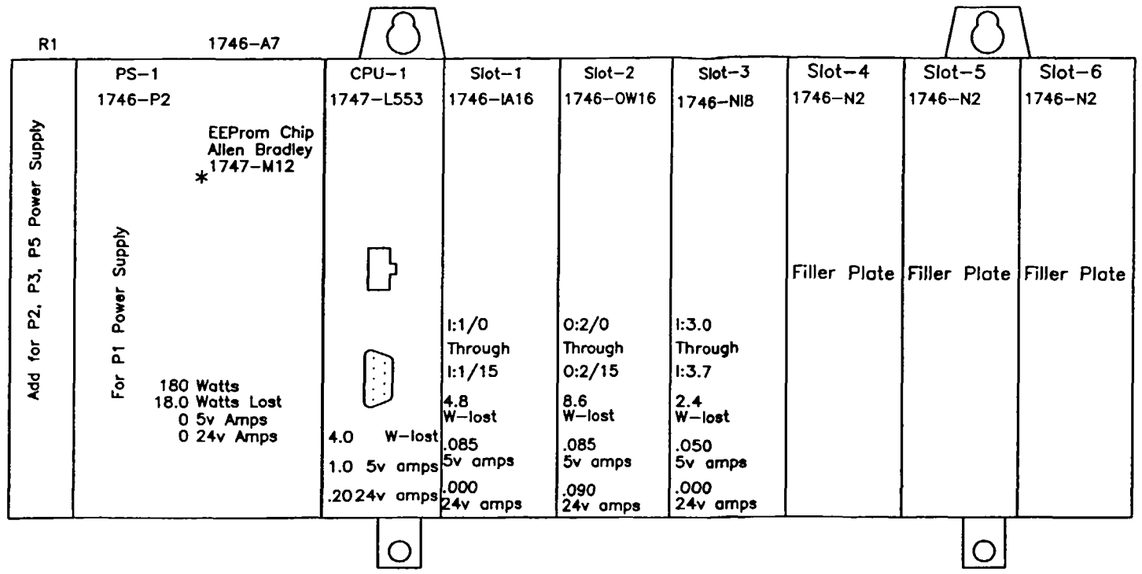

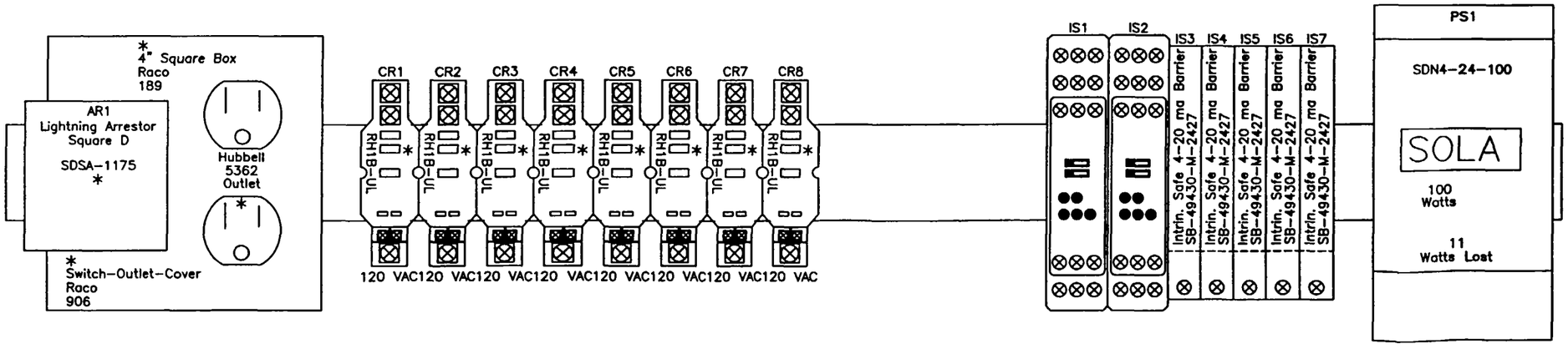

Terminals Legend

Terminal (+)

Reference Tag

PLC-I/O

Remote

Local

Austgen Electric Inc.
801 East Main Street
Griffith, IN 46319

DATE	REVISION	BY	CHD

Panel SVE

JOB # 11015-01 DATE: 8-1-02

FILE M:\Drawings\Montgomery Watson\OFF-SITE EXPANSION\Blower-build-control\

Customer: Montgomery Watson

Title Offsite Blower Control

DRAWN BY: RF Total Sheets 10

Drawing No. 3.dwg

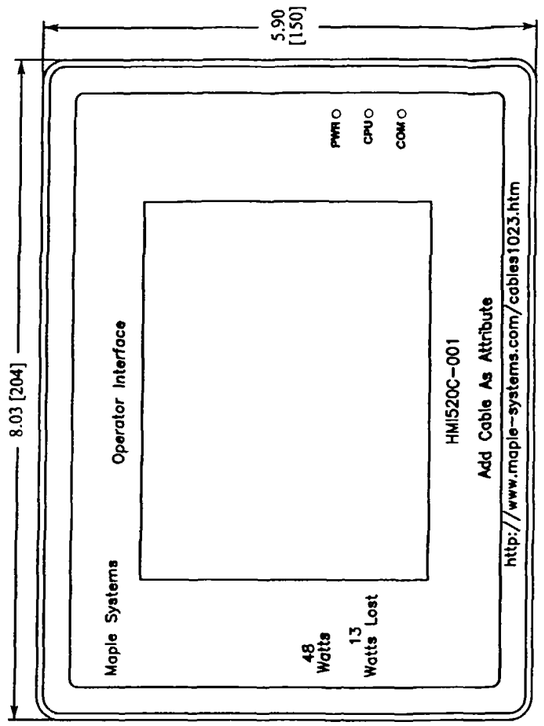

Terminals Legend

Terminal

Remote

Reference Tag

Local

PLC-I/O

Austgen Electric Inc.
801 East Main Street
Griffith, IN 46319

DATE	REVISION	BY	CHD

Panel SVE

JOB # 11015-01 DATE: 8-1-02

FILE

Customer: Montçomery Watson

Title Offsite Blower Control

DRAWN BY: RF Total Sheets 10

Drawing No. 14.DWG

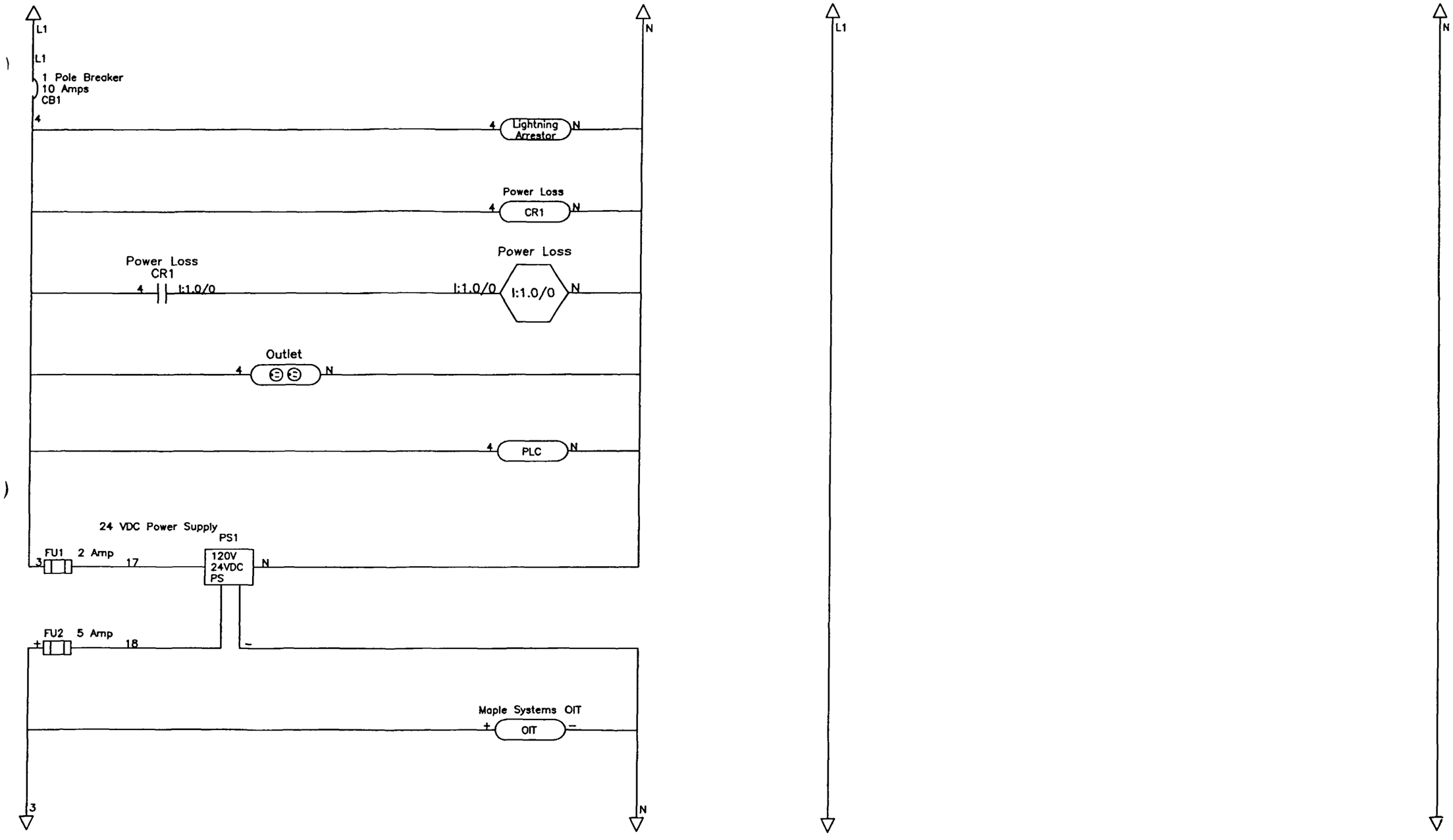

Terminals Legend

Terminal

Remote

Reference Tag

Local

PLC-I/O

Austgen Electric Inc.
801 East Main Street
Griffith, IN 46319

DATE	REVISION	BY	CKD

Panel SVE

JOB # 11015-01 DATE: 8-1-02

Customer: Montgomery Watson

Title Offsite Blower Control

DRAWN BY: RF Total Sheets 10

Drawing No. 5.dwg

FILE M:\Drawings\Montgomery Watson\OFF-SITE EXPANSION\Blower-build-control\

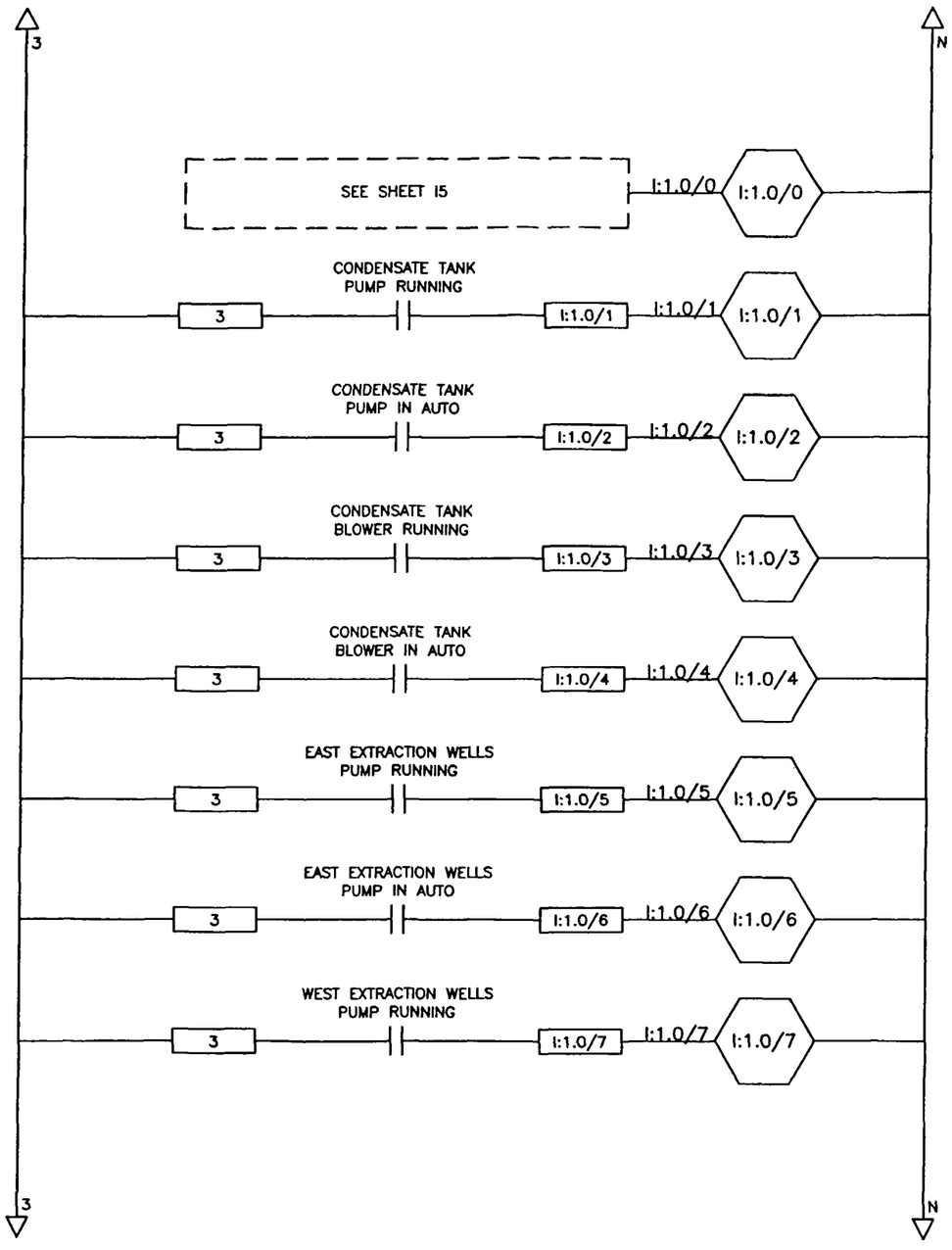

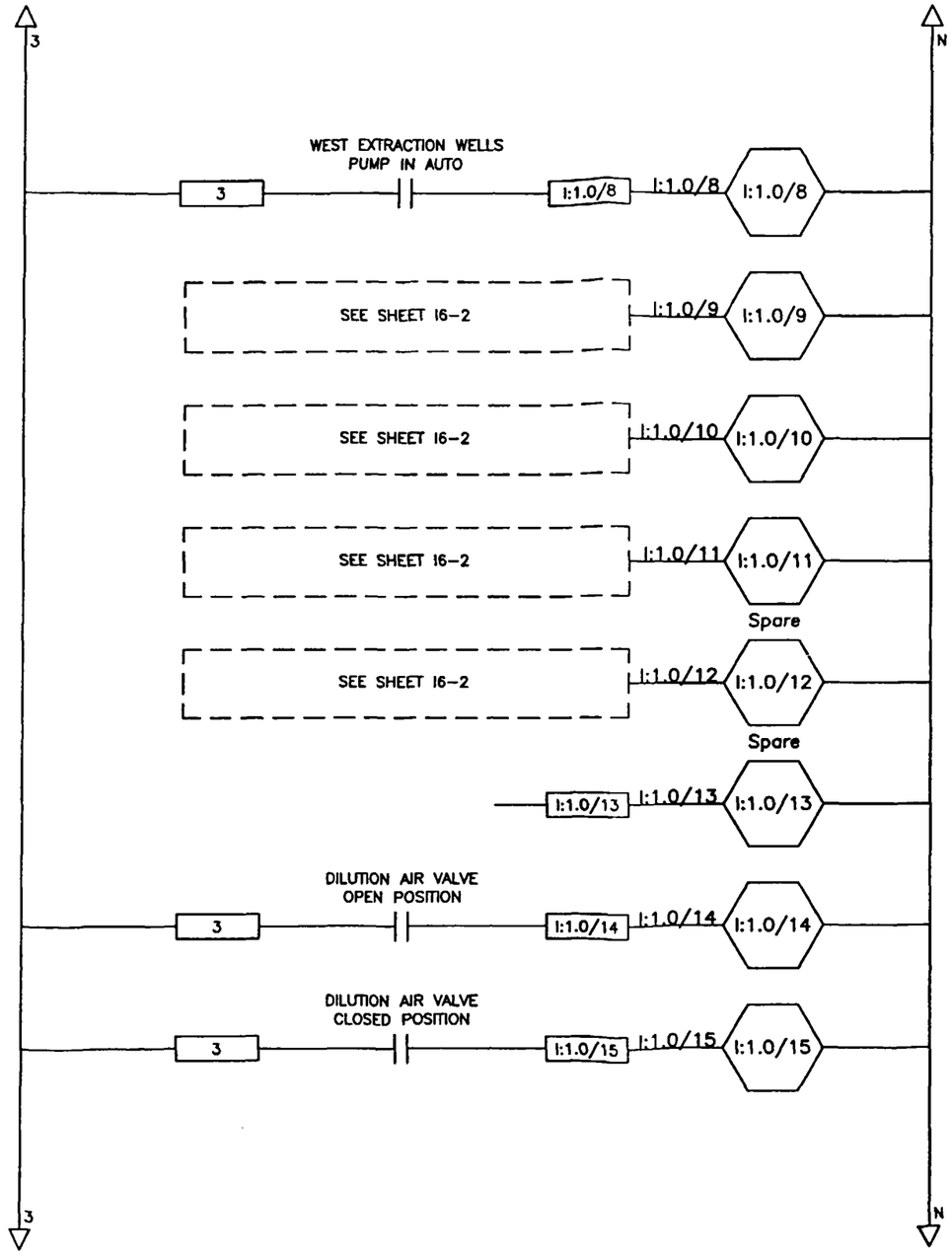

Terminal

Remote

Terminals Legend

Reference Tag

Local

PLC-I/O

Austgen Electric Inc.
801 East Main Street
Griffith, IN 46319

DATE	REVISION	BY	CHK'D

Panel SVE

JOB # 11015-01 DATE: 8-1-02

FILE M:\Drawings\Montgomery Watson\OFF-SITE EXPANSION\Blower-build-control\

Customer: Montgomery Watson

Title Offsite Blower Control

DRAWN BY: RF Total Sheets 10

Drawing No. 15.dwg

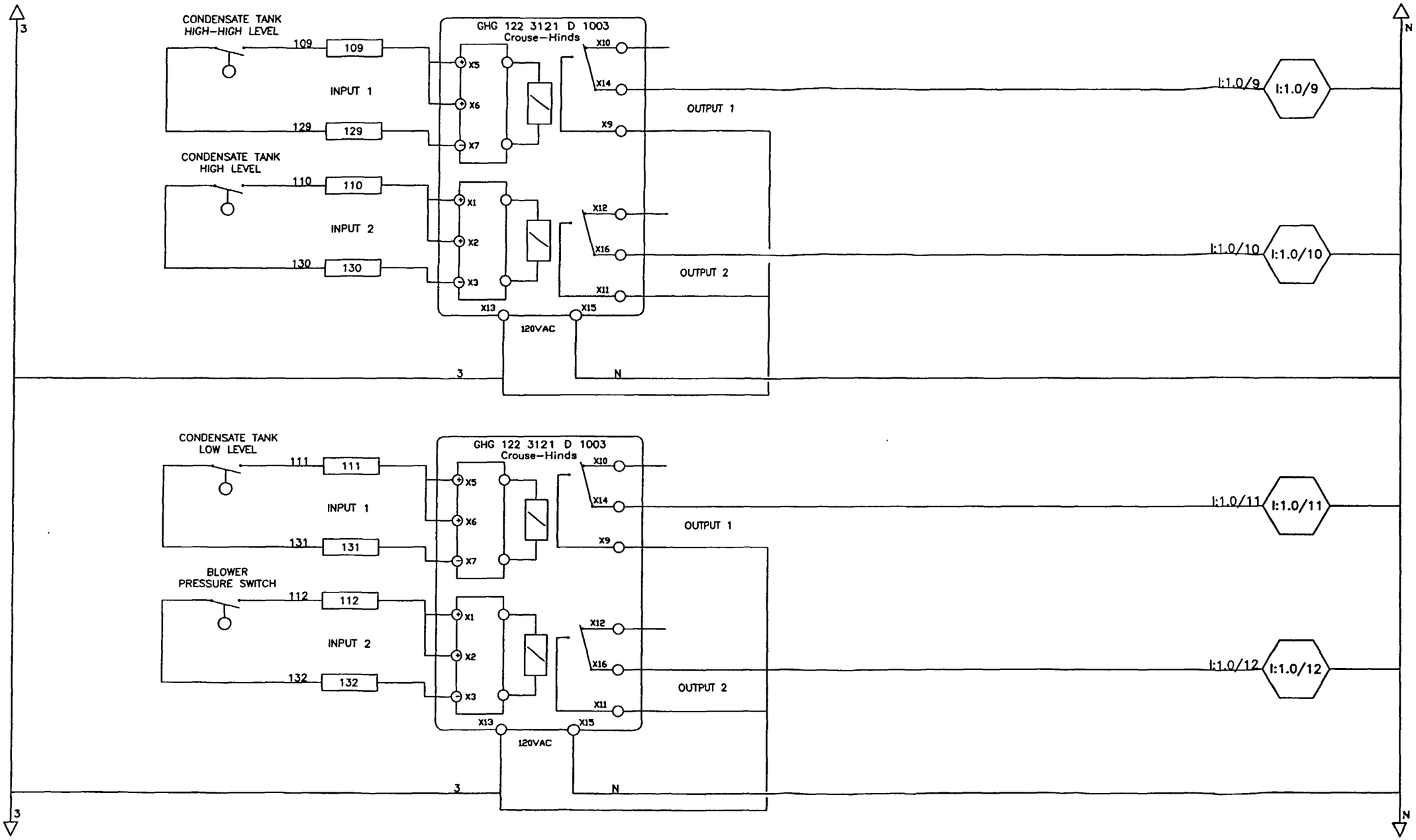

Terminals Legend

Terminal

Reference Tag

Remote

Local

PLC-I/O

Austgen Electric Inc.
801 East Main Street
Griffith, IN 46319

DATE	REVISION	BY	CH'D

Panel SVE

JOB # 11015-01 DATE: 8-1-02

FILE M:\Drawings\Montgomery Watson\OFF-SITE EXPANSION\Blower-buid-control\

Customer: Montgomery Watson

Title Offsite Blower Control

DRAWN BY: RF Total Sheets 10

Drawing No. 17.dwg

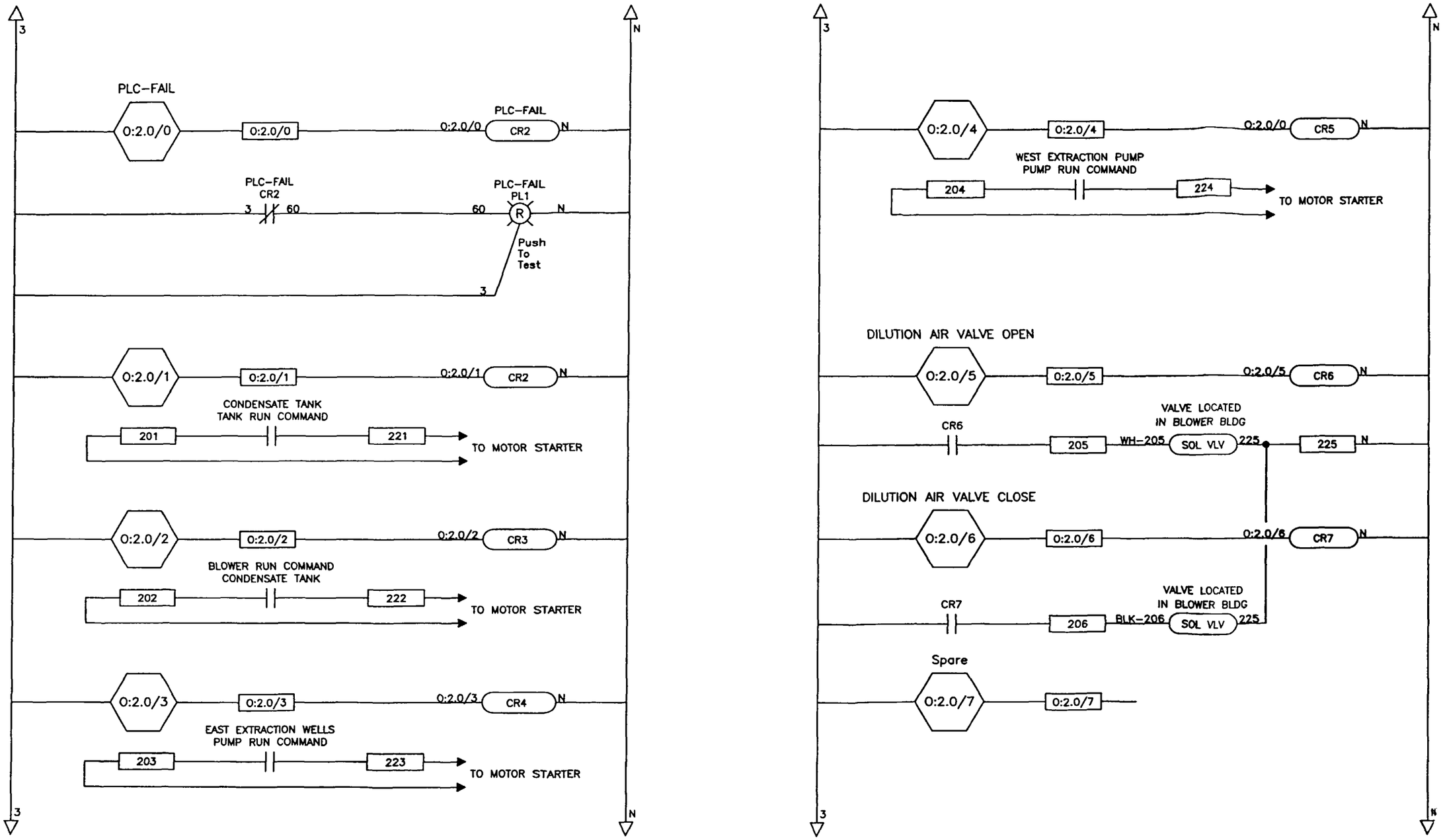

Terminals Legend

Terminal

Remote

Reference Tag

Local

PLC-I/O

Austgen Electric Inc.
801 East Main Street
Griffith, IN 46319

DATE	REVISION	BY	CH'D

Panel SVE

JOB # 11015-01 DATE: 8-1-02

FILE M:\Drawings\Montgomery Watson\OFF-SITE EXPANSION\Blower-buid-control\

Customer: Montgomery Watson

Title Offsite Blower Control

DRAWN BY: RF Total Sheets 10

Drawing No. 8.dwg

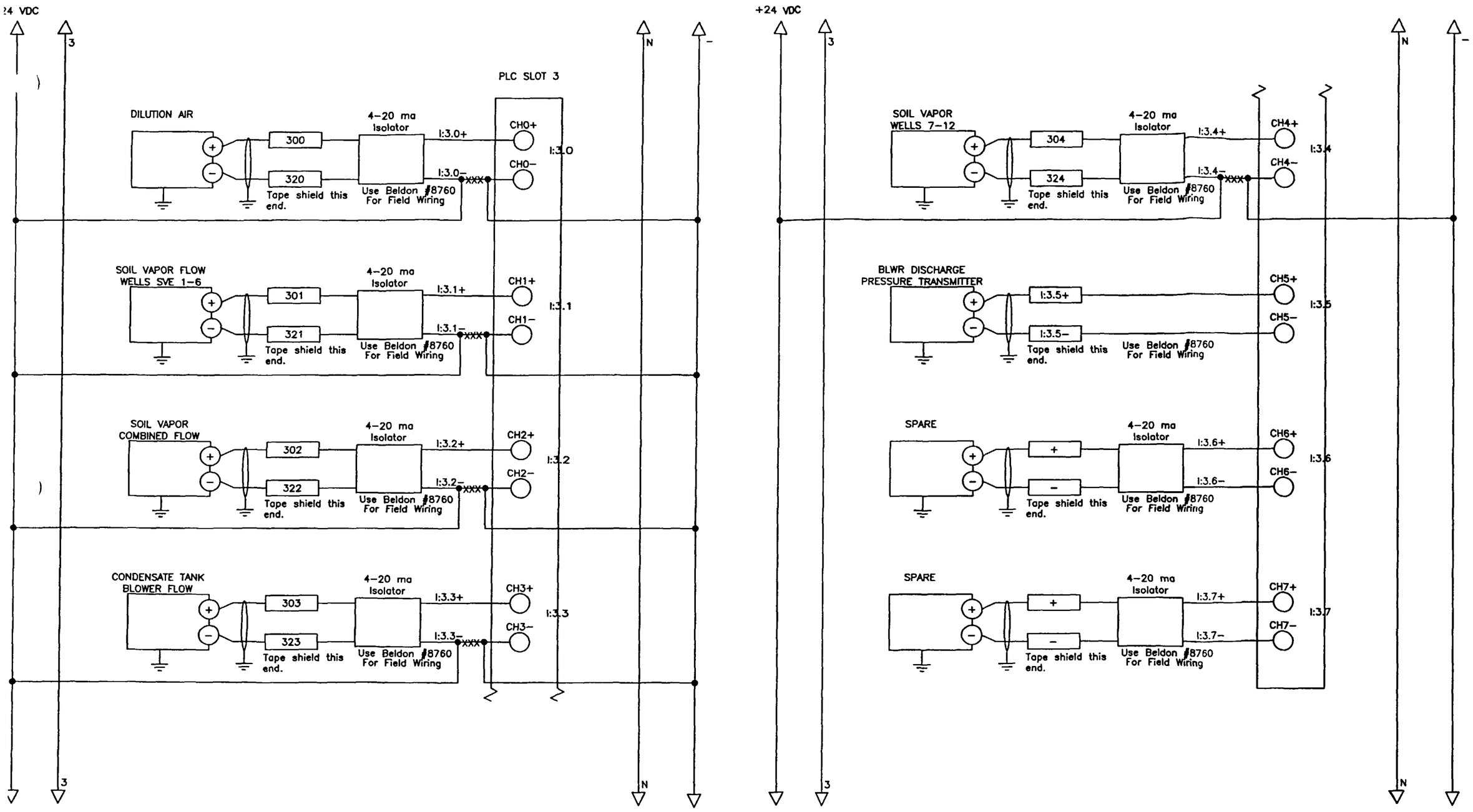

Terminals Legend

Terminal (+)

Remote

Reference Tag

Local

PLC-I/O

Austgen Electric Inc.
801 East Main Street
Griffith, IN 46319

DATE	REVISION	BY	CH'D

Panel SVE

JOB # 11015-01 DATE: 8-1-02

FILE M:\Drawings\Montgomery Watson\OFF-SITE EXPANSION\Blower-build-control\

Customer: Montgomery Watson

Title Offsite Blower Control

DRAWN BY: RF Total Sheets 10

Drawing No. 15.dwg

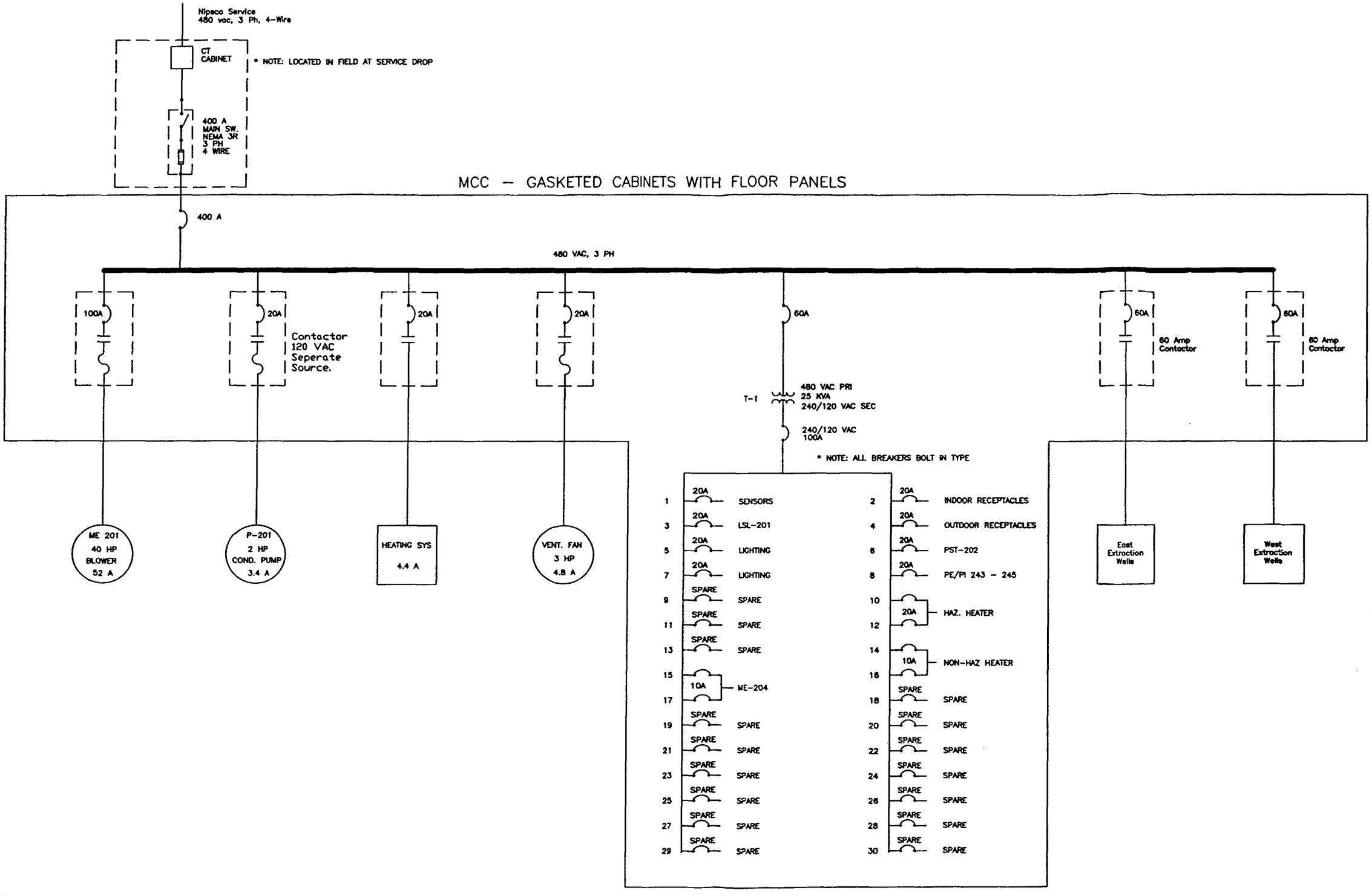

Terminals Legend

Terminal (+)

Reference Tag

Remote

Local

PLC-I/O

Austgen Electric Inc.
801 East Main Street
Griffith, IN 46319

DATE	REVISION	BY	CHKD

Panel SVE

JOB # 11015-01 DATE: 8-1-02

FILE M:\Drawings\Montgomery Watson\OFF-SITE EXPANSION\Blower-buid-control\

Customer: Montgomery Watson

Title Offsite Blower Control

DRAWN BY: RF Total Sheets 10

Drawing No. 1'0.dwg

VALVE ACTUATORS DESIGNATIONS

(FIELD MOUNTED, INTEGRATED TO REMOTE CONTROLLER)
(ANSI/ISA S-5.1 SECTION 6.3 AND S-5.3 SECTION 4)

- HAND OPERATED BLOCK VALVE (EXAMPLE: BALL VALVE)
- S — SOLENOID OPERATED VALVE
- PISTON ACTUATED BLOCK VALVE (EXAMPLE: BALL VALVE)
- DIAPHRAGM OPERATED CONTROL VALVE
- M — MOTOR OPERATED CONTROL VALVE (EXAMPLE: BALL VALVE)
- HAND ACTUATED CONTROL VALVE (EXAMPLE: GATE VALVE)
- PIPE MOUNTED DEVICE (EXAMPLE: FLOW METER)

LOCAL CONTROL VALVE DESIGNATIONS

(FIELD MOUNTED, LOCAL CONTROL)

- BACK PRESSURE REGULATOR SELF-CONTAINED
- PRESSURE REDUCING REGULATOR SELF-CONTAINED
- BACK PRESSURE VALVE WITH PIPE TAP
- PRESSURE REDUCING VALVE WITH PIPE TAP

COMPUTER CONTROL SYSTEM SYMBOLS

(ANSI/ISA S-5.3 SECTION 4)

XX OR TAG NO. XX — COMPUTER I/O INTERFACE OR COMPONENT TAG NOT NORMALLY ACCESSED BY OPERATOR

XX = DI – DIGITAL INPUT
= DO – DIGITAL OUTPUT
= PO – PULSE OUTPUT
= AI – ANALOG INPUT
= AO – ANALOG OUTPUT
= SI – SERIAL INPUT
= BCD- BINARY CODED DIGIT
= STI – SMART TRANSMITTER INPUT
= SP – SCADA INPUT SETPOINT
= PB – SCADA INPUT ENABLE
= TR – SCADA TREND / ELAPSE TIME
= IS – INTRINSICALLY SAFE BARRIER

- DISTRIBUTED CONTROL/SHARED DISPLAY NORMALLY ACCESSIBLE TO OPERATOR
- DISTRIBUTED CONTROL/SHARED DISPLAY NOT NORMALLY ACCESSIBLE TO OPERATOR
- COMPLEX COMPUTER LOGIC
- L_n — INTERLOCK LOGIC – WHERE n = INTERLOCK NUMBER (UNIQUE FOR PLANT)
- PROGRAMMABLE LOGIC CONTROLLER DI, DO, AI, AO
- C — POWER CONTACTOR
- MS — MOTOR STARTER
- AX — MOTOR STARTER AUX.
- M — MOTOR

INSTRUMENTATION SYMBOLS

(ANSI/ISA S-5.1 SECTION 6.3)

- FIELD MOUNTED INSTRUMENT
- PANEL, FRONT MOUNTED INSTRUMENT
- PANEL, BACK MOUNTED INSTRUMENT
- DUAL FUNCTION OR INTEGRALLY MOUNTED FIELD INSTRUMENT
- LOCAL PANEL MOUNTED INSTRUMENT (AUXILIARY)
- LOCAL PANEL BACK MOUNTED INSTRUMENT (AUXILIARY)
- VSC — VARIABLE SPEED CONTROL
- ECD — EDDY CURRENT DRIVE
- PILOT LIGHT
- HS XXX — HAND SWITCH FUNCTIONAL DESIGNATION

XXX = HOA – HAND/OFF/AUTOMATIC
= OCA – OPEN/CLOSED/AUTOMATIC
= JOA – JOG ON/OFF/AUTOMATIC
= HOR – HAND/OFF/REMOTE
= OC – OPEN/CLOSED
= OCO – OPEN/CLOSE/INTERLOCK OVERIDE
= HO – HAND/OFF
= FOR – FORWARD/OFF/REVERSE
= PB – START/STOP PUSH BUTTON
= LR – LOCAL/REMOTE SWITCH

INSTRUMENT SUPPLY & VALVE POSITION ABBREVIATIONS

(ANSI/ISA S-5.1 SECTION 6.2)

IA – INSTRUMENT AIR SUPPLY
PA – PLANT AIR SUPPLY
ES – ELECTRICAL SUPPLY
GS – GAS SUPPLY
HS – HYDRAULIC SUPPLY
NS – NITROGEN SUPPLY
SS – STEAM SUPPLY
WS – WATER SUPPLY
FC – FAIL CLOSED
FO – FAIL OPEN
FL – FAIL LAST POSITION
M – MOTOR STARTER
MS – STARTER AUX. CONTACTS
NO – NORMALLY OPEN
NC – NORMALLY CLOSED
OL – OVERLOAD
VS – VENDOR SUPPLIED

INSTRUMENT LINE SYMBOLS

(ANSI/ISA S-5.1 SECTION 6.2)

- ▲ ANALOG INPUT
- ▼ ANALOG OUTPUT
- ELECTRICAL SIGNAL
- SOFTWARE CONNECTION
- △ DIGITAL INPUT
- ▽ DIGITAL OUTPUT
- ELECTROMAGNETIC OR SONIC SIGNAL (GUIDED SYSTEM)
- WIRED DATA LINK OR FIELD BUS / CAT 5 ETHERNET
- FIBRE OPTIC DATA LINK OR FIELD BUS
- VIRTUAL DATA LINK SHOWN FOR CLARITY

INSTRUMENT LETTER DESIGNATIONS

(ANSI/ISA – S 5.1 SECTION 5.1)

	FIRST LETTER		SUCCEEDING LETTERS		
	MEASURED OR INITIATING VARIABLE	MODIFIER	READOUT OR PASSIVE FUNCTION	OUTPUT FUNCTION	MODIFIER
A	ANALYSIS TURBIDITY, CHEMICAL COMPONENT ANALYSIS, ETC.		ALARM		AUTO
B	BURNER FLAME		USERS' CHOICE	USERS' CHOICE	BOTTOM OR USERS' CHOICE
C	CONDUCTIVITY (ELECTRICAL) OR USERS' CHOICE			CONTROL	CLOSED POSITION
D	DENSITY (MASS), SPECIFIC GRAVITY OR USERS' CHOICE	DIFFERENTIAL			
E	VOLTAGE (EMF)		PRIMARY ELEMENT		
F	FLOW RATE	RATIO (FRACTION)	COMPUTER FLAG OR USERS' CHOICE		
G	GAGING (DIMENSIONAL) OR OR USERS' CHOICE		GLASS, VIEWING DEVICE		
H	HAND (MANUALLY INITIATED)				HIGH OR HAND
I	CURRENT (ELECTRICAL)		INDICATE		INLET
J	POWER	SCAN			
K	TIME OR TIME-SCHEDULE	TIME RATE OF CHANGE		CONTROL STATION	
L	LEVEL		LIGHT (PILOT)		LOW OR LOWER
M	MOISTURE HUMIDITY OR USERS' CHOICE	MOMENTARY			MIDDLE OR INTERMEDIATE
N	USERS' CHOICE		COMPUTER NUMERIC SETPOINT ENTRY	USERS' CHOICE	USERS' CHOICE
O	USERS' CHOICE		ORIFICE RESTRICTION		OPEN POSITION OR OUTLET
P	PRESSURE OR VACUUM		POINT (TEST CONNECTION)		
Q	QUANTITY	INTEGRATE OR TOTALIZE			
R	RADIOACTIVITY		RECORD OR PRINT		RUN/STOPPED
S	SPEED OR FREQUENCY	SAFETY		SWITCH	
T	TEMPERATURE			TRANSMIT	
U	MULTIVARIABLE		MALFUNCTION	MALFUNCTION	UPPER OR MALFUNCTION
V	VIBRATION, MECHANICAL ANALYSIS			VALVE, DAMPER OR LOUVER	
W	WEIGHT OR FORCE		WELL		
X	UNCLASSIFIED	X-AXIS	UNCLASSIFIED	UNCLASSIFIED	UNCLASSIFIED
Y	EVENT, STATE OR PRESENCE	Y-AXIS		RELAY, TRANSDUCE, COMPUTE, CONVERT	
Z	POSITION	Y-AXIS		DRIVE, ACTUATE, OR OTHER FINAL ELEMENT	

Austgen Electric Inc.
801 East Main Street
Griffith, IN 46319

DATE	REVISION	BY	CH'D

P&ID Legend

JOB #
FILE

TOLERANCES UNLESS OTHERWISE SPECIFIED

CUSTOMER: MONTGOMERY WATSON
TITLE: OFF SITE EXPANSION
SCALE: | DRAWN BY: | CHKD BY: | APP'D BY:
DATE: 8-1-02 | SHEET 1 OF 3 | DRAWING NO. P&ID-LEGEND-1.DWG

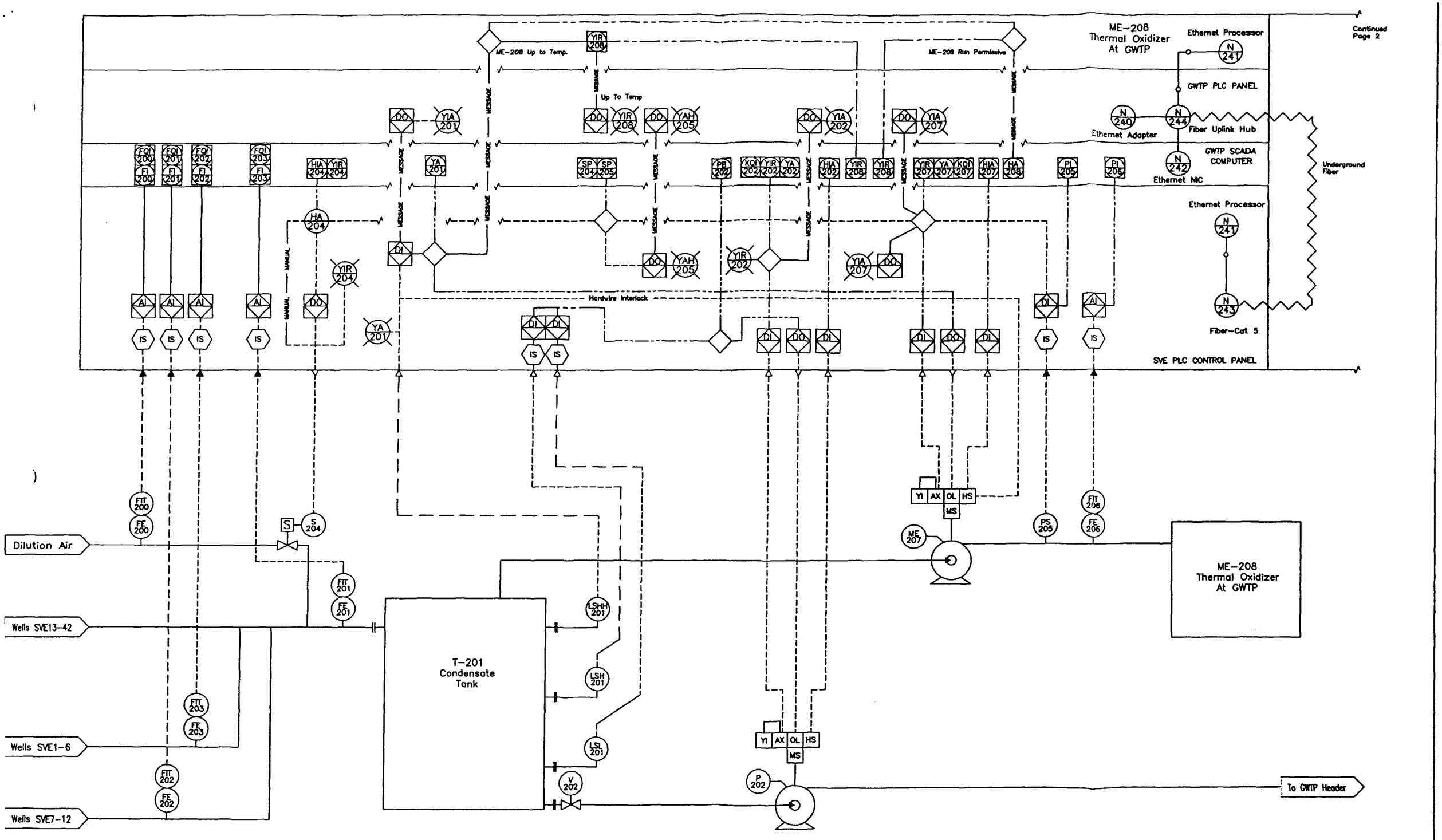

Terminals Legend

Terminal

Reference Tag

Remote

Local

Austgen Electric Inc.
801 East Main Street
Griffith, IN 46319

DATE	REVISION	BY	CH'D

P & ID
Off Site SVE

JOB #
FILE MW\Off-Site Exp\Blower

CUSTOMER: Montgomery Watson

TITLE: SVE Blower Control

SCALE: | DRAWN BY: mg | CHKD BY: | APP'D BY:

DATE: 11-27-0 | SHEET 2 OF 3 | DRAWING NO. P&ID-1.DWG

Continued From Page 1

ME-208
Thermal Oxidizer
At GWTP

GWTP PLC PANEL

GWTP SCADA COMPUTER

SVE PLC CONTROL PANEL

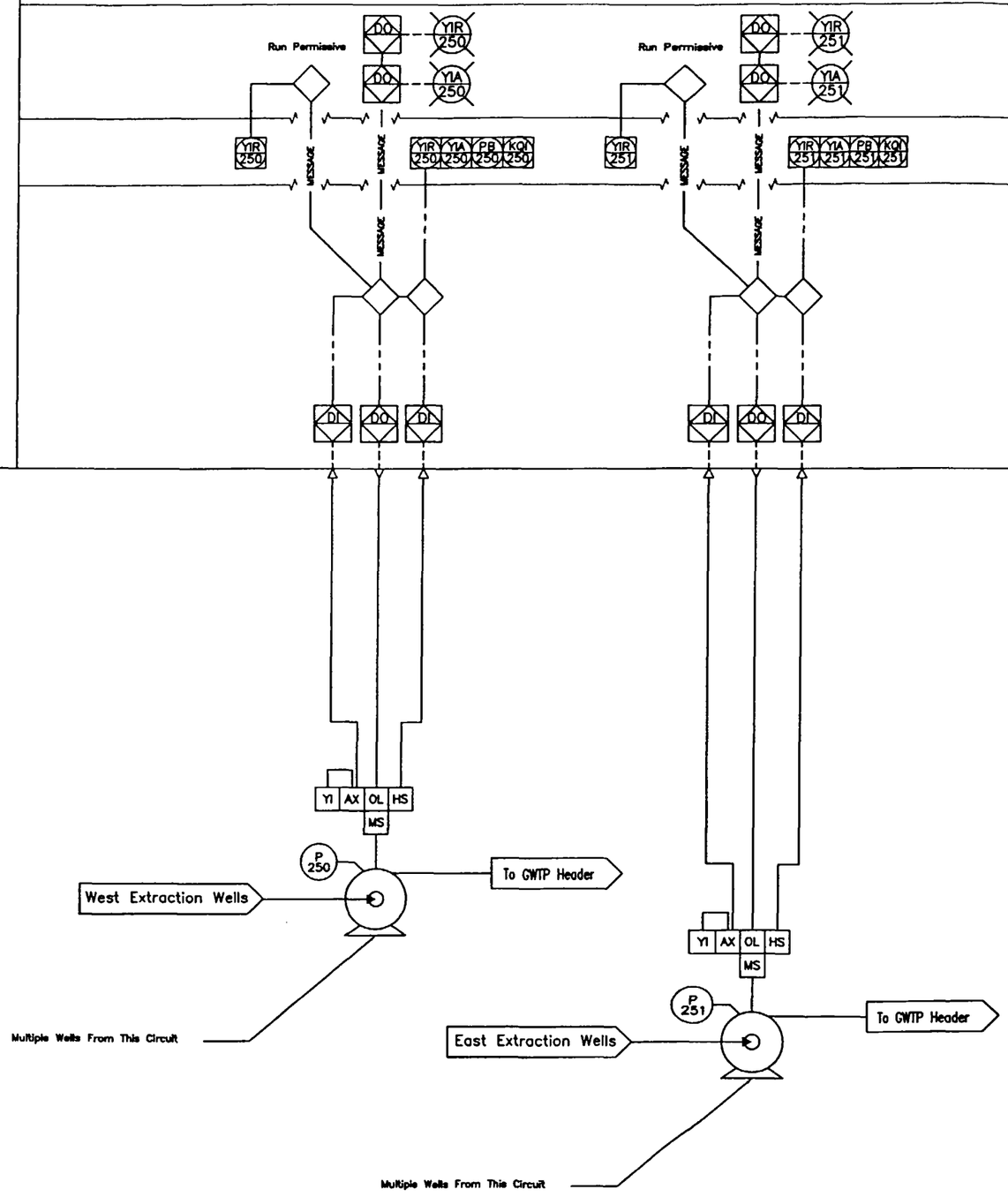

Terminals Legend

Terminal (+)

Reference Tag

Remote

Local

Austgen Electric Inc.
801 East Main Street
Griffith, IN 46319

DATE	REVISION	BY	CH'D

P & ID
Off Site SVE

JOB #

FILE MW\Off-Site Exp\Blower

CUSTOMER: Montgomery Watson

TITLE: SVE Blower Control

SCALE: | DRAWN BY: mg | CHKD BY: | APP'D BY:

DATE: 8-1-02 | SHEET 3 OF SHEETS 4 | DRAWING NO. P&ID-2.DWG

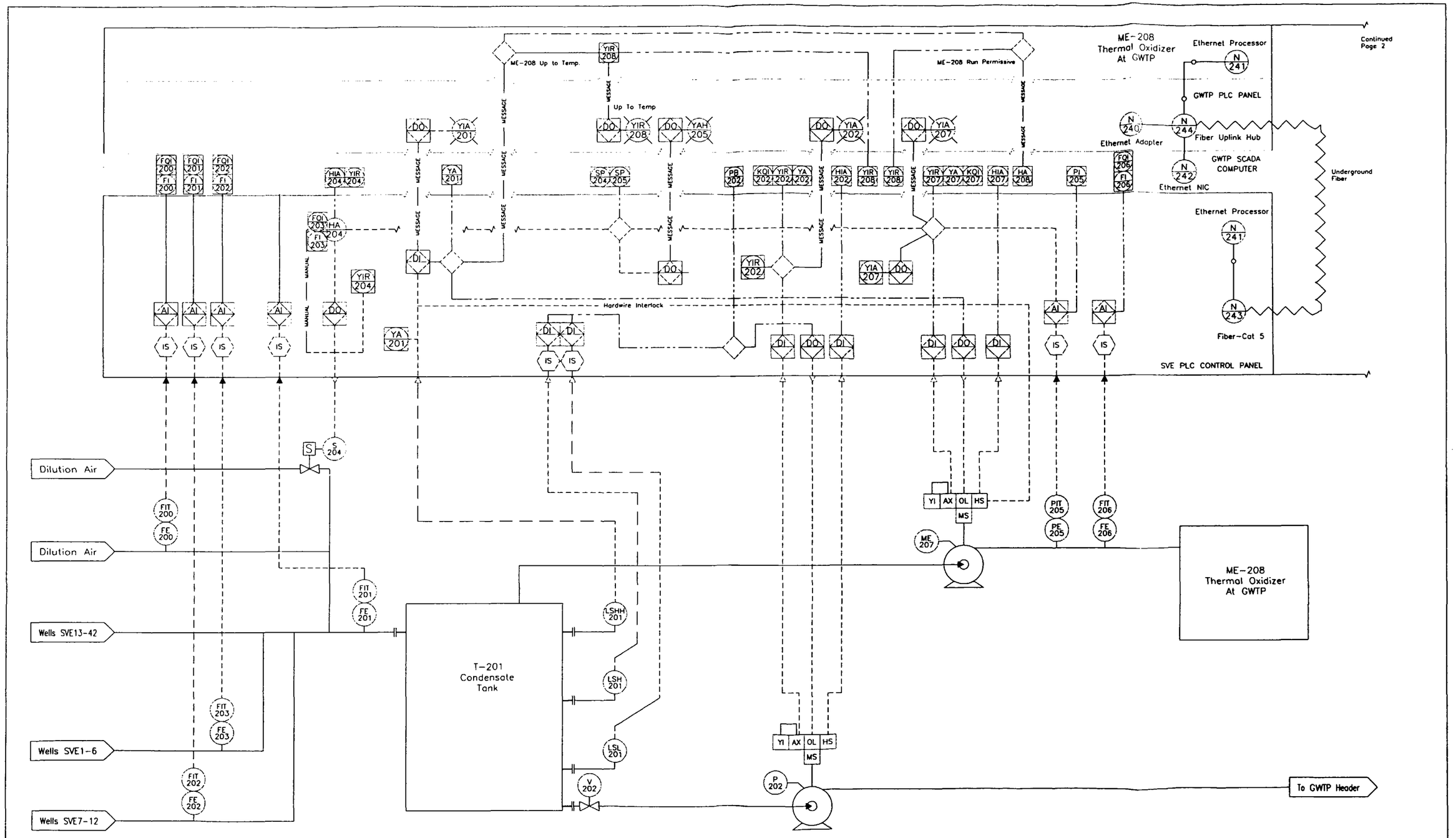

Terminals Legend

Terminal

Reference Tag

Remote

Local

Austgen Electric Inc.
801 East Main Street
Griffith, IN 46319

DATE	REVISION	BY	CH'D

P & ID
Off Site SVE

JOB #
FILE MW\Off-Site Exp\Blower

TOLERANCES UNLESS OTHERWISE SPECIFIED

CUSTOMER: Montgomery Watson

TITLE: SVE Blower Control

SCALE:	DRAWN BY: mg	CHKD BY:	APP'D BY:
DATE: 11-27-01	SHEET OF SHEETS 2 3	DRAWING NO. P&ID-1.DWG	

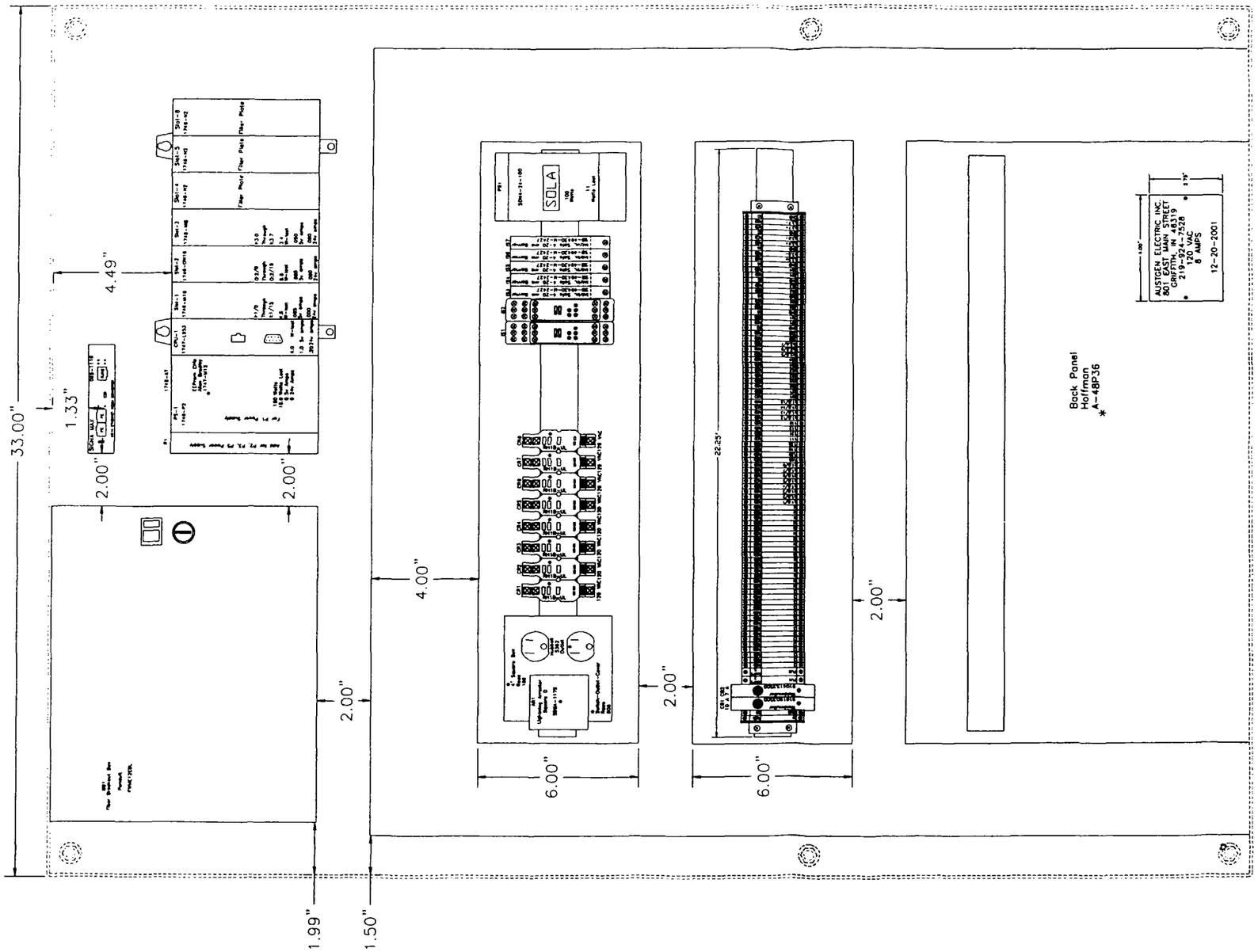

Terminals Legend

Terminal (+)

Reference Tag

Remote

Local

PLC-I/O

Austgen Electric Inc.
801 East Main Street
Griffith, IN 46319

DATE	REVISION	BY	CH'D

Panel SVE

JOB # 11015-01 DATE: 8-1-02

FILE M:\Drawings\Montgomery Watson\OFF-SITE EXPANSION\Blower-build-control\

Customer: Montgomery Watson

Title Offsite Blower Control

DRAWN BY: RF Total Sheets 10

Drawing No. 12.dwg

APPENDIX G

Blower Shed Equipment and Material Specifications

- HDPE Pipe Sweeps
- Foundation Coating
- Structural Details
- ISVE Blower
- ISVE Blower Protective Coating
- Transfer Pump
- Entrained Water Knockout Tank
- Filter
- Silencers
- Gate Valves
- Butterfly Valves
- Pressure and Vacuum Safety Valves
- Flow Sensors and Gauges
- Heating, Lighting, and Ventilation
- Electrical Components

MANUFACTURER'S PRODUCT SPECIFICATIONS

HDPE Pipe Sweeps

CPChem
FORMANCE PIPE

www.performancepipe.com

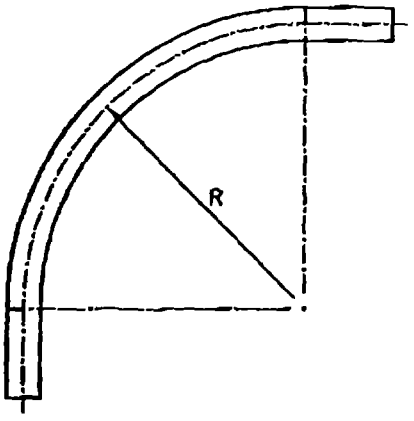

90° Sweep Ells

AWWA C906-99 Available - Call for Quote

90° Sweep Ells					List Price[A]				
					Radius				
Size (IPS)	Pressure Class (psi)	Feed Stock	Weight (lbs.)	Plant	24"	36"	40"	60"	Reference Code
2"	128	DR 11	4.0	AB					"F"S90D"
3"	128	DR 11	10.0	AB					"F"S90D"
4"	128	DR 11	26.0	AB					"F"S90D"
6"	128	DR 11	55.0	AB					"F"S90D"
8"	128	DR 11	71.0	AB					"F"S90D"

[A] - Minimum order quantity is (5).
- Dimensions and weights are approximate and subject to change.
- Drawing No. - CU708650

PERFORMANCE PIPE, a division of
Chevron Phillips Chemical Company LP
PO Box 269006
Plano, TX 75026-9006
Phone: 1-800-527-0662
Fax: 972-599-7348

Web:
www.performancepipe.com

MANUFACTURER'S PRODUCT SPECIFICATIONS

Foundation Coating

U.S. FLOOR® CORPORATION

CONCRETE SURFACE PROTECTION SINCE 1939

September 14, 2001 *Fax: 219-924-4561*

Mr. Lee M. Orosz
Field Supervisor
MONTGOMERY WATSON CONSTRUCTORS, INC.
410 S. Colfax Street
Griffith, IN 46319
219-924-4607

Subject: ADDENDUM TO SEPTEMBER 12, 2001 PROPOSAL
Exterior Concrete – Field Pad

Dear Mr. Orosz:

Pursuant to our conversation this morning, we offer the following:

- The product specified has been proven in the laboratory and the field to perform as promoted when it is applied to "green" concrete with a minimum 48 hour cure time at 60° F. Therefore, U.S. FLOOR Corporation's guarantee will cover the installation specified in our proposal.

- The waste residue – neutralized acid generated by the concrete surface preparation process will be delivered to your designated on-site personnel for disposal.

Trusting the above meets with your approval and looking forward to supplying our material and services to Montgomery Watson Contractors, Inc., We are

Very truly yours,
U.S. FLOOR® Corporation

Dan Moran
President

www.usfloor.net
3423 Howard Street, Skokie, IL 60076 USA
(847)673-1010 · Toll Free (877)873-5667 · Fax (847)673-1110

ROCK-TRED
Flooring Solutions Since 1939

ROCK-TRED MATERIAL SAFETY DATA SHEET

SECTION 1 - CHEMICAL PRODUCT AND COMPANY IDENTIFICATION

PRODUCT NAME : AGUA-ROCK Clear Part-A
IDENTIFICATION NUMBER: A111-000 DATE PRINTED: 9/17/01
PRODUCT USE/CLASS : AMINE CURING AGENT

SUPPLIER:
ROCK-TRED Corporation
3415 W. Howard Street
Skokie, IL 60076

Chemtrec: 800/424-9300
24 Hours

MANUFACTURER:
ROCK-TRED Corporation
3415 W. Howard Street
Skokie, IL 60076

Chemtrec: 800/424-9300
24 Hours

PREPARER: ROCK-TRED, PHONE: 800/762-8733, PREPARE DATE: 10/21/99

SECTION 2 - COMPOSITION/INFORMATION ON INGREDIENTS

ITEM	CHEMICAL NAME	CAS NUMBER	WT/WT %
01	Tetraethylenepentamine	112-57-2	<10.0 %
02	Tris-2.4.6-(dimethylaminomethyl) phenol	90-72-2	<2.0 %

	EXPOSURE LIMITS					
	ACGIH		OSHA		COMPANY	
ITEM	TLV-TWA	TLV-STEL	PEL-TWA	PEL-CEILING	TLV-TWA	SKIN
01	N.E.	N.E.	N.E.	N.E.	N.E.	YES
02	N.E.	N.E.	N.E.	N.E.	N.E.	YES

(See Section 16 for abbreviation legend)

SECTION 3 - HAZARDS IDENTIFICATION

*** EMERGENCY OVERVIEW ***: May cause allergic skin reaction.

EFFECTS OF OVEREXPOSURE - EYE CONTACT: Moderate eye irritant.

EFFECTS OF OVEREXPOSURE - SKIN CONTACT: May cause skin sensitization, an allergic reaction, which becomes evident on reexposure to this material. Prolonged or repeated contact can result in defatting and drying of the skin which may result in skin irritation and dermatitis (rash).

EFFECTS OF OVEREXPOSURE - INHALATION: Inhalation of vapors causes skin

SECTION 3 - HAZARDS IDENTIFICATION

irritation of the respiratory tract and may cause adverse systemic effects.

EFFECTS OF OVEREXPOSURE - INGESTION: Ingestion may cause headache, nausea, vomiting.

EFFECTS OF OVEREXPOSURE - CHRONIC HAZARDS: Repeated and/or prolonged contact with skin may cause allergic reaction/sensitization. Repeated and/or prolonged exposures may result in: adverse skin effects (such as defatting, rash, irritation or corrosion); adverse eye effects (such as conjunctivitis or corneal damage).

PRIMARY ROUTE(S) OF ENTRY: SKIN CONTACT SKIN ABSORPTION INHALATION INGESTION EYE CONTACT

SECTION 4 - FIRST AID MEASURES

EYE CONTACT: Hold eyelids apart and immediately flush eyes with plenty of water for at least 15 minutes. Get medical attention.

SKIN CONTACT: Remove product and immediately flush affected area with plenty of water for 15 minutes. Call a physician.

INHALATION: Remove to fresh air. If not breathing, give artificial respiration. If breathing is difficult, give oxygen. Consult a physician.

INGESTION: Get medical attention immediately.

SECTION 5 - FIRE FIGHTING MEASURES

FLASH POINT: N.A.

LOWER EXPLOSIVE LIMIT: N.A.
UPPER EXPLOSIVE LIMIT: N.A.

AUTOIGNITION TEMPERATURE: N.A.

EXTINGUISHING MEDIA: ALCOHOL FOAM CO2 DRY CHEMICAL WATER FOG

UNUSUAL FIRE AND EXPLOSION HAZARDS: May generate toxic or irritating combustion products.

SPECIAL FIREFIGHTING PROCEDURES: Firefighters should wear butyl rubber boots, gloves and body suit as well as a self-contained breathing apparatus. Water runoff can cause environmental damage. Dike and collect water used to fight fire.

SECTION 6 - ACCIDENTAL RELEASE MEASURES

STEPS TO BE TAKEN IN CASE MATERIAL IS RELEASED OR SPILLED: Flush area with water spray. Absorb spill with inert material (e.g. dry sand or earth), then place in a chemical waste container. Avoid runoff into storm sewers and ditches which lead to waterways. Wear a self-contained breathing apparatus and appropriate personal protective equipment. (See Exposure Controls/Personal Protection Section)

SECTION 7 - HANDLING AND STORAGE

HANDLING: Handle in well ventilated work space. Avoid contact with skin, eyes and clothing.

STORAGE: Keep from freezing. Keep container closed when not in use. Keep container in a cool, well ventilated place. Keep away from oxidizers, heat or flames.

SECTION 8 - EXPOSURE CONTROLS/PERSONAL PROTECTION

ENGINEERING CONTROLS: Good general ventilation should be sufficient to control airborne levels. In case of insufficient ventilation, wear suitable respiratory equipment (NIOSH approved).

RESPIRATORY PROTECTION: In poorly ventilated areas, a cartridge mask NIOSH approved for organic vapors is recommended. For emergency situations use self-contained breathing apparatus with pressure demand mode.

SKIN PROTECTION: Where contact is likely, wear chemical resistant gloves, rubber boots, and chemical safety goggles.

EYE PROTECTION: Wear chemical safety galsses with side shields or goggles.

OTHER PROTECTIVE EQUIPMENT: Where splashing is possible, full chemically resistant protective clothing and boots are required.

HYGIENIC PRACTICES: Wash hands before eating. Avoid prolonged or repeated contact with skin. Avoid contact with eyes, skin, and clothing.

SECTION 9 – PHYSICAL AND CHEMICAL PROPERTIES

BOILING RANGE	: N.A.	VAPOR DENSITY	: Is heavier than air
ODOR	: AMMONIACAL	ODOR THRESHOLD	: No Data
APPEARANCE	: AMBER LIQUID	EVAPORATION RATE	: Is slower than Ether
SOLUBILITY IN H2O	: SLIGHT		
FREEZE POINT	: No Data	SPECIFIC GRAVITY	: 1.0367
VAPOR PRESSURE	: No Data	pH @ 100.0 %	: >7
PHYSICAL STATE	: Liquid	VISCOSITY	: N.A.

SECTION 9 – PHYSICAL AND CHEMICAL PROPERTIES

COEFFICIENT OF WATER/OIL DISTRIBUTION: SLIGHT

(See Section 16 for abbreviation legend)

SECTION 10 – STABILITY AND REACTIVITY

CONDITIONS TO AVOID: Not applicable.

INCOMPATIBILITY: Oxidizing agents.

HAZARDOUS DECOMPOSITION PRODUCTS: Carbon monoxide in a fire. Carbon dioxide in a fire. Nitrogen oxides in a fire. Irritating and toxic fumes at elevated temperatures.

HAZARDOUS POLYMERIZATION: Will not occur under normal conditions.

STABILITY: This product is stable under normal storage conditions.

SECTION 11 – TOXICOLOGICAL PROPERTIES

No product or component toxicological information is available.

SECTION 12 – ECOLOGICAL INFORMATION

ECOTOXICITY: No Information.

ENVIRONMENTAL FATE: No Information.

ADDITIONAL INFORMATION: No Information.

SECTION 13 – DISPOSAL CONSIDERATIONS

DISPOSAL METHOD: Comply with all Federal, State and Local Regulations. Incinerate in admixture with fuel equipped with a scrubber to remove nitrogen oxides and carbon monoxide. Dispose of in a permitted waste management facility if incineration or landfill is not practicable.

SECTION 14 – TRANSPORTATION INFORMATION

DOT PROPER SHIPPING NAME: Resin Compound - Not Regulated

SECTION 14 – TRANSPORTATION INFORMATION

DOT TECHNICAL NAME:

DOT HAZARD CLASS: HAZARD SUBCLASS:

DOT UN/NA NUMBER: PACKING GROUP: RESP. GUIDE NO.:

SECTION 15 – REGULATORY INFORMATION

U.S. FEDERAL REGULATIONS: AS FOLLOWS -

OSHA: Hazardous by definition of Hazard Communication Standard (29 CFR 1910.1200)

CERCLA - SARA HAZARD CATEGORY:
This product has been reviewed according to the EPA 'Hazard Categories' promulgated under Sections 311 and 312 of the Superfund Amendment and Reauthorization Act of 1986 (SARA Title III) and is considered, under applicable definitions, to meet the following categories:

IMMEDIATE HEALTH HAZARD

SARA SECTION 313:
This product contains the following substances subject to the reporting requirements of Section 313 of Title III of the Superfund Amendments and Reauthorization Act of 1986 and 40 CFR Part 372:

CHEMICAL NAME	CAS NUMBER	WT/WT %
No SARA Section 313 components exist in this product.		

TOXIC SUBSTANCES CONTROL ACT:
This product contains the following chemical substances subject to the reporting requirements of TSCA 12(B) if exported from the United States:

CHEMICAL NAME	CAS NUMBER
No information is available.	

U.S. STATE REGULATIONS: AS FOLLOWS -

NEW JERSEY RIGHT-TO-KNOW:
The following materials are among the top five components in this product:

CHEMICAL NAME	CAS NUMBER
Water	7732-18-5
Polyamine polymer	Proprietary
Tetraethylenepentamine	112-57-2
Amino terminated polyether	Proprietary
Tris-2.4.6-(dimethylaminomethyl) phenol	90-72-2

SECTION 15 – REGULATORY INFORMATION

---------- CHEMICAL NAME ----------	CAS NUMBER

PENNSYLVANIA RIGHT-TO-KNOW:
The following ingredients are present in the product at greater than 3%:

---------- CHEMICAL NAME ----------	CAS NUMBER
Water	7732-18-5
Polyamine polymer	Proprietary

CALIFORNIA PROPOSITION 65:
WARNING: The chemical(s) noted below and contained in this product, are known to the state of California to cause cancer, birth defects or other reproductive harm:

---------- CHEMICAL NAME ----------	CAS NUMBER
Ethanol	000064-17-5

INTERNATIONAL REGULATIONS: AS FOLLOWS -

CANADIAN WHMIS: This MSDS has been prepared in compliance with Controlled Product Regulations except for use of the 16 headings.

CANADIAN WHMIS CLASS: D-2B

SECTION 16 – OTHER INFORMATION

HMIS RATINGS - HEALTH: 1 FLAMMABILITY: 0 REACTIVITY: 0

PREVIOUS MSDS REVISION DATE: 04/07/99

VOLATILE ORGANIC COMPOUNDS (VOCS): 0.06 lbs/gal, 7 grams/ltr

LEGEND: N.A. - Not Applicable, N.E. - Not Established,
N.D. - Not Determined

The information contained on this MSDS has been checked and should be accurate. However, it is the responsibility of the user to comply with all Federal, State, and Local laws and regulations.

<END OF MSDS>

ROCK-TRED
Flooring Solutions Since 1939

ROCK-TRED MATERIAL SAFETY DATA SHEET

SECTION 1 - CHEMICAL PRODUCT AND COMPANY IDENTIFICATION

PRODUCT NAME : AGUA-ROCK Clear Part-B
IDENTIFICATION NUMBER: B110-000 DATE PRINTED: 9/17/01
PRODUCT USE/CLASS : Epoxy Resin

SUPPLIER:
ROCK-TRED Corporation
3415 W. Howard Street
Skokie, IL 60076

Chemtrec: 800/424-9300
24 Hours

MANUFACTURER:
ROCK-TRED Corporation
3415 W. Howard Street
Skokie, IL 60076

Chemtrec: 800/424-9300
24 Hours

PREPARER: ROCK-TRED, PHONE: 800/762-8733, PREPARE DATE: 03/23/01

SECTION 2 - COMPOSITION/INFORMATION ON INGREDIENTS

ITEM	CHEMICAL NAME	CAS NUMBER	WT/WT %
01	Bisphenol A epoxy resin	025085-99-8	<95.0 %
02	Benzyl alcohol	100-51-6	<10.0 %

	EXPOSURE LIMITS					
	ACGIH		OSHA		COMPANY	
ITEM	TLV-TWA	TLV-STEL	PEL-TWA	PEL-CEILING	TLV-TWA	SKIN
01	N.E.	N.E.	N.E.	N.E.	N.E.	YES
02	N.E.	N.E.	N.E.	N.E.	N.E.	YES

(See Section 16 for abbreviation legend)

SECTION 3 - HAZARDS IDENTIFICATION

*** EMERGENCY OVERVIEW ***: May cause allergic skin reaction.

EFFECTS OF OVEREXPOSURE - EYE CONTACT: May cause slight transient (temporary) eye irritation. Corneal injury is unlikely.

EFFECTS OF OVEREXPOSURE - SKIN CONTACT: May cause skin sensitization, an allergic reaction, which becomes evident on reexposure to this material.

EFFECTS OF OVEREXPOSURE - INHALATION: Vapors are unlikely due to physical properties.

SECTION 3 - HAZARDS IDENTIFICATION

EFFECTS OF OVEREXPOSURE - INGESTION: No hazard in normal industrial use.

EFFECTS OF OVEREXPOSURE - CHRONIC HAZARDS: Not classified as a carcinogen. No known teratological or reproductive effects.

PRIMARY ROUTE(S) OF ENTRY: SKIN CONTACT INHALATION INGESTION EYE CONTACT

SECTION 4 - FIRST AID MEASURES

EYE CONTACT: Flush eyes with plenty of water.

SKIN CONTACT: Wash off in flowing water or shower.

INHALATION: No adverse effects anticipated by this route of exposure.

INGESTION: If swallowed, do NOT induce vomiting. Give victim a glass of water or milk. Call a physician or poison control center immediately. Never give anything by mouth to an unconscious person.

SECTION 5 - FIRE FIGHTING MEASURES

FLASH POINT: 210 F
(PENSKY-MARTENS C.C.)

LOWER EXPLOSIVE LIMIT: N.A.
UPPER EXPLOSIVE LIMIT: N.A.

AUTOIGNITION TEMPERATURE: N.A.

EXTINGUISHING MEDIA: ALCOHOL FOAM CO2 DRY CHEMICAL FOAM

UNUSUAL FIRE AND EXPLOSION HAZARDS: The byproducts expected in incomplete pyrolysis or combustion of epoxy resins are mainly phenolics, carbon monoxide and water. The thermal decomposition products of epoxy resins therefore should be treated as potentially hazardous substances, and appropriate precautions should be taken.

SPECIAL FIREFIGHTING PROCEDURES: Firefighters should wear butyl rubber boots, gloves and body suit as well as a self-contained breathing apparatus. Water runoff can cause environmental damage. Dike and collect water used to fight fire.

SECTION 6 - ACCIDENTAL RELEASE MEASURES

STEPS TO BE TAKEN IN CASE MATERIAL IS RELEASED OR SPILLED: Flush area with water spray. Absorb spill with inert material (e.g. dry sand or earth), then place in a chemical waste container. Avoid runoff into storm sewers and ditches which lead to waterways.

SECTION 7 - HANDLING AND STORAGE

HANDLING: Wash thoroughly after handling. Avoid contact with skin, eyes and clothing.

STORAGE: Keep from freezing. Keep container closed when not in use.

SECTION 8 - EXPOSURE CONTROLS/PERSONAL PROTECTION

ENGINEERING CONTROLS: Good general ventilation should be sufficient to control airborne levels.

RESPIRATORY PROTECTION: In poorly ventilated areas, a cartridge mask NIOSH approved for organic vapors is recommended.

SKIN PROTECTION: Where contact is likely, wear chemical resistant gloves, rubber boots, and chemical safety goggles.

EYE PROTECTION: Wear chemical safety galsses with side shields or goggles.

OTHER PROTECTIVE EQUIPMENT: Nitrile rubber gloves.

HYGIENIC PRACTICES: Wash hands before eating. Remove contaminated clothing and wash before reuse. Follow all MSDS/label precautions even after container is emptied because they may retain product residues. Avoid prolonged or repeated contact with skin. Avoid contact with eyes, skin, and clothing.

SECTION 9 – PHYSICAL AND CHEMICAL PROPERTIES

BOILING RANGE	: N.A.	VAPOR DENSITY	: Is heavier than air
ODOR	: Faint Epoxy Odor	ODOR THRESHOLD	: N.A.
APPEARANCE	: Clear liquid	EVAPORATION RATE	: Is slower than Ether
SOLUBILITY IN H2O	: None		
FREEZE POINT	: N.A.	SPECIFIC GRAVITY	: 1.1481
VAPOR PRESSURE	: N.A.	pH @ 0.0 %	: N.A.
PHYSICAL STATE	: LIQUID	VISCOSITY	: N.A.

COEFFICIENT OF WATER/OIL DISTRIBUTION: NONE

(See Section 16 for abbreviation legend)

SECTION 10 – STABILITY AND REACTIVITY

CONDITIONS TO AVOID: Excess heating above 60C over long periods of time degrades resin.

INCOMPATIBILITY: Bases, acids, amines and oxidizing materials.

HAZARDOUS DECOMPOSITION PRODUCTS: Carbon monoxide and phenolics in a fire.

SECTION 10 – STABILITY AND REACTIVITY

HAZARDOUS POLYMERIZATION: Will not occur under normal conditions.

STABILITY: This product is stable under normal storage conditions.

SECTION 11 – TOXICOLOGICAL PROPERTIES

COMPONENT TOXICOLOGICAL INFORMATION:

CHEMICAL NAME	LD50	LC50
Bisphenol A epoxy resin	>5000 mg/kg o-rat	No Information
Benzyl alcohol	No Information	No Information

SECTION 12 – ECOLOGICAL INFORMATION

ECOTOXICITY: Material is highly toxic to aquatic organisms on an acute basis.

ENVIRONMENTAL FATE: Bioconcentration potential is low. Biodegradation under aerobic static laboratory conditions is below detectable limits.

ADDITIONAL INFORMATION: No Information.

SECTION 13 – DISPOSAL CONSIDERATIONS

DISPOSAL METHOD: Comply with all Federal, State and Local Regulations.

SECTION 14 – TRANSPORTATION INFORMATION

DOT PROPER SHIPPING NAME: Epoxy Resin - Not Regulated

DOT TECHNICAL NAME:

DOT HAZARD CLASS: HAZARD SUBCLASS:

DOT UN/NA NUMBER: PACKING GROUP: RESP. GUIDE NO.:

SECTION 15 – REGULATORY INFORMATION

U.S. FEDERAL REGULATIONS: AS FOLLOWS -

OSHA: Hazardous by definition of Hazard Communication Standard (29 CFR 1910.1200)

CERCLA - SARA HAZARD CATEGORY:
This product has been reviewed according to the EPA 'Hazard Categories' promulgated under Sections 311 and 312 of the Superfund Amendment and Reauthorization Act of 1986 (SARA Title III) and is considered, under applicable definitions, to meet the following categories:

IMMEDIATE HEALTH HAZARD

SARA SECTION 313:
This product contains the following substances subject to the reporting requirements of Section 313 of Title III of the Superfund Amendments and Reauthorization Act of 1986 and 40 CFR Part 372:

CHEMICAL NAME	CAS NUMBER	WT/WT %
No SARA Section 313 components exist in this product.		

TOXIC SUBSTANCES CONTROL ACT:
This product contains the following chemical substances subject to the reporting requirements of TSCA 12(B) if exported from the United States:

CHEMICAL NAME	CAS NUMBER
No information is available.	

U.S. STATE REGULATIONS: AS FOLLOWS -

NEW JERSEY RIGHT-TO-KNOW:
The following materials are among the top five components in this product:

CHEMICAL NAME	CAS NUMBER
Bisphenol A epoxy resin	025085-99-8
Benzyl alcohol	100-51-6
Hydrotreated heavy napthenic distillate	64742-52-5

PENNSYLVANIA RIGHT-TO-KNOW:
The following ingredients are present in the product at greater than 3%:

CHEMICAL NAME	CAS NUMBER
Bisphenol A epoxy resin	025085-99-8
Benzyl alcohol	100-51-6

CALIFORNIA PROPOSITION 65:

SECTION 15 – REGULATORY INFORMATION

WARNING: The chemical(s) noted below and contained in this product, are known to the state of California to cause cancer, birth defects or other reproductive harm:

---------- CHEMICAL NAME ---------- CAS NUMBER
No Proposition 65 chemicals exist in this product.

INTERNATIONAL REGULATIONS: AS FOLLOWS -

CANADIAN WHMIS: This MSDS has been prepared in compliance with Controlled Product Regulations except for use of the 16 headings.

CANADIAN WHMIS CLASS: D2B - SKIN SENSITIZER

SECTION 16 – OTHER INFORMATION

HMIS RATINGS - HEALTH: 1 FLAMMABILITY: 1 REACTIVITY: 0

PREVIOUS MSDS REVISION DATE: 04/07/99

VOLATILE ORGANIC COMPOUNDS (VOCS): 0.88 lbs/gal, 106 grams/ltr

LEGEND: N.A. - Not Applicable, N.E. - Not Established,
N.D. - Not Determined

The information contained on this MSDS has been checked and should be accurate. However, it is the responsibility of the user to comply with all Federal, State, and Local laws and regulations.

<END OF MSDS>

MANUFACTURER'S PRODUCT SPECIFICATIONS

Structural Details

Fliteway Technologies, Inc.

Remediation Equipment Building

P.O. Box 108 - 6901 Industrial Loop - Greendale, WI 53129

(414) 423-5600 1-800-236-3580 FAX (414) 423-9007

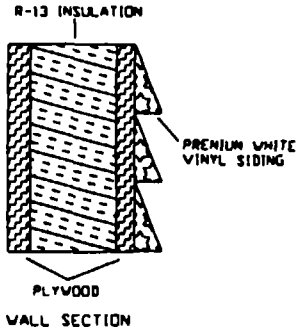

APPROVED BY:_____

DATE:_____

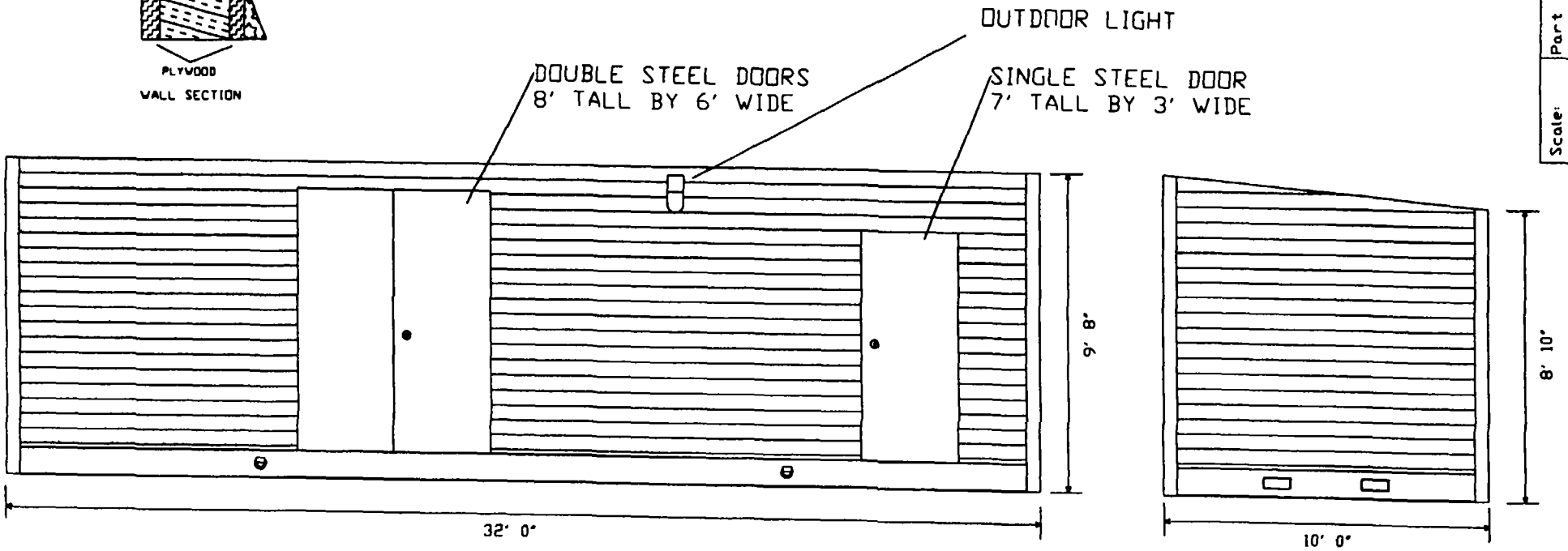

REVISED 7/19/01

Scale:	Part #:	Rev:	Date: 7/05/01
Quote #:012058	10' X 32' STEEL FRAME BUILDING		Approval
Drawn By: Tom Schneeberg			

Fliteway Technologies Inc.
6901 Industrial Loop
P.O. Box 108
Greendale WI 53129

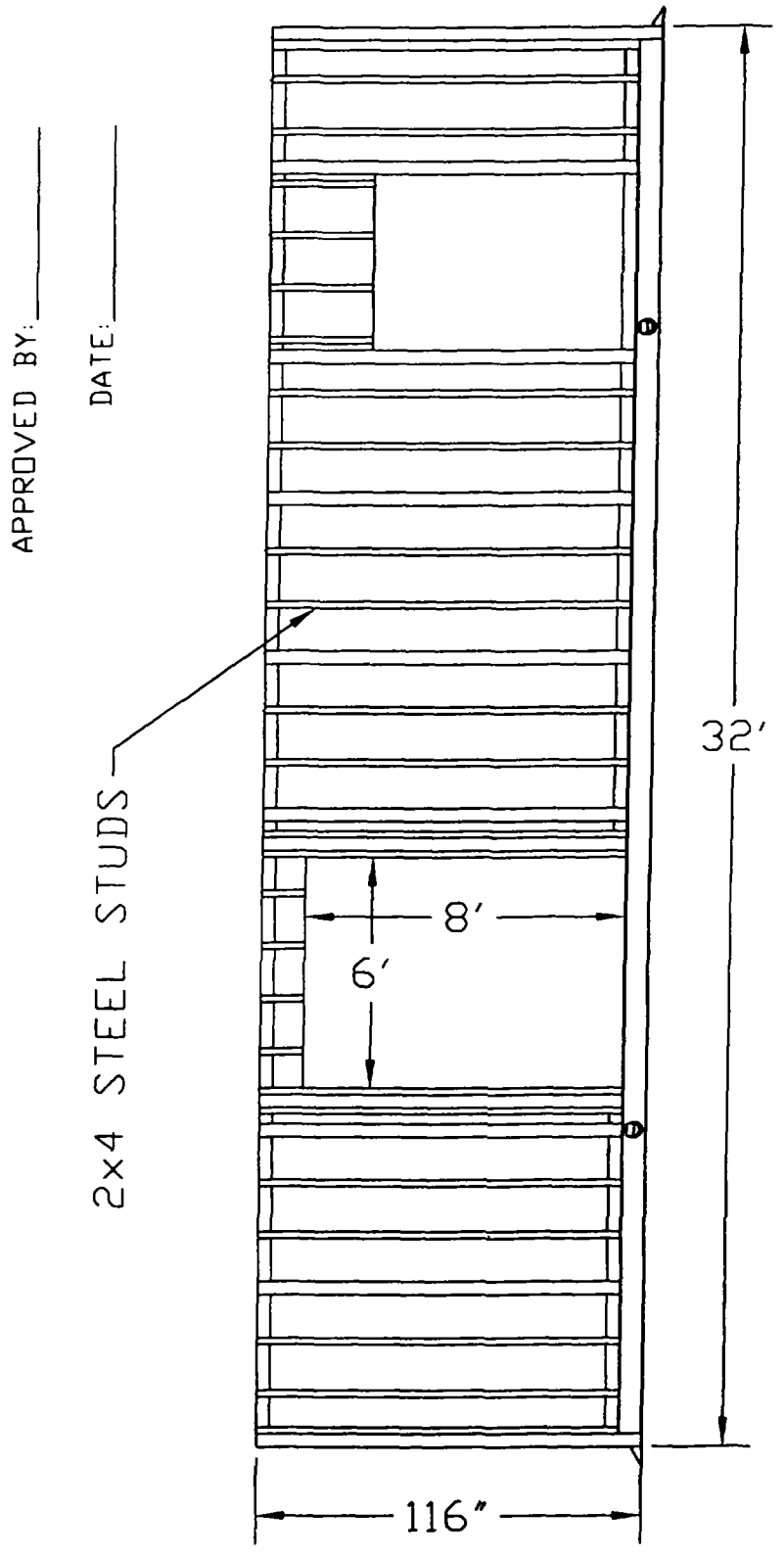

Fliteway Technologies, Inc. 6901 Industrial Loop Greendale, WI 53129 414-423-5600	Fliteway 10'X32' Steel Frame Building			
	FRONT VIEW			
7/05/01	SIZE	FSCM NO.	DWG NO. Q12058 REV 8	REV
	SCALE 32:1	TLS	SHEET	

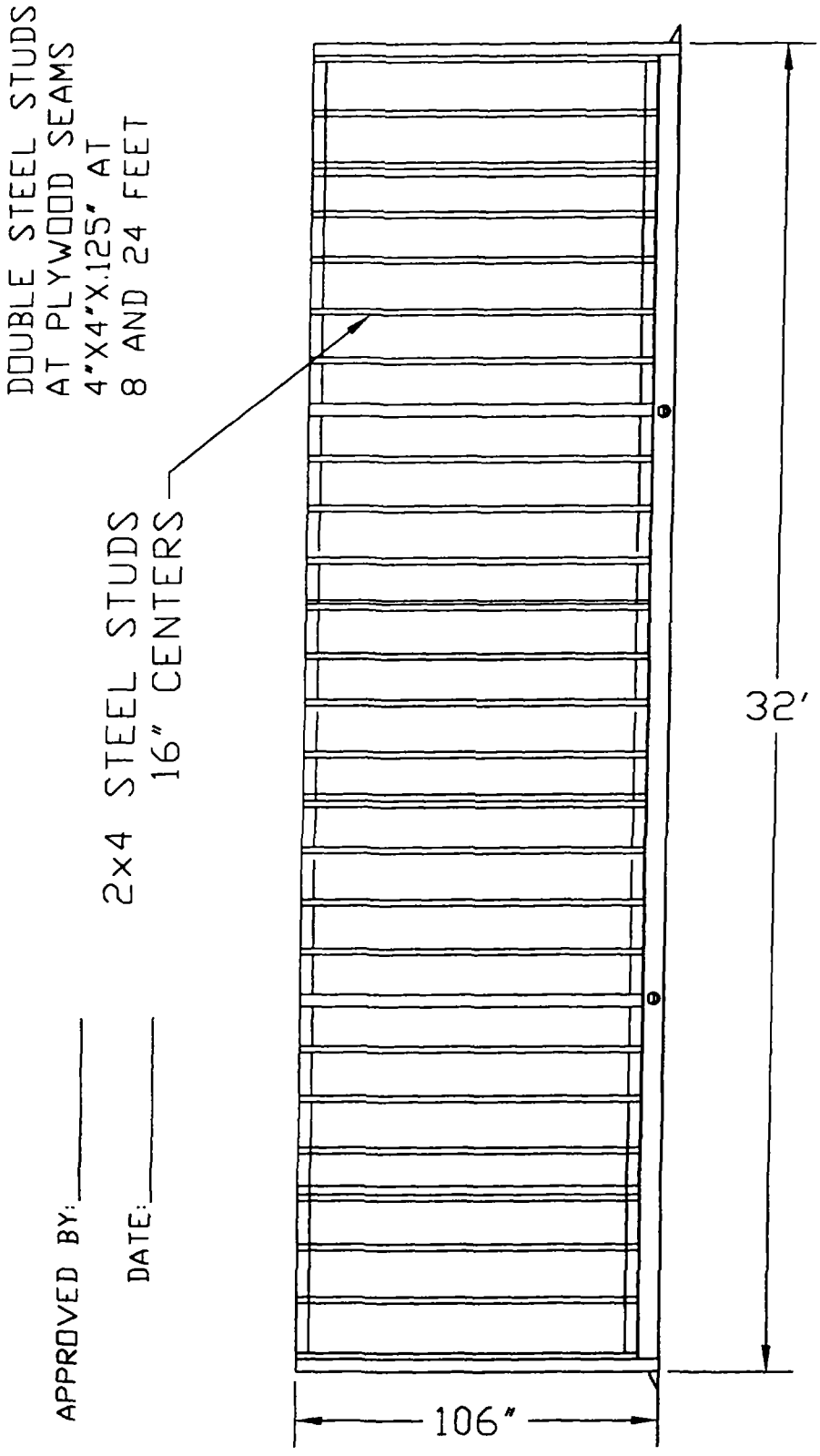

APPROVED BY: _____

DATE: _____

Fliteway Technologies, Inc. 6901 Industrial Loop Greendale, WI 53129 414-423-5600	Fliteway 10'X32' Steel Frame Building			
	REAR VIEW			
7/05/01	SIZE	FSCM NO.	DWG NO. Q12058 REV 8	REV
	SCALE 32:1		TLS	SHEET

SIDE VIEW OF INNER FRAME

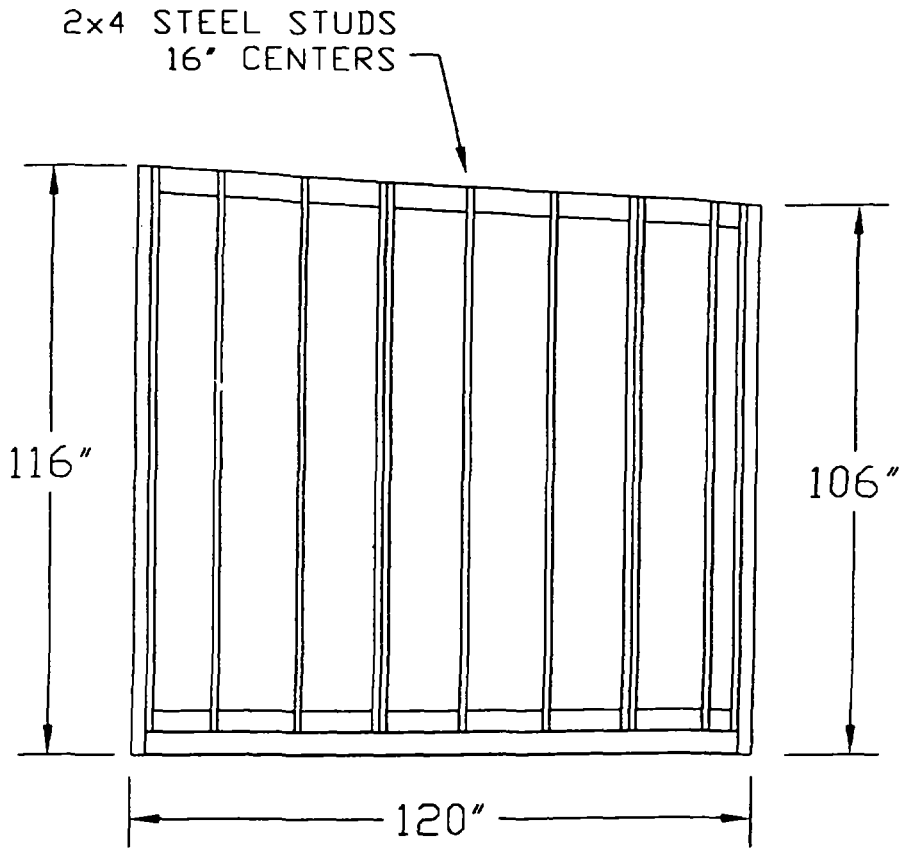

Fliteway Technologies, Inc. 6901 Industrial Loop Greendale, WI 53129 414-423-5600	Fliteway 10'X32' Steel Frame Building			
	REAR VIEW			
7/05/01	SIZE	FSCM NO.	DWG NO.	REV
	SCALE 32:1	TLS	SHEET	

REVISIONS				
REF	QTY	DESCRIPTION		
5	32	3" X 3" X .125" X 21"	TUBE	
4	7	4" X 4" X .125" X 112"	TUBE	
3	8	2" X 4" X .125" X 112"	TUBE	
2	2	4" X 4" X .250" X 110"	ANGLE	
1	2	4" X 4" X .250" X 374"	ANGLE	

APPROVED BY: _____

DATE: _____

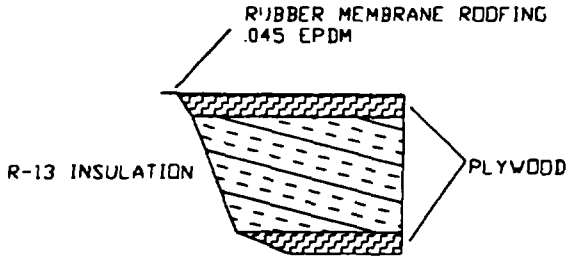

ROOF SECTION

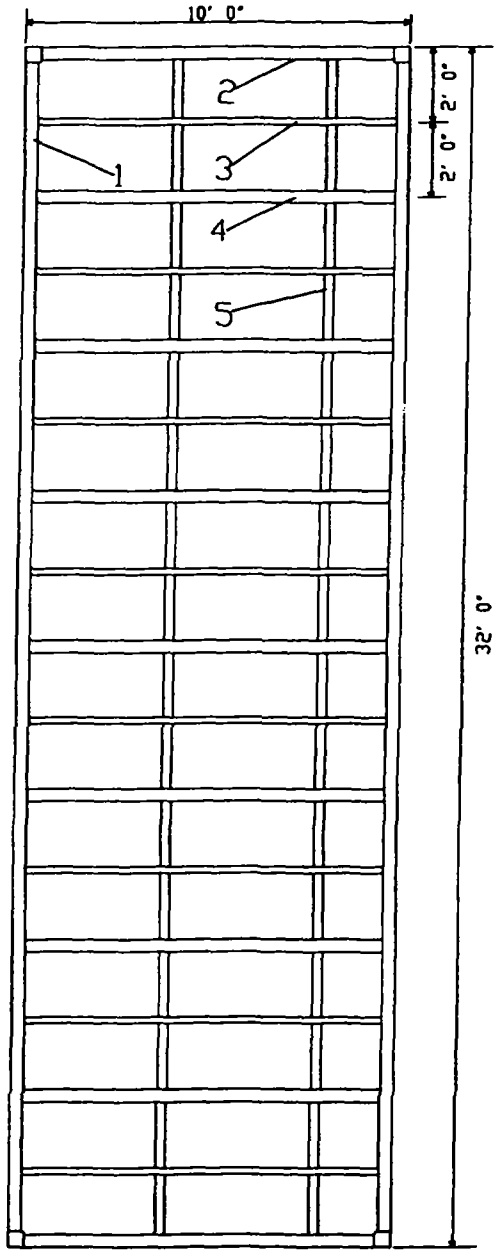

Fliteway Technologies, Inc. 6901 Industrial Loop Greendale, WI 53129 414-423-5600	Fliteway 10'X32' Steel Frame Building ROOF FRAME AND BRACING			
7/06/01	SIZE	FSCM NO.	DWG NO.	REV
TLS	SCALE	012058 REV B	SHEET	

APPROVED BY: _____

DATE: _____

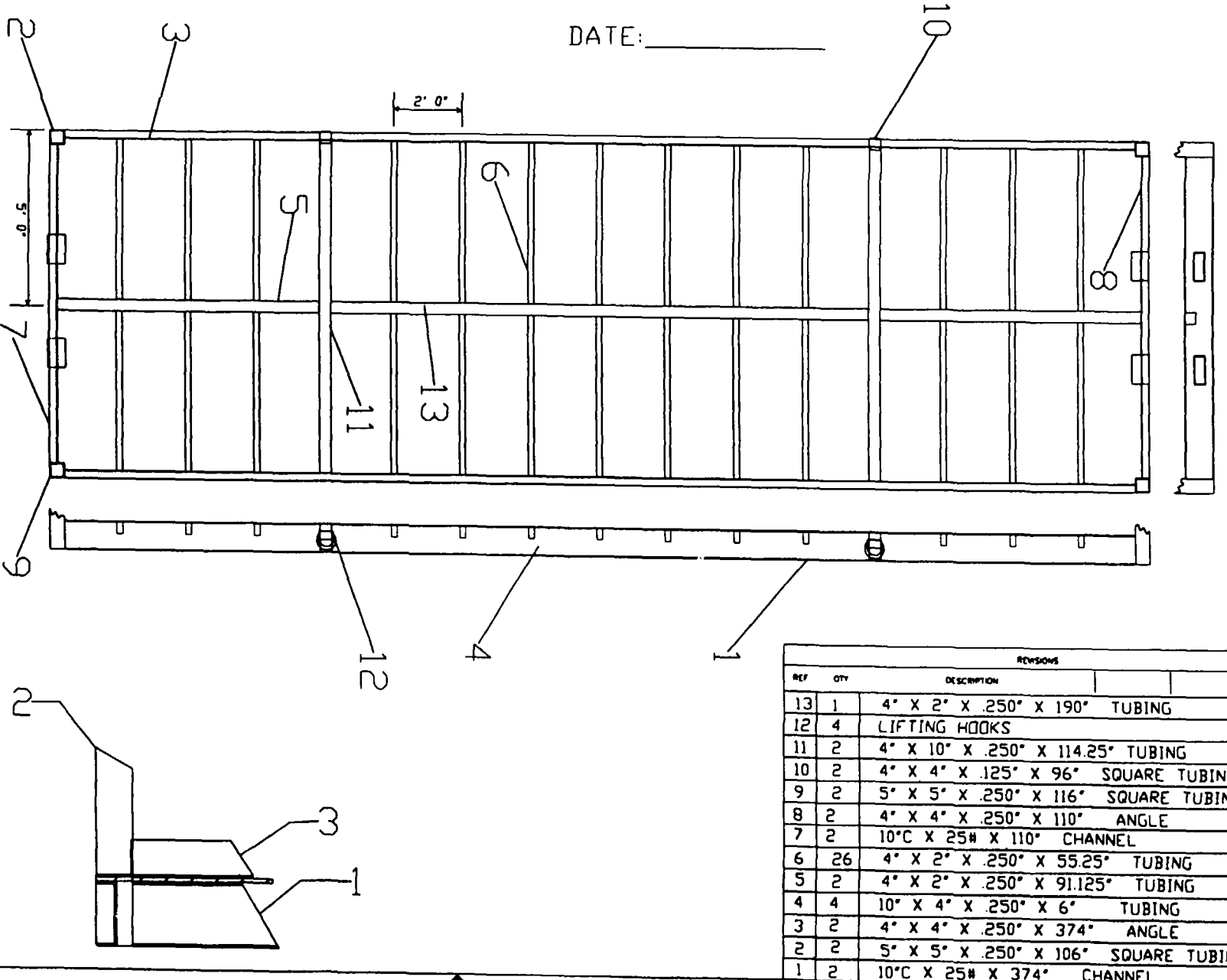

REVISIONS				
REF	QTY	DESCRIPTION		
13	1	4" X 2" X .250" X 190" TUBING		
12	4	LIFTING HOOKS		
11	2	4" X 10" X .250" X 114.25" TUBING		
10	2	4" X 4" X .125" X 96" SQUARE TUBING		
9	2	5" X 5" X .250" X 116" SQUARE TUBING		
8	2	4" X 4" X .250" X 110" ANGLE		
7	2	10"C X 25# X 110" CHANNEL		
6	26	4" X 2" X .250" X 55.25" TUBING		
5	2	4" X 2" X .250" X 91.125" TUBING		
4	4	10" X 4" X .250" X 6" TUBING		
3	2	4" X 4" X .250" X 374" ANGLE		
2	2	5" X 5" X .250" X 106" SQUARE TUBING		
1	2	10"C X 25# X 374" CHANNEL		

Fliteway Technologies, Inc.
6901 Industrial Loop
Greendale, WI 53129
414-423-5600

7/12/01

TLS

SCALE

SIZE

FSCM NO.

JOB # 012058 REV 8

SHEET

REV

Fliteway 10'X32' Steel Frame Building

BASE FRAME AND FLOOR BRACING

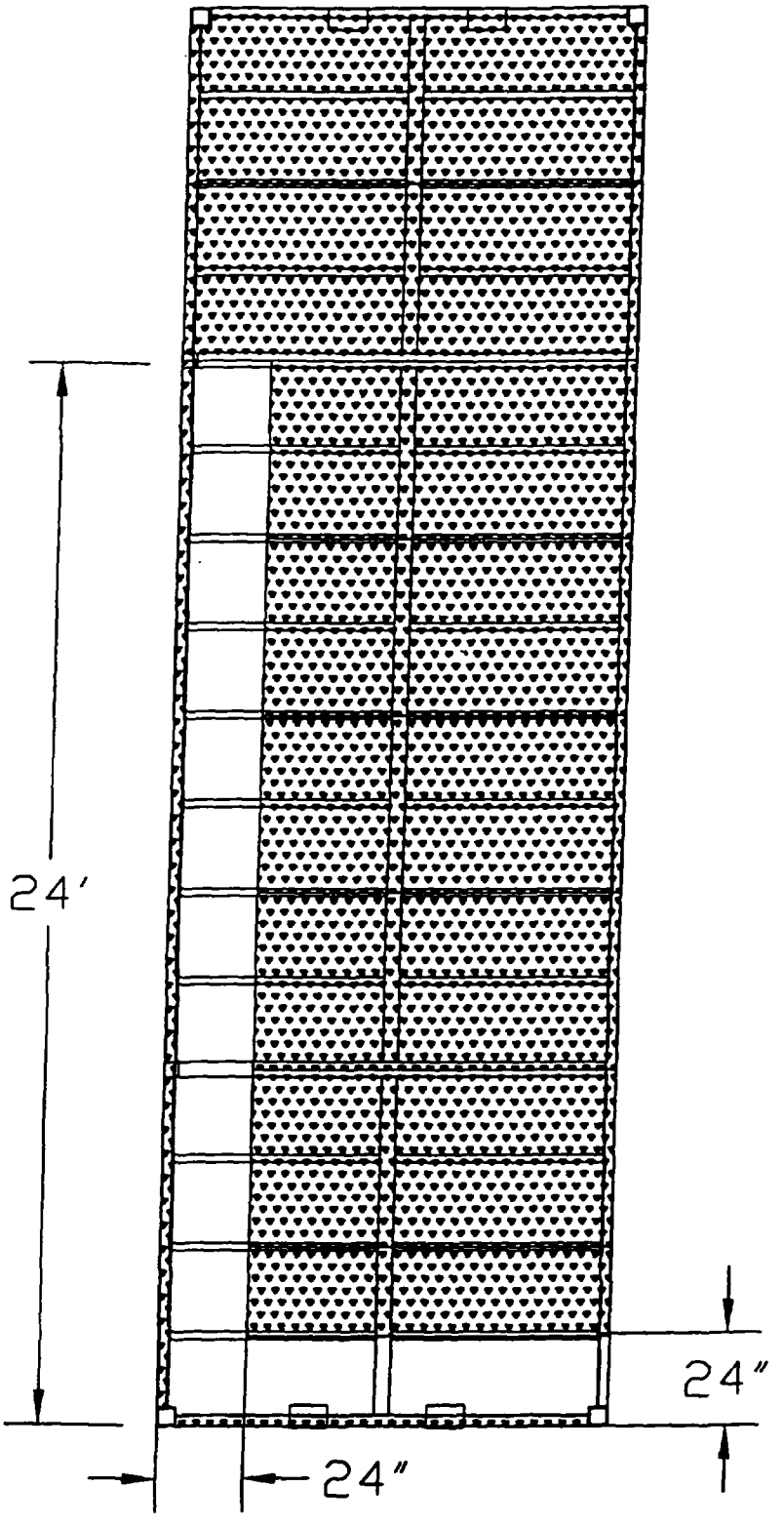

APPROVED BY: _____

DATE: _____

Fliteway Technologies, Inc. 6901 Industrial Loop Greendale, WI 53129 414-423-5600	Fliteway 10'X32' Steel Frame Building FLOORING LAYOUT			
7/12/01	SIZE	FSCM NO.	JOB # Q12058 REV 8	REV
TLS	SCALE 50:1			SHEET

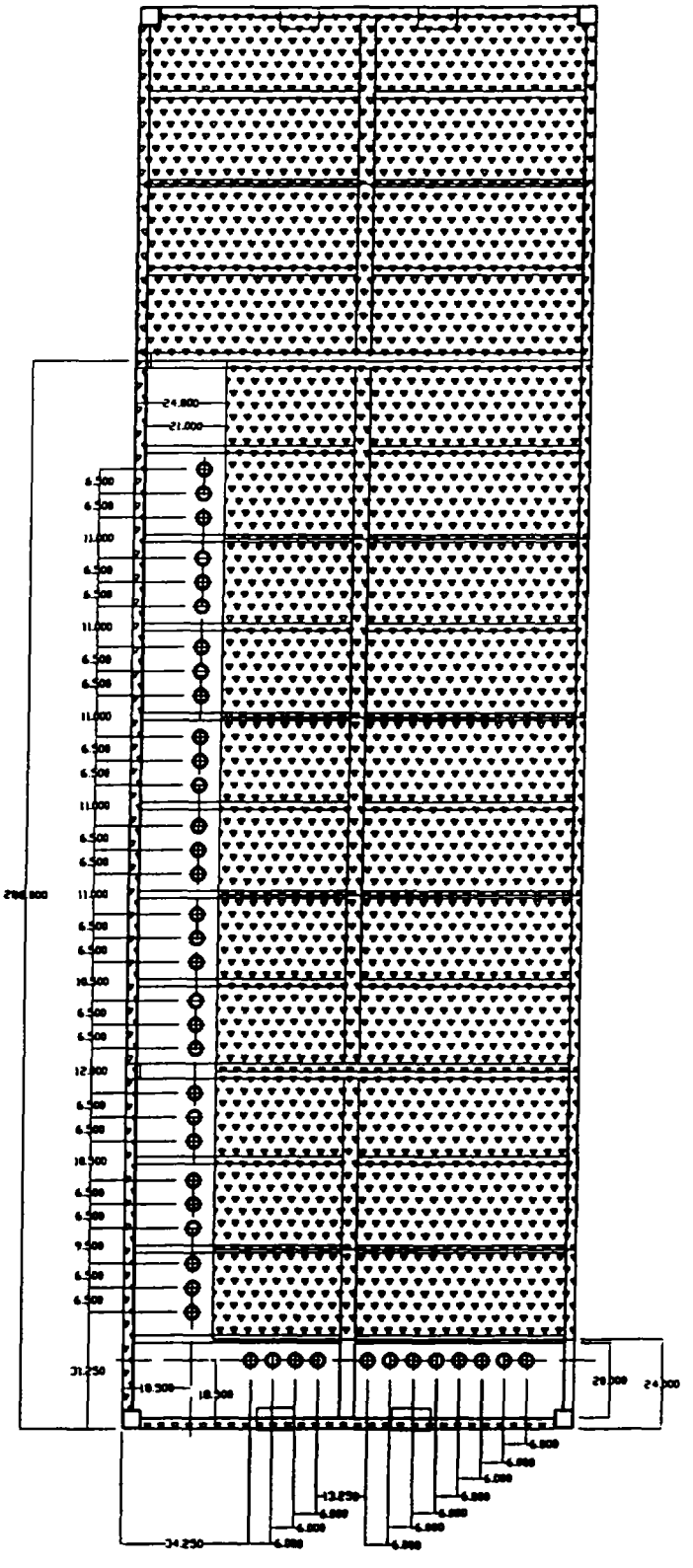

APPROVED BY: _____

DATE: _____

REVISION 7-31-01

Fliteway Technologies, Inc. 6901 Industrial Loop Greendale, WI 53129 414-423-5600	Fliteway 10'X32' Steel Frame Building FLOORING LAYOUT WITH PIPE PENITRATION			
7/12/01	SIZE	FSCM NO.	JOB # Q12058 REV 8	REV
TLS	SCALE			SHEET

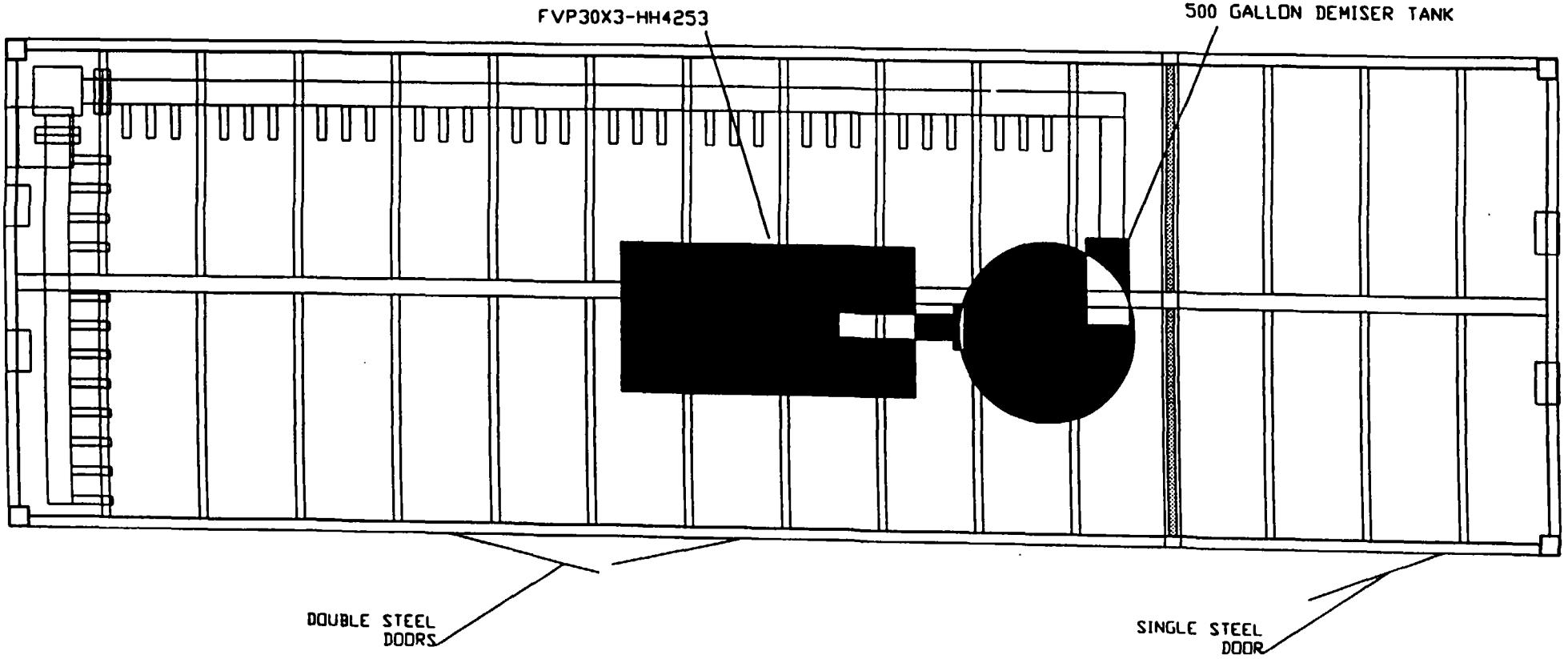

APPROVED BY:_____

DATE:_____

Fliteway Techonolgies, Inc. P.O. Box 108 6901 Industrial Loop Greendale, WI 53129 414-423-5600	BUILDING LAYOUT					
	Montgomery Watson					
7/05/01	SIZE	FSCM NO	DWG NO			REV
		Q12058 REV8				2
Q12058	SCALE	1/32 : 1	TLS	SHEET	1 OF 1	

END VIEW

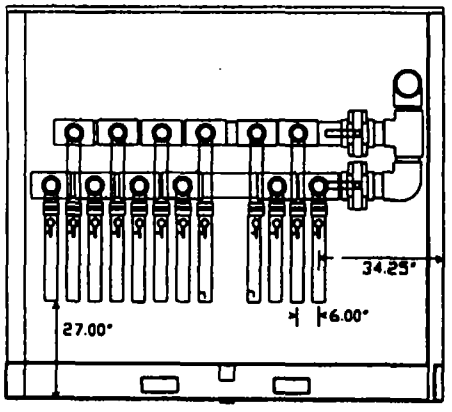

SIDE VIEW

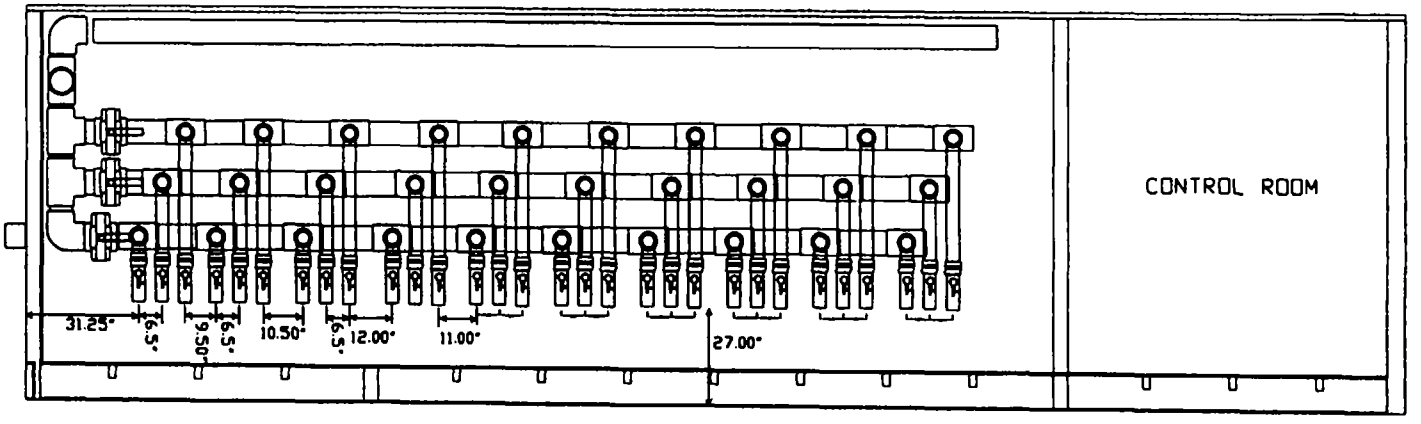

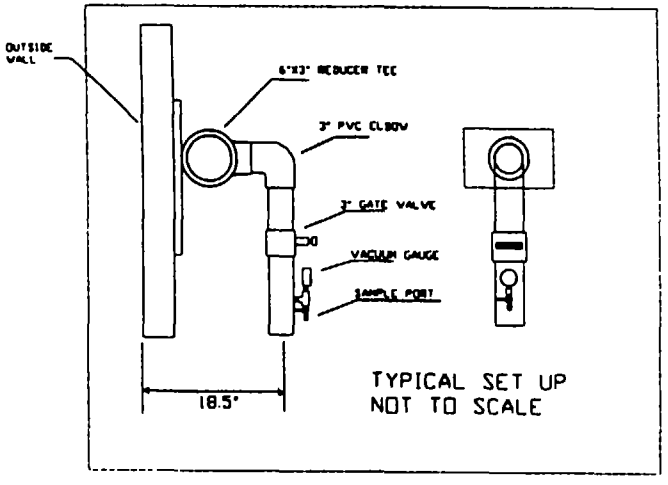

TYPICAL SET UP
NOT TO SCALE

APPROVED BY: _____

DATE: _____

REVISION 7-31-01

ALL PIPING AND FITTINGS ARE SCHEDULE 80 EXCEPT THE VALTERRA GATE VALVES WHICH ARE SCHEDULE 40

Flitewey Techonolgies, Inc. P.O. Box 108 6901 Industrial Loop Greendale, WI 53129 414-423-5600	SVE PLUMBING				
	Montgomery Watson				
7/17/01	SIZE	FSCM NO	DWG NO		REV
		012058 REV 0			2
012058	SCALE		TRS	SHEET	1 OF 1

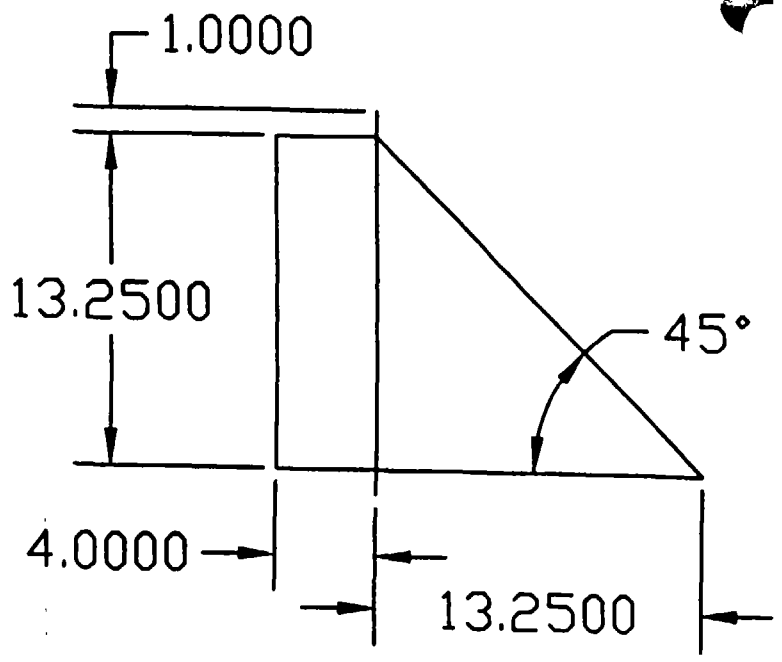

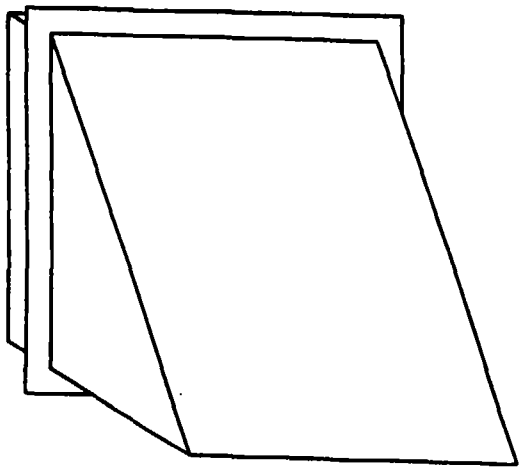

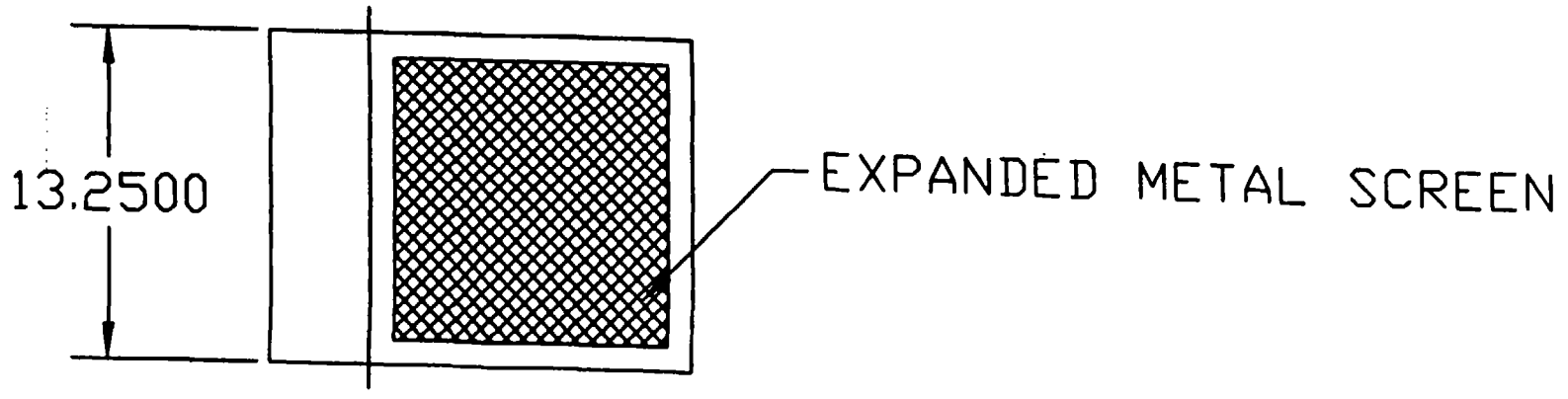

NOTE: 20 GA. W/ EXPANDED METAL SCREEN

Fliteway Technologies Inc. P.O. Box 108 6901 Industrial Loop Greenfield, WI 53129	45° VENT	Scale: 8:1	Part #:
		Quote #:	Rev:
			Date: 5/25/00
	Drawn By: Tom Schneeberg		Approval

MANUFACTURER'S PRODUCT SPECIFICATIONS

ISVE Blower

Received: 7/23/01 10:51AM, Jul-23-01 10:51A Hibon Inc 1 905 631 1109 P.02

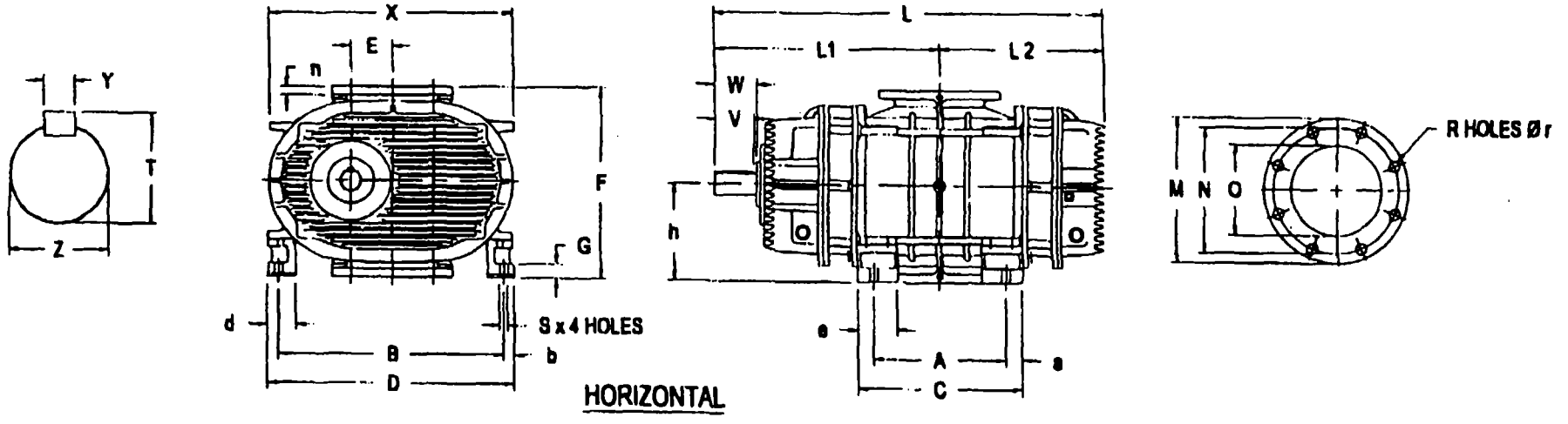

HORIZONTAL

1. METRIC DIMENSIONS ARE EXACT.
2. IMPERIAL DIMENSIONS ARE CONVERSION OF METRIC.
3. Ø22 ON INLET SIDE AND M20 ON DISCHARGE SIDE.

MODEL	A in mm	a in mm	B in mm	b in mm	C in mm	D in mm	d in mm	E in mm	e in mm	F in mm	G in mm	h in mm	L in mm	L1 in mm	L2 in mm	n in mm	S in mm	V in mm	W in mm	X in mm	Z mm	TOL. mm	T mm	Y mm	O mm	N mm	M mm	R mm	r mm	WEIGHT Lbs Kgs
SNH806	4.92	1.36	15.55	1.08	7.64	17.72	2.26	2.66	2.72	14.57	0.79	7.28	25.24	15.00	10.24	0.79	0.71	2.95	3.16	16.73		+ 0.025								367
	125	34.5	395	27.5	194	450	57.5	67.5	69	370	20	185	641	381	260	20	18	75	80	425	38	+ 0.009	41	10	125	210	250	8	18	167
SNH809	8.07	1.36	15.55	1.08	10.79	17.72	2.26	2.66	2.72	14.57	0.79	7.28	28.39	16.57	11.81	0.79	0.71	2.95	3.15	16.73		+ 0.025								416
	205	34.5	395	27.5	274	450	57.5	67.5	69	370	20	185	721	421	300	20	18	75	80	425	38	+ 0.009	41	10	150	240	285	8	22	189
SNH815	14.57	1.65	15.55	1.08	17.87	17.72	2.26	2.66	3.31	14.57	0.79	7.28	35.47	20.12	15.35	1.02	0.71	2.95	3.15	16.73		+ 0.025								537
	370	42	395	27.5	454	450	57.5	67.5	84	370	20	185	901	511	390	26	18	75	80	425	38	+ 0.009	41	10	200	295	340	8	22	244
SNH822	14.17	1.42	21.65	0.98	17.01	23.62	2.56	3.41	2.83	17.72	0.98	8.86	38.66	22.48	16.18	1.02	0.87	3.54	3.94	20.79		+ 0.026								957
	360	36	550	25	432	600	65	86.5	72	450	25	225	982	571	411	26	22	90	100	528	50	+ 0.009	53.5	14	200	295	343	8	22	435
SNH842	14.76	1.77	23.62	1.38	18.31	26.38	3.31	4.27	4.17	21.26	0.98	10.63	44.37	26.00	18.37	1.10	0.79	4.13	4.72	25.67		+ 0.030								1364
	375	45	600	35	465	670	84	108.5	106	540	25	270	1127	660.5	466.5	28	20	105	120	652	65	+ 0.011	69	18	250	350	395	12	22	620
SNH870	16.93	2.09	28.74	1.38	21.10	31.50	3.54	5.31	5.08	24.41	0.98	12.20	50.04	29.02	21.02	1.10	1.06	5.12	5.51	31.10		+ 0.030								2202
	430	53	730	35	536	800	90	135	129	620	25	310	1271	737	534	28	27	130	140	790	70	+ 0.011	74.5	20	250	350	395	12	#3	1001
SNH890	20.87	2.95	29.92	1.38	26.77	32.68	4.13	5.31	4.92	26.77	0.98	13.39	55.94	31.97	23.98	1.18	1.06	5.12	5.51	31.10		+ 0.030								2446
	530	75	760	35	680	830	105	135	125	680	25	340	1421	812	609	30	27	130	140	790	70	+ 0.011	74.5	20	300	400	445	12	22	1112
SNH8110	26.77	2.95	29.92	1.38	32.68	32.68	4.13	5.31	4.92	26.77	0.98	13.39	61.85	34.92	26.93	1.18	1.06	5.12	5.51	31.10		+ 0.030								2697
	680	75	760	35	830	830	105	135	125	680	25	340	1571	887	684	30	27	130	140	790	70	+ 0.011	74.5	20	350	460	505	16	22	1226

THE INFORMATION GIVEN ON THIS DRAWING IS THE EXCLUSIVE PROPERTY OF HIBON INC. ANY USE WITHOUT A WRITTEN AUTORIZATION IS STRICTLY FORBIDEN.

hibon inc
12055 COTE DE LESSE, DORVAL, QUE, H9P 1B4 TEL:(514) 631-3501 FAX:(514) 631-3502
850 LEGION ROAD, UNIT 3, BURLINGTON, ONT, L7S 1T5 TEL:(905) 681-7717 FAX:(905) 681-1544

TITLE: HIBON SNH SERIES BLOWER - OVERALL DIMENSIONS

SCALE: NTS | SIZE: B | DATE: MARCH 30, 2000 | DRAWING NO. HIBONSNH | REV. 1

Vacuum Operation

OPERATING DATA

Gas	air	
Standard gas density	0.075	lb/ft3
Inlet conditions		
temperature	68	°F
pressure (altitude=1 ft)	11.25	psia
density	0.057	lb/ft3
relative humidity	100.00	%
Differential pressure	4.35	psi
Discharge pressure	15.60	psia
Flow at inlet conditions	1000 (749)	ACFM (SCFM)
Blower speed	2165	rpm
Blower shaft power	24.8	BHP
Discharge temperature	137	°F
Dissipated heat	6.36	BHP
Tolerance on flow and power	+/-10	%
Maximum blower speed	4100	rpm
Maximum differential pressure	7	psi
% maximum speed	53	%
Motor nominal speed	1800	rpm
Motor speed under load	1770	rpm
Motor power	30.0	HP

Hibon Blower

SNH/V 815 TRI-LOBE

hibon

Hibon Inc.
info@hibon-canada.com

16/07/01

07/01-vl4.07T

Received: 7/20/01 1:33PM; 1 905 631 1109 ; Jul-20-01 02:23P Hibon Inc 1 905 631 1109 P.04

HIBON Tri-Lobe Blowers

Superior mechanical features

- **Heavy duty bearing holders** on thrust end for **more axial load** capability.
- **Oil thrower and oil passages** for good bearing lubrication & long life.
- **Piston ring seals** for **lifetime reliability.**
- **Helical Gears** located on the drive side for **more input torque** capability.
- **5 Bearings standard** with drive shaft roller bearings **suitable for V-Belt and direct drives.**
- **Large oil sumps** for improved bearing lubrication.
- **Progressive unloading channels** for less pulsating noise.
- **Tri-Lobes** for **smoother operation** and better efficiency.

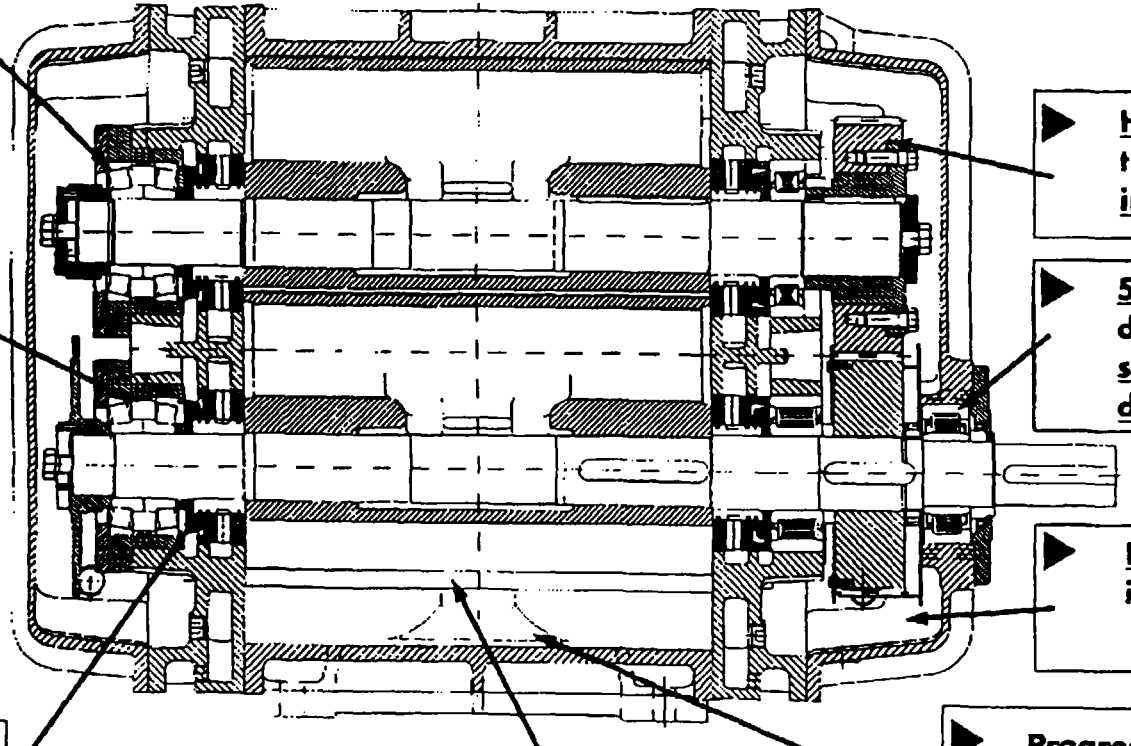

SNH SERIES

hibon®

	Nr.:
	Date: 30 - Aug, 01

DATA SHEET

Customer: MWH ACS

Motor line: **EXPLOSION PROOF - UL**

Rated Output	: 30.0 HP (cv)	Duty cycle	: S1
Frame	: 286T	Altitude	: 1000 m.a.s.l
Poles	: 4 Poles	Ambient temperature	: 40 °C
Frequency	: 60 Hz	Degree of protection	: IP54
Full load speed	: 1765 rpm	Slip	: 1.94 %
Voltage	: 208-230/460 V	No load current	: 22.0/11.0 A
Full load current	: 70.6/35.3 A	Locked rotor time	: 9 s
Service factor	: 1.15	Moment of inertia	: 3.8313 sq.ft.lb
Locked rotor amps	: 586/293 A	Aprox. weight	: 351 lb
Locked rotor current (Il/In)	: 8.30 - Code J	Noise level	: 68 dB(A)
Insulation class	: F		
Temperature rise	: 80 K		
Full load torque	: 88.1 ft.lb		
Locked rotor torque	: 280 %		
Breakdown torque	: 250 %		
Design	: A		

Performance under load

Load	cos ø	Efficiency(%)
100 %	0.86	91.0
75 %	0.83	89.3
50 %	0.77	88.6

	Bearings	Regreasing int.	Grease amount
D.E.	6311 C3	9500 h	18 g
N.D.E.	6211-Z C3	9500 h	11 g

NOTE:

DRAWING AND DIMENSIONS - C FLANGE

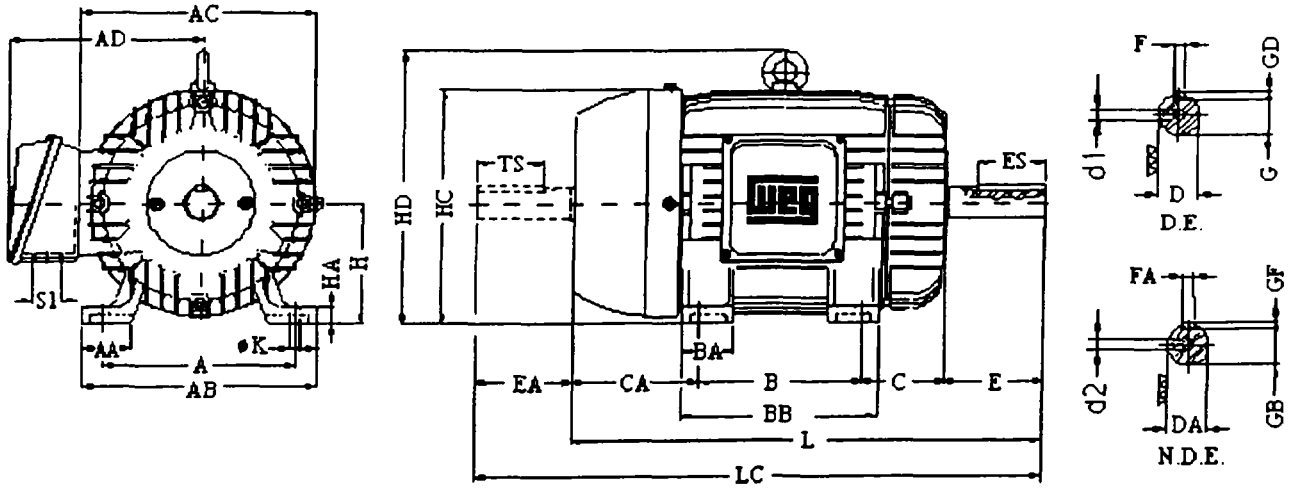

2E 11.000	**2F** 11.000	**H** 0.531	**BA** 4.750	**A** 13.781	**B** 13.078	**C** 28.047	**D** 7.000
G 1.109	**J** 3.156	**K** 2.953	**O** 14.047	**P** 14.093	**T** 2.515	**Width** 0.500	**Depth** 0.250
key length 3.250	**N-W** 4.625	**U** 1.875	**AB** 11.375	**AA** NPT 1 1/2"	**d1** A4		
BA 4.750	**AJ** 9.000	**AK** 10.500	**BD** 11.031	**Holes** 4	**BF** UNC 1/2" 13	**BB** 0.250	**BC** 0.250
AH 4.375	**AH**						

Performed: Ted	Checked:

MANUFACTURER'S PRODUCT SPECIFICATIONS

ISVE Blower Protective Coating

Benjamin Moore & Co.

INDUSTRIAL MAINTENANCE COATINGS

M74 / M75 Aliphatic Acrylic Urethane Gloss

Features

- Excellent chemical resistance
- Excellent abrasion resistance
- Excellent gloss retention
- Excellent color retention
- Wide unlimited color selection and non-yellowing clear
- Equals the results of the best baked finishes.
- Interior or exterior application
- High traffic floors
- Cures at lower temperatures

General Properties

This two component acrylic urethane provides excellent chemical & abrasion resistance, plus color and gloss retention. The cured coating equals the results of the best baking finishes. This coating performs well on high trafficked floors where color and gloss are desired. Resists continuous clean with strong cleaning compounds. Resists the strong solvents used in graffiti removal.

Curing time may be accelerated or retarded as necessary by the addition of M77 Urethane Accelerator or M92 Urethane Retarder.▲

Recommended For:

- Buildings
- Equipment
- Machinery
- Rolling stock
- Construction equipment
- Highway and mining equipment
- Lockers
- Storage tanks
- Bridges
- Towers
- Cement trucks, airplanes
- Waste treatment plants
- Food processing plants
- Chemical plants
- Pulp and paper mills
- Fertilizer plants
- Breweries
- Power generating plants
- Oil field equipment
- Bottling plants

Limitations:

- Use tie coat when applying over zinc coated surfaces.
- Contains strong solvents that could lift conventional coatings.
- Not for continuous immersion.

Danger: Vapors and spray mist are harmful if inhaled. Reference safety section of this brochure.

Product Information

Labor Saving Benefits

- This coating provides excellent chemical and abrasion resistance for wider choice of uses.
- This coating provides excellent color & gloss retention for longer coating life.
- The performance qualities of this cured coating equal the best baked finishes.
- Available in wide color range to satisfy the most demanding color need.
- Available in non-yellowing clear for complete graffiti removal.†
- Performs well on high trafficked or display floors where color and high gloss are desired.

Colors:

All must be mixed with M75-85 Aliphatic Urethane Gloss Hardener

—Standard:
CM74-00 Clear†
M74-15 Safety Yellow
M74-21 Safety Red
M74-35 Safety Blue
M74-65 Safety Orange
M74-82 Safety Black

—Tint Bases:
M74-90 Tintable White
M74-91 Deep Base
M74-92 Clear Base

—Special Colors: Contact your Benjamin Moore & Co. Representative

Certification:

Formulated without lead, mercury, or chromates.
Formulated with non-photochemically reactive solvents.

† for Clear Sealer Finish reference Product Data Sheet M73 M74B0
▲ see *Application Information* for use of accelerators and retarders.

Technical Data	Tintable White
Generic Type	Aliphatic Acrylic Urethane
Pigment Type	Titanium Dioxide
Volume Solids (mixed)	52%
Theoretical Coverage At Recommended Film Thickness	420 sq. ft./gal.
Film Thickness – Wet	3.8 Mils
– Dry	2.0 Mils
Dry Time @ 70° F – To Touch	2 Hours▲
– To Recoat	4 – 8 Hours▲
Dries By	Chemical Cure
Dry Heat Resistance	350° F
Viscosity (Mixed)	75 ± 5 KU
Flash Point (Seta)	86° F
60° Specular Gloss	90%
Surface Temperature At Application – Min.	40° F
– Max.	95° F
Surface must be dry and at least 5° above the dew point.	
Reduction – Brush	Do not thin
– Roller	Do not thin
– Spray	Do not thin
Clean Up Thinner	M93
Mixing Ratio	4:1 by Volume
Induction Time	30 Minutes
Pot Life @ 70°F	6 – 8 Hours
Weight Per Gallon (Mixed)	10.0 lbs
Storage Temperature – Min.	40° F
– Max.	90° F

Analysis:

(typical — may vary by color)

M74 90-F as mixed with M75-85-F

Pigment: 21.0%		Vehicle: 79.0%	
Titanium Dioxide	99.2%	Acrylic Urethane Resin	53.7%
Inert Pigments	0.8%	Solvents and Additives	46.3%
	100.0%		100.0%

Volatile Organic Compounds (VOC)

Unthinned	Grams/Liter	426
	Lbs./Gal.	3.56

Benjamin Moore & Co.

INDUSTRIAL MAINTENANCE COATINGS

M74 / M75 Aliphatic Acrylic Urethane Gloss

Primer Selection

Technical Information	Ferrous Metal Hot or Cold Rolled Steel	Ferrous Metal Epoxy Zinc-Rich Primer	Masonry Walls Poured, Cast or Brick	Block Walls Concrete-Cinder or Lt. Weight
Primer Product Code	M33/M34	CM18/CM19	CM36-00/M37	M31/M32
Generic Type	Polyamide Epoxy	Polyamide Epoxy	Polyamide Epoxy	Waterborne Epoxy Block Filler
Pigment Type	Titanium Dioxide, Oxides, Select Inerts	Metallic Zinc Dust	Clear	Organic Fibers and Inerts
Volume Solids	48%	55%	54%	46%
Theoretical Coverage at Recommended Film Thickness	385 sq. ft.	350 sq. ft.	430 sq. ft.	75 sq. ft.
Film Thickness - Wet - Dry	4.2 Mils 2.0 Mils	4.5 Mils 2.5 Mils	3.7 Mils 2.0 Mils	22 Mils 10 Mils
Dry Time - To Touch - To Recoat	1.5 Hours 4 Hours	4 Hours 16 Hours	1.5 Hours 4 Hours	2 Hours 16 Hours
Dries By	Chemical Cure	Chemical Cure	Chemical Cure	Chemical Cure
Dry Heat Resistance	400° F	350° F	300° F	260° F
Viscosity	80 ± 5 KU	80 ± 5 KU	70 ± 5 KU	Mastic
Flash Point (Seta)	80° F	84° F	84° F	None
60° Specular Gloss	0 – 6%	0–5%	85–95%	Flat
Surface Temperature -Min At Application -Max Surface must be dry and at least 5° above the dew point	60° F 90° F	50° F 90° F	60° F 90° F	60° F 95° F
Reducer	—	—	—	Clean Water
Reduction - Brush - Roller - Spray	do not thin do not thin do not thin	do not thin do not thin do not thin	do not thin do not thin do not thin	5% 5% 5%
Clean Up Thinner	M95	M95	M95	Clean Water
Mixing Ratio (by volume)	1:1	4:1	1:1	1:1
Induction Time	30 Minutes	30 Minutes	30 Minutes	30 Minutes
Pot Life @ 70 F	8 Hours	8 Hours	8 Hours	8 Hours
Weight Per Gallon	11.3 lbs.	19.4 lbs.	8.5 lbs.	12.0 lbs.
Storage Temperature - Min. - Max.	40° F 90° F	40° F 90° F	40° F 90° F	40° F 90° F

Note: For additional information regarding primer selection — reference the primer selection chart in the product manual or in the product catalog.

Primer Information

M33 / M34

Excellent rust inhibition, chemical resistance and superior adhesion qualities make it a perfect choice for all ferrous and non-ferrous metals both interior and exterior. Supports epoxy and urethane topcoats for ultimate protection in the most aggressive environments.

CM18 /C M19

Two component epoxy zinc rich with metallic zinc dust in the dry film providing optimal galvanic protection for steel. Protects steel substrates in the most aggressive chemical and industrial environments. High performance topcoats can be easily applied with excellent adhesion guaranteed.

CM36-00 / M37-84

Can also be used for penetrating concrete floors, wood, and wood floors. Accepts a wide variety of high performance finish coats.

M31 / M32

Provides the bonding properties needed to support any two component product when used on high abuse surfaces, high moisture areas or below grade applications. Excellent for areas subjected to repeated cleaning with high pressure water. Protects surfaces in food processing plants, water & waste treatment plants, pulp and paper plants, dairies, bottling plants, and a host of others.

Surface Preparation

Previously Painted or Primed Surfaces

Ensure that the surface is clean, dry and free from oil, grease, dirt, salts, and any other contaminants. All blistered and loose paint must be removed. All bare areas must be primed. Glossy surfaces should be roughened before recoating.

Bare Steel

All surfaces shall be free of loose rust, millscale, and contaminants such as oil, grease, dirt, and salts. Before any surface preparation is attempted, oil and grease must be removed by employing SSPC-SP1 Solvent Cleaning. For large areas, use M83 Oil & Grease Emulsifier. Use Commercial Blast Cleaning to SSPC-SP6 to remove millscale, rust, and other contaminants and leave a roughened surface.

Concrete and Masonry

Remove all loose particles, laitance, oil, grease, form release agents, and any other contaminants. New concrete and masonry must be allowed to cure for a minimum of 28 days. Before painting, roughen the surface by abrasive blasting, acid etching, or scarifying.

Application Information

Generally, this paint is best applied by spray. Due to the rapid dry of this coating, only small areas may be coated by brush, applicator pad, or roller. Care must be taken to achieve the specified wet and dry film thicknesses. Uniform, even coats must be obtained. Large horizontal surfaces should be spray applied; however, roller application can be performed. Use of M92 Urethane Retarder will aid brush or roller application.

Dry time may be decreased or increased by the addition of M77 Urethane Accelerator or M92 Urethane Retarder. See relevant product data sheets for details. Either product should be added after the A and B components have been mixed and allowed to sit for an induction period of 30 minutes. The addition of 2.0 fl. oz. of M77 per gallon reduces dry-to-touch time from 2 hours to 1 hour and dry-to-recoat time from 6 hours to 3 hours, while increasing VOC level to 433 gm/l. The addition of 8.0 fl. oz. of M92 per gallon increases pot life by 2 – 4 hours and dry time by 1 – 2 hours, while increasing VOC level to 441 gm/l.

Application Equipment

Conventional or airless spray, brush, or roller. Certain colors may require two coats depending on method of application and color of the prime or intermediate coat.

Conventional Spray

Equipment Recommendations: Binks Model 62 Spray Gun or equal.

Fluid Nozzle	Air Nozzle	Atomizing Air Pressure (Measured at gun inlet)	Fluid Pressure
63B (.040")	63 PB	45 PSI	25 PSI

Low temperatures or longer hoses require higher pot pressure. Proper atomization is necessary to obtain a smooth finish.

Airless Spray

Equipment Recommendations: Binks Airless 1 Spray Gun or equal.

Airless Tip Orifice	Fluid Pressure	Binks Tip No.
.015" - .021"	2,000 - 2,500 PSI	9 - 1560/9 - 2150

CAUTION! Use 100 mesh manifold filter and gun with 100 mesh tip strainer. Use appropriate tip and atomizing pressure for equipment, applicator technique and weather conditions.

Roller

Use a ¼" nap synthetic cover. Do not use medium or long nap roller covers.

Clean Up Instructions

Clean all equipment immediately after use with M93 Aliphatic Urethane Thinner. At the same time, flush out all fluid lines and carefully clean pressure pots. Use clean solvent only. It is also good practice to periodically clean the spray tip or the fluid tip/air cap combination during the course of the working day or shift.

Benjamin Moore & Co.

INDUSTRIAL MAINTENANCE COATINGS

M74 / M75 Aliphatic Acrylic Urethane Gloss

Performance Standards

All test results are for Tintable White unless otherwise noted.

Description	Test	Results
Adhesion	ASTM D 3359 Cross Cut Tape Test	5B
Abrasion Resistance	ASTM D 4060 C17 Wheels, 1000 gm Load, 1000 cycles	44 mg.
Impact Resistance	ASTM D 2794 Gardner Impact, 7 Day Air Dry at 77° F	Direct: 75 inch pounds Reverse: 25 inch pounds
Flexibility	ASTM D 522 Conical Mandrel Apparatus	28%
Chemical Resistance ASTM D1308 24 Hour Covered Watch Glass Spot Test	5% NaOH	No Effect
	5% H_2SO_4	No Effect
	100% Xylene	No Effect
	100% Mineral Spirits	No Effect
Hardness	ASTM D 3363 Pencil Hardness 7 Day Cure	4H
Exterior Durability	ASTM G53 Accelerated aging via exposure to fluorescent, ultraviolet, and condensation.	1000 Hours - No effect, 1300 Hours - DE 1.6
Salt Fog Resistance	ASTM B117	400 Hours — No effect
Immersion	not recommended	
Hot Water Immersion	not recommended	
Graffiti Resistance	Crayon: Excellent Lipstick: Excellent Ink Pen: Excellent Litter: Excellent Marker: Excellent Shoe Polish: Excellent	

Safety Information

Hazardous Materials Identification System © NPCA

Health	4*	Flammability	3
Reactivity	1	Personal protection	

0 = Minimal; 4 = Severe Hazard

DANGER! FLAMMABLE LIQUID AND VAPOR! **Contains xylene (xylol), n-butyl acetate, and crystalline silica.** Harm- if inhaled. May affect the brain or nervous system causing dizziness, headache, or nausea. May cause eye, skin, nose, .d throat irritation.(Mixture will contain: aliphatic polyisocyanate and Hexamethane diisocyanate. Overexposure may cause lung damage. May cause allergic skin and respiratory reaction. Effects may be permanent.)

IMPORTANT: Designed to be mixed with other components (M75). Mixture will have hazards of both components. Before opening packages, read all warning labels. Follow all precautions.

NOTICE: Repeated and prolonged exposure to solvents may lead to permanent brain and nervous system damage. Eye watering, headaches, nausea, dizziness, and loss of coordination are signs that solvent levels are too high. Intentional misuse by deliberately concentrating and inhaling the contents may be harmful or fatal. Cancer Hazard: contains crystalline silica which can cause cancer when in respirable form.

Keep away from heat, sparks, and flame. **Vapors may cause flash fire.** Close container after each use. Use only with adequate ventilation. Do not breathe vapors, spray mist, or sanding dust. Do not get in eyes or on skin.

INDIVIDUALS WITH LUNG OR BREATHING PROBLEMS OR PRIOR REACTION TO ISOCYANATES (FOUND IN CURING AGENT M75) MUST NOT BE EXPOSED TO VAPOR OR SPRAY MIST. Do not breathe vapor or spray mist. WEAR A PROPERLY FITTED VAPOR/PARTICULATE RESPIRATOR APPROVED BY NIOSH during and after application with eye protection, gloves, and protective clothing during application. A positive-pressure, supplied air respirator (NIOSH) is recommended. A vapor/particulate respirator (NIOSH) may be appropriate where airborne monitoring demonstrates vapor levels below ten times the applicable exposure limits. In all cases, follow respirator manufacturer's directions. Do not permit anyone without protection in the painting area.

FIRST AID: If affected by inhalation of vapors or spray mist, remove to fresh air. If breathing difficulty persists or occurs later, consult a physician and have label information available. In case of eye contact, flush immediately with plenty of water for at least 15 minutes and call a physician. For skin, wash thoroughly with soap and water. In case of ingestion, DO NOT induce vomiting. Get medical help immediately.

IN CASE OF: FIRE – Use foam, CO2, dry chemical, or water fog.

SPILL – Absorb with inert material and dispose of in accordance with applicable regulations.

DISPOSAL: Empty container with product residue may still be flammable; follow all hazard statements until it has been disposed of. Contains organic solvents which may cause adverse effects on the environment if disposed of improperly. Consult your sanitation department for more information on disposal of empty containers. **Disposal of wastes containing either organic solvents or free-liquids in landfills is prohibited. Contact your state-designated environmental agency for information concerning re-use, recycling, or disposal of solvent-borne paint.**

FOR PROFESSIONAL USE ONLY **NOT FOR RESIDENTIAL USE** **KEEP OUT OF REACH OF CHILDREN**

Refer to Material Safety Data Sheet available from your dealer for further safety and handling information.

Warranty & Limitation of Sellers Liability

All statements made on any product label, product manual, product data sheets, technical data charts or specification charts contained herein, are accurate to the best of our knowledge. The products and information are intended for use by persons having skill and know-how in the industry at their own discretion and risk. Benjamin Moore & Co. warrants only that its coatings represented herein meet the formulation standards of Benjamin Moore & Co. NO OTHER WARRANTY OR GUARANTEE OF ANY KIND IS MADE BY THE SELLER, EXPRESSED OR IMPLIED, STATUTORY, BY OPERATION OR LAW, OR OTHERWISE INCLUDING MERCHANTABILITY AND FITNESS FOR A PARTICULAR PURPOSE. Workmanship, weather, construction equipment, quality of her materials and other variables affecting the results are beyond our control. No agent, employee or representative of seller has any authority to bind eller to any affirmation, representation or warranty except as stated above.

Benjamin Moore & Co., 51 Chestnut Ridge Road, Montvale, NJ 07645 Tel: (201) 573-9600 Fax: (201) 573-9046 www.benjaminmoore.com
M73 M7400 9/99
The triangle "M" device is a registered trademark of Benjamin Moore & Co. © 1999 Benjamin Moore & Co. All rights reserved Lithos in USA

MANUFACTURER'S PRODUCT SPECIFICATIONS

Transfer Pump

Fliteway Technologies, Inc.
6901 Industrial Loop • P.O. Box 108 • Greendale, WI 53129
(414) 423-5600 • 1-800-236-3580 • FAX (414) 423-9007

SPECIFICATION DATA

MOYNO® SP PUMPS

300 SERIES

331, 332, 333, 344, 356 AND 367 MODELS

DIMENSIONS

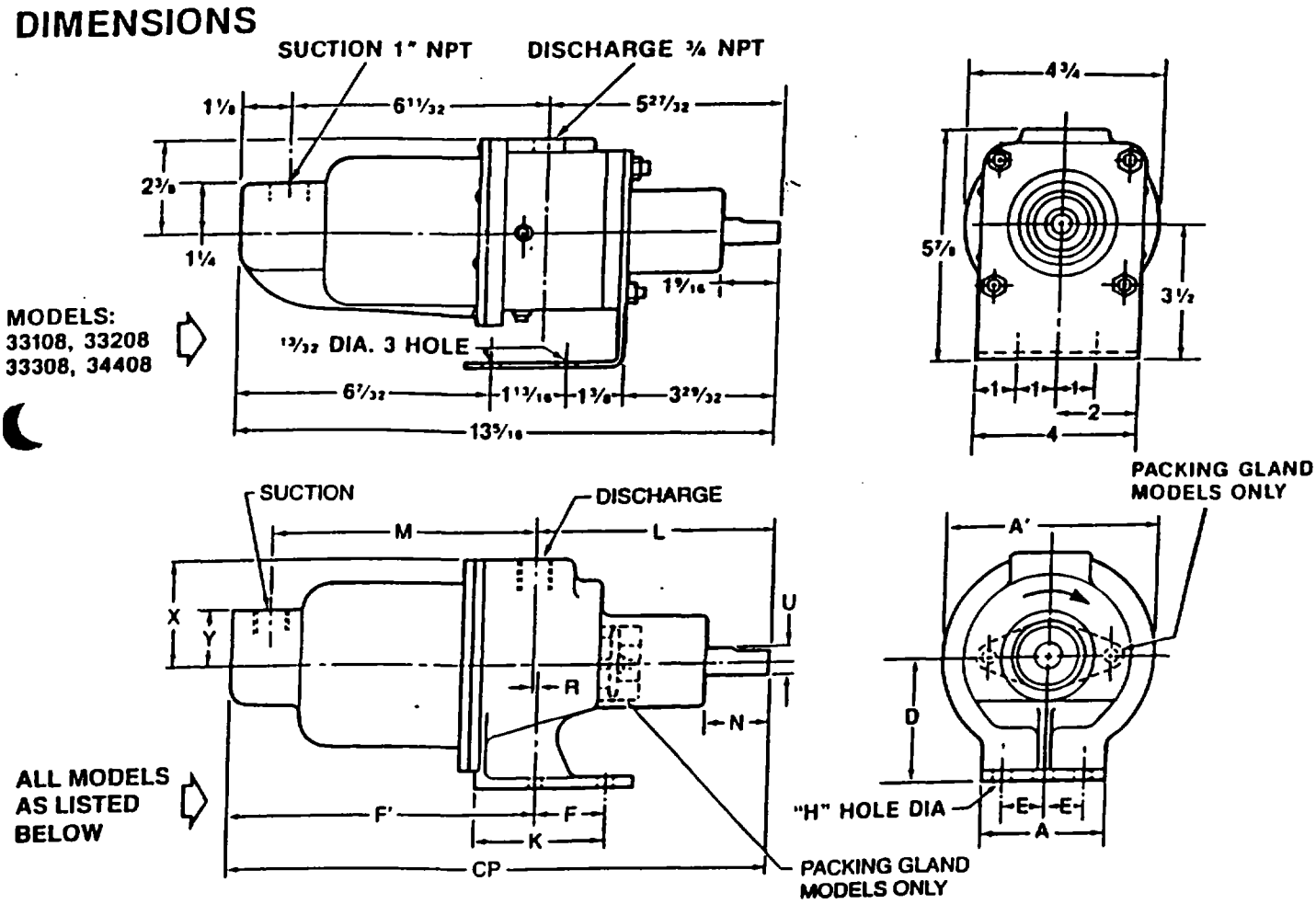

MODELS	CP	A	A'	D	E	F	F'	H	K	L	M	N	R	U	X	Y	SUCT (NPT)	DISCH (NPT)
33101, 33201 33301, 33104 33204, 33304 34401, 34404	12⅝	3⅛	4¾	2¾	1	1 13/16	6 15/16	13/32	3 1/32	5 11/16	6 5/16	1 7/16	—	⅝	2⅜	1¼	¾	⅜
*34411	13 15/16	3¼	4¾	2¾	1⅛	—	7 3/16	13/32	2⅞	7	6 5/16	1⅜	¼	⅝	2 9/16	1¼	¾	⅜
1, 35604	17½	6½	7 9/16	4 9/32	1¾	2	10 19/32	13/32	4½	7⅜	8⅝	2⅜	15/32	¾	3 29/32	2⅛	1½	1¼
*35611, *35613	19⅜	6½	7 9/16	4 9/32	1¾	2½	10 19/32	13/32	4	9 11/32	8⅝	2 13/32	9/16	¾	3 29/32	2⅛	1½	1¼
36701	20 15/16	5¼	8	4½	2	2 5/16	13	9/16	4 1/16	7 15/16	11 3/16	2⅛	—	1	4	2½	2	2

Packing Gland Model

All dimensions are in inches.
Specifications subject to change without notice.

Fliteway Technologies, Inc.
6901 Industrial Loop • P.O. Box 108 • Greendale, WI 53129
(414) 423-5600 • 1-800-236-3580 • FAX (414) 423-9007

356 MODELS

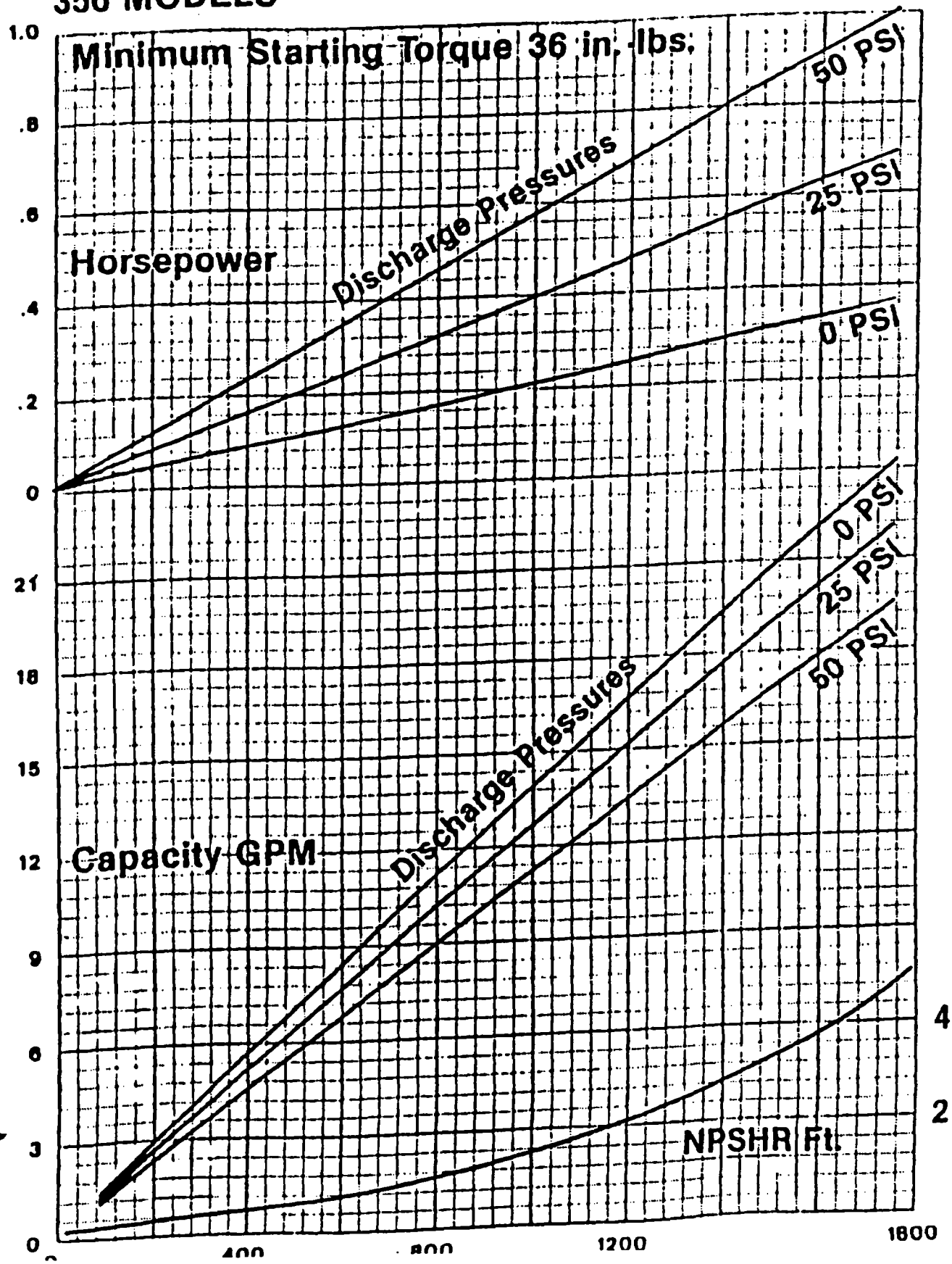

MANUFACTURER'S PRODUCT SPECIFICATIONS

Entrained Water Knockout Tank

500 GALLON TANK
WITH 6IN FLANGES

STAINLESS STEEL

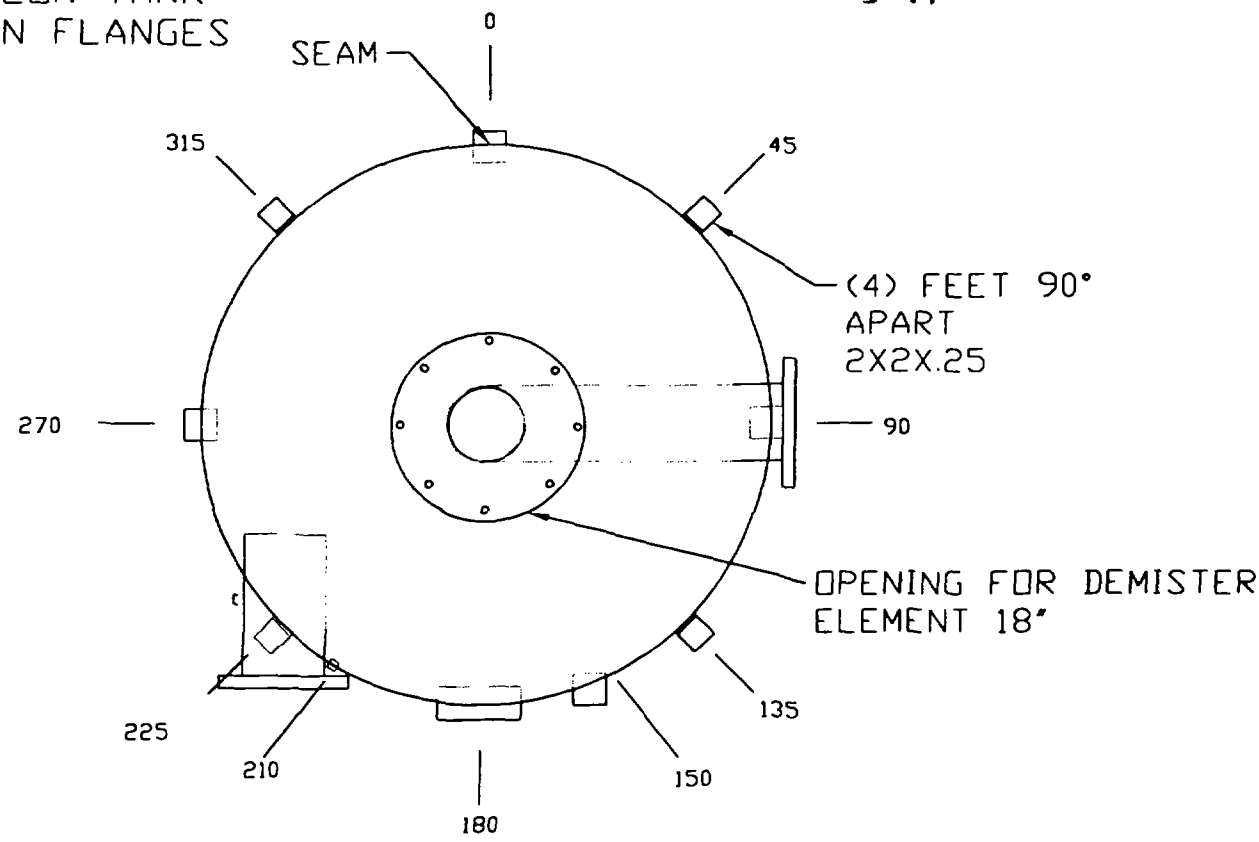

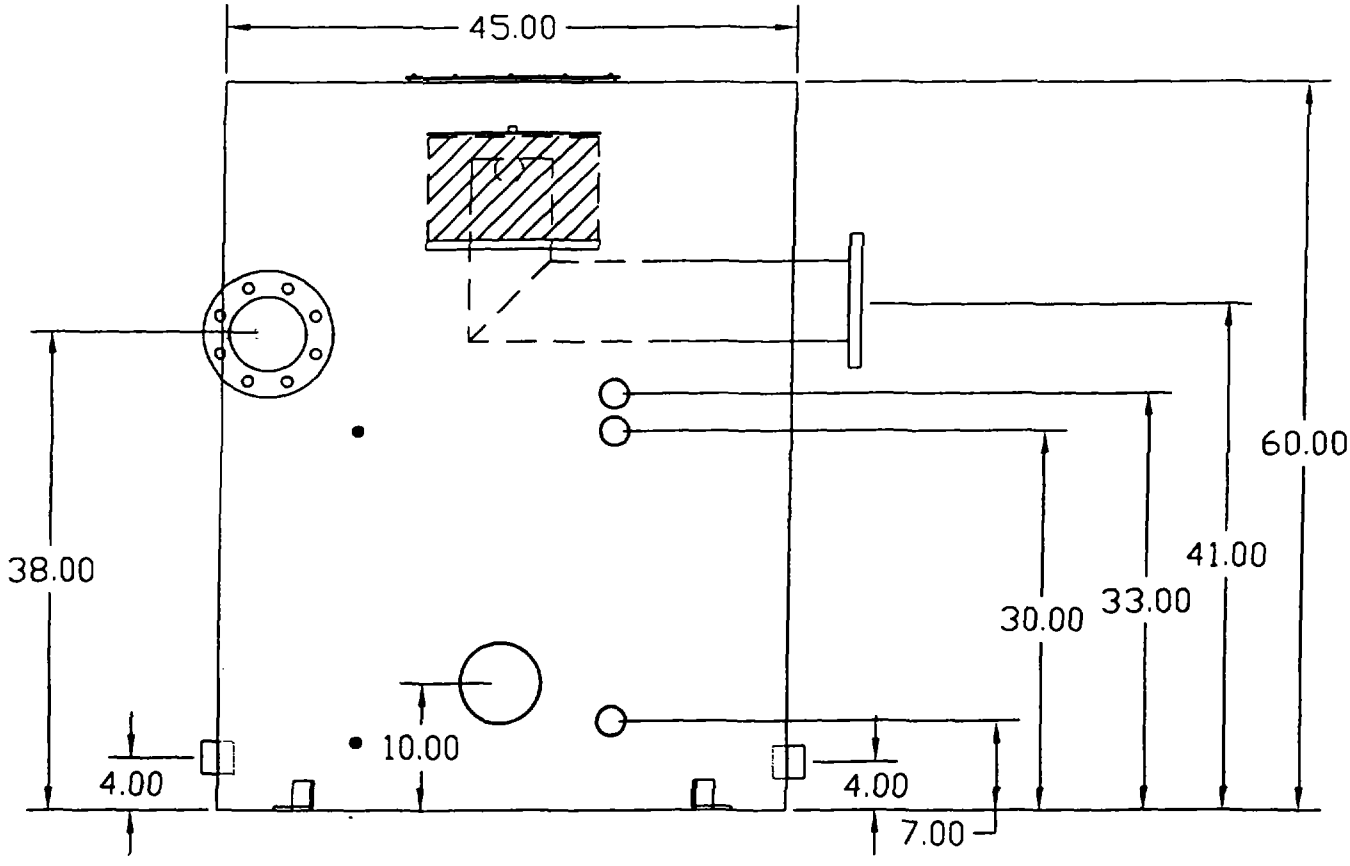

Q12058

	SCALE: 10:1	Part #TK-V500-6F W/D
	Quote #:	Rev:
Fliteway Technologies Inc. 6901 Industrial Loop P.O. Box 108	500 GAL CYCLONIC K.O. TANK WITH DEMISER	Date: 6/25/01
	Drawn By: TLS	Approval

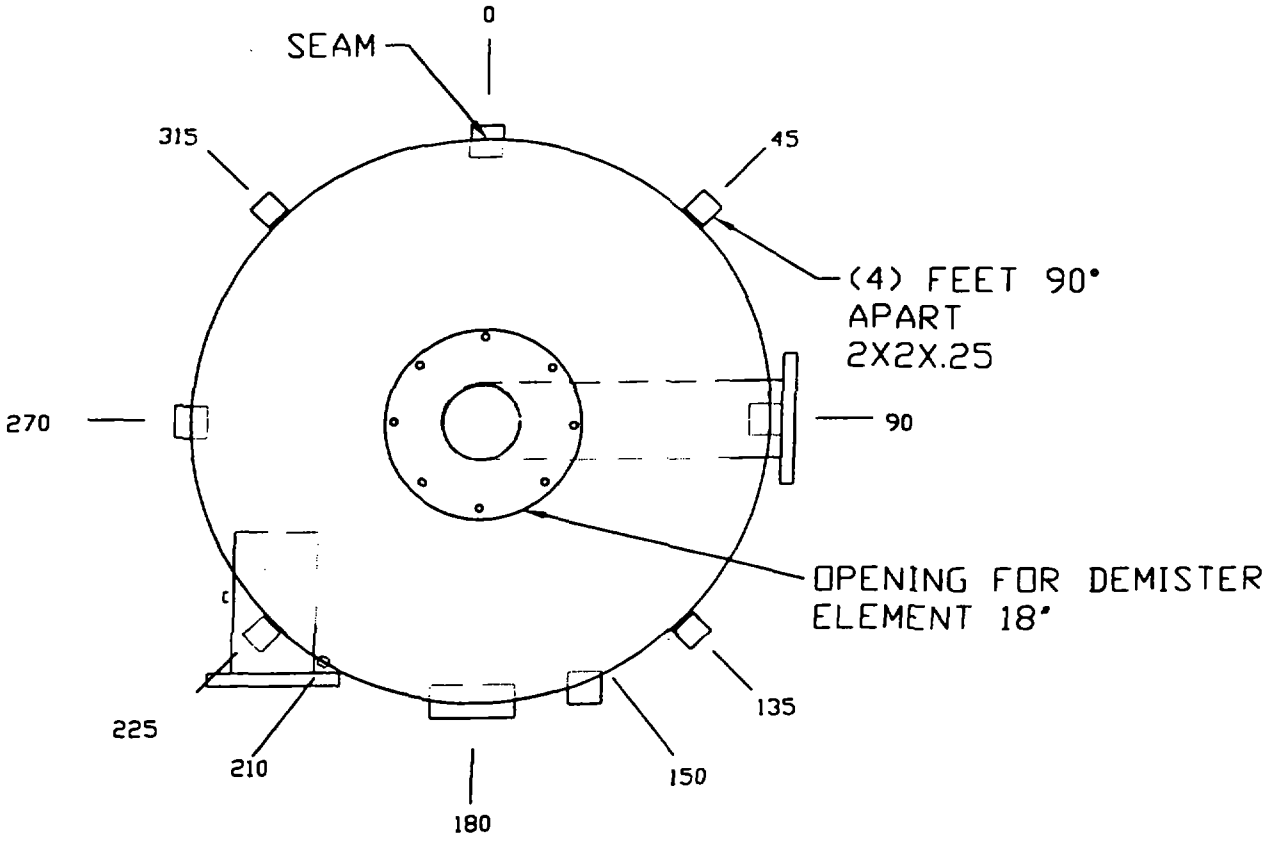

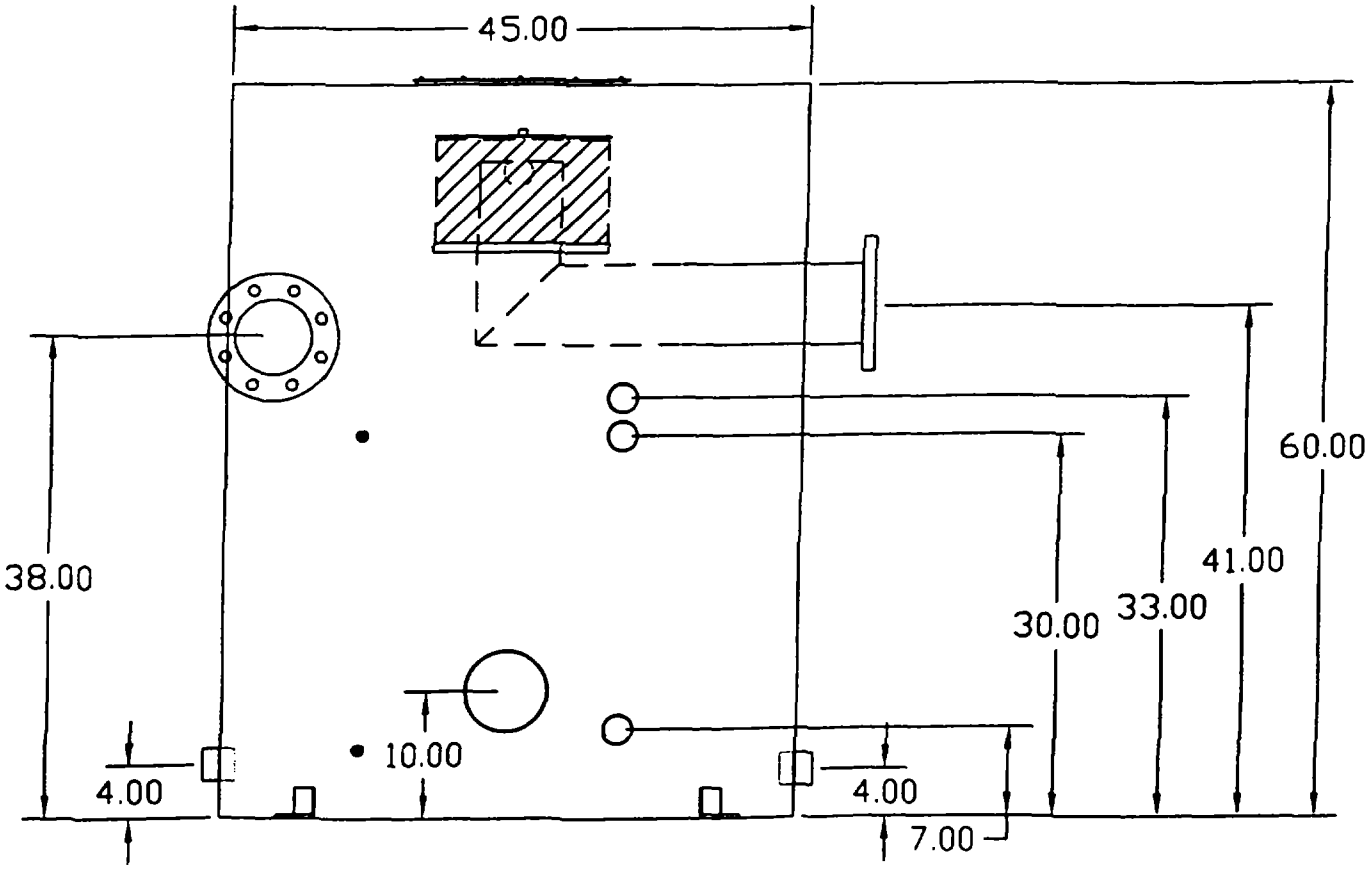

	SCALE: 10:1	Part #TK-V500-6F W/D
	Quote #:	Rev:
Fliteway Technologies Inc. 6901 Industrial Loop	500 GAL CYCLONIC K.O. TANK WITH DEMISER	Date: 6/25/01

MANUFACTURER'S PRODUCT SPECIFICATIONS

Filter

INLINE AIR FILTERS

COATED

F65V

INLINE AIR FILTERS - VACUUM SERVICE ONLY

The Series F65V Inline Air Filter is designed to mount directly in the air piping system for engines, blowers or compressors. The filter element, which is fabricated from pleated paper media, has an efficiency of 99% on 1 micron particles and larger. The housing is designed to withstand a full vacuum. Pressure taps are provided on the intake and discharge nozzles for installation of a pressure drop indicator or switch by the customer. The F65V Inline Air Filter surfaces are prime coated with a red oxide primer.

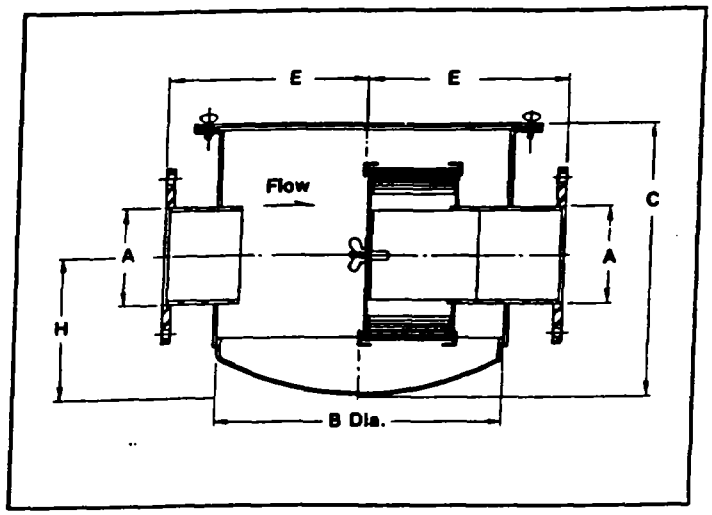

ALTERNATE FILTRATION MEDIA AVAILABLE FOR F65V

Cleanable Polyurethane Foam - 98% on 10 micron particles
Cleanable Polyester Felt - 98% on 3 micron particles
Epoxy Coated Wire Mesh - 90% on 10 micron particles (When Oil Wetted)

FOR PRESSURE SERVICE USE F65 (See Page 2)

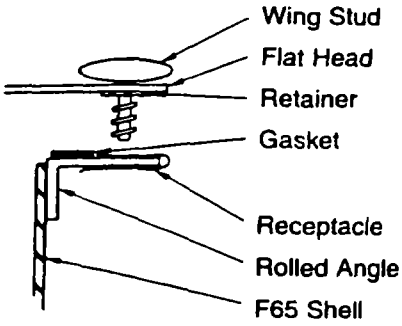

F65V up to and including 8" size:
Coarse threaded wing studs allow for easy access to the F65V for servicing the filter elements. See diagram at left.

F65V 10" size and larger:
Wing nuts are provided to allow for easy access to the F65V for servicing the filter elements.

F65V SERIES

MODEL	A	B	C	E	H	RATED CFM[1]	WEIGHT	REPLACEMENT ELEMENT NUMBER
F65V-2	2 NPT	12	10¾	9	5	135	38	F8-108
F65V-2½	2½ NPT	12	10¾	9	5	180	40	F8-108
F65V-3	3 NPT	16	15¼	11	7	285	70	F8-109
F65V-4	*4 FLG	16	15¼	11	7	520	77	F8-109
F65V-5	*5 FLG	16	15¼	11	7	750	80	F8-109
F65V-6	*6 FLG	18	18⅝	12	10	1075	100	F8-110
F65V-8	*8 FLG	24	19½	15	10	1800	180	F8-111
F65V-10	*10 FLG	36	37	22	17	3335	390	F8-137
F65V-12	*12 FLG	36	37	22	17	4675	415	F8-137
F65V-14	*14 FLG	36	37	22	17	5655	435	F8-137

*Flanges match 125# ASA. Diameter and Drilling.
(1) Rated capacity is based upon a maximum exit velocity of 5500 fpm

MANUFACTURER'S PRODUCT SPECIFICATIONS

Silencers

'LIL HUMMER™'
Compact Blower Silencer

INLET OR DISCHARGE SILENCER FOR POSITIVE DISPLACEMENT BLOWERS

Benefits ...

Approximately 1/3 the size of conventional blower silencers.

Reduces overall package noise without further acoustic treatment.

Reduces cost, overall package size, weight, storage space, freight cost and damage.

VERSATILE—Suitable for inlet or discharge application, forward or reverse flow, all without compromising acoustic or pressure drop performance.

Design Advantages ...

For conditions up to 15 PSIG.

Internal pack material suitable for temperatures up to 325 degrees F.

Standard connections, plain nominal pipe ends.

Flanged or threaded connections available.

Availability ...

Sizes 2" through 12"—delivery from stock.

Larger sizes, special connections, and mounting hardware available for fast delivery.

UNIVERSAL SILENCER
A FLEETGUARD/NELSON COMPANY
Noise Control and Air Filtration

COATED

'LIL HUMMER'
Compact Blower Silencer

ATTENUATION CURVE, TYPICAL

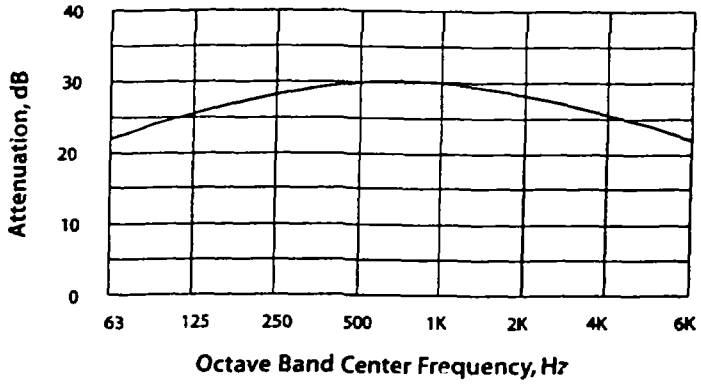

PRESSURE DROP

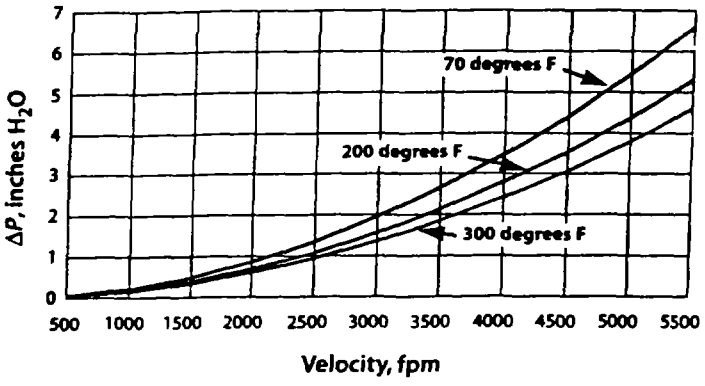

MODELS, DIMENSIONS & WEIGHTS

MODEL	P (nom.)	D	L	H	Y	K	WT.	CFM CAP
CB-2	2	8.00	11.00	8.00	4.00	7.00	15	120
CB-2.5	2.5	8.00	12.50	9.50	4.75	7.00	25	187
CB-3	3	12.00	13.50	10.50	5.25	9.00	35	270
CB-4	4	12.00	18.00	15.00	7.50	9.00	45	480
CB-5	5	16.00	20.00	17.00	8.50	11.00	70	750
CB-6	6	16.00	26.00	23.00	11.50	11.00	85	1080
CB-8	8	24.00	31.00	27.50	13.75	15.50	170	1920
CB-10	10	30.00	39.00	35.50	17.75	18.50	275	3000
CB-12	12	34.00	43.00	39.50	19.75	20.50	355	4320

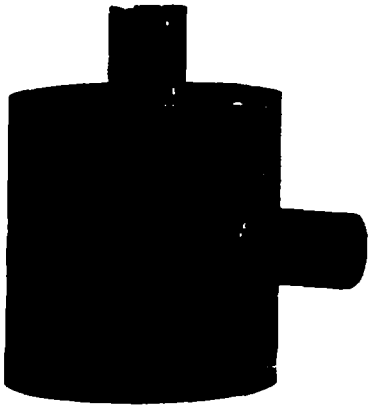

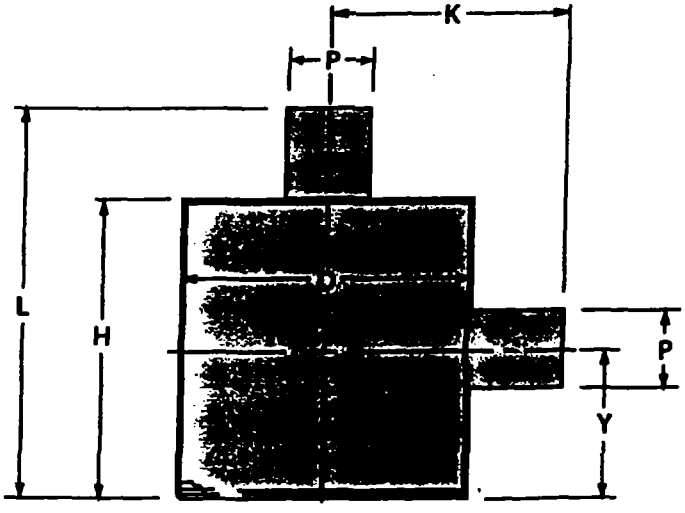

NOTES:
1. Finish: Shop coat primer (88-0102).

UNIVERSAL SILENCER
A FLEETGUARD/NELSON COMPANY
P. O. Box 411, Stoughton, Wisconsin 53589
608-873-4272 Fax 608-873-4298
Visit us on the World Wide Web: http://www.universal-silencer.com

Copyright 1998 Universal Silencer. All rights reserved. Lil Hummer is a trademark

MANUFACTURER'S PRODUCT SPECIFICATIONS

Gate Valves

PVC Knife Gate Valves ll Port

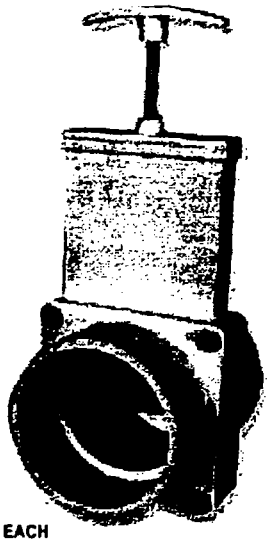

- Designed for quick shut-off in low pressure or vacuum lines
- Very inexpensive

Valterra gate valves are ideally suited for tank drains, wastewater control, septic systems, and other low pressure applications. White PVC bodies and stainless steel shafts are standard throughout. The 3" sliding gate is made of polypropylene, whereas the 4", 6", and 8" gates made of stainless steel. Seals are EPDM or comparable material. Our stock valves have Soc. x Soc. connections for Sch. 40 PVC pipe. All sizes can be rebuilt or resealed without removing the socket end connections. Valves with extended handles up to 6 ft are available on special order.

PIPE SIZE SCH. 40	OVERALL LENGTH	MAX PSI	VALVE STOCK #	EACH
2"	3¼"	50	18255	$ 14.56
3"	4½"	20	18251	14.85
4"	5 3/16"	18	18252	49.81
6"	11⅛"	18	18253	183.00
8"	13¾"	18	18254	259.00

The Elder® Valve

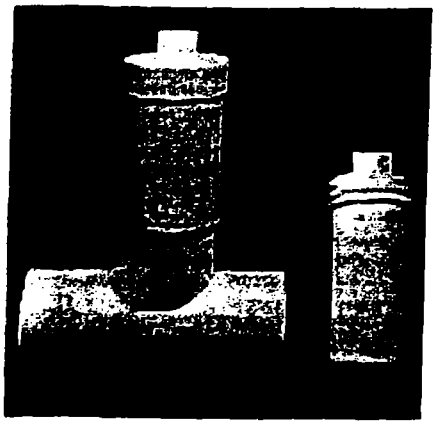

- Sewer cleanout and shutoff
- Guarantees fast yment of sewer bills
- Protection against basement flooding

The Elder® Valve serves both as a cleanout and a disconnect device. The Elder Valve Housing is installed in SDR35 No. 3034 PVC (4.125" O.D.) sanitary sewer pipe with a stand pipe extending to ground level. When it is desirable to disconnect the service, the threaded Elder Valve Plunger, which is cemented on the end of 1" Schedule 40 PVC pipe with tee-handle (supplied locally), is inserted into the Elder Valve Housing and rotated to reduce flow 95%. Clear water from a leaking faucet will pass, but movement of sewage is blocked from either direction. When sanitary services are disconnected, bill collection problems virtually disappear.

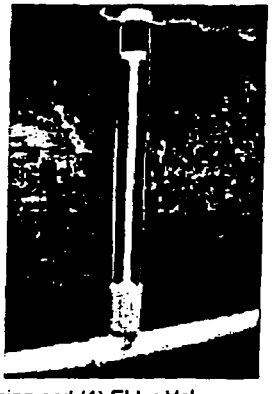

Elder® Valves are also used to protect homes during hurricanes, floods and other conditions that can cause raw sewage to back up into homes.

For a complete valve, order (1) Elder Valve Housing and (1) Elder Valve Plunger. For use with 4" Schedule 40 pipe instead of SDR 36, order (2) adapter fittings.

DESCRIPTION	STOCK	EACH
ER® VALVE HOUSING	17116	$ 47.63
R VALVE PLUNGER	17114	11.23
PTER 4" SDR 36 (M) X SCH 40 (F)	24340	8.33

Brass Ball Valves

We only carry industry proven brands. Brass body and cap for durability and compact design. PTFE seats and seals. Rated minimum 600 psi. Brass stem, chrome plated brass ball.

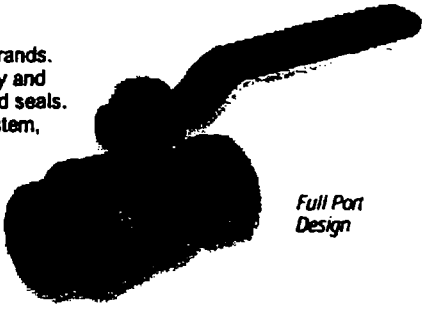

Full Port Design

NPT THREAD	STOCK #	EACH
¼"	16938	$ 5.78
⅜"	16940	5.78
½"	16942	5.78
¾"	16944	9.42
1"	16946	13.26
1¼"	16948	23.54
1½"	16950	28.16
2"	16952	44.41
2½"	16953	116.72
3"	16955	172.79
4"	16956	224.06

Miniature Ball Valves ¼" NPT for Gauge Isolation

Won't freeze up over time. Body is nickel plated forged brass and ball is hard chrome plated forged brass. Stem seal is viton o-ring. Ball seals against teflon rings. 230 psi working pressure. Body is only 1.7" long.

64175

64174

MINIATURE VALVE (FxF)	64175	$ 7.95
MINIATURE VALVE (MxF)	64174	7.95

Brass Needle Valve

¼" NPT brass for air service to 2,000 psi.

NEEDLE VALVE	17123	$ 15.00

Universal Stopcock

- Choice of EPDM or Viton® seals
- ¼ NPT with six possible end configurations

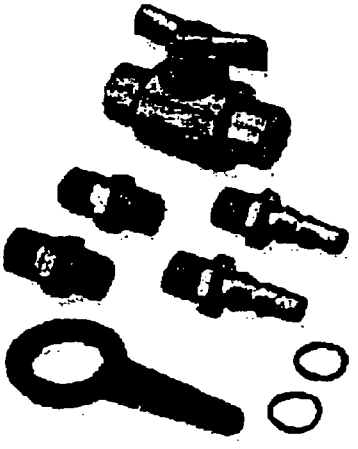

Great for sampling or for shutting off chemical feed lines so that you can work on pumps without making a mess. Tubing barb fittings pictured are for ¼" through 7/16" I.D. tubing. End connectors seal with o-ring. No need for Teflon tape. Can be used for flow control down to a few drops per minute. Hex wrench included. Rated at 150 psi @ 70°F non-shock.

PVC/EPDM	68240	$ 15.54
PVC/VITON	76889	15.53

MANUFACTURER'S PRODUCT SPECIFICATIONS

Butterfly Valves

Technical Information

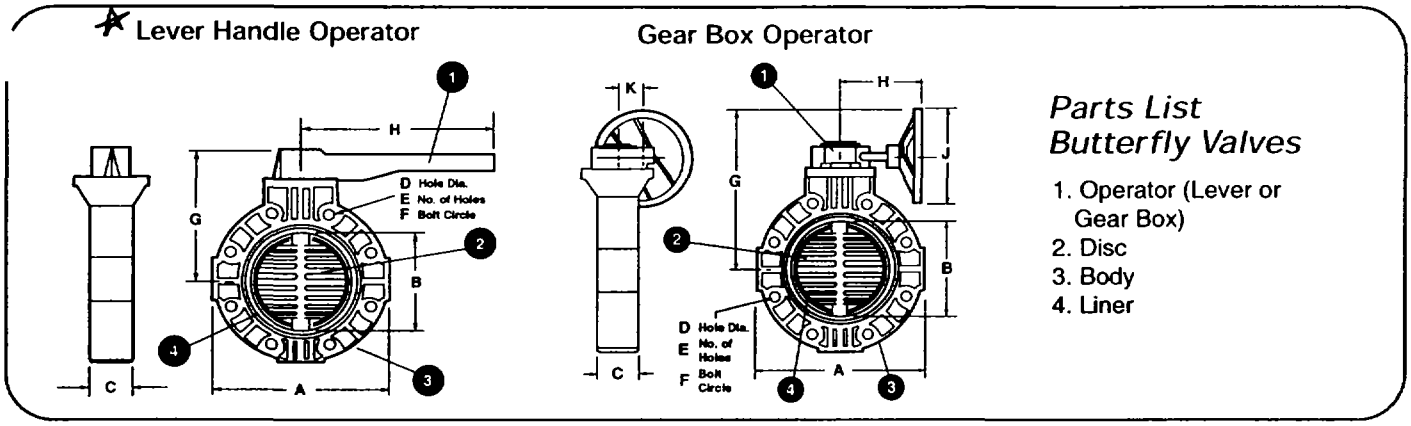

Parts List
Butterfly Valves

1. Operator (Lever or Gear Box)
2. Disc
3. Body
4. Liner

Dimensions - Inches / Millimeters

Size	A	B	C	D	E	F	G		H		J	K	Wt. Lb / Kg
							Gear Box	Lever	Gear Box	Lever			
1-1/2 / 50	6.00 / 152	1.75 / 44	1.50 / 38	.63 / 16	4	3.88 / 99	9.31 / 236	6.25 / 159	7.13 / 181	10.50 / 267	8.00 / 203	1.88 / 48	10.5 / 4.8
2 / 63	6.00 / 152	1.75 / 44	1.50 / 38	.75 / 19	4	4.75 / 121	9.31 / 236	6.25 / 159	7.13 / 181	10.50 / 267	8.00 / 203	1.88 / 48	10.5 / 4.8
3 / 90	7.75 / 197	3.13 / 80	2.00 / 51	.75 / 19	4	6.00 / 152	9.75 / 248	6.69 / 170	7.13 / 181	10.50 / 267	8.00 / 203	1.88 / 48	11.6 / 5.3
4 / 110	9.25 / 235	3.94 / 100	2.19 / 56	.75 / 19	8	7.50 / 191	10.19 / 259	7.94 / 202	7.13 / 181	12.00 / 305	8.00 / 203	1.88 / 48	14.3 / 6.5
★ 6 / 160	11.25 / 286	5.81 / 148	2.31 / 59	.88 / 22	8	9.50 / 241	12.38 / 314	9.50 / 241	7.13 / 181	14.00 / 356	8.00 / 203	1.88 / 48	15.4 / 7.0
8 / 225	13.75 / 349	7.75 / 197	2.50 / 64	.88 / 22	8	11.75 / 298	13.50 / 343	10.63 / 270	7.13 / 181	16.00 / 406	8.00 / 203	1.88 / 48	23.5 / 10.7
10 / 280	16.00 / 406	9.76 / 248	3.00 / 76	1.00 / 25	12	14.25 / 362	16.00 / 406	N/A	8.09 / 205	N/A	8.00 / 203	2.36 / 59	39.0 / 17.7
12 / 315	19.00 / 483	11.50 / 292	3.18 / 81	1.00 / 25	12	17.00 / 432	17.50 / 445	N/A	8.09 / 205	N/A	8.00 / 203	2.36 / 59	51.0 / 23.1

DIN metric flanges available

Cv Factors

Size	Factor	Size	Factor
1-1/2"	90	6"	1100
2"	125	8"	2500
3"	280	10"	4700
4"	675	12"	7100

Pressure Loss Calculation Formula

$$\Delta P = \left[\frac{Q}{Cv}\right]^2$$

ΔP = Pressure Drop
Q = Flow in GPM
Cv = Flow Coefficient

Operating Temperature/Pressure

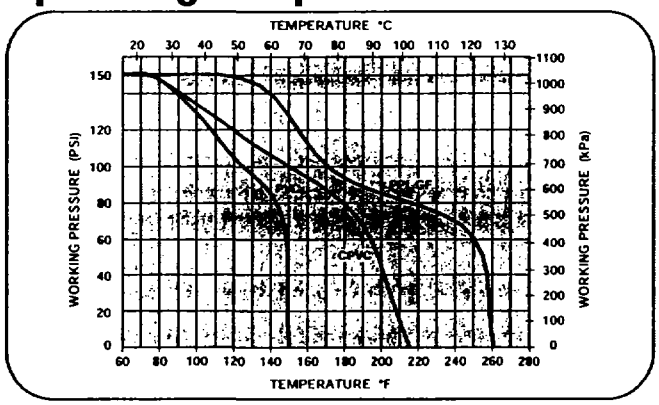

Selection Chart

Size	Body Material	Disc Material	Shaft Material	Liner	Operator	Pressure Rating
1-1/2" to 6"	CPVC	CPVC	316 SSTL	Viton®, EPDM or Nitrile	Lever or Gear Box	150 PSI @70F Non-Shock
1-1/2" to 8"	PVC	PPL or PVDF				
1-1/2" to 8"	PVC	PVC	416 SSTL			
1-1/2" to 12"	PPL	PPL				

HAYWARD®

Hayward Industrial Products, Inc.
One Hayward Industrial Drive, Clemmons, NC 27012
Tel: 1-888-429-4635 (1-888-HAYINDL) • Fax: 1-888-778-8410
E-mail: industrial@haywardnet.com
Web Site: http://www.haywardindustrial.com

Hayward Industrial Products Canada Inc.
2880 Plymouth Drive, Oakville, Ontario L6H 5R4
Tel: 905 829-2880 • Fax: 905 829-3636

Hayward Industrial Products (UK) Ltd.
Unit 2, Crowngate, Wyncolls Road, Colchester, Essex C04 4HT
Tel: 441-206-854454 • Fax: 441-206-851240

MC-1-BFY-12 Rev. 2 Printed In U.S.A.

MANUFACTURER'S PRODUCT SPECIFICATIONS

Pressure and Vacuum Safety Valves

KUNKLE
Valve Division

IRON SAFETY AND VACUUM VALVES

MODELS 215V

ASME Standard
UV
N.B. Certified

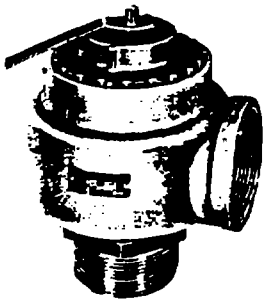

MODEL 337

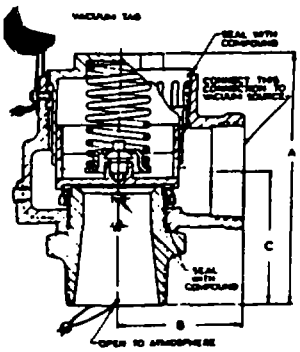

MODEL 215V

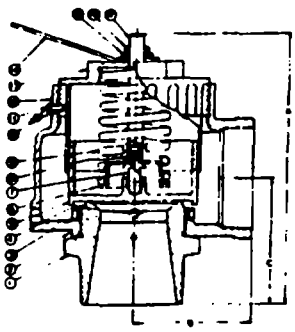

MODEL 337

VACUUM LIMITS 215V — 22" HG.-300°F.

APPLICATIONS

- Protection of low to medium pressure high volume blowers, compressors and pneumatic conveying systems.
- Bulk hauling trailers/equipment.
- Light gauge tanks.
- Protection of high volume vacuum pumps and conveying systems.

FEATURES

High capacity full nozzle design. Bronze nozzle, disc and guide with cast iron housing. Flat bronze valve seats are lapped for optimum performance. Warn ring offers easy adjustability for precise opening with minimum preopen or simmer and exact blowdown control. Pivot between disc and spring corrects mis-alignment and compensates for spring side thrust. Model 337 has reversible lift lever for "pull-up" or "pull-down" manual testing. Every valve 100% tested/inspected for pressure setting, blowdown and leakage. All adjustments are factory sealed to prevent tampering or dis-assembly.

SPECIFICATIONS

SIZE IN & OUT	A 337	A 215V	B	C	WGHT LBS.
2"	7¼	6¾	3¼	3¼	8
2½"	8	7½	3¾	3¾	12
3"	9½	9	4¼	4¼	19

CAPACITIES SCFM Air, 60°F., 10% Accumulation

Set Pressure PSIG	MODEL 337 2"	MODEL 337 2½"	MODEL 337 3"
5	527	799	1157
10	743	1127	1632
15	903	1368	1982
20	1062	1608	2331
25	1221	1850	2680
30	1380	2091	3029
35	1539	2332	3379
40	1698	2573	3728
45	1857	2814	4076
50	2017	3055	4428
60	2335	3537	5129

Set Inches Mercury	MODEL 215V 2"	MODEL 215V 2½"	MODEL 215V 3"
1	140	213	308
2	217	329	477
3	264	400	579
4	299	453	657
5	331	501	726
6	352	533	772
7	372	564	817
8	391	592	858
9	403	610	884
10	413	625	906
12	424	642	930
12.8 +	426	646	935

MODEL NUMBER/ORDER GUIDE

MODEL NO. POSITION	1	2	3	4	5	6	7	8	9	10	11	12	13	14	15
EXAMPLE	2	1	5	V	—	H	0	1	—	Q	E				
	0	3	3	7											

INLET SIZE
H — 2"
J — 2½"
K — 3"

VARIATION (01 thru 99)
Number Provided Only by Manufacturer to Cover Specific Feature or Option.

DESIGN REVISION
Indicates Non-Interchangeable Revision. Dash (-) If Original Design.

VALVE SERVICE
K-Air ASME Sec VIII (Model 337 Only)
Q-Vacuum (Model 215V Only)

SPRING MATERIAL
E-Stainless (302)

SET PRESSURE
Models 337 2 PSIG (0002) thru 60 PSIG (0060)
Model 215V 1" HG (Inches of Mercury) (0001) thru 22" HG (0022) Vacuum

8222 Bluffton Road
Box 1740
Fort Wayne, Indiana 46801-1740
219-747-1533
FAX 219-747-7958

... misuse or misapplication of its products (see warranty).

KUNKLE
Valve Division

IRON SAFETY AND VACUUM VALVES

MODELS 337

ASME Standard
UV
N.B. Certified

PRESSURE LIMITS 337 — 60 PSIG-300°F.

[redacted]

APPLICATIONS

- Protection of low to medium pressure high volume blowers, compressors and pneumatic conveying systems.
- Bulk hauling trailers/equipment.
- Light gauge tanks.
- Protection of high volume vacuum pumps and conveying systems.

FEATURES

High capacity full nozzle design. Bronze nozzle, disc and guide with cast iron housing. Flat bronze valve seats are lapped for optimum performance. Warn ring offers easy adjustability for precise opening with minimum preopen or simmer and exact blowdown control. Pivot between disc and spring corrects mis-alignment and compensates for spring side thrust. Model 337 has reversible lift lever for "pull-up" or "pull-down" manual testing. Every valve 100% tested/inspected for pressure setting, blowdown and leakage. All adjustments are factory sealed to prevent tampering or dis-assembly.

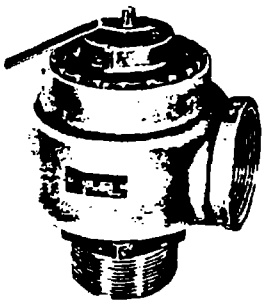

MODEL 337

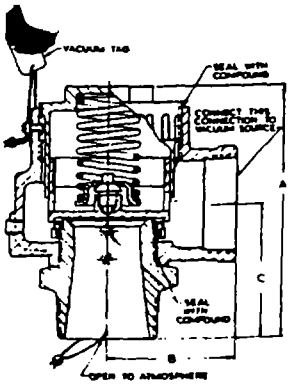

MODEL 215V

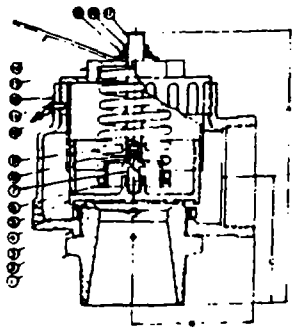

MODEL 337

SPECIFICATIONS

SIZE IN & OUT	A 337	A 215V	B	C	WGHT LBS.
2"	7¼	6¾	3¼	3¼	8
2½"	8	7½	3¾	3¾	12
3"	9½	9	4¼	4¼	19

CAPACITIES SCFM Air, 60°F., 10% Accumulation

Set Pressure PSIG	MODEL 337 2"	MODEL 337 2½"	MODEL 337 3"
5	527	799	1157
10	745	1127	1632
15	903	1368	1982
20	1062	1609	2331
25	1221	1850	2680
30	1380	2091	3029
35	1539	2332	3379
40	1698	2573	3728
45	1857	2814	4076
50	2017	3055	4428
60	2335	3537	5125

Set Inches Mercury	MODEL 215V 2"	MODEL 215V 2½"	MODEL 215V 3"
1	140	213	308
2	217	329	477
3	264	400	579
4	299	453	657
5	331	501	726
6	352	533	772
7	372	564	817
8	391	592	858
9	403	610	884
10	413	625	906
12	424	642	930
12 & UP	426	646	935

MODEL NUMBER/ORDER GUIDE

MODEL NO. POSITION	1	2	3	4	5	6	7	8	9	10	11	12	13	14	15
EXAMPLE	2	1	5	V	—	H	0	1	—	Q	E				
	0	3	3	7											

INLET SIZE
H — 2"
J — 2½"
K — 3"

VARIATION (01 thru 99)
Number Provided Only by Manufacturer to Cover Specific Feature or Option.

DESIGN REVISION
Indicates Non-Interchangeable Revision. Dash (-) If Original Design.

VALVE SERVICE
K-Air ASME Sec VIII (Model 337 Only)
Q-Vacuum (Model 215V Only)

SPRING MATERIAL
E-Stainless (302)

SET PRESSURE
Models 337 2 PSIG (0002) thru 60 PSIG (0060)
Model 215V 1" HG (Inches of Mercury) (0001) thru 22" HG (0022) Vacuum

8222 Bluffton Road
Box 1740
Fort Wayne, Indiana 46801-1740
219-747-1533

MANUFACTURER'S PRODUCT SPECIFICATIONS

Flow Sensors and Gauges

Series DS-200 and DS-300 Flow Sensors

For use with the Dwyer Capsuhelic® differential pressure gage to measure high flow rates of air or water in pipes.

The Dwyer flow sensor is an averaging pitot tube providing accurate and convenient flow rate sensing. When purchased with a Dwyer Capsuhelic® differential pressure gage of appropriate range, the result is a flow indicating system delivered off the shelf at an economical price.

Pitot tubes have been used in flow measurement for years. Conventional pitot tubes sense velocity pressure at only one point in the flowing stream. Therefore, a series of measurements must be taken across the stream to obtain a meaningful average flow rate. The Dwyer flow sensor eliminates the need for "traversing" the flowing stream because of its multiple sensing points and built-in averaging capability.

Dwyer Series DS-300 flow sensors are designed to be inserted in the pipeline through a compression fitting. They are furnished with instrument shut-off valves on both pressure connections. Valves are fitted with ¼" NPT female connections. Accessories include adapters with ¼" SAE 45° flared ends compatible with hoses supplied with the Model A-471 Portable Capsuhelic kit. Standard valves are rated at 200 psig (13.7 bar) and 200°F (93.3°C). Where valves are not required, they can be omitted at reduced cost. Series DS-300 flow sensors are available for pipe sizes from 1" to 10". If replacing a DS-200 flow sensor or using an A-160 threadolet with a DS-300, an optional ½" X ¼" bushing, #N A-161 is required.

DS-200 models are also available in ten insertion lengths from 1" - 10". Operation is similar to DS-300 units. Basic differences are the multi-turn shut-off valves, ¼" NPT mounting and installed ¼" SAE 45° flared pressure connections.

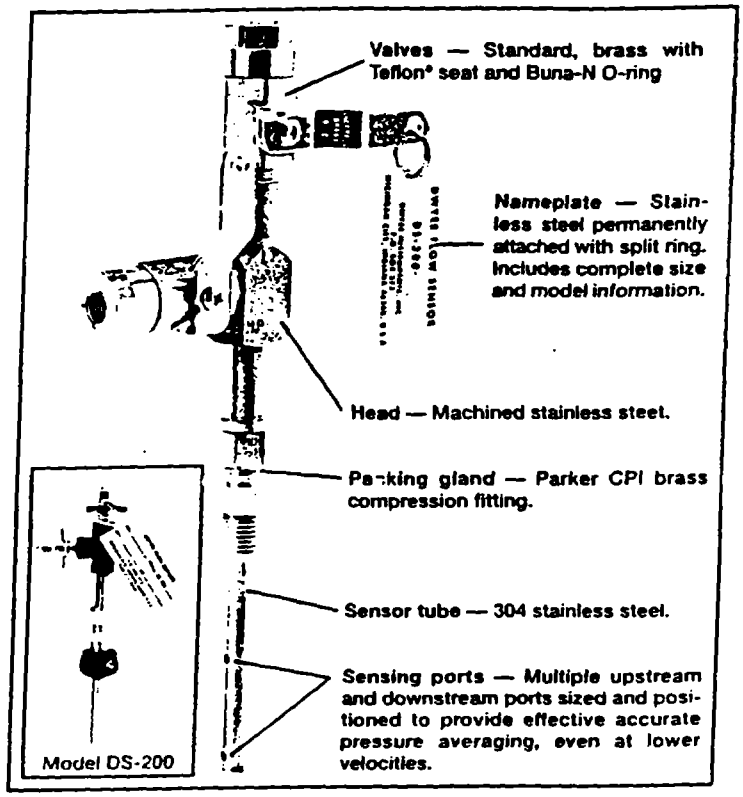

1119801 0298F

Model A-471 Portable Kit

The Dwyer Series 4000 Capsuhelic® differential pressure gage is ideally suited for use as a read-out device with the DS-300 Flow Sensors. The gage may be used on system pressures of up to 500 PSIG even when the flow sensor differential pressure to be read is less than 0.5" w.c. With accuracy of ±2% of full scale, the Capsuhelic® gage can be used in ambient temperatures from 32°F to 200°F. Zero and range adjustments are made from outside the gage. The standard gage with a die cast aluminum housing can be used with the flow sensor for air or oil applications. For water flow measurements, the optional forged brass housing should be specified. The Capsuhelic gage may be panel or surface mounted and permanently plumbed to the flow sensor if desired. The optional A-610 pipe mounting bracket allows the gage to be easily attached to any 1½"-2" horizontal or vertical pipe.

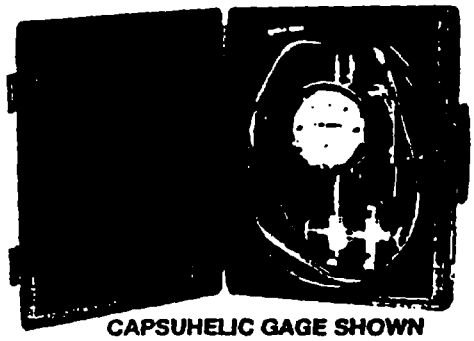

CAPSUHELIC GAGE SHOWN INSTALLED IN A-471 PORTABLE KIT

For portable operation, the A-471 Capsuhelic Portable Gage Kit is available complete with tough polypropylene carrying case, mounting bracket, 3-way manifold valve, two 10' high pressure hoses, and all necessary fittings. See Bulletin A-30-P for complete information on the Capsuhelic gage.

How To Order

Merely determine the pipe size into which the flow sensor will be mounted and designate the size as a suffix to Model DS-300. For example, a flow sensor to be mounted in a 2" pipe would be a Model No. DS-300-2".

Optional and Accessories

Less Valves (DS-300) — To order, add suffix -LV. Example: DS-300-2"-LV
A-160 Thredolet — ⅜" NPT, forged steel, 3000 psi
A-161 Bushing — ¼" x ⅜" brass bushing

For non-critical water and air flow monitoring applications, the chart below can be utilized for ordering a stock Capsuhelic* differential pressure gage for use with the DS-300 flow sensor. Simply locate the maximum flow rate for the media being measured under the appropriate pipe size and read the Capsuhelic* gage range in inches of water column to the left. The DS-300 sensor is supplied with installation and operating instructions, Bulletin F-50. It also includes complete flow conversion information for the three media conditions shown in the chart below. This information enables the user to create a complete differential pressure to flow rate conversion table for the sensor and differential pressure gage employed. Both the Dwyer Capsuhelic* gage and flow sensor feature excellent repeatability so, once the desired flow rate is determined, deviation from that flow in quantitative measure can be easily determined. You may wish to order the adjustable signal flag option for the Capsuhelic* gage to provide an easily identified reference point for the proper flow.

Capsuhelic* gages with special ranges and/or direct reading scales in appropriate flow units are available on special order for more critical applications. Customer supplied data for the full scale flow (quantity and units) is required along with the differential pressure reading at that full flow figure. Prior to ordering a special Capsuhelic* differential pressure gage for flow read-out, we recommend you request Bulletin F-50 to obtain complete data on converting flow rates of various media to the sensor differential pressure output. With this bulletin and after making a few simple calculations, the exact range gage required can easily be determined.

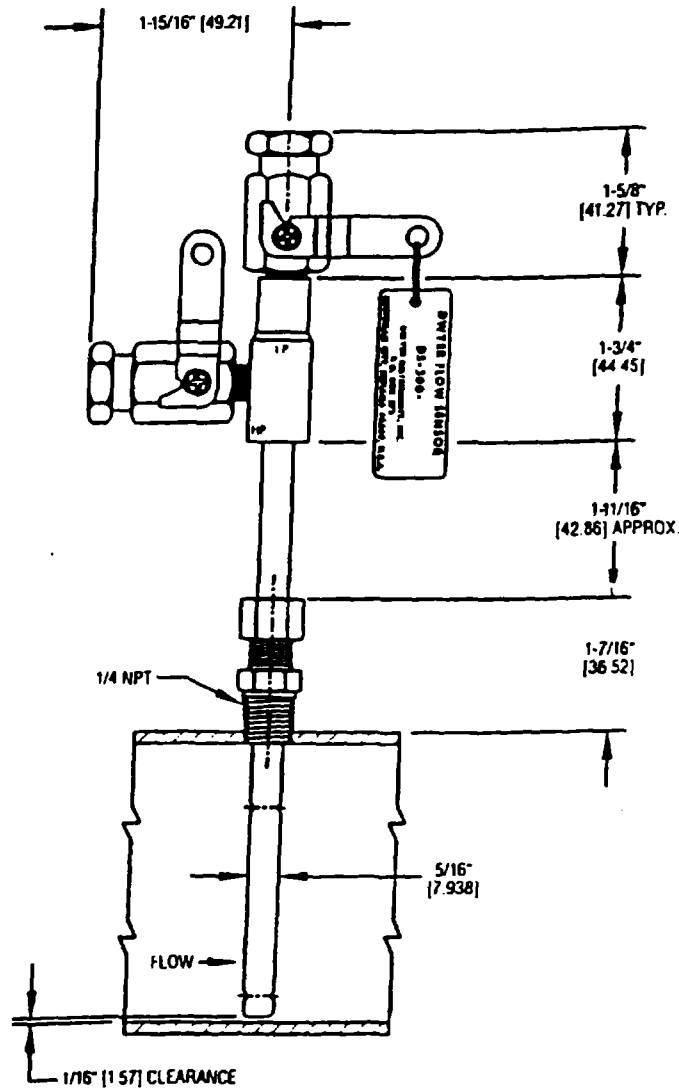

GAGE RANGE (IN. W.C.)	MEDIA @ 70°F	FULL RANGE FLOWS BY PIPE SIZE (APPROXIMATE)									
		1"	1¼"	1½"	2"	2½"	3"	4"	6"	8"	10"
2	Water (GPM)	4.8	8.3	11.5	20.5	30	49	86	205	350	560
	Air @ 14.7 PSIA (SCFM)	19.0	33.0	42.0	65.0	113	183	330	760	1340	2130
	Air @ 100 PSIG (SCFM)	50.0	90.5	120.0	210.0	325	510	920	2050	3600	6000
5	Water (GPM)	7.7	14.0	18.0	34.0	47	78	138	320	560	890
	Air @ 14.7 PSIA (SCFM)	30.0	51.0	66.0	118.0	178	289	510	1200	2150	3400
	Air @ 100 PSIG (SCFM)	83.0	142.0	190.0	340.0	610	820	1600	3300	5700	10000
10	Water (GPM)	11.0	19.0	25.5	45.5	67	110	195	450	800	1260
	Air @ 14.7 PSIA (SCFM)	41.0	72.0	93.0	163.0	250	410	725	1690	3040	4860
	Air @ 100 PSIG (SCFM)	120.0	205.0	275.0	470.0	740	1100	2000	4600	8100	15000
25	Water (GPM)	18.0	32.0	40.5	72.0	108	173	310	720	1250	2000
	Air @ 14.7 PSIA (SCFM)	63.0	112.0	155.0	255.0	390	640	1130	2630	4860	7700
	Air @ 100 PSIG (SCFM)	185.0	325.0	430.0	760.0	1200	1800	3300	7200	13000	22000
50	Water (GPM)	25.0	44.0	57.5	100.0	152	247	435	1000	1800	
	Air @ 14.7 PSIA (SCFM)	90.0	161.0	205.0	360.0	560	900	1600	3700	6400	
	Air @ 100 PSIG (SCFM)	260.0	460.0	620.0	1050.0	1700	2600	4600	10000	18500	
100	Water (GPM)	36.5	62.0	82.0	142.0	220	350	620	1500		
	Air @ 14.7 PSIA (SCFM)	135.0	230.0	300.0	505.0	800	1290	2290	5000		
	Air @ 100 PSIG (SCFM)	370.0	660.0	870.0	1500.0	2300	3600	6500	15000		

Series 604D

Minihelic® Differential Pressure Indicating Transmitter

Dial Gage Indication, 2, 3 or 4 Wire 4-20 mA Output

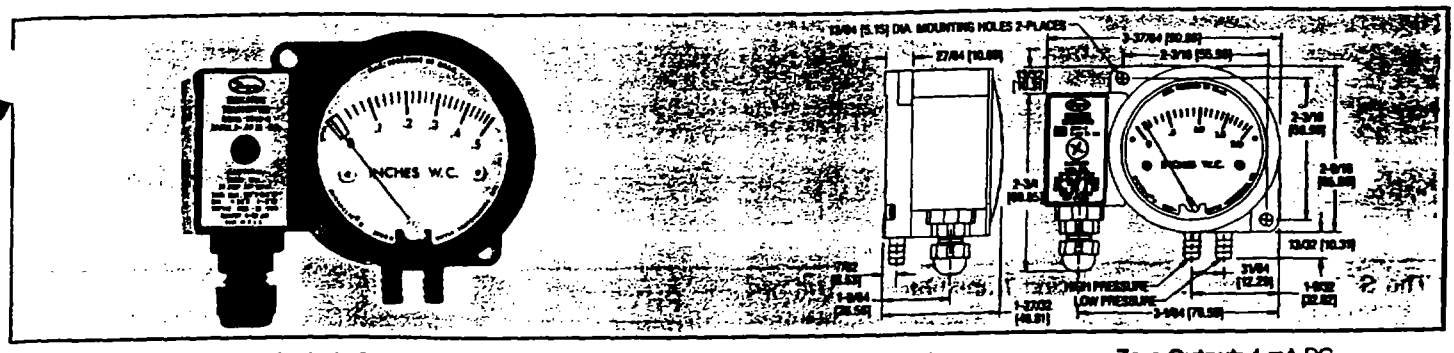

The Dwyer Series 604D Minihelic® Indicating Transmitter combines visual monitoring with electronic control of low differential air or compatible gas pressures. This versatile device is ideal for building HVAC systems where local indication is needed during maintenance checks or when troubleshooting the system. The transmitter design employs the latest silicon strain gage technology and operates in 2, 3 or 4 wire control loop circuits. Separate Zero and Span controls plus a 4-screw terminal strip are protected in a gasketed side enclosure. Cable gland fits .10 - .25" round cable. A 10-35 VDC or 16-26 VAC (4-wire only) power supply is required.

STOCKED MODELS

Model Number	Range Inches w.c.	Price	Model Number	Range Inches w.c.	Price
604D-0	0-0.5	$163.00	604D-10	0-10	$163.00
604D-1	0-1.0	163.00	604D-20	0-20	163.00
604D-2	0-2.0	163.00	604D-40	0-40	163.00
604D-3	0-3.0	163.00	604D-60	0-60	163.00
604D-5	0-5.0	163.00	604D-100	0-100	163.00

PHYSICAL DATA
Maximum Pressure: 30 psig (207 kPa) continuous, 50 psig (344 kPa) surge
Media Compatibility: Air & non-corrosive, non-combustible gases
Materials: Mineral and glass filled nylon housing, high impact acrylic cover, silicone rubber diaphragm
Power Supply: 10-35 VDC — 2, 3 or 4 wire; 16-26 VAC — 4 wire
Output Signal: 4-20 mA DC, limited at 38 mA DC
Loop Resistance: DC, 0-1300 ohms; AC, 0-1200 ohms
Current Consumption: DC, 38 mA max.; AC, 76 mA max.
Warm-Up Time: 10 minutes
PERFORMANCE AT 70°F (21.1°C)
Zero Output: 4 mA DC
Full Span Output: 20 mA DC
Accuracy, Gage: ±5% of full scale
Accuracy, Transmitter: ±2% of full span output (Includes linearity, hysteresis and repeatability)
Stability: ±1% F.S.O./yr
Operating Temperature: 20 to 120°F (-6.7 to 49°C)
Thermal Errors: ±1% per 50°F
Weight: 8 ounces (227 grams)
Span and Zero Controls: Internally accessible potentiometers
Pressure Connections: Barbed, for 3/16" (4-5 mm) I.D. tubing
Standard Accessories: Two #10 X 1" pan head sheet metal screws, one .050" hex allen wrench.

Series 605

Magnehelic® Differential Pressure Indicating Transmitter

Dial Gage Indication, Two-Wire 4-20 mA Output

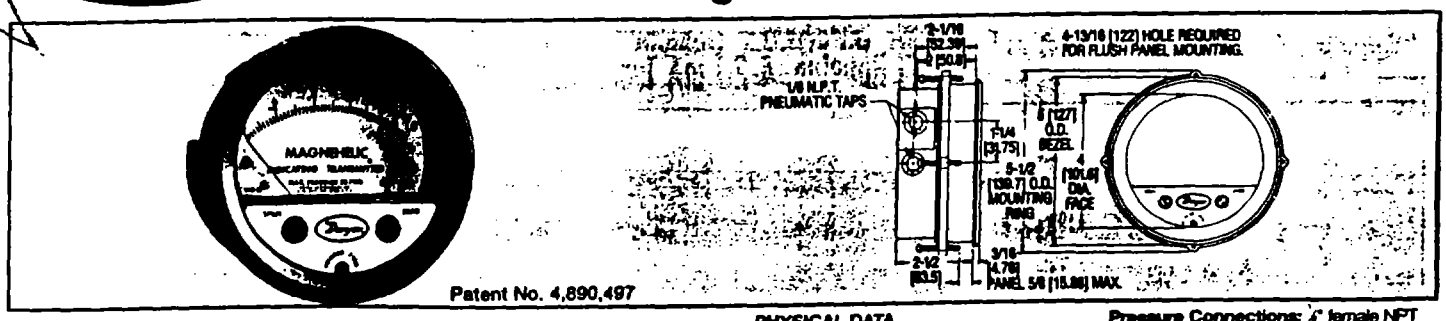

Patent No. 4,890,497

The Dwyer Series 605 Magnehelic® Indicating Transmitter provides for both visual monitoring and electronic control of very low differential pressure. The Series 605 is ideal for control applications in building HVAC systems where local indication is desired during routine maintenance checks or necessary when trouble shooting the system. The easily read dial gage is complemented by the two-wire, 4-20 mA control signal utilizing the time-proven Dwyer Magnehelic® gage mechanical design and Series 600 strain-gage transmitter technology. The two-wire design with terminal strip on the rear simplifies connection in any 4-20 mA control loop powered by a 12.3-35 VDC supply.

PHYSICAL DATA
Maximum Pressure: See chart.
Media Compatibility: Air & non-combustible, non-corrosive gases.
Power Supply: 10 to 35 VDC
Output Signal: 4 to 20 mA DC, 2 wire (limited at 38 mA max.)
Loop Resistance: 0-1250 ohms from 10 to 35 VDC
Current Consumption: 38 mA DC (max.)
Material: Die cast aluminum case, baked dark gray hammertoid finish, acrylic cover.
Weight: 25 lb.(1.14 kg).
Span and Zero adjustments: Protected potentiometers
Pressure Connections: 1/8" female NPT high and low pressure taps
PERFORMANCE AT 70°F
Zero output: 4 mA
Full span output: 20 mA
Accuracy (includes linearity, hysteresis, repeatability): See chart below.
Stability: ±1% F.S.O. /yr
Warm-up time: 10 minutes
Operating Temperature: 30° to 120°F
Thermal Error: ±1%/50°F typical (-1 to 49°C).
STANDARD ACCESSORIES: Span and zero adjust tool, mounting hardware kit.

STOCKED MODELS in bold

Model Number	Range in w.c.	Maximum Pressure	Electrical Accuracy +/-%	Mechanical Accuracy +/-%	Price	Model Number	Range in w.c.	Maximum Pressure	Electrical Accuracy +/-%	Mechanical Accuracy +/-%	Price
605-00N	.05-0-	25 psi (1.7 bar)	2	4	$208.50	**605-20**	0-20.0	20 psi (1.4 bar)	0.5	2	$186.50
605-11	.20	25 psi (1.7 bar)	2	3	208.50	**605-30**	0-30	20 psi (1.4 bar)	0.5	2	186.50
605-0	.25-0-.25	25 psi (1.7 bar)	2	2	186.50	**605-50**	0-50	20 psi (1.4 bar)	0.5	2	186.50
605-1	0-.50	10 in. w.c. (2.5 kPa)	0.5	2	186.50		**Range in Pa**				
605-2	0-1.0	5 psi (34.5 kPa)	0.5	2	186.50	**605-250 Pa**	0-250	25 psi (1.7 bar)	2	2	186.50
605-3	0-2.0	5 psi (34.5 kPa)	0.5	2	186.50	**605-500 Pa**	0-500	10 in. w.c. (2.5 kPa)	0.5	2	186.50
605-5	0-3.0	5 psi (34.5 kPa)	0.5	2	186.50		**Range in kPa**				
605-10	0-6.0	20 psi (1.4 bar)	0.5	2	186.50	**605-1.5 kPa**	0-1.5	5 psi (34.5 kPa)	0.5	2	186.50

MANUFACTURER'S PRODUCT SPECIFICATIONS

Heating, Lighting, and Ventilation

HAZARDOUS LOCATION ELECTRIC CONVECTION HEATERS

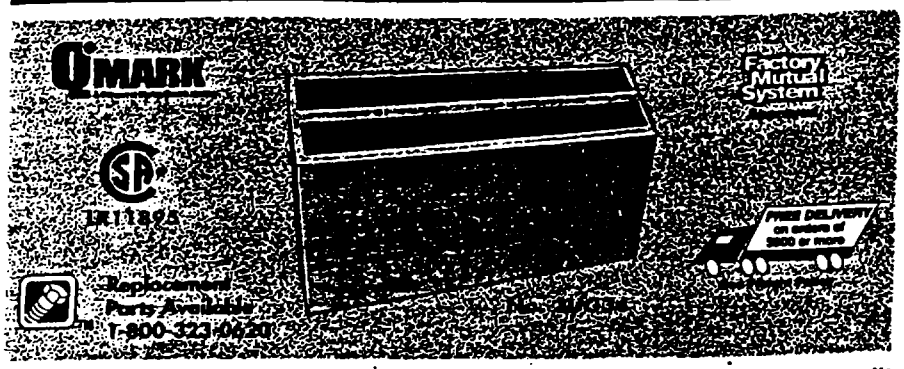

Certified for use in Class 1, Groups B, C and D, Division 1 and 2 atmosphere having ignition temperature code ratings down to 392°F (200°C, T3)

- **Sloped top cabinet prevents objects from being set on top and restricting airflow**
- **Easily mounted with brackets provided for wall installation**
- **Heavy gauge steel with epoxy paint finish for excellent corrosion resistance**

Designed for typical applications involving petroleum refineries and gasoline storage and dispensing areas, industrial firms that use flammable liquids in dip tanks for parts cleaning, petrochemical companies manufacturing chemicals, dry cleaning plants, utility and natural gas plants, aircraft hangers, fueling areas, and many other hazardous areas covered by these classifications.

A built-in automatic reset thermal limit for overtemperature protection. Contactors, where required, will be supplied by customer. Can be operated by a non explosion-resistant thermostat if the stat is in an area remote from the hazardous location.

Element—High quality, long-life finned tubular elements with high grade resistance wire embedded in MGO, centered in a heavy gauge diameter sheath with 1⅛"diameter fins.

Terminal Box—Explosion proof stainless steel terminal box included, with provision for rigid metallic conduit entry and ease of wiring.

Clearance—Must be installed a minimum of 8" from the floor to provide sufficient area for air flow into the bottom of the heater.

HAZARDOUS LOCATION ELECTRIC CONVECTION HEATERS

Voltage	Output Stat	Wattage	Phase	Amps	Number of Elements	Cabinet Size H x L x D (in.)	Gilbert Model	Stock No.	List	Each	Shpg. Wt.
T3 Temperature Rating (392° F)											
208	6140	1800	1	8.7	3	23 x 39 x 8	ICG18081A-N	3UG34	$1258.26	$973.50	65.0
240	6140	1800	1	7.5	3	23 x 39 x 8	ICG18041A-N	3UG33	1258.26	973.50	65.0
T2A Temperature Rating (536° F)											
208	12,280	3600	1	17.4	3	23 x 39 x 8	ICG36081A-N	3UG37	1687.37	1305.00	65.0
240	12,280	3600	1	15.0	3	23 x 39 x 8	ICG36041A-N	3UG35	1687.37	1305.00	65.0
480	12,280	3600	3	4.4	3	23 x 39 x 8	ICG36048SA-N	3UG36	1687.37	1305.00	65.0
T2 Temperature Rating (572° F)											
480	25,590	7500	3	9.1	3	23 x 67.5 x 8	ICG75048SA-N	3UG38	2587.80	1981.00	165.0

NATIONAL ELECTRICAL CODE CLASSIFICATIONS FOR HAZARDOUS LOCATIONS

Abbreviated descriptions of Classes, Groups and Divisions. Before selecting any heater for a particular application, refer to Article 500 of the National Electrical Code (NEC) as well as National Fire Prevention Association and ANSI standards for further information.

Class I

Equipment does not have surface operating temperature in excess of the ignition temperature of the specific gas or vapor.

Class II

Equipment does not have surface temperature greater than the ignition temperature of the specified dust.

Group B

Atmospheres such as but not limited to acrolein (inhibited) (2), arsine, butadiene (1), ethylene oxide (2), hydrogen, manufactured gases containing more than 30% hydrogen (by volume), propylene oxide (2) and propylnitrate.

Group C

Atmospheres such as but not limited to acetaldehyde, allyl alcohol, n-butyraldehyde, carbon monoxide, crotonaldehyde, cyclopropane, diethyl ether, diethylamine, epichlorohydrin, ethylene, ethylenimine, ethyl mercaptan, ethyl sulphide, hydrogen cyanide, hydrogen sulfide, morpholine, 2-nitropropane, tetrahydrofuran and unsymmetrical dimethyl hydrazine.

Group D

Atmospheres such as but not limited to acetone, alcohol, gasoline, lacquer solvent vapors, natural gas, propane or other gases or vapors of equivalent hazard.

Group E

Atmospheres containing combustible metal dust regardless of resistivity, or other combustible dust of similar hazard characteristics having resistivity of less than 10^5 OHM-Centimeter.

Group F

Atmospheres containing black, charcoal, coal, or coke dust.

Group G

Atmospheres containing combustible dust having resistivity of 10^5 OHM-Centimeter or greater.

Division I

A location in which ignitable concentrations of flammable material exist under normal operating conditions.

Division II

Locations in which flammable materials will normally be confined within closed containers and escape only in the case of accidental rupture, breakdown or during maintenance operations. Any equipment approved for Division I is automatically also approved for Division II.

For The Brands You Depend On, Call Grainger Today!

Fliteway Technologies, Inc.

P.O. Box 108 . 6901 Industrial Loop . Greendale, WI 53129
(414) 423-5600 . 1-800-238-3580 . FAX (414) 423-9007

Hazardous Location Lights - Series 1586

Class I Div. 2
Hazardous Location Lights

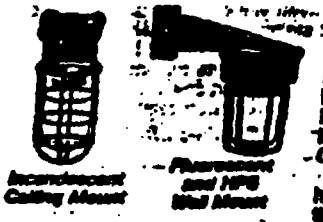

Incandescent Ceiling Mount — *Fluorescent and HPS Wall Mount*

Completely enclosed and gasketed lights withstand moisture, dirt, corrosion, and vibration. They have an epoxy finish, diecast aluminum housing, and stainless steel external hardware. Operate on 120 VAC. All lights are UL listed for Class I, Div. 2, Groups A, B, C, and D.

Ceiling mounts and wall mounts have four ¾" NPT conduit connections, except for incandescent ceiling mounts which have five. Pendant mount lights have one ¾" NPT conduit connection on top. Incandescent lights are for base-up use only. Bulbs sold separately. Fluorescent lights include bulbs. High-pressure sodium lights use medium base bulbs (sold separately). Fluorescent and high-pressure sodium lights are also UL listed Class II, Div. 1 and 2 and Class III. Meet NEMA 3 and 4X requirements.

Mount	Watts	Lg. x Wd.	
Incandescent (A21 Bulb Type)			
Ceiling	150	9⅛" x 4⅛"	1586K86
Wall	150	12" x 7⅛"	1586K87
Pendant	150	9⅛" x 4⅛"	1586K84
Incandescent (PS25 Bulb Type)			
Ceiling	300	12⅛" x 5⅛"	1586K46
Wall	300	18" x 7⅛"	1586K47
Pendant	300	12⅛" x 5⅛"	1586K44
Fluorescent (One 13-Watt Twin-Tube)			
Ceiling	13	13⅛" x 10"	14805K84
Wall	13	14⅛" x 15⅛"	14805K87
Pendant	13	11⅛" x 10"	14805K81
Fluorescent (Three 13-Watt Twin-Tube)			
Ceiling	39	13⅛" x 10"	14805K86
Wall	39	13⅛" x 10"	14805K89
Pendant	39	13⅛" x 10"	14805K83
High-Pressure Sodium (Medium Base)			
Ceiling	50	13⅛" x 10"	14945K25
Ceiling	100	13⅛" x 10"	14945K45
Wall	50	14⅛" x 15⅛"	14945K23
Wall	100	13⅛" x 10"	14945K43
Pendant	50	11⅛" x 10"	14945K21
Pendant	100	13⅛" x 10"	14945K41

Bulbs For	
Incandescent, A21 Bulb Type, 150 Watt	1586K22
Incandescent, PS25 Bulb Type, 300 Watt	8360K12
Fluorescent, 13-Watt Twin-Tube	1828K93
High-Pressure Sodium, Medium Base, 50 Watt	8293K56
High-Pressure Sodium, Medium Base, 100 Watt	8293K58

HAZARDOUS LOCATION EXHAUST FANS

Exhaust fans handle many atmospheres containing flammable, explosive vapors or gases. Air deliveries specified below are based on standard test codes of AMCA. Have spark resistant cast aluminum fan blade.

Powered by 1725 RPM, 115V, 60 Hz totally enclosed, hazardous location, ball bearing, split-phase motor, except No. 4C371 and No. 3C772 which have a 115/230V, 60 Hz, capacitor motor. All models have automatic reset thermal protection. Motors only are UL Listed, (E62643) for Class I, Group D and Class II, Groups E, F, and G hazardous locations. Not for use in other hazardous locations or where motor will accumulate paint residue. Built into heavy steel frame with ample mounting holes.

For intake guards complying with OSHA regulations see Index under Guards, Fan. Fan shipped assembled.

Propeller Dia. (in.)	No. Blades	CFM Air Delivery 0.0" SP	0.125" SP	0.250" SP	0.375" SP	Motor HP	Full-Loaded Amps	Volts 60 Hz	Dia. Opening Required (in.)	Stock No.	List	Each	Shpg. Wt.
12	4	855	645	330	175	1/4	4.5	115	13½	4C020	$672.17	$402.50	39.0
16	4	2000	1640	1260	750	1/4	4.5	115	17½	4C369	727.28	435.50	42.0
18	4	2210	1810	1300	800	1/4	4.5	115	19½	4C370	786.27	458.25	43.0
20	4	2475	1900	1350	850	1/4	4.5	115	21½	2C963	786.08	471.25	45.0
24	4	3636	2820	1720	1000	1/3	6.4	115	25½	2C856	979.45	586.50	47.0
24	4	4205	3320	2480	2310	1/2	9.8/4.6	115/230	25½	4C371	1113.06	666.50	60.0
30	6	7185	6000	6000	3600	3/4	9.8/4.8	115/230	31½	3C772	1230.70	737.00	48.0

CONDUIT BOX for HAZARDOUS LOCATION FAN MOTORS

For use on Dayton brand hazardous location fan motors above. Has hole for self-tapping grounding screw. Easily installed.

UL Listed. Gray finish.

No. 4X788. Shpg. wt. 1.6 lbs. List ..... $33.00.
Each $29.30

MANUFACTURER'S PRODUCT SPECIFICATIONS

Electrical Components

SERIES

XSD/XSX/ FXSD/FXSX Manual Motor Starting Switches

Class I, Div. 1 & 2, Groups C, D
Class II, Div. 1 & 2, Groups E, F, G
Class III
NEMA 7 C D, 9 E F G
NEMA 3 (Factory sealed type)

APPLICATIONS
- Provides manual starting and stopping of small AC or DC motors
- Motor running protection when overload heaters are used
- XSX/FXSX Series (without overload protection) are ideally suited for across-the-line applications where a positive disconnect means is required

FEATURES
- FXSX Series require no external seals (factory sealed) and are NEMA 3 (raintight) rated
- Enclosures are cast copper-free aluminum alloy
- Operating shaft is stainless steel coupled with a dichromate over cadmium plated steel trip arm to provide maximum strength and corrosion resistance
- Multiple gang assemblies available in combination with pilot lights, push-buttons and switches on request
- Ground flange joint between bolted cover and box provide required flame path
- Provisions for padlocking switch in either "ON" or "OFF" position is standard

DIMENSIONS
For dimensional data, see page 66.

FXS SERIES:

LISTED - FILE E53360 and/or E12379

CERTIFIED - FILE LR11714

FM – FILE 25219

See files for details or call Killark.

XSD, XSX, Series
Non Factory Sealed

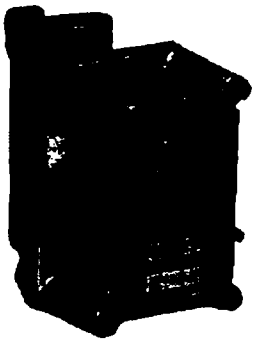

FXSD, FXSX Series
Factory Sealed

XSD/FXSD Series With Overload Protection①

Non-Factory Sealed:
Square D, Class 2510, Type F
1-Pole, 1HP, 115-230 VAC
2-Pole, 1HP, 115-230 VAC
¾ HP, 115-230 VAC

Factory Sealed (NEMA 3):
Square D, Class 2510, Type F
1-Pole, 1HP, 115-230 VAC
2-Pole, 1HP, 115-230 VAC
¾ HP, 115-230 VAC

XSD Single Gang Ordering Information

HUB STYLE	HUB SIZE	CATALOG NUMBER 1-POLE SINGLE PHASE	CATALOG NUMBER 2-POLE SINGLE PHASE
DEAD END	½	XSD11	XSD12
	¾	XSD21	XSD22
STRAIGHT THRU	½	XSD41	XSD42
	¾	XSD51	XSD52
COVER ASSEMBLY		XSD01	XSD02

FXSD Single Gang Ordering Information

HUB STYLE	HUB SIZE	CATALOG NUMBER 1-POLE SINGLE PHASE	CATALOG NUMBER 2-POLE SINGLE PHASE
DEAD END	½	FXSD11	FXSD12
	¾	FXSD21	FXSD22
STRAIGHT THRU	½	FXSD41	FXSD42
	¾	FXSD51	FXSD52
COVER ASSEMBLY		FXSD01	FXSD02

①Order heaters separately on page 66.

XSX/FXSX Series Without Overload Protection

Non-Factory Sealed:
Square D, Class 2510, Type K
2-Pole, 1 HP, 115 VAC
2 HP, 200-230 VAC
3 HP, 460-575 VAC
3-Pole, 2 HP, 115 VAC
3 HP, 200-230 VAC
5 HP, 460-575 VAC

Factory Sealed (NEMA 3):
Square D, Class 2510, Type K
2-Pole, 1 HP, 115 VAC
2 HP, 200-230 VAC
3 HP, 460-575 VAC
3-Pole, 2 HP, 115 VAC
3 HP, 200-230 VAC
5 HP, 460-575 VAC

XSX Single Gang Ordering Information

HUB STYLE	HUB SIZE	CATALOG NUMBER 2-POLE 30A., 250V 20A., 600V 1-PHASE	CATALOG NUMBER 3-POLE 30A., 250V 20A., 600V 3-PHASE
DEAD END	½	XSX12	XSX13
	¾	XSX22	XSX23
STRAIGHT THRU	½	XSX42	XSX43
	¾	XSX52	XSX53
COVER ASSEMBLY		XSX02	XSX03

FXSX Single Gang Ordering Information

HUB STYLE	HUB SIZE	CATALOG NUMBER 2-POLE 30A., 250V 20A., 600V 1-PHASE	CATALOG NUMBER 3-POLE 30A., 250V 20A., 600V 3-PHASE
DEAD END	½	FXSX12	FXSX13
	¾	FXSX22	FXSX23
STRAIGHT THRU	½	FXSX42	FXSX43
	¾	FXSX52	FXSX53
COVER ASSEMBLY		FXSX02	FXSX03

S E R I E S

XEDS
Disconnect Switches
3 Pole/Non-Fusible

Class I, Div. 1 & 2, Groups C, D
Class II, Div. 1 & 2, Groups E,F,G
Class III
NEMA 7 C D, 9 E F G

APPLICATIONS
XEDS Series disconnect switches and enclosures are suitable for:

- Hazardous areas due to the presence of flammable gases or vapors, combustible dusts or easily ignitable fibers or flyings
- Use in accordance with the NEC where a horsepower rated quick make-quick break disconnect means for a motor and its controller is permitted

FEATURES
(30-60-100-200 Amp Housing Styles)

- External handle is vault type with standard provisions for locking in "OFF" position with up to three padlocks
- Provisions for locking in "ON" position available as factory modification (add suffix SU-40 to catalog number)
- Enclosure and external handle is cast copper-free aluminum alloy
- Cover bolts are stainless steel
- Westinghouse Type-DS Switches are [illegible] in all 30, 60, 100 and 200 [illegible]pere assemblies
- Disconnect switches rated at 600 volts AC

(30-60-100 Amp Housing Styles Only)

- Two cast conduit hubs; one top and one bottom
- Internal disconnect handle mechanism is a sliding plate mounted to the cover

(200 Amp Housing Style Only)

- Two drilled and tapped conduit open[illegible]ings, one top and one bottom
- Custom drilled and tapped conduit openings available on any of the four sides. (See Conduit Opening Data Chart, page 26 of Section 2, or consult factory.)
- Drilled and tapped holes are provided with close-up plugs for field assembly of drain and breather
- Handle mechanism interlocks with disconnect switch to prevent opening of enclosure when in the "ON" position
- Aluminum hinges are supplied as standard on left side of all assemblies

LISTED - FILE E53290
CERTIFIED - FILE LR11714
See files for details or call Killark.

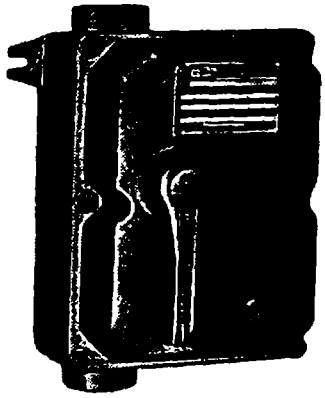

30-60-100 Amp Style

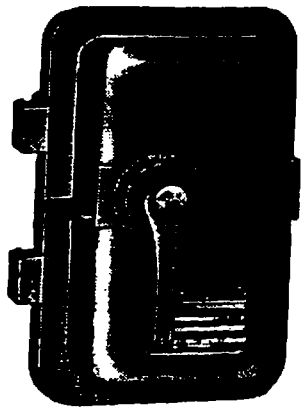

200 Amp Style

XEDS Ordering Information

SWITCH RATING	CATALOG NUMBER WITH SWITCH	WITH SWITCH AND AUXILIARY CONTACTS	ENCLOSURE ONLY (WITHOUT SWITCH OR AUXILIARY CONTACTS)
30 AMP	XEDS-30	XEDS-30A	XEDS-A
60 AMP	XEDS-60	XEDS-60A	XEDS-B
100 AMP	XEDS-100Φ	XEDS-100AΦ	XEDS-BΦ
200 AMP	XDS2003	XDS2003A	XDS000C

Φ Due to wire gutter space this unit must be wired with incoming (line) connection through the top hub and outgoing (load) connection to the bottom hub.

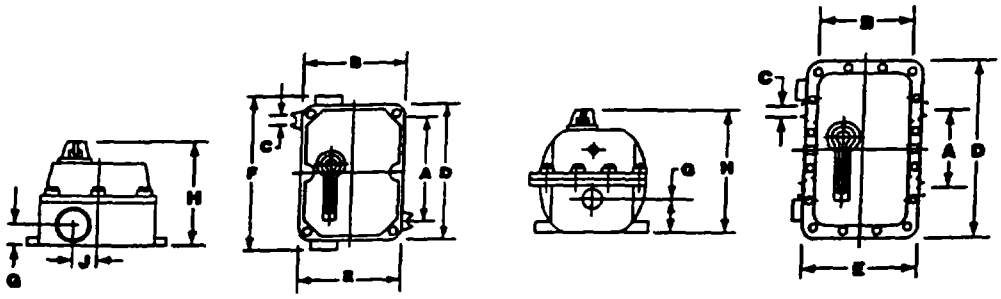

XEDS Dimensions

CATALOG NUMBER	A	B	C	D	E	F	G	H	J	HUB SIZE
XEDS-A	8¾	8¾	13/16	10¼	7¾	11 ¼	1¾	6¾	2	1¼
XEDS-B	10¾	9¾	13/16	13¾	7¾	16	1 ¾	7	2	2
XDS000C	14½	13¾	¼	22	15	—	3 ¼	12¾	—	3

XEDS Electrical Ratings

SWITCH AMPERES	MAXIMUM HORSEPOWER–THREE PHASE–3-POLE				
	120 VAC	240 VAC	480 VAC	600 VAC	250 VDC
30	5	10	20	25	7½
60	10	20	40	60	15
100	15	30	75	75	25
200	–	60	125	150	40

Auxiliary switch kits are available for separate control circuit applications. Each switch has one normally open and one normally closed contact. Each switch includes three soldered, identified leads. Rated 15 amps at 250 volts maximum. Contact factory.

APPENDIX H NOTES

The criteria used during compaction and moisture content testing was:

- **Compaction:** Minimum 95% of Proctor maximum dry density (110.8 pounds per cubic foot)

- **Moisture Content:** Zero to plus two percent (0 to +2% of the optimum moisture content (17.4%). Therefore, the criteria range was 17.4% to 19.4%.

The following should supercede information shown in the records included in this appendix:

1. Test No. 13, tested on 7/11/02, failed moisture content criteria and is, therefore, a failed test.
2. Test No. 16, tested on 7/12/02, failed moisture content criteria and is, therefore, a failed test.
3. The term "Pump Station" refers to the Off-Site Area Blower Shed.

APPENDIX H

Conveyance Piping Clay Compaction Testing Results

PATRICK ENGINEERING INC.

Project No.: 9349.A0	Tech: MG
Boring No.:	Date: 1/3/2002
Sample No.:	
Sample Description: Light Gray Silty Clay	

Atterberg Limits

Number Of Blows	35	26	20	12	12	LL=	37
Tare Number	40	86	99	76	4	PL=	16
Wt. of tare (g)	1.58	1.6	1.59	1.6	1.58	PI=	21
Wt. of wet soil&tare	11.19	10.64	11.55	10.09	9.7	USCS CLASS	CL
Wt. of dry soil&tare	8.67	8.2	8.8	7.64	7.37		
Moisture Content %	35.5	37	38.1	40.6	40.2		
One Point LL	37	37.2	37.1	37.1	36.8		
Avg.:							

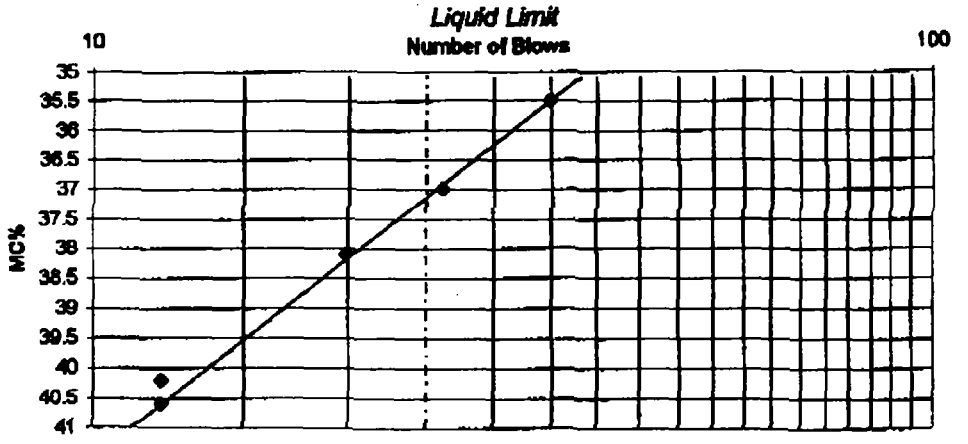

Plastic Limit

Tare Number	74	18	61	87			
Tare Weight (g)	1.57	1.52	1.53	1.56			
Wt. of wet soil&tare	2.21	1.96	2	2.15			
Wt. of dry soil&tare	2.12	1.9	1.93	2.07			
Moisture Content %	16.4	15.8	17.5	15.7			
Avg:							

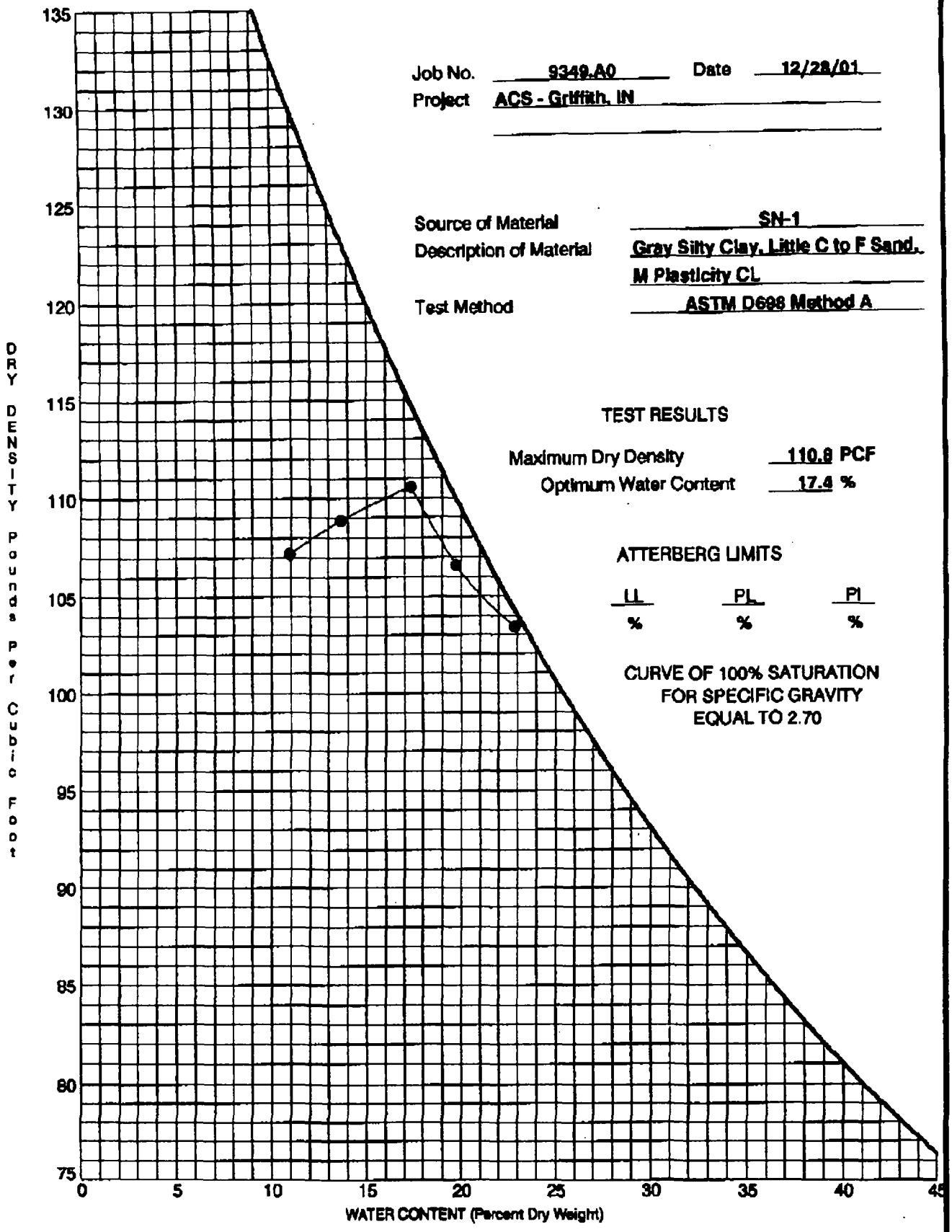

Job No. 9349.A0 Date 12/28/01

Project ACS - Griffith, IN

Source of Material SN-1

Description of Material Gray Silty Clay, Little C to F Sand, M Plasticity CL

Test Method ASTM D698 Method A

TEST RESULTS

Maximum Dry Density 110.8 PCF

Optimum Water Content 17.4 %

ATTERBERG LIMITS

LL	PL	PI
%	%	%

CURVE OF 100% SATURATION FOR SPECIFIC GRAVITY EQUAL TO 2.70

MOISTURE-DENSITY RELATIONSHIP

Patrick Engineering Inc.

Lisle, Illinois

NUCLEAR DENSITY TEST DATA

PATRICK ENGINEERING INC.

Project: American Chemical NPL Site, Griffith IN Job No: 9349.A0

Client: Heritage Industrial Services Date Tested: 07/11/02

Inspector: Alicia Hightower Page: 1 of 4

Density Standard: 2361 Moisture Standard: 529 Meter No.: #7

Test No.	Elev.	Lift Thick.	Location
1	Grade	12"	24' S of well 28
2	Grade	12"	28' S of well 28
3	Grade	12"	38' S of well 28
4	Grade	12"	50' S of well 28
5	Grade	12"	10' S of well 28
6	Grade	12"	Retest of test 5
7	Grade	12"	20' S of well 28
8	Grade	12"	14' SE of well 23
9	Grade	12"	40' SE of well 20
10	Grade	12"	20' SE of well 20

TEST DATA

Test No.	1	2	3	4	5	6	7	8	9	10
Soil No.	SN-1	SN-1	SN-1	SN-1	SN-1	SN-1	SN-1	SN-1	SN-1	SN-1
Probe Depth, in.	4	4	4	4	4	4	4	4	4	4
Time Interval, min.	1	1	1	1	1	1	1	1	1	1
Aver. Density Count	2198	2491	2442	2107	2651	2776	2458	2439	2417	2417
Aver. Moisture Count	141	186	207	192	186	166	217	201	212	215
Wet Density, pcf	132.3	125.6	126.5	134.2	122.4	121.2	126.1	126.6	127.0	127.0
Weight of Water, pcf	13.5	18.3	19.4	16.5	17.6	15.6	20.7	18.7	19.9	20.3
Dry Density, pcf	118.8	107.3	106.0	115.2	104.1	104.8	104.5	106.7	105.9	105.6
Moisture Content, %	11.4	17.1	19.4	16.5	17.6	15.6	20.7	18.7	19.9	20.3
Control Density, pcf	110.8	110.8	110.8	110.8	110.8	110.8	110.8	110.8	110.8	110.8
Opt. Moisture, %	17.4	17.4	17.4	17.4	17.4	17.4	17.4	17.4	17.4	17.4
% Compaction	107	97	96	104	94	95	94	96	96	95
Results	F	F	P	F	F	R:F	F	P	F	F

P: Test Passed F: Test Failed R: Retest of Failed Area

NUCLEAR DENSITY TEST DATA

PATRICK ENGINEERING INC.

Project: American Chemical NPL Site, Griffith IN Job No: 9349.A0

Client: Heritage Industrial Services Date Tested: 07/11/02

Inspector: Alicia Hightower Page: 2 of 4

Density Standard: 2361 Moisture Standard: 529 Meter No.: #7

Test No.	Elev.	Lift Thick.	Location
11	Grade	12"	40' S of well 20
12	Grade	12"	15' SE of well 25
13	Grade	12"	15' SE of well 25
14	Grade	12"	20' S of well 20
15	Grade	12"	30' SW of well 22
16	Grade	12"	20' NW of well 22
17	Grade	12"	22' S of well 28
18	Grade	12"	40' W of well 29
19	Grade	12"	40' S of well 23
20	Grade	12"	Retest of test 19

TEST DATA

Test No.	11	12	13	14	15	16	17	18	19	20
Soil No.	SN-1	SN-1	SN-1	SN-1	SN-1	SN-1	SN-1	SN-1	SN-1	SN-1
Probe Depth, in.	4	4	4	4	4	4	4	4	4	4
Time Interval, min.	1	1	1	1	1	1	1	1	1	1
Aver. Density Count	3034	2292	2477	2297	2335	2476	2471	2446	2617	2311
Aver. Moisture Count	204	194	202	202	210	198	205	201	194	205
Wet Density, pcf	115.3	129.9	125.8	129.7	128.8	125.9	125.9	126.5	123.0	129.4
Weight of Water, pcf	20.3	19.2	20.1	20.1	20.9	19.6	20.4	19.96	19.2	20.4
Dry Density, pcf	95.0	110.7	105.8	109.7	107.9	106.2	105.6	106.5	103.8	109.0
Moisture Content, %	21.3	17.3	19.9	18.3	19.4	18.5	19.3	18.7	18.5	18.7
Control Density, pcf	110.8	110.8	110.8	110.8	110.8	110.8	110.8	110.8	110.8	110.8
Opt. Moisture, %	17.4	17.4	17.4	17.4	17.4	17.4	17.4	17.4	17.4	17.4
% Compaction	86	100	96	99	97	96	95	96	94	98
Results	F	F	P	P	P	P	P	P	F	R:P

P: Test Passed F: Test Failed R: Retest of Failed Area

NUCLEAR DENSITY TEST DATA

PATRICK ENGINEERING INC.

Project: American Chemical NPL Site, Griffith IN Job No: 9349.A0

Client: Heritage Industrial Services Date Tested: 07/11/02

Inspector: Alicia Hightower Page: 3 of 4

Density Standard: 2361 Moisture Standard: 529 Meter No.: #7

Test No.	Elev.	Lift Thick.	Location
21	Grade	12"	20' NE of well 13
22	Grade	12"	18' W of well 26
23	Grade	12"	Retest of test 22
24	Grade	12"	30' S of well 40
25	Grade	12"	40' S of well 38
26	Grade	12"	12' S of well 41
27	Grade	12"	10' S of well 41
28	Grade	12"	5' S of well 41
29	Grade	12"	30' W of well 41
30	Grade	12"	Retest of test 29

TEST DATA

Test No.	21	22	23	24	25	26	27	28	29	30
Soil No.	SN-1	SN-1	SN-1	SN-1	SN-1	SN-1	SN-1	SN-1	SN-1	SN-1
Probe Depth, in.	4	4	4	4	4	4	4	4	4	4
Time Interval, min.	1	1	1	1	1	1	1	1	1	1
Aver. Density Count	2378	2640	2423	2581	2442	2507	2575	2401	2783	2507
Aver. Moisture Count	202	210	198	185	194	209	171	211	175	206
Wet Density, pcf	127.9	122.5	127.0	123.8	126.6	125.2	124.0	127.4	119.9	125.2
Weight of Water, pcf	20.1	20.9	19.6	18.2	19.2	20.8	16.7	21.0	17.2	20.5
Dry Density, pcf	107.9	101.6	107.4	105.6	107.4	104.4	107.3	106.4	102.8	104.7
Moisture Content, %	18.6	20.6	18.3	17.3	17.9	19.9	15.6	19.7	16.7	19.5
Control Density, pcf	110.8	110.8	110.8	110.8	110.8	110.8	110.8	110.8	110.8	110.8
Opt. Moisture, %	17.4	17.4	17.4	17.4	17.4	17.4	17.4	17.4	17.4	17.4
% Compaction	97	92	97	95	97	94	97	106	93	95
Results	P	F	R:P	F	P	F	F	F	F	R:F

P: Test Passed F: Test Failed R: Retest of Failed Area

NUCLEAR DENSITY TEST DATA

PATRICK ENGINEERING INC.

Project: American Chemical NPL Site, Griffith IN Job No: 9349.A0

Client: Heritage Industrial Services Date Tested: 07/11/02

Inspector: Alicia Hightower Page: 4 of 4

Density Standard: 2361 Moisture Standard: 529 Meter No.: #7

Test No.	Elev.	Lift Thick.	Location
31	Grade	12"	50' S of well 42
32	Grade	12"	15' S of well 41
33	Grade	12"	Retest of test 32
34	Grade	12"	12' S of well 40
35	Grade	12"	22' E of well 11
36	Grade	12"	40' SW of well 9

TEST DATA

Test No.	31	32	33	34	35	36				
Soil No.	SN-1	SN-1	SN-1	SN-1	SN-1	SN-1				
Probe Depth, in.	4	4	4	4	4	4				
Time Interval, min.	1	1	1	1	1	1				
Aver. Density Count	2319	2662	2394	2345	2535	2558				
Aver. Moisture Count	206	143	197	170	186	178				
Wet Density, pcf	128.1	127.4	127.6	128.8	123.5	124.3				
Weight of Water, pcf	19.8	13.7	19.5	16.6	18.3	17.5				
Dry Density, pcf	108.3	108.7	108.1	112.2	105.2	106.8				
Moisture Content, %	18.3	12.6	18.0	14.8	17.4	16.4				
Control Density, pcf	110.8	110.8	110.8	110.8	110.8	110.8				
Opt. Moisture, %	17.4	17.4	17.4	17.4	17.4	17.4				
% Compaction	98	98	98	101	95	96				
Results	P	F	R:P	F	P	F				

P: Test Passed F: Test Failed R: Retest of Failed Area

NUCLEAR DENSITY TEST DATA

PATRICK ENGINEERING INC.

Project: American Chemical NPL Site, Griffith IN Job No: 9349.A0

Client: Heritage Industrial Services Date Tested: 07/12/02

Inspector: TMK Page: 1 of 3

Density Standard: 2498 Moisture Standard: 686 Meter No.: 5

Test No.	Elev.	Lift Thick.	Location
1	Grade	12"	15' W of well 11
2	Grade	12"	25' W of well 9
3	Grade	12"	17' W of well 11
4	Grade	12"	50' W of well 11
5	Grade	12"	100' S of well 3
6	Grade	12"	30' N of well 6
7	Grade	12"	25' N of well 5
8	Grade	12"	15' N of well 1
9	Grade	12"	25' N of well 7
10	Grade	12"	15' N of well 8

TEST DATA

Test No.	1	2	3	4	5	6	7	8	9	10
Soil No.	SN-1	SN-1	SN-1	SN-1	SN-1	SN-1	SN-1	SN-1	SN-1	SN-1
Probe Depth, in.	4	4	4	4	4	4	4	4	4	4
Time Interval, min.	.25	.25	.25	.25	.25	.25	.25	.25	.25	.25
Aver. Density Count	3030	3257	3368	3064	3389	3007	3237	3301	3173	3164
Aver. Moisture Count	203	225	225	232	226	252	236	230	238	239
Wet Density, pcf	128.3	124.4	122.7	127.6	122.4	128.4	124.7	123.7	125.7	125.9
Weight of Water, pcf	16.4	18.4	18.4	19.0	18.5	20.8	19.9	18.8	19.5	19.6
Dry Density, pcf	111.8	106.1	105.1	108.6	105.9	107.7	105.4	104.9	106.2	106.3
Moisture Content, %	14.7	17.4	17.6	17.5	17.8	19.3	18.4	17.9	18.4	18.5
Control Density, pcf	110.8	110.8	110.8	110.8	110.8	110.8	110.8	110.8	110.8	110.8
Opt. Moisture, %	17.4	17.4	17.4	17.4	17.4	17.4	17.4	17.4	17.4	17.4
% Compaction	101	96	95	98	95	97	95	95	96	96
Results	F	P	R\P	P	P	P	P	P	P	P

P: Test Passed F: Test Failed R: Retest of Failed Area

NUCLEAR DENSITY TEST DATA

PATRICK ENGINEERING INC.

Project: American Chemical NPL Site, Griffith IN Job No: 9349.A0

Client: Heritage Industrial Services Date Tested: 07/12/02

Inspector: TMK Page: 2 of 3

Density Standard: 2498 Moisture Standard: 686 Meter No.: 5

Test No.	Elev.	Lift Thick.	Location
11	Grade	12"	35' W of well 32
12	Grade	12"	15' W of well 32
13	Grade	12"	20' W of well 33
14	Grade	12"	25' W of well 2035
15	Grade	12"	15' S of well 37
16	Grade	12"	10' S of well 39
17	Grade	12"	20' S of well 40
18	Grade	12"	15' W of well 32
19	Grade	12"	10' S of well 39
20	Grade	12"	15' E of well 13

TEST DATA

Test No.	11	12	13	14	15	16	17	18	19	20
Soil No.	SN-1	SN-1	SN-1	SN-1	SN-1	SN-1	SN-1	SN-1	SN-1	SN-1
Probe Depth, in.	4	4	4	4	4	4	4	4	4	4
Time Interval, min.	.25	.25	.25	.25	.25	.25	.25	.25	.25	.25
Aver. Density Count	3249	3794	3143	3365	3387	3698	3119	3342	3447	3068
Aver. Moisture Count	229	183	242	229	213	207	236	230	217	240
Wet Density, pcf	124.6	116.7	126.2	122.7	122.5	117.9	126.6	123.6	122.6	127.5
Weight of Water, pcf	18.7	14.6	19.9	18.7	18.3	16.8	19.6	17.9	18.6	19.7
Dry Density, pcf	105.8	102.1	106.3	105.0	105.2	101.2	107.3	105.7	106.0	107.8
Moisture Content, %	17.7	14.3	18.7	18.0	17.5	16.6	18.0	17.4	17.7	18.3
Control Density, pcf	110.8	110.8	110.8	110.8	110.8	110.8	110.8	110.8	110.8	110.8
Opt. Moisture, %	17.4	17.4	17.4	17.4	17.4	17.4	17.4	17.4	17.4	17.4
% Compaction	96	92	96	95	95	91	97	95	96	97
Results	P	F	P	P	P	P	P	R\P	R\P	P

P: Test Passed F: Test Failed R: Retest of Failed Area

NUCLEAR DENSITY TEST DATA

PATRICK ENGINEERING INC.

Project: American Chemical NPL Site, Griffith IN Job No: 9349.A0

Client: Heritage Industrial Services Date Tested: 07/12/02

Inspector: TMK Page: 3 of 3

Density Standard: 2498 Moisture Standard: 686 Meter No.: 5

Test No.	Elev.	Lift Thick.	Location
21	Grade	12"	20' W of Pump Station
22	Grade	12"	25' W of well 13

TEST DATA

Test No.	21	22								
Soil No.	SN-1	SN-1								
Probe Depth, in.	4	4								
Time Interval, min.	.25	.25								
Aver. Density Count	3213	3019								
Aver. Moisture Count	243	229								
Wet Density, pcf	125.1	128.3								
Weight of Water, pcf	20.0	18.7								
Dry Density, pcf	105.1	109.6								
Moisture Content, %	19.0	17.5								
Control Density, pcf	110.8	110.8								
Opt. Moisture, %	17.4	17.4								
% Compaction	95	99								
Results	P	P								

P: Test Passed F: Test Failed R: Retest of Failed Area

APPENDIX I

Conveyance Piping Material Specifications

- HDPE Pipe
- Miscellaneous Fittings
- Pipe Saddles

MANUFACTURER'S PRODUCT SPECIFICATIONS

HDPE Pipe

PERFORMANCE PIPE
A DIVISION OF CHEVRON PHILLIPS CHEMICAL COMPANY LP
2929 NORTH CENTRAL EXPRESSWAY, SUITE 300
P.O. BOX 83-3866
RICHARDSON, TEXAS 75083-3866 • 972/783-2888

October 18, 2001

Forrer Supply Co., Inc.
W194 N11811 McCormick Drive
P.O. Box 220
Germantown, WI 53022-0220
(262) 255-3030 Fax (262) 255-4064

This letter has been prepared at your request concerning Performance Pipe 1000 Series HDPE pipe and fittings.

Performance Pipe 1000 series pipe and fittings are manufactured from resins having a cell class of PE 345464C according to ASTM D3350. This is a high density, high molecular weight polyethylene resin that meets the criteria for a Type III piping material in accordance with ASTM D3350. Performance Pipe 1000 pipe has a Plastic Pipe Institute recommended hydrostatic basis of 1600 psi at 23°C and 800 psi at 60°C based on TR/3 as derived from ASTM D2837 test methodology.

The dimensional characteristics and pressure capabilities of Performance Pipe 1000 are established in accordance with the guidelines set forth in ASTM F714 for sizes 3" IPS and larger and D3035 for sizes smaller than 3" IPS. These standards are referenced in the print line and repeated every two feet along the entire length of pipe.

Sincerely,

Heath W. Casteel
Technical Services Engineer

PE 3408 Industrial Piping System
Pipe Data and Pressure Ratings Bulletin No. 301

Chevron Plexco

(Pipe weights are calculated in accordance with PPI TR-7) Average inside diameter calculated on using nominal OD and minimum wall plus 6% for use in estimating fluid flows. Actual ID will vary. When designing components to fit the pipe ID, refer to pipe dimensions and tolerances in applicable pipe specifications.

Pressure Ratings are for water at 73°F. For other fluids and service temperatures ratings may differ, refer to The Plexco/Spirolite Engineering Manual.

Pressure Rating		255 psi DR 7.3			200 psi DR 9.0			160 psi DR 11.0			130 psi DR 13.5			110 psi DR 15.5			
[redacted]	Nominal OD (in.)	Minimum Wall (in.)	Average ID (in.)	Weight LB/FT	Minimum Wall (in.)	Average ID (in.)	Weight LB/FT	Minimum Wall (in.)	Average ID (in.)	Weight LB/FT	Minimum Wall (in.)	Average ID (in.)	Weight LB/FT	Minimum Wall (in.)	Average ID (in.)	Weight LB/FT	[redacted]
[redacted]	1.660	0.227	1.179	0.44	[redacted]	1.270	0.37	[redacted]	1.340	0.31	[redacted]	1.399	0.28	[redacted]	1.433	0.23	[redacted]
[redacted]	1.900	0.260	1.349	0.58	[redacted]	1.453	0.49	[redacted]	1.533	0.41	[redacted]	1.601	0.34	[redacted]	1.639	0.30	[redacted]
[redacted]	2.375	0.325	1.686	0.91	[redacted]	1.815	0.76	[redacted]	1.917	0.64	[redacted]	2.002	0.53	[redacted]	2.051	0.47	[redacted]
[redacted]	3.500	0.479	2.485	1.98	[redacted]	2.675	1.65	[redacted]	2.826	1.39	[redacted]	2.951	1.15	[redacted]	3.021	1.02	[redacted]
[redacted]	4.500	0.616	3.194	3.27	[redacted]	3.440	2.74	[redacted]	3.633	2.30	[redacted]	3.794	1.90	[redacted]	3.885	1.67	[redacted]
[redacted]	5.375	0.736	3.815	4.66	[redacted]	4.109	3.90	[redacted]	4.338	3.27	[redacted]	4.531	2.72	[redacted]	4.639	2.40	[redacted]
[redacted]	5.563	0.762	3.948	5.00	[redacted]	4.253	4.16	[redacted]	4.490	3.50	[redacted]	4.690	2.91	[redacted]	4.802	2.57	[redacted]
[redacted]	6.625	0.908	4.700	7.09	[redacted]	5.065	5.93	[redacted]	5.349	4.97	[redacted]	5.584	4.13	[redacted]	5.720	3.64	[redacted]
[redacted]	7.125	0.976	5.056	8.20	[redacted]	5.446	6.87	[redacted]	5.751	5.75	[redacted]	6.006	4.78	[redacted]	6.150	4.21	[redacted]
[redacted]	8.625	1.182	6.119	12.01	[redacted]	6.594	10.06	[redacted]	6.963	8.42	[redacted]	7.270	7.00	[redacted]	7.446	6.16	[redacted]
[redacted]	10.750	1.473	7.627	18.66	[redacted]	8.219	15.62	[redacted]	8.679	13.09	[redacted]	9.062	10.87	[redacted]	9.279	9.59	[redacted]
[redacted]	12.750	1.747	9.046	26.25	[redacted]	9.746	21.97	[redacted]	10.293	18.42	[redacted]	10.749	15.30	[redacted]	11.005	13.47	[redacted]
[redacted]	13.375	1.832	9.491	28.69	[redacted]	10.225	24.17	[redacted]	10.797	20.26	[redacted]	11.274	16.83	[redacted]	11.545	14.83	[redacted]
[redacted]	14.000	1.918	9.934	31.64	[redacted]	10.701	26.49	[redacted]	11.301	22.20	[redacted]	11.802	18.44	[redacted]	12.086	16.24	[redacted]
[redacted]	16.000	2.192	11.353	41.34	[redacted]	12.231	34.61	[redacted]	12.915	29.00	[redacted]	13.489	24.09	[redacted]	13.812	21.21	[redacted]
[redacted]	18.000	2.466	12.772	52.31	[redacted]	13.760	43.79	[redacted]	14.532	36.69	[redacted]	15.174	30.46	[redacted]	15.539	26.85	[redacted]
[redacted]	20.000	2.740	14.191	64.57	[redacted]	15.289	54.05	[redacted]	16.146	45.30	[redacted]	16.860	37.64	[redacted]	17.265	33.13	[redacted]
[redacted]	22.000	3.014	15.610	78.15	[redacted]	16.818	65.41	[redacted]	17.760	54.82	[redacted]	18.544	45.56	[redacted]	18.992	40.09	[redacted]
[redacted]	24.000	[redacted]	17.029	92.99	[redacted]	18.346	77.85	[redacted]	19.374	65.24	[redacted]	20.231	54.22	[redacted]	20.718	47.72	[redacted]
[redacted]	26.000	[redacted]	18.449	109.15	[redacted]	19.875	91.35	[redacted]	20.988	76.58	[redacted]	21.917	63.63	[redacted]	22.445	56.02	[redacted]
[redacted]	28.000	[redacted]			[redacted]	21.405	105.96	[redacted]	22.606	88.79	[redacted]	23.603	73.76	[redacted]	24.171	64.94	[redacted]
[redacted]	30.000	[redacted]			[redacted]	22.934	121.62	[redacted]	24.219	101.94	[redacted]	25.289	84.68	[redacted]	25.898	74.56	[redacted]
[redacted]	32.000	[redacted]			[redacted]			[redacted]	25.833	115.99	[redacted]	26.976	96.35	[redacted]	27.622	84.88	[redacted]
[redacted]	34.000	[redacted]			[redacted]			[redacted]	27.447	130.92	[redacted]	28.660	108.60	[redacted]	29.349	95.53	[redacted]
[redacted]	36.000	[redacted]			[redacted]			[redacted]			[redacted]			[redacted]	31.075	107.40	[redacted]
[redacted]	42.000	[redacted]			[redacted]			[redacted]			[redacted]			[redacted]			[redacted]
[redacted]	48.000	[redacted]			[redacted]			[redacted]			[redacted]			[redacted]			[redacted]
[redacted]	54.000	[redacted]			[redacted]			[redacted]			[redacted]			[redacted]			[redacted]

* Industrial PE (polyethylene) pipe sizes are identified by IPS (iron pipe size) diameters which designate the nominal diameter for 12" IPS AND SMALLER PIPE, AND O.D. (outside diameter) for 14" IPS and larger pipe.

PLEXCO can produce to specialized pipe dimensions. Check with your PLEXCO sales office for availability of dimensions not listed.

† SUBJECT TO MINIMUM ORDER QUANTITIES, AND AVAILABILITY OF TOOLING.

© 1999 Chevron - Chemical Co.

MANUFACTURER'S PRODUCT SPECIFICATIONS

Miscellaneous Fittings

Plexco

Dimensions for Fabricated Fittings and End Connections

Bulletin 321

PLEXCO fittings are made from the same resin as PLEXCO EHMW PE 3408 Pipe. Mitered fittings are assemblies fused with angular cut pipe segments. Due to the configuration of mitered fittings, stresses are greater than those imposed on pipe of the same SDR.

PLEXCO offers two styles of fittings.

PLEXCO fully pressure rated fittings are produced from heavier wall pipe which provides the capability of design equal to the piping system. The fitting outlet ends are machined to the desired SDR.

PLEXCO reduced pressure rated fittings are produced from the same wall pipe and are rerated in accordance with industry practice. The pressure rating of these fittings is approximately 75% of straight pipe of the same SDR. Reduced pressure rated fittings are not available in all sizes and SDR's. Consult PLEXCO Bulletin No. 227, **High Density EHMW PE 3408 Industrial Pricing and Packaging Data** for availability.

MITERED ELL			22.5°	45°	67.5°	90°
SIZE	R	C	B	B	B	B
2"	13-1/8"	4"	4-1/4"	7"	10-3/8"	14-3/4"
3	13-5/8	4	4-3/8	7-1/4	10-3/4	15-1/4
4	14-1/4	5	5-1/2	8-1/2	12-1/8	16-7/8
6	15-1/4	6	6-5/8	10	13-3/4	18-7/8
8	16-1/4	6-1/2	7-3/8	10-7/8	15	20-3/8
10	17-1/4	6-1/2	7-5/8	11-1/4	15-5/8	21-3/8
12	19-1/2	8	9-1/4	13-1/2	18-1/2	24-7/8
14	21	8	9-3/8	13-7/8	19-1/4	26-1/4
16	24	8	9-5/8	14-3/4	20-7/8	28-7/8
18	27	8	9-3/4	15-5/8	22-1/2	31-3/8
20	30	8	10	16-1/2	24-1/8	34
22	33	8	10-1/4	17-1/4	25-5/8	36-5/8
24	36	8	10-3/8	18-1/8	27-1/4	39-1/4
28	42	14	16-3/4	25-7/8	36-1/2	50-3/8
30	45	14	17	26-5/8	38-1/8	53
32	48	14	17-1/8	27-1/2	39-3/4	55-5/8
36	54	14	17-5/8	29-1/4	42-7/8	60-7/8
42	63	21	25-1/8	38-3/4	54-3/4	75-5/8
48	72	21	25-3/4	41-1/4	59-1/2	83-1/2
54	81	21	26-3/8	43-3/4	64-3/8	91-1/4

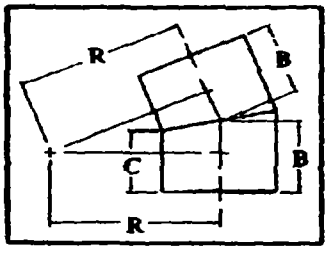

25.5° ELL—2 SEGMENT

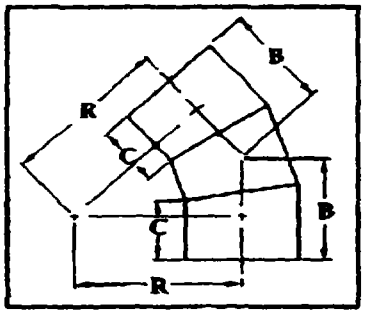

45° ELL—3 SEGMENT

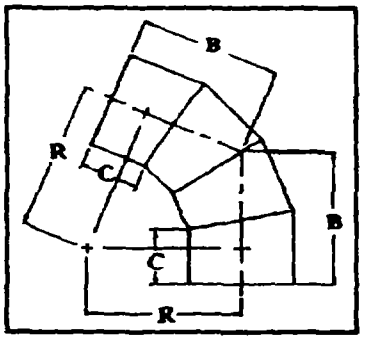

67.5° ELL—4 SEGMENT

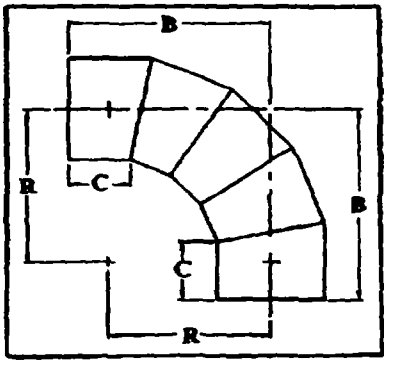

90° ELL—5 SEGMENT

Note: All dimensions are nominal and are not exact. Dimensions will vary slightly with temperature change. Applications requiring close dimensional tolerances should be reviewed before ordering fittings or accessories. Fabricated fittings are produced to order and are non-cancelable and non-returnable.

Chevron

Plexco

BULLETIN 320

Dimensions for Molded Fittings

PLEXCO® fittings are injection molded from the same high quality polyethylene resins as PLEXCO® Polyethylene Pipe, and meet the applicable requirements of ASTM D 2513. In addition, butt fittings meet the requirements of ASTM D 3261 while socket fittings conform to ASTM D 2683. All of the fittings in this bulletin are 100% injection molded.

All dimensions and weights are nominal with measurements taken at 73°F. This information is provided as reference data only, applications requiring close dimensional tolerances should be reviewed before ordering fittings.

All fittings available in PE2406 and PE3408.

MOLDED BUTT TEE

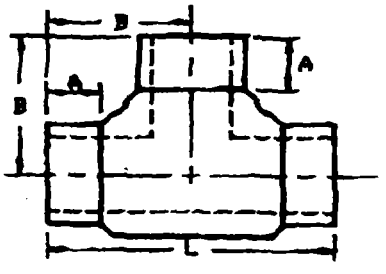

NOMINAL SIZE Butt Tee	SDR	DIMENSIONS-IN. A	B	L	PACKAGE QUANTITY	PACKAGE WEIGHT (lbs.)
1/2" CTS	7	1-3/4	2-7/8	5-3/4	10	0.7
1" CTS	11	1-3/4	3	6	10	1.3
3/4" IPS	11	1-3/4	3	6	10	1.2
1" IPS	11	1-3/4	3-1/8	6-1/8	10	1.8
1-1/4" IPS	9-11	3	4-1/2	9	10	5.0
1-1/2" IPS	11	3	4-3/8	8-3/4	10	6.2
2" IPS	7-9	2-7/8	5-1/8	10-1/4	10	14.0
2" IPS	11-17	2-7/8	5-1/8	10-1/4	10	10.0
3" IPS	9	3	6-1/8	12-1/4	4	14.0
3" IPS	11-21	3	5-3/4	11-1/2	4	8.8
4" IPS	9	3	6-3/4	13-1/2	4	20.0
4" IPS	11-21	3	6-1/4	12-1/4	4	15.2
6" IPS	9	4-1/4	8-5/8	17-1/4	1	13.0
6" IPS	11-32.5	4	8-1/4	16-1/4	1	10.0
8" IPS	11-32.5	6	12-1/8	24-1/4	1	27.5

BUTT 90° ELL

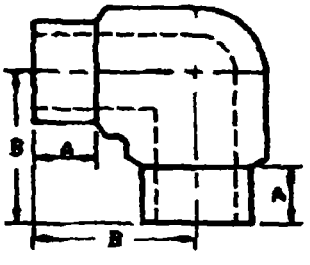

Butt 90 ELL	SDR	DIMENSIONS-IN. A	B	L	PACKAGE QUANTITY	PACKAGE WEIGHT (lbs.)
1/2" CTS	7	1-3/4	2-7/8	-	10	0.4
1" CTS	11	1-5/8	2-7/8	-	10	1.0
3/4" IPS	11	1-3/4	3	-	10	0.9
1" IPS	11	1-3/4	3	-	10	1.3
1-1/4" IPS	9-11	3	4-3/8	-	10	3.0
1-1/2" IPS	11	3	4-3/8	-	10	4.5
2" IPS	7-9	2-7/8	5	-	10	10.0
2" IPS	11-17	2-7/8	5	-	10	8.0
3" IPS	9	3	6	-	4	12.0
3" IPS	11-21	3	5-1/2	-	4	8.0
4" IPS	9	3	6-5/8	-	4	16.0
4" IPS	11-21	3	6	-	4	12.0
6" IPS	9	4	8-1/2	-	2	20.0
6" IPS	11-32.5	4	8	-	2	15.0
8" IPS	11-32.5	6	11-7/8	-	1	20.0

BUTT 45° ELL

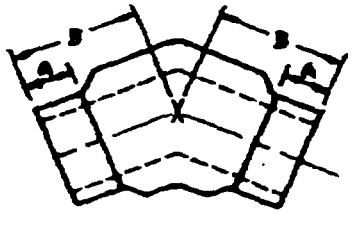

Butt 45 ELL	SDR	DIMENSIONS-IN. A	B	L	PACKAGE QUANTITY	PACKAGE WEIGHT (lbs.)
3" IPS	9-17	3	5-1/2	-	4	10.0
4" IPS	9	3	5-/12	-	4	12.0
4" IPS	11-21	3	5	-	4	10.0
6" IPS	9	4	7-1/4	-	2	17.0
6" IPS	11-32.5	4	8-1/4	-	2	12.0
8" IPS	11-32.5	6	10	-	1	16.5

Southwest Stainless, Inc.

...FOR ALL YOUR STAINLESS NEED

FLANGES

FLANGES – Generally conform to ASA B16.5 specifications for dimensions and ASTM-ASME A-182 for material specifications.

Now Stocking 14" – 24" 150# Large O.D. Flanges

Southwest Stainless, Inc.

ASA B16.5

ASA 150 POUND FORGED FLANGES

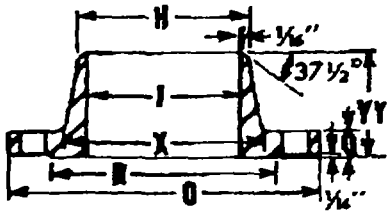

WELDED NECK

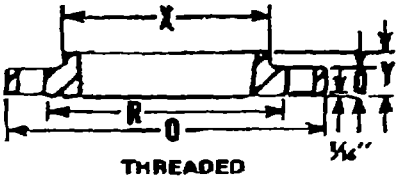

THREADED

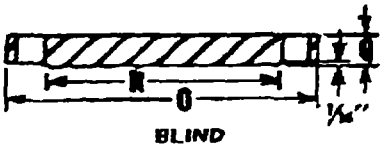

BLIND

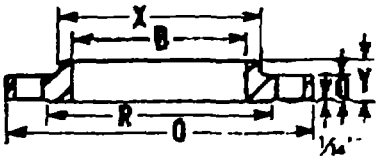

SLIP-ON

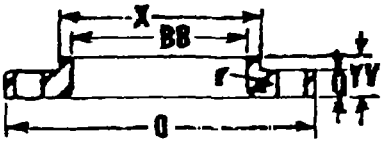

LAP JOINT

NOMINAL PIPE SIZE	COMMON DIMENSIONS						WELDING NECK			SLIP-ON THICKNESS	SLIP-ON	LAP JOINT		
	O	C*	R	I	NUMBER AND DIAMETER OF BOLT HOLES	BOLT CIRCLE	YY*	H	J*	Y*	B	T	Y	BB
½	3½	7/16	1⅜	1 3/16	4- ⅝	2⅜	1⅜	.84	.62	⅜	.88	⅛	⅝	.90
¾	3⅞	½	1 11/16	1½	4- ⅝	2¾	2 1/16	1.05	.82	⅝	1.09	⅛	⅝	1.11
1	4¼	9/16	2	1 15/16	4- ⅝	3⅛	2 3/16	1.32	1.05	11/16	1.36	⅛	1 5/16	1.38
1¼	4⅝	⅝	2½	2 5/16	4- ⅝	3½	2¼	1.66	1.38	13/16	1.70	3/16	1 3/16	1.72
1½	5	11/16	2⅞	2 7/16	4- ⅝	3⅞	2 7/16	1.90	1.61	⅞	1.95	¼	⅞	1.97
2	6	¾	3⅝	3 1/16	4- ¾	4¾	2½	2.38	2.07	1	2.44	5/16	1	2.46
2½	7	⅞	4⅛	3 9/16	4- ⅞	5½	2¾	2.88	2.47	1⅛	2.94	5/16	1⅛	2.97
3	7½	15/16	5	4¼	4- ¾	6	2¾	3.50	3.07	1 3/16	3.57	⅜	1 7/16	3.60
3½	8½	15/16	5½	4 13/16	8- ¾	7	2 13/16	4.00	3.55	1¼	4.07	⅜	1¼	4.10
4	9	15/16	6 3/16	5 5/16	8- ¾	7½	3	4.50	4.03	1 5/16	4.57	7/16	1 5/16	4.60
5	10	13/16	7 5/16	6 7/16	8- ⅞	8½	3½	5.56	5.05	1 7/16	5.66	7/16	1 7/16	5.69
6	11	1	8½	7 9/16	8- ⅞	9½	3½	6.63	6.07	1 9/16	6.72	½	1 9/16	6.75
8	13½	1⅛	10⅝	9 11/16	8- ⅞	11¾	4	8.63	7.98	1⅝	8.72	½	1⅝	8.75
10	16	1 3/16	12¾	12	12-1	14¼	4	10.75	10.02	1 13/16	10.88	½	1 15/16	10.92
12	19	1¼	15	14⅞	12-1	17	4½	12.75	12.00	2 3/16	12.88	½	2 3/16	12.92

Flanges conform to ASA B16.5.

* "A" raised face is included in thickness O and length through bolt Y, YY

* Unless otherwise specified Welding Neck Flanges in sizes 12" and smaller are bored to dimensions as listed to correspond to Schedule 40S pipe. Special bores on application. Sizes 14" and larger—bore to be specified by purchaser.

FLANGE ADAPTER

IPS	Length (C)		Flange Dia	Flange Thickness (T)			Radius
Size	7-9	11-32.5	B.	7 - 9	11 - 21	26 - 32.5	R
1-1/2"	6"	6"	3-1/8"	0.30"*	0.24"+	—	1/4"
2	6	6-1/4	3-3/4	0.38	0.24+	—	3/8
3	6	6-1/4	4-5/8	0.55	0.35^	—	3/8
4	6	7-1/8	6	0.71	0.45	0.45	1/2
6	8	7-3/8	8-1/4	1.05	0.67	0.67	1/2
8	8-5/8	6-1/2	10-3/8	1.36	0.87	0.87	1/2
10	8-3/4	7-1/2	12-3/4	1.69	1.08	1.08	1/2
12	9-1/4	9-1/4	15-1/2	2.01	1.28	1.28	1/2
14	12	12	17	2.20	1.40	1.28	1/2
16	12	12	19-1/2	2.52	1.61	1.28	1/2
18	12	12	20-1/4	2.83	1.80	1.28	1/2
20	12	12	23-1/8	3.15	2.00	1.28	1/2
22	12	12	25-1/4	3.46"	2.20	1.28	1/2
24	12	12	27-1/2	3.78"	2.40	1.28	1/2
28	14	14	32	4.40"	2.80	1.28	1/2
30	14	14	34	4.71"	3.00	1.28#	1/2
32	—	14	36-1/4	—	3.20-	1.36#	1/2
36	—	14	40-1/2	—	3.60-	1.53#	1/2
42	—	21	47-1/4	—	3.00-	1.78#	1/2
48	—	21	53-1/2	—	3.40-	2.04#	1/2
54	—	21	59-5/8	—	3.20@	2.29#	1/2

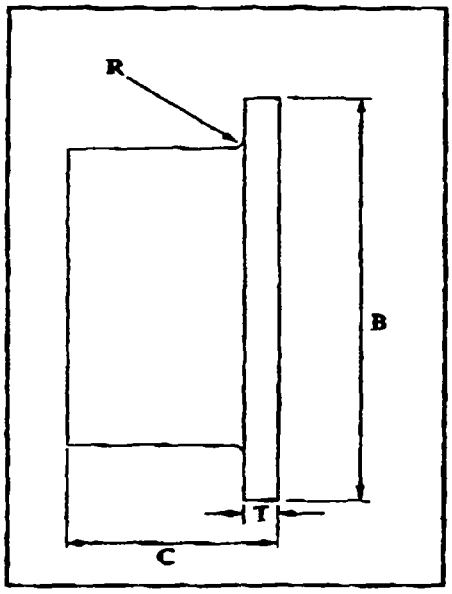

FLANGE ADAPTER

*DR 9 only
+DR 11 only
^DR 11 - 17 only
-DR 17 - 21 only
@DR 21 only
#DR 26 - 41

Note: Non-standard SDR's are available upon request.

Notes for Lap Joint Flanges:

This information may be used for determining hardware specifications.

AWWA C-207 Class D Flanges are inventoried in sizes 2" IPS thru 36" IPS.

2" - 12" convoluted stainless steel Lap Joint Flange and 4" - 12" Class 150 are inventoried. Stainless Steel, Epoxy Coated, Split Rings, Blind Flanges, and Ductile Iron are for special order only. Prices and lead times are available upon request. PLEXCO does not supply hardware for flanges.

This information may be used for determining hardware specifications.

BUPPSS—Stainless Steel Flange/Backup Ring

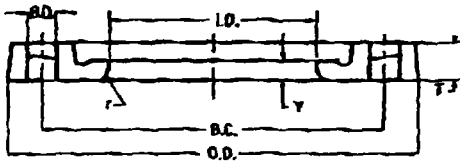

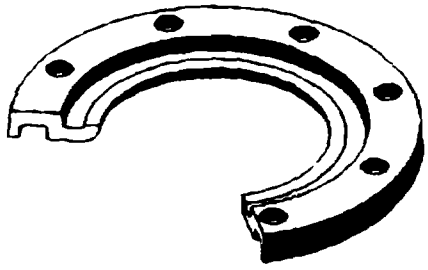

- **Description** Utilizes the patented IPP Deltaflex® flange cross section
- **Utilization** HDPE, stainless steel, and carbon steel stub-ends
- **Material** Cast in stainless steel ASTM A351CF8M (316), CF8 (304), tensile 70,000 psi; yield 30,000 psi; 30% elongation
- **Dimensions** Bolt circle is ANSI/B16.5 class 150. Mates with ANSI B16.5, B16.47, AWWA C207
- **Finish** As-cast to fully machined

Pipe Diameter	Product Code	Outside Dia. O.D.	Flange Thick. T	Inside Dia. I.D.	Y	Bolt Count N	Bolt Hole B.D.	Bolt Circle B.C.	Radius R	Weight (lbs/pc)	HDPE[1] Operating Pressure	Steel[2] Operating Pressure
1"	BUPPSS-316-0100	4.25	.40	1.38	0.3	4	0.62	3.12	0.06	.98	275	275
1.5"	BUPPSS-316-0150	5.00	.40	1.97	0.3	4	0.62	3.87	0.06	1.26	275	275
2"	BUPPSS-316-0200	6.00	.40	2.46	0.4	4	0.75	4.75	0.13	1.78	209	275
3"	BUPPSS-316-0300	7.50	.40	3.80	0.4	4	0.75	6.00	0.13	2.50	140	205
4"	BUPPSS-316-0400	9.00	.50	4.60	0.4	8	0.75	7.50	0.13	3.66	130	190
6"	BUPPSS-316-0600	11.00	.60	6.75	0.5	8	0.87	9.50	0.13	6.08	136	200
8"	BUPPSS-316-0800	13.50	.70	8.75	0.5	8	0.87	11.75	0.13	8.81	125	183
10"	BUPPSS-316-1000	16.00	.90	10.92	0.5	12	1.00	14.25	0.13	12.41	136	200
12"	BUPPSS-316-1200	19.00	1.05	12.92	0.6	12	1.00	17.00	0.25	20.86	115	168
14"	BUPPSS-316-1400	21.00	1.13	14.18	0.6	12	1.12	18.75	0.25	25.71	107	157
16"	BUPPSS-316-1600	23.50	1.25	16.19	0.6	16	1.12	21.25	0.25	31.71	94	138
18"	BUPPSS-316-1800	25.00	1.34	18.20	0.6	16	1.25	22.75	0.25	33.89	83	122
20"	BUPPSS-316-2000	27.50	1.47	20.25	0.6	20	1.25	25.00	0.25	40.77	75	110
22"	BUPPSS-316-2200	29.50	1.54	22.25	0.7	20	1.37	27.25	0.25	52.00	75	110
24"	BUPPSS-316-2400	32.00	1.60	24.25	0.8	20	1.27	29.50	0.25	59.14	63	93
26"	BUPPSS-316-2600	34.25	2.20	26.38	0.50	24	1.375	31.75	0.31	106	80	117
28"	BUPPSS-316-2800	36.50	2.30	28.38	0.50	28	1.375	34.00	0.31	117	80	117
30"	BUPPSS-316-3000	38.75	2.18	30.38	0.54	28	1.375	36.00	0.31	130	64	94
32"	BUPPSS-316-3200	41.75	2.36	32.38	0.56	28	1.625	85.00	0.31	158	64	94
36"	BUPPSS-316-3600	46.00	2.35	36.38	0.60	32	1.625	42.75	0.31	175	50	73
42"	BUPPSS-316-4200	53.00	2.48	42.38	0.60	36	1.625	49.50	0.31	235	40	58
48"	BUPPSS-316-4800	59.50	2.45	48.50	0.70	44	1.625	56.00	0.25	300	30	44
54"	BUPPSS-316-5400	66.25	2.80	54.62	0.70	44	1.375	62.75	0.19	380	30	44

1. Operating pressure on an HDPE stub-end with a safety factor of 2.
2. Operating pressure on a steel stub-end with a safety factor of 1.5.

2" & 3" Fls Gaskets -

Common Names	EPR, EPT, EPDM
Trade Names	Nordel, Epcar, Royalene, Epsyn, Vistalon
ASTM D-2000 Classification	CA
Chemical Definition	Ethylene Propylene
Durometer Range (Shore A)	30 - 90
Tensile Range (P.S.I.)	500 - 2500
Elongation (Max.%)	600
Compression Set	Good
Resilience - Rebound	Good
Abrasion Resistance	Good
Tear Resistance	Fair
Solvent Resistance	Poor
Oil Resistance	Poor
Low Temperature Usage (F°)	-20° to -60°
High Temperature Usage (F°)	to 350°
Aging Weather - Sunlight	Excellent
Adhesion to Metals	Fair to Good

Ethylene Propylene is a polymer with outstanding properties.

- exceptionally good weather aging and ozone resistance.
- excellent water and chemical resistance.
- excellent resistance to gas permeability.
- heat resistance excellent up to 350° F.
- oil and solvent resistance is poor, however, it is fairly good in ketones and alcohols.
- not recommended for food applications.
- some processing problems due to anti-tack property restrict roll co lating. but it is useable for molded rolls.

Southwest Stainless, Inc. ...FOR ALL YOUR STAINLESS NEE

STAINLESS STEEL PIPE

Southwest Stainless, Inc.

STANDARD STAINLESS STEEL TUBING

GENERAL CHARACTERISTICS

STAINLESS STEEL TYPES	CHEMICAL COMPOSITION PRINCIPAL ELEMENTS %				MECHANICAL PROPERTIES ANNEALED CONDITION - NOMINAL				TYPICAL CHARACTERISTICS
	CR	NI	C	OTHER ELEMENTS	TENSILE PSI	YIELD PSI	ELONG. % IN 2"	HARDNESS ROCKWELL	
304	18.00-20.00	8.00-11.00	0.08 max	—	85,000 105,000	35,000 75,000	55 20	B80 Ann B95 ½Hd	General purpose "300" series grade for tubing applications.
304L	18.00-20.00	8.00-13.00	0.035 max	—	80,000	30,000	55	B75	Low carbon type 304 where greater resistance to carbide percipitation is desired.
304N	18.00-20.00	8.00-11.00	0.04-0.10	—	85,000	35,000	55	B80	Carbon modified for improved high temperature strength.
310	24.00-26.00	19.00-22.00	0.15 max	—	95,000	45,000	45	B85	High resistance to scaling and oxidation up to 2000°F.
316	16.00-18.00	11.00-14.00	0.08 max	Mo 2.00-3.00	85,000	35,000	50	B80	Better corrosion resistance than type 304 in reducing media. Good hi-temp strength.
316L	16.00-18.00	10.00-15.00	0.035 max	Mo 2.00-3.00	75,000	30,000	60	B75	Low carbon type 316 where greater resistance to carbide percipitation is desired.
316H	16.00-18.00	11.00-14.00	0.04-0.10	Mo 2.00-3.00	85,000	35,000	50	B80	Carbon modified for improved temperature strength.
317	18.00-20.00	11.00-14.00	0.08 max	Mo 3.00-4.00	90,000	40,000	45	B85	Similar to type 316 but with better corrosion resistance and creep strength.
321	17.00-20.00	9.00-13.00	0.08 max	Ti 5XC-0.80	90,000	35,000	55	B80	Titanium stabilized against carbide precipitation. Similar properties to type 304
347	17.00-20.00	9.00-13.00	0.08 max	Cb + Ta 10XC-1.00	95,000	40,000	50	B85	Columbian and tantalum stabilized against carbide precipitation.

PHYSICAL PROPERTIES (Annealed)

TYPE	DENSITY LBS/CU. IN.	SPECIFIC ELECT. RESIST OHMS CM/CM²	SPECIFIC HEAT BTU/LB. DEG. F	THERMAL CONDUCT BTU/HR.SQFT./DEG. F (212°)	MEAN COEFFICIENT OF EXPANSION °F		TENSION PSI MODULUS OF ELASTICITY	MAGNETIC PRENEABILITY
					32-212	32-1200		
304 304L	0.29	72	0.12	9.4	9.6×10^{-6}	10.4×10^{-6}	28.0×10^{6}	1.003
310	0.29	78	0.12	8.2	8.8×10^{-6}	9.7×10^{-6}	29.0×10^{6}	1.003
316 316L	0.29	74	0.12	9.4	8.9×10^{-6}	10.3×10^{-6}	28.0×10^{6}	1.003
317	0.29	74	0.12	9.4	8.9×10^{-6}	10.3×10^{-6}	28.0×10^{6}	1.003
321	0.29	72	0.12	9.3	9.3×10^{-6}	10.7×10^{-6}	28.0×10^{6}	1.003
347	0.29	73	0.12	9.3	9.3×10^{-6}	10.6×10^{-6}	28.0×10^{6}	1.003
21-6-9	0.29	—	0.12	9.6	9.3×10^{-6}	—	28.5×10^{6}	1.002

The information and data presented herein are typical or average values and are not a guarantee of maximum or minimum values. Applications specifically suggested for material described herein are made solely for the purpose of illustration to enable the reader to make his own evaluation and are not intended as warranties, either express or implied, of fitness for these or other purposes.

Bolts.

GRADE-2

Description	A six-sided internally threaded fastener whose thickness is .875 D where D is the nominal nut size and 1.5D is their width across the flats, made from low carbon steel.
Applications/ Advantages	The most versatile and widely used nut design. Grade-2 nuts are for use with any low carbon bolt or screw that is not heat-treated, with a specified minimum tensile strength of 74,000 psi or less.
Material	[illegible]
Hardness	Rockwell B69 - C32
Proof Load	Coarse thread: 90,000 psi; Fine thread: 86,000 psi.
Finish	See Appendix-A for information on the plating of steel finished hex nuts.

STEEL HOT-DIP GALVANIZED

Description	A six-sided internally threaded fastener whose thickness is .875 D where D is the nominal nut size and 1.5D is their width across the flats, made from low carbon steel with a galvanic zinc coating.
Applications/ Advantages	Designed for use with low carbon bolts and screws with a specified minimum tensile strength of 74,000 psi or less, which are subjected to moisture, salt and other such corrosive conditions.
Material	Nuts shall be made from a low carbon steel which conforms to the following chemical composition requirements-- *Carbon*: 0.47% maximum; *Phosphorus*: 0.12% maximum; *Sulfur*: 0.23% maximum.
Hardness	Rockwell B69 - C32
Proof Load	Coarse thread: 88,000 psi; Fine thread: 89,000 psi.
Finish	See Appendix-A for information on the plating of steel finished hex nuts.

Bolts

STAINLESS STEEL, 18-8 & 316

Description	Six-sided internally threaded fasteners whose thickness is .875 D where D is the nominal nut size and 1.5D is their width across the flats, made from austenitic alloys as described below.
Applications/ Advantages	Designed for use with stainless steel bolts and screws with a specified minimum tensile strength equal to or less than the specified proof stress of the mating nut. Both types of stainless are corrosion resistant with 316 stainless having greater such resistance as well as superior strength at raised temperatures.
Material	18-8: Nuts shall be made from one of the following austenitic alloys: 303, 303Se, 304, XM7, all of which are characterized as having a chromium content of 18% and nickel content of 8-10%. 316: Nuts shall be made from 316 stainless steel, an austenitic alloy which differs from 18-8 by its molybdenum content (2-3%) and a higher nickel content (10-14%).
Heat Treatment	The austenitic alloys develop their strength through work hardening during the fastener manufacturing process, as seen from the hardness properties below. The only heat treatment normally available on austenitic stainless alloys is annealing, which is done at approximately 1900°F to a dead soft condition and is not normally thermally reversible.
Hardness	1/4 through 5/8: Rockwell B95 - C32; 3/4 through 1": Rockwell B88 - C32
Proof Load	1/4 through 5/8: 100,000 psi.; Fine thread: 85,000 psi.

Cap Screw.

	washer face on the bearing surface.
Applications/ Advantages	Economical for use in non-critical applications where the fastener is not subject to extreme temperatures or stress beyond the limits listed herein.
Material	AISI 1008 - 1050 or equivalent steel.
Hardness	1/4 through 3/4 in. diameter, 6 in. and shorter in length: Rockwell 070 - B100 1/4 through 3/4 in. diameter, over 6 in. in length: Rockwell 070 - B100 7/8 through 1-1/2 in. diameter, all lengths: Rockwell B70 - B100.
Proof Load	[illegible] 7/8 through 1-1/2 in. diameter, all lengths: 33,300 psi.
Yield Strength*	1/4 through 3/4 in. diameter, 6 in. and shorter in length: 57,900 psi. minimum. 1/4 through 3/4 in. diameter, over 6 in. in length: 36,000 psi. minimum. 7/8 through 1-1/2 in. diameter, all lengths: 36,000 psi. minimum.
Tensile Strength*	1/4 through 3/4 in. diameter, 6 in. and shorter in length: 74,000 psi. minimum. 1/4 through 3/4 in. diameter, over 6 in. in length: 60,000 psi. minimum. 7/8 through 1-1/2 in. diameter, all lengths: 60,000 psi. minimum
Elongation	18% minimum (all diameters)
Reduction of Area	35% minimum (all sizes)
Plating	See Appendix-A for plating information

HEX CAP SCREW--STAINLESS STEEL, 18-8 & 316

	18-8 and 316 stainless steel cap screws are both made from austenitic alloys as described below.
Applications/ Advantages	18-8: Used in products that require general atmospheric corrosion resistance, such as chemical and food-processing equipment. Some chemical environments may require special corrosion resistant materials and precautions. 316: The molybdenum content gives this type of stainless even greater corrosion resistance than 18-8 as well as superior strength at high temperatures.
Material	18-8: A cap screw made from one of the following austenitic alloys: 303, 303Se, 304, XM7, all of which are characterized as having a chromium content of (7-19% and nickel content of 8-19%. 316: A cap screw made from 316 stainless steel, an austenitic alloy which differs from 18-8 by its molybdenum content (2-3%) and a higher nickel content (10-14%).
Heat Treatment	The austenitic alloys develop their strength through work hardening during the fastener manufacturing process, as seen from the hardness properties below. The only heat treatment normally available on austenitic stainless alloys is annealing, which is done at approximately 1900°F to a dead soft condition and is not normally thermally reversible.
Hardness	1/4 through 5/8 in. diameter: Rockwell B95 - C32 3/4 through 1 in. diameter: Rockwell B80 - C32
Tensile Strength	1/4 through 5/8 in. diameter, 2.25D and longer: 65,000 psi. minimum 3/4" (2.25D & longer) & 7/8 through 1 in. diameter (3D & longer): 45,000 psi. minimum
Shear Strength	1/4 through 5/8 in. diameter, 2.25D and longer: 100,000 - 150,000 psi. 3/4" (2.25D & longer) & 7/8 through 1 in. diameter (3D & longer): 85,000 - 140,000 psi.

MANUFACTURER'S PRODUCT SPECIFICATIONS

Pipe Saddles

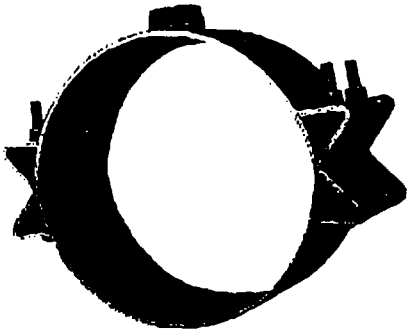

JCM 418 FABRICATED THREADED OUTLET &
JCM 438 STAINLESS STEEL THREADED OUTLET
Tapping Sleeve
Typical Specification

JCM 418 FABRICATED THREADED OUTLET TAPPING SLEEVE

Service fittings shall be the high strength type fabricated of ASTM 283 Grade C Steel or ASTM A-36, which conforms to and reinforces the pipe. Sleeve shall be minimum 8" wide and be sized to fit and reinforce the pipe circumference.

Sleeve outlet shall have a minimum 3/4" wide Buna-N gasket recessed in a machined groove around the threaded outlet.

Service fitting shall be furnished with a corrosion resistant shop coat paint primer with high strength, low alloy corrosion resistant bolts and nuts (AWWA C-111, ANSI 21.11). Optional Fusion Applied Epoxy Coating (AWWA C-213) and stainless steel bolts and nuts available.

Service fittings shall be JCM 418 Threaded Outlet Tapping Sleeve or approved equal.

JCM 438 STAINLESS STEEL THREADED OUTLET TAPPING SLEEVE

Service fittings shall be the high strength Stainless Steel 18-8 Type 304, which conforms to and reinforces the pipe. Sleeve shall be minimum 8" wide and be sized to fit and reinforce the pipe circumference.

Sleeve outlet shall have a minimum 3/4" wide Buna-N gasket recessed in a machined groove around the threaded outlet.

Service fitting shall be furnished with 18-8 Type 304 stainless steel bolts, nuts and washers.

Service fittings shall be JCM 438 Stainless Steel Threaded Outlet Tapping Sleeve or approved equal.

JCM 438 All Stainless Steel Threaded Outlet Tapping Sleeve

For taps and connections on larger pipe, thin wall pipe and pipe requiring extra reinforcement in corrosive or aggressive conditions.

The JCM 438 All Stainless Steel Threaded Outlet Tapping Sleeve is especially recommended for aggressive or acidic conditions. The heavy gasket section and full sleeve support of this fitting offer much more stability, pipe reinforcement and strength than a strapped saddle, yet they are competitively priced. Readily available for pipe 4" and larger requiring IPS outlets of 3/4" through 4", these sleeves are furnished with shop coat and alloy bolts. Epoxy coating and stainless steel bolts are available at an additional charge.

How To Order

1. Determine O.D. of pipe and outlet size.
2. Check listing to determine order number. If size is not listed, order by pipe O.D. size.

EXAMPLE:
For 24" Cast Iron with 25.80 O.D. with 3"IP outlet, order: 438-2580 x 17IP

438 ALL STAINLESS STEEL THREADED OUTLET TAPPING SLEEVE (IPS Outlet)

4	4.50	438-0450 X –			21
	4.80	438-0480 X –			21
6	6.63	438-0663 X –			23
	6.90	438-0690 X –			23
8	8.63	438-0863 X –			31
	9.05	438-0905 X –			33
10	10.75	438-1075 X –			38
	11.10	438-1110 X –			40
12	12.75	438-1275 X –			48
	13.20	438-1320 X –			51
14	14.59 - 15.08	438-1475 X –			54
	15.23 - 15.80	438-1530 X –			57
	16.30 - 16.73	438-1650 X –			60
16	17.33 - 17.87	438-1740 X –			64
	18.62 - 19.19	438-1875 X –			68
18	19.41 - 20.01	438-1950 X –			72
	20.93 - 21.57	438-2130 X –			77
20	21.51 - 22.15	438-2160 X –			80
	23.46 - 24.16	438-2400 X –			87
24	25.71 - 26.41	438-2580 X –			95
	28.14 - 28.84	438-2834 X –			104
30	31.82 - 32.22	438-3200 X –			115
36	38.10 - 38.75	438-3830 X –			139
42	44.10 - 44.70	438-4450 X –			160
48	50.40 - 51.00	438-5080 X –			183
54	56.60 - 57.25	438-5710 X –			205

OTHER SIZES AVAILABLE UPON REQUEST.

3/4"	06
1"	08
1-1/4"	10
1-1/2"	12
2"	14
2-1/2"	16
3	17
4	18

Available Options for JCM 438:

- With CC Threaded Outlet (additional charge).

subject to change without notice.

APPENDIX J

Thermal Oxidizer/Scrubber System Equipment and Material Specifications

- Influent Pressure Gauge
- Influent Flow Sensor and Gauge
- Actuators for Damper Assembly
- Process Blower
- Combustion Chamber Refractory
- Combustion Chamber Insulation
- Temperature Controller
- Burner
- Combustion Blower
- Flame Detector
- Thermocouples
- Spray Nozzles
- Recirculation Pump
- Mist Eliminator
- Scrubber Sump Level Monitor
- Recirculation Flow Meter
- Caustic Metering Pump
- Conductivity Analyzer and Probe
- pH Analyzer and Probe
- Programmable Logic Controller
- Variable Frequency Drive
- Chart Recorder
- Relays
- Purge Timer
- Alarm Horn

MANUFACTURER'S PRODUCT SPECIFICATIONS

Influent Pressure Gauge

Series 2000 Magnehelic® Differential Pressure Gages

Indicate low air or gas pressures-positive, negative or differential. Accurate within 2%. 81 Ranges.

Service Manual

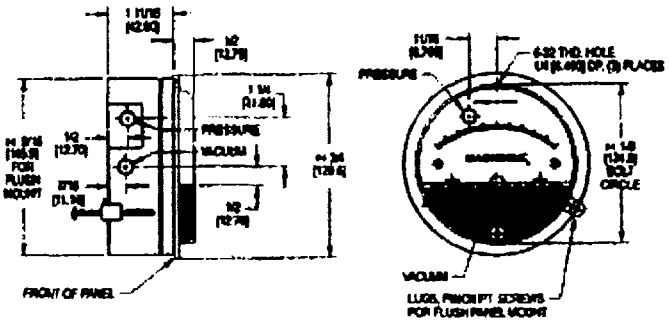

Dimensional Enlargement

Select the Dwyer Magnehelic gage for high accuracy--guaranteed within 2% of full scale--and for the wide choice of 81 models available to suit your needs precisely. Using Dwyer's simple, frictionless Magnehelic movement, it quickly indicates low air or non-corrosive gas pressures--either positive, negative (vacuum) or differential. The design resists shock, vibration and over-pressures. No manometer fluid to evaporate, freeze or cause toxic or leveling problems. It's inexpensive, too.

The Magnehelic is the industry standard to measure fan and blower pressures, filter resistance, air velocity, furnace draft, pressure drop across orifice plates, liquid levels with bubbler systems and pressures in fluid amplifier or fluidic systems. It also checks gas-air ratio controls and automatic valves, and monitors blood and respiratory pressures in medical care equipment.

MOUNTING. A single case size is used for most models of Magnehelic gages. They can be flush or surface mounted with standard hardware supplied. With the optional A-610 Pipe Mounting Kit they may be conveniently installed on horizontal or vertical 1 1/4" - 2" pipe. Although calibrated for vertical position, many ranges above 1 inch may be used at any angle by simply re-zeroing. However, for maximum accuracy, they must be calibrated in the same position in which they are used. These characteristics make Magnehelic gages ideal for both stationary and portable applications. A 4 9/16" hole is required for flush panel mounting. Complete mounting and connection fittings plus instructions are furnished with each instrument.

VENT VALVES

In applications where pressure is continuous and the Magnehelic gage is connected by metal or plastic tubing which cannot be easily removed, we suggest using Dwyer A-310A vent valves to connect gage. Pressure can then be removed to check or re-zero the gage.

HIGH AND MEDIUM PRESSURE MODELS

Installation is similar to standard gages except that a 4 13/16" hole is needed for flush mounting. The medium pressure construction is rated for internal pressures up to 35 psig and the high pressure up to 80 psig. Available for all models. Because of larger case size, the medium pressure and high pressure models will not fit in a portable case. Weight 1 lb., 10 oz. (Installation of the A-321 safety relief valve on standard Magnehelic gages often provides adequate protection against infrequent overpressure; see Bulletin S-101).

PHYSICAL DATA

Ambient temperature range: 20° to 140° F.*
Rated total pressure: -20" Hg. to 15 psig.+
Overpressure: Relief plug opens at approximately 25 psig
Connections: 1/8"' female NPT high and low pressure taps duplicated - one pair side and one pair back.
Housing: Exterior finish is coated gray to withstand 168 hour salt spray test. Die cast aluminum. Case and aluminum parts Iridite-dipped.
Accuracy: Plus or minus 2% of full scale (3% on - 0 and 4% on - 00 ranges), throughout range at 70°F (21°C).
Standard accessories: Two 1/8" NPT plugs for duplicate pressure taps, two 1/8" pipe thread to rubber tubing adapters and three flush mounting adapters with screws. (Mounting and snap ring retainer substituted for 3 adapters in MP & HP gage accessories.)
Weight: 1 lb. 2 OZ.

* Low temperature models available as special option.
+ For applications with high cycle rate within gage total pressure rating next higher rating is recommended. See Medium and High pressure options lower left.

OPTIONS AND ACCESSORIES

Transparent overlays

Furnished in red and green to highlight and emphasize critical pressures.

Adjustable signal flag

Integral with plastic gage cover. Available for most models except those with medium or high pressure construction. Can be ordered with gage or separate.

LED Setpoint Indicator

Bright red LED on right of scale shows when setpoint is reached. Field adjustable from gage face, unit operates on 12 - 24 VDC Requires MP or HP style cover and bezel.

Portable units

Combine carrying case with any Magnehelic gage of standard range, except high pressure connection. Includes 9 ft. (2.7 m) of 3/16" I.D. rubber tubing, standhang bracket, and terminal tube with holder.

Air filter gage accessory package

Adapts any standard Magnehelic for use as an air filter gage. Includes aluminum surface mounting bracket with screws, two 5 ft lengths of 1/4" aluminum tubing, two static pressure tips and two molded plastic vent valves, integral compression fittings on both tips and valves.

Quality design and construction features

1. **Bezel** provides flange for flush mounting in panel.
2. **Clear plastic face** is highly resistant to breakage. Provides undistorted viewing of pointer and scale.
3. **Precision litho-printed scale** is accurate and easy to read.
4. **Red tipped pointer** of heat treated aluminum tubing is easy to see. It is rigidly mounted on the helix shaft.
5. **Pointer stops** of molded rubber prevent pointer over-travel without damage.

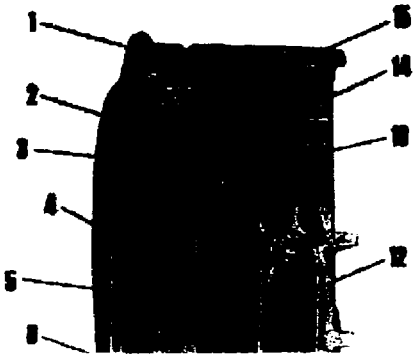

6. **"Wishbone" assembly** provides mounting for helix, helix bearings and pointer shaft.
7. **Sapphire bearings** are shock-resistant mounted; provide virtually friction-free motion for helix. Motion damped with high viscosity silicone fluid.
8. **Zero adjustment screw** is conveniently located in the plastic cover, and is accessible without removing the cover. O-ring seal provides pressure tightness.
9. **Helix** is precision made from an alloy of high magnetic permeability. Mounted in jeweled bearings, it turns freely, following the magnetic field to move the pointer across the scale.
10. **Samarum Cobalt magnet** mounted at one end of range spring rotates helix without mechanical linkages.
11. **Calibrated range spring** is flat spring steel. Small amplitude of motion assures consistency and long life. It reacts to pressure on diaphragm. Live length adjustable for calibration.
12. **Silicone rubber diaphragm** with integrally molded "O" ring is supported by front and rear plates. It is locked and sealed in position with a sealing plate and retaining ring. Diaphragm motion is restricted to prevent damage due to overpressures.
13. **Die cast aluminum case** is precision made. Iridite-dipped to withstand 168 hour salt spray test. Exterior finished in baked dark gray hammerloid. One case size used for all standard pressure ranges, and for both surface and flush mounting.
14. **Blowout plug** of silicone rubber protects against overpressure on 15 PSIG rated models. Opens at approximately 25 PSIG.
15. **"O" ring seal** for cover assures pressure integrity of case.

SERIES 2000 MAGNEHELIC® GAGES
STOCKED MODELS, RANGES

The models listed below will fulfill most requirements. Custom models can be provided for OEM customers. For special units with scales reading in ounces per square inch, inches of mercury, other metric units, etc., contact the factory.

Choose a different selection (if desired), then press the '**Display the product...**' button.

Series 2000 Magnehelic Gages - Inches of Water

STOCKED MODELS

Model Number	Range, Inches of Water	Minor Div.	Notes	Price
2000-00	0 to 0.25	.005	Vertical Scale Position	$65.00*
2000-0	0 to 0.50	.01	Vertical Scale Position	$59.00*
2001	0 to 1.0	.02	-	$59.00*
2002	0 to 2.0	.05	-	$59.00*
2003	0 to 3.0	.10	-	$59.00*
2004	0 to 4.0	.10	-	$59.00*
2005	0 to 5.0	.10	-	$59.00*

MANUFACTURER'S PRODUCT SPECIFICATIONS

Influent Flow Sensor and Gauge

Dwyer Series 605

Magnehelic® Differential Pressure Indicating Transmitter

Dial Gage Indication, Two-Wire 4-20 mA Output

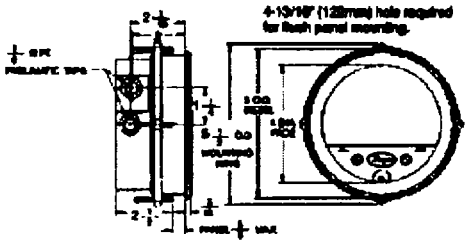

Dimensional Enlargement

The Dwyer Series 605 Magnehelic® Indicating Transmitter provides for both visual monitoring and electronic control of very low differential Pressure. The Series 605 is ideal for control applications in building HVAC systems where local indication is desired during routine maintenance checks or necessary when trouble shooting the system. The easily read dial gage is complemented by the two-wire, 4-20 mA control signal utilizing the time-proven Dwyer Magnehelic® gage mechanical design and Series 600 strain-gage transmitter technology. The two-wire design with terminal strip on the rear simplifies connection in any 4-20 mA control loop powered by a 12.3-35 VDC supply.

SPECIFICATIONS

GENERAL

Maximum Pressure: 25 PSIG
Media Compatibility: Air & non-combustible, non-corrosive gases.

ELECTRICAL

Power Supply: 12.3 to 35 VDC
Output Signal: 4 to 20 mA DC, 2 wire (limited at 38 mA max.)
Loop Resistance: 0-1135 ohms from 12.3 to 35 VDC
Current Consumption: 38 mA DC (max.)

MATERIALS

Die cast aluminum case with baked dark gray hammerloid finish, acrylic cover

MECHANICAL

Weight: 2 lb., 8 oz.
Span and Zero adjustments: Protected potentiometers

Pressure connections: 1/8" NPT female high and low pressure taps

PERFORMANCE AT 70°F
Zero output: 4 mA
Full span output: 20 mA
Accuracy (includes linearity hysteresis, repeatability): ±2% of full span output
Span and Zero: Adjustable to 0.05% of full span
Warm-up time: 10 minutes

ENVIRONMENTAL
Operating temperature: 30° to 120°F
Thermal Error: ±1 %/50°F typical

STANDARD ACCESSORIES
Span and zero adjust tool, mounting hardware kit

Choose a different selection (if desired), then press the '**Display the product...**' button.
Series 605 Differential Pressure Transmitter - Ranges in Inches W.C.

STOCKED MODELS

Model Number	Range, Inches w.c.	Price
605-00N	.05-0-.20	$219.00*
605-11	.25-0-.25	$219.00*
605-0	0-.50	$196.00*
605-1	0-1.0	$196.00*
605-2	0-2.0	$196.00*
605-3	0-3.0	$196.00*
605-6	0-6.0	$196.00*
605-10	0-10	$196.00*
605-20	0-20	$196.00*
605-30	0-30	$196.00*
605-50	0-50	$196.00*

***Prices are based in US currency and may change for international customers due to and not limited to customs brokerage fees, export packing and documentation, tariffs, duty and taxes.**

Click the **Model Number** of the item to add the item to your shopping cart.

VIEW YOUR SHOPPING CART

MANUFACTURER'S PRODUCT SPECIFICATIONS

Actuators for Damper Assembly

RCE FAILSAFE

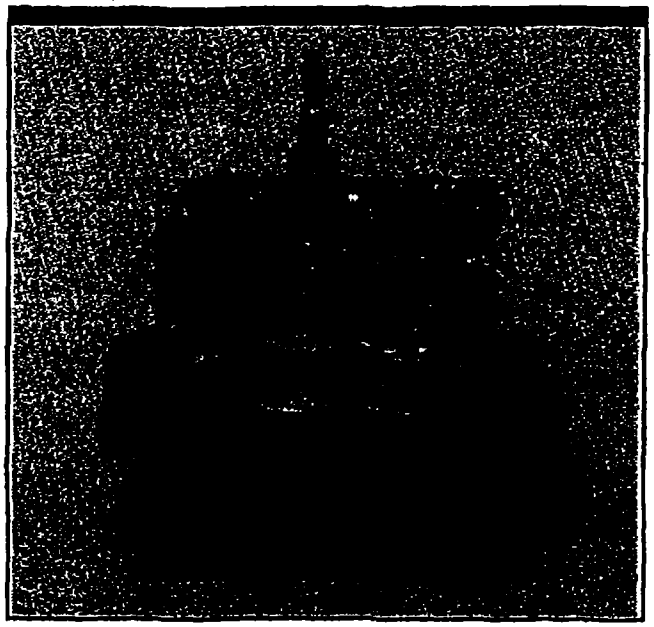

The RCE Failsafe Electric Actuator features a rechargeable battery pack built into the actuator housing. This failsafe feature is available on all RCE Actuators in torque ranges from 150 - 2000 inch pounds.

FEATURES

- Two corrosion resistant models:
  Series RCE - Baked epoxy-coated aluminum combination NEMA 4X, 7 and 9 housing.
  Series RCE - Zytel® engineered resin NEMA 4X housing.
- Wide torque range: 150, 300, 400, 700, 1100, 2000 inch-pounds.
- Available voltages: 120, 220, 12 and 24 VAC; 12 and 24 VDC.
- Capable of 25 cycles* without recharging batteries. features a built-in trickle charger (automatic battery recharge system).
- Low battery charge indicator light located on outside of housing.
- "Remote-local" switch inside housing facilitates start-up, maintenance.
- Compact design: battery pack built into actuator housing.
- Manual override, position indicator, ISO mounting dimensions, and 75% duty cycles are all standard.
- Can be set for fail-open or fail-close.

*Continuous cycles, under full load.

REMOTE CONTROL

VISIT US ON THE WEB: WWW.REMOTECONTROL.THOMASREGISTER.COM

Remote Control Inc. • P.O. Box 275 • North Kingstown, RI 02852 • 401-294-1400 • FAX 401-294-3388

REMOTE CONTROL

Instructions For Installation, Operation and Maintenance RCE Failsafe

Instruction Sheet No. RCE - M3

Remote Control, Inc. • P.O. Box 275 • North Kingstown, RI 02852 • 401-294-1400 • FAX: 401-294-3388

DESCRIPTION:
The Series RCE reversing electric actuators feature a fail-safe rechargeable battery pack option which is capable of 25 cycles under battery power alone. This option also includes a low voltage indicator light on the housing exterior and a "Local/ Remote" switch to facilitate calibration during start-up maintenance.

Available torque outputs:

RCE 15	150 in./lbs.	RCE 70	700 in./lbs.
RCE 30	300 in./lbs.	RCE 110	1100 in./lbs.
RCE 40	400 in./lbs.	RCE 200	2000 in./lbs.

Available voltages: 220, 120, 24, 12-VAC and 24, 12 VDC.

OPERATION:
The fail-safe option uses a high energy, rechargeable flat pack battery to provide power to the actuator upon loss of primary power. The actuator is powered by a 12 volt DC motor.

As long as power is available from the primary power source, the fail-safe relay directs that power through the control relay to the actuator motor and limit switches. Upon loss of power the fail-safe relay will de-energize interrupting the normal power circuits and connecting the battery pack to a circuit which bypasses the control relay and powers the actuator to the fail position.

Once the condition that initiated the fail-safe action no longer exists, the circuit board's detection and controls circuits will automatically reset. Immediately upon reset and dependent upon the input to the control circuit, the actuator may drive to the non-fail-safe position.

OPTIONAL:
To cycle valve open and close using input voltage and maintain designated fail position, the following is required:
A. Constant input voltage terminal #1 & #4 location J1
B. Contact closure at terminal #5 & #6 = valve open
C. Contact open at terminal #5 & #6 = valve closed

INSTALLATION:
To remove actuator cover it is necessary to remove the handle (RCE 15 & RCE 30), The manual override knob (RCE 40, 70 & 110) or the handwheel (RCE 200) by loosening the slotted set screws. Remove two cover screws. The remaining cover screws are packaged inside the actuator.

AC: Per drawing No. 029FS attached, connect incoming AC power to Terminal Block J1, Hot to Contact #1 and Neutral to Contact #4.

DC: Per drawing No. 029FS attached, connect incoming DC power to Terminal Block J1, Positive to Contact #1 and Negative to Contact #4.

NOTE: Battery must be disconnected during shipment. Reconnect battery after installation

CALIBRATION AND ADJUSTMENT:
To ensure reliable operation, the battery pack should be replaced every year. To ensure maximum battery capability over the year period, the battery charging voltage must be precisely adjusted to 12.5 - 12.8 volts (no load). The proper adjustment is made during final test at the factory, but it should be checked upon actuator installation.

NOTE: Use a digital volt meter or digital multimeter with ±1.2% accuracy.

1. After disconnecting power, remove cover. First, remove manual override knob by loosing slotted set screw. Then remove cover screws.
2. Unplug the battery cable from the circuit board. Check the battery volts at terminal block, the middle contact is negative. If the voltage measured is not 12.2 volts then it is necessary to charge the battery.
3. Reconnect power (unplug the battery cable). With power supplied to the actuator, measure the voltage at Terminal Block J2-Contact #2--negative. If the voltage measured is not 12.5 - 12.8, adjust potentiometer "CHARGE". See drawing No. 048FS.
4. Reconnect the battery cable. If battery is fully charged, the low voltage indicator light will be flickering. If the battery is low on charge-battery voltage below 11.5 volts-the low voltage indicator light should be easily visible.
5. Move "REMOTE LOCAL" selector switch #4 to "LOCAL". This will allow you to operate the actuator without the need for assistance from the remote control panel. You can now operate the actuator by moving selector switch "OPEN"-"CLOSE". See drawing No. 048FS.

   The shaft of the actuator should run until it stops in the "FULL OPEN" position, and light indicator LED GREEN isilluminated, or in the "FULL CLOSED" position and light indicator LED RED is illuminated. See drawing No. 050FS.

   To readjust the micro switches "OPEN" or "CLOSED", if necessary, move the selector switch "OPEN (local)-CLOSED (remote)" to "OPEN (local)" and adjust open closed.
6. Move "REMOTE-LOCAL" switch to "REMOTE". Apply power to the actuator, the actuator shaft should run until it stops in the "FULLY OPEN" position.

MAINTENANCE:
WARNING: Be sure that power is off before removing actuator cover.

The RCE Failsafe Battery Pack provides power output that is more than sufficient to ensure actuator operation in the adverse conditions that usually exist in emergency situations. Although the pack is rugged, like any other power source, there are several precautions that should be observed to ensure long battery life.

1. Battery voltage should be maintained between 12 volts minimum and 13 volts maximum, measured at battery test jacks located on the fail-safe circuit board (see adjustment and calibration-steps 4 and 5).
2. A shelf like of three (3) years should be expected from a battery pack.
3. Store battery pack at an average temperature of 80° F Lower temperature increases shelf life. Conversely, higher temperatures decreases shelf life.
4. The minimum operating temperature is +15°F. Heater and thermostat is recommended if temperatures of +32°F or lower are anticipated. The maximum operating temperature is 125°F. Sustained exposure to temperatures over 125°F can result in the destruction of the battery.

SPECIFICATIONS

Temperature limits: ..... +15° F to 150° F
(heater and thermostat recommended for -40° F to +32° F)
Limit switches: ..... SPDT 5 amp (1 Aux LSW Standard)
Conduit Entry: ..... 1/2" NPT
Lubrication: ..... Not necessary Gear train is permanently lubricated
Maximum battery current charge: ..... 500 mA

OPTIONS

- Voltages: 12, 24, 120 and 220 VAC; 12 and 24 VDC.
- Heater and Thermostat
- Additional limit switch (RCE 40 and Larger)
- Feedback potentiometer low voltage only

ENGINEERING DATA

Battery Pack Model	Torque (in-lbs)	Duty Cycle (%)	90° Cycle Time (sec)	Amp Draw (amps)	Weight (lbs)
RCE - 15	150	75	5.0	*	4.0
RCE - 30	300	75	5.0	*	4.0
RCE - 40	400	75	10.0	*	10.0
RCE - 70	700	50 - 75*	10.0	*	10.0
RCE - 110	1100	75	25.0	*	11.0
RCE - 200	2000	50	25.0	*	21.0

WIRING SCHEMATIC

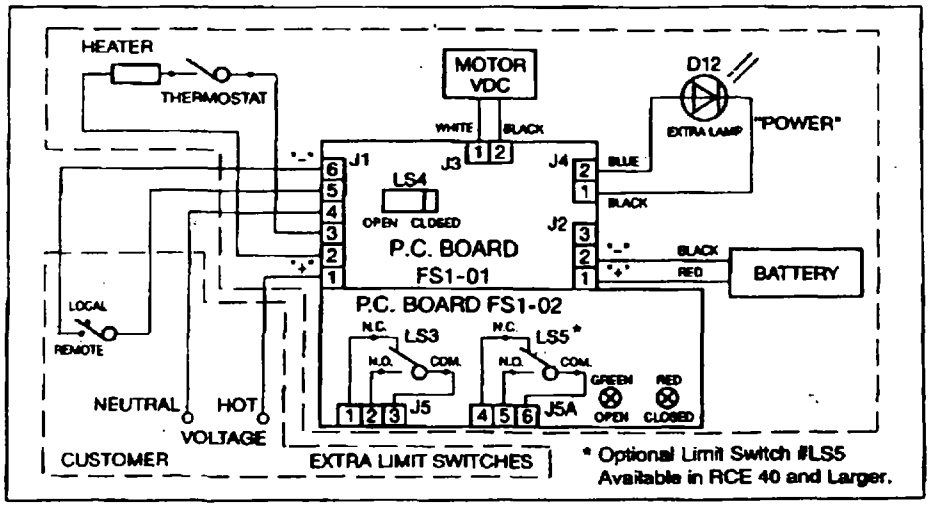

REMOTE CONTROL

Product specifications and data are subject to change.

Remote Control Inc. • P.O. Box 275 • North Kingstown, RI 02852 • 401-294-1400 • FAX 401-294-3388

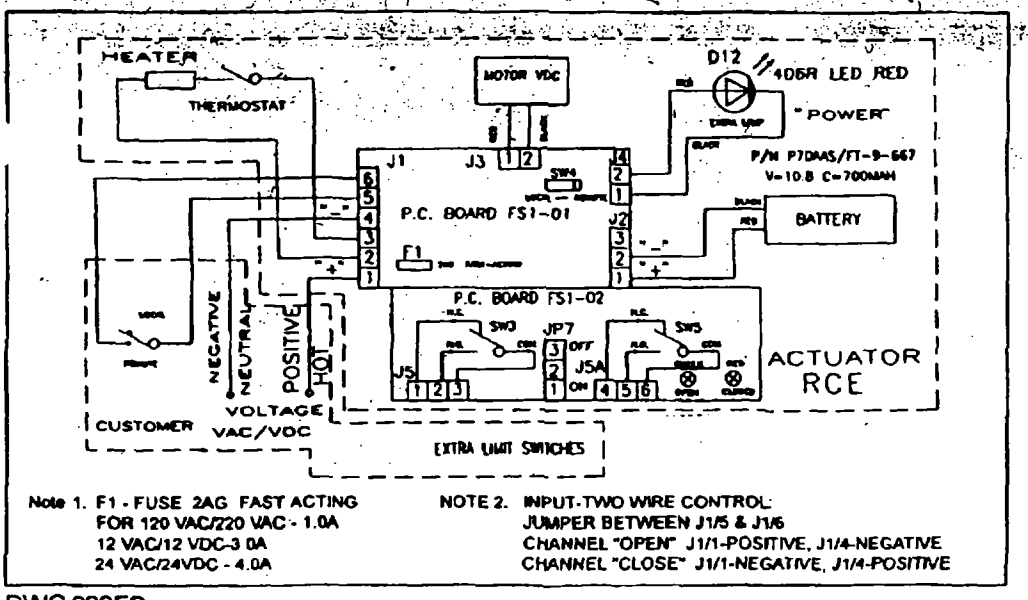

Note 1. F1 - FUSE 2AG FAST ACTING
FOR 120 VAC/220 VAC - 1.0A
12 VAC/12 VDC-3 0A
24 VAC/24VDC - 4.0A

NOTE 2. INPUT-TWO WIRE CONTROL:
JUMPER BETWEEN J1/5 & J1/6
CHANNEL "OPEN" J1/1-POSITIVE, J1/4-NEGATIVE
CHANNEL "CLOSE" J1/1-NEGATIVE, J1/4-POSITIVE

DWG 029FS

ENGINEERING DATA:

Maximum Battery Current Charge: 200mA(13 Volts)

Battery Pack Part No.
P70AASFT-9-667
V = 10.8 C = 700mAH

NOTE: Battery must be disconnected during shipment. Reconnect battery after installation. Fuse replacement: If actuator does not function, check for blown overload protection fuse (F1). Replace only with original fuse type 2AG FAST ACTING.
For 220, 120 VAC - 1.0A,
For 12VAC/RVDC - 3.0A
For 24VAC/24VDC - 4.0A

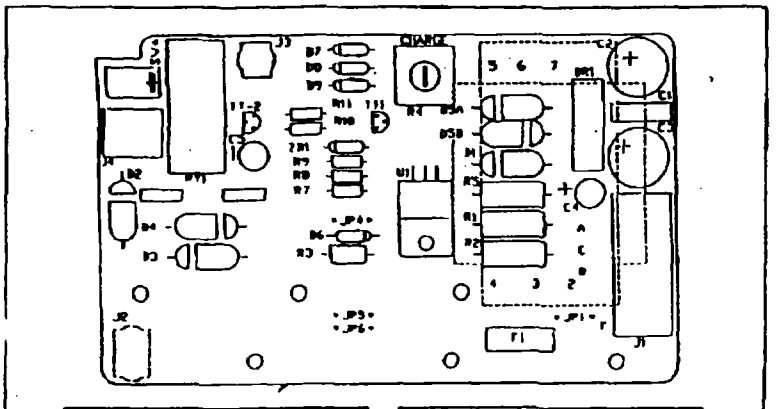

#	SYMBOL	DESCRIPTION
1	U1	VOLT. REG.
2	TT1	TRANSISTOR
3	TT2	TRANSISTOR
4	F-1	FUSE 1.5A
5	RY-1	RELAY
6	J4	TERM. BLOCK
7	J2	CONN. HEADER
8	J3	CONN. HEADER
9	J1	TERM. BLOCK
10	J5	TERM. BLOCK
11	SW4	SWITCH
12	C1	CAPACITOR
13	C2,C3	CAPACITOR
14	C4	CAPACITOR
15	C5	CAPACITOR
16	D1-D5	DIODE

#	SYMBOL	DESCRIPTION
17	D6-D9	DIODE
18	ZD-1	ZENER DIODE
19	R1,R2	RESISTOR
20	R3	RESISTOR
21	R4	RESISTOR
22	R5	RESISTOR
23	R7	RESISTOR
24	R8	RESISTOR
25	R9	RESISTOR
26	R10	RESISTOR
27	R11	RESISTOR
28	R11	RESISTOR
29	TR-1	TRANSFORMER
30	BR-1	BRIDGE RECT.
31	JP1	JUMPER
32	JP4,5,6	JUMPER

DWG 048FS

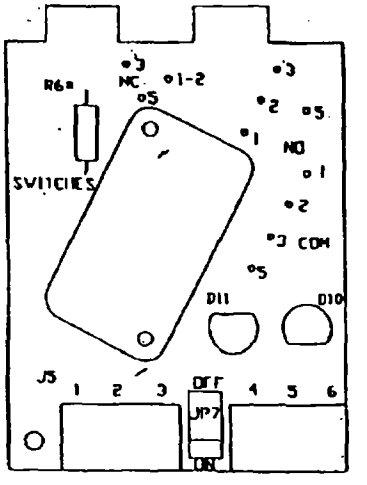

#	SYMBOL	DESCRIPTION
01	R6	RESISTOR
02	D10	BARE LED RED
03	D11	BARE LED GREEN
04	SW-1	SWITCH
05	SW-2	SWITCH
06	SW-3	SWITCH
07	J5	TERMINAL BLOCK
08	J5A	TERMINAL BLOCK
09	JP7	JAMPER

DWG 050FS

ELECTRICAL REQUIREMENTS

MODEL	220 VAC		115 VAC		24 VAC		12 VAC		24 VDC		12 VDC		CYCLE TIME/90°	WEIGHT
	AMP DRAW	DUTY CYCLE	AMP DRAW	DUTY CYCLE	AMP DRAW	DUTY CYCLE	AMP DRAW	DUTY CYCLE	AMP DRAW	DUTY CYCLE	AMP DRAW	DUTY CYCLE	(SEC)	LBS
RCE15	0.2	75%	0.4	75%	4.0	75%	2.0	75%	4.0	75%	2.5	75%	5	7.25
RCE30	0.2	75%	0.4	75%	4.0	75%	2.0	75%	4.0	75%	2.5	75%	5	7.25
RCE40	0.2	75%	0.4	75%	4.0	75%	2.5	75%	3.5	75%	3.0	75%	10	15.80
RCE70	0.2	75%	0.4	50%	4.0	75%	2.5	75%	3.5	75%	3.0	75%	10	15.80
RCE110	0.2	75%	0.4	75%	2.5	75%	2.0	75%	2.5	75%	2.8	75%	25	16.40
RCE200	0.2	50%	0.4	50%	2.5	50%	2.0	50%	2.5	50%	3.0	50%	25	19.35

NOTE: *All amp ratings are considered locked rotor.*
CAUTION: Actuators mounted outdoors must be protected from direct sunlight to keep internal temperatures below 125°F

MANUFACTURER'S PRODUCT SPECIFICATIONS

Process Blower

HIGH PRESSURE BLOWERS

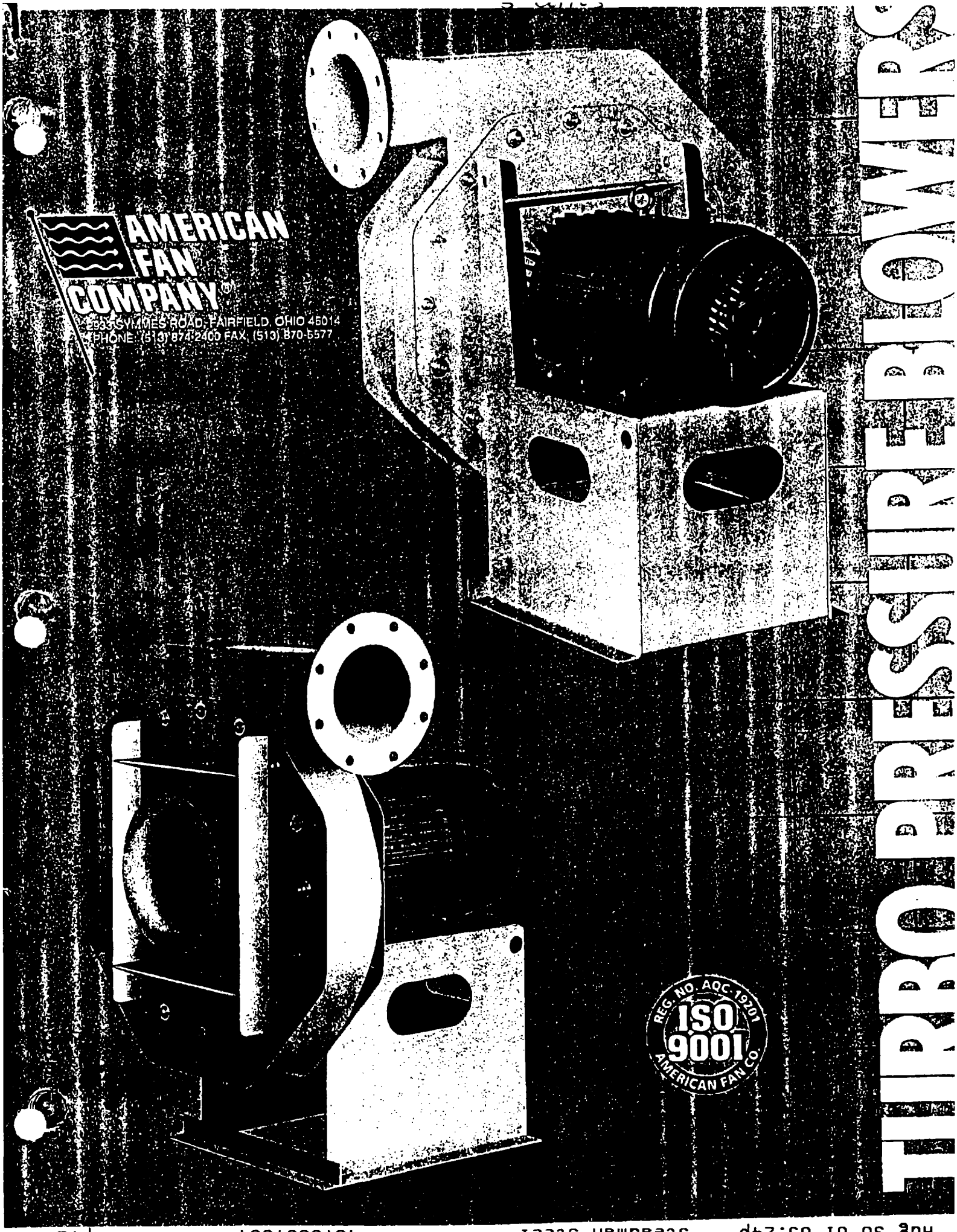

AMERICAN FAN COMPANY®
5333 SYMMES ROAD, FAIRFIELD, OHIO 45014
PHONE: (513) 874-2400 FAX: (513) 870-5577

REG. NO. AQC 19201
ISO 9001
AMERICAN FAN CO.

ARRANGEMENTS

ARRT. 1

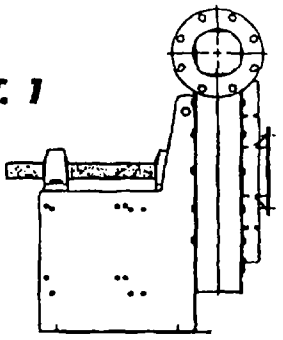

The fan wheel is overhung with both bearings mounted on a common pedestal. ARRT. 1 is suitable for high temperature and/or corrosive environment. Fan can be belt driven or directly coupled to drive motor mounted on a separate base.

ARRT. 1 UNITARY

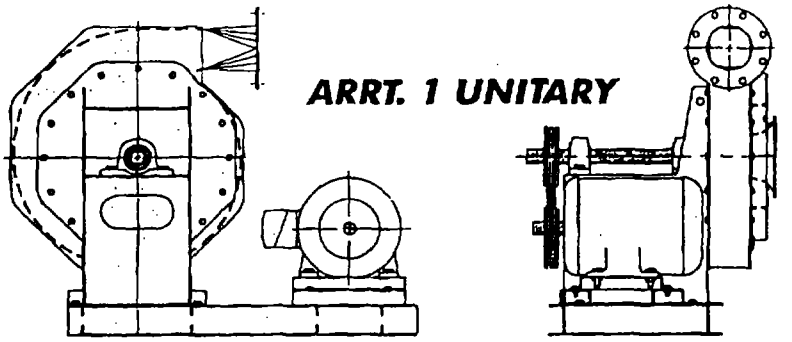

American Fan Co. offers unitary bases constructed of heavy channel iron for high horsepower or high temperature applications where ARRT.9 is impractical. The unitary base design is a complete packaged unit simplifying handling and installation while providing a more uniform weight distribution necessary when vibration isolators are used. Unitary bases also allow excellent access for routine maintenance.

ARRT. 4

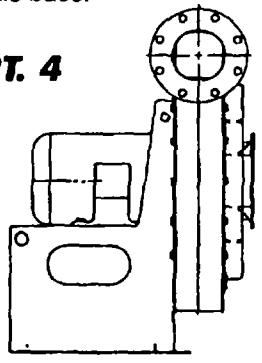

Direct drive fan with wheel mounted directly on motor shaft. Unit is designed for standard temperature applications only. With no belt loss, the direct drive fan operates at a higher efficiency.

ARRT. 8

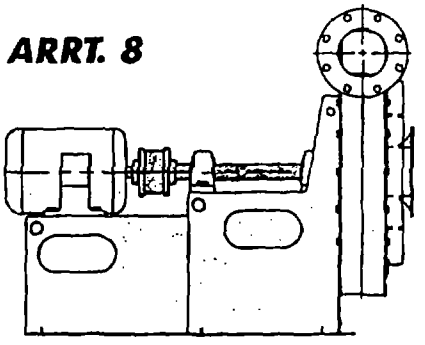

Direct drive fan through shaft and bearings. Efficiency of ARRT. 4 is maintained. However, ARRT. 8 may be used for high temperature and/or corrosive applications which require the motor shaft to be outside of airstream.

ARRT. 9

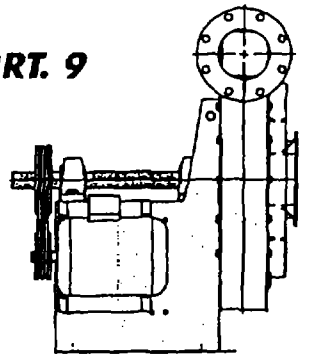

The fan wheel is overhung with both bearings mounted on a common pedestal. Fan is belt driven with drive motor mounted on bearing pedestal for a more compact unit suitable for high temperature and/or corrosive environment.

BLOWER SELECTION INSTRUCTIONS:

1. Based on application, determine which wheel type(s) would be appropriate.
   Example: Select blower for 900 CFM @ 17.5" SP., Clean air, 70F. See BC Wheels.
2. Using the required CFM and SP (equivalent SP if density is other than .075 Lbs./Ft.^{3} Choose a model from quick selection chart that is nearest your requirement. Note the Model No., BHP and Curve No.
   Example: From BC-1-06-18A produces 900 CFM @ 17.32" SP. 3.95 BHP, Curve No. 5030.
3. Refer to the appropriate curve no. to determine exact CFM and BHP at required SP. Read across grid at required SP until line intersects SP vs. CFM curve. Read CFM Scale straight down point of intersection.
   Example: 17.5" SP. intersects curve at 890 CFM.
4. Where CFM line intersects BHP vs. CFM curve, read BHP straight across to right on the BHP scale.
   Example: 890 CFM intersects BHP vs. CFM curve at 3.95 BHP. 5 HP. motor is required.
5. Find numbered point on curve nearest selection point and locate corresponding sound analysis point in sound analysis chart, interpolating when necessary.
   Example: Selection point is approximately equidistant from points 6 and 7. Referring to sound analysis chart on page 13, sound analysis of points 6 and 7 is:

TD-5030/MODEL BC-1

6" INLET, 5" OUTLET
3450 RPM, .075 DENSITY @ INLET
IV = CFM/.1963, OV = CFM/.1364
IV = INLET VELOCITY OV = OUTLET VELOCITY

KEY TO GRAPH
—— = MODEL BC-1-06-18A
- - - - = MODEL BC-1-06-16A
◆ = PEAK STATIC EFFICIENCY
● = OCTAVE BAND PT.

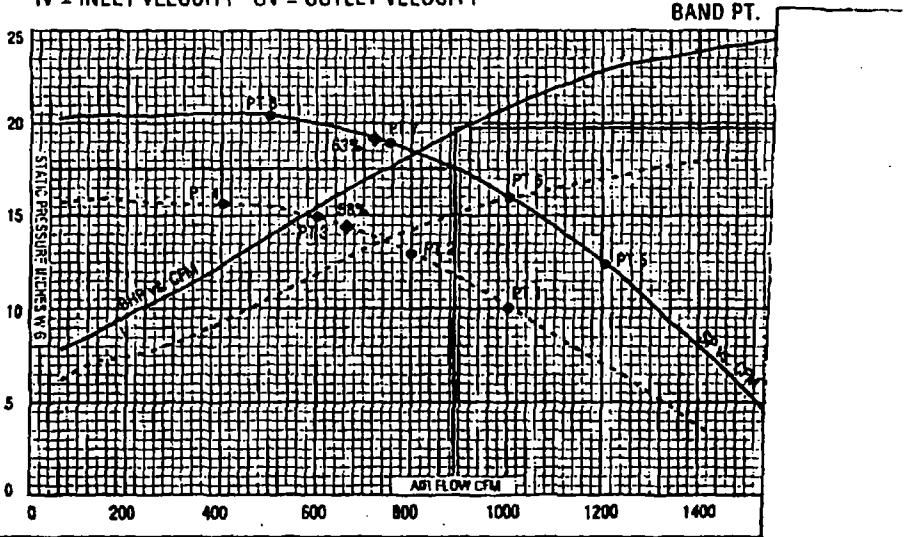

MODEL NUMBER	PT.	CFM	SP	OCTAVE BAND Hz 63	125	250	500	1000	2000	4000	8000	SE
BC-1-06-18A	6	992	16	87.1	96.2	95.0	96.0	90.9	87.9	83.0	80.0	87
	7	749	19	85.7	92.0	95.0	96.0	92.3	89.3	83.0	80.0	87.8
INTERPOLATING FOR SELECTION PT	▶	890	17.5	86.4	94.1	95.0	96.0	91.6	88.6	83.0	80.0	87.4

FEATURES

- Heavy gage continuously welded housings, reversible and rotatable
- Round inlet and outlet with flanges drilled to match ANSI 150 # pipe flanges (outlet flange standard)
- Dynamically balanced wheels to assure smooth operation
- Three inlet types available – stub pipe, flanged or venturi (standard)
- Teflon shaft seal with steel retaining plate (standard)
- Heavy-duty anti-friction pillow block ball bearings
- Close tolerance 1141 turned, ground, and polished shafting
- Pressures to 59" S.P.W.G., Capacities to 4500 CFM
- Lifting eyes are standard for handling ease

ACCESSORIES

- Housing drain
- Housing inspection door
- Inlet screen
- Outlet screen
- High-temperature construction to 700°F
- Stuffing box
- Stainless steel or other alloy airstream
- Heat slinger
- Spark-resistant construction
- Inlet damper
- Outlet damper
- Flexible coupling for Arr't 8
- Special Coatings
- Drive guards

TYPICAL APPLICATIONS

- Combustion air
- Air pollution control systems
- Induced pneumatic conveying
- Glass blowing
- Drying
- Gas boosting
- Material aeration
- Cooling
- Air flotation conveyors
- Textile fiber stripping and recycling

MAJOR INDUSTRIES

- Chemical
- Pulp and Paper
- Steel
- Glass
- Food Processing
- Energy
- Textile
- Petrochemical

HOW TO SPECIFY

VP-3-06F-19A

- WHEEL TYPE: VP, OVP, AVP, BC, N
- HOUSING SIZE: 1, 1N, 2, 3, 3N, 4, 5, 5N, or 6
- INLET DIAMETER
- INLET TYPE: STUB PIPE, FLANGED, VENTURI (STANDARD)
- WHEEL DIAMETER
- WHEEL WIDTH CODE: A, B OR N

DISCHARGE POSITIONS

NOTE: ROTATION VIEWED FROM DRIVEN SIDE

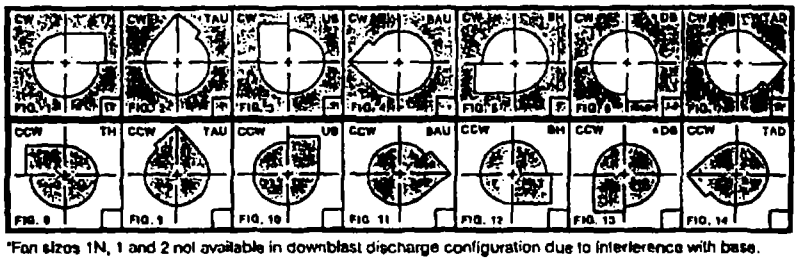

*Fan sizes 1N, 1 and 2 not available in downblast discharge configuration due to interference with base.

CONSTRUCTION MATERIALS

GAUGES & SHAFT DIAMETERS

Fan Size	Housing Side	Scroll	Base	Motor Base, Front & Inlet Plate	Inlet Venturi	Stub Pipe Inlet	Flanges	Shaft Dia.	Bearings (Sealmaster or Equal)
1, 1N & 2	10	12	10	10	14	12	1/4	1 1/16	MP-27
3, 3N & 4	10	12	7	10	14	12	1/4	1 15/16	MP-31
5, 5N & 6	10	12	1/4	10	14	12	1/4	2 3/16	MP-35

HI-TEMPERATURE CONSTRUCTION

250° – 400° F
Heat Slinger, high-temperature paint.

401° – 700° F
Heat Slinger, high-temperature shaft seal, high-temperature paint, Arr't 1 or 8 only.

SPECIAL CONSTRUCTION/MATERIALS

SPARK RESISTANT CONSTRUCTION

TYPE A
All parts of the fan in contact with the air or gas being handled shall be made of non-ferrous material, except shaft.

TYPE B
Fan shall have entirely non-ferrous wheel and a non-ferrous ring about the opening through which the shaft passes.

TYPE C
Fan shall be so constructed that a shift of the wheel or shaft will not permit two ferrous parts of the fan to rub or strike.

CORROSION RESISTANT AND SPECIAL ALLOYS

For applications involving handling of corrosive fumes, a wide variety of protective coatings and special alloy metals are available. Consult your American Fan representative or factory for full details.

Aug 30 01 05:27p Steadman Steel 4078597684 p.6

MANUFACTURER'S PRODUCT SPECIFICATIONS

Combustion Chamber Refractory

ULTRA-GREEN 45

Ultra-low Cement, Vibrating Castable

ULTRA-GREEN 45 is a 45% alumina, ultralow cement, vibratable castable. Features excellent strength, outstanding hot load bearing ability, superior corrosion resistance, and low porosity -- high density. Can be used as original linings, to repair existing linings, and as pre-cast shapes in iron and steel applications, non-ferrous furnaces and ladles, cement kilns, coolers and rings, boilers, and in the chemical processing industry.

CHEMICAL ANALYSIS - Calcined Basis

Silica - SiO_2	46.0%
Alumina - Al_2O_3	48.3%
Iron Oxide - Fe_2O_3	1.2%
Lime - CaO	1.2%
Magnesia - MgO	0.1%
Titania - TiO_2	2.4%
Alkalies - $Na_2O + K_2O$	0.6%
Other	0.2%

A. P. Green is a supplier of high duty and super duty brick, insulating firebrick, high alumina brick, basic brick, silica brick, mortars, plastics, castables, and precast shapes as well as mineral wool block insulation and a complete ceramic fiber line. Stocks of these products are maintained in more than 90 locations throughout North America. And, having been in the refractories business for more than 80 years, A. P. Green can also provide the expertise and thorough technical assistance that you might require.

ULTRA-GREEN 45

Technical Data

	Vibration Cast			
MAXIMUM RECOMMENDED TEMPERATURE	3000°F		1650°C	
QUANTITY REQUIRED	146 lb/ft³		2.34 g/cm³	
QUANTITY IN PLACE	lb/ft³	σ	g/cm³	σ
Cured and Then Dried at 220°F (105°C)	147	1.2	2.35	0.019
Heated at 1500°F (815°C)	146		2.34	
APPARENT POROSITY - ASTM C20				
Cured and Then Dried at 220°F (105°C)	10%			
Heated at 1500°F (815°C) and Then Cooled	14%			
WATER REQUIRED FOR MIXING	Approximately			
Weight % Dry Solids	5.3%			
Per 100 Pounds (45.4 kg)	5.1 pints (U.S.)		2.4 liters	
MAXIMUM TIME FROM ADDING WATER TO PLACING MATERIAL	20 Minutes			
PERMANENT LINEAR CHANGE - ASTM C113				
Expansion or Shrinkage - Percent of Original Length				
Cured and Then Dried at 220°F (105°C)	Nil			
Heated at 1500°F (815°C) and Then Cooled	0.2% shr.			
Heated at 2000°F (1095°C) and Then Cooled	0.3% shr.			
Heated at 2500°F (1370°C) and Then Cooled	0.1% shr			
Heated at 2900°F (1595°C) and Then Cooled	0.5% exp.			
MODULUS OF RUPTURE - ASTM C133	lb/in²	σ	MPa	σ
Cured and Then Dried at 220°F (105°C)	1750	196	12.1	1.35
Heated at 1500°F (815°C) and Then Cooled	2500		17.2	
Heated at 2000°F (1095°C) and Then Cooled	2700		18.6	
Heated at 2500°F (1370°C) and Then Cooled	2400		16.6	
HOT MODULUS OF RUPTURE - ASTM C583				
Heated at 1500°F (815°C)	2400		16.6	
Heated at 2500°F (1370°C)	700		4.8	
Heated at 2700°F (1480°C)	300		2.1	
COLD CRUSHING STRENGTH - ASTM C133				
Cured and Then Dried at 220°F (105°C)	9400		64.8	
Heated at 1500°F (815°C) and Then Cooled	14000		96.6	
Heated at 2000°F (1095°C) and Then Cooled	15000		103.4	
Heated at 2500°F (1370°C) and Then Cooled	11000		75.9	
ABRASION LOSS - ASTM C704	cc			
Heated at 1500°F (815°C) and Then Cooled	8.0			
Heated at 2500°F (1370°C) and Then Cooled	6.5			
PARTICLE SIZE - ASTM C92				
Retained on 4 Mesh Tyler Screen (4.7 mm opening)				
Dry Analysis	Less Than 5%			
THERMAL CONDUCTIVITY				
At a Mean Temperature of	Btu·in/hr·ft²·°F		W/m·°C	
400°F (205°C)	6.2		0.89	
800°F (425°C)	7.3		1.05	
1200°F (650°C)	8.6		1.24	
1600°F (870°C)	9.6		1.38	
2000°F (1095°C)	10.8		1.56	
2400°F (1315°C)	11.9		1.72	

Manufacturing Locations: Lehi, UT; Oak Hill, OH; Smithville, ON

The test data shown are based on average results on production samples and are subject to normal variation on individual tests. Accordingly, test data cannot be taken as establishing maximum or minimum specifications.

May 9, 1996

MANUFACTURER'S PRODUCT SPECIFICATIONS

Combustion Chamber Insulation

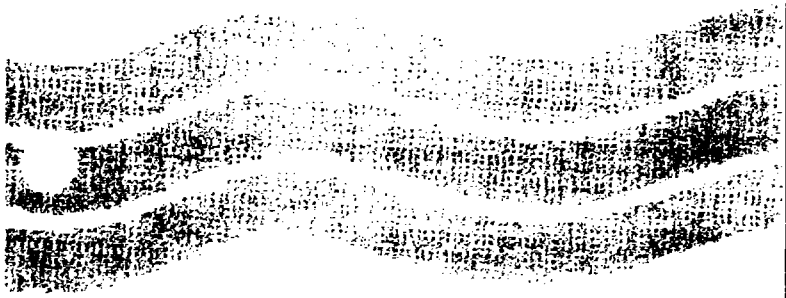

Thermafiber®

K-FAC® SR

HIGH-DENSITY SEMI-REFRACTORY FELT

NON-CORROSIVE FIRE RATED EASILY APPLIED NON-ASBESTOS

For insulation of high-temperature ovens, furnaces, kilns and vessels

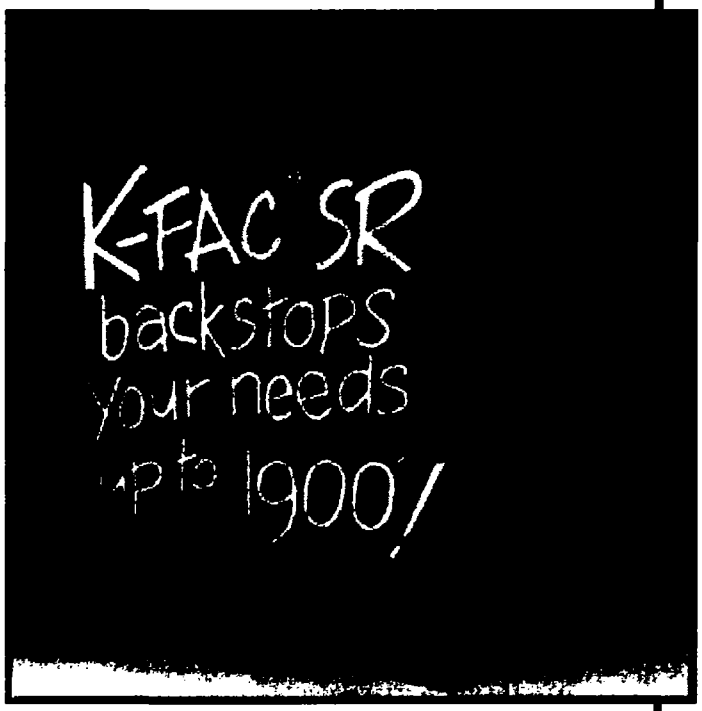

Economical, High Performance Insulation

K-FAC SR High-Density, Semi-Refractory Felt (nominal 14-lb./cu.ft. density) provides high-temperature insulating properties with excellent workability and easy application. Nonload-bearing, it is a selected blend of high-density mineral fiber with a resin binder. Does not contain asbestos.

Up to 1900 °F Service Temperature

Recommended for maximum hot-surface temperature applications up to 1900°F one side (enclosed panel only) per ASTM C356 and C411. Uses above 1400°F are to be limited to static applications. At temperatures above 1400°F, vibrations may cause degradation of the insulation.

The first time this material is put into service only, heat rise should not exceed 15°F per minute. This will allow the binder to dissipate uniformly. Thermal conductivity is not affected.

Versatile Uses

Performs effectively over a wide range of uses, especially when replacing mineral wool board and calcium silicate insulations in high heat ovens, furnaces, precipitators, firedoor cores and many other similar installations. Not for use in load-bearing situations or to be subjected to direct flame impingement.

Nonabsorbent, Corrosion-Resistant

Absorbs less than 1% moisture. Does not corrode steel or aluminum as tested per HH-1-558B.

Easily Applied

K-FAC SR High-Density, Semi-Refractory Felt fabricates easily for ready application. Can be grooved, routed, slotted, die-cut, etc., to desired size and shape. K-FAC SR can be faced with a nonwoven glass mat that makes cutting and forming around curved surfaces easy to do.

Since K-FAC SR is a high-density felt, it can be easily impaled. Recommended attachment is by impaling on pins or studs.

TF668/rev. 10-98 Copyright 1998, Thermafiber Printed in U.S.A.

K-FAC® SR

HIGH-DENSITY SEMI-REFRACTORY FELT

NON-CORROSIVE FIRE RATED EASILY APPLIED NON-ASBESTOS

Physical Properties

Fire Rated Performance:
Withstands ASTM E119 temperature for over 5 hours when mechanically supported.

Surface Burning Characteristics:
Flame Spread 15
Smoke Developed 0, (Per ASTM E-84)

Chemical State:
High melt point, mineral fiber formulation.

Physical Data

Average compressive load to 10% deformation(1)	Linear shrinkage max./24 hr. at 1900°F(2)
520 psf	2%

(1) Per ASTM C165
(2) Per ASTM C356

Specification Compliance

Federal Spec. HH-I-558B, Class 5, ASTM C612, Class 5 (exception is compressive strength). Meets applicable analysis for chloride content on the basis of plot points for austenitic stainless steel per Military Spec. MIL-I-24244A.

Specific Airflow Resistance of 14 lb./cu. ft. density Thermafiber Industrial Felt

Thickness (inches)	Specific Airflow Resistance (mks-rayls)
1	2,500
2	5,000
3	7,500
4	10,000

Thermal Conductivity

"K" (Btu/in./sq. ft./°F)
mean temperature (°F)

300°F	400°F	500°F	600°F	700°F	800°F	900°F
0.37	0.43	0.48	0.57	0.65	0.75	0.85

Per ASTM C177 or C518 test procedure.

Sizes and Availability(1)

Minimum Thickness	Maximum Thickness*	Width	Length
1"	4"	6,12,24"	36"
1"	4"	12,24"	48"

(1) Thickness from 1" to 4" in 1/2" increments. Thicknesses over 2" are laminated and recommended for use in flat form only. If laminating is not desired, product can be double layered with joints staggered (certain types of fabrication may cause separation.) K-FAC SR, faced and plain, is available from our Wabash, Ind., plant only Packaged in cartons.

The information presented herein represents typical or average values obtained by ASTM or other standard methods. The value will vary due to normal manufacturing variations. The person using this product must determine its suitability for a particular application.

Safety First! Follow good safety and industrial hygiene practices during handling and installing of all products and systems. Take necessary precautions and wear the appropriate personal protective equipment as needed. Read material safety data sheets and related literature on products before specification and/or installation.

For further information on these products including non-standard sizes, contact Thermafiber at the sales offices listed below.

NOTICE: We shall not be liable for incidental and consequential damages, directly or indirectly sustained, nor for any loss caused by application of these goods not in accordance with current printed instructions or for other than the intended use. Our liability is expressly limited to replacement of defective goods. Any claim shall be deemed waived unless made in writing to us within thirty (30) days from date it was or reasonably should have been discovered.

Thermafiber®
THE NAME IN MINERAL WOOL™

3711 West Mill Street Wabash, IN 46992
Tel. (888) 834-2371 (219) 563-2111 Fax: (800) 294-7076

Alternate 64/East Nash Road Spring Hope, NC 27882

1 Jackrabbit Road Nolanville, TX 76559

2301 Taylor Way Tacoma, WA 98421-4397
Tel: (800) 426-8127 (253) 383-1537 Fax: (800) 447-0846

www.thermafiber.com

MANUFACTURER'S PRODUCT SPECIFICATIONS

Temperature Controller

Honeywell

Representative photograph, actual product appearance may vary.

Due to regional agency approval requirements, some products may not be available in your area. Please contact your regional Honeywell office regarding your product of choice.

UDC1000

UDC1000 Controller, 1/16 DIN, 0.25% accuracy, universal input, autotune, single loop, communications, digital input, three position step control, limit controller, CE, UL, cUL, DIN rail, relay, linear outputs, universal power

Features

- Advanced tuning
- Auto and manual switching
- Setpoint ramping

Description

The UDC1000 provides a high degree of functionality and reliability in a small format 1/16 DIN 48 mm x 48 mm [1.89 in x 1.89 in] at low price. This versatile controller offers many options and can control many variables including temperature, pressure, and flow. FM-approved limit control is available for safety cut-off applications.

Honeywell

UDC1000

UDC1000 Controller, 1/16 DIN, 0.25% accuracy, universal input, autotune, single loop, communications, digital input, three position step control, limit controller, CE, UL, cUL, DIN rail, relay, linear outputs, universal power

Product Specifications	
Input Signal Type	Thermocouple, RTD, 4-20 mA, mV
Loops of Control	1
Control Output	Current Proportioning, Time Proportioning, heat/cool duplex, Position Proportioning
Alarms	2
Digital Inputs	1
Digital Outputs	0
Auxiliary Output	1
Accuracy	0.0025
Autotune	Yes
Communications	Yes
Size	1/16 DIN
Front Face Format (mm)	48 x 48
Prompts	Code
Limit Control	Yes
Math Functions	No
Setpoint Program	0
Transmitter Power	No
Universal Power	Yes
Approval	CE, UL, cUL, FM
Availability	Global

Honeywell

UDC1000

UDC1000 Controller, 1/16 DIN, 0.25% accuracy, universal input, autotune, single loop, communications, digital input, three position step control, limit controller, CE, UL, cUL, DIN rail, relay, linear outputs, universal power

⚠ WARNING

PERSONAL INJURY

DO NOT USE these products as safety or emergency stop devices, or in any other application where failure of the product could result in personal injury.

Failure to comply with these instructions could result in death or serious injury.

⚠ WARNING

MISUSE OF DOCUMENTATION

- The information presented in this product sheet (or catalog) is for reference only. DO NOT USE this document as product installation information.
- Complete installation, operation and maintenance information is provided in the instructions supplied with each product.

Failure to comply with these instructions could result in death or serious injury.

©Copyright Honeywell Inc.1998-2002 All rights reserved.

MANUFACTURER'S PRODUCT SPECIFICATIONS

Burner

Performance Graphs

TJ100 Operational/Ignition Zone

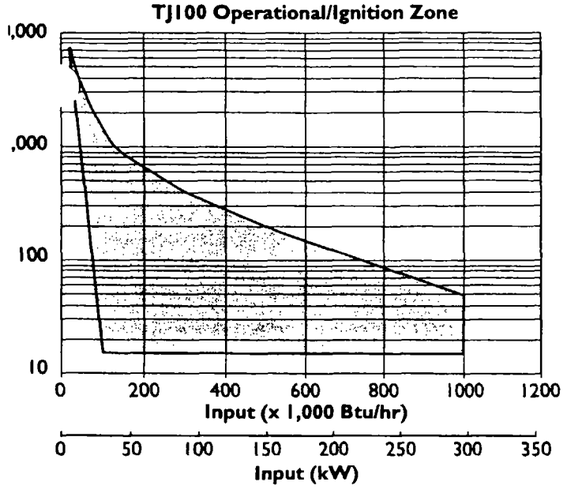

TJ100 NOx Emissions

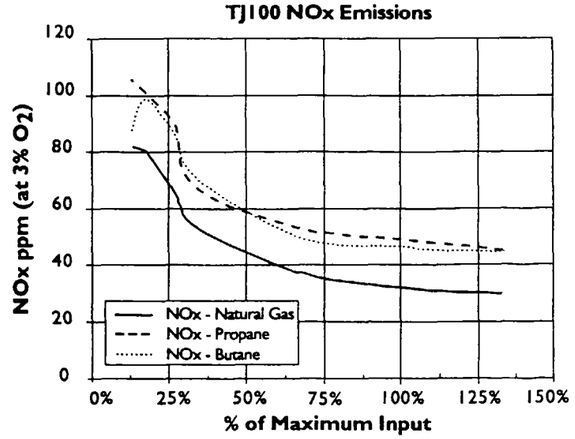

Emissions from the burner are influenced by:

- fuel type
- combustion air temperature
- firing rate
- chamber conditions
- percent of excess air

For estimates of other emissions, contact Eclipse Combustion.

TJ100 Gas Orifice Δ P vs. Input
(Measured from Tap B to Tap D)

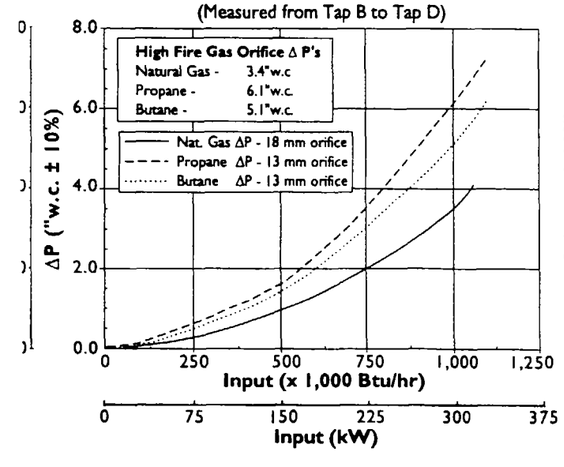

TJ100 Air Orifice Δ P vs. Input
(Measured from Tap A to Tap C)

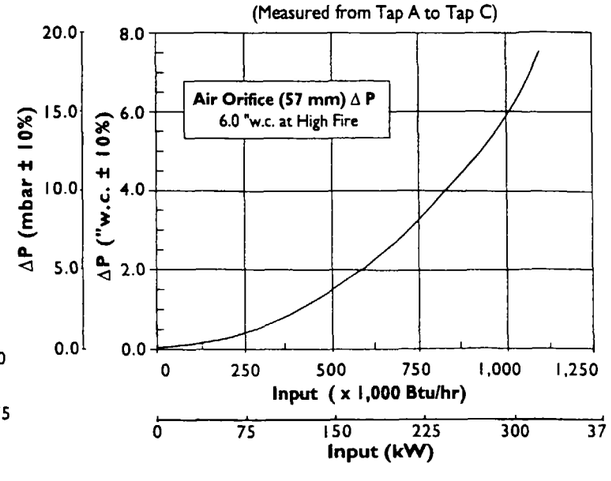

Dimensions & Specifications
Inches (mm)

Burner Housing

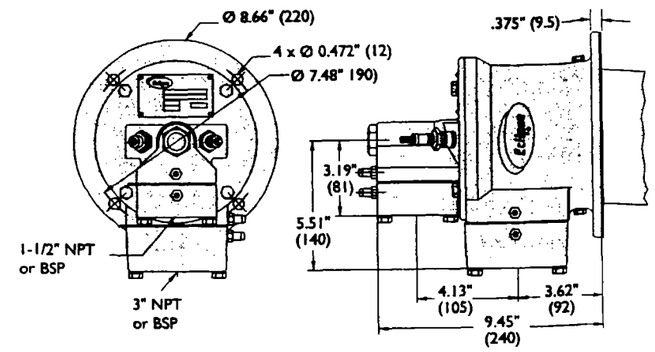

Burner weight less combustor: 42 lb (19 kg)

Tap Locations

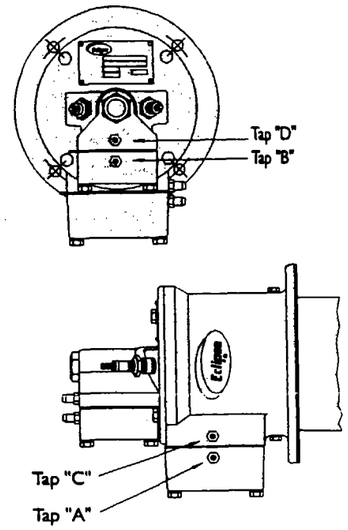

Combustor

Exhaust outlet diameter : High Velocity : Ø 2.125 (54)
Medium Velocity : Ø 3.0" (76.2)

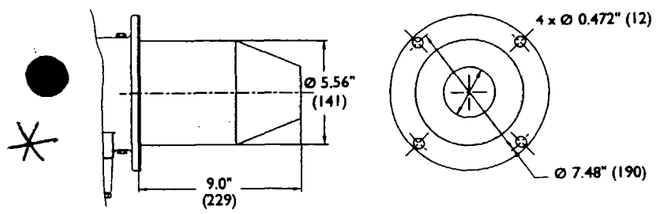

Alloy Tube (AISI 310)
Weight: 3.2 lb (1.45 kg)
Max Chamber Temp: 1,950°F (1066°C)

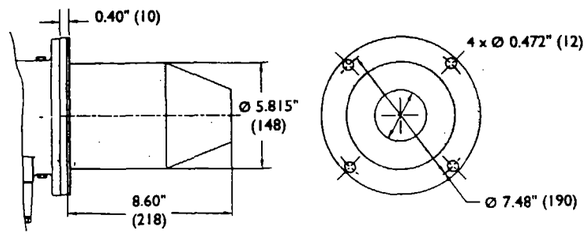

Silicon Carbide Tube
Weight: 3.2 lb (1.45 kg)
Max Chamber Temp: 2,500°F (1371°C)

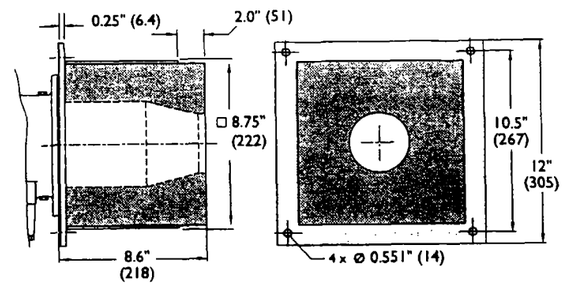

Refractory Block
(w/RA330 wrapper)
Weight: 61.3 lb (28 kg)
Max Chamber Temp: 2,800°F (1538°C)

MANUFACTURER'S PRODUCT SPECIFICATIONS

Combustion Blower

Performance Requirements

Actual Volume	250	Cu Ft / Min
Static Pressure	22.000	Inches W.G.
Max Design Temperature	200	Degrees F

Inlet Conditions

Operating Temperature	70	Degrees F
Specific Gravity	1.000	
Altitude	0	Feet
Inlet Pressure	0.000	Inches W.G.
Density at Static Pressure	0.0750	Lb / Cu Ft

Selected Direct Drive Speed

Speed	3450	RPM

Selection

Model and Size	1N-04-18.5N	
Impeller Diameter	18.50	Inches
Impeller Material	Aluminum	
Density	0.0750	Lb / Cu Ft
Volume	247	Cu Ft / Min
Static Pressure	21.51	Inches W.G.
Power @ Condition	1.88	Horsepower
Power @ 0.075 Lb / Cu Ft	1.88	Horsepower
Fan Speed	3450	RPM
Impeller Tip Speed	16709	Ft / Min
Static Efficiency	44	%
Outlet Velocity	2746	Ft / Min
% of Max Fan Speed	90	%
Max Fan Speed	3820	RPM
Recommended Motor	2	Horsepower

Sound Data
Sound Power Levels @ 10E-12 Watts

Frequency	LW dB
63	91
125	93
250	96
500	95
1000	91
2000	87
4000	84
8000	78

The sound power level ratings are shown in decibels, referred to 10E-12 watts calculated per AMCA Standard 301. Values shown are for inlet Lwi sound power levels for Installation Type B, free inlet, ducted outlet. Ratings do not include the effects of duct end correction.

dbA value shown was obtained in installation Type B tests conducted in the AFC Laboratory. dbA value obtained for your installation may be different. dbA level shown is for comparative purposes only.

Estimated DBA @ 5 Feet
85

Copyright (C) 1998 by American Fan Company Fairfield, OH

MASTER

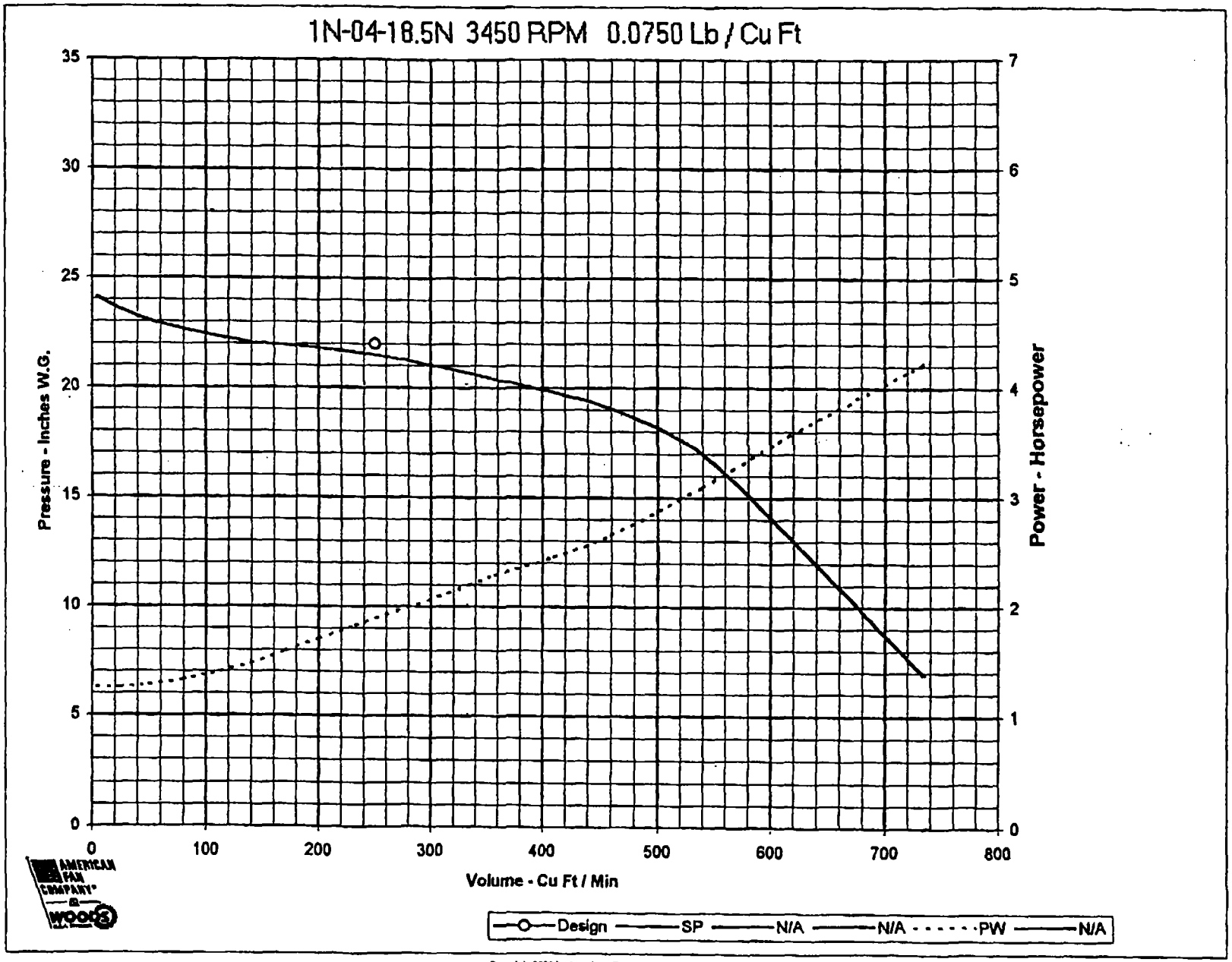

Copyright 2000 by American Fan Company Fairfield, OH

MANUFACTURER'S PRODUCT SPECIFICATIONS

Flame Detector

Honeywell

C7061A,F Dynamic Self-Check Ultraviolet Flame Detector

MODEL C7061A1038

PRODUCT DATA

AMPLIFIER MODEL R7861A1026

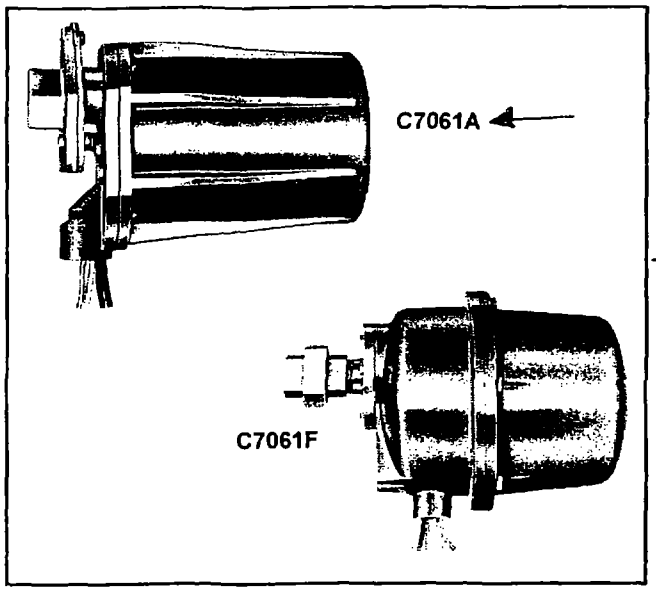

APPLICATION

The C7061A,F are dynamic self-checking flame detectors for sensing the ultraviolet radiation generated by the combustion of gas, oil, or other fuels.

FEATURES

- **Oscillating shutter interrupts ultraviolet radiation reaching the UV sensor 12 times per minute to provide the UV sensor tube checking function. Amplifier circuitry components are checked from the microprocessor in the 7800 Series Control.**
- **Detectors can be mounted horizontally, vertically or at any other angle. The self-checking C7061 models require faceplate alignment and have integral locating reference points to assure proper shutter mechanism operation.**
- **Ultraviolet radiation sensing tube and quartz viewing window are field replaceable.**
- **Threaded conduit fitting and color-coded leadwires allow rapid electrical installation.** Nat P/N 105000A01F1202
- **C7061A1038 uses Brad Harrison® 4130 connector.** 12 ft. long
- **Two flame detectors can be wired in parallel to reduce nuisance shutdowns in difficult flame sighting applications.**
- **A swivel mount is available to facilitate flame sighting.**
- **-40°F (-40°C) rated ultraviolet sensing tube.**
- **Incorporates UV sensor tube checking feature; used with R7861 Dynamic Self-check Amplifiers.**
- **High pressure 50 psi (345 kPa) quartz viewing window, magnifying lens and antivibration mount are available as accessories.**
- **Housing meets NEMA 4 enclosure standards.**
- **Protective heat block built into mounting flange.**

C7061F

- **Housing designed to be explosion-proof and Underwriters Laboratories Inc. listed for use in hazardous locations; Class 1, groups C and D; and Class 2, groups E, F and G.**
- **Viewing window rated for 100psi (690 kPa).**

Contents

Application	1
Features	1
Specifications	2
Ordering Information	2
Installation	3
Wiring (Fig. 10)	7
Adjustments and Checkout	8
Troubleshooting	10
Service	10

® U.S. Registered Trademark
Copyright © 2000 Honeywell • All Rights Reserved

65-0223-2

SPECIFICATIONS

IMPORTANT

The specifications in this publication do not include normal manufacturing tolerances. Therefore, this unit may not exactly match the specifications listed. This product is tested and calibrated under closely controlled conditions, and minor differences in performance can be expected if those conditions are changed.

Models:
C7061A Dynamic Self-Check Ultraviolet Flame Detector.
C7061F Dynamic Self-Check Ultraviolet Flame Detector. (Same as C7061A except with explosion-proof housing for use in hazardous locations).

Electrical Ratings:
Voltage and Frequency:
The C7061 is powered from the Flame Safeguard unit that delivers the necessary voltages to operate the tube and shutter. Nominal voltage: (-15%, +10%), 50/60 Hz.

Ambient Operating Temperature Ratings

(Outside the Case):
-40°F to 175°F (-40°C to 80°C) using part no. 129464N UV Sensing Tube.

Storage Temperature Ratings: -60°F to 175°F (-50°C to 80°C).

Housing:
C7061A: Violet, cast-aluminum cover. Separate mounting flange (with heat block) and faceplate provide heat insulation and sealoff.
Meets NEMA 4 enclosure requirements (indoor, outdoor protection; rain-tight, dust-tight, hose-directed water protection).
Optional water jacket available; see Accessories.
C7061F: Explosion-proof, two-piece, violet, cast aluminum.

Pressure Rating of Quartz Viewing Window:
C7061A: 20 psi (138 kPa), see Replacement Parts.
C7061F: 100 psi (690 kPa).

Pressure Rating of Quartz Focusing Lens: 20 psi (138 kPa), see Accessories.

Mounting:
C7061A: Mounting flange with 3/4 NPT internal threads for attaching to sight pipe.
C7061F: Pipe union with 1 inch NPT internal threads for attaching to sight pipe.

Wiring Connections:
Leadwire: NEC Class 1 color coded.
Length: 8 ft (2.4m).

Threaded Leadwire Faceplate Opening: 1/2-14 NPSM internal threads for attaching conduit.

Connector: C7061A1038 Only: Brad Harrison® 41310.

Dimensions: See Fig. 1.

Weight:
C7061A: 2.6 lbs (1.2 kg).
C7061F: 14.5 lbs (6.6 kg).

Serviceability:
C7061A: Field replaceable ultraviolet sensing tube viewing window, coil and shutter assembly gaskets.
C7061F: Field replaceable self-checking coil and shutter assembly.

Approvals:
Underwriters Laboratories Inc. Listed: File Number MP268, Guide Number MCCZZ.
Canadian Standards Association Certified: Master File LR95329-1.
Factory Mutual Approved: 14740.01.
Industrial Risk Insurers Acceptable.
C7061F: For use in hazardous locations; Class 1, Groups C and D; Class 2, Groups E, F, and G; File no. E34649.

Replacement Parts:
All Models:
129464N Ultraviolet Sensing Tube; -40°F (-40°C).
114372 Quartz Viewing Window; rated for 20 psi (138 kPa).
114465 Gasket, silicone rubber; for installing viewing window (three required).
120739 Gasket, fiber-neoprene; heat insulation and seal-off for mounting flange.
190971B Coil and Shutter Assembly.
C7061F:
122037 Quartz Viewing Window; rated for 100 psi (690 kPa).

ORDERING INFORMATION

When purchasing replacement and modernization products from your TRADELINE® wholesaler or distributor, refer to the TRADELINE® Catalog or price sheets for complete ordering number.

If you have additional questions, need further information, or would like to comment on our products or services, please write or phone:

1. Your local Home and Building Control Sales Office (check white pages of your phone directory).
2. Home and Building Control Customer Relations
   Honeywell, 1885 Douglas Drive North
   Minneapolis, Minnesota 55422-4386 (800) 328-5111

In Canada—Honeywell Limited/Honeywell Limitée, 35 Dynamic Drive, Scarborough, Ontario M1V 4Z9.
International Sales and Service Offices in all principal cities of the world. Manufacturing in Australia, Canada, Finland, France, Germany, Japan, Mexico, Netherlands, Spain, Taiwan, United Kingdom, U.S.A.

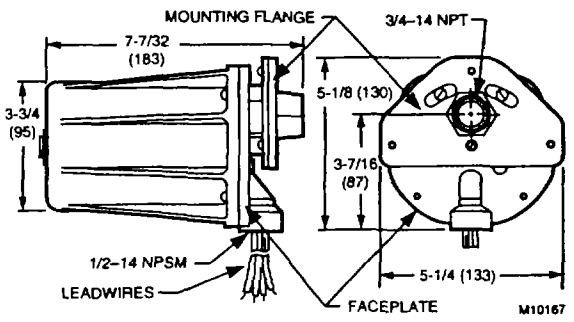

Fig. 1. Dimensions of C7061A in in. (mm).

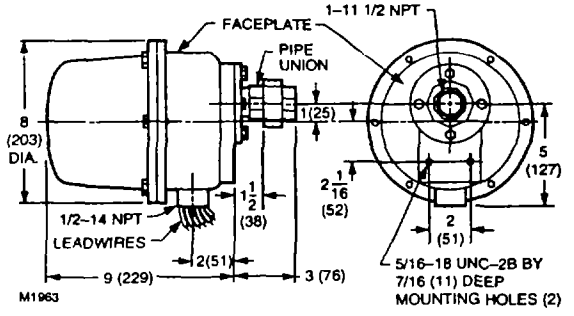

Fig. 2. Dimensions of C7061F in in. (mm).

Accessories:
All models:
- 118367A Swivel Mount.
- 122748 Quartz Viewing Window, rated for 50 psi (345 kPa).
- 124204 Quartz Focusing Lens, rated for 20 psi (138 kPa); increases the detector-sensed ultraviolet radiation.
- 120934 Mounting Flange, aluminum, with 3/4 inch NPT internal threads for attaching to sight pipe.
- 124198 Mounting Flange, aluminum, with 1 inch NPT internal threads for attaching to sight pipe.
- 123539 Antivibration Mount.
- 190105 Water Jacket.
- 204341 Mirror Assembly.

INSTALLATION

When Installing this Product...

1. Read these instructions carefully. Failure to follow them could damage the product or cause a hazardous condition.
2. Check the ratings given in the instructions and on the product to make sure the product is suitable for your application.
3. Installer must be a trained, experienced flame safeguard service technician.
4. After installation is complete, check out product operation as provided in these instructions.

⚠ CAUTION

Equipment damage hazard.
Sensing tube can fail to discriminate between flame conditions.
Change sensing tube after 40,000 hours of continuous use.

⚠ WARNING

Electrical shock hazard.
Can cause serious injury or death.
Disconnect power supply before beginning installation to prevent electrical shock and equipment damage. More than one disconnect may be involved.

IMPORTANT
1. *Do not connect these detectors to non-Honeywell manufactured controls (primaries, programmers, multiburner systems, and burner management systems). Unsafe conditions could result.*
2. *All wiring must be NEC Class 1 (line voltage).*
3. *Voltage and frequency of the power supply connected to this detector must agree with the values marked on the detector.*
4. *Sight the detector so it does not respond to ignition spark.*
5. *On multiburner installations, each detector must respond only to the flame of the burner it is supervising.*
6. *Do not connect more than two C7061 Flame Detectors in parallel.*

Proper flame detector installation is the basis of a safe and reliable flame safeguard installation. Refer also to the burner manufacturer instructions. Carefully follow all instructions for the best possible flame detection application.

Basic Requirements

The combustion flames of most carbon-based fuels emit sufficient ultraviolet radiation to enable the C7061 Solid State (Purple Peeper) Ultraviolet Flame Detector to prove the presence of a flame in a combustion chamber. The detector is mounted outside the combustion chamber with its mounting flange or union threaded to one end of a sight pipe inserted through the wall of the combustion chamber. The ultraviolet sensing tube in the flame detector sights the flame through the pipe.

When a flame is present, the UV tube in the C7061 senses the ultraviolet radiation emitted. The C7061 then produces a signal that is sent to the amplifier in the flame safeguard control. The amplified signal pulls the flame relay into the control to allow proper system operation.

Because it is necessary for the UV sensing tube to actually see the flame, it is best to locate the detector as close to the flame as physical arrangement, temperature, and other restrictions permit. These restrictions are described in detail in the following paragraphs.

Determine Location

Before beginning the actual installation, determine the best location for mounting the detector. Carefully consider the factors discussed in this section before deciding on the location.

Temperature

Install the C7061 where the ambient temperature (outside the case) stays within the ambient operating temperature ratings.

To keep the C7061 below its maximum rating, it may be necessary to add additional insulation between the wall of the combustion chamber and the detector. A shield or screen can be added to reflect radiated heat away from the detector. If the detector continues to get too hot, cooling is necessary. Refer to the Sight Pipe Ventilation section. (A 190105 Water Jacket is also available for cooling the C7061.)

Vibration

If the C7061 is subject to excessive vibration, use a special 123539 Antivibration Mount. If you use this mount, install it before you position and sight the detector.

Clearance

Make sure there is enough room to easily mount the sight pipe, detector, and all required fittings, and to remove the detector for troubleshooting and servicing.

Radiation Sources (Other than Flame)

Examples of radiation sources (other than flame) that could actuate the detection system:

Ultraviolet sources:

Hot refractory above 2300°F (1260°C).

Spark:

— Ignition transformers.
— Welding arcs.
— Lightning.
Welding flames.

Bright incandescent or fluorescent artificial light.

Solar radiation.

Gas lasers.

Sun lamps.

Germicidal lamps.

Bright flashlight held close to the sensing tube.

Gamma ray and X-ray sources:

Diffraction analyzers.

Electron microscopes.

Radiographic X-ray machines.

High voltage vacuum switches.

High voltage condensers.

High voltage coronas.

Radioisotopes.

Except under unusual circumstances, none of these sources except hot refractory and ignition spark would be present in or near the combustion chamber.

The detector can respond to hot refractory above 2300°F (1260°C) if the refractory surface represents a significant percentage of the detector field of view. If the temperature of the hot refractory causes the flame relay (in the flame safeguard control) to pull in, re-aim the sight pipe so the detector views a cooler area of the refractory.

Ignition spark is an intense source of ultraviolet radiation. *When installing the detector, make sure it does not respond to ignition spark.*

Single Burner Requirements

The detector must have an unobstructed view of a steady part of the flame it is supervising. This requires a proper sighting angle and minimized ultraviolet radiation attenuation effects. However, when supervising only one burner, sighting requirements are simplified.

Sighting Angle (Fig. 3)

The first 30 percent of a flame closest to the burner nozzle (the flame root) emits the most ultraviolet energy. Also, if the detector sights the flame at an angle instead of perpendicularly, it views more flame depth. Therefore, the best sighting angle is nearly parallel to the axis of the flame, permitting the detector to view a large portion of the first 30 percent of the flame closest to the burner nozzle, as illustrated in Fig. 3.

Low angle sighting permits the detector to view a greater depth of flame, thus reducing the effects of instabilities in the flame pattern. Also, the environment near the burner nozzle is usually cleaner than at any other part of the combustion chamber. This provides a clearer line of sight and can keep the viewing window cleaner, thus reducing the maintenance required.

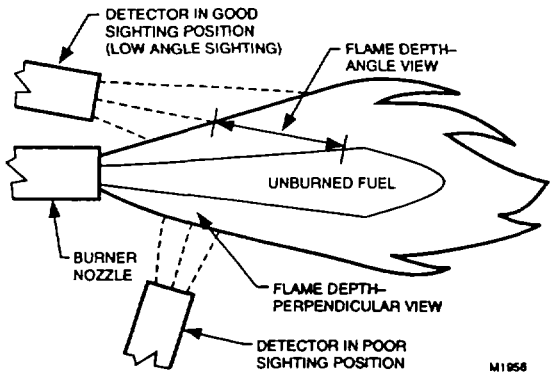

Fig. 3. Detector sighting angle.

NOTE: When possible, it is desirable to tilt the detector and sight pipe downward to prevent the buildup of soot in the pipe or on the viewing window.

In most installations, the detector needs to respond to the pilot flame alone, then the pilot and main burner flame together, and finally the main burner flame alone. The detector must meet all sighting requirements that apply:

- Pilot flame alone—the smallest pilot flame that can be detected must be capable of reliably igniting the main burner.
- Pilot and main burner flame together—the detector must sight the junction of both flames.
- Main burner flame alone—the detector must sight the most stable part of the flame for all firing rates.

Parallel Flame Detectors

Shifting flame patterns, commonly encountered on burners with high turndown ratios, can require two parallel detectors to prove the flame at the highest and lowest firing rates and for modulation in between. In this case, one detector supervises the pilot (interrupted) and both detectors supervise the main burner flame. During the main burner run period, either detector is capable of maintaining system operation. A maximum of two C7061 Detectors can be connected in parallel.

In addition to assuring more reliable flame detection, parallel detectors facilitate maintenance during burner operation. Each detector can be removed, in turn, without shutting down the supervised burner. However, a flame simulating failure occurring in the flame signal amplifier or in either detector will cause a shutdown.

Screening Effects

Smoke, oil mist, dirt and dust are masking agents that attenuate the ultraviolet radiation that the flame emits. If they absorb too much radiation, the amount of ultraviolet radiation reaching the detector is reduced. The flame signal can then become too low to hold in the flame relay, resulting in burner shutdown.

The problem can be eliminated by diluting the contaminants. A strong flow of air through the sight pipe will clear a viewing path through the attenuating material. Refer to the Sight Pipe Ventilation section.

It is also desirable to sight the detector at an area containing fewer masking agents such as near the burner nozzle or near the entrance of the combustion air. Increasing the viewing area of the detector by shortening the sight pipe or by increasing the diameter of the sight pipe also reduces the attenuating effects of masking agents.

Multiburner Requirements

(Flame Discrimination)

In addition to meeting the requirements for a single burner, a multiburner installation requires discrimination between flames. Flame discrimination can be defined as locating all flame detectors so that each detector responds only to the flame of the burner it is supervising.

In multiple burner systems, not every detector can be positioned so its line-of-sight does not intercept flames from other burners. For example, this situation occurs in front-fired boiler-furnaces having more than one row of burners, or in multilevel opposed-fired furnaces where the burners face each other.

When planning such an installation, locate each flame detector so that it has the best possible view of the first 30 percent closest to the burner nozzle (the flame root) it is supervising, and the worst possible view of all other flames.

Fig. 4 illustrates a critical detector application problem that requires flame discrimination. Flame discrimination is accomplished for Detector A by repositioning it until the flame relay (in the flame safeguard control) does not respond to Flame B. Note that Detector A is aimed at the first 30 percent of Flame A where the ultraviolet radiation is most intense. It sights the tip of Flame B, but it is not aimed at the first 30 percent of Flame B where UV is intense. Detector A is repositioned to assure maximum response to Flame A while rejecting Flame B. Similarly, Detector B is positioned to assure maximum response to Flame B while rejecting Flame A.

If you reposition a detector and still cannot achieve flame discrimination, try reducing the viewing area by increasing the length or decreasing the diameter of the sight pipe, or adding an orifice plate.

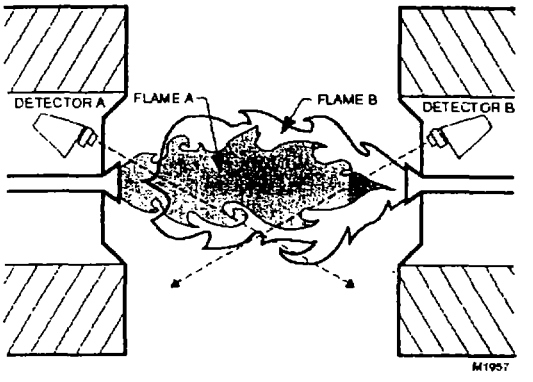

Fig. 4. Example of flame discrimination problem (opposed fired burners).

Install the Sight Pipe (Fig. 5)

After you have determined the location and sighting angle, select the sight pipe. A black iron pipe with a diameter of at least 1-1/2 in. (38 mm) is recommended. Do not use stainless steel or galvanized pipe because they reflect ultraviolet radiation internally and complicate aiming the pipe.

Sight pipes with diameters 2 to 3 in. (51 to 76 mm) produce better results for horizontal rotary burners, which require wide viewing angles. A wide viewing angle can also be obtained by using a short sight pipe.

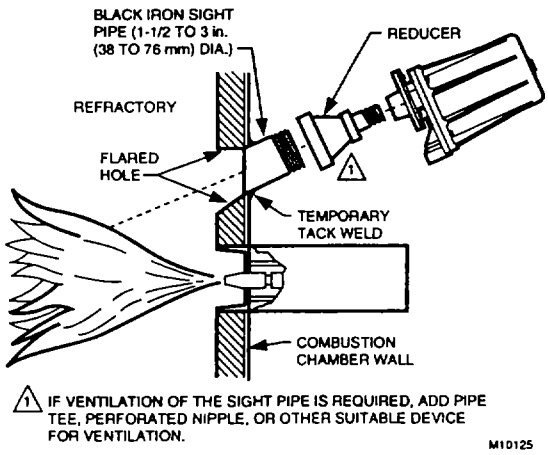

Fig. 5. Typical mounting of C7061.

Prepare Hole in Combustion Chamber Wall

Cut or drill a hole of the proper diameter for the sight pipe in the wall of the combustion chamber at the selected location. Flare the hole to leave room for small adjustments of the sighting angle. The taper of the hole should be about 1 in. for every 3 in. (25 mm for every 76 mm) of wall thickness.

Mount Sight Pipe

Thread one end of the pipe to fit the mounting flange, union, or required coupling. Cut the pipe to the desired length (as short as practical) and at an angle so it fits flush with the wall of the combustion chamber. Tack weld the pipe to the wall in a trial position. Do not weld the sight pipe permanently in place until after completing the Adjustments and Checkout.

NOTE:If you use 118367A Swivel Mount and you are positive about the location and sighting angle, you can permanently weld the pipe.

Install Fittings

In some cases, the sight pipe does not directly fit the C7061 mounting flange or union. Also, it may be desirable or necessary to ventilate the sight pipe. You may also want to use a swivel mount or an antivibration mount. Each of these cases can require additional fittings.

Reducer

For sight pipes of larger diameter than the mounting flange connector or union, install a reducer as illustrated in Fig. 5. The reducer requires a close nipple with 3/4 in. NPT external threads:

Sight Pipe Ventilation

It may be necessary to ventilate the sight pipe to cool the detector or to clear a viewing path through UV radiation attenuating material.

For a negative pressure combustion chamber, drilling a few holes in the section of the sight pipe outside of the combustion chamber allows air at atmospheric pressure to flow through the sight pipe and into the chamber. A perforated pipe nipple between the sight pipe and the detector can also be used.

For a positive pressure combustion chamber, connect a supply of pressurized air from the burner blower to flow through the sight pipe and into the chamber. The air pressure must be greater than the chamber pressure.

Swivel Mount

To facilitate proper flame sighting, use 118367A Swivel Mount (ordered separately). The swivel mount requires a reducer of the proper size to mount it onto the sight pipe. It also requires a one-inch close nipple for mounting to a C7061 with a one-inch connector. (For 118367A Swivel Mount mounting details, refer to 60-0361.)

Antivibration Mount

The detector withstands normal burner vibration. If the vibration is excessive, 123539 Antivibration Mount is available. (For mounting details, see form 60-0361.) If you use this mount, install it before positioning and sighting the detector.

Mount the Detector (Fig. 5-8)

Mount the detector onto the sight pipe, reducer, or other fitting (see Fig. 5-8).

The C7061 Self-Checking Flame Detectors incorporate an oscillating shutter mechanism and, therefore, require special consideration for mounting positions other than vertically sighting downward or upward, as illustrated in Fig. 6. The C7061 has notch and arrow indicators (see Fig. 7) on the faceplate to facilitate mounting in positions other than those shown in Fig. 6. The notch and arrow must be vertically aligned with the notch in the up position and the arrow pointing downward (see Fig. 7). The C7061 must be mounted with the conduit opening located approximately 45 degrees below the horizontal (see Fig. 7).

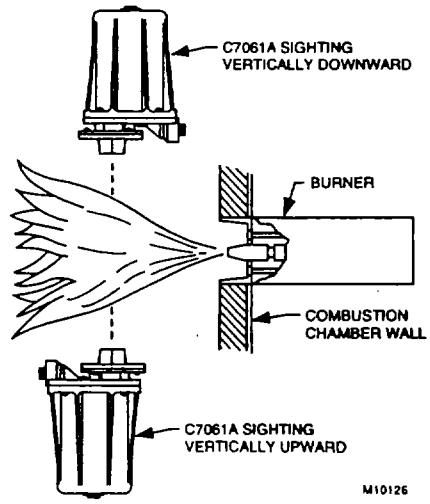

Fig. 6. Vertical mounting of C7061A.

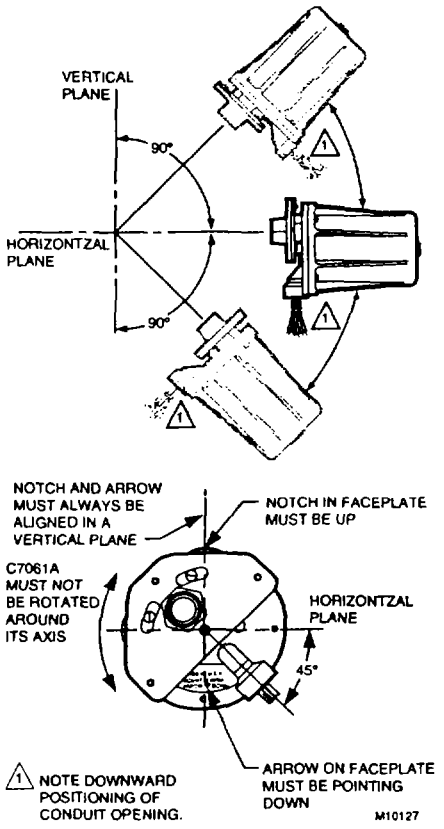

Fig. 7. C7061 mounting positions.

IMPORTANT

The notch and arrow on the faceplate must be aligned in a vertical plane with the notch up and the arrow pointing down.

The housing must be mounted with the conduit opening approximately 45¡ below horizontal (see Fig. 6).

To mount a C7061A (Fig. 8):

1. The mounting flange is in two pieces. Loosen (but do not remove) the three screws holding the flange together.
2. Slightly rotate the detector so the slots in the back section of the mounting flange clear the screws in the front section; then separate the two sections.
3. Screw the front section of the mounting flange onto the sight pipe, reducer, or other fitting.
4. Fit the slots in the back section of the mounting flange (with the detector) over the three screws in the front section, and rotate the detector so the screws hold the flange together.
5. Tighten the screws securely.

To mount the C7061F with explosion-proof housing (Fig. 9):

1. Unscrew the collar on the pipe union and remove the coupling section. The collar and coupling are in two pieces; do not separate them.
2. Screw the coupling onto the sight pipe, reducer, or other fitting.
3. Mount the remainder of the pipe union (with the detector) onto the coupling and securely tighten the collar.

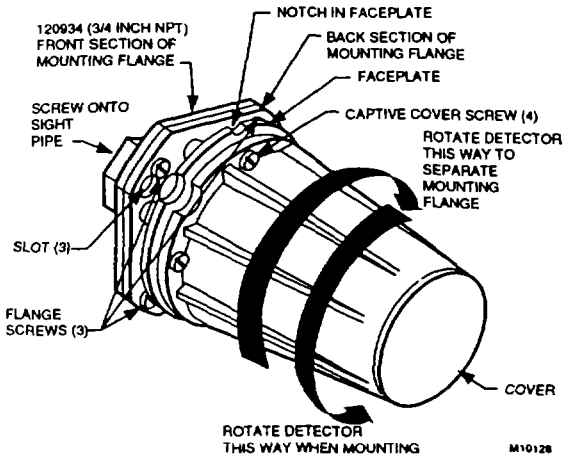

Fig. 8. Mounting C7061A Detector.

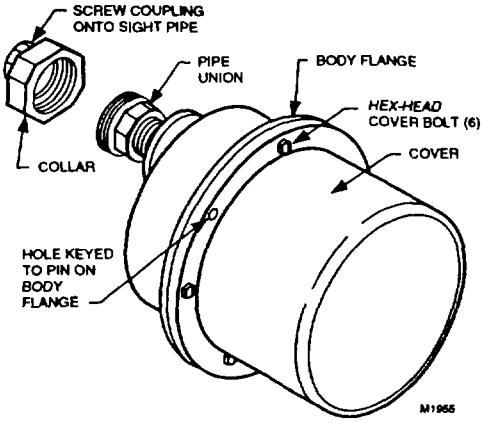

Fig. 9. Mounting a C7061F Detector.

WIRING (FIG. 10)

⚠ CAUTION

Equipment damage hazard.
Improper wiring can permanently damage amplifier.
When using a C7061A with an R7861 Dynamic Self-Check Amplifier, be careful not to short the white shutter leadwires together (by wiring incorrectly, leaving an incorrect jumper wire, or stripping the insulation too much so the bare leadwires can touch).

1. All wiring must comply with applicable local electrical codes, ordinances, and regulations. Use NEC Class 1 wiring.
2. Keep the flame signal leadwires as short as possible from the flame detector to the terminal strip or wiring subbase. Capacitance increases with leadwire length, reducing the signal strength. The maximum permissible leadwire length depends on the type of leadwire and

conduit type and diameter. *The ultimate limiting factor in flame signal leadwire length is the signal current.* Refer to Table 1.

3. The detector has color-coded plastic-insulated, no. 18 leadwires, 8 ft (2.4m) long, rated for 221°F (105°C). *These wires must be run in a conduit.*
4. If the leadwires are not long enough to reach the terminal strip or wiring subbase, make the required splices in a junction box.
5. If splicing is necessary, use moisture-resistant no. 14 wire suitable for at least 167°F (75°C) if the detector is used with a flame safeguard primary control, or at least 194°F (90°C) if used with a flame safeguard programming control.
6. *For high temperature installations,* use Honeywell specification no. R1298020 wire or equivalent for the F leadwire. This wire is rated up to 400°F (204°C) for continuous duty. It is tested for operation up to 600 volts and for breakdown up to 7500 volts. For the other leadwires, use moisture-resistant no. 14 wire selected for a temperature rating above the maximum operating temperature.
7. Refer to Fig. 10 for wiring connections.

IMPORTANT

Do not run the flame detector wiring in the same conduit with high voltage ignition transformer wires.

Connecting Detectors in Parallel

For a flame that is difficult to sight, using two parallel C7061 Flame Detectors reduces nuisance shutdowns. If only one of the parallel detectors loses the flame signal, the other indicates the presence of the flame and keeps the burner running. When two parallel C7061 Detectors are used, a flame-simulating failure in either detector causes the burner to shut down. Two C7061 Detectors can be connected in parallel to the same terminals on 120 volt flame safeguard controls. To avoid exceeding the rating of the solid-state shutter switch in the R7861 Flame Signal Amplifier, do not connect more than two C7061 Detectors in parallel.

IMPORTANT

Voltage and frequency rating of the C7061A must match the power supply of the flame safeguard control.

ADJUSTMENTS AND CHECKOUT

UV Sensor Tube Test

For initial burner lightoff, consult the burner manufacturer instructions or the flame safeguard control instructions.

If the system does not start during the initial burner lightoff, check the UV sensor tube in the flame detector. If a reddish glow appears when there is no flame present, replace the UV sensing tube. When performing this test, make sure there are no extraneous sources of ultraviolet radiation in the test area (see Radiation Sources section).

Adjust Detector Sighting

With the flame detector installed and the burner running, adjust the sighting position of the detector for optimum flame signal.

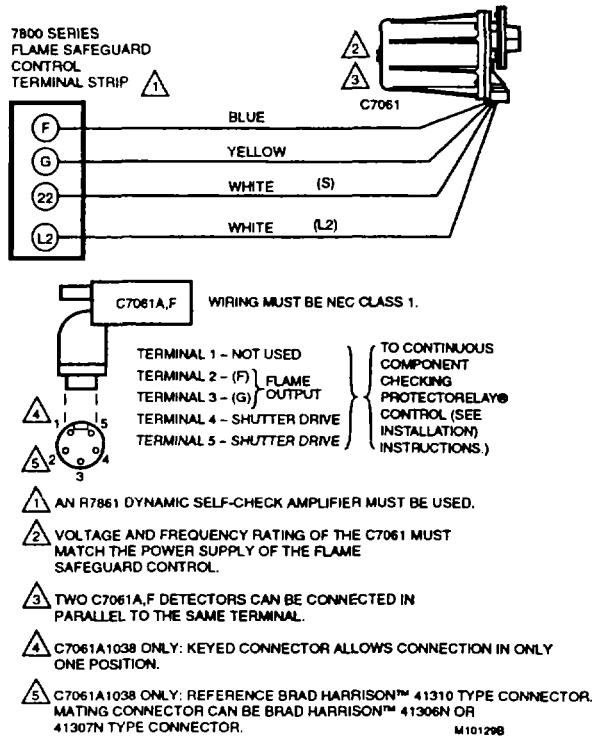

Fig. 10. Wiring diagram for C7061A,F Detectors with 7800 Series Flame Safeguard controls with shutter drive circuitry.

It is suggested that a volt-ohm meter with a minimum sensitivity of one megohm/volt and a zero to five or ten Vdc scale be used for R7861 Amplifier flame signal measurements. Measure the flame signal as illustrated in Fig. 10. Be careful to make the proper connections of positive (red) meter lead to positive (+) control jack and negative (black) meter lead to negative (-) or (-Com) jack with 7800 Series controls. When the 7800 Series control has a Keyboard Display Module, a zero to five Vdc voltage is displayed on the module.

NOTES:

1. The shutter operation causes fluctuations in the voltage reading. Read the average stable reading, disregarding the peaks.
2. The flame signal must be steady (or stable as described in note 1).

Move the detector and sight pipe around to sight the flame from various positions and angles. Try to get a maximum steady (or stable) reading on the meter that is above the minimum acceptable voltage listed in Table 1.

Measure the flame signal for the pilot alone, the main burner flame alone, and both together (unless monitoring only the pilot flame when using an intermittent pilot, or only the main burner flame when using direct spark ignition). Also measure the flame signal at low and high firing rates and while modulating in between (as applicable). With the detector in its final position, all required flame signals must be steady (or stable) and as specified in Table 1. If you cannot obtain the proper signal, refer to the Troubleshooting section.

Pilot Turndown Test

When the detector is used to prove a pilot flame before the main fuel valve(s) can be opened, perform a Pilot Turndown Test before welding the sight pipe into position. Follow the procedures in the flame safeguard control instructions and in the burner manufacturer instructions.

Ultraviolet Response Tests Ignition Spark Response Test

Test to be sure that ignition spark is not actuating the flame relay in the flame safeguard control.

1. Close the pilot and main burner manual shutoff valves.

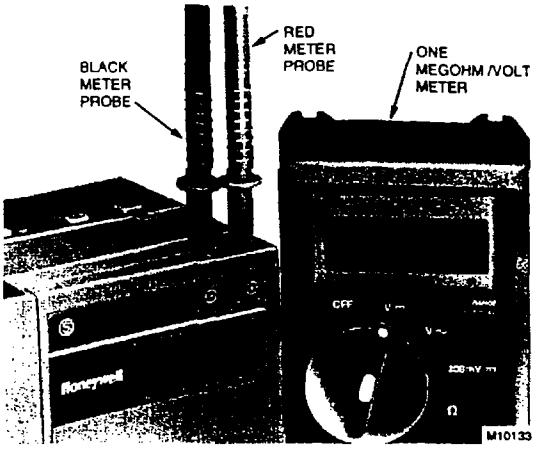

Fig. 11. Measuring voltage flame signal with 7800 Series controls.

Table 1. Flame Signal.

Flame Detector	Plug-in Flame Signal Amplifier	Flame Safeguard Control(s)	Minimum[a] Acceptable Steady Voltage (Vdc)	Maximum Expected Voltage (Vdc)
C7061A,F	R7861 Dynamic Self-Check[a,b]	RM7800E,G,L,M; RM7823A; RM7838A,B,C; EC7823A; RM7840E,G,L,M; RM7890B; EC7890B; RM7895A,B,C,D; RM7896A,B,C,D; EC7895A,C; EC/RM7885; EC7810; EC7820; EC/RM7830; EC7850.	1.25	5.0

[a] Shutter operation of the C7061A causes fluctuations in the voltage reading. Read the average stable voltage, disregarding the peaks.

[b] Shutter operates at 12 cycles per minute.

2. Start the burner and run through the Ignition period. Ignition spark should occur, but the flame LED must not light. The flame signal should not be greater than 0.25 Vdc.
3. If the flame relay does pull in, reposition the detector farther from the spark, or relocate/resight the detector to eliminate/reduce the detector response to reflected UV radiation. It may be necessary to construct a barrier to block the ignition spark from the detector view. Continue adjustments until the flame signal due to ignition spark is less than the flame signal values indicated in step 2.

Response to other Ultraviolet Radiation Sources

Some sources of artificial light produce small amounts of ultraviolet radiation. Under certain conditions, an ultraviolet detector responds as if it is sensing a flame. Do not use an artificial light source to check the response of an ultraviolet flame detector. To check for proper detector operation, conduct flame failure response tests under all operating conditions.

Weld the Sight Pipe

When the flame signal is acceptable after all adjustments are made, remove the detector and weld the sight pipe in its final position. (If you are using a swivel mount, the pipe may be already welded.) Then reinstall the detector.

Final Checkout

Before putting the burner into service, check out the installation using the Checkout procedures in the Instructions for the appropriate flame safeguard control. After completing the Checkout, run the burner through at least one complete cycle to verify correct operation.

IMPORTANT

Do not put the system into operation until all Checkout tests in the Instructions for the appropriate flame safeguard control and any others specified in the burner installation instructions are satisfactorily completed.

TROUBLESHOOTING

⚠ WARNING

Electrical shock hazard.
Can cause serious injury or death.
Open the master switch to disconnect power before removing or installing the detector or its cover. More than one disconnect may be involved.

Equipment Required

A volt-ohm meter with a minimum sensitivity of one megohm/volt and a zero to five or ten Vdc scale is suggested. When the Keyboard Display Module is included with the control, a flame signal displays on the module.

For replacement parts, see Specifications section.

UV Sensor Tube Test

See UV Sensor Tube Test section.

Unsatisfactory Flame Signal

If a satisfactory flame signal (see Table 1) cannot be obtained while adjusting the sighting position of the detector, follow these procedures. If you encounter other problems in the system, refer to the Troubleshooting section in the instructions for the appropriate flame safeguard control.

NOTE: For instructions to replace the viewing window, sensing tube, and coil and shutter assembly, see the Service section.

Troubleshooting Procedures

First perform the Preliminary Inspection. Then follow the applicable procedures for either a low meter reading or a zero meter reading. After reinstalling the detector or replacing its cover, recheck the meter reading. To try to obtain the proper flame signal, adjust the position of the detector. If you complete all of the procedures and yet cannot obtain a proper flame signal, replace the detector.

Preliminary Inspection

1. Check for the proper line voltage. Make sure the master switch is closed, connections are correct, and power supply is of the correct voltage and frequency.
2. Check the detector wiring for defects:
   a. Incorrect connections.
   b. Wrong type or size of wire.
   c. Deteriorated wire.
   d. Open circuits.
   e. Short circuits.
   f. Leakage paths caused by moisture, soot, or dirt.
3. With the burner running, check the temperature at the detector. If it exceeds 175°F (79°C):
   a. Add additional insulation between the wall of the combustion chamber and the detector.
   b. Add a shield or screen to reflect radiated heat away from the detector, or
   c. Add cooling (refer to Sight Pipe Ventilation and Accessories sections).

Removing Detector from Sight Pipe (Refer to Fig. 8)

Loosen the three screws holding the mounting flange; rotate the detector slightly so the screws clear the slots in the back section of the flange; separate the flange; and pull off the back section (with the UV sensor).

NOTE: The detector is free when the collar is unscrewed; do not drop it.

Procedure for Zero Meter Reading

1. Replace the plug-in amplifier. Then recheck the flame signal.
2. Replace the ultraviolet sensing tube (see Service section). Then recheck the flame signal.
3. Replace the coil and shutter assembly (see Service Section). Then recheck the flame signal.
4. If you cannot yet obtain a meter reading, replace the detector.

IMPORTANT
At the completion of Troubleshooting, be sure to perform the Adjustments and Checkout procedures.

SERVICE

⚠ WARNING

Electrical shock hazard.
Can cause serious injury or death.
Open the master switch to disconnect power before removing or installing the detector or its cover. More than one disconnect can be involved.

Periodic Maintenance

1. Clean the viewing window (or focusing lens) when necessary. Remove the detector (see Troubleshooting section) and use a clean cloth over the eraser end of a pencil. Do not remove the window (or lens) to clean it. If it is broken or damaged or it is coated with a substance that cannot be removed, replace it (see Fig. 13).
2. Keep the flame detection system adjusted for the smoothest, most reliable operation as recommended by the burner manufacturer.
3. Replace the sensing tube, coil and shutter assembly, or viewing window only when necessary to obtain proper operation.

Removing Detector Cover (All Models):

1. 1.Open the Master Switch.
2. 2.Unscrew the four captive cover screws (Fig. 7) and carefully slide off the cover.

NOTE: These bolts are removable. Put them in a safe place to avoid losing them.

Replacing Ultraviolet Sensing Tube (All Models) (Fig. 11)

IMPORTANT

Be very careful not to kink or otherwise damage the flexible shutter.

1. Open the master switch and remove the cover from the detector (see instructions above).
2. Locate the UV sensing tube.
3. Gently bend the alignment guide just enough to free the tip of the tube.
4. Insert a screwdriver between the tube base and the socket, and gently pry the tube out of its socket.
5. Pull the tube completely out of its socket.
6. Insert the new tube through the openings in the shutter assembly.
7. Align the three pins on the new tube with the holes in the socket.
8. Carefully push the new tube firmly into the socket until the alignment guide snaps into place around the tip of the tube.
9. *Make sure the new UV sensor tube is seated securely.*
10. Replace the detector cover.

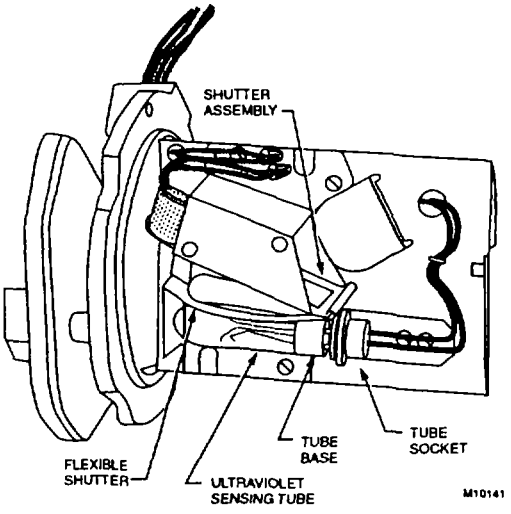

Fig. 12. Replacing ultraviolet radiation sensing tube.

Replacing Coil and Shutter Assembly (Fig. 12)

NOTE: Use only a 190971B Coil and Shutter Assembly.

1. Open the master switch and remove the detector cover (see Removing Detector Cover section).
2. Remove the ultraviolet sensing tube (steps 1 through 5 of Replacing Ultraviolet Sensing Tube section).
3. Cut the white wires as close as possible to the crimped connectors, and remove the crimped connectors.
4. Remove the three mounting screws from the base of the coil and shutter assembly. Put the screws in a safe place.
5. Remove the coil and shutter assembly.
6. Install the new coil and shutter assembly.

IMPORTANT

Be very careful not to kink or otherwise damage the flexible shutter.

7. Insert the three mounting screws into the base of the coil and shutter assembly and tighten securely.
8. Remove sufficient insulation from each of the two white leadwires remaining on the detector, and also from each of the two white leadwires on the new coil.
9. Using solderless connectors, connect one of the coil wires to one of the remaining white leadwires. Connect the other coil wire to the other remaining white leadwire.
10. Reinstall the sensing tube (steps F through I of Replacing Ultraviolet Sensing Tube section).
11. Replace the detector cover.

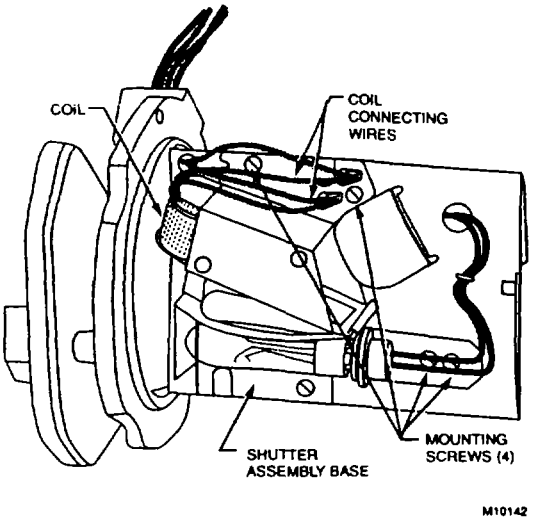

Fig. 13. Replacing coil and shutter assembly.

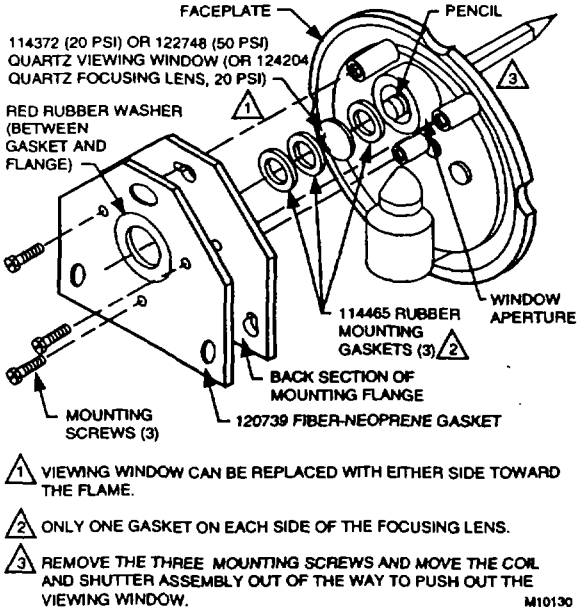

Fig. 14. Replacing quartz viewing window or focusing lens.

Replacing Quartz Viewing Window (or Focusing Lens)

▶ C7061A (Fig. 14)

IMPORTANT

Use quartz window or lens. Ordinary glass absorbs or filters out ultraviolet radiation.

1. Open the master switch; remove the detector from the sight pipe and remove the detector cover. (See appropriate sections.)
2. Remove the ultraviolet sensing tube (steps 1 through 5 of Replacing Ultraviolet Sensing Tube section).
3. Loosen the three screws holding the back section of the mounting flange to the faceplate. Carefully remove and keep together the three screws, the gray fiber-neoprene gasket, the red rubber washer, and the back section of the mounting flange.

NOTE: If the viewing window (with its rubber mounting gaskets) is stuck to the mounting flange, skip step 4.

IMPORTANT

Be very careful not to kink or otherwise damage the flexible shutter.

4. Using the eraser end of a pencil, push out the viewing window (with its rubber mounting gaskets) from the inside of the faceplate.
5. Insert one rubber mounting gasket into the window aperture in the faceplate.
6. Insert the new quartz viewing window (or focusing lens) into the window aperture with either side toward the flame.
7. Insert two rubber mounting gaskets (only one gasket when replacing a focusing lens) into the aperture.
8. Put the back section of the mounting flange, red rubber washer, and fiber-neoprene gasket in place on the faceplate, and securely tighten the three mounting screws.

NOTE: Make sure the red rubber washer between the gray fiber-neoprene gasket and the back section of the mounting flange does not protrude over the window aperture or otherwise obscure the detector line-of-sight.

9. Clean both sides of the viewing window (or focusing lens) using a clean cloth placed over the eraser end of a pencil.
10. Reinstall the sensing tube (steps F through I of Replacing Ultraviolet Sensing Tube section).
11. Replace the detector cover and reinstall the detector on the sight pipe.

C7061F (Fig. 15)

Open the master switch and remove the detedctor from the sight pipe (see appropriate section).

Unscrew the four hex-ehad bolts holding the seal-off flange to the faceplate and remove the flange. Put the bolts in a safe place.

Unscrew the retaining ring (with its rubber O-ring seal) from the seal-off flange.

Tip the flange and let the viewing window fall into your hand.

Insert either side of the new 122037 Quartz Viewing Window into the window aperture.

Screw the retaining ring (with O-ring seal) into theseal-off flange and tighten securely.

Clean the viewing window on both sides with a clean cloth placed over the eraser end of a pencil.

Put the seal-off flange back into place on the faceplate and securely tighten the four hex-head bolts.

Reinstall the detector on the sight pipe.

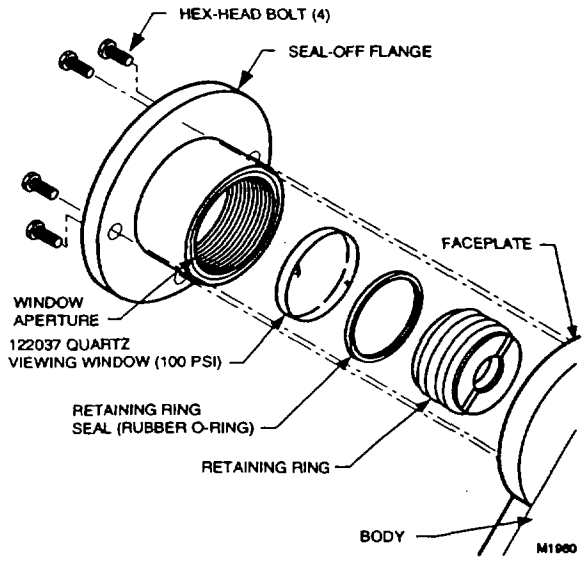

Fig. 15. Replacing quartz viewing window on C7061F.

MANUFACTURER'S PRODUCT SPECIFICATIONS

Thermocouples

Mineral Insulated Thermocouples

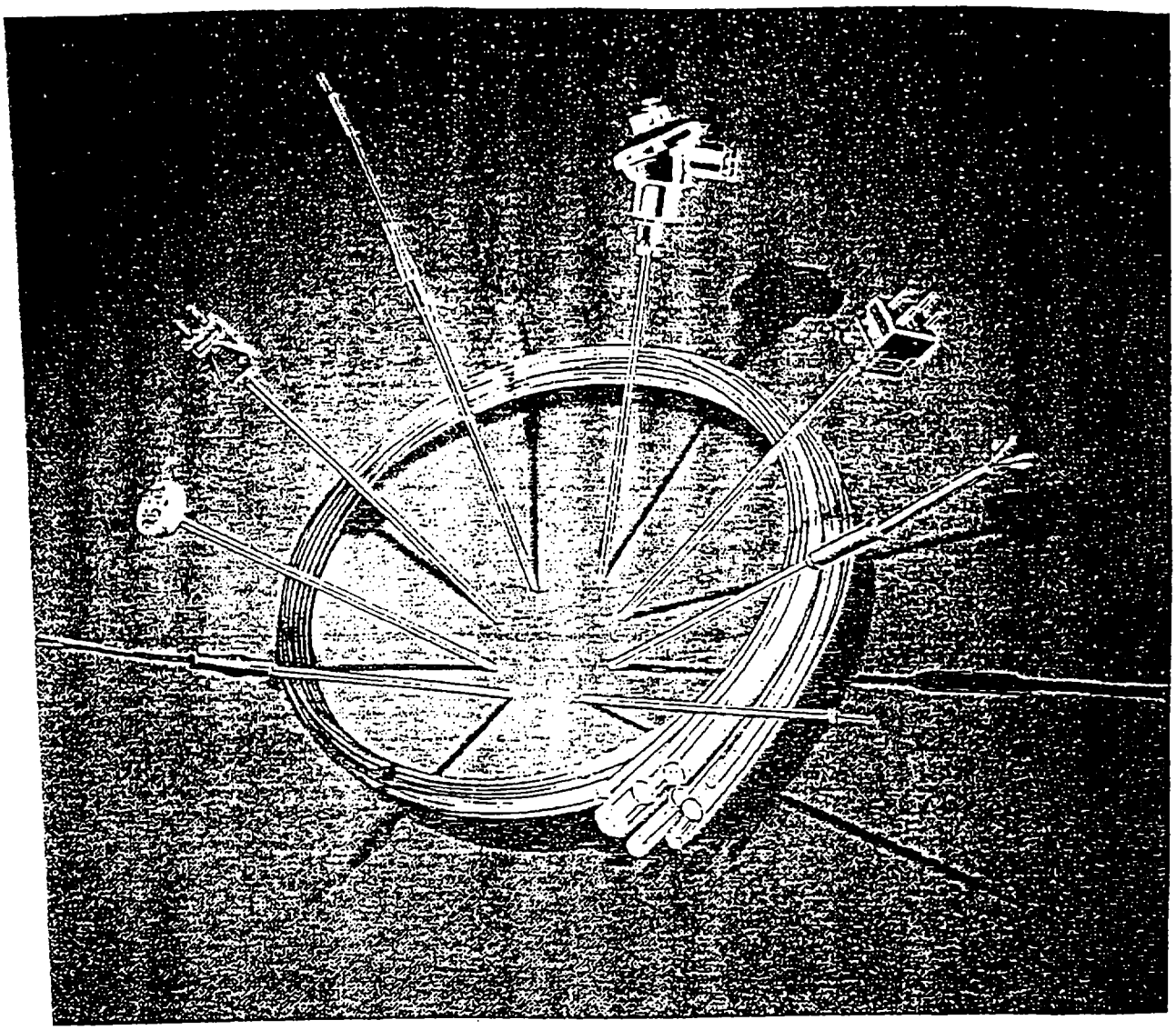

XacTpak® Thermocouple Assemblies

Thermocouples in this section of the catalog are manufactured from material we call XacTpak. XacTpak is Watlow Gordon's trademark for metal-sheathed, mineral-insulated thermocouple material.

XacTpak gives fast time response because the protective metal outer sheath allows the use of smaller diameter thermocouple conductors. The rock hard compacted MgO insulation further enhances the sensor's ability to "read" temperature by transferring heat quickly to the measuring junction.

XacTpak outperforms and lasts longer than beaded thermocouple assemblies in most applications and often eliminates the need for bulky, expensive protection tubes. XacTpak is available in a wide variety of sheath materials, diameters and calibrations.

Quality Control & Testing:

To maintain quality and consistency, XacTpak is manufactured under carefully controlled procedures and rigid standards of cleanliness. Quality checks are made at critical points throughout the manufacturing process.

All XacTpak is inspected and tested for conductor uniformity, electrical continuity, insulation resistance, calibration conformance and physical dimension. Special testing and certification, including helium leak, X-ray and dye penetrant, among others, are available on request. For a more complete discussion of Watlow Gordon's advanced technological capabilities, refer to the Laboratory Services Section of this catalog.

Sheath Materials:

Virtually any malleable metal can be used as XacTpak sheath material. Some of the more commonly used materials and their maximum continuous operating temperatures in an oxidizing atmosphere are:

Alloy 600 ..... +2150°F (1212°C)
304 Stainless Steel ..... +1650°F (899°C)
316 Stainless Steel ..... +1650°F (899°C)
310 Stainless Steel ..... +2100°F (1150°C)

Unless otherwise specified, XacTpak is annealed in a protective atmosphere. No oxide removal is necessary prior to welding.

For temperatures exceeding 2200°F (1204°C), noble or refractory metals are used for sheathing. See the High Performance Thermocouple Section of this catalog.

Important Features of XacTpak:

- Moistureproof
- High Pressure Rated
- Thermal Shock Resistant
- High Temperature Rated
- Fast Responding
- Accurate
- Formable
- Weldable
- Durable
- Compact

Typical Applications:

- Heat Treating
- Furnaces
- Kilns
- Turbines
- Bearing Temperature
- Power Stations
- Steam Generators
- Diesel Engines
- Nuclear Reactors
- Atomic Research
- Jet Engines and Test Cells
- Rocket Engines
- Blast Furnaces
- Glass Melting
- Refineries
- Oil Processing
- Catalytic Reformers

Conductor Materials:

The thermocouple material used in XacTpak meets or surpasses all applicable ANSI standards.

Insulation:

The insulation used in XacTpak is high purity or standard purity magnesium oxide with other insulation types available upon request. During the manufacturing process, the insulation is highly compacted, which excludes air from the sheath, retards moisture absorption and prevents "powdering out". The high degree of compaction achieved also ensures high thermal conductivity and maximum dielectric strength.

Forming:

Because XacTpak sheath is dead soft and bright annealed, it can be formed or shaped to any contour without risk of cracking. As a rule of thumb, it can be formed on a mandrel twice the outside diameter of the sheath. In other words, .125 XacTpak can be wound around a .250 mandrel.

Welding:

Welding, such as to a vessel or pipe, should be made in an inert atmosphere to prevent oxidation of the sheath. When working with XacTpak of .040 in. outside diameter or less, extreme caution should be used not to burn through the sheath. If applicable, a short swaged-on sleeve should be fabricated on the finished assembly at the factory. Such a sleeve will be .020 in. to .030 in. thicker than the sheath outside diameter.

Assembly Length Tolerances

Sheath Length Dimensions

XacTpak Diameter (In)	"L" Element Length Up to 24 in.	"L" Tolerance Over 24 in.
Up to .036	+/−1/4"	+/−1%
.036 to .056	+/−3/16"	+/−3/4%
.056 and larger	+/−1/8"	+/−1/2%

Flexible Lead Dimensions

"E" Length (ft.)	"E" Tolerance
1 up to 10	+6", −0"
10 & longer	+5%, −0"

Choose the measuring junction that best suits your particular needs:

(Hot or Measuring Junctions available in single or dual element cable.)

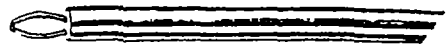

Exposed Junction (E)

Thermocouple wires are butt welded. Insulation is sealed against liquid or gas penetration. This junction style provides the fastest possible response time but leaves the thermocouple wires unprotected against corrosive or mechanical damage.

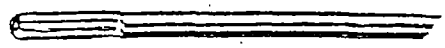

Grounded Junction (G)

The sheath and conductors are welded together forming a completely sealed integral junction. Recommended in presence of liquids, moisture, gas or high pressure. The wire is protected from corrosive or erosive conditions. In the Grounded Junction, response time approaches that of the Exposed Junction.

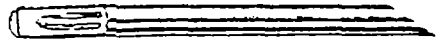

Ungrounded Junction (U)

Thermocouple junction is fully insulated from welded sheath end. Excellent for applications where stray emf's would affect the reading and for frequent or rapid temperature cycling. In the Ungrounded Junction, response time is slightly longer than for the Grounded Junction.

- Watlow Gordon connection heads provide superior dust and moisture resistance.
- Most covers have lugs to allow tightening with either screwdriver or wrench.
- Plastic heads are weatherproof and resist weak acids, organic solvents, alkalies, sunlight and dust. Bottom mounting is standard. Side mounting available on request.
- Aluminum canister head features neoprene O-ring seals for very high water resistance.
- Available complete with a head-mounted 4-20 mA transmitter on a consult factory basis.

Style AR Connection Head

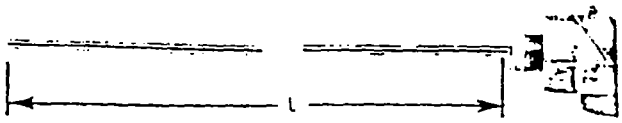

Assembly with standard mounting fitting.

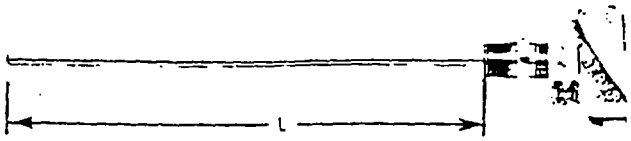

Assembly with fitting option E, F, or H.

1	2	3	4	5	6	7	8	9	10	11	12	13	14	15
A	R				O							O	O	O

SHEATH O.D. (in)

E = .063	K = .313
G = .125	L = .375
H = .188	M = .500
J = .250	

CONNECTION HEAD

A = Universal Cast Iron
B = Universal Cast Aluminum
C = Polypropylene
D = Small Cast Iron
E = Small Aluminum
F = Miniature Plastic
G = Canister
H = Explosion Proof

FITTINGS, WELD PADS*

If required, enter letter from table on pp. 70-71. If none, enter "0".

SHEATH MATERIAL

A = 304 SS	Q = Alloy 600
D = 310 SS	F = 316 SS

*When a double threaded fitting is selected, one side of the fitting will be used to mount the head.

SPECIAL REQUIREMENTS

If none, enter "0" If required, consult factory.

***CALIBRATION**

	E	J	K	N	R	S
Std. Limits	E	J	K	N	R	S
Special Limits	2	3	4	5		

*Standard thermocouples for calibration and S are available in .063 and .125 diameter, Alloy 600 sheath material, ungrounded junction and single element. Consult factory for other configurations.

JUNCTION

	Grounded	Ungrounded	Exposed
Single	G	U	E
Dual, common	H	V	F
Dual, isolated	—	W	D

SHEATH LENGTH "L" (fractional in.)

0 = 0	4 = 1/2
1 = 1/8	5 = 5/8
2 = 1/4	6 = 3/4
3 = 3/8	7 = 7/8

SHEATH LENGTH "L"

Whole inches 01 to 99 (6 in. increments standard). Lengths over 99 in. consult factory

See the components and hardware section for a complete description of Watlow Gordon connection heads.

Standard Fitting Optior

Fixed Fittings

Fixed fittings must be brazed to the sheath and are suitable where the exact immersion depth "A" is known in advance.

Thread	Material	Sheath O.D. (in)	NPT (in)	Hex (in)	Code	Length (in)
Single	303 SS	.063 to .250	1/8	7/16	A	11/16
Single	303 SS	.250 to .375	1/4	9/16	B	7/8
Single	Mild Steel	.125 to .375	1/2	7/8	C	1
Single	303 SS	.125 to .375	1/2	7/8	D	1
Double	Mild Steel	.125 to .375	1/2	7/8	E	1-3/4
Double	303 SS	.125 to .375	1/2	7/8	F	1-3/4

*When ordering fixed fittings as part of an assembly, specify the distance "A" in inches from tip of the measuring junction to the start of threads.

Shown in Hardware Section as TH-184
or MC-100155-G(SS) and MC-100151-C (Ste

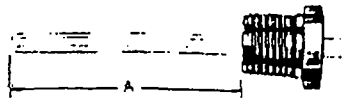

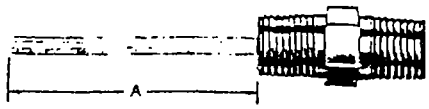

Shown in Hardware Section as MC-100156-G (S
MC-100157-G (SS)

Adjustable Spring-Loaded Fitting

The adjustable spring-loaded fitting features a 50 psi ambient, high-temperature seal.

Material	Sheath O.D. (in)	NPT (in)	Hex (in)	Code
316 SS	.250	1/2	7/8	H

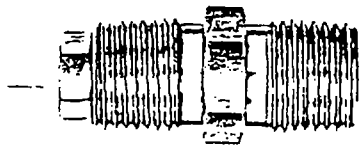

Shown in Hardware Section as 6555-250

Compression Fittings

Compression fittings are shipped finger-tight on the sheath allowing field installation. Once non-adjustable fittings are deformed, they cannot be relocated. Adjustable fittings come with neoprene, teflon or lava sealant glands.

Non-Adjustable

Thread	Material	Sheath O.D. (in)	NPT (in)	Hex (in)	Code
Single	Brass	.125 to .250	1/8	1/2	J
Single	Brass	.250 to .375	1/4	1/2	K
Single	304 SS	.063 to .250	1/8	1/2	L
Double	304 SS	.063 to .250	1/8	1/2	M

Shown in Hardware Section as TH-185 (Brass
TH-2745 (SS Single) or TH-2749 (SS Double

Adjustable

Thread	Material	Sheath O.D. (in)	NPT (in)	Hex (in)	Neo-prene	Tef-lon	La-va
Single	304 SS	.063 to .188	1/8	1/2	N	G	Q
Single	304 SS	.250 to .375	1/4	7/8	P	X	V
Double	304 SS	.063 to .188	1/8	1/2	S	R	7
Double	304 SS	.250 to .375	1/4	7/8	T	U	9

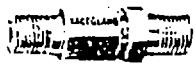

Shown in Hardware Section as TH-2747 or TH-2
(Single) and TH-2751 or TH-2752 (Double)

See Pages 159-161 for a complete description of all mounting fittings.

Thermocouples

Mineral Insulated

Style AR Connection Head

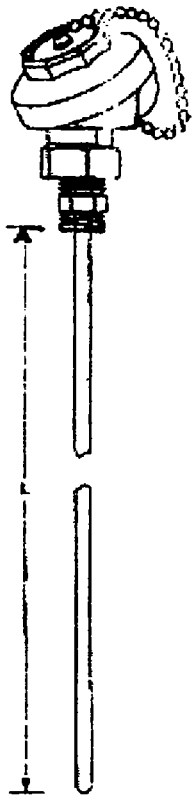

1	2	3	4	5	6	7	8	9	10	11	12	13	14	15
A	R	M	E	F	0	G	2	4	0	V	K	0	0	0

3. Sheath O.D. (inch)
E = 0.063 X = 0.313 J = 0.250
G = 0.125 L = 0.375
H = 0.188 M = 0.500
Note: Teflon® coating only available on E, G, H, J.

4. Connection Head
A = Universal cast iron
B = Universal cast aluminum
C = Polypropylene
D = Small cast iron
E = Small aluminum
F = Miniature plastic
G = Canister
H = Explosion proof

F = 1/2 x 1/2 SS HEX NIPPLE

***5. Fittings, Weld Pads**
One single threaded fitting is included for mounting head. If additional fittings or double threaded fittings are required, enter letter from table on pages 71-73. If none, enter "0". For Teflon® coating, specify E or F only.

6. Enter "0"

7. Sheath Material
A = 304 SS F = 316 SS
D = Alloy 600 O = 310 SS
C = Teflon® coated over 304 SS or 316 SS sheath depending on availability.

8-9. Sheath Length "L" (whole inches)
01 to 99
Lengths over 99 inches consult factory. When calculating "L" dimension for insertion into a thermowell, subtract ¾ inch from bore depth. On spring loaded designs, add ¾ inch to above "L" dimension.
Note: Maximum length for Teflon® coating is 48 inches.

10. Sheath Length "L" (fractional inch)

0 = 0	2 = ¼	4 = ½	6 = ¾
1 = ⅛	3 = ⅜	5 = ⅝	7 = ⅞

11. Junction

	Grounded	Ungrounded	Exposed
Single	G	U	E
Dual, common	H	V	F
Dual, isolated	—	W	D

12. Calibration

	E	J	K	N	T
Standard Limits	E	J	K	N	T
Special Limits	2	3	4	5	6

13-14. Enter "00"

15. Special Requirements
If none, enter "0". If required, consult factory.

* When a double threaded fitting is selected, one side of the fitting will be used to mount the head.

Matrix also available for Made-to-Order units. Consult factory.

Watlow West Michigan 616 694 9516 01/02/02 02:55P P.01

MANUFACTURER'S PRODUCT SPECIFICATIONS

Spray Nozzles

BETE

BETE FOG NOZZLE, INC.
BOX 1438 • 50 GREENFIELD STREET
GREENFIELD, MA 01302-1438

PHONE: 413 772-0846
FAX: 413 772-67
INTERNATIONAL FAX: 413 772-6345

BETE ISO 9001

FAX ☒ MAIL ☐

DRAWING TRANSMITTAL RECORD

DATE: November 20, 2001

CC# R9B9

TO: Durr Environmental Inc.
PO Box 930459
Wixom, MI 48393

From: Laurie Byrne
Reference:
Customer PO#: 85085-22429
Customer Quote Request#:
BETE Order Number: 170038
Page 1 of 4

Attention: Denise McPherson
FAX #: 248-926-6570
TEL #:

NO. COPIES	DRAWING #:	REV.	DESCRIPTION		STATUS	Nozzle QTY
1	2MP-16488	-	½" MP218NN, 316L	QUENCH H_2O	A	1
1	2MP-12983	A	1" MP437M, 316L	RECIRC. H_2O	A	4
1	2MP-10270	B	3/8" MP125M, 316L	MAKEUP H_2O	A	[illegible]

STATUS CODE:

A - Certified: Production will proceed

B - For Approval: Production will not proceed until prints are approved, signed and returned

C - For Information Only: No action required

MAKEUP WATER SPRAY NOZZLE

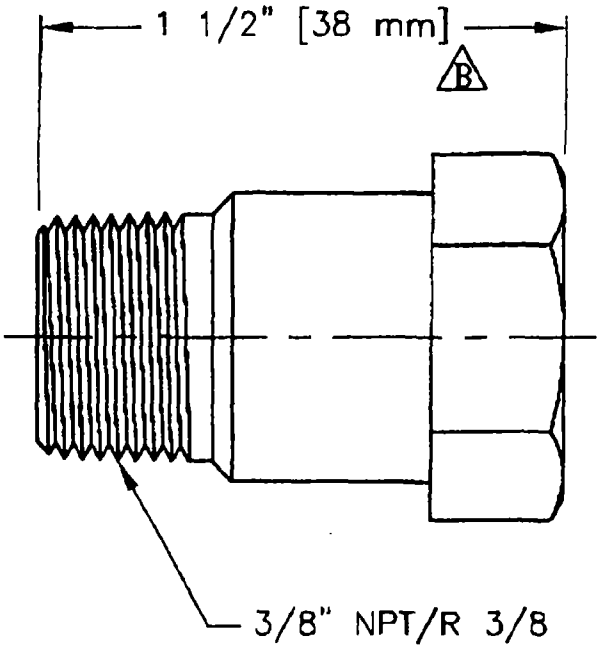

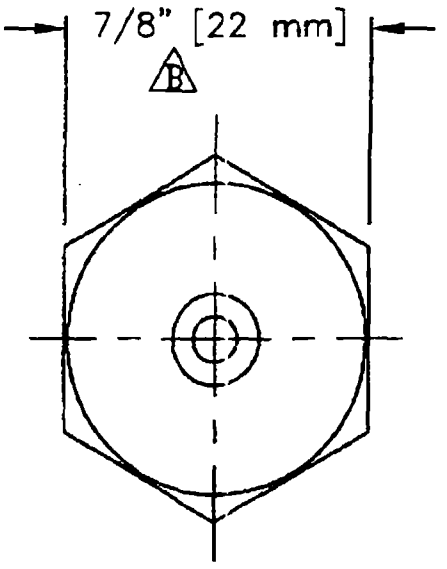

CERTIFIED PRINT
PER [signature] 11/26/01

NOTES B

1. MATERIAL: CAST
2. SPRAY PATTERN: 90° FULL CONE
3. FLOW RATE: 1.70 GPM @ 20 PSI [6.44 L/M @ 1.4 BAR]

REV	DATE	BY	CHECKED	DCR
B	6/15/96	MNS	JKP	9423
A	5/14/90	JS		1329

3RD ANGLE PROJECTION

UNLESS OTHERWISE NOTED, REMOVE ALL BURRS & SHARP EDGES

IS PRINT CONTAINS PROPRIETARY INFORMATION WHICH MUST NOT BE USED FOR COMPETITIVE PURPOSES OR IN ANY WAY DETRIMENTAL TO BETE FOG NOZZLE INC. PRINT MUST BE RETURNED ON REQUEST

TOLERANCES: (EXCEPT AS NOTED)
ANGLES ±1/2°
MACHINED DIMENSIONS: FRACTIONAL ±1/32"
TWO PLACE DECIMAL ±.01"
THREE PLACE DECIMAL ±.005"
CAST DIMENSIONS: OVER 3" ±.01 INCHES PER INCH
METRIC: WHOLE NUMBER ±1mm
ONE PLACE DECIMAL ±.4mm
TWO PLACE DECIMAL ±.14mm

BETE FOG NOZZLE, INC.
50 GREENFIELD STREET GREENFIELD, MASSACHUSETTS 01301

3/8" MP 125 M

FOR

SCALE:	DRAWN:	CHECKED:	REV
2" = 1"	JS DATE: 3/27/90	DATE:	B

DRAWING NUMBER: 2MP-10270

RECIRC. WATER SPRAY NOZZLE

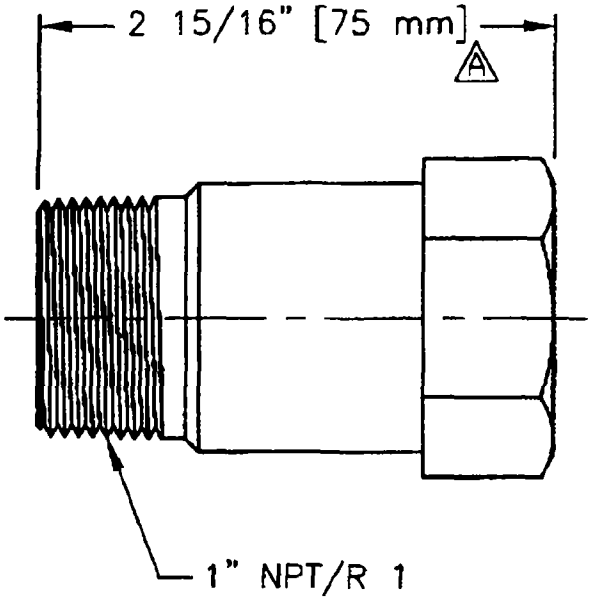

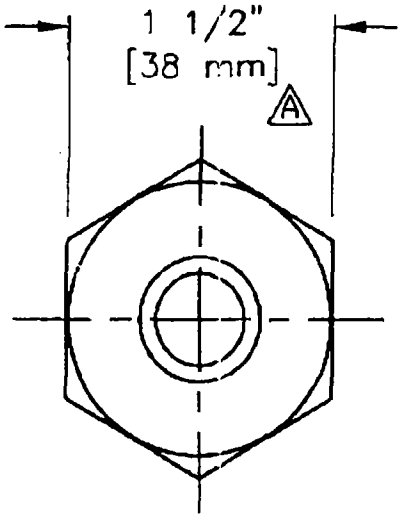

CERTIFIED PRINT
PER [signature] 11/20/01

NOTES A

1. MATERIAL: CAST
2. SPRAY PATTERN: 90° FULL CONE
3. FLOW RATE: 21.0 GPM @ 20 PSI [79.5 L/M @ 1.4 BAR]

REV	DATE	BY	CHECKED	DCR
A	9/10/96	MNS	JKP	9748

3RD ANGLE PROJECTION

UNLESS OTHERWISE NOTED, REMOVE ALL BURRS & SHARP EDGES

IS PRINT CONTAINS PROPRIETARY INFORMATION WHICH MUST NOT BE USED FOR COMPETITIVE PURPOSES OR IN ANY WAY DETRIMENTAL TO BETE FOG NOZZLE INC. PRINT MUST BE RETURNED ON REQUEST

TOLERANCES: (EXCEPT AS NOTED)

MACHINED DIMENSIONS: ANGLES ±1/2°
FRACTIONAL ±1/32"
TWO PLACE DECIMAL ±.01"
THREE PLACE DECIMAL ±.005"
CAST DIMENSIONS: UP TO 1" ±.010"
FOR EACH INCH AFTER ADD ±.003" PER IN
METRIC: WHOLE NUMBER ±1mm
ONE PLACE DECIMAL ±.4mm
TWO PLACE DECIMAL ±.14mm

BETE FOG NOZZLE, INC.
50 GREENFIELD STREET GREENFIELD, MASSACHUSETTS 01301

1" MP 437 M

FOR

SCALE:	DRAWN:	CHECKED:	REV
FULL	JS DATE: 7/16/91	DATE:	A

DRAWING NUMBER: 2MP-12983

QUENCH WATER SPRAY NOZZLE

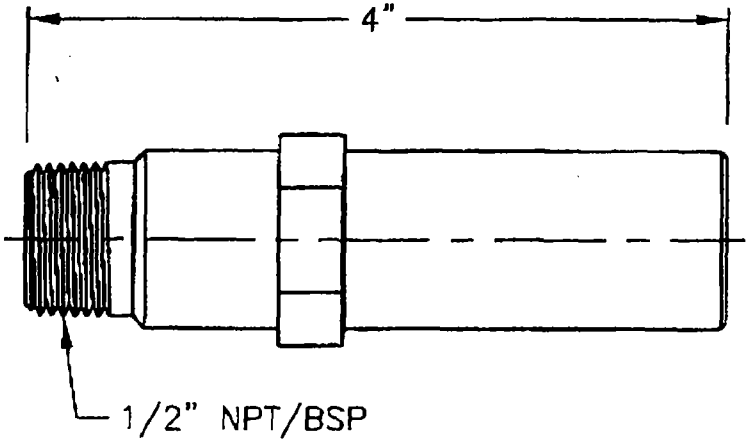

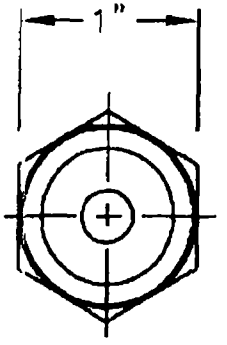

CERTIFIED PRINT
PER [signature] 11/20/01

NOTES

1. MAT'L.: 316 SS.
2. FLOW RATE: 3.7 GPM @ 7 PSI.
3. SPRAY PATTERN: 30° FULL CONE.

REV.	DATE	BY	CHECKED	DCR

THIS PRINT CONTAINS PROPRIETARY INFORMATION WHICH MUST NOT BE USED FOR COMPETITIVE PURPOSES OR IN ANY WAY DETRIMENTAL TO BETE FOG NOZZLE, INC. PRINT MUST BE RETURNED ON REQUEST

UNLESS OTHERWISE NOTED: REMOVE ALL BURRS & SHARP EDGES

TOLERANCES: (EXCEPT AS NOTED)
MACHINED DIMENSIONS: FRACTIONAL--------- ±1/32"
TWO PLACE DECIMAL--- ±.01
THREE PLACE DECIMAL-- ±.005
CAST DIMENSIONS: OVER 3" ±.01 INCHES PER INCH

BETE FOG NOZZLE, INC.
GREENFIELD, MASS.

1/2" MP 218 NN.

FOR

SCALE:	DRAWN:	CHECKED:	REV.
FULL	JS DATE: 4.2.93	DATE:	

DWG. NO. 2MP-16488

MANUFACTURER'S PRODUCT SPECIFICATIONS

Recirculation Pump

Hayes Pump
Pete Gilday/Nicole Vilkas
Application Engineers
68 Old Powder Mill Road
West Concord, MA 01742
Tel: 978-318-4202
Fax: 978-369-8481
e-mail: pgilday@hayespump.com

DURR ENVIRONMENTAL INC.

INQ NO: Montgomery Watson

Mar 27, 2002

Proposal No: 353-TT-PG-01 Rev.#: 1

Item No: ITEM001

Attn: Darin Brown

MODEL:3298 Size: 2x3-6 S QTY: 1

Operating conditions

SERVICE	*SCRUBBER*
LIQUID	*Water Temp. 60.0 Deg °F, Vapor Pres. 0.26 psi abs, SP.GR 1.000, Viscosity 1.122 cp*
CAPACITY Norm./Rate	*100.0 / 100.0 gpm*
HEAD	*50.0 ft*

Performance at 3500 RPM

PUBLISHED EFFY	*46.0% (CDS)*
RATED EFFY	*46.0%*
RATED POWER	*2.7 hp (Run out 3.2 hp)*
NPSHR	*6.4 (ft)*
DISCH. PRESSURE	*21.6 (26.0 @ Shut off) (psi g)*
PERF.CURVE	*5137-1 (Rotation CW viewed from coupling end)*
SHUT OFF HEAD	*60.0 ft*
MIN FLOW	*30.0 (gpm)*

Materials

CONSTRUCTION	*Tefzel lined (close coupled)*
CASING	*Ductile iron/tefzel max.casing.pres.@ rated temperature175.0psi g*
MAGNETS	*Neodymium-Iron Mag Drive Assy C04384A02*
IMPELLER	*Tefzel - Enclosed (4.0000 rated (in) max=6.0625 min=4.0000)*
IMPELLER WEAR RING	*Carbon filled Teflon*
SHAFT	*Silicon carbide*
MAG DRIVE ASSY	*C04384A02*
BASEPLATE	*Channel steel D06964A*

Casing connections

Casing drain flanged

Flanges

150# raised face

Liquid end options

Impeller balance holes

Magnets balanced statically to ISO 1940 G6.3 balance levels

Containment Shell o-ring and Reverse thrust bearing o-ring in Viton

Frame options

Thrust and radial bearings-silicon carbide

Documentation

Drawing packages - Std commercial (3 copies)

Testing

Non witnessed casing hydrostatic-test

Painting

Goulds Blue water reducible coating (Strathmore)

Goulds Pumps
ITT Industries

OUTLINE DRAWING

Model 3296 S
2x3-6

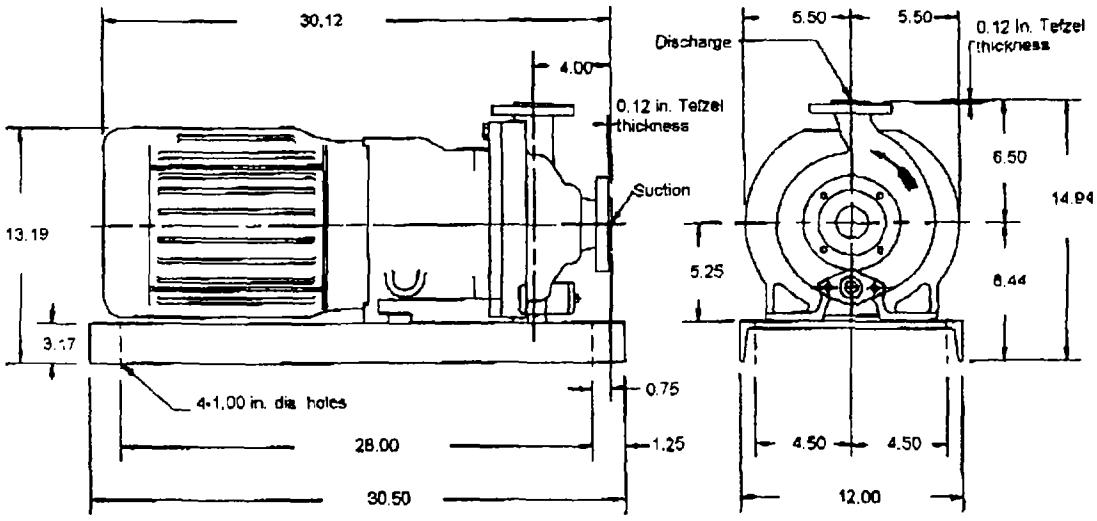

Pump specification

SUCT.FLANGE SIZE *3"*	DRILLING *ANSI 150#*	FACING *RF*	FINISH *SMOOTH*
DISCH.FLANGE SIZE *2"*	DRILLING *ANSI 150#*	FACING *RF*	FINISH *SMOOTH*
PUMP ROTATION (LOOKING AT PUMP FROM MOTOR)	*CW*		
TYPE OF LUBRICATION *N/A*			COOLED *NO*
TYPE OF STUFFING BOX *N/A*			COOLED *NO*
TYPE OF SEALING *SEALLESS PUMP*			

Weights and Measurements

PUMP	*79.0 lb*
MOTOR	*105.0 lb*
BASEPLATE	*75.0 lb*
TOTAL	*259.0 lb*
GR.VOLUME w/BOX	*7.3 ft3*
GR.WEIGHT w/BOX	*296.0 lb*

Motor specification

MOTOR BY *PUMP MFG*		MOUNT BY *PUMP MFG*		MFG. *US ELECTRIC*	
FRAME	*184TC*	POWER	*5.00 hp*	RPM	*3600*
PHASE	*3*	FREQUENCY	*60Hz*	VOLTS	*230/460*
INSULATION *F*		S.F.	*1.15*		
ENCLOSURE *SEVERE DUTY/MILL AND CHEMICAL PREMIUM EFFICIENCY*					

Notes and References

* INSTALL FOUNDATION BOLTS IN PIPE SLEEVES
* ALLOW FROM 0.75 to 1.50in. FOR GROUTING. SEE INSTRUCTION BOOK FOR DETAILS
* MTR DIMENSIONS ARE APPROXIMATE

FOR PUMP TAPPED OPENINGS REFER TO DWG.:
T353-TT-PG-01/ITEM001

Auxiliary specification

COUPLING BY	CPLG TYPE
CPL GUARD BY	CPLG GUARD MATL
BASEPLATE *CHANNEL STEEL D06964A*	

All dimensions are in inches.
Drawing is not to scale
Weights (lbs) are approximate

Customer: DURR ENVIRONMENTAL INC.
Serial No: S/N 776E176
Customer P.O. No: 85157-22429
Item No: ITEM001
Service: SCRUBBER
End User: Montgomery Watson @
AMERICAN CHEMICAL SERVICES GRIFFITH, IN

DRAWING NO 353-TT-PG-01/ITEM001

FORM # ED0132 Program Version 1.34.0.0

Goulds Pumps

ITT Industries

CROSS SECTIONAL DRAWING

Model 3298 S
2x3-6

NEMA MOTOR , CLOSE COUPLED

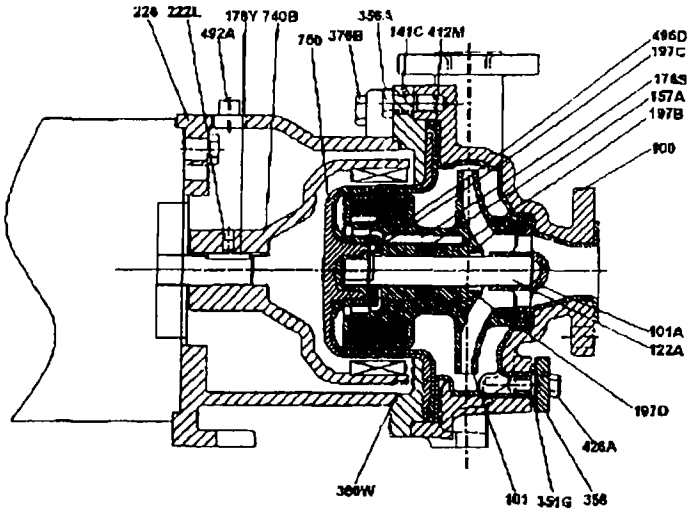

* Recommended spare parts

\# Items not illustrated

BILL OF MATERIAL

ITEM	QTY		PART NAME	MATERIAL	ASTM #
100	1		CASING	ROTATIONAL MOLDING POWDER	
101	1	*	IMPELLER	TEFZEL,DUPONT 280	
101A	1	*	BEARING SPIDER	CARBON FILLED TEFZEL BASE	
122A	1	*	STATIONARY SHAFT	ALPHA SINTERED SILICON	
141C	1		CLAMP RING		
157A	1		BEARING SPACER		
178S	1		KEY, IMPELLER TO BEARING		
178Y	1		MTR - MGNT KEY	STEEL	
197B	2	*	RADIAL BRG	ALPHA SINTERED SILICON	
197C	1	*	REVERSE THRST BRG	ALPHA SINTERED SILICON	
197D	1	*	IMPELLER THRST BRG	ALPHA SINTERED SILICON	
222L	1		NYLOK SET SCREW		
351G	1		FLANGE COVER GASKET		
356A	1		HEX CAP SCREW		
358	1		FLG CVR FOR CASE DRAIN		
360W	1	*	GSK - MTR SUPPORT		
370B	1		CAPSCREW FRAME TO ADPTR		
371	1		SCREW HHC ADAPTER - MOTOR		
408A	1		PLUG,PIPE 3/8" DRAIN	STEEL	
412M	1	*	CONTAINMENT SHELL O-RING	VITON	
492A	1		PIPE PLUG - ACC.HOLE - MTR		
496D	1	*	REVERSE THRST BRG O-RING	PFA TEFLON COATED VITON	
740B	1	*	FRM MNT DRV MGNT ASSY	DUCTILE IRON	
750	1		CONTAINMENT SHELL		

Customer: DURR ENVIRONMENTAL INC.
Serial No: S/N 776E176
Customer P.O. No: 85157-22429
Item No: ITEM001
Service: SCRUBBER
End User: Montgomery Watson

DRAWING NO 353-7.1-PG-01/ITEM001

FORM# ED0479

Program Version 1.34.0.0

Durr Environmental
Peter Gilday @ Hayes Pump, Inc
Ref Montgomery Watson/Scrubber

Goulds Pump Selection Software ver: 6.041
03/27/02

PUMP DATA SHEET

Goulds Process Pumps 60 Hz

Selection file: 353-TTPG.UFS
Catalog: PRCESS60.MPC v 4

Curve: 5137

Design Point: Flow: 100 US gpm
Head: 50 ft

Pump: 3298 - 3600
Speed: 3500 rpm

Size: 2x3-6 S
Dia: 4 in

Limits: Temperature: --- °F
Pressure: --- psi_g

Sphere size: — in
Power: --- bhp

Specific Speed: Ns: ---
Nss: ---

Dimensions: Suction: 3 in
Discharge: 2 in

Motor: 5 hp
Speed: 3600
Frame: 184T
NEMA Standard
TEFC Enclosure
sized for Max Power on Design Curve

Fluid: Water
Temperature: 60 °F
SG: 1
Viscosity: 1.122 cP
Vapor pressure: 0.2568 psi_a
Atm pressure: 14.7 psi_a

NPSHa: — ft

Piping:
System: —
Suction: --- in
Discharge: --- in

--- Data Point ---

Flow: 100 US gpm
Head: 51.1 ft
Eff: 46%
Power: 2.73 bhp
NPSHr: 6.35 ft

-- Design Curve --

Shutoff Head: 60 ft
Shutoff dP: 26 psi
Min Flow: 30 US gpm
BEP: 52% eff
@ 150 US gpm
NOL Pwr: 3.22 bhp
@ 180 US gpm

-- Max Curve --

Max Pwr: 13.4 bhp
@ 325 US gpm

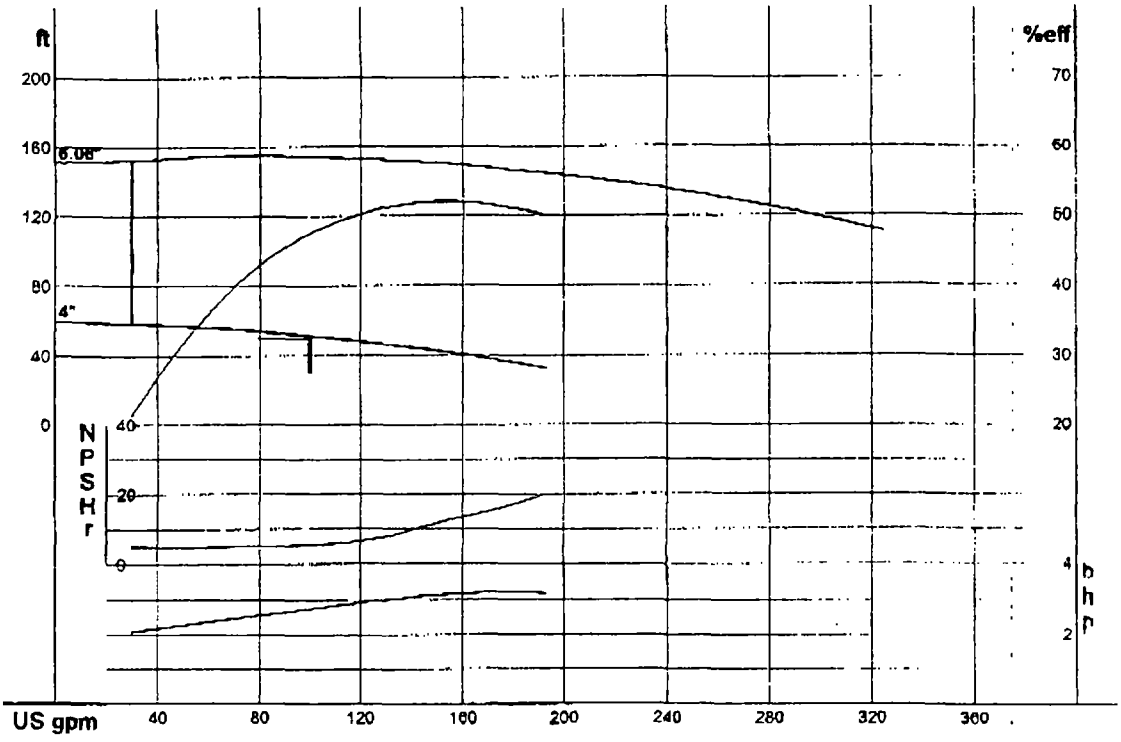

--- PERFORMANCE EVALUATION ---

Flow US gpm	Speed rpm	Head ft	Pump %eff	Power bhp	NPSHr ft	Motor %eff	Motor kW	Hrs/yr	Cost /kWh
120	3500	48.2	49	2.91	7.26				
100	3500	51.1	46	2.73	6.35				
80	3500	54	42	2.55	5.43				
60	3500	56.2	35	2.35	5				
40	3500	57.9	27	2.14	5				

MANUFACTURER'S PRODUCT SPECIFICATIONS

Mist Eliminator

NOTES

1. MATERIAL: INCONEL 625
2. WEIGHT: 40 LBS./MODULE
3. SEE MUNTERS FORM IMVFME-LATEST REV. FOR INSPECTION & MAINTENANCE INSTRUCTIONS.

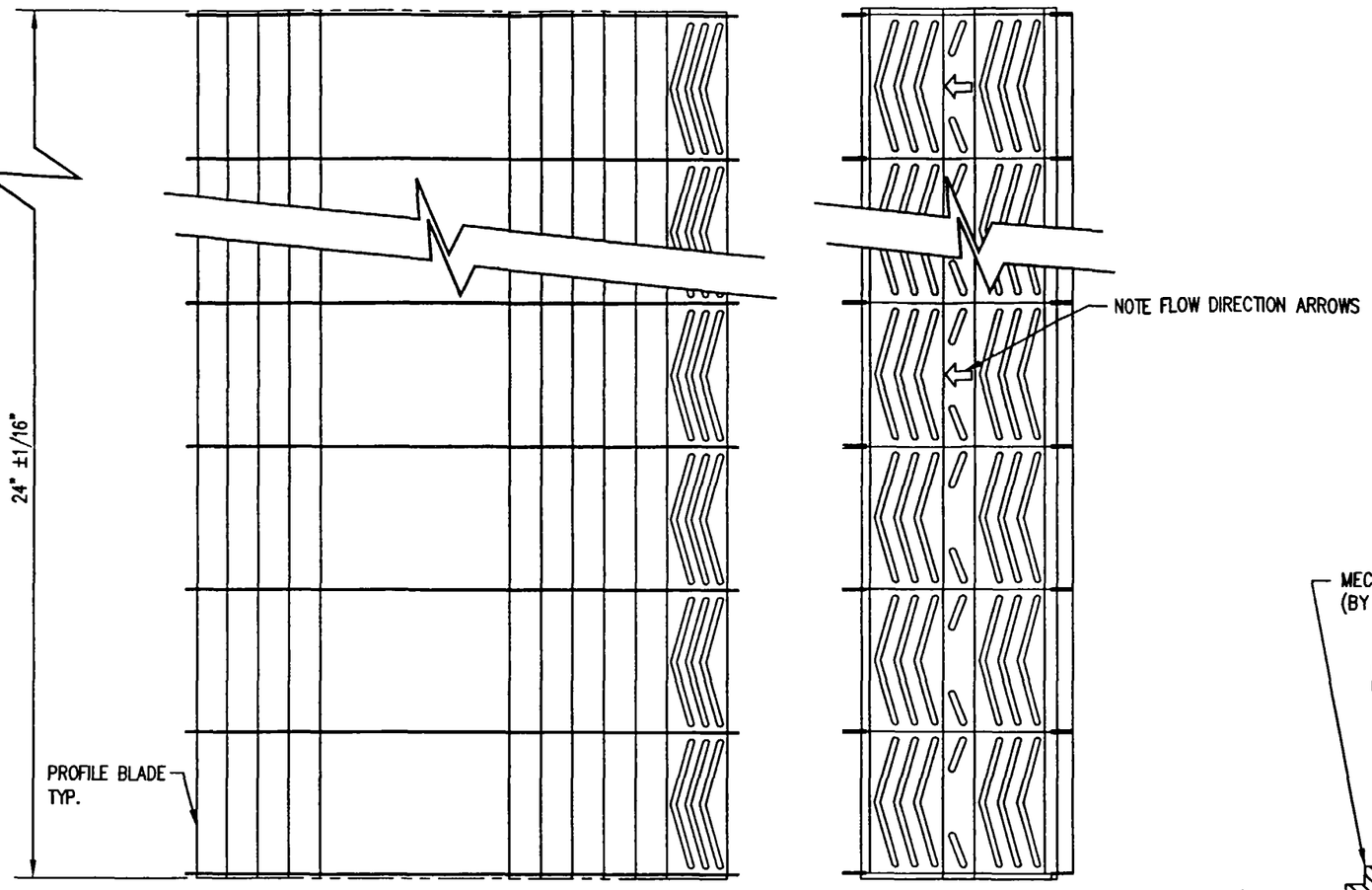

PLAN VIEW

END VIEW

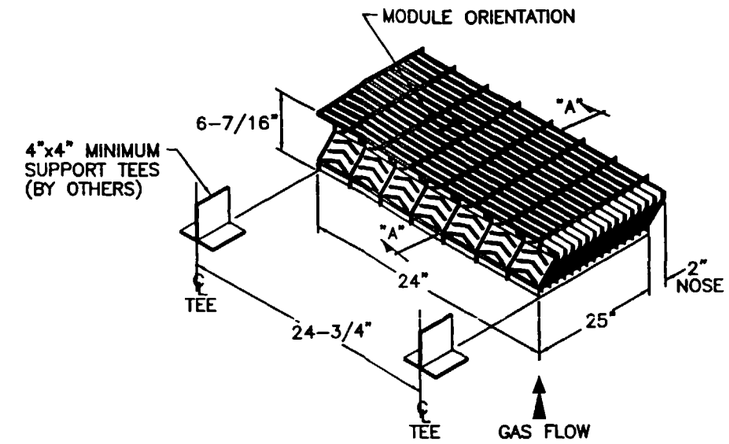

TYP. T-271-S MODULE
(UNCUT) NOT TO SCALE

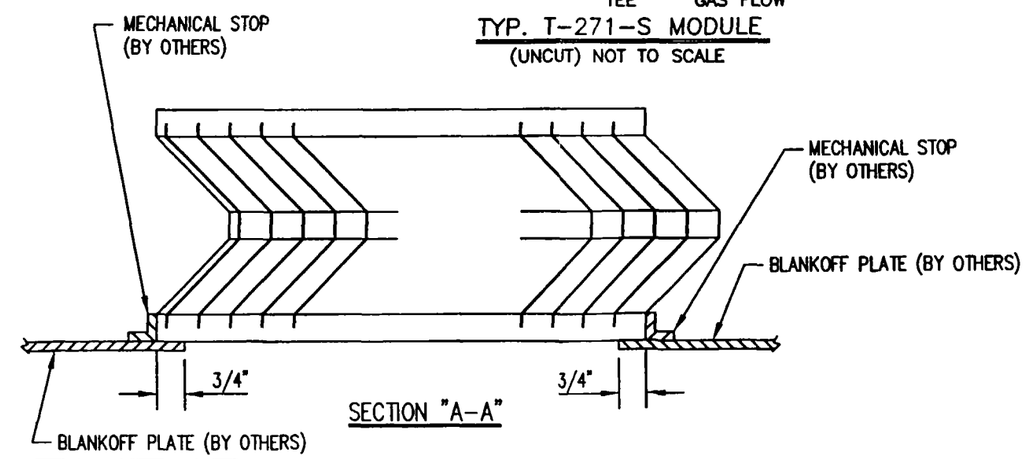

SECTION "A-A"

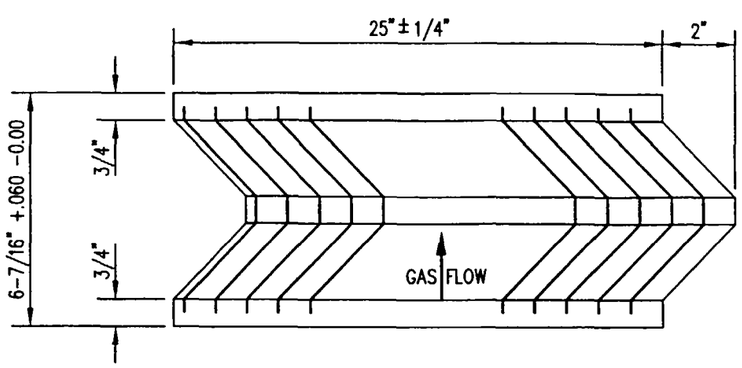

SIDE VIEW

CERTIFIED
FOR CONSTRUCTION
DATE : 12/5/01
BY
PERLEY MACKENZIE

SYM.	REVISION	BY	DATE
A	INCONEL 625 WAS AL6XN	MAC PSM	12/5 01

NOTICE: COPYRIGHT © 1999 BY MUNTERS CORPORATION
THIS DRAWING IS THE PROPERTY OF THE MUNTERS CORP. FT. MYERS, FL. AND IS LOANED SUBJECT TO THE CONDITION THAT IT SHALL NOT BE REPRODUCED, COPIED, LOANED OR SUBMITTED TO OUTSIDE PARTIES FOR EXAMINATION WITHOUT OUR WRITTEN CONSENT, AND SHALL UPON REQUEST, BE RETURNED. DO NOT SCALE DRAWING FOR CONSTRUCTION.

DRAWN BY MAC	SCALE NONE	THE MUNTERS CORPORATION 108 6TH STREET S.E. P.O. BOX 6428 FT. MYERS FLORIDA 33911 PHONE (941) 936-1555 FAX (941) 278-1316	
CHECKED BY PM	DATE 11/28/01		
APPROVED BY PSM	FOR DURR INDUSTRIES INC. G107-28051 (13300)		
TITLE GENERAL ARRANGEMENT : T-271 INCONEL 625 MODULE 24"W. x 25"LG.			
DRAWING NUMBER B-28051-01	SHEET OF	REV. A	

ACAD GA28051

MANUFACTURER'S PRODUCT SPECIFICATIONS

Scrubber Sump Level Monitor

ROSEMOUNT SPECIFICATIONS

Model 3051 Digital Pressure Transmitter

1. EQUIPMENT DESCRIPTION

- Two-wire, capacitance (DP/GP) or piezoresistive (AP/GP), high-performance differential/gage/absolute/level/flow pressure transmitter with HART® based or FOUNDATION™ fieldbus based digital communication capabilities.
- Small, lightweight Coplanar™ design.

2. REFERENCES

- Material supplied under this specification shall be in conformance with:
  - National Electric Code (NFPA 70) 501-5 by incorporating a two-compartment electronics housing for separation of the process medium and the electrical conduit.
  - National Electrical Manufacturer's Association (NEMA) standard number ICS6 "Enclosure for industrial controls and systems," 4X.
  - IP65 or IP68, depending on installation conditions.
  - Factory Mutual (FM), Canadian Standards Association (CSA), CENELEC, and SAA standards for explosion-proof enclosure and intrinsically safe electronic circuitry.
  - Japanese Industrial Standard (JIS) for flameproof enclosure.
  - CE mark per European Standards EN 50081-1, EN 50082-1, EN 50082-2
- Manufacturer must be certified as meeting the requirements of ISO 9001.

3. ENVIRONMENTAL CONDITIONS

- The instrument selected shall be suitable for the following conditions:
  - Humidity: 0–100% relative humidity.
  - Ambient Temperature Limits: –40 to 185 °F (–40 to 85 °C).
- Transmitter shall have a dual-compartment housing with a moisture barrier completely isolating the electronic circuitry from the field wiring and calibration terminals.

4. PROCESS CONDITIONS

- Suitable for liquid, gas, and vapor service.
- Process Temperature Limits:
  - Silicone fill: –40 to 250 °F (–40 to 121 °C) with Coplanar flange.
    –40 to 300 °F (–40 to 149 °C) with traditional flange.
  - Inert fill, above atmospheric pressure: 0 to 185 °F (–18 to 85 °C).
- Overpressure Limits (Models 3051CD and 3051CG)*:
  0 psia to 4,500 psig (31 MPa).
  0 psia to 2,000 psig (13.8 MPa) for 0.5 to 2.5 inH_2O (0.12 to 0.62 kPa).
  ** See PDS 00813-0100-4001 for Model 3051T and 3051CA overpressure limits.*
- Line Pressure Limits (Model 3051CD):
  0.5 psia to 4,500 psig (3.5 kPa abs. to 31 MPa). **4,500 psig (31 MPa) optional for Ranges 2–5 (see Section 12).
  0.5 psia to 2,000 psig (3.5 kPa abs. to 13.8 MPa) for spans of 0.5 to 2.5 inH_2O (0.12 to 0.62 kPa).

5. ELECTRICAL

- Transmitter shall be certified for use in hazardous areas by a recognized authority, such as Factory Mutual.
- Electrical connections shall include a choice of: ½–14 NPT, M20 x 1.5 (CM20), PG 13.5, or G½ conduit.

6. POWER SUPPLY

- Transmitter shall operate on 10.5 to 55 V dc, with no load (6–12 V dc with no load for low power).

7. MEASUREMENT RANGES

	Minimum Span	Maximum Span
Differential	0.1 inH_2O (0.25 kPa)	2,000 psig (13.8 MPa)
Gage	2.5 inH_2O (0.62 kPa)	10,000 psig (70.0 MPa)
Absolute	0.339 inHga (8.61 mmHga)	10,000 psig (70.0 MPa)
Liquid Level	2.5 inH_2O (0.62 kPa)	8,310 inH_2O (2068 kPa)
Remote Seals	2.5 inH_2O (0.62 kPa)	2,000 psig (13.8 MPa)

8. OUTPUTS

- Outputs shall be a 4–20 mA analog signal (1–5 V dc or 0.8–3.2 V dc for low power), user-selectable linear or square root, with a superimposed digital signal, using HART Protocol.
- Analog output shall be adjustable remotely with a field communicator or control system. Zero and span adjustments shall also be available on the transmitter.

9. DATA STORAGE

- Transmitter data shall be stored in nonvolatile EEPROM memory.
- Sensor module characterization data shall be an integral part of the sensor module.

10. SOFTWARE FUNCTIONALITY

- Transmitter shall be capable of digital communication over the 4–20 mA output loop without disruption, using the HART Communications Protocol.
- The transmitter shall perform continuous diagnostics, capable of self-test functions and be able to provide specific diagnostic information locally on the meter and remotely.
- The configuration capabilities of the transmitter shall allow the user the ability to input and store information including the range, engineering units, damping, square root or linear output, drain/vent valves, flange, and O-ring materials, date, message, descriptor, tag number, serial number, and remote seal information.
- Process variable and sensor module temperature information shall be available digitally.
- Transmitter software security shall be user selectable.
- Upscale/Downscale failure mode shall be user selectable.

11. PERFORMANCE

- The transmitter shall meet the following performance criteria as a minimum:
  - **Specification Conformance:**
    The Model 3051 Family maintains a specification conformance of at least 3σ.
  - **Total Performance [over ±50 °F (28°C), 1,000 psi (6.9 MPa) line pressure]:**
    ±0.15% of span (Models 3051CD, 3051CG, 3051T, 3051CA).
    ±0.10% of span (Model 3051P Reference Class).
  - **Stability [over ±50 °F (28°C), 1,000 psi (6.9 MPa) line pressure]:**
    ±0.125%of URL for 5 years.
    ±0.1% of URL for 12 months (Models 3051T and 3051CA Ranges 1–5).
    ±0.2% of URL for 12 months (Models 3051CD Range 1, 3051CA Range 0).
  - **Accuracy:**
    ±0.075% of Calibrated Span (Standard Model 3051).
    ±0.05% of Calibrated Span (Model 3051P Reference Class).
  - **Total Ambient Temperature Effect per 50 °F (28 °C):**
    ±(0.0125% URL + 0.0625% span) spans from 1:1 to 30:1 (Standard Model 3051).
    ±(0.006% URL + 0.03% span) spans from 1:1 to 10:1 (Model 3051P Reference Class).
    ±(0.025% URL + 0.125% span) spans from 1:1 to 30:1 (Models 3051T and 3051CA).
  - **Static Pressure Effects per 1,000 psi (6.9 MPa) for Differential only:**
    Zero: ±0.05% of URL which can be calibrated out (Standard Model 3051).
    ±0.04% of URL which can be calibrated out (Model 3051P Reference Class).
    Span: ±0.1% of Reading (Standard Model 3051).
    ±0.1% of Reading (Model 3051P Reference Class).
  - **Time Response:**
    Dead Time (T_d):45 milliseconds (nominal)
    Time Constant (T_c):55 milliseconds
    Update Rate:20 times per second (minimum)
  - **Vibration Effect:**
    ±0.1% of URL when tested from 15 to 2,000 Hz per SAMA PMC 31.1.
  - **RFI Effect:**less than ±0.1% of span from 20 to 1,000 MHz for field strength of 30 V/m per IEC 801-3.

12. OPTIONS

- The following optional equipment shall be available:
  - Digital LCD indicator with diagnostic capabilities.
  - Model 305/306 Integral Manifold.
  - Remote diaphragm seals.
  - 4,500 psi (31.0 MPa) line pressure.
  - Worldwide hazardous locations certifications.
  - FOUNDATION fieldbus
  - High temperature (375 °F [191 °C]).
  - Mounting brackets.
  - Stainless steel housing.
  - Level flanges.
  - Low power electronics.
  - Factory-assembled primary elements

Rosemount Inc.
8200 Market Boulevard
Chanhassen, MN 55317 USA
Tel 1-800-999-9307
Telex 4310012
Fax (612) 949-7001
© 1998 Rosemount, Inc.

Fisher-Rosemount Limited
Heath Place
Bognor Regis
West Sussex PO22 9SH
England
Tel 44 (1243) 863 121
Fax 44 (1243) 867 5541

Fisher-Rosemount Singapore Pte Ltd.
1 Pandan Crescent
Singapore 128461
Tel (65) 777-8211
Fax (65) 777-0947
Tlx RS 61117 FRSPL

All rights reserved.
http://www.rosemount.com

00815-0100-4001 Rev. AB 11/98

ROSEMOUNT®

FISHER-ROSEMOUNT™ Managing The Process Better.™

REVISIONS				
REV	DESCRIPTION	CHG. NO.	APP'D	DATE
AC	ADD PIPE FLANGE MANIFOLD.	RTC 1007387		
AD	MAKE ASSEMBLY FLANGE AN OPTION ADD SEALS	RTC 1008076	PS	12/17/99

DIMENSIONAL DRAWINGS SPECIFIC TO OUTPUTS CODES F AND W

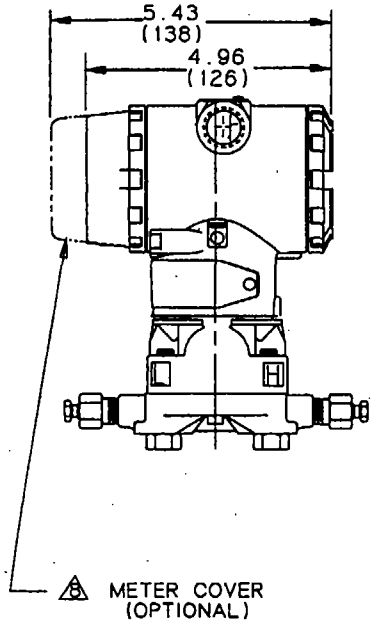

DIMENSIONAL DRAWINGS FOR OUTPUTS CODES A AND M

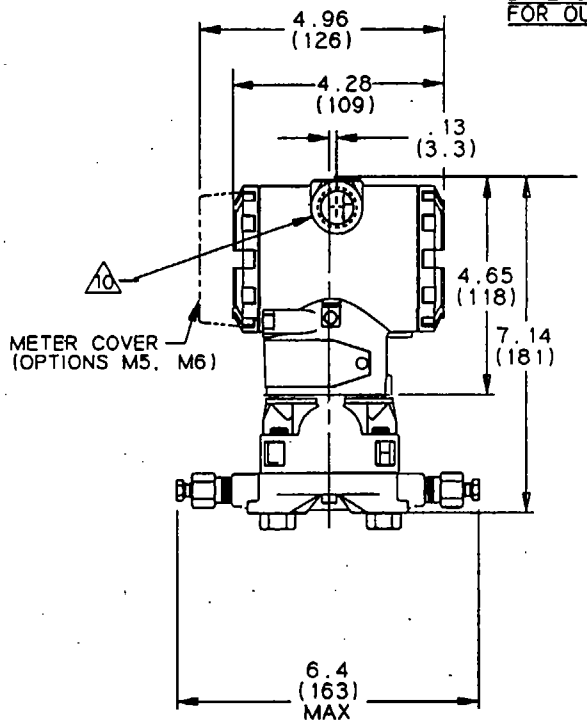

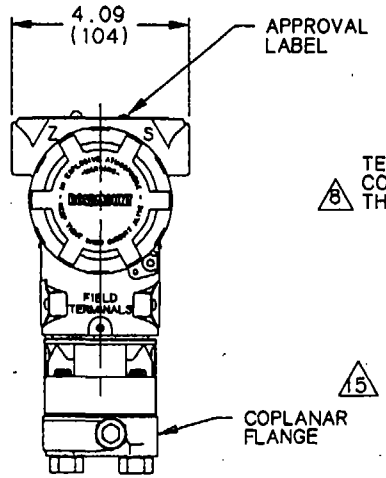

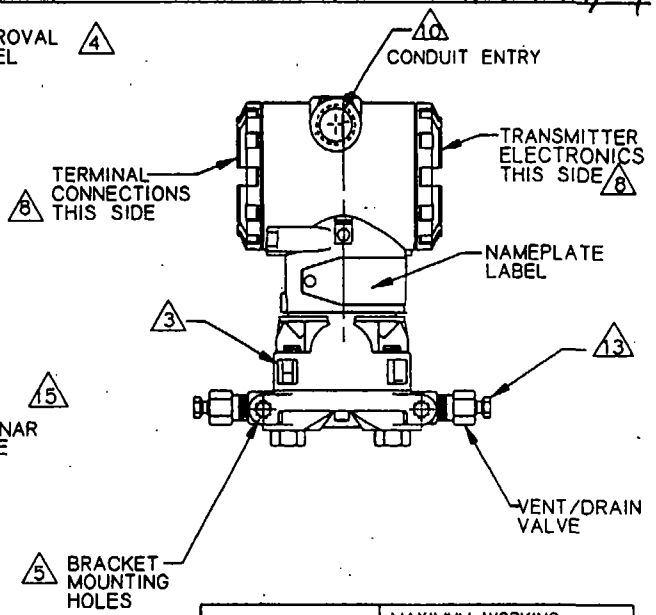

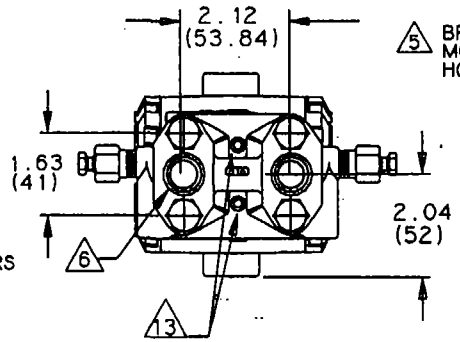

MODEL NUMBER	MAXIMUM WORKING PRESSURE *
3051CD, 3051CG	3626 PSIG(25.0 MPa)
3051P	2000 PSIG(13.8 MPa)
3051CD/RANGE 1	2000 PSIG(13.8 MPa)
3051CD/RANGE 0	750 PSIG (5.2 MPa)
3051CA/RANGE 0	5 PSIA
3051CA/RANGE 1	30 PSIA
3051CA/RANGE 2	150 PSIA
3051CA/RANGE 3	800 PSIA
3051CA/RANGE 4	4000 PSIA
3051CD, G (WITH SEALS)	2000 PSI OR FLANGE RATING, (PER ANSI B16.5) WHICHEVER IS LESS

* MAXIMUM WORKING PRESSURE APPLIES TO ALL MODEL OPTIONS UNLESS OTHERWISE SPECIFIED

16 SEE FIG. 12 FOR TYPICAL MANIFOLD CONFIGURATIONS

15 COPLANAR FLANGE IS STANDARD. FOR OPTIONAL TRADITIONAL FLANGE SEE FIG 13. SEE FIG 14 FOR LEVEL FLANGE VERTICAL MOUNT.

14 NO FLANGE ADAPTER ON LOW SIDE FOR GUAGE OR ABSOLUTE PRESSURE TRANSMITTERS

13 TORQUE BOLTS TO 70 in. lbs ±25in. lbs (7.3 NM ±2.8 NM).

12 TORQUE BOLTS TO 650in. lbs ±50in. lbs (67.2 NM ±5.6 NM) FOR CARBON STEEL, 300in. lbs ±50in. lbs (33.6 NM ±5.6 NM) FOR SST.

11. WEIGHT 7.5 LB (3.4 kg) WITHOUT OPTIONS. REFER TO RMD MANUAL OR PDS FOR OPTION WEIGHTS.

10 1/2-14 NPT UNLESS MARKED CM20, PG 13.5, OR G 1/2

9. SEE FIGURES 1-6 FOR OPTIONAL MOUNTING CONFIGURATIONS.

8 .75" (19.0) CLEARANCE REQUIRED FOR COVER REMOVAL.

7 ADAPTERS CAN BE ROTATED TO GIVE FLANGE CONNECTION CENTERS OF 2.00" (50.8), 2.13" (54.1), AND 2.25" (57.2).

6 1/4-18 ANPT ON THE COPLANAR OR TRADITIONAL FLANGES. SEE FIGURE 14 FOR 1/2-14 ANPT FLANGE ADAPTERS (DF OPTION)

5 MOUNTING HOLES ARE 3/8-16 UNC-2B x .562" DEEP.

4 ROTATE APPROVAL LABEL FOR ZERO AND SPAN ADJUST.

3 LETTERS DENOTE HIGH AND LOW SIDES FOR PRESSURE CONNECTION.

2. FOR MODEL NUMBER SELECTION, SEE TABLES 1-3.

1. DIMENSIONS SHOWN IN PARENTHESES ARE IN MILLIMETERS.

NOTES:

THIS DRAWING WAS CREATED ON CAD. VELLUM MASTER IS NOT TO BE CHANGED. DRAWING IS ARCHIVED ON MAGNETIC TAPE FOR ECO CHANGES.

FILE NAME: -

UNLESS OTHERWISE SPECIFIED DIMENSIONS IN INCHES

-TOLERANCE-

DECIMALS .X ± .1, .XX ± .02, .XXX ± .010

FRACTIONS ±1/32

ANGLES ±2°

DO NOT SCALE PRINT

DR ERIC LOVAASEN	03/20/96	
APP'D. DRAWING		
APP'D. DRAWING		12/17/99
APP'D. TAGGING		
APP'D. SPECIALS		

ROSEMOUNT® INC. CHANHASSEN, MINNESOTA

TITLE OUTLINE DIMENSIONAL DRAWING FOR MODEL 3051C PRESSURE TRANSMITTERS

SIZE	FSCM. NO.	DRAWING NO
A	04274	03031-1011

SCALE: NONE WT. SHEET 1 OF 33

MANUFACTURER'S PRODUCT SPECIFICATIONS

Recirculation Flow Meter

ROSEMOUNT® SPECIFICATIONS

Model 8800C Vortex Flowmeter

1. EQUIPMENT DESCRIPTION

- Two-wire piezoelectric-based vortex shedding flowmeter
  - Fully cast, all-welded meter body
  - Non-clogging sensor design
  - Adaptive Digital Signal Processing filtering
  - HART® and FOUNDATION™ fieldbus communication capabilities

2. ENVIRONMENTAL CONDITIONS

- The instrument selected shall be suitable for the following conditions:
  - Humidity: 0–95% relative humidity under noncondensing conditions
  - Ambient temperature limits
    - HART: –58 to 185 °F (–50 to 85 °C)
    - FOUNDATION fieldbus: –40 to 185 °F (–40 to 85 °C)
- Flowmeter shall have a dual-compartment housing with a moisture barrier totally isolating the electronic circuitry from the field wiring and communication terminals

3. PROCESS CONDITIONS

- Suitable for liquid, gas, and steam in homogeneous, single-phase state
- Process temperature limits:
  - Standard range sensor: –40 to 450 °F (–40 to 232 °C)
  - Extended range temperature sensor: –330 to 800 °F (–200 to 427 °C)

4. ELECTRICAL

- Flowmeter shall be certified for use in hazardous areas by a recognized authority, such as Factory Mutual
- Electrical connections shall include a choice of: ½–14 NPT, M20 × 1.5 or PG 13.5

5. POWER SUPPLY

- HART communication: flowmeter shall operate on 10.8 to 42 V dc with no load
- FOUNDATION fieldbus communication: flowmeter shall operate on 9 to 32 V dc, 17.8 mA nominal, 19 mA maximum

6. LINE SIZES

- Flowmeter shall be available in the following line sizes:
  - Wafer, flanged, and dual-sensor style: ½-,1-,1½-, 2-, 3-, 4-, 6-, and 8-inch
- Flanged-style flowmeters shall be available with ANSI Class 150, 300, or 600 or DIN PN 10, 16, 25, 40, 64, or 100 or JIS 10K, 20K, or 40K flanges in each of the above sizes

7. OUTPUTS

- Outputs shall be a 4–20 mA analog signal with a superimposed HART digital signal
- Analog output shall be adjustable remotely with a field communicator or a control system
- A simultaneous, independently scalable pulse/frequency output (0 to 10,000 Hz) also available with HART
- FOUNDATION fieldbus output also available

8. SOFTWARE FUNCTIONALITY

- Flowmeter shall be capable of simultaneous communication over the 4–20 mA output signal enabling process variable information to be available digitally
- Flowmeter shall perform continuous diagnostics, be capable of self-test functions and be able to give specific diagnostic information
- Accessible test points shall be available for ISO electronics verification
- Transmitter shall be able to calculate density ratio for standard and normal flow units
- Transmitter shall have flow simulation capabilities by an internal flow generator
- The shedding frequency at the Upper Range Value shall be available

9. PERFORMANCE

- The flowmeter shall meet the following performance criteria as a minimum:
  - Accuracy:

    Liquids (for Reynolds numbers over 20,000)

    – Digital and Pulse output: ±0.65% of rate

    – Analog output: same as pulse plus an additional 0.025% of span

    Gas & Steam (for Reynolds numbers over 15,000)

    – Digital and Pulse output: ±1.35% of rate

    – Analog output: same as pulse plus an additional 0.025% of span

    Accuracy Limitations:

    – ½- and 1-in. (DN 15 and DN 25): max velocity of 220 ft/s (67.06 m/s)

    – Dual-style meters (all sizes): max velocity of 100 ft/s (30.5 m/s)
  - Stability: ±0.1% of rate over one year
  - Ambient temperature effect:

    Digital and pulse outputs: no effect

    Analog output: ±0.1% of span from -40 to 185 °F (-40 to 85 °C)
  - Process temperature effect:

    Flowmeter shall have an automatic K-factor correction with user-entered process temperature
  - Mating pipe I.D. effect:

    Flowmeter shall have an automatic K-factor correction with user-entered mating pipe I.D.

10. MEASURABLE FLOW RATES

Flowmeter shall be capable of processing signals from flow applications which meet the following sizing requirements stated in Table 1,Table 2, and Table 3. Process conditions must be within both the Reynolds number and velocity limitations for the desired size.

TABLE 1.Minimum Measurable Reynolds Number

Line Sizes	Reynolds Number Limitations
1/2 through 4/15 through 100	10,000 minimum
6 through 8/150 through 200	20,000 minimum

TABLE 2.Minimum Measurable Velocities
(use the larger of the two values)

	Feet per second	Meters per second
Liquids	$\sqrt{36/\rho}$ or 0.7	$\sqrt{54/\rho}$ or 0.22
Gases	$\sqrt{36/\rho}$ or 6.5	$\sqrt{54/\rho}$ or 2.0

TABLE 3.Minimum Measurable Velocities
(use the smaller of the two values)

	Feet per second	Meters per second
Liquids	$\sqrt{(90,000)/\rho}$ or 25	$\sqrt{(134,000)/\rho}$ or 7.6
Gases	$\sqrt{(90,000)/\rho}$ or 250	$\sqrt{(134,000)/\rho}$ or 76

11. OPTIONS

- The following options shall be available:
  - Indicating LCD meter (totalized flow display available with HART)
  - Remote electronics cable (up to 75 feet maximum) and mounting hardware
  - Terminal block with integral transient protection (HART only)

12. MODEL 8800C VORTEX FLOWMETER TYPICAL SPECIFICATION

The Model 8800C Vortex Flowmeter shall operate on the principal of vortex shedding, which is produced by an all-welded shedder bar in the flow stream that causes vortices to form. These vortices create pulses that represent the specific volume of fluid (liquid, gas, or steam), which is generated at a rate linearly proportional to the process flow rate. Vortex flowmeters with moving parts or cavities that retain process fluid are not acceptable.

The flowmeter body and shedder bar should be welded or cast in place and require no process seals. The flowmeter body, shedder bar, and flanges shall be made of stainless steel or Hastelloy-C® material. The fluid shall generate pressure pulses that will be converted to electronic pulses by a piezoelectric sensor that is external (non-wetted) of the process.

The electronics shall be intelligent, microprocessor-based, and can be integrally mounted or remotely mounted up to a distance of 75 feet (23 meters). The electronics will convert the signal into a digital, 4-20 mA and pulse output with internal totalizer, and be capable of being replaced without shutting-down the flow. The electronics will be optionally available with FOUNDATION fieldbus output. The electronics shall be capable of disconnecting the sensor and producing a simulation of the flow to verify the electronics remotely via HART communications protocol. The electronics shall use Adaptive Digital Signal Processing for the filters for optimal performance and perform continuous self-diagnostic routines that immediately identify electronics problems. The electronics housing shall be suitable for hazardous locations (Explosion-Proof for Class I, Division 1, Groups B, C, and D. Dust Ignition-Proof for Class II/III, Division 1, Groups E, F, and G. Factory sealed.)

Flowmeter accuracy shall be 0.65% of rate for liquids having flowrates corresponding to Reynolds numbers greater than 20,000 and 1.35% of rate in gas and steam applications having flowrates corresponding to Reynolds numbers greater than 15,000. The flowmeters will have a process capability of –330 to 800 °F (-200 to 427 °C).

The Vortex Flowmeter shall be Rosemount Model 8800 or customer pre-approved equal.

Refer to Rosemount Product Specifications for more detailed information.

Rosemount and the Rosemount logotype are registered trademarks of Rosemount Inc.
HART is a registered trademark of the HART Communication Foundation.
FOUNDATION is a trademark of the Fieldbus Foundation.
Hastelloy C is a registered trademark of Haynes International Inc.

Rosemount Inc.
8200 Market Boulevard
Chanhassen, MN 55317 USA
Tel 1-800-999-9307
Fax (952) 949-7001
© 2000 Rosemount, Inc.

All rights reserved.
http://www.rosemount.com

00815-0100-4003 Rev. CA 3/00

Fisher-Rosemount Flow
Groeneveldselaan 6-8
3903 AZ Veenendaal
The Netherlands
Tel 31 (0) 318 549 549
Fax 31 (0) 318 549 559
Tel 0800-966 180 (U.K. only)
Fax 0800-966 181 (U.K. only)

Fisher-Rosemount
Singapore Pte Ltd.
1 Pandan Crescent
Singapore 128461
Tel (65) 777-8211
Fax (65) 777-0947
AP.RMT-Specialist@frco.com

ROSEMOUNT

FISHER-ROSEMOUNT™ Managing The Process Better.

REVISIONS				
REV	DESCRIPTION	CHG.NO.	APP'D	DATE
AH	ADD 900#/PN160 RATINGS	RTC1009367	M.S	

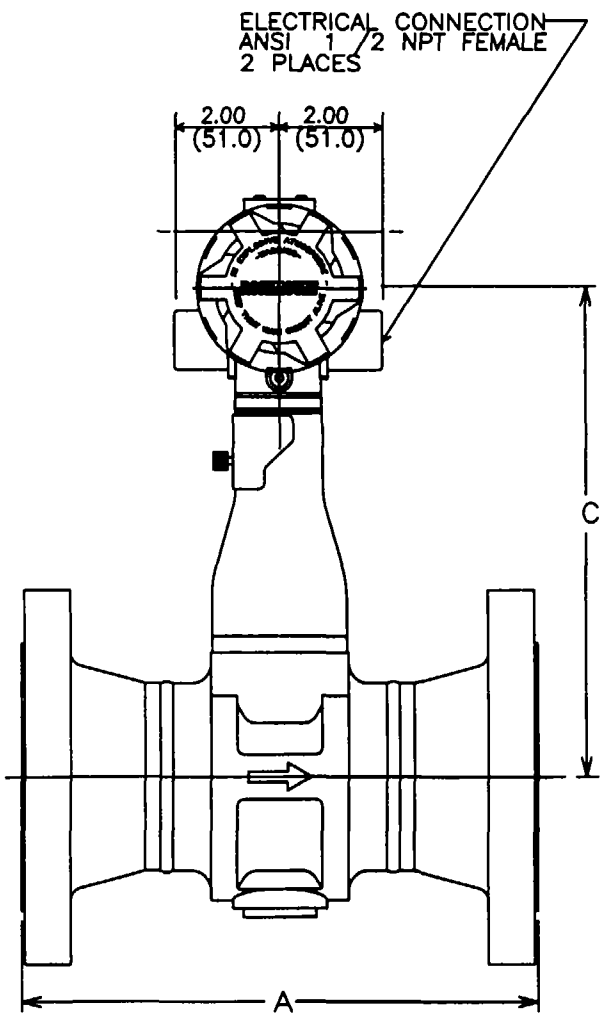

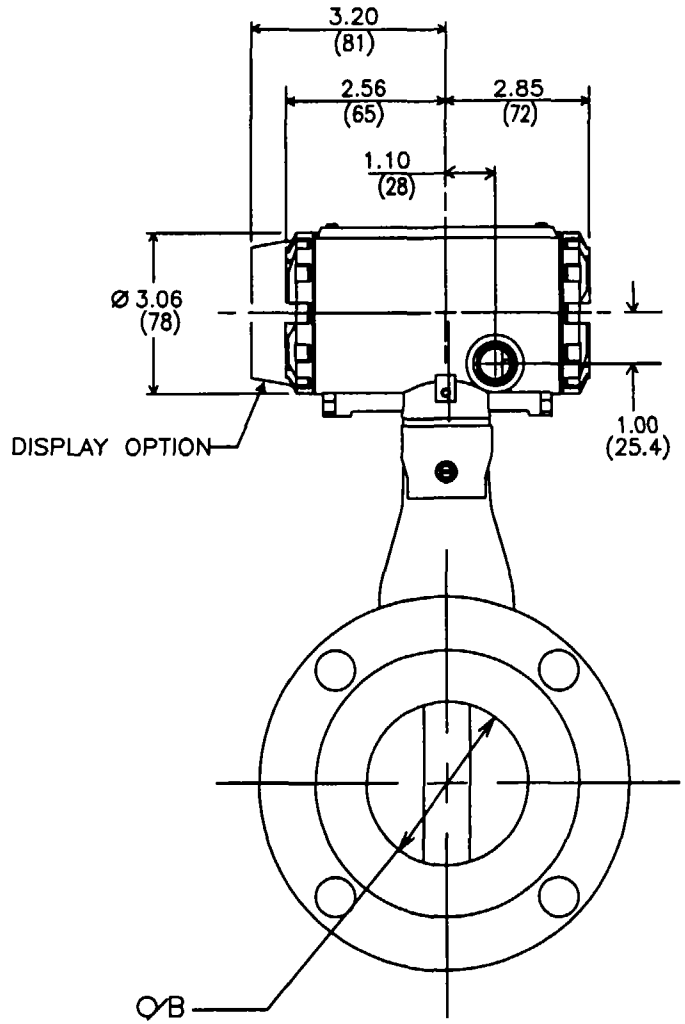

THIS DRAWING WAS CREATED ON CAD. VELLUM MASTER IS NOT TO BE CHANGED. DRAWING IS ARCHIVED ON MAGNETIC TAPE FOR ECO CHANGES.

FILE NAME:

UNLESS OTHERWISE SPECIFIED DIMENSIONS IN INCHES

-TOLERANCE-

DECIMALS	FRACTIONS
.X ± .1	±1/32
.XX ± .02	ANGLES
.XXX ± .010	±2°

DO NOT SCALE PRINT

DR. JOHN ARMSTRONG	5/28/98	
APP'D. DRAWING	-	
APP'D. DRAWING		
APP'D. TAGGING		
APP'D. SPECIALS		

ROSEMOUNT® INC. CHANHASSEN, MINNESOTA

TITLE INSTALLATION DRAWING FOR MODEL 8800C VORTEX FLOWMETER

SIZE	FSCM.NO.	DRAWING NO.
A	04274	08800-0002

SCALE:NONE WT SHEET 1 OF 8

2. REFERENCE INSTRUCTION MANUAL FOR DETAIL INSTALLATION INFORMATION AND WIRING CONNECTIONS.

1. DIMENSIONS ARE IN INCHES. DIMENSIONS SHOWN IN PARENTHESES ARE IN MILLIMETERS.

MANUFACTURER'S PRODUCT SPECIFICATIONS

Caustic Metering Pump

Data **Sheet**

MODEL C941-30

Series C

Electronic Metering Pumps

Configuration Data

Model C92 1 - 363SI

Control & Output Code
Manual Control
Speed (stroking frequency) and stroke length manually adjustable.
C10 --- 1.3 GPH (4.9 l/h) ... 300 psi (20.7 Bar)
C11 --- 2.5 GPH (9.5 l/h) ... 150 psi (10.3 Bar)
C12 --- 4.0 GPH (15.1 l/h) ... 100 psi (6.9 Bar)
C13 --- 8.0 GPH (30 l/h) ..... 60 psi (4.1 Bar)
C14 --- 20 GPH (76 l/h) ..... 25 psi (1.7 Bar)
Instrument Responsive/Manual Control
Manual adjustment features of C1 Series plus switch conversion to external control for automatic systems.
C70 --- 1.3 GPH (4.9 l/h) ... 300 psi (20.7 Bar)
C71 --- 2.5 GPH (9.5 l/h) ... 150 psi (10.3 Bar)
C72 --- 4.0 GPH (15.1 l/h) ... 100 psi (6.9 Bar)
C73 --- 8.0 GPH (30 l/h) ..... 60 psi (4.1 Bar)
C74 --- 20 GPH (76 l/h) ..... 25 psi (1.7 Bar)
C77 --- 10 GPH (38 l/h) ..... 80 psi (5.5 Bar)
C78 --- 25 GPH (95 l/h) ..... 30 psi (2.07 Bar)
C90 --- 1.3 GPH (4.9 l/h) ... 300 psi (20.7 Bar)
C91 --- 2.5 GPH (9.5 l/h) ... 150 psi (10.3 Bar)
C92 --- 4.0 GPH (15.1 l/h) ... 100 psi (6.9 Bar)
C93 --- 8.0 GPH (30 l/h) ..... 60 psi (4.1 Bar)
C94 --- 20 GPH (76 l/h) ..... 25 psi (1.7 Bar)

Voltage Code
1 -------- 120 VAC US Plug
2 -------- 240 VAC US Plug
3 -------- 220-240 VAC DIN Plug
5 -------- 240-250 VAC, UK Plug
6 -------- 240-250 VAC, AUST/NZ Plug
7 -------- 220-240 VAC, SWISS Plug

Liquid End
See next page for complete liquid end specifications and selection.

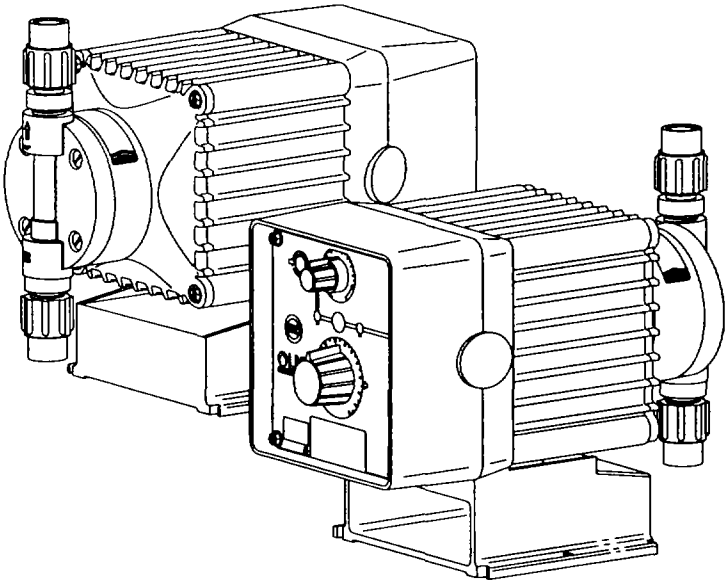

Dimensions

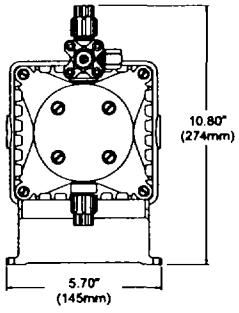

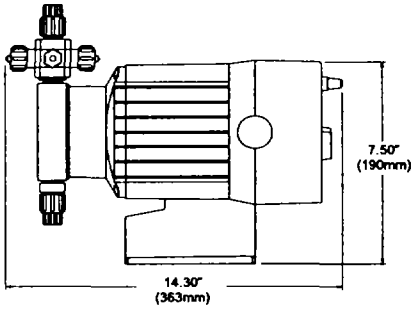

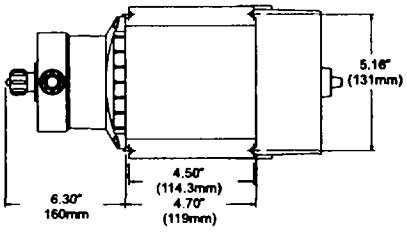

* Dimensions shown are maximum for largest liquid end available. These dimensions vary depending on the liquid end selected

Specifications

Series	Strokes Per Minute (Adjustable) Min	Max	Stroke Length (Adjustable) Recommended Minimum	Average Input Power @ Max Speed	Shipping Weight
C10, C70, C90 C11, C71, C91 C12, C72, C92 C13, C73, C93 C14, C74, C94	1	100	10%	44 watts	20 lbs (9.1 kg)
C77 C78	1	100	10%	87 watts	28 lbs (12.7 kg)

LMI MILTON ROY

8 Post Office Square
Acton, MA 01720 USA
TEL: (978)263-9800
FAX: (978)264-9172
http://www.lmipumps.com

Replaces same of Rev.C 9/97
1712.D 10/99

Configuration Data & Materials of Construction

Drive Assembly	Liquid End No.	Size Code	Materials of Construction: Head & Fittings	Balls	Liquifram™	Seal Ring	Accessory	Tubing & Connections: Discharge	Suction
C90 ☐ -									
C70 ☐ -	297	0.9	316 S.S.	316 S.S.	Fluorofilm™	316 S.S.		Pipe 1/4" NPT M	
C10 ☐ -	94S**	0.9	PVC	Ceramic	Fluorofilm™	PTFE	4FV	Pipe 1/4" NPT M	
	360SI †	1.8	Acrylic/PGC	Ceramic	Fluorofilm™	PGC / Polyprel®	4FV	PE .375" O.D.	
	361SI †	1.8	PGC/PGC	Ceramic	Fluorofilm™	PGC / Polyprel®	4FV	PE .375" O.D.	
C91 ☐ -	362SI †	1.8	PVDF / PVDF	Ceramic	Fluorofilm™	PVDF/ Polyprel®	4FV	PE .375" O.D.	
C92 ☐ -	363SI †	1.8	PVDF / PVDF	Ceramic	Fluorofilm™	PVDF/ PTFE	4FV	PE .375" O.D.	
C71 ☐ -	277	1.8	316 S.S.	316 S.S.	Fluorofilm™	316 S.S.		Pipe 1/4" NPT M	
C72 ☐ -	71FS	1.8	Acrylic/PVDF	PTFE	Hypalon®	Hypalon®	4FV	PE .5" O.D.	Vinyl .5" O.D.
C11 ☐ -	71S †	1.8	Acrylic/PVC	Ceramic	Fluorofilm™	PTFE	4FV	PE .5" O.D.	Vinyl .5" O.D.
C12 ☐ -	72S †	1.8	PVC	Ceramic	Fluorofilm™	PTFE	4FV	PE .5" O.D.	
	74S**	1.8	PVC	Ceramic	Fluorofilm™	PTFE	4FV	Pipe 1/4" NPT M	
	75HV	1.8	Polypropylene	316 S.S.	Fluorofilm™	PTFE		PE .5" O.D.	Vinyl .938" O.D.
	75S †	1.8	Polypropylene	Ceramic	Fluorofilm™	PTFE	4FV	PE .5" O.D.	
	76	1.8	Acrylic/PP	316 S.S.	Fluorofilm™	Hypalon®		PE .5" O.D.	Vinyl .938" O.D.
	79	1.8	UHMW PE	Ceramic	Hypalon®	Hypalon®		PE .5" O.D.	Vinyl .5" O.D.
	310SI †	3.0	Acrylic/PGC	Ceramic	Fluorofilm™	PGC / Polyprel®	4FV	PE .375" O.D.	
	311SI †	3.0	PGC/PGC	Ceramic	Fluorofilm™	PGC / Polyprel®	4FV	PE .375" O.D.	
	312SI †	3.0	PVDF / PVDF	Ceramic	Fluorofilm™	PVDF/ Polyprel®	4FV	PE .375" O.D.	
C93 ☐ -	313SI †	3.0	PVDF / PVDF	Ceramic	Fluorofilm™	PVDF / PTFE	4FV	PE .375" O.D.	
C73 ☐ -	20HV	3.0	Acrylic/PP	316 S.S.	Fluorofilm™	Hypalon®		PE .5" O.D.	Vinyl .938" O.D.
C13 ☐ -	20S**	3.0	Acrylic/PVC	Ceramic	Fluorofilm™	Hypalon®	4FV	PE .5" O.D.	Vinyl .5" O.D.
	24	3.0	PVC	Ceramic	Fluorofilm™	PTFE		Pipe 1/2" NPT M	
	25HV	3.0	Polypropylene	316 S.S.	Fluorofilm™	PTFE		PE .5" O.D.	Vinyl .938" O.D.
	25P	3.0	Polypropylene	Ceramic	Fluorofilm™	PTFE		Pipe 1/2" NPT M	
	25T	3.0	Polypropylene	Ceramic	Fluorofilm™	PTFE		PE .5" O.D.	
	26S**	3.0	PVC	Ceramic	Fluorofilm™	Viton®	4FV	PE .5" O.D.	
	27	3.0	316 S.S.	316 S.S.	Fluorofilm™	PTFE		Pipe 1/2" NPT M	
	29	3.0	UHMW PE	Ceramic	Fluorofilm™	Hypalon®		PE .5" O.D.	
	30	6.0	Acrylic/PVC	Ceramic	Fluorofilm™	PTFE		PE .5" O.D	Vinyl .5" O.D.
C94 ☐ -	32	6.0	PVDF	Ceramic	Fluorofilm™	PTFE		PE .5" O.D.	
C78 ☐ -	34	6.0	PVC	Ceramic	Fluorofilm™	PTFE		Pipe 1/2" NPT M	
C74 ☐ -	35P	6.0	Polypropylene	Ceramic	Fluorofilm™	PTFE		Pipe 1/2" NPT M	
C14 ☐ -	35T	6.0	Polypropylene	Ceramic	Fluorofilm™	PTFE		PE .5" O.D.	
	36	6.0	PVC	Ceramic	Fluorofilm™	PTFE		PE .5" O.D.	
	37	6.0	316 S.S.	316 S.S.	Fluorofilm™	PTFE		Pipe 1/2" NPT M	
	20HV	3.0	Acrylic/PP	316 S.S.	Fluorofilm™	Hypalon®		PE .5" O.D.	Vinyl .938" O.D.
	20S**	3.0	Acrylic/PVC	Ceramic	Fluorofilm™	Hypalon®	4FV	PE .5" O.D.	Vinyl .5" O.D.
	24	3.0	PVC	Ceramic	Fluorofilm™	PTFE		Pipe 1/2" NPT M	
C77 ☐ -	25HV	3.0	Polypropylene	316 S.S.	Fluorofilm™	PTFE		PE .5" O.D.	Vinyl .938" O.D.
	25P	3.0	Polypropylene	Ceramic	Fluorofilm™	PTFE		Pipe 1/2" NPT M	
	25T	3.0	Polypropylene	Ceramic	Fluorofilm™	PTFE		PE .5" O.D.	
	26S**	3.0	PVC	Ceramic	Fluorofilm™	Viton®	4FV	PE .5" O.D.	
	27	3.0	316 S.S.	316 S.S.	Fluorofilm™	PTFE		Pipe 1/2" NPT M	
	29	3.0	UHMW PE	Ceramic	Fluorofilm™	Hypalon®		PE .5" O.D.	

☐ See front page for voltage code specifications

** These Liquid Ends are available without a 4FV, simply drop the 'S' at the end of the Liquid End number to order the model without a 4FV.

† To specify ¼" NPT male, change 'I' to 'P'. To specify black, UV resistant tubing, change 'I' to 'U' To specify Bleed 4FV, change 'S' to 'B' To specify 3FV, change 'S' to'T'.
Fluorofilm™ is a copolymer of PTFE and PFA.
Polyprel® is an elastomeric PTFE copolymer.

4FV indicates that the pump is equipped with an LMI Four Function Valve. This diaphragm type anti-syphon/pressure relief valve is installed on the pump head. It provides anti-syphon protection and aids in priming, even under pressure

Output Information

Series	Gallons per Hour Min	Gallons per Hour Max	Liters per Hour Min	Liters per Hour Max	mL/cc per Minute Min	mL/cc per Minute Max	mL/cc per Stroke Min	mL/cc per Stroke Max	Maximum Injection Pressure	
C10, C70*, C90*	0.001	1.3	0.005	4.9	0.08	82	0.08	0.82	300 psi	(20.7 Bar)
C11, C71*, C91*	0.003	2.5	0.010	9.5	0.16	158	0.16	1.58	150 psi	(10.3 Bar)
C12, C72*, C92*	0.004	4.0	0.015	15.1	0.25	252	0.25	2.52	100 psi	(6.9 Bar)
C13, C73*, C93*	0.008	8.0	0.030	30	0.51	505	0.51	5.05	60 psi	(4.1 Bar)
C14, C74*, C94*	0.020	20.0	0.076	76	1.26	1262	1.26	12.62	25 psi	(1.7 Bar)
C77*	0.010	10.0	0.038	38	0.63	631	0.63	6.31	80 psi	(5.5 Bar)
C78*	0.025	25.0	0.095	95	1.58	1577	1.58	15.77	30 psi	(2.07 Bar)

* Minimum output is based on 1 stroke per minute and 10% stroke setting, minimum output can be reduced further in external mode. Series C9 pumps may be programmed for strokes per hour for lower outputs.

© 1999 LMI Milton Roy - All Rights Reserved
Printed in USA
Specifications subject to change without notice.

Polyprel is a registered trademark of Liquid Metronics Incorporated.
Flourofilm and Liquifram are trademarks of Liquid Metronics Incorporated.
Hypalon and Viton are registered trademarks of E. I. du Pont de Nemours & Co., Inc.

Specification Sheet
Series C

GENERAL
Chemical metering pumps shall be positive displacement, Liquifram™ type pumps that are UL and CUL approved. Output volume shall be adjustable while pumps are in operation from zero to maximum capacity of:

C10, C70, C90	- 1.3 GPH	(4.9 liters per hour)
C11, C71, C91	- 2.5 GPH	(9.5 liters per hour)
C12, C72, C92	- 4.0 GPH	(15.1 liters per hour)
C13, C73, C93	- 8.0 GPH	(30.0 liters per hour)
C14, C74, C94	- 20.0 GPH	(76.0 liters per hour)
C77	- 10.0 GPH	(38.0 liters per hour)
C78	- 25.0 GPH	(95.0 liters per hour)

Chemical metering pumps shall be capable, without a hydraulically backed diaphragm, of injecting solutions against pressures up to:

C10, C70, C90	- 300 psig	(20.7 bar)
C11, C71, C91	- 150 psig	(10.3 bar)
C12, C72, C92	- 100 psig	(6.9 bar)
C13, C73, C93	- 60 psig	(4.1 bar)
C14, C74, C94	- 25 psig	(1.7 bar)
C77	- 80 psig	(5.5 bar)
C78	- 30 psig	(2.1 bar)

SERIES C1
Adjustment shall be by means of readily accessible dial knobs, one for changing stroke length and the other for changing stroke frequency (speed). Both knobs are to be located opposite the liquid handling end.

SERIES C7
Control of Series C7 metering pumps shall be selectable between internal and external pulsing by means of a 3-position center-off switch. Stroke length shall be adjustable by means of readily accessible dial knob. When in external pulsed mode, Series C7 units shall accept signals without the use of electrical timer or internal timer. Pressure capacity shall be adjustable to reduce noise, vibration and wear.

SERIES C9
Series C9 metering pumps shall have a clear liquid crystal display. Control shall be selectable between internal and external pulsing by means of a tactile keypad. Internal stroke frequency shall be adjustable from 1 stroke per hour to 100 strokes per minute. Pressure capacity shall be keypad adjustable to reduce noise, vibration and wear. Metering pump shall be capable of dividing or multiplying pulse inputs from 1 to 999 or responding directly or inversely to a 4-20mA input signal.

DRIVE
The pump drive shall be totally enclosed with no exposed moving parts. Solid state electronic pulser shall be encapsulated and supplied with quick connect terminals at least 3/16" (4.75 mm) wide. Electronics shall be housed in chemical resistant enclosure at the rear of the pump for maximum protection against chemical spillage. Electrical power consumption shall not exceed 87 watts under full speed and maximum pressure conditions. Pump weight shall not exceed 28 lbs (12.7 kg).

AUTOMATIC PRESSURE RELIEF
To eliminate need for pressure relief valve, Liquifram™ shall automatically stop pulsating when discharge pressure exceeds pump pressure rating by not more than 35%.

MATERIAL
Chemical metering pump housing shall be of chemically resistant glass fiber reinforced thermoplastic with a glass fiber reinforced polypropylene EPU carrier[1]. All exposed fasteners shall be stainless steel. Chemical metering pump valves shall be ball type, with ceramic balls[2]. Valve seat and seal ring shall be renewable by replacing the combination seat-seal ring[3] or cartridge valve assembly. Pump head shall be of transparent acrylic[4] material capable of resisting the pumped chemical. Fittings and connections at pump head shall be PVC[5].

CHECK VALVES AND TUBING
A total of 16 ft (4.8 m) of polyethylene tubing[6] shall be provided per pump complete with compression connections. A foot valve with integral one piece strainer shall be provided for the suction line, and an injection check/back pressure valve with ½" NPT male connection for the injection point. The injection check valve shall incorporate a dilating orifice which prohibits scale formation and accumulation of crystalline deposits.

Notes:

1. With plastic coated cast iron EPU carrier for Series C77 and C78.
2. Type 316 stainless steel or PTFE may be specified.
3. Hypalon®, PTFE, Viton® or Polyprel® may be specified
4. PVC, polypropylene, or Type 316 stainless steel may be specified.
5. PVDF, Polypropylene, or Type 316 stainless steel may be specified.
6. 6 ft. (1.8 m) of vinyl suction tubing may be specified in place of polyethylene for the suction side only. 1/4" or 1/2" male pipe thread may be specified.

LMI MILTON ROY

8 Post Office Square
Acton, MA 01720 USA
TEL: (978) 263-9800
FAX: (978) 264-9172
http://www.lmipumps.com

Replaces same of Rev. B 8/97
1619. C 12/99

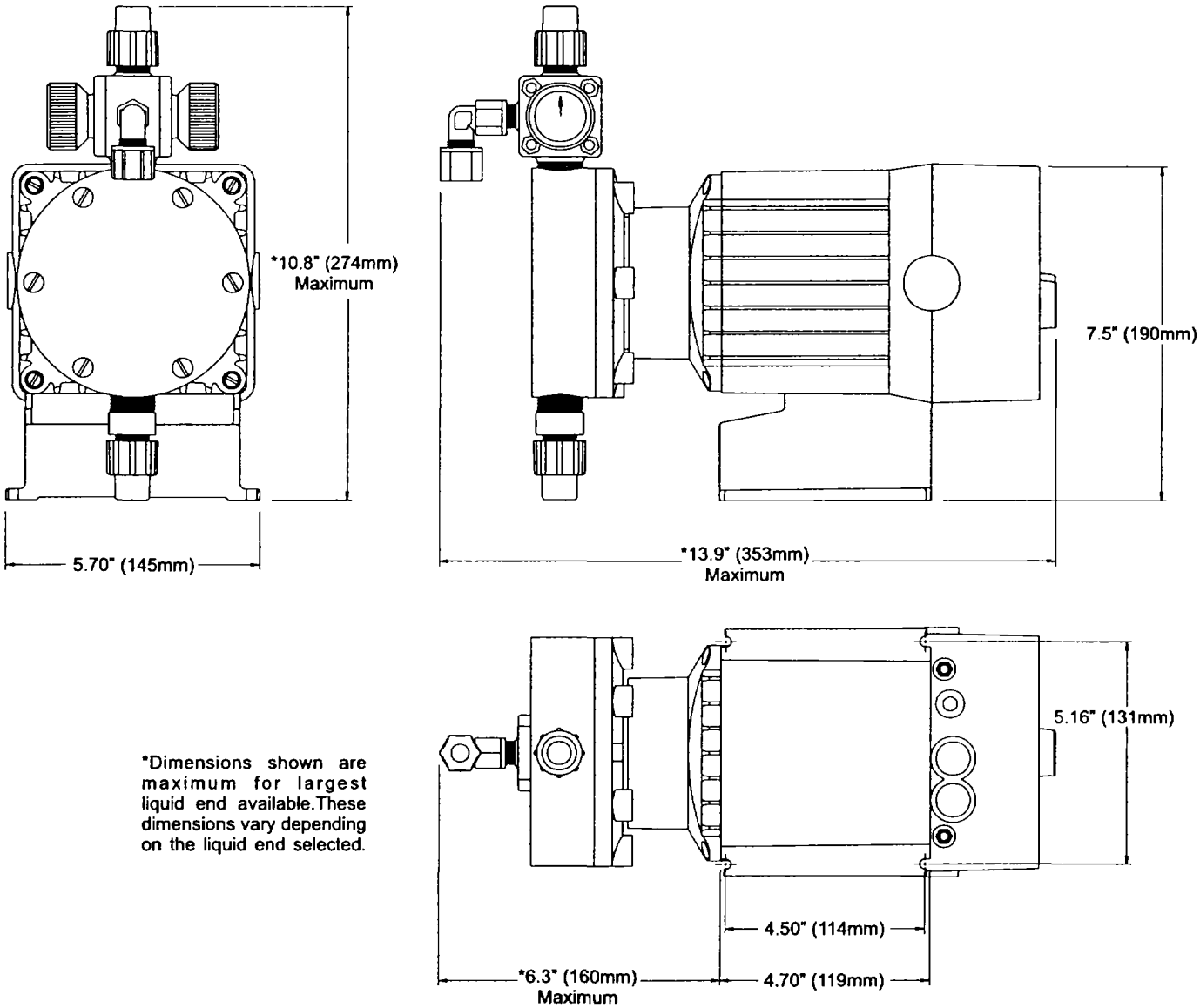

*Dimensions shown are maximum for largest liquid end available.These dimensions vary depending on the liquid end selected.

© 1999 LMI Milton Roy - All Rights Reserved
Printed in USA
Specifications subject to change without notice.

Polyprel is a registered trademark of Liquid Metronics Incorporated.
Liquifram, Liquitron, Micropace are trademarks of Liquid Metronics Incorporated.
Hypalon and Viton are registered trademarks of E. I. du Pont de Nemours & Co., Inc.

MANUFACTURER'S PRODUCT SPECIFICATIONS

Conductivity Analyzer and Probe

Instruction Sheet
PN 51A054eC
February 2001

Model 54e C

Conductivity/Resistivity HART® Analyzer/Controller

ESSENTIAL INSTRUCTIONS

READ THIS PAGE BEFORE PROCEEDING!

Rosemount Analytical designs, manufactures, and tests its products to meet many national and international standards. Because these instruments are sophisticated technical products, you must properly install, use, and maintain them to ensure they continue to operate within their normal specifications. The following instructions must be adhered to and integrated into your safety program when installing, using, and maintaining Rosemount Analytical products. Failure to follow the proper instructions may cause any one of the following situations to occur: Loss of life; personal injury; property damage; damage to this instrument; and warranty invalidation.

- Read all instructions prior to installing, operating, and servicing the product. If this Instruction Manual is not the correct manual, telephone 1-949-757-8500 and the requested manual will be provided. Save this Instruction Manual for future reference.
- If you do not understand any of the instructions, contact your Rosemount representative for clarification.
- Follow all warnings, cautions, and instructions marked on and supplied with the product.
- Inform and educate your personnel in the proper installation, operation, and maintenance of the product.
- Install your equipment as specified in the Installation Instructions of the appropriate Instruction Manual and per applicable local and national codes. Connect all products to the proper electrical and pressure sources.
- To ensure proper performance, use qualified personnel to install, operate, update, program, and maintain the product.
- When replacement parts are required, ensure that qualified people use replacement parts specified by Rosemount. Unauthorized parts and procedures can affect the product's performance and place the safe operation of your process at risk. Look alike substitutions may result in fire, electrical hazards, or improper operation.
- Ensure that all equipment doors are closed and protective covers are in place, except when maintenance is being performed by qualified persons, to prevent electrical shock and personal injury.

WARNINGS

RISK OF ELECTRICAL SHOCK

Making cable connections to and servicing this instrument require access to shock hazard level voltages which can cause death or serious injury, therefore, disconnect all hazardous voltage before accessing the electronics.

Relay contacts made to separate power sources must be disconnected before servicing.

Electrical installation must be in accordance with the National Electrical Code (ANSI/NFPA-70) and/or any other applicable national or local codes.

Unused cable conduit entries must be securely sealed by non-flammable closures to provide enclosure integrity in compliance with personal safety and environmental protection requirements. Use NEMA 4X or IP65 conduit plugs supplied with the instrument to maintain the ingress protection rating (IP65).

For safety and proper performance this instrument must be connected to a properly grounded three-wire power source.

Proper relay use and configuration is the responsibility of the user. No external connection to the instrument of more than 60VDC or 43V peak allowed with the exception of power and relay terminals. Any violation will impair the safety protection provided.

Do not operate this instrument without front cover secured. Refer installation, operation and servicing to qualified personnel.

WARNING

This product is not intended for use in the residential, commercial or light industrial environment per CE certification to EN50081-2.

ROSEMOUNT® Analytical

EMERSON. Process Management

CAUTION

Ground conduit to metal stiffener or to metal enclosure. Use non-flammable watertight conduit fittings/plugs to preserve enclosure rating.

DANGER

LIVE VOLTAGES MAY BE PRESENT
When fuse or this cover is removed will cause severe injury or death.

CAUTION

For continued protection against fire, replace only with fuses of specified voltage and current ratings. Fuses are located under this cover.

VAROVANI

Zemnici vodic musi byt vodive spojen s kostrou pristroje. Pouzivejte nehorlave vodotesne pruchodky, abyste zachovali stupen krytí pristroje.

NEBEZPECI

ZARIZENI POD NAPETIM
Odstraneni pojistky nebo tohoto krytu muze zpusobit vazne zraneni nebo smrt.

VAROVANI

Poskozene pojistky nahrazujte pouze pojistkami se stejnym jmenovitym napetim a proudem. Pojistky jsou umisteny pod timto krytem.

FORSIGTIG

Brug uantændelig vandtæt forskruning som sikkerhed for bevaring af kapslings klasse.

Jordforbindelse til metal kapsel.

FARE

UBESKYTTET SPÆNDING
Hvis sikringen eller denne påskrift fjernes kan dette medføre alvorlige kvæstelser eller død.

FORSIGTIG

Brug kun sikringer med nærmere angivet spænding og strømstyrke som sikkerhed for vedvarende beskyttelse mod brandfare. Sikringerne er placeret under denne påskrift.

ATENCION

La toma a tierra debe hacerse a un contrafuerte de metal o a la caja metálica. Utilice accesorios/enchufes no inflamables y estancos al agua para preservar las especificaciones de la caja.

PELIGRO

VOLTAJE PUEDE ESTAR PRESENTE
Cuando los fusibles o esta cubierta son removidos causará severas lesiones o muerte.

ATENCION

Para una proteccion continua contra el fuego, reemplace solamente con fusibles de voltaje y corriente especificados. Los fusibles se encuentran debajo de esta cubierta.

VOORZICHTIG

Aardleiding naar metalen profiel of naar metalen behuizing. Gebruik onbrandbare, waterdichte wartels en pluggen om de beschermingsklasse te handhaven.

GEVAAR

KAN ONDER SPANNING STAAN
Verwijderen van zekering of dit deksel kan dit leiden tot ernstig of dodelijk letsel.

VOORZICHTIG

Voor duurzame bescherming tegen brand, uitsluitend zekeringen gebruiken met aangegeven nominale spannings - en stroomwaarden. De zekeringen bevinden zich onder dit deksel.

ATTENTION

Raccorder le tube à la masse métallique d'une entretoise ou du coffret. Utiliser des raccords et des bouchons étanches ininflammables afin de preserver la classification du boîtier.

DANGER

POSSIBILITE DE HAUTE TENSION
En cas de démontage de ce capot ou des fusibles. Risques de Blessures graves ou de mort

ATTENTION

Afin d'assurer une protection permanente contre le feu, ne remplacer *les fusibles que par des modèles équivalents en tension et en courant.* Les fusibles se trouvent derriere cette plaquette

ADVARSEL

Kabelinnføring må jordes til metallavstiver eller til metallkapslingen. Bruk flammesikre og vanntette nipler\plugger slik at kapslingens tetthetsgrad opprettholdes.

FARE

SPENNING KAN VÆRE TIL STEDE
når sikringen eller dette dekslet fjærnes, og kan føre til alvorlige skader eller dødsulykker.

ADVARSEL

For at beskyttelse mot antennelse skal opprettholdes, må sikringer bare erstattes med tilsvarende som har spesifisert spenning- og strømstyrke. Sikringer er plassert under dette dekslet.

ACHTUNG

Der Analysator ist vorschriftsmaessig zu erden.

Um die Schutzart des Geraetes sicherzustellen ist es mit den entsprechenden Kabelverschraubungen und Blindkappen auszuruesten.

ACHTUNG

GEFAEHRLICHE ELEK-TRISCHE SPANNUNG
Ist die Schutzabdeckung oder die Sicherung entfernt, so koennen am Geraet ernsthafte oder toedliche Verletzungen entstehen.

ATTENTION

Um die Gefahr von Kurzschluß und Funkenbildung zu verhindern dürfen die Sicherungen nur durch solche gleicher Spannung und Stromwerte ausgetauscht werden. Die Sicherungen befinden sich unter dieser Abdeckung.

Attenzione

Tubo di protezione per messa a terra con elemento di ingresso in metallo o con custodia in metallo.

Utilizzare accessori/connettori del tubo di protezione e tenuta stagna, non infiammabili, per assicurare i limiti di resistenza della custodia

Pericolo

POSSIBILE PRESENZA DI ALTA TENSIONE
La rimozione del fusibile o del coperchio può causare gravi lesioni o morte.

ATTENZIONE

Per garantire una continua protezione contro gli incendi, sostituire solo con *fusibili del voltaggio indicato e dell'attuale potenza. I fusibili sono* alloggiati sotto il coperchio.

UWAGA

Uziemij przewod do metalowego plaskownika lub obudowy. Aby zachowac stopien szczelnosci obudowy stosuj niepalne, wodoszczelne dlawiki,.

NIEBEZPIECZENSTWO

URZADZENIE MOZE BYC POD NAPIECIEM
Gdy bezpieczniki lub ta pokrywa sa usuniete istnieje mozliwosc uszkodzenia ciala lub smierci.

UWAGA

W celu utrzymania zabezpieczenia przed zapaleniem, nalezy stosowac bezpieczniki o identycznym z oryginalnym napieciu i amperazu.

Bezpieczniki sa umieszczone pod ta pokrywa.

ATENÇÃO

Ligar a conducta de cabos à terra através de suporte ou invólucro metálicos. Utilize bucins e acessórios ignifugos e estanques para preservação da estanquecidade.

PERIGO

POSSIBILIDADE DE TENSÃO PERIGOSA
A remoção do fusivel ou desta tampa pode causar lesões graves ou a morte.

ATENÇÃO

Para manter sempre uma boa proteção contra incêndio, substituir somente por fusíveis com a tensão e corrente especificadas. Os fusíveis encontram-se sob esta tampa.

IAKTTAG FÖRSIKTIGHET

Anslutningspunkt är jordad till chassi. Använd brandsäker, vattentät kabelanslutning för att bevara klassificering av apparatskåp.

FARA

HÖGSPÄNNING KAN FÖREKOMMA
Avlägsnande av säkring eller skyddskåpa kan förorsaka allvarlig skada eller dödsfall

IAKTTAG FÖRSIKTIGHET

För kontinuerligt skydd mot brandfara, ersätt endast med specificerad säkringsstorlek och spänning.

PHYSICAL SPECIFICATIONS - GENERAL

Enclosure: Epoxy-painted cast aluminum

NEMA 4X (IP65),144 X 144 X 132mm, DIN size (5.7 X 5.7 X 5.2 in.)

Front Panel: Membrane keyboard with tactile feed back and user selectable security. Light gray, blue and white overlay. Light gray enclosure, dark gray bezel.

Display: Three-line LED back-lit dot matrix LCD (7.0 x 3.5 cm). The display contrast is compensated for ambient temperature.

Process Variable Character Height: 16mm (0.6 inch)

Electrical Classification:

Class I, Division 2, Groups A, B, C, & D. T5 Ta=50°C. Dust ignition proof: Class II, Division 1, Groups E, F, & G; Class III.

CSA-LR34186:
Max. relay contact rating: 28 Vdc; 110 Vac; 230 Vac; 6 amps resistive

FM: Max. relay contact rating: 28 Vdc resistive
150 mA - Groups A & B;
400 mA - Group C;
540 mA - Group D

Power:

Code -01: 100 - 127 VAC, 50/60 Hz ± 6%, 6.0 W
200 - 253 VAC, 50/60 Hz ± 6%, 6.0 W

Code -02: 20 - 30 VDC, 6.0 W

Current Outputs:

Output 1: Process, Raw conductivity, or Temp.

Output 2: Process, Raw conductivity, or Temp.

Each output is galvanically isolated, 0-20 mA or 4-20 mA into 600 ohms maximum load at 24 Vdc or 115/230 Vac or 550 ohms maximum load at 100/200 Vac.Output 1 includes digital signal 4-20 mA superimposed HART (Code -09 only).

EMI/RFI :EN50081-2
EN50082-2 CE

LVD (Code -01 only): EN61010-1

Ambient Temperature: 0 to 50°C (32 to 122°F)
NOTE: The analyzer is operable from -20 to 60°C (-4 to 140°F) with some degradation in display performance.

Relative Humidity: 95%, non-condensing

Alarms: Relay 1 - Process, Interval, or Time Proportional Control (code -20)

Relay 2 - Process, Interval, or Time Proportional Control (code -20)

Relay 3 - Process, Interval, or Time Proportional Control (code -20)

Relay 4 - Fault alarm

Each relay has a dedicated LED on the front panel.

Relay Contacts: Relays 1-3: Epoxy sealed form A contacts, SPST, normally open.

Relay 4: Epoxy sealed form C, SPDT.

	Resistive	Inductive
28 Vdc	5.0 Amps	3.0 Amps
115 Vac	5.0 Amps	3.0 Amps
230 Vac	5.0 Amps	1.5 Amps

Weight/Shipping Weight: 1.1 kg/1.6 kg (2.5 lb/3.5 lb)

INSTRUMENT SPECIFICATIONS @ 25°C

Measurement Range: (See table on following page), –15 to 200°C (5 to 392°F)

Accuracy:

Contacting Sensors: ±0.5% of reading, ±.005 µS/cm

Inductive Sensors: ±1% of reading, 200 µS/cm to 2 S/cm, ±5 µS/cm

Repeatability: ±0.25% of reading

Stability: ±0.25% of output range/month, noncumulative

Ambient Temperature Coefficient: ±0.01% of reading/°C

Temperature Compensation: -15 to 200°C (5 to 392°F) (automatic or manual)

Temperature Correction: High purity water (dilute sodium chloride), cation conductivity (dilute hydrochloric acid), linear temperature coefficient (0.0 to 5.00%/°C), or none. High purity water and cation conductivity temperature correction apply between 0 and 100°C. Linear temperature coefficient can be applied between -5 and 200°C (23 to 392°F).

CONTACTING SENSORS				
Conductivity Sensor Model Number	142, 400 402, 403, 404 400VP, 402VP 403VP	142, 150, 400 402, 403, 404 400VP, 402VP 403VP	140, 141, 150 400, 402, 403 400VP, 402VP 403VP	401-14 402, 403
Cell Constant	0.01	0.1	1.0	10.0

INDUCTIVE SENSORS					
Conductivity Sensor Model Number	226	228	225	222 (1in.)	222 (2 in.)
Cell Constant*	1.0	3.0	3.0	6.0	4.0
Minimum Range	50	250	250	500	500
Maximum Range	1,000,000	2,000,000	2,000,000	2,000,000	2,000,000
* Typical	FULL SCALE MICROSIEMENS/cm				

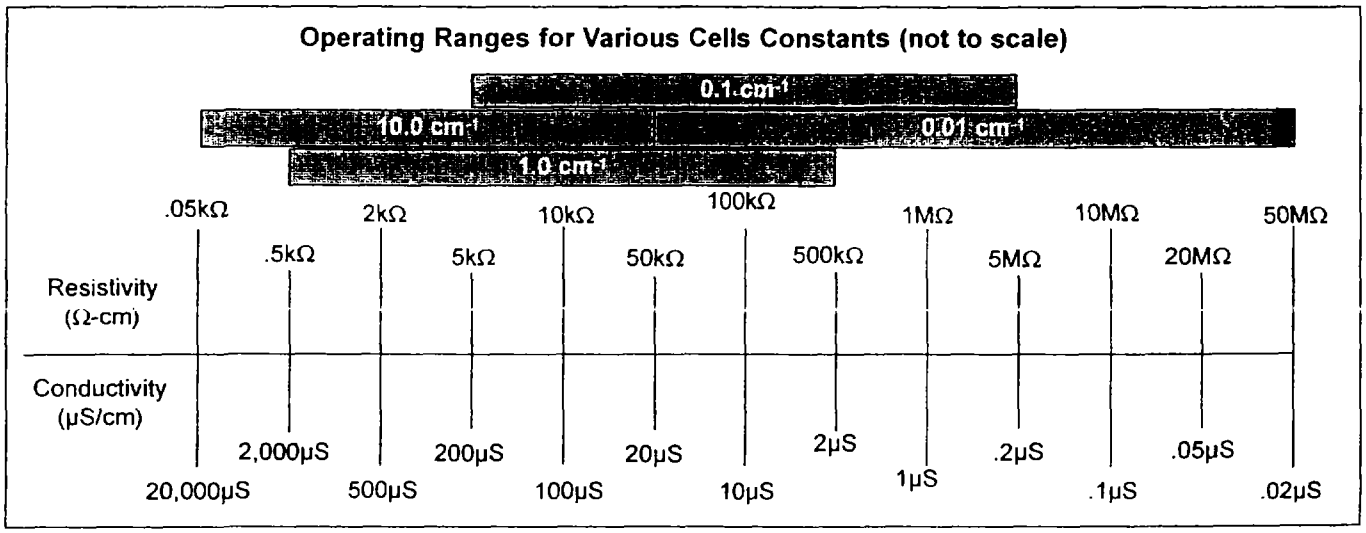

MODEL 54e C QUICK START

Use the ↓ or ↑ key to move the cursor down or up and the → or ← to move the cursor right or left.

Press ENTER (F4) to move to the next menu, SAVE (F4) to store a setting, EDIT (F4) to change a setting, and EXIT (F1) to exit without saving changes.

STEP 1 - MEASUREMENT TYPE

Note: The analyzer is factory configured for a toroidal sensor (inductive mode). Skip to step 2 if you will use this mode.

Press any button. The main menu will appear with CALIBRATE highlighted.

Use the arrow buttons to select Program. Press ENTER.

Use the arrow buttons to select Configure. Press ENTER.

DISPLAY will be highlighted. Press ENTER.

SENSOR will be highlighted. Press ENTER.

Use the arrow buttons to select CONTACTING. Press SAVE.

Press EXIT twice.

STEP 2 - OUTPUT SETPOINTS

Press any button. The main menu will appear with CALIBRATE highlighted.

Use the arrow buttons to select Program. Press ENTER.

Use the arrow buttons to select OUTPUT SETPOINTS. Press ENTER.

OUTPUT 1 SETPOINTS will be highlighted. Press ENTER. Press CONT.

4 mA will be highlighted. Press EDIT. Use the arrow buttons to enter the desired value. Press SAVE.

Use the arrow buttons to select 20 MA. Press EDIT. Use the arrow buttons to enter the desired value. Press SAVE. Press EXIT.

Use the arrow buttons to select OUTPUT 2 SETPOINTS. Press ENTER. Press CONT.

Enter the 4 mA and 20 mA values as above.

Press EXIT until the main display appears.

STEP 3 - SENSOR ZERO

Press any button. The main menu will appear with CALIBRATE highlighted. Press ENTER.

Use the arrow buttons to select INITIAL SETUP. Press ENTER.

Press ENTER. Press EDIT. Use the arrow buttons to enter the sensor's cell constant. Press SAVE. Press EXIT.

Use the arrow buttons to select SENSOR ZERO. Press ENTER.

Make sure the sensor is dry and in air. Press CONT.

Note: The procedure may be repeated several times if necessary. A successful zero is indicated with the message "Sensor zero completed"

Press EXIT until the main display appears.

STEP 4 - CALIBRATION

Use the arrow buttons to select CALIBRATE SENSOR. Place the sensor in a solution of known conductivity.

Press EDIT. Use the arrow buttons to enter the conductivity value of the solution. Press SAVE.

Press EXIT until the main display appears.

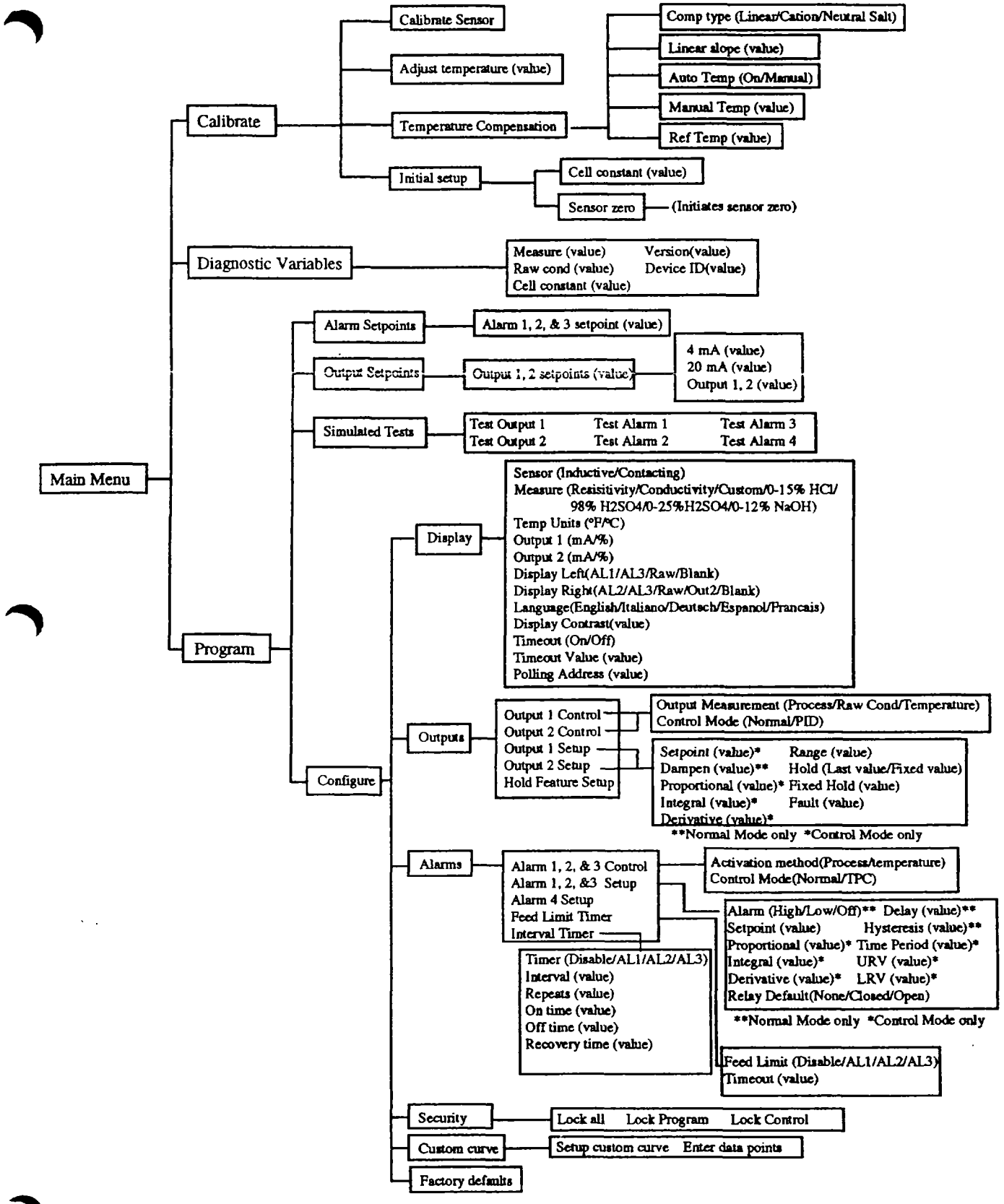
Main Menu
Calibrate
Calibrate Sensor
Adjust temperature (value)
Temperature Compensation
Comp type (Linear/Cation/Neutral Salt)
Linear slope (value)
Auto Temp (On/Manual)
Manual Temp (value)
Ref Temp (value)
Initial setup
Cell constant (value)
Sensor zero
(Initiates sensor zero)
Diagnostic Variables
Measure (value)
Raw cond (value)
Cell constant (value)
Version(value)
Device ID(value)
Program
Alarm Setpoints
Alarm 1, 2, & 3 setpoint (value)
Output Setpoints
Output 1, 2 setpoints (value)
4 mA (value)
20 mA (value)
Output 1, 2 (value)
Simulated Tests
Test Output 1
Test Output 2
Test Alarm 1
Test Alarm 2
Test Alarm 3
Test Alarm 4
Configure
Display
Sensor (Inductive/Contacting)
Measure (Resisitivity/Conductivity/Custom/0-15% HCl/
98% H2SO4/0-25%H2SO4/0-12% NaOH)
Temp Units (°F/°C)
Output 1 (mA/%)
Output 2 (mA/%)
Display Left(AL1/AL3/Raw/Blank)
Display Right(AL2/AL3/Raw/Out2/Blank)
Language(English/Italiano/Deutsch/Espanol/Francais)
Display Contrast(value)
Timeout (On/Off)
Timeout Value (value)
Polling Address (value)
Outputs
Output 1 Control
Output 2 Control
Output 1 Setup
Output 2 Setup
Hold Feature Setup
Output Measurement (Process/Raw Cond/Temperature)
Control Mode (Normal/PID)
Setpoint (value)*
Dampen (value)**
Proportional (value)*
Integral (value)*
Derivative (value)*
Range (value)
Hold (Last value/Fixed value)
Fixed Hold (value)
Fault (value)
**Normal Mode only *Control Mode only
Alarms
Alarm 1, 2, & 3 Control
Alarm 1, 2, &3 Setup
Alarm 4 Setup
Feed Limit Timer
Interval Timer
Activation method(Process/temperature)
Control Mode(Normal/TPC)
Alarm (High/Low/Off)**
Setpoint (value)
Proportional (value)*
Integral (value)*
Derivative (value)*
Relay Default(None/Closed/Open)
Delay (value)**
Hystereais (value)**
Time Period (value)*
URV (value)*
LRV (value)*
**Normal Mode only *Control Mode only
Timer (Disable/AL1/AL2/AL3)
Interval (value)
Repeats (value)
On time (value)
Off time (value)
Recovery time (value)
Feed Limit (Disable/AL1/AL2/AL3)
Timeout (value)
Security
Lock all
Lock Program
Lock Control
Custom curve
Setup custom curve
Enter data points
Factory defaults

WARNING

All electrical installation must conform to the National Electrical Code, all state and local codes, and all plant codes and standards for electrical equipment. All electrical installations must be supervised by a qualified and responsible plant electrician.

LOCATING THE CONTROLLER

Position the Model 54e C controller to minimize the effects of temperature extremes and to avoid vibration and shock. Locate the controller away from your chemical process to protect it from moisture and fumes.

Select an installation site that is more than 2 ft from high voltage conduit, has easy access for operating personnel, and is not exposed to direct sunlight.

UNPACKING AND INSPECTION

Inspect the exterior of the shipping container for any damage. Open the container and inspect the controller and related hardware for missing or damaged parts.

If there is evidence of damage, notify the carrier immediately. If parts are missing, contact Rosemount Analytical customer support.

MECHANICAL INSTALLATION

Mounting the Controller

The Model 54e C controller may be supplied with a mounting bracket accessory. If you use the mounting bracket on wall or pipe installations, avoid mounting on pipes which vibrate or are close to the process. The bracket may be modified to mount the controller on I-beams or other rigid members. You can also fabricate your own bracket or panel mount the controller using the bracket as an example.

Wall or Surface Mounting:

1. Mount the bracket to the controller using the supplied four screws.
2. Mount controller mounting bracket to wall using any appropriate fastener such as screws, bolts, etc

Pipe Mounting:

1. Attach the mounting bracket to the rear of the controller and tighten the four screws.
2. Place supplied U bolts around the mounting pipe and through the pipe mounting bracket and mounting bracket. Tighten the U bolt nuts until the controller is securely mounted to the pipe.

Panel Mounting:

The controller is designed to fit into a 5.7 x 5.7 inch (DIN standard 144x144 mm) panel cutout (Figure 2-3). Installation requires both front and rear access.

1. Install the controller as shown in Figure 2-3. Insert the instrument enclosure through the front of the panel cutout and align the panel mounting brackets as shown.
2. Insert two mounting bracket screws through each of the two mounting brackets and into the tapped holes in the rear of the controller enclosure and tighten each screw.
3. Insert four panel mounting screws through each hole in the mounting brackets. Tighten each screw until the mounting bracket holds controller firmly in place. To avoid damaging the controller mounting brackets, do not use excessive force.

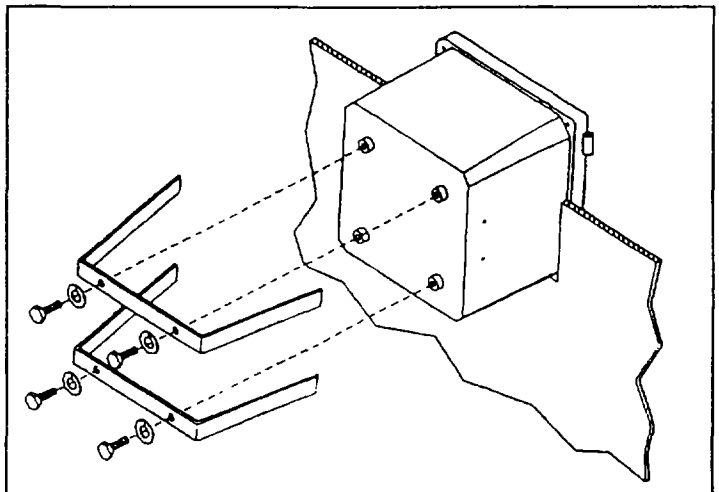

PANEL MOUNTING

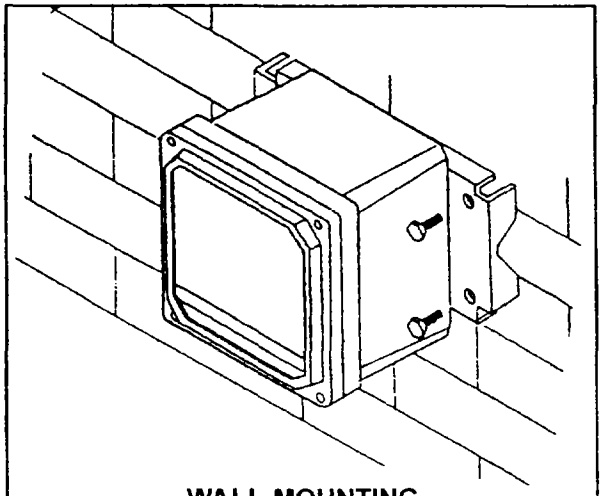

WALL MOUNTING

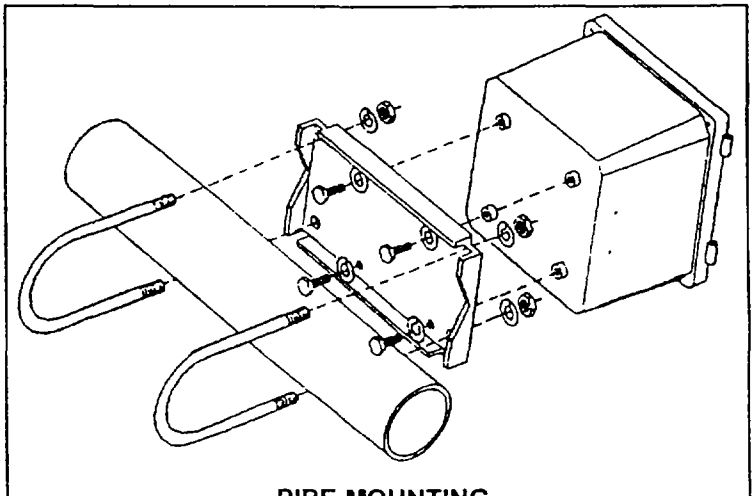

PIPE MOUNTING

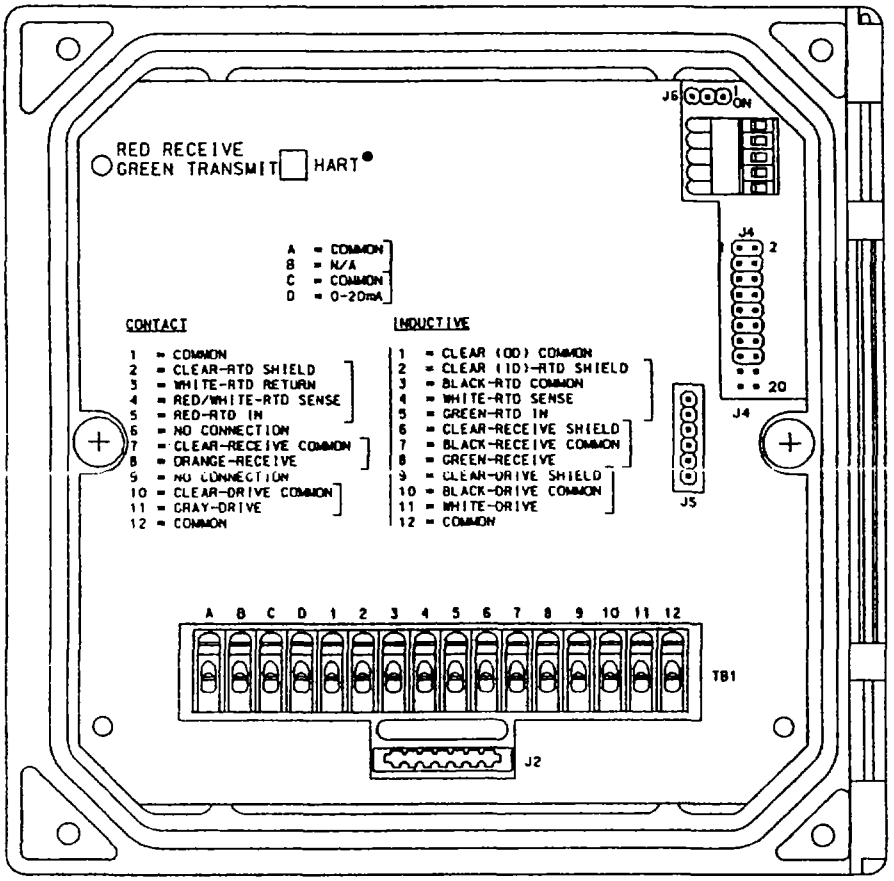

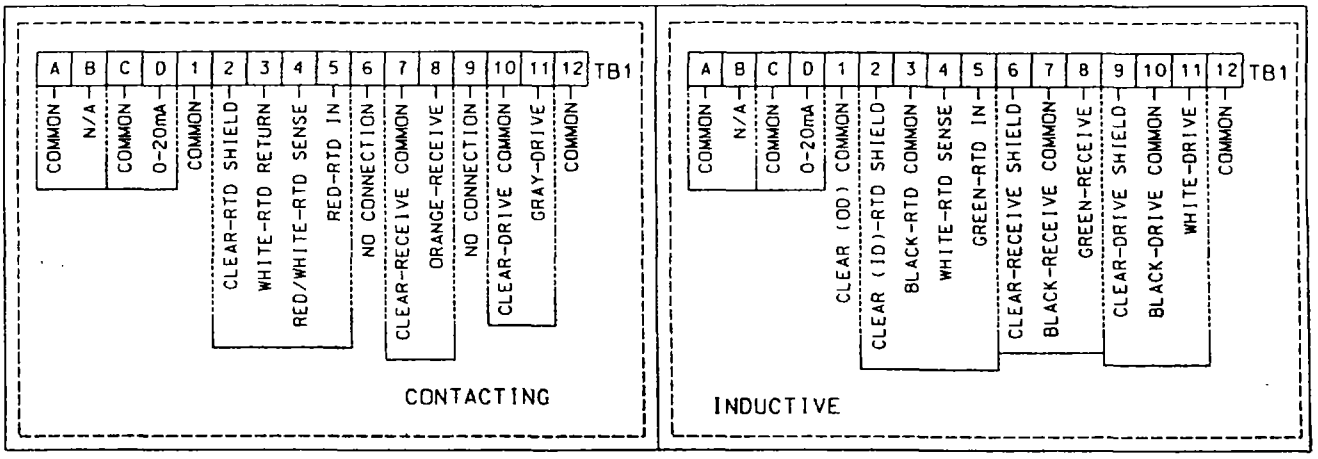

TB1 SENSOR WIRING

Sensor Wiring Diagram

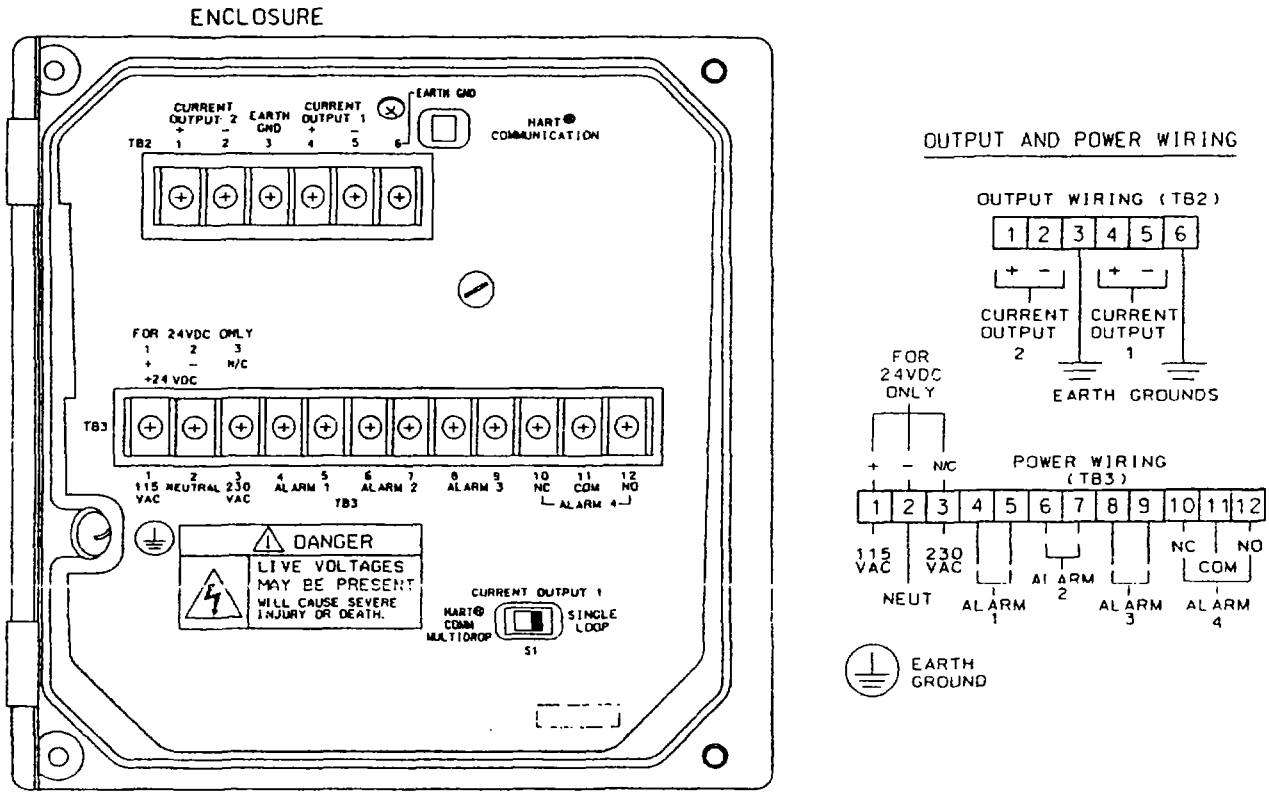

Power Input and Relay Output Wiring for Model 54e C

NOTE: Maximum inductive load is 3.0 A at 115 V, 1.5 A at 230V. External power must be brought to relay contact. HART communications superimposed on Output 1.

The right people, the right answers, right now.

ROSEMOUNT ANALYTICAL
CUSTOMER SUPPORT CENTER
1-800-854-8257

ON-LINE ORDERING NOW AVAILABLE ON OUR WEB SITE http://www.RAuniloc.com

Credit Cards for U.S. Purchases Only.

Emerson Process Management
Rosemount Analytical Inc.
2400 Barranca Parkway
Irvine, CA 92606 USA
Tel: (949) 863-1181
Fax: (949) 474-7250
http://www.RAuniloc.com

© Rosemount Analytical Inc. 2001

EMERSON.
Process Management

Submersion/Insertion Sensor

CAUTION

SENSOR/PROCESS APPLICATION COMPATIBILITY

The wetted sensor materials may not be compatible with process composition and operating conditions. Application compatibility is entirely the responsibility of the user.

CAUTION

BEFORE REMOVING THE SENSOR, be absolutely certain the process pressure is reduced to 0 psig and the process temperature is at a safe level!

SPECIFICATIONS - SENSORS

MODEL	Materials of Construction	Temperature	Pressure
228-01	Polypropylene	110°C (230°F)	295 psig (2135 kPa abs)
228-02	PEEK	120°C (248°F)	295 psig (2135 kPa abs)
228-03	PEEK	200°C (392°F)	295 psig (2135 kPa abs)
228-04	Tefzel	120°C (248°F)	200 psig (1480 kPa abs)

SPECIFICATIONS - RETRACTION ASSEMBLIES

		Operating Conditions		Retraction/Insertion Conditions	
PN	Materials of Construction	Temperature	Pressure	Temperature	Pressure
23311-00 (mechanical)	316 SS, Teflon, EPDM	200°C (392°F)	295 psig (2135 kPa abs)	200°C (392°F)	295 psig (2135 kPa abs)
23311-01 (manual)	316 SS. Teflon EPDM	200°C (392°F)	295 psig (2135 kPa abs)	130°C (266°F)	35 psig (343 kPa abs)

SPECIFICATIONS - ADAPTERS

PN	Materials of Construction	Temperature	Pressure
23242-02	PEEK, Viton, 316 SS	200°C (392°F)	295 psig (2135 kPa abs)
23242-03	PEEK, Viton, 316 SS	200°C (392°F)	295 psig (2135 kPa abs)
2001990	CVPC, PEEK, Viton		

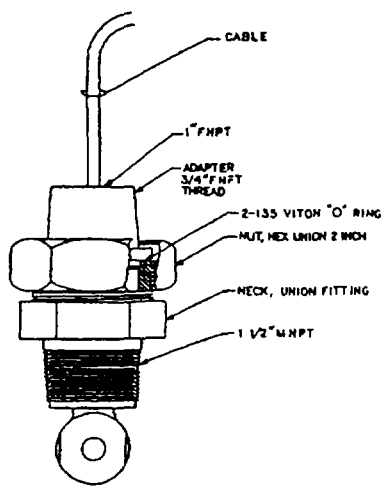

FIGURE 1. Adapter PN 23242-02 use with 228-21 (3/4 in. MNPT)

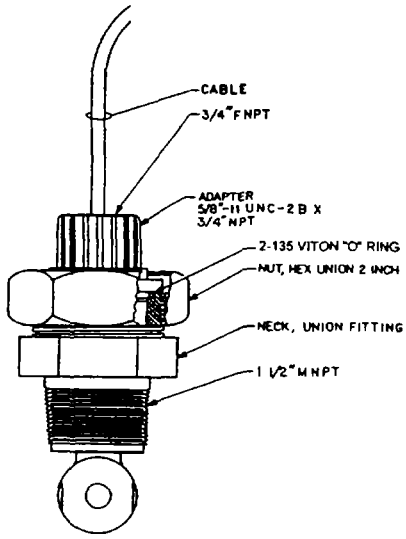

FIGURE 2. Adapter PN 23242-03 use with 228-20 (5/8-11 UNC threads)

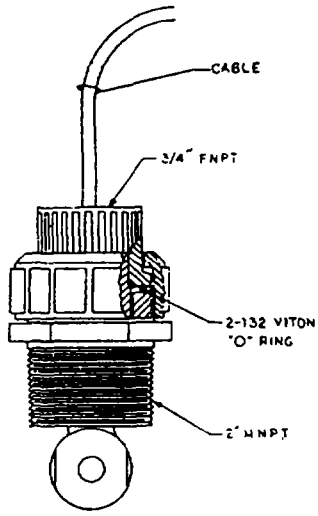

FIGURE 3. Adapter PN 2001990 use with 228-21 (3/4 in. MNPT)

2" MIN

INSTALLATION

Keep at least 1 in. (2.5 cm) between sensor and pipe wall. If clearance is too small, calibrate the sensor in place. Ensure that the sensor is completely submerged in liquid. Horizontal mounting is best.

WIRING

Keep sensor wiring away from ac conductors and high current demanding equipment. **Do not cut cable. Cutting the cable may void the warranty.**

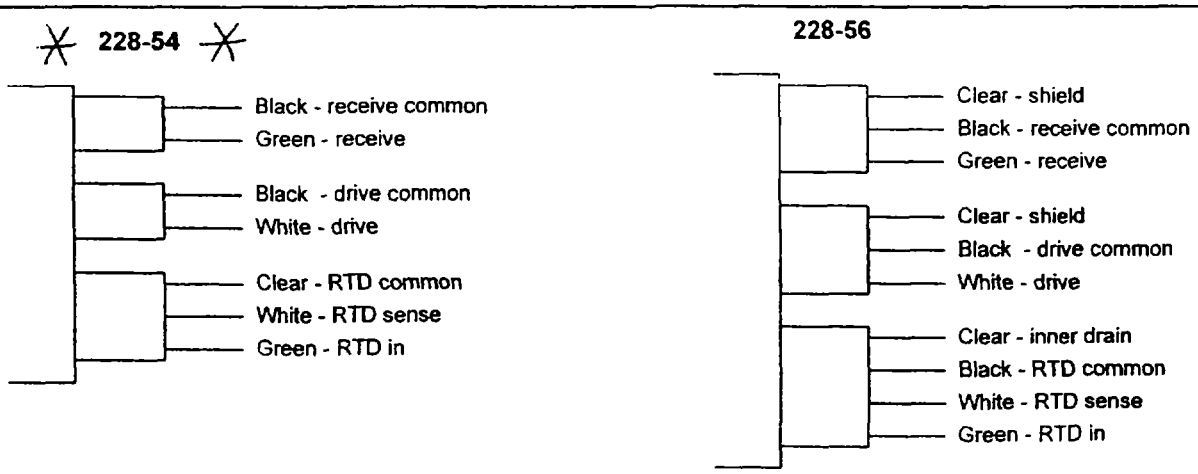

FIGURE 4. Wire Functions

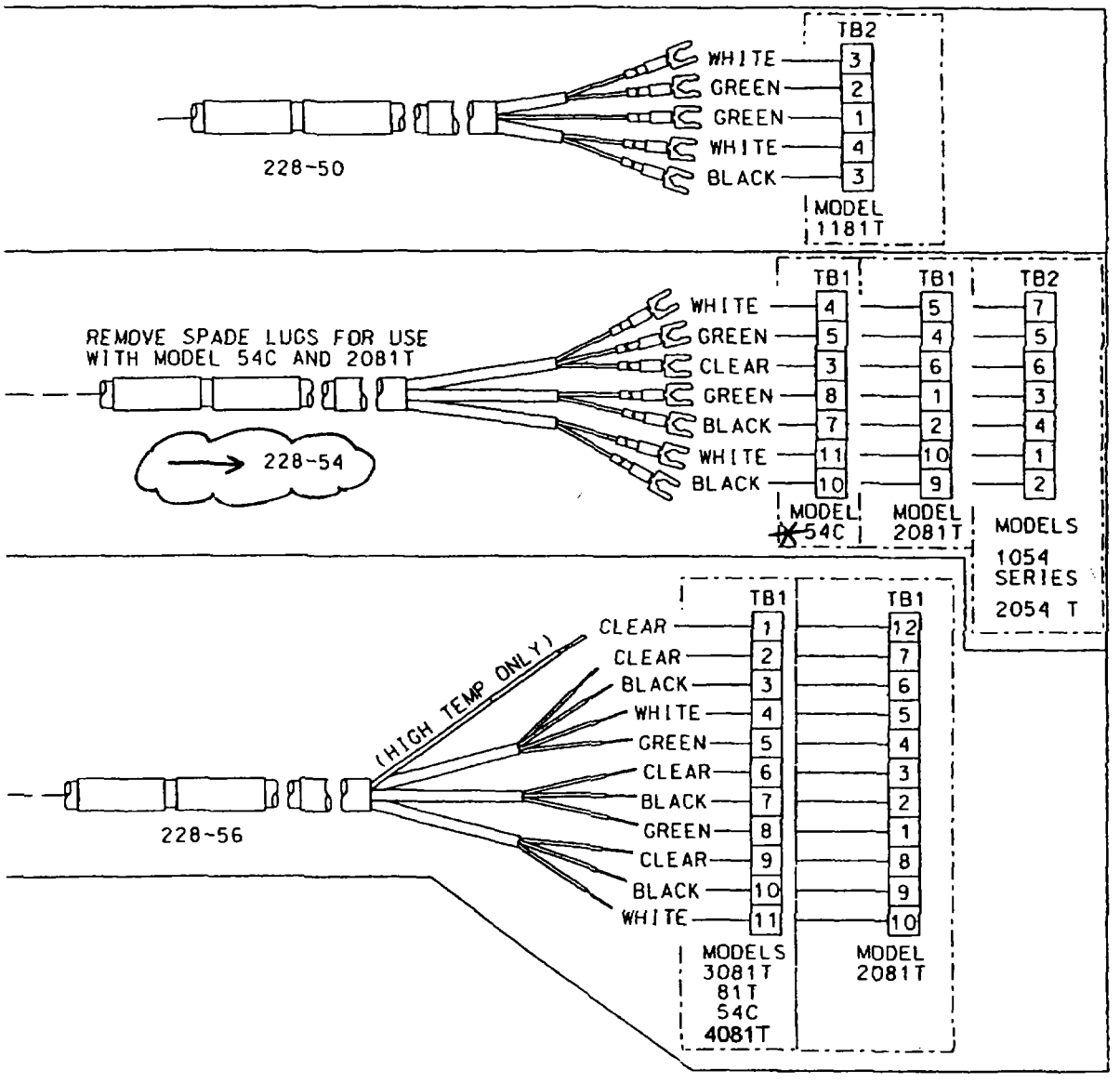

FIGURE 5. Wiring Model 228 Directly to Models 1181T, 54C, 2081T, 2054T, 1054, 3081T, 81T, & 4081T

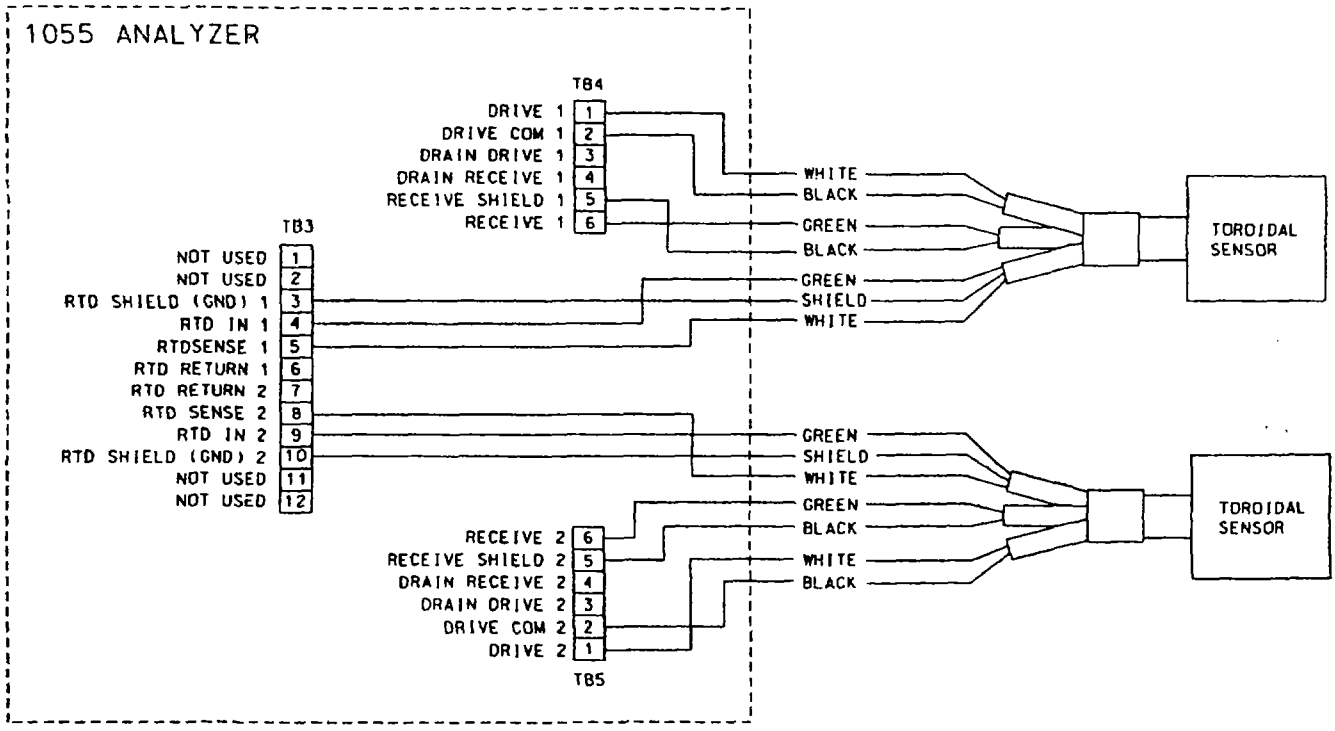

FIGURE 6. Wiring Model 228-54 to Model 1055-21-31

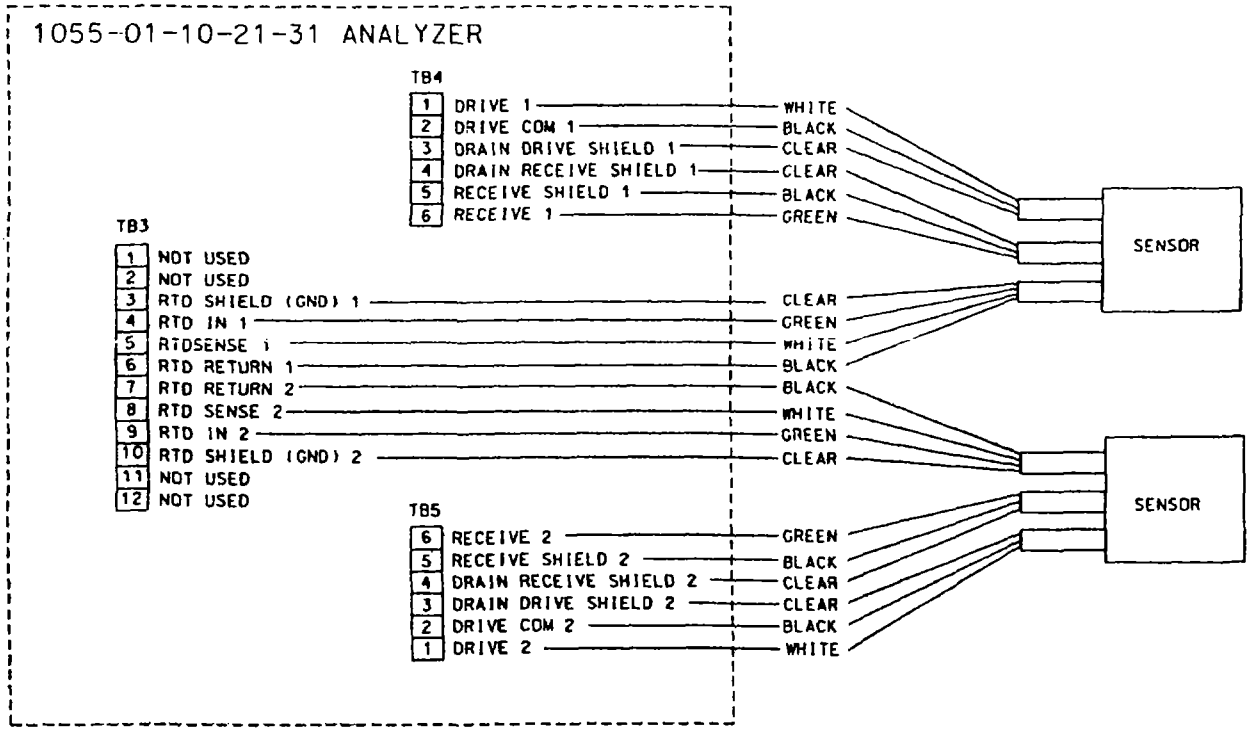

FIGURE 7. Wiring Model 228-56 to Model 1055-01-21-31

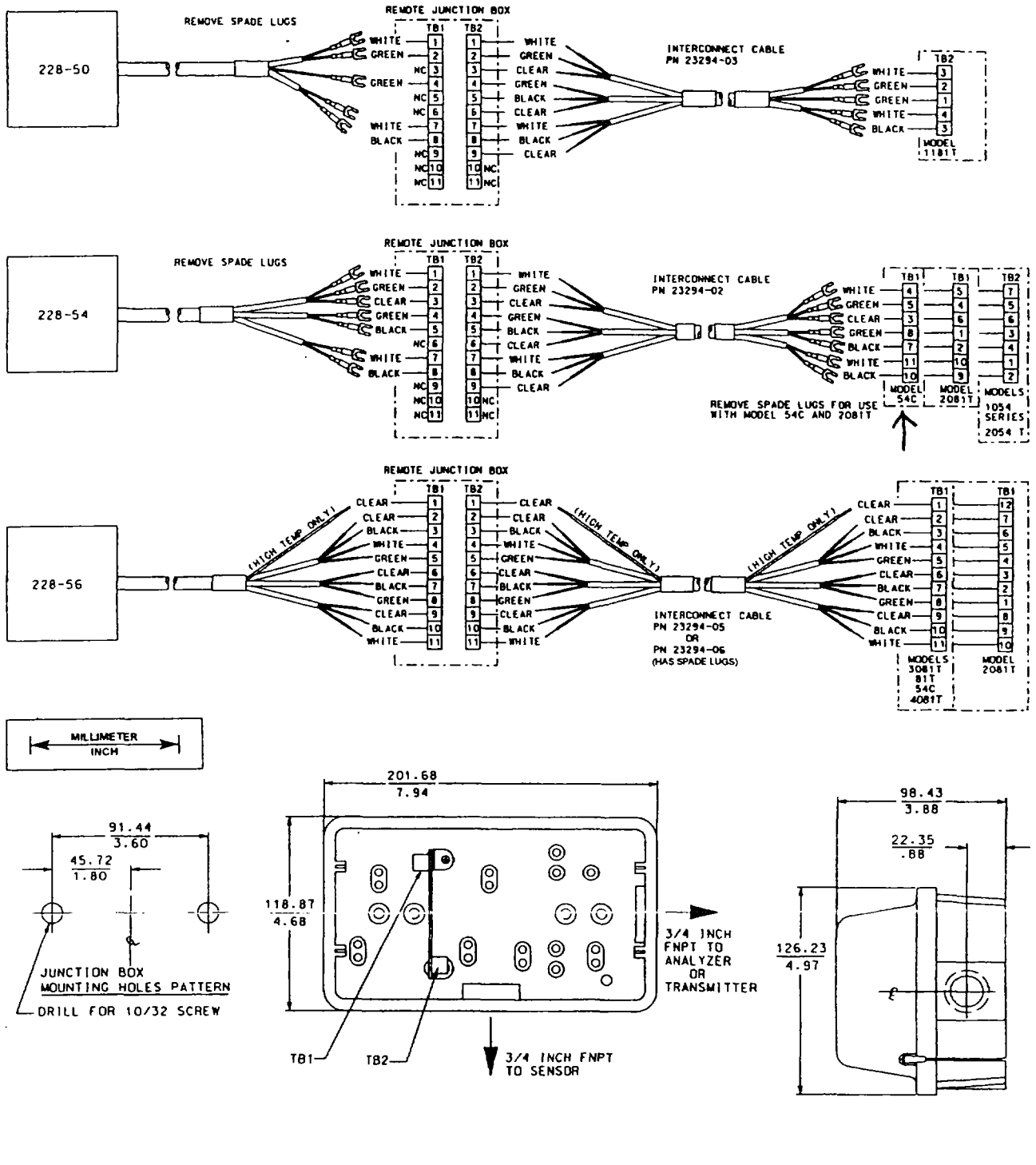

FIGURE 8. Wiring Model 228 Sensors Through a Junction Box (PN 23550-00)

INSERTION - RETRACTION ASSEMBLIES

INSTALLATION REQUIREMENTS

1. Process connection: 1-1/2 inch. Larger openings may keep the sensor from inserting far enough into the process liquid.
2. Line size: 3 in.; 2-in. line requires in-place calibration.
3. Valve: 1-1/2 NPT full port ball valve (PN 9340067).
4. Retraction clearance: 2 ft (0.6 m).
5. Provide mechanical support if excess vibration is expected.
6. Flush water: provide 1/8 in. valves in inlet and outlet flush ports. Position flush ports so that retraction chamber can be drained.

MANUAL RETRACTION ASSEMBLY (PN 23311-01)

INSTALLATION

1. Loosen the collet nut and retract the sensor tube into the retraction chamber. See Figure 10.
2. Loosen the union nut and separate the retraction chamber from the assembly.
3. Install the retraction chamber on the 1-1/2 in. NPT full port ball valve mounted on the process line or vessel.
4. Thread the sensor cable through the tube into the junction box. Screw the sensor into the tube. Hand tighten the sensor an additional half turn once the gasket is seated.
5. Terminate the sensor wiring in the junction box. See Figure 9 for wiring details.
6. Insert the sensor and tube assembly into the retraction chamber.
7. Tighten the union nut.
8. Open the ball valve, check for leaks, and manually insert the sensor into the process.
9. Position the sensor at least 1/2 in. (13 mm) away from any wall of the vessel or pipe.
10. Tighten the collet nut.

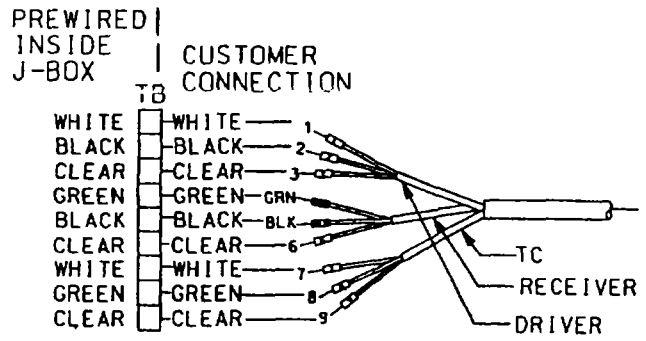

FIGURE 9. Sensor-Mounted Junction Box Wiring

RETRACTION

1. Make certain that the system pressure is less than 35 psig (342 kPa abs). Push in on the sensor using the top of the junction box. Slowly loosen the collet nut.

WARNING

Severe impact injury can occur if the collet nut is loosened under pressure.

2. When the collet nut is loose enough, slowly ease the sensor back so that it clears the ball valve. Close the valve to the process line.
3. Drain the retraction chamber contents using the 1/8 in. flush ports.
4. Loosen the 3 in. hex union nut. Remove the sensor and tube assembly.
5. **Replace the 3 in. hex nut O-ring.** Place the sensor and tube assembly back in the retraction assembly. Tighten the 3 in. hex union nut. Verify that the 1/8 in. flush ports are closed.

NOTE

With the ball valve closed and the retraction chamber 1/8 in. flush ports open, some residual process fluid may leak from the 3 in. hex union nut female ACME threads. This leakage is normal and to be expected.

6. Before opening the ball valve, make sure that the process pressure is less than 35 psig (342 kPa abs). Open the ball valve and check for leaks. Insert the sensor into the process. Tighten the collet nut.

WARNING

Retraction chamber contents may be under pressure.

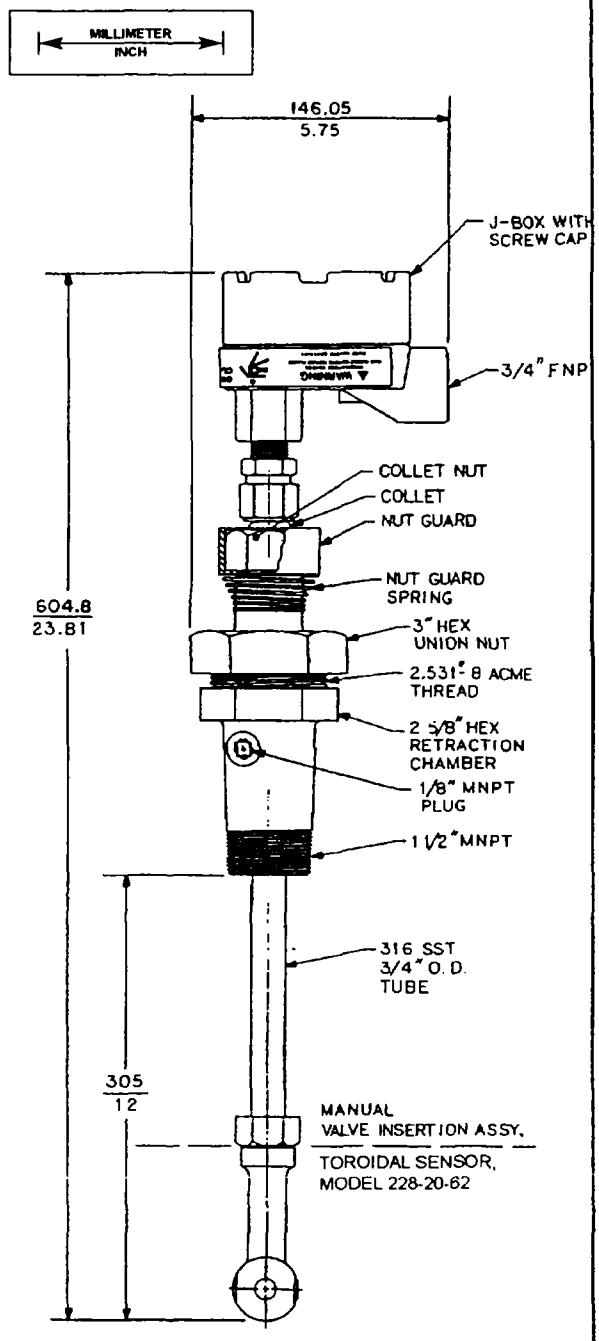

FIGURE 10. Manual Retraction Assembly

MECHANICAL RETRACTION ASSEMBLY (PN 23311-00)

INSTALLATION

1. Thread the sensor cable through the tube into the junction box. Screw the sensor into the tube. Hand tighten the sensor an additional half turn once the gasket is seated. See Figure 11.
2. Terminate the sensor wiring in the junction box. See Figure 9 for wiring details.
3. Using a 1/2 in. (13 mm) socket wrench, retract the sensor into the retraction chamber.
4. Install the assembly on the 1-1/2 in. NPT full port ball valve mounted in the process line or vessel.
5. Tighten the union nut.
6. Open the ball valve and check for leaks.
7. Using a 1/2 in. (13 mm) socket wrench, insert the sensor into the process line or vessel.
8. Position the sensor at least 1/2 in. (13 mm) away from any wall of the vessel or pipe. Set the travel stop collar "A" next to the nut housing.

WARNING

Do not loosen cap screws or collar when pressurized.

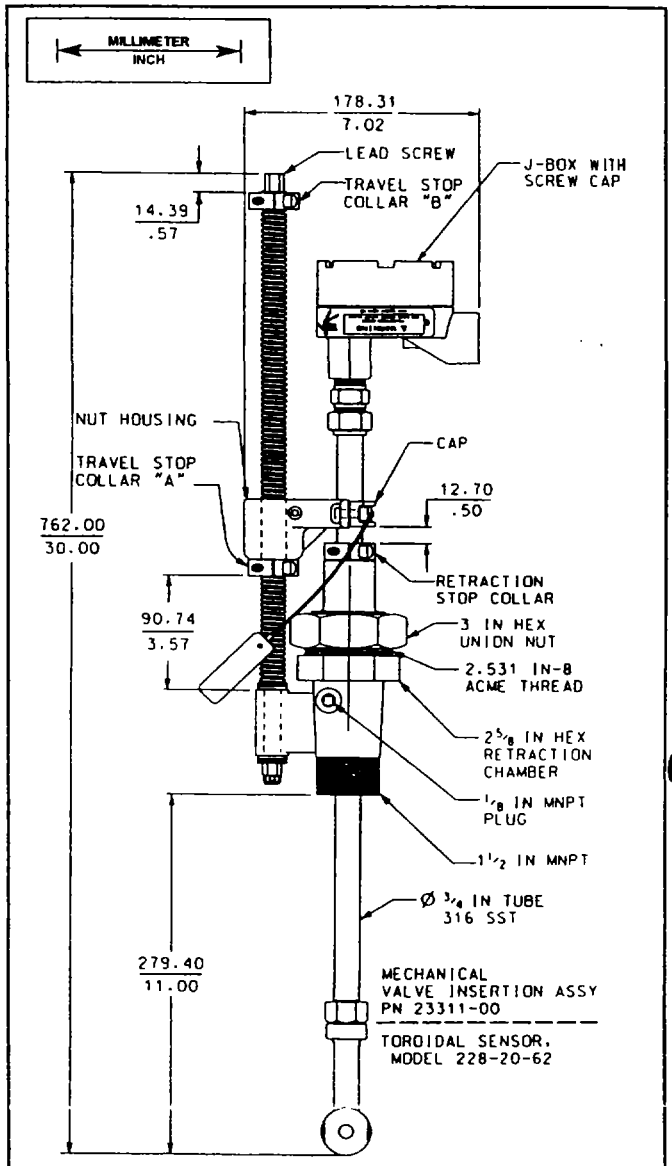

FIGURE 11. Mechanical Retraction Assembly

RETRACTION

1. Make certain that the system pressure is less than 295 psig (2135 kPa abs) before retracting the sensor.
2. Retract the sensor using a 1/2 in. (13 mm) socket wrench. When the sensor clears the ball valve, close the valve.

WARNING

Retraction chamber contents may be under pressure.

3. Drain the retraction chamber contents using the 1/8 in. flush ports.
4. Loosen the 3 in. hex union nut, and remove the retraction stop collar and orange clamp top. Remove the sensor and tube assembly.
5. **Replace the 3 in. hex nut O-ring.** Place the sensor and tube assembly back in the retraction assembly. Replace the retraction stop collar about 1/2 in. in front of the clamp. Tighten the clamp screws, retraction stop collar, and 3-in. hex union nut. Verify that the 1/8 in. flush ports are closed.

NOTE

With the ball valve fully closed and the retraction chamber 1/8 in. flush ports open, some residual process fluid may leak from the 3 in. hex union nut female ACME threads. This leakage is normal and to be expected.

6. Before opening the ball valve, make sure that the process pressure is less than 295 psig (2135 kPa abs). Open the valve, check for leaks, and insert sensor into the process.

REPLACING SEALS IN MANUAL AND MECHANICAL RETRACTION ASSEMBLIES.

1. Retract the sensor into the retraction chamber and fully close the ball valve.
2. Drain the retraction chamber contents using the 1/8 in. flush ports.

WARNING

Retraction chamber contents may be under pressure.

3. (Mechanical) Mark the location of the nut housing cap and retraction collar on the sensor tube. Remove both socket head cup screws from the nut housing and loosen the retraction stop collar.
4. Remove the 3 in. Hex Union nut.
5. Withdraw the sensor from the retraction chamber.
6. Open the junction box and disconnect the sensor wires from the terminal block.
7. Remove the compression fitting just below the junction box and remove the junction box from the sensor tube.
8. (Manual) Pull down the nut guard and remove the collet nut from the bushing housing.
9. Slide all hardware including the bushing housing off the sensor tube.
10. Remove the retaining ring from the bottom of the bushing housing.
11. Remove the Teflon guard.
12. From the top of the bushing housing press out the Teflon bushing. This will also push out the Teflon cup seal.
13. Replace all damaged parts with replacement parts from Figure 12 or 13. Replace the sensor tube if the surface is damaged. A rough or uneven surface will prevent the Teflon cup from sealing.
14. Rebuild the bushing housing. The open end of the cup seal (spring visible) faces the process.
15. Carefully slide the bushing housing onto the sensor tube. Do not damage the Teflon bushing or the Teflon cup seal.
16. (Manual) Slide the 3 in. Hex Union nut, collet nut with nut guard, junction box compression nut, and plastic ferrules onto the sensor tube.
17. (Mechanical) Slide the 3 in. Hex Union nut, retraction stop collar, junction box compression nut, and plastic ferrules onto the sensor tube.
18. Connect the junction box to the sensor tube and wire the sensor leads to the appropriate terminals.
19. (Mechanical) Lock the retraction stop collar into position (see Figure 11 or previously marked position for proper location).
20. Place the Union nut O-ring on the bottom of the bushing housing. Insert the sensor assembly into the retraction chamber and tighten the 3 in. Hex Union nut.
21. (Mechanical) Install the nut housing cap (see Figure 11 or previously marked position for proper location).

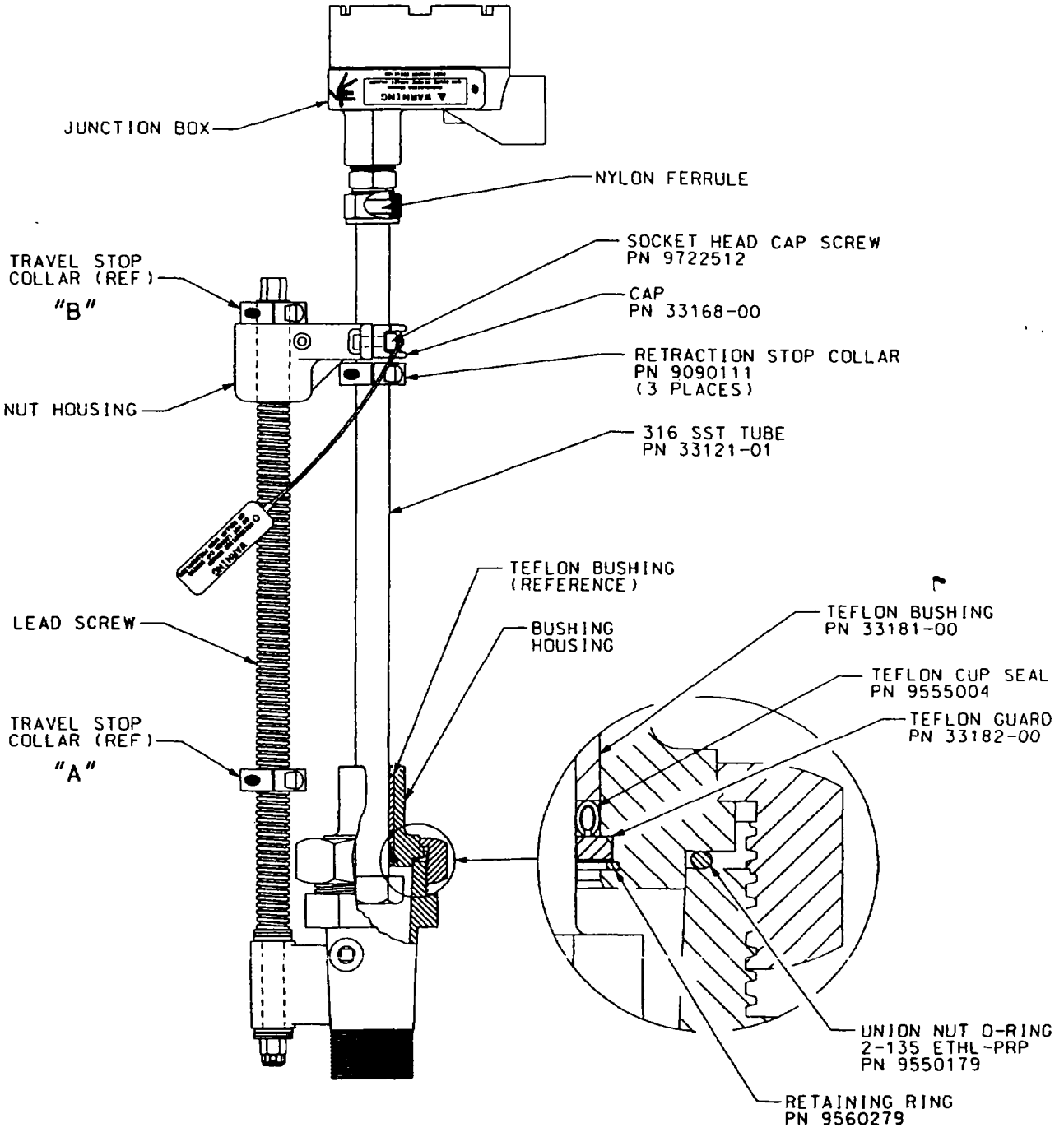

FIGURE 12. Mechanical Retraction Assembly Replacement Parts

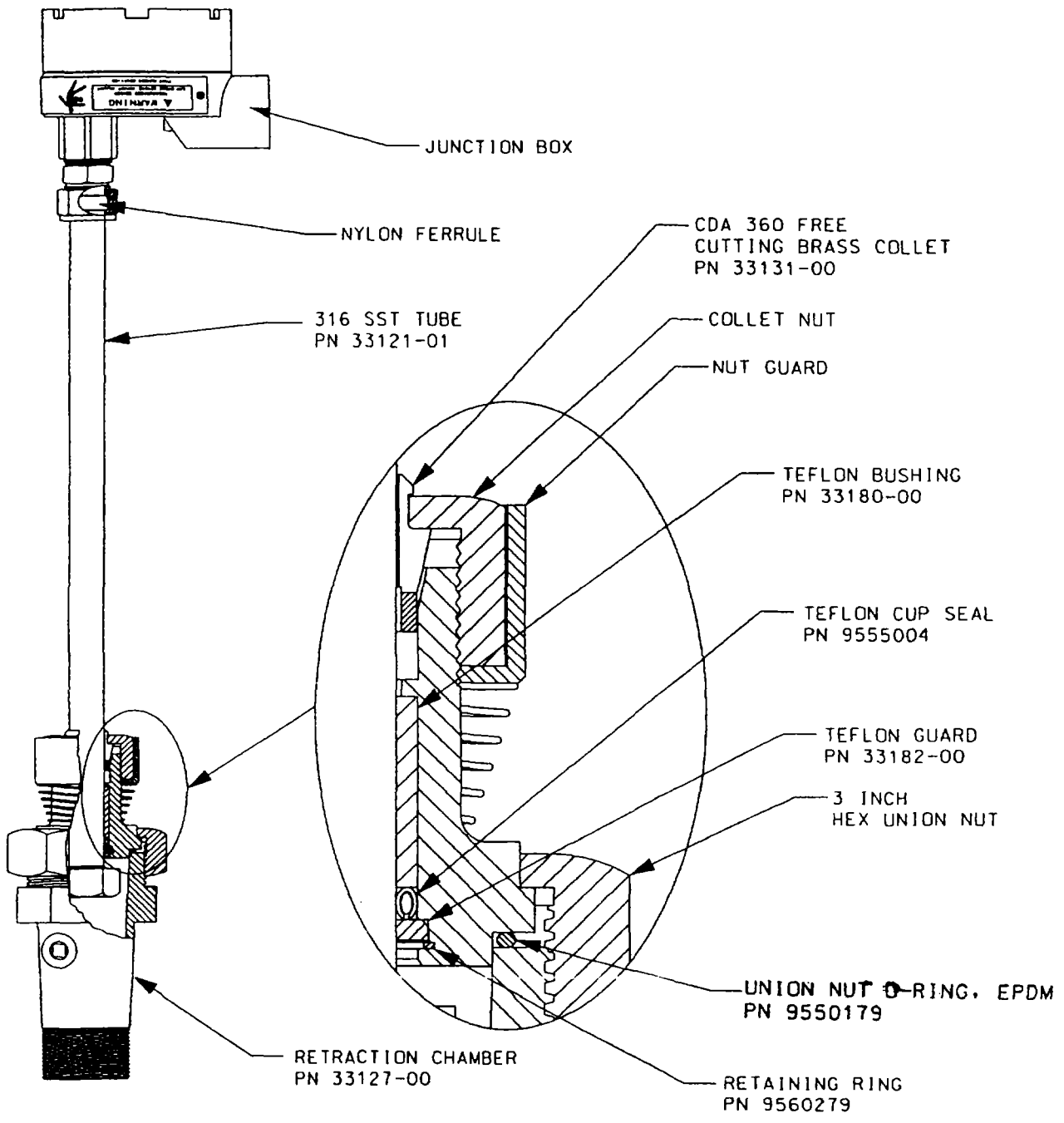

FIGURE 13. Manual Retraction Assembly Replacement Parts

The right people,
the right answers,
right now.

ROSEMOUNT ANALYTICAL
CUSTOMER SUPPORT CENTER
1-800-854-8257

ON-LINE ORDERING NOW AVAILABLE ON OUR WEB SITE http://www.RAuniloc.com

PlantWeb

DNV Certification, Inc. USA
ANSI-RAB QMS ACCREDITED
DNV NBC The Netherlands Accredited by the RvA
DNV
ISO 9001 REGISTERED FIRM

Credit Cards for U.S. Purchases Only.

VISA MasterCard

Emerson Process Management

Rosemount Analytical Inc.
2400 Barranca Parkway
Irvine, CA 92606 USA
Tel: (949) 863-1181
Fax: (949) 474-7250

http://www.RAuniloc.com

© Rosemount Analytical Inc. 2001

EMERSON.
Process Management

Roxane Morrison

MATERIAL SAFETY DATA SHEET

PART NUMBER: SS-5, SS-5A
IDENTITY: CONDUCTIVITY SOLUTION
MANUFACTURER: ROSEMOUNT ANALYTICAL INC.
ADDRESS: 2400 BARRANCA PARKWAY
IRVINE, CA 92606
TELEPHONE: 949/863-1181

DATE REVISED: 06/30/98
PREPARED BY: R. MORRISON

SECTION 1—MATERIAL IDENTIFICATION AND INFORMATION

COMPONENTS	CAS#	%	OSHA PEL	ACGIH TLV	OTHER LIMIT RECOMMENDED
POTASSIUM CHLORIDE	(7447-40-7)	<.1			
NON-HAZARDOUS INGREDIENTS		100			
TOTAL		100			

SECTION 2—PHYSICAL/CHEMICAL CHARACTERISTICS

BOILING POINT	100°C
SPECIFIC GRAVITY (H_2O = 1)	1.0
VAPOR PRESSURE (mm Hg/TEMPERATURE)	24 mmHg @ 25°C
MELTING POINT	N/A
VAPOR DENSITY (AIR = 1)	N/A
EVAPORATION RATE (= 1)	N/A
SOLUBILITY IN WATER	COMPLETE
WATER REACTIVE	N/A
APPEARANCE AND ODOR	COLORLESS, ODORLESS SOLUTION

SECTION 3—FIRE AND EXPLOSION HAZARD DATA

FLASH POINT AND METHOD USE	N/A
AUTO IGNITION TEMPERATURE	N/A
FLAMMABILITY LIMITS IN AIR BY VOLUME	N/A
LEL	N/A
UEL	N/A
EXTINGUISHER MEDIA	N/A
SPECIAL FIRE FIGHTING PROCEDURE	N/A

UNUSUAL FIRE AND EXPLOSION HAZARD: THIS IS AN AQUEOUS SOLUTION WHICH IS NOT FLAMMABLE NOR EXPLOSIVE.

SECTION 4—REACTIVITY HAZARD DATA

STABILITY STABLE X UNSTABLE
CONDITIONS TO AVOID:

INCOMPATIBILITY MATERIALS TO AVOID: NONE

HAZARDOUS DECOMPOSITION PRODUCTS: NONE
HAZARDOUS POLYMERIZATION: MAY OCCUR_ WILL NOT OCCUR X
HAZARDOUS POLYMERIZATION CONDITIONS TO AVOID: DOES NOT POLYMERIZE

ECTION 5--HEALTH HAZARD DATA SS-5, SS-5A

'RIMARY ROUTES OF ENTRY: INHALATION_ SKIN ABSORPTION
INGESTION_ NOT HAZARDOUS X

:ARCINOGEN LISTED: NPT_ IRAC_ OSHA_ NOT LISTED X

HEALTH HAZARDS

ACUTE: N/A
CHRONIC: N/A

SIGNS AND SYMPTOMS OF EXPOSURE: UNKNOWN

MEDICAL CONDITIONS GENERALLY AGGRAVATED BY EXPOSURE: UNKNOWN

EMERGENCY FIRST AID PROCEDURES:

EYE CONTACT: FLUSH WITH WATER A MINIMUM 15 MINUTES.

SKIN CONTACT: WASH WITH SOAP AND WATER.

INHALATION: REMOVE TO FRESH AIR IF NECESSARY.

INGESTION: SILUTE WITH SEVERAL GLASSES OF WATER. SEEK MEDICAL ATTENTION.

SECTION 6--CONTROL AND PROTECTIVE MEASURES

RESPIRATORY PROTECTION (SPECIFY TYPE): NIOSHA/MSHA APPROVED RESPIRATOR
PROTECTIVE GLOVES: YES
EYE PROTECTION: YES

VENTILATION TO BE USED
LOCAL EXHAUST:
MECHANICAL (GENERAL): X
SPECIAL OTHER (SPECIFY):
PROTECTIVE CLOTHING AND EQUIPMENT: LAB COAT/APRON
HYGIENIC WORK PRACTICES: WASH HANDS AFTER HANDLING.

SECTION 7--PRECAUTIONS FOR SAFE HANDLING AND USE/LEAK PROCEDURES

STEPS TO BE TAKEN IF MATERIAL IS SPILLED OR RELEASED: RINSE AREA WITH WATER. MOP.

WASTE DISPOSAL METHODS: DISPOSE IN ACCORDANCE WITH FEDERAL, STATE AND LOCAL REGULATIONS.
PRECAUTIONS TO BE TAKEN IN HANDLING AND STORAGE: STORE IN PLASTIC CONTAINER AT ROOM TEMPERATURE.

OTHER PRECAUTIONS AND/OR SPECIAL HAZARDS:

NFPA RATING:
HEALTH 0 FLAMMABILITY 0 REACTIVITY 0 SPECIAL

HMIS RATING:
HEALTH 0 FLAMMABILITY 0 REACTIVITY 0 PERSONAL PROTECTION A

MANUFACTURER'S PRODUCT SPECIFICATIONS

pH Analyzer and Probe

Instruction Sheet
PN 51A054epH/rev.A
October 2001

Model 54e pH/ORP

pH/ORP HART® Analyzer/Controller

ESSENTIAL INSTRUCTIONS

READ THIS PAGE BEFORE PROCEEDING!

Rosemount Analytical designs, manufactures, and tests its products to meet many national and international standards. Because these instruments are sophisticated technical products, you must properly install, use, and maintain them to ensure they continue to operate within their normal specifications. The following instructions must be adhered to and integrated into your safety program when installing, using, and maintaining Rosemount Analytical products. Failure to follow the proper instructions may cause any one of the following situations to occur: Loss of life; personal injury; property damage; damage to this instrument; and warranty invalidation.

- Read all instructions prior to installing, operating, and servicing the product. If this Instruction Manual is not the correct manual, telephone 1-949-757-8500 and the requested manual will be provided. Save this Instruction Manual for future reference.
- If you do not understand any of the instructions, contact your Rosemount representative for clarification.
- Follow all warnings, cautions, and instructions marked on and supplied with the product.
- Inform and educate your personnel in the proper installation, operation, and maintenance of the product.
- Install your equipment as specified in the Installation Instructions of the appropriate Instruction Manual and per applicable local and national codes. Connect all products to the proper electrical and pressure sources.
- To ensure proper performance, use qualified personnel to install, operate, update, program, and maintain the product.
- When replacement parts are required, ensure that qualified people use replacement parts specified by Rosemount. Unauthorized parts and procedures can affect the product's performance and place the safe operation of your process at risk. Look alike substitutions may result in fire, electrical hazards, or improper operation.
- Ensure that all equipment doors are closed and protective covers are in place, except when maintenance is being performed by qualified persons, to prevent electrical shock and personal injury.

WARNINGS

RISK OF ELECTRICAL SHOCK

Making cable connections to and servicing this instrument require access to shock hazard level voltages which can cause death or serious injury, therefore, disconnect all hazardous voltage before accessing the electronics.

Relay contacts made to separate power sources must be disconnected before servicing.

Electrical installation must be in accordance with the National Electrical Code (ANSI/NFPA-70) and/or any other applicable national or local codes.

Unused cable conduit entries must be securely sealed by non-flammable closures to provide enclosure integrity in compliance with personal safety and environmental protection requirements. Use NEMA 4X or IP65 conduit plugs supplied with the instrument to maintain the ingress protection rating (IP65).

For safety and proper performance this instrument must be connected to a properly grounded three-wire power source.

Proper relay use and configuration is the responsibility of the user. No external connection to the instrument of more than 60VDC or 43V peak allowed with the exception of power and relay terminals. Any violation will impair the safety protection provided.

Do not operate this instrument without front cover secured. Refer installation, operation and servicing to qualified personnel.

WARNING

This product is not intended for use in the residential, commercial or light industrial environment per CE certification to EN50081-2.

ROSEMOUNT® Analytical

EMERSON. Process Management

CAUTION

Ground conduit to metal stiffener or to metal enclosure. Use non-flammable watertight conduit fittings/plugs to preserve enclosure rating.

DANGER

LIVE VOLTAGES MAY BE PRESENT

When fuse or this cover is removed will cause severe injury or death.

CAUTION

For continued protection against fire, replace only with fuses of specified voltage and current ratings. Fuses are located under this cover.

VAROVANI

Zemnicí vodič musí být vodivě spojen s kostrou přístroje. Používejte nehořlavé vodotesné průchodky, abyste zachovali stupeň krytí přístroje.

NEBEZPECI

ZARIZENI POD NAPETIM

Odstranení pojistky nebo tohoto krytu může způsobit vážné zranení nebo smrt.

VAROVANI

Poškozené pojistky nahrazujte pouze pojistkami se stejnými jmenovitými napětím a proudem. Pojistky jsou umístěny pod tímto krytem.

FORSIGTIG

Brug usintændelig vandtæt forskruning som sikkerhed for bevaring af kapslings klasse.

Jordforbindelse til metal kapsel.

FARE

UBESKYTTET SPÆNDING

Hvis sikringen eller denne påskrift fjernes kan dette medføre alvorlige kvæstelser eller død.

FORSIGTIG

Brug kun sikringer med nærmere angivet spænding og strømstyrke som sikkerhed for vedvarende beskyttelse mod brandfare. Sikringerne er placeret under denne påskrift.

ATENCION

La toma a tierra debe hacerse a un contrafuerte de metal o a la caja metálica. Utilice accesorios/enchufes no inflamables y estancos al agua para preservar las especificaciones de la caja.

PELIGRO

VOLTAJE PUEDE ESTAR PRESENTE

Cuando los fusibles o esta cubierta son removidos causará severas lesiones o muerte.

ATENCION

Para una protección continua contra el fuego, reemplace solamente con fusibles de voltaje y corriente especificados. Los fusibles se encuentran debajo de esta cubierta.

VOORZICHTIG

Aardleiding naar metalen profiel of naar metalen behuizing. Gebruik onbrandbare, waterdichte wartels en pluggen om de beschermingsklasse te handhaven.

GEVAAR

KAN ONDER SPANNING STAAN

Verwijderen van zekering of dit deksel kan dit leiden tot ernstig of dodelijk letsel.

VOORZICHTIG

Voor duurzame bescherming tegen brand, uitsluitend zekeringen gebruiken met aangegeven nominale spannings - en stroomwaarden. De zekeringen bevinden zich onder dit deksel.

ATTENTION

Raccorder le tube à la masse métallique d'une entretoise ou du coffret. Utiliser des raccords et des bouchons étanches ininflammables afin de préserver la classification du boîtier.

DANGER

POSSIBILITE DE HAUTE TENSION

En cas de démontage de ce capot ou des fusibles. Risques de Blessures graves ou de mort

ATTENTION

Afin d'assurer une protection permanente contre le feu, ne remplacer les fusibles que par des modèles équivalents en tension et en courant. Les fusibles se trouvent derriere cette plaquette.

ADVARSEL

Kabelinnføring må jordes til metallavstiver eller til metallkapslingen. Bruk flammesikre og vanntette niplerlplugger slik at kapslingens tøtthetsgrad opprettholdes.

FARE

SPENNING KAN VÆRE TIL STEDE

når sikringen eller dette dekslet fjernes, og kan føre til alvorlige skader eller dødsulykker.

ADVARSEL

For at beskyttelse mot antennelse skal opprettholdes, må sikringer bare erstattes med tilsvarende som har spesifisert spenning- og strømstyrke. Sikringer er plassert under dette dekslet.

ACHTUNG

Der Analysator ist vorschriftsmaessig zu erden.

Um die Schutzart des Gerätes sicherzustellen ist es mit den entsprechenden Kabelverschraubungen und Blindkappen auszuruesten.

ACHTUNG

GEFAEHRLICHE ELEK-TRISCHE SPANNUNG

Ist die Schutzabdeckung oder die Sicherung entfernt, so koennen am Geraet ernsthafte oder toedliche Verletzungen entstehen.

ATTENTION

Um die Gefahr von Kurzschluß und Funkenbildung zu verhindern dürfen die Sicherungen nur durch solche gleicher Spannung und Stromwerte ausgetauscht werden. Die Sicherungen befinden sich unter dieser Abdeckung.

Attenzione

Tubo di protezione per messa a terra con elemento di ingresso in metallo o con custodia in metallo.

Utilizzare accessori/connettori del tubo di protezione e tenuta stagna, non infiammabili, per assicurare i limiti di resistenza della custodia.

Pericolo

POSSIBILE PRESENZA DI ALTA TENSIONE

La rimozione del fusibile o del coperchio può causare gravi lesioni o morte.

ATTENZIONE

Per garantire una continua protezione contro gli incendi, sostituire solo con fusibili del voltaggio indicato e dell'attuale potenza. I fusibili sono alloggiati sotto il coperchio.

UWAGA

Uziemij przewód do metalowego płaskownika lub obudowy. Aby zachować stopień szczelności obudowy stosuj niepalne, wodoszczelne dławiki.

NIEBEZPIECZENSTWO

URZADZENIE MOZE BYC POD NAPIECIEM

Gdy bezpieczniki lub ta pokrywa są usunięte istnieje możliwość uszkodzenia ciała lub śmierci.

UWAGA

W celu utrzymania zabezpieczenia przed zapaleniem, należy stosować bezpieczniki o identycznym z oryginalnym napięciu i amperażu.

Bezpieczniki są umieszczone pod tą pokrywą.

ATENÇÃO

Ligar a conducta de cabos à terra através de suporte ou invólucro metálicos. Utilize bucins e acessórios ignífugos e estanques para preservação da estanqueicidade.

PERIGO

POSSIBILIDADE DE TENSÃO PERIGOSA

A remoção do fusível ou desta tampa pode causar lesões graves ou a morte.

ATENÇÃO

Para manter sempre uma boa proteção contra incêndio, substituir somente por fusíveis com a tensão e corrente especificadas. Os fusíveis encontram-se sob esta tampa.

IAKTTAG FÖRSIKTIGHET

Anslutningspunkt är jordad till chassi. Använd brandsäker, vattentät kabelanslutning för att bevara klassificering av apparatskåp.

FARA

HÖGSPÄNNING KAN FÖREKOMMA

Avlägsnande av säkring eller skyddskåpa kan förorsaka allvarlig skada eller dödsfall

IAKTTAG FÖRSIKTIGHET

För kontinuerligt skydd mot brandfara, ersätt endast med specificerad säkringsstorlek och spänning.

PHYSICAL SPECIFICATIONS - GENERAL

Enclosure: Epoxy-painted aluminum
NEMA 4X (IP65)
144 X 144 X 132 mm, DIN size (5.7 X 5.7 X 5.2 in.)

Front Panel: Membrane keyboard with tactile feedback and user selectable security. Light gray, blue and white overlay
Light gray enclosure, dark gray bezel

Display: Back-lit dot matrix LCD (7.0 x 3.5 cm), blue on gray-green
The display contrast is compensated for ambient temperature.

Process Variable Character Height: 16mm (0.6 in.)

Electrical Classification:
Class I, Division 2, Groups A, B, C, & D. T5 Ta=50°C. Dust ignition proof: Class II, Division 1, Groups E, F, & G; Class III.

CSA-LR34186:
Max. relay contact rating: 28 Vdc; 110 Vac; 230 Vac; 6 amps resistive

FM: Max. relay contact rating: 28 Vdc resistive
150 mA - Groups A & B;
400 mA - Group C;
540 mA - Group D

Power:
Code -01: 100 - 127 VAC, 50/60 Hz ± 6%, 6.0 W
200 - 253 VAC, 50/60 Hz ± 6%, 6.0 W
Code -02: 20 - 30 VDC, 6.0 W

Current Outputs: Output 1: pH, ORP, temperature, glass impedance, or reference impedance.

Output 2: pH, ORP, temperature, glass impedance, or reference impedance.

Each output is galvanically isolated, 0-20 mA or 4-20 mA into 600 ohms maximum load at 24 Vdc or 115/230 Vac or 550 ohms maximum load at 100/200 Vac. Output 1 includes digital signal 4-20 mA superimposed HART (Code -09 only).

RFI/EMI: EN-50081-2
EN-50082-2 CE

LVD (Code -01 only): EN-61010-1

Ambient Temperature: 0 to 50°C (32 to 122°F)
NOTE: The analyzer is operable from -20 to 60°C (-4 to 140°F) performance.

Relative Humidity: 95%, non condensing

Alarms:

Relay 1 - Process, Interval, or Time Proportional Control (TPC requires code -20)

Relay 2 - Process, Interval, or Time Proportional Control (TPC requires code -20)

Relay 3 - Process, Interval, or Time Proportional Control (TPC requires code -20)

Relay 4 - Sensor/analyzer and process fault alarm

Each relay has a dedicated LED on the front panel.

Relay Contacts: Relays 1-3: Epoxy sealed form A contacts, SPST, normally open

Relay 4: Epoxy sealed form C, SPDT

	Resistive	Inductive
28 Vdc	5.0 Amps	3.0 Amps
115 Vac	5.0 Amps	3.0 Amps
230 Vac	5.0 Amps	1.5 Amps

Weight/Shipping Weight: 1.1 kg/1.6 kg (2.5 lb/3.5 lb)

INSTRUMENT SPECIFICATIONS @ 25°C — pH

Measurement Range: 0 to 14 pH

Output Scale Expansion: Zero suppression: up to 13 pH units
Span: Any pH from 1 to 14

Accuracy: ± 0.01 pH

Repeatability: ± 0.01 pH

Stability: ± 0.01 pH/month, non-cumulative

Temperature Coefficient: Input: ± 0.003 pH/°C
Output: ± 0.006 pH/°C

Temperature Compensation: Pt 100 or Pt 1000 RTD, Automatic or Manual; –15 to 120°C (5 to 248°F)

INSTRUMENT SPECIFICATIONS @ 25°C — ORP

Measurement Range: –1400 to +1400 mV

Output Scale Expansion: Zero suppression: up to ±1300 mV
Span: Any ORP range from 100 to 2800 mV

Accuracy: ± 1.0 mV

Repeatability: ± 1.0 mV

Stability: ± 1.0 mV/month, non-cumulative

Temperature Coefficient: Input: ± 0.2 mV/°C
Output: ± 0.4 mV/°C

Temperature Measurement: –15 to 120°C (5 to 248°F)
Pt 100 or Pt 1000 RTD

WARNING

All electrical installation must conform to the National Electrical Code, all state and local codes, and all plant codes and standards for electrical equipment. All electrical installations must be supervised by a qualified and responsible plant electrician.

LOCATING THE CONTROLLER

Position the Model 54e pH/ORP controller to minimize the effects of temperature extremes and to avoid vibration and shock. Locate the controller away from your chemical process to protect it from moisture and fumes.

Select an installation site that is more than 2 ft from high voltage conduit, has easy access for operating personnel, and is not exposed to direct sunlight.

UNPACKING AND INSPECTION

Inspect the exterior of the shipping container for any damage. Open the container and inspect the controller and related hardware for missing or damaged parts.

If there is evidence of damage, notify the carrier immediately. If parts are missing, contact Rosemount Analytical customer support.

MECHANICAL INSTALLATION

Mounting the Controller

The Model 54e pH/ORP controller may be supplied with a mounting bracket accessory. If you use the mounting bracket on wall or pipe installations, avoid mounting on pipes which vibrate or are close to the process. The bracket may be modified to mount the controller on I-beams or other rigid members. You can also fabricate your own bracket or panel mount the controller using the bracket as an example.

Wall or Surface Mounting:

1. Mount the bracket to the controller using the supplied four screws.
2. Mount controller mounting bracket to wall using any appropriate fastener such as screws, bolts, etc

Pipe Mounting:

1. Attach the mounting bracket to the rear of the controller and tighten the four screws.
2. Place supplied U bolts around the mounting pipe and through the pipe mounting bracket and mounting bracket. Tighten the U bolt nuts until the controller is securely mounted to the pipe.

Panel Mounting:

The controller is designed to fit into a 5.43 x 5.43 inch (DIN standard 144x144 mm) panel cutout (shown below). Installation requires both front and rear access.

1. Install the controller as shown below. Insert the instrument enclosure through the front of the panel cutout and align the panel mounting brackets as shown.
2. Insert two mounting bracket screws through each of the two mounting brackets and into the tapped holes in the rear of the controller enclosure and tighten each screw.
3. Insert four panel mounting screws through each hole in the mounting brackets. Tighten each screw until the mounting bracket holds controller firmly in place. To avoid damaging the controller mounting brackets, do not use excessive force.

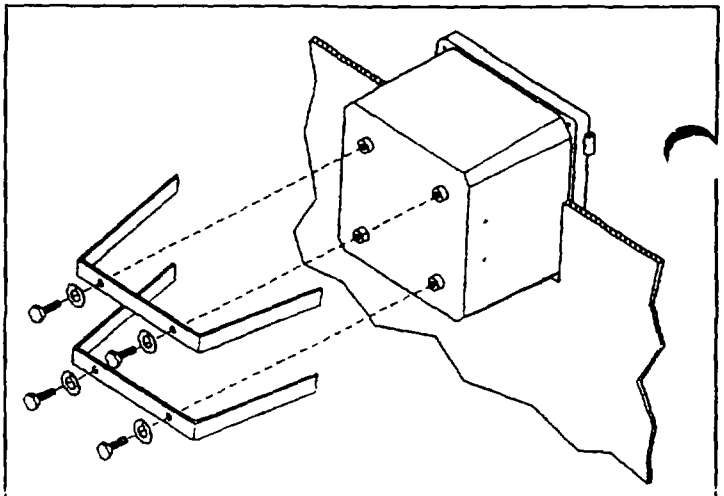

PANEL MOUNTING

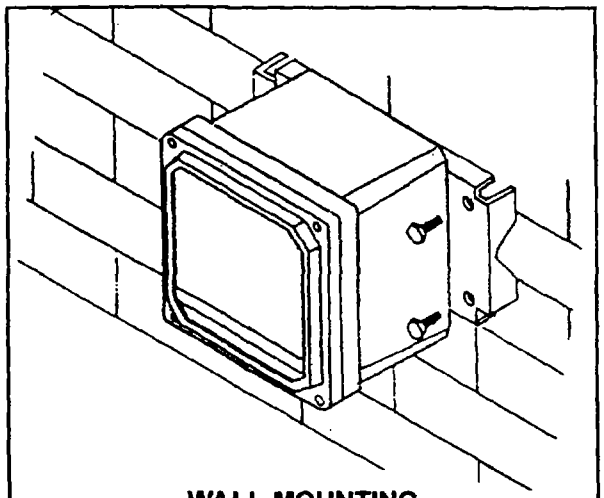

WALL MOUNTING

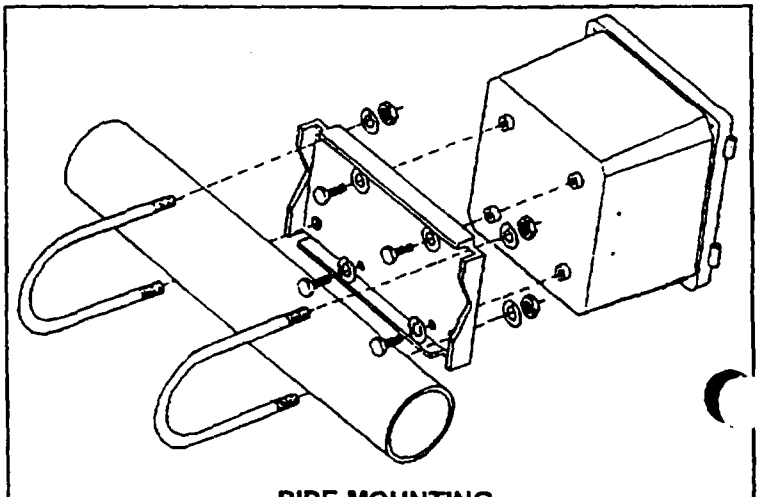

PIPE MOUNTING

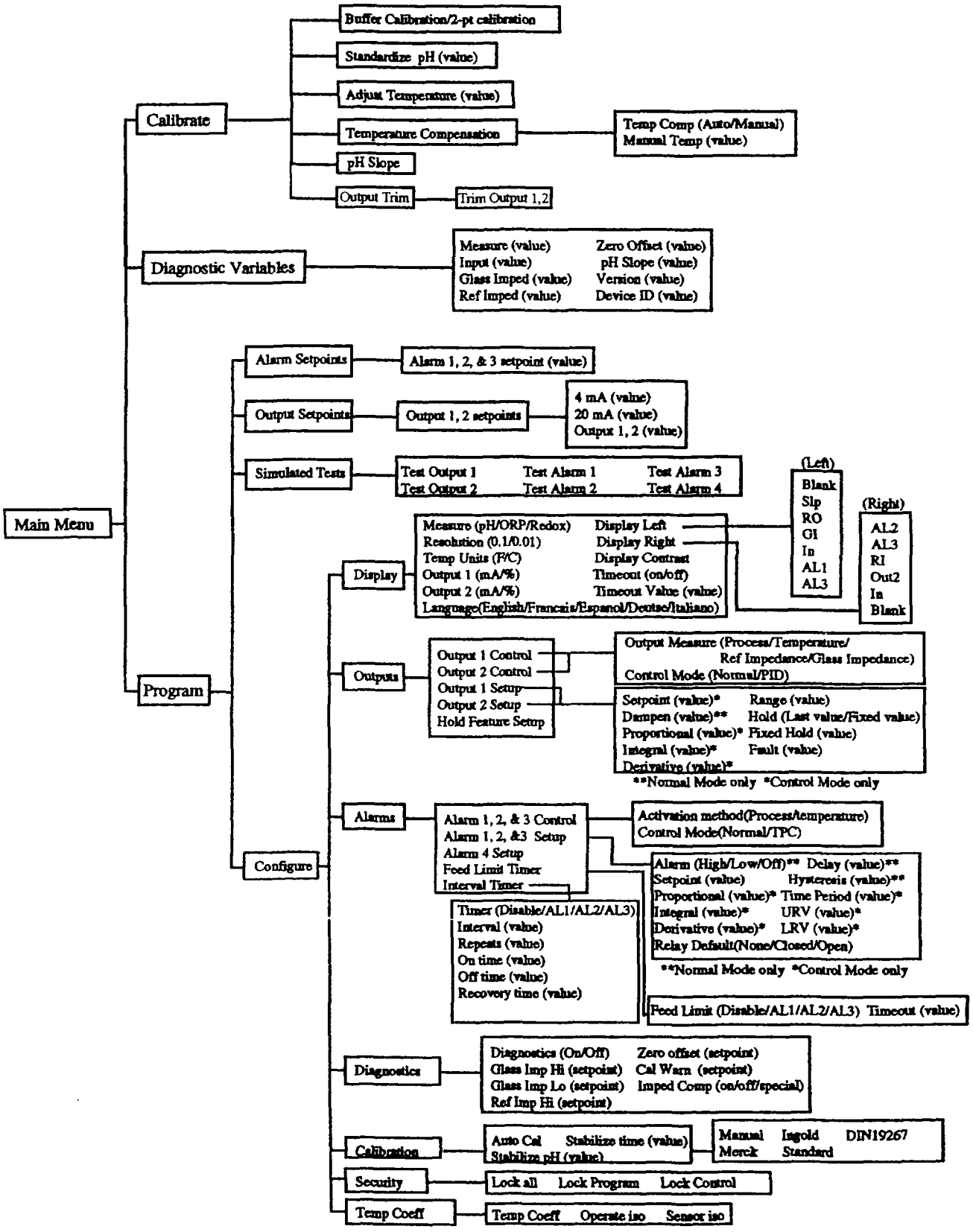

*Menu shown with measure pH selected. Some menus will look different with ORP selected.

MODEL 54e pH/ORP QUICK START

Use the ↓ or ↑ key to move the cursor down or up and the → or ← to move the cursor right or left.

Press ENTER (F4) to move to the next menu, SAVE (F4) to store a setting, EDIT (F4) to change a setting, and EXIT (F1) to exit without saving changes.

STEP 1 - MEASUREMENT TYPE

Note: The analyzer is factory configured for a pH sensor. Skip to step 2 if you will be measuring pH.

Press any button. The main menu will appear with CALIBRATE highlighted.

Use the arrow buttons to select Program. Press ENTER.

Use the arrow buttons to select Configure. Press ENTER.

DISPLAY will be highlighted. Press ENTER.

MEASURE will be highlighted. Press ENTER.

Use the arrow buttons to select REDOX or ORP. Press SAVE.

Press EXIT until the main display appears.

STEP 2 - OUTPUT SETPOINTS

Press any button. The main menu will appear with CALIBRATE highlighted.

Use the arrow buttons to select Program. Press ENTER.

Use the arrow buttons to select OUTPUT SETPOINTS. Press ENTER.

OUTPUT 1 SETPOINTS will be highlighted. Press ENTER. Press CONT.

4 mA will be highlighted. Press EDIT. Use the arrow buttons to enter the desired value. Press SAVE.

Use the arrow buttons to select 20 MA. Press EDIT. Use the arrow buttons to enter the desired value. Press SAVE. Press EXIT.

Use the arrow buttons to select OUTPUT 2 SETPOINTS. Press ENTER. Press CONT.

Enter the 4 mA and 20 mA values as above.

Press EXIT until the main display appears.

STEP 3 - AUTOCAL

Note: Obtain two pH buffer solutions with values at least 2 pH units apart. (Factory set buffers are 4.01, 7.00, and 10.01 pH.)

Press any button. The main menu will appear with CALIBRATE highlighted. Press ENTER.

BUFFER CALIBRATION will be highlighted. Press ENTER.

Place the sensor in the first buffer and press CONT. Wait until the screen reads "Buf 1 done."

Use the arrow buttons to select the correct buffer. Press CONT.

Rinse and dry the sensor.

Place the sensor in the second buffer and press CONT. Wait until the screen reads "Buf 2 done."

Use the arrow buttons to select the correct buffer. Press CONT.

Press EXIT until the main display appears.

STEP 4 - SINGLE-POINT STANDARDIZATION

After the sensor is installed, take a grab sample as close to the sensor as possible.

Use a calibrated pH instrument with automatic temperature compensation to determine the pH of the grab sample.

Press any button. The main menu will appear with CALIBRATE highlighted. Press ENTER.

Use the arrow buttons to select STANDARDIZE. Press ENTER.

Press EDIT. Use the arrow buttons to enter the pH value of the sample. Press SAVE.

Press EXIT until the main display appears.

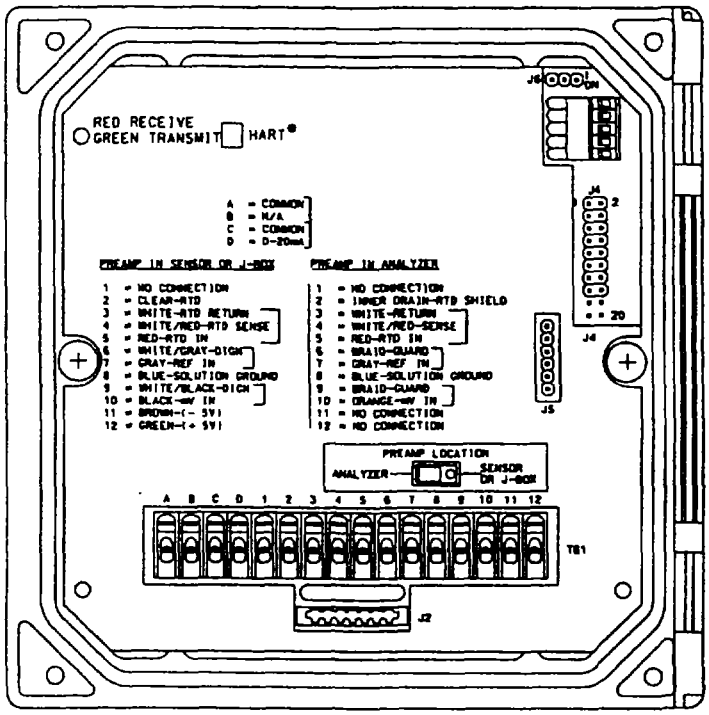

FRONT PANEL

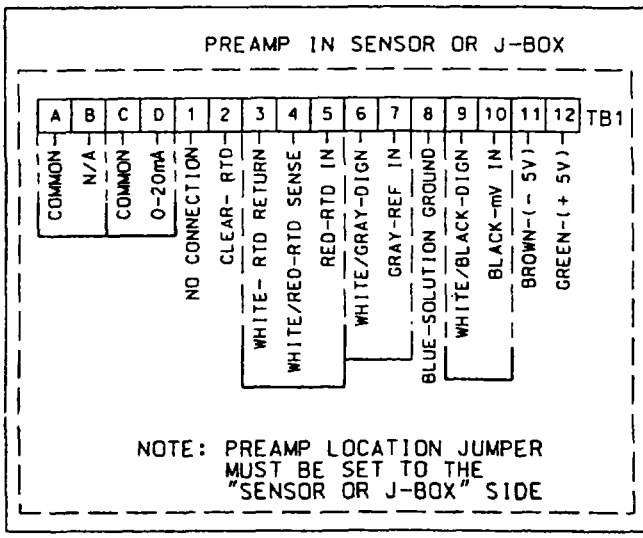

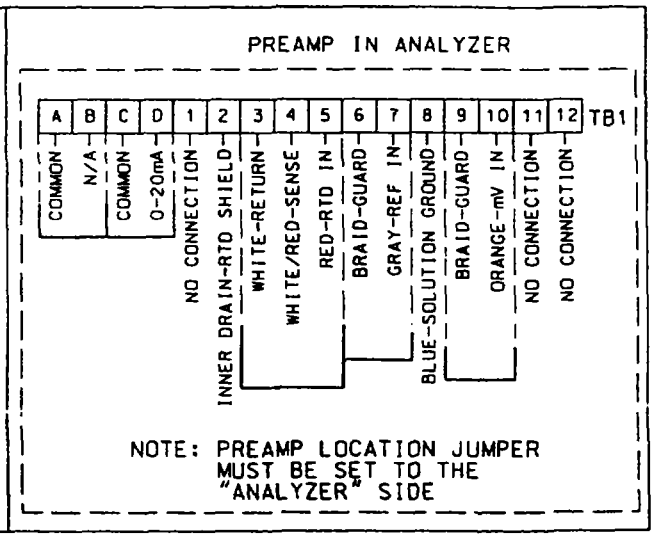

TB1 SENSOR WIRING

Sensor Wiring Diagram

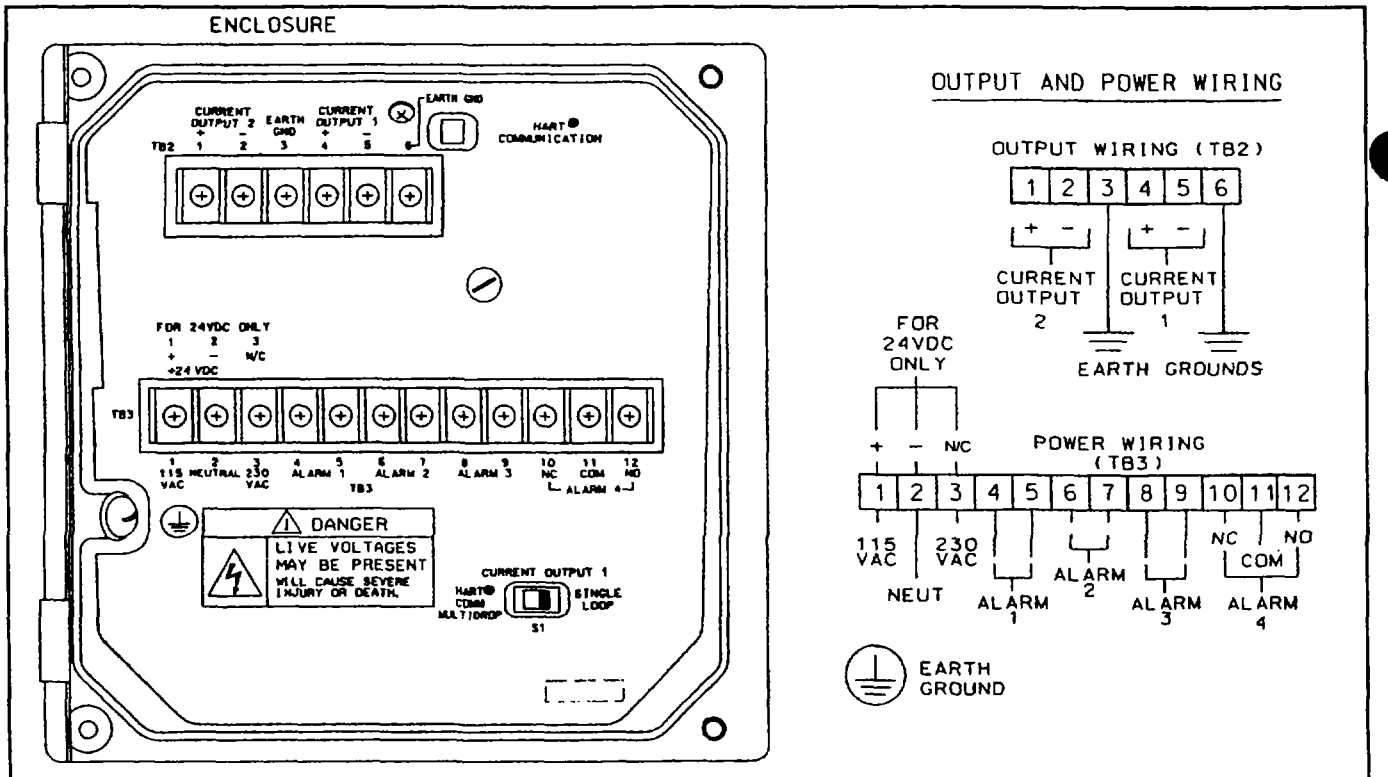

Power Input and Relay Output Wiring for Model 54e pH/ORP

OUTPUT AND POWER WIRING

The right people, the right answers, right now.

ROSEMOUNT ANALYTICAL
CUSTOMER SUPPORT CENTER
1-800-854-8257

ON-LINE ORDERING NOW AVAILABLE ON OUR WEB SITE http://www.RAuniloc.com

Credit Cards for U.S. Purchases Only.

Emerson Process Management

Rosemount Analytical Inc.
2400 Barranca Parkway
Irvine, CA 92606 USA
Tel: (949) 863-1181
Fax: (949) 474-7250

http://www.RAuniloc.com

© Rosemount Analytical Inc. 2001

EMERSON.
Process Management

P/N 398-10-31-54-62

Instruction Sheet
PN 51A0396
February 2001

Models 396 and 398

TUpH pH/ORP Sensors

SPECIFICATIONS

pH Range*: AccuGlass: 0-14 pH

Wetted Materials:
Model 396: polypropylene, 316 stainless steel, glass, EP
Model 398: Tefzel; titanium; glass; and choice of Kalrez, Viton or EPDM o-rings

Interconnecting Cable: 15 ft (4.6 m), for use with remote preamplifier

Temperature Rating: 0 to 100° C (32 to 212° F)

Pressure Range:
Model 396:
Hemi bulb: 100 - 1136 kPa (abs) (0 - 150 psig)
Flat bulb: 100 - 790 kPa (abs) (0 - 100 psig)
Model 398:
Hemi bulb: 100 - 1825 kPa (abs) (0 - 250 psig)
Flat bulb: 100 - 790 kPa (abs) (0 - 100 psig)

Minimum Conductivity: 75 µS/cm, nominal 100 µS/cm

Weight/Shipping Weight: 0.45 kg/0.9 kg (1 lb/2 lb)

Process Connections: None: must use 1 in. MNPT process connector PN 23166-00 or 23166-01

*PERCENT LINEARITY		
pH range	hemi bulb GPHT	flat bulb GPLR
0-2	94%	93%
2-12	99%	98%
12-13	97%	95%
13-14	92%	—

CAUTION
SENSOR/PROCESS APPLICATION COMPATIBILITY

The wetted sensor materials may not be compatible with process composition and operating conditions. Application compatibility is entirely the responsibility of the user.

DANGER

DO NOT CONNECT SENSOR TO POWER LINES. SERIOUS INJURY MAY RESULT.

STORAGE

1. It is recommended that electrodes be stored in their original shipping containers until needed.
2. Do not store at temperatures below -5°C (23°F).
3. Electrodes should be stored with a protective cap containing KCl solution (PN 9210342).
4. For overnight storage, immerse the sensor in tap water or 4 pH buffer solution.
5. A pH glass electrode does have a limited shelf life of one year.

WARNING

GLASS ELECTRODE MUST BE WETTED AT ALL TIMES (IN STORAGE AND IN LINE) TO MAXIMIZE SENSOR LIFE.

ELECTRODE PREPARATION

1. Remove electrode from shipping container.
2. Remove the protective boot covering the electrode bulb.
3. For pH electrode, rinse away salt film with clean water, then shake the electrode so that the internal solution fills the bulb, thus removing any air trapped there.

NOTE

Do not allow lubricant to coat electrode bulb or reference junction. If it does, wipe it clean before installation.

WARNING

BEFORE REMOVING THE SENSOR, **be absolutely certain that the process pressure is reduced to 0 psig and the process temperature is lowered to a safe level!**

INSTALLATION

For sensor dimensions, see Figure 1.

For sensor orientation, see Figures 2 and 3.

For wiring, see Figures 4 - 16.

TWO POINT BUFFER CALIBRATION

Select two stable buffer solutions, preferably pH 4.0 and 10.0 (pH buffers other than pH 4.0 and pH 10.0 can be used as long as the pH values are at least two pH units apart).

NOTE

A pH 7 buffer solution reads a mV value of approx. zero, and pH buffers read approximately ± 59.1 mV for each pH unit above or below pH 7. Check the pH buffer manufacturer specifications for millivolt values at various temperatures since it may affect the actual value of the buffer solution mV/pH value.

1. Immerse sensor in the first buffer solution. Allow sensor to equilibrate to the buffer temperature (to avoid errors due to temperature differences between the buffer solution and sensor temperature) and wait for reading to stabilize. Value of buffer can now be acknowledged by analyzer/transmitter.
2. Once the first buffer has been acknowledged by the analyzer/transmitter, rinse the buffer solution off of the sensor with distilled or deionized water.
3. Repeat steps 1 & 2 using the second buffer solution.
4. The theoretical slope value, according to the Nernst equation for calculating pH, is approximately 59.17 mV/pH. Over time the sensor will age, both in the process and in storage, and will result in reduced slope values. To ensure accurate readings, it is recommended that the electrode be replaced when the slope value falls below 47 to 49 mV/pH.

RECOMMENDED pH SENSOR STANDARDIZATION

For maximum accuracy, the sensor can be standardized on-line or with a process grab sample after a buffer calibration has been performed and the sensor has been conditioned to the process. Standardization accounts for the sensor junction potential and other interferences. Standardization will not change the sensor's slope but will simply adjust the analyzer's reading to match that of the known process pH.

MAINTENANCE FOR pH ELECTRODE

Electrodes should respond rapidly. Sluggishness, offsets, and erratic readings are indicators that the electrodes may need cleaning or replacement.

1. To remove oil deposit, clean the electrode with a mild non-abrasive detergent.
2. To remove scale deposits, soak electrodes for 30 to 60 minutes in a 5% hydrochloric acid solution.
3. Temperature effect on life expectancy: If glass electrode life expectancy is 100% @ 25°C (77°F), then it will be approximately 25% @ 80°C (176°F).

CAUTION

Hydrofluoric acid and the mixture of Hydrochloric acid and thiourea is toxic and highly corrosive. Avoid skin contact, wear protective gloves. Use only in a well ventilated area. Do not inhale fumes. In case of an accident, consult a doctor immediately.

ORP CALIBRATION

1. After making an electrical connection between the sensor and the instrument, obtain a standard solution of saturated quinhydrone (PN R508-16OZ). This can also be made quite simply by adding a few crystals of quinhydrone to either pH 4 or pH 7 buffer. Quinhydrone is only slightly soluble, therefore only a few crystals will be required.
2. Immerse the sensor in the standard solution. Allow 1-2 minutes for the ORP sensor to stabilize.
3. Adjust the standardize control of the instrument to the solution value shown in the table below. The resulting potentials, measured with a clean platinum electrode and saturated KCl/AgCl reference electrode, should be within +/- 20 millivolts of the value shown in the table below. Solution temperature must be noted to ensure accurate interpretation of results. The ORP value of saturated quinhydrone solution is not stable over long periods of time. Therefore, these standards should be made up fresh each time they are used.
4. Remove the sensor from the buffer, rinse, and install in the process.

MAINTENANCE FOR ORP ELECTRODE

Electrodes should respond rapidly. Sluggishness, offsets, and erratic readings are indicators that the electrodes may need cleaning or replacement.

1. To remove oil deposit, clean the electrode with a mild non-abrasive detergent.
2. To remove scale deposits, soak electrodes for 30 to 60 minutes in a 5% hydrochloric acid solution.
3. ORP (metallic) electrodes should be polished with moistened baking soda.

ORP of Saturated Quinhydrone Solution (millivolts)

	pH 4 Solution			pH 7 Solution		
Temp °C	20	25	30	20	25	30
mV Potential	268	264	260	94	87	80

CAUTION

The solution used during calibration is an acid and should be handled with care. Follow the directions of the acid manufacturer. Wear the proper protective equipment. Do not let the solution come in contact with skin or clothing. If contaact with skin is made, immediately rinse with clean water.

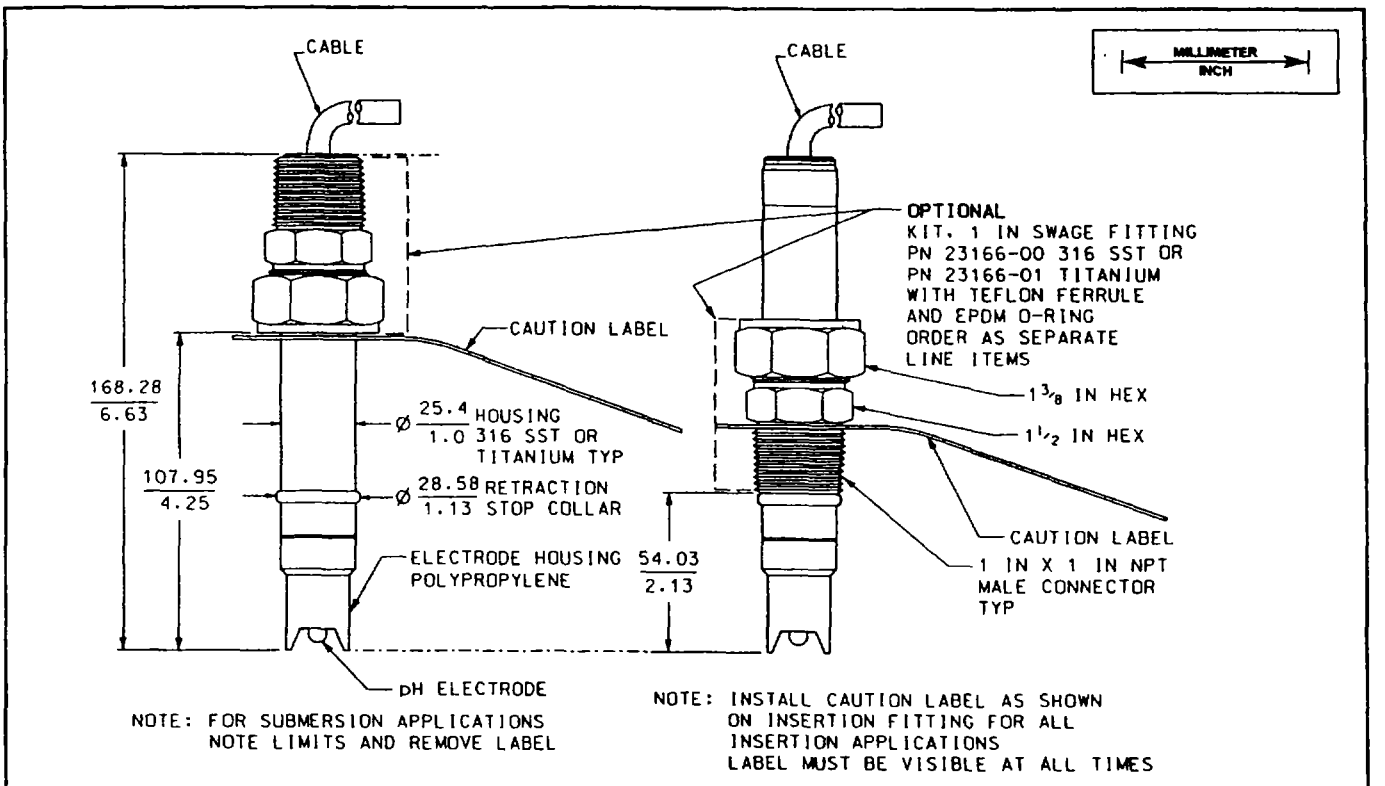

FIGURE 1. Sensor Dimensions

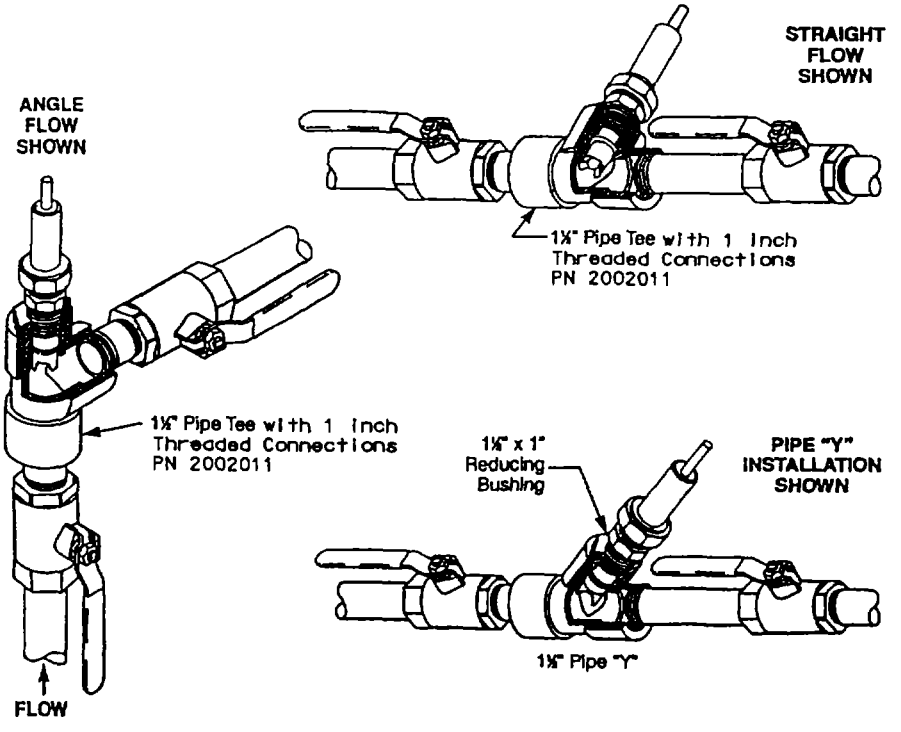

FIGURE 2. Flow Through and Insertion Installation For Models 396 and 398

1-1/2 inch Pipe Tee (PN 2002011) with 1 inch threaded connections.

NOTE: The sensor must be mounted at least 10° above the horizon.

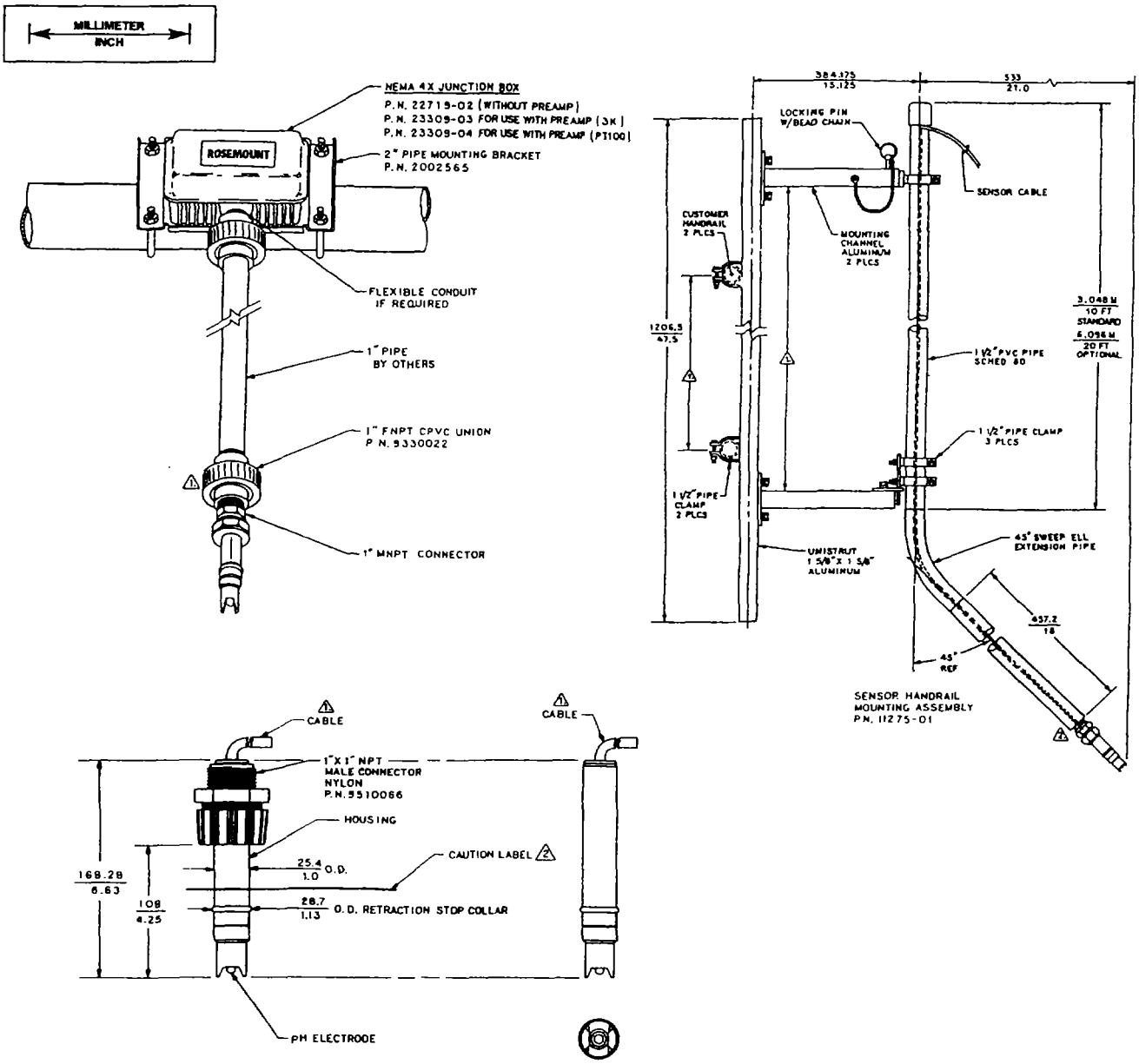

FIGURE 3. Submersion Installations For Models 396 and 398

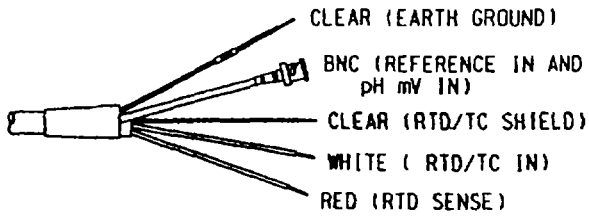

FIGURE 4. Models 396 and 398 Standard Wiring Option used with Models 1054A, 1054B, 2054, and Preamplifiers PN 22698-02 and 22698-03

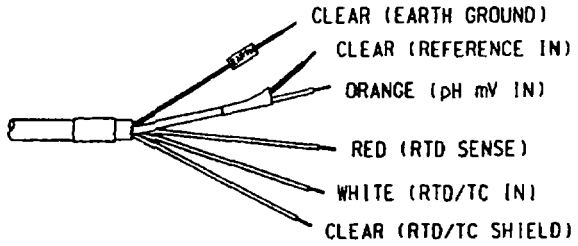

FIGURE 5. Models 396 and 398 Option -62 for Wiring to Models 1054, 1181, 2081, 54, 81, 3081, 4081, SoluComp, and 2700 Preamplifier (PN 23054-03). Also for use with remote Junction Box PN 23555-00.

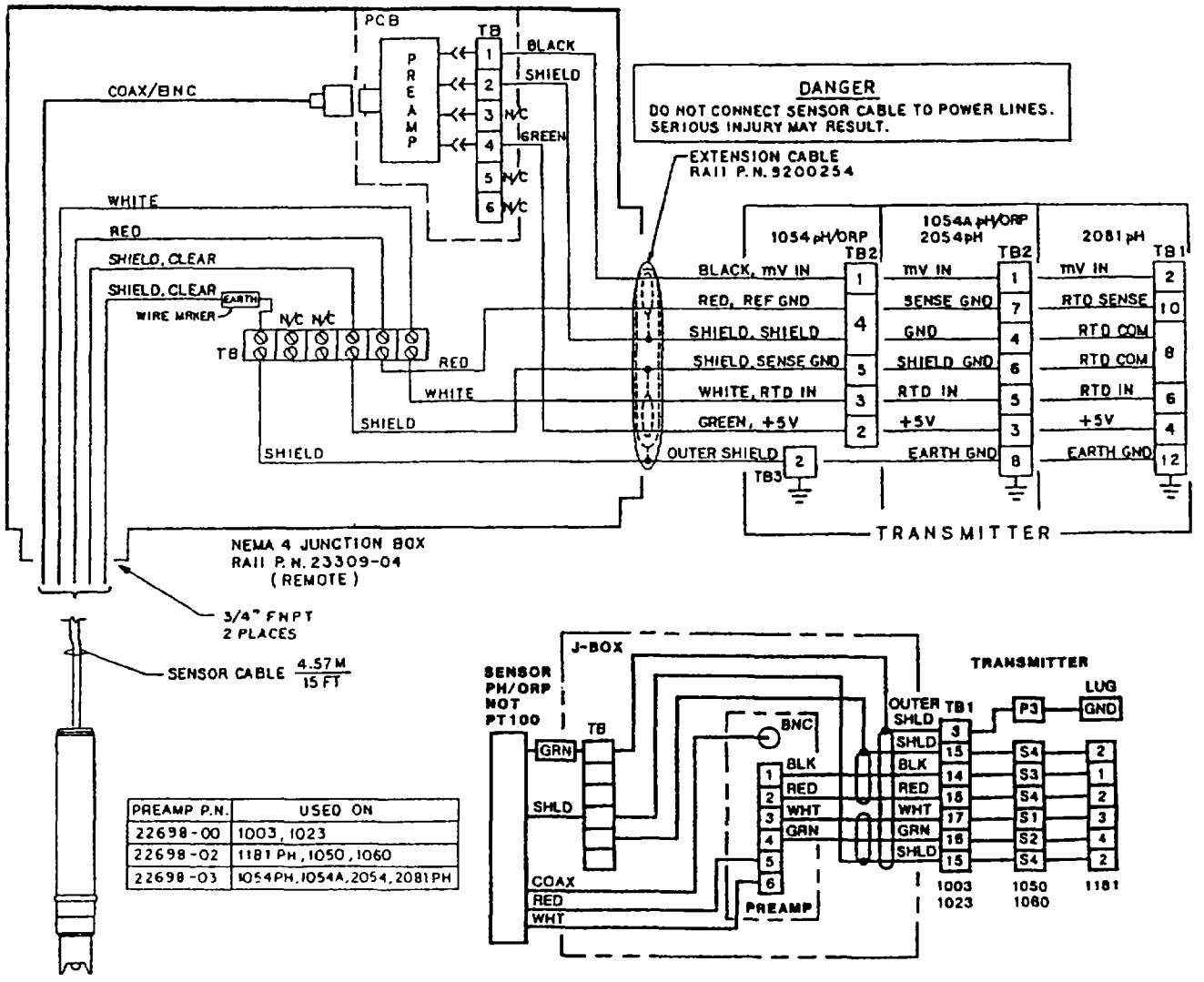

PREAMP P.N.	USED ON
22698-00	1003, 1023
22698-02	1181 PH, 1050, 1060
22698-03	1054PH, 1054A, 2054, 2081PH

Figure 6. Wiring Details for Model 396-54 (50) and 398-54 (50).
For use with Junction Box PN 23309-04 (03) and Remote Preamplifier.

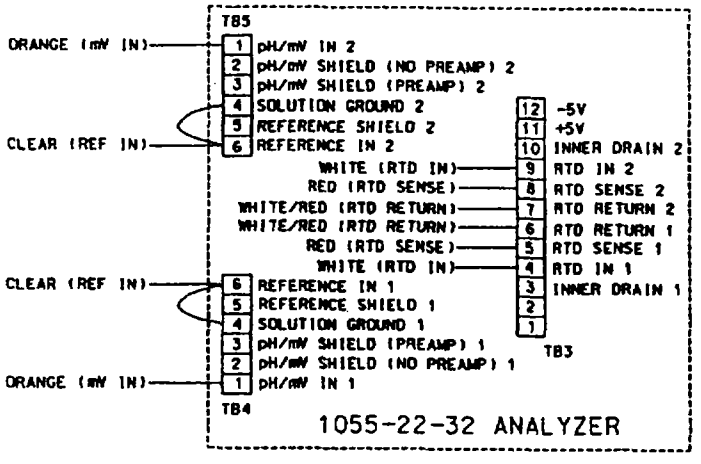

FIGURE 7. Wiring to Model 1055-22-32.

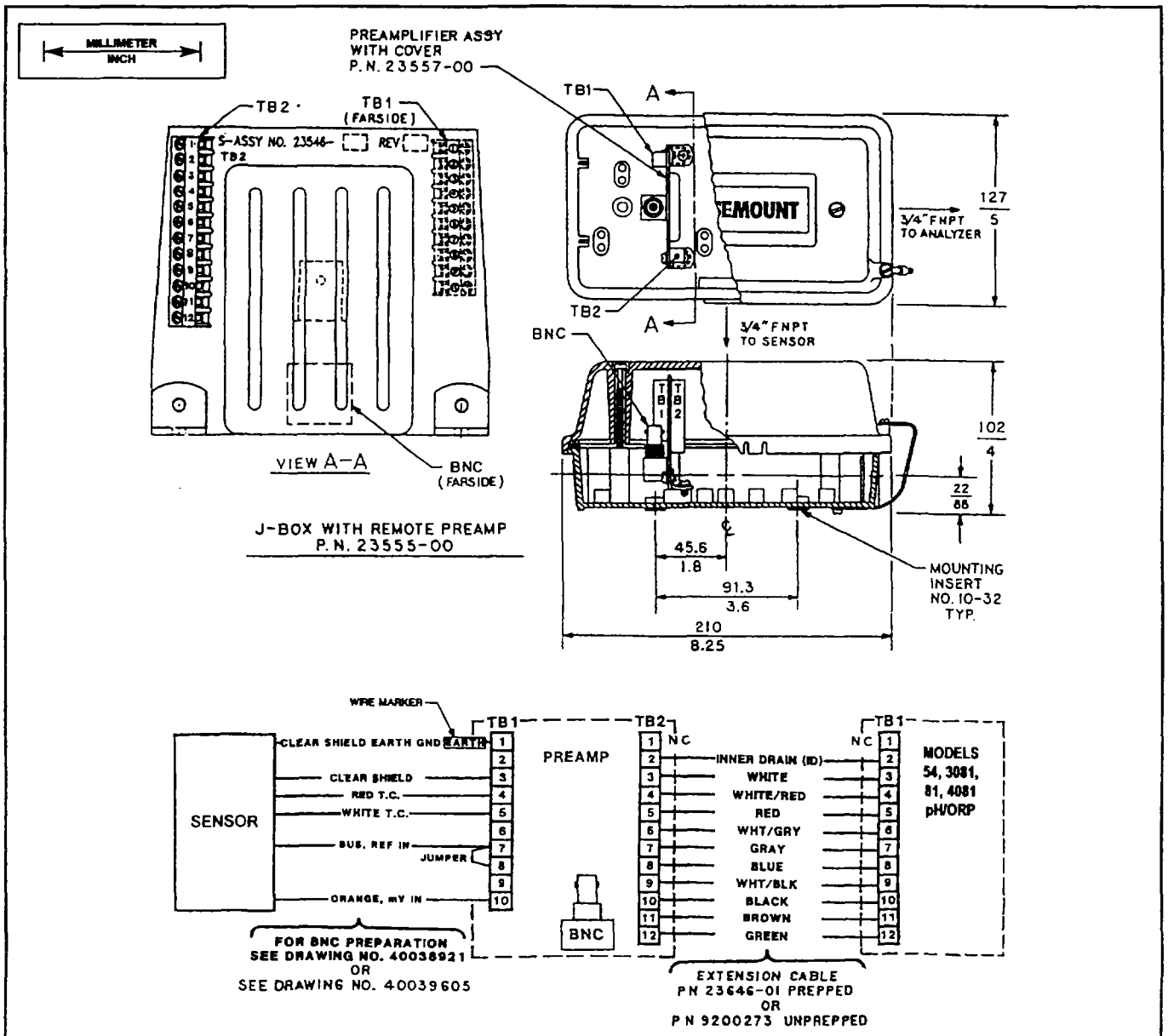

FIGURE 8. Wiring to Junction Box (PN 23555-00) and Remote Preamplifier.

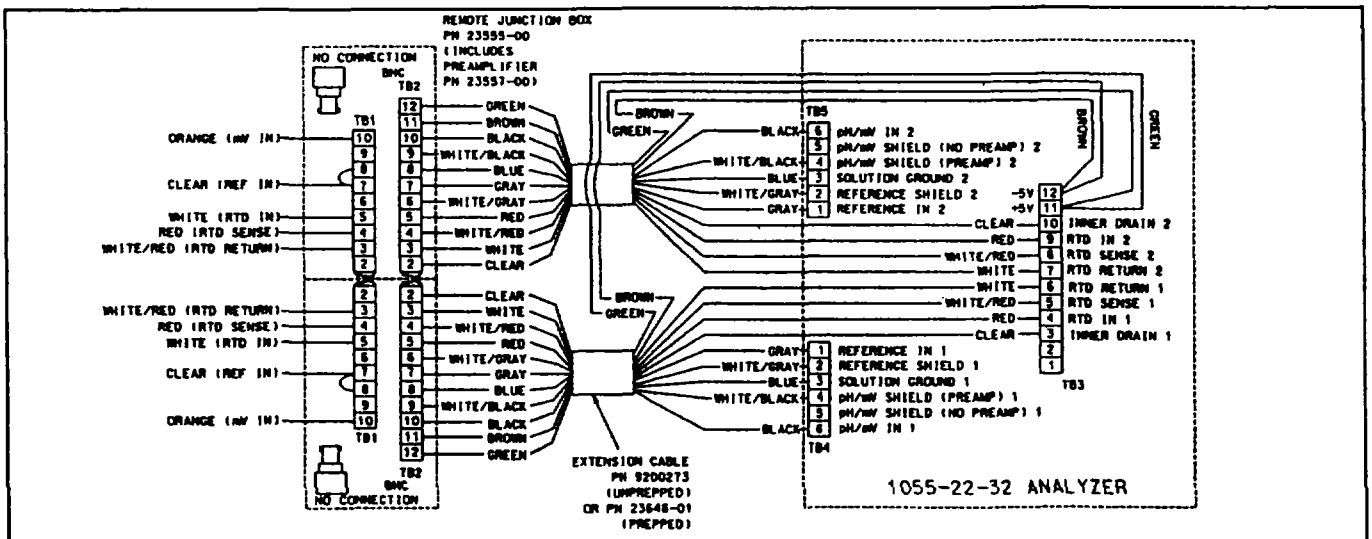

FIGURE 9. Wiring to Model 1055-22-32 through a Remote Junction Box

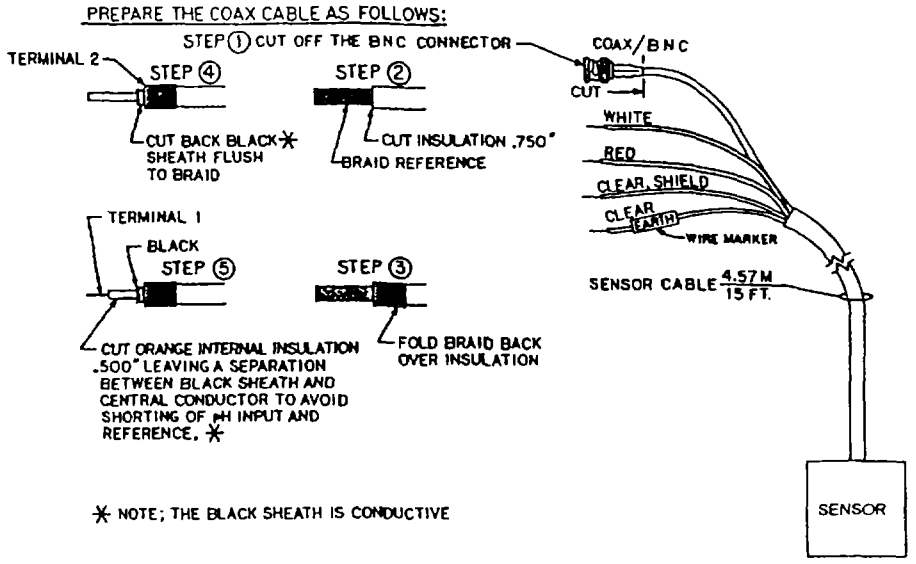

FIGURE 10. Preparing Coax Cable for Wiring to Model 1181

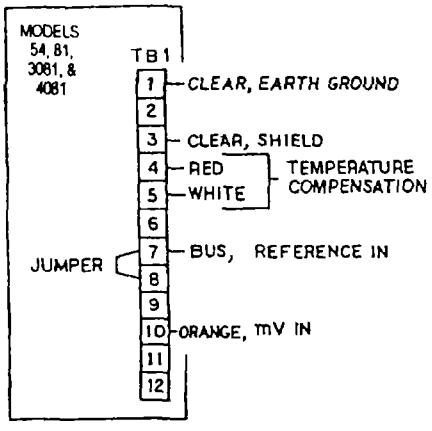

FIGURE 11. Wiring to Models 54, 81, 3081, and 4081

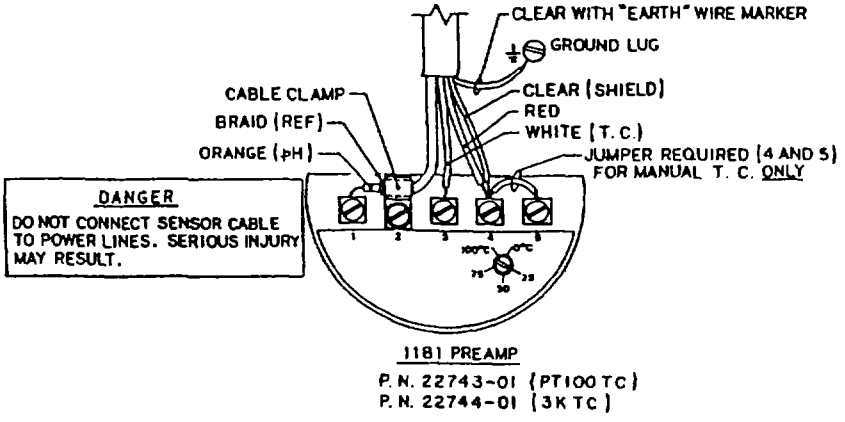

FIGURE 12. Wiring to Model 1181

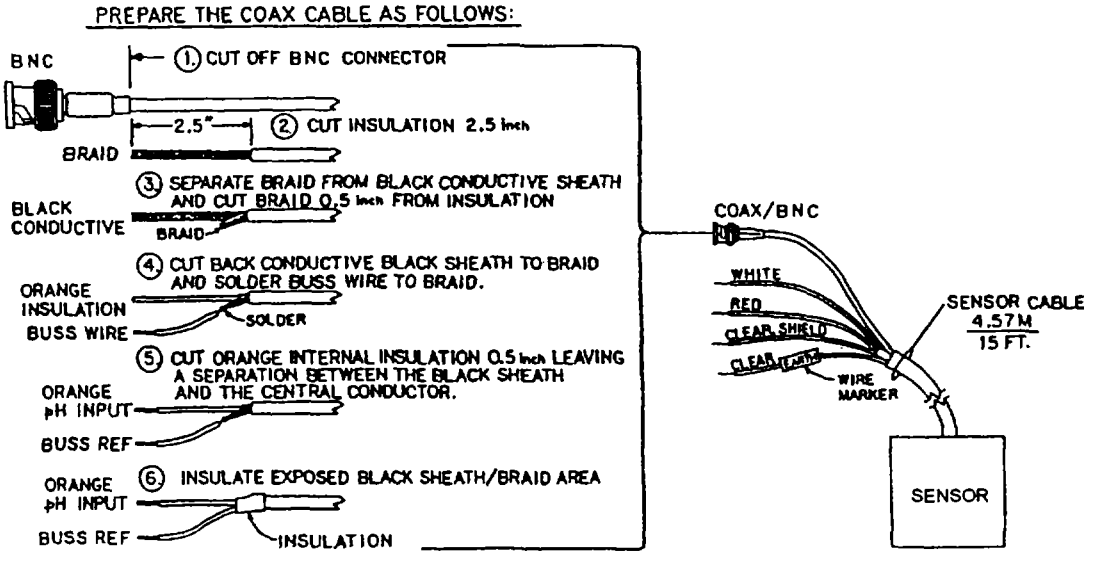

FIGURE 13. Preparing Coax Cable for Wiring to Models 54, 81, 2081, 3081, and 4081

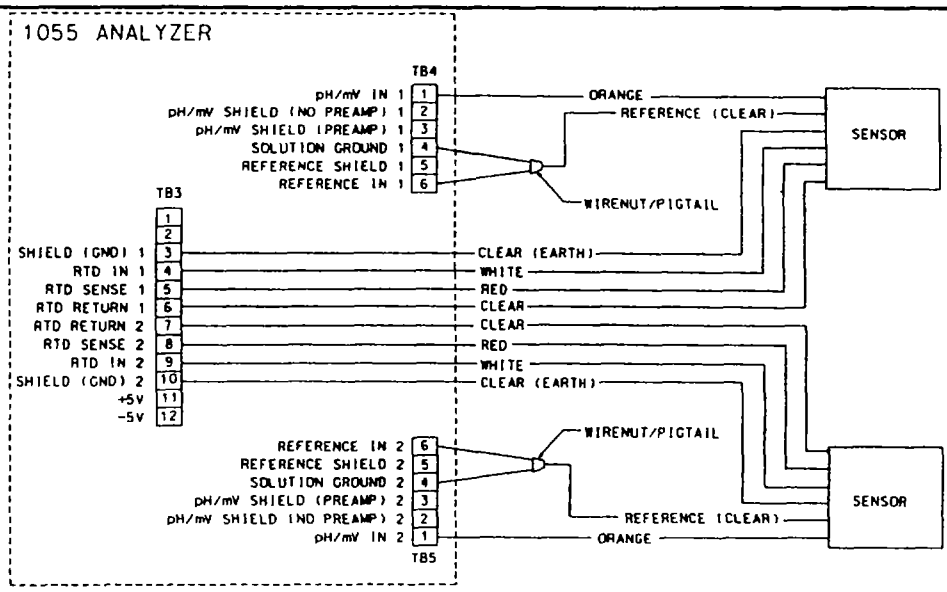

FIGURE 14. Wiring to Model 1055-01-10-22-32

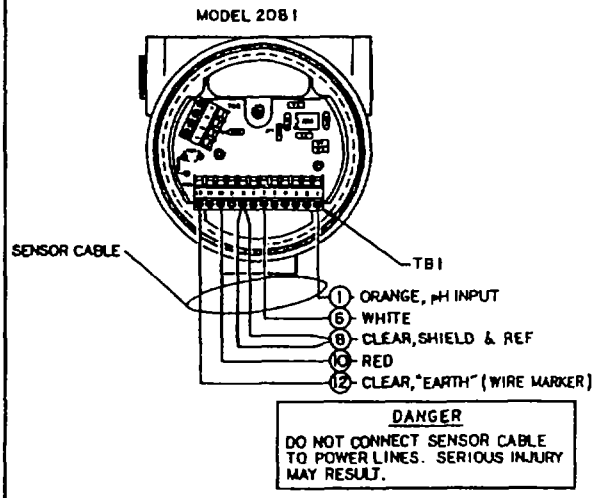

FIGURE 15. Wiring to Model 2081

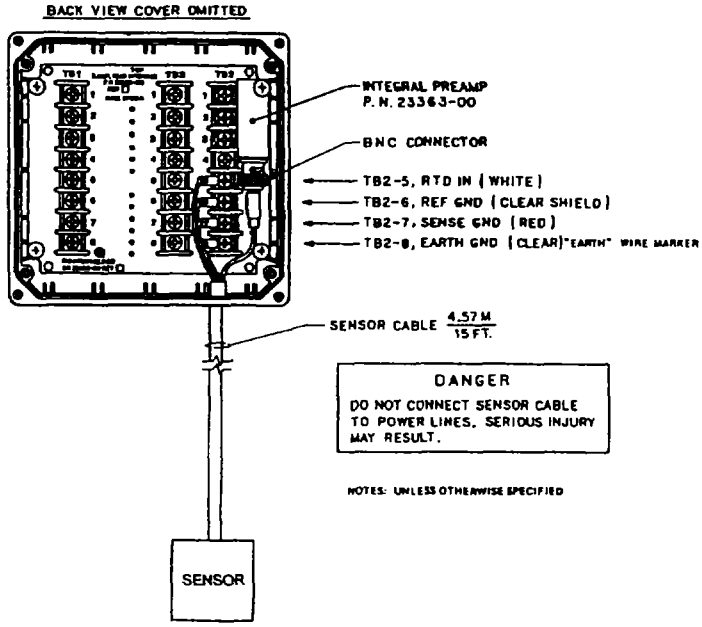

FIGURE 16. Wiring to Models 1054A/B and 2054

The right people, the right answers, right now.

ROSEMOUNT ANALYTICAL
CUSTOMER SUPPORT CENTER
1-800-854-8257

ON-LINE ORDERING NOW AVAILABLE ON OUR WEB SITE http://www.RAuniloc.com

PlantWeb

DNV Certification, Inc. USA — ANSI-RAB QMS ACCREDITED — DNV — DNV MSC The Netherlands Accredited by the RvA — ISO 9001 REGISTERED FIRM

Credit Cards for U.S. Purchases Only.

VISA MasterCard Cards

Emerson Process Management

Rosemount Analytical Inc.
2400 Barranca Parkway
Irvine, CA 92606 USA
Tel: (949) 863-1181
Fax: (949) 474-7250

http://www.RAuniloc.com

EMERSON.
Process Management

© Rosemount Analytical Inc. 2001

MANUFACTURER'S PRODUCT SPECIFICATIONS

Programmable Logic Controller

SLC 500 Modular Processors

The SLC 500 processors offer a wide range of choices in memory, I/O capacity, instruction set, and communication ports to allow you to tailor your control system to exactly meet your application requirements. These products have a strong reliability history covering hundreds of thousands of installations in a broad range of applications

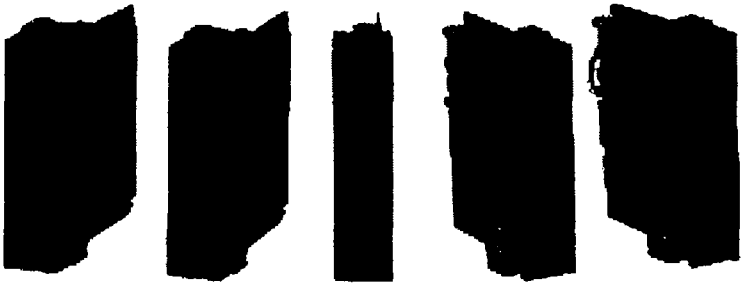

Features

- Simple and affordable processors with extensive capabilities to address a broad range of applications including material handling, HVAC control, high-speed assembly operations, small process control, and SCADA
- Advanced instruction set based on the PLC-5 mid-size processors, and compatible with the MicroLogix family of packaged controllers
- Communications enhancements enable the 5/03, 5/04 and 5/05 to provide master control of SCADA networks
- Powerful features including indirect addressing, high-level math capability and a compute instruction
- Wide range of memory size's from 1K up to 64K

SLC 5/01 Processor (Catalog No. 1747-L511 or -L514)

The SLC 5/01 processor offers a large comprehensive instruction in a modular hardware configuration. The SLC 5/01 processor provides:

- Two choices of program memory size — 1K or 4K instructions
- Control of up to 3940 input and output points
- Powerful ladder logic programming instruction set
- Subroutines
- DH-485 communication channel (peer-to-peer communication response only)
- Capacitor backup for the 1747-L511 (battery backup optional); battery backup standard for the 1747-L514

SLC 5/02 Processors (Catalog No. 1747-L524)

The SLC 5/02 processor offers additional instructions, increased diagnostics, faster throughput, and additional peer-to-peer communication options; building on what the SLC 5/01 processors offer. The SLC 5/02 processor provides:

- Program memory size of 4K instructions
- Control of up to 4096 input and output points
- PID - used to provide closed-loop process control
- Indexed addressing
- Interrupt capability (10 millisecond STI)
- User fault routines
- Ability to handle 32-bit signed math functions
- DH-485 communication channel (initiation and response of peer-to-peer communication)
- Battery-backed RAM
- Increased processor speed over the SLC 5/01

SLC 5/03 Processors (Catalog No. 1747-L531 or -L532)

The SLC 5/03 processor significantly increases performance by supplying system throughput times of 1 ms for a typical 1K user program. Now applications such as high-speed packaging, sorting, and material handling become more affordable. With the addition of online editing, the SLC 5/03 processor presents a positive solution for your continuous process application. A built-in RS-232 channel gives you the flexibility to connect to external intelligent devices without the need for additional modules. The SLC 5/03 processor provides:

- Total memory size of 8K or 16K
- Control of up to 4096 input and output points
- Online programming (includes runtime editing)
- Built-in DH-485 channel
- Built-in RS-232 channel supporting DF1 Full-duplex, DF1 Half-Duplex Master/Slave for SCADA, DH-485 using a 1761-NET-AIC with a 1747-CP3 cable, and ASCII protocols
- Remote I/O passthrough from channel 0 (DF1) or channel 1 (DH485) using a 1747-SN or 1747-BSN remote I/O scanner module
- DeviceNet passthrough using 1747-SDN DeviceNet scanner module
- Built-in real-time clock/calendar
- 2 ms Selectable Timed Interrupt (STI)
- 0.50 ms Discrete Input Interrupt (DII)
- Advanced math features - trigonometric, PID, exponential, floating point, and the compute instruction
- Indirect addressing
- Flash PROM provides firmware upgrades without physically changing EPROMS
- Optional flash EPROM memory module available
- Key switch - RUN, REMote, PROGram
- Battery-backed RAM

SLC 5/04 Processors (Catalog No. 1747-L541, -L542, or -L543)

The SLC 5/04 processor provides the baseline functionality of the SLC 5/03processor plus DH+ communication. Communication via DH+ is 3 to 12 times faster than DH-485, providing you with increased performance levels. In addition, the SLC 5/04 processor runs approximately 15% faster than the SLC 5/03 processor. The SLC 5/04 processor provides:

- Program memory sizes of 16K, 32K, or 64K
- High-speed performance — 0.90 ms/K typical
- Control of up to 4096 input and output points
- Online programming (includes runtime editing)
- Built-in DH+ channel, supporting:
  - — High-speed communication (57.6K, 115.2K, and 230.4K baud)
  - — Messaging capabilities with SLC 500, PLC-2®, PLC-5®, and PLC-5/250 processors
- Built-in RS-232 channel supporting DF1 Full-duplex, DF1 Half-Duplex Master/Slave for SCADA, DH-485 using a 1761-NET-AIC with a 1747-CP3 cable, and ASCII protocols
- Channel-to-channel (DH+ to DH-485) passthrough capability
- Channel-to-channel (DF1 Full-Duplex to DH+) passthrough
- Remote I/O passthrough from channel 0 (DF1) or channel 1 (DH+) using a 1747-SN or1747-BSN remote I/O scanner module
- DeviceNet passthrough using 1747-SDN DeviceNet scanner module
- Built-in real-time clock/calendar
- 1 ms Selectable Timed Interrupt (STI)
- 0.50 ms Discrete Input Interrupt (DII)
- Advanced math features — trigonometric, PID, exponential, floating point, and the compute instruction
- Indirect addressing
- Flash PROM provides firmware upgrades without physically changing EPROMS
- Optional flash EPROM memory module available
- Key switch — RUN, REMote, PROGram (clear faults)
- Battery-backed RAM

SLC 5/05 Processors (Catalog No. 1747-L551, -L552, or -L553)

The SLC 5/05 processor provides identical control functionality as the SLC 5/04 processor using standard Ethernet communications instead of DH+. Ethernet communication takes place at 10 Mbps, providing you with a high-performance network for program upload/download, on-line editing, peer-to-peer messaging, data acquisition, and operator interface (e.g. RSView32). The variety of memory sizes allows you to closely match your application needs. The SLC 5/05 provides:

- Program memory sizes of 16K, 32K, or 64K
- High-speed performance - 0.90 ms/K typical
- Control of up to 4096 input and output points
- Online programming (includes runtime editing)
- Built-in 10Base-T Ethernet channel, supporting:
  - — High-speed computer communication using TCP/IP
  - — Messaging capabilities with SLC 5/05, PLC-5, and PLC-5/250 processors, 1785-ENET Ethernet interface module, and 1756-ENET Ethernet bridge, and other commercially available computer Ethernet modules
  - — SNMP for standard Ethernet network management
  - — BOOTP for optional dynamic IP address assignment
- Built-in RS-232 channel supporting DF1 Full-duplex, DF1 Half-Duplex Master/Slave for SCADA, DH-485 using a 1761-NET-AIC with a 1747-CP3 cable, and ASCII
- Ethernet to DH-485, channel-to-channel passthrough
- Ethernet to DF1, channel-to-channel passthrough
- Remote I/O passthrough from channel 0 (DF1 or DH485) or channel 1 (Ethernet) using a 1747-SN or 1747-BSN remote I/O scanner module
- DeviceNet passthrough using 1747-SDN DeviceNet scanner module
- Built-in real-time clock/calendar
- 1 ms Selectable Timed Interrupt (STI)
- 0.50 ms Discrete Input Interrupt (DII)
- Advanced math features — trigonometric, PID, exponential, floating point, and the compute instruction
- Indirect addressing
- Flash PROM provides firmware upgrades without physically changing EPROMS
- Optional flash EPROM memory module available
- Key switch - RUN, REMote, PROGram (clear faults)
- Battery-backed RAM

Processor Capabilities

The following table summarizes the specifications for the SLC 500 modular processors.

Memory Size (words)	L511: 1K L514: 4K	L524: 4K	L531: 8K L532: 16K	L541: 16K L542: 32K L543: 64K	L551: 16K L552: 32K L553: 64K
Power Supply Loading	350 mA at 5V dc 105 mA at 24V dc	350 mA at 5V dc 105 mA at 24V dc	500 mA at 5V dc 175 mA at 24V dc	1.0A at 5V dc 200 mA at 24V dc	1.0 mA at 5V dc 200 mA at 24V dc
Max. I/O Capacity	3940 Discrete inputs and outputs	4096 Discrete inputs and outputs	4096 Discrete inputs and outputs	4096 Discrete inputs and outputs	4096 Discrete inputs and outputs
Max. Local Chassis/Slots	3/30	3/30	3/30	3/30	3/30
On-board Communications	DH-485 Slave	DH-485	DH-485 & RS-232	DH+ & RS-232	Ethernet & RS-232
Programming	Programming Software or Hand-Held Terminal (HHT)		Programming Software		
Programming Instructions	52	71	107	107	107
Typical Scan Time [1]	8 ms/K	4.8 ms/K	1 ms/K	0.9 ms/K	0.9 ms/K
Program Scan Hold-up Time after Loss of Power	20 ms to 3s (dependent on power supply loading)				
Bit Execution (XIC)	4 µs	2.4 µs	0.44 µs	0.37 µs	0.37 µs
Clock/Calendar Accuracy	n/a	n/a	±54 seconds/month at +25°C (+77°F) ±81 seconds/month at +60°C (+140°F)		

(1) The scan times are typical for a 1K ladder logic program consisting of simple ladder logic and communication servicing. Actual scan times depend on your program size, instructions used, and the communication protocol.

System Protection Options

The following table summarizes the system protection options available for the SLC 500 processor family.

Password	•	•	•
Future Access (OEM Lock)	•	•	•
Program Owner	•	•	•
Program Files	NA	NA	•
Data Table Files	•	•	•
Memory Module Data File Overwrite	NA	NA	•
Memory Module Program Compare	NA	NA	•
Memory Module Write Protection	NA	NA	•
Force Protection	NA	NA	•
Keyswitch	NA	NA	•
Communication Channel Protection	NA	NA	•

Operating System Upgrade Kits

Kits are available to upgrade your SLC 5/03 and higher processors. By upgrading your processors's operating system, you can take advantage of 8 new programming instructions (including block transfers) and increased diagnostic capabilities.

1747-OS302	5/03 Firmware Upgrade Kit (includes 5 OS upgrade labels)
1747-OS401	5/04 Firmware Upgrade Kit (includes 5 OS upgrade labels)
1747-DU501	5/05 Firmware Upgrade Kit (includes 5 OS upgrade labels)
1747-RL302	5/03 Firmware Label Upgrade Kit (includes 10 OS upgrade labels)
1747-RL401	5/04 Firmware Label Upgrade Kit (includes 10 OS upgrade labels)
1747-RL501	5/05 Firmware Label Upgrade Kit (includes 10 OS upgrade labels)

Memory Modules

The following table summarizes the available memory back up options for the SLC 500 processors. EEPROM memory modules provide non-volatile memory back-up. Flash EPROMs (Flash Erasable Programmable Read Only Memory) combine the versatility of EEPROMs with the security of UVPROMs.

EEPROM	1747-M1 1747-M2	1747-M2	n/a	n/a	n/a
Flash	n/a	n/a	1747-M11 1747-M12	1747-M11 1747-M12	1747-M11 1747-M12

Program Storage Device

The 1747-PSD Program Storage Device simplifies PLC program backup and upgrade shipping issues for MicroLogix controllers and SLC 5/03 and higher processors. It allows you to backup PLC programs without using a computer or programming software. The PSD also enables you to make multiple copies of an installed program. OEMs can confidently ship program upgrades to end users for easy and low-cost installation at remote sites.

Features

- The 1747-PSD provides reliable storage of user programs. The device is designed for repetitive use; upload and download as you need to. It performs error checking prior to downloading a PLC program to ensure that the program is compatible with the target PLC.
- The PSD can be powered by either two AAA batteries or by an external power supply. A battery save feature shuts off power 30 seconds after the operation is completed. Stored programs are retained in Flash EPROM memory even if the batteries and power supply fail.
- The hand-held device is lightweight and very easy to use. Only minimal training should be needed. One red LED and one green LED provide instant status feedback. For ease of operation, all of the PSD functions can be accessed using one switch and one push button.
- Installation of the PSD is simple, using a standard RS-232, 9-pin, D-shell connector. The device attaches to the PLC with standard SLC 500 and MicroLogix cables.
- For maximum compatibility, the 1747-PSD can store the largest PLC programs of the SLC 500 and MicroLogix programmable controllers.

Specifications

Compatible Programmable Controllers	SLC 5/03 and higher, MicroLogix 1000, 1200, and 1500
Memory Size	64K words maximum
Memory Type	Flash EPROM
Operating Power	(2) AAA batteries or power supply (7 to 30V dc, 250 mA maximum)
Compatible Cables	1747-CP3 and 1761-CBL-PM02 (not included)

Discrete I/O Modules

Our wide variety of input, output, and combination modules makes the SLC 500™ family the smart choice for all of your small PLC applications.

I/O modules are available in a wide variety of densities including 4-, 8-, 16-, and 32-point and can interface to AC, DC, and TTL voltage levels. Output modules are available with solid-state AC, solid-state DC, and relay contact type outputs. For added flexibility, combination modules are also available in 2-input/2-output, 4-input/4-output, and 6-input/6-output versions.

Designed and tested for industrial applications, our modules are of the highest quality. The modules feature input filtering, optical isolation, and built-in surge protection to enhance the reliability of operation in noisy industrial environments.

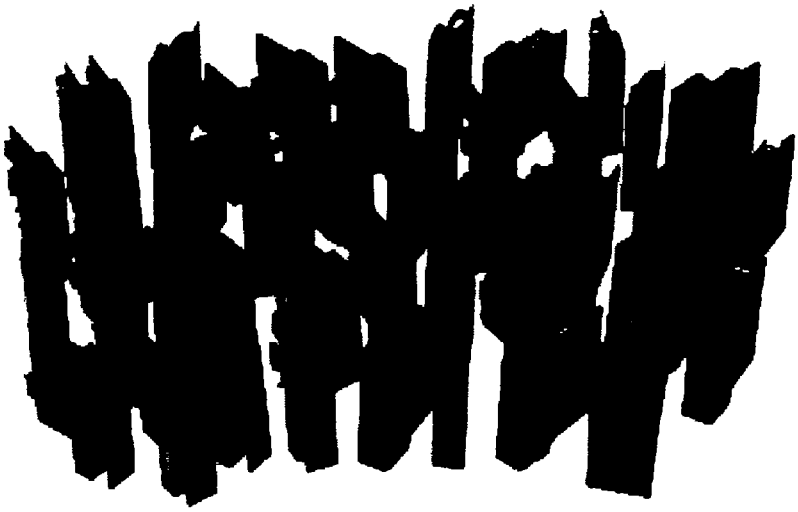

Features

Select I/O modules to exactly match your application with combination modules that allow you to have inputs and outputs in a single slot for efficient use of your chassis space.

High-density 32-point DC I/O and fast response DC inputs are available, allowing the SLC 500 to be applied in a broader spectrum of control applications

LEDs indicate the status of each I/O point, assisting you in troubleshooting. The LEDs illuminate when the proper signal is received at an input terminal, or when the processor applies power to an output terminal.

Terminal identification diagrams located on each module making terminal identification easier.

All modules feature optical isolation between digital and field circuits, resulting in increased noise immunity and limited damage to your system due to an electrical malfunction of the field wiring.

Solid-state output modules available with fusing and electronic protection, eliminating the need to replace modules damaged by short circuits and overloads.

Removable terminal blocks allow you to replace the module without rewiring it (not available on all modules). A matching color band is also provided on the front of the module to assist in matching the terminal block to the module.

Barrier-type terminal blocks provided on all modules to help prevent accidental shorting of field wiring.

Self-locking tabs secure the modules in the chassis, and no tools are necessary to either install or remove the modules to/from the chassis..

MANUFACTURER'S PRODUCT SPECIFICATIONS

Variable Frequency Drive

GE Industrial Systems

Product Specifications

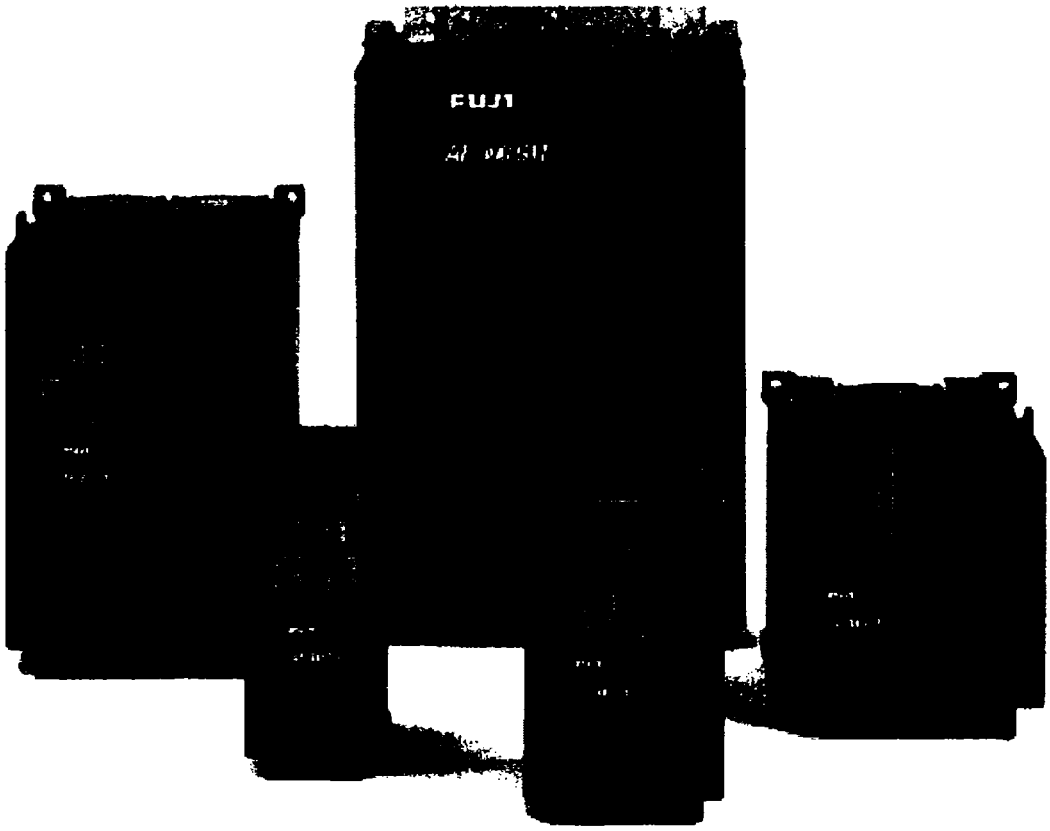

AF-300 G11™

AF-300 G11™ Specifications

Category	Item	Description
Nominal Motor	230 VAC, 3 Phase	1/4 Hp to 125 Hp
	460 VAC, 3 Phase	1/2 Hp to 450 Hp
Braking Torque (Standard)	1/4 Hp to 1 Hp	150%
	2 Hp to 10 Hp	100%
	15 Hp to 30 Hp	20%
	40 Hp and Higher	10% - 15%
Braking Torque (Optional)	1 Hp to 30 Hp	150%
	40Hp and Higher	100%
Enclosure, Standard	1/4 Hp to 30 Hp	NEMA 1 Standard, NEMA 4 Optional to 10 Hp, NEMA 12 Optional all ratings
	40 Hp and Up	NEMA 1 Standard, IP00 Optional 40Hp and above
Cooling Method	Convection	1 Hp and below
	Fan Cooled	Above 1 Hp
Standards	UL/cUL	No input fuses required
	CE	EN61800-3 for EMC EN61800-2 for Low Voltage
Input	**Item**	**Description**
	Up to 30 Hp, 230 VAC	200V - 230V (+10%, -15%), 50 or 60 Hz (+/- 5%)
	Up to 30 Hp, 460 VAC	380V - 480V (+10%, -15%), 50 or 60 Hz (+/- 5%)
	40 Hp & Above, 230 VAC	200V - 220V (+10%, -15%), 50 Hz (+/- 5%) / 220V - 230V (+10%, -15%), 60 Hz (+/- 5%)
	40 Hp & Above, 460 VAC	380V - 440V (+10%, -15%), 50 Hz (+/- 5%) / 380V - 480V (+10%, -15%), 60 Hz (+/- 5%)
	Unbalance	Voltage Unbalance within 3%
	Power Dip	For input voltage greater than Vmin, the drive will operate at rated output continuously. For input voltage less than Vmin, the drive will operate at 85% of rated output for 15 Msec. Vmin (230V Series) = 165V, Vmin (460V Series) = 310V. Smooth recovery method is selectable
Condition	**Item**	**Description**
Altitude		1000 meters or less. Derate at 1% for each 100 meters from 1000 to 3000 meters (Above 3000 meters, consult factory)
Temperature	Ambient	-10 to 50°C (units less than and equal to 30Hp must have ventilation covers removed for 40°C and above)
	Storage	-20 to 65°C
Vibration		IEC61200-2
Humidity		5 - 95% Relative Humidity (Non-condensing)
Output	**Item**	**Description**
	230V, 3 Phase	3 Phase, 200V, 50Hz or 3 Phase, 200V, 220V, 230V, 60Hz
	460V, 3 Phase	3 Phase, 380V, 400V, 415V, 440V, 50Hz or 3 Phase, 380V, 400V, 440V, 460V, 60Hz
	Frequency	50 / 60 Hz
	Overload	150% of rated current for 1 min 180% of rated current for 0.5 sec => 30Hp 200% of rated current for 0.5 sec =< 30Hp
	Max Freq.	50 - 400 Hz
	Base Freq.	25 - 400 Hz
	Starting Freq.	0.1 - 60 Hz
	Carrier Freq.	0.75 - 15 kHz up to 100 Hp. 0.75 - 10 kHz 125 Hp and above. Minimum carrier frequency changes dependent on maximum output frequency
Accuracy (Stability)	Analog	+/- 0.2% of maximum frequency (speed) at 25 +/- 10°C
	Digital	+/- 0.01% of maximum frequency (speed) between -10 and 50°C
Setting Resolution	Analog	1/3000 of maximum frequency (speed)
	Digital	0.01 Hz for frequency up to 99.9 Hz (0.1 Hz for frequency > 100 Hz)

Control	Item	Description
Control Method	Sinusoidal PWM	V/Hz
		Dynamic Torque Vector Control (Sensorless)
		Flux-vector Control with Pulse Tachometer
Operation	Methods	Keypad, Digital Input, Bus Communication
Frequency Setting	Keypad	(UP or DOWN)
	Potentiometer	1-5KW (1/2 W) Optional
	Analog	0 - 5 VDC
		0 to +/– 10 VDC Bi-polar (Reversible operation by signal polarity)
		0 - 10 VDC (10 - 0 VDC selectable)
		4 - 20 MA (20 - 4 MA selectable)
	Digital	Up/Down Control (Increases with UP, decreases with DOWN)
		Multi-step (4 different frequencies via SS1 and SS2)
		Multi-step (8 different frequencies via SS1, SS2, and SS4)
		Multi-step (16 different frequencies via SS1, SS2, SS4, and SS8)
		Programmed pattern operation - 8 stages
	Serial Networks	RS485 with Modbus RTU - Standard
		Optional network cards
Acceleration Setting	Four Modes	0.01 - 3600 seconds (Independent Acc/Dec, four times, three modes - Linear, S-Curve, Non-linear)
	Automatic	When the motor acc.(dec.) torque reaches a preset value, the acc. (dec.) time is automatically extended for tripless operation.
Frequency Limiter		High and low values are presettable
Bias Frequency		-400.0 to +400.0 Hz
Frequency Gain		Adjustable from 0 - 200 %
Jump Frequency		Jump frequency setting (3 points), jump hysteresis width (1 setting)
Catch Spinning Motor		Smoothly pick up a rotating motor without stopping (speed search method) - No DB required
Auto-Restart		Autorestart is available after a momentary power failure (speed search method) Continuous operation mode is selectable
Switching Operation		Control terminals are provided for smooth switching operation from line power to drive
Slip Compensation		Related to load torque and magnified for negative slips frequencies
Torque Limiting		Automatic overcurrent adjustments 2 torque limiting functions can be preset
Torque Control		Output torque or load factor can be controlled by analog input signal with PG option
PID Control		Process controller - standard
Automatic Deceleration		Automatic extension of deceleration time when braking torque limit is reached for tripless operation without a DB resistor
2nd Motor Settings		Settings for a second motor: base freq., rated voltage, rated current, no load current, impedances
Fan Stop Operation		Automatically manage cooling fan operation to extend life - up to 30Hp operation is preset, above 30Hp signal is preset
Motor Autotune	Offline Tuning	Selectable with motor rotating and without motor rotating
	Online Tuning	Dynamically compensates regulator for changes in motor temperature
Energy Saving		Reduces losses at light loads
Keypad	**Item**	**Description**
		Backlit LCD Display
		Smart Keypad to copy parameters from one drive to another
		Extension cable adapter for RJ45 connector

Indication	Item	Description
Operation Mode	LED	Output frequency
		Output current, Output voltage
		Motor synchronous speed (RPM)
		Line speed (M/min)
		Load shaft speed (RPM)
		Output torque (%)
		Frequency setting
		PID (Set 1 value, Set 2 value, Feedback value)
		Power consumption
		Motor load factor
	LCD	Heatsink temperature
		Drive internal temperature
		I/O Test - indicates signal existence or absence of digital I/O and signal value of analog I/O
		RMS current - 1 cycle
		%DB - 1 cycle
	Other	DC Link power charge display
Program Mode	Feature	Function Code and Function Name, Data or Data Code
	Languages	English, French, German, Italian, Japanese, Spanish
Trip Mode	OC1	Overcurrent during acceleration
	OC2	Overcurrent during deceleration
	OC3	Overcurrent running at constant speed
	FUS	Fuse blown
	OU1	Overvoltage during acceleration
	OU2	Overvoltage during deceleration
	OU3	Overvoltage running at constant speed
	LV	Low voltage
	OH1	Overheating of heatsink
	OH2	External thermal relay tripped
	OH3	Overtemperature of inside air
	dBH	Overheating of DB circuit
	OL1, OL2	Motor overload
	OUV	Drive unit overload
	EF	Ground fault
	LIM	Input Phase Loss
	FUS	DC Fuse open (40 Hp and above)
	Er1	Memory error
	Er2	KEYPAD communication error
	Er3	CPU error
	Er4	Option card error, detected by the control card
	Er5	Option card error, detected by the option card
	Er6	Operations procedure error.
	Er7	Output wiring error - impedance unbalance
	Er8	RS485 communications error
Diagnostics	History	Trip history - passed four events (Trip and Warning)

Protection	Item	Description
Overload		Detection of electronic thermal overload relay
Overvoltage		Detection of DC link circuit overvoltage (230V series - 400V, 460V series - 800V)
Incoming Surge		Drive protection from surge voltage input (Max. 1.2 x 50 usec 7KV peak)
Undervoltage		Detection of DC link circuit undervoltage (230V series - 200V, 460V series - 400V)
Overheating		Drive overheating protection by temperature detection
Short Circuit		Short circuit protection for drive output circuit
Ground Fault		Ground fault protection for drive output circuit - 3 phase circuit detection method
		Zero phase current detection method - 40 Hp and above
Motor Overload		Electronic thermal overload relay can be selected for general purpose motor or dedicated drive motor
		Calculation of thermal time constant can be preset
		2nd motor electronic thermal overload relay
DB Resistor Overheating		Internal electronic thermal overload relay - up to 10 Hp
		Overheating detection thermal overload relay installed in braking resistor unit - 15 Hp and above (option)
Motor Overheating		Overheating detection PTC thermistor can be connected to terminals 13-C1-11
Phase Loss		Drive protection for line side phase loss
		Drive protection for motor side phase loss during tuning
		Detection of output impedance unbalance during tuning
Signal Loss		Detection of loss of C1 current signal
Auto-reset		Auto reset times and reset interval can be preset
Terminal Functions	**Item**	**Description**
Main Circuit		
Power Input	L1/R, L2/S, L3/T	Connect a three phase power source
Drive Output	U, V, W	Connect to a three phase induction motor
DC Reactor	P1, P(+)	Connect the DC reactor for power factor correcting or harmonic current reduction Shipped in same carton with drive
Braking Unit	P(+), N(-)	Connect the braking unit - optional for 15 Hp and above
Ext. Braking Resistor Unit	P(+), DB	Connect the external braking resistor - 230V/460V series up to 10 Hp
Ground	G	Ground terminal for drive chassis (housing)
Aux. Control Power	R0, T0	Connect the same AC power source used for Power Input as backup for control circuit power supply - 2 Hp and above
Analog Inputs	**Item**	**Description**
Potentiometer Power	13	+10V DC power supply, maximum allowable output current 10ma
Voltage Input	12	0-10V / 0-100%, 22K ohm input impedance
		0-5V / 0-100% can be selected by signal gain setting
		Inverse mode operation by polarity
		Reversible operation can be selected by function code
		Frequency command, torque control, Tach feedback, or PID control
Common	11	Common for analog signal
Current Input	C1	4-20ma / 0-100 % (input impedance 250 ohm)
		Inverse mode operation
		Frequency command, PID feedback
Analog Input 1	V2	0 - +/- 10V / 0 - +/- 100% (input impedance 22K ohm)

Digital Inputs	Item	Description
Forward Operation	FWD	ON - Motor runs in the forward direction, OFF - Motor decelerates and stops
Reverse Operation	REV	ON - Motor runs in the reverse direction, OFF - Motor decelerates and stops
Digital Input 1	X1	Functions selected via function codes - Sink type terminal specification default with source type hardware selectable
Digital Input 2	X2	ON state - maximum input voltage 2V, maximum source current 5ma
Digital Input 3	X3	OFF state - maximum voltage 27V, maximum leakage current 0.5ma
Digital Input 4	X4	Selectable from the following
Digital Input 5	X5	
Digital Input 6	X6	
Digital Input 7	X7	
Digital Input 8	X8	
Digital Input 9	X9	
3 Wire Stop	HLD	ON - the drive latches the FWD or REV signal, OFF - the drive releases the latch
Coast Stop	BX	ON - motor will coast to a stop, no alarm signal will be issued
Trip Command	THR	OFF - OH2 trip is issued and latched, motor will coast to a stop
Alarm Reset	RST	ON - Momentary on for > 0.1 sec will reset faults
Multistep Frequency	SS1 / SS2	4 different frequencies can be selected by ON/OFF pattern on terminals SS1 and SS2
	SS4	8 different frequencies can be selected by ON/OFF pattern on terminals SS1, SS2, and SS4
	SS8	16 different frequencies can be selected by ON/OFF pattern on terminals SS1, SS2, SS4, and SS8
ACC/DEC Time Select	RT1	Second ACC/DEC time can be selected by terminal RT1
	RT2	4 different ACC/DEC times can be selected by ON/OFF pattern on terminals RT1 and RT2
JOG	JOG	ON - JOG frequency is activated
2nd Frequency Select	HZ2/HZ1	ON - drive will stop and the 2nd frequency command becomes effective
2nd Motor Select	M2/M1	ON - drive will stop and Motor 1 values are changed to Motor 2 values
DC Brake Command	DCBRK	ON - DC injection braking is active during deceleration
2nd Torque Limiter	TL2/TL1	ON - Torque Limiter 2 is active
Line/drive Switching	SW50 / SW60	ON - Motor is changed from drive operation to line operation (Main circuit signal output via Y1-Y5)
UP Command	UP	ON - drive output frequency increases (change rate determined by ACC time)
DOWN Command	DOWN	ON - drive output frequency decreases (change rate determined by DEC time)
Write Enable	WE-KP	ON - data can be changed by KEYPAD operation
PID Control Cancel	HZ/PID	ON - PID control is canceled
Inverse Mode Changeover	IVS	ON - Operation mode is toggled from Normal to Inverse or Inverse to Normal
Interlock Signal (52-2)	IL	Connection for auxiliary contact 52-2
TRQ Control Cancel	HZ/TRQ	ON - Torque control is canceled
Link Enable (RS485)	LE	ON - Bus link or RS485 link is active
Universal Digital Input	U-DI	ON - Enables input from RS485 or LAN option
Sync/Tach Enable	PG/HZ	ON - Synchronize operation or Tach feedback operation is active
Zero Speed Command	ZERO	ON - Enables stall torque function
Timed Alarm Command	STP	OFF -The drive decelerates and stops
Pre-exciting Command	EXITE	ON - The motor eneters into a pre-exciting state during flux vector control
RS485 I/O Terminal	DXA, DXB, SD	Connections for RS485 serial port communications Modbus RTU standard protocol
PLC Terminal	PLC	Connection for PLC power supply that avoids drive current loops on Sink type inputs when PLC power supply is off.
Common	CM	Common for digital inputs

Analog Outputs	Item	Description
Analog Monitor	FMA / 11	Output DC voltage is proportional to selected function's value. Functions are selected by FC31
		Slip frequency (0 - max frequency)
		Output frequency (0 - max frequency)
		Output current (0 - 200 %)
		Output voltage (0 - 200 %)
		Output torque (0 - 200 %)
		Load factor (0 - 200 %)
		Input power (0 - 200 %)
		PID feedback value (0 - 100 %)
		Tach feedback value (0 - max speed)
Universal Analog Output		Analog output pass through for process control
Pulse Rate Monitor	FMP / CM	Pulse rate is proportional to selected function's value. maximum output current: 2ma
		The average value of the pulse train is proportional to the selected function's value, output functions same as for FMA
Transistor Outputs	**Item**	**Description**
Power Supply	P24	DC power supply - +24V, 100ma
Transistor Output 1	Y1	ON state maximum output voltage 2V, sink current 50ma
Transistor Output 2	Y2	OFF state maximum allowable voltage 27V, leakage current 0.1ma
Transistor Output 3	Y3	Select from the following
Transistor Output 4	Y4	
Drive Running	RUN	ON - output frequency is larger than starting frequency
Frequency Equivalence	FAR	ON - difference between output frequency and setting frequency is smaller than FAR hysteresis width
Frequency Level Detection	FDT	ON - output frequency is larger than preset detection level
Undervoltage Detection	LV	ON - drive undervoltage stops and operation command is ON
Torque Polarity	B/D	ON - drive is in braking mode
Torque Limiting	TL2/TL1	ON - drive is in torque limiting mode
Auto-restarting	IPF	ON - drive auto restarting mode active or restart waiting mode is active
KEYPAD Operation Mode	TP	ON - drive is in KEYPAD operation mode
Drive Stopping	STOP	ON - drive is in stopping mode or DC braking mode
Overload Early Warning (Selectable)	OL	ON - electronic thermal calculated value is larger than preset protection level
		ON - output current is larger than preset detection level
Line/drive Changeover	SW88	Outputs signal 88 for line/drive changeover
	SW52-2	Outputs signal 52-2 for line/drive changeover
	SW52-1	Outputs signal 52-1 for line/drive changeover
Motor 2 / Motor 1	SWM2	Outputs motor changeover control switch for switching between motor 1 and motor 2
Auxiliary Terminal	AX	ON - drive is running
Times UP	TU	Outputs a 100ms ON pulse for time up for pattern operation
Cycle Complete	TO	Outputs a 100ms ON pulse for cycle complete for pattern operation
Stage 1 Indicator	STG-1, STG-2, STG-3	Pattern operation stage indicator (binary encoded)
Alarm 1 Indicator	AL-1, AL-2, AL-4	Trip alarm number (binary encoded)
Fan Control	FAN	Outputs the drive fan control signal for 40 Hp and larger drives
Auto-resetting	1-TRY	ON - auto resetting mode or reset waiting mode active
Universal Digital Output	U-DO	ON - Enables output from RS485 or LAN option
Overheating Early Warning	OH	ON - heatsink temperature is larger than preset detection level
Synchronization Complete	SY	Synchronization signal for synchronize operation option
Loss of C1 Current Input Signal	C1-OFF	ON - When C1 current input is smaller than 2mA
Common	CM	Common terminal for transistor output signals

AF-300 G11™ Specifications

Relay Output	Item	Description
Alarm Relay Output	30A, 30B, 30C	Activates when a protective function is activated, programmable with the default state function code settable
Programmable Relay Output	Y5A, Y5C	Selectable the same as Y1-Y4
Options	**Item**	**Description**
	LAN	GENIUS
	LAN	Profibus DP
	LAN	N2 - Metasys
	LAN	Interbus-S
	LAN	Modbus Plus
	LAN	DeviceNet
Tachometer		
KEYPAD Extension Cable		Adaptor for RJ45 cable, up to 100'

Input/Output Specifications

Three-phase 230V series

Type designation 6KG1123_ _ _X1A1 (NEMA Type1) 6KG1123_ _ _X2A1 (NEMA Type12) 6KG1123_ _ _X4A1 (NEMA Type4) 6KG1123_ _ _X8A1 (Open, Type 12 Heatsink) 6KG1123_ _ _X9A1 (Open)			F25	F50	001	002	003	005	007	010	015	020	025	030	040	050	060	075	100	125
Nominal 230V system applied motor		HP	1/4	1/2	1	2	3	5	7.5	10	15	20	25	30	40	50	60	75	100	125
Output ratings	Rated Capacity *1)	kVA	0.59	1.1	1.9	3.1	4.3	6.7	9.9	13	18	23	29	34	45	57	71	85	112	137
	Rated Voltage *2)	V	3-phase, 200V /50Hz , 200V 220V ,230V /60Hz																	
	Rated Current *3)	A	1.5	3.0	5.0	8.0	11	17	25	33	46	59	74	87	115	145	180	215	283	346
	Overload Capability		150% of rated current for 1min , 200% of rated current for 0.5s												150% of rated current for 1min , 180% of rated current for 0.5s					
	Rated Frequency	Hz	50 60Hz																	
Input ratings	Phases, Voltage, Frequency		3 phase, 200 to 230V 50/60Hz												3-phase, 200 to 220V /50Hz , 200 to 230V /60Hz * 220 to 230V /50Hz *4)					
	Voltage / frequency variations		Voltage +10 to -15% (Voltage unbalance *5) 2% or less) Frequency +5 to -5%																	
	Momentary voltage dip capability *6)		When the input voltage is 165V or more, the inverter can be operated continuously When the input voltage drops below 165V from rated voltage, the inverter can be operated for 15ms (within 85% load of nominal applied motors) The smooth recovery method is selectable																	

1) Drive output capacity [kVA] at 230V
2) Output voltage is proportional to the power supply and can't exceed the power supply voltage
3) Current derating may be required in case of low impedence load such as high frequency motor.
4) 220 to 230 V/50 Hz: Order individually
5) Reference to the IEC 61800-3 (5.2.3)
6) Input power: 85%

Three-phase 460V series

Type designation 6KG1143_ _ _X1A1 (NEMA Type1) 6KG1143_ _ _X2A1 (NEMA Type12) 6KG1143_ _ _X4A1 (NEMA Type 4) 6KG1143_ _ _X8A1 (Open, Type 12 Heatsink) 6KG1143_ _ _X9A1 (Open)			F50	001	002	003	005	007	010	015	020	025	030	040	050	060	075	100	125	150	200	250	300	350	400	450
Nominal 480V system applied mot		HP	1/2	1	2	3	5	7.5	10	15	20	25	30	40	50	60	75	100	125	150	200	250	300	350	400	450
Output ratings	Rated Capacity *1)	kVA	1.1	1.9	2.9	4.3	7.1	10	14	19	23	31	35	47	59	72	89	119	140	167	201	242	300	330	414	
	Rated Voltage *2)	V	3 phase, 380V 400V , 415V /50Hz , 380V , 400V , 440V , 460V /60Hz																							
	Rated Current *3)	A	1.5	2.5	3.7	5.5	9.0	13	18	24	30	39	45	60	75	91	112	150	176	210	253	304	377	415	520	
	Overload Capability		150% of rated current for 1min , 200% of rated current for 0.5s											150% of rated current for 1min , 180% of rated current for 0.5s												
	Rated Frequency	Hz	50, 60Hz																							
Input ratings	Phases, Voltage, Frequency		3 phase, 380 to 480V , 50/60Hz											3 phase, 380 to 440V /50Hz , 380 to 480V /60Hz * 380V/50Hz and 380 to 415V/60Hz *4)												
	Voltage / frequency variations		Voltage +10 to -15% (Voltage unbalance *5) 2% or less) Frequency +5 to -5%																							
	Momentary voltage dip capability *6)		When the input voltage is 310V or more, the inverter can be operated continuously When the input voltage drops below 310V from rated voltage, the inverter can be operated for 15ms (less than 85% load of nominal applied motors) The smooth recovery method is selectable																							

1) Drive output capacity [kVA] at 460V
2) Output voltage is proportional to the power supply and can't exceed the power supply voltage.
3) Current derating may be required in case of low impedence load such as high frequency motor.
4) Change the tap of auxiliary transformer
380/50 Hz: Change over CN UX connector from U1 part to U2 part (reference to the instruction manual)

Input Voltage	CN UX connector
400 to 440V/50 Hz, 440 to 480V/60 Hz 380V/50 Hz (398V or smaller)	U4 (factory setting)
380 to 415V/60 Hz (430V or smaller)	U2

5) Reference to the IEC 61800-3 (5.2.3)
6) Input power: 85%

Dimensions .25 - 30 Hp

Fig. 1

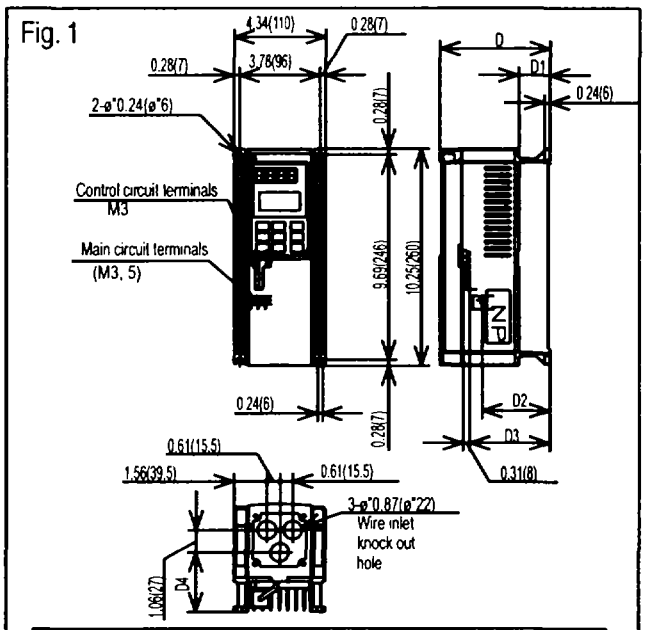

Type	D	D1	D2	D3	D4
1/4, 1/2 HP	5.12 (130)	1.44 (36.5)	3.15 (80)	3.70 (94)	2.81 (71.5)
1 HP	5.71 (145)	2.03 (51.5)	3.74 (95)	4.29 (109)	3.41 (86.5)

Fig. 2

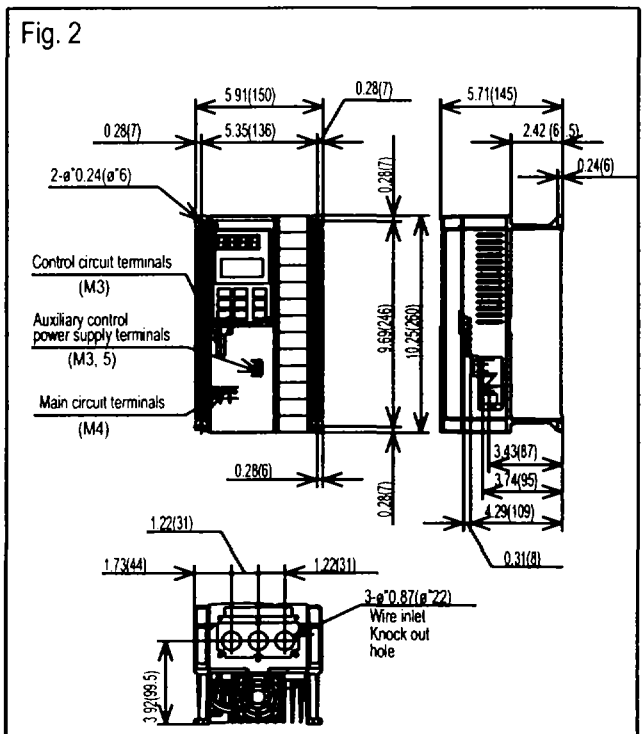

2 to 5 Hp

Fig. 3

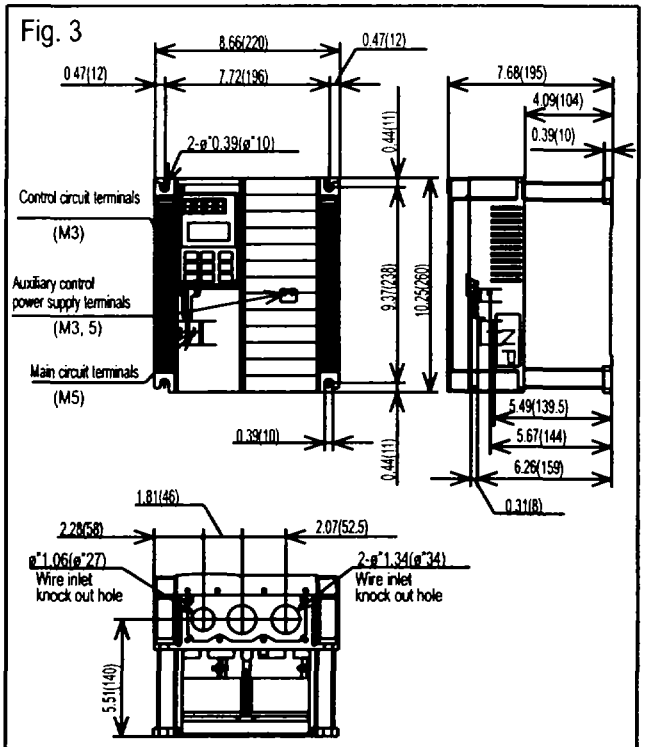

7 to 10 Hp

Fig. 4

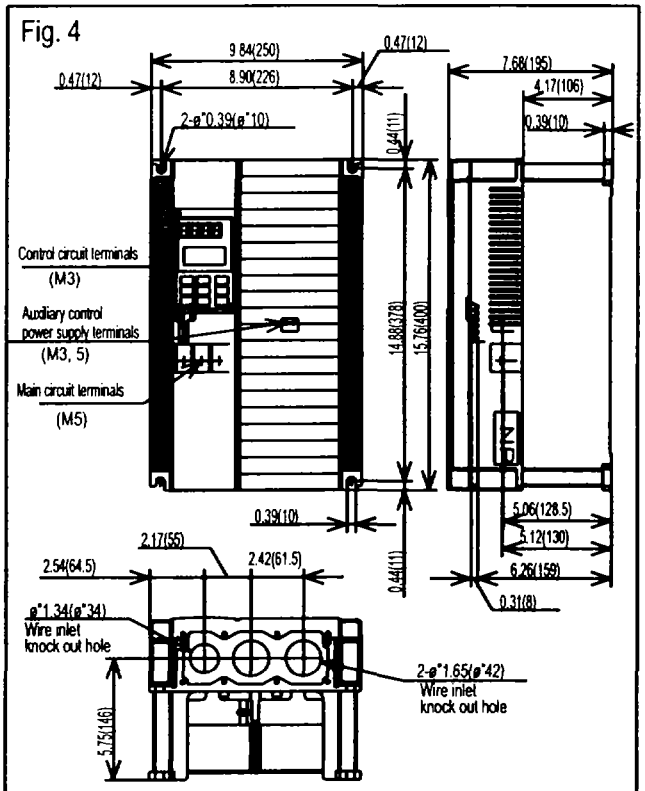

15 to 30 Hp

Dimensions NEMA 1

Surface Mount

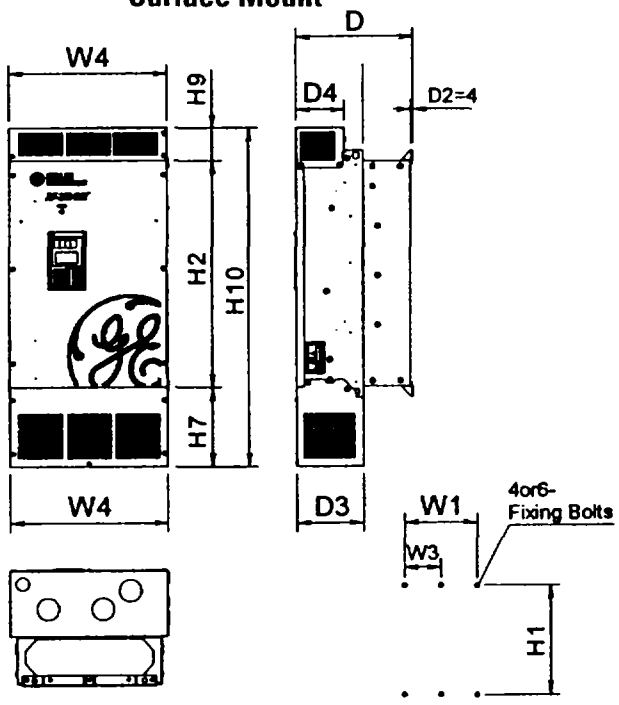

230V SERIES NEMA 1

HP	DIMENSIONS inches (mm) W1	W2	W3	W4	H1	H2	H3	H6	H7	H9	H10	D	D2	D3	D4	Mtg. Bolts	Wt. Lb (kg)
40 HP	9.4 (240)	12.8 (326)	–	13.5 (342)	20.9 (530)	19.7 (500)	20.2 (512)	0.4 (9)	7.1 (180)	3 (75)	29.7 (755)	10 (255)	0.2 (4)	5.7 (145)	4.1 (105)	M8	70 (32)
50 HP	10.8 (275)	14.2 (361)		14.9 (377)	23.4 (595)	22.2 (565)	22.7 (577)		7.9 (200)		33.1 (840)	10.6 (270)					86 (39)
60 HP					28.3 (720)	27.2 (690)	27.6 (702)				38 (965)						106 (48)
75 HP																	110 (50)
100 HP	16.9 (430)	20.01 (510)		21 (533)		27 (685)	27.4 (695)	0.5 (13)	11.1 (283)	3.3 (83)	41.3 (1050)	11.2 (285)			3.6 (91)	M12	172 (78)
125 HP	22.8 (580)	26 (660)	11.4 (290)	26.9 (683)	33.5 (850)	32.1 (815)	32.5 (825)		15.1 (383)		50.4 (1280)	14.2 (360)		8.7 (220)	6.5 (166)		282 (128)

460V SERIES NEMA 1

HP	DIMENSIONS inches (mm) W1	W2	W3	W4	H1	H2	H3	H6	H7	H9	H10	D	D2	D3	D4	Mtg. Bolts	Wt. Lb (kg)
40 HP	9.4 (240)	12.8 (326)	–	13.5 (342)	20.9 (530)	19.7 (500)	20.2 (512)	0.4 (9)	7.1 (180)	3 (75)	29.7 (755)	10 (255)	0.2 (4)	5.7 (145)	4.1 (105)	M8	70 (32)
50 HP	10.8 (275)	14.2 (361)		14.9 (377)								10.6 (270)					82 (37)
60 HP					25.8 (655)	24.6 (625)	25.1 (637)				34.6 (880)						95 (43)
75 HP																	97 (44)
100 HP					28.3 (720)	27.2 (690)	27.6 (702)		7.9 (200)		38 (965)						115 (52)
125 HP 150 HP	16.9 (430)	20.0 (510)		21 (533)	28 (710)	26.6 (675)	27 (685)	0.5 (13)	8.2 (208)	3.3 (83)		12.4 (315)		6.9 (175)	4.7 (121)	M12	174 (79)
200 HP 250 HP					38 (970)	37 (935)	37 (945)		13 (333)		53.1 (1350)	14.2 (360)		9 (220)	7 (166)		245 (111)
300 HP 350 HP	22.8 (580)	26 (660)	11.4 (290)	26.9 (683)					15.1 (383)		55.1 (1400)						337 (153)
400 HP 450 HP																	

Dimensions Open Type

Surface Mount

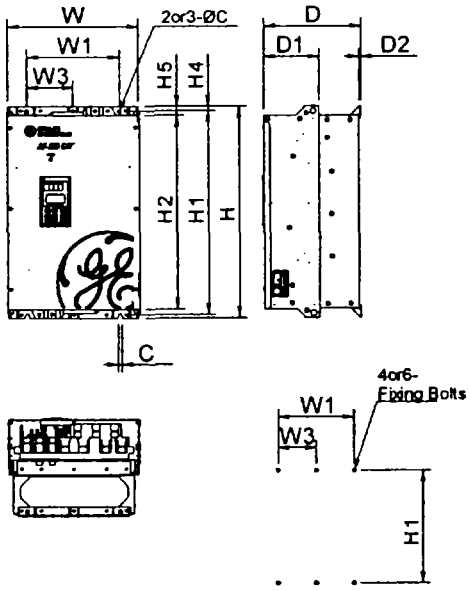

Through Panel Mount

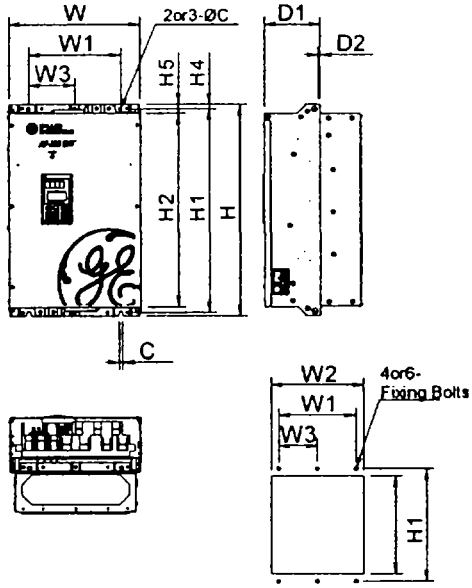

[230V SERIES]																	
HP	DIMENSION Inch (mm)															Mtg.	Weight
230V	W	W1	W2	W3	H	H1	H2	H3	H4	H5	H6	D	D1	D2	C	Bolts	Lb (kg)
40 HP	13.4 (340)	9.4 (240)	12.8 (326)		21.7 (550)	20.9 (530)	19.7 (500)	20.2 (512)	0.5 (12)	1 (25)	0.4 (9)	10 (255)	5.7 (145)	0.2 (4)	0.4 (10)	M8	64 (29)
50 HP	14.8 (375)	10.8 (275)	14.2 (361)		24.2 (615)	23.4 (595)	22.2 (565)	22.7 (577)				10.6 (270)					79 (36)
60 HP					29.1 (740)	28.3 (720)	27.2 (690)	27.6 (702)									97 (44)
75 HP																	101 (46)
100 HP	20.9 (530)	16.9 (430)	20.1 (510)		29.5 (750)		27 (685)	27.4 (695)	0.6 (16)	1.3 (33)	0.5 (13)	11.2 (285)			0.6 (15)	M12	154 (70)
125 HP	26.8 (680)	22.8 (580)	26 (660)		34.6 (880)	33.5 (850)	32.1 (815)	32.5 (825)				14.2 (360)	8.7 (220)				253 (115)
[460V SERIES]																	
HP	DIMENSION Inch (mm)															Mtg.	Weight
460V	W	W1	W2	W3	H	H1	H2	H3	H4	H5	H6	D	D1	D2	C	Bolts	Lb (kg)
40 HP	13.4 (340)	9.4 (240)	12.8 (326)		21.7 (550)	20.9 (530)	19.7 (500)	20.2 (512)	0.5 (12)	1 (25)	0.4 (9)	10 (255)	5.7 (145)	0.2 (4)	0.4 (10)	M8	64 (29)
50 HP	14.8 (375)	10.8 (275)	14.2 (361)									10.6 (270)					75 (34)
60 HP					26.6 (675)	25.8 (655)	24.6 (625)	25.1 (637)									86 (39)
75 HP																	88 (40)
100 HP					29.1 (740)	28.3 (720)	27.2 (690)	27.6 (702)									106 (48)
125 HP 150 HP	20.9 (530)	16.9 (430)	20.1 (510)			28 (710)	26.6 (675)	27 (682)	0.6 (16)	1.3 (33)	0.5 (13)	12.4 (315)	6.9 (175)		0.6 (15)	M12	154 (70)
200 HP 250 HP					39.4 (1000)	38.2 (970)	36.8 (935)	37.2 (945)				14.2 (360)	8.7 (220)				220 (100)
300 HP 350 HP	26.8 (680)	22.8 (580)	26 (660)	11.4 (290)													308 (140)
400 HP 450 HP																	

Plug-in Terminal Strip Assignments

	30A	Y5A	CMY	Y3	Y1	C1	FMA	FMP	PLC	X1	X2	X3	X4	X5	X6	X7	X8	X9	
30C	30B	Y5C	Y4	Y2	11	12	13	V2	CM	CM	FWD	REV	P24	P24	DX	DX	SD		

Classification	Terminal Symbol	Terminal Name	Function
Analog input	13	Potentiometer power supply	Used for +10V DC power supply for frequency setting POT (resistance of 1 to 5k Ohm)
	12	Voltage input	① Frequency is set according to the analog input voltage supplied from an external circuit. - 0 to +10V DC / 0 to 100% - Reversible operation using positive and negative signals: 0 to +/- 10V DC / 0 to 100% - Reverse operation: +10 to 0V DC / 0 to 100% ② The feedback signal for PID control is input. ③ The analog input value from the external circuit is used for torque control * Input resistance: 22 k Ohm
	V2	Voltage input supplied from an external circuit.	¨Frequency is set according to the analog input voltage - 0 to +10V DC/0 to 100% - Reverse operation: +10 to 0V DC/0 to 100% * Use only one terminal - V2 or C1 alternatively. * Input resistance: 22 k Ohm
	C1	Current input	① Frequency is set according to the analog input current supplied from an external circuit. - 4 to 20mA DC / 0 to 100% - Reverse operation: 20 to 4mA DC / 0 to 100% ② The feedback signal for PID control is input. ③ PTC thermistor input 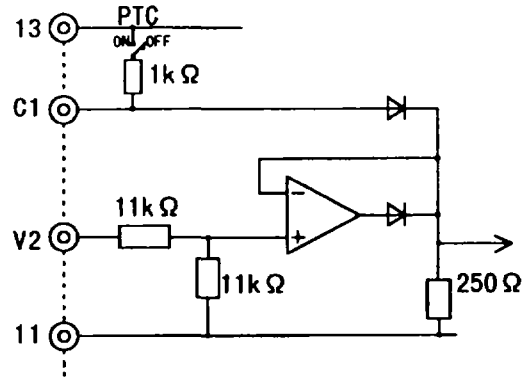 * Use only one terminal - V2 or C1 alternatively * Input resistance: 250 Ohm
	11	Analog input common	Common terminal for analog input signals

Digital input	FWD	Forward operation / Stop command	Used for forward operation (when FWD-CM is on) or deceleration and stop (when FWD-CM is off)
	REV	Reverse operation / Stop command	Used for reverse operation (when REV-CM is on) or deceleration and stop (when REV-CM is off)
	X1	Digital input 1	The coast-to-stop command, external alarm, alarm reset, multi-step frequency selection, and other functions (from an external circuit) can be assigned to terminals X1 to X9. For details, see "Setting the Terminal Functions E01 to E09" in Section 5.2 Function Explanation in the Instruction Manual. <Specifications of digital input circuit>
	X2	Digital input 2	
	X3	Digital input 3	
	X4	Digital input 4	
	X5	Digital input 5	
	X6	Digital input 6	
	X7	Digital input 7	
	X8	Digital input 8	
	X9	Digital input 9	
	P24	Control Unit power Supply	+24VDC power supply for control input. Maximum output current = 100mA
	PLC	PLC signal power	Used to connect power supply for PLC output signals; rated voltage = 24 VDC (22 to 27) at sink logic operation.
	CM	Digital input common	Common terminal for digital input signals and P24
Analog output	FMA (11: common terminal)	Analog monitor	Outputs monitor signal using analog DC voltage 0 to +10V DC. The signal indicates one of the following: - Output frequency (before slip compensation) - Load factor - Output frequency (after slip compensation) - Power consumption - Output current - PID feedback value - Output voltage - PG feedback value - Output torque - DC link circuit voltage * Connectable impedance: min. 5kW
Pulse output	FMP (CM: Common terminal)	Frequency monitor (pulse waveform output)	Outputs a monitor signal using the pulse waveform. This signal has the same function as the FMA signal.

Item		min.	typ.	max.
Operating voltage	ON	0V	-	2V
	OFF	22V	24V	27V
Operating current	ON		3.2mA	4.5mA
Allowable leakage current	OFF			0.5mA

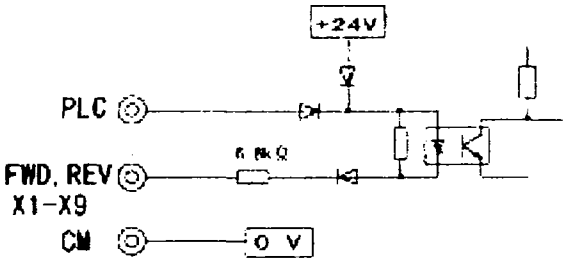

Transistor	Y1	Transistor output 1	A running signal, frequency equivalence signal, overload early warning output signal, and other signals from the drive are output (as transistor output) to arbitrary ports. For details, see "Setting the Terminal Functions E20 to E23" in Section 5.2 Function Explanation In the Instruction Manual. * <Specifications of transistor output circuit>
	Y2	Transistor output 2	
	Y3	Transistor output 3	
	Y4	Transistor output 4	
	CME	Transistor output common	Common terminal for transistor output signals. This terminal is isolated from terminals (CM) and [11].
Relay output	30A,30B,30C	Alarm outputs for any fault.	If the drive is stopped by an alarm (protective function), the alarm signal is output from the relay contact output terminal (1SPDT). Contact rating: 250 VAC, 0.3A,cosØ = 0.3, 48 VDC, 0.5A for CE Marking An excitation mode (excitation at alarm occurrence or at normal operation) can be selected.
	Y5A,Y5C	Multi-purpose signal relay outputs	These signals can be output similar to the Y1 to Y4 signals above. The contact rating for any fault is the same as that of the alarm output above.
Communic-ation	DX+,DX-	RTU communication	Input / output signal terminals for RTU communication input / output Up to 31 inverters can be connected using the daisy chain method.
	SD	Communication cable shield connection terminal	Terminal for connecting the cable shield. The terminal is electrically floating.-

Item		min.	typ.	max.
Operating voltage	ON	–	1V	2V
	OFF	–	24V	27V
Maximum load current	ON	–	–	50 mA
Leakage current	OFF	–	–	0.1 mA

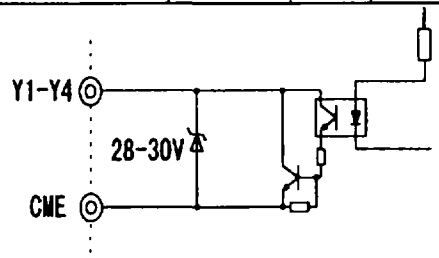

GE Industrial Systems

1501 Roanoke Boulevard, Suite 435
Salem, VA 24153
1-800-543-6196
Internet Address: http//www.ge.com

MANUFACTURER'S PRODUCT SPECIFICATIONS

Chart Recorder

DR4500A Truline®
Circular Chart Recorder

Specification

Function

Honeywell's Truline recorder is a one to four-channel, microprocessor-based, circular chart recorder. Its "one-pen" stylus printhead produces up to four analog traces and prints alphanumeric chart data on a blank heat-sensitive chart. All four traces share the *same time line* reference which the Truline prints. This eliminates the error caused by pen alignment offsets in conventional pen designs. Since the Truline prints the chart and generates the analog traces at the same time, there is no error due to variations in chart size caused by changes in temperature and humidity.

With microprocessor electronics and single printhead, the Truline recorder is easily configured by users to meet a variety of application requirements - from metals to food processing. Models with up to four input channels accept inputs from any one of a variety of sensors or transmitters within the configurable range limits.

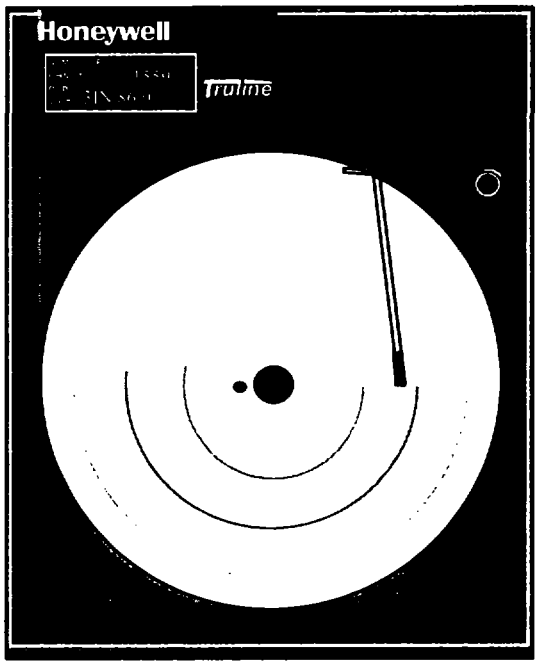

20889

Figure1 - Truline recorder provides printed chart data and continuous digital indication of process variable value.

Also, models are available with one or two independent digital controllers to generate controlled output signals which will operate valves, dampers, heating elements, etc. for process control.

Features

- ***User Configurable*** — means that users, using English language prompts, can set and/or alter operating parameters to fit their requirements, including type of input, without recalibration.
- ***Operator Interface*** — includes clear, brilliant alphanumeric displays; indicators; deviation bargraph; and keypad for visual and tactile interaction.
- ***All-Purpose Chart*** —blank chart eliminates the need for ordering and stocking several types of charts. And, users can design the chart to match specific applications.
- ***Four Channels*** — up to four channels that monitor process variables from a variety of sensors reduce panel space requirements.

Features, continued

- ***"One-pen" Printer*** — prints configurable alphanumeric chart data including time and trend lines. This automatically compensates for chart width variations caused by changes in the ambient relative humidity.
- ***Control Output*** — up to two versatile PID digital controllers let users configure the exact control action needed for their process.
- ***Time/Date*** — real-time, clock, dates, time of printing (hour, minutes, date and year) and any operator changes in real time guard against unauthorized chart advancement. There is a 10-year life battery backup.
- ***Accutune II™*** —This standard feature provides a new, truly plug and play tuning algorithm, which will, at the touch of a button or through a digital input, accurately identify and tune any process including those with deadtime and integrating processes. This speeds up and simplifies start-up plus allows re-tuning at any setpoint.

Features, continued

- ***Fuzzy Logic*** — This standard feature uses fuzzy logic to suppress process variable overshoot due to SP changes or externally induced process disturbances. It operates independently from Accutune II™ tuning. It does not change the PID constants, but temporarily modifies the internal controller response to suppress overshoot. This allows more aggressive tuning to co-exist with smooth PV response. It can be enabled or disabled depending on the application or the control criteria.
- ***Setpoint Ramp*** — a single set point ramp is user programmable and is easily repeated and activated through the Run/Hold key.
- ***Setpoint Rate*** — lets you define a ramp rate applied to any local setpoint change. A separate upscale or downscale rate is configurable.

Printed in U.S.A. © Copyright 2002—Honeywell

Features, continued

Set Point Ramp/Soak Programming — Lets users program and store 18 ramp and 18 soak segments. Run or Hold of program is keyboard or remote switch selectable. Each Control Loop can run one of the 6 profiles using any number of consecutive segments of the program. You can select a recovery mode for power-up.

• ***Event Messages*** — up to six event messages can be printed on designated areas of the chart and can be triggered by a specific selectable event.

External Interface Selections

• ***Auxiliary Output*** — there is also a 4 to 20 mA current output available. It can be used to retransmit a process variable.
In addition, the 4-20 outputs on the control board can be used as an auxiliary output if not used for control.

• ***Modbus™ Communications*** — option allows you to network your recorders to take advantage of overall monitoring of the system using an RS485 network.

• ***Six Alarms*** — up to six integral "soft" alarms are easily set by users to announce selected, out-of-limit conditions.

• ***Timer*** — This optional feature provides a configurable time period of 0 to 99 hours, 59 minutes or units of minutes and seconds. It can be started via the keyboard, alarm 2, or by a digital input. The timer output is Alarm 1 that energizes at the end of the Timer Period. Alarm 1 can be automatically reset. The Timer Period can be changed between each batch. Status is shown on the lower display. • ***Digital Input*** — Allows users to initiate from a remote location through two dry contact closures, selected recorder functions, such as automatic to manual control mode, direct to reverse controller action, or initiate autotune.

Options*

• ***CE Mark*** — Conformity with 73/23/EEC, Low Voltage Directive and 89/336/EEC EMC Directive.

• ***Chart Illumination*** — Lights the chart area to improve readability in lower light areas.

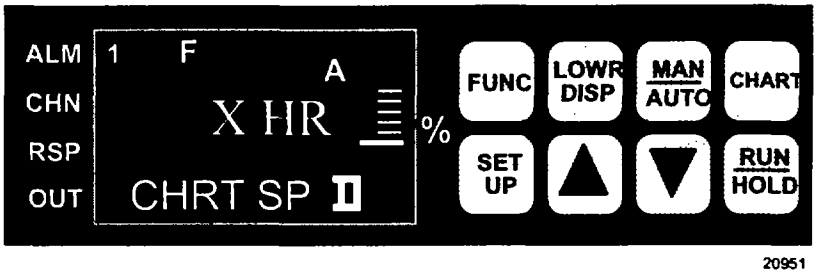

Figure 2 - Operator interface includes displays and keypad for comprehensive interaction with the recorder and the process.

Options*, continued

• ***Two Totalizers*** — one or two totalizers are available. Eight digit totals with multiplier on digital display. Fourteen digits totalization print out on chart; a grand total can be printed.

• ***Math Functions***

Algorithms — pre-configured algorithms for easy implementation into other control loop with Ratio and Bias.

Summer - will add three inputs with the result as the derived PV.

Multiplier/Divider - **uses** three analog inputs to calculate a derived PV with or without square root.

Multiplier- will multiply three inputs with the result as the derived PV with or without square root.

Subtractor/Multipler - **the** difference between input 1 and input 2 is multiplied by input 3.

Input High/Low Select - **specifies** the PV as the higher or lower of two inputs.

Polynomial Curve Characteristics -- A fifth order polynomial equation can be used on any one of the analog inputs.

• ***Door Options*** — Choice of gray, black or blue doors with standard latch or optional lock.
Optional UL and FM approved NEMA4X door available.

• ***Approval Body Options*** — FM approval, CSA certification and UL Listing or a combination is available.

• ***Customer ID Tag*** — (30 characters max.)

*Restrictions apply -- Not all of the options can be supplied together.

User Configurable

In the DR4500A Series recorder, microprocessor control replaces conventional electromechanical recording techniques. This means that its software now primarily determines the recorder's capabilities. Since Honeywell has preprogrammed a variety of functional capabilities into the recorder, a user only has to configure those functions that are specific for the given application.

Operator Interface

Two digital displays present the process variable (PV) value and by key selection, the controller set point; controller output; deviation from reference input; dry bulb temperature; totalization value; or engineering units as desired. The lower display can also be set to scroll or hold.

In configuration mode, digital displays are pre-empted by English language prompts and values that you use to enter configuration data (type of input, chart speed, chart range, alarm settings, tuning constants, etc.) and then stored in nonvolatile memory for safe keeping in the event of a power failure.

Indicators light to show alarm conditions, which channel PV is on display, use of remote set point, which output relay is on, selected temperature unit, and controller's mode of operation. A deviation bargraph lets operators tell at a glance if the process variable is at, above, or below the controller's set point.

The keypad through which configuration data is entered also serves as an integral automatic/manual station that provides bumpless transfer for controllers.

Microprocessor Controlled Recording and Printing

Both the chart and the printhead are driven by the stepper motors, which are controlled by the microprocessor. The microprocessor uses the configured chart range data as well as the input data to determine the proper printhead position. The stepper motor accurately positions the printhead drive.

Since chart speed is configurable, users can easily alter the chart speed through the keypad. Gear changing or additional motors are no longer required.

By using a "one-pen" printhead that is capable of printing alphanumeric characters, users can now set various "printed" chart data through configuration. This means that such chart data as range marking in engineering units; digital values for process variables, and trace identification are easily personalized for the application.

This data, plus printed time lines and engineering units of scale eliminate the need to maintain an inventory of a variety of preprinted charts.

The Truline recorder uses a dot fill technique from a microprocessor algorithm to produce a continuous analog trace of a process variable.

Input Processing

The input can be one of many standard low-level electrical signals. Since inputs are isolated, users can connect different types of input signals to multi-channel models in any combination. And, for models with 2 or more channels, a relative humidity (wet/dry bulb) actuation is available using 100 ohm platinum bulbs (Alpha (α) = 0.00385).

The input type and range are user configurable. Ranges are easily expanded and compressed within their span limitations to meet specific measurement needs. Users can select upscale or downscale sensor break protection for many of the actuations.

An integral 24 Vdc power supply, along with 4-20 mA input configuration, allows direct operation with up to two transmitters without the need for any additional/external transmitter power supply.

To totalize a variable, such as a flow signal, users select the applicable input and set the digital display scaling factor through configuration. This eliminates the need for additional integration hardware including a mechanical counter. The totalizer has an eight digit display and 14 digit printing on the chart.

Also, there is the capability to reset the totalizer remotely with digital inputs and a low flow cutoff can be set, in percent of range, below which the applicable totalizer does not increment. Elapsed time can also be totalized. A grand total can be enabled to print the sum of all the totalizers.

Digital Controller

The DR4500A Series recorder controller (1 or 2 loops) includes an integral microprocessor-based, PID controller. A variety of output types, including a duplex variation for heat-cool applications, lets users select the output that is right for their final control element.

Depending on the output type, users can configure the control action as On-Off, PID-A, PID-B, PD with Manual Reset or 3 Position Step control.

As with the record functions, English language prompts quickly guide users through the entry of all the controller's configurable parameters.

Diagnostics

All DR4500A Series recorders include self-diagnostic systems that check critical operations and provide error messages to alert users about detected faults.

Power-up self-diagnostics is a microprocessor controlled diagnostic program that runs tests on selected circuitry when the recorder is powered up. A "key" test allows a user to initiate, on demand, a self-diagnostic routine that checks the keypad and front panel displays.

Construction

The DR4500A Series recorder is housed in a molded case, which can be panel or surface, mounted. A glass or optional acrylic window, gasketed door protects internal components from harsh industrial environments while allowing easy access to the chart and operator interface.
A UL and FM approved NEMA4X door is also available.
Circuitry is partitioned on printed circuit boards for ease of service.

Process Interface

Power, input, and output wiring connect to terminations inside the case. Knockouts in the sides and bottom of the case accept conduit connections for convenient wire entry.

Specifications

Design

Digital Indication Accuracy	1 digit
Minimum Input Span	Range is fully configurable with span limitation of the operating range selected
Input Impedance	*4-20 mA dc:* 250 ohms *0-10 Vdc:* 200K ohms *All others:* 10 Megohms
Source Impedance	*RTD:* 100 ohms per lead maximum
Sampling Rate	Each input sampled 3 times a second (1 or 2 inputs); 3 times in 2 seconds (3 or 4 inputs)
Input Filter	*Software*: Single pole low pass section with selectable time constants (off to 120 seconds)
Digital Displays	Vacuum fluorescent, alphanumeric. A six-digit display dedicated to the process variable. Alternate information displayed during configuration mode. An eight-digit display shows key selected operating parameters. Also provides guidance during configuration.
Indicators	Channel PV display (CHN 1, 2, 3, or 4) Alarm status (ALM 1, 2) Controller Output (OUT 1 or 2) Remote Set Point (RSP) Temperature unit (F or C) or Engineering units Controller's mode (A or MAN)
Deviation Bargraph	21 segment, color coded deviation bargraph: Green (large) = On Control Green (Small) = Deviation to ± 10% of PV
Controller Modes of Operation	Manual Operation Automatic with local set point Automatic with remote set point
Transmitter Supply Voltage	22 to 26 Vdc at input terminals (50 mAdc at 24 Vdc)

Performance

Number of Inputs	*One channel model:* One input *Two channel model:* Two inputs *Three channel model:* Three inputs *Four channel model:* Four inputs

Types of Input Actuation[1]	Range		Reference Accuracy		Temp. Stability ± Degrees Error Per 1 Degree ΔT
	°F	°C	± °F	± °C	
Thermocouples[2]	**105 to 3300**	**41 to 1816**			
B	105 to 150	41 to 66	42.00	23.00	2.00
	150 to 500	66 to 260	14.00	7.70	2.00
	500 to 1000	260 to 538	3.00	1.70	0.50
	1000 to 3300	538 to 1816	1.50	0.80	0.20
E	**-454 to 1832**	**-270 to 1000**			
	-454 to -202	-270 to -130	18.00	10.00	0.70
	-202 to 1832	-130 to 1000	1.00	0.55	0.35
E (low)	**-200 to 1100**	**-129 to 593**	0.50	0.30	0.20
J	**0 to 1600**	**-18 to 871**	0.40	0.22	0.06
I (low)	**20 to 770**	**-7 to 410**	0.20	0.11	0.04

Specifications, continued

Types of Input Actuation[1]	Range °F	Range °C	Reference Accuracy ± °F	Reference Accuracy ± °C	Temp. Stability ± Degrees Error Per 1 Degree ΔT
K	**-320 to 2500**	**-196 to 1371**			
	-320 to 0	-196 to -18	1.25	0.70	0.18
	0 to 2500	18 to 1371	0.60	0.35	0.09
K (low)	**-20 to 1000**	**-29 to 538**	0.30	0.16	0.05
NNM (Ni Ni Moly)	**32 to 2500**	**0 to 1371**			
	32 to 500	0 to 260	0.75	0.40	0.09
	500 to 2500	260 to 1371	0.50	0.30	0.07
NIC (Nicrosil Nisil)	**0 to 2372**	**-18 to 1300**	1.0	0.55	0.01
R	**0 to 3100**	**-18 to 1704**			
	0 to 500	-18 to 260	2.00	1.10	0.25
	500 to 3100	260 to 1704	1.00	0.55	0.13
S	**0 to 3100**	**-18 to 1704**			
	0 to 500	-18 to 260	2.00	1.10	0.23
	500 to 3100	260 to 1704	1.00	0.55	0.13
T	**-300 to 700**	**-184 to 371**	0.60	0.35	0.07
T (low)	**-200 to 600**	**-129 to 316**	0.40	0.22	0.07
W5W26	**0 to 4200**	**-18 to 2315**			
	0 to 600	-18 to 316	1.40	0.77	0.17
	600 to 3600	316 to 1982	1.30	0.70	0.17
	3600 to 4200	1982 to 2315	1.60	0.90	0.29
W5W26 (low)	**0 to 2240**	**-18 to 1227**			
	0 to 600	-18 to 316	1.10	0.60	0.14
	600 to 2240	316 to 1227	1.00	0.55	0.10
Radiamatic (RH)	**1400 to 3400**	**760 to 1871**	1.00	0.55	0.10
RTDs[2]					
Platinum					
100 ohms	**–300 to 900**	**–184 to 482**	0.40	0.22	0.05
200 ohms (High)**	**32 to 752**	**0 to 400**	0.30	0.16	0.05
200 ohms (Low)**	**32 to 392**	**0 to 200**	0.20	0.12	0.05
500 ohms	**–300 to 900**	**–184 to 482**	0.20	0.11	0.05
Linear					
Milliamperes dc	4 to 20	–	0.10%	–	0.004% /°F
Millivolts dc	0 to 10	–	0.05%	–	0.004% /°F
	10 to 50	–	0.05%	–	0.004% /°F
Volts dc	1 to 5 (can be calibrated 0 to 5)	–	0.05%	–	0.004% /°F
	0 to 10	–	0.10%	–	0.004% /°F
Relative Humidity					
Platinum 100 ohm Wet/Dry Bulb* — **Wet/Dry Input**	**–130 to 392**	**–90 to 200**	0.30	0.16	0.03
	Measured %RH	**Dry Bulb Range °F**	**°C**	**Reference Accuracy ± °F / ± °C**	**Temp. Stability 53 to 104°F/ 12 to 40°C**
%RH[3]	0 to <20	–103 to 212	–75 to 100	2% RH	0.11% RH/°F
	20 to 100	35 to 40	2 to 4	2% RH	0.11% RH/°F
		>40 to 100	>4 to 38	1% RH	0.06% RH/°F
		100 to 212	38 to 100	1% RH	0.03% RH/°F

[1]Not all Input Actuations are available on all models of the Truline Recorder. Consult Model Selection Guide for information.

[2]Includes reference junction calibration of ± 0.01degrees using standard "ice bath" method of calibration. Factory calibration at reference ± 1.2°F. Note that factory calibration may vary by as much as ± 10 microvolts or ± 0.3 ohms for RTDs which means recalibration may be required to achieve stated accuracy.

[3]The RH calculation is inoperative when temperature goes below 32°F (0°C) or above 212°F (100°C). However, the dry bulb temperature will be monitored to -103°F (-75°C). Accuracy stated is for Truline Recorder only and does not include remaining system accuracies.

*IEC Alpha (α) = 0.00385 Ω/Ω/°C

**Only available with Model DR45AR

Specifications, continued

Configurable Parameters: These parameters can be set through the keypad for Recorder DR45AT -- Different parameters apply for DR45AR, DR45AW, DR45AH, and DR45AP Models.

Group	Parameters	Setting Range or Selection	Resolution
INPUT 1	Decimal point location	None, 1 (XXX.X) or 2 (XX.XX) -- one decimal place only for non-linear inputs	
	Units	°F, °C or engineering units	
	Engineering Units	A to Z, 0 to 9, +, –, \ .	
	Actuation type	See input types	
	Transmitter characterization	All non-linear input types, linear, square root	0.1
	High range value	–999.0 to 9999	0.1
	Low range value	–999.0 to 9999	
	Low Flow Cutoff	0 to 100% of input range	0.1
	Input compensation	–999.0 to 9999	1.0
	Filter 1	0 to 120	
	Sensor break protection	None, Up or Down(burnout)	
	Emissivity	.01 to 1.00	0.01
INPUT 2	SAME AS INPUT 1		
INPUT 3	SAME AS INPUT 1		
INPUT 4	SAME AS INPUT 1		
PEN 1	Pen 1	Disable or Enable	
	Pen 1 input	Input 1,2,3,or 4, Output 1, SP 1, Dgtl1, Dgtl2, Output 2, SP 2, RH, PV1	
	Chart 1 high range value	–999.0 to 999	0.1
	Chart 1 low range value	–999.0 to 999	0.1
	Major chart division	2 to 10	
	Minor chart division	2 to 10	
	Range 1 Tag	Up to five characters	
	Pen 1 On	0 to 100% of chart	1
	Pen 1 Off	0 to 100% of chart	1
PEN 2	Same as PEN 1		
PEN 3	Same as PEN 1		
PEN 4	Same as PEN 1		
CHART	Chart speed	8 hrs, 12 hrs, 24 hrs, 7 days, or selected hours per revolution	
	Hours per revolution	6 to 744 hrs* (12 hrs. for Abrasion Resistant Pen)	
	Time Div	8 to 24	
	Minor Div	4 or 8	
	Continue	Yes or No (Chart rotation beyond 360 degrees)	
	Chart Name	Up to six characters	
	Header	Yes or No	
	Rem Chart	None, Extsw1, Extsw2, Alarm1,2, 3, 4, 5, or 6, Time	
	Wake Minute	0 to 59	
	Wake Hour	0 to 23	
	Wake Day	0 to 31	
	Wake Month	0 to 12 * Below 8 hrs. chart speed and 24 hrs. chart speed with Abrasion Resistant Pen, printing may be degraded.	
TIME	Minutes	1 to 59	
	Hours	0 to 23	
	Day	1 to 31	
	Month	1 to 12	
	Year	4-digits	
	Day	Monday to Sunday	
TOTAL 1	Totalized Value (Read only)	(8 digits displayed, 14 digits printed on chart)	
	Reset total	Yes or No	
	Total 1	Input 1, 2, 3, 4, PV1. ETime	
	Total engineering units	Desired alphanumeric title	
	Rate	Second, Minute, Hour, Day or Million/Day	
	Scaling factor	1, 10, 100, 1000, 10,000, 100,000 or 1E6	
	Resettable	No, Local, EXTSW1, EXTSW2	

Specifications, continued

Group	Parameters	Setting Range or Selection	Resolution
TOTAL 2	SAME AS TOTAL 1		
Controller			
Input Algorithm	Input Algorithm	Summer w/ratio-bias, multiplier with or without square root, multiplier/divider with or without square root, subtractor multiplier, or High/Low Select.	
	K Coefficient	00.000 to 1000	
	PV High Limit	-999 to 9999	
	PV Low Limit	-999 to 9999	
	Ratio A	-20 to +20	
	Bias A	-999 to 9999	
	Ratio B	-20 to +20	
	Bias B	-999 to 9999	
	Ratio C	-20 to +20	
	Bias C	-999 to 9999	
	Polynomial Characterization	None, Input 1, Input 2, Input 3, Input 4	
	Polynomial coefficient C0	–99.99 to 99.99	
	Polynomial coefficient C1, C2, C3, C4, and C5	–9.999 to 9 999	
Control 1 (2)	PID tuning sets	1 or 2 (keyboard or automatic switchover)	
	Set point source	Local, Remote* (Control 1 only), 2 Local, or Control Loop 2 output	
	Ratio (input 2)	–20.00 to 20.00	0.01
	Bias	–999 to 9999	1.0
	SP tracking	None or RSP (Control 1 only)	
	Power-up mode recall	Manual, Auto LSP, Auto RSP, AMSP, or AMLSP	
	Power Out	Last or Failsafe	
	High and low SP limits	0 to 100% of span in engineering units	
	Action	Direct or reverse	
	High and low output limits	–5 to 105% of output	1.0
	Dropoff value	–5 to 105% of output	1.0
	Deadband	–5.0 to 25%	0.1
	Output Hyst	0.0 to 5.0	0.1
	Failsafe output value	Within the output limits	1.0
	Remote Switching	None, ToMan, ToLSP, To2SP, ToDir, RN/HLD, TUNE	
	Man Key	Disable or Enable	
	PB or Gain	Proportional band (%) or gain	1.0
	Reset units	Repeats/minute or minutes/repeat	
	Control 1 Algorithm	PIDA, PIDB, PD + MR, ON-OFF, 3 Position Step	
	Output 1 Algorithm	Current, Position Prop, TimeD, Cur TI, TI Cur, Time	
TUNING 1(2)	Gain (or Prop Band)	0.1 to 1000	0.1
	Rate Min (or RPM)	0.00 to 10.00	0.01
	Reset Min (or RPM)	0.02 to 50.00	0.01
	Man Rset	–100 to 100% output	1
	Cyc Sec	1 to 120 sec.	1
SPRAMP 1(2)	SP Ramp (1 or 2)	Disable or Enable	
	Time Min	0 to 255	
	Final SP	0 to 100% of Span	
	SPRate	Enable or Disable	
	EU/HR UP	0 to 9999	
	EU/HR DN	0 to 9999	
	SP Program	Disable or Enable	
	Recycles	0 to 99	
	Soak Deviation	0.0 to 99.0	
	Profile	1 to 6	
	State	Disable or Hold	
	Recovery	Enable or Disable	
	Program End	Last Setpoint or Failsafe	

* For Remote Setpoint Input #3 is automatically assigned as your RSP source for Control #1; Input #4 is assigned for Control #2. However, if the recorder has only 2 inputs, then the RSP will be on Input #2.

* *Communications only

Specifications, continued

Controller (continued)			
Group	**Parameters**	**Setting Range or Selection**	**Resolution**
SPPSEGS	Profile Start Segment Profile End Segment Ramp Unit Synchronize Profiles Segment X Ramp Segment X Setpoint Segment X Time	Ramp 1 to Ramp 35 Soak 2 to Soak 36 Time or Rate Enable, Disable 0.00 to 99:59 within High/Low Range Limits 0.00 to 99.59	
SPP EVENT	Segment X Event	None, Alarm 1, 2, 3, 4, 5, or 6	
TIMER	Timer Period Start Ldisplay Reset Increment	Enable/Disable 0.00 to 99:59 Run/Hold Key or Alarm 2 Time Remaining or Elapsed Time Run/Hold key or Alarm 1 Minute or Second	
OPTIONS	Reject Frequency Relative Humidity Atm. Pressure Scroll Grand Totalizer Deviation Deviation Setpoint	60 or 50 Hz Yes or No 590 to 800 None, 1 sec, 2 sec, 3 sec Enable or Disable (Prints sum of all active totalizer at each major time line) None, SetPnt, Chan 1 –999.0 to 9999	
ALARMS (1, 2, 3, 4, 5, 6)	SP Value SP Type Alarm Type Alarm Scaling Multiplier for Totalizer Alarm Alarm Hysteresis	-999 to 9999 None, Input 1 (2, 3, 4), RH/PV, Dev, Output, Dev2, Out2, Event, Total 1, Total 2 High or Low 1, 10, 100, 1000, 10000, 100000, 1E6 0.0 to 100% of span or full output	 0.1
AUXILIARY OUTPUT	Aux Output 4mA Val 20mA Val	Disable, IN1, IN2, PV1, PV2, Dev1, Dev2, Out1(2),SP1 (2) Low scaling factor High scaling factor	
MODBUS	Communications State Communications Address Baud Transmit Delay	Enable/Disable 1 to 99 300, 600, 1200, 2400, 4800, 9600, 19200, 38400 None, 10msec, 20msec, 30msec, 40msec, 50msec.	
ADJUST PRINTING	Trace Line Grid Line Pen Type	Dark, Medium, Light Dark, Medium, Light Normal, Jewel	
EVNT MSG	Event 1 (2,3,4,5,6) MESSAGE 1 (2,3,4,5,6) POSITION 1 (2,3,4,5,6)	EXTSW1, EXTSW2, ALARM 1, ALARM 2, ALARM 3, ALARM 4, ALARM 5, ALARM6 Message for event (up to 6 characters) Chart position for message printing (0 to 100%)	
LOCKOUT	Password Lockout (software and/or hardware) Change	Up to four characters None, Calib, +Conf, Max (hardware configuration lockout-option) Used if changing Password	
STATUS	Version Failsafe RAM Test Configuration Test Calibration Test * Comm Test Fact CRC (Factory Set Input Constants) Battery test	Latest Software Version Yes or No Pass or Fail Pass or Fail Pass or Fail Pass or Fail Pass or Fail Pass or Fail	

* Communications only

Specifications, continued

Controller (continued)	
Controller Output[1] (Optional)	• *On-Off or Time Proportional* One SPST electromechanical relay. Control action can be set for direct or reverse; N.O. or N.C. contact selectable. • *On-Off Duplex , 3 Position Step, or Time Proportional Duplex* Two SPST electromechanical relays. Control action can be set for direct or reverse; N.O. or N.C. contact selectable. • *Current Proportional* 21 mAdc maximum into a negative or positive grounded or non-grounded load of 0 to 1000 ohms. Output range can be set between 4 and 20 mA, and as direct or reverse action. Resolution: 10 bits Accuracy: 0.5% full scale FM Approved Output (Optional) • *Position Proportional* Two SPST electromechanical relays operate motor having a 100 ohm to 1000 ohm slidewire. • *Current/Time Duplex and Time /Current Duplex* Variation of time proportional duplex for Heat/Cool applications. Time proportional output (heat or cool) is a SPST electromechanical relay. Current proportional output (heat or cool) is a 4-20 mA signal that can be fed into a negative or positive grounded load of 0 to 1000 ohms and is operational over 50 % of range or the entire range. Time Proportional Relay Resolution: 4.4 mSec. Relay Contact Ratings: Resistive Load: 5A @ 120 Vac, 2.5A @ 240 Vac Inductive Load: 50 VA @ 120 Vac or 240 Vac Cycle Time: 1 to 120 seconds Current Proportional : Resolution: 10 bits Accuracy: 0.5% full scale
CE Conformity (Europe) (Optional)	This product is in conformity with the protection requirements of the following European Council Directives: **73/23/EEC**, the Low Voltage Directive, and **89/336/EEC**, the EMC Directive. Conformity of this product with any other "CE Mark" Directive(s) shall not be assumed.
Product Classification:	Class I: Permanently Connected, Panel Mounted Industrial Control Equipment with protective earthing (grounding). (EN 61010-1)
Enclosure Rating:	Panel Mounted Equipment, IP 00, this recorder must be panel mounted. Terminals must be enclosed within the panel. Front panel IP 65 (IEC 529)
Installation Category (Over-voltage Category)	Category II: Energy-consuming equipment supplied from the fixed installation. Local level appliances, and Industrial Control Equipment. (EN 61010-1)
Pollution Degree:	Pollution Degree 2: Normally non-conductive pollution with occasional conductivity caused by condensation. (Ref. IEC 664-1)
EMC Classification	Group 1,Class A, ISM Equipment (EN 55011, emissions), Industrial Equipment (EN 50082-2, immunity)
Method of EMC Assessment	Technical File (TF)
Declaration of Conformity	51197639-000
Case/Door	Molded, foamed-Noryl* with gasketed door to meet NEMA 3 enclosure requirements. Panel gasket available separately. An optional UL and FM approved NEMA4X door is also available.
Chart	12-inch (304.8mm) diameter chart. Plain thermal-sensitive paper.
Wiring Connections	Terminals inside the case
Color	*Case:* Black *Door (standard):* Caribbean Blue, Black or Gray
Approval Bodies	U.L. approval depending on model. Consult Model selection Guide for information. FM approved for Class I, Div 2, Groups A, B, C, D areas depending on model.
Dimensions	See Figure 3
Weight	13.2 lb. (6 kg)
Mounting	Panel or surface mounted. Some adapter kits are available for existing panel cutouts.

* Registered Trademark -- General Electric Co.

1. Not all controller outputs are available on all models of the Truline Recorder. Consult Model Selection Guide for information.

Specifications, continued

Options	
Alarm Output	Two, four or six relays available. Relays 3 through 6 available if not used for control outputs. *Relay Contact Ratings:* First Relays, Resistive Load: 1A @ 120 Vac, 1/2A @ 240 Vac. Relays 3 through 6, Resistive Load: 5A @ 120 Vac, 2.5A @ 240 Vac.
Auxiliary Linear Output (Optional)	Three Auxiliary Outputs are available: 21 mA dc maximum into a negative or positive grounded load or non-grounded load of 0 to 1000 ohms. Output range can be set between 2 to 21 mA, and as direct or reverse action. It can be configured to represent any one of 12 parameters: Input 1-4, PV 1-2, Deviation 1-2, Output 1-2, Setpoint 1-2. The range of the auxiliary output, as a function of the selected variable, can be scaled. Auxiliary Output 2 and Auxiliary Output 3 use Control Current Output 1 and Control Current Output 2 if Control "OUTALG" is not set to "CURRENT" or "POSITION".. *Resolution:* 12 bits over 0 to 21 mA (10 bits for Auxiliary Output 2 and 3) *Accuracy:* 0.2% of full scale *Temperature Stability:* 0.03% F.S. / °C
Digital Input	+20 Vdc source for external dry contact or isolated solid state contacts. Selects one configured input.
Totalizers	One or two totalizers on DR45A1, DR45A2, DR45AT and DR45AR Models. Up to four totalizers on DR45AW Model. Eight digit "totals" with multiplier on digital display; 14-digit totalization printout on chart. Grand total can be printed at each major time line.
Calculations	F_O calculation available on DR45AR Model. Open channel flow calculations available on DR45AW Model.
Math Algorithms	Eight algorithms are available: A + B + C (summer with ratio and bias) √A • B/C (square root multiplier/divider) √A • B • C (square root multiplier) A • B/C (multiplier/divider) A • B • C (multiplier) (A-B) • C (difference multiplier) where: A = Input 1 • ratio A + bias A B = Input 2 • ratio B + bias B C = Input 3 • ratio C + bias C Limit of Ratio = -20 to +20 Limit of Bias = -999 to +9999 High/Low Select between Input 1 and Input 2 Polynomial Equation – Fifth order provides equation
Miscellaneous	• UL and FM approved NEMA4X door • Door Lock • Chart Illumination • U.L. Listing, FM Approval, CSA, CE Conformity • Control with Accutune II Tuning Capability • Auxiliary 4-20 mA output • Glass or Acrylic Window • Customer ID Tag • 2 Pulse output counter alarm functions on DR45AW Model • Lead seal provisions
RS485 Modbus® RTU Communications	*Baud Rate:* 300, 600, 1200, 2400, 4800, 9600, 19200, 38400 *Protocol:* RS485 Modbus RTU Communications *Length of Link:* 4000 ft (1,219 m) maximum *Link Characteristics:* Two wire, multidrop

®registered trademark of Modicon

Specifications, continued

Environmental and Operating Conditions				
Parameter	**Reference**	**Rated**	**Extreme**	**Transport and storage**
Ambient Temperature	67 to 77 °F 19 to 25 °C	58 to 131 °F 15 to 55 °C	32 to 131 °F 0 to 55 °C	–40 to 151 °F –40 to 66 °C
Relative Humidity (%RH)	0 to 55*	10 to 90*	5 to 90*	5 to 95*
Vibration				
Frequency (Hz)	0	0 to 70	0 to 200	0 to 200
Acceleration (g)	0	0.1	0.2	0.5
Mechanical Shock				
Acceleration (g)	0	1	5	20
Duration (ms))	0	30	30	30
Mounting Position from Vertical				
Tilted Forward	5°	5°	5°	Any
Tilted Backward	5°	30°	90°	Any
Tilted to Side (±)	5°	10°	20°	Any
Power Requirements				
Voltage (VRMS)	119 to 121 238 to 242	102 to 132 204 to 264	102 to 132 204 to 264	N/A N/A
Frequency (Hz)	49.8 to 50.2 59.8 to 60.2	49 to 51 59 to 61	48 to 52 58 to 62	N/A N/A
Power Consumption	20 VA maximum			
General Reference Data				
Stray Rejection	*Common Mode Rejection Ratio:* 120dB or 1 LSB (whichever is greater) at 60 Hz with maximum source impedance of 100 ohms. *Normal Mode Rejection Ratio:* 60dB with a 100% span peak-to-peak maximum at 60 Hz.			
Static Charge Effects	Exposed panel surfaces capable of withstanding a discharge from a 250pf capacitor charged to 10KV through 100 ohms.			
Line Noise Effects	Field terminals for connecting power line to recorder can withstand the IEEE Surge Withstanding Capability Test to a level of 2.5KV.			
Stylus Life	Typically capable of printing one chart per day for five years under clean room conditions.			
Technical Assistance	Toll-free 800 number puts technical assistance only a phone call away.			

* The maximum rating only applies up to 104°F (40°C). For higher temperatures, the RH specification is derated to maintain constant moisture content.

Reference Specifications	
44-45-03-11	**DR45AW Flow Model** for Weir, Parshall flume or Palmer-Bowles flume calculations and up to 4 totalizers
44-45-03-12	**DR45AR Model** for up to 6 relays, special RTD ranges, and F_O calculation
44-45-03-16	**DR45AH High Temperature Short Time (HTST)** **DR45AS Safety Thermal Limit Recorder (STLR)** **DR45AP Model for Dairy Flow/Timing Applications** for the dairy industry with lead seal provisions and FDA compliance

WARRANTY/REMEDY

Honeywell warrants goods of its manufacture as being free of defective materials and faulty workmanship. Contact your local sales office for warranty information. If warranted goods are returned to Honeywell during the period of coverage, Honeywell will repair or replace without charge those items it finds defective. The foregoing is Buyer's sole remedy and is **in lieu of all other warranties, expressed or implied, including those of merchantability and fitness for a particular purpose**. Specifications may change without notice. The information we supply is believed to be accurate and reliable as of this printing. However, we assume no responsibility for its use.

While we provide application assistance personally, through our literature and the Honeywell web site, it is up to the customer to determine the suitability of the product in the application.

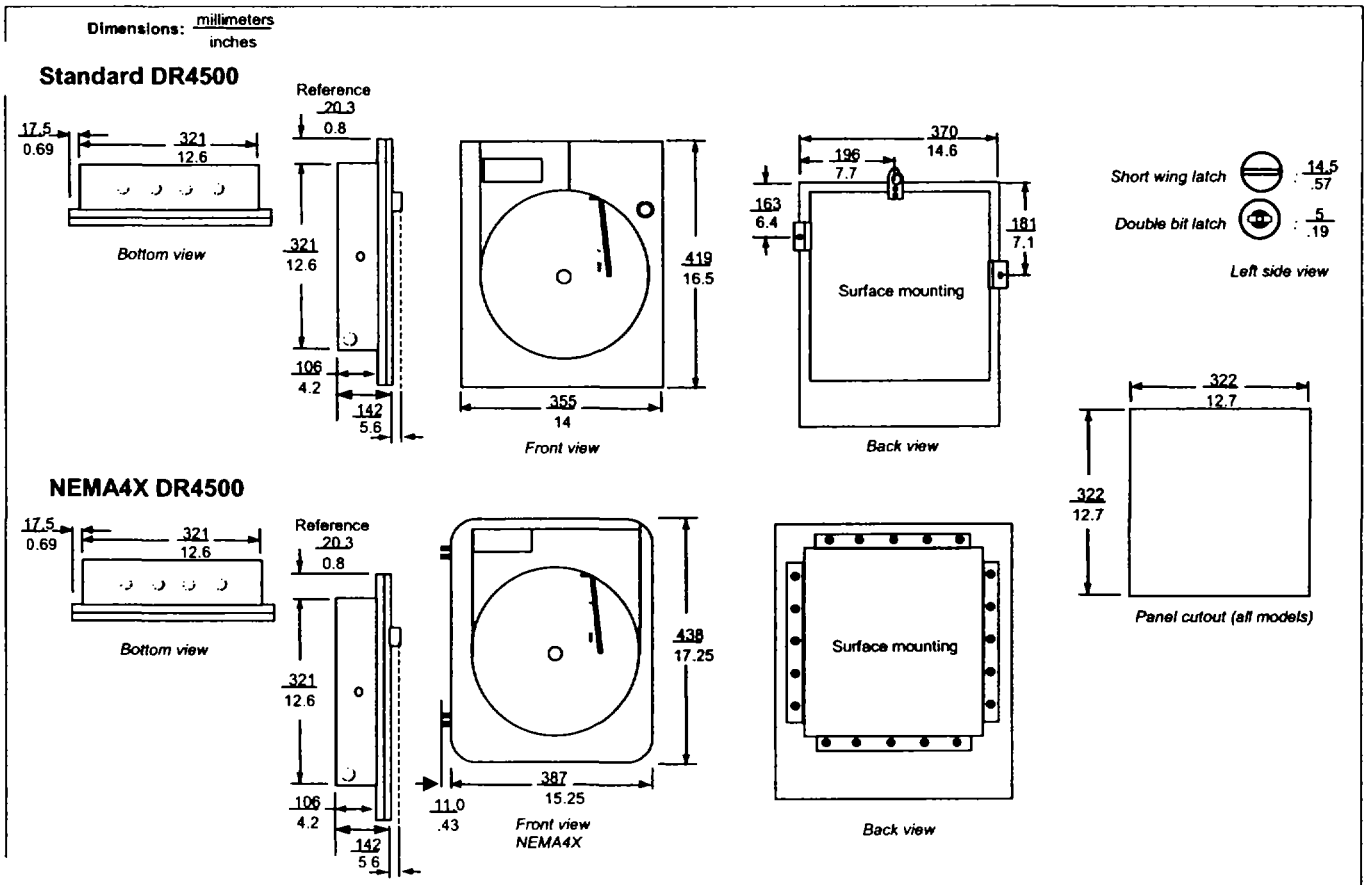

Figure 3— DR4500A series recorder dimensions - for reference only

Ordering Information

For complete ordering information, request Model Selection Guide 44-45-16-07 for DR4500A Series Circular Chart Recorder. Honeywell offers a full line of sensors and transmitters that produce compatible range of dc voltage or current signals.

Honeywell

Industrial Measurement and Control
Honeywell
1100 Virginia Drive
Fort Washington, PA 19034

44-45-03-14 0802 Printed in USA

www.honeywell.com/imc/

MANUFACTURER'S PRODUCT SPECIFICATIONS

Relays

7800 SERIES Relay Modules

CHECKOUT AND TEST

This publication provides general checkout and troubleshooting procedures for the 7800 SERIES Relay Modules.

SYSTEM CHECKOUT

IMPORTANT

Perform all Static Checkout Procedures in the applicable relay module installation instructions before starting these procedures.

⚠ WARNING

Explosion Hazard.
Can cause serious injury or death.
Do not allow fuel to accumulate in the combustion chamber for longer than a few seconds without igniting to prevent danger of forming explosive mixture Close manual fuel shutoff valve(s) if flame is not burning at end of specified time.

⚠ WARNING

Electric Shock Hazard.
Can cause serious injury or death.

1. Use extreme care while testing system. Line voltage is present on most terminal connections when power is on.
2. Open master switch before removing or installing 7800 SERIES Relay Module or Keyboard Display Module connector.

Make sure all manual fuel shutoff valve(s) are closed before starting initial lightoff check and Pilot Turndown tests.

Do not put the system in service until you have satisfactorily completed all applicable tests in this section and any others recommended by the original equipment manufacturer..

Limit trial for pilot to ten seconds. Limit the attempt to light main burner to two seconds after fuel reaches burner nozzle. Do not exceed manufacturer nominal lightoff time.

⚠ CAUTION

Equipment Malfunction or Damage Hazard.
Each relay module type is unique. Using existing wiring on a relay module change can cause equipment damage.
Make wiring changes when a relay module is replaced with a different 7800 SERIES Relay Module to sequence burner.

IMPORTANT

1. *If the system fails to perform properly, note the fault code, fault message, equipment status, and sequence time on the display. Then refer to the Troubleshooting section.*
2. *Repeat all required Checkout tests after all adjustments are made. All tests must be satisfied with the flame detector(s) in their final position.*

Equipment Recommended

S7800A Keyboard Display Module
Volt-ohmmeter (1M ohm/volt minimum sensitivity) with:
- 0-300 Vac capability.
- 0-6000 ohm capability.
- 0-10 Vdc capability.

Checkout Summary

Table 1 provides an overview of checkout steps performed for each applicable system.

See Installation Instructions for location of component parts and/or Q7800 Specifications for terminal locations.

® U.S. Registered Trademark
Copyright © 1998 Honeywell Inc. • All Rights Reserved

Table 1. Checkout Steps and Applicable 7800 Series Systems.

Checkout Step	Piloted Systems	DSI Systems	Infrared Flame Detectors	Flame Rod Systems	Ultraviolet Flame Detectors
Preliminary Inspection	X	X	X	X	X
Flame Signal Measurement	X	X	X	X	X
Initial Lightoff Check for Proved Pilot	X				
Initial Lightoff Check for Direct Spark Ignition		X			
Pilot Turndown Test	X				
Ignition Interference Test				X	
Hot Refractory Saturation Test			X		
Hot Refractory Hold-in Test	X	X	X	X	X
Ignition Spark Pickup					X
Response to Other Ultraviolet Sources					X
Flame Signal with Hot Combustion Chamber	X	X	X	X	X
Safety Shutdown Tests	X	X	X	X	X

Preliminary Inspection

Perform the following inspections to avoid common problems. Make certain that:

1. Wiring connections are correct and all terminal screws are tight.
2. Flame detector(s) is clean, installed and positioned properly. Consult the applicable Instructions.
3. Combination of amplifier and flame detector(s) is correctly used. See the amplifier specifications.
4. Plug-in amplifier and purge card (if required) are securely in place.
5. Burner is completely installed and ready to fire; consult equipment manufacturer instructions. Fuel lines are purged of air.
6. Combustion chamber and flues are clear of fuel and fuel vapor.
7. Power is connected to the system disconnect switch (master switch).
8. Lockout is reset (reset button) only if the Relay Module is powered.
9. Run/Test Switch (if present) is in RUN position.
10. System is in STANDBY condition. STANDBY message is displayed in the S7800 Keyboard Display Module.
11. All limits and interlocks are reset.

Flame Signal Measurement

See instructions provided with the amplifer.

INITIAL LIGHTOFF CHECKS

Proved Pilot Systems

Perform this check on all installations that use a pilot. It should immediately follow the preliminary inspection.

NOTE: Low fuel pressure limits, if used, could be open. If so, bypass them with jumpers during this check.

1. Open the master switch.
2. Make sure that the manual main fuel shutoff valve(s) is closed. Open the manual pilot shutoff valve. If the pilot takeoff is downstream from the manual main fuel shutoff valve(s), slightly open the manual main valve to supply pilot gas flow. Make sure the main fuel is shut off just upstream from the burner inlet, or disconnect power from the automatic main fuel valve(s).
3. Close the master switch and start the system with a call for heat by raising the setpoint of the operating controller, see the relay module sequence. The 7800 Series Relay Module should start the INITIATE sequence.
4. Let the sequence advance to PILOT IGN (status is displayed on the Keyboard Display Module, if used), PILOT LED turns on, ignition spark should occur and the pilot should light. If the pilot ignites, the FLAME LED is energized. Go to step 7.
5. If the pilot flame is not established in ten seconds (four seconds if configuration jumper JR1 is clipped), safety shutdown occurs. Let the sequence complete its cycle.
6. Push the reset pushbutton, and let the system recycle once. If the pilot still does not ignite, make the following ignition/pilot adjustments:
   a. Open the master switch and remove the 7800 Series Relay Module from the subbase.

b. On the subbase, jumper L1 to the ignition terminal; refer to the appropriate wiring diagram to determine the proper terminal. Disconnect the leadwire to the pilot valve if it is connected to the same terminal.
c. Close the master switch to energize only the ignition transformer.
d. If the ignition spark is not strong and continuous, open the master switch and adjust the ignition electrode spark gap setting to the manufacturer recommendation.
e. Make sure the ignition electrodes are clean.
f. Close the master switch and observe the spark.
g. After a continuous spark is obtained, open the master switch and add a jumper on the subbase from terminal L1 power to the pilot terminal 8 or 21. Reconnect the leadwire from the pilot valve if it was disconnected in step b.
h. Close the master switch to energize both the ignition transformer and the pilot valve.
i. If the pilot does not ignite and if the ignition spark is still continuous, adjust the pressure regulator until a pilot is established.
j. When the pilot ignites properly and stays ignited, open the master switch and remove the jumper(s) from the terminals of the subbase.
k. Check for adequate bleeding of the fuel line.
l. Reinstall the 7800 Series Relay Module on the subbase, close the master switch, and then return to step 4.

7. When pilot ignites, measure the flame signal. If the pilot flame signal is unsteady or approaching the 1.25 Vdc minimum value, adjust the pilot flame size or detector sighting to provide a maximum and steady flame signal.
8. Recycle the system to recheck lightoff and pilot flame signal.
9. When the MAIN LED turns on, make sure the automatic main fuel valve is open; then smoothly open the manual main fuel shutoff valve(s) and watch for main burner flame ignition. When the main burner flame is established, go to step 16.
10. If the main burner flame is not established within five seconds or the normal lightoff time as specified by the equipment manufacturer, close the manual main fuel shutoff valve(s).
11. Recycle the system to recheck the lightoff and pilot flame signal.
12. Smoothly open the manual fuel shutoff valve(s) and try lightoff again. (The first re-attempt may have been required to purge the lines and bring sufficient fuel to the burner.)
13. If the main burner flame is not established within five seconds or the normal lightoff time specified by the equipment manufacturer, close the manual main fuel shutoff valves(s). Check all burner adjustments.
14. If the main burner flame is not established after two attempts:
    A. Check for improper pilot size.
    B. Check for excess combustion air at low fire.
    C. Check for adequate low fire fuel flow.
    D. Check for proper gas supply pressure.
    E. Check for proper valve operation.
    F. Check for proper pilot flame positioning.
15. Repeat steps 8 and 9 to establish the main burner flame; then go to step 16.
16. With the sequence in RUN, make burner adjustments for flame stability and Btu input rating.
17. Shut down the system by opening the burner switch or by lowering the setpoint of the operating controller. Make sure the main flame goes out. There may be a delay due to gas trapped between the valve(s) and burner. Make sure all automatic fuel valve(s) close.
18. Restart the system by closing the burner switch and/or raising the setpoint of the operating controller. Observe that the pilot is established during PILOT IGN and the main burner flame is established during MAIN IGN within the normal lightoff time.
19. Measure the flame signal. Continue to check for the proper signal through the RUN period. Check the signal at both High and Low Firing Rate positions and while modulating, if applicable.
20. Run the burner through another sequence, observing the flame signal for:
    a. Pilot flame alone.
    b. Pilot and main flame together.
    c. Main flame alone (unless monitoring an intermittent pilot). Also observe the time it takes to light the main flame. Ignition of main flame should be smooth.
21. Make sure all readings are in the required ranges before proceeding.
22. Return the system to normal operation.

NOTE: After completing these tests, open the master switch and remove all test jumpers from the subbase terminals, limits/controls or switches.

Direct Spark Ignition Systems

This check applies to gas and oil burners not using a pilot. It should immediately follow the preliminary inspection. Refer to the appropriate sample block diagram of field wiring for the ignition transformer and fuel valve(s) hookup.

NOTE: Low fuel pressure limits, if used, could be open. If so, bypass them with jumpers during this check.

1. Open the master switch.
2. Complete the normal ready-to-fire checkout of the fuel supply and equipment as recommended by the equipment manufacturer.
3. Close all manual main fuel shutoff valve(s). Check that the automatic fuel valve(s) is closed. Make sure fuel is not entering the combustion chamber.
4. Close the master switch and start the system with a call for heat by raising the setpoint of the operating controller; see the relay module sequencing. The program sequence should start the INITIATE sequence.
5. Let the sequence advance through PREPURGE (if applicable). Ignition spark should occur when the PILOT LED turns on. Listen for the click of the first stage fuel solenoid valve(s). The relay module locks out and the ALARM LED turns on.
6. Let the 7800 Series Relay Module complete its cycle.
7. Open the manual fuel shutoff valve(s).
8. Push the reset button and the relay module recycles the program sequence through PREPURGE (if applicable).
9. When the PILOT LED turns on, make sure that the first stage burner flame is established. If it is, go to step 15.
10. If the first stage burner flame is not established within four seconds, or within the normal lightoff time specified by the equipment manufacturer, close the manual fuel shutoff valve(s), and open the master switch.
11. Check all burner adjustments.

12. Wait about three minutes. Close the master switch, open the manual fuel shutoff valve(s), and try to light off the burner again. The first attempt may be required to purge the lines and bring sufficient fuel to the burner.
13. If the first stage burner flame is not established within four seconds, or within the normal lightoff time specified by the equipment manufacturer, close the manual fuel shutoff valve(s), and open the master switch.
14. If necessary, repeat steps 11 through 13 to establish the first stage burner flame. Then go to step 15.
15. When the first stage burner flame is established, the sequence advances to RUN. Make burner adjustments for flame stability and input rating. If a second stage is used, go to step 18.
16. Shut down the system by opening the burner switch or by lowering the setpoint of the operating controller. Make sure the burner flame goes out and all automatic fuel valves close.
17. If used, remove the bypass jumpers from the low fuel pressure limit and subbase.
18. If a second stage is used, make sure the automatic second stage fuel valve(s) opened. Check the lightoff as follows (or go to step 19):
    a. Open the manual second stage fuel valve(s).
    b. Restart the system by raising the setpoint of the operating controller.
    c. When the first stage burner flame is established, watch for the automatic second stage fuel valve(s) to open. Observe that the second stage lights off properly.
    d. Make burner adjustments for flame stability and input rating.
    e. Shut down the system by lowering the setpoint of the operating controller. Make sure the burner flame goes out and all automatic fuel valves close.
    f. Go to step 19.
19. Restart the system by closing the burner switch and/or raising the setpoint of the operating controller. Observe that the burner flame is established during PILOT IGN, within the normal lightoff time specified by the equipment manufacturer.
20. Measure the flame signal. Continue to check for the proper signal through the RUN period. Check the signal at both high and low firing rate positions and while modulating. Any pulsating or unsteady readings require further attention.
21. Make sure all readings are in the required ranges before proceeding.

    NOTE: On completing these tests, open the master switch and remove all test jumpers from the subbase terminals, limits/controls or switches.

22. Return the system to normal operation.

PILOT TURNDOWN TEST (ALL INSTALLATIONS USING A PILOT)

Perform this check on all installations that use a pilot. The purpose of this test is to verify that the main burner can be lit by the smallest pilot flame that can hold in the flame amplifier and energize the FLAME LED. Clean the flame detector(s) to make sure that it detects the smallest acceptable pilot flame.

If using AMPLI-CHECK™ or self-checking amplifier and 1M ohm/volt meter, the flame signal fluctuates every time the amplifier does a self-check or a shutter check.

NOTE: Low fuel pressure limits, if used, could be open. If so, bypass them with jumpers during this test.

1. Open the master switch.
2. Close the manual main fuel shutoff valve(s).
3. Connect a manometer (or pressure gauge) to measure pilot gas pressure during the turndown test.
4. Open the manual pilot shutoff valve(s).
5. Close the master switch and start the system with a call for heat. Raise the setpoint of the operating controller. The 7800 Series sequence should start, and PREPURGE (if applicable) should begin.
6. After the PILOT LED turns on in interrupted pilot applications, set the Run/Test Switch to the TEST position to stop the sequence. The FLAME LED comes on when the pilot ignites.

   NOTE: If the sequence does not stop, reset the system and make sure you set the Run/Test Switch to TEST within the first eight seconds of the PILOT IGN sequence.

IMPORTANT

You have 0.8 second or three seconds, depending on PFEP selected, to position the Run/Test Switch to the TEST position to stop the sequence after the start of the PILOT IGN period.

7. Turn down the pilot pressure very slowly, reading the manometer (or pressure gauge) as it drops. Stop instantly when the FLAME LED goes out. Note the pressure. The pilot is at the minimum turndown position. Immediately turn up the pilot pressure until the FLAME LED comes on again or the flame signal increases to 1.25 Vdc.

   NOTE: If there is no flame for fifteen seconds with the RUN/TEST switch in the TEST position, the relay module locks out.

8. Repeat step 7 to verify the pilot gas pressure reading at the exact point the FLAME LED light goes out.
9. Increase the pilot pressure immediately until the FLAME LED comes on, and then turn it down slowly to obtain a pressure reading just above the dropout point or until the flame signal increases to 1.25 Vdc.
10. Set the Run/Test Switch in the RUN position (if used) and let the sequence proceed. When the MAIN LED turns on, make sure the automatic main fuel valve(s) opens; then smoothly open the manual main fuel shutoff valve(s) (or any other manually-opened safety shutoff valve(s), if used) and watch for main burner ignition. If the main burner flame is established, go to step 18.

    NOTE: This step requires two people, one to open the manual valve(s) and one to watch for ignition.

11. If the main burner flame is not established within five seconds, or within the normal lightoff time specified by the equipment manufacturer, close the manual main fuel shutoff valve(s) and open the master switch. If the lightoff is rough, the pilot flame size is too small.

12. Close the master switch to recycle the burner and stop the sequence in the PILOT period by using the Run/ Test Switch.
13. Increase the pilot flame size by increasing its fuel flow until a smooth main flame is accomplished.
14. Reposition the flame scanner sight tube or use orifices until the pilot flame signal voltage is in the range of 1.25 to 1.50 Vdc.
15. When the main burner lights reliably with the pilot at turndown, disconnect the manometer (or pressure gauge) and turn up the pilot gas flow to that recommended by the equipment manufacturer.
16. If used, remove the bypass jumpers from the subbase terminals, limits/controls, or switches.
17. Run the system through another cycle to check for normal operation.
18. Return the system to normal operation.

IGNITION INTERFERENCE TEST (ALL FLAME RODS)

Ignition interference can subtract from (decrease) or add to (increase) the flame signal. If it decreases the flame signal enough, it causes a safety shutdown. If it increases the flame signal, it could cause the FLAME LED to come on when the true flame signal is below the minimum acceptable value.

Start the burner and measure the flame signal with both ignition and pilot (or main burner) on, and then with only the pilot (or main burner) on. Any significant difference (greater than .5 Vdc) indicates ignition interference.

To Eliminate Ignition Interference

1. Make sure there is enough ground area.
2. Be sure the ignition electrode and the flame rod are on opposite sides of the ground area.
3. Check for correct spacing on the ignition electrode:
   a. 6000V systems—1/16 to 3/32 in. (1.6 to 2.4 mm).
   b. 10,000V systems—1/8 in. (3.2 mm).
4. Make sure the leadwires from the flame rod and ignition electrode are not too close together.
5. Replace any deteriorated leadwires.
6. If the problem cannot be eliminated, consider changing the system to an ultraviolet flame detection system.

Hot Refractory Saturation Test (All Infrared Detectors)

Start the burner and monitor the flame signal during the warmup period. A decrease in signal strength as the refractory heats up indicates hot refractory saturation. If saturation is extreme, the flame signal drops below 1.25 Vdc and the system shuts down as though a flame failure occurred.

If hot refractory saturation occurs, the condition must be corrected. Add an orifice plate in front of the cell to restrict the viewing area, lengthen the sight pipe or decrease the pipe size (diameter). Continue adjustments until hot refractory saturation is eliminated.

Hot Refractory Hold-in Test (Rectifying Photocell, Infrared Detectors, Ultraviolet Detectors)

This condition can delay response to flame failure and also can prevent a system restart if hot refractory is detected.

Infrared (lead sulfide) detectors can respond to infrared rays emitted by a hot refractory, even when the refractory has visibly ceased to glow. Infrared radiation from a hot refractory is steady, but radiation from a flame has a flickering characteristic. The infrared detection system responds only to flickering infrared radiation; it can reject a steady signal from hot refractory. The refractory steady signal can be made to fluctuate if it is reflected, bent or blocked by smoke or fuel mist within the combustion chamber. Be careful when applying an infrared system to verify its response to flame only.

The ultraviolet detector can respond to hot refractory above 2300°F (1371°C).

1. Operate the burner until the refractory reaches its maximum temperature (Infrared Only).
   If the installation has a multi-fuel burner, burn the heavier fuel that is most likely to reflect, bend or obscure the hot refractory steady infrared radiation
2. When the maximum refractory temperature is reached, close all manual fuel shutoff valves, or open the electrical circuits of all automatic fuel valves.
3. Visually observe when the burner flame or FLAME LED goes out. If this takes more than three seconds, the infrared detector is sensing hot refractory.
4. Immediately terminate the firing cycle. Lower the setpoint to the operating controller, or set the Fuel Selector Switch to OFF. *Do not open the master switch.*

   NOTE: Some burners continue to purge oil lines between the valves and nozzles even though the fuel valves are closed. Terminating the firing cycle (instead of opening the master switch) allows purging the combustion chamber. This reduces a buildup of fuel vapors in the combustion chamber caused by oil line purging.

5. If the detector is sensing hot refractory, correct the condition by one or more of the following procedures:
   a. Add an orifice plate in front of the cell to restrict the viewing area of the detector.
   b. Resight the detector at a cooler, more distant part of the combustion chamber. Make sure the detector properly sights the flame.
   c. Try lengthening the sight pipe or decreasing the pipe size (diameter).

For details, refer to the detector Instructions and the equipment Operating Manual. Continue adjustments until hot refractory hold-in is eliminated.

IGNITION SPARK RESPONSE TEST (ALL ULTRAVIOLET DETECTORS)

Test to make certain that the ignition spark is not actuating the FLAME LED:

1. Close the pilot and main burner manual fuel shut-off valve(s).
2. Start the burner and use the Run/Test Switch (if available) to stop the sequence in the PILOT IGN period. Ignition spark should occur, but the flame signal should not be more than 0.5 Vdc.
3. If the flame signal is higher than 0.5 Vdc and the FLAME LED does come on, consult the equipment operating manual and resight the detector farther out from the spark, or away from possible reflection. It may be necessary to construct a barrier to block the ignition spark from the detector view. Continue adjustments until the flame signal due to ignition spark is less than 0.5 Vdc.

NOTE: The Honeywell Q624A and Q652A,B Solid State Spark Generators prevent detection of ignition spark when properly applied with C7027, C7035, C7044 or C7061 Ultraviolet Flame Detectors. The Q624A and Q652B are only for use with gas pilots; the Q652A is only for oil applications.

Response To Other Ultraviolet Sources

Some sources of artificial light (such as incandescent or fluorescent bulbs, mercury sodium vapor lamps and daylight) produce small amounts of ultraviolet radiation. Under certain conditions, an ultraviolet detector responds to these sources as if it is sensing a flame. To check for proper detector operation, check the Flame Failure Response Time (FFRT) and conduct Safety Shutdown Tests under all operating conditions.

Flame Signal With Hot Combustion Chamber (All Installations)

1. With all initial start-up tests and burner adjustments completed, operate the burner until the combustion chamber is at the maximum expected temperature.
2. Observe the equipment manufacturer warm-up instructions.
3. Recycle the burner under these hot conditions and measure the flame signal. Check the pilot alone, the main burner flame alone, and both together (unless monitoring only the pilot flame when using an intermittent pilot, or only the main burner flame when using DSI). Check the signal at both High and Low Firing Rate positions and while modulating, if applicable.
4. Check the FFRT of the flame amplifier and relay module.
5. Lower the setpoint of the operating controller and observe the time it takes for the burner flame to go out. This should be within the maximum FFRT.
6. If the flame signal is too low or unsteady, check the flame detector temperature. Relocate the detector if the temperature is too high.
7. If necessary, realign the sighting to obtain the proper signal and response time.
8. If the response time is still too slow, replace the Plug-in Flame Signal Amplifier.
9. If the detector is relocated or resighted, or the amplifier is replaced, repeat all required Checkout tests.

SAFETY SHUTDOWN TESTS (ALL INSTALLATIONS)

Perform these tests at the end of Checkout, after all other tests are completed. If used, the external alarm should turn on. Press the RESET pushbutton on the relay module to restart the system.

1. Opening a Preignition Interlock during the STANDBY or PREPURGE period (only for RM7800, EC/RM7840, RM7838B, EC7810, EC7820, EC/RM7830, EC/RM7850).
   a. *Preignition ILK* fault is displayed on the Keyboard Display Module. Fault code 10 or 33 is displayed to denote the fault.
   b. Safety shutdown occurs.
2. Opening a Lockout Interlock during PREPURGE, PILOT IGN, MAIN IGN or RUN period (only for RM7800, EC/RM7840, RM7838B, EC7810, EC7820, EC/RM7830, EC/RM7850).
   a. *Lockout ILK* fault is displayed on the Keyboard Display Module. Fault code 11 or 12 or 21 or 29 is displayed to denote the fault.
   b. Safety shutdown occurs.
3. Detection of flame 40 seconds after entry to STANDBY from RUN, fault code 9. Detection of flame from ten seconds up to 30 seconds into PREPURGE time.
   a. Simulate a flame to cause the flame signal voltage level to be at least 1.25 Vdc for 40 seconds after entry to STANDBY from RUN and also simulate a flame signal for 10 seconds to 30 seconds for PREPURGE.
   b. *Flame Detected* fault is displayed on the Keyboard Display Module. Fault code 9 or 15 or 18 is displayed to denote the fault.
   c. Safety shutdown occurs.
4. Failure to ignite pilot.
   a. Close pilot and main fuel manual shutoff valve(s).
   b. Cycle burner on.
   c. Automatic pilot valve(s) should be energized but the pilot cannot ignite.
   d. *Pilot Flame Fail* fault is displayed on the Keyboard Display Module. Fault code 28 is displayed four or ten seconds, depending on the jumper configuration selection for Pilot Flame Establishing Period (PFEP) after the pilot valve(s) is energized to denote the fault.
   e. Safety shutdown occurs.
5. Failure to ignite main (only interrupted pilot application).
   a. Open the manual pilot valve(s); leave the main fuel manual shutoff valve(s) closed.
   b. Depress the RESET button.
   c. Start the system.
   d. The pilot should ignite and the flame signal should be at least 1.25 Vdc but the main burner cannot light.
   e. The flame signal should drop below 1.25 Vdc within the FFRT of the amplifier and the relay module after the interrupted pilot goes out.
   f. *Main Flame Ign.* fault is displayed on the Keyboard Display Module. Fault code 19 is displayed to denote the fault.
   g. Safety shutdown occurs.

6. Loss of flame during RUN.
   a. Open the main fuel manual shutoff valve(s) and open manual pilot shutoff valve(s).
   b. Depress the RESET button.
   c. Start the system. Start-up should be normal and the main burner should light normally.
   d. After the sequence is in the normal RUN period for at least ten seconds with the main burner firing, close the manual main fuel shutoff valve(s) to extinguish the main burner flame. (On intermittent pilot applications, also, close the pilot manual shutoff valve.)
   e. The flame signal should drop below 1.25 Vdc within the FFRT of the amplifier and the relay module after the main flame and/or pilot goes out.
   f. *Main Flame Fail* fault is displayed on the Keyboard Display Module. Fault code 17 is displayed to denote the fault.
   g. Safety shutdown occurs. (EC/RM7890, EC/RM7895, RM7896 relay modules will recycle if jumper JR2 is intact, then lock out on failure to *light the pilot.*)
7. Opening a Preignition Interlock after the first five seconds of POSTPURGE.
   a. Open the main fuel manual shutoff valve(s) and open manual pilot shutoff valve(s).
   b. Depress the RESET button.
   c. *Preignition ILK* fault is displayed on the Keyboard Display Module. Fault code 33 is displayed to denote the fault.
   d. Safety shutdown occurs.

IMPORTANT

1. *If the relay module fails to shut down on any of these tests, take corrective action; refer to Troubleshooting and the relay module diagnostics and return to the beginning of all Checkout tests.*
2. *When all Checkout tests are completed, reset all switches to the original status.*

TROUBLESHOOTING

System Diagnostics

Troubleshooting control system equipment failures is easier with the relay module self-diagnostics and first-out annunciation. In addition to an isolated spst alarm relay (audible annunciation), the relay module provides visual annunciation by displaying a fault code and fault or hold message at the S7800 Keyboard Display Module (standard on RM7800 and RM7838A,B devices; optional on all others). The relay module provides 127 diagnostic messages for troubleshooting the system (see Table 3).

Self-diagnostics of the relay module enables it to detect and annunciate both external and internal system problems. Fault messages, such as interlock failures, flame failures and false flame signals are displayed at the KDM, and annunciated at the 7800 SERIES Relay Module by the ALARM LED.

The KDM displays a sequence status message indicating: STANDBY, PURGE, PILOT IGN, MAIN IGN, RUN and POSTPURGE. The selectable messages also provide visual indication of current status and historical status of the equipment such as: Flame Signal, Total Cycles, Total Hours, Fault History, Diagnostic Information and Expanded Annunciator terminal status (if used). With this information, most problems can be diagnosed without extensive trial and error testing.

Table 2 provides the sequence and status hold messages. Table 3 is a summary of all relay module fault messages, fault codes, and troubleshooting suggestions. In addition, Diagnostic Information and History Data are available to assist in troubleshooting the relay module.

The relay module provides diagnostic information to aid the service mechanic in obtaining information when troubleshooting the system. Information available in the Diagnostic Information includes Device Type, Device Suffix, Software Revision, Manufacturing Code, Flame Amplifier Type, Flame Failure Response Time, Selectable Jumper Configuration Status, Run/Test Switch Status and Terminal Status.

Diagnostic Information Index

The relay module monitors input/output terminals and can display the status of the terminal at the KDM (see Table 2) (example: Pilot Valve T8 1). See the applicable relay module installation instructions for a complete terminal description and number. The display shows the actual status of the terminal. If voltage is detected at the terminal, 1 is displayed, but if no voltage is detected at the terminal, 0 is displayed.

Historical Information Index

The relay module has nonvolatile memory that allows the Relay Module to retain historical information for the six most recent lockouts. Each of the six lockout files retains the cycle when the fault occurred, the hour of operation when the fault occurred, a fault code, a fault message and burner status when the fault occurred.

IMPORTANT

Some older relay modules can not operate without a KDM, extension cable assembly with KDM or a Data ControlBus Module™ installed.

SERVICE NOTES:

1. If the KDM is scrambled, remove and reinstall the KDM, and reset the 7800 Relay Module.
2. Reset the 7800 Series Relay Module by pressing the RESET pushbutton on the 7800 Series Relay Module, or pressing a remote reset pushbutton wired through the KDM, Data ControlBus Module™ or Remote Reset Module. A power-up reset causes an electrical reset of the relay module but does not reset a lockout condition.
3. Use the access slots on the sides of the Q7800A,B to check terminal voltage.
4. Maximum ambient operating temperature of a C7012E,F; Series 1 through 6, is reduced to 125°F because of the duty cycle operation of the relay module.

Table 2. Keyboard Display Module Sequence and Status Hold Messages.

Sequence	Status
INITIATE mm:ss	The Keyboard Display Module (KDM) indicates the burner status, INITIATE, a stabilization period for the relay module to check for any fluctuations in ac line voltage inputs or control inputs on power up or during normal operation. The timing of the INITIATE period is either two seconds or ten seconds, depending on the model, before entering STANDBY.
If the relay module is in an INITIATE HOLD status, the following conditions could exist:	
INITIATE HOLD: (AC Frequency/Noise)	The KDM indicates the burner status and that it is waiting for excess line noise to clear up, which prevents sufficient reading of the line voltage inputs. The burner sequence does not advance into STANDBY until the excess line noise ceases or a line frequency error occurs; this is caused by using a 60 Hz device on a 50 Hz line, or vice versa on devices with a date code earlier than 9804, is corrected.
INITIATE HOLD: (AC Line Dropout)	The KDM indicates the burner status and that ac line power has momentarily dropped out. The burner sequence does not advance into STANDBY until the ac line voltage has stabilized throughout the INITIATE sequence.
INITIATE HOLD: (AC Frequency)	The KDM indicates the burner status and that line frequency is faster than the expected value. The burner sequence does not advance into STANDBY until the line frequency returns to the proper value; this is perhaps caused by using a 60 Hz device on a 50 Hz line for devices with a date code earlier than 9804.
INITIATE HOLD: (Low Line Voltage)	The KDM indicates the burner status and that low line voltage (10% lower than rated voltage) has occurred. The burner sequence does not advance into STANDBY until the line voltage is at a sufficient level for proper operating parameters.
STANDBY	The KDM indicates the burner status, STANDBY. The burner can be placed in STANDBY by opening the burner switch or if the operating controller indicates its setpoint is satisfied. If a demand is present for burner operation, the burner sequence does not advance from STANDBY to PURGE until the recycle limits close. If an Expanded Annunciator is connnected, the display messages are enhanced.
If the relay module is in a STANDBY HOLD status, the following conditions could exist:	
STANDBY HOLD: F/G (Flame Detected)	The KDM indicates the burner status and that a flame is detected. A demand is present for burner operation. The sequence does not advance to PREPURGE until the flame signal clears. If the flame signal does not clear within 40 seconds, the relay module locks out.
STANDBY HOLD: T20 (Preignition Interlock)	The KDM indicates the burner status and that the Preignition Interlock is not closed. A demand is present for burner operation, but the burner sequence does not advance to PREPURGE until the Preignition Interlock proves closed. If this time exceeds a 30 second hold, the relay module locks out.
STANDBY HOLD: T7 (Lockout Interlock)	The KDM indicates the burner status and that the Lockout Interlock is closed. A demand is present for burner operation, but the burner sequence does not advance to PREPURGE until the Lockout Interlock proves open. If this time exceeds the 120 second hold, the relay module locks out.
STANDBY HOLD: T7 (Running Interlock) T17 for EC/RM7810, 7820, 7830, 7850 devices	The KDM indicates the burner status and that the Running Interlock is closed. A demand is present for burner operation, but the burner sequence does not advance to PREPURGE until the Running Interlock proves open. If this time exceeds the 120 second hold, the relay module locks out.
PURGE	The KDM indicates the burner status, PURGE, which is the period of time the blower motor is running before the Ignition period. The timing of the PURGE period is selectable.
If the relay module is in a PURGE HOLD status, the following conditions could exist:	
PURGE HOLD: T19 (High Fire Switch)	The KDM indicates the burner status and that the High Fire Switch is not closed. The firing rate motor is driving to its PURGE rate position. If this time exceeds four minutes and fifteen seconds, the relay module locks out.
PURGE DELAY: T19 (High Fire Switch Jumpered)	The KDM indicates the burner status and that the High Fire Switch is jumpered. The High Fire Switch is bypassed, welded or otherwise prematurely closed. The system automatically adds 30 seconds to allow the firing rate motor additional drive time to reach or near the open damper position before starting the PURGE sequence.
PURGE HOLD: TEST (Run/Test Switch)	The KDM indicates the burner status and that the Run/Test Switch is in the TEST position. The sequence does not continue until the Run/Test Switch is placed in the RUN position.

NOTE: **Normal sequences** are in **bold type**, while abnormal sequences are in regular type. This table is for all 7800 SERIES Relay Modules so all listed steps may not apply to the unit installed.

Table 2. Keyboard Display Module Sequence and Status Hold Messages (continued).

Sequence	Status
If the relay module is in a PURGE HOLD status, the following conditions could exist *(continued)*:	
PURGE HOLD: T18 (Low Fire Switch Jumpered)	The KDM indicates the burner status and that the Low Fire Switch is jumpered. The Low Fire Switch is bypassed, welded or otherwise prematurely closed. The system automatically adds 30 seconds to allow the firing rate motor additional drive time to reach or near the closed damper position before starting the ignition sequence.
PURGE HOLD: F/G (Flame Detected)	The KDM indicates the burner status and that a flame is detected. The burner sequence does not advance through PREPURGE because a flame is detected as being present. The sequence holds waiting for the flame signal to clear. If the time exceeds 30 seconds, the relay module locks out.
PURGE HOLD: T18 (Low Fire Switch)	The KDM indicates the burner status and that the Low Fire Switch is not closed. The firing rate motor is driving to its Low Fire position in preparation for Ignition Trials. If this time exceeds four minutes and fifteen seconds, the relay module locks out.
PURGE HOLD: T7 (Running Interlock)	The KDM indicates the burner status and that the Running Interlock is not closed. The sequence does not advance to ignition until the Running Interlock proves closed. If this time exceeds 30 seconds, the relay module locks out.
PILOT IGN mm:ss	The KDM indicates the burner status, PILOT IGN, and the timing of the PILOT IGN trial begins, in seconds. During this period, the relay module permits the pilot valve to open and the pilot flame to establish.
If the relay module is in a PILOT HOLD status, the following condition could exist:	
PILOT HOLD: TEST (Run/Test Switch)	The KDM indicates the burner status, PILOT IGN, and that the Run/Test Switch is in the TEST position. The sequence does not continue until the Run/Test Switch is placed in the RUN position.
MAIN IGN mm:ss	The KDM indicates the burner status, MAIN IGN, and the timing of the MAIN IGN trial begins, in seconds. During this period, the relay module permits the main valve to open and the main flame to establish.
RUN	The KDM indicates the burner status, RUN, which is the period of time after the Ignition Trials and before the operating controller setpoint is reached. During this time, the burner is firing under control of the firing rate control.
If the relay module is in a RUN HOLD status, the following condition could exist:	
RUN LOWFIRE: TEST (Run/Test Switch)	The KDM indicates the burner status and that the Run/Test Switch is in the TEST position. Normal modulation or operation does not continue until the Run/Test Switch is placed in the RUN position.
POSTPURGE mm:ss	The KDM indicates the burner status, POSTPURGE, which is the period of time after the RUN period when the blower motor continues to run. The timing of the POSTPURGE period is fifteen seconds.
Waiting for connection...	The KDM has power but is waiting to receive a signal from the relay module to continue operation.
RESET/ALARM TEST	The KDM indicates the burner status, RESET/ALARM TEST. This condition indicates that the reset button is pressed. If it is held for more than four seconds, the alarm output is energized. The alarm output is de-energized when the reset button is released.
Additional Sequence Status Information When An Expanded Annunciator Is Connected To The Relay Module:	
BURNER OFF: T6 (Burner Switch)	The KDM indicates the Burner Switch is not closed. The burner sequence does not advance to PREPURGE until the Burner Switch closes.
STANDBY	The KDM indicates the burner status, STANDBY, and that the Operating Control is not closed. The burner sequence does not advance to PREPURGE until the Operating Control closes.
STANDBY HOLD: T6 (EA Hold Message)	The KDM indicates the burner status, STANDBY, and that a limit is not closed. The burner sequence does not advance to PREPURGE until one or all limits close downstream from the Operating Control.
STANDBY HOLD: T6 (Circuit Fault)	The KDM indicates the burner status, STANDBY, and that the control input is not closed. The burner sequence does not advance to PREPURGE until the control input closes.

NOTE: **Normal sequences** are in **bold type**, while abnormal sequences are in regular type. This table is for all 7800 SERIES Relay Modules so all listed steps may not apply to the unit installed.

Table 3. Hold and Fault Message Summary.

Fault Code	System Failure	Recommended Troubleshooting
Fault 1 *No Purge Card*	No card is plugged into the purge card slot.	1. Make sure the purge card is seated properly. 2. Inspect the purge card and connector on the relay module for damage or contaminants. 3. Reset and sequence the relay module. 4. If the fault code reappears, replace the purge card. 5. Reset and sequence the relay module. 6. If the fault persists, replace the relay module.
Fault 2 *AC Frequen/Noise*	Excess noise or device running on slow ac.	1. Check the relay module and display module connections. 2. Reset and sequence the relay module. 3. Check the relay module power supply and make sure that both frequency and voltage meet the specifications. 4. Check the backup power supply, as appropriate.
Fault 3 *AC Line Dropout*	Ac line dropout detected.	
Fault 4 *AC Frequency*	Device running on fast ac.	
Fault 5 *Low Line Voltage*	Low ac line detected.	
Fault 6 *Purge Card Error*	Purge card timing changed since card was initially read.	1. Make sure the purge card is seated properly. 2. Inspect the purge card and connector on the relay module for damage or contaminants. 3. Reset and sequence the relay module. 4. If the fault code reappears, replace the purge card. 5. Reset and sequence the relay module. 6. If the fault persists, replace the relay module.
Fault 7 *Flame Amplifier*	Flame sensed when flame not present.	1. Check wiring and correct any errors. Make sure that flame sensor wires are in separate conduits. Check for noise coupling into the flame detector leadwires. 2. Make sure that flame detector and flame amplifier are compatible. 3. Remove the flame amplifier and inspect connections. Reseat the amplifier. 4. Reset and sequence the relay module. 5. If the code reappears, replace the amplifier and/or the flame detector. 6. If the fault persists, replace the relay module.
Fault 8 *Flame Amp/Shutr*	Flame sensed when no signal expected during shutter-check or Ampli-Check™ versions.	
Fault 9 *Flame Detected*	Flame sensed when shutter open and no flame is expected during STANDBY.	1. Check that flame is not present in the combustion chamber; correct any errors. 2. Check wiring and correct any errors. Make sure that flame sensor wires are in separate conduits. Check for noise coupling into flame detector leadwires. 3. Remove the flame amplifier and inspect its connections. Reseat the amplifier. 4. Reset and sequence the relay module. 5. If the code reappears, replace the amplifier and/or the flame detector. 6. If the fault persists, replace the relay module.
Fault 10 *Preignition ILK*	Preignition Interlock fault during STANDBY *EC/RM7800, 7840, 7838B only).	1. Check wiring and correct any errors. 2. Check Preignition Interlock switches to assure proper functioning. 3. Check fuel valve operation. 4. Reset and sequence the relay module; monitor the Preignition Interlock status. 5. If the code persists, replace the relay module.

(continued)

Table 3. Hold and Fault Message Summary (continued).

Fault Code	System Failure	Recommended Troubleshooting
Fault 11 *Running ILK On*	Running Interlock powered at improper sequence point.	1. Check wiring to make sure that interlocks are connected properly between terminals 6 and 7. Correct any errors. 2. Reset and sequence the relay module. 3. If the fault persists, measure the voltage between terminals 6 and G (ground), then terminals 7 and G. If there is line supply voltage present at terminal 6 when the controller is off, the controller switch may be bad or is jumpered. 4. If steps 1 through 3 are correct and there is line supply voltage present at terminal 7 when the controller is closed and the fault persists, check for a welded or jumpered Running Interlock, Lockout Interlock, or Airflow Switch. Correct any errors. 5. If steps 1 through 4 are correct and the fault persists, replace the relay module.
Fault 12 *Lockout ILK On*	Lockout Interlock powered at improper point in sequence.	
Fault 13 *Airflow Sw. On*	Combustion airflow interlock fault during STANDBY.	
Fault 14 *High Fire Sw.*	High Fire Interlock Switch failure to close during PREPURGE.	1. Check wiring and correct any errors. 2. Reset and sequence the relay module. 3. Use either the manual motor potentiometer to drive the motor to the High Fire position or use the Run/Test Switch option, if available. Sequence to Prepurge drive to High Fire and place in the Test position. Adjust the High Fire Switch while in this state to make sure that it closes properly. 4. Measure the voltage between terminal 19 and G (ground) while in the Prepurge drive to High Fire state. Line supply voltage should be present. If not, the switch adjustment is incorrect and/or the switch is defective and needs replacing. 5. Reset and sequence the relay module. If line supply voltage was present between the High Fire Switch and terminal 19, and the fault still persists, replace the relay module.
Fault 15 *Flame Detected*	Flame sensed when no flame is expected during STANDBY.	1. Check that the flame is not present in the combustion chamber; correct any errors. 2. Make sure that the flame amplifier and flame detector are compatible. 3. Check wiring and correct any errors. 4. Remove the flame amplifier and inspect the connections. Reseat the amplifier. 5. Reset and sequence the relay module. 6. If the code reappears, replace the amplifier and/or the flame detector. 7. If the fault persists, replace the relay module.
Fault 16 *Flame-Out Timer*	No-flame detected during Pilot Flame Establishing Period.	1. Measure the flame signal. If one exists, make sure it meet specifications. Make any necessary burner adjustments using manufacturer instructions. 2. Make sure that the flame amplifier and flame detector are compatible. 3. If the code reappears, replace the amplifier and/or the flame detector. 4. If the fault persists, replace the relay module.
Fault 17 *Main Flame Fail*	Main flame failure during RUN after flame is established and on for at least 10 seconds.	1. Inspect the main fuel valve(s) and connection(s). 2. Make sure that the fuel pressure is high enough to supply fuel to the combustion chamber. 3. Check the flame detector sighting for adequate flame signal throughout the burner firing rate.

(continued)

Table 3. Hold and Fault Message Summary (continued).

Fault Code	System Failure	Recommended Troubleshooting
Fault 18 *Flame Detected*	Flame sensed when shutter is open and no flame is expected during PREPURGE.	1. Check that flame is not present in the combustion chamber. Correct any errors. 2. Make sure that the flame amplifier and flame detector are compatible. 3. Check the wiring and correct any errors. Make sure F and G wires are in individual conduits and protected from stray noise pickup. 4. Remove the flame amplifier and inspect the connectors. Reseat the flame amplifier. 5. Reset and sequence the relay module. 6. If the code reappears, replace the flame amplifier and/or the flame detector. 7. If the fault persists, replace the relay module.
Fault 19 *Main Flame Ign.*	Flame was lost during MFEP or the first 10 seconds of the RUN state.	1. Inspect the main fuel valve(s) and connection(s). 2. Make sure that the fuel pressure is high enough to supply fuel to the combustion chamber. 3. Make sure the flame detector is positioned to obtain the required flame signal strength; reset and recycle.
Fault 20 *Low Fire Sw. Off*	Low Fire Interlock switch failure to close during PREPURGE.	1. Check wiring and correct any errors. 2. Reset and sequence the relay module. 3. Use either the manual motor potentiometer to drive the motor to the Low Fire position or use the Run/Test Switch option, if available. Sequence to Prepurge drive to Low Fire and place in the Test position. Adjust the Low Fire Switch to make sure that it closes properly. 4. Measure the voltage between terminal 18 and G (ground) while in the Prepurge drive to Low Fire state. Line supply voltage should be present. If not, the switch adjustment is incorrect and/or the switch is defective and needs replacing. 5. Reset and sequence the relay module. If line supply voltage was present between the Low Fire Switch and terminal 18, and the fault still persists, replace the relay module.
Fault 21 *Running ILK*	Running Interlock fault during PREPURGE.	1. Check wiring; correct any errors. 2. Inspect the fan; make sure there is no blockage of the air intake and that it is supplying air. 3. Make sure the Interlock Switches are working properly and that all switch contacts are free of contaminants. 4. Reset and sequence the relay module to PREPURGE (place the Run/Test Switch in the Test position, if available). Measure the voltage between terminals 7 and G (ground). Line voltage should be present. 5. If steps 1 through 4 are correct and the fault persists, replace the relay module.
Fault 22 *Lockout ILK*	Lockout Interlock fault during PREPURGE.	
Fault 23 *Airflow Switch*	Combustion airflow interlock fault during PREPURGE.	
Fault 24 *Call Service*	The flame interlock (relay module) was on when it should be off.	1. Check for F leadwire routing. Make sure routing is in its conduit and isolated from noise-producing circuits.
Fault 25 *Call Service*	The flame interlock (relay module) was off when it should be on.	
Fault 26 *Man-Open Sw. Off*	The Manual Open Valve Switch was off when it should be on (RM7838B only).	1. Check wiring and correct any errors. 2. Make sure that the Manual Open Valve Switch is fully open. 3. Make sure that the Manual Open Valve Switch is functioning properly and that the switch contacts are free from contaminants. 4. Reset and sequence the relay module. 5. Make sure that the Manual Open Valve Switch provides an electrical path when closed. Verify that the relay module is receiving power at terminal 17. 6. If steps 1 through 5 are correct and the fault persists, replace the relay module.

(continued)

Table 3. Hold and Fault Message Summary (continued).

Fault Code	System Failure	Recommended Troubleshooting
Fault 27 *Start Switch On*	Start Switch was on during PREPURGE (RM7838A, RM7838B only).	1. Start Switch held on too long. 2. Check wiring; verify that Start Switch is correctly connected. 3. Make sure that the Start Switch is functioning properly and that the switch contacts are free of contaminants. 4. Reset and sequence the relay module to PREPURGE; set the Run/Test Switch to Test. Make sure there is no power at terminal 6 during PREPURGE. 5. If steps 1 through 3 are correct and the fault persists, replace the relay module.
Fault 28 *Pilot Flame Fail*	Pilot flame failure.	1. Check pilot valve wiring and operation. Correct any errors. 2. Check fuel supply. 3. Check pilot pressure and repeat pilot turndown test. 4. Check ignition transformer electrode, flame detector, flame detector sighting and flame amplifier. 5. If steps 1 through 4 are correct and the fault persists, replace the relay module.
Fault 29 *Lockout ILK*	Lockout Interlock fault.	1. Check wiring; correct any errors. 2. Inspect the fan; make sure that there is no blockage of the air intake and that it is supplying air. 3. Make sure that the Lockout Interlock Switches are working properly and that all switch contacts are free of contaminants. 4. Reset and sequence the relay module to PREPURGE (place the Run/Test Switch in the Test position, if available). Measure the voltage between terminals 7 and G (ground). Line voltage should be present. 5. If steps 1 through 4 are correct and the fault persists, replace the relay module.
Fault 30 *Running ILK*	Running Interlock fault.	1. Inspect the Running Interlocks, including the Airflow Switch, and the connections. *(continued)* 2. Make sure that the Running Interlocks, including the Airflow Switch, are functioning properly and that switch contacts are free of contaminants. 3. Reset and sequence the relay module to PREPURGE. Set the Run/Test Switch, if available, to Test. Measure the voltage between terminal 7 and G (ground). Line voltage should be present. 4. If steps 1 through 3 are correct and the fault persists, replace the relay module.
Fault 31 *Low Fire Sw. Off*	Low Fire Interlock Switch failure to close during RUN (RM7838B only).	1. Check wiring; correct any errors. 2. Reset and sequence the relay module. 3. Use either the manual motor position to drive the motor to the Low Fire position, or use the Run/Test Switch option, if available. Sequence to Run drive to Low Fire and place in the Test position. Adjust the Low Fire Switch while in this state to make sure it is closing properly. 4. While in Run, drive to Low Fire state, measure the voltage between terminal 18 and G (ground). Line voltage should be present. If not, the switch adjustment is incorrect and/or the switch is defective and needs replacement. 5. Reset and sequence the relay module. If line voltage was present between the Low Fire Switch and terminal 18 and the fault persists, replace the relay module.

(continued)

Table 3. Hold and Fault Message Summary (continued).

Fault Code	System Failure	Recommended Troubleshooting
Fault 32 *Airflow Switch*	Combustion Airflow Interlock fault.	1. Check wiring; correct any errors. 2. Inspect the fan; make sure there is no blockage of the air intake and it is supplying air. 3. Make sure the Airflow Interlock Switches are working properly and all switch contacts are free of contaminants. 4. Reset and sequence the relay module to PREPURGE. Place the Run/Test Switch in the Test position, if available. Measure the voltage between terminals 7 and G (ground). Line voltage should be present. 5. If steps 1 through 4 are correct and the fault persists, replace the relay module.
Fault 33 *Preignition ILK*	Preignition interlock fault.	1. Check wiring; correct any errors. 2. Inspect the Preignition Interlock switches and make sure they function properly. 3. Check fuel valve operation. Valve must close within five seconds. 4. Reset and sequence the relay module. 5. During STANDBY or PREPURGE, measure the voltage between terminal 20 and G (ground). For EC/RM7810, 7820, 7830, 7850, check voltage between terminal 17 and G. Line voltage should be present. If not, the Preignition Interlock switches can be defective and need replacing. 6. If the fault persists, replace the relay module.
Fault 34 *Control On*	CTL input was energized at the wrong time for the relay module. This fault implies a field wiring error.	1. Check wiring; correct any errors. 2. Reset and sequence the relay module. 3. If fault persists, replace the relay module.
Fault 35 *Call Service*	Safety relay was off when it should be on or a fuse has blown.	1. Reset and sequence the relay module. If fault repeats, replace relay module, but be sure to test for excessive loads on appropriate terminals described by fault code. 2. If fault does not repeat on next cycle check for electrical noise being coupled into the relay module through the loads on appropriate terminals described by the fault code. 3. If fault persists, replace the relay module.
Fault 36 *Call Service*	Main valve terminal was off when it should be on.	
Fault 37 *Call Service*	Pilot (ignition) valve terminal was off when it should be on.	
Fault 38 *Call Service*	Ignition terminal was off when it should be on.	
Fault 39 *Call Service*	V2S valve terminal (usually terminal 21) was off when it should be on.	
Fault 40 *Call Service*	Safety relay was on when it should be off.	
Fault 41 *Main Valve On*	Main valve terminal was on when it should be off.	**⚠ WARNING** **Explosion Hazard.** **Can cause explosion, serious injury or death.** 1. Remove system power, turn off fuel supply. 2. Check for wiring errors that could provide power to terminals described by the fault. Correct any errors. 3. Re-power system; reset and sequence the relay module. 4. If fault persists, replace the relay module. 5. When fault is corrected, turn on fuel supply.
Fault 42 *Pilot Valve On*	Pilot (ignition) valve terminal was on when it should be off.	
Fault 43 *Ignition On*	Ignition terminal was on when it should be off.	
Fault 44 *Pilot Valve 2 On*	V2S valve terminal, used as a pilot, is on when it should be off.	

(continued)

Table 3. Hold and Fault Message Summary (continued).

Fault Code	System Failure	Recommended Troubleshooting
Fault 45 *Low Fire Sw. Off*	Low Fire Interlock switch failure to close or stay closed.	1. Check wiring; correct any errors. 2. Reset and sequence the relay module. 3. Use either the manual motor position to drive the motor to the Low Fire position, or use the Run/Test Switch option, if available. Sequence to Run, drive to Low Fire and place in the Test position. Adjust the Low Fire Switch while in this state to make sure it is closing properly. 4. While in Run, drive to Low Fire state, measure the voltage between terminal 18 and G (ground). Line voltage should be present. If not, the switch adjustment is incorrect and/or the switch is defective and needs replacement. 5. If steps 1 through 4 are correct and the fault still persists, replace the relay module.
Fault 46 *Flame Amp Type*	This fault indicates: a. The Flame Failure Response Time (FFRT) or TYPE input from the amplifier changed while the device was powered; or b. A standard amplifier was used in a pilot valve application; or c. A three-second FFRT Amplifier was used with the relight option on the RM7890 Relay Module.	1. Remove power to the device. 2. Reseat the flame amplifier and reset and sequence the relay module. 3. For EC/RM7890 only; make sure that Jumper JR2 is completely clipped if a three-second FFRT amplifier is being used. If Jumper JR2 is intact (relight option is selected), use 0.8 second FFRT amplifier. 4. For RM7838B only; make sure that a Shutter Check Flame Amplifier is being used with the Pilot Valve Hold option selected.
Fault 47 *Jumpers Changed*	The configuration jumpers differ from the sample taken at startup.	1. Inspect the jumper connections. Make sure that clipped jumpers are completely removed. 2. Reset and sequence the relay module. 3. If fault persists, replace the relay module.
Fault 48 *Delayed MV On*	V2S valve terminal, used as a delayed main valve, was on when it should be off.	**⚠ WARNING** **Explosion Hazard.** **Can cause explosion, serious injury or death.** 1. Remove system power, turn off fuel supply. 2. Check wiring; correct any errors. 3. Inspect the V2S Fuel Valve and its connections. Make sure the switch is working correctly and is not jumpered or welded. 4. Reset and sequence the relay module. 5. If fault persists, replace the relay module.
Fault 49 *Man-Open Sw. On.*	The manual open switch was on when it should be off.	**⚠ WARNING** **Explosion Hazard.** **Can cause explosion, serious injury or death.** 1. Remove system power, turn off fuel supply. 2. Check wiring; correct any errors. 3. Inspect the Manual-Open Switch and its connections. Make sure the switch is working correctly and is not jumpered or welded. 4. Reset and sequence the relay module. 5. If fault persists, replace the relay module.
Fault 50 *Jumpers Wrong*	The sequence logic detected a combination of jumpers that is illegal for the sequence eg, if it is correct to clip Jumper JR1 or Jumper JR2, but not both, this fault would be used when both are clipped (RM7888 only).	1. Inspect the jumpers and refer to the installation instructions for compatible jumper configurations. 2. Make sure that clipped jumpers are completely removed. 3. Reset and sequence the relay module. 4. If fault persists, replace the relay module.

(continued)

Table 3. Hold and Fault Message Summary (continued).

Fault Code	System Failure	Recommended Troubleshooting
Fault 51 *Flame Too Strong*	Flame signal value is too high to be valid.	1. Make sure that flame detector and flame amplifier are compatible. 2. Remove the flame amplifier and inspect the connections. Reset the flame amplifier. 3. Reset and sequence the relay module. 4. Check the flame detector sighting position, reset and cycle. 5. Verify that no ignition noise is present in the F lead due to wire routing. 6. Measure the flame strength. Verify it meets specifications. If not, refer to the flame amplifier and/or flame detector checkout procedures. 7. If the code reappears, replace the flame amplifier and/or the flame detector. 8. If the fault persists, replace the relay module.
Fault 52 *Call Service*	Pilot Valve 2 (terminal 21) was off when it should be on.	1. Inspect terminal 21 and connections. Make sure that the valve is operating properly. 2. Reset and sequence the relay module. 3. If the fault persists, replace the relay module.
Fault 53 *Lockout Switch*	Lockout Input fault (EC/RM7810, 7820, 7830, 7850 only).	1. Check wiring; correct any errors. 2. Inspect the Lockout Switch to make sure it is working properly. 3. Reset and sequence the relay module. During STANDBY or PREPURGE, measure the voltage between terminal 20 and G (ground). Supply voltage should be present. If not, the lockout switch is defective and needs replacing. 4. If the fault persists, replace the relay module.
Fault 54 *Comb. Pressure*	Combustion pressure switch fault (Fulton pulse only).	1. Check wiring; correct any errors. 2. Inspect the Combustion Pressure Switch to make sure it is working correctly. 3. Reset and sequence the relay module. 4. During STANDBY or PREPURGE, measure the voltage between terminal 20 and G (ground). Supply voltage should be present. If not, the Combustion Pressure Switch is defective and needs replacing. 5. If the fault persists, replace the relay module.
Fault 55 *Purge Fan Sw. On*	Purge fan switch is on when it should be off (Fulton pulse only).	1. Check wiring; correct any errors. 2. Inspect the Purge Fan Switch terminal 18 and its connections. Make sure the switch is working correctly and is not jumpered or welded. 3. Reset and sequence the relay module. 4. If the fault persists. replace the relay module.
Fault 56 *Block Intake*	Block intake fault (Fulton pulse only).	1. Check wiring; correct any errors. 2. Inspect the Block Intake Switch and make sure it is working properly. 3. Reset and sequence the relay module. 4. During PREPURGE, measure the voltage between terminal 7 and G (ground). Supply voltage should be present. If not, the Block Intake Switch is defective and needs replacing. 5. If the fault persists, replace the relay module.
Fault 57 *Purge Fan Sw. Off*	Purge Fan Switch is off when it should be on (Fulton pulse only).	1. Inspect the Prepurge Fan Switch terminal 18 and the connections. Make sure the switch is working properly. 2. Reset and sequence the relay module. 3. If the fault persists, replace the relay module.
Faults 58 - 66 *Call Service*	Unused faults	—
Fault 67 *AC Phase*	L1 and L2 miswired/exchanged (EC/RM7810, 7820, 7830, 7850 only).	1. Check L1 and L2 for proper line phasing.

(continued)

Table 3. Hold and Fault Message Summary (continued).

Fault Code	System Failure	Recommended Troubleshooting
Fault 68 *Preignition ILK*	Preignition Interlock fault.	1. Check wiring; correct any errors. 2. Inspect the Preignition Interlock switches and make sure they work properly. 3. Check fuel valve operation. Valve must close within five seconds. 4. Reset and sequence the relay module. 5. During STANDBY or PREPURGE, measure the voltage between terminal 17 and G (ground). Supply voltage should be present. If not, the Preignition Interlock switches are defective and need replacing. 6. If the fault persists, replace the relay module.
Fault 69 - 70 *Call Service*	Unused faults.	—
Fault 71 *Dynamic LFS*	Low Fire Switch closed, High Fire Switch must be open (EC/RM7850 only).	1. Check firing rate position switches (usually in Modutrol® Motor) for proper operation. 2. Check wiring, correct any errors. 3. Reset and sequence the relay module. 4. If the fault persists, replace the relay module.
Fault 71 *Limits Complete*	Limit input (terminal 7) is off when it should be on (RM7888 only).	1. Check limits to make sure they are satisfied after resetting. 2. Check electrical connections to terminal 7 of wiring subbase. 3. Reset relay module. 4. If the fault persists, replace the relay module.
Fault 72 *Dynamic HFS*	High Fire Switch closed; Low Fire Switch must be open (EC/RM7850 only).	1. Check firing rate position switches (usually in Modutrol® Motor) for proper operation. 2. Check wiring, correct any errors. 3. Reset and sequence the relay module. 4. If the fault persists, replace the relay module.
Fault 72 *Spec.Func.2*	Special Function 2 Input (terminal 17) is off when it should be on.	1. Check operation of Special Function 2 of PLC. 2. Check electrical connection to terminal 17 of wiring subbase and confirm presence of supply power when Special Function 2 is activated. 3. Reset relay module. 4. If the fault persists, replace the relay module.
Fault 73 *Spec.Func.3*	Special Function 3 Input (terminal 19) is off when it should be on.	1. Check operation of Special Function 3 of PLC. 2. Check electrical connection to terminal 19 of wiring subbase and confirm presence of supply power when Special Function 3 is activated. 3. Reset relay module. 4. If the fault persists, replace the relay module.
Fault 75 *Flame Proven Feedback*	Flame Indication Feedback (terminal 21) either on when it should be off or off when it should be on.	1. Remove wire to terminal 21 and reset relay module. 2. If the fault persists, replace relay module. 3. Reconnect wire to terminal 21. If the fault returns, verify wiring.
Fault 76 - 93 *Accessory Fault*	—	—
Fault 94 - 104 *Call Service*	—	—
Fault 105 *Call Service*	Relay Module self-test failure.	1. Reset and sequence the relay module. 2. If the fault reappears, remove power from the relay module and reapply the power; reset and sequence the relay module. 3. If the fault persists, replace the relay module.
Fault 106 *Call Service*	Relay Module self-test failure.	
Fault 107 *Call Service*	Relay Module flame signal crosscheck failure.	

(continued)

Table 3. Hold and Fault Message Summary (continued).

Fault Code	System Failure	Recommended Troubleshooting
Fault 109 *Call Service*	Negative cycle test failed, earth ground absent or line voltage phasing improper.	1. Make sure a good earth ground connection exists at the installation site and all earth ground connections are complete and correct. 2. Make sure the relay module and all loads operate at the same line voltage phase. 3. Reset and sequence the relay module. 4. If the fault persists, replace the relay module.
Fault 110 *Call Service*	The configuration jumpers differ from stored values.	1. Inspect the jumper connections. Make sure they match the original selection and clipped jumpers are completely removed. 2. Reset and sequence the relay module. 3. If the fault persists, replace the relay module. 4. Configuration jumpers must be selected prior to 200 hours of operation. If configuration jumpers are changed after 200 hours of operation, lockout 110 occurs. Relay module *cannot* be reset and *must* be replaced.
Fault 111 *Call Service*	Relay Module configuration jumper test failure.	1. Inspect the jumper connections. Make sure they match the original selection and clipped jumpers are completely removed. 2. Reset and sequence the relay module. 3. If the fault persists, replace the relay module.
Fault 112 - 126 *Call Service*	Relay Module self-test failure.	1. Reset and sequence the relay module. 2. If the fault persists, replace the relay module.
Fault 127 *Call Service*	Safety relay feedback circuit was in an improper state.	1. Reset and sequence the relay module. 2. If the fault persists, replace the relay module.

Honeywell

Home and Building Control
Honeywell Inc.
Honeywell Plaza
P.O. Box 524
Minneapolis MN 55408-0524

Home and Building Control
Honeywell Limited-Honeywell Limitée
155 Gordon Baker Road
North York, Ontario
M2H 3N7

65-0229—1 G.R. Rev. 4-98

Printed in U.S.A. on recycled paper containing at least 10% post-consumer paper fibers.

www.honeywell.com

MANUFACTURER'S PRODUCT SPECIFICATIONS

Purge Timer

EAGLE SIGNAL brand
Electric Timers

HP5 CYCL-FLEX® Reset Timer

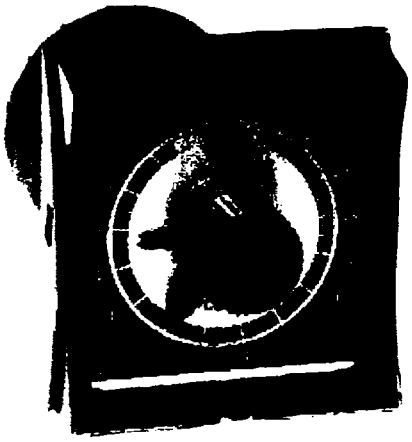

The high quality timer that has become an industry standard... knob setpoint, cycle progress pointer, pilot light, and patented plug-in housing

RECOGNIZED CERTIFIED APPROVED

The HP5 CYCL-FLEX® series timer is a high quality, synchronous motor driven reset timer housed in the standard CYCL-FLEX® plug-in housing.

- 16 standard time ranges from 5 seconds to 60 hours
- Knob adjustable time ranges - progress pointer for each
- Highly visible, calibrated dials (7.85 inch circumference)
- Easily read and well-spaced calibrations
- Red progress pointer displays remaining time interval
- Pilot light indicates when timer motor is energized
- Standard timers supplied with "power on" clutch operation
- Optional reverse action clutch will not reset on power failure
- 15 terminal ABS (UL rated 94V-0) molded housing has high impact resistance and will not support combustion

OPERATION

Application of power to terminals 1, 2, and 11 energizes the clutch coil, closes contacts 9-10 and 6-8, and starts the timing period. At time out, contacts 4-3 close, 11-12 open, and the motor stops. The timer will remain in this condition until power is removed from the clutch coil.

Contacts 6-7-8 and 9-10-C are instantaneous contacts and operate with the application of power to the clutch coil. Contacts 3-4-5 and 11-12-A operate at time out with contacts 3-4-5 operating prior to contacts 11-12-A.

SPECIFICATIONS

Time Ranges:

7	5 Sec.	1/6 Sec.	.05 Sec.	±.05 Sec.
5	10 Sec.	1/3 Sec.	1/6 Sec.	±.05 Sec.
4	15 Sec.	1/2 Sec.	1/4 Sec.	±.08 Sec.
0	30 Sec.	1 Sec.	1/2 Sec.	±.15 Sec.
1	60 Sec.	2 Sec.	1 Sec.	±.3 Sec.
2	150 Sec.	4.5 Sec.	2 Sec.	±.75 Sec.
3	5 Min.	9 Sec.	3 Sec.	±1.5 Sec.
4	10 Min.	20 Sec.	10 Sec.	±3 Sec.

Time Ranges Cont.:

18	15 Min.	30 Sec.	15 Sec.	±4.5 Sec.
5	30 Min.	1 Min.	1/2 Min.	±9 Sec.
6	60 Min.	2 Min.	1 Min.	±18 Sec.
7	150 Min.	4.5 Min.	2 Min.	±45 Sec.
8	5 Hr.	9 Min.	3 Min.	±1.5 Min.
9	10 Hr.	20 Min.	10 Min.	±3 Min.
10	30 Hr.	1 Hr.	1/2 Hr.	±9 Min.
11	60 Hr.	2 Hr.	1 Hr.	±18 Min.

Reset Time: 1/2 second at max. setting

Voltage/Frequency: 120V (+10, -15%), 50/60 Hz
240V (+10, -15%), 50/60 Hz

Burden: Motor: 2.45 VA, 120 VAC
Clutch: 10.5 VA

Output Rating: 10 amps, resistive, 120 VAC
5 amps, resistive, 240 VAC

Electrical Lifetime: Contingent on load characteristics. Average contact life at full load is 250,000 operations. At 1 amp load, switch life increases to 5 million cycles. Inrush current should not exceed 10 amps.

Power On Response: 28 ms average pull-in
17 ms average drop-out

Temperature Range: 0° to 140°F (-18° to +60°C)

Vibration: Unaffected by 2.5G sinusoidal vibration magnitudes in both directions of three perpendicular mounting axes imposed from 10 to 900 Hz

Approximate Weight: 2 lb. 14 oz.

Agency Approvals: UL Recognition E61735
UL Recognition 71726 (Feature 92 only)
CSA Certification LR26861
CSA Certification (Feature 92 only)
FM Approval 15030

OPERATION

Standard and Reverse Start

Instantaneous contacts 9-10-C and 6-7-8 operate directly with the clutch offering different sequences of operation depending on the control circuit configuration.

Delayed contacts 4-3 and 11-A close and contacts 4-5 and 11-12 open when timer reaches a timed out condition. Contacts 4-5 and 11-12 close and contacts 4-3 and 11-A open when timer is reset.

Schematic Diagram

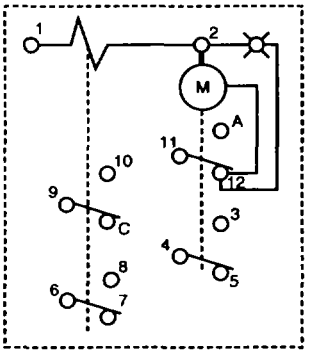

ENCLOSURES

HN308	1	Surface Mtg. with terminal block
HN364	1	Surface Mtg. without terminal block
HN368	!A	Dual unit cabinet with 9 position terminal block, timer housings, and DPST toggle switch
HN370	1A	Dual unit cabinet less unit cases and toggle switch, with 9 terminal block

ACCESSORIES

H-5331	Mounting Brackets 2 req'd per timer
HP50-31	One Hole Mounting Ring
HP50-103	120 VAC, 50/60 Hz Repeat Cycle Kit Not applicable with Feature 19
HP50-131	CYCL-FLEX® Water-Sealed Housing
HP50-133	Surface Mounting Adapter to use in place of brackets
HP50-295	Dial Lock

MOUNTING

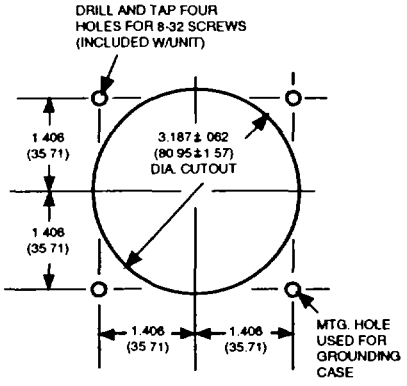

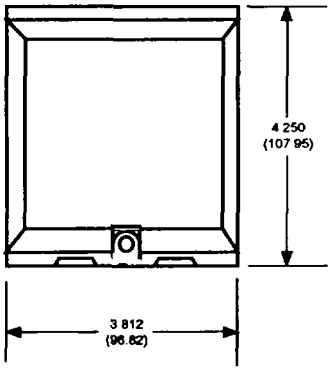

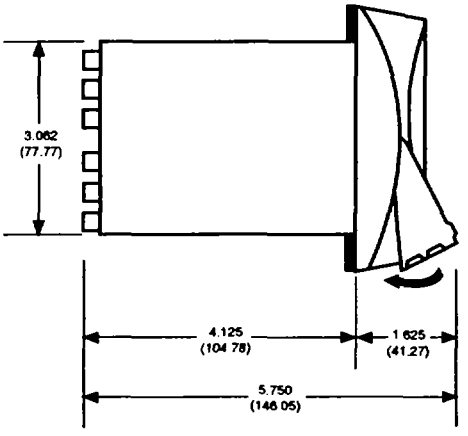

ORDERING INFORMATION

HP5 15 A6 01

TIME RANGE

17	0-5 Sec.	18	0-15 Min.
15	0-10 Sec.	5	0-30 Min.
14	0-15 Sec.	6	0-60 Min.
0	0-30 Sec.	7	0-150 Min.
1	0-60 Sec.	8	0-5 Hr.
2	0-150 Sec.	9	0-10 Hr.
3	0-5 Min.	10	0-30 Hr.
4	0-10 Min.	11	0-60 Hr.

VOLTAGE & FREQUENCY

A5	120V, 50 Hz
A6	120V, 60 Hz
B5	240V, 50 Hz
B6	240V, 60 Hz

FEATURES

01	Reverse Clutch Arrangement
05	Chrome Plated Bezel
07	Dial Lock
15	Stainless Steel Handle & Housing Plate
19	Revision for Mtg. to HN383 Explosion Proof Cabinet. Add when purchased without cabinet. DOES NOT have pilot light.
22	Water Resistant Window & Housing
92*	Enclosed in HN383 Explosion Proof Cabinet

*Laboratory Testing: UL Recognition E61735
CSA Certification LR45132-1

MANUFACTURER'S PRODUCT SPECIFICATIONS

Alarm Horn

EDWARDS
SIGNALING PRODUCTS

Installation Instructions for Indoor AdaptaHorns

Description

The AdaptaHorns are UL listed vibrating horns. AC models are FM listed. They are low current, high decibel horns designed for heavy-duty use indoors. The horns are intended for general signaling applications.

PLC Compatibility

The electrical input load requirements for PLC compatible signaling devices are listed in Table 1. Signaling devices may be directly connected to output cards that meet these input load requirements.

24V DC electromechanical horns such as the 871-G1, 873-G1, 873DPO-G1 and 875-G1 can produce transient spikes and should only be used on PLC output cards that have inherent transient spike suppression. The Process Control Engineer should consult the PLC manufacturer when connecting 24V DC electromechanical devices to PLCs.

Installation

Flush Mounting (870 and 871 Series)

1. Using approved wiring methods, connect black wire leads to power source wires. Polarity is not important.
2. Ground to wiring system.
3. Insert horn connector into connector receptacle and secure horn to backbox with (4) oval head screws (supplied).

Surface Mounting (872, 872DPO, 873, 873DPO, 874, and 875 Series)

1. Loosen screw at bottom of horn and remove backplate.
2. Mount plate using one of the following methods:
   a. Mount on any outlet box cover having single gang opening using #6 screws (supplied).
   b. Mount on a 3 1/4" (83mm), 3 1/2" (89mm), 4" (102mm) octagon or 4" (102mm) square box using #8 screws supplied with backbox.
   c. Mount on the wall, for open wiring, using #8 wood screws (supplied).
3. Using approved wiring methods connect one wire to each terminal in backplate. Ground to wiring system.

Table 1. PLC Compatibility

Cat. No.	Operating voltage*	Maximum off state leakage current (mA)	Continuous on current (mA)	Surge (inrush/duration) (A/ms**)
870-N5	120V AC	25	120	1.02/0.000026
871-G1	24V DC	25	150	1.7/0.000042
872-N5	120V AC	25	120	1.02/0.000026
872DPO-N5	120V AC	25	120	1.02/0.000026
873-G1	24V DC	25	150	1.7/0.000042
873DPO-G1	24V DC	25	150	1.7/0.000042
874-N5	120V AC	25	120	1.02/0.000026
875-G1	24V DC	25	150	1.7/0.000042

*All AC volts at 60 Hz
**Amps/milliseconds

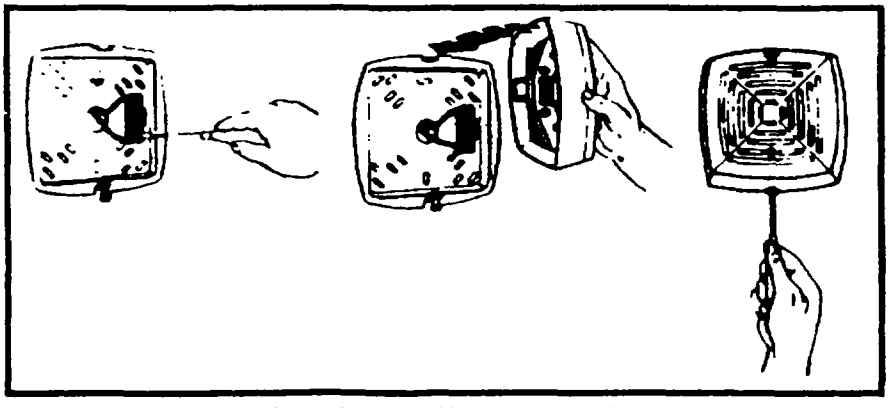

Figure 1. Mounting the Horn on the AdaptaPlate

Place the horn on the mounting plate so that the tab at the top seats in slot on horn. Press horn firmly against plate and tighten screw at bottom of unit. See Figure 1.

Volume Adjustment

These devices have a volume adjustment screw (located on the grille front) factory set to maximum. To reduce volume level, turn set screw clockwise using the supplied 1/16" (1.6mm) allen wrench.

Table 2. Electrical Specifications

Cat. No.	Voltage	Current
870-G5	24V 50/60 Hz	0.63A
870-N5	120V 50/60 Hz	0.13A
870-R5	240V 50/60 Hz	0.07A
871-E1	12V DC	0.27A
871-G1	24V DC	0.16A
871-K1	48V DC	0.07A
871-P1	125V DC	0.025A
871-S1	250V DC	0.014A
872-E5	12V 50/60 Hz	1.25A
872-G5	24V 50/60 Hz	0.63A
872-N5	120V 50/60 Hz	0.13A
872-R5	240V 50/60 Hz	0.07A
872DPO-G5	24V 50/60 Hz	0.63A
872DPO-N5	120V 50/60 Hz	0.13A
872DPO-R5	240V 50/60 Hz	0.07A
873-G1	24V DC	0.16A
873-K1	48V DC	0.07A
873-P1	125V DC	0.025A
873-S1	250V DC	0.014A
873DPO-E1	12V DC	0.27A
873DPO-G1	24V DC	0.16A
873DPO-J1	32V DC	0.13A
873DPO-P1	125V DC	0.025A
873DPO-S1	250V DC	0.014A
874-E5	12V 50/60 Hz	1.25A
874-G5	24V 50/60 Hz	0.63A
874-N5	120V 50/60 Hz	0.13A
874-R5	240V 50/60 Hz	0.07A
875-C1	6V DC	0.70A
875-E1	12V DC	0.27A
875-G1	24V DC	0.16A
875-J1	32V DC	0.13A
875-P1	125V DC	0.025A
875-S1	250V DC	0.014A

APPENDIX K

Sequence of Operation for Thermal Oxidizer/Scrubber

Dürr Environmental, Inc.

MONTGOMERY WATSON HARZA
FOR
AMERICAN CHEMICAL SERVICES
Griffith, IN

Dürr Project No. 22429

Recuperative Thermal Oxidizer
with Wet Scrubber

SEQUENCE OF OPERATION

April 22, 2002
Rev. 1

Table of Contents

1. GENERAL INFORMATION 1

1.1. GENERAL INSTRUCTIONS 1
1.2. INTRODUCTION 1
1.3. MAJOR COMPONENTS OF THE OXIDIZER 1
1.3.1 Base Frame 1
1.3.2 Process Fan and Motor (123 MTR) 1
1.3.3 Heat Exchanger 1
1.3.4 Combustion Chamber 2
1.3.5 Burner and Fuel Supply Train 2
1.3.6 Combustion Air Blower (FN-02) System 2
1.3.7 Fresh Air Damper (O:04/07 DM) 2
1.3.8 Process Interlock Signals 3
1.3.9 Main Control Panel 3
1.4. MAIN FEATURES OF THE OXIDIZER 4
1.4.1. Air Flow Through the Oxidizer 4
1.4.2. Combustion Chamber Temperature Control 4
1.4.3. Process Fan Speed Control 5
1.4.4. Oxidizer Warm Up Period 5
1.4.5. Oxidizer Idle Mode 5
1.4.6. Oxidizer Interface to Process 5
1.4.7. IMPORTANT WARNING 6
1.5. MAJOR COMPONENTS OF THE SCRUBBER 7
1.5.1. Quench Spray Header 7
1.5.2. Scrubber Vessel 7
1.5.3. Packing Media 7
1.5.4. Recirculation Pump (PP-01) 7
1.5.5. Caustic Metering Pump (416P) 7
1.5.6. Recirculation Water Spray Headers 7
1.5.7. Makeup Water/Mist Eliminator Spray Headers 7
1.5.8. Mist Eliminator 8
1.6. MAIN FEATURES OF THE SCRUBBER 8
1.6.1. Air Flow Through the Scrubber 8
1.6.2. pH Control 8
1.6.3. Conductivity Control 8

2. SEQUENCE OF OPERATION 9

2.1. INITIATING SCRUBBER STARTUP 9
2.2. INITIATING OXIDIZER STARTUP 9
2.3. SYSTEM PURGING REQUIREMENTS 10
2.4. PURGE PERMISSIVE COMPONENTS 10
2.5. BURNER PERMISSIVE REQUIREMENTS 10
2.6. BURNER PERMISSIVE COMPONENTS 11
2.7. BURNER IGNITION SEQUENCE 11
2.7.1. Auto-Ignition Sequence 11
2.8. COMBUSTION CHAMBER TEMPERATURE RAMP 11
2.9. OXIDIZER INCINERATE MODE 12
2.10. OXIDIZER SHUTDOWN 12
2.10.1. Extended Duration Shutdown 12

3. CONTROL SYSTEM COMPONENTS 13

3.1. OPERATOR CONTROLS 13
3.2. SCRUBBER LEVEL CONTROL 13
3.3. SCRUBBER pH CONTROL 13
3.4. SCRUBBER BLOW DOWN CONTROL 14
3.5. INSTRUMENTATION 14
3.5.1. Combustion Chamber High Temperature Limit (221HTL) 14
3.5.2. Chart Recorder 14
3.5.3. Scrubber Flowmeter 14
3.5.4. Scrubber Level Transmitter 14
3.5.5. Scrubber Conductivity Sensor and Analyzer 14
3.5.6. Scrubber pH Sensor and Analyzer 15
3.6. SYSTEM ALARMS 15
3.7. FIELD COMPONENTS 15
3.7.1. Motor Starters 15
3.7.2. Variable Frequency Drive 15
3.7.3. Process Fan (123 MTR) 15
3.7.4. Combustion Air Blower (107 MTR) 15
3.7.5. Fresh Air Damper (O:04/07 DM) Actuator 15
3.7.6. Field Mounted Burner Controls 16
3.7.7. Pressure Switches 16

4. OPERATING THE OXIDIZER 17

4.1. SYSTEM PRE-CHECKS 17

4.1.1 Personnel Safety Check 17

4.1.2 Applying Power 17

4.1.3 Instrumentation Check 17

4.2. INITIATING OXIDIZER STARTUP 17

4.2.1. Start the Oxidizer 17

4.3. MONITORING OXIDIZER STARTUP 17

4.3.1. Combustion Air Fan (107 MTR) Start 17

4.3.2. Process fan (123 MTR) Start 18

4.3.3. System Purge Cycle 18

4.3.4. Automatic Burner Ignition 18

4.4. TROUBLESHOOTING OXIDIZER STARTUP 18

4.4.1. Combustion Air Fan (107 MTR) Will Not Start 18

4.4.2. Process fan (123 MTR) Will Not Start 18

4.4.3. System Fails to Purge 19

4.4.4. Burner Fails to Ignite 19

4.5. OXIDIZER OPERATING CONDITIONS 19

4.5.1. Incinerate Mode 19

4.5.2. Fresh Air and Process Isolation Damper 19

4.5.3. Process fan Speed Control 20

4.6. TROUBLESHOOTING DURING OXIDIZER OPERATION 20

4.6.1. Temperature Will Not Ramp Up 20

4.6.2. OXIDIZER NOT AT TEMP 20

4.6.3. Fresh Air Damper (O:04/07 DM) Will Not Close 20

4.6.4. Process Isolation Damper Will Not Open 20

4.6.5. Inlet Pressure Incorrect 20

4.7. SHUTTING DOWN THE OXIDIZER 21

4.8. SHUTTING DOWN THE OXIDIZER TROUBLESHOOTING 21

4.9. MONITORING OXIDIZER SHUTDOWN 21

4.9.1. Burner Shutdown 21

4.9.2. Fresh Air and Process Isolation Dampers (M8-M9) 21

4.9.3. Process Fan 21

4.10. TROUBLESHOOTING OXIDIZER SHUTDOWN 21

4.10.1. Burner Will Not Shutdown 21

4.10.2. Fresh Air Damper (O:04/07 DM) Will Not Open 21

4.10.3. Process Isolation Damper Will Not Close 22

4.10.4. Process fan (123 MTR) Will Not Shutdown 22

4.10.5. Combustion Air Fan (107 MTR) Will Not Shutdown 22

4.11. SYSTEM POST CHECK 22
4.11.1. Remove System Power *22*
4.11.2. Secure System Fuel Supply *22*
4.12. DESCRIPTION SUMMARY ALARMS: 22
4.12.1. Combustion High Temp Warning: ***(W)*** *22*
4.12.2. Combustion High Temp Fault: ***(S)*** *22*
4.12.3. Flame Fault: ***(W)*** *23*
4.12.4. Recirc. Flowrate OK: ***(S) No warning, just a fault*** *23*
4.12.5. Scrubber High Temp Warning, Fault: ***(W, S)*** *23*
4.12.6. Media Pressure Drop OK: ***(W)*** *23*
4.12.7. Demister Pressure Drop OK: ***(W)*** *23*
4.12.8. Scrubber pH Low: ***(W)*** *24*
4.12.9. Scrubber pH High (821PHT): ***(W)*** *24*
4.12.10. Water Conductivity OK (826CNT): ***(W)*** *24*
4.13. ACRONYMS 25

1. GENERAL INFORMATION

1.1. GENERAL INSTRUCTIONS

This Sequence of Operation is intended for use in conjunction with other Dürr documentation such as the "Flow and P&I Diagram" (Dwg. 22429F001 & F002) which provide further information.

For adjustment of the burner combustion system refer to the Owner's Manual.

For normal maintenance please refer to the Purchased Equipment information in the Owner's Manual.

1.2. INTRODUCTION

Dürr Environmental Inc is a world leader in the development of cost effective control technologies for the destruction of volatile organic compounds (VOCs), air toxics (TOXINS) and odors. The Company leads the industry in combining energy conservation principles with highly efficient destruction of airborne pollutants, and has hundreds of installations around the world. Dürr has successfully treated some of the world's most difficult VOC control problems, including the design of the world's largest regenerative thermal oxidizer.

The thermal oxidizer uses high temperature, residence time and turbulence to convert VOCs to carbon dioxide and water vapor. The wet scrubber uses recirculating water dosed with a basic solution to neutralize acid vapors.

1.3. MAJOR COMPONENTS OF THE OXIDIZER

1.3.1 Base Frame

The base frame is a structural steel skid fabricated from tube steel on which the oxidizer vessel, heat exchanger, gas train, burner, and combustion air blower are mounted. The forced draft process fan is located adjacent to the heat exchanger inlet.

1.3.2 Process Fan and Motor (123 MTR)

Process air is pushed through the heat exchanger tubes, oxidizer, and scrubber by the forced draft process fan and exhausted through an exhaust stack. The 7.5 HP process fan motor (123 MTR) is controlled by a Variable Frequency Drive (VFD) which modulates fan speed to maintain static pressure in the abatement system.

1.3.3 Heat Exchanger

The shell and tube style heat exchanger pre-heats the process air before entering the oxidizer's combustion chamber, and cools the process air as it leaves the combustion chamber. Inlet air flows through ¾"OD Inconel

600 tubes, and exhaust air flows around the outside of the same tubes to achieve heat transfer.

1.3.4 Combustion Chamber

The combustion chamber is where VOC oxidation occurs. The chamber is fabricated from 10 Ga. Hastelloy plate and stainless steel supports, and insulated with ¼" thick ceramic paper and 4" thick castable refractory.

1.3.5 Burner and Fuel Supply Train

Combustion chamber temperature is controlled by a Natural Gas burner system. The burner system, including the fuel train consists of the following items:

a) Ultraviolet flame scanner

b) Flame Management control relay

c) Spark ignition system (transformer and igniter)

d) Combustion air train, including:

   1. Automatic flow control valve and actuator (4-20 mA signal)
   2. Manual flow control valve
   3. Combustion Airflow Pressure Switch

e) Fuel supply train, including:

   1. Gas Safety Shutoff Valve
   2. Gas Blocking Valve
   3. Gas Flow Proportioning Regulator
   4. Gas Pilot Solenoid Valve
   5. Gas Pressure switches (high and low)

1.3.6 Combustion Air Blower (FN-02) System

Combustion air for the burner system is provided by a 2 HP combustion air blower (FN-02), which operates at a constant speed. The combustion airflow is controlled via an air flow control valve and modulating actuator (305 GVA).

1.3.7 Fresh Air Damper (O:04/07 DM)

The Fresh Air Damper (O:04/07 DM) directs fresh air into the abatement system for purging purposes prior to burner ignition, and provide an air source for the heat-up and idle modes of the oxidizer.

1.3.8 Process Interlock Signals

Interlock signals from the process source controls to the Oxidizer controls are as follows:

(a) Process Permit
(b) Process Fan Running

Status signals from the Oxidizer controls to client's SVE are listed below:

Signal Name	Signal Type	Address	From	To	Address
Thermox Ready	Digital	B3:3/0	Thermox	SVE	N11:30/00
Process Fan Status	Digital	I:1/10	Thermox	SVE	N11:30/01
Fresh Air Valves	Digital	Open I:3/2	Thermox	SVE	N11:30/02
Thermox Isolation Damper	Digital	Open I:1/6 Closed I:1/7	Thermox	SVE	N11:30/03 Open N11:30/04 Clsd
Recirc Pump Status	Digital	Flow OK O:2/9	Thermox	SVE	N11:30/05
Blowers Ready	Digital		SVE	Thermox	N11:30/06
Blower Flow Normal	Digital		SVE	Thermox	N11:30/07
Chamber Temperature	Analog	I:6.0	Thermox	SVE	F14:0
Process Fan Flow Rate	Analog	I:5.2	Thermox	SVE	F14:1
Exhaust Temperature	Analog	I:6.1	Thermox	SVE	F14:2
Sump Level	Analog	I:5.0	Thermox	SVE	F14:3
Recirc. Water Flow Rate	Analog	I:5.1	Thermox	SVE	F14:4
Scrubber Water pH	Analog	I:5.3	Thermox	SVE	F14:5

Interlock signals from the Oxidizer controls to the process source controls are as follows:

(a) Oxidizer Ready to receive solvents (OXIDIZER AT TEMP TRANSMITS to GWTP PLC via SCADA).

1.3.9 Main Control Panel

All Oxidizer control functions are performed at the Main Control Panel that is located indoors near the wet scrubber. The major components of the wall mounted control panel are:

(a) Programmable Logic Controller
(performs all system logic control, alarms, etc.)
(b) Flame Safety Control System
(provides ignition and flame failure protection.)
(c) High Temperature Limit Controls
(d) Oxidizer and Scrubber Status indicator lights
(e) Circle Chart Recorder
(f) Motor Starters and discrete controls

1.4. MAIN FEATURES OF THE OXIDIZER

1.4.1. Air Flow Through the Oxidizer

This process fan is located on the inlet side of the oxidizer and pushes air through the heat exchanger, the oxidizer, and the scrubber.

The process air isolation damper is opened to allow process air into the combustion chamber.

The Programmable Logic Controller (PLC) performs the sequencing of these solenoid valves.

When the Oxidizer is in SHUTDOWN mode, the process isolation damper will remain open until the oxidizer has cooled to 200°F.

1.4.2. Combustion Chamber Temperature Control

The temperature in the oxidizer's combustion chamber is maintained at set point by modulating the firing rate of the burner by using a Proportional/Integral/Derivative controller, located on the control panel door. The set point for the controller is generated by a Type K thermocouple (T/C).

The burner control loop consists of three main elements:

a) Process Variable (combustion chamber thermocouple)
b) Burner temperature controller (PID)
c) Controlled Variable: Modulating combustion air valve

Operation: The PID control loop operates in the AUTOMATIC configuration mode under normal operating conditions. The set point value is obtained from the operator input. The Control variable output is continually updated based on calculations made by the PID controller. When the PID controller is placed in the MANUAL control mode, the control variable output may be adjusted manually.

WARNING: WHEN OPERATING MANUALLY, SYSTEM TEMPERATURES MUST BE CAREFULLY MONITORED AT ALL TIMES TO ENSURE THAT SYSTEM TEMPERATURES DO NOT REACH LEVELS THAT MAY BE DAMAGING TO THE OXIDIZER AND/OR IT'S ASSOCIATED DUCTING.

1.4.3. Process Fan Speed Control

WARNING: WHEN OPERATING MANUALLY, SYSTEM PRESSURES MUST BE CAREFULLY MONITORED AT ALL TIMES TO ENSURE THAT SYSTEM PRESSURES DO NOT REACH LEVELS THAT MAY BE DAMAGING TO THE OXIDIZER AND/OR IT'S ASSOCIATED DUCTING.

The pressure control loop maintains a static pressure setpoint at the process fan inlet by modulating airflow through the oxidizer and system ductwork by varying process fan motor speed with a Variable Frequency Drive (VFD).

The control loop consists of three elements:

a) Pressure transmitter (PT 208) piped to the oxidizer inlet duct
b) Pressure loop controller (VFD-PID)
c) Controlled variable: A 4-20 mA signal is sent to the VFD

The Process fan speed is constantly modulated to maintain its pressure set point (SP). The Control variable output is continually updated based on calculations made by the PID controller with reference to the Pressure process variable (PV).

1.4.4. Oxidizer Warm Up Period

During its warm up period, the Oxidizer pulls fresh air through the fresh air damper and does not accept process air stream. From start up, the Combustion chamber temperature is raised until the chamber reaches 1400°F setpoint. After 20 minutes, the Oxidizer is READY TO RECEIVE SOLVENTS.

1.4.5. Oxidizer Idle Mode

In IDLE mode, the Oxidizer does not accept process air stream, its air source for combustion is from a fresh air damper (O:04/07 DM).

1.4.6. Oxidizer Interface to Process

The Oxidizer to Process Interlocks are carried out through discrete signals. Interlock signals from the Process source controls to the oxidizer controls are as follows:

(a) Blowers Ready
(b) Blower Flow Normal

Interlock signals from the oxidizer controls to the Process source Controls are as follows:

(c) Oxidizer Ready to receive solvents (OXIDIZER AT TEMP transmitted to GWTP PLC via SCADA).

Once started the oxidizer will heat up to its chamber temperature setpoint warm up period in the 'Incinerate Mode'.

Once the Process controls see this signal the Isolation damper will start to open to allow process air into the oxidizer. At this point the control of the VFD Process fan is released to the speed control PID loop in the VFD Controller.

Should the process isolation damper fail to open or go to a fault condition, the oxidizer will switch to cool down mode.

The following conditions are required to enable the OXIDIZER AT TEMP to receive solvents:

a) Burner enable mode must be selected.
b) The oxidizer purge permissive must be satisfied.
c) The combustion chamber temperature must be equal to, or greater than 1450°F.

In the event that OXIDIZER AT TEMP state is lost due to a Fault, the process isolation damper will close and the process air stream will be diverted away from the oxidizer and go into COOL DOWN mode.

However, if the Oxidizer has a less serious Alarm condition occur then it will continue to operate online until such time as the oxidizer shuts down on a fault condition.

1.4.7. IMPORTANT WARNING

Operation of your process while the Oxidizer is not "Ready" or otherwise not in good working order may violate your operating permit and may result in the release of noxious or hazardous substances.

Always consult your environmental and legal staff before commencing or continuing operations if your Oxidizer is not on line, "Ready", or in good working order.

1.5. MAJOR COMPONENTS OF THE SCRUBBER

1.5.1. Quench Spray Header

A spray header located in the process duct at the scrubber inlet fabricated from AL6XN pipe is fitted with one (1) 30° BETE Fog Spray nozzles, Model MP218NN.

1.5.2. Scrubber Vessel

The scrubber vessel is fabricated from AL6XN material and forms the sump to store recirculation water, and houses the packing media, recirculation water spray headers, makeup water spray headers, and mist eliminator.

1.5.3. Packing Media

Rauschert RMSR 40 packing media consists of nominal 1½" diameter rings made of 316 stainless steel that are installed to a depth of approximately six feet. The media ensures intimate mixing of the process air with the recirculation water to be sure acid vapors are neutralized.

1.5.4. Recirculation Pump (PP-01)

A Goulds Model 3298 size 2X3-6 S centrifugal style, magnetically coupled pump recirculates water from the scrubber sump to the recirculation spray header and the quench spray header.

1.5.5. Caustic Metering Pump (416P)

An LMI/Milton Roy Model C941-36 doses sodium hydroxide (base) liquid into the recirculation piping to maintain proper pH to neutralize acid vapors.

1.5.6. Recirculation Water Spray Headers

Two recirculation water spray headers located near the top of the scrubber vessel fabricated from AL6XN pipe are fitted with a total of four 90° BETE Fog Spray nozzles, Model MP437M. These nozzles spray recirculation water on top of the scrubber packing to scrub acid vapors from the process airstream.

1.5.7. Makeup Water/Mist Eliminator Spray Headers

Two makeup water spray headers located near the top of the scrubber vessel fabricated from AL6XN pipe are fitted with a total of four 90° BETE Fog Spray nozzles, Model MP125M. These nozzles spray fresh

water on the under side of the mist eliminator to remove any potential deposits to insure maximum mist elimination.

1.5.8. Mist Eliminator

A Munters vane style mist eliminator fabricated of Inconel 625 removes water droplets from the process airstream at the top of the scrubber vessel.

1.6. MAIN FEATURES OF THE SCRUBBER

1.6.1. Air Flow Through the Scrubber

The scrubber neutralizes potential acid vapors from the oxidizer exhaust. The gas to be treated enters at the bottom of the packed tower and is intimately contacted in a countercurrent fashion in the packed section by the scrubbing liquid, which is sprayed onto the tower packing. After the acidic contaminants have been removed, the gas stream passes upward in the tower through the mist eliminator where entrained droplets are removed before it is permitted to enter the stack. The spent scrubbing liquid is collected in the sump at the bottom of the tower. The scrubbing liquid is recirculated to the top of the packed section of the tower after the addition of makeup reagent, sodium hydroxide (NaOH). A small sidestream is sprayed at the scrubber inlet to quench to inlet airstream from the oxidizer.

1.6.2. pH Control

pH is measured in the recirculation water and maintained by dosing caustic liquid using a metering pump.

1.6.3. Conductivity Control

Conductivity is measured in the recirculation water and maintained via blowdown cycles by removing a water volume of high conductivity and replacing it with fresh makeup water to reduce conductivity.

2. SEQUENCE OF OPERATION

2.1. INITIATING SCRUBBER STARTUP

a) Fill scrubber sump by opening Makeup water valve O:02/12SOL.
b) Confirm proper water level in sump via "HIGH SUMP" indicator light illuminated on control panel (426DPT).
c) The program logic cycles all automatic valves in scrubber plumbing.
d) Set and confirm valves are in normal operating position.
e) Program turns on recirculation pump 111MTR.
f) Confirm water flow rate of 60 GPM at flow meter 430DPT in recirculation piping.
g) Confirm pH 821PHT and Conductivity 826CNT analyzers are ready and operational.
h) For initial startup, calibrate both the pH and conductivity analyzers per manufacturer's instructions.
i) Begin oxidizer startup with PURGE sequence.
j) Confirm air pressures and temperatures in scrubber.

2.2. INITIATING OXIDIZER STARTUP

This procedure is initiated by pushing the start button that causes the Auto Start-Up sequence to latch.

a) Fresh Air Damper (O:04/07 DM) Opens
b) The Main process isolation valve is proved to be closed.
c) The Combustion Air blower (107MTR) starts.
d) At the same time as the combustion blower, the Process Fan (123MTR) starts and ramps up to 25 Hz.
e) The OXIDIZER Purge Sequence starts (See 2.4)
f) The Purge sequence and Burner Permissives are proved.
g) The Auto Ignition sequence commences and the oxidizer burner lights.
h) The oxidizer Gets to temperature and signals the Process (Ready to receive solvents)
i) The Main isolation Damper starts to Open at the same time the Fresh air damper (O:04/07DM) closes to atmosphere.
j) The Main Draft fan (123MTR) ramps up to speed and then releases the VFD to control on the VFD Pressure PID loop.
k) The oxidizer is now running.

Also see Section 4.5 for Oxidizer Operating Conditions.

2.3. SYSTEM PURGING REQUIREMENTS

Before the control system will test for Purge permissive the Oxidizer must be in BURNER ENABLE mode and the Process Fan (123 MTR) must be running.

2.4. PURGE PERMISSIVE COMPONENTS

The Oxidizer Purge Permissive signal consist of a series of "hard wired" signals and PLC derived enabled signals that must all be satisfied before the system purge timer (213TMR) begins timing.

These are as follows:

a) Fresh Air Damper (O:04/07 DM) limit switch (proved open).
b) The Process isolation damper closed hardwired interlock is present.
c) Gas Blocking valve proved closed (322SSV/324BV)
d) Gas Valve at Low fire position (309LS)
e) Process fan airflow is proven (208DPS)
f) Process fan running from VFD (123VFD)
g) Combustion Blower Fan running (O:02/00MS)
h) Combustion Blower Airflow proven (211DPS)
i) Combustion Chamber High temperature limit OK (221HTL).
j) Purge Enable from PLC (O:02/01CR)

When all the purge permissives are satisfied, then the system purge timer begins timing. The purge time is determined by the amount of time that it takes to complete at least four clean air changes through the oxidizer.

WARNING: DO NOT RESET THE PURGE TIME TO A VALUE LESS THAN THE CORRECT VALUE REQUIRED FOR FOUR COMPLETE FRESH AIR CHANGES. DO NOT DISABLE OR "JUMP OUT" SAFETY DEVICES OR CIRCUITS. DAMAGE MAY RESULT TO EQUIPMENT AND INJURY AND/OR DEATH MAY OCCUR TO PERSONNEL.

2.5. BURNER PERMISSIVE REQUIREMENTS

Before the control system will test for burner permissive, the oxidizer's selector switch must be in BURNER ENABLE and the purge cycle must be complete.

2.6. BURNER PERMISSIVE COMPONENTS

The Oxidizer burner permissive consist of a series of "Hard Wired" components that must be satisfied, these are as follows:

a) Not Low gas pressure (300PS1).
b) Not High gas pressure (300PS2).
c) Purge time Completed (213TMR).
d) Burner is enabled (300SS)
e) High temp OK (223CR)
f) Burner air flow proven (211CR)
g) PLC Stop burner relay not on (O:02/08CR)

When all the burner permissive and Purge signals are satisfied, the burner ignition sequence starts.

WARNING: DO NOT DISABLE OR "JUMP OUT" ANY SAFETY DEVICE OR CIRCUIT. DAMAGE MAY RESULT TO EQUIPMENT AND INJURY OR DEATH MAY OCCUR TO PERSONNEL.

2.7. BURNER IGNITION SEQUENCE

2.7.1. Auto-Ignition Sequence

Once the Purge sequence has been completed and the Burner permissives are proved the Flame Safety relay (304FR) sequences the safe establishment of the Burner Flame.

This happens in the following sequence:

a) The PLC Burner Ignite relay (532CR) is momentarily energized.
b) The Burner Gas valve (305GVA) go to low fire.
c) The Pilot valves (312SOL/313SOL) is opened
d) The Pilot Ignition transformer (316XF) is turned on.
e) The UV Scanner (316UV) detects the Pilot flame.
f) The Gas Blocking Valve (324BV) is opened.
g) Main flame is established

This is a basic version of the Flame Safety relay burner ignition sequence, for more specific details please refer to the Honeywell documentation contained in the equipment manuals.

2.8. COMBUSTION CHAMBER TEMPERATURE RAMP

The Burner can have a ramp rate if set as an option on the Honeywell temperature controller. The Burner is programmed for a 15 minute delay to high-fire operation and takes approximately 6 hours to heat up from cold start.

2.9. OXIDIZER INCINERATE MODE

The Combustion chamber temperature ramps up to 1500°F. When the temperature goes above 1400°F, a 20 minute PLC timer is started and the OXIDIZER AT TEMP indicator light on the master control panel begins to flash. After this timer has expired and Combustion chamber temperature has reached incineration temperature with all other interlocks present, the OXIDIZER AT TEMP green indicator light on the control panel will be on steady. The oxidizer is now READY TO RECEIVE SOLVENTS.

2.10. OXIDIZER SHUTDOWN

2.10.1.Extended Duration Shutdown

CAUTION: *Before Oxidizer Shutdown, verify that all process equipment is secured. Shutdown will interrupt OXIDIZER AT TEMP and process exhaust will be stopped (or diverted to atmosphere if bypass damper is present)..*

Push the AUTO STOP button. The following shutdown sequence will occur:

a) The signal 'Ready to receive solvents' is turned off to the Process

b) The Oxidizer Fresh Air Damper (O:04/07 DM) opens

c) The Oxidizer burner is shut off

d) The system goes into COOL DOWN mode.

e) The oxidizer continues to operate in this mode until the cooldown time has expired. At this point the oxidizer Process Fan (123MTR) and Combustion Air Fan (107 MTR) will shutdown.

3. CONTROL SYSTEM COMPONENTS

3.1. OPERATOR CONTROLS

An AUTO START and AUTO STOP push button are installed on the control panel to start or stop the system.

3.2. SCRUBBER LEVEL CONTROL

1. Recirculation pump 111MTR operates under normal conditions. Water level in scrubber sump slowly:
   1.1. rises due to addition of NaOH to neutralize the HCl vapors.
   1.2. rises due to addition of makeup water used to wash mist eliminator.
   1.3. lowers due to evaporation.
2. Open Makeup water valve O:02/12SOL when Low Level is detected.
3. Signal SCRUBBER LOW SUMP alarm indicator light if Low Level is detected by Rosemount pressure transmitter for more than 10 minutes.
4. Close Makeup water valve O:02/12SOL when High level is detected.
5. Signal SCRUBBER HIGH SUMP alarm when High Level is detected for more than 10 minutes.
6. Start system shut down if High-High Level is detected for more than 5 minutes.

3.3. SCRUBBER pH CONTROL

A discrete output signal to the LMI dosing pump controls pH.

1. Confirm recirculation water flow rate at 430DPT is in range for the pH control loop to be active.
2. At pH 6.5 the pH analyzer 821PHT turns on caustic metering pump 416P.
3. SCRUBBER PH LOW indicator light turns on at pH 6.0. Sound alarm horn after 10 minutes.
4. At pH 9.0 the pH analyzer 821PHT turns off caustic metering pump 416P.
5. SCRUBBER PH HIGH indicator light turns on at pH 9.0. Sound alarm horn after 10 minutes.

3.4. SCRUBBER BLOW DOWN CONTROL

1. Open blow down valve O:02/15SOL when the conductivity analyzer 826CNT exceeds 40 mS/cm^2 (milliSiemens per centimeter squared).
2. Blow down valve O:02/15SOL remains open until Low Level LSL3001 detected on sump control (approximately 15" w.c. on meter).
3. Open fresh water makeup valve O:02/12SOL at mist eliminator until adequate water level is achieved (approximately 19" w.c. on meter).
4. Every 2 hours blow down turns on for 3 minutes, or until Low Level is achieved.

3.5. INSTRUMENTATION

3.5.1. Combustion Chamber High Temperature Limit (221HTL)

A combustion chamber high temperature limit (221HTL) is located on the control panel face and will prevent burner operation in the event of an excessive combustion chamber temperature condition. Its output function is a hard-wired interlock in the oxidizer purge permissive chain and its operation will terminate purge complete and isolate any process dampers feeding the oxidizer. Normal set point for this function is 1850°F.

3.5.2. Chart Recorder

A Honeywell Circle Chart Recorder is located on the control panel door that records combustion chamber temperature, scrubber temperature (post quench), and process inlet air flowrate. (See Owner's Manual for setup details)

3.5.3. Scrubber Flowmeter

A Rosemount Model 8800CF020HA1N1D1M5 flowmeter is located in-line recirculation piping and measures recirculation flow rate in GPM (Gallons Per Minute). The flowrate is displayed locally on the flowmeter and also sends an analog output signal to the PLC.

3.5.4. Scrubber Level Transmitter

A Rosemount Model 3051CD2A03A1AS5M5 (hydrostatic) pressure transmitter is located on the scrubber vessel and measures water level in the scrubber sump. The transmitter sends a discrete output signal to the PLC for warning and fault.

3.5.5. Scrubber Conductivity Sensor and Analyzer

A Rosemount Model 228-02-20-54-61 conductivity sensor is located in the recirculation piping and measures recirculation water conductivity in mS

(milliSiemens). The conductivity value is displayed on a Rosemount Model 54eC analyzer that sends a discrete output signal to the PLC for warning and fault.

3.5.6. Scrubber pH Sensor and Analyzer

A Rosemount Model 398-10-31-54-62 pH sensor is located in the recirculation piping and measures recirculation water pH. The pH value is displayed on a Rosemount Model 54EPH/ORP-01 analyzer that sends an analog output signal to the PLC.

3.6. SYSTEM ALARMS

System alarms are signaled by an alarm horn and indicator lights on the master control panel.

3.7. FIELD COMPONENTS

3.7.1. Motor Starters

Motor starters are located in the Main control panel. Motor starter(s) within the control panel are controlled via the PLC program.

3.7.2. Variable Frequency Drive

A Fuji variable frequency drive controls the Process fan Motor (123 MTR) speed.

3.7.3. Process Fan (123 MTR)

The oxidizer Process fan provides airflow through the Oxidizer and is driven by the Process fan Motor (123 MTR).

3.7.4. Combustion Air Blower (107 MTR)

The Combustion Air Fan (107 MTR) provides combustion air to the burner.

3.7.5. Fresh Air Damper (O:04/07 DM) Actuator

The oxidizer Fresh Air Damper (O:04/07 DM) actuator opens and closes the oxidizer Fresh Air Damper (O:04/07 DM). The actuator is controlled from the control panel. End limit switch(s) provide the control system with damper status.

3.7.6. Field Mounted Burner Controls

The field mounted burner controls consist of:

a) Main Gas Safety Shut-Off Valve (322SSV)
b) Main Gas Block Valve (324BV)
c) Gas Pilot Solenoid Valve (312SOL/313SOL)
d) Gas Pressure switches (300PS1/300PS2)
e) Combustion Airflow pressure switch (211DPS)
f) Self Checking Ultra Violet Flame Scanner (316UV)
g) Spark Ignition Transformer
h) Spark Igniter (316SP)

3.7.7. Pressure Switches

Pressure switches are provided to monitor high and low fuel pressure, process airflow proving, combustion air pressure proving, and differential pressure across the scrubber packing and scrubber mist eliminator.

4. OPERATING THE OXIDIZER

4.1. SYSTEM PRE-CHECKS

4.1.1 Personnel Safety Check

Prior to starting or re-starting or operating the oxidizer, ensure that no personnel are inside or in dangerous proximity to the oxidizer or any other machinery that may be started directly or indirectly or any other operating machinery. Also ensure that all equipment is in proper repair and working condition.

4.1.2 Applying Power

Close the disconnect switch for the 460VAC control panel power supply. No motors should start at this time. Turn on the circuit breakers inside the control panel board.

4.1.3 Instrumentation Check

Ensure that all high temperature limit controls are not tripped; reset any that are. Check and reset any alarms that may exist. If an alarm condition persists after resetting, it must be rectified before continuing.

Ensure that all PID temperature and pressure controllers are in the automatic mode.

Verify that the chart recorder is turned on and functioning.

4.2. INITIATING OXIDIZER STARTUP

4.2.1. Start the Oxidizer

Start the Oxidizer by pushing the green AUTO START button

Note: If the Oxidizer fails to complete the start-up sequence it will go into cool down mode.

4.3. MONITORING OXIDIZER STARTUP

4.3.1. Combustion Air Fan (107 MTR) Start

Fifteen seconds after initiating oxidizer start, the combustion air blower (107 MTR) is started.

4.3.2. Process fan (123 MTR) Start

With the Combustion Air Blower start signal the Oxidizer Process Fan (123 MTR) is started.

4.3.3. System Purge Cycle

Typically after the Process Fan has started, the purging cycle begins. The purge time is determined by the amount of time required for four fresh air changes to be introduced through the oxidizer. (See 2.4 for Details).

If any of the interlocks fail during purge timing, the purge cycle will re-start from the beginning after the failed device has been rectified.

4.3.4. Automatic Burner Ignition

When the system purge cycle has successfully completed, an automatic Burner Ignition sequence is initiated.

If all of the burner permissives are satisfied the main gas safety shut-off valve is opened and the burner is ignited. For a detailed description of the burner ignition sequence see: BURNER IGNITION SEQUENCE in Section 2.7

4.4. TROUBLESHOOTING OXIDIZER STARTUP

4.4.1. Combustion Air Fan (107 MTR) Will Not Start

a) Check 460VAC Circuit Breaker and starter overloads on the motor protector (107CB) in the control panel are not tripped.

4.4.2. Process fan (123 MTR) Will Not Start

a) Check VFD is not faulted or stopped.
b) Ensure that no high outlet temperature conditions exist.

4.4.3. System Fails to Purge

a) Check the Fresh Air Damper (O:04/07 DM) limit switch is open.
b) Check the Process Isolation Damper is closed
c) Check both the Safety Shutoff Valve and Gas Blocking valve are proved closed (322SSV/324BV)
d) Check the Gas Valve is at Low Fire Position (309LS)
e) Check the Process fan airflow is proven (PSL209)
f) Check the running signal from the Process fan VFD (123VFD)
g) Check the Combustion Blower Fan is running (O:02/00MS)
h) Check the Combustion Blower Airflow proven switch (PSL 1091)
i) Check the Combustion Chamber High temperature limit is not tripped (221HTL).
j) Check the Flame Safety relay (304FR) flame fault not detected (1311TR)
k) Check PLC Burner stop relay is not energized (O:02/08CR)
l) Check the Purge Enable relay is energized (O:02/01CR)

4.4.4. Burner Fails to Ignite

One time automatic burner ignition fails to ignite burner(s):

a) System purge cycle must be complete.
b) Burner permissive must be satisfied
c) Check Flame UV scanner is not dirty, sooty, or is blocked in any way.
d) Check for "Flame Out" message Flame Safety relay and/or the operator interface.

4.5. OXIDIZER OPERATING CONDITIONS

4.5.1. Incinerate Mode

INCINERATE temperature setpoint is 1500°F. When the combustion chamber reaches 1400°F, a 20 minute delay period is started to ensure there is adequate heat prior to increasing airflow through the oxidizer. When both of these conditions are true, the OXIDIZER AT TEMP relay is energized. The oxidizer is now ready to accept VOC laden process air.

4.5.2. Fresh Air and Process Isolation Damper

The process isolation damper will open with respect to the Oxidizer when the system is OXIDIZER AT TEMP. Upon detecting the Isolation damper move from its closed position the Fresh Air Damper (O:04/07 DM) will close after flow is proven from the blower shed.

4.5.3. Process fan Speed Control

The Process fan speed is controlled by the PID function of the VFD. The INCINERATE set point is set between -0.10" w.c. to -0.20" w.c. This will cause an increase in Process Fan speed when the isolation damper opens.

The Oxidizer is now in full INCINERATE mode and will continue in this mode until manually shutdown, or a system alarm causes loss of OXIDIZER AT TEMP. Minimum fan speed is set at 25 Hz.

4.6. TROUBLESHOOTING DURING OXIDIZER OPERATION

4.6.1. Temperature Will Not Ramp Up

a) Check the temperature controller(s) operation mode - Should be set to "Automatic"
b) Check the operation of the Gas valve actuator
c) Check the system gas pressure
d) Ensure that the burner equipment is operational.
e) Check the correct parameters on the burner PID control loop

4.6.2. OXIDIZER NOT AT TEMP

a) Check that operational temperature has been achieved.
b) Check for Faults or Alarms on the system and reset if necessary

4.6.3. Fresh Air Damper (O:04/07 DM) Will Not Close

a) Check that OXIDIZER AT TEMP is attained.
b) Check that Process Isolation Damper is FULLY open to oxidizer.

4.6.4. Process Isolation Damper Will Not Open

a) Check that OXIDIZER AT TEMP to receive solvents is attained.

4.6.5. Inlet Pressure Incorrect

a) Check the pressure controller operation mode - Should be set to "AUTO"
b) Ensure that the Fresh Air Damper (O:04/07 DM) is closed.
c) Ensure that the Process Isolation Damper is open to the Oxidizer.
d) Check that OXIDIZER AT TEMP is attained.
e) Check operation of pressure transmitter.
f) Check tubing connections to the pressure transmitter.

4.7. SHUTTING DOWN THE OXIDIZER

Note: Initiating oxidizer shutdown will immediately interrupt OXIDIZER AT TEMP status.

Shut down the oxidizer by pushing the red AUTO STOP button once initiates Oxidizer Cool Down mode. Pushing the button a second time will put the oxidizer in an immediate shutdown.

4.8. SHUTTING DOWN THE OXIDIZER TROUBLESHOOTING

a) *Check STOP push button for proper operation.*
b) Check PLC input from selector switch.

4.9. MONITORING OXIDIZER SHUTDOWN

4.9.1. Burner Shutdown

After Oxidizer SHUTDOWN has been selected, burner operation is stopped immediately.

4.9.2. Fresh Air and Process Isolation Dampers (M8-M9)

The Fresh Air/Barometric Damper (O:04/07 DM) opens and the Process Isolation Damper closes with respect to the oxidizer.

4.9.3. Process Fan

The Process Fan operates at 25 Hz. to pull in fresh air until the oxidizer has cooled for 60 minutes and/or cooled to 200°F.

4.10. TROUBLESHOOTING OXIDIZER SHUTDOWN

4.10.1. Burner Will Not Shutdown

a) Check "Burner Enable" selector switch.
b) Check PLC input from selector switch.
c) Manually press the burner shutdown push button.
d) Confirm that the main safety shutoff valve is de-energized and closed.

4.10.2. Fresh Air Damper (O:04/07 DM) Will Not Open

a) Ensure that unit is NOT OXIDIZER AT TEMP.
b) Check electrical signal to damper actuator.
c) Check for a mechanical bind.
d) Check battery charge level.

4.10.3. Process Isolation Damper Will Not Close

a) Ensure that unit is NOT OXIDIZER AT TEMP.

4.10.4. Process fan (123 MTR) Will Not Shutdown

a) Is the average combustion chamber temperature less than 200°F?

4.10.5. Combustion Air Fan (107 MTR) Will Not Shutdown

a) Is the average combustion chamber temperature less than 200°F?

4.11. SYSTEM POST CHECK

4.11.1. Remove System Power

If the Oxidizer is to be shutdown for an extended period of time ensure that ALL power disconnect switches are turned off. Be certain that the system is secured and left in a safe, cool condition.

4.11.2. Secure System Fuel Supply

Shutoff the natural gas fuel supply by closing the manual shutoff valve.

4.12. DESCRIPTION SUMMARY ALARMS:

There are three types of alarms displayed as follows:

(S) SHUTDOWN = an alarm event that **will** cause a disruption to customer process by causing loss of OXIDIZER AT TEMP and or loss of Purge Complete.

(W) WARNING = an alarm event that **will NOT** cause a disruption to customer process but will require acknowledgment and action by an operator.

4.12.1. Combustion High Temp Warning: **(W)**

The combustion chamber high temperature warning device has detected 1650°F or greater in the combustion chamber which shuts off the burner due to a potential high solvent loading condition to the oxidizer inlet. The burner will re-ignite when chamber temperature falls below 1650°F, but WILL NOT re-ignite below 1400°F due to loss of Purge Complete. OXIDIZER NOT AT TEMP indicator light illuminates below 1400°F. ***Effects:*** Loss of OXIDIZER AT TEMP (unless high solvent loading to self-sustain temperature) and loss of Purge Complete.

4.12.2. Combustion High Temp Fault: **(S)**

The combustion chamber high temperature shutdown device has detected 1850°F or greater in the combustion chamber which has caused a complete shutdown, and closed the isolation damper to the process. The system will then go into a Cool Down mode and the blue COOL DOWN indicator light illuminates.

Effects: Loss of OXIDIZER AT TEMP and loss of Purge Complete.

4.12.3. Flame Fault: **(W)**

The flame safety controller UV scanner has not detected a viable flame signal at the burner and has turned off the burner.
Effects: Possible loss of OXIDIZER AT TEMP if combustion chamber temperature is allowed to fall below the OXIDIZER AT TEMP temperature set point (1400°F) before the burner is re-lit.

4.12.4. Recirc. Flowrate OK: **(S)**

1. The flow meter 430DPT has detected flowrate out of range or loss of signal from flowmeter (35 GPM < 430DPT < 70 GPM).
2. Sound alarm and extinguish indicator light on MCP.
3. Initiate STOP sequence, beginning with Cool Down mode.

4.12.5. Scrubber High Temp Warning, Fault: **(W, S)**

1. The scrubber temperature thermocouple TE203 located just below the scrubber packing media has exceeded a programmed set point of 170°F and has caused a loss of Purge Complete and has stopped the Oxidizer Burner. Sound alarm and illuminate SCRUBBER HIGH TEMP WARNING indicator light on MCP.
2. Open Emergency Quench valve O:04/01SOL.
3. Check for sufficient recirculation flowrate on flowmeter 430DPT display.
4. If temperature continues to increase to 190°F, the plumbing from pump discharge is likely plugged, or pump is defective, or valve is closed.
5. ***Effects:*** Loss of OXIDIZER AT TEMP.

4.12.6. Media Pressure Drop OK: **(W)**

1. Pressure switch I:03/04PS has sensed high pressure drop across the scrubber packing. Sound alarm horn and extinguish green indicator light.
2. Wash mist eliminator continuously for 10 minutes (open O:02/12SOL).
3. If switch does not reset, schedule inspection/maintenance of scrubber packing.

4.12.7. Demister Pressure Drop OK: **(W)**

1. Pressure switch I:03/05PS has sensed high pressure drop across the mist eliminator. Sound alarm horn and extinguish green indicator light.
2. Wash mist eliminator continuously for 10 minutes (open O:02/12SOL).
3. If switch does not reset, schedule inspection/maintenance of demister.

4.12.8. Scrubber pH Low: **(W)**

1. The pH sensor 821PHT and analyzer AIC304 have detected pH less than 4.0. Sound alarm horn and illuminate indicator light.
2. **Effects:** Insufficient caustic addition to scrub acid vapors.

4.12.9. Scrubber pH High (821PHT): **(W)**

1. The pH sensor 821PHT and analyzer AIC304 have detected pH greater than 10.0. Sound alarm horn and illuminate indicator light.
2. **Effects:** Excessive caustic addition.

4.12.10. Water Conductivity OK (826CNT): **(W)**

1. The conductivity sensor 826CNT and analyzer AIC306 have detected conductivity greater than 40 mS/cm^2. Sound alarm horn and illuminate indicator light.
2. Initiate blowdown cycle.
3. **Effects:** Eventual precipitation of solids in the recirculation water that could plug spray nozzles and reduce scrubbing performance.

4.13. ACRONYMS

AE = Analytical Element (pH or conductivity)
AIC = Analytical Indicating Controller
AI = Analog Input
AO = Analog Output
BV = Ball Valve, Blocking Valve
CA = Combustion Air
CR = Contact Relay
CNT = Conductivity transmitter
DI = Discrete Input
DO = Discrete Output
DPT = Differential Pressure Transmitter
FIT = Flow Indicating Transmitter
FR = Flame Relay
HTL = High Temperature Limit
LSH = Level Switch High (analog setpoint)
LSH = Level Switch High High (analog setpoint)
LSL = Level Switch Low (analog setpoint)
MTR = Motor
NG = Natural Gas
PHT= pH transmitter
PI = Pressure Indicator
PSL = Pressure Switch Low
PSH = Pressure Switch High
P&I Diagram = Piping and Instrumentation Diagram
PG = Process Gas
SOL = Automatic Ball Valve
SP = Spark Igniter
SSV = Safety Shutoff Valve
TC = Temperature Controller
TE = Temperature Element
TIR = Temperature Indicating Recorder
TO = Thermal Oxidizer
UV = Ultra Violet
XF = Ignition Transformer

APPENDIX L

Control and Instrumentation Equipment Specifications

- Programmable Logic Controller
- Human Machine Interface

MANUFACTURER'S PRODUCT SPECIFICATIONS

Programmable Logic Controller

Rockwell Automation
Allen-Bradley

Connect to the Future Today with Allen-Bradley's SLC 5/05™ Processor with Ethernet®

SLC 5/05 Programmable Controllers
(Cat. Nos. 1747-L551, -L552, -L553)

Product Profile

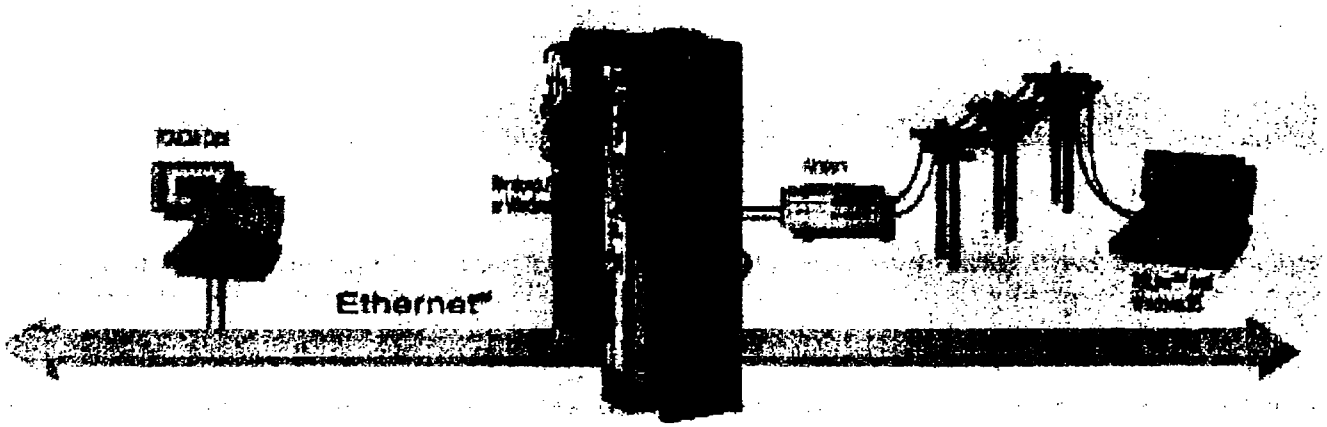

Connected With Ethernet

Allen-Bradley's SLC 5/05 Programmable Controllers (1747-L551, 1747-L552, and 1747-L553) provide high bandwidth networking for standards-based distributed programmable controller systems. They bring 10 Mbps Ethernet connectivity to the popular SLC 500™ family of programmable controllers.

Allen-Bradley supports TCP/IP (Transmission Control Protocol/Internet Protocol), a communication protocol in wide use over Ethernet networks. We integrate control systems with supervisory monitoring and information management systems through the SLC 5/05 processors that support TCP/IP-over-Ethernet communication. Through Ethernet networks, your SLC 5/05 processors can communicate plant-floor data in data acquisition, supervisory control, program management, statistical quality control, maintenance management, production scheduling, and material tracking applications.

We help make it easy for you to use Ethernet networks in applications such as supervisory monitoring and SLC 5/05 processor program management.

Processor Overview:

- Three processor models (16K, 32K and 64K memory) to fit a wide range of applications
- Built-in 10Base-T Ethernet channel
- 10 Mbps communications – TCP/IP protocol
- Uses widely available Ethernet devices and cabling
- Supports online programming over Ethernet with RSLogix 500™ Programming Software

Processor Overview: (continued)

- Supports Simple Network Management Protocol (SNMP) for network management
- Achieves high-speed peer-to-peer programmable controller communications via the SLC 500 message instruction
- High-speed performance – 0.90 ms/K typical scan time
- Built-in real-time clock/calendar, Year 2000 and Leap Year ready
- 1 ms Selectable Timed Interrupt (STI) for use in time critical applications
- 0.50 ms Discrete Input Interrupt (DII) for use in high-speed applications
- Advanced math features – trigonometric, PID, exponential, floating point, and the compute instruction
- Indirect addressing
- Flash PROM enables future firmware upgrades without physically changing EPROMs

Programming:

RSLogix 500, a Microsoft® 32-bit Windows 95® and Windows NT™ programming software package, supports Allen-Bradley SLC 500 and MicroLogix™ families of processors. RSLogix 500 is designed to offer powerful functionality, superior diagnostics, reliable communications, and an easy-to-use interface.

RSLogix 500 provides everything you expect in a programming software package, from consolidated project view to drag-and-drop editing. Plus RSLogix 500 is part of the RSLogix family of products that share:

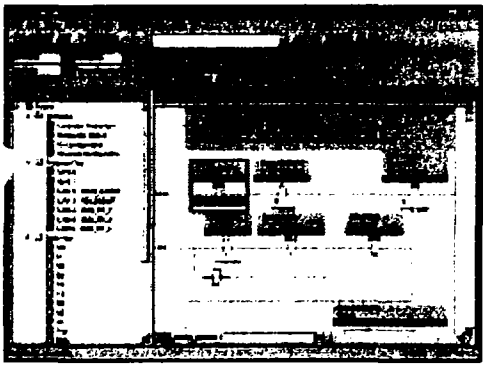

- A common user interface and feature set
- Flexible, easy-to-use editors
- Point-and-click I/O configuration
- Powerful database editor
- Diagnostic and troubleshooting tools
- Dependable communications

Flexible Ladder Editor	Create programs without constantly correcting syntax errors, then later use the *Project Verifier* to navigate through the corrections.
Powerful Database Editor	Use the Symbol Group Editor to classify a group of symbols for easy reuse from project to project. Use the Symbol Picker to select address or symbols to address ladder instructions. RSLogix 500 symbols may be 20 characters long. Address comments may reach 100 characters (5 lines x 20 characters). Each rung comment may be 65K characters in length. Export your database to Comma-Separated-Value (CSV) format for use in Excel or another spreadsheet program – Import changes back into RSLogix 500.
Programming Tools	RSLogix 500 designed for Microsoft Windows 95 and NT (4.0 or later) gives you powerful tools, such as drag and drop, multiple window view, drop down menus and much more.
Diagnostics & Troubleshooting Tools	Use Advanced Diagnostics to navigate to an application area that is causing problems. Use the Custom Data Monitor to monitor the status of bits, timers, counters, inputs, and outputs from within one window. Create a unique Custom Data Monitor window for each application.
Upgradeability and Reusability	Easily upgrade projects from Rockwell Software DOS programming packages, by opening the existing project in RSLogix 500. Or move a project developed in RSLogix 500 to any of the DOS programming packages.

Features and Benefits

Supports standard Ethernet communications on Channel 1. The SLC 5/05 processors support 10Mbps Ethernet communications and use the TCP/IP protocol. The 10Base-T Ethernet channel provides an economical connection to your Ethernet Network.

Built-in Ethernet, not an add on module. The SLC 5/05 delivers fast data throughput with no backplane delays.

The SLC 5/05 Modular Processors provide a second channel (Channel 0) for RS-232 communication. This allows:

- Dial up for remote monitoring and programming
- Networking over modems for SCADA master/slave RTU applications
- An alternate connection for operator interfaces freeing up peer-to-peer network
- Direct communication to ASCII devices such as bar code decoders and serial printers via a complete set of ASCII ladder instructions which simplify programming
- Direct connection to personal computer

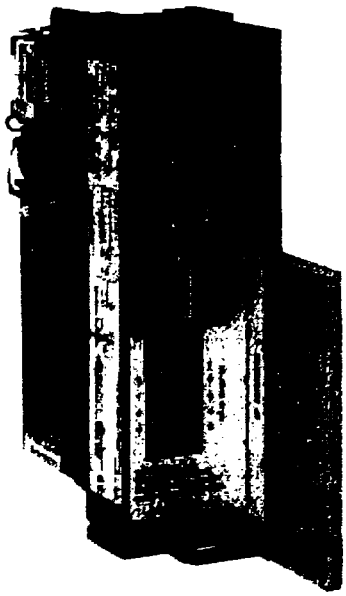

Channel 0 also supports DH-485 communication. Communication via the DH-485 network is available in every SLC processor we ship, reducing your system cost for processor communication.

Supports user memory sizes of 16K, 32K, and 64K. By offering a wide range of user memory, the SLC 5/05 modular processors can be used in a wide range of applications.

Supports a variety of input and output modules. The 1746 modular I/O system offers over 60 types of modules, allowing you to customize your control solution to meet your application needs, including discrete, analog, and specialty modules.

Supports I/O configurations of up to 3 chassis (30 local I/O slots). Provides you with the flexibility to expand I/O capacity as required.

Supports remote I/O and DeviceNet™. The SLC 5/05 processors support up to 4096 discrete inputs and 4096 discrete outputs. This I/O can be any mix of local I/O, remote I/O, or I/O on a DeviceNet network. This also allows for connectivity to flex I/O.

Provides user-selectable program security. The wide range of system protection capabilities allow you to secure user data and program files from changes.

Supports a host of third-party products through the Allen-Bradley Encompass™ Program. The Encompass Program provides access to products and services that increase your application capabilities.

System Example

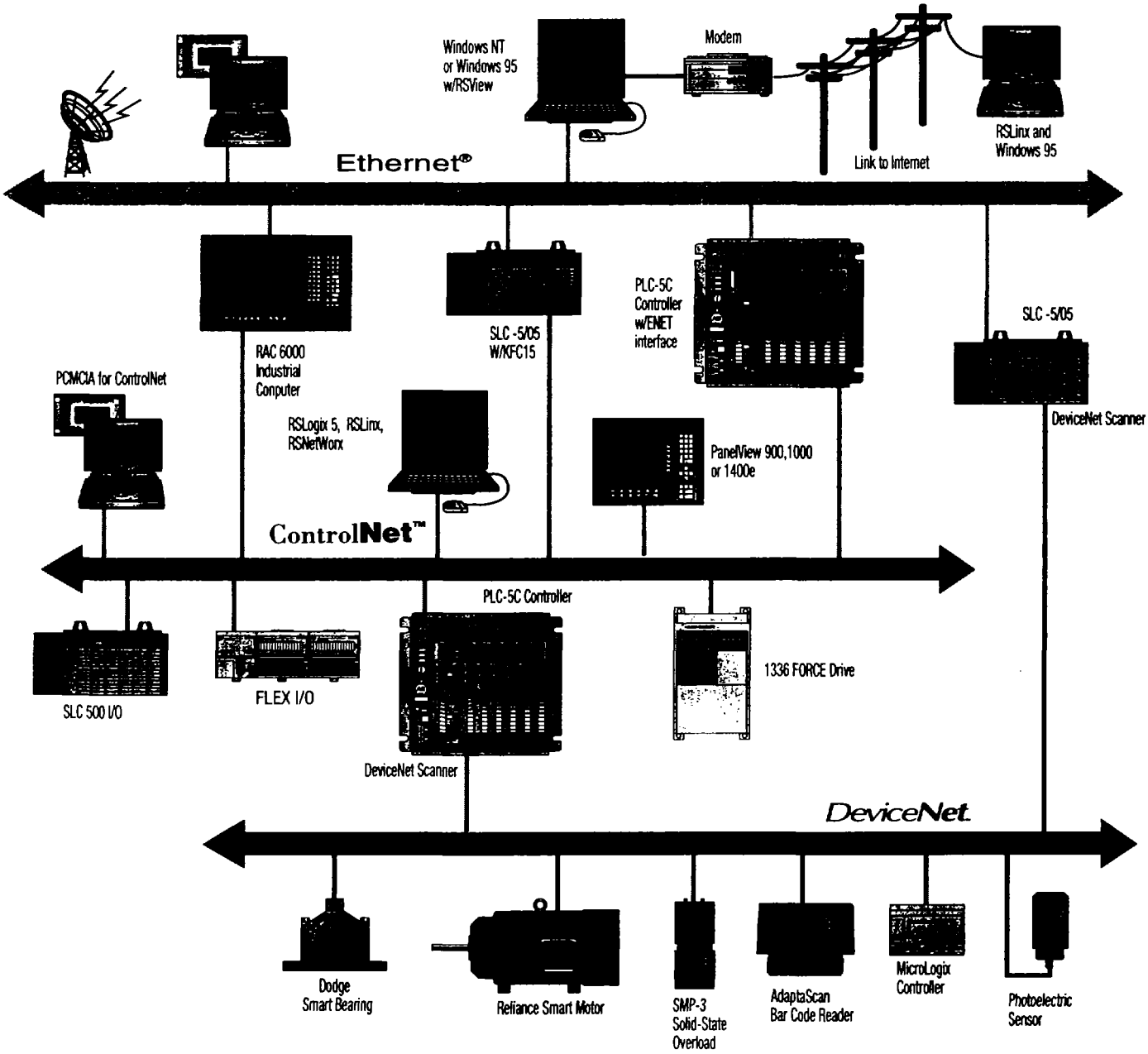

SLC 5/05 Processor General Specifications

Specification	1747-L551	1747-L552	1747-L553
Memory Size	16K Words	32K Words	64K Words
/O Capacity	up to 4096 inputs and 4096 outputs		
Maximum Chassis/Slots	3/30		
Standard RAM	Lithium Battery (2 years)		
Memory Back-up Options	Flash EPROM		
LED Indicators	Run, CPU Fault, Battery Low, Forced I/O, Ethernet, RS-232		
Typical Scan Time[1]	0.9 ms/K		
Bit Execution (XIC)	0.37 µs		
Communication	Channel 1: Ethernet (10Base-T) Channel 0: RS-232 (DF1, ASCII, or DH485)		
Power Supply Loading at 5V dc	1A		
Power Supply Loading at 24V dc	200 mA		
Clock/Calendar Accuracy	±54 sec/month at +25°C (+77°F), ±81 sec/month at +60°C (+140°F) Year 2000 and Leap Year Ready		
Program Scan Hold-up Time after Loss of Power	20 milliseconds to 3 seconds (dependent on power supply loading)		
Noise Immunity	NEMA Standard ICS 2-230		
Ambient Temperature Rating	Operating: 0°C to +60°C (+32°F to +140°F) Storage: -40°C to +85°C (-40°F to +185°F)		
Humidity	5 to 95% without condensation		
Shock (operating)	30Gs		
Vibration	Displacement: .015 in., peak-to-peak at 5 to 57 Hz Acceleration: 2.5Gs at 57 to 2000 Hz		
Certification	UL listed/CSA approved Class 1, Groups A, B, C or D, Division 2 CE compliant for all applicable directives		
Ethernet Connections per Processor	16 simultaneous open connections		
Primary Cable Connection	RJ45		
Node Address Type	Internet Protocol (IP address)		
Data Rate	10 Mbps		

[1] The scan times are typical for 1K ladder logic program consisting of simple ladder logic and communication servicing. Actual scan times depend on your program size, instructions used, and communication protocol.

SLC 5/05 System Test Specifications

Description	Specification
Temperature	Operating: 0°C to +60°C (+32°F to +140°F)
	Storage: -40°C to +85°C (-40°F to +185°F)
Humidity	5 to 95% without condensation
Vibration	Operating: 1.0G at 5 to 2000 Hz
	Non-operating: 2.5Gs at 5 to 2000 Hz
Shock	Operating: 30.0Gs (3 pulses, 11 ms)
	Non-operating: 50.0Gs (3 pulses, 11 ms)
Free Fall (drop test)	Portable, 2.268 kg (5 lbs) or less at 0.762m (30 in.) (six drops)
	Portable, 2.268 kg (5 lbs) or more at 0.1016m (4 in.) (three flat drops)
Electromagnetic Compatibility	Showering Arc: 1.5 KV Per NEMA ICS 2-230/NEMA ICS 3-304
	Surge Withstand Capability: 3 KV Per IEEE Std. 472-1974/ANSI C37.90/90A-1974
	Fast Transient Burst (impulse): 2 KV for 1746 power supplies, 1 KV for 1746 I/O and communication lines over 10m (32.84 ft), 5 ns rise time
	Electrostatic Discharge (ESD): 15 KV, 100 pF/1.5k ohm model
	Radiated Electromagnetic Susceptibility: 5W walkie-talkie at 464.5 MHz and 153.05 MHz
Safety	Dielectric Withstand: 1500V ac Per UL 508, CSA C22.2 No. 142
	Isolation between Communication Circuits: 500V dc
	Isolation between Backplane and I/Os:1500V ac
	Flammability and Electrical Ignition: UL94V-0
Certification	UL listed/CSA approved Class 1, Groups A, B, C or D, Division 2 CE compliant for all applicable directives

For more information about the SLC 5/05 processor with built-in Ethernet, as well as other products and services, contact your local Allen-Bradley sales representative, authorized distributor or authorized system integrator.

SLC 500, Encompass, ControlLogix, RAC6000, and MicroLogix are trademarks of Rockwell Automation.
Ethernet is a registered trademark of Digital Equipment Corporation, Intel, and Xerox Corporation.
Microsoft and Windows 95 are registered trademarks of Microsoft Corporation.
Windows NT is a trademark of Microsoft Corporation.
DeviceNet is a trademark of Open DeviceNet Vendor Association.
RSLogix 500 is a trademark of Rockwell Software, Inc.

Rockwell *Automation*

Rockwell Automation helps its customers receive a superior return on their investment by bringing together leading brands in industrial automation, creating a broad spectrum of easy-to-integrate products. These are supported by local technical resources available worldwide, a global network of system solutions providers, and the advanced technology resources of Rockwell.

Worldwide representation.

Argentina • Australia • Austria • Bahrain • Belgium • Bolivia • Brazil • Bulgaria • Canada • Chile • China, People's Republic of • Colombia • Costa Rica • Croatia • Cyprus Czech Republic • Denmark • Dominican Republic • Ecuador • Egypt • El Salvador • Finland • France • Germany • Ghana • Greece • Guatemala • Honduras • Hong Kong Hungary • Iceland • India • Indonesia • Iran • Ireland • Israel • Italy • Jamaica • Japan • Jordan • Korea • Kuwait • Lebanon • Macau • Malaysia • Malta • Mexico Morocco • The Netherlands • New Zealand • Nigeria • Norway • Oman • Pakistan • Panama • Peru • Philippines • Poland • Portugal • Puerto Rico • Qatar • Romania • Russia Saudi Arabia • Singapore • Slovakia • Slovenia • South Africa, Republic of • Spain • Sweden • Switzerland • Taiwan • Thailand • Trinidad • Tunisia • Turkey • United Arab Emirates United Kingdom • United States • Uruguay • Venezuela

Rockwell Automation Headquarters, 1201 South Second Street, Milwaukee, WI 53204-2496 USA, Tel: (1) 414 382-2000, Fax: (1) 414 382-4444

Publication 1747-1.18 – November 1997

Copyright 1997 Rockwell International Corporation. All rights reserved. Printed in USA

Allen-Bradley

SLC / 1746 System
- Controllers Home
- SLC/1746 System Home
- System Overview
- Processors
- I/O Hardware
  - I/O Adapter Modules
  - I/O Chassis
  - I/O Module Overview
  - I/O Module Selection
  - I/O Connection Hardware (Removable Terminal Blocks)
  - I/O Connection Hardware (Wiring Systems)
- Communication Modules
- Power Supplies
- Hand-Held Terminal
- Program Storage Device
- I/O Simulator
- Software
- Distributed I/O
- Weights
- Partner Products (Encompass)

Resources
- Product Directory
- Find a U.S. Distributor
- Case Studies
- Shop On-Line
- Events Listing
- A-B Journal
- The VIEW Magazine
- Catalogs
- Manuals On-Line
- Automation Bookstore
- AutoCAD Library
- CrossWorks

Services
- Product Support
- Migration & Upgrade
- Product Certification
- Product Testing
- Customer Training
- Sales Support Training

1746 I/O Module Overview

The 1746 I/O product line provides more than 60 modules to meet your application needs in a modular assembly - including intelligent I/O modules.

- digital I/O modules provide 4 thru 32 I/O per module - digital I/O circuits interface to on/off sensors/actuators - ladder logic has direct access to I/O values - input modules, output modules, and combination input/output modules - ac and dc input modules - ac, dc, and relay-contact output modules
- analog I/O modules provide 4 thru 16 I/O per module - D/A and A/D conversions interface analog signals to data-table values - ladder logic has direct access to I/O values - input modules, output modules, and combination input/output modules - a high level of resolution for accurate control in a broad range of analog applications
- intelligent I/O modules are available to enhance your control system. These modules include a high-speed counter module, a BASIC language module, a motion control module and communication modules. Each provides a unique easy-to-use interface between the I/O circuits (digital and/or analog) and the CPU.

This modular hardware design uses cost- and space-effective means to add I/O to your control system. These modules can be used:

- in a 2-slot expansion chassis to augment an SLC 500 fixed-I/O controller
- in a local I/O chassis of an SLC modular-hardware controller
- at a location remote from the processor, in an I/O chassis with a 1747-ACN15 or -ACNR15 I/O adapter on a ControlNet link with the processor
- at a location remote from the processor, in an I/O chassis with a 1747-ASB I/O adapter on a Universal Remote I/O link with the processor

Features

- Hardware-platform sharing makes spare-parts stocking convenient
- Combinations of input and outputs in the same digital and analog modules provide expansion capabilities without sacrificing space or increasing cost
- Variety of voltages creates a precise power fit for your application
- No need to disconnect wiring to replace module of 16 or more I/O; removable terminal blocks are shipped with I/O modules
- Broad range of signal interfaces to ac and dc sensors/actuators for a wide variety of applications

- LED indicators show input/output status for easier troubleshooting
- Modules available in different densities (32 I/O per module max) for greater flexibility and cost savings
- 1746 I/O modules include optical coupling and filter circuitry for signal noise reduction
- A wide range of analog signal levels including standard analog inputs and outputs, and direct thermocouple and RTD temperature inputs

Specifications

Shock	• Operating: (relay contect output) 10 g (3 pulses, 11 ms) • Operating: (all modules except relay contact output) 30.0 g (3 pulses, 11 ms) • Non-operating: 50.0 g (3 pulses, 11 ms)
Vibration	• Operating: 1.0 g @ 5-2000 Hz • Non-operating: 2.5 g @ 5-2000 Hz
Environmental conditions	• Operational temperature: 0 to 60° C (32 to 140° F) • Storage temperature: -40 to 85° C (-40 to 185° F) • Relative Humidity: 5-95% (without condensation)

TOP

Automation Systems Catalog, page last updated December 20, 2000.

Copyright © 2002, Rockwell Automation. All rights reserved.
Important Notices

MANUFACTURER'S PRODUCT SPECIFICATIONS

Human Machine Interface

Home Page

HMI520C

Product Specifications

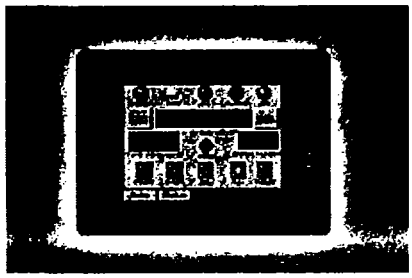

Hardware Specifications

Display

Type — 256-color STN
Size (Angle)— 5.7 inches [145 mm]
Size (W x H) — 4.5 x 3.5 inches [114 x 89 mm]
Resolution — 320 x 240 pixels
Brightness — 150 cd/m²
Contrast — 30:1
Backlight — CCFL with 15,000 hour minimum life span

Touchscreen

Type — 4-wire analog resistive
Touch Accuracy — 0.08 inches [2 mm]
Surface Hardness — 4H

Hardware

Microprocessor — 133 MHz 32-bit RISC
Flash Memory — 1 MB
DRAM — 4 MB
Non-volatile Recipe RAM — 1 MB
Real-Time Clock Chip— standard

Physical Dimensions

Height — 5.9 inches [150 mm]
Width — 8.0 inches [204 mm]
Total Depth — 2.0 inches [51 mm]

Panel Cutout and Dimensional Drawings

Mechanical

Material — plastic ABS
Mounting — panel
Wiring — field-wired to external terminal strip for power and D-style communication connectors
Weight — 2.2 pounds [1 kg]

Environment

Ratings — IP65, NEMA 4
Operating Temperature — 32 to 113° F [0 to 45° C]
Storage Temperature — -4 to 140° F [-20 to 60° C]
Relative Humidity — 10% to 90% (non-condensing)
Voltage Resistance — 500VAC (1 minute)
Isolation Resistance — exceed 50Mohms at 500VDC
Vibration Endurance — 20 to 25 Hz (x,y,z direction; 2G; 30 minutes)

Certifications

CE complies with EN50081-2 (1993) & EN50082-2 (1995)

Power Requirements

Input Voltage — 24 VDC
Power Requirements — 48 watts typical (2 amps @ 24VDC)

Communication

Serial Port 1 (OIT Configuration & RS-485 Communications) — RS-232 or RS-485 (DE9P)
Serial Port 2 (RS-232 Communications) — RS-232 (DE9S)
Baud Rates — 115.2K, 57.6K, 38.4K, 19.2K, 9600
Type — point-to-point

Operating Specifications

Screens & Pop-up Windows

- Up to 245 user-definable screens (full size) or pop-up windows (partial size)
- Up to 6 pop-up windows can be displayed at one time
- Pop-up windows can overlap
- Pop-up windows can be minimized to the task bar or moved by the operator
- User-definable startup screen
- User-definable common window for displaying objects that should always be shown
- Fast selection window for quick access to screens
- Change screens or call pop-up windows using PLC registers or function keys

Touchable Objects

- Can be any size
- Place any number in a screen or pop-up window
- Locate anywhere in a screen or pop-up window

Graphic Objects

- Drawing tools for lines, rectangles, circles, arcs and polygons

- 256-colors available
- Overlay existing graphics to create complex graphics
- Create two-state graphics to represent PLC coils
- Create multi-state graphics to represent PLC registers

Graphic Libraries

- Include more than 500 of the most common symbols
- Store new graphics in the libraries
- Use the same libraries in multiple projects
- Import preexisting bitmaps (up to 256 colors)

Text

- Eight font sizes
- Display in 256-colors
- International characters available
- Character set can be modified to include special characters of your creation

Function Keys

- Display a new or previous screen
- Display or close a pop-up window
- Display a message board
- Edit a PLC register using numbers or ASCII characters

Bar Graphs

- Display with or without a background shape
- Define the direction - up, down, left, right
- Constant or variable hi/lo alarm limits
- Adjustable color, size, span and zero reference
- Unlimited number of bar graphs per screen

Meters

- Four formats - up half, full up, full bottom, ¾ full
- Adjustable color, size, span and zero reference
- Unlimited number of meters per screen

Trends

- Periodically retrieve data from up to 16 PLC registers
- Vary sampling time from 1 to 65,535 seconds
- Hold feature for pausing the sampling
- Single or multiple page display
- Adjustable color and size

Alarms

- Monitor an unlimited number of PLC registers and coils
- On-screen alarm indicator
- Horizontal scrolling bar scrolls through all active alarms
- Alarm list displays all active alarms

Events

- Monitor PLC coils or registers for "events"
- Display screens or pop-up windows on an event trigger (the screens can be configured to set PLC coils)
- Acknowledge and "return to normal" capabilities

PLC Register Control

- Decimal, hex, binary, or floating point representation
- Linear scaling to present analog or digital data in readily understandable terms (i.e., degrees, speed)
- Jogging capability - incremental or time rated
- Use single or multi-state graphics to represent
- Masked format for password protection

Other Features

- Animated object movement using multi-state graphic objects tied to a PLC register
- On-line simulation mode for quick debugging
- Multiple OITs easily connected to one PLC
- Message board for writing messages
- Backlight screen saver
- Standard recipe and RTC

Welcome | What's New | Company | Products | Where To Buy
Support | Useful Links | Contact Us

This page last modified on 4/17/2002.
Maintained by maple@maple-systems.com.
Material Copyright © 2000-2002 Maple Systems, Inc.