SDMS US EPA Region V

Imagery Insert Form

Document ID:

EPA Region 5 Records Ctr.
202458

Some images in this document may be illegible or unavailable in SDMS. Please see reason(s) indicated below:

[x] Illegible due to bad source documents. Image(s) in SDMS is equivalent to hard copy.

Specify Type of Document(s) / Comments:

BATE #MEN03831 TO MEN03839 ARE NOT LEGIBLE. Also Exhibit 12 multiple

[ ] Includes _____ COLOR or _____ RESOLUTION variations.
Unless otherwise noted, these pages are available in monochrome. The source document page(s) is more legible than the images. The original document is available for viewing at the Superfund Records Center.

Specify Type of Document(s) / Comments:

[ ] Confidential Business Information (CBI).
This document contains highly sensitive information. Due to confidentiality, materials with such information are not available in SDMS. You may contact the EPA Superfund Records Manager if you wish to view this document.

Specify Type of Document(s) / Comments:

[ ] Unscannable Material:
Oversizedor ___Format.
Due to certain scanning equipment capability limitations, the document page(s) is not available in SDMS. The original document is available for viewing at the Superfund Records center.

Specify Type of Document(s) / Comments:

[ ] Document is available at the EPA Region 5 Records Center.

Specify Type of Document(s) / Comments:

Rev. 07/10/02

SUPPLEMENTAL PRODUCTION

VOL. II

DOCUMENTS 5-13

5

MEN03647

STATE OF MICHIGAN

JAMES J. BLANCHARD, Governor

DEPARTMENT OF NATURAL RESOURCES

STEVENS T. MASON BUILDING
BOX 30028
LANSING, MI 48909

RONALD O. SKOOG, Director

May 31, 1985

CERTIFIED MAIL

Menasha Corporation
320 North Farmer Street
Otsego, Michigan 49078

Re: NPDES Permit No. MI 0003824

Dear Gentlemen:

Your application for a National Pollutant Discharge Elimination System (NPDES) Permit has been processed in accordance with appropriate state and federal regulations.

Your NPDES Permit contains: 1) limitations which require you to monitor your effluent in accordance with Part I, Section A; and 2) a schedule of compliance for submittal of information concerning other permit requirements.

REVIEW THE PERMIT EFFLUENT LIMITS AND PERFORMANCE SCHEDULES CAREFULLY. These are subject to the criminal and civil enforcement provisions of both state and federal law. Permit violations are audited by the United States Environmental Protection Agency and will appear in a published quarterly noncompliance report made available to agencies and the public.

Your monitoring and reporting responsibilities shall be complied with in accordance with Part I, Section B of this permit. If applicable, monthly operating report forms will be transmitted to you in the near future. These reports are to be submitted monthly or otherwise as required by your NPDES permit.

Any reports, notifications, and questions regarding the attached permit or NPDES program should be addressed to the following address:

Fred Morley, District Supervisor
521 North Tenth Street
P.O. Box 355
Plainwell, Michigan 49080
Telephone: (616) 685-9886

5205

MEN03648

NOTE: All references within this permit made to the Water Quality Division or Chief of the Water Quality Division are to refer to the Surface Water Quality Division or Chief of the Surface Water Quality Division, respectively.

Sincerely,

William E. McCracken

William E. McCracken, P.E.
Chief, Permits Section
Surface Water Quality Division
517-373-3088

Enclosure: Permit

cc: EPA-Region V (2)
Files
Water Quality Surveillance
Compliance Section #1
Fred Morley - Plainwell District
Land Application Unit
208 Agency - West Michigan Regional Planning Commission

5206

MEN03649

Permit No. MI 0003824

MICHIGAN WATER RESOURCES COMMISSION

AUTHORIZATION TO DISCHARGE UNDER THE

NATIONAL POLLUTANT DISCHARGE ELIMINATION SYSTEM

[illegible] compliance with the provision of the Federal Water Pollution Control Act, as amended, [illegible] 1251 et seq; the "Act"), and the Michigan Water Resources Commission Act, as [illegible] (Act 245, Public Acts of 1929, as amended, the "Michigan Act"),

Menasha Corporation

[illegible] to discharge from a facility located at

320 N. Farmer Street
Otsego, Michigan 49078

[illegible] water named Kalamazoo River

[illegible] with effluent limitations, monitoring requirements and other conditions set [illegible] Parts I and II hereof.

[illegible] permit takes effect immediately upon the date of issuance. Any person who feels [illegible] by this permit may file a sworn petition with the Commission, setting forth [illegible] of the permit which are being challenged and specifying the grounds for [illegible]. The Commission may reject any petition filed more than 60 days after [illegible] as being untimely. Upon granting of a contested case to the applicant, the [illegible] shall review the permit to determine which contested terms shall be stayed [illegible] the Commission takes its final action All other conditions of the permit remain [illegible] effect. If the contested condition is a modification of a previous permit [illegible] and the Commission determines the contested condition shall be stayed, then [illegible] previous condition remains in effect until the Commission takes final action [illegible] the course of any administrative proceeding brought by a person other than the [illegible], the conditions of this permit will remain in effect, unless the Commission [illegible] otherwise.

[illegible] permit and the authorization to discharge shall expire at midnight May 31 1990 [illegible] order to receive authorization to discharge beyond the date of expiration, the [illegible] shall submit such information and forms as are required by the Michigan Water [illegible] Commission no later than 180 days prior to the date of expiration.

[illegible] permit is based on an application dated December 11, 1980 and updated [illegible] 1981, February 22, 1982, December 8, 1982, December 29, 1982, [illegible] 1983, April 13, 1983, October 24, 1983, November 9, 1983, December 2, 1983, [illegible] 7, 1983, and shall supersede any and all Orders of Determination, [illegible] Final Orders of Determination, or NPDES Permits previously adopted [illegible] Michigan Water Resources Commission.

[illegible] this 21st day of May 1985, by the Michigan Water [illegible] Commission superseding NPDES Permit No. MI 0003824 issued June 29, 1979 [illegible] expiration date of March 31, 1981.

Paul D. Zugger
Executive Secretary

5207

PART I

A. EFFLUENT LIMITATIONS AND MONITORING REQUIREMENTS

1. Final Effluent Limitations

During the period beginning upon issuance of this permit and lasting until expiration of this permit, the permittee is authorized to discharge up to six hundred thousand (600,000) gallons per day of noncontact cooling water from outfall 001 to the Kalamazoo River. Such discharge shall be limited and monitored by the permittee as specified below:

Effluent Characteristic	Discharge Limitations kg/day (lbs/day) Monthly Average	Daily Maximum	Other Limitations Monthly Average	Daily Maximum	Monitoring Requirements Measurement Frequency	Sample Type
m^3/Day (MGD)					Daily	Grab
Temperature (°F)					Weekly	Direct reading
Visual Observation*					Daily	Visual

*Unusual characteristics of the discharge which would not be expected from the above specified discharge (e.g., turbidity, discoloration, oil film, suspended matter, etc.) shall be reported immediately to the District Office of the Surface Water Quality Division, followed with a written report within 5 days detailing the findings of the investigation and the steps taken to correct the condition.

Term noncontact cooling water shall mean water used for cooling which does not come in direct contact with any raw material, intermediate product, by-product, waste product, or finished product.

a. The pH shall not be less than 6.0 nor greater than 9.0 The pH shall be monitored as follows: Weekly; grab.

b. The discharge shall not cause excessive foam in the receiving waters. The discharge shall be essentially free of floating and settleable solids.

c. The discharge shall not contain oil or other substances in amounts sufficient to create a visible film or sheen on the receiving waters.

d. Measurements and/or observations taken in compliance with the monitoring requirements shall be taken prior to discharge to the storm sewer.

e. In the event the permittee shall require the use of water treatment additives in addition to any previously approved by the Chief of the Surface Water Quality Division, the permittee shall notify the Division Chief. Written approval from the Chief of the Surface Water Quality Division to use such additives at specified levels shall be obtained prior to usage by the permittee. The permit will be modified in accordance with the requirements of Part II, Section A-1 if a constituent of the additive or additives requires limiting.

5208

004

Final Effluent Limitations

During the period beginning upon issuance of this permit and [illegible] of this permit, the permittee is authorized to discharge up to [illegible] hundred [illegible] (200,000) gallons per day of treated vacuum pump seal water, heat exchanger [illegible] water and condensate, and noncontact cooling water from outfall 002 to the Kalamazoo [illegible]. Such discharge shall be limited and monitored by the permittee as specified below

Effluent Characteristic	Discharge Limitations kg/day (lbs/day) Monthly Average	Daily Maximum	Other Limitations Monthly Average	Daily Maximum	Monitoring Requirements Measurement Frequency	Sample Type
[illegible] m^3 Day (MGD)					Continuous	Report total daily flow
Chemical Oxygen Demand (BOD_5) (mg/l)					Daily	24-Hr. Composite
[illegible] Suspended Solids (TSS) (mg/l)					Daily	24-Hr. Composite
[illegible] Temperature (°F)					Weekly	Direct reading
[illegible] Observation*					Daily	Visual

[illegible] any unusual characteristics of the discharge which would not be expected from the above [illegible] discharge (e.g., turbidity, discoloration, oil film, suspended matter, etc.) [illegible] reported immediately to the District Office of the Surface Water Quality [illegible] followed with a written report within 5 days detailing the findings of the [illegible] investigation and the steps taken to correct the condition.

The term noncontact cooling water shall mean water used for cooling which does not come into direct contact with any raw material, intermediate product, by-product, waste [illegible], or finished product.

a. The pH shall not be less than 6.0 nor greater than 9.0. The pH shall be monitored as follows: Daily: grab

b. The discharge shall not cause excessive foam in the receiving waters. The discharge shall be essentially free of floating and settleable solids.

c. The discharge shall not contain oil or other substances in amounts sufficient to create a visible film or sheen on the receiving waters.

d. Samples, measurements and/or observations taken in compliance with the monitoring requirements shall be taken prior to discharge to the Kalamazoo River.

e. In the event the permittee shall require the use of water treatment additives in addition to any previously approved by the Chief of the Surface Water Quality Division, the permittee shall notify the Division Chief. Written approval from the Chief of the Surface Water Quality Division to use such additives at specified levels shall be obtained prior to usage by the permittee. The permit will be modified in accordance with the requirements of Part II, Section A-1 if a constituent of the additive or additives requires limiting.

5209

3 Final Effluent Limitations

During the period beginning upon issuance of this permit and last until expiration of this permit, the permittee is authorized to discharge up to nine hundred twenty thousand (920,000) gallons per day of treated process wastewater, lime slurry, miscellaneous seal and cooling water, and recovery evaporator condensate from outfall 000 through outfall 003 to the Kalamazoo River. Such discharge shall be limited and monitored by the permittee as specified below:

Effluent Characteristic	Discharge Limitations kg/day (lbs/day) Monthly Average	Daily Maximum	Other Limitations Monthly Average	Daily Maximum	Monitoring Requirements Measurement Frequency	Sample Type
Flow, M^3/Day (MGD)					Continuous	Report total daily flow
Biochemical Oxygen Demand (BOD_5)(mg/l)					Daily	24-Hr. Composite
Total Suspended Solids (TSS) (mg/l)					Daily	24-Hr. Composite
Total Residual Chlorine (mg/l)					Daily*	Grab
Outfall Observation**					Daily	Visual

*Monitoring shall occur during period of chlorination. If the review of the monitoring data shows that a discharge limitation is necessary, then this permit may be modified in accordance with Part II, B-4 of this permit. If the permittee believes that the monitoring data shows that limiting and continued monitoring is not necessary, then the permittee may submit a written request to the Plainwell District Supervisor asking for termination of monitoring for total residual chlorine. Such termination shall become effective upon receipt of written authorization to do so from the Plainwell District Supervisor.

**Any unusual characteristics of the above authorized discharge which would not be expected (i.e., turbidity, discoloration, oil film, suspended solids, etc.) shall be reported immediately to the District Office of the Surface Water Quality Division followed with a written report within 5 days detailing the findings of the investigation and the steps taken to correct the condition.

a. The pH shall not be less than 6.0 nor breater than 9.0. The pH shall be monitored as follows: daily; grab.

b. The discharge shall not cause excessive foam in the receiving waters. The discharge shall be essentially free of floating and settleable solids.

c. The discharge shall not contain oil or other substances in amounts sufficient to create a visible film or sheen on the receiving waters.

d. Samples, measurements, and/or observations taken in compliance with the monitoring requirements above shall be taken as follows: Flow, BOD, TSS, TRC, & pH: prior to mixing with other wastewaters; outfall observation: at the point of discharge (outfall 003).

e. In the event the permittee shall require the discharge of water treatment additives in addition to any previously approved by the Chief of the Surface Water Quality Division, the permittee shall notify the Division Chief. Written approval from the Chief of the Surface Water Quality Division to discharge such additives at specified levels shall be obtained prior to discharge by the permittee. The permit will be modified in accordance with the requirements of Part II, Section B-4 if a constituent of the additive or additives requires limiting.

4. Initial Phosphorus Limitation

During the period upon the issuance of this permit and lasting until the effective date of an alternative phosphorus limitation, as approved by the Chief of the Surface Water Quality Division, the permittee shall monitor and limit the discharge from outfall 000 as specified below:

Effluent Characteristic	Discharge Limitations kg/day (lbs/day) Monthly Average	Daily Maximum	Other Limitations Monthly Average	Daily Maximum	Monitoring Requirements Measurement Frequency	Sample Type
Soluble ortho phosphorus	3.5(8.0)				Weekly	24-Hr. Composite

5. Final Phosphorus Limitations & Requirements

The permittee shall submit and receive approval of a report which provides the necessary factors to be considered (as described in 40 CFR Part 125.3 (d)(1) of September 26, 1984) when setting BPT limits on a case by case basis. This report shall establish whether the final phosphorus limitation should be equal to the current Water Quality Standard goal of 1.0 mg/l as a monthly average or whether some other phosphorus limitation is appropriate.

For the purpose of this permit, the final phosphorus discharge limitations shall become that value as demonstrated in the above required report and as approved and accepted by the Chief of the Surface Water Quality Division. As part of the report, submitted for approval, the permittee shall include a construction and implementation schedule designed to come into compliance with the final phosphorus limit as approved. This report shall be submitted on or before September 30, 1986 . Compliance with this condition shall be achieved in accordance with the Schedule of Compliance, Part I, C-5. Please be advised that if future water quality studies show that water quality based phosphorus loading limits are necessary to protect the designated uses of the Kalamazoo River. treatment for further phosphorus removal may be required of the permittee.

MEN03654

003
00A

Final Effluent Limitations

During the period beginning upon issuance of this permit and lasting until [illegible] of this permit, the permittee is authorized to discharge up to s[illegible] million nine hundred fifty-five thousand (6,955,000) gallons per day of turbine condenser water from outfall 00A (splitter box) through outfalls 003 and 005 to the Kalamazoo River. Such discharge (00A) shall be monitored and limited as specified below:

Effluent Characteristic	Discharge Limitations kg/day (lbs/day) Monthly Average	Daily Maximum	Other Limitations Monthly Average	Daily Maximum	Monitoring Requirements Measurement Frequency	Sample Type
[illegible] M^3/Day (MGD)					Daily	Calculation
Temperature (^oF)					Weekly	Direct reading
Outfall Observation*					Daily	Visual

The term noncontact cooling water shall mean water used for cooling which does not come into direct contact with any raw material, intermediate product, by-product, waste product, or finished product.

Any unusual characteristics of the above authorized discharge (i.e., turbidity, discoloration, oil film, suspended solids, etc.) shall be reported immediately to the District Office of the Surface Water Quality Division followed with a written report within 5 days detailing the findings of the investigation and the steps taken to correct the condition.

a. The pH shall not be less than 6.0 nor greater than 9.0. The pH shall be monitored as follows: weekly: grab.

b. The discharge shall not cause excessive foam in the receiving waters. The discharge shall be essentially free of floating and settleable solids.

c. The discharge shall not contain oil or other substances in amounts sufficient to create a visible film or sheen on the receiving waters.

d. Samples, measurements, and observations taken in compliance with the monitoring requirements above shall be taken as follows: Flow: to be calculated from intake; temperature: at the splitter box; outfall observation: at the point of discharge(outfall 005).

e. In the event the permittee shall require the discharge of water treatment additives in addition to any previously approved by the Chief of the Surface Water Quality Division, the permittee shall notify the Division Chief. Written approval from the Chief of the Surface Water Quality Division to discharge such additives at specified levels shall be obtained prior to discharge by the permittee. The permit will be modified in accordance with the requirements of Part II, Section B-4 if a constituent of the additive or additives requires limiting.

WAS/bu

5212

7. Final Effluent Limitations

During the period beginning upon issuance of this permit and lasting until expiration of this permit, the permittee is authorized to discharge up to two hundred thirty four thousand (234,000) gallons per day of noncontact cooling water, boiler blowdown, zeolite recharging wastewater, and roof and floor drain from outfall 004 to the Kalamazoo River. Such discharge shall be limited and monitored by the permittee as specified below:

Effluent Characteristic	Discharge Limitations kg/day (lbs/day) Monthly Average	Daily Maximum	Other Limitations Monthly Average	Daily Maximum	Monitoring Requirements Measurement Frequency	Sample Type
Flow, M^3/Day (MGD)					Daily	Grab
Total Suspended Solids	18(39)	44(96)	20 mg/l	50 mg/l	Weekly	Grab
Temperature (^oF)					Weekly	Direct reading
Outfall Observation*					Daily	Visual

*Any unusual characteristics of the discharge which would not be expected from the above authorized discharge (e.g., turbidity, discoloration, oil film, suspended matter, etc.) shall be reported immediately to the District Office of the Surface Water Quality Division followed with a written report within 5 days detailing the findings of the investigation and the steps taken to correct the condition.

The term noncontact cooling water shall mean water used for cooling which does not come into direct contact with any raw material, intermediate product, by-product, waste product, or finished product.

a. The pH shall not be less than 6.0 nor greater than 9.0. The pH shall be monitored as follows: Weekly; grab

b. The discharge shall not cause excessive foam in the receiving waters. The discharge shall be essentially free of floating and settleable solids.

c. The discharge shall not contain oil or other substances in amounts sufficient to create a visible film or sheen on the receiving waters.

d. Samples, measurements, and/or observations taken in compliance with the monitoring requirements above shall be taken prior to discharge to the Kalamazoo River.

e. In the event the permittee shall require the discharge of water treatment additives in addition to any previously approved by the Chief of the Surface Water Quality Division, the permittee shall notify the Division Chief. Written approval from the Chief of the Surface Water Quality Division to discharge such additives at specified levels shall be obtained prior to discharge by the permittee. The permit will be modified in accordance with the requirements of Part II, Section B-4 if a constituent of the additive or additives requires limiting.

WAS/bu

MEN03656

0004002

3. Initial Effluent Limitations

During the period beginning upon issuance of this permit and lasting until September 30, 1985, the permittee shall limit and monitor outfalls 000 and 002 as specified below on a combined basis:

Effluent Characteristic	Discharge Limitations kg/day (lbs/day) Monthly Average	Daily Maximum	Other Limitations Monthly Average	Daily Maximum	Monitoring Requirements Measurement Frequency	Sample Type
Biochemical Oxygen Demand (BOD_5)						
(May 1 - October 31)		1,693 (3,725)			Daily	Calculation
(November 1 - April 30)	1,314 (2,890)	2,541 (5,590)			Daily	Calculation
Total Suspended Solids (TSS)	1,455 (3,200)	2,182 (4,800)			Daily	Calculation

4. Final Effluent Limitations

During the period beginning October 1, 1985, and lasting until expiration of this permit, the permittee shall limit and monitor outfalls 000 and 002 as specified below on a combined basis:

Effluent Characteristic	Discharge Limitations kg/day (lbs/day) Monthly Average	Daily Maximum	Other Limitations Monthly Average	Daily Maximum	Monitoring Requirements Measurement Frequency	Sample Type
Biochemical Oxygen Demand (BOD_5)						
(May 1 - September 30)		1,693 (3,725)			Daily	Calculation
(October 1 - April 30)	1,520 (3,345)	2,846 (6,261)			Daily	Calculation
Total Suspended Solids (TSS)	1,629 (3,584)	2,444 (5,376)			Daily	Calculation

5. Special Condition

This permit may be modified, or, alternatively revoked and reissued to comply with any applicable standard(s) or limitation(s) promulgated under Section 301(b)(2)(c)(d), 304(b)(2) and 307(a)(2) of the Act, if the effluent standard(s) or limitation(s) so promulgated:

a. is(are) either different in conditions or more stringent than any effluent limitation in the permit; or

b. control(s) any pollutant not limited in the permit.

5214

11. Special Condition

During the month of October, 1985, if the permittee expects to discharge BOD_5 loadings in excess of the May 1 - September 30 seasonal BOD_5 loading limit of 3725 pounds per day and up to the October 1 - April 30 loading limit of 6261 pounds per day, then the permittee shall receive written approval to do so. Such written approval shall be obtained from the Surface Water Quality District Supervisor prior to exceeding the 3725 pound per day limit for BOD_5 during October, 1985. The upper limit to an increased BOD_5 loading during October, 1985 is the daily maximum allowable loading limit of 6261 pounds per day.

12. Special Condition - Short-Term Waste Characterization Study

As a condition of this permit, beginning upon issuance of this permit and before December 31, 1985, the permittee shall begin monitoring* the discharge from outfalls 002 and 003 for the constituents, at the frequency, and for the period specified below. This monitoring will be required to demonstrate that these constituents are not contained in significant quantities. The results of the analysis of such monitoring shall be submitted by February 28, 1986, to the Chief of the Surface Water Quality Division. If, upon review of the analysis, it is determined that any of the materials or constituents require limiting to protect the receiving water in accordance with applicable water quality standards, the permittee will be so informed. The permit will then be modified in accordance with Part II, B-4.

CONSTITUENT	SAMPLE TYPE	SAMPLE FREQUENCY	SAMPLE DURATION
Conduct a purgeable halocarbon scan[1]	Grab	Weekly	Four Weeks
Toluene[2]	Grab	Weekly	Four Weeks

[1]Use EPA Test Method 601.

[2]Use EPA Test Method 602.

*The permittee shall submit a monitoring, sampling and analysis plan to the Chief of the Surface Water Quality Division and receive approval thereof in accordance with Part I, C-3 Schedule of Compliance.

13. Special Condition - Dissolved Oxygen Monitoring Study

As a condition of this permit, beginning upon issuance of this permit and before December 31, 1986, the permittee shall monitor* outfalls 001, 002, 003, 004 and 005 for dissolved oxygen, at the frequency and duration, specified below. This monitoring is required to demonstrate that the water quality based effluent limit of 3.0 mg/l minimum for dissolved oxygen is consistently being met. The results of the monitoring program shall be submitted by February 28, 1987, to the Chief of the Surface Water Quality Division. If, upon review of the data, it is determined that dissolved oxygen needs to be monitoring and/or limited any further to protect the receiving waters in accordance with applicable Water Quality Standards, the permittee will be so informed. The permit will then be modified in accordance with Part II, B-4.

CONSTITUENT	SAMPLE TYPE	SAMPLE FREQUENCY	SAMPLE DURATION
Dissolved Oxygen (mg/l)	Grab	Twice Monthly	12 Months

*The permittee shall submit a monitoring, sampling, and analysis plan to the Chief of the Surface Water Quality Division and receive approval thereof in accordance with Part I, C-2 Schedule of Compliance.

MEN03658

14. Special Condition - Production Increases

If the permittee expects to increase production more than 20% above the rate of 448 tons/day as applied for, then the permittee shall submit an application or written notification for an increased use. The permittee shall include technical and support data of how the increased wastewater loading will be adequately treated throughout the year with special consideration given towards how the summer seasonal limits will be complied with.

15. Special Condition - Notification Requirement

The discharger shall notify the Chief of the Surface Water Quality Division, in writing, within 10 days of knowing, or having reason to believe, that a change in facility operation, maintenance, or construction has resulted or will result in the discharge of:

1. Detectable levels* of chemicals on the current Michigan Critical Materials Register or priority pollutants or hazardous substances set forth in 40 CFR Vol. 48, No. 64, April 1, 1983, Part 122.21, Appendix D, pp. 14176-14177 which were not acknowledged in the application** or listed in the application at less than detectable levels.

2. Detectable levels* of any other chemical not listed in the application or listed at less than detection, for which the application specifically requested information.

3. Any chemical at levels greater than five times the average level reported in the application**.

Any other monitoring results obtained as a requirement of this permit shall be reported in accordance with the schedule of compliance.

*The detectable level shall be defined as the Method Detection Limit (MDL) as given in Appendix B to Part 136, Federal Register, Vol. 49, No. 209, October 26, 1984, pp. 43430-31.

**The application dated December 11, 1980 and subsequently updated.

PART I

. MONITORING AND REPORTING

1. Representative Sampling

Samples and measurements taken as required herein shall be representative of the volume and nature of the monitored discharge.

2. Reporting: [A] = applicable to your facility; [NA] = not applicable to your facility

[A] a. MOR Submittal Requirements - The permittee shall submit Monthly Operating Report (MOR) forms to the Data Center of the Michigan Department of Natural Resources for each calendar month of the authorized discharge period(s). The MOR's shall be postmarked no later than the 10th day of the month following each month of the authorized discharge period(s).

[NA] b. Retained Self-Monitoring Requirements - The permittee shall maintain a year-to-date log of retained self-monitoring results and provide such log for inspection by the staff of the

- [ ] (1.) Surface Water Quality Division/Groundwater Quality Division of the Michigan Department of Natural Resources.
- [ ] (2.) Environmental Health Services Division, Michigan Department of Public Health
- [ ] (3.) Northern Peninsula Division, Michigan Department of Public Health
- [ ] (4.) Division of Health Facility Licensing & Certification, Michigan Department of Public Health

upon request.

The permittee shall certify in writing to the Chief of the Surface Water Quality Division or Groundwater Quality Division of the Department of Natural Resources, in accordance with the Schedule of Compliance Part I, C- N/A, that:

(1.) all retained self-monitoring requirements have been complied with and a year-to-date log has been maintained.
(2.) the flow rate(s) (if part of retained self-monitoring results) from all outfalls have been substantially the same as the flow rate(s) authorized by this permit or if
(3.) the flow rate(s) (if part of retained self-monitoring results) is (are) substantially different from the flow rate(s) authorized by this permit and the permittee shall provide reasons for the difference in flow rates.

[NA] c. Groundwater Monitoring - The permittee shall submit Monthly Operating Report (MOR) forms to the Data Center of the Michigan Department of Natural Resources in accordance with the monitoring requirements set forth in Part I, A-N/A. The MOR's shall be postmarked no later than the 10th day of the month following each completed report period.

[NA] d. First Permit - Existing or Proposed Facility - Upon issuance of the first permit for an existing or proposed facility the permittee is exempt from submitting MOR's for a period of ninety (90) days from the date the permit is issued.

[NA] e. Permit Reissuance or Modification - For any parameter added to the monitoring requirements as a result of permit reissuance or modification of the current permit, the permittee will be exempt from submitting MOR data for that parameter for a period of ninety days from the date the permit is issued.

5217

3. Definitions

a. The monthly average discharge is defined as the total discharge by weight, or concentration if specified, during the reporting month divided by the number of days in the reporting month that the discharge from the production or commercial facility occurred. When less than daily sampling occurs, the monthly average discharge shall be determined by the summation of the measured daily discharges by weight, or concentration if specified, divided by the number of days during the reporting month when the samples were collected, analyzed and reported.

b. The daily maximum discharge means the total discharge by weight, or concentration if specified, during any calendar day.

c. The Regional Administrator is defined as the Region V Administrator, U.S. EPA, located at 230 South Dearborn, 13th Floor, Chicago, Illinois 60606.

d. The Michigan Water Resources Commission is located in the Stevens T. Mason Building. The mailing address is Box 30028, Lansing, Michigan 48909.

4. Test Procedures

Test procedures for the analysis of pollutants shall conform to regulations published pursuant to Section 304(h) of the Act, under which such procedures may be required.

5. Recording Results

For each measurement or sample taken pursuant to the requirements of this permit, the permittee shall record the following information:

a. The exact place, date, and time of sampling;

b. The dates the analyses were performed;

c. The person(s) who performed the analyses;

d. The analytical techniques or methods used; and

e. The results of all required analyses.

6. Additional Monitoring by Permittee

If the permittee monitors any pollutant at the location(s) designated herein more frequently than required by this permit, using approved analytical methods as specified above, the results of such monitoring shall be included in the calculation and reporting of the values required in the Monthly Operating Report. Such increased frequency shall also be indicated.

7. Records Retention

All records and information resulting from the monitoring activities required by this permit including all records of analyses performed and calibration and maintenance of instrumentation and recordings from continuous monitoring instrumentation shall be retained for a minimum of three (3) years, or longer if requested by the Regional Administrator or the Michigan Water Resources Commission.

C. SCHEDULE OF COMPLIANCE

1. The permittee shall continue to operate the installed facilities to achieve the effluent limitations specified for outfalls 000-005.

2. The permittee shall achieve compliance with the Dissolved Oxygen Monitoring Study special condition of Part I, A-13 in accordance with the following schedule. All submittals shall be to the Chief of the Surface Water Quality Division.

a. On or before August 31, 1985, submit and receive approval of a monitoring, sampling, and analysis plan.

b. On or before December 31, 1986, the permittee shall have completed all monitoring as required.

c. On or before February 28, 1987, the results of the analysis of such monitoring shall be submitted.

MEN03662

Schedule of Compliance (continued)

3. The permittee shall achieve compliance with the "Short-Term Waste Characterization Study" special condition of Part I, A-12 in accordance with the following schedule. All submittals shall be to the Chief of the Surface Water Quality Division.

a. On or before August 31, 1985, submit and receive approval of a monitoring, sampling, and analysis plan.

b. On or before December 31, 1985, the permittee shall have completed all monitoring as required.

c. On or before February 28, 1986, the results of the analysis of such monitoring shall be submitted.

4. The permittee shall achieve compliance with the Final Phosphorus Limitations and Requirements of Part I, A-5 in accordance with the following schedule. All submittals shall be to the Chief of the Surface Water Quality Division.

a. On or before September 30, 1985, submit and receive approval of an outline to address the 40 CFR Part 125.3 (d)(i) requirements for setting BPT limits.

b. On or before March 31, 1986, submit a progress report.

c. On or before September 30, 1986, submit and receive approval of the final report as required in Part I, A-5.

5. No later than 14 calendar days following a date identified in the above schedule of compliance, the permittee shall submit either a report of progress, or, in the case of specific actions being required by identified dates, a written statement of compliance or noncompliance. In the latter case, the statement shall include the cause of noncompliance, any remedial actions taken, and the probability of meeting the next scheduled requirement. Failure to submit the written statement is just cause to pursue enforcement action pursuant to the Commission Act and the Part 21 Rules.

PART II

A. MANAGEMENT REQUIREMENTS

1. Duty to Comply

All discharges authorized herein shall be consistent with the terms and conditions of this permit. The discharge of any pollutant identified in this permit more frequently than or at a level in excess of that authorized shall constitute a violation of the permit.

It is the duty of the permittee to comply with all the terms and conditions of this permit. Any noncompliance with the Effluent Limitations, Special Conditions, or terms of this permit constitutes a violation of Public Acts 245 of 1929, as amended, and/or PL 92-500, as amended, and constitutes grounds for enforcement action; for permit termination, revocation and reissuance, or modification; or denial of an application for permit renewal.

2. Change of Conditions

Any anticipated facility expansion, production increases, or process modification which will result in new, different, or increased discharges of pollutants must be reported by submission of a new application or, if such changes will not violate the effluent limitations specified in this permit, by notice to the permit issuing authority of such changes. Following such notice, the permit may be modified to specify and limit any pollutant not previously limited.

3. Containment Facilities

The permittee shall provide facilities for containment of any accidental losses of concentrated solutions, acids, alkalies, salts, oils, or other polluting materials in accordance with the requirements of the Michigan Water Resources Commission Rules, Part 5. This requirement is included pursuant to Section 5 of the Michigan Water Resources Commission Act, 1929 PA 245, as amended, and the Part 5 rules of the General Rules of the Commission.

4. Operator Certification

The permittee shall have the waste treatment facilities under direct supervision of an operator certified by the Michigan Water Resources Commission, as required by Section 6a of the Michigan Act.

5. Noncompliance Notification

If, for any reason, the permittee does not comply with or will be unable to comply with any daily maximum effluent limitation specified in this permit, the permittee shall provide the Chief of the Surface Water Quality Division with the following information, in writing, within five (5) days of becoming aware of such condition:

a. A description of the discharge and cause of noncompliance; and

b. The period of noncompliance, including exact dates and [illegible]; or, if not corrected, the anticipated time the noncompliance is expected to continue, and the steps being taken to reduce, eliminate and prevent recurrence of the noncomplying discharge.

6. Spill Notification

The permittee shall immediately report any spill or loss of any product, by-product, intermediate product, oils, solvents, waste material, or any other polluting substance which occurs to the surface waters or groundwaters of the state by calling the Department of Natural Resources 24-hour Emergency Response telephone number 1-800-292-4706; and the permittee shall within ten (10) days of the spill or loss, provide the state with a full written explanation as to the cause and discovery of the spill or loss, cleanup and recovery measures taken, preventative measures to be taken, and schedule of implementation. This requirement is included pursuant to Section 5 of the Michigan Water Resources Commission Act, 1929 PA 245, as amended.

7. Facility Operation

The permittee shall at all times properly operate and maintain all treatment or control facilities or systems installed or used by the permittee to achieve compliance with the terms and conditions of this permit.

8. Adverse Impact.

The permittee shall take all reasonable steps to minimize any adverse impact to the surface or groundwaters of the state resulting from noncompliance with any effluent limitation specified in this permit including, but not limited to, such accelerated or additional monitoring as necessary to determine the nature and impact of the discharge in noncompliance.

9. By-Passing

Any diversion from or by-pass of facilities necessary to maintain compliance with the terms and conditions of this permit is prohibited, except (i) where unavoidable to prevent loss of life, personal injury, or severe property damage, or (ii) where excessive storm drainage or runoff would damage any facilities necessary for compliance with the effluent limitations and prohibitions of this permit. The permittee shall promptly notify the Michigan Water Resources Commission and the Regional Administrator, in writing, of such diversion or by-pass.

10. Power Failures

In order to maintain compliance with the effluent limitations and prohibitions of this permit, the permittee shall either:

a. Provide an alternative power source sufficient to operate facilities utilized by permittee to maintain compliance with the effluent limitations and conditions of this permit which provision shall be indicated in this permit by inclusion of a specific compliance date in each appropriate "Schedule of Compliance for Effluent Limitations".

MEN03665

b. Upon the reduction, loss, or failure of one or more of the primary sources of power to facilities utilized by the permittee to maintain compliance with the effluent limitations and conditions of this permit, the permittee shall halt, reduce or otherwise control production and/or all discharge in order to maintain compliance with the effluent limitations and conditions of this permit.

11. Removed Substances

Solids, sludges, filter backwash, or other pollutants removed from or resulting from treatment or control of wastewaters shall be disposed of in a manner such as to prevent any pollutant from such materials from entering navigable waters, or the entry of toxic or harmful contaminants thereof onto the groundwaters in concentrations or amounts detrimental to the groundwater resource.

12. Upset Noncompliance Notification

If a process "upset" (defined as an exceptional incident in which there is unintentional and temporary noncompliance with technology based permit effluent limitations because of factors beyond the reasonable control of the permittee) has occurred, the permittee who wishes to establish the affirmative defense of upset shall notify the Chief of the Surface Water Quality Division by telephone within 24 hours of becoming aware of such conditions and within five (5) days provided, in writing, the following information:

a. That an upset occurred and that the permittee can identify the specific cause(s) of the upset;

b. That the permitted wastewater treatment facility was, at the time, being properly operated;

c. That the permittee has specified and taken action on all responsible steps to minimize or correct any adverse impact in the environment resulting from noncompliance with his permit.

If any enforcement proceedings, the permittee seeking to establish the occurrence of an upset, has the burden of proof.

13. Any requirement of this permit which is included under the unique terms of Michigan, the Water Resources Commission, Act 245, P.A. 1929, as amended, and rules promulgated thereunder, is not enforceable under the Federal Clean Water Act regulations.

3 RESPONSIBILITIES

1. Right of Entry

The permittee shall allow the Executive Secretary of the Michigan Water Resources Commission, the Regional Administrator and/or their authorized representatives, upon the presentation of the credentials:

a. To enter upon the permittee's premises where an effluent source is located or in which any records are required to be kept under the terms and conditions of this permit; and

b. At reasonable times to have access to and copy any records required to be kept under the terms and conditions of this permit; to inspect any monitoring equipment or monitoring method required in this permit; and to sample any discharge of pollutants.

2. Transfer of Ownership or Control

In the event of any change in control or ownership of facilities from which the authorized discharge emanate, the permittee shall notify the succeeding owner or controller of the existence of this permit by letter, a copy of which shall be forwarded to the Michigan Water Resources Commission and the Regional Administrator.

3. Availability of Reports

Except for data determined to be confidential under Section 308 of the Act and Rule 2128 of the Water Resources Commission Rules, Part 21, all reports prepared in accordance with the terms of this permit shall be available for public inspection at the offices of the State Water Pollution Control Agency and the Regional Administrator. As required by the Act, effluent data shall not be considered confidential. Knowingly making any false statement on any such report may result in the imposition of criminal penalties as provided for in Section 309 of the Act and Sections 7 and 10 of the Michigan Act.

4. Permit Modification

After notice and opportunity for a hearing, this permit may be modified suspended, or revoked in whole or in part during its term for cause including, but not limited to, the following:

a. Violation of any terms or conditions of this permit.

b. Obtaining this permit by misrepresentation or failure to disclose fully, all relevant facts; or

c. A change in any condition that requires either a temporary or permanent reduction or elimination of the authorized discharge.

MEN03667

5. Toxic Pollutants

Notwithstanding Part II, B-4 above, if a toxic effluent standard or prohibition (including any schedule of compliance specified in such effluent standard or prohibition) is established under Section 307(a) of the Act for a toxic pollutant which is present in the discharge and such standard or prohibition is more stringent than any limitation for such pollutant in this permit, this permit shall be revised or modified in accordance with the toxic effluent standard or prohibition and the permittee so notified.

6. Civil and Criminal Liability

Except as provided in permit conditions on "By-Passing" (Part II, A-8) and "Power Failures" (Part II, A-10), nothing in this permit shall be construed to relieve the permittee from civil or criminal penalties for noncompliance, whether or not such noncompliance is due to factors beyond his control, such as accidents, equipment breakdowns, or labor disputes.

7. Oil and Hazardous Substance Liability

Nothing in this permit shall be construed to preclude the institution of any legal action or relieve the permittee from any responsibilities, liabilities, or penalties to which the permittee may be subject under Section 311 of the Act except as are exempted by federal regulations.

8. State Laws

Nothing in this permit shall be construed to preclude the institution of any legal action or relieve the permittee from any responsibilities, liabilities, or penalties established pursuant to any applicable State law or regulation under authority preserved by Section 510 of the Act.

9. Property Rights

The issuance of this permit does not convey any property rights in either real or personal property, or any exclusive privileges, nor does it authorize any Federal, State or local laws or regulations, nor does it obviate the necessity of obtaining such permits or approvals from other units of government as may be required by law.

10. Severability

The provisions of this permit are severable, and if any provision of this permit, or the application of any provision of this permit to any circumstances, is held invalid, the application of such provision or other circumstances, and the remainder of this permit, shall not be affected thereby.

11. Notice to Public Utilities (Miss Dig)

The issuance of this permit does not exempt the permittee from giving notice to public utilities and complying with each of the requirements of Act 53 of the Public Acts of 1974, being sections 460.701 to 460.718 of the Michigan Compiled Laws, when constructing facilities to meet the terms of this permit.

MEN03668

Permit No. MI 0003824

MIXING ZONE

Facility: Menasha Corp., Otsego

OUTFALL NUMBER	RECEIVING STREAM	DISCHARGE LOCATION
001, 002, 003, 004, 005	Kalamazoo River	320 N. Farmer St.

For toxic pollutants, the volume of receiving water used in assuring that effluent limitations are sufficiently stringent to meet Water Quality Standards is 25% of the design flow of the receiving stream.

For other pollutants, the volume of receiving water used in assuring that effluent limitations are sufficiently stringent to meet Water Quality Standards is the design flow of the receiving stream.

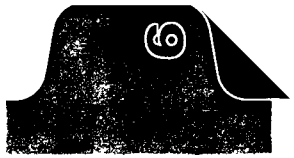

MEN03669

NATURAL RESOURCES COMMISSION
E. M. LA TALA
Chairman
CARL T. JOHNSON
HILARY F. SNELL
HARRY H. WHITELEY
CHARLES G. YOUNGLOVE

STATE OF MICHIGAN

WILLIAM G. MILLIKEN Governor

DEPARTMENT OF NATURAL RESOURCES

STEVENS T. MASON BUILDING, LANSING MICHIGAN 48926

A. GENE GAZLAY, Director

WATER RESOURCES COMMISSION
JOHN P. WOODFORD
Chairman
P. BALDEN
Vice Chairman
CHARLES D. HARRIS
JOHN E. VOGT
STANLEY QUACKENBUSH
THOMAS F. JAMES
JOHN H. KITCHEL, M.D.

February 26, 1974

CERTIFIED MAIL

Menasha Corporation
320 North Farmer Street
Otsego, Michigan 49078

Re: NPDES Permit No. MI 0003824

Gentlemen:

Your application for a National Pollutant Discharge Elimination System (NPDES) Permit has been processed in accordance with appropriate State and Federal regulations.

All discharges authorized from this facility shall be consistent with the terms and conditions of this permit.

Your reporting forms will be transmitted to you in the near future.

Very truly yours,

WATER RESOURCES COMMISSION

James N. Howell
Division Permit Coordinator

JNH
Enclosure: Permit
cc: A. H. Manzardo (2)
R. J. Courchaine
K. Zollner
Chet Harvey
Comp. Studies
Planning
Files
T. K. Wu
C. Oden
A. Prirtz

5960

cd

MICHIGAN

MEN03670

Permit No. MI 0003824

MICHIGAN WATER RESOURCES COMMISSION

AUTHORIZATION TO DISCHARGE UNDER THE

NATIONAL POLLUTANT DISCHARGE ELIMINATION SYSTEM

(Superseding Order of Determination 1231, dated February 12, 1969)

In compliance with the provisions of the Federal Water Pollution Control Act, as amended, (33 U.S.C. 1251 et seq; the "Act"), and the Michigan Water Resources Commission Act, as amended, (Act 245, Public Acts of 1929, as amended, the "Michigan Act"),

MENASHA CORPORATION

is authorized to discharge from a facility located at

320 North Farmer Street
Otsego, Michigan

to receiving waters named the Kalamazoo River

in accordance with effluent limitations, monitoring requirements and other conditions set forth in Parts I and II hereof.

This permit shall become effective on the date of issuance

This permit and the authorization to discharge shall expire at midnight, January 31, 1979. In order to receive authorization to discharge beyond the date of expiration, the permittee shall submit such information and forms as are required by the Michigan Water Resources Commission no later than 180 days prior to the date of expiration.

Signed this 28th day of February, 1974, for the Michigan Water Resources Commission.

William G. Turney
Assistant Executive Secretary

5961

PART I

A. EFFLUENT LIMITATIONS AND MONITORING REQUIREMENTS

1. Initial Effluent Limitations

During the period beginning upon issuance of this permit and lasting until June 30, 1975, the permittee is authorized to discharge from outfall(s) 002. Such discharge shall be limited and monitored by the permittee as specified below:

Effluent Characteristic	Discharge Limitations kg/day (lbs/day) Daily Average	Daily Maximum	Other Limitations Daily Average	Daily Maximum	Monitoring Requirements Measurement Frequency	Sample Type
Flow m^3/day (mgd)	-	-	-	-	Continuous	Total Daily Flow
BOD_5	475(1048)	1198(2635)	-	-	Daily	24-hr Comp.
Total Suspended Solids	158(349)	880(1935)	-	-	Daily	24-hr Comp.
Settleable Solids	-	-	-	-	Daily	Grab
Phenol	-	-	-	0.3 mg/l	Weekly	24-hr Comp.

a. The pH shall not be less than 6.5 nor greater than 9.5. The pH shall be monitored as follows: Daily - Grab.

b. The discharge shall not cause excessive foam in the receiving waters. The discharge shall be essentially free of floating and settleable solids.

c. The discharge shall not contain oil or other substances in amounts sufficient to create a visible film or sheen on the receiving waters.

d. Samples taken in compliance with the monitoring requirements above shall be taken prior to discharging to the Kalamazoo River.

MEN03672

PART I

2. Initial Effluent Limitations

During the period beginning upon issuance of this permit and lasting until June 30, 1975, the permittee is authorized to discharge from outfall(s) 003. Such discharge shall be limited and monitored by the permittee as specified below:

Effluent Characteristic	Discharge Limitations kg/day (lbs/day) Daily Average	Daily Maximum	Other Limitations Daily Average	Daily Maximum	Monitoring Requirements Measurement Frequency	Sample Type
Flow m^3/day (mgd)	-	-	-	-	Continuous	Total Daily Flow
BOD_5	1818(4000)	6466(14225)	-	-	Daily	24-hr Comp.
Total Suspended Solids	1266(2785)	9356(20585)	-	-	Daily	24-hr Comp.
Settleable Solids	-	-	-	-	Daily	Grab
Phenol	-	-	-	0.3 mg/l	Weekly	24-hr Comp.
Total Phosphorus (as P)	-	-	-	6.0 mg/l	Twice per month	24-hr Comp.

a. The pH shall not be less than 6.5 nor greater than 9.5. The pH shall be monitored as follows: Daily - Grab.

b. The discharge shall not cause excessive foam in the receiving waters. The discharge shall be essentially free of floating and settleable solids.

c. The discharge shall not contain oil or other substances in amounts sufficient to create a visible film or sheen on the receiving waters.

d. Samples taken in compliance with the monitoring requirements above shall be taken prior to mixing with cooling water

PART I

3. Initial Effluent Limitations

During the period beginning upon issuance of permit and lasting until June 30, 1975, the permittee is authorized to discharge from outfall(s) 004. Such discharge shall be limited and monitored by the permittee as specified below:

Effluent Characteristic	Discharge Limitations kg/day (lbs/day) Daily Average	Daily Maximum	Other Limitations Daily Average	Daily Maximum	Monitoring Requirements Measurement Frequency	Sample Type
Flow m^3/day(mgd)	-	-	-	-	Daily	
Total Suspended Solids	135(300)	375(825)	-	-	Daily	Grab
Temperature	-	-	-	90°F	Daily	Reading

a. The pH shall not be less than 6.5 nor greater than 9.5. The pH shall be monitored as follows: Weekly - Grab.

b. The discharge shall not cause excessive foam in the receiving waters. The discharge shall be essentially free of floating and settleable solids.

c. The discharge shall not contain oil or other substances in amounts sufficient to create a visible film or sheen on the receiving waters.

d. Samples taken in compliance with the monitoring requirements above shall be taken prior to discharging to the Kalamazoo River

MEN03674

3. Final Effluent Limitations

During the period beginning on issuance of this permit and lasting until its expiration, the permittee is authorized to discharge from outfall(s) 001. Such discharge shall be limited and monitored by the permittee as specified below:

Effluent Characteristic	Discharge Limitations kg/day (lbs/day) Daily Average	Daily Maximum	Other Limitations Daily Average	Daily Maximum	Monitoring Requirements Measurement Frequency	Sample Type
Flow m^3/day (mgd)	-	-	-	-	Daily	
BOD_5	-	-	-	20 mg/l	Weekly	Grab
Total Suspended Solids	-	-	-	20 mg/l	Weekly	Grab

a. The pH shall not be less than 6.5 nor greater than 9.5. The pH shall be monitored as follows: Weekly - Grab

b. The discharge shall not cause excessive foam in the receiving waters. The discharge shall be essentially free of floating and settleable solids.

c. The discharge shall not contain oil or other substances in amounts sufficient to create a visible film or sheen on the receiving waters.

d. Samples taken in compliance with the monitoring requirements above shall be taken prior to discharging to the city storm sewer.

5. Final Effluent Limitations

During the period beginning July 1, 1975 and lasting until the expiration of this permit, all process wastes prior to mixing with noncontact cooling water and discharged through outfalls 002 and 003 shall be limited and monitored by the permittee as specified below:

Effluent Characteristic	Discharge Limitations kg/day (lbs/day) Daily Average	Daily Maximum	Other Limitations Daily Average	Daily Maximum	Monitoring Requirements Measurement Frequency	Sample Type
Flow M^3/day (MGD)	-	-	-	-	Continuous	Report Total Daily Flow
Settleable Solids	-	-	-	-	Daily	grab
Phenol	-	-	-	0.3 mg/l	Weekly	24 hr. comp.
Total Phosphorus (as P)	-	-	-	2.0 mg/l	Twice Monthly	24 hr. comp.
May 15 to October 15						
BOD_5*	-	1695(3725)	-	-	Daily	24 hr. comp.
Total Suspended* Solids	-	1455(3200)	-	-	Daily	24 hr. comp.
October 15 to May 15						
BOD_5*	1695(3725)	2540(5590)	-	-	Daily	24 hr. comp.
Total Suspended* Solids	1455(3200)	2182(4800)	-	-	Daily	24 hr. comp.

*Limits above are based upon combined loadings of process wastes discharged through outfalls 002 and 003.

Concentration limitations apply to each treated process stream prior to mixing with non contact cooling water.

a. The pH shall not be less than 6.5 for outfall 002 nor greater than 9.5. The pH shall be monitored as follows: Daily; grab

b. The discharge shall not cause excessive foam in the receiving waters. The discharge shall be essentially free of floating and settleable solids.

c. The discharge shall not contain oil or other substances in amounts sufficient to create a visible film or sheen on the receiving waters.

d. Samples taken in compliance with the monitoring requirements above shall be taken for outfall 002 prior to discharging to the Kalamazoo River and outfall 003, prior to mixing with noncontact cooling water.

MEN03676

6. Final Effluent Limitations

During the period beginning July 1, 1975 and lasting until the expiration of this permit, the permittee is authorized to discharge from outfall(s) 003. Such discharge shall be limited and monitored by the permittee as specified below:

Effluent Characteristic	Discharge Limitations kg/day (lbs/day) Daily Average	Daily Maximum	Other Limitations Average	Maximum	Monitoring Requirements Measurement Frequency	Sample Type
Flow M^3/day (MGD)	-	-	-	-	Continuous	Report Total Daily Flow
Oil & Grease	-	-	-		Weekly	visual observation
BOD_5	-	-	-	-	Weekly	Grab

The noncontact cooling water portion of this discharge shall mean water used for cooling which does not come into direct contact with any raw material, intermediate product, by product, waste product, or finished product.

a. The pH shall not be less than 6.5 nor greater than 9.5. The pH shall be monitored as follows: Weekly; grab

b. The discharge shall not cause excessive foam in the receiving waters. The discharge shall be essentially free of floating and settleable solids.

c. The discharge shall not contain oil or other substances in amounts sufficient to create a visible film or sheen on the receiving waters.

d. Samples taken in compliance with the monitoring requirements above shall be taken prior to discharging to the Kalamazoo River.

e. In the event the permittee shall require the use of water treatment additives, the permittee shall notify the Michigan Water Resources Commission in accordance with the requirements of Part II, Section A-1.

5967

MEN03677

6. Final Effluent Limitations

During the period beginning July 1, 1975 and lasting until the expiration date, the permittee is authorized to discharge from outfall(s) 004. Such discharge shall be limited and monitored by the permittee as specified below:

Effluent Characteristic	Discharge Limitations kg/day (lbs/day) Daily Average	Daily Maximum	Other Limitations Daily Average	Daily Maximum	Monitoring Requirements Measurement Frequency	Sample Type
Flow m^3/day (mgd)	-	-	-	-	Daily	
Total Suspended Solids	-	10.5(23)	-	35 mg/l	Daily	Grab
Temperature	-	-	-	85°F	Daily	Reading

a. The pH shall not be less than 6.5 nor greater than 9.5. The pH shall be monitored as follows: Weekly - Grab

b. The discharge shall not cause excessive foam in the receiving waters. The discharge shall be essentially free of floating and settleable solids.

c. The discharge shall not contain oil or other substances in amounts sufficient to create a visible film or sheen on the receiving waters.

d. Samples taken in compliance with the monitoring requirements above shall be taken prior to discharging to the Kalamazoo River.

PART I

B. MONITORING AND REPORTING

1. Representative Sampling

Samples and measurements taken as required herein shall be representative of the volume and nature of the monitored discharge.

2. Reporting

The permittee shall submit monitoring reports containing results obtained during the previous month and shall be postmarked no later than the 10th day of the month following each completed report period. The first report shall be submitted within 90 days of the date of issuance of this permit.

3. Definitions

a. The daily average discharge is defined as the total discharge by weight, or concentration if specified, during a calendar month divided by the number of days in the month that the production or commercial facility was operating.

b. The daily maximum discharge means the total discharge by weight, or concentration if specified, during any calendar day.

c. The Regional Administrator is defined as the Region V Administrator, U.S. EPA, located at One North Wacker Drive, Chicago, Illinois, 60606.

d. The Michigan Water Resources Commission is located in the Stevens T. Mason Building, Lansing, Michigan.

4. Test Procedures

Test procedures for the analysis of pollutants shall conform to regulations published pursuant to Section 304(g) of the Act, under which such procedures may be required.

5. Recording of Results

For each measurement or sample taken pursuant to the requirements of this permit, the permittee shall record the following information:

a. The exact place, date, and time of sampling;

b. The dates the analyses were performed;

c. The person(s) who performed the analyses;

d. The analytical techniques or methods used; and

e. The results of all required analyses.

6. Additional Monitoring by Permittee

If the permittee monitors any pollutant at the location(s) designated herein more frequently than required by this permit, using approved analytical methods as specified above, the results of such monitoring shall be included in the calculation and reporting of the values required in the Monthly Operating Report. Such increased frequency shall also be indicated.

7. Records Retention

All records and information resulting from the monitoring activities required by this permit including all records of analyses performed and calibration and maintenance of instrumentation and recordings from continuous monitoring instrumentation shall be retained for a minimum of three (3) years, or longer if requested by the Regional Administrator or the Michigan Water Resources Commission.

C. SCHEDULE OF COMPLIANCE

1. The permittee shall achieve compliance with the effluent limitations specified for outfall(s) 002, 003, and 004 in accordance with the following schedule:

a. Submit progress report to the Chief Engineer of the Michigan Water Resources Commission on or before March 31, 1974.

b. Submit a preliminary engineering report and basis of design for said facilities to the Chief Engineer of the Michigan Water Resources Commission and obtain his approval thereof on or before NA.

c. Submit progress report to the Chief Engineer of the Michigan Water Resources Commission on or before NA.

d. Submit final plans and specifications for said facilities to the Chief Engineer of the Michigan Water Resources Commission and obtain his approval thereof on or before June 30, 1974.

e. Commence construction of said facilities on or before July 31, 1974.

f. Submit progress report to the Chief Engineer of the Michigan Water Resources Commission on or before NA.

g. Complete construction of said facilities on or before March 31, 1975.

h. Attain operational level necessary to meet the limitations specified herein on or before June 30, 1975.

1. Effluent
2. Alternate source of power
2 months

MEN03680

2. The permittee shall comply with the requirements of Section 9, Part II in accordance with the following:

a. Submit plans for approval to the Chief Engineer of the Michigan Water Resources Commission necessary to comply with the primary power provision of Section 9 in Part II on or before June 30, 1974.

b. The permittee shall comply with the requirements of items 9a or 9b contained in Part II on or before December 31, 1974. Before this date the permittee is still obligated to halt, reduce, or otherwise control production in order to protect the waters of the State of Michigan upon the reduction or loss of the primary source of power.

3. No later than 14 calendar days following a date identified in the above schedule of compliance, the permittee shall submit either a report of progress or, in the case of specific actions being required by identified dates, a written notice of compliance or noncompliance. In the latter case, the notice shall include the cause of noncompliance, any remedial actions taken, and the probability of meeting the next scheduled requirement.

5976

PART II

A. MANAGEMENT REQUIREMENTS

1. Change in Discharge

All discharges authorized herein shall be consistent with the terms and conditions of this permit. The discharge of any pollutant identified in this permit more frequently than or at a level in excess of that authorized shall constitute a violation of the permit. Any anticipated facility expansions, production increases, or process modifications which will result in new, different, or increased discharges of pollutants must be reported by submission of a new NPDES application or, if such changes will not violate the effluent limitations specified in this permit, by notice to the permit issuing authority of such changes. Following such notice, the permit may be modified to specify and limit any pollutants not previously limited.

2. Containment Facilities

The permittee shall provide approved facilities for containment of any accidental losses of concentrated solutions, acids, alkalies, salts, oils, or other polluting materials in accordance with the requirements of the Michigan Water Resources Commission Rules, Part 5.

3. Operator Certification

The permittee shall have the waste treatment facilities under the direct supervision of an operator certified by the Michigan Water Resources Commission, as required by Section 6a of the Michigan Act.

4. Noncompliance Notification

If, for any reason, the permittee does not comply with or will be unable to comply with any daily maximum effluent limitation specified in this permit, the permittee shall provide the Regional Administrator and the State with the following information, in writing, within five (5) days of becoming aware of such condition:

a. A description of the discharge and cause of noncompliance; and

b. The period of noncompliance, including exact dates and times; or, if not corrected, the anticipated time the noncompliance is expected to continue, and steps being taken to reduce, eliminate and prevent recurrence of the noncomplying discharge.

5. Facilities Operation

The permittee shall at all times maintain in good working order and operate as efficiently as possible, all treatment or control facilities or systems installed or used by the permittee to achieve compliance with the terms and conditions of this permit.

MEN03682

C. Adverse Impact

The permittee shall take all reasonable steps to minimize any adverse impact to navigable waters resulting from noncompliance with any effluent limitations specified in this permit, including such accelerated or additional monitoring as necessary to determine the nature and impact of the noncomplying discharge.

7. By-passing

Any diversion from or by-pass of facilities necessary to maintain compliance with the terms and conditions of this permit is prohibited, except (i) where unavoidable to prevent loss of life or severe property damage, or (ii) where excessive storm drainage or runoff would damage any facilities necessary for compliance with the effluent limitations and prohibitions of this permit. The permittee shall promptly notify the Michigan Water Resources Commission and the Regional Administrator, in writing, of such diversion or by-pass.

8. Removed Substances

Solids, sludges, filter backwash, or other pollutants removed from or resulting from treatment or control of wastewaters shall be disposed of in a manner such as to prevent any pollutant from such materials from entering navigable waters.

9. Power Failures

In order to maintain compliance with the effluent limitations and prohibitions of this permit, the permittee shall either:

a. Provide an alternative power source sufficient to operate facilities utilized by permittee to maintain compliance with the effluent limitations and conditions of this permit which provision shall be indicated in this permit by inclusion of a specific compliance date in each appropriate "Schedule of Compliance for Effluent Limitations", or

b. Upon the reduction, loss, or failure of one or more of the primary sources of power to facilities utilized by the permittee to maintain compliance with the effluent limitations and conditions of this permit. the permittee shall halt, reduce or otherwise control production and/or all discharge in order to maintain compliance with the effluent limitations and conditions of this permit.

B. RESPONSIBILITIES

1. Right of Entry

The permittee shall allow the Michigan Water Resources Commission, the Regional Administrator and/or their authorized representatives, upon the presentation of credentials:

a. To enter upon the permittee's premises where an effluent source is located or in which any records are required to be kept under the terms and conditions of this permit; and

b. At reasonable times to have access to and copy any records required to be kept under the terms and conditions of this permit; to inspect any monitoring equipment or monitoring method required in this permit; and to sample any discharge of pollutants.

2. Transfer of Ownership or Control

In the event of any change in control or ownership of facilities from which the authorized discharge emanate, the permittee shall notify the succeeding owner or controller of the existence of this permit by letter, a copy of which shall be forwarded to the Michigan Water Resources Commission and the Regional Administrator.

3. Availability of Reports

Except for data determined to be confidential under Section 308 of the Act and Rule 2128 of the Water Resources Commission Rules, Part 21, all reports prepared in accordance with the terms of this permit shall be available for public inspection at the offices of the State Water Pollution Control Agency and the Regional Administrator. As required by the Act, effluent data shall not be considered confidential. Knowingly making any false statement on any such report may result in the imposition of criminal penalties as provided for in Section 309 of the Act and Sections 7 and 10 of the Michigan Act.

4. Permit Modification

After notice and opportunity for a hearing, this permit may be modified, suspended, or revoked in whole or in part during its term for cause including, but not limited to, the following:

a. Violation of any terms or conditions of this permit;

b. Obtaining this permit by misrepresentation or failure to disclose fully, all relevant facts; or

c. A change in any condition that requires either a temporary or permanent reduction or elimination of the authorized discharge.

5. Toxic Pollutants

Notwithstanding Part II, B-4 above, if a toxic effluent standard or prohibition (including any schedule of compliance specified in such effluent standard or prohibition) is established under Section 307(a) of the Act for a toxic pollutant which is present in the discharge and such standard or prohibition is more stringent than any limitation for such pollutant in this permit, this permit shall be revised or modified in accordance with the toxic effluent standard or prohibition and the permittee so notified.

5974

6. Civil and Criminal Liability

Except as provided in permit conditions on "By-passing" (Part II, A-7) and "Power Failures (Part II, A-9), nothing in this permit shall be construed to relieve the permittee from civil or criminal penalties for noncompliance, whether or not such noncompliance is due to factors beyond his control, such as accidents, equipment breakdowns, or labor disputes.

7. Oil and Hazardous Substance Liability

Nothing in this permit shall be construed to preclude the institution of any legal action or relieve the permittee from any responsibilities, liabilities, or penalties to which the permittee is or may be subject under Section 311 of the Act.

8. State Laws

Nothing in this permit shall be construed to preclude the institution of any legal action or relieve the permittee from any responsibilities, liabilities, or penalties established pursuant to any applicable State law or regulation under authority preserved by Section 510 of the Act.

9. Property Rights

The issuance of this permit does not convey any property rights in either real or personal property, or any exclusive privileges, nor does it authorize any injury to private property or any invasion of personal rights, nor infringement of Federal, State or local laws or regulations.

10. Severability

The propisions of this permit are severable, and if any provision of this permit, or the application of any provision of this permit to any circumstances, is held invalid, the application of such provision to other circumstances, and the remainder of this permit, shall not be affected thereby.

MENASHA CORPORATION

MI 070 0X5 2 710553

The Menasha Corporation produces 400 tons per day of paperboard by the neutral sulfite semi-chemical process. Schedule "A" guideline allow 14 lbs per ton per day of 5-day BOD and 8 lbs. per ton per day of suspended solids.

Schedule A (average and normal maximum)

BOD

400 X 14 = 5,600 #/day average
5600 X 1.5 = 8,400 #/day maximum

Suspended Solids

400 X 8 = 3,200 #/day average
3,200 X 2 = 6,400 #/day maximum

The Kalamazoo River in the Plainwell-Otsego area while not considered a water quality segment, requiring a stable effluent, careful consideration must be given to assure protection of intolant fish warm water species and other designated use.

Staff has evaluated allowable waste loading in the Otsego area and has determined that to meet water quality standards BOD must be limited to 15 lbs. per cubic feet per second per day. The 7 day once in 10 years low flow is estimated to be 325 cfs. Therefore, the total Otsego area BOD loading is:

325 cfs X 15 lbs BOD/cfs/day = 4875 lbs BOD/day.

Load allocations for the various discharges determined by staff are as follows.

1. City of Otsego 500 lbs. BOD/day
2. Mead Corp. 650 lbs. BOD/day
3. Menasha 3725 lbs/day

These limits are to be imposed only during summer warm weather - low flow periods. Any other time of the year BOD is limited to 3725 lbs. per day average with a maximum of 5590 lbs. per day. Suspended solids are limited in the same fashion as BOD and are based upon limiting the increase in the stream of around 3 mg/l.

MEN03686

MENASHA CORPORATION
Otsego, Michigan

MI 070 0X5 2710553

The Mixing zone for the purpose of evaluating compliance with the states water quality standards is defined as the Right 1/4 of the stream a distance of 600 feet downstream from the Farmer Street Bridge.

5971

7

MEN03687

TO: J. Cutro

FROM: K. E. Lowe

SUBJECT: Meeting with WRC Representative

1. A meeting was held with R. Courchaine and C. Harvey of the WRC in Lansing on January 10, 1969. The following attended from Otsego: J. Cutro, G. McConney and K. E. Lowe. Andre Caron of the National Council also attended.

2. The following was tentatively agreed upon:

   a. BOD -- Present BOD restrictions of 7375#/day will be allowed until July, 1971. After July, 1971, the load will be reduced to 5000#/day.

   b. Suspended Solids -- They will recommend the present level (10#/AD ton of paper)be maintained. On 310 tons per day, this will amount to 3100# per day. They are uncertain this will be accepted and proposed if this level is not accepted, limit will be set for 2100#/day.

   c. Sanitary Wastes -- The septic tank system for the Power House is acceptable as long as it meets state and local standards.

3. These agreements are based on the understanding that a waste treatment plant will start up at the same time as production increases in the fall of 1969. The Increased Use Statement states that we will have such a plant and a tentative proposal was given the State.

4. These agreements have to be approved by the staff. If approved, they will be submitted to the commission during the February, 1969 meeting.

K. E. Lowe

5761

MEN03688

STATE OF MICHIGAN

NATURAL RESOURCES COMMISSION
HARRY H. WHITELEY
Chairman
CARL T. JOHNSON
E. M. LAITALA
ROBERT C. McLAUGHLIN
AUGUST SCHOLLE

ROBERT J. FURLONG
Secretary to the Commission

GEORGE ROMNEY, Governor

DEPARTMENT OF NATURAL RESOURCES

STEVENS T. MASON BUILDING, LANSING, MICHIGAN 48926

RALPH A. MAC MULLAN, Director

WATER RESOURCES COMMISSION
JOHN E. VOGT
Chairman
STANLEY QUACKENBUSH
Vice Chairman
GERALD E. EDDY
JOHN P. WOODFORD
LYNN F. BALDWIN
JIM GILMORE
GEORGE F. LIDDLE

February 17, 1969

CERTIFIED MAIL

Mr. Joseph Cutro
General Manager
Paperboard Division
Menasha Corporation
P.O. Box 155
Otsego, Michigan 49078

Dear Mr. Cutro:

Enclosed is a copy of the Order of Determination to Menasha Corporation at Otsego, Michigan which was adopted by the Water Resources Commission at its February 12-13-14, 1969 meeting. (Superseding WRC Order No. 103, dated October 24, 1951 and the Stipulation between the Company and the WRC dated July 25, 1961.)

Very truly yours,

WATER RESOURCES COMMISSION

Ralph W. Purdy
Executive Secretary

RWP/sb
enc.
cc: W. G. Turney
C. D. Harris
C. Harvey
R. Courchaine
F. B. Frost
Andre Caron, National Council for Stream Improvement
W. A. Clarke, Manager, City of Otsego
Allegan County Health Department

5762

MEN03689

STATE OF MICHIGAN

WATER RESOURCES COMMISSION

OFFICIAL CERTIFICATE

Lansing, Michigan February 17, 1969

I, Ralph W. Purdy, Executive Secretary of the Water Resources Commission, DO HEREBY CERTIFY that annexed is a true copy of the Order of Determination to Menasha Corporation at Otsego, Michigan which was adopted by the Water Resources Commission at its February 12-13-14, 1969 meeting and that I have carefully compared the said copy with the original thereof now on file and of record in the office of said Commission, and that it is a correct transcript therefrom and of the whole thereof.

By Ralph W. Purdy
Executive Secretary
Water Resources Commission
Lansing, Michigan

5763

MEN03690

STATE OF MICHIGAN

WATER RESOURCES COMMISSION

Order No. 1231

Statement of MENASHA CORPORATION, :
PAPERBOARD DIVISION, A Wisconsin :
Corporation, Regarding a CHANGE :
IN USE of the KALAMAZOO RIVER :
at OTSEGO, MICHIGAN :

ORDER OF DETERMINATION
Superseding WRC Order No. 103, dated October 24, 1951
and the Stipulation between the Company and the WRC
dated July 26, 1961.

WHEREAS, Menasha Corporation, Paperboard Division, a Wisconsin Corporation, has filed with the Water Resources Commission a written statement dated December 9, 1968 for a prospective change in use of the waters of the state for disposal of wastes from an expansion of its paper manufacturing operations located at Otsego, Michigan; and

WHEREAS, the said written statement sets forth that Menasha Corporation, Paperboard Division, proposes to dispose of a total of approximately six million (6,000,000) gallons per day of cooling and condensing water and six hundred thousand (600,000) gallons per day of treated process wastes from its expanded paperboard manufacturing operations into the Kalamazoo River and an undetermined quantity of sanitary sewage into the City of Otsego sanitary sewer system; and

WHEREAS, the Menasha Corporation, Paperboard Division's waste discharges to the Kalamazoo River are presently restricted by Commission Order No. 103 and the July 26, 1961 Stipulation, to contain not more than ten (10) pounds of suspended solids per ton of product and not more than seven thousand three hundred seventy five (7,375) pounds per day of five-day biochemical oxygen demand; and

WHEREAS, the Commission at its meeting on February 12, 1969, after giving due consideration to the statement and to investigations by its staff of the factors involved, is of the opinion and has determined that the restrictions and conditions as hereinafter set forth are necessary to protect the waters of the state against unlawful pollution;

5764

MEN03691

NOW THEREFORE BE IT RESOLVED, that it is the order of the Commission that the Menasha Corporation, Paperboard Division, a Wisconsin Corporation, its agents or successors, in disposing of wastes into the Kalamazoo River from its existing and expanded paperboard manufacturing operations located at Otsego, Michigan shall comply with the following restrictions and conditions:

1. Coincident with the planned expansion of paperboard manufacturing operations and by no later than July 1, 1971, all process waste waters resulting from pulp and paper manufacturing, represented to be six hundred thousand (600,000) gallons per day, shall be so treated and controlled that when discharged to the Kalamazoo River they shall:

   a. Not contain more than five thousand (5,000) pounds per day of five-day biochemical oxygen demand.

   b. Not contain more than three thousand (3,000) pounds per day of suspended solids.

   c. Not contain fecal coliform in amounts which will raise the fecal coliform content of the receiving waters above established Water Quality Standards for the designated water uses.

   d. Not contain settleable or floating solids in amounts which result in deposits on the surface, bed or banks of the Kalamazoo River which are or may become injurious to any designated uses of the receiving waters.

   e. Have a pH of not less than 6.5 nor greater than 9.5.

   f. Contain no other substances in amounts which are or may become injurious to fish and other aquatic life or which are or may become injurious to any designated uses of the receiving waters.

MEN03692

2. The Company's existing waste control facilities shall continue to be operated in the interim until July 1, 1971 in such a manner and wastes be so controlled that when discharged to the Kalamazoo River they shall:

   a. Not contain more than seven thousand three hundred seventy five (7,375) pounds per day of five-day biochemical oxygen demand.

   b. Not contain more than ten (10) pounds of suspended solids per ton of product.

3. Cooling and condensing water, represented to be six million (6,000,000) gallons per day shall be so treated and controlled that when dishcarged to the Kalamazoo River they shall contain no substances, including heat, in amounts which are or may become injurious to fish and other aquatic life or which are or may become injurious to any designated uses of the receiving waters.

4. All sanitary wastes shall be discharged into the City of Otsego sanitary sewer system.

5. The Company shall make or cause to be made measurements and analyses of its waste discharges sufficient to show that the biochemical oxygen demand, suspended solids, and pH restrictions contained in this Order are being met and shall submit reports of such measurements and analyses to the Chief Engineer of the Commission at the end of each calendar month.

6. Facilities necessary for compliance with the restrictions and conditions set forth in this Order shall be constructed from plans submitted, in triplicate, to and approved by the Chief Engineer of the Commission.

BE IT FURTHER RESOLVED, that the aforesaid restrictions and conditions set forth in this Order shall become effective at and from the time this Order becomes final as provided herein and shall remain in effect until further order of the Commission.

BE IT FURTHER RESOLVED, that this Order supersedes the terms of the Commission's October 24, 1951 Final Order of Determination No. 103 and the July 26, 1961 Stipulation between the Company and the Commission.

MEN03693

BE IT FURTHER RESOLVED, that this instrument does not obviate the necessity of obtaining such permits from other units of government as may be required by law.

This Order made this 12th day of February, 1969, by the Commission in accordance with Act 245, Public Acts of 1929, as amended, and shall be final in the absence of request for public hearing filed within 15 days after receipt hereof, on motion by Gerald Eddy, supported by Lynn Baldwin, and unanimously carried.

PRESENT AND VOTING:

John E. Vogt (Chairman), for Director of Public Health
George F. Liddle (Vice Chairman), for Municipal Groups
Gerald E. Eddy, for Director of Natural Resources
Stanley Quackenbush, for Director of Agriculture
John Woodford, for State Highway Commission
Lynn F. Baldwin, for Conservation Groups

MEN03694

FORM APPROVED
OMB NO. 49-R 0402

DEPARTMENT OF THE ARMY, CORPS OF ENGINEERS

APPLICATION FOR PERMIT TO DISCHARGE OR WORK IN NAVIGABLE WATERS AND THEIR TRIBUTARIES

SECTION I: GENERAL INFORMATION

1. State: MI
Application Number (to be assigned by Corps of Engineers): Div. 070 Dist. CX5 Type 2 Sequence No. 710553

2. Name of applicant and title of signing official
MENASHA CORPORATION
R. L. Johnson, President

3. Mailing address of applicant
MENASHA CORPORATION
P. O. BOX 367
NEENAH, WISCONSIN 54956

4. Name, address, telephone number and title of applicant's authorized agent for permit application coordination and correspondence.
KENNETH E. LOWE
TECHNICAL MANAGER
616-692-6141
P. O. BOX 155
OTSEGO, MICHIGAN 49078

NOTE TO APPLICANT: Refer to the pamphlet entitled "Permits for Work and Structures in and for Discharges or Deposits into Navigable Waters" before attempting to complete this form.

Required Information

a. All information contained in this application will, upon request, be made available to the public for inspection and copying. A separate sheet entitled "Confidential Answers" must be used to set out information which is considered by the applicant to constitute trade secrets or commercial or financial information of a confidential nature. The information must clearly indicate the item number to which it applies. Confidential treatment can be considered only for that information for which a specific written request of confidentiality has been made on the attached sheet. However, in no event will identification of the contents and frequency of a discharge be recognized as confidential or privileged information.

b. The applicant shall furnish such supplementary information as is required by the District Engineer in order to evaluate fully an application.

c. If additional space is needed for a complete response to any item on this form, attach a sheet entitled "Additional Information." Indicate on that sheet the item numbers to which answers apply.

d. Drawings required by items 20 and 21 should be attached to this application. Other papers which must be attached to this application include, if applicable, copies of a water quality certification or a written communication which describes water quality impact (see Item 22 and Item 10 of Section II below), the additional information sheet(s) in "c" above, and the confidential information sheet described in "a" above.

Fees

If any discharge or deposit is involved, an application fee of $100 must be submitted with this application. An additional $50 is required for each additional point of discharge or deposit.

Signature

a. If a discharge is involved, an application submitted by a corporation must be signed by the principal executive officer of that corporation or by an official of the rank of corporate vice president or above who reports directly to such principal executive officer and who has been designated by the principal executive officer to make such applications on behalf of the corporation. In the case of a partnership or a sole proprietorship, the application must be signed by a general partner or the proprietor. Other signature requirements are discussed in the pamphlet.

b. If no discharge is involved, an application may be signed by the applicant or his authorized agent.

Application is hereby made for a permit or permits to authorize the activities described herein. I certify that I am familiar with the information contained in this application, and that to the best of my knowledge and belief such information is true, complete, and accurate.

Signature of Applicant

18 U.S.C. Section 1001 provides that:

Whoever, in any matter within the jurisdiction of any department or agency of the United States knowingly and wilfully falsifies, conceals or covers up by any trick, scheme, or device a material fact, or makes any false, fictitious or fraudulent statements or representations, or makes or uses any false writing or document knowing same to contain any false, fictitious or fraudulent statement or entry, shall be fined not more than $10,000 or imprisoned not more than five years, or both.

FOR CORPS OF ENGINEERS USE ONLY

Acronym name of applicant

Are discharge structures Major? ☐ Minor? ☐ N/A? ☐

Date received, form not complete — — — — — —
Date received, form complete but without certificate — — — — — —
Date received, form complete — — — — — —
Date of Cert./Ltr. — — — — — —
day mo yr

Date sent to EPA, form not complete — — — — — —
Date sent to EPA, NOAA, D/I, AEC, FPC in complete form — — — — — —
day mo yr

ENG FORM 4345
MAY 71

5757

MEN03695

5. Date: JUN 15 71 (mo day yr)

(Office use only) W 070035 2 710553

6. Check type of application: a. Original [X] b. Revision [ ]

7. Number of original application: N A

8. Name of facility where discharge or construction will occur.

MENASHA CORPORATION
OTSEGO, MICHIGAN

9. Full mailing address of facility named in item 8 above.

MENASHA CORPORATION
PAPERBOARD DIVISION
320 N. FARMER STREET
P. O. BOX 155
OTSEGO, MICHIGAN 49078

10. Names and mailing addresses of all adjoining property owners whose property also adjoins the waterway.

EASTBOUND	WESTBOUND	SOUTHBOUND
Mr. Robert Wright	City Street	City of Otsego
1444 106th Street	City of Otsego	117 E. Orleans St.
Otsego, Michigan 49078	117 E. Orleans St.	Otsego, Michigan 49078
	Otsego, Michigan 49078	

11. Check to indicate the nature of the proposed activity:

a. Dredging [ ] b. Construction [ ] c. Construction with Discharge [ ] d. Discharge only [X]

12. If activity is temporary in nature, estimate its duration in months.

N A

If application is for a discharge:

13. List intake sources

Source	Estimated Volume in Million Gallons Per day or Fraction Thereof
Municipal or private water supply system	0.02
Surface water body	4.32
Ground water	1.18
Other	

14. Describe water usage within the plant

Type	Estimated Volume in Million Gallons Per day or Fraction Thereof
Cooling water	4.67
Boiler Feed water	.10
Process water	.70
Sanitary system*	Less than .01
Other	

15. List volume of discharges or losses other than into navigable waters.

Type	Estimated Volume in Million Gallons Per day or Fraction Thereof
Municipal waste treatment system	Less than .01
Surface containment	
Underground disposal	
Waste Acceptance firms	
Evaporation	.10
Consumption	

* Indicate number employees served per day: 172

ENG FORM 4345 MAY 71

5758

MEN03696

If structures exist, or dredging, filling or other construction will occur, the precise location of the activity must be described.

(Office use only) MI 0 7 0 0 X 5 2 7 1 0 5 5 3

a. Name the corporate boundaries within which the structures exist or the activity will occur.

16. State: MICHIGAN 17. County: ALLEGAN 18. City or Town: OTSEGO

b. Name of waterway at the location of the activity

19. KALAMAZOO RIVER

20. Maps and sketches which show the location and character of each structure or activity, including any and all outfall devices, dispersive devices, and non-structural points of discharge, must be attached to this application.

21. For construction or work in navigable waters for which a separate permit is sought under 33 U.S.C. 403, the character of each structure must be fully shown on detailed plans to be submitted with this application. Note on the drawings those structures for which separate discharge information (Section II of this form) has been submitted.

22. List all approvals or denials granted by Federal, interstate, State or local agencies for any structures, construction, discharges or deposits described in this application.

Type of document	Id. No.	Date	Issuing Agency
ORDER OF DETERMINATION	1231	February 17, 1969	WATER RESOURCES COMMISSION STATE OF MICHIGAN

23. Check if facility existed or was lawfully under construction prior to April 3, 1970. [X]

24. If dredging or filling will occur: N A

State the type of materials involved, their volume in cubic yards, and the proposed method of measurement.

25. Describe the proposed method - instrumentation which will be used to measure the volume of any solids which may be deposited and to determine its effect upon the waterway.

N A

26. State rates and periods of deposition described in Item 25.

N A

MEN03697

M 070 0X5 2 710553

June 24, 1971

Water Resources Commission
Department of Natural Resources
State of Michigan
Stevens T. Mason Building
Lansing, Michigan 48926

Gentlemen:

Please find attached our applications for a discharge permit to the U. S. Corps of Engineers. This copy is mailed to your office for review so that you can determine if state certification is to be granted.

Very truly yours,

MENASHA CORPORATION

R. L. Johnson
President

c.c. Corps of Engineer
U. S. Army Engineer District, Detroit
P. O. Box 1027
Detroit, Michigan 48231

Attach.

jk

5760

MEN03698

SECTION II. PLANT PROCESS AND DISCHARGE DESCRIPTION

1. Discharge described below is
a. Present [X] b. Proposed new or changed [ ]

2. Implementation schedule [ ]

(Office use only) MI 0 7 0 0 X 5 2 7 1 0 5 5 3

Name of corporate boundaries within which the point of discharge is located.

State	County	City or Town	Discharge Serial No.
3. MICHIGAN	4. ALLEGAN	5. OTSEGO	001

State the precise location of the point of discharge.
7. Latitude 4 2 Degrees; 2 7 Min; 4 5 Sec.
8. Longitude 8 5 Degrees; 4 1 Min; 4 6 Sec.

9. Name of waterway at the point of discharge.
KALAMAZOO RIVER

10. Has application for water quality certification or description of impact been made? If so, give date:

Date	Check if certificate is attached to form	Name Issuing Agency
JUN 28 71 (mo day yr)	[ ]	WATER RESOURCES COMMISSION STATE OF MICHIGAN

11. Narrative description of activity (include terms of general 4-digit Standard Industrial Classification, and specific manufacturing process).

a. General Process - Manufacture of pulp and paper

b. Specific Process - Manufacture of semichemical Corrugating Medium Paperboard

12. Standard industrial classification number.	13. Principal product.	14. Amount of principal product produced per day.
SIC 2611	PAPERBOARD	335 TONS (Average Maximum)

15. Principal raw material.	16. Amount of principal raw material consumed per day.	17. Number of batch discharges per day.
N A	N A	N A

18. Average gallons per batch discharge.	19. Date discharge began.	20. Date discharge will begin.
N A	SEP 01 69 (mo day yr)	NA (mo day yr)

21. Describe waste abatement practices.

This discharge is cooling water from the paper mill and is discharged directly to the river without prior treatment through a city storm sewer. The water must travel about 850 feet before it is discharged to the Kalamazoo River via discharge 001. During this course it is aerated and cooled some and has similar properties to the intake water (well water).

ESEGRE

ENG FORM MAY 71 4345-1

5766

MEN03699

22 PHYSICAL DESCRIPTION OF INTAKE WATER AND DISCHARGE

(Office use only) M 0 7 0 0 X 5 ? 7 1 0 5 5 3

Discharge Serial No. 001

Parameter and (Code)	Intake: Untreated Intake Water (1)	Intake: Treated Intake Water (2)	Discharge: Average (Daily) (3)	Discharge: Minimum (Operating Year) (4)	Discharge: Maximum (Operating Year) (5)	Sample Frequency (6)	Continuous Monitoring (7)
Flow (Gallons per day) 00056	200,000	NO TREATMENT	260,000 ~~200,000~~	100,000	299,000 ~~300,000~~	MNLY	ABS
pH 00400	7.4	"	7.4	6.9	7.8[a]	SEMI[b] ANNUALLY	ABS
Temperature (Winter) (°F) 74028	50	"	65[a]	55[a]	70[a]	SEMI ANNUALLY	ABS
Temperature (Summer) (°F) 74027	55	"	70	60[a]	70[a]	SEMI ANNUALLY	ABS

23. DISCHARGE CONTENTS

PARAMETER	PRESENT	ABSENT	PARAMETER	PRESENT	ABSENT	PARAMETER	PRESENT	ABSENT
Color 00080	X[a]		Aluminum 01105		X	Nickel 01067		X
Turbidity 00070		X	Antimony 01097		X	Selenium 01147		X
Radioactivity 74050		X	Arsenic 01002		X	Silver 01077		X
Hardness 00900	X[a]		Beryllium 01012		X	Potassium 00937	X[a]	
Solids 00500	X[a]		Barium 01007		X	Sodium 00929	X[a]	
Ammonia 00610		X	Boron 01022		X	Titanium 01152		X
Organic Nitrogen 00605		X	Cadmium 01027		X	Tin 01102		X
Nitrate 00620		X	Calcium 00916	X[a]		Zinc 01092		X
Nitrite 00615		X	Cobalt 01037		X	Algicides 74051		X
Phosphorus 00665		X	Chromium 01034		X	Oil and Grease 00550		X
Sulfate 00945		X	Copper 01042		X	Phenols 32730	X[a]	
Sulfide 00745		X	Iron 01045	X[a]		Surfactants 38260		X
Sulfite 00740		X	Lead 01051		X	Chlorinated Hydrocarbons 74052		X
Bromide 71870		X	Magnesium 00927	X[a]		Pesticides 74053		X
Chloride 00940	X[a]		Manganese 01055	X[a]		Fecal Strentococci Bacteria 74054		X
Cyanide 00720		X	Mercury 71900		X	Coliform Bacteria 74056		X
Fluoride 00951		X	Molybdenum 01062		X			

MI 0700X5 2 719553

24a. Have all known hazardous or potentially hazardous substances in your plant been inventoried?

[X] Yes [ ] No

24b. If yes, have steps been taken to insure that there exists no possibility of any such known hazardous or potentially hazardous substance entering this discharge?

[X] Yes [ ] No

25. Remarks.

The information above completes the basic reporting requirements which are required of all applicants. Those applicants whose discharge results from an activity included within any of the Standard Industrial Classification Code (SIC Code) categories listed below must complete Part A of this form as well.

CRITICAL INDUSTRIAL GROUPS

SIC	098	FISH HATCHERIES, FARMS, AND PRESERVES
SIC	10-14	DIVISION B – MINING
SIC	201	MEAT PRODUCTS
SIC	202	DAIRY PRODUCTS
SIC	203	CANNED PRESERVED FRUITS, VEGETABLES (EXCEPT SEAFOODS, SIC 2031 AND 2036)
SIC	2031, 2036	CANNED AND CURED FISH AND SEAFOODS; FRESH OR FROZEN PACKAGED FISH AND SEAFOODS
SIC	204	GRAIN MILL PRODUCTS
SIC	206	SUGAR
SIC	207	CONFECTIONARY AND RELATED PRODUCTS
SIC	208	BEVERAGES
SIC	209	MISCELLANEOUS FOOD PREPARATIONS AND KINDRED PRODUCTS
SIC	22	TEXTILE MILL PRODUCTS
SIC	23	APPAREL AND OTHER FINISHED PRODUCTS MADE FROM FABRICS AND SIMILAR MATERIALS
SIC	242	SAWMILLS AND PLANING MILLS
SIC	2432	VENEER AND PLYWOOD
SIC	2491	WOOD PRESERVING
SIC	26	PAPER AND ALLIED PRODUCTS
SIC	281	INDUSTRIAL INORGANIC AND ORGANIC CHEMICALS (EXCEPT SIC 2818)
SIC	2818	INDUSTRIAL ORGANIC CHEMICALS
SIC	282	PLASTICS MATERIALS AND SYNTHETIC RESINS, SYNTHETIC RUBBER, SYNTHETIC AND OTHER MAN-MADE FIBERS, EXCEPT GLASS
SIC	283	DRUGS
SIC	284	SOAP, DETERGENTS, AND CLEANING PREPARATIONS, PERFUMES, COSMETICS, AND OTHER TOILET PREPARATIONS
SIC	285	PAINTS, VARNISHES, LACQUERS, ENAMELS, AND ALLIED PRODUCTS
SIC	2871	FERTILIZERS
SIC	2879	AGRICULTURAL PESTICIDES, AND OTHER AGRICULTURAL CHEMICALS, NOT ELSEWHERE CLASSIFIED
SIC	2891	ADHESIVES AND GELATIN
SIC	2892	EXPLOSIVES
SIC	29	PETROLEUM REFINING AND RELATED INDUSTRIES
SIC	3011, 3069	TIRES AND INNER TUBES; FABRICATED RUBBER PRODUCTS, NOT ELSEWHERE CLASSIFIED
SIC	3079	MISCELLANEOUS PLASTICS PRODUCTS
SIC	311	LEATHER TANNING AND FINISHING
SIC	32	STONE, CLAY, GLASS, AND CONCRETE PRODUCTS
SIC	331	BLAST FURNACES, STEEL WORKS, AND ROLLING AND FINISHING MILLS
SIC	332	IRON AND STEEL FOUNDRIES
SIC	333, 334	PRIMARY SMELTING AND REFINING OF NONFERROUS METALS; SECONDARY SMELTING AND REFINING OF NONFERROUS METALS
SIC	336	NONFERROUS FOUNDRIES
SIC	347	COATING, ENGRAVING, AND ALLIED SERVICES
SIC	35	MACHINERY, EXCEPT ELECTRICAL
SIC	36	ELECTRICAL MACHINERY, EQUIPMENT, AND SUPPLIES
SIC	37	TRANSPORTATION EQUIPMENT (EXCEPT SHIP BUILDING AND REPAIRING, SIC 3731)
SIC	3731	SHIP BUILDING AND REPAIRING
SIC	491	ELECTRIC COMPANIES AND SYSTEMS
SIC	493	COMBINATION COMPANIES AND SYSTEMS

MEN03701

PART A

(Note: Submission of Part A is required of all applicants whose processes are listed on page 3 above.)

(Office use only) MI 0700X5 2 710553

Discharge Serial No. 001

INFORMATION REQUIRED OF SPECIFIED INDUSTRIES

Intake			Discharge								
PARAMETER AND CODE	(DAILY AVG. CONCENTRATION) UNTREATED INTAKE WATER (1)	(DAILY AVG. CONCENTRATION) TREATED INTAKE WATER (2)	MAXIMUM CONCENTRATION (3)	MAXIMUM POUNDS PER DAY PER PROCESS UNIT (4)	MAXIMUM POUNDS PER DAY (5)	DAILY AVG. CONCENTRATION (6)	AVERAGE POUNDS PER DAY (7)	SAMPLE TYPE (8)	SAMPLE FREQUENCY (9)	METHOD OF ANALYSIS (10)	CONTINUOUS MONITORING (11)
ALKALINITY (as $CaCO_3$) 00410	308	NO	a	a	a	308	511	COMP	b OTHER	STD. METHODS	ABS
B.O.D. 5-DAY 00310	10	T	18 ~~a~~	a	36 ~~a~~	10	17	"	"	"	ABS
CHEMICAL OXYGEN DEMAND (C.O.D.) 00340	48	R E	a	a	a	48	80	"	"	"	ABS
TOTAL SOLIDS 00500	510	A T	600 ~~a~~	a	1469 ~~a~~	510	1167 ~~850~~	"	"	"	ABS
TOTAL DISSOLVED SOLIDS 70300	508	M E	a	a	a	508	846	"	"	"	ABS
TOTAL SUSPENDED SOLIDS 00530	2	N T	~~a~~ 29	a	~~a~~ 71	2	11 ~~3~~	"	"	"	ABS
TOTAL VOLATILE SOLIDS 00505	306		a	a	a	306	510	"	"	"	ABS
AMMONIA (as N) 00610	3.80		a	a	a	3.80	6.3	"	"	"	ABS
KJELDAHL NITROGEN 00625	5.30		a	a	a	5.30	8.8	"	"	"	ABS
NITRATE (as N) 00620	1.55		a	a	a	1.55	3	"	"	"	ABS
PHOSPHORUS TOTAL (as P) 00665	0.05		a	a	a	0.05	1	"	"	"	ABS

ENG FORM MAY 71 4345-1

5769 REVISED: 8/9/72

MEN03702

NOTES TO DISCHARGE 001

ITEM 22

a. Not enough data have been compiled on a year around basis to provide accurate data. Values given are based on one test or are estimated.

b. Data now being compiled on weekly basis.

ITEM 23

a. These are present in the well water and are not from process contamination.

PART A

a. Not enough tests have been made on a year around basis to provide accurate data.

b. Sample Frequency - Yearly.

MEN03703

SECTION II. PLANT PROCESS AND DISCHARGE DESCRIPTION

1. Discharge described below is
a. Present [XX] b. Proposed new or changed [ ]

2. Implementation schedule [ ]

(Office use only) MI 0 7 0 0 4 5 2 7 1 0 5 5 3

Name of corporate boundaries within which the point of discharge is located.

3. State: MICHIGAN 4. County: ALLEGAN 5. City or Town: OTSEGO

6. Discharge Serial No. 002

State the precise location of the point of discharge.

7. Latitude 4 2 Degrees: 2 7 Min: 4 6 Sec.

8. Longitude 8 5 Degrees: 4 1 Min: 4 2 Sec.

9. Name of waterway at the point of discharge.
KALAMAZOO RIVER

10. Has application for water quality certification or description of impact been made? If so, give date:

Date: JUN 28 71 (mo day yr)

Check if certificate is attached to form [ ]

Name Issuing Agency: WATER RESOURCES COMMISSION STATE OF MICHIGAN

11. Narrative description of activity (include terms of general 4-digit Standard Industrial Classification, and specific manufacturing process).

a. General Process - Manufacture of Pulp and Paper

b. Specific Process - Manufacture of Semichemical Corrugating Medium Paperboard.

12. Standard industrial classification number.
SIC 2611

13. Principal product.
PAPERBOARD

14. Amount of principal product produced per day.
335 TONS
(Average Maximum)

15. Principal raw material.
N A

16. Amount of principal raw material consumed per day.
N A

17. Number of batch discharges per day.
N A

18. Average gallons per batch discharge.
N A

19. Date discharge began.
JUN 01 56 (mo day yr)

20. Date discharge will begin.
NA (mo day yr)

21. Describe waste abatement practices.
(Cont. on Attached Sheet)

(1) This discharge is made up of cooling water from the pulp mill and is separate and discharged from the pulp mill without being contaminated with process water. This water is taken from Company wells. The water is discharged from an aeration pond to increase the dissolved oxygen content of this water prior to its discharge to the Kalamazoo River. This aeration pond holds 30,000 gallons and has a 5 HP stationary aerator.

(2) At times, vacuum pump seal water from the paper mill is by-passed through this system as a water control measure. This water is normally diverted into the paper mill process water and eventually discharged through discharge 003. However since this water has a relatively low pollution load, it is at times discharged through aerated pond along with the pulp mill cooling water and then discharged to the river through discharge 002.

MEN03704

The data given in parenthesis in Section 22 and in Part A represent the properties of the combinedflows. The combined flow system would normally be used less than 30 days a year.

ESEGRE, PAERAT

MEN03705

22. PHYSICAL DESCRIPTION OF INTAKE WATER AND DISCHARGE

Intake / Discharge

(Office use only) MI 0 7 0 0 5 2 7 1 0 5 5 3

Discharge Serial No. 002

Parameter and (Code)	(1) Untreated Intake Water	(2) Treated Intake Water	(3) Average (Daily)	(4) Minimum (Operating Year)	(5) Maximum (Operating Year)	(6) Sample Frequency	(7) Continuous Monitoring
Flow (Gallons per day) 00056	60,000 (200,000)	NO TREATMENT	~~80,000~~ 418,000 (~~256,000~~)	~~60,000~~ (200,000)	~~100,000~~ 492,000 (~~300,000~~)	DYLY	REC
pH 00400	7.4*	"	7.7 (7.6)	7.2 (7.9)[a]	7.4 (7.3)[a]	WEEKLY (DYLY)	ABS
Temperature (Winter) (°F) 74028	50	"	60[a] (75)[a]	55[a] (70)[a]	65[a] (80)[a]	WEEKLY (DYLY)	ABS
Temperature (Summer) (°F) 74027	55	"	71 (88)	65[a] (85)[a]	80[a] (94)[a]	WEEKLY DYLY	ABS

23. DISCHARGE CONTENTS

PARAMETER	PRESENT	ABSENT	PARAMETER	PRESENT	ABSENT	PARAMETER	PRESENT	ABSENT
Color 00080	x		Aluminum 01105	(x)	x	Nickel 01067		x
Turbidity 00070	(x)	x	Antimony 01097		x	Selenium 01147		x
Radioactivity 74050		x	Arsenic 01002		x	Silver 01077		x
Hardness 00900	x		Beryllium 01012		x	Potassium 00937	x	
Solids 00500	x		Barium 01007		x	Sodium 00929	x	
Ammonia 00610		x	Boron 01022		x	Titanium 01152		x
Organic Nitrogen 00605			Cadmium 01027		x	Tin 01102		x
Nitrate 00620		x	Calcium 00916	x		Zinc 01092		x
Nitrite 00615		x	Cobalt 01037		x	Algicides 74051		x
Phosphorus 00665	x		Chromium 01034		x	Oil and Grease 00550		x
Sulfate 00945	x		Copper 01042		x	Phenols 32730	(x)	x
Sulfide 00745		x	Iron 01045	x		Surfactants 38260	(x)	
Sulfite 00740		x	Lead 01051	(x)	x	Chlorinated Hydrocarbons 74052		x
Bromide 71870		x	Magnesium 00927	x		Pesticides 74053		x
Chloride 00940	x		Manganese 01055		x	Fecal Streptococci Bacteria 74054		x
Cyanide 00720		x	Mercury 71900		x	Coliform Bacteria 74056		x
Fluoride 00951		x	Molybdenum 01062		x			

MI 0 7 0 0 X 5 2 7 1 0 5 3

23a. Have all known hazardous or potentially hazardous substances in your plant been inventoried?

[X] Yes [ ] No

24b. If yes, have steps been taken to insure that there exists no possibility of any such known hazardous or potentially hazardous substance entering this discharge?

[X] Yes [ ] No

25. Remarks.

The information above completes the basic reporting requirements which are required of all applicants. Those applicants whose discharge results from an activity included within any of the Standard Industrial Classification Code (SIC Code) categories listed below must complete Part A of this form as well.

CRITICAL INDUSTRIAL GROUPS

SIC	098	FISH HATCHERIES, FARMS, AND PRESERVES
SIC	10-14	DIVISION B – MINING
SIC	201	MEAT PRODUCTS
SIC	202	DAIRY PRODUCTS
SIC	203	CANNED PRESERVED FRUITS, VEGETABLES (EXCEPT SEAFOODS, SIC 2031 AND 2036)
SIC	2031, 2036	CANNED AND CURED FISH AND SEAFOODS; FRESH OR FROZEN PACKAGED FISH AND SEAFOODS
SIC	204	GRAIN MILL PRODUCTS
SIC	206	SUGAR
SIC	207	CONFECTIONARY AND RELATED PRODUCTS
SIC	208	BEVERAGES
SIC	209	MISCELLANEOUS FOOD PREPARATIONS AND KINDRED PRODUCTS
SIC	22	TEXTILE MILL PRODUCTS
SIC	23	APPAREL AND OTHER FINISHED PRODUCTS MADE FROM FABRICS AND SIMILAR MATERIALS
SIC	242	SAWMILLS AND PLANING MILLS
SIC	2432	VENEER AND PLYWOOD
SIC	2491	WOOD PRESERVING
SIC	26	PAPER AND ALLIED PRODUCTS
SIC	281	INDUSTRIAL INORGANIC AND ORGANIC CHEMICALS (EXCEPT SIC 2818)
SIC	2818	INDUSTRIAL ORGANIC CHEMICALS
SIC	282	PLASTICS MATERIALS AND SYNTHETIC RESINS, SYNTHETIC RUBBER, SYNTHETIC AND OTHER MAN-MADE FIBERS, EXCEPT GLASS
SIC	283	DRUGS
SIC	284	SOAP, DETERGENTS, AND CLEANING PREPARATIONS, PERFUMES, COSMETICS, AND OTHER TOILET PREPARATIONS
SIC	285	PAINTS, VARNISHES, LACQUERS, ENAMELS, AND ALLIED PRODUCTS
SIC	2871	FERTILIZERS
SIC	2879	AGRICULTURAL PESTICIDES, AND OTHER AGRICULTURAL CHEMICALS, NOT ELSEWHERE CLASSIFIED
SIC	2891	ADHESIVES AND GELATIN
SIC	2892	EXPLOSIVES
SIC	29	PETROLEUM REFINING AND RELATED INDUSTRIES
SIC	3011, 3069	TIRES AND INNER TUBES; FABRICATED RUBBER PRODUCTS, NOT ELSEWHERE CLASSIFIED
SIC	3079	MISCELLANEOUS PLASTICS PRODUCTS
SIC	311	LEATHER TANNING AND FINISHING
SIC	32	STONE, CLAY, GLASS, AND CONCRETE PRODUCTS
SIC	331	BLAST FURNACES, STEEL WORKS, AND ROLLING AND FINISHING MILLS
SIC	332	IRON AND STEEL FOUNDRIES
SIC	333, 334	PRIMARY SMELTING AND REFINING OF NONFERROUS METALS; SECONDARY SMELTING AND REFINING OF NONFERROUS METALS
SIC	336	NONFERROUS FOUNDRIES
SIC	347	COATING, ENGRAVING, AND ALLIED SERVICES
SIC	35	MACHINERY, EXCEPT ELECTRICAL
SIC	36	ELECTRICAL MACHINERY, EQUIPMENT, AND SUPPLIES
SIC	37	TRANSPORTATION EQUIPMENT (EXCEPT SHIP BUILDING AND REPAIRING, SIC 3731)
SIC	3731	SHIP BUILDING AND REPAIRING
SIC	491	ELECTRIC COMPANIES AND SYSTEMS
SIC	493	COMBINATION COMPANIES AND SYSTEMS

MEN03707

PART A

(Note: Submission of Part A is required of all applicants whose processes are listed on page 3 above.)

(Office use only) MI 0700X5 2 710553

Discharge Serial No. 002

INFORMATION REQUIRED OF SPECIFIED INDUSTRIES

PARAMETER AND CODE	Intake: DAILY AVG. CONCENTRATION (1)	Intake: DAILY AVG. CONCENTRATION (2)	Discharge: MAXIMUM CONCENTRATION (3)	Discharge: MAXIMUM POUNDS PER DAY PER PROCESS UNIT (4)	Discharge: MAXIMUM POUNDS PER DAY (5)	Discharge: DAILY AVG. CONCENTRATION (6)	Discharge: AVERAGE POUNDS PER DAY (7)	Discharge: SAMPLE TYPE (8)	Discharge: SAMPLE FREQUENCY (9)	Discharge: METHOD OF ANALYSIS (10)	Discharge: CONTINUOUS MONITORING (11)
ALKALINITY (as $CaCO_3$) 00410	308	NO	a	a	a	292 (356)	194 (759)	COMP (Comp)	OTHER (Other)	STANDARD METHODS	ABS
B.O.D. 5-DAY 00310	10	TREATMENT	~~~~ 755	"	~~~~ 1673	~~7~~ (300)	746 ~~5~~ ~~(640)~~	AVE (AVE)	WKLY (DYLY)		ABS
CHEMICAL OXYGEN DEMAND (C.O.D.) 00340	48		"	"	"	36 (2220)	24 (4733)	COMP (COMP)	OTHER (OTHER)		ABS
TOTAL SOLIDS 00500	510		4,000		9496	~~500~~ (1193)	4,014 ~~333~~ (~~2545~~)	AVE. (AVE)	WKLY (DYLY)		ABS
TOTAL DISSOLVED SOLIDS 70300	508		"	"	"	455 (1000)	303 (2132)	AVE (AVE)	WKLY (DYLY)		ABS
TOTAL SUSPENDED SOLIDS 00530	2		~~~~ 555	"	~~~~ 1,187	~~11~~ (93)	160 ~~7~~ (~~177~~)	AVE (AVE)	WKLY (DYLY)		ABS
TOTAL VOLATILE SOLIDS 00505	306		"	"	"	390 (990)	260 (2111)	COMP (COMP)	OTHER (OTHER)		ABS
AMMONIA (as N) 00610	3.80		"	"	"	3.80 (0.00)	2.5 (0)	COMP (COMP)	OTHER (OTHER)		ABS
KJELDAHL NITROGEN 00625	5.30		"	"	"	5.30 (8.0)	11.3 (17)	COMP (COMP)	OTHER (OTHER)		ABS
NITRATE (as N) 00620	1.55		"	"	"	1.55 (0.50)	1 (1)	COMP (COMP)	OTHER (OTHER)		ABS
PHOSPHORUS TOTAL (as P) 00665	0.05		"	"	"	0.01 (0.6)	0.01 (1.3)	COMP (COMP)	OTHER (OTHER)		ABS

ENG FORM MAY 71 4345-1

REVISED: 8/9/72

5775

MEN03708

NOTES TO DISCHARGE 002

Item 22

a. Not enough data have been compiled on a year around basis to provide accurate data. Values given are based on one test or are estimated.

ITEM 23

Check in parenthesis are for combined flows.

PART A

a. Not enough tests have been made on a year around basis to provide accurate data.

b. OTHER -- Yearly Test.

MEN03709

SECTION II. PLANT PROCESS AND DISCHARGE DESCRIPTION

1. Discharge described below is a. Present [X] b. Proposed new or changed [ ]

2. Implementation schedule [X]

(Office use only) MI 0 7 0 0 X 5 2 7 1 0 5 5 3

Name of corporate boundaries within which the point of discharge is located.

State	County	City or Town
3. MICHIGAN	4. ALLEGAN	5. OTSEGO

6. Discharge Serial No. 003

State the precise location of the point of discharge.

7. Latitude 4 2 Degrees; 2 7 Min; 4 8 Sec.

8. Longitude 8 5 Degrees; 4 1 Min; 2 9 Sec.

9. Name of waterway at the point of discharge. KALAMAZOO RIVER

10. Has application for water quality certification or description of impact been made? If so, give date:

Date: JUN (mo) 28 (day) 71 (yr)

Check if certificate is attached to form [ ]

Name Issuing Agency: WATER RESOURCES COMMISSION STATE OF MICHIGAN

11. Narrative description of activity (include terms of general 4-digit Standard Industrial Classification, and specific manufacturing process).

a. General Process. Manufacture of Pulp and Paper

b. Specific Process. Manufacture of Semi-chemical corrugating medium Paperboard

12. Standard industrial classification number.	13. Principal product.	14. Amount of principal product produced per day.
SIC 2611	PAPERBOARD	335 TONS (Average Maximum)

15. Principal raw material.	16. Amount of principal raw material consumed per day.	17. Number of batch discharges per day.
N A	N A	N A

18. Average gallons per batch discharge.	19. Date discharge began.	20. Date discharge will begin.
N A	2 (mo) 1 5 (day) 7 0 (yr)	N A (mo) (day) (yr)

21. Describe waste abatement practices. (See Attached Sheet)

(a) This discharge is made up of excess process water from the paper mill and is discharged only after being recycled through the mill about 15 times. The excess waste water is filtered and stored in a surge pond. It is then pumped to an aerated lagoon to remove about 70% of its BOD and is finally clarified in settling ponds before discharging to the Kalamazoo River. It is discharged through a common outfall line with the power house cooling water.

(b) The power house cooling water is pumped from the Kalamazoo River, filtered through a coarse screen and used in an indirect heat exchanger to condense steam from a turbine. The only tests made on this water are the temperatures in and out of the condenser. Temperature at the combined outfall line is not recorded. Data on the power house cooling water are given on a

ENG FORM MAY 71 4345-1

5777

MEN03710

22. PHYSICAL DESCRIPTION OF INTAKE WATER AND DISCHARGE

Intake / Discharge

(Office use only) 3700X 2 710553

Discharge Serial No. 003

Parameter and (Code)	UNTREATED INTAKE WATER (1)	TREATED INTAKE WATER (2)	AVERAGE (DAILY) (3)	MINIMUM (OPERATING YEAR) (4)	MAXIMUM (OPERATING YEAR) (5)	SAMPLE FREQUENCY (6)	CONTINUOUS MONITORING (7)
Flow (Gallons per day) 00056	726,000	NO TREATMENT	726,000	400,000	1,000,000	DYLY	REC
pH 00400	7.4		7.8	6.5	8.2	DYLY	ABS
Temperature (Winter) (°F) 74027	50		54	41	64	DYLY	ABS
Temperature (Summer) (°F) 74027	55		79	84	75	DYLY	ABS

23. DISCHARGE CONTENTS

PARAMETER	PRESENT	ABSENT	PARAMETER	PRESENT	ABSENT	PARAMETER	PRESENT	ABSENT
Color 00080	X		Aluminum 01105	X		Nickel 01067		X
Turbidity 00070	X		Antimony 01097		X	Selenium 01147		X
Radioactivity 74050		X	Arsenic 01002		X	Silver 01077		X
Hardness 00900	X		Beryllium 01012		X	Potassium 00937	X	
Solids 00500	X		Barium 01007		X	Sodium 00929	X	
Ammonia 00610		X	Boron 01022		X	Titanium 01152		X
Organic Nitrogen 00605	X		Cadmium 01027		X	Tin 01102		X
Nitrate 00620	X		Calcium 00916	X		Zinc 01092	X	
Nitrite 00615		X	Cobalt 01037		X	Algicides 74051		X
Phosphorus 00665	X		Chromium 01034		X	Oil and Grease 00680	X	
Sulfate 00945	X		Copper 01042	X		Phenols 32730	X	
Sulfide 00745		X	Iron 01045	X		Surfactants 38260	X	
Sulfite 00740		X	Lead 01051	X		Chlorinated Hydrocarbons 74052		X
Bromide 71870		X	Magnesium 00927	X		Pesticides 74053		X
Chloride 00940	X		Manganese 01055		X	Fecal Streptococci Bacteria 74054		X
Cyanide 00720		X	Mercury 71900		X	Coliform Bacteria 74056		X
Fluoride 00951		X	Molybdenum 01062		X			

5778

MEN03711

separate sheet of Section 22. Detailed tests have not been made on river water as this water source does not come into contact with any contaminating sources, except heat. This arrangement is to comply with State of Michigan requirements.

(c) Effective July 1, 1971, the State requires BOD loading to be reduced to 5000 lbs. per day. Additional aeration capacity is being added to the aeration lagoon to comply with this requirement. Due to manufacturing delays this equipment will not be installed before August 15, 1971. However, we expect to meet the new BOD requirement by making in plant changes.

(a) Discharge.

RECYCL, POTHER, EMERGE, CNUTRI, BAERAT, SLANDD

(b) Discharge.

No treatment.

MEN03712

24a. Have all known hazardous or potentially hazardous substances in your plant been inventoried? MI 0700X5 2 710553

[X] Yes [ ] No

24b. If yes, have steps been taken to insure that there exists no possibility of any such known hazardous or potentially hazardous substance entering this discharge?

[X] Yes [ ] No

25. Remarks

SEES NOTES ATTACHED.

The information above completes the basic reporting requirements which are required of all applicants. Those applicants whose discharge results from an activity included within any of the Standard Industrial Classification Code (SIC Code) categories listed below must complete Part A of this form as follows.

CRITICAL INDUSTRIAL GROUPS

SIC	098	FISH HATCHERIES, FARMS, AND PRESERVES
SIC	10-14	DIVISION B – MINING
SIC	201	MEAT PRODUCTS
SIC	202	DAIRY PRODUCTS
SIC	203	CANNED PRESERVED FRUITS, VEGETABLES (EXCEPT SEAFOODS, SIC 2031 AND 2036)
SIC	2031, 2036	CANNED AND CURED FISH AND SEAFOODS; FRESH OR FROZEN PACKAGED FISH AND SEAFOODS
SIC	204	GRAIN MILL PRODUCTS
SIC	206	SUGAR
SIC	207	CONFECTIONARY AND RELATED PRODUCTS
SIC	208	BEVERAGES
SIC	209	MISCELLANEOUS FOOD PREPARATIONS AND KINDRED PRODUCTS
SIC	22	TEXTILE MILL PRODUCTS
SIC	23	APPAREL AND OTHER FINISHED PRODUCTS MADE FROM FABRICS AND SIMILAR MATERIALS
SIC	242	SAWMILLS AND PLANING MILLS
SIC	2432	VENEER AND PLYWOOD
SIC	2491	WOOD PRESERVING
SIC	26	PAPER AND ALLIED PRODUCTS
SIC	281	INDUSTRIAL INORGANIC AND ORGANIC CHEMICALS (EXCEPT SIC 2818)
SIC	2818	INDUSTRIAL ORGANIC CHEMICALS
SIC	282	PLASTICS MATERIALS AND SYNTHETIC RESINS, SYNTHETIC RUBBER, SYNTHETIC AND OTHER MAN-MADE FIBERS, EXCEPT GLASS
SIC	283	DRUGS
SIC	284	SOAP, DETERGENTS, AND CLEANING PREPARATIONS, PERFUMES, COSMETICS, AND OTHER TOILET PREPARATIONS
SIC	285	PAINTS, VARNISHES, LACQUERS, ENAMELS, AND ALLIED PRODUCTS
SIC	2871	FERTILIZERS
SIC	2879	AGRICULTURAL PESTICIDES, AND OTHER AGRICULTURAL CHEMICALS, NOT ELSEWHERE CLASSIFIED
SIC	2891	ADHESIVES AND GELATIN
SIC	2892	EXPLOSIVES
SIC	29	PETROLEUM REFINING AND RELATED INDUSTRIES
SIC	3011, 3069	TIRES AND INNER TUBES; FABRICATED RUBBER PRODUCTS, NOT ELSEWHERE CLASSIFIED
SIC	3079	MISCELLANEOUS PLASTICS PRODUCTS
SIC	311	LEATHER TANNING AND FINISHING
SIC	32	STONE, CLAY, GLASS, AND CONCRETE PRODUCTS
SIC	331	BLAST FURNACES, STEEL WORKS, AND ROLLING AND FINISHING MILLS
SIC	332	IRON AND STEEL FOUNDRIES
SIC	333, 334	PRIMARY SMELTING AND REFINING OF NONFERROUS METALS; SECONDARY SMELTING AND REFINING OF NONFERROUS METALS
SIC	336	NONFERROUS FOUNDRIES
SIC	347	COATING, ENGRAVING, AND ALLIED SERVICES
SIC	35	MACHINERY, EXCEPT ELECTRICAL
SIC	36	ELECTRICAL MACHINERY, EQUIPMENT, AND SUPPLIES
SIC	37	TRANSPORTATION EQUIPMENT (EXCEPT SHIP BUILDING AND REPAIRING, SIC 3731)
SIC	3731	SHIP BUILDING AND REPAIRING
SIC	491	ELECTRIC COMPANIES AND SYSTEMS
SIC	493	COMBINATION COMPANIES AND SYSTEMS

MEN03713

PART A

(Note: Submission of Part A is required of all applicants whose processes are listed on page 3 above.)

(Office use only) ME 0700.X5 2 710553

Discharge Serial No. 003

INFORMATION REQUIRED OF SPECIFIED INDUSTRIES

PARAMETER AND CODE	Intake: DAILY AVG. CONCENTRATION (1)	Intake: DAILY AVG. CONCENTRATION (2)	Discharge: MAXIMUM CONCENTRATION (3)	Discharge: MAXIMUM POUNDS PER DAY PER PROCESS UNIT (4)	Discharge: DAILY AVG. CONCENTRATION (5)	Discharge: AVERAGE POUNDS PER DAY (6)	Discharge: SAMPLE TYPE (7)	Discharge: SAMPLE FREQUENCY (8)	Discharge: METHOD OF ANALYSIS (9)	Discharge: CONTINUOUS MONITORING (10)	Discharge: (11)
ALKALINITY (as $CaCO_3$) 00410	308	NOT TREATED	a	a	a	2638	15,949	COMP	c. OTHER	STAND. METHODS	ABS
B.O.D. 5-DAY 00310	10	"	2,350 ~~827~~	5000	11,595 ~~5000~~	661	4,236 ~~4,000~~	AVE	DYLY	"	ABS
CHEMICAL OXYGEN DEMAND (C.O.D.) 00340	48	"	a	a	a	8886	53,734	COMP	OTHER	"	ABS
TOTAL SOLIDS 00500	510	"	17,700 ~~11,330~~	61,269	72,571 ~~61,269~~	8900	~~53,818~~	AVE	DYLY	"	ABS
TOTAL DISSOLVED SOLIDS 70300	508	"	10,750	58,287	58,287	8440	51,037	AVE	DYLY	"	ABS
TOTAL SUSPENDED SOLIDS 00530	2	"	3,400 ~~550~~	2,982	14,134 ~~2,982~~	460	2,833 ~~2,782~~	AVE	DYLY	"	ABS
TOTAL VOLATILE SOLIDS 00505	306	"	9,492	51,466	51,466	7510	45,413	COMP	WKLY	"	ABS
AMMONIA (as N) 00610	3.8	"	a	a	a	25	151	COMP	OTHER	"	ABS
KJELDAHL NITROGEN 00625	5.3	"	a	a	a	75	454	COMP	OTHER	"	ABS
NITRATE (as N) 00620	1.55	"	a	a	a	<0.05 ~~0.00~~	<0.30 ~~0~~	COMP	OTHER	"	ABS
PHOSPHORUS TOTAL (as P) 00665	0.05	"	a	a	a	6.0	36	COMP	OTHER	"	ABS

ENG FORM MAY 71 4345-1

REVISED: 8/9/72

5781

MEN03714

NOTES FOR DISCHARGE 003

PART A

a. Not enough data has been compiled on a year around basis to accurately determine these values.

b. When concentrations are high, flows are lower than average.

c. Other - Yearly

MEN03715

POWER HOUSE COOLING WATER

22. PHYSICAL DESCRIPTION OF INTAKE WATER AND DISCHARGE

Intake / Discharge

(Office use only) MI 0 7 0 0 X 5 2 7 1 0 5 5 3

Discharge Serial No. 003

Parameter and (Code)	UNTREATED INTAKE WATER (1)	TREATED INTAKE WATER (2)	AVERAGE (DAILY) (3)	MINIMUM (OPERATING YEAR) (4)	MAXIMUM (OPERATING YEAR) (5)	SAMPLE FREQUENCY (6)	CONTINUOUS MONITORING (7)
Flow (Gallons per day) 00056	4,320,000	NO TREATMENT	4,320,000	4,320,000	5,000,000	OTHER(b)	ABS
pH 00400	7.4		7.4	(a)	(a)	0	ABS
Temperature (Winter) (°F) 74028	40		56	54	60	DYLY	ABS
Temperature (Summer) (°F) 74027	80		95	90	110	DYLY	ABS

23. DISCHARGE CONTENTS

PARAMETER	PRESENT	ABSENT	PARAMETER	PRESENT	ABSENT	PARAMETER	PRESENT	ABSENT
Color 00080	X		Aluminum 01105		X	Nickel 01067		X
Turbidity 00070	X		Antimony 01097		X	Selenium 01147		X
Radioactivity 74050		X	Arsenic 01002		X	Silver 01077		X
Hardness 00900	X		Beryllium 01012		X	Potassium 00937	X	
Solids 00500	X		Barium 01007		X	Sodium 00929	X	
Ammonia 00610		X	Boron 01022		X	Titanium 01152		X
Organic Nitrogen 00605	X		Cadmium 01027		X	Tin 01102		X
Nitrate 00620	X		Calcium 00916	X		Zinc 01092		X
Nitrite 00615		X	Cobalt 01037		X	Algicides 74051		X
Phosphorus 00665	X		Chromium 01034		X	Oil and Grease 00550		X
Sulfate 00945	X		Copper 01042		X	Phenols 32730		X
Sulfide 00745		X	Iron 01045	X		Surfactants 38260		X
Sulfite 00740		X	Lead 01051		X	Chlorinated Hydrocarbons 74052		X
Bromide 71870		X	Magnesium 00927	X		Pesticides 74053		X
Chloride 00940	X		Manganese 01055		X	Fecal Streptococci Bacteria 74054		X
Cyanide 00720		X	Mercury 71900		X	Coliform Bacteria 74056	X	
Fluoride 00951		X	Molybdenum 01062		X			

ENG FORM MAY 71 4345-1

5783

Page 2 of 4

MEN03716

NOTE TO DISCHARGE 003

POWER HOUSE COOLING WATER

Section 22

a. Not enough data have been compiled on a year around basis to accurately estimate values for these parameter.

b. Based on pump capacities.

PART A

a. Not enough data have been compiled on a year around basis to accurately estimate these values.

b. Based on limited number of test, but values all believed to be representative of typical conditions.

c. Tests not made as water is not contaminated, except for thermal pollution during use for cooling purpose.

MEN03717

MI 070 0X5 2 710553

MENASHA CORPORATION

PAPERBOARD DIVISION OTSEGO, MICHIGAN 49078 • 616 • 692-6141 September 7, 1972

U. S. Army Engineering District,
Detroit Corps of Engineers
150 Michigan AVenue
Box 1027
Detroit 26, Michigan 48231

Attention: Mr. Joseph Kimmel
Permit Section

Gentlemen:

This is in regards to your call of August 30, 1972 on clarifying the changes submitted to the Corps on August 22, 1972 for application No. MI 070 0X5 2 710553.

The changes in analyses reported for discharge 003 pertain only to the effluent from the aeration pond. The sample used for these analyses was obtained before the aeration pond effluent mixes with the cooling water from the power house.

We have not been able to sample the combined effluents for discharge 003. The discharge pipe is underground and it discharges to the river at an inaccessible point for sampling.

We feel that the analyses on the individual flows from the power house and from the aeration pond accurately represents the properties of the water discharged from 003.

Very truly yours,

MENASHA CORPORATION

K. E. Lowe
Technical Director

js

FOUNDED 1849

5785

MEN03718

SECTION II. PLANT PROCESS AND DISCHARGE DESCRIPTION

1. Discharge described below is
a. Present [X] b. Proposed new or changed [ ]

2. Implementation schedule [ ]

(Office use only) MI 0 7 0 0 X 5 ? 7 1 0 5 5 3

Name of corporate boundaries within which the point of discharge is located.

State	County	City or Town	6. Discharge Serial No.
3. MICHIGAN	4. ALLEGAN	5. OTSEGO	004

State the precise location of the point of discharge.

7. Latitude 4 2 Degrees: 27 Min: 4 8 Sec.
8. Longitude 8 5 Degrees: 41 Min: 2 9 Sec.

9. Name of waterway at the point of discharge.
KALAMAZOO RIVER

10. Has application for water quality certification or description of impact been made? If so, give date:

Date: JUN (mo) 2 8 (day) 7 1 (yr)

Check if certificate is attached to form [ ]

Name Issuing Agency: WATER RESOURCES COMMISSION STATE OF MICHIGAN

11. Narrative description of activity (include terms of general 4-digit Standard Industrial Classification, and specific manufacturing process).

a. General Process: Manufacture of Pulp and Paper

b. Specific Process: Manufacture of Semi-Chemical Corrugating Medium Paperboard

12. Standard industrial classification number.	13. Principal product.	14. Amount of principal product produced per day.
SIC 2611	PAPERBOARD	335 TONS (AVERAGE MAXIMUM)

15. Principal raw material.	16. Amount of principal raw material consumed per day	17. Number of batch discharges per day.
N A	N A	N A

18. Average gallons per batch discharge.	19. Date discharge began.	20. Date discharge will begin.
N A	S E P (mo) 0 1 (day) 6 9 (yr)	N A (mo) (day) (yr)

21. Describe waste abatement practices.

This discharge is made up of lime waste from the power house's hot lime softener and of scrubbing water from the fly ash collection tank. Floor drains from the power houseare also discharged here. These discharges flow into a earthen pond of about 10,000 gallons and the lime and fly ash settle out. The overflow is discharged through a weir to the Kalamazoo River via discharge 001. The lime and ash settlingsare dredged from the pond and landfilled.

ESECKE, PSEDIM 3786

22. PHYSICAL DESCRIPTION OF INTAKE WATER AND DISCHARGE

(Office use only) MI 0700X5 2 710553

Discharge Serial No. 004

Parameter and (Code)	Intake: Untreated Intake Water (1)	Intake: Treated Intake Water (2)	Discharge: Average (Daily) (3)	Discharge: Minimum (Operating Year) (4)	Discharge: Maximum (Operating Year) (5)	Sample Frequency (6)	Continuous Monitoring (7)
Flow (Gallons per day) 00056	77,760	NOT TREATED	77,760	34,860 [a]	108,000 [a]	DLYD	ABS
pH 00400	7.4		8.1	7.8	8.6	WKLY	ABS
Temperature (Winter) (°F) 74028	50		65 [a]	55 -- [b]	103 -- [b]	WKLY	ABS
Temperature (Summer) (°F) 74027	55		77 [a]	70	113	WKLY	ABS

23. DISCHARGE CONTENTS

PARAMETER	PRESENT	ABSENT	PARAMETER	PRESENT	ABSENT	PARAMETER	PRESENT	ABSENT
Color 00080	X		Aluminum 01105		X	Nickel 01067		X
Turbidity 00070	X		Antimony 01097		X	Selenium 01147		X
Radioactivity 74050		X	Arsenic 01002		X	Silver 01077		X
Hardness 00900	X		Beryllium 01012		X	Potassium 00937	X	
Solids 00500	X		Barium 01007		X	Sodium 00929	X	
Ammonia 00610		X	Boron 01022		X	Titanium 01152		X
Organic Nitrogen 00605		X	Cadmium 01027		X	Tin 01102		X
Nitrate 00620	X		Calcium 00916	X		Zinc 01092		X
Nitrite 00615		X	Cobalt 01037		X	Algicides 74051		X
Phosphorus 00665	X		Chromium 01034		X	Oil and Grease 00550	X	
Sulfate 00945	X		Copper 01042		X	Phenols 32730		X
Sulfide 00745		X	Iron 01045	X		Surfactants 38260		X
Sulfite 00740		X	Lead 01051		X	Chlorinated Hydrocarbons 74052		X
Bromide 71870		X	Magnesium 00927	X		Pesticides 74053		X
Chloride 00940	X		Manganese 01055	X		Fecal Streptococci Bacteria 74054		X
Cyanide 00720		X	Mercury 71900		X	Coliform Bacteria 74056		X
Fluoride 00951		X	Molybdenum 01062		X			

MEN03720

MI 0700X5 2 710553

24a. Have all known hazardous or potentially hazardous substances in your plant been inventoried?

☒ Yes ☐ No

24b. If yes, have steps been taken to insure that there exists no possibility of any such known hazardous or potentially hazardous substance entering this discharge?

☒ Yes ☐ No

25. Remarks.

The information above completes the basic reporting requirements which are required of all applicants. Those applicants whose discharge results from an activity included within any of the Standard Industrial Classification Code (SIC Code) categories listed below must complete Part A of this form as well.

CRITICAL INDUSTRIAL GROUPS

SIC	098	FISH HATCHERIES, FARMS, AND PRESERVES
SIC	10-14	DIVISION B – MINING
SIC	201	MEAT PRODUCTS
SIC	202	DAIRY PRODUCTS
SIC	203	CANNED PRESERVED FRUITS, VEGETABLES (EXCEPT SEAFOODS, SIC 2031 AND 2036)
SIC	2031, 2036	CANNED AND CURED FISH AND SEAFOODS; FRESH OR FROZEN PACKAGED FISH AND SEAFOODS
SIC	204	GRAIN MILL PRODUCTS
SIC	206	SUGAR
SIC	207	CONFECTIONARY AND RELATED PRODUCTS
SIC	208	BEVERAGES
SIC	209	MISCELLANEOUS FOOD PREPARATIONS AND KINDRED PRODUCTS
SIC	22	TEXTILE MILL PRODUCTS
SIC	23	APPAREL AND OTHER FINISHED PRODUCTS MADE FROM FABRICS AND SIMILAR MATERIALS
SIC	242	SAWMILLS AND PLANING MILLS
SIC	2432	VENEER AND PLYWOOD
SIC	2491	WOOD PRESERVING
SIC	26	PAPER AND ALLIED PRODUCTS
SIC	281	INDUSTRIAL INORGANIC AND ORGANIC CHEMICALS (EXCEPT SIC 2818)
SIC	2818	INDUSTRIAL ORGANIC CHEMICALS
SIC	282	PLASTICS MATERIALS AND SYNTHETIC RESINS, SYNTHETIC RUBBER, SYNTHETIC AND OTHER MAN-MADE FIBERS, EXCEPT GLASS
SIC	[illegible]	DRUGS
SIC	284	SOAP, DETERGENTS, AND CLEANING PREPARATIONS, PERFUMES, COSMETICS AND OTHER TOILET PREPARATIONS
SIC	285	PAINTS, VARNISHES, LACQUERS, ENAMELS, AND ALLIED PRODUCTS
SIC	2871	FERTILIZERS
SIC	2879	AGRICULTURAL PESTICIDES, AND OTHER AGRICULTURAL CHEMICALS, NOT ELSEWHERE CLASSIFIED
SIC	2891	ADHESIVES AND GELATIN
SIC	2892	EXPLOSIVES
SIC	29	PETROLEUM REFINING AND RELATED INDUSTRIES
SIC	3011, 3069	TIRES AND INNER TUBES; FABRICATED RUBBER PRODUCTS, NOT ELSEWHERE CLASSIFIED
SIC	3079	MISCELLANEOUS PLASTICS PRODUCTS
SIC	311	LEATHER TANNING AND FINISHING
SIC	32	STONE, CLAY, GLASS, AND CONCRETE PRODUCTS
SIC	331	BLAST FURNACES, STEEL WORKS, AND ROLLING AND FINISHING MILLS
SIC	332	IRON AND STEEL FOUNDRIES
SIC	333, 334	PRIMARY SMELTING AND REFINING OF NONFERROUS METALS, SECONDARY SMELTING AND REFINING OF NONFERROUS METALS
SIC	336	NONFERROUS FOUNDRIES
SIC	347	COATING, ENGRAVING, AND ALLIED SERVICES
SIC	35	MACHINERY, EXCEPT ELECTRICAL
SIC	36	ELECTRICAL MACHINERY, EQUIPMENT, AND SUPPLIES
SIC	37	TRANSPORTATION EQUIPMENT (EXCEPT SHIP BUILDING AND REPAIRING, SIC 3731)
SIC	3731	SHIP BUILDING AND REPAIRING
SIC	491	ELECTRIC COMPANIES AND SYSTEMS
SIC	492	COMBINATION COMPANIES AND SYSTEMS

5788

MEN03721

PART A

(Note: Submission of Part A is required of all applicants whose processes are listed on page 3 above.)

(Office use only) MT 0 7 0 0 X 5 2 7 1 0 5 5 3

Discharge Serial No. 004

INFORMATION REQUIRED OF SPECIFIED INDUSTRIES

PARAMETER AND CODE	Intake: DAILY AVG. CONCENTRATION UNTREATED INTAKE WATER (1)	Intake: DAILY AVG. CONCENTRATION TREATED INTAKE WATER (2)	Discharge: MAXIMUM CONCENTRATION (3)	Discharge: MAXIMUM POUNDS PER DAY PER PROCESS UNIT (4)	Discharge: DAILY AVG. CONCENTRATION (5)	Discharge: AVERAGE POUNDS PER DAY (6)	Discharge: SAMPLE TYPE (7)	Discharge: SAMPLE FREQUENCY (8)	Discharge: METHOD OF ANALYSIS (9)	Discharge: CONTINUOUS MONITORING (10)	Discharge: (11)
ALKALINITY (as $CaCO_3$) 00410	300	NO	a	a	a	515	334	COMP	YEARLY	STM	ABS
B.O.D. 5-DAY 00310	10	T R	a	a	a	14	9	COMP	YEARLY	STM	ABS
CHEMICAL OXYGEN DEMAND (C.O.D.) 00340	48	E A	a	a	a	160	104	COMP	YEARLY	STM	ABS
TOTAL SOLIDS 00500	510	T M	5,100 ~~a~~	a	3,079 ~~a~~	1300	842	AVER.	WKLY	STM	ABS
TOTAL DISSOLVED SOLIDS 70300	508	E N	a	a	a	840	544	AVER.	WKLY	STM	ABS
TOTAL SUSPENDED SOLIDS 00530	2	T	1,276 ~~a~~	a	670 ~~a~~	460	298	AVER.	WKLY	STM	ABS
TOTAL VOLATILE SOLIDS 00505	306		a	a	a	910[b]	589	COMP	YEARLY	STM	ABS
AMMONIA (as N) 00610	3.80		a	a	a	1.30	0.84	COMP	YEARLY		ABS
KJELDAHL NITROGEN 00625	5.30		a	a	a	2.0	1.3	COMP	YEARLY		ABS
NITRATE (as N) 00620	1.55		a	a	a	2.5[b]	2	COMP	YEARLY	STM	ABS
PHOSPHORUS TOTAL (as P) 00665	0.05		a	a	a	1.1[b]	1	COMP	YEARLY	STM	ABS

MEN03722

NOTES TO DISCHARGE 004

Section 22

a. Based on a limited number of tests. Values represent an estimate but are believed to be representative of typical data.

b. Not enough data have been compiled on a year around basis to accurately estimate these values.

PART A

a. Not enough data have been compiled on a year around basis to accurately estimate these values.

b. Based on a limited number of tests, but values are believed to be representative of typical data.

c. Analytical data delayed but results will be submitted when available. There is no evidence to indicate that significant quantities of ammonia nitrogen or Kjeldahl Nitrogen exist.

MEN03723

MENASHA CORPORATION

MI 0700X5 . 2 110553

PAPERBOARD DIVISION OTSEGO, MICHIGAN 49078 • 616 • 692-6141

August 22, 1972

Department of the Army
Detroit District,
Corps of Engineers
P. O. Box 1027
Detroit, Michigan 48231

ATTENTION: Mr. Joseph Kimmel
Permit Section

Gentlemen:

As per your request, we have attached the following:

- Permit application for Weir 005, which was formerly the by-pass on Weir 002.
- Order of determination from the Michigan WRC, dated February 17, 1969.
- A general flow diagram of waste waters at our plant.

The revised data mailed to your office on August 11, 1972, represent the results of further tests on our waste water discharges.

A check for $50.00 is attached for the application on Weir 005.

Very truly yours,

MENASHA CORPORATION

K. E. Lowe
Technical Director

js

Encl.

FOUNDED 1849

5791

MEN03724

SECTION II. PLANT PROCESS AND DISCHARGE DESCRIPTION

1. Discharge described below is: a. Present [X] b. Proposed new or changed [ ]

2. Implementation schedule [ ]

(Office use only) MI 0700X5 2 710553

Name of corporate boundaries within which the point of discharge is located.

3. State: MICHIGAN

4. County: ALLEGAN

5. City or Town:

6. Discharge Serial No. 005

State the precise location of the point of discharge.

7. Latitude 42 Degrees: 27 Min: 46 Sec.

8. Longitude 85 Degrees: 41 Min: 41 Sec.

9. Name of waterway at the point of discharge: KALAMAZOO RIVER

10. Has application for water quality certification or description of impact been made? If so, give date:

Date: JUN 28 71 (mo day yr)

Check if certificate is attached to form [ ]

Name Issuing Agency: WATER RESOURCES COMMISSION STATE OF MICHIGAN

11. Narrative description of activity (include terms of general 4-digit Standard Industrial Classification, and specific manufacturing process).

a. General Process - Manufacture of Pulp and Paper

b. Specific Process - Manufacture of Semichemical Corrugating Medium Paperboard.

12. Standard industrial classification number: SIC 2611

13. Principal product: PAPERBOARD

14. Amount of principal product produced per day: 335 TONS (Average Maximum)

15. Principal raw material: NA

16. Amount of principal raw material consumed per day: NA

17. Number of batch discharges per day: NA

18. Average gallons per batch discharge: NA

19. Date discharge began: JUN 01 56 (mo day yr)

20. Date discharge will begin: NA (mo day yr)

21. Describe waste abatement practices.

This discharge is the same as that from Weir 002. Weir 005 is only used when the equipment associated with Weir 002 is shutdown for repairs. At that time Weir 005 discharges the waste water directly to the river.

(1) This discharge is made up of cooling water from the pulp mill and is separated and discharged from the pulp mill without being contaminated with process water. This water is taken from Company wells. The water is discharged from an aeration pond to increase the dissolved oxygen content of this water prior to its discharge to the Kalamazoo River. This aeration pond holds 30,000 gallons and has a 5 HP stationary aerator.

(2) At times, vacuum pump seal water from the paper mill is by-passed through this system as a water control measure. This water is normally diverted into the paper mill process water and eventually discharged through discharge 003

ENG FORM MAY 71 4345-1 (Cont. on attached Sheet)

5792

However, since this water has a relatively low pollution load, it is at times then discharged to the river through discharge 002.

The data given in parenthesis in Section 22 and in Part A represent the properties of the combined flows. The combined flow system would normally be used less than 30 days a year.

MEN03726

22. PHYSICAL DESCRIPTION OF INTAKE WATER AND DISCHARGE

Intake — Discharge

(Office use only) MI 0 7 0 0 X 7 1 0 5 5 3

Discharge Serial No. 005

Parameter and (Code)	UNTREATED INTAKE WATER (1)	TREATED INTAKE WATER (2)	AVERAGE (DAILY) (3)	MINIMUM (OPERATING YEAR) (4)	MAXIMUM (OPERATING YEAR) (5)	SAMPLE FREQUENCY (6)	CONTINUOUS MONITORING (7)
Flow (Gallons per day) 00056	60,000 (200,000)	NO TREATMENT	~~80,000~~ 418,000 ~~(256,000)~~	60,000 (200,000)	~~100,000~~ 492,000 ~~(300,000)~~	DYLY	REC
pH 00400	7.4	"	7.7 (7.6)	7.2 (7.9)[a]	7.4 (7.3)[a]	WEEKLY (DYLY)	ABS
Temperature (Winter) (°F) 74028	50	"	60[a] (75)[a]	55[a] (70)[a]	65[a] (80)[a]	WEEKLY (DYLY)	ABS
Temperature (Summer) (°F) 74027	55	"	71 (88)	65[a] (85)[a]	80[a] (94)[a]	WEEKLY (DYLY)	ABS

23. DISCHARGE CONTENTS

PARAMETER	PRESENT	ABSENT	PARAMETER	PRESENT	ABSENT	PARAMETER	PRESENT	ABSENT
Color 00080	x		Aluminum 01105	(x)	x	Nickel 01067		x
Turbidity 00070	(x)	x	Antimony 01097		x	Selenium 01147		x
Radioactivity 74050		x	Arsenic 01002		x	Silver 01077		x
Hardness 00900	x		Beryllium 01012		x	Potassium 00937	x	
Solids 00500	x		Barium 01007		x	Sodium 00929	x	
Ammonia 00610		x	Boron 01022		x	Titanium 01152		x
Organic Nitrogen 00605			Cadmium 01027		x	Tin 01102		x
Nitrate 00620		x	Calcium 00916	x		Zinc 01092		x
Nitrite 00615		x	Cobalt 01037		x	Algicides 74051		x
Phosphorus 00665	x		Chromium 01034		x	Oil and Grease 00550		x
Sulfate 00945	x		Copper 01042		x	Phenols 32730	(x)	x
Sulfide 00745		x	Iron 01045	x		Surfactants 38260	(x)	
Sulfite 00740		x	Lead 01051	(x)	x	Chlorinated Hydrocarbons 74052		x
Bromide 71870		x	Magnesium 00927	x		Pesticides 74053		x
Chloride 00940	x		Manganese 01055		x	Fecal Streptococci Bacteria 74054		x
Cyanide 00720		x	Mercury 71900		x	Coliform Bacteria 74056		x
Fluoride 00951		x	Molybdenum 01062		x			

MEN03727

MI 0700X 005 2 710553

24a. Have all known hazardous or potentially hazardous substances in your plant been inventoried?

[X] Yes [ ] No

24b. If yes, have steps been taken to insure that there exists no possibility of any such known hazardous or potentially hazardous substance entering this discharge?

[X] Yes [ ] No

25. Remarks.

The information above completes the basic reporting requirements which are required of all applicants. Those applicants whose discharge results from an activity included within any of the Standard Industrial Classification Code (SIC Code) categories listed below must complete Part A of this form as well.

CRITICAL INDUSTRIAL GROUPS

SIC	098	FISH HATCHERIES, FARMS, AND PRESERVES
SIC	10-14	DIVISION B – MINING
SIC	201	MEAT PRODUCTS
SIC	202	DAIRY PRODUCTS
SIC	203	CANNED PRESERVED FRUITS, VEGETABLES (EXCEPT SEAFOODS, SIC 2031 AND 2036)
SIC	2031, 2036	CANNED AND CURED FISH AND SEAFOODS; FRESH OR FROZEN PACKAGED FISH AND SEAFOODS
SIC	204	GRAIN MILL PRODUCTS
SIC	206	SUGAR
SIC	207	CONFECTIONARY AND RELATED PRODUCTS
SIC	208	BEVERAGES
SIC	209	MISCELLANEOUS FOOD PREPARATIONS AND KINDRED PRODUCTS
SIC	22	TEXTILE MILL PRODUCTS
SIC	23	APPAREL AND OTHER FINISHED PRODUCTS MADE FROM FABRICS AND SIMILAR MATERIALS
SIC	242	SAWMILLS AND PLANING MILLS
SIC	2432	VENEER AND PLYWOOD
SIC	2491	WOOD PRESERVING
SIC	26	PAPER AND ALLIED PRODUCTS
SIC	281	INDUSTRIAL INORGANIC AND ORGANIC CHEMICALS (EXCEPT SIC 2818)
SIC	2818	INDUSTRIAL ORGANIC CHEMICALS
SIC	282	PLASTICS MATERIALS AND SYNTHETIC RESINS, SYNTHETIC RUBBER, SYNTHETIC AND OTHER MAN-MADE FIBERS, EXCEPT GLASS
SIC	283	DRUGS
SIC	284	SOAP, DETERGENTS, AND CLEANING PREPARATIONS, PERFUMES, COSMETICS, AND OTHER TOILET PREPARATIONS
SIC	285	PAINTS, VARNISHES, LACQUERS, ENAMELS, AND ALLIED PRODUCTS
SIC	2871	FERTILIZERS
SIC	2879	AGRICULTURAL PESTICIDES, AND OTHER AGRICULTURAL CHEMICALS, NOT ELSEWHERE CLASSIFIED
SIC	2891	ADHESIVES AND GELATIN
SIC	2892	EXPLOSIVES
SIC	29	PETROLEUM REFINING AND RELATED INDUSTRIES
SIC	3011, 3069	TIRES AND INNER TUBES; FABRICATED RUBBER PRODUCTS, NOT ELSEWHERE CLASSIFIED
SIC	3079	MISCELLANEOUS PLASTICS PRODUCTS
SIC	311	LEATHER TANNING AND FINISHING
SIC	32	STONE, CLAY, GLASS, AND CONCRETE PRODUCTS
SIC	331	BLAST FURNACES, STEEL WORKS, AND ROLLING AND FINISHING MILLS
SIC	332	IRON AND STEEL FOUNDRIES
SIC	333, 334	PRIMARY SMELTING AND REFINING OF NONFERROUS METALS; SECONDARY SMELTING AND REFINING OF NONFERROUS METALS
SIC	336	NONFERROUS FOUNDRIES
SIC	347	COATING, ENGRAVING, AND ALLIED SERVICES
SIC	35	MACHINERY, EXCEPT ELECTRICAL
SIC	36	ELECTRICAL MACHINERY, EQUIPMENT, AND SUPPLIES
SIC	37	TRANSPORTATION EQUIPMENT (EXCEPT SHIP BUILDING AND REPAIRING, SIC 3731)
SIC	3731	SHIP BUILDING AND REPAIRING
SIC	491	ELECTRIC COMPANIES AND SYSTEMS
SIC	493	COMBINATION COMPANIES AND SYSTEMS

MEN03728

PART A

(Note: Submission of Part A is required of all applicants whose processes are listed on page 3 above.)

(Office use only)
MI C 7.0 0 X S 2 7 1 0 5 5 3

Discharge Serial No. 005

INFORMATION REQUIRED OF SPECIFIED INDUSTRIES

PARAMETER AND CODE	Intake (1) DAILY AVG. CONCENTRATION UNTREATED INTAKE WATER	Intake (2) DAILY AVG. CONCENTRATION TREATED INTAKE WATER	Discharge (3) MAXIMUM CONCENTRATION PER PROCESS UNIT	Discharge (4) MAXIMUM POUNDS PER DAY	Discharge (5) DAILY AVG. CONCENTRATION	Discharge (6) AVERAGE POUNDS PER DAY	Discharge (7) SAMPLE TYPE	Discharge (8) SAMPLE FREQUENCY	Discharge (9) METHOD OF ANALYSIS	Discharge (10) CONTINUOUS MONITORING	Discharge (11)
ALKALINITY (as $CaCO_3$) 00410	308	No	a	a	a	292 (356)	194 (759)	COMP (comp)	OTHER (other)	STA	ABS
B.O.D. 5-DAY 00310	10	TR	~~—~~ 755	"	~~—~~ 1,673	7 (300)	~~5~~ (~~640~~) 746	AVE (AVE)	WKLY (DYLY)	NDAR	ABS
CHEMICAL OXYGEN DEMAND (C.O.D.) 00340	48	EA	"	"	"	36 (2220)	24 (4733)	COMP (COMP)	OTHER (OTHER)	ME	ABS
TOTAL SOLIDS 00500	510	TM	4,000		9,496	~~500~~ (1193)	~~333~~ (~~2543~~) 4,314	AVE. (AVE)	WKLY (DYLY)	THOD	ABS
TOTAL DISSOLVED SOLIDS 70300	508	EN	"	"	"	455 (1000)	303 (2132)	AVE (AVE)	WKLY (DYLY)	S	ABS
TOTAL SUSPENDED SOLIDS 00530	2	T	~~—~~ 555	"	~~—~~ 1,187	~~11~~ (93)	~~7~~ (~~1277~~) 160	AVE (AVE)	WKLY (DYLY)		ABS
TOTAL VOLATILE SOLIDS 00505	306		"	"	"	390 (990)	260 (2111)	COMP (Comp)	OTHER (OTHER)		ABS
AMMONIA (as N) 00610	3.80		"	"	"	3.80 (0.00)	2.5 (0)	COMP (COMP)	OTHER (OTHER)		ABS
KJELDAHL NITROGEN 00625	5.30		"	"	"	5.30 (8.0)	11.3 (17)	COMP (COMP)	OTHER (OTHER)		ABS
NITRATE (as N) 00620	1.55		"	"	"	1.55 (0.50)	1 (1)	COMP (Comp)	OTHER (OTHER)		ABS
PHOSPHORUS TOTAL (as P) 00665	0.05		"	"	"	0.01 (0.6)	0.01 (1.3)	COMP (COMP)	OTHER (OTHER)	ABS	

579C

MEN03729

NOTES TO DISCHARGE 005

Item 22

a. Not enough data have been compiled on a year around basis to provide accurate data. Values given are based on one test or are estimated.

Item 23

Check in parenthesis are for combined flows.

Part A

a. Not enough tests have been made on ayear around basis to provide accurate data.

b. OTHER-- Yearly Test.

MEN03730

MI 0700X5 2 710553

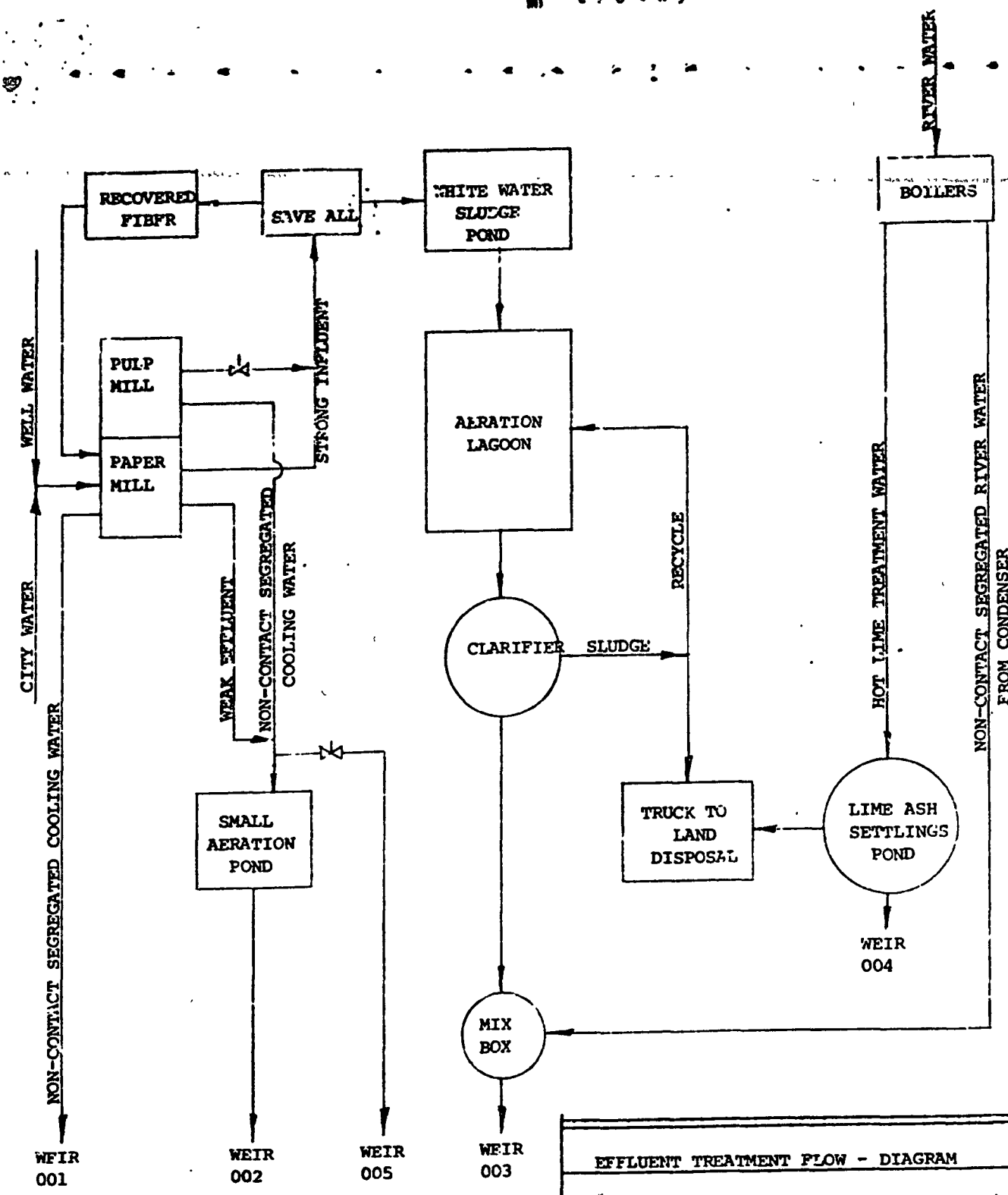

EFFLUENT TREATMENT FLOW - DIAGRAM

Name of Applicant: Menasha Corporation

Application No: MI 0700X5-2-710553

Discharge Serial No.(s): 001 - 005

DATE: 8/22/72

5798

MEN03731

0 7 0 9 X 5 2 7 1 0 5 5 3

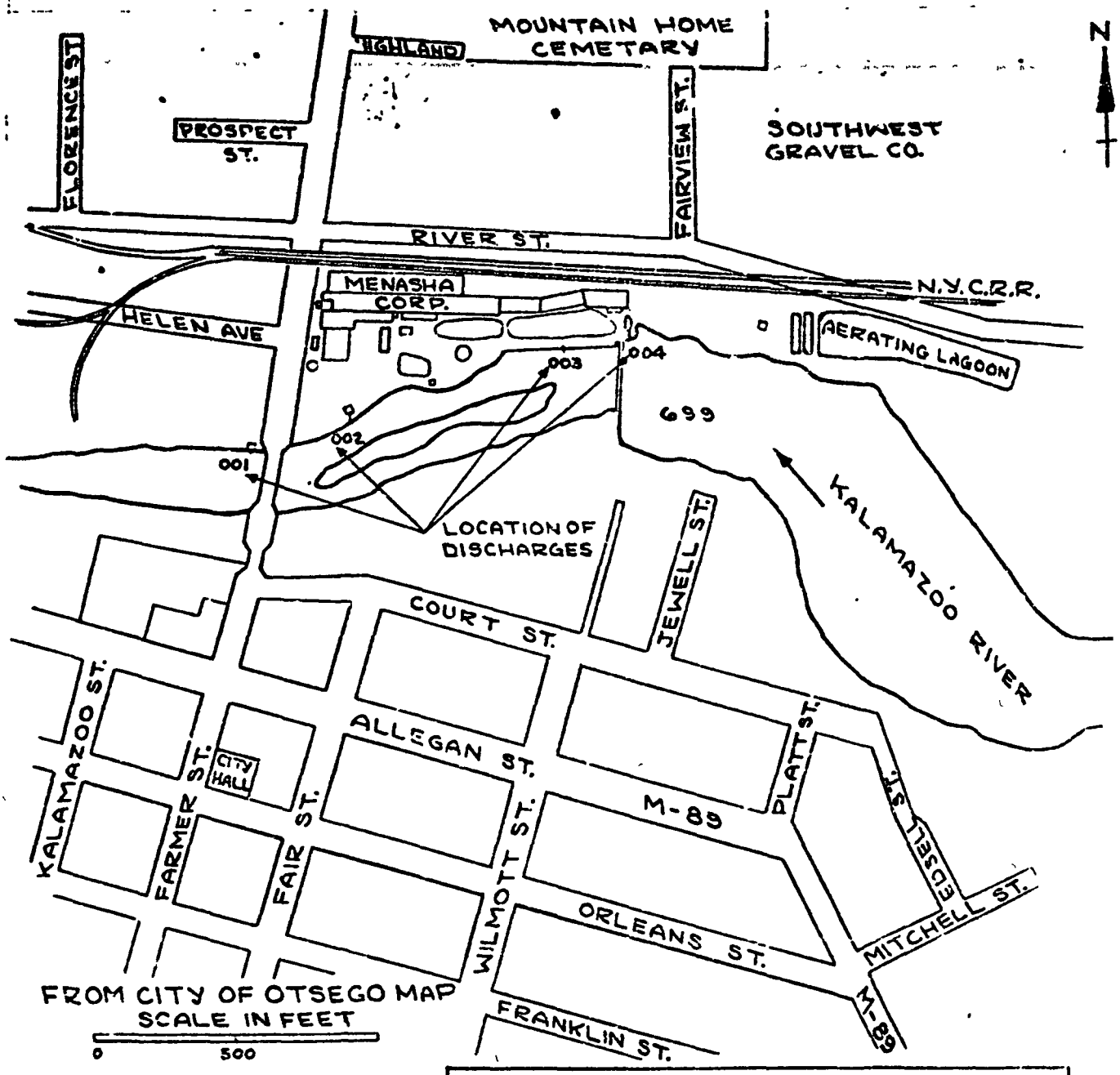

LOCATION OF DISCHARGES

IN KALAMZOO RIVER

AT OTSEGO

COUNTY OF ALLEGAN, STATE OF MICHIGAN

APPLICATION BY MENASHA CORP

SHEET 1 OF 5 JUNE 23, 1971 DATE

5799

MEN03732

501

0700X5 2 710553

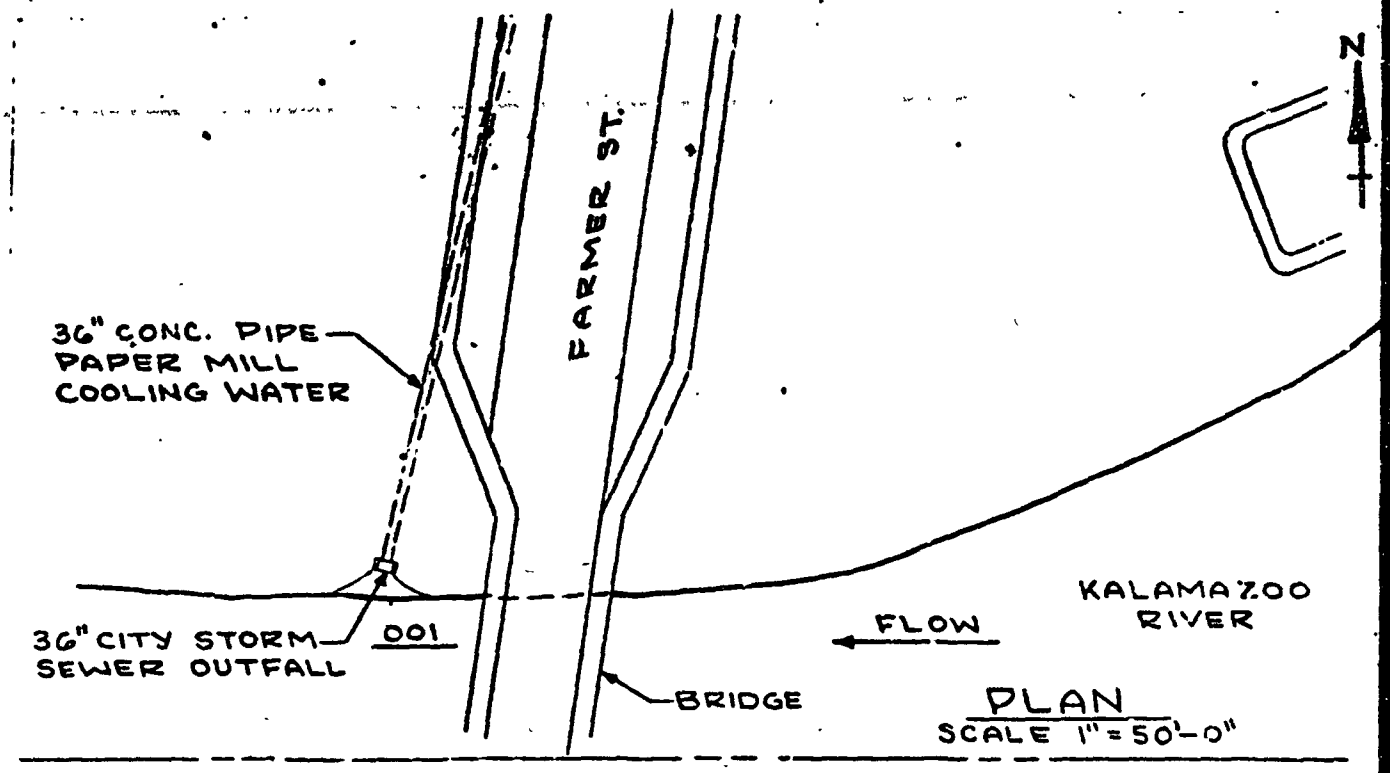

PLAN
SCALE 1" = 50'-0"

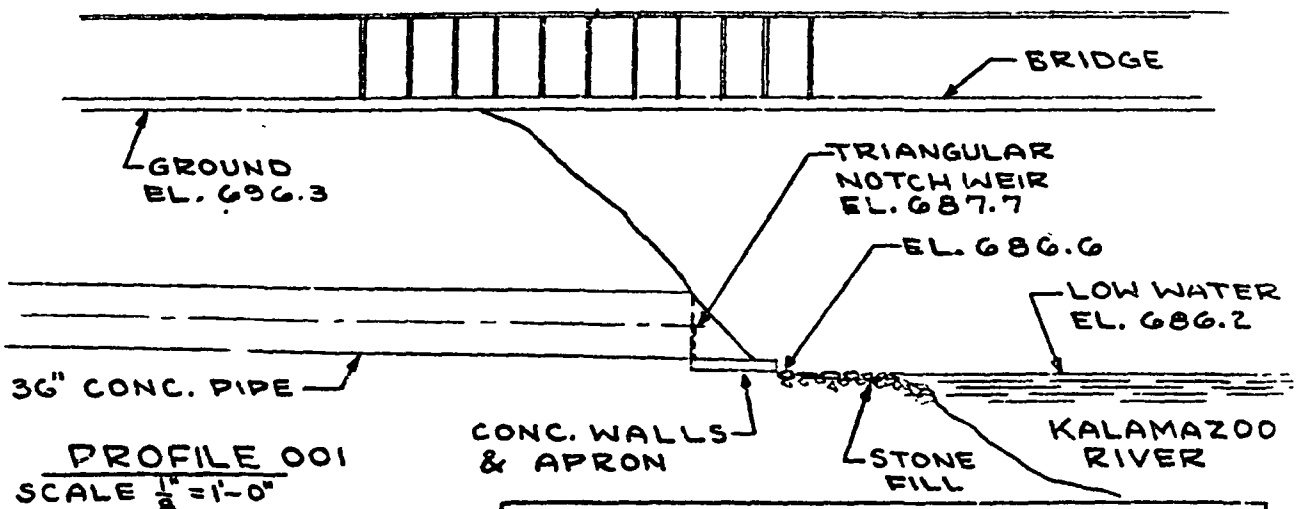

PROFILE 001
SCALE $\frac{1}{8}$" = 1'-0"

• OUTFALL & DISCHARGE

IN KALAMZOO RIVER
AT OTSEGO
COUNTY OF ALLEGAN, STATE OF MICHIGAN
APPLICATION BY MENASHA CORP
SHEET 2 OF 5 JUNE 23, 1971 DATE

5800

MEN03733

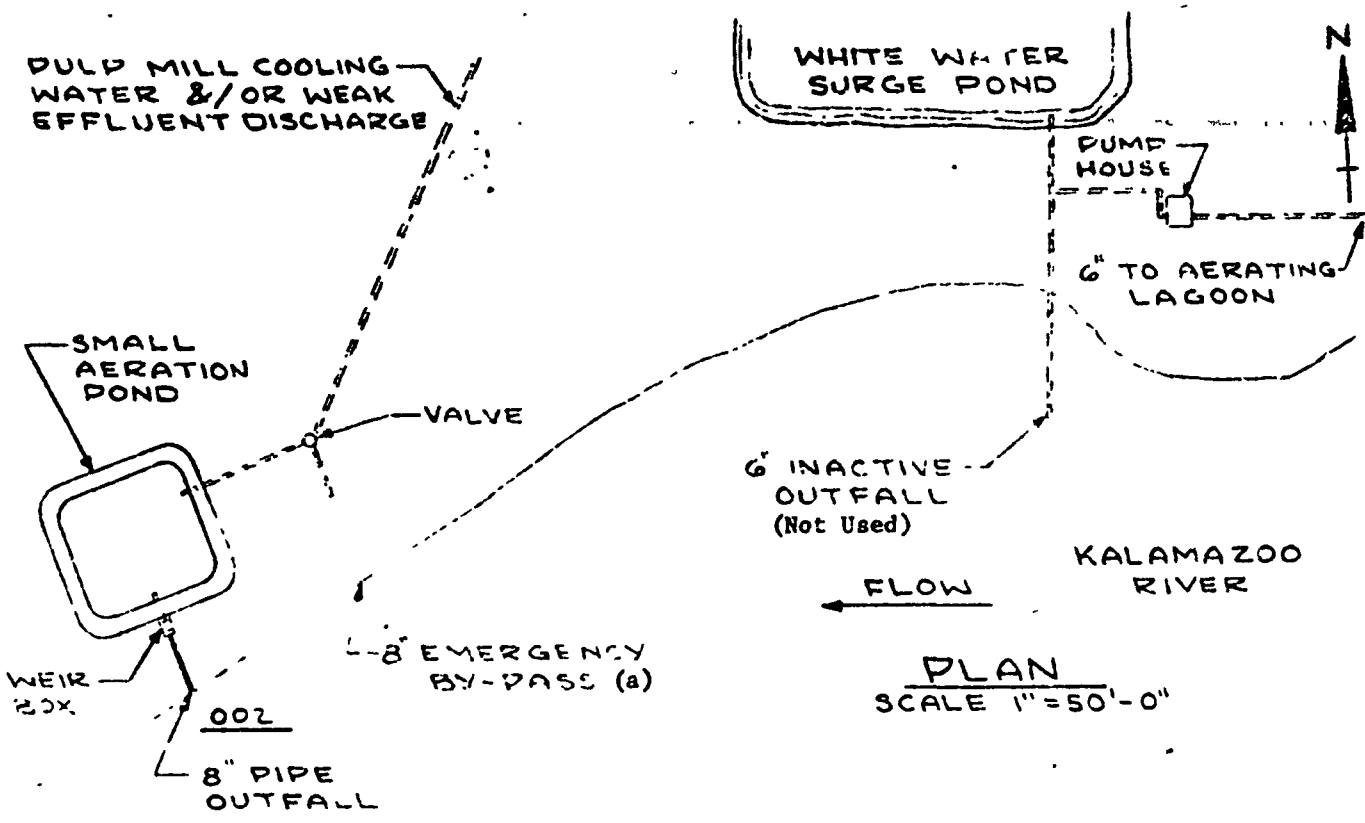

PLAN
SCALE 1" = 50'-0"

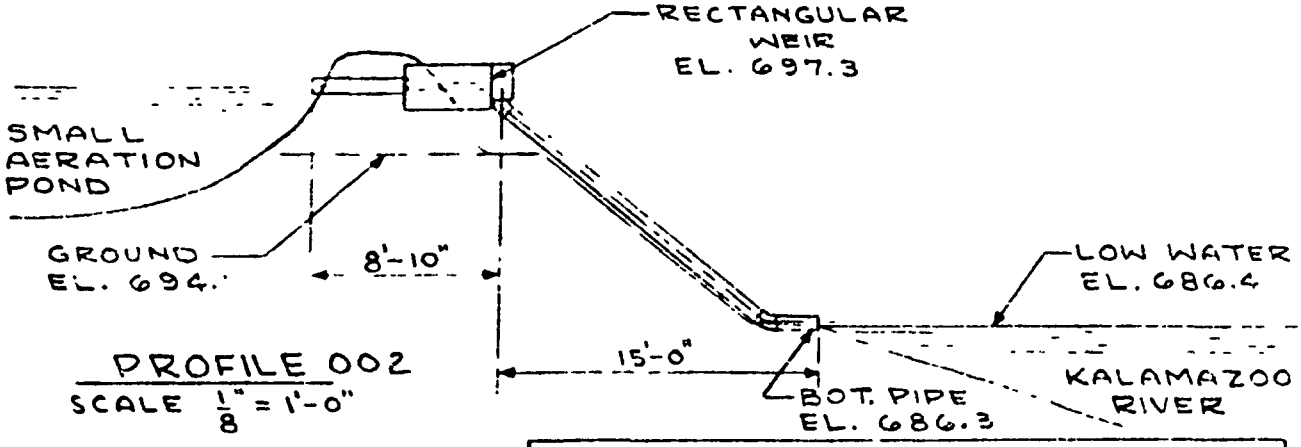

PROFILE 002
SCALE $\frac{1}{8}$" = 1'-0"

(a) Used only when small aeration pond is down for repairs.

OUTFALL & DISCHARGE

IN KALAMZOO RIVER
AT OTSEGO
COUNTY OF ALLEGAN, STATE OF MICHIGAN
APPLICATION BY MENASHA CORP
SHEET 3 OF 5 JUNE 23, 1971 DATE

MEN03734

0700X5 2 710553

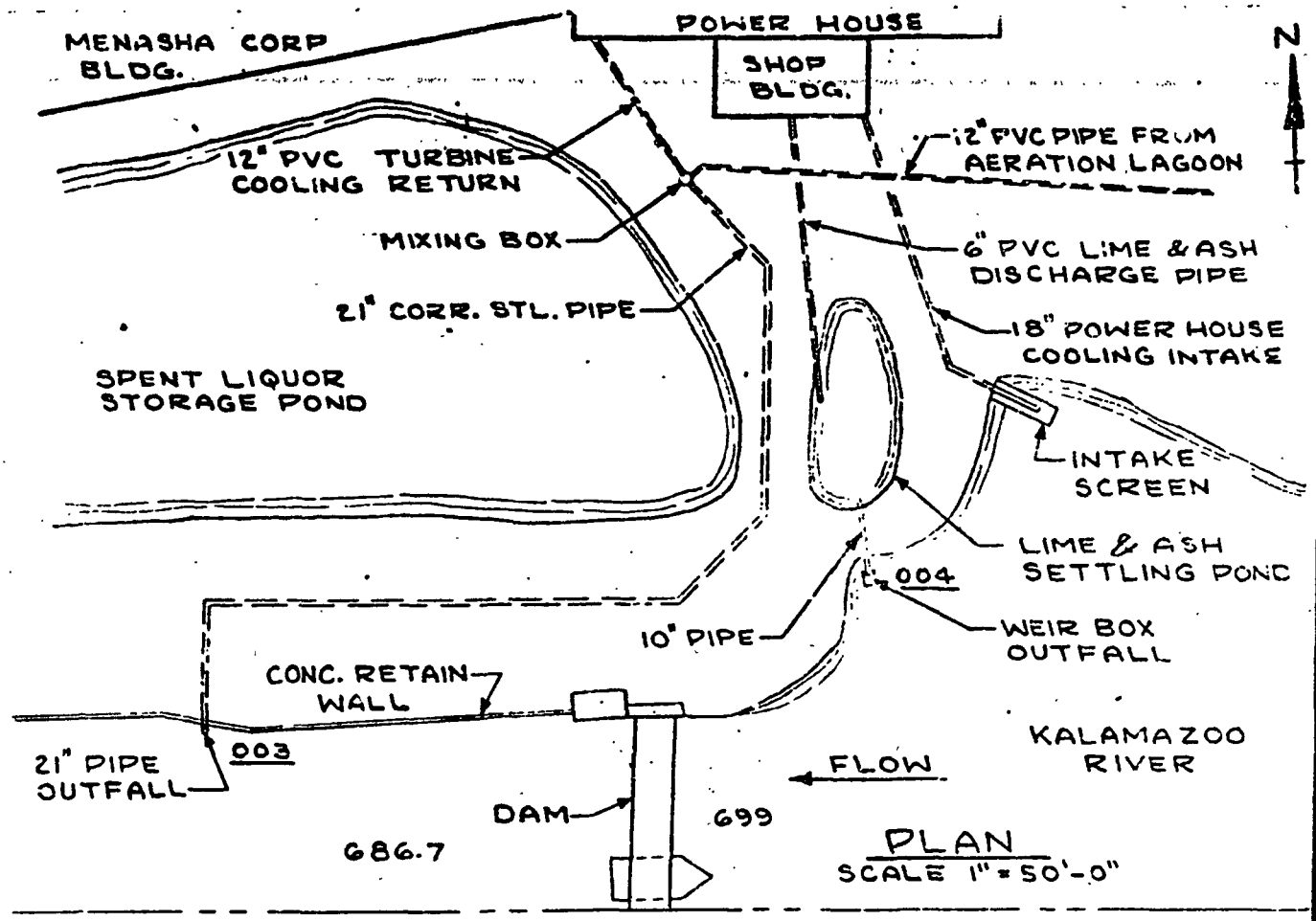

PLAN
SCALE 1" = 50'-0"

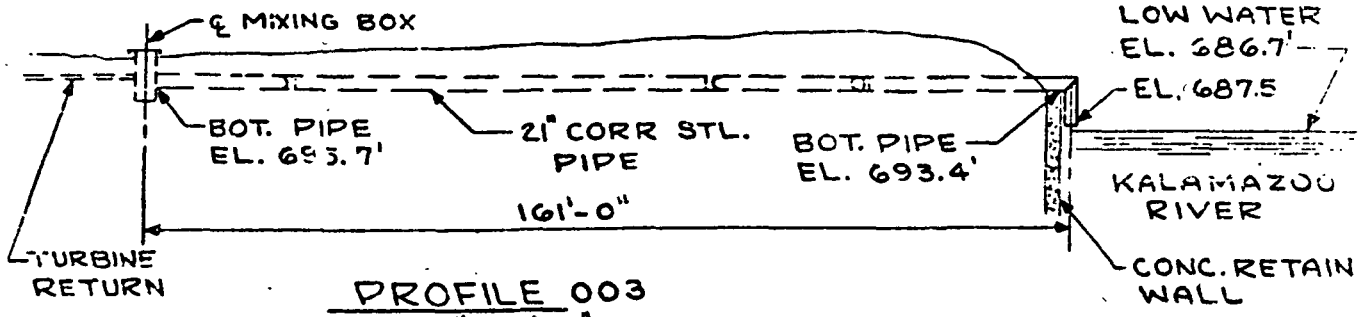

PROFILE 003
SCALE 1" = 20'-0"

OUTFALL & DISCHARGE

IN KALAMZOO RIVER
AT OTSEGO
COUNTY OF ALLEGAN, STATE OF MICHIGAN
APPLICATION BY MENASHA CORP
SHEET 4 OF 5 JUNE 23, 1971 DATE

5802

MEN03735

M 0100X5 2 710553

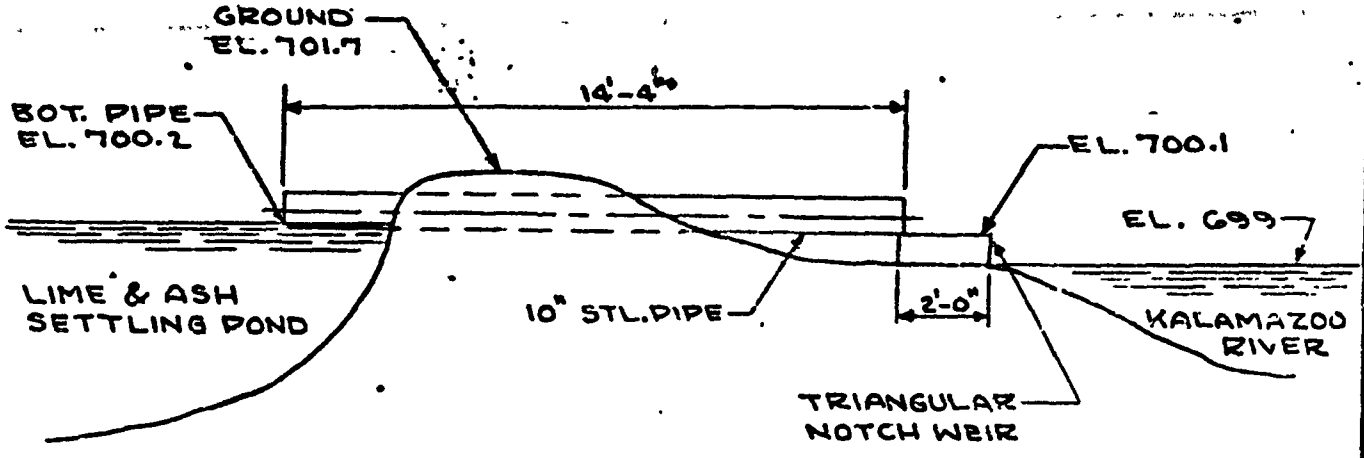

PROFILE 004
SCALE $\frac{1}{4}$" = 1'-0"

OUTFALL & DISCHARGE

IN KALAMZOO RIVER
AT OTSEGO
COUNTY OF ALLEGAN, STATE OF MICHIGAN
APPLICATION BY MENASHA CORP
SHEET 5 OF 5 JUNE 23, 1971 DATE

5803

MEN03736

M 0700X5 2 710553 6

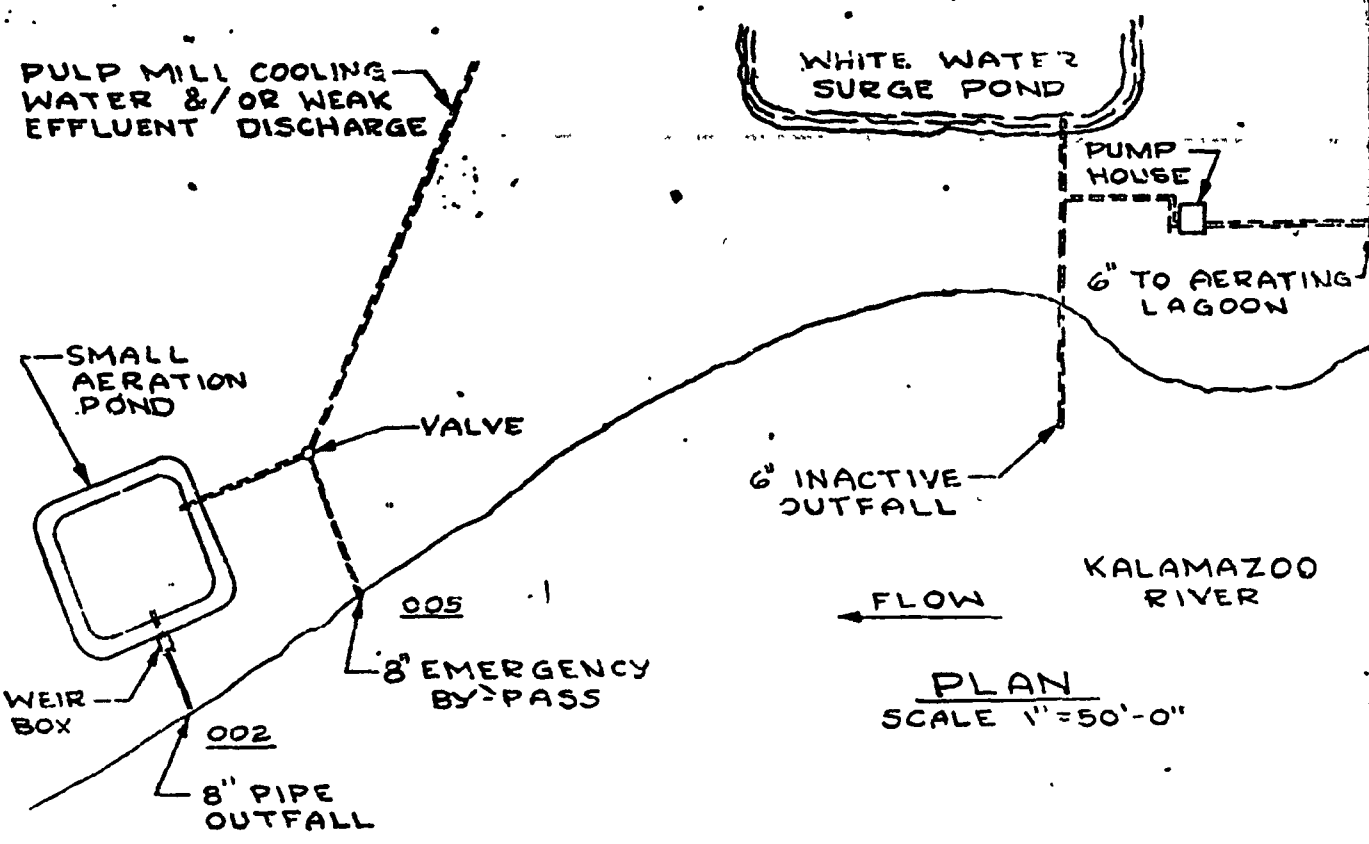

PLAN
SCALE 1" = 50'-0"

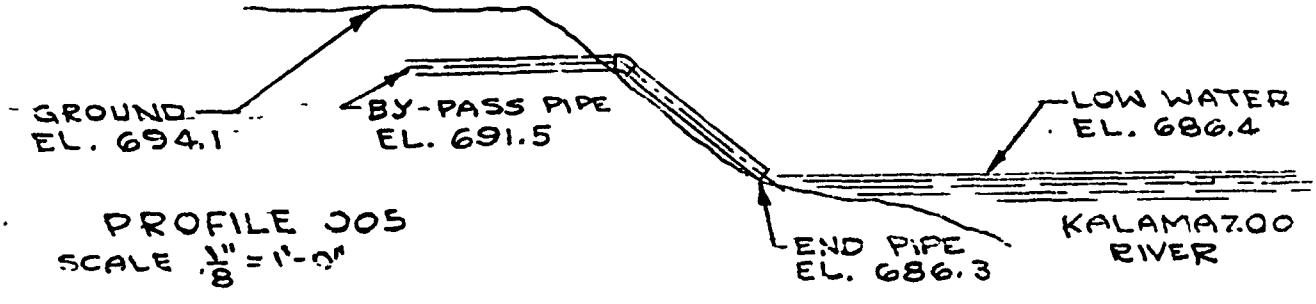

PROFILE 005
SCALE 1/8" = 1'-0"

OUTFALL & DISCHARGE
IN KALAMAZOO RIVER
AT OTSEGO
COUNTY OF ALLEGAN, STATE OF MICHIGAN
APPLICATION BY MENASHA CORP
SHEET 6 AUGUST 18, 1972

5804

MEN03737

71835

0700X5 2 710553

PART B. DISCHARGE DESCRIPTION

"I certify that I am familiar with the information contained in the completed Part B of this application, and that to the best of my knowledge and belief such information is true, complete and accurate".

R. L. Johnson

R. L. Johnson

070-0X5-2-710553
Application No.

5805

MEN03738

PART B DISCHARGE DESCRIPTION

(Note: Submission of Part B is required of all applicants who are also required to submit Part A. Only those parameters specifically indicated in the instructions are to be reported by a particular industry)

(Office use only)
MI 070-0X5-2-710553

Discharge Serial No.
001

B-1. PHYSICAL AND BIOLOGICAL PARAMETERS OF INTAKE WATER AND DISCHARGE (See Table B-1)

Intake		Discharge					
PARAMETER AND CODE	(1) UNTREATED INTAKE WATER	(2) TREATED INTAKE WATER	(3) AVERAGE (DAILY)	(4) MINIMUM (OPERATING YEAR)	(5) MAXIMUM (OPERATING YEAR)	(6) SAMPLE FREQUENCY	(7) CONTINUOUS MONITORING
COLOR 00080	100		100		a	0	A
SPECIFIC CONDUCTANCE 00095	615		615	a	700[b]	0	A
TURBIDITY 00070							
FECAL STREPTOCOCCI BACTERIA 74054							
FECAL COLIFORM BACTERIA 74055							
TOTAL COLIFORM BACTERIA 74056	[b] 23,000		[b] 43,000		a	0	A

Remarks:

a Not enough data have been collected on a year around basis to accurately estimate.

b Based on limited number of tests.

MEN03739

PART B

(Office use only)
MI 070-0X5-2-710553

Discharge Serial No.
001

B-2. CHEMICAL PARAMETERS OF INTAKE WATER AND DISCHARGE (See Table B-2)

PARAMETER AND CODE	Intake: UNTREATED INTAKE WATER (1)	Intake: TREATED INTAKE WATER (2)	Discharge: MAXIMUM CONCENTRATION (3)	Discharge: MAXIMUM POUNDS PER DAY PER PROCESS UNIT (4)	Discharge: MAXIMUM POUNDS PER DAY (5)	Discharge: DAILY AVG. CONCENTRATION (6)	Discharge: AVERAGE POUNDS PER DAY (7)	Discharge: SAMPLE TYPE (8)	Discharge: SAMPLE FREQUENCY (9)	Discharge: METHOD OF ANALYSIS (10)	Discharge: CONTINUOUS MONITORING (11)
ACIDITY (as $CaCO_3$) 00435											
TOTAL ORGANIC CARBON (T.O.C.) 00680	12		a	a	a	12	20	C	O	S	A
TOTAL HARDNESS 00900	310		388[b]	970	970	292	486	C	O	S	A
NITRITE (as N) 00615											
ORGANIC NITROGEN 00605	0.5		a	a	a	0.5[b]	0.8	C	O	S	A
PHOSPHORUS-ORTHO (as P) 70507											
SULFATE 00945	20		60[b]	150	150	20	33	C	O	S	A
SULFIDE 00745											
SULFITE 00740	<1		a	a	a	<1	<2	C	O	S	A
BROMIDE 71870	c	c	c	c	c	c	c	C	O	S	A

ENG FORM 4345-1
JUN 71

5867

MEN03740

PART B

(Office use only)
MI 070-0X5-2-710553

Discharge Serial No.
001

B-2. (cont.) CHEMICAL PARAMETERS OF INTAKE WATER AND DISCHARGE (See Table B-2)

Intake	Discharge										
PARAMETER AND CODE	UNTREATED INTAKE WATER (1)	TREATED INTAKE WATER (2)	MAXIMUM CONCENTRATION (3)	MAXIMUM POUNDS PER DAY PER PROCESS UNIT (4)	MAXIMUM POUNDS PER DAY (5)	DAILY AVG. CONCENTRATION (6)	AVERAGE POUNDS PER DAY (7)	SAMPLE TYPE (8)	SAMPLE FREQUENCY (9)	METHOD OF ANALYSIS (10)	CONTINUOUS MONITORING (11)
CHLORIDE 00940	26		65 b	162	162	26	43	C	O	S	A
CYANIDE 00720											
FLUORIDE 00951											
ALUMINUM-TOTAL 01105											
ANTIMONY-TOTAL 01097											
ARSENIC-TOTAL 01002											
BARIUM TOTAL 01007											
BERYLLIUM-TOTAL 01012											
BORON-TOTAL 01022											
CADMIUM-TOTAL 01027											

ENG FORM JUN 71 4345-1

5808

MEN03741

PART B.

(Office use only)
MI 070-OX-2-710553
M 0 7 0 0 X 5 2 7 1 0 5 5 3

Discharge Serial No. 001

2. (cont.) CHEMICAL PARAMETERS OF INTAKE WATER AND DISCHARGE (See Table B-2)

Intake			Discharge								
PARAMETER CODE	UNTREATED INTAKE WATER (1)	TREATED INTAKE WATER (2)	MAXIMUM CONCENTRATION (3)	MAXIMUM POUNDS PER DAY PER PROCESS UNIT (4)	MAXIMUM POUNDS PER DAY (5)	DAILY AVG. CONCENTRATION (6)	AVERAGE POUNDS PER DAY (7)	SAMPLE TYPE (8)	SAMPLE FREQUENCY (9)	METHOD OF ANALYSIS (10)	CONTINUOUS MONITORING (11)
CALCIUM-TOTAL 16	84		a	a	a	84	140	C	O	S	A
CHROMIUM-TOTAL 34	<50		a	a	a	<50	<0.083	C	O	S	A
COPPER-TOTAL 37											
IRON-TOTAL 2	<50		a	a	a	<50	<0.083	C	O	S	A
LEAD-TOTAL 5	1.1		2.5[b]	6	6	1.1	0.002	C	O	S	A
NICKEL-TOTAL 9	<10		a	a	a	<10	<0.017	C	O	S	A
MAGNESIUM-TOTAL 7	25		28[b]	70	70	25	42	C	O	S	A
MANGANESE-TOTAL	150		a	a	a	150	0.250	C	O	S	A
MERCURY-TOTAL	<1		a	a	a	<1	<0.002	C	O	S	A
CADMIUM-TOTAL											

4345-1

REVISED: 8/9/72 5809

MEN03742

PART B

(Office use only) 070-0X5-2-710553

MI 0700X5 2 710553

Discharge No. 001

2 (cont.) **CHEMICAL PARAMETERS OF INTAKE WATER AND DISCHARGE (See Table B-2)**

Intake	Discharge										
PARAMETER AND CODE	UNTREATED INTAKE WATER (1)	TREATED INTAKE WATER (2)	MAXIMUM CONCENTRATION (3)	MAXIMUM POUNDS PER DAY PER PROCESS UNIT (4)	MAXIMUM POUNDS PER DAY (5)	DAILY AVG. CONCENTRATION (6)	AVERAGE POUNDS PER DAY (7)	SAMPLE TYPE (8)	SAMPLE FREQUENCY (9)	METHOD OF ANALYSIS (10)	CONTINUOUS MONITORING (11)
ICKEL TOTAL [illegible]	<50		a	a	a	<50	<0.083	C	O	S	A
OTASSIUM-TOTAL [illegible]037	3.6		a	a	a	3.6	6.0				
LENIUM-TOTAL [illegible]147											
LVER-TOTAL [illegible]077											
DIUM-TOTAL [illegible]	0.4		a	a	a	0.4	0.7	C	O	S	A
ALLIUM-TOTAL [illegible]											
[illegible]OTAL [illegible]											
[illegible]IUM-TOTAL [illegible]											
TOTAL	50		a	a	a	50	0.083				
D GREASE											

5810

MEN03743

PART B

(Office use only)

NPDES 070-0X5-2-710553

Discharge Serial No. 001

B-2. (cont.) **CHEMICAL PARAMETERS OF INTAKE WATER AND DISCHARGE (See Table B-2)**

PARAMETER AND CODE	Intake: UNTREATED INTAKE WATER (1)	Intake: TREATED INTAKE WATER (2)	Discharge: MAXIMUM CONCENTRATION (3)	Discharge: MAXIMUM POUNDS PER DAY PER PROCESS UNIT (4)	Discharge: MAXIMUM POUNDS PER DAY (5)	Discharge: DAILY AVG. CONCENTRATION (6)	Discharge: AVERAGE POUNDS PER DAY (7)	Discharge: SAMPLE TYPE (8)	Discharge: SAMPLE FREQUENCY (9)	Discharge: METHOD OF ANALYSIS (10)	Discharge: CONTINUOUS MONITORING (11)
PHENOLS 32730	5		a	a	a	5	0.008	C	O	S	A
SURFACTANTS 38260											
ALGICIDES* 74051											
CHLORINATED HYDROCARBONS* (EXCEPT PESTICIDES) 74052											
PESTICIDES* 74053											

*Name specific compound(s) and fill in the required data for each. Use extra blanks at the end of the form and the "Remarks" space as necessary.

a Not enough data have been compiled on a year around basis to accurately estimate.
b Based on limited number of tests.
c Due to color interference, standard test could not be applied.
d Tests in progress and will be reported at a later date.
e Sample frequency. Each test represents results from tests on one to three samples.

PART B DISCHARGE DESCRIPTION

(Note: Submission of Part B is required of all applicants who are also required to submit Part A. Only those parameters specifically indicated in the instructions are to be reported by a particular industry)

(Office use only)
MI 070-0X5-2-71055

Discharge Serial No. 002

B-1. PHYSICAL AND BIOLOGICAL PARAMETERS Or INTAKE WATER AND DISCHARGE (See Table 3-1)

Intake	Discharge						
PARAMETER AND CODE	UNTREATED INTAKE WATER (1)	TREATED INTAKE WATER (2)	AVERAGE (DAILY) (3)	MINIMUM (OPERATING YEAR) (4)	MAXIMUM (OPERATING YEAR) (5)	SAMPLE FREQUENCY (6)	CONTINUOUS MONITORING (7)
COLOR 00080	100		100 (a)		b (a)	d O	A
SPECIFIC CONDUCTANCE 00095	615		615 (695)	b (b)	b (b)	d O	A
TURBIDITY 00070							
FECAL STREPTOCOCCI BACTERIA 74054							
FECAL COLIFORM BACTERIA 74055							
TOTAL COLIFORM BACTERIA 74056	c 23,000		c 43,000 c (23,000)		b (b)	d O	A

NOTE: Data given in parenthesis in B-1 and B-2 represent the properties of the combined flow. The combined flow system would normally be used less than 30 days a year.

Remarks:

a Color of combined flow does not conform to test.

b Not enough data have been compiled on a year around basis to accurately estimate.

c Based on limited data.

Results represent tests on one to three samples.

MEN03745

PART B

(Office use only)
MI 070-0X5-2-710553

Discharge Serial No.
002

2. CHEMICAL PARAMETERS OF INTAKE WATER AND DISCHARGE (See Table B-2)

ake	Discharge										
RAMETER ID CODE	UNTREATED INTAKE WATER (1)	TREATED INTAKE WATER (2)	MAXIMUM CONCENTRATION (3)	MAXIMUM POUNDS PER DAY PER PROCESS UNIT (4)	MAXIMUM POUNDS PER DAY (5)	DAILY AVG. CONCENTRATION (6)	AVERAGE POUNDS PER DAY (7)	SAMPLE TYPE (8)	SAMPLE FREQUENCY (9)	METHOD OF ANALYSIS (10)	CONTINUOUS MONITORING (11)
IDITY (as $CaCO_3$) 135											
TAL ORGANIC RBON (T.O.C.) 680	12		a (a)	a (a)	a (a)	12 (390)	8.0 (831)	C	O	S	A
TAL RDNESS 900											
TRITE (as N) 615											
IGANIC NITROGEN 605	0.5		a (a)	a (a)	a (a)	0.5 (3.0)	0.3 (6.4)	C	O	S	A
OSPHORUS-ORTHO P) 507											
ILFATE 945	20		60[b] (a)	50 (a)	50 (a)	20 (10)	13 (21)	C	O	S	A
ILFIDE 745											
ILFITE 740	<1		a (a)	a (a)	a (a)	<1 (1)	<1 (2)	C	O	S	A
OM 70	c	c	c	c	c	c	c	C	O	S	A

FORM 4345-1
IN 71

5813

MEN03746

PART B

(Office use only) NI 070-0X5-2-710553
NI 0700X5 2 710553

Discharge Serial No 002

ont.) CHEMICAL PARAMETERS OF INTAKE WATER AND DISCHARGE (See Table B-2)

	Discharge										
	TREATED INTAKE WATER	TREATED INTAKE WATER	MAXIMUM CONCENTRATION	MAXIMUM POUNDS PER DAY PER PROCESS UNIT	MAXIMUM POUNDS PER DAY	DAILY AVG. CONCENTRATION	AVERAGE POUNDS PER DAY	SAMPLE TYPE	SAMPLE FREQUENCY	METHOD OF ANALYSIS	CONTINUOUS MONITORING
TER DE	(1)	(2)	(3)	(4)	(5)	(6)	(7)	(8)	(9)	(10)	(11)
DE	26		65[b] (a)	54 (a)	54 (a)	26 (26)	17 (17)	C	O	S	A
E											
DE											
UM-TOTAL	< 50		a (a)	a (a)	a (a)	< 50 (4730)	< 0.03 (10)	C	O	S	A
NY-TOTAL											
-TOTAL											
TOTAL											
IUM-TOTAL											
TOTAL											
M-T											

4345-1

REVISED: 8/9/72 5814

MEN03747

PART B

(Office use only)
MI 070-0X5-2-710553
070 0X5 2 710553
Discharge Serial No. 002

B-2. (cont.) CHEMICAL PARAMETERS OF INTAKE WATER AND DISCHARGE (See Table B-2)

Intake	Discharge										
UNTREATED INTAKE WATER	TREATED INTAKE WATER	MAXIMUM CONCENTRATION	MAXIMUM POUNDS PER DAY PER PROCESS UNIT	MAXIMUM POUNDS PER DAY	DAILY AVG. CONCENTRATION	AVERAGE POUNDS PER DAY	SAMPLE TYPE	SAMPLE FREQUENCY	METHOD OF ANALYSIS	CONTINUOUS MONITORING	
PARAMETER AND CODE	(1)	(2)	(3)	(4)	(5)	(6)	(7)	(8)	(9)	(10)	(11)
CALCIUM-TOTAL 0916	84		a (a)	a (a)	a (a)	84 (100)[b]	56 213	C	O	S	A
CHROMIUM-TOTAL 1034	<50		a (a)	a (a)	a (a)	<50 (<50)	<0.033 (0.11)	C	O	S	A
COBALT 1037											
COPPER-TOTAL 1042	<50		a (a)	a (a)	a (a)	<50 (<50)	<0.033 (<0.11)	C	O	S	A
IRON TOTAL 1045	1.1		a (a)	a (a)	a (a)	3400 (1500)	2.3 (3.2)				
LEAD TOTAL 1051	<10		a (a)	a (a)	a (a)	<10 (41)	<0.007 (0.087)	C	O	S	A
MAGNESIUM-TOTAL 1027											
MANGANESE-TOTAL 1055											
MERCURY TOTAL [illegible]	<1		a (a)	a (a)	a (a)	<1 (1)	<0.0007 (0.002)	C	O	S	A
MOLYBDENUM-TOTAL [illegible]											

[1] 4345-1

5815

REVISED: 8/9/72

MEN03748

PART B

(Office use only)
MI 073-0X5-2-710553
MI 0 7 0 0 X 5 2 7 1 0 5 5 3

Discharge Outfall No. 002

B-2. (cont.) CHEMICAL PARAMETERS OF INTAKE WATER AND DISCHARGE (See Table B-2)

Intake			Discharge								
PARAMETER AND CODE	UNTREATED INTAKE WATER (1)	TREATED INTAKE WATER (2)	MAXIMUM CONCENTRATION (3)	MAXIMUM POUNDS PER DAY PER PROCESS UNIT (4)	MAXIMUM POUNDS PER DAY (5)	DAILY AVG CONCENTRATION (6)	AVERAGE POUNDS PER DAY (7)	SAMPLE TYPE (8)	SAMPLE FREQUENCY (9)	METHOD OF ANALYSIS (10)	CONTINUOUS MONITORING (11)
NICKEL TOTAL 01067	<50		a	a	a	<50 (<50)	<0.003 (<0.107	C	O	S	A
POTASSIUM-TOTAL 00937	3.6		a	a	a	3.6 (10.1)	2.4 (21.5)	C	O	S	A
SELENIUM-TOTAL 01147											
SILVER-TOTAL 01077											
SODIUM-TOTAL 00929	0.4		a (a)	a (a)	a (a)	0.4 (192)	0.3 (409)	C	O	S	A
THALLIUM TOTAL 01059											
TIN-TOTAL 01102											
TITANIUM-TOTAL 01152											
ZINC TOTAL 01092	50		a (a)	a (a)	a (a)	50 (54)	0.033 (0.12)	C	O	S	A
OIL AND GREASE 00556											

MEN03749

PART B

(Office use only)
MI 070-0X5-2-710553

Discharge Serial No.
002

B-2. (cont.) **CHEMICAL PARAMETERS OF INTAKE WATER AND DISCHARGE** (See Table B-2)

Intake	Discharge										
PARAMETER AND CODE	UNTREATED INTAKE WATER (1)	TREATED INTAKE WATER (2)	MAXIMUM CONCENTRATION (3)	MAXIMUM POUNDS PER DAY PER PROCESS UNIT (4)	MAXIMUM POUNDS PER DAY (5)	DAILY AVG. CONCENTRATION (6)	AVERAGE POUNDS PER DAY (7)	SAMPLE TYPE (8)	SAMPLE FREQUENCY (9)	METHOD OF ANALYSIS (10)	CONTINUOUS MONITORING (11)
PHENOLS 32730	5		a (a)	a (a)	a (a)	5 (69)	0.003 (0.15)	C	O	S	A
SURFACTANTS 38260											
ALGICIDES* 74051											
CHLORINATED HYDROCARBONS* (EXCEPT PESTICIDES) 74052											
PESTICIDES* 74053											
Alkalinity[e] 00410	308		a (a)	a (a)	a (a)	292 (280)	194 (597)	C	O	S	A

*Name specific compound(s) and fill in the required data for each. Use extra blanks at the end of the form and the "Remarks" space as necessary.

a Not enough data have been compiled on a year around basis to correctly estimate.
b Based on limited number of tests or data.
c Due to color interference, standard test could not be applied.
d Tests in progress and results will be reported at a later date.
e Correction to Part A. Data originally reported in error.

ENG FORM 4345-1
JUN 71

5817

MEN03750

PART B

(Office use only)
mI 070-0X5-2-710553

AERATION POND EFFLUENT

Discharge Serial No. 003

B-2. CHEMICAL PARAMETERS OF INTAKE WATER AND DISCHARGE (See Table B-2)

Intake	Discharge										
PARAMETER AND CODE	UNTREATED INTAKE WATER (1)	TREATED INTAKE WATER (2)	MAXIMUM CONCENTRATION (3)	MAXIMUM POUNDS PER DAY PER PROCESS UNIT (4)	MAXIMUM POUNDS PER DAY (5)	DAILY AVG. CONCENTRATION (6)	AVERAGE POUNDS PER DAY (7)	SAMPLE TYPE (8)	SAMPLE FREQUENCY (9)	METHOD OF ANALYSIS (10)	CONTINUOUS MONITORING (11)
ACIDITY (as $CaCO_3$) 00435											
TOTAL ORGANIC CARBON (T.O.C.) 00680	12		a	a	a	2880	17,418	C	O	S	A
[illegible] HARDNESS 00[illegible]											
NITRITE (as N) 00615											
ORGANIC NITROGEN 00605	0.0		a	a	a	22.1	134	C	O	S	A
PHOSPHORUS-ORTHO (as P) 70507											
SULFATE 00945	20		a	a	a	17	103	C	O	S	A
SULFIDE 00745	0.1		a	a	a	95	575	C	O	S	A
SULFITE 00740	<1		a	a	a	6	36	C	O	S	A
IO[illegible] 870[illegible]	b		b	b	b	b	c	C	O	S	A

FORM 4345-1 (71)

5818

MEN03751

PART B

(Office use only)
MX 070-0X5-2-710553
M 0 7 0 0 X 5 2 7 1 0 5 5 3

Discharge Serial No. 003

B-2. (cont.) CHEMICAL PARAMETERS OF INTAKE WATER AND DISCHARGE (See Table B-2)

PARAMETER AND CODE	Intake: UNTREATED INTAKE WATER (1)	Intake: TREATED INTAKE WATER (2)	Discharge: MAXIMUM CONCENTRATION (3)	Discharge: MAXIMUM POUNDS PER DAY PER PROCESS UNIT (4)	Discharge: MAXIMUM POUNDS PER DAY (5)	Discharge: DAILY AVG. CONCENTRATION (6)	Discharge: AVERAGE POUNDS PER DAY (7)	Discharge: SAMPLE TYPE (8)	Discharge: SAMPLE FREQUENCY (9)	Discharge: METHOD OF ANALYSIS (10)	Discharge: CONTINUOUS MONITORING (11)
CHLORIDE 00940	26		a	a	a	50	302	C	O	S	A
CYANIDE 00720											
F[illegible]DE 00950											
ALUMINUM-TOTAL 01105	< 50		a	a	a	35,000	212				
ANTIMONY TOTAL 01097											
ARSENIC-TOTAL 01002											
BARIUM-TOTAL 01007											
BERYLLIUM-TOTAL 01012											
BORON-TOTAL 01022											
CAD[illegible]-TOTAL 01027											

MEN03752

PART B

(Office use only)

MI 070-0X5-2-710553

~~MI 070-0X5-2-710553~~

Discharge Serial No. 003

B-2. (cont.) CHEMICAL PARAMETERS OF INTAKE WATER AND DISCHARGE (See Table B-2)

Intake	Discharge										
PARAMETER AND CODE	UNTREATED INTAKE WATER (1)	TREATED INTAKE WATER (2)	MAXIMUM CONCENTRATION (3)	MAXIMUM POUNDS PER DAY PER PROCESS UNIT (4)	MAXIMUM POUNDS PER DAY (5)	DAILY AVG. CONCENTRATION (6)	AVERAGE POUNDS PER DAY (7)	SAMPLE TYPE (8)	SAMPLE FREQUENCY (9)	METHOD OF ANALYSIS (10)	CONTINUOUS MONITORING (11)
CALCIUM-TOTAL 00916	84		a	a	a	50	303	C	O	S	A
CHROMIUM-TOTAL 01034	< 50		a	a	a	100	0.60	C	O	S	A
COBALT-TOTAL 01037											
COPPER-TOTAL 01042	< 50		a	a	a	< 50	< 0.30	C	O	S	A
IRON-TOTAL 01045	1.1		a	a	a	12,000	73	C	O	S	A
LEAD TOTAL 01051	< 10		a	a	a	300	1.81	C	O	S	A
MAGNESIUM-TOTAL 00927	25		a	a	a	34	206	C	O	S	A
MANGANESE-TOTAL 01055											
MERCURY-TOTAL 71900	< 1		a	a	a	< 1	< 0.006	C	O	S	A
MOLYBDENUM-TOTAL [illegible]62											

FORM 4345-1

5820

REVISED: 8/9/72

PART B

(Office use only) MI 070-0X5-2-710553
MI 070 0X5 710553

Discharge Serial No. 003

B-2. (cont.) CHEMICAL PARAMETERS OF INTAKE WATER AND DISCHARGE (See Table B-2)

PARAMETER AND CODE	Intake: UNTREATED INTAKE WATER (1)	Intake: TREATED INTAKE WATER (2)	Discharge: MAXIMUM CONCENTRATION (3)	Discharge: MAXIMUM POUNDS PER DAY PER PROCESS UNIT (4)	Discharge: MAXIMUM POUNDS PER DAY (5)	Discharge: DAILY AVG CONCENTRATION (6)	Discharge: AVERAGE POUNDS PER DAY (7)	Discharge: SAMPLE TYPE (8)	Discharge: SAMPLE FREQUENCY (9)	Discharge: METHOD OF ANALYSIS (10)	Discharge: CONTINUOUS MONITORING (11)
NICKEL-TOTAL 01067	<50		a	a	a	50	0.3	C	O	S	A
POTASSIUM-TOTAL 00937	3.6		a	a	a	75 ?	454	C	O	S	A
SELENIUM-TOTAL 01147											
SILVER-TOTAL 01077											
SODIUM-TOTAL 00929	0.4		a	a	a	1425	~~8618~~ 8618	C	O	S	A
THALLIUM-TOTAL 01059											
TIN-TOTAL 01102											
TITANIUM-TOTAL 01152											
ZINC TOTAL 01092	50		a	a	a	400	2.4	C	O	S	A
OIL AND GREASE	<1		a	a	a	2	12	C	O	S	A

MEN03754

PART B

(Office use only) M1 070-0X5-2-710553

AERATION POND EFFLUENT

Discharge Serial No 0 3

B-2. (cont.) **CHEMICAL PARAMETERS OF INTAKE WATER AND DISCHARGE (See Table B-2)**

PARAMETER AND CODE	Intake: UNTREATED INTAKE WATER (1)	Intake: TREATED INTAKE WATER (2)	Discharge: MAXIMUM CONCENTRATION (3)	Discharge: MAXIMUM POUNDS PER DAY PER PROCESS UNIT (4)	Discharge: MAXIMUM POUNDS PER DAY (5)	Discharge: DAILY AVG. CONCENTRATION (6)	Discharge: AVERAGE POUNDS PER DAY (7)	Discharge: SAMPLE TYPE (8)	Discharge: SAMPLE FREQUENCY (9)	Discharge: METHOD OF ANALYSIS (10)	Discharge: CONTINUOUS MONITORING (11)
PHENOLS 32730	5		~~a~~ 14,000	a	a	2,284 ~~510~~	3.08	C	O	S	A
SURFACTANTS 38260											
ALGICIDES* 4051											
CHLORINATED HYDROCARBONS* (EXCEPT PESTICIDES) 4052											
PESTICIDES* 4053											
Ammonia Nitrogen[d] 0610	0.0		a	a	a	1.50	9.07	C	O	S	A
Kjeldahl[d] Nitrogen 0625			a	a	a	23.60	142.7	C	O	S	A

*Name specific compound(s) and fill in the required data for each. Use extra blanks at the end of the form and the "Remarks" space if necessary.

Remarks:

Not enough data have been compiled on a year around basis to accurately estimate.
Due to color interference, standard procedure could not be applied.
Tests being made and will be reported at a later date.
Correction to Part A. Originally data was in error.

PART B DISCHARGE DESCRIPTION

(Note: Submission of Part B is required of all applicants who are also required to submit Part A. Only those parameters specifically indicated in the instructions are to be reported by a particular industry)

(Office use only)
MI 070-0X5-2-710553

AERATION POND EFFLUENT

Discharge Serial No.
003

B-1. PHYSICAL AND BIOLOGICAL PARAMETERS OF INTAKE WATER AND DISCHARGE (See Table B-1)

Intake	Discharge						
PARAMETER AND CODE	UNTREATED INTAKE WATER (1)	TREATED INTAKE WATER (2)	AVERAGE (DAILY) (3)	MINIMUM (OPERATING YEAR) (4)	MAXIMUM (OPERATING YEAR) (5)	SAMPLE FREQUENCY (6)	CONTINUOUS MONITORING (7)
COLOR 00080	100		a	X	a	e O	A
SPECIFIC CONDUCTANCE 00095	615		5400	b	b	e O	A
TURBIDITY 00070	c	c	c	X	c	e O	A
FECAL STREPTOCOCCI BACTERIA 74054				X			
FECAL COLIFORM BACTERIA 74055				X			
TOTAL COLIFORM BACTERIA 74056	23,000[d]		111,000[d]	X	b	e O	A

a Does not conform to test procedure.
b Not enough data have been collected on a year around basis to accurately estimate.
c Color interference
d Based on limited number of tests.
e Results represent tests on one to three samples.

MEN03756

PART B DISCHARGE DESCRIPTION

[illegible]: Submission of Part B is required of all applicants who are also required to submit Part A. Only those parameters specifically indicated in the instructions are to be reported by a particular industry)

(Office use only)
MI 070-0X5-2-710553

POWER HOUSE COOLING WATER (SIC 493)

Discharge Serial No.
003

B-1. PHYSICAL AND BIOLOGICAL PARAMETERS OF INTAKE WATER AND DISCHARGE (See Table B-1)

	Intake	Discharge						
PARAMETER AND CODE	UNTREATED INTAKE WATER	TREATED INTAKE WATER	AVERAGE (DAILY)	MINIMUM (OPERATING YEAR)	MAXIMUM (OPERATING YEAR)	SAMPLE FREQUENCY	CONTINUOUS MONITORING
	(1)	(2)	(3)	(4)	(5)	(6)	(7)
COLOR 00080				X			
SPECIFIC CONDUCTANCE 00095							
TURBIDITY 00070				X			
FECAL STREPTOCOCCI BACTERIA 74054				X			
FECAL COLIFORM BACTERIA 74055				X			
TOTAL COLIFORM BACTERIA 74056				X			

FORM N 71 4345-1

5824

MEN03757

PART B

(Office use only)

MI 070-0X5-2-710553

Discharge Serial No. 03

B-2. **CHEMICAL PARAMETERS OF INTAKE WATER AND DISCHARGE (See Table B-2)**

Intake	Discharge										
PARAMETER AND CODE	UNTREATED INTAKE WATER (1)	TREATED INTAKE WATER (2)	MAXIMUM CONCENTRATION (3)	MAXIMUM POUNDS PER DAY PER PROCESS UNIT (4)	MAXIMUM POUNDS PER DAY (5)	DAILY AVG. CONCENTRATION (6)	AVERAGE POUNDS PER DAY (7)	SAMPLE TYPE (8)	SAMPLE FREQUENCY (9)	METHOD OF ANALYSIS (10)	CONTINUOUS MONITORING (11)
ACIDITY (as $CaCO_3$) 00435											
TOTAL ORGANIC CARBON (T.O.C.) 00680											
T[illegible] HARDNESS 0[illegible]											
NITRITE (as N) 00615											
ORGANIC NITROGEN 00605											
PHOSPHORUS-ORTHO (as P) 70507											
SULFATE 00945											
SULFIDE 00745											
SULFITE 00740	<2		a	a	a	<2	<72	C	O	S	A
RO[illegible]E 18 [illegible]											

FORM 4345-1 JN 71

5825

MEN03758

PART B

(Office use only)
MI 070-0X5-2-710553

Discharge Serial No.
003

B-2. (cont.) CHEMICAL PARAMETERS OF INTAKE WATER AND DISCHARGE (See Table B-2)

Intake	Discharge										
PARAMETER AND CODE	(1) UNTREATED INTAKE WATER	(2) TREATED INTAKE WATER	(3) MAXIMUM CONCENTRATION	(4) MAXIMUM POUNDS PER DAY PER PROCESS UNIT	(5) MAXIMUM POUNDS PER DAY	(6) DAILY AVG. CONCENTRATION	(7) AVERAGE POUNDS PER DAY	(8) SAMPLE TYPE	(9) SAMPLE FREQUENCY	(10) METHOD OF ANALYSIS	(11) CONTINUOUS MONITORING
CHLORIDE 00940	43		a	a	a	45	1619	C	O	S	A
CYANIDE 00720											
FLUORIDE 00951											
ALUMINUM-TOTAL 01105											
ANTIMONY-TOTAL 01097											
ARSENIC-TOTAL 01002											
BARIUM-TOTAL 01007											
BERYLLIUM TOTAL 01012											
BORON-TOTAL 01022											
CADMIUM-TOTAL 01027											

MEN03759

PART B

(Office use only)
MI 070-0X5-2-710553

Discharge Serial No.
003

2. (cont.) CHEMICAL PARAMETERS OF INTAKE WATER AND DISCHARGE (See Table B-2)

ake	Discharge										
AMETER CODE	UNTREATED INTAKE WATER (1)	TREATED INTAKE WATER (2)	MAXIMUM CONCENTRATION (3)	MAXIMUM POUNDS PER DAY PER PROCESS UNIT (4)	MAXIMUM POUNDS PER DAY (5)	DAILY AVG. CONCENTRATION (6)	AVERAGE POUNDS PER DAY (7)	SAMPLE TYPE (8)	SAMPLE FREQUENCY (9)	METHOD OF ANALYSIS (10)	CONTINUOUS MONITORING (11)
CIUM-TOTAL 16											
OMIUM-TOTAL 4	<50		a	a	a	<50	<1.9	C	O	S	A
AL L 7											
ER-TOTAL											
TOTAL											
TOTAL											
ESIUM-TOTAL											
ANESE TOTAL											
RY-TOTAL											
IDE OTAL											

4345-1

5827

PART B

(Office use only)
MI 070-0X5-2-710553

Discharge Serial No.
003

B-2. (cont.) CHEMICAL PARAMETERS OF INTAKE WATER AND DISCHARGE (See Table B-2)

Intake	Discharge										
PARAMETER AND CODE	UNTREATED INTAKE WATER (1)	TREATED INTAKE WATER (2)	MAXIMUM CONCENTRATION (3)	MAXIMUM POUNDS PER DAY PER PROCESS UNIT (4)	MAXIMUM POUNDS PER DAY (5)	DAILY AVG. CONCENTRATION (6)	AVERAGE POUNDS PER DAY (7)	SAMPLE TYPE (8)	SAMPLE FREQUENCY (9)	METHOD OF ANALYSIS (10)	CONTINUOUS MONITORING (11)
CKEL TOTAL 067											
TASSIUM-TOTAL 137											
[illegible] OTAL 37											
ER TOTAL 7											
UM-TOTAL 9											
UM-TOTAL											
TAL											
UM TOTAL											
TAL	50		a	a	a	50.	1.9	C	O	S	A
[illegible] E											

4345-1

5828

PART B

(Office use only)
MI 070-0X5-2-710553

Discharge Serial No.
003

B-2. (cont.) CHEMICAL PARAMETERS OF INTAKE WATER AND DISCHARGE (See Table B-2)

	Intake		Discharge								
PARAMETER AND CODE	(1) UNTREATED INTAKE WATER	(2) TREATED INTAKE WATER	(3) MAXIMUM CONCENTRATION	(4) MAXIMUM POUNDS PER DAY PER PROCESS UNIT	(5) MAXIMUM POUNDS PER DAY	(6) DAILY AVG. CONCENTRATION	(7) AVERAGE POUNDS PER DAY	(8) SAMPLE TYPE	(9) SAMPLE FREQUENCY	(10) METHOD OF ANALYSIS	(11) CONTINUOUS MONITORING
PHENOLS 32730	5		a	a	a	5	0.2	C	O	S	A
SURFACTANTS 38260											
A[illegible]ES* 740[illegible]											
CHLORINATED HYDROCARBONS* (EXCEPT PESTICIDES) 74052											
PESTICIDES* 74053											

Name specific compound(s) and fill in the required data for each. Use extra blanks at the end of the form and the "Remarks" space if necessary.

Remarks:

Not enough data have been compiled on a year around basis to accurately estimate.

MEN03762

PART B DISCHARGE DESCRIPTION

(Note: Submission of Part B is required of all applicants who are also required to submit Part A. Only those parameters specifically indicated in the instructions are to be reported by a particular industry)

(Office use only) MI 070-0X5-2-710553

LIME ASH POND

Discharge Serial No. 004

B-1. PHYSICAL AND BIOLOGICAL PARAMETERS OF INTAKE WATER AND DISCHARGE (See Table B-1)

Intake		Discharge					
PARAMETER AND CODE	UNTREATED INTAKE WATER (1)	TREATED INTAKE WATER (2)	AVERAGE (DAILY) (3)	MINIMUM (OPERATING YEAR) (4)	MAXIMUM (OPERATING YEAR) (5)	SAMPLE FREQUENCY (6)	CONTINUOUS MONITORING (7)
COLOR 00080	100		200[b]		a	O	A
SPECIFIC CONDUCTANCE 00095	615		1340[b]	a	a	O	A
TURBIDITY 00070							
FECAL STREPTOCOCCI BACTERIA 74054							
FECAL COLIFORM BACTERIA 74055							
TOTAL COLIFORM BACTERIA 74056	23,000[b]		A[c]		A[a]	O	A

a Not enough data have been compiled on a year around basis to accurately estimate.

b Based on limited number of tests.

c Tests being rechecked.

ENG FORM JUN 71 4345-1

5830

MEN03763

PART B

(Office use only)

MS 070-UX5-2-710553

Discharge Serial No 004

B 2. **CHEMICAL PARAMETERS OF INTAKE WATER AND DISCHARGE. (See Table B-2)**

Intake	Discharge										
PARAMETER AND CODE	UNTREATED INTAKE WATER (1)	TREATED INTAKE WATER (2)	MAXIMUM CONCENTRATION (3)	MAXIMUM POUNDS PER DAY PER PROCESS UNIT (4)	MAXIMUM POUNDS PER DAY (5)	DAILY AVG. CONCENTRATION (6)	AVERAGE POUNDS PER DAY (7)	SAMPLE TYPE (8)	SAMPLE FREQUENCY (9)	METHOD OF ANALYSIS (10)	CONTINUOUS MONITORING (11)
ACIDITY (as $CaCO_3$) 00435											
TOTAL ORGANIC CARBON (T.O.C.) 00680	12		a	a	a	33	21	C	O	S	A
T[illegible] HARDNESS C[illegible]											
NITRITE (as N) 00615											
ORGANIC NITROGEN 00605	0.5		a	a	a	2.4	1.5	C	O	S	A
PHOSPHORUS-ORTHO (as P) 00671											
SULFATE 00945	20		a	a	a	35	23	C	O	S	A
SULFIDE 00745											
SULFITE 00740	<1		a	a	a	<1	<0.6	C	O	S	A
BO[illegible] 18[illegible]	b		b	b	b	b	b	C	O	S	A

FORM 4345-1

5831

MEN03764

PART B

(Office use only)
MI 070-0X5-2-710553

Discharge Serial No.
004

B-2. (cont.) **CHEMICAL PARAMETERS OF INTAKE WATER AND DISCHARGE (See Table B-2)**

PARAMETER AND CODE	Intake: UNTREATED INTAKE WATER (1)	Intake: TREATED INTAKE WATER (2)	Discharge: MAXIMUM CONCENTRATION (3)	Discharge: MAXIMUM POUNDS PER DAY PER PROCESS UNIT (4)	Discharge: MAXIMUM POUNDS PER DAY (5)	Discharge: DAILY AVG. CONCENTRATION (6)	Discharge: AVERAGE POUNDS PER DAY (7)	Discharge: SAMPLE TYPE (8)	Discharge: SAMPLE FREQUENCY (9)	Discharge: METHOD OF ANALYSIS (10)	Discharge: CONTINUOUS MONITORING (11)
CHLORIDE 00940	26		a	a	a	260	168	C	O	S	A
CYANIDE 00720											
FLUORIDE [illegible]51											
ALUMINUM-TOTAL 01105											
ANTIMONY-TOTAL 01097											
ARSENIC-TOTAL 01002											
BARIUM-TOTAL 01007											
BERYLLIUM-TOTAL 01012											
BORON-TOTAL 01022											
CADMIUM-TOTAL [illegible]											

MEN03765

PART B

(Office use only)
070-0X5-2-710553
070X5 2 710553

Discharge Serial No. 004

B-2. (cont.) CHEMICAL PARAMETERS OF INTAKE WATER AND DISCHARGE (See Table B-2)

Intake	Discharge										
PARAMETER AND CODE	UNTREATED INTAKE WATER (1)	TREATED INTAKE WATER (2)	MAXIMUM CONCENTRATION (3)	MAXIMUM POUNDS PER DAY PER PROCESS UNIT (4)	MAXIMUM POUNDS PER DAY (5)	DAILY AVG. CONCENTRATION (6)	AVERAGE POUNDS PER DAY (7)	SAMPLE TYPE (8)	SAMPLE FREQUENCY (9)	METHOD OF ANALYSIS (10)	CONTINUOUS MONITORING (11)
CALCIUM-TOTAL 00916	84		a	a	a	600[c]	389	C	O	S	A
CHROMIUM-TOTAL 01034	<50		a	a	a	<50	<0.032	C	O	S	A
[illegible]LT-TOTAL [illegible]											
COPPER-TOTAL 01042	<50		a	a	a	<50	<0.032	C	O	S	A
IRON-TOTAL 01045	1.1		a	a	a	5700	3.7	C	O	S	A
EAD-TOTAL 01051	<10		a	a	a	<10	<0.006	C	O	S	A
MAGNESIUM-TOTAL 00927	25		a	a	a	36	23	C	O	S	A
MANGANESE-TOTAL 01055	150		a	a	a	300	0.13	C	O	S	A
MERCURY-TOTAL 71900	<1		a	a	a	<1	<0.0006	C	O	S	A
M[illegible]ENUM-TOTAL 010[illegible]											

MEN03766

PART B

(Office use only) MI 070-0X5-2-710553

MI 070 0X5 2 710553

Discharge Serial No. 004

B-2. (cont.) CHEMICAL PARAMETERS OF INTAKE WATER AND DISCHARGE (See Table B-2)

PARAMETER AND CODE	Intake: UNTREATED INTAKE WATER (1)	Intake: TREATED INTAKE WATER (2)	Discharge: MAXIMUM CONCENTRATION (3)	Discharge: MAXIMUM POUNDS PER DAY PER PROCESS UNIT (4)	Discharge: MAXIMUM POUNDS PER DAY (5)	Discharge: DAILY AVG. CONCENTRATION (6)	Discharge: AVERAGE POUNDS PER DAY (7)	SAMPLE TYPE (8)	SAMPLE FREQUENCY (9)	METHOD OF ANALYSIS (10)	CONTINUOUS MONITORING (11)
NICKEL TOTAL 01067											
POTASSIUM-TOTAL 00937	3.6		a	a	a	4.3	2.8	C	O	S	A
[illegible]ENIUM-TOTAL 01147											
SILVER-TOTAL 01077											
SODIUM-TOTAL 00929	0.4		a	a	a	230	149	C	O	S	A
THALLIUM-TOTAL 01059											
TIN-TOTAL 01102											
TITANIUM-TOTAL 01152											
ZINC-TOTAL 01092	50		a	a	a	50	0.032	C	O	S	A
[illegible]ND GREASE	<1		a	a	a	<1	<0.0006	C	O	S	A

MEN03767

PART B

(Office use only)
MI 070-0X5-2-710553

Discharge Serial No.
004

B-2. (cont.) CHEMICAL PARAMETERS OF INTAKE WATER AND DISCHARGE (See Table B-2)

Intake		Discharge										
PARAMETER AND CODE	UNTREATED INTAKE WATER (1)	TREATED INTAKE WATER (2)	MAXIMUM CONCENTRATION (3)	MAXIMUM POUNDS PER DAY PER PROCESS UNIT (4)	MAXIMUM POUNDS PER DAY (5)	DAILY AVG. CONCENTRATION (6)	AVERAGE POUNDS PER DAY (7)	SAMPLE TYPE (8)	SAMPLE FREQUENCY (9)	METHOD OF ANALYSIS (10)	CONTINUOUS MONITORING (11)
PHENOLS 32730	5		a	a	a	13	0.0008	C	O	S	A
SURFACTANTS 38260											
ALGICIDES* 74051											
CHLORINATED HYDRO-CARBONS* (EXCEPT PESTICIDES) 74052											
PESTICIDES* 74053											

*Name specific compound(s) and fill in the required data for each. Use extra blanks at the end of the form and the "Remarks" space as necessary.

a Not enough data have been compiled on year around basis to accurately estimate.
b Color interference, standard procedure would not be applied.
c Data based on one test. Being rechecked.
d Tests being made and will be reported at a later date.

MEN03768

PART B DISCHARGE DESCRIPTION

(Note: Submission of Part B is required of all applicants who are also required to submit Part A. Only those parameters specifically indicated in the instructions are to be reported by a particular industry)

(Office use only)
MI070-0X5-2-710553 710553

Discharge Serial No. 005

B-1. PHYSICAL AND BIOLOGICAL PARAMETERS OF INTAKE WATER AND DISCHARGE (See Table B-1)

Intake		Discharge					
PARAMETER AND CODE	UNTREATED INTAKE WATER (1)	TREATED INTAKE WATER (2)	AVERAGE (DAILY) (3)	MINIMUM (OPERATING YEAR) (4)	MAXIMUM (OPERATING YEAR) (5)	SAMPLE FREQUENCY (6)	CONTINUOUS MONITORING (7)
COLOR 00000	100		100 (a)		b (a)	d 0	A
SPECIFIC CONDUCTANCE 00095	615		615 (695)	b (b)	b (b)	d 0	A
TURBIDITY 00070							
FECAL STREPTOCOCCI BACTERIA 74054							
FECAL COLIFORM BACTERIA 74055							
TOTAL COLIFORM BACTERIA 74056	c 23,000		c 43,000 (c 23,000)		b (b)	d 0	A

NOTE: Data given in parenthesis in B-1 and B-2 represent the properties of the combined flow. The combined flow system would normally be used less than 30 days a year.

Remarks:

a Color of combined flow does not conform to test.

b Not enough data have been compiled on a year around basis to accurately estimate.

c Based on limited data.

d Results represent tests on one to three samples.

EPA FORM 6245-1 (10-71)

5836

1887

MEN03769

PART B

(Office use only)
MI 070-0X5 2 710553

Discharge Serial No.
005

B-2. CHEMICAL PARAMETERS OF INTAKE WATER AND DISCHARGE (See Table B-2)

Intake	Discharge										
PARAMETER AND CODE	UNTREATED INTAKE WATER (1)	TREATED INTAKE WATER (2)	MAXIMUM CONCENTRATION (3)	MAXIMUM POUNDS PER DAY PER PROCESS UNIT (4)	MAXIMUM POUNDS PER DAY (5)	DAILY AVG. CONCENTRATION (6)	AVERAGE POUNDS PER DAY (7)	SAMPLE TYPE (8)	SAMPLE FREQUENCY (9)	METHOD OF ANALYSIS (10)	CONTINUOUS MONITORING (11)
ACIDITY (as $CaCO_3$) 00435											
TOTAL ORGANIC CARBON (T.O.C.) 00680	12		a (a)	a (a)	a (a)	12 (390)	8.0 (831)	C	O	S	A
TOTAL HARDNESS 00900											
NITRITE (as N) 00615											
ORGANIC NITROGEN 00605	0.5		a (a)	a (a)	a (a)	0.5 (3.0)	0.3 (6.4)	C	O	S	A
PHOSPHORUS-ORTHO (as P) 70507											
SULFATE 00945	20		60[b] (a)	50 (a)	50 (a)	20 (10)	13 (21)	C	O	S	A
SULFIDE 00745											
SULFITE 00740	<1		a (a)	a (a)	a (a)	<1 (1)	<1 (2)	C	O	S	A
BROMIDE 71870	c	c	c	c	c	c	c	c	O	S	A

5837

MEN03770

(Office use only)
070-0X5-2-710553
MI 0700X5 2 710553

Discharge Serial No.
005

B-2. (cont.) CHEMICAL PARAMETERS OF INTAKE WATER AND DISCHARGE (See Table B-2)

Intake	Discharge										
PARAMETER AND CODE	UNTREATED INTAKE WATER (1)	TREATED INTAKE WATER (2)	MAXIMUM CONCENTRATION (3)	MAXIMUM POUNDS PER DAY PER PROCESS UNIT (4)	MAXIMUM POUNDS PER DAY (5)	DAILY AVG. CONCENTRATION (6)	AVERAGE POUNDS PER DAY (7)	SAMPLE TYPE (8)	SAMPLE FREQUENCY (9)	METHOD OF ANALYSIS (10)	CONTINUOUS MONITORING (11)
CHLORIDE 00940	26		65[b] (a)	54 (a)	54 (a)	26 (26)	17 (17)	C	O	S	A
CYANIDE 00720											
FLUORIDE 00951											
ALUMINUM-TOTAL 01105	< 50		a (a)	a (a)	a (a)	< 50 (4730)	< 0.03 (10)	C	O	S	A
ANTIMONY-TOTAL 01097											
ARSENIC-TOTAL 01002											
BARIUM-TOTAL 01007											
BERYLLIUM-TOTAL 01012											
BORON-TOTAL 01022											
CADMIUM-TOTAL 01027											

MEN03771

PART B

(Office use only)
070-0X5-2-710553
0 7 0 0 X 5 2 7 1 0 5 5 3

Discharge Serial No.
05

B-2. (cont.) **CHEMICAL PARAMETERS OF INTAKE WATER AND DISCHARGE (See Table B-2)**

Intake | Discharge

PARAMETER AND CODE	UNTREATED INTAKE WATER (1)	TREATED INTAKE WATER (2)	MAXIMUM CONCENTRATION (3)	MAXIMUM POUNDS PER DAY PER PROCESS UNIT (4)	MAXIMUM POUNDS PER DAY (5)	DAILY AVG. CONCENTRATION (6)	AVERAGE POUNDS PER DAY (7)	SAMPLE TYPE (8)	SAMPLE FREQUENCY (9)	METHOD OF ANALYSIS (10)	CONTINUOUS MONITORING (11)
CALCIUM-TOTAL 00916	84		a (a)	a (a)	a (a)	84 (100)[b]	56 213	C	O	S	A
CHROMIUM-TOTAL 01034	<50		a (a)	a (a)	a (a)	<50 (<50)	<0.033 (0.11)	C	O	S	A
[illegible]ALT-TOTAL [illegible]7											
COPPER-TOTAL 01042	<50		a (a)	a (a)	a (a)	<50 (<50)	<0.033 (<0.11)	C	O	S	A
IRON-TOTAL 01045	1.1		a (a)	a (a)	a (a)	3400 (1500)	2.3 (3.2)				
LEAD-TOTAL 01051	<10		a (a)	a (a)	a (a)	<10 (41)	<0.007 (0.087)	C	O	S	A
MAGNESIUM-TOTAL [illegible]0927											
[illegible]ANGANESE-TOTAL [illegible]055											
[illegible]CURY-TOTAL [illegible]	<1		a (a)	a (a)	a (a)	<1 (1)	<0.0007 (0.002)	C	O	S	A
[illegible]DENUM TOTAL											

5839

MEN03772

PART B

(Office use only)
073-0X5-2-710553
MI 0700X5 2 710553

Discharge Serial No. 005

B-2. (cont.) CHEMICAL PARAMETERS OF INTAKE WATER AND DISCHARGE (See Table B-2) 005

Intake	Discharge										
PARAMETER AND CODE	UNTREATED INTAKE WATER (1)	TREATED INTAKE WATER (2)	MAXIMUM CONCENTRATION (3)	MAXIMUM POUNDS PER DAY PER PROCESS UNIT (4)	MAXIMUM POUNDS PER DAY (5)	DAILY AVG. CONCENTRATION (6)	AVERAGE POUNDS PER DAY (7)	SAMPLE TYPE (8)	SAMPLE FREQUENCY (9)	METHOD OF ANALYSIS (10)	CONTINUOUS MONITORING (11)
[illegible]CKEL TOTAL 01037	<50		a	a	a	<50 (<50)	<0.003 (<0.107	C	O	S	A
[illegible]OTASSIUM-TOTAL 00937	3.6		a	a	a	3.6 (10.1)	2.4 (21.5)	C	O	S	A
[illegible]UM-TOTAL 01147											
SILVER-TOTAL 01077											
SODIUM-TOTAL [illegible]929	0.4		a (a)	a (a)	a (a)	0.4 (192)	0.3 (409)	C	O	S	A
THALLIUM-TOTAL [illegible]059											
[illegible] TOTAL [illegible]32											
[illegible]NIUM TOTAL [illegible]2											
[illegible] TOTAL [illegible]	50		a (a)	a (a)	a (a)	50 (54)	0.033 (0.12)	C	O	S	A
[illegible]ND GREASE											

5840 5B of 7

MEN03773

PART B

(Office use only)

MI 070-0X5-2-710553 710553

Discharge Serial No. 005

(cont.) CHEMICAL PARAMETERS OF INTAKE WATER AND DISCHARGE (See Table B-2)

	Discharge										
	UNTREATED INTAKE WATER	TREATED INTAKE WATER	MAXIMUM CONCENTRATION	MAXIMUM POUNDS PER DAY PER PROCESS UNIT	MAXIMUM POUNDS PER DAY	DAILY AVG. CONCENTRATION	AVERAGE POUNDS PER DAY	SAMPLE TYPE	SAMPLE FREQUENCY	METHOD OF ANALYSIS	CONTINUOUS MONITORING
AMETER CODE	(1)	(2)	(3)	(4)	(5)	(6)	(7)	(8)	(9)	(10)	(11)
NOLS 30	5		a (a)	a (a)	a (a)	5 (69)	0.003 (0.15)	C	O	S	A
IFACTANTS 60											
ICIDES* 51											
ORINATED HYDRO-BONS* (EXCEPT TICIDES) 62											
STICIDES* 33											

...ific compound(s) and fill in the required data for each. Use extra blanks at the end of the form and the "Remarks" space ...ary.

Not enough data have been compiled on a year around basis to correctly estimate.

Based on limited number of tests or data.

Due to color interference, standard test could not be applied.

Tests in progress and results will be reported at a later date.

Correction to Part A. Data originally reported in error.

5841

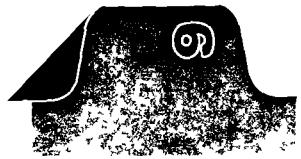

MICHIGAN DEPARTMENT OF NATURAL RESOURCES MEN03774

INTEROFFICE COMMUNICATION

RECEIVED

July 15, 1986 JUL 21 1986

SWQD-Plainwell

TO: Linda Koivuniemi, Plainwell District Office, SWQD

FROM: Jil Marie Gahsman, Great Lakes and Environmental Assessment Section, SWQD

SUBJECT: Menasha Corporation's Use of Calgon CL-56
MI0003824

Pursuant to your request, we have reviewed the use of the water treatment additive Calgon CL-56 by Menasha Corporation as an organic corrosion inhibitor in their mill air compressor cooling water. This additive would be incorporated into Menasha's 0.281 mgd discharge via outfall 001 to the Kalamazoo River.

Based on aquatic toxicity data provided by Menasha and other information in MDNR files, the discharge of Calgon CL-56 should not adversely impact the designated uses of the receiving water. Therefore, we have no recommendations regarding water quality-based effluent limits or monitoring requirements for Calgon CL-56 and hereby approve its use at the rates indicated in Menasha's June 5, 1986, letter to the Plainwell District Office.

cc: Mr. J. Grant/GLEAS file

Gary Roys - Menasha (TX from Gary Roys 8-14-86)
I read this memo over phone to Gary, thereby giving him verbal approval. I will send him a copy of this memo for his files.
Linda Koivuniemi
8-14-86

4835

MEN03775

MENASHA CORPORATION
PAPERBOARD GROUP

July 14, 1986

Linda Koivuniemi
Surface Water Quality Specialist
621 10th St.
Plainwell, MI 49080

Dear Linda:

As you know, we had a few problems getting the testing satisfactorily completed for the spacial waste characterization study required by our NPDES Permit.

The first set of samples showed traces of acetone, bromoform and 1,2 dichloroethane at weir 002. A test run on a second GC column indicated the presents of acetone only. We then re-sampled and ran GC/MS tests, the results came back with no mention of acetone. The lab that ran the tests had not checked for acetone. The lab went back to check the test results and found the computer disk with our test results was defective.

We then re-sampled again, had the EPA 601 and 602 scans run again and finally have the results. The attached results are from the first GC/MS run. As you can see, 1,2, dichloroethane and bromoform were non-detectable to a detection limit of 2.5 ppb. The re-test for acetone show a 28 ppb concentration on the June 19th sample and 2.2 ppb on the June 24 sample.

As I stated in a previous letter, acetone is a product of the thermal degradation of wood. Since we do operate at temperatures where thermal degradation can take place, this would be the most likely source of the acetone.

I do not know whether these concentrations pose a hazard for the Kalamazoo River.

Please contact John Bonham or John Blauwkamp if you have any other questions or comments.

4836

OTSEGO MILL BOX 155 • 320 N FARMER STREET • OTSEGO MICHIGAN [illegible] • PHONE 616 [illegible]

Sincerely,

Otsego Paperboard Division

Mark T. Reed

Mark T Reed
Technical Manager

cc: J. Bonham
J. Blauwkamp
S Jones
K. Kling

kj

MEN03777

WESTERN MICHIGAN
ENVIRONMENTAL SERVICES, INC.
245 EAST LAKEWOOD BLVD
HOLLAND MI 49423-2066
PHONE 616 396-1209

TO: Menasha Corporation
PO Box 155
Otsego, Michigan 49078

Attn: John Blauwkamp

DATE: June 9, 1986

ANALYSIS: OF WATER SAMPLES

REPORTED BY: Robert W. Hamm
Robert W. Hamm, Laboratory Director

SAMPLING DATE: Received from client on May 28, 1986.

RESULTS. Expressed as noted.

ESI #	SAMPLE I.D.	PARAMETER	CONCENTRATION
865127-1	002 Weir 05/19/86 3:30 p.m.	See Attached Table	
-2	002 05/26/86 11:00 a.m.	See Attached Table	

4838

MEN03778

WESTERN MICHIGAN ENVIRONMENTAL SERVICES, INC

TABLE 1
VOLATILE ORGANIC PRIORITY POLLUTANTS
Results for Menasha Corporation
Received May 28, 1986. Reported June 9, 1986.
Expressed as micrograms per liter (µg/ℓ).
Limit of detection is 2.5 µg/ℓ except where noted in parentheses.

Parameter	002 Weir 05/19/86 3:30 p.m.	002 05/26/86 11:00 a.m.
chloromethane(25)	N.D.	N.D.
bromomethane(25)	N.D.	N.D.
vinyl chloride(25)	N.D.	N.D.
chloroethane(25)	N.D.	N.D.
chloroform	N.D.	N.D
bromoform	N.D.	N.D.
dibromochloromethane	N.D.	N.D.
bromodichloromethane	N.D.	N.D.
methylene chloride	N.D.	N.D.
1,1-dichloroethylene	N.D.	N.D.
1,1-dichloroethane	N.D.	N.D.
carbon tetrachloride	N.D.	N.D.
1,2-dichloropropane	N.D.	N.D.
trichloroethylene	N.D.	N.D.
1,1,2-trichloroethane	N.D.	N.D.
tetrachloroethylene	N.D.	N.D.
trans-1 2-dichloroethylene	N.D.	N.D.
1,2-dichloroethane	N.D.	N.D.
1,1,1-trichloroethane	N.D.	N.D.
cis-1,3-dichloropropene	N.D.	N.D.
trans-1,3-dichloropropene	N.D.	N.D.
1,1,2,2-tetrachloroethane	N.D.	N.D.
2-chloroethyl vinyl ether(12.5)	N.D.	N.D.
chlorobenzene	N.D.	N.D.
benzene	N.D.	N.D.
toluene	N.D.	N.D.
ethyl benzene	N.D.	N.D.
acrolein (12.5)	N.D.	N.D.
acrylonitrile (12.5)	N.D.	N.D.
ESI #865127	-1	-2

MEN03779

TO: [illegible] King
Venasha

FROM: Linda [illegible]
Plainwell District Office

SUBJECT: Water Treatment Additives Review

OUR JOB NO:

DATE OF MEMO: 4-21-86

MESSAGE

Attached for your review and information is the water treatment additive review done by the [illegible] staff. If you can not meet the limit for Busan 110, please eliminate its use. Please respond in writing on your findings, to this office by May 5, 1985.

cc. Gary Boerson, Permits

SIGNED Linda [illegible]

SENDER – DO NOT WRITE BELOW THIS LINE

REPLY

SIGNED

DATE

ORIGINAL

SENDER — Retain part 2 for your follow-up, send parts 1 and 3 to addressee
RECIPIENT — Retain part 1 and return part 3

4841

MEN03780

MICHIGAN DEPARTMENT OF NATURAL RESOURCES

INTEROFFICE COMMUNICATION

RECEIVED

April 9, 1986

TO: Linda Koivuniemi, Plainwell District Office, SWQD

FROM: Jil Marie Gahsman, Toxic Chemical Evaluation Section, SWQD

SUBJECT: Menasha Corporation Water Treatment Additive Review

Pursuant to your request, we have reviewed several water treatment additives for usage by Menasha Corporation of Otsego (NPDES permit No. MI 0003824) and offer the following comments:

1. Busan 110 - Based on aquatic toxicity data provided by Menasha Corp., we feel that Busan 110 should be limited in the subject facility's NPDES permit since it has the potential to be discharged to the receiving water at or above a level of environmental/public health concern. The recommended monthly average water quality-based effluent limit (WQBEL) is given below. This WQBEL was calculated using a combined facility design flow of 0.937 mgd for outfalls 000 and 002, and a 95% exceedance flow of 312 mgd for the Kalamazoo River.

Chemical	Outfall 000 Monthly Average WQBEL	Outfall 002 Monthly Average WQBEL
Busan 110	140 ug/l (0.74 lbs/day)	140 ug/l (0.38 lbs/day)

The above WQBEL of 140 ug/l for Busan 110 is necessary to protect aquatic life for chronic toxicity after mixing. Demonstration of compliance with this limit should be made on a one-time basis by monitoring the subject facility's outfall 000 and 002 effluent for Busan 110 or by mass balance calculation.

2. Calgon pHreeGuard 1200 - Based on information including aquatic toxicity data provided by Menasha, the discharge of this anionic polymer should not adversely impact the designated uses of the receiving water. Therefore, we have no recommendations regarding WQBELs or monitoring requirements for this additive.

3. Calcium hypochlorite - The Water Quality Surveillance Section has the responsibility for reviewing this additive; therefore, we have forwarded all information on calcium hypochlorite to Dennis Swanson for his Section's comments.

cc: Mr. J. Grant/TCES File

4842

MEN03781

STATE OF MICHIGAN

NATURAL RESOURCES COMMISSION
[illegible]
[illegible]
[illegible] FLUHARTY
[illegible] MONSMA
[illegible] EWART MYERS
[illegible] POUPORE
[illegible] WHITELEY

JAMES J BLANCHARD, Governor

DEPARTMENT OF NATURAL RESOURCES

STEVENS T MASON BUILDING
BOX 30028
LANSING, MI 48909

RONALD O SKOOG Director

April 10, 1986

Mr. John Blauwkamp
Menasha Corporation
P.O. Box 155
Otsego, Michigan 49078

Dear Mr. Blauwkamp:

On April 9, 1986, I spoke to Ms. Jane Hoch, Chemist for Prein-Newhof, regarding the volatile hydrocarbon scan of Menasha's effluent. Ms. Hoch informed me she repeated the first GC test and obtained results similar to those reported (January 6, 1985), i.e. a peak at acetone and other peaks suggesting the possibility of bromoform and 1,2-dichloroethane. However, the GC test run on a second column could confirm only the presence of acetone. Therefore, in order to ascertain the identity of other chemicals present, we believe additional testing is necessary. We request that you run GC/MS scans using EPA Method 624 on two samples of the effluent of outfall 002 collected once a week over a two week period.

It is our understanding that Menasha will agree to perform this work without permit modification.

If you have any questions concerning this matter, please contact me.

Sincerely,

Megan McMahon
Toxic Chemical Evaluation Section
Surface Water Quality Division
517-373-2190

cc: Ms. Linda Koivuniemi
Mr. J. Grant/TCES

4843

MEN03782

MENASHA CORPORATION

AIRBOARD GROUP

January 24, 1986

Linda Koivuniemi
Department of Natural Resources
621 10th St.
Plainwell, MI 49080

Dear Linda;

On January 17, I became aware that two chemicals not previously reported were being used in the power house to help keep our turbines condenser clean. The use of these chemicals was not included in the NPDES Permit application or its amendments.

Calcium hypochlorite is mixed up and pumped into the cooling water going to the condenser. This solution is recycled through the cistern for a period of time before being discharged through outfalls 003 and 005. When the program was set up the chlorine addition rate and the time it is recirculated were established such that most of the chlorine was used up before the solution was discharged to the river. However, routine monitoring of the chlorine concentration is not currently being conducted before the solution is discharged to the river.

The program of washing the turbine condenser with calcium hypochlorite was established in about 1973 and the wash occurs about every two weeks in the summer and about once a month in the winter. The use of the Calgon pHree Guard 1200 was started in mid 1985. This product is fed for one hour out of twelve and is quite effective in preventing a buildup of material in the condenser. Since the use of these materials is esstential to keeping the turbine operational, we would like to have our NPDES permit modified to allow for their use. Please send us whatever forms and instructions that are necessary to have the appropriate modifications made to our permit.

Sincerely,

Menasha Corporation

J R. Blauwkamp, P.E.
Corporate Environmental Manager

cc: M. Reed, B. Buchanan, G. Roys, S. Rosenthal, A. Coleman

4854

OTSEGO MILL BOX 155 • 320 N FARMER STREET • OTSEGO MICHIGAN 49078 • PHONE 616 692 6141

MEN03783

MENASHA CORPORATION

August 12, 1985

Chief of Surface Water Quality
Department of Natural Resources
P.O. Box 30028
Lansing, MI 48909

Gentlemen:

This letter is to inform you of our plan with regards to the "Short Term Waste Characterization Study" which we are required to complete under the special conditions section of our NPDES permit #MI0003824.

Plan

Grab samples will be taken each Monday morning from October 7th, 1985 to October 28, 1985. Samples will be taken from outfalls 003 and 002.

The samples from the outfalls will then be packaged and shipped to a laboratory to be tested. The sampling, shipping and test procedures will all be carried out in accordance with EPA test method 601 for the purgeable halocarbon scan and EPA test method 602 for the toluene test.

The testing will conclude on October 28th. A report on the results of the testing will be submitted on or before February 28, 1986 as stated in our NPDES permit.

If there are any questions or comments please call.

Sincerely,

Menasha Corporation
Otsego Paperboard Division

Mark T. Reed

Mark T. Reed
Technical Manager

kj

MEN03784

MENASHA CORPORATION

August 23, 1985

Chief of Surface Water Quality
Department of Natural Resources
P.O. Box 30028
Stevens T. Mason Building
Lansing, MI 48909

Gentlemen:

This letter is to inform you of our plan on conducting the Dissolved Oxygen Monitoring Study required under the Special Conditions section of our NPDES permit #MI 0003824.

Plan

Beginning November 5, 1985 and continuing through October 21, 1986, we will test outfalls 001 through 005 for dissolved oxygen. Testing will be run on the first and third Tuesday of each month. All testing will be run with our portable dissolved oxygen meter. The meter will be calibrated before each days testing.

Outfall 001: The dissolved oxygen will be measured in the Kalamazoo River within 10 feet of outfall 001, in the discharge stream from 001.

Outfall 002: The dissolved oxygen will be measured in the discharge pipe from the weir box leading to the river.

Outfall 003: The dissolved oxygen will be measured in the Kalamazoo River within 10 feet of where the discharge from outfall 003 falls to the river.

Outfall 004: The dissolved oxygen will be measured on the discharged side of the weir box going to the outfall.

Outfall 005: The dissolved oxygen will be measured at the splitter box just prior to the outfall.

The dissolved oxyen monitoring will be completed on October 21, 1986 and a report on the results submitted to the Department of Natural Resources on or before February 28, 1987.

If you have any questions or concerns, please call.

4863

OTSEGO PAPERBOARD MILL FARMER STREET • OTSEGO, MICHIGAN 49078 • PHONE 51

MEN03785

Sincerely,
Menasha Corporation
Otsego Paperboard Division

Mark T. Reed

Mark T. Reed
Technical Manager

cc: B. Buchanan
J. Blauwkamp
G. Roys
K. Kling
L. Koivumiemi - DNR

kj

4864

MEN03786

STATE OF MICHIGAN

NATURAL RESOURCES COMMISSION
THOMAS J. ANDERSON
E. R. CAROLLO
MARLENE FLOWER
STEPHEN K. MONSMA
STEWART MYERS
RAYMOND POLFORE
HARRY H. WHITELEY

JAMES BLANCHARD, Governor

DEPARTMENT OF NATURAL RESOURCES

RONALD O. SKOOG, Director

District 12 Headquarters
P.O. Box 355, Plainwell, Michigan 49080

August 27, 1984

Mr. John Blauwkamp, Technical Manager
Menasha Corporation
Farmer Street
Otsego, Michigan 49078

Dear Mr. Blauwkamp:

This letter is a follow-up to our August 24, 1984, telephone conversation. In that conversation you stated that Menasha has a need to replace a small pond prior to outfall 004 with a ten-foot diameter enclosed tank. The Department has no objection to this proposal provided NPDES permit limits are met and that the water being discharged via outfall 004 remains unchanged.

If you have any questions, feel free to contact me at the Plainwell District Office.

Sincerely,

SURFACE WATER QUALITY DIVISION

Garth Aslakson

Garth Aslakson
Water Quality Specialist
Plainwell District
(616) 685-9886

GA:ek

4885

MEN03787

STATE OF MICHIGAN

WILLIAM G. MILLIKEN, Governor

STEVENS T. MASON BUILDING
BOX 30028
LANSING, MI 48909

DEPARTMENT OF NATURAL RESOURCES

HOWARD A. TANNER, Director

State Office Building
350 Ottawa, N.W., Suite 6D
Grand Rapids, Michigan 49503

March 27, 1980

Mr. Bruce Buchanan
Menasha Corporation
320 N. Farmer Street
Otsego, Michigan 49078

Dear Mr. Buchanan:

This letter is meant to be a written clarification of the reading point for the oil and grease parameter as required by NPDES Permit MI0003824. The oil and grease, visual observation, is listed as a final effluent limitation in Menasha's NPDES Permit for two (2) outfalls. The effluent from these outfalls must be in compliance at the sampling point listed in Section d. The "no visible film" limitation for outfall 004 is to be met "prior to discharging to the Kalamazoo River." The same limitation is listed for the non-contact cooling waters from outfalls 003 and 005 and the effluent shall be in compliance "at the splitter box prior to discharging through outfalls 003 and 005."

As you pointed out in your July 9, 1979 letter, an oil skimming baffle on the weir box at outfall 004 prevents oil from being discharged to either the weir box or the receiving waters. Because the weir box is the last convenient point a visual observation can be made "prior to discharging to the Kalamazoo River," this would appear to be the most logical place to read the visual observation. If the company would like to install an observation site downstream of the weir box yet prior to discharging to the Kalamazoo River, district staff would be available to review the plans.

Section c, "The discharge shall not contain oil or other substances in amounts sufficient to create a visible film or sheen on the receiving waters," is a statement of water quality standards and is included as a limitation on all outfalls to surface waters. Sections b and c are included in all surface water permits.

If you should have any further questions concerning the above matter, feel free to contact me at this office.

Sincerely,

WATER QUALITY DIVISION

Marge Spruit

Marge Spruit
Water Quality Specialist

MS:nc

cc: Calen Kilmer, Tech. Serv.
WGD files, Lansing

5034

MEN03788

memo / MENASHA CORPORATION

TO: File

DATE: Sept. 11, 1

SUBJECT: 004 Oil Violations

FROM: John Bonham

On September 10, 1986, at 1:10 PM, I spoke with John Bantjes of the Michigan Department of Natural Resources about our discharge to the Kalamazoo River through outrall 004. Specifically, I wanted to get his interpretation of what would constitute an oil discharge violation under the outfall observation criteria of our NPDES permit. He had already received a copy of my letter concerning our two recent violations. I explained to him that although these incidents involved quantities of oil measurable in drops, we have no clear definition of what's allowable on our NPDES permit, and had previously always reported them as violations. I also stated that in my opinion it was irrational for us to keep reporting these tiny quantities of oil as violations when considering all the storm sewers which by comparison dump huge quantities of oil to the river every time it rains.

Mr. Bantjes responded very favorably to this suggestion. While stating that we should still seek ways to keep oil out of the 004 system, he also said that we should not bother to report incidents which involve such minute quantities of oil as we have recently had. He did not define exactly at what point an oil discharge becomes serious enough to report, but it seems that will rest on our judgement of both what is normal and reasonable.

It is safe to say that most, if not all, of our oil violations year to date would not have been reportable under these guidelines. In the future when observing a surface oil sheen or streaks, we will more carefully consider estimated oil quantity and duration before reporting "a few drops" as a violation.

cc: Bruce Buchanan
John Blauwkamp
Keith Kling
Gary Roys
Al Switzenberg
Tom Oldham
Fred Katje

kj

5260

10

MEN03789

CALGON

SUBSIDIARY OF MERCK & CO., INC.

WATER MANAGEMENT DIVISION CALGON CORPORATION CALGON CENTER BOX 1346 PITTSBURGH, PA. 15230 (412) 923-2345

November 4, 1971

Menasha Corporation
Otsego, Michigan

Attention: Mr. Ken Lowe

Environmental Engineering Services
Project No. 100360

Gentlemen:

Enclosed are the results of our laboratories' analyses of waste water samples in conjunction with your Corps of Engineers discharge permit application.

If you have any questions concerning this data, please do not hesitate to contact me.

Very truly yours,

CALGON CORPORATION

L. B. Kline
Development Engineer
Environmental Engineering Department

LBK/car

cc: Enclosed (3)

5749

HALL LABORATORIES

MEN03790

CALGON INDUSTRIAL WATER SURVEY
U.S. CORPS OF ENGINEERS PERMIT DATA
PART A

Plant Name Menasha
Otsego Michigan

Address

Sample Identification No.	Type of Sample	Collection Point	Collection Date
E-7930		001	10-11-71

pH (Standard Units) Code 00400	SIC Number	Remarks: * Does not conform to APHA standards
7.5	26	

Parameter	Code	Concentration
Acidity (Total) as $CaCO_3$ (mg/l)	00435	0
Alkalinity (as $CaCO_3$) (mg/l)	00410	370
B.O.D. (5-Day) (mg/l)	00310	40
Chemical Oxygen Demand (C.O.D.) (mg/l)	00340	80
Total Solids (mg/l)	00500	560
Total Dissolved Solids (mg/l)	70300	540
Total Suspended Solids (mg/l)	00530	< 5
Total Volatile Solids (mg/l)	00505	180
Ammonia (as N) (mg/l)	00610	3.80
Kjeldahl Nitrogen (mg/l)	00625	5.30
Nitrate (as N) (mg/l)	00620	0.15
Phosphorus Total (as P) (mg/l)	00665	< 0.2

We certify that the above results were determined using either APHA Standard Methods (15th Edition, 1971) or procedures by the FWPCA (Nov., 1969) as listed in the Corps of Engineers Form 4345-1 (May, 1971).

L B Kline
Environmental Engineering Dept.

M R Gigliotti
Laboratory Supervisor

5750

MEN03791

CALGON INDUSTRIAL WATER SURVEY
U.S. CORPS OF ENGINEERS PERMIT DATA
PART B

Plant Name: Menasha

Address: Otsego Michigan

Sample Identification No.	Type of Sample	Collection Point	Collection Date	SIC Number
E-7930		001	10-11-71	26

Parameters	Code	Concentration	Parameters	Code	Concentration
Color (Units)	00080	*	Nitrite (as N) mg/liter	00615	< 0.05
Odor at Room Temperature (Units)	00085		Phosphorus-Ortho (as P) mg/liter	70507	
Specific Conductance Micromhos	00095	770	Sulfate (as S) mg/liter	00945	16
Turbidity (Jackson Units)	00070		Sulfide (as S) mg/liter	00745	
Radioactivity Total Alpha pc/gram	01513		Sulfite (as SO_3) mg/liter	00740	< 2
Total Beta pc/gram	03513		Cobalt, µg/liter	01035	
Total Radium pc/gram	05513		Chromium, Total µg/liter	01030	<50
Hardness Total mg $CaCO_3$/liter	00900		Copper, µg/liter	01040	<50
Total Organic Carbon (TOC) mg/liter	00680	44	Iron, µg/liter	01045	3400
Dissolved Oxygen (DO), mg/liter	00300		Lead, µg/liter	01051	<10
Total Oxygen Demand (TOD) mg/liter			Magnesium mg/liter	00927	30
Organic Nitrogen mg/liter	00605	1.5	Manganese µg/liter ✓	01055	150
			Mercury, µg/liter	71900	< 1
			Molybdenum µg/liter	01062	

(Continued)

5751

CALGON INDUSTRIAL WATER SURVEY
U.S. CORPS OF ENGINEERS PERMIT DATA
PART B
PAGE 2
SAMPLE IDENTIFICATION NO. E-7930

MEN03792

Parameters	Code	Concentration	Parameters	Code	Concentration
Nickel, µg/liter	01067	150	Pesticides mg/liter		
Selenium, µg/liter	01145		Oil & Grease mg/liter	00550	
Bromide, mg/liter	71870	0.340			
Chloride, mg/liter	00940	25	Phenols, µg/liter	32720	< 1
Cyanide, mg/liter	00720		Surfactants mg/liter	38260	< 0.05
Fluoride mg/liter	00950		Coliform Total (most probable number per 100 ml)	31505	0
Aluminum µg/liter ✓	01105	< 50			
Antimony µg/liter	01095		Coliform Fecal (number per 100 ml)	31614	0
Arsenic, µg/liter	01000				
Beryllium µg/liter	01012		Fecal Streptococci (number per 100 ml)	31673	0
Boron, µg/liter	01022		Others		
Cadmium µg/liter	01027		Phosphorus - Ortho, mg/l		0.2
Calcium, mg/liter	00916	71	Potassium, mg/l		3.6
Silver, µg/liter	0107		Sodium, mg/l		66
Tin, µg/liter	01102				
Zinc, µg/liter	01092	100			
Algicides mg/liter					
Chlorinated Hydrocarbons, mg/liter					

We certify that the above results were determined using either APHA Standard Methods (Edition, 1971) or procedures by the FWPCA (Nov., 1969) as listed in the Corps of Engineers Form 4345-1 (May, 1971).

K. B. Kline
Environmental Engineering Dept.

M. R. Gigliotti
Laboratory Supervisor

5752

MEN03793

CALGON INDUSTRIAL WATER SURVEY
U.S. CORPS OF ENGINEERS PERMIT DATA
PART A

Plant Name Menasha

Address Otsego, Michigan

Sample Identification No.	Type of Sample	Collection Point	Collection Date
E-7931		003	10-11-71

pH (Standard Units) Code 00400	SIC Number	Remarks: * Does not conform to APHA standards
7.9	26	

Parameter	Code	Concentration
Acidity (Total) as $CaCO_3$ (mg/l)	00435	0
Alkalinity (as $CaCO_3$) (mg/l)	00410	2750
B.O.D. (5-Day) (mg/l)	00310	1280
Chemical Oxygen Demand (C.O.D.) (mg/l)	00340	9780
Total Solids (mg/l)	00500	12,180
Total Dissolved Solids (mg/l)	70300	5070
Total Suspended Solids (mg/l)	00530	6130
Total Volatile Solids (mg/l)	00505	2835
Ammonia (as N) (mg/l)	00610	25
Kjeldahl Nitrogen (mg/l)	00625	150
Nitrate (as N) (mg/l)	00620	< 0.05
Phosphorus Total (as P) (mg/l)	00665	8.4

We certify that the above results were determined using either APHA Standard Methods (13th Edition, 1971) or procedures by the FWPCA (Nov., 1969) as listed in the Corps of Engineers Form 4345-1 (May, 1971).

L B Kline
Environmental Engineering Dept.

M R Gigliotti
Laboratory Supervisor

5753

MEN03794

CALGON INDUSTRIAL WATER SURVEY
U.S. CORPS OF ENGINEERS PERMIT DATA
PART B

Plant Name: Menasha
Address: Otsego, Michigan

Sample Identification No.	Type of Sample	Collection Point	Collection Date	SIC Number
E-7931		003	10-11-71	26

Parameters	Code	Concentration	Parameters	Code	Concentration
Color (Units)	00080	*	Nitrite (as N) mg/liter	00615	< 5
Odor at Room Temperature (Units)	00085		Phosphorus-Ortho (as P) mg/liter	70507	
Specific Conductance Micromhos	00095	6900	Sulfate (as S) mg/liter	00945	350
Turbidity (Jackson Units)	00070		Sulfide (as S) mg/liter	00745	
Radioactivity Total Alpha pc/gram	01513		Sulfite (as SO_3) mg/liter	00740	24
Total Beta pc/gram	03513		Cobalt, µg/liter	01035	
Total Gamma pc/gram	05513		Chromium, Total µg/liter	01030	<50
Hardness Total mg $CaCO_3$/liter	00900		Copper, µg/liter	01040	100
Total Organic Carbon (TOC) mg/liter	00680	2000	Iron, µg/liter	01045	12,000
Dissolved Oxygen (DO), mg/liter	00300		Lead, µg/liter	01051	650
Total Oxygen Demand (TOD) mg/liter			Magnesium mg/liter	00927	34
Organic Nitrogen mg/liter	00605		Manganese µg/liter	01055	1200
			Mercury, µg/liter	71900	1
			Molybdenum µg/liter	01062	

(Continued)

5754

MEN03795

CALGON INDUSTRIAL WATER SURVEY
U.S. CORPS OF ENGINEERS PERMIT DATA
PART B
PAGE 2
SAMPLE IDENTIFICATION NO. E-7931

Parameters	Code	Concentration	Parameters	Code	Concentration
Nickel, µg/liter	01067	<50	Pesticides mg/liter		
Selenium, µg/liter	01145		Oil & Grease mg/liter	00550	
Bromide, mg/liter	71870	0.580	Phenols, µg/liter	32720	1800
Chloride, mg/liter	00940	120	Surfactants mg/liter	38260	< 0.05
Cyanide, mg/liter	00720		Coliform Total (most probable number per 100 ml)	31505	40
Fluoride mg/liter	00950		Coliform Fecal (number per 100 ml)	31614	40
Aluminum µg/liter	01105	35,000	Fecal Streptococci (number per 100 ml)	31673	0
Antimony µg/liter	01095		Others		
Arsenic, µg/liter	01000		Ortho-Phosphorus, mg/l		0.2
Beryllium µg/liter	01012		Potassium, mg/l		75
Boron, µg/liter	01022		Sodium, mg/l		2240
Cadmium µg/liter	01027				
Calcium, mg/liter	00916	86			
Silver, µg/liter	01077				
Tin, µg/liter	01102				
Zinc, µg/liter	01092	350			
Algicides mg/liter					
Chlorinated Hydrocarbons, mg/liter					

We certify that the above results were determined using either APHA Standard Methods (14th Edition, 1971) or procedures by the FWPCA (Nov., 1969) as listed in the Corps of Engineers Form 4345-1 (May, 1971).

L. F. Kline
Environmental Engineering Dept.

M. R. Gigliotti
Laboratory Supervisor

5755

MEN03796

CALGON INDUSTRIAL WATER SURVEY
U.S. CORPS OF ENGINEERS PERMIT DATA
PART A

Plant Name Menasha

Address Otsego, Michigan

Sample Identification No.	Type of Sample	Collection Point	Collection Date
E-7932		Ash Lime Pond 004	10-11-71

pH (Standard Units) Code 00400	SIC Number	Remarks:
8.9	26	

Parameter	Code	Concentration
Acidity (Total) as $CaCO_3$ (mg/l)	00435	0
Alkalinity (as $CaCO_3$) (mg/l)	00410	273
B.O.D. (5-Day) (mg/l)	00310	14
Chemical Oxygen Demand (C.O.D.) (mg/l)	00340	80
Total Solids (mg/l)	00500	1125
Total Dissolved Solids (mg/l)	70300	590
Total Suspended Solids (mg/l)	00530	480
Total Volatile Solids (mg/l)	00505	110
Ammonia (as N) (mg/l)	00610	1.35
Kjeldahl Nitrogen (mg/l)	00625	1.6
Nitrate (as N) (mg/l)	00620	1.9
Phosphorus Total (as P) (mg/l)	00665	2.0

We certify that the above results were determined using either APHA Standard Methods (13th Edition, 1971) or procedures by the FWPCA (Nov., 1969) as listed in the Corps of Engineers Form 4345-1 (May, 1971).

L B Kline
Environmental Engineering Dept.

M R Gigliotti
Laboratory Supervisor

5756

CALGON INDUSTRIAL WATER SURVEY
U.S. CORPS OF ENGINEERS PERMIT DATA
PART B

MEN03797

Plant Name: Menasha
Address: Otsego, Michigan

Sample Identification No.	Type of Sample	Collection Point	Collection Date	SIC Number
E-7932		Ash Lime Pond 004	10-11-71	26

Parameters	Code	Concentration	Parameters	Code	Concentration
Color (Units)	00080	100	Nitrite (as N) mg/liter	00615	< 0.5
Odor at Room Temperature (Units)	00085		Phosphorus-Ortho (as P) mg/liter	70507	
Specific Conductance Micromhos	00095	950	Sulfate (as S) mg/liter	00945	30
Turbidity (Jackson Units)	00070		Sulfide (as S) mg/liter	00745	
Radioactivity Total alpha pc/gram	01513		Sulfite (as SO_3) mg/liter	00740	< 2
Total beta pc/gram	03513		Cobalt, µg/liter	01035	
Total gamma pc/gram	05513		Chromium, Total µg/liter	01030	<50
Hardness Total mg $CaCO_3$/liter	00900		Copper, µg/liter	01040	<50
Total Organic Carbon (TOC) mg/liter	00680	21	Iron, µg/liter	01045	5700
Dissolved Oxygen (DO), mg/liter	00300		Lead, µg/liter	01051	<10
Total Oxygen Demand (TOD) mg/liter			Magnesium mg/liter	00927	36
Organic Nitrogen mg/liter	00605		Manganese µg/liter	01055	300
			Mercury, µg/liter	71900	< 1
			Molybdenum µg/liter	01062	

(Continued)

5757

CALSON INDUSTRIAL WATER SURVEY
U.S. CORPS OF ENGINEERS PERMIT DATA
PART B
PAGE 2
SAMPLE IDENTIFICATION NO. E-7932

MEN03798

Parameters	Code	Concentration	Parameters	Code	Concentration
Nickel, µg/liter	01067	< 50	Pesticides mg/liter		
Selenium, µg/liter	01145		Oil & Grease mg/liter	00550	
Bromide, mg/liter	71870	0.200			
Chloride, mg/liter	00940	129	Phenols, µg/liter	32720	< 1
Cyanide, mg/liter	00720		Surfactants mg/liter	38260	< 0.05
Fluoride mg/liter	00950		Coliform Total (most probable number per 100 ml)	31505	90
Aluminum µg/liter	01105	1700			
Antimony µg/liter	01095		Coliform Fecal (number per 100 ml)	31614	0
Arsenic, µg/liter	0100[illegible]				
Beryllium µg/liter	01012		Fecal Streptococci (number per 100 ml)	31673	0
Boron µg/liter	01022		Others		
Cadmium µg/liter	01027		Ortho-Phosphorus, mg/l		0.1
Calcium, mg/liter	00916	105	Potassium, mg/l		4.3
Silver, µg/liter	1077		Sodium, mg/l		150
Tin, µg/liter	01102				
Zinc, µg/liter	01092	350			
Algicides, mg/liter					
Chlorinated Hydrocarbons, mg/liter					

We certify that the above results were determined using either APHA Standard Methods (13th Edition, 1971) or procedures by the FWPCA (Nov., 1969) as listed in the Corps of Engineers Form 4345-1 (May, 1971).

L. B. Kline
Environmental Engineering Dept.

M. R. Giglioti
Laboratory Supervisor

5758

OMB NO. 158-R0013

MEN03799

ENVIRONMENTAL PROTECTION AGENCY

NOTICE OF FEDERAL CERTIFICATION

(Pursuant to Section 169 of the Internal Revenue Code of 1954, as amended) RE: MI-5

PLEASE TAKE NOTICE that pursuant to section 169 of the Internal Revenue Code of 1954, as amended, and Part 602 of Title 18 of the Code of Federal Regulations, the control facility identified herein

☒ is certified

☐ Will, if constructed, reconstructed, acquired, created, installed and operated in accordance with the accompanying application, be certified

as being in compliance with the applicable regulations of Federal agencies and the general policies of the United States for cooperation with the States in the prevention and abatement of ☒ water pollution ☐ air pollution under the Federal Water Pollution Control Act, as amended (33 U.S.C. 1151 et seq.) or the Clean Air Act, as amended (42 U.S.C. 1857 et seq.). This certification is based on facts furnished by the applicant, and is valid for purposes of section 169 only to the extent that such facts are complete and accurate.

1. NAME OF APPLICANT Menasha Corporation	ADDRESS (Street, City, State, Zip Code) P. O. Box 367 Highway 41 Neenah, Wisconsin 54956
2. EMPLOYER IDENTIFICATION NUMBER 39-0364680	
3. PERSON AUTHORIZED TO RECEIVE CERTIFICATION:	
NAME W. Allen Schenck	ADDRESS (Street, City, State, Zip Code) Same
TITLE Vice President	

4. DESCRIPTION OF CONTROL FACILITY

Facility is an aerating lagoon system for treatment of paper mill white water. It consists of ponds and piping, five Dorr-Oliver floating aerators, pumps, valves, and electrical equipment and other appurtenances. The purpose is to provide high rate oxidation of organic materials to bring about a reduction in waste loading on the Kalamazoo River. A clarifier and settling ponds are also provided and sludge is removed for surface disposal on land areas.

5. LOCATION OF CONTROL FACILITY (Street, City, State, Zip Code)

Menasha Corporation Paperboard Division, Otsego, Michigan 49078

6. EFFLUENT DISCHARGED TO

Kalamazoo River

7. THE CONTROL FACILITY IDENTIFIED HEREIN ☐ DOES ☒ DOES NOT GENERATE PROFITS THROUGH THE RECOVERY AND SALES OF WASTES, OR OTHERWISE.

8. THE CONTROL FACILITY IDENTIFIED HEREIN ☐ IS ☒ IS NOT A BUILDING THE ONLY FUNCTION OF WHICH IS THE ABATEMENT OR CONTROL OF POLLUTION, AS DETERMINED IN ACCORDANCE WITH SECTION 1.169-2 (2) (i) OF THE INCOME TAX REGULATIONS.

9.
☒ A. THE CONTROL FACILITY IDENTIFIED HEREIN IS USED ONLY IN CONNECTION WITH PLANTS OR PROPERTIES THAT WERE IN SERVICE ON OR BEFORE DECEMBER 31, 1968.
☒ B. 100 % OF THE AMORTIZABLE BASIS OF THE FACILITY IS ALLOCABLE TO ITS USE IN CONNECTION WITH PLANTS OR PROPERTIES THAT WERE IN SERVICE ON OR BEFORE DECEMBER 31, 1968.

10.
☒ A. THE CONTROL FACILITY PERFORMS NO FUNCTION IN ADDITION TO THE ABATEMENT OR CONTROL OF POLLUTION.
☒ B. 100 % OF THE AMORTIZABLE BASIS OF THE CONTROL FACILITY IS ALLOCABLE TO THE ABATEMENT OR CONTROL OF POLLUTION.

ISSUED THIS 26th DAY OF September, 19 72	SIGNATURE Robert W. Zeller, Ph.D.
STATE CERTIFICATION NUMBER F-54	TITLE Director-Surveillance & Analysis Division

EPA Form 3300-3 (9-71)

5759

NATURAL RESOURCES COMMISSION
THOMAS J ANDERSON
MARLENE J FLUHARTY
GORDON E GUYER
KERRY KAMMER
ELLWOOD A MATTSON
D STEWART MYERS
RAYMOND POUPORE

STATE OF MICHIGAN

MEN03800

JAMES J BLANCHARD Governor

DEPARTMENT OF NATURAL RESOURCES

STEVENS T MASON BUILDING
P O BOX 30028
LANSING MI 48909

DAVID F HALES Director

October 23, 1990

CERTIFIED MAIL

Menasha Corporation
320 North Farmer Street
Otsego, Michigan 49078

Gentlemen:

SUBJECT: NPDES Permit No. MI0003824

Your National Pollutant Discharge Elimination System (NPDES) Permit has been processed in accordance with appropriate state and federal regulations. It contains the requirements necessary for you to comply with state and federal water pollution control laws.

REVIEW THE PERMIT EFFLUENT LIMITS AND COMPLIANCE SCHEDULES CAREFULLY. These are subject to the criminal and civil enforcement provisions of both state and federal law. Permit violations are audited by the Michigan Department of Natural Resources and the United States Environmental Protection Agency and may appear in a published quarterly noncompliance report made available to agencies and the public.

Your monitoring and reporting responsibilities must be complied with in accordance with this permit. If applicable, Discharge Monitoring Report forms will be transmitted to you in the near future. These reports are to be submitted monthly or otherwise as required by your NPDES permit.

Any reports, notifications, or questions regarding the attached permit or NPDES program should be directed to the following address:

Fred Morley, District Supervisor
621 North Tenth Street
P.O. Box 355
Plainwell, Michigan 49080
Telephone: (616) 685-9886

NOTE: All references within this permit made to the Water Quality Division or Chief of the Water Quality Division are to refer to the Surface Water Quality Division or Chief of the Surface Water Quality Division, respectively.

Sincerely,

William E. McCracken

William E. McCracken, P.E.
Chief, Permits Section
Surface Water Quality Division
517-373-8088

Enclosure: Permit

cc: EPA-Region V (2)
208 Agency - West Michigan Regional Planning Commission
Planning and Special Programs Section, SWQD
Mr. Fred Morley - Plainwell District, SWQD (2)
Mr. Paul Blakeslee, Regional Supervisor, Region III, SWQD
Compliance and Enforcement, SWQD
Data Entry, SWQD
Point Source Studies (Grand Rapids District Office), SWQD
Files

PERMIT NO. MI0003824

MEN03802

MICHIGAN WATER RESOURCES COMMISSION
AUTHORIZATION TO DISCHARGE UNDER THE
NATIONAL POLLUTANT DISCHARGE ELIMINATION SYSTEM

In compliance with the provisions of the Federal Water Pollution Control Act, as amended, (33 U.S.C. 1251 et seq; the "Act"), and the Michigan Water Resources Commission Act, as amended, (Act 245, Public Acts of 1929, as amended, the "Michigan Act"),

Menasha Corporation
320 North Farmer Street
Otsego, Michigan 49078

is authorized to discharge from a facility located at

320 North Farmer Street
Otsego, Michigan 49078

designated as Menasha Corp

to the receiving water named the Kalamazoo River in accordance with effluent limitations, monitoring requirements and other conditions set forth in this permit.

This permit takes effect on January 1, 1991. Any person who feels aggrieved by this permit may file a sworn petition with the Executive Secretary of the Michigan Water Resources Commission, setting forth the conditions of the permit which are being challenged and specifying the grounds for the challenge. The Commission may reject any petition filed more than 60 days after issuance as being untimely. Upon granting of a contested case to the applicant, the Commission shall review the permit to determine which contested term shall be stayed until the Commission takes its final action. If a contested condition is a requirement placed on wastewater covered by a new or increased discharge authorization, such increased discharge authorization shall be stayed until the Commission takes final action. All other conditions of the permit remain in full effect. If the contested condition is a modification of a previous permit condition and the Commission determines the contested condition shall be stayed, then such previous condition remains in effect until the Commission takes final action. During the course of any administrative proceeding brought by a person other than the applicant, the conditions of this permit will remain in effect, unless the Commission determines otherwise.

This permit and the authorization to discharge shall expire at midnight October 1, 1995. In order to receive authorization to discharge beyond the date of expiration, the permittee shall submit such information and forms as are required by the Michigan Water Resources Commission to the Permits Section of the Surface Water Quality Division no later than 180 days prior to the date of expiration.

This permit is based on an application submitted on December 4, 1989 as amended. On its effective date this permit shall supersede NPDES Permit No. MI0003824, expiring May 31, 1990.

Issued this 20th day of September, 1990, by the Michigan Water Resources Commission.

Paul D. Zugger
Executive Secretary

PART I

MEN03803

A. EFFLUENT LIMITATIONS AND MONITORING REQUIREMENTS

1. Final Effluent Limitations, Outfall 001

During the period beginning on the effective date of this permit and lasting until the expiration of this permit the permittee is authorized to discharge up to six hundred thousand (600,000) gallons per day of noncontact cooling water from outfall 001 to the Kalamazoo River. Such discharge shall be limited and monitored by the permittee as specified below:

	Discharge Limitations				Monitoring Requirements	
	lbs/day		Other Limitations			
Effluent Characteristic	Monthly Average	Daily Maximum	Monthly Average	Daily Maximum	Measurement Frequency	Sample Type
Flow (MGD)	(report)	(report)	--	--	Daily	Report Total Daily Flow
Temperature (°F)	--	--	--	(report)	Weekly	Reading
Total Copper	--	--	--	105 ug/l	Weekly	Grab Comp.*
pH (Standard Units)			6.5 (Daily Minimum)	9.0	Weekly	Grab
Outfall Observation	--	--	--	--	Daily	Visual

*Grab composite samples shall consist of three grab samples, spaced equally during a 24-hour period.

a. The receiving stream shall contain no unnatural turbidity, color, oil film, floating solids, foams, settleable solids, or deposits in quantities which are or may become injurious to any designated use as a result of this discharge.

b. Samples, measurements, and observations taken in compliance with the monitoring requirements above shall be taken prior to discharge to the storm sewer.

c. Any unusual characteristics of the discharge (i.e., unnatural turbidity, color, oil film, floating solids, foams, settleable solids, or deposits which would not be expected from the discharges specified above) shall be reported immediately to the Plainwell District Supervisor of the Surface Water Quality Division followed with a written report within 5 days detailing the findings of the investigation and the steps taken to correct the condition.

d. In the event the permittee shall require the discharge of water treatment additives in addition to any previously approved by the Plainwell District Supervisor of the Surface Water Quality Division, the permittee shall notify the Plainwell District Supervisor. Written approval from the Plainwell District Supervisor to discharge such additives at specified levels shall be obtained prior to discharge by the permittee. The permit will be modified in accordance with the requirements of Part II.B.4. if a constituent of the additive or additives requires limiting.

e. The term noncontact cooling water shall mean water used for cooling which does not come into direct contact with any raw material, intermediate product, by-product, waste product, or finished product.

PART I

MEN03804

Section A.

2. Interim Effluent Limitations, Outfall 002

During the period beginning on the effective date of this permit and lasting until July 31, 1991 the permittee is authorized to discharge up to eight hundred thousand (800,000) gallons per day of treated vacuum pump seal water, heat exchanger shower water and condensate, and noncontact cooling water from outfall 002 to the Kalamazoo River. Such discharge shall be limited and monitored by the permittee as specified below:

	Discharge Limitations				Monitoring Requirements	
	lbs/day		Other Limitations			
Effluent Characteristic	Monthly Average	Daily Maximum	Monthly Average	Daily Maximum	Measurement Frequency	Sample Type
Flow (MGD)	(report)	(report)	--	--	Daily	Report Total Daily Flow
BOD_5, mg/l	--	--	(report)	(report)	Daily	24-Hr. Comp.
TSS, mg/l	--	--	(report)	(report)	Daily	24-Hr. Comp.
Total Copper	--	--	--	105 ug/l	Weekly	24 Hr. Comp.
Temperature (°F)	--	--	--	(report)	Weekly	Direct Readi
Outfall Observation	--	--	--	--	Daily	Visual
			Daily Minimum	Daily Maximum		
pH (Standard Units)			6.5	9.0	Weekly	Grab

a. The receiving stream shall contain no unnatural turbidity, color, oil film, floating solids, foams, settleable solids, or deposits in quantities which are or may become injurious to any designated use as a result of this discharge.

b. Samples, measurements, and observations taken in compliance with the monitoring requirements above shall be taken prior to discharge to the Kalamazoo River.

c. Any unusual characteristics of the discharge (i.e., unnatural turbidity, color, oil film, floating solids, foams, settleable solids, or deposits which would not be expected from the discharges specified above) shall be reported immediately to the Plainwell District Supervisor of the Surface Water Quality Division followed with a written report within 5 days detailing the findings of the investigation and the steps taken to correct the condition.

PART I

MEN03805

Section A. 2.

d. In the event the permittee shall require the discharge of water treatment additives in addition to any previously approved by the Plainwell District Supervisor of the Surface Water Quality Division, the permittee shall notify the Plainwell District Supervisor. Written approval from the Plainwell District Supervisor to discharge such additives at specified levels shall be obtained prior to discharge by the permittee. The permit will be modified in accordance with the requirements of Part II.B.4. if a constituent of the additive or additives requires limiting.

e. The term noncontact cooling water shall mean water used for cooling which does not come into direct contact with any raw material, intermediate product, by-product, waste product, or finished product.

PART I

MEN03806

Section A.

3. Interim Effluent Limitations, Outfall 000

During the period beginning on the effective date of this permit and lasting until July 31, 1991 the permittee is authorized to discharge up to nine hundred twenty thousand (920,000) gallons per day of treated process wastewater, lime slurry, miscellaneous seal and cooling water, and recovery evaporator condensate from outfall 000 through outfall 003 to the Kalamazoo River. Such discharge shall be limited and monitored by the permittee as specified below:

	Discharge Limitations				Monitoring Requirements	
	lbs/day		Other Limitations			
Effluent Characteristic	Monthly Average	Daily Maximum	Monthly Average	Daily Maximum	Measurement Frequency	Sample Type
Flow (MGD)	(report)	(report)	--	--	Daily	Report Total Daily Flow
Soluble Ortho-phosphorus	8	--	--	--	Weekly	24-Hr. Comp.
BOD_5, mg/l	--	--	(report)	(report)	Daily	24-Hr. Comp.
TSS, mg/l	--	--	(report)	(report)	Daily	24-Hr. Comp.
Total Zinc	--	--	--	506 ug/l	Weekly	24-Hr. Comp.
Temperature (°F)	--	--	--	(report)	Weekly	Direct Readir
			Daily Minimum	Daily Maximum		
pH (Standard Units)			6.0	9.0	Daily	Grab

a. Samples, measurements, and observations taken in compliance with the monitoring requirements above shall be taken prior to mixing with other waste streams.

PART I

Section A.

4. Interim Effluent Limitations, Outfalls 000 and 002

During the period beginning on the effective date of this permit and lasting until July 31, 1991 the permittee shall limit and monitor outfalls 000 and 002 as specified below on a combined basis:

Effluent Characteristic	Discharge Limitations lbs/day Monthly Average	Discharge Limitations lbs/day Daily Maximum	Other Limitations Monthly Average	Other Limitations Daily Maximum	Monitoring Requirements Measurement Frequency	Monitoring Requirements Sample Type
BOD_5 (10/1 to 4/30)	3,345	6,261	--	--	Daily	Calculation
BOD_5 (5/1 to 9/30)	--	3,725	--	--	Daily	Calculation
TSS	3,742	5,376	--	--	Daily	Calculation

PART I

Section A.

5. Interim Effluent Limitations, Outfall 003 and 005

During the period beginning on the effective date of this permit and lasting until July 31, 1991 the permittee is authorized to discharge up to six million nine hundred fifty-five thousand (6,955,000) gallons per day of turbine condenser noncontact cooling water through outfalls 003 and 005 and nine hundred twenty thousand (920,000) gallons per day of treated process wastewater, lime slurry, miscellaneous seal and cooling water, and recovery evaporator condensate from outfall 000 through outfall 003 to the Kalamazoo River. Such discharge shall be limited and monitored by the permittee as specified below:

	Discharge Limitations				Monitoring Requirements	
	lbs/day		Other Limitations			
Effluent Characteristic	Monthly Average	Daily Maximum	Monthly Average	Daily Maximum	Measurement Frequency	Sample Type
Flow (MGD)	(report)	(report)	--	--	Daily	Report Total Daily Flow
Temperature (°F)	--	--	--	report	Weekly	Direct Readi
Total Copper	--	--	--	105 ug/l	Weekly	Grab Comp.
Outfall Observation	--	--	--	--	Daily	Visual
			Daily Minimum	Daily Maximum		
pH (Standard Units)			6.5	9.0	Weekly	Grab

a. The receiving stream shall contain no unnatural turbidity, color, oil film, floating solids, foams, settleable solids, or deposits in quantities which are or may become injurious to any designated use as a result of this discharge.

b. Samples, measurements, and observations taken in compliance with the monitoring requirements above shall be taken as follows: flow to be calculated from intake for turbine condenser water; temperature and pH - at the splitter box; total copper for outfall 003 - at the mix box after mixing; total copper for outfall 005 - at the splitter box; outfall observation - at the point of discharge (outfalls 003 and 005).

c. Any unusual characteristics of the discharge (i.e., unnatural turbidity, color, oil film, floating solids, foams, settleable solids, or deposits which would not be expected from the discharges specified above) shall be reported immediately to the Plainwell District Supervisor of the Surface Water Quality Division followed with a written report within 5 days detailing the findings of the investigation and the steps taken to correct the condition.

PART I

Section A. 5.

d. In the event the permittee shall require the discharge of water treatment additives in addition to any previously approved by the Plainwell District Supervisor of the Surface Water Quality Division, the permittee shall notify the Plainwell District Supervisor. Written approval from the Plainwell District Supervisor to discharge such additives at specified levels shall be obtained prior to discharge by the permittee. The permit will be modified in accordance with the requirements of Part II.B.4. if a constituent of the additive or additives requires limiting.

e. The term noncontact cooling water shall mean water used for cooling which does not come into direct contact with any raw material, intermediate product, by-product, waste product, or finished product.

PART I

Section A.

6. Interim Effluent Limitations, Outfall 004

During the period beginning on the effective date of this permit and lasting until July 31, 1991 the permittee is authorized to discharge up to two hundred thirty four thousand (234,000) gallons per day of noncontact cooling water, boiler blowdown, zeolite recharging wastewater, and roof and floor drain from outfall 004 to the Kalamazoo River. Such discharge shall be limited and monitored by the permittee as specified below:

	Discharge Limitations				Monitoring Requirements	
	lbs/day		Other Limitations			
Effluent Characteristic	Monthly Average	Daily Maximum	Monthly Average	Daily Maximum	Measurement Frequency	Sample Type
Flow (MGD)	(report)	(report)	--	--	Daily	Report Total Daily Flow
TSS	39	96	20 mg/l	50 mg/l	Weekly	Grab
Temperature (°F)	--	--	--	(report)	Weekly	Direct Readir
Outfall Observation	--	--	--	--	Daily	Visual
			Daily Minimum	Daily Maximum		
pH (Standard Units)			6.5	9.0	Weekly	Grab

a. The receiving stream shall contain no unnatural turbidity, color, oil film, floating solids, foams, settleable solids, or deposits in quantities which are or may become injurious to any designated use as a result of this discharge.

b. Samples, measurements, and observations taken in compliance with the monitoring requirements above shall be taken prior to discharge to the Kalamazoo River.

c. Any unusual characteristics of the discharge (i.e., unnatural turbidity, color, oil film, floating solids, foams, settleable solids, or deposits which would not be expected from the discharges specified above) shall be reported immediately to the Plainwell District Supervisor of the Surface Water Quality Division followed with a written report within 5 days detailing the findings of the investigation and the steps taken to correct the condition.

d. In the event the permittee shall require the discharge of water treatment additives in addition to any previously approved by the Plainwell District Supervisor of the Surface Water Quality Division, the permittee shall notify the Plainwell District Supervisor. Written approval from the Plainwell District Supervisor to discharge such additives at specified levels shall be obtained prior to discharge by the permittee. The permit will be modified in accordance with the requirements of Part II.B.4. if a constituent of the additive or additives requires limiting.

e. The term noncontact cooling water shall mean water used for cooling which does not come into direct contact with any raw material, intermediate product, by-product, waste product, or finished product.

PART I

MEN03811

Section A.

7. Final Effluent Limitations, Outfall 003

During the period beginning on August 1, 1991 and lasting until the expiration of this permit the permittee is authorized to discharge up to nine million nine hundred fifty five thousand (9,955,000) gallons per day of treated process wastewater, vacuum pump seal water, boiler blowdown, zeolite evaporator condensate wastewater, lime slurry, turbine condenser water and other noncontact cooling water, miscellaneous seal and cooling water, recovery evaporator condensate and an unspecified amount of storm water runoff from outfall 003 to the Kalamazoo River. Such discharge shall be limited and monitored by the permittee as specified below:

	Discharge Limitations				Monitoring Requirements	
	lbs/day		Other Limitations			
Effluent Characteristic	Monthly Average	Daily Maximum	Monthly Average	Daily Maximum	Measurement Frequency	Sample Type
Flow (MGD)	(report)	(report)	--	--	Daily	Report Total Daily Flow
Total Copper	--	--	--	105 ug/l	Weekly	24. Hr. Comp
Total Zinc	--	--	--	506 ug/l	Weekly	24. Hr. Comp
Temperature (°F)	--	--	--	(report)	Weekly	Direct Readi·
Total Phosphorus (as P) mg/l	--	--	(report)	--	2 X Monthly	24. Hr. Comp
Outfall Observation	--	--	--	--	Daily	Visual
			Daily Minimum	Daily Maximum		
pH (Standard Units)			6.5	9.0	Weekly	Grab

a. The receiving stream shall contain no unnatural turbidity, color, oil film, floating solids, foams, settleable solids, or deposits in quantities which are or may become injurious to any designated use as a result of this discharge.

b. Samples, measurements, and observations taken in compliance with the monitoring requirements above shall be taken: Total Copper, Total Zinc and Total Phosphorus - before mixing with turbine condenser water; for other parameters at outfall 003 prior to discharge to the Kalamazoo River.

PART I

MEN03812

Section A. 7.

c. Any unusual characteristics of the discharge (i.e., unnatural turbidity, color, oil film, floating solids, foams, settleable solids, or deposits which would not be expected from the discharges specified above) shall be reported immediately to the Detroit District Supervisor of the Surface Water Quality Division followed with a written report within 5 days detailing the findings of the investigation and the steps taken to correct the condition.

d. In the event the permittee shall require the discharge of water treatment additives in addition to any previously approved by the Plainwell District Supervisor of the Surface Water Quality Division, the permittee shall notify the Plainwell District Supervisor. Written approval from the Plainwell District Supervisor to discharge such additives at specified levels shall be obtained prior to discharge by the permittee. The permit will be modified in accordance with the requirements of Part II.B.4. if a constituent of the additive or additives requires limiting.

e. The term noncontact cooling water shall mean water used for cooling which does not come into direct contact with any raw material, intermediate product, by-product, waste product, or finished product.

PART I

MEN03813

Section A.

8. Final Effluent Limitations, Outfall 00B

During the period beginning on August 1, 1991 and lasting until the expiration of this permit the permittee is authorized to discharge up to three million (3,000,000) gallons per day of treated process wastewater, vacuum pump seal water, boiler blowdown, zeolite recharging wastewater, noncontact cooling water and stormwater runoff from outfall 00B through outfall 003 to the Kalamazoo River. Such discharge shall be limited and monitored by the permittee as specified below:

	Discharge Limitations				Monitoring Requirements	
	lbs/day		Other Limitations			
Effluent Characteristic	Monthly Average	Daily Maximum	Monthly Average	Daily Maximum	Measurement Frequency	Sample Type
Flow (MGD)	(report)	(report)	--	--	Daily	Report Total Daily Flow
BOD_5						
(May 1 to Sept. 30)	--	3,725	--	--	Daily	24. Hr. Comp.
(Oct. 1 to Apr. 30)	3,345	6,261	--	--	Daily	24. Hr. Comp.
Total Suspended Solids	4,939	7,096	--	--	Daily	24 Hr. Comp.
Soluble Ortho-phosphorus	8	--	--	--	Weekly	24. Hr. Comp.

a. Samples, measurements, and observations taken in compliance with the monitoring requirements above shall be taken as follows: soluble orthophosphorus before the treated process wastewater gets mixed with other wastestreams and for other parameters prior to mixing with the turbine condenser water.

PART I

MEN03814

Section A.

9. Special Condition - Short Term Waste Characterization Study

As a condition of this permit, the permittee shall monitor the discharge from outfalls 001 for the constituents, at the frequency, and for the duration specified below. This monitoring is designed to determine whether these constituents are discharged in significant quantities. The results of the analysis of such monitoring shall be submitted to the Plain Well District Supervisor of the Surface Water Quality Division in accordance with Part I.C.4, Schedule of Compliance. If, upon review of the analysis, it is determined that any of the materials or constituents require limiting to protect the receiving waters in accordance with applicable water quality standards, the permit may then be modified after public notice and Commission approval of the recommended permit modification in accordance with Part II.B.4.

CONSTITUENT	OUTFALL NO.	SAMPLE TYPE	DESIRED DETECTION-LIMIT	SAMPLE DURATION
Total Zinc	001	24 Hr. Comp.	5 ug/l	Weekly for 6 Weeks

Called Asad 1/8/91 - ok.

Called Gene Mogg 1/8/91
Grab each 4 hrs over 24 hr.

PART I

Section A. MEN03815

10. Special Condition - Acute Toxicity Testing

To satisfy the aquatic toxicity-related requirements of Rule 57 of the Michigan Water Quality Standards (MWQS), the effluent from outfall 000 shall not exceed 7.1 acute toxic units (TU_A). "Acute toxic unit" is defined as the reciprocal of the test concentration that causes the acute effect by the end of the acute exposure period.

a. On or before January 1, 1991, the permittee shall submit a biomonitoring plan outlining specific testing and reporting procedures to the Plainwell District Supervisor of the Surface Water Quality Division for approval. The plan shall include four acute toxicity tests on two test species using effluent from outfall 000. The toxicity tests shall be conducted once every 2 months after approval of the biomonitoring plan. Test species shall include fathead minnow and *Daphnia magna* (alternate test species may be used upon approval of the Plainwell District Supervisor). Testing and reporting procedures shall follow procedures contained in EPA/600/4-85/013, "Methods for Measuring the Acute Toxicity of Effluents to Freshwater and Marine Species".

b. The permittee shall implement the biomonitoring plan within 60 days after approval of the Plainwell District Supervisor.

c. The final report on the tests conducted under item 8.b. above, shall be submitted to the Plainwell District Supervisor within one month after completion of the final test.

d. The Surface Water Quality Division will review the toxicity data submitted by the permittee to determine if the toxicity requirements of Rule 57 are being satisfied. An acute/chronic ratio of 10 will be used (unless the permittee develops an effluent specific acute/chronic ratio through additional toxicity testing performed under the guidance of the Plainwell District Supervisor of the Surface Water Quality Division) to predict the effluents's maximum acceptable toxicant concentration from the acute test results.

i. If the toxicity requirements of Rule 57 are not being met, upon written notification by the Plainwell District Supervisor, the following conditions apply:

a) Within 90 days of the above notification, the permittee shall submit a Toxicity Identification/Reduction Evaluation (TI/RE) Plan to the Plainwell District Supervisor for approval. The TI/RE Plan shall include appropriate measures to comply with the toxicity requirements of Rule 57, monitoring to show the effectiveness of the toxicity control measures, and a schedule to implement the plan.

b) The permittee shall implement the approved TI/RE Plan in accordance with the schedule contained in the plan.

(continued)

PART I

MEN03816

Section A.10.d. (continued)

ii. If the toxicity requirements of Rule 57 are close to being exceeded, upon written notification by the Plainwell District Supervisor, the permittee shall conduct quarterly acute toxicity tests on the effluent from outfall 000 for the life of the permit. After 1 year the monitoring frequency may be reduced upon approval of the Plainwell District Supervisor if the test data indicate that the toxicity requirements of Rule 57 are consistently being met. The acute toxicity tests shall be performed using the more sensitive species selected from the acute toxicity database produced in item 8.b., above. If a more sensitive species cannot be identified, the acute toxicity tests shall be performed with both species.

The Surface Water Quality Division will review the toxicity data submitted by the permittee to determine if the toxicity requirements of Rule 57 are being satisfied. If the toxicity requirements of Rule 57 are not being met, upon written notification by the Plainwell District Supervisor, the conditions of item 8.d.i., above, apply.

e. This permit may be modified in accordance with Part II.B.4. to include additional whole effluent toxicity requirements as necessary.

11. Special Condition - Toxicity Testing and Compliance Demonstration for Water Additives.

The authorization to discharge water additives Busperse 231 and Busan 881 from outfall 002 beyond December 31, 1991 will require the permittee to submit acute toxicity data for the above water additives. Minimal characterization of aquatic toxicity includes: 1) a 96-hour LC50 for rainbow trout or fathead minnow; and 2) a 48-hour EC50 for *Daphnia* species. Testing procedures shall follow ASTM, Standard E 729-88. Prior to conducting the testing, a plan shall be submitted to and approved by the Plainwell District Supervisor of the Surface Water Quality Division.

The permittee shall also determine the concentrations of the water additives in the discharges by analysis or, if an approved analytical technique is not available, by calculations based on the mass balance through the system.

The toxicity data and discharge concentration data shall be submitted to the Plainwell District Supervisor of the Surface Water Quality Division by March 31, 1991.

If, as determined by the Plainwell District Supervisor, the water additives, as currently used, does not exceed the water quality-based effluent limitations, the permittee will be authorized to use the water additives at the levels specified in the application.

If, upon review of the above demonstrations, it is determined by the Plainwell District Supervisor that the effluent limitations are being exceeded, the permittee will be so notified. The permittee shall achieve compliance with the effluent limitations within three months of such notification.

PART I

Section A. MEN03817

12. Special Condition - Compliance Demonstration for Water Additives.

The authorization to discharge water additives Busan 110 and Busan 110WB from outfall 002 and Calgon CL56 from outfall 001 beyond July 31, 1991, and the authorization to discharge water additives Busan 110, Busan 110WB, and Betz 445 from combined outfall 003 beyond March 31, 1992 will require the permittee to submit to the Plainwell District Supervisor of the Surface Water Quality Division, sufficient data to demonstrate that the concentrations of the above mentioned water additives in the discharges do not exceed the daily maximum and monthly average effluent limitations listed below. The concentrations of the water additives in the discharge shall be determined by analyses or, if an approved analytical technique is not available, by calculation based on the mass balance through the system.

If, as determined by the Plainwell District Supervisor, the water additives, as currently used, do not exceed the effluent limitations, the permittee will be authorized to continue the use of the water additives at the levels specified in the application.

If, upon review of the above demonstration, it is determined by the Plainwell District Supervisor that the effluent limitations are being exceeded, the permittee will be so notified. The permittee shall achieve compliance with the effluent limitations within three months of such notification.

WATER TREATEMENT ADDITIVE	OUTFALL NO.	DAILY MAXIMUM CONCENTRATION		AVERAGE MONTHLY CONCENTRATION	
		*	**	*	**
Busan 110	002	78 ug/l	--	--	--
Busan 110	003	--	78 ug/l	--	11.6 ug/l
Busan 110 WB	002	78 ug/l	--	--	--
Busan 110 WB	003	--	78 ug/l	--	11.6 ug/l
Calgon CL56	001	456 ug/l	--	--	--
Betz 445	003	--	--	20.5 mg/l	15 mg/l

*Prior to outfall combination
**After outfall combination

PART I

MEN03818

Section A.

13. Special Condition - Program for Effective Residuals Management (PERM)

In addition to the requirements in Part II.A.11. herein, the permittee shall provide for the effective management and/or disposal of residuals, i.e., solids, sludges, ash, grit and other substances removed from or resulting from treatment of the wastewater. Residuals disposal shall be accomplished in such manner and at such locations that the disposal practices shall not result in unlawful pollution of the air, surface waters or groundwaters of the state nor create nuisance conditions. Such management and/or disposal program shall be set forth in a "Program for Effective Residuals Management" prepared by the permittee. The program shall include but is not limited to the following:

1) a management plan (treatment, transportation, storage, disposal, contingency plans);

2) an inventory of residuals production, storage, and disposal for a period of at least one year;

3) an analysis of the residuals;

4) a monitoring program;

5) if land application is proposed, site maps, soil analyses, application rates, proposed vegetation, and other pertinent information; and,

6) if groundwater degradation potential exists, a hydrogeologic study.

The program shall be submitted to and receive the approval of the Plainwell District Supervisor of the Surface Water Quality Division in accordance with the Schedule of Compliance, Part I.C.5 of this permit. Subsequent to approval, disposal of residuals resulting from treatment of wastewater shall be in accordance with the program. If the permittee desires to make any substantial changes in the program, such proposed changes shall be submitted to and be approved by the Plainwell District Supervisor of the Surface Water Quality Division prior to implementation. Substantial changes shall include but not be limited to: a change in disposal method or site; a change in treatment method; a change in storage method or site; a change in monitoring parameters or monitoring frequency; an increase in application rate; or a change in residuals quantity or characteristics. Any residual disposal inconsistent with the approved program shall be considered a violation of this permit.

PART I

MEN03819

Section A.

14. Special Condition - Biocides

The permittee is prohibited from using chlorophenolic-containing biocides. In the event the permittee desires to use such biocides, the permittee may request modification of the permit. The permit may be modified in accordance with the requirements of Part II.B.4. to include effluent limitations for pentachlorophenol and trichlorophenol, and any other requirements necessary to protect the receiving waters.

15. Special Condition - Production Rates Reporting

The permittee shall report in writing to the Plainwell District Supervisor of the Surface Water Quality Division, that the production rates as listed in the permit application have been achieved. The production rates shall be reported by the end of the month for the previous month, starting with the production rates for the month of June 1991. The reporting shall be continued on a monthly basis until the month the rates specified in the permit application have been achieved. If the production rates consistently fall below the values reported in the application, the permit may be modified in accordance with the requirements of Part II.B.4. so that the effluent limitations would reasonably reflect the values corresponding to the rates of production, taking into consideration the start-up process of the expanded and modified production facilities.

16. Special Condition - Temperature Modification

The Water Resources Commission is considering the necessity of incorporating temperature limitations in this permit to assure that the requirements of the Michigan Water Quality Standards Rule 82 (1) are met. Therefore, when the consideration of this issue has been completed, the Commission may modify this permit in accordance with Part II.B.4. to add appropriate temperature limitations or requirements.

17. Special Condition - Reopener Clause

This permit may be modified or, alternatively, revoked and reissued to comply with any applicable standard(s) or limitation(s) promulgated under Section 301(b)(2)(c)(d), 304(b)(2) and 307(a)(2) of the Act, if the effluent standard(s) or limitation(s) so promulgated:

a. is(are) either different in condition or more stringent than any effluent limitation in the permit; or

b. control(s) any pollutant not limited in the permit.

PART I

Section A. MEN03820

18. Special Condition - Notification Requirement

The permittee shall notify the Plainwell District Supervisor of the Surface Water Quality Division, in writing, within 10 days of knowing, or having reason to believe, that any activity or change has occurred or will occur which would result in the discharge of:

a. Detectable levels* of chemicals on the current Michigan Critical Materials Register or priority pollutants or hazardous substances set forth in 40 CFR 122.21, Appendix D, which were not acknowledged in the application** or listed in the application at less than detectable levels.

b. Detectable levels* of any other chemical not listed in the application or listed at less than detection, for which the application specifically requested information.

c. Any chemical at levels greater than five times the average level reported in the application**.

Any other monitoring results obtained as a requirement of this permit shall be reported in accordance with the schedule of compliance.

*The detectable level shall be defined as the Method Detection Limit (MDL) as given in Appendix B to Part 136, Federal Register, Vol. 49, No. 209, October 26, 1984, pp. 43430-31.

**The application submitted on December 4, 1989 as amended.

19. Discharge to the Groundwaters

The reissuance of this permit does not authorize any discharge to the groundwaters. Such discharge must be authorized by a groundwater discharge permit issued pursuant to Act 245, Public Acts of 1929, as amended.

PART I

MEN03821

B. MONITORING AND REPORTING

1. Representative Sampling

Samples and measurements taken as required herein shall be representative of the volume and nature of the monitored discharge.

2. Reporting:

a. DMR Submittal Requirements - The permittee shall submit Discharge Monitoring Report (DMR) forms to the Michigan Department of Natural Resources, Surface Water Quality Division, Data Entry Unit, P.O. Box 30028, Lansing, Michigan, 48909, for each calendar month of the authorized discharge period(s). The DMRs shall be postmarked no later than the 10th day of the month following each month of the authorized discharge period(s).

3. Definitions

a. The monthly average discharge is defined as the total discharge by weight, or concentration if specified, during the reporting month divided by the number of days in the reporting month that the discharge from the production or commercial facility occurred. If the pollutant concentration in any sample is less than the detection limit, regard that value as zero when calculating monthly average concentration. When less than daily sampling occurs, the monthly average discharge shall be determined by the summation of the measured daily discharges by weight, or concentration if specified, divided by the number of days during the reporting month when the samples were collected, analyzed and reported.

b. The daily maximum discharge means the total discharge by weight, or concentration if specified, during any calendar day.

c. The Regional Administrator is defined as the Region V Administrator, U.S. EPA, located at 230 South Dearborn, 13th Floor, Chicago, Illinois, 60604.

d. The Executive Secretary of the Michigan Water Resources Commission is located in the KNAPP'S OFFICE CENTRE. The mailing address is P.O. Box 30028, Lansing, Michigan, 48909.

e. The Chief of the Surface Water Quality Division's mailing address is P.O. Box 30028, Lansing, Michigan, 48909.

4. Test Procedures

Test procedures for the analysis of pollutants shall conform to regulations published pursuant to Section 304(h) of the Act, under which such procedures may be required.

PART I

MEN03822

Section B.

5. Recording Results

For each measurement or sample taken pursuant to the requirements of this permit, the permittee shall record the following information:

a. The exact place, date, and time of measurement or sampling;

b. The person(s) who performed the measurement or sample collection;

c. The dates the analyses were performed;

d. The person(s) who performed the analyses;

e. The analytical techniques or methods used;

f. The date of and person responsible for equipment calibration; and

g. The results of all required analyses.

6. Additional Monitoring by Permittee

If the permittee monitors any pollutant at the location(s) designated herein more frequently than required by this permit, using approved analytical methods as specified above, the results of such monitoring shall be included in the calculation and reporting of the values required in the Discharge Monitoring Report. Such increased frequency shall also be indicated.

7. Records Retention

All records and information resulting from the monitoring activities required by this permit including all records of analyses performed and calibration and maintenance of instrumentation and recordings from continuous monitoring instrumentation shall be retained for a minimum of three (3) years, or longer if requested by the Regional Administrator or the Michigan Water Resources Commission.

PART I

MEN03823

C. SCHEDULE OF COMPLIANCE

1. The permittee shall continue to operate the installed facilities to achieve the effluent limitations specified for outfalls 001, 002, 000 through 003, 00A through 003 & 005, and 004.

2. Sixty days prior to the commencement of discharge from new outfalls 00B and 003, the permittee shall notify the Plainwell District Supervisor of the Surface Water Quality Division.

3. The permittee shall achieve compliance with the final effluent limitations for outfalls 003 and 00B specified in Part I.A.7. and 8., in accordance with the following schedule. All submittals shall be to the Plainwell District Supervisor of the Surface Water Quality Division.

a. The permittee shall submit and receive approval of the final plans prior to construction of any facilities to meet final effluent limitations.

b. On or before August 31, 1991, the permittee shall attain an operational level necessary to meet the final effluent limitations specified in Part I.A.6. and 7.

4. The permittee shall achieve compliance with the Short Term Waste Characterization Study requirements specified in Part I.A.9., in accordance with the following schedule. All submittals shall be to the Grand Rapids District Supervisor of the Surface Water Quality Division.

a. On or before January 31, 1991, the permittee shall implement the study.

b. On or before March 31, 1991, the permittee shall have completed all monitoring as required.

c. On or before April 30, 1991, the permittee shall submit the analytical results of such monitoring.

5. The permittee shall achieve compliance with the Program for Effective Residuals Management (PERM) requirements specified in Part I.A.13. in accordance with the following schedule. All submittals shall be to the Plainwell District Supervisor of the Surface Water Quality Division.

a. On or before March 31, 1991, submit and receive approval of a "PERM".

b. On or before June 30, 1991, certify in writing that the approved "PERM" has been implemented.

PART I

MEN03824

Section C.

6. Reapplication

If the discharges authorized by this permit are expected to continue beyond the expiration date of this permit, the permittee is required to submit an application for reissuance to the Chief of the Permits Section of the Surface Water Quality Division on or before April 1, 1995.

7. Written Notification Required

Within 14 days of every requirement date specified in this permit, the permittee shall submit a written notification to the Plainwell District Supervisor of the Surface Water Quality Division indicating whether or not the particular requirement was accomplished. If the requirement was not accomplished, the notification shall include an explanation of the failure to accomplish the requirement, actions taken or planned by the permittee to correct the situation, and an estimate of when the requirement will be accomplished. If a written report is required to be submitted by a specified date and the permittee accomplishes this, a separate written notification is not required.

PART II

MEN03825

A. MANAGEMENT REQUIREMENTS

1. Duty to Comply

All discharges authorized herein shall be consistent with the terms and conditions of this permit. The discharge of any pollutant identified in this permit more frequently than or at a level in excess of that authorized shall constitute a violation of the permit.

It is the duty of the permittee to comply with all the terms and conditions of this permit. Any noncompliance with the Effluent Limitations, Special Conditions, or terms of this permit constitutes a violation of Public Acts 245, of 1929, as amended, and/or PL 92-500, as amended, and constitutes grounds for enforcement action; for permit termination, revocation and reissuance, or modification; or denial of an application for permit renewal.

2. Change of Conditions

Any anticipated facility expansion, production increases, or process modification which will result in new, different, or increased discharges of pollutants must be reported by submission of a new application to the Chief of the Permits Section of the Surface Water Quality Division or, if such changes will not violate the effluent limitations specified in this permit, by notice to the Plainwell District Supervisor of the Surface Water Quality Division. Following such notice, the permit may be modified to specify and limit any pollutant not previously limited.

3. Containment Facilities

The permittee shall provide facilities for containment of any accidental losses of concentrated solutions, acids, alkalies, salts, oils, or other polluting materials in accordance with the requirements of the Michigan Water Resources Commission Rules, Part 5. This requirement is included pursuant to Section 5 of the Michigan Water Resources Commission Act 245, P.A. of 1929, as amended, and the Part 5 Rules of the General Rules of the Commission.

4. Operator Certification

The permittee shall have the waste treatment facilities under direct supervision of an operator certified by the Michigan Department of Natural Resources, as required by Section 6a of the Michigan Act.

5. Noncompliance Notification

If, for any reason, the permittee does not comply with or will be unable to comply with any daily maximum effluent limitation specified in this permit, the permittee shall provide the Plainwell District Supervisor of the Surface Water Quality Division with the following information, in writing, within five (5) days of becoming aware of such condition:

a. A description of the discharge and cause of noncompliance; and

b. The period of noncompliance, including exact dates and times; or, if not corrected, the anticipated time the noncompliance is expected to continue, and the steps taken to reduce, eliminate and prevent recurrence of the noncomplying discharge.

PART II

Section A. MEN03826

6. Spill Notification

The permittee shall immediately report any spill or loss of any product, by-product, intermediate product, oils, solvents, waste material, or any other polluting substance which occurs to the surface waters or groundwaters of the state by calling the Department of Natural Resources 24-hour Emergency Response telephone number, 1-800-292-4706 (calls from out-of-state dial 1-517-373-8166); and within ten (10) days of the spill or loss, the permittee shall submit to the Plainwell District Supervisor of the Surface Water Quality Division a full written explanation as to the cause and discovery of the spill or loss, clean-up and recovery measures taken, preventative measures to be taken, and schedule of implementation. This requirement is included pursuant to Section 5 of the Michigan Water Resources Commission Act 245, P.A. of 1929, as amended.

7. Facility Operation

The permittee shall at all times properly operate and maintain all treatment or control facilities or systems installed or used by the permittee to achieve compliance with the terms and conditions of this permit.

8. Adverse Impact

The permittee shall take all reasonable steps to minimize any adverse impact to the surface or groundwaters of the state resulting from noncompliance with any effluent limitation specified in this permit including, but not limited to, such accelerated or additional monitoring as necessary to determine the nature and impact of the discharge in noncompliance.

9. By-Passing

Any diversion from or by-pass of facilities necessary to maintain compliance with the terms and conditions of this permit is prohibited, except (a) where unavoidable to prevent loss of life, personal injury, or severe property damage, or (b) where excessive storm drainage or runoff would damage any facilities necessary for compliance with the effluent limitations and prohibitions of this permit. The permittee shall promptly notify the Plainwell District Supervisor of the Surface Water Quality Division and the Regional Administrator, in writing, of such diversion or by-pass.

10. Power Failures

In order to maintain compliance with the effluent limitations and prohibitions of this permit, the permittee shall either:

a. Provide an alternative power source sufficient to operate facilities utilized by the permittee to maintain compliance with the effluent limitations and conditions of this permit which provision shall be indicated in this permit by inclusion of a specific compliance date in each appropriate "Schedule of Compliance for Effluent Limitations".

b. Upon the reduction, loss, or failure of one or more of the primary sources of power to facilities utilized by the permittee to maintain compliance with the effluent limitations and conditions of this permit, the permittee shall halt, reduce or otherwise control production and/or all discharge in order to maintain compliance with the effluent limitations and conditions of this permit.

PART II

Section A.

MEN03827

11. Removed Substances

Solids, sludges, filter backwash, or other pollutants removed from or resulting from treatment or control of wastewaters shall be disposed of in a manner such as to prevent any pollutant from such materials from entering navigable waters, or the entry of toxic or harmful contaminants thereof onto the groundwaters in concentrations or amounts detrimental to the groundwater resource.

12. Upset Noncompliance Notification

If a process "upset" (defined as an exceptional incident in which there is unintentional and temporary noncompliance with technology based permit effluent limitations because of factors beyond the reasonable control of the permittee) has occurred, the permittee who wishes to establish the affirmative defense of upset shall notify the Plainwell District Supervisor of the Surface Water Quality Division by telephone within 24 hours of becoming aware of such conditions and within five (5) days, provide in writing, the following information:

a. That an upset occurred and that the permittee can identify the specific cause(s) of the upset;

b. That the permitted wastewater treatment facility was, at the time, being properly operated;

c. That the permittee has specified and taken action on all responsible steps to minimize or correct any adverse impact in the environment resulting from noncompliance with this permit.

In any enforcement proceedings the permittee, seeking to establish the occurrence of an upset, has the burden of proof.

13. Any requirement of this permit which is included under the unique terms of the Water Resources Commission, Act 245, P.A. of 1929, as amended, and rules promulgated thereunder, is not enforceable under the Federal Clean Water Act regulations.

PART II

B. RESPONSIBILITIES

MEN03828

1. Right of Entry

The permittee shall allow the Executive Secretary of the Michigan Water Resources Commission, the Regional Administrator and/or their authorized representatives, upon the presentation of credentials:

a. To enter upon the permittee's premises where an effluent source is located or in which any records are required to be kept under the terms and conditions of this permit; and

b. At reasonable times to have access to and copy any records required to be kept under the terms and conditions of this permit; to inspect any monitoring equipment or monitoring method required in this permit; and to sample any discharge of pollutants.

2. Transfer of Ownership or Control

In the event of any change in control or ownership of facilities from which the authorized discharge emanates, the permittee shall notify the succeeding owner or controller of the existence of this permit by letter, a copy of which shall be forwarded to the Plainwell District Supervisor of the Surface Water Quality Division and the Regional Administrator.

3. Availability of Reports

Except for data determined to be confidential under Section 308 of the Act and Rule 2128 of the Water Resources Commission Rules, Part 21, all reports prepared in accordance with the terms of this permit shall be available for public inspection at the offices of the State Water Pollution Control Agency and the Regional Administrator. As required by the Act, effluent data shall not be considered confidential. Knowingly making any false statement on any such report may result in the imposition of criminal penalties as provided for in Section 309 of the Act and Sections 7 and 10 of the Michigan Act.

4. Permit Modification

After notice and opportunity for a hearing, this permit may be modified, suspended, or revoked in whole or in part during its term for cause including, but not limited to, the following:

a. Violation of any terms or conditions of this permit;

b. Obtaining this permit by misrepresentation or failure to disclose fully, all relevant facts; or

c. A change in any condition that requires either a temporary or permanent reduction or elimination of the authorized discharge.

PART II

MEN03829

Section B.

5. Toxic Pollutants

Notwithstanding Part II.B.4. above, if a toxic effluent standard or prohibition (including any schedule of compliance specified in such effluent standard or prohibition) is established under Section 307(a) of the Act for a toxic pollutant which is present in the discharge and such standard or prohibition is more stringent than any limitation for such pollutant in this permit, this permit shall be revised or modified in accordance with the toxic effluent standard or prohibition and the permittee so notified.

6. Civil and Criminal Liability

Except as provided in permit conditions on "By-Passing" (Part II.A.9., pursuant to 40 CFR 122.41(m)) and "Upset" (Part II.A.12., pursuant to 40 CFR 122.41(n)), nothing in this permit shall be construed to relieve the permittee from civil or criminal penalties for noncompliance, whether or not such noncompliance is due to factors beyond his control, such as accidents, equipment breakdowns, or labor disputes.

7. Oil and Hazardous Substance Liability

Nothing in this permit shall be construed to preclude the institution of any legal action or relieve the permittee from any responsibilities, liabilities, or penalties to which the permittee may be subject under Section 311 of the Act except as are exempted by federal regulations.

8. State Laws

Nothing in this permit shall be construed to preclude the institution of any legal action or relieve the permittee from any responsibilities, liabilities, or penalties established pursuant to any applicable State law or regulation under authority preserved by Section 510 of the Act.

9. Property Rights

The issuance of this permit does not convey any property rights in either real or personal property, or any exclusive privileges, nor does it authorize violation of any Federal, State or local laws or regulations, nor does it obviate the necessity of obtaining such permits or approvals from other units of government as may be required by law.

10. Severability

The provisions of this permit are severable, and if any provision of this permit, or the application of any provision of this permit to any circumstances, if held invalid, the application of such provision to other circumstances, and the remainder of this permit, shall not be affected thereby.

11. Notice to Public Utilities (Miss Dig)

The issuance of this permit does not exempt the permittee from giving notice to public utilities and complying with each of the requirements of Act 53 of the Public Acts of 1974, being sections 460.701 to 460.718 of the Michigan Compiled Laws, when constructing facilities to meet the terms of this permit.

STATE OF MICHIGAN

WATER RESOURCES COMMISSION

G. MENNEN WILLIAMS, GOVERNOR

MEN03830

LEGAL COUNSEL
THOMAS M. KAVANAGH
Attorney General

STAFF
MILTON P. ADAMS
Executive Secretary
LORING F. OEMING
Chief Engineer
NORMAN BILLINGS
Chief, Hydrology Division

STAFF OFFICES
417 W. Michigan
TEL. 5-8144, Ext. 676

P. O. BOX 87
LANSING 1, MICHIGAN

COMMISSION
GERALD E. EDDY, CHAIRMAN
Director of Conservation
LYNN F. BAWIN, E. RAPIDS, V. CHAIRMAN
Conservation Groups
ALBERT E. HEUSTIS, M. D.
State Health Commissioner
CHARLES M. ZIEGLER
State Highway Commissioner
GEORGE S. McINTYRE
Director of Agriculture
GEORGE F. LIDDLE, MUSKEGON
Municipal Groups
FRANK M. BURKE, JR., COLOM.
Industrial Management Groups

October 21, 1955

Mr. R. J. Suess, President
Otsego Falls Paper Mills, Inc.
Otsego, Michigan

Dear Mr. Suess:

Enclosed for your information is a copy of the report of a waste survey made at your Otsego mill July 28 through August 3, 1955.

This survey was made to determine whether you are meeting the restrictions set forth in this Commission's final order of October, 1951. The results of this survey will be reported to the Commission at some later date and you will be notified at that time of their action.

If you have any questions about the contents of this report, please contact us.

Very truly yours,

L. F. Oeming

Loring F. Oeming
Chief Engineer

WATER RESOURCES COMMISSION

RWPurdy:if

cc: Chester Harvey

6976

MEN03831

[illegible]

[illegible]

[illegible]

[illegible]

[illegible]

[illegible]

[illegible]

[illegible]

[illegible]

Summary of Results:

Data	[illegible]	[illegible]	[illegible]	[illegible]	[illegible]	[illegible]	[illegible]
Fire-million gallons	[illegible]	[illegible]	[illegible]	[illegible]	[illegible]	[illegible]	[illegible]
Production, tons	[illegible]	[illegible]	[illegible]		[illegible]	[illegible]	[illegible]
5-Day B.O.D., lbs.	[illegible]	[illegible]	[illegible]	[illegible]	[illegible]	[illegible]	[illegible]
5-Day B.O.D., lbs./ton paper	[illegible]	[illegible]	[illegible]		[illegible]	[illegible]	[illegible]
Susp. Solids, lbs.	[illegible]	[illegible]	[illegible]	[illegible]	[illegible]	[illegible]	[illegible]
Suspended Sol. lbs/ton paper	[illegible]	[illegible]	[illegible]		[illegible]	[illegible]	[illegible]
Susp. Vol. Solids, lbs.	[illegible]	[illegible]	[illegible]	[illegible]	[illegible]	[illegible]	[illegible]
Susp. Vol. Solids, lbs/ton paper	[illegible]	[illegible]	[illegible]		[illegible]	[illegible]	[illegible]
Gallons Waste/ton paper	[illegible]	[illegible]	[illegible]		[illegible]	[illegible]	[illegible]
Population Equivalent	[illegible]	[illegible]	[illegible]	[illegible]	[illegible]	[illegible]	[illegible]

Type of Mill Production:

Board mill and neutral semi-chemical pulp mill.

Mill Water Supply:

Well water.

Waste Control Procedure:

Pulp mill spent liquors are discharged to large storage tanks for use as a road binder during summer months. Thereby pulp liquor is discharged to a storage lagoon. Prevent practice is to discharge no pulp liquor to the river during the summer months. White water is recirculated in a partially closed system with excess discharged to a white water lagoon with overflow to the river. Solids are removed from the lagoon annually during the July shutdown period.

6977

MEN03833

Suspended Solids to Rivers

0.336 x 8.34 x 288 = 807
0.302 x 8.34 x 280 = 705
0.301 x 8.34 x 450 = 1,130
0.128 x 8.34 x 590 = 630
0.376 x 8.34 x 290 = 846
0.309 x 8.34 x 210 = 541
0.335 x 8.34 x 170 = 475

of Suspended Solids per ton of Product:

807 / 89.86 = 8.98
705 / 79.30 = 8.89
1,130 / 85.31 = 13.24
/
846 / 74.83 = 11.31
541 / 83.74 = 6.46
475 / 85.21 = 5.57

of Suspended Volatile Solids to Rivers:

0.336 x 8.34 x 288 = 807
0.302 x 8.34 x 280 = 705
0.301 x 8.34 x 450 = 1,130
0.128 x 8.34 x 590 = 630
0.376 x 8.34 x 290 = 846
0.309 x 8.34 x 18 = 464
0.335 x 8.34 x 170 = 475

Suspended Volatile Solids per ton of [illegible]

807 / 89.86 = 8.98
705 / 79.30 = 8.89
1,130 / 85.31 = 13.24
/
846 / 74.83 = 11.31
464 / 83.74 = 6.54
475 / 85.21 = 5.57

Costs per ton of paper

336,000 / 89.86 = [illegible]
302,000 / 79.30 = [illegible]
301,000 / 85.31 = 3,528
376,000 / 74.83 = 5,025
309,000 / 83.74 = 3,690
335,000 / 85.21 = 3,931

This survey was made immediate following the cleaning of the [illegible]

The results may have been affected by the [illegible] of [illegible]

MEN03834

MEN03835

STATE OF MICHIGAN

WATER RESOURCES COMMISSION

G. MENNEN WILLIAMS, GOVERNOR

LEGAL COUNSEL
THOMAS M. KAVANAGH
Attorney General

STAFF
MILTON P. ADAMS
Executive Secretary
LORING F. OEMING
Chief Engineer
NORMAN BILLINGS
Chief, Hydrology Division

STAFF OFFICES
417 W. Michigan
TEL. 5-8144, Ext. 676

P. O. BOX 87
LANSING 1, MICHIGAN

COMMISSION
GERALD E. EDDY, CHAIRMAN
Director of Conservation
[illegible] EDWIN, E. RAPIDS, V. CHAIRMAN
Conservation Groups
ALBERT [illegible] JEUSTIS, M. D.
State Health Commissioner
CHARLES M. ZIEGLER
State Highway Commissioner
GEORGE S. McINTYRE
Director of Agriculture
GEORGE F. LIDDLE, MUSKEGON
Municipal Groups
FRANK M. BURKE, JR., COLOMA
Industrial Management Groups

March 16, 1956

Otsego Falls Paper Mills
Division of Menasha Wooden Ware Corp.
Attention: R. J. Suess, President
Otsego, Michigan

Gentlemen:

Enclosed herewith is a copy of the report of waste surveys made at your Otsego Mill February 28, through March 1, 1956.

The results of these surveys are substantially in agreement with the surveys made during July and August of last year. To further evaluate the effectiveness of the lagoon as a method of controlling the suspended solids losses in the white water, we are scheduling additional surveys for June of this year.

If you have any comments on the report, we would be pleased to receive them.

Very truly yours,

L. F. Oeming

Loring F. Oeming
Chief Engineer

WATER RESOURCES COMMISSION

RWPurdy:ja

cc: Mr. Chester Harvey

Encl.

6981

MEN03836

Report of Waste Survey
of
Chicago Falls Paper Mills, Inc.
Otsego, Michigan

Survey Periods (24 hrs. each)

February 28 to 29, 1956

February 29 to March 1, 1956

Summary of Results:

Date	Feb. 28, 29	Feb. 29, Mar. 1
Flow, million gals/day	0.278 m.g.d.	0.324 m.g.d.
Production, tons	93.610 T.	100.79 T.
5-day B.O.D., lbs.	5,955 #	5,940 #
5-day B.O.D., lbs/ton paper	74.3 #/T	58.93 #/T.
Susp. Solids, lbs.	417.99 #	778.97 #
Susp. Solids, lbs/ton paper	4.46 #/T.	7.29 #/T.
Susp. Vol. Solids, lbs.	370.9 #	648.5 #/T.
Susp. Vol. Solids, lbs. ton paper	3.96 #/T.	6.43 #/T.
Gallons waste/ton paper	2,969 gal/T.	3,215 gal/T.
Population Equivalent	41,645	35,568

Type of Mill Production:

Board mill and neutral semi-chemical pulp mill.

Mill Water Supply:

Well water.

Waste Control Procedure:

Excess white water is discharged to lagoon with overflow to river. Most of the white water is utilized in recirculation and as make-up water for the pulp lockers. Solids are removed from the lagoon during the July shutdown period.

Survey Procedure:

The lagoon overflows into a weir box which is equipped with a 24" rectangular weir with end contractions. A continuous record of flow during the time of survey was made by installing a recording head meter on the weir box. A composite sample

6982

for each 24 hour survey period was obtained by installing an automatic sampling device set to take samples proportional to the instantaneous flow at fifteen minute intervals. The sampler froze up a portion of the 2/28 - 2.29 period, however since the lagoon is quite large the sample is believed to be typical.

Survey Data:

	2/28-29/56	2/29-3/1/56
Date		
Production, tons	93.610 T.	100.79 T
Flow m.g.d.	0.278 m.g.d.	0.324 m.g.d.
5-day B.O.D., ppm	3000 ppm	2,200 ppm
Susp. Solids, ppm	180 ppm	272 ppm
Susp. Vol. Solids, ppm	160 ppm	240 ppm
pH	6.3	6.3

Survey Calculations:

Pounds of 5-day B.O.D. to River
2,28-29 0.278 x 8.34 x 3,000 = 6,955 #
2,29-3,1 0.324 x 8.34 x 2,200 = 5,940 #

Pounds of 5-day B.O.D. per ton of Paper
2,28-29 6,955 # / 93.610 T. = 74.3 #/T.
2,29-3,1 5,940 # / 100.79 T. = 58.9 #/T.

Population Equivalent
2,28-29 6,955 # / 0.167 = 41,646
2,29-3,1 5,940 # / 0.167 = 35,568

Pounds of Suspended Solids to River
2,28-29 0.278 x 8.34 x 180 = 417.33 #
2,29-3,1 0.324 x 8.34 x 272 = 734.97 #

Pounds of Suspended Solids per Ton of Paper
2,28-29 417.3 # / 93.61 T. = 4.45 #/T.
2,29-3,1 734.4 # / 100.79 T. = 7.28 #/T.

Pounds of Suspended Volatile Solids to River
2,28-29 0.278 x 8.34 x 160 = 370.96 #
2,29-3,1 0.324 x 8.34 x 240 = 648.5 #

Pounds of Suspended Volatile Solids per Ton of Paper
2,28-29 370.96 # / 93.610 T. = 3.96 #/T.
2,29-3,1 648.5 # / 100.79 T. = 6.43 #/T.

Gallons of Waste per Ton of Paper
2,28-29 278,000 gal./ 93.61 T. = 2,969 gal/T.
2,29-3,1 324,000 gal./ 100.79 T. = 3,215 gal./T.

Remarks:

During the period of this survey the white water lagoon was constantly producing gasses, one of which was hydrogen sulfide in such quantities as to cause a definite odor. Chunks of sludge were continuously rising from the bottom of the lagoon due to the gas production, this probably increased the suspended solids content of the effluent. Another survey should be made before the lagoon is cleaned out in July, but after a sufficient period of warm weather has occurred to induce increased biological action in the lagoon sludge.

According to the plant management, the demand for semi-chemical liquors to be used for road binder will be greater this year than last. This will necessitate storage of the liquor earlier in the spring.

Otsego Falls Paper Mills is under Commission order to treat their white water so that the suspended solids content of the effluent will be less than .0 cubic per ton of product. The results of this survey show that the Otsego Falls Paper Mill was discharging effluent with a suspended solids content of from [illegible] to 7[illegible] per ton of paper, and were in compliance with the Commission's orders at the time of the survey.

Survey written by E. Shannon

Supervised by R. [illegible]dy

Field work by E. [illegible] Co[illegible]

Chemical analysis by R. Krueger

ES:mj

6454

MEN03839

REPORT OF WASTE SURVEY
AT
OTSEGO FALLS PAPER MILLS, INCORPORATED
Otsego, Michigan

Survey Period: (24 hr. each)
June 19, 1956 -- 3:00 P.M. to June 20, 1956 -- 3:00 P.M.
June 20, 1956 -- 3:00 P.M. to June 21, 1956 -- 3:00 P.M.

Summary of Results:

Date	June 19 - 20	June 20 - 21
Flow, M.G.D.	.202	.320
Production, tons	108.9	112.8
5 day B.O.D., lbs.	4540	8010
5 day B.O.D., lbs./ton paper	41.9	72.5
Susp. Solids, lbs.	1260	2220
Susp. Solids, lbs./ton paper	11.6	19.6
Susp. Vol. Solids, lbs.	1260	2220
Susp. Vol. Solids, lbs./ton paper	11.6	19.[illegible]
Gallons waste/ton paper	1550	2830
Population Equivalent	27,400	48,100

Type of Mill Production:

Board mill and neutral semi-chemical pulp mill.

Mill water supply:

Well water

Waste Control Procedure:
Excess white water is discharged to lagoon with overflow to Kalamazoo River. Most of the white water is utilized in recirculation and as makeup water for the pulp cookers. Solids are removed from the lagoon during the July shutdown period

Survey Procedure:
The lagoon overflows into a weir box which is constructed with a 24" rectangular weir with end contractions. The head over this weir was measured and recorded by means of a Stevens Recorder. An automatic sampler was installed to secure instantaneously proportional samples at 15 minute intervals, the samples were composited for each 24 hour survey period.

Survey Data:

Date	June 19-20, 1956	June 20-21, 1956
Production, tons	108.9	112.8
Flow, M.G.D.	.202 M.G.D.	.320 M.G.D.
5 day B.O.D., P.P.M.	2700	3000
Susp. Solids, P.P.M.	747	830
Susp. Vol. Solids, P.P.M.	747	830

6985

Survey Calculations:

Pounds of 5-day B.O.D. to River
June 19-20, 1956 2700 x 8.34 x .202 = 4540
June 20-21, 1956 3000 x 8.34 x .320 = 8010

Pounds of 5-day B.O.D./ton paper
June 19-20, 1956 4560 / 108.9 = 41.9
June 20-21, 1956 8010 / 112.8 = 72.5

Population equivalent
June 19-20-1956 4560 / 0.167 = 27,400
June 20-21-1956 8010 / 0.167 = 48,100

Pounds of Susp. Solids to River
June 19-20,1956 747 x 8.34 x .202 = 1260
June 20-21, 1956 830 x 8.34 x .320 = 2220

Pounds of Susp. Solids per ton paper
June 19-20,1956 1260 / 108.9 = 11.6
June 20-21,1956 2220 / 112.8 = 19.6

Pounds of Susp. Volatile Solids to river
June 19-20,1956 747 x 8.34 x .202 = 1260
June 20-21,1956 830 x 8.34 x .320 = 2220

Pounds of Susp. Volatile Solids per ton paper
June 19-20,1956 1260 / 108.9 = 11.6
June 20-21,1956 2220 / 112.8 = 19.6

Gallons of Waste per ton of paper
June 19-20,1956 202,000 / 108.9 = 1850
June 20-21,1956 320,000 / 112.9 = 2830

Remarks:

The Otsego Falls Paper Company is under Commission order to treat their white water so that the suspended solids content of the effluent will not be greater than 10 pounds per ton of product. The results of this survey show that on June 19, 20, and 21, 1956, the company was discharging 11.6 and 19.6 pounds per ton. At the time of the survey the lagoon was "turning over", a thick layer of sludge covered the lagoon surface and a large quantity of hydrogen sulfide gas was being released.

All the semi-chemical liquors were being hauled away by tank truck for use as road binder.

Report by E. Shannon
Survey by E. Shannon
and C. Willems
Supervised by R. Purdy
Chemical analysis R. Kreuger

6986

MEN03841

MAOE ... MC

JOE STATE OF MICHIGAN

NATURAL RESOURCES COMMISSION
AUGUST SCHOLLE
Chairman
CARL T JOHNSON
E M LAITALA
ROBERT C McLAUGHLIN
HARRY H WHITELEY

WILLIAM G MILLIKEN Governor

DEPARTMENT OF NATURAL RESOURCES

STEVENS T MASON BUILDING, LANSING, MICHIGAN 48926

RALPH A MACMULLAN Director

WATER RESOURCES COMMISSION
JOHN E VOGT
Chairman
STANLEY QUACKENBUSH
Vice Chairman
GERALD E EDDY
JOHN P WOODFORD
JIM GILMORE
GEORGE F LIDDLE
JOHN H KITCHEL M D

4056 Plainfield Avenue, N. E.
Grand Rapids, Michigan 49505

October 27, 1970

Art -
Tim ✓
Rel (last)

Menasha Corporation
Otsego, Michigan 49078

Attention: Mr. Kenneth Lowe,
Technical Director

Dear Mr. Lowe:

Enclosed with this letter you will find a copy of our Industrial Waste Waters Survey covering operations of your facility in Otsego This survey was conducted during September 1 and 2, 1970.

There are several tables included in this report which I think are significant in determining the direction of reducing waste effluent which should be of assistance to you in further improvements. While the percentage of B.O.D. removed shown in this report approaches the degree indicated in your preliminary study, the pounds of B.O.D. are greater than anticipated based on preliminary studies.

After studying this report, if you care to make any comments, we would appreciate having them.

Very truly yours,

WATER RESOURCES COMMISSION

Chester Harvey

Chester Harvey,
Basin Engineer

CH/mc
Enclosure
cc: W.R.C., Lansing

MICHIGAN
THE GREAT LAKE STATE

6987

MEN03842

Michigan Water Resources Commission
Bureau of Water Management
Michigan Department of Natural Resources

Industrial Wastewater Survey Report
on the
MENASHA CORPORATION
City of Otsego
Allegan County

September 1 and 2, 1970

Purpose of Survey

On Tuesday, September 1, 1970, staff members of the Water Resources Commission began conducting a 24-hour wastewater survey on the industrial wastewater discharge of Menasha Corporation. The purpose of this survey was to determine the quality and quantity of this wastewater being discharged by this company to the Kalamazoo River. Furthermore, the results of this survey would be compared to the results of previous surveys to determine if any improvements in the quality of wastewater has occurred. These results would also be compared with the limitations set forth, in part, by the Water Resources Commission Final Order of Determination of October 24, 1951 and the Commission's Stipulation Agreement of April 27, 1961 between the Commission and the Menasha Corporation pertaining to the latter's discharge of wastewater to the Kalamazoo River.

Plant Processes, Sources of Waste and Treatment

The Menasha Corporation is currently engaged in the production of corrugating medium from hardwoods using a semi-chemical neutral sulfite process. The hardwood is in the form of chips when they enter a digester where they are softened into pulp by a mild cooking in a sulfide liquor consisting of water, sodium sulfate, and soda ash. From the cooker the softened pulp enters the mechanical presses which squeeze out the cooking liquor. This liquor is a byproduct and is sent to a storage tank, evaporated, concentrated and shipped out by rail as a saleable by-product. The excess liquor which is not completely concentrated is given away to be used as a road binder. The partially fiberized chip, partially pulp mixture from the presses is then mixed with water, fresh and some whitewater, and made into corregated medium on one of two Fourdrinier paper machines. The whitewater from the paper machine is sent through an Impco (leaf type) filter to reclaim the fibre before the whitewater is discharged into the treatment system. Some of the whitewater is used in the plant as makeup water, equipment cleanup and floor washing. This also is recirculated back into the Impco filter. The digester blowdown, evaporator condensate and spent brown liquor are kept separate from the whitewater so that this liquid can be reused in the pulping process.

disk.

The majority of the wastewater entering the treatment system is the whitewater from the Impco filter. The rest is sealwater from vacuum pumps. The condensate from the paper machines is returned to the boiler room. The cooling water used in the paper machines and calender rolls is withdrawn from the river and returned after passing once through these systems. This is discharged separately from the treatment system (fig. #1). ← wells

6988

MEN03843

The treatment system for the wastewater consists of a holding tank, aeration pond and two settling basins which are operated in parallel with the aeration pond (fig. #1). The holding tank or surge tank provides storage for reuse of part of the whitewater in the plant for purposes mentioned above. The wastewater from the holding tank is pumped into the aeration pond and flows by gravity through either of the settling basins and then through concrete box equipped with a 2' rectangular weir with end contractions and to the Kalamazoo River below the dam (fig. #1). The flow through the settling ponds is based upon the need for removal of the sludge. If one pond is having the sludge removed, the flow is diverted to the other. This sludge is pumped into a series of ditches located west of the aeration pond (fig. #1) where the liquid is allowed to run off into the aeration pond leaving the sludge to dry. At the time of this survey, some of the sludge was draining back into the aeration pond along with the supernatant.

The plant production during this survey, from 7:00 a.m. Tues., to 7:00 a.m., Wed., was a gross tonnage of 335 tons. This plant employs some 170 persons with production running 24 hours a day, 7 days a week. The water used in production and potable supplies is withdrawn from wells. The sanitary sewage is discharged into the city sanitary sewer system.
city water

Survey Procedure and Results Obtained

The survey staff installed a Stevens (type F) Water Level Recorder and an automatic sampler at the existing two foot rectangular weir to monitor the final effluent from Menasha's treatment system. The recorder was used to continuously measure the elevation of the wastewater above the weir creating a time-head curve from which the total flow during a survey period could be computed. The sampler operated every fifteen minutes in which it obtained a proportional sample of the instantaneous flow over the weir and deposited the sample into a clean container which made up a composite sample representative of the total flow during a survey period.

Prior to the survey, the Menasha Corporation was pumping sludge from one of their settling basins and draining the other basin through the weir box. A grab sample of this flow was also obtained.

The survey staff also composited a sample of the influent to the treatment system during the survey period by collecting a series of grab samples of this influent at the storage tank and composited them into a clean container.

At the end of the survey all samples were transported to the Bureau of Water Management Laboratory in Lansing for selected chemical and physical analysis.

Table 1 Wastewater flow in million gallons daily (MGD) being discharged by Menasha Corporation to the Kalamazoo River via their treatment system.

Survey Period: 2:00 p.m., Tues., Sept. 1, 1970 to 2:00 p.m., Wed., Sept. 2, 1970.

Hours Monitored	Actual Flow, Gallons	Flow in MGD
23.96	630,095	0.631

534,800

6989

MEN03844

Table 2 Laboratory analyses of the grab sample of the final effluent and the composite samples of the influent and effluent of the treatment system and the computed pounds per day of selected wastewater constituents present in the influent and effluent waters of the system along with the percent removal of these constituents being affected by the treatment system.

Flow, GPD 630,095

Parameter	Concentration* Grab sample mg/l	Concentration* Composite samples influent mg/l	Concentration* Composite samples effluent mg/l	Pounds per day** Composite samples influent lbs/day	Pounds per day** Composite samples effluent lbs/day	Percent*** Removal percent
5 day biochemical oxygen demand	1,500	>3,900	1,275	> 20,520	6,710	>67.3
Chemical oxygen demand	10,400	12,500	9,500	65,780	49,990	24
Total solids	N.A.	13,690	11,150	72,040	58,680	18.6
Total solids volatile	N.A.	760	940	4,000	4,950	none
Total solids non-volatile	N.A.	12,930	10,210	68,040	53,730	21
Dissolved solids	N.A.	13,606	10,798	71,600	56,830	20.6
Dissolved volatile solids	N.A.	676	608	3,560	3,200	10.1
Dissolved non-volatile solids	N.A.	12,930	10,190	68,040	53,630	21.2
Suspended solids	1,260	84	352	442	1,850	none
Suspended volatile solids	1,110	84	332	442	1,750	none
Suspended non-volatile solids	150	0	20	0	105	none
Settleable solids	N.A.	32	56	168	295	none
Total phosphorus - P	6.4	6.0	4.4	32	23	26.7
Soluble orthophosphates - P	0.0	1.0	0.0	5.3	0	100
Organic nitrogen - N	N.A.	70	75	368	395	none
Ammonia nitrogen - N	0.0	0.0	0.0	0	0	--
Nitrate nitrogen - N	0.0	0.0	0.0	0	0	--
Sulfates, SO4	N.A.	2,000	2,000	10,530	10,530	none
Phenols	N.A.	N.A.	2.3	--	12	--
pH	7.2	6.5	8.0			

* All concentrations are expressed as milligrams per liter (mg/l) except pH.

** Pounds per day ar computed from the following formula: conc. (mg/l) x flow (MGD) x unit weight of water (8.34 lbs/gal.).

*** Percent removal is computed from the following formula: $\% = \left(1 - \frac{\text{Effluent}}{\text{Influent}}\right) \times 100\%$

N.A. Parameter listed was not analyzed.

3587 3369 1126 1017

6990

Table 3 Comparison of the results of this survey with the results of previous surveys conducted at the Menasha Corporation in Otsego.

Survey Period	Sept. 1 & 2, 1970	September 11, 12 & 13, 1968		September 18, 19 & 20, 1967	
		1st survey	2nd survey	1st survey	2nd survey
Production, tons	335	212.4	207.4	200	200
Gallons of water/ton	1,970	1,790	1,830	1,780	1,780
lbs of BOD_5/ton	20	32.2	38.9	56.5	67.5
lbs of SS/ton	5.5	3.81	3.0	14.9	19.4
lbs of SVS/ton	5.2	3.62	2.85	14.6	18.25
% of SS which are volatile	95	95	95	98	94
% of SS which are settleable	16	30	--	65	54
*Fibre loss as % of total fibre	0.28	0.19	0.15	0.78	0.96
lbs of COD/ton	154	97.8	112.9	193	--

* Assuming finished paper is 94% fibre and suspended volatile solids (SVS) is all fibre:

$$\% = \frac{\text{lbs. SVS} \times 100}{(\text{lbs. of paper produced} \times 0.94) + \text{lbs. of SVS}}$$

Note: The survey of Sept. 1 & 2, 1970 differs from the survey of 1968 & 1967 in that the survey of 1970 represents the first survey conducted at Menasha Corporation since this company installed their new treatment system.

Table 4 Comparison of the results of this survey with the limitation set forth, in part, by the Water Resources Commission Final Order of Determination adopted on October 24, 1951 and the Stipulation agreement added on April 27, 1961 which pertain to the wastewater discharges of Menasha Corporation to the Kalamazoo River.

Parameter	Max. allowed by the Commission	Actual being discharged by the Menasha Corp.
lbs. of SS/ton of paper discharged to the Kalamazoo Rv.	10 lbs/ SS/ton or total of 3,350 pounds	5.5 lbs/ton or total of 1850 pounds
lbs. of BOD_5/day discharged to the Kalamazoo River	total BOD_5 of not more than 7,375 lbs BOD_5/day	6,710 lbs. BOD_5/day

Survey Remarks

The wastewater being discharged by Menasha Corporation to the Kalamazoo River was a dark brown in color and discolored a portion of the river for many hundreds of yards downstream. Other members of the Commission, in flying over the area, reported that this discoloration was distinguishable for at least 1 mile downstream.

MEN03846

The company at times adds some 100,000 gallons/day of river water to the aeration pond in an attempt to improve the digestion of the waste. However, this was not done during this survey period.

Discussion and Conclusion

The results of this survey, based upon the laboratory examinations of the collected wastewater samples and the computations derived from these results, indicate that the wastewater discharge of Menasha Corporation has the following characteristics:

1. The 56,830 pounds of total dissolved solids in the final effluent are over 94% non-volatile which indicates that a significant portion of the wastewater still contains the chemicals used in the semi-chemical neutral sulfite process and are being wasted to the river.

2. There is a four-fold increase in the concentration of the suspended solids being discharged from the treatment system over the concentration of the SS being introduced into the treatment system. However, the loading to the Kalamazoo River is within the limits set forth by the Commission in their Final Order of Determination with the Menasha Corporation. A plausible explanation for this increase could be a direct result of the runoff of the sludge back into the aeration lagoon from the sludge disposal area.

3. The 5-day biochemical oxygen demand loading to the river is greatly improved over previous surveys and is also less than the limitation of the Commission's Stipulation agreement with the Menasha Corporation

Survey by: Thomas A. Newell, Sanitary Engineer
James McDonald, Water Quality Investigator
Phillip Hartwick, Conservation Aide

Contact with Management: Mr. Brindley
Mr. Timlowski
Mr. Lowe

Laboratory analyses by: R. Krueger

Stored No: 030010

Report by: Thomas A. Newell
Water Quality Appraisal Section
Michigan Water Resources Commission
Bureau of Water Management
Michigan Dept. of Natural Resources
September 21, 1970

Sept. 1970

MM

6992

MEN03847

FIGURE 1: VICINITY MAP OF MENASHA CORPORATION

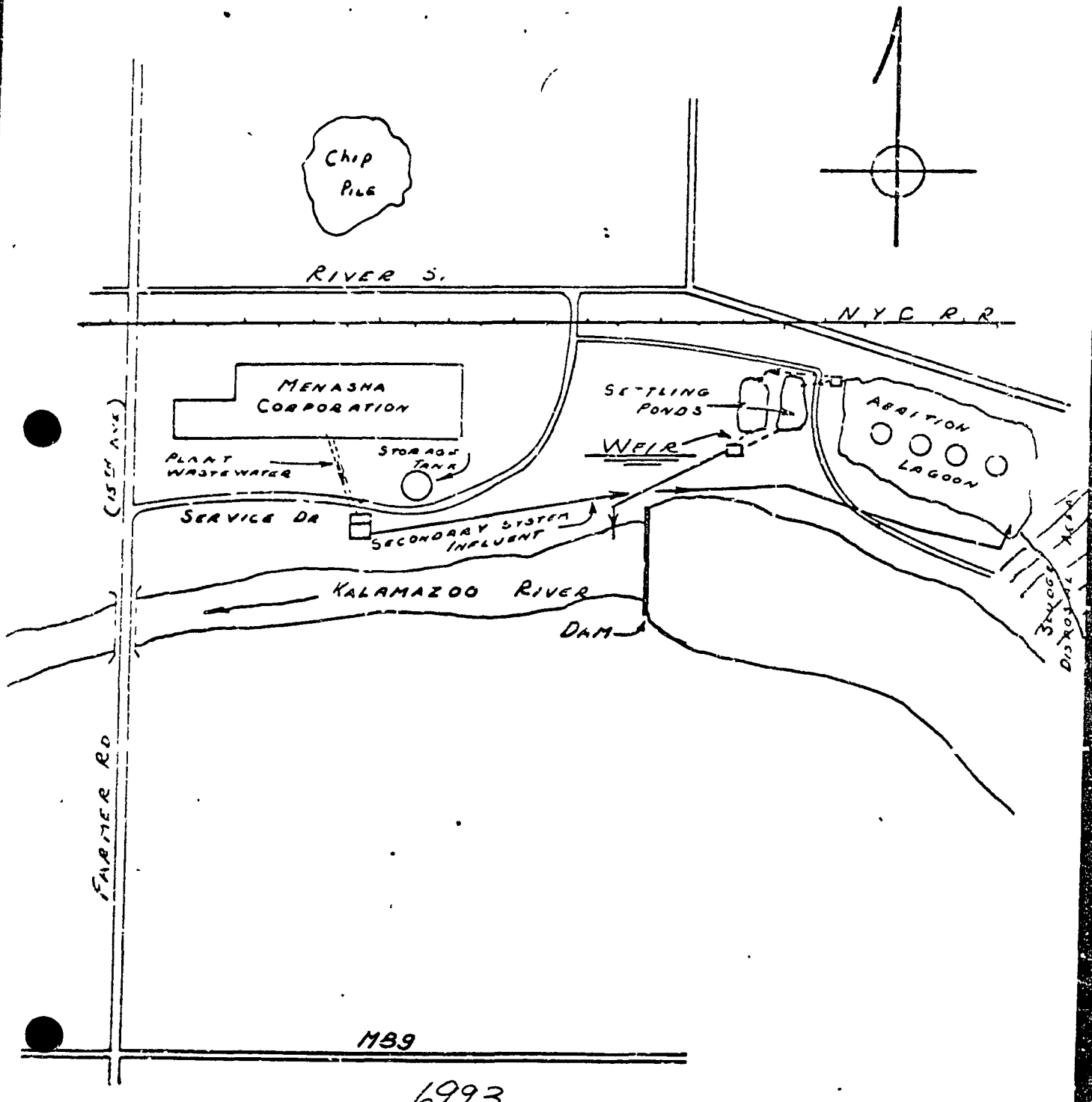

6993

No Scale

MEN03848

7-28-75

MICHIGAN WATER RESOURCES COMMISSION
BUREAU OF WATER MANAGEMENT
ENVIRONMENTAL PROTECTION BRANCH
DEPARTMENT OF NATURAL RESOURCES

Report of an
Industrial Wastewater Survey
Conducted at
MENASHA CORPORATION
All Outfalls No. 030019
Allegan County
Otsego, Michigan
May 13-14, 1975

Survey Summary

Wastewater monitoring was performed during one twenty-four hour survey period starting Tuesday, May 13, 1975.

Menasha Corporation discharged a combined total of 6.3 MGD from four outfalls during the survey period. Results of the continually monitored [illegible] are noted in Table 1 are:

[illegible]	001	002	003 Cooling	003 Process	004
[illegible]	0.380	0.612	4.32	0.918	0.076
[illegible]	< 5	300	< 5	300	8
[illegible] (lbs/day)	--	1500	--	2300	5
Suspended solids (mg/l)	4	100	29	2420	345
Suspended sol. (lbs/day)	13	500	1045	19000	220
Settleable solids (mg/l)	4	60	21	1880	150
[illegible]	--	0.9	--	1.0	0.04

Hydrocarbon analyses of the 24-hour grab composite samples collected from the process outfalls resulted in 0.53 ug/l PCB's from the treatment system discharge to 003. Phthalate concentrations were found present in all 3 of the outfalls sampled (Table 3).

Menasha Corporation exceeded their National Pollutant Discharge Elimination System (NPDES) Permit No. M10003924, initial daily maximum limitations for phenols at outfalls 002 and process wastewater to 003. BOD5 and suspended solids loadings for outfall 002 and suspended solids loadings for the process wastewater to 003 would exceed the 30-day average limitations. Daily maximum temperature limitations for outfall 004 were also exceeded in two of three grab samples. (Table 4)

-2-

The company's May 1975 operating report was similar to the survey findings except for reporting considerably lower suspended and settleable solids plus phenol results for the process to outfall 003. Lower total phosphorus values are also being reported for the process wastewater to 003, suspended solids at 004, and temperature for 004. The May 1975 report did not contain the cooling discharge to outfall 003. (Table 4)

Comparison of the company's analyses from a split portion of the survey samples revealed higher BOD5 and lower suspended and settleable solids for outfalls 002 and 003 than the survey results (Table 5).

Since the last survey conducted at this plant in May 1974, flows have decreased at outfalls 003 and 004, and increased at 002. BOD5 increases are evident at outfall 002 with decreases from the process to 003. Suspended and settleable solids are both up at outfalls 002 and process to 003. Phenol increases are apparent for 002 and process wastewater to 003 also (Table 6).

Survey Comments

Menasha Corporation utilizes permanently installed weirs with flow meters on outfalls 002 and process to 003. A staff constructed box weir was repaired for monitoring outfall 004. No permanent flow measuring devices are being utilized for outfall 001 or the turbine cooling water to 003. Turbine cooling water flows to 003 are determined from pump capacity. Automatic samplers are located at outfalls 002 and the process to 003. Outfalls 002's sampler was inoperative and hence the company was grab compositing samples. Sampling is being conducted in accordance with the permit except for pH readings, which are taken from the composites of outfalls 002 and process to 003. BOD5 and suspended solids analyses are being conducted by the company according to the permit while total phosphorus and phenol analyses are performed by a commercial laboratory.

Midway through the survey, the company discovered a valve between the aeration lagoon and the final settling ponds had been opened. Thus, a portion of the process wastewater discharged to outfall 003 was not going through the clarifier (See Figure 1).

Several of the BOD and bacteria samples collected during the survey were not analyzed within the six-hour holding time allowed for these parameters. Colorimetric interferences were noted by the laboratory for sulfide analyses.

By-passes previously possible for outfall 002 and the surge pit have been eliminated. A turbine cooling water by-pass was still evident bubbling up in the vicinity of outfall 004.

Purpose of Survey

The purpose of the survey was to determine the quality and quantity of wastewater being discharged by Menasha Corporation, a principal discharger, to the Kalamazoo River.

MEN03849

[illegible]

[illegible] Corporation, Paperboard Division, produces corrugated cardboard [illegible] neutral sulfite pulping process. The mill operates 24 hours [illegible] employing 235 employees. Product off the paper machines [illegible] tons per day during the survey.

[illegible] at the mill when hardwood logs enter the chipper. The [illegible] digester which breaks them down with a sulfite cooking [illegible] sodium sulfite, soda ash and sometimes, sodium hydroxide [illegible] chips are further broken down through refiners. From the [illegible] pulp is conveyed through mechanical presses which removes 60% [illegible] cooking liquor.

[illegible] liquor is stored in a 500,000 gallon liquor storage pond or a [illegible] tank. A portion of liquor is concentrated in evaporators and [illegible] waste liquor to a kraft mill. Excess liquor is either [illegible] or incinerated in the mill's new fluidized bed, [illegible] system.

[illegible] the pulp enters the stock [illegible] and is sent through primary [illegible] where it is blended with recycled scrap paper and [illegible] machines. The stock is further refined before going [illegible] to the head box and the two Fourdrinier paper

[illegible] Water and Treatment

[illegible] its process and a portion of its cooling water [illegible] the City of Otsego. Powerhouse cooling water is [illegible] while the plant's domestic supply is obtained [illegible] The company uses a phosphate conditioner at their well heads [illegible] treatment. An ammonia-biocide is also added to inhibit [illegible] water treatment is performed in the plant for water used

[illegible] is used throughout the papermaking process and discharged [illegible] the plant's four outfalls to the Kalamazoo River. Outfall [illegible] discharges cooling water from the primary refiners, rewinder, [illegible] machine oil cooler plus roof drainage. Outfall [illegible] discharges the vacuum, the digester cooling waters plus the [illegible] seal water off the #1 machine to the small aeration pond (pilot

[illegible] cooling water, outfall 030171, combines with the treated process [illegible] outfall 030053, prior to discharging through outfall 003. Water [illegible] plus the fly and bottom ash from the powerhouse along with [illegible] floor drainage discharges through the ash-lime pond, outfall 030055 [illegible] the river

The wastewater treatment system illustrated on Figure 1 receives its influent from the overflow of both the old 36,000 and the new 144,000 gallon white water tanks, surge pond overflow and the spent liquor incineration system. The excess from the two white water tanks enters a surge pit and is either pumped to the treatment system or the surge pond. The surge pond also receives influent directly from sumps connected to the new digester's cooling and wash-up water, plus the pulper and beater room sewers.

The treatment system consists of a 10 to 15-day retention, aeration lagoon which contains 5 - 100 hp aerators. Nutrients are added to the lagoon's influent at a daily rate of 200 pounds nitrogen and 60 pounds phosphorus. A 25,000 gallon capacity clarifier follows the aeration pond. A polymer is added to the clarifier influent as a coagulating aid. The clarifier effluent is discharged to either of two settling ponds, pumped through the company's weirbox and combines with the turbine cooling water prior to discharge through Outfall 003.

Excess sludge which is not sent back to the lagoon is removed from the clarifier throughout the day and disposed of at a company landfill located north of the plant.

Emergency ponds are located east of the aeration lagoon for emergency liquor containment.

Survey Procedure

A 12-inch rectangular weir with end contractions was installed by staff members in a manhole located on the Farmer Street storm sewer to monitor Outfall #030138(001). A 24-inch full channel weir permanently installed by the company was utilized for Outfall #030134(002), as was the company's 24-inch rectangular weir on the treatment system effluent, #030053, to Outfall 003. A 90° v-notch weir was used by staff on the ash-lime pond Outfall #030055(004).

Each weir was equipped with a water level recorder and an automatic sampler. The water level recorder provided a continuous account of the liquid level or head above the crest of each weir on a head versus time graph for the duration of each survey period. The total volume of wastewater over the weir during the survey period was computed from the graph. The automatic sampler obtained samples proportional to the instantaneous flow over each weir. These individual samples were deposited in a clean container to make up a composite sample representative of the total flow over each weir during the survey period.

A continuous sample was collected from the turbine cooling water discharge 030171 to 003, by submerging a container into the flow and allowing the weir in the container to be displaced with liquid at a constant rate for the duration of the survey period. Assuming a uniform flow this sample would be representative of the total flow during a survey period. A water level was installed on this discharge to record flow fluctuations.

Individual grab samples were collected from all outfalls for selected physical, chemical and bacteriological analyses.

MEN03850

[illegible] samples collected were preserved according to Table 7

[illegible] samples were transported to the Bureau of Water [illegible] laboratory located in Lansing for selected quantitative physical and [illegible] analyses. The following formula was used to compute the pounds per [illegible] wastewater constituents discharged

[illegible] (mg/l) x unit weight of water (8.34 lbs/gal)

[illegible] samples were transported to the Michigan Department of Public [illegible], Bureau of Laboratories located in Lansing for selected quantitative [illegible] analyses

[illegible] of the physical, chemical and bacteriological analyses are presented in Tables 1, 2 and 3.

Table 1. Quantitative analyses of the 24-hour composite samples collected from Menasha Corporation of Otsego discharge, to the Kalamazoo River to determine the concentration of the wastewater constituents present in the samples, plus the computed pounds per day (lbs/day) of these constituents being discharged. Also noted are the highest and lowest flow rates recorded during the respective survey periods.

Survey Period	030138-(001)		030134 (002)	
From	4.00PM 5-13-75		11:25AM 5-13-75	
To	2:40PM 5-14-75		11:20AM 5-14-75	
Total flow monitored (gal)	358,958		607,3[illegible]	
Computed flow rate (mgd)*	0.380		0.612	
Highest flow rate (mgd)	0.401		0.631	
Lowest flow rate (mgd)	0.340		0.359	
pH	7.7		7.3	
	mg/l	lbs/day	mg/l	lbs/day
5-day BOD	<5	--	300	[illegible],500
COD	43	140	1,000	5,1[illegible]
Total solids	408	1,300	1,410	7,[illegible]
Total volatile solids			628	3,200
Suspended solids	4[illegible]	13	100	500
Suspended volatile solids			95	49[illegible]
Dissolved solids	404	1,300	1,190	6,1[illegible]
Dissolved volatile solids			480	7,500
Settleable solids	<1	--	60	300
Soluble orthophosphate-P	NS	NS	<0.1	--
Total phosphorus-P	NS	NS	0.7	[illegible].0
Nitrate nitrogen-N	NS	NS	0.1	0.5
Ammonia nitrogen-N	NS	NS	0.1	0.5
Organic nitrogen-N	NS	NS	4.5	[illegible]3.0
Sulfates (SO_4)	NS	NS	15	77.0
Phenols	NS	NS	0.9	5.0
Sulfites (SO_3)	NS	NS	<5	--
Sodium (Na)	NS	NS	270	1,400
Total copper (Cu)			.02	0.1
Total chromium (Cr)	NS	NS	<.01	--
Total lead (Pb)	NS	NS	.07	0.4

NS - Not Sampled
* Flow rates used in the computation of lbs/day.

7613

MEN03851

Table 1 Continued

	Process		Cooling			
Survey Period	030053 (to 003)		030171 (to 003)		030055 (to 004)	
From	2:30PM 5-13-75		1:30PM 5-13-75		12:10PM 5-13-75	
To	2:20PM 5-14-75		1:00PM 5-14-75		12:00N 5-14-75	
Total flow monitored (gal)	906,329				75,191	
Computed flow rate (mgd)*	0.9[illegible]		4.3**		0.076	
Highest flow rate (mgd)	[illegible]				[illegible]95	
Lowest flow rate (mgd)	[illegible]07				0.058	
[illegible]	7.7		7.9		7.7	
	mg/l	lbs/day	mg/l	lbs/day	mg/l	lbs/day
[illegible]-day BOD	300	2,300	<5	---	8	5
[illegible]	2,900	22,000	42	1,513	51	32
[illegible]	1,[illegible]	14,000				
Total solids	6,920	53,000	392	14,[illegible]23	968	610
Total volatile solids	2,[illegible]	19,000			292	150
[illegible] solids	2,4[illegible]	[illegible]	29	1,045	345	220
[illegible] volatile solids	355	[illegible]			70	40
[illegible]	[illegible]	[illegible]	363	13,979	570	360
[illegible] volatile solids	[illegible]	[illegible]			200	130
[illegible]	[illegible]	14,000	21	757	230	150
[illegible] phosphate-P	0.5	4.0	NS	NS	0.7	0.4
[illegible]-P	4.[illegible]	37	NS	NS	1.1	0.7
[illegible]-N	[illegible]	2	NS	NS	1.7	1.0
[illegible]-N	0.[illegible]	7	NS	NS	0.3	0.2
[illegible]-N	53	400	NS	NS	1.3	0.8
[illegible]	350	2,800	NS	NS		
[illegible]	1.0	8	NS	NS	0.04	0.03
[illegible]	<5	--	NS	NS		
[illegible]	1,300	10,000	NS	NS		
Total copper (Cu)	0.06	0.5	NS	NS	.03	0.02
Hexavalent chromium (Cr^{+6})	<1	--	NS	NS		
Total chromium (dissolved)	0.12	0.9	NS	NS	<.01	--
Total lead (Pb)	0.26	2.0	NS	NS	<.05	

[illegible] - Not Calculated.
* Flow rates used in the computation of lbs/day.
** Flow rate from company

Table 2. Quantitative analyses of grab samples collected from Menasha Corporation, Otsego discharges, to the Kalamazoo River to determine concentrations of select physical, chemical and bacteriological constituents present in the wastewater.

Outfall	Time	Date	Temp.	pH S.U.	BOD mg/l	Sulfites mg/l	E. Coliform Total cts/100ml	E. Coliform Fecal cts/100ml
030138-001	11:00PM	5-13-75	18°C	7.8	---	---	3,800,000	40
030138-001	8:15AM	5-14-75	18 C	7.8	---	---	4,200,000	70
030134-002	11:30PM	5-13-75	24 C	7.5	300	<5	---	---
030134-002	7:40AM	5-14-75	25 C	7.5	300	<5	---	---
030053 to 003	10:15PM	5-13-75	20 C	7.6	270	42	82,000,000	22,000
030053 to 003	6:30AM	5-14-75	20 C	7.5	370	42	78,000,000	21,000
030171 to 003	10:10PM	5-13-75	28.5 C	7.8	---	---	---	---
030171 to 003	7:15AM	5-14-75	27 C	7.7	---	---	---	---
*030055-004	3:00PM	5-13-75	42 C	8.5	---	---	---	---
030055-004	9:50PM	5-13-75	36 C	8.7	<5	<5	27,000	140
030055-004	7:15A	5-14-75	30 C	8.7	7	<5	25,000	270

	T.S. mg/l	T.V.S. mg/l	S.S. mg/l	S.V.S. mg/l	T.D.S. mg/l	D.V.S. mg/l	Set.Sol. mg/l
*030055-004	920	148	410	115	490	30	265

*Solids analyses conducted on a turbid discharge from outfall 004.

2014

Table 3. Quantitative analyses of 24-hour composite samples collected from Menasha Corporation process wastewater discharges to determine concentrations of chlorinated hydrocarbons present in the wastewater.

	Outfall 030134-002	Outfall 030053-process to 003	Outfall 030055-004
Time	from 2:30 pm to 2:10 pm	from 11:25 am to 11:25 am	from 12:10 pm to 12:00 noon
Date	from 5-13-75 to 5-14-75	from 5-13-75 to 5-14-75	from 5-13-75 to 5-14-75
[illegible] benzene [illegible]	ND	ND	< 0.005
[illegible] chlorinated [illegible] PCB, ug/l	ND	< 0.0[illegible]	0.53
[illegible] PCB, ug/l	< 0.01	< 0.01	< 0.01
[illegible] PCB, ug/l	< 0.0[illegible]	< 0.01	< 0.01
[illegible] phalate (DEHP)	22	5.3	5.5
[illegible] phthalate [illegible]	ND	6.8	< 1.5
[illegible] phthalates (BuP)	14	25	4.1

Table 4. Comparison of results obtained during the survey at Menasha Corporation with the facility's NPDES Permit, No. MI 0003824, and monthly operating report for May 1975.

Source	Parameter (Unit)		NPDES Permit Limitations Average Daily	NPDES Permit Limitations Maximum Daily	Monthly Operating Report May Ave.	Monthly Operating Report May Max.	Monthly Operating Report 5-13-75	Survey Results 5/13-14/75
030138-001	Flow	(MGD)	--	--	0.289	510	0.359	0.380
	BOD_5	(mg/l)	--	20	3	3	3	<5
	Susp. Sol	(mg/l)	--	20	11	20	5	4
	pH	(SU)	6.5 - 9.5		8.2	8.4	8.4	7.5
030134-002	Flow	(MGD)	--	--	0.484	0.558	0.542	0.612
	BOD_5	(lbs/day)	1,043	2,635	835	1,625	1,625	1,500
	Susp. Sol	(lbs/day)	349	1,935	211	259	407	500
	Set. So	(mg/l)	-	--	14	60	[illegible]7	60
		(lbs/day)	--	--				300
	Phenol	(mg/l)	--	0.3	0.4	.71	0.7	0.9
	pH	(SU)	6.5 - 9.5		8.0	8.3	8.0	7.3
030053 process to 003	Flow	(MGD)	--	--	0.889	1.20	1.028	0.918
	BOD_5	(lbs/day)	4,000	14,225	2,746	4,954	3,314	2,300
	Susp. Sol.	(lbs/day)	2,785	20,585	2,714	6,755	2,289	9,000
	Set. Sol	(mg/l)	--	--	31	260	0	1,880
	Phenol	(mg/l)	--	0.3	.064	.096	.094	1.0
	Tot. P.	(mg/l)	--	6.0	2.26	3.9	0.63	4.8
	pH	(SU)	6.5 - 9.5		8.0	8.2	8.0	7.7
030055 - 004	Flow	(MGD)			0.074	0.11[illegible]	0.068	0.076
	Susp. Sol.	(lbs/day)	300	825	338	2,236	86	32
	Temp.		--	90	77	90	72	86° - 100°
	pH	(SU)	6.5 - 9.5		8.9	9.2	9.2	7.7

7015

MEN03853

Table 5 Comparison of quantitative analysis of 24 hour composite sample by Michigan Water Resources Commission Staff with Menasha Corporation's analytical results

	Cooling to #030[illegible]-[illegible]03		#0[illegible]-004		#0301[illegible]		[illegible]		Process to #030[illegible]53 C[illegible]	
	Menasha Corp	WRC	Menasha Corp	WRC	Menasha Corp	WRC	Menasha Corp	WRC	Menasha Corp	WRC
Flow rate (mgd)	4 3	4 3	068	076	359	330	.534	61	1 0[illegible]	9[illegible]
pH (S U)	8 [illegible]	7 9	8 0	7 7	9	7 7	7 [illegible]	7 3	[illegible]	7 [illegible]
	mg/l	mg/l	mg/l	mg/l	mg/l	mg/l	mg/l	mg/l	mg/l	mg/l
5-day BOD	3	<5	4	8	1	<5	363	300	443	300
Suspended solids	27	20	322	345	5	4	78	100	38[illegible]	2 4 0
Settleable solids							[illegible]	60	16	8[illegible]
Total phosphorus P									[illegible]	4 [illegible]
Phenol							0 7[illegible]*	0 9	0	1 0

*Not [illegible] split sample

Table 6 Comparison of the survey results with the data of the previous survey conducted at Menasha Corporation in May 19[illegible]4

Survey Period	0301[illegible]		030134 002			0300 3-00[illegible]		
From	5-20-74	5-[illegible]	5 [illegible] 74	5 21-74	5-1[illegible]-75	5 20-74	5 [illegible] 4	[illegible]
To	5 21-74	5 14-75	5-21-74	5 22-74	5-1[illegible] 75	5-21-74	[illegible]	[illegible]
Flow rate (mgd)	407	[illegible]	0 517	0 533	0 6[illegible]2	[illegible]41	935	[illegible]
pH (SU)	6 9	7 7	7 3	7 9	7 3	8 0	8 1	7 7
	mg/l	mg/l	mg/l	mg/l	mg/l	mg/l	mg/l	mg/l
5-day BOD	9	5	90	66	300	700	1,000	[illegible]
COD	63	43	320	180	1,000	8,500	52,500	9[illegible]
Total solids	564	408	764	620	1,410	8,864	9,788	6,9[illegible]
Total volatile solids			33[illegible]	3[illegible]	628	4,0[illegible]	5,72[illegible]	2,510
Total nonvolatile solids			384	320	---	4,784	4 060	---
Suspended solids	20	4	[illegible]	[illegible]	[illegible]	[illegible]	115	2,[illegible]
Suspended volatile solids			66	21	95	710	94	955
Suspended nonvolatile solids			4	29	---	110	21	---
Dissolved solids	544	404	694	570	1,190	8,044	9,673	4,290
Dissolved volatile solids			314	279	480	3,377	5 634	1,320
Dissolved nonvolatile solids			380	291	-	4,674	4 039	---
Settleable solids	5	<4	36	26	60	60	1[illegible]	1,[illegible]
Soluble orthophosphate-P	NS	NS	<0.02	0.01	<0 1	<1	< 02	0 5
Total phosphorus P	NS	NS	0 24	0.16	0 7	5.2	3 6	4 8
Nitrate nitrogen-N	NS	NS	0.08	0 19	0 1	1	8 0	0 2
Ammonia nitrogen-N	NS	NS	0.08	0.20	0.1	4 0	1 8	0 9
Organic nitrogen-N	NS	NS	3 0	7 8	4 5	56	52	53
Sulfates (SO_4)	NS	NS	114	86	15	1,800	-	35[illegible]
Phenols	NS	NS	0.15	0.21	0 9	0 18	18	1 0
Sulfite (SO_3)	NS	NS	<1	<1	<5	<10	<1[illegible]	<5
Total copper (Cu)	.01	NS	.01	[illegible]1	02	.10	03	06
Total chromium (Cr)	< 01	NS	< 01	<.01	< 01	.24	10	12
Total lead (Pb)	< 05	NS	< 05	<.05	< 07	40	40	26

NS - Not Sampled

7016

MEN03854

Table 6 Continued

	030055-00*			0101		
Survey Period						
From	5-20-74	5-21-74	5-13-75	5-20-74	5-21-74	5-13-75
To	5-21-74	5-22-74	5-14-75	5-21-74	5-22-74	5-14-75
Flow rate (mgd.*	0.100	0.109	.076	4.32	4.32	
pH	8.5	9.2	[illegible]	8.0	[illegible]	7.9
	mg/l	mg/l	mg/l	mg/l	mg/l	mg/l
5-day BOD	5	4	8	<5	<5	<5
COD	710	97	51	21	13	42
Total solids	902	908	968	368	304	392
Total volatile solids	268	258	292	NS	NS	NS
Total nonvolatile solids	640	640	---	NS	NS	NS
Suspended solids	126	216	345	14	8	29
Suspended volatile solids	80	82	70	NS	NS	NS
Suspended nonvolatile solids	46	134	---	NS	NS	NS
Dissolved solids	782	692	570	354	296	388
Dissolved volatile solids	188	186	200	NS	NS	NS
Dissolved nonvolatile solids	594	506	---	NS	NS	NS
Settleable solids	24	102	230	NS	NS	NS
Soluble orthophosphate-P	0.64	0.78	0.7	NS	NS	NS
Total phosphorus-P	1.7	1.4	1.1	NS	NS	NS
Nitrate nitrogen-N	1.4	1.5	1.7	NS	NS	NS
Ammonia nitrogen-N	.20	.14	0.3	NS	NS	NS
Organic nitrogen-N	1.20	0.7	1.3	NS	NS	NS
Sulfates (SO_4)	166	210	- -	NS	NS	NS
Phenols	0.02	0.02	0.04	NS	NS	NS
Sulfites (SO_3)	<1	<1	---	NS	NS	NS
Total copper (Cu)	0.01	0.02	0.03	NS	NS	NS
Total chromium (Cr)	0.01	<0.01	<.01	NS	NS	NS
Total lead (Pb)	<0.05	<0.05	<0.05	NS	NS	NS

NS Not Sampled
*Flow rates used in the computation of lbs/day

Table [illegible] Sample Preservation

Parameter	Preservative
BOD	Cooled to 4°C
COD	5 drops 1:1 H_2SO_4/125 ml Cooled to 4°C
General Chemistry	Cooled to 4°C
Total Metals	2 ml 1:1 HNO_3/250 ml
Nutrients	5 drops $CHCl_3$/125 ml Cooled to 4°C
Pesticides, PCB's, Phthalate	100 ml hexane.
Sulfides	5 drops 1N ZnAc/125 ml Cooled to 4°C

Survey by: Bradley Brogren, Sanitary Engineer
L. J. McDonald, Water Quality Investigator
Jerry Chesney, Maintenance Mechanic

Contact with Management: Bruce Buchanan
Art Brindley (Certified Operator)

Chlorinated Hydrocarbon Analyses by: Christine Kazen, Chemist

Physical & Chemical Analyses by: James Bedford, Chemist

Bacteriological Analyses by: Michigan Department of Public Health
Bureau of Laboratories

Report by: Bradley Brogren, Sanitary Engineer
L. J. McDonald, Water Quality Investigator
Point Source Surveys Section
Michigan Water Resources Commission
Bureau of Water Management
Environmental Protection Branch
Department of Natural Resources

Distribution "A"
PB

2617

MEN03855

Figure 1
Menasha Corporation
Outfalls-May 1975

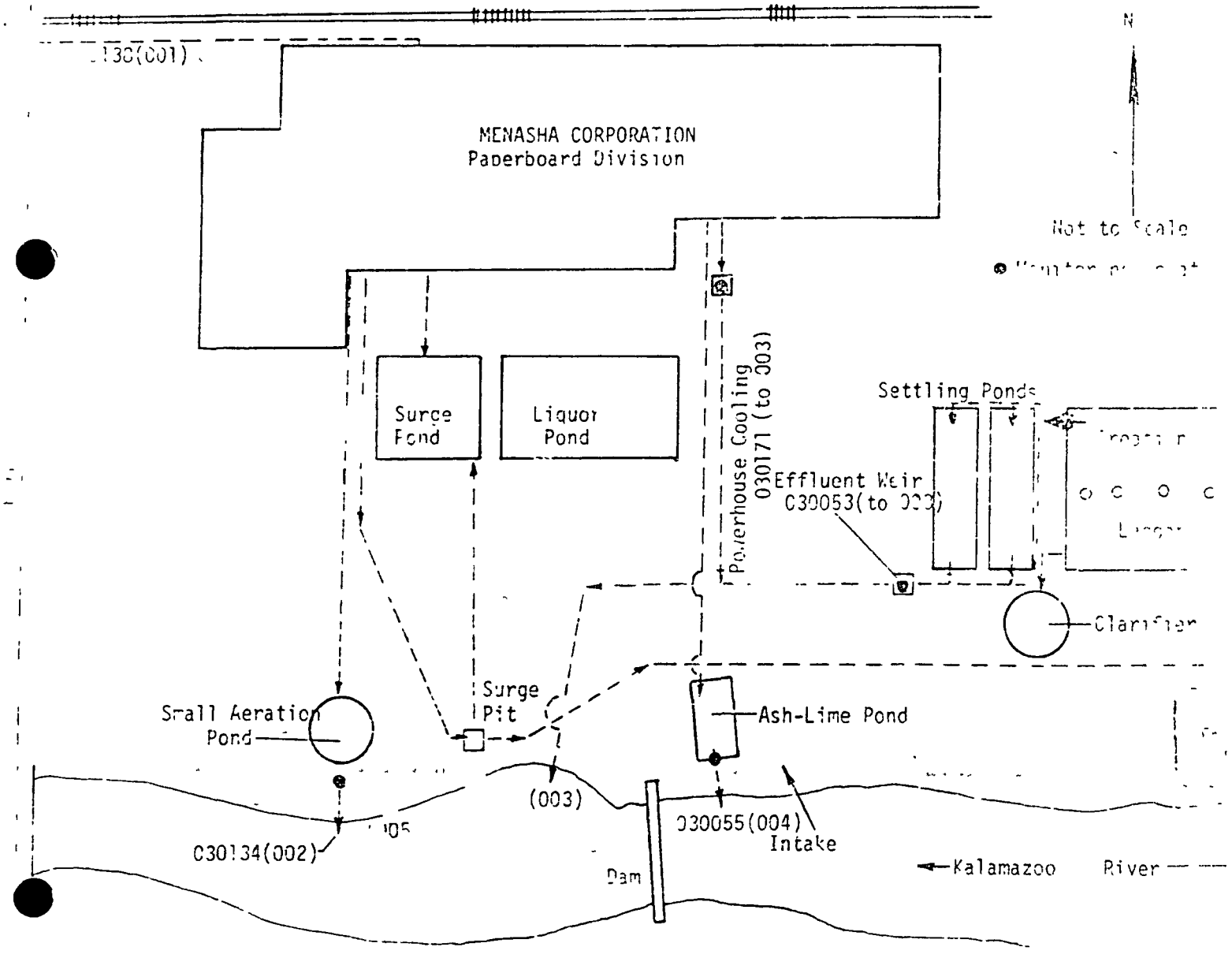

STATE OF MICHIGAN

MEN03856

NATURAL RESOURCES COMMISSION
CARL T. JOHNSON
JAATALA
PRIDGEON
HARRY H. WHITELEY
JOAN L. WOLFE
CHARLES O. YOUNGLOVE

WILLIAM G. MILLIKEN, Governor

DEPARTMENT OF NATURAL RESOURCES

HOWARD A. TANNER, Director

WATER RESOURCES COMMISSION
4056 Plainfield Avenue, N. E.
Grand Rapids, Michigan 49505

November 29, 1976

Mr. B. T. Buchanan,
Technical Superintendent
Menasha Corporation
Otsego Paperboard Mill
Otsego, Michigan 49078

Dear Mr. Buchanan:

Enclosed are two copies of the "Report of An Industrial Wastewater Survey" conducted at the Menasha Corporation's Otsego Mill on August 9-10, 1976. The report includes the volume of wastewater discharged and results of the chemical analyses performed on the composite of the collected effluent. In addition, grab samples were obtained for certain determinations.

The results of the survey indicate that not all of Menasha's discharges to the Kalamazoo River met the final limitations contained in N.P.D.E.S. Permit MI 0003824 at the time of the survey.

The phenol concentrations in outfall 002 and in the process water prior to mixing with the noncontact cooling water (Table 1) were in excess of the 0.3 mg/l phenol limit contained in Menasha's N.P.D.E.S. Permit. This appears to be a recurring problem as reflected in the company's Monthly Operating Reports for the past several months. What course of action has Menasha taken to correct this source of noncompliance?

The total suspended solids in the discharge from outfall 004 exceeded the permit limitation of 35 mg/l, as well as the load limitation of 23 lbs. per day (Table 1). In addition, the composite sample for outfall 004 contained a BOD concentration of 80 mg/l, indicating a source of contamination in this outfall.

High settleable solids concentration were found in the process water prior to mixing with the noncontact cooling water (140 mg/l, Table 1). Our office has been aware of the sludge bulking problem which has resulted in BOD and solids exceeding the permit limitations. It is anticipated that the treatment program which was started November 18, 1976, will solve the sludge bulking problem and bring the BOD and solids levels in line with the N.P.D.E.S. Permit limitations.

More

MEN03857

Oil and grease concentrations from one of two grab samples taken from outfall 002 and 004 contained 82 mg/l and 160 mg/l, respectively (Table 2). Although not specifically limited by the permit, the oil and grease concentrations should not exceed 10 mg/l for any outfall, nor should a discernible film be present.

In addition, the Point Source Study Unit which conducted the survey, observed that the company's weir on the process waste prior to mixing with the cooling water was partially submerged during the survey which would give an inaccurate flow reading. This should be corrected. They also expressed concern that contaminated runoff could reach the Kalamazoo River. These areas were identified as the road binder truck loading area, drainage from the side hill screen area, and floor drainage from the maintenance shop. The company should take appropriate steps to prevent contaminated runoff in these areas from reaching the Kalamazoo River.

We would appreciate receiving your comments and/or course of action taken on the items cited by December 30, 1976.

Very truly yours,

WATER RESOURCES COMMISSION

Chester Harvey

Chester Harvey,
District Engineer

RP/mc
cc: Karl Zollner

MEN03858

11-2-76

MICHIGAN DEPARTMENT OF NATURAL RESOURCES
ENVIRONMENTAL PROTECTION BUREAU
POINT SOURCE STUDIES SECTION

Report of an
Industrial Wastewater Survey
Conducted at
MENASHA CORPORATION
All Outfalls No. 030019
Allegan County
Otsego, Michigan
August 9-10, 1976

Survey Summary

Wastewater monitoring was performed during one twenty-four hour survey period starting Monday, August 9, 1976.

The results of this survey did not meet the final limitations in the facility's National Pollutant Discharge Elimination System (NPDES) Permit, No. MI0003824. The plant exceeded its phenol limitations at the process outfall 030134 (002) and the process wastewater prior to mixing with cooling water, outfall 030171. The total phosphorus limitation was also slightly exceeded at outfall 030171. The suspended solid limitation was exceeded at outfall 030055 (004) on the composite sample (Table 1).

A comparison of the results found on this survey to the results reported on the plant s monthly operating report can be seen in Table 4. The survey staff found higher phenol concentrations at outfalls 030134 (002) and 030171. The survey staff also found higher settleable solids than the company at outfall 030171.

A comparison of the laboratory analytical results obtained by the plant and the Environmental Protection Bureau from the split composite samples can be seen in Table 5. Higher BOD results were found by the Environmental Protection Bureau laboratory while the suspended solids concentrations compared well.

The results found on this survey are generally lower than those found on the May 1975 survey (Table 6).

In the composite samples, a BOD of 140 mg/l was found at the combined process and cooling water outfall 003 and of 80 mg/l on the old ash lime pond outfall 030055 (004) (Table 1). High oil & grease concentrations were found in one of the two samples collected at outfalls 030134 (002) and 030055 (004) (Table 2).

Survey Comments

An electrical failure prevented collection of a composite sample with the scoop-type sampler at 030138 (001). The sample was composed of grab samples collected during the survey and was not split with the company for analyses.

7017

Results from the sample collected where the clarifier effluent and turbine cooling water mix represent the last 18 hours of the survey.

Purpose of Survey

The purpose of the survey was to determine the quality and quantity of wastewater being discharged by Menasha Corporation, a principal discharger to the Kalamazoo River and to check for compliance with the NPDES Permit No. MI0003824.

This survey was in conjunction with an intensive study of the water quality of the Kalamazoo River conducted by the Comprehensive Studies Section of the Environmental Protection Bureau.

Plant Processes

Menasha Corporation, Paperboard Division, produces corrugated cardboard medium through the neutral sulfite pulping process. The mill operates 24 hours a day, 7 days per week, employing 240 people. Normal production is 360-370 tons per day. During the survey period the No. 1 paper machine was down approximately 12 hours. This reduced production was about 220 tons.

The process begins with hardwood chips that are brought to the plant.

The chips are sent to the digester which breaks them down with a sulfite cooking liquor consisting of sodium sulfite, soda ash and on rare occasions sodium hydroxide for a buffer. The chips are further broken down through refiners. From the refiners, the pulp is conveyed through mechanical presses which removes 60% of the cooking liquor.

The spent liquor is either sent to a 500,000 gallon liquor storage pond or a separate storage tank. Excess liquor is either given away as a roadbinder or concentrated in evaporators and incinerated to form a sodium sulfate salt cake which is sold to a Kraft mill.

From the presses, the pulp enters the stock bin and is sent through primary refiners to the wood chest where it is blended with recycled scrap paper and broke from the paper machines. The stock is further refined before going through the inlet fan pump to the head box and the two Fourdrinier paper machines.

Water Supply, Wastewater and Treatment

Menasha Corporation obtains its process and a portion of its cooling water from either of five wells or the City of Otsego. Powerhouse cooling water is derived from the Kalamazoo River while the plant's domestic supply is obtained from the city The company uses phosphate conditioner at their well heads for calcium and iron treatment. An organosulfur biocide is also added to inhibit bacteria growth. Fresh water treatment is performed in the plant for water used in the boilers.

Cooling water is used throughout the papermaking process and discharged through three of the plant's four outfalls to the Kalamazoo River. Outfall 030138 (001) discharges cooling water from the primary refiners, air compressors, drive magnetic clutch and #1 machine oil cooler plus roof drainage. Outfall 030139 (002) discharges the winder, the digester cooling waters plus the contaminants seal water off the #1 machine to the small aeration pond, the old pilot plant.

Condenser cooling water from the powerhouse, outfall 030053, combines with the treated process outfall 030171 in a manhole and is discharged from outfall 003 to the Kalamazoo River.

Water softener backwash, some cooling waters and miscellaneous floor and roof drainage discharges to the old ash-lime pond, outfall 030055 (004) to the river. Fly and bottom ash from the powerhouse goes to the new ash-lime settling ponds and then to the treatment system.

The wastewater treatment system illustrated on Figure 1 receives the bulk of its influent from the saveall.

Survey Procedure

An 11-7/8" full-channel weir with end contractions permanently installed by the company was used to monitor outfall 030138 (001). A permanent 24" full-channel weir was utilized for 030134 (002), as was the company's 24" rectangular weir on the treatment system effluent 030171 to outfall 003. A 60° v-notch weir was used at the ash-lime pond 030055 (004).

Each weir was equipped with a H_2O level recorder and an automatic scoop-type sampler. An automatic air-activated sampler collected samples in the manhole where turbine cooling water (003) and clarifier effluent (030171) mix. The water level recorder provided a continuous account of the liquid level or head above the crest of each weir on a head versus time graph for the duration of the survey period. The total volume of wastewater over each weir during the survey period was computed from the graph. The automatic scoop-type samplers obtained samples proportional to the instantaneous flow over each weir at 10-minute intervals These individual samples were deposited in a clean container to make up a composite sample representative of the total flow over each weir during the survey period.

Two grab samples were collected from all the outfalls with the exception of the cooling water and clarifier effluent mix where three samples were collected. All grab samples were analyzed for selected physical, chemical and bacteriological parameters (Table 2). All samples collected were preserved according to Table 7.

The composite and grab samples were transported to the Environmental Protection Bureau laboratory located in Lansing for selected quantitative physical and chemical analyses. The following formula was used to compute the pounds per day of various wastewater constituents discharged:
lbs/day = flow (mgd) x conc. (mg/l) x unit weight of water (8.34 lbs/gal)

The bacteria samples were transported to the Michigan Department of Public Health, Bureau of Laboratories located in Lansing for selected quantitative bacteriological analyses.

The results of the physical, chemical and bacteriological analyses are presented in Tables 1 and 2. - 7021

MEN03861

Table 1 Quantitative analyses of the 24 hour composite samples collected from the Menasha Corporation discharges to the Kalamazoo River, to determine the concentration of the wastewater constituents present in the samples, plus the computed pounds per day (lbs/day) of these constituents being discharged. Also noted are the highest and lowest flow rates recorded during the survey period.

Outfalls		030138 (001)		030134 (002)	
Survey Period	From	8-9-76 - 1200		8-9-76 - 1330	
	To	8-10-76 - 1153		8-10-76 - 1325	
Computed flow rate (mgd) *		0.27		0.38	
Highest flow rate (mgd)		0.31 @ 1140		0.48 @ 2345	
Lowest flow rate (mgd)		0.23 @ 1745		0.16 @ 1330	
pH (S.U.)		7.8		8.1	
		mg/l	lbs/day	mg/l	lbs/day
5-day BOD		< 5	--	180	570
20-day BOD		5	11	200	630
COD		16	36	620	1970
Total solids		472	1060	852	2700
Suspended solids		< 5	--	44	140
Dissolved solids		404	910	815	2580
Orthophosphate-P		0.04	0.09	0.01	0.03
Total phosphorus-P		0.72	1.6	0.70	2.2
Nitrite & nitrate nitrogen-N		0.21	0.47	0.01	0.03
Ammonia nitrogen-N		0.18	0.40	0.04	0.13
Organic nitrogen-N		0.28	0.63	3.2	10
Chlorides (Cl)		23	52	27	86
Sulfates (SO_4)		44	99	78	250
Phenols		< 10	--	1.0	3.2
				ug/l	
1242 Polychlorinated biphenyls				< 0.0001	--
1254 " "				< 0.0001	-
1260 " "				< 0.0001	--

* Flow rates used in the computation of lbs/day.

7022

MEN03862

Table 1 (continued)

Outfalls	030171 Process		030055 (004)	
Survey Period From	8-9-76 - 1530		8-9-76 - 1440	
To	8-10-76 - 1550		8-10-76 - 1435	
Computed flow rate (mgd) *	0.97		0.04	
Highest flow rate (mgd)	1.03 @ 0530		0.05 @ 0520	
Lowest flow rate (mgd)	0.90 @ 1345		0.04 @ 0815	
pH (S.U.)	8.3		7.9	
	mg/l	lbs/day	mg/l	lbs/day
5-day BOD	280	2,265	80	27
20-day BOD	--	--	93	31
COD	4,300	34,800	96	32
Total solids	6,780	54,800	732	244
Suspended solids	300	2,430	85	23
Dissolved solids	5,860	47,400	712	238
Settleable solids	140	1,130	--	--
Orthophosphate-P	0.2	1.6	0.21	0.07
Total phosphorus-P	2.1	17.0	0.54	0.18
Nitrite & nitrate nitrogen-N	0.1	--	0.20	0.07
Ammonia nitrogen-N	0.6	4.8	0.16	0.05
Organic nitrogen N	20	160	1.4	0.47
Chlorides (Cl)	97	790	61	20
Sulfates (SO_4)	--	--	77	26
Phenols	0.89	7.2	0.03	0.01
	ug/l		ug/l	
1242 Polychlorinated biphenyls	<0.0001	--	<0.0001	--
1254 " "	<0.0001	--	<0.0001	--
1260 " "	<0.0001	--	<0.0001	--

* Flow rates used in the computation of lbs/day.

Table 1 (continued)

Outfalls	003 (Cooling & process)		030053 (cooling)	
Survey Period From	8-9-76 - 1455		8-9-76 - 1440	
To	8-10-76 - 1500		8-10-76 - 1450	
Computed flow rate (mgd) *	7.85 **		6.88	
pH (S.U.)	8.1		8.2	
	mg/l	lbs/day	mg/l	lbs/day
5-day BOD	140	9,200	< 5	--
20-day BOD	150	9,800	--	--
COD	840	55,000	23	--
Total solids	1,720	113,000	412	23,600
Suspended solids	78	5,100	30	1,700
Dissolved solids	1,670	109,000	392	22,500
Settleable solids	--	--	23	1,300
Orthophosphate-P	< 0.1	--	0.08	4.6
Total phosphorus-P	0.6	40	0.24	14
Nitrite & nitrate nitrogen-N	0.2	10	0.47	27
Ammonia nitrogen-N	0.1	7	0.09	5.2
Organic nitrogen-N	5.7	370	1.1	63
Chlorides (Cl)	49	3,200	--	--
Sulfates (SO_4)	81	5,300	--	--
Phenols	0.8	50	--	--

* Flow rates used in the computation of lbs/day obtained by the company.

** Sum of flow rates obtained at the process wastewater prior to mixing with cooling water and the cooling water flow rate obtained from the plant's monthly operating report.

MEN03864

Table 2 Quantitative analyses of grab samples collected from the Menasha Corporation, Otsego discharge to the Kalamazoo River to determine concentrations of select physical and chemical constituents present in the wastewater.

Date	Time	Temp.[1] °C	pH[1] S.U.	Oil & Grease mg/l	BOD_5 mg/l	Susp. solids mg/l	Total diss. solids mg/l	Ortho-phosphate mg/l	Total phosphorus mg/l	Nitrite & nitrate nitrogen mg/l	Ammonia nitrogen mg/l	Organic nitrogen mg/l	D.O. mg/l	Phenol mg/l	Settle. solids mg/l
030138 (001)															
8-9-76	2200	19	7.6	1	< 5	10	388	0.04	0.63	0.17	0.18	0.30	0.7	--	--
8-10-76	1152	19	7.8	< 1	< 5	11	400	0.04	0.64	0.20	0.18	0.48	--	--	--
030134 (002)															
8-9-76	2225	21	8.1	5	270	72	920	0.02	0.54	0.03	0.05	3.6	5.1	1.6	40
8-10-76	1030	19	8.2	82	100	112	648	0.01	0.50	0.01	0.03	2.8	1.4	0.65	< 5
030055 (004)															
8-9-76	2305	18	7.8	1	7	11	672	0.18	0.38	0.16	0.19	1.8	2.9	--	--
8-10-76	1120	19	7.9	160	10	14	708	0.16	0.60	0.20	0.10	14.0	2.3	--	--
003 (Cooling & Process)															
8-9-76	2325	23	8.1	2	240	240	4160	0.1	1.3	< 0.1	0.3	14.0	< 0.1	--	--
8-10-76	1100	24	8.1	1	200	260	4000	0.1	1.8	0.1	0.5	18.0	--	--	--
[redacted] (Cooling & Process)															
8-10-76	0900	26	8.0	1	130	124	1840	< 0.1	0.8	0.2	0.1	7.9	--	--	--
030171 (Process)															
8-9-76	2350	22	8.1	< 1	350	260	5760	0.2	1.5	0.1	0.6	23	--	0.35	90
8-10-76	2335	23	8.1	1	290	330	5900	0.2	2.4	0.2	0.6	23	--	0.71	120
030053 (cooling)															
8-9-76	2325	28	7.9	1	< 5	--	--	--	--	--	--	--	--	--	--
8-10-76	1115	28	7.8	3	< 5	--	--	--	--	--	--	--	--	--	--

1 Values determined in the field at time of sampling.

Table 3 Quantitative analyses of grab samples collected fr[illegible]nasha Corporation discharges, 030134 (002) and (003), to the Kalamazoo River to determine concentrations of select bacteriological constituents present in the wastewater.

Outfall	Date	Time	Fecal Coliform cts/100 ml
030134	8-9-76	2225	50
	8-10-76	0955	270
	8-10-76	1030	330
	8-10-76	1315	460
	8-10-76	1610	340
003	8-9-76	2325	470
	8-10-76	0950	2500
	8-10-76	1100	2400
	8-10-76	1445	500
	8-10-76	1605	460

MEN03866

Table 4 Comparison of results obtained during the survey at the Menasha Corporation with the facility's NPDES Permit, No. MI0003824, and monthly operating report for August, 1976.

Parameter (Unit)	NPDES Permit Final Limitations	Monthly Operating Report				Survey Results	
	Daily Maximum	Monthly Average	Monthly Maximum	8-9-76	8-10-76	Composite	Grabs
030138 (001)							
Flow (MGD)	--	0.311	0.320	0.304	0.320	0.27	
BOD_5 (mg/l)	20	5.5	7	--	--	< 5	<5, <5
Suspended solids (mg/l)	20	0.75	1	--	--	< 5	10, 11
pH (S.U.)	6.5 - 9.5	7.4	7.6	--	--	7.8	7.6, 7.8
030052 (Cooling)							
Flow (MGD)	--	6.90	7.03	6.854	6.854	--	--
Oil & Grease	--	--	--	--	--	--	1, 3
BOD_5	--	8	10	--	6	< 5	<5, <5
pH (S.U.)	6.5 - 9.5	7.6	7.9	--	7.4	8.2	7.9, 7.8
030055 (004)							
Flow (MGD)	--	0.048	0.078	0.050	0.042	0.04	
Suspended solids (lbs/day)	23	4	47	2	1	28	--
(mg/l)	35	10	133	5	2	85	11, 14
Temperature (°F)	85	69	82	70	68	--	64, 66
pH (S.U.)	6.5 - 9.5	7.8	8.6	7.5	7.4	7.9	7.8, 7.9
030134 (002)							
Flow (MGD)	--	0.476	0.548	0.341	0.385	0.376	
BOD_5 (mg/l)	--	273	507	155	147	180	270, 100
Suspended solids (mg/l)	--	60	219	25	37	44	72, 112
Phenol (mg/l)	0.3	0.632	0.850	--	0.390	1.0	1.6, 0.65
Total phosphorus (mg/l)	2.0	0.54	0.65	--	0.65	0.70	0.54, 0.50
pH (S.U.)	--	7.6	8.1	7.5	7.7	8.1	8.1, 8.2
030171 (Process)							
Flow (MGD)	--	0.912	1.176	1.024	0.852	0.974	
BOD_5 (mg/l)	--	152	281	210	182	280	350, 290
Suspended solids (mg/l)	--	205	340	280	215	300	260, 330
Phenol (mg/l)	0.3	0.036	0.055	--	0.042	0.890	0.350, 0.710
Total phosphorus (mg/l)	2.0	1.9	2.2	--	2.2	2.1	1.5, 2.4
Settleable solids (ml/l)	--	22	109	18	25	140	90, 120
pH (S.U.)	--	--	--	--	--	8.3	8.1, 8.1
030186							
Flow (MGD)	--	--	--	1.37	1.24	1.35	
BOD_5 (lbs/day)	3725	2220	4137	2234	1769	2800	--
Suspended solids (lbs/day)	3200	1784	3310	3102	1648	2600	--

MEN03867

Table 5 Comparison of the laboratory analytical results obtained the Menasha Corporation, Otsego and the Environmental Protection Bureau from the split composite samples

Outfalls	030134 (002)		030055 (004)	
	Menasha Corp.	E.P.B.	Menasha Corp.	E.P.B.
pH (S.U.)	7.6	8.1	7.6	7.9
5-day BOD (mg/l)	112	180	6	80
Suspended solids (mg/l)	46	44	86	85

Outfalls	030171 (Process)		030171 (Cooling & Process)		030053 (Cooling)	
	Menasha Corp.	E.P.B.	Menasha Corp.	E.P.B.	Menasha Corp.	E.P.B.
pH (S.U.)	8.0	8.3	7.8	8.1	7.3	8.2
5-day BOD (mg/l)	193	280	48	140	5	< 5
Suspended solids (mg/l)	236	300	73	78	25	30

7628

Table C Comparison of the analytical results obtained during the previ survey at the Menasha Corporation in May 1975 with the results obtained in this survey.

Outfalls	030138 (001)		030134 (002)		030171 Process to 003	
Survey Date From	5-13-75	8-9-76	5-13-75	8-9-76	5-13-75	8-9-76
To	5-14-75	8-10-76	5-14-75	8-10-76	5-14-75	8-10-76
Flow Rate (MGD)	0.380	0.270	0.612	0.378	0.918	--
pH (S.U.)	7.7	7.8	7.3	8.1	7.7	8.1
	mg/l	mg/l	mg/l	mg/l	mg/l	mg/l
5-day BOD	5	< 5	300	180	300	280
20-day BOD	--	--	--	--	150	--
COD	43	16	1000	620	2900	4300
Total solids	408	472	1410	852	6920	6780
Suspended solids	4	< 5	100	44	2420	300
Dissolved solids	404	404	1190	815	4290	5860
Orthophosphate-P	--	--	< 0.1	0.01	0.5	0.2
Total phosphorus-P	--	--	0.7	0.70	4.8	2.1
Nitrite & nitrate nitrogen-N	--	--	0.1	0.01	0.2	0.1
Ammonia nitrogen-N	--	--	0.1	0.04	0.9	0.6
Organic nitrogen-N	--	--	4.5	3.2	53	20
Sulfates (SO_4)	--	--	15	78	--	--
Phenols	--	--	0.9	1.0	1.0	0.89

Outfalls	030055 (004)		030053 Cooling to 003	
Survey Date From	5-13-75	8-9-76	5-13-75	8-9-76
To	5-14-75	8-10-76	5-14-75	8-10-76
Flow Rate (MGD)	0.076	0.041	--	--
pH (S.U.)	7.7	7.9	7.9	8.2
	mg/l	mg/l	mg/l	mg/l
5-day BOD	8	80	< 5	< 5
COD	51	96	42	23
Total solids	968	732	392	412
Suspended solids	345	85	29	33
Dissolved solids	570	712	388	392
Orthophosphate-P	0.7	0.21	--	--
Total phosphorus-P	1.1	0.54	--	--
Nitrite & nitrate nitrogen-N	1.7	0.20	--	--
Ammonia nitrogen-N	0.3	0.16	--	--
Organic nitrogen-N	1.3	1.4	--	--
Phenols	0.04	0.030	--	--

Table 7 Sample Preservation

Parameter	Preservative
BOD	Cooled to 4°C.
COD	5 drops H_2SO_4/125 ml (to pH <2). Cooled to 4°C.
General Chemistry	Cooled to 4°C.
Microbiology	2 drops 10% sodium thiosulfate/125 ml to dechlorinate sample. Cooled to 4°C.
Nutrients	5 drops $CHCl_3$/125 ml. Cooled to 4°C.
Oil & Grease	1 ml 1:1 H_2SO_4/250 ml (to pH <4). Cooled to 4°C.
PCB	Collected in clean glass bottle
Phenolics	2 ml 10% $CuSO_4$ + H_3PO_4 (to pH 4)/250 ml. Cooled to 4°C.

Survey by: Thomas M. Polasek, Sanitary Engineer
Larry Elmleaf, Water Quality Investigator
Joseph Hey, General Foreman

Contact with Management: Bruce Buchanan

Certified Operator: Art Brindley

Hydrocarbon Analyses by: Tom Wilcox, Chemist

Physical & Chemical Analyses by: Ray Wimmer, Chemist

Bacteriological Analyses by: Michigan Department of Public Health
Bureau of Laboratories

Report by: Thomas M. Polasek
Larry Elmleaf
Point Source Studies Section
Environmental Services Division
Environmental Protection Bureau
Michigan Department of Natural Resources

Distribution "A"
MM

MEN03870

Figure 1
Menasha Corporation
Outfalls-May 1975

Sludge
Disposal

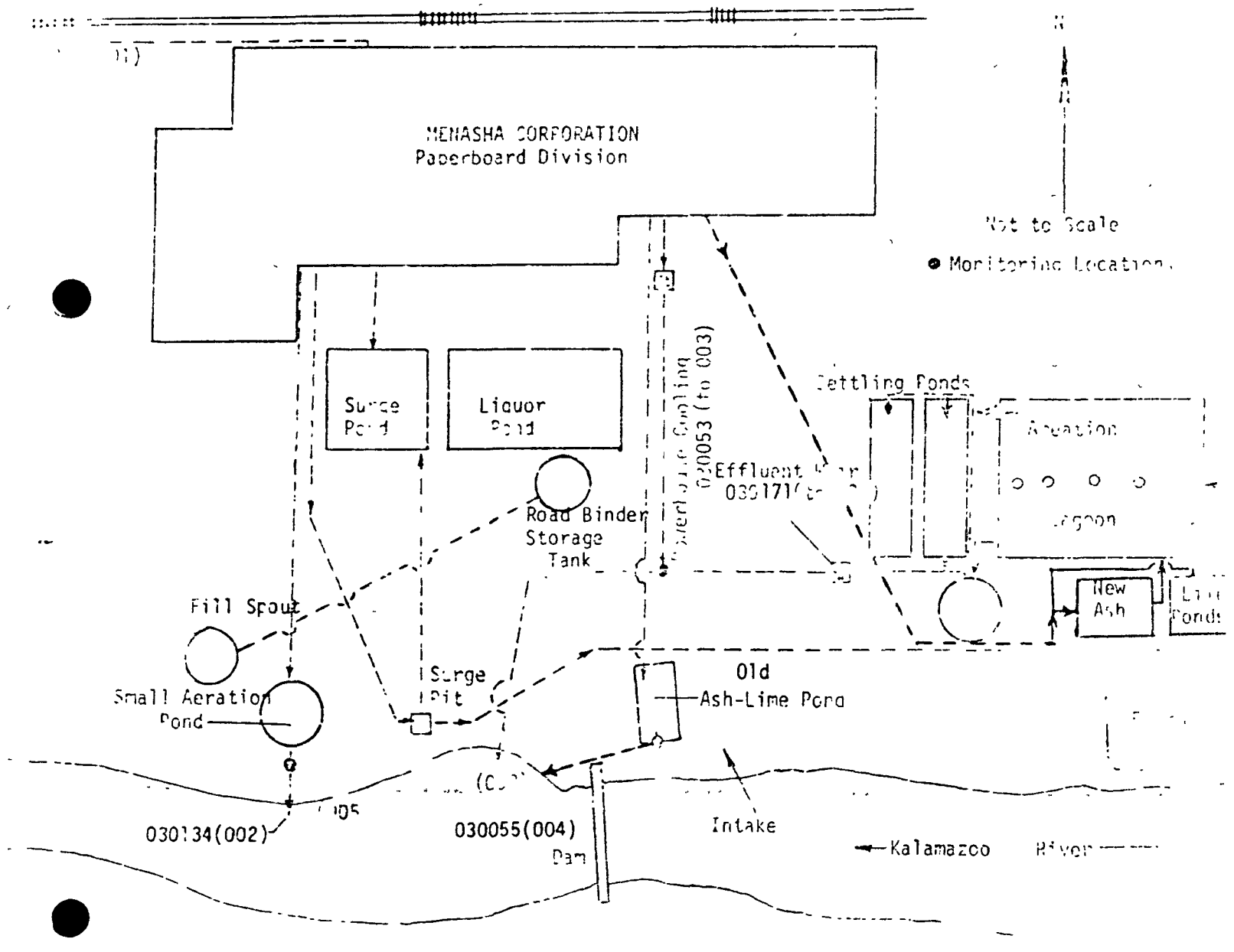

cc Art Reviews

NATURAL RESOURCES COMMISSION
CARL T. JOHNSON
F. M. LAITALA
JEAN PRIDGEON
HILARY F. SNELL
HARRY H. W[illegible]
JOAN L. WOLFE
CHARLES G. YOUNGLOVE

MEN03871

WILLIAM G. MILLIKEN Governor

DEPARTMENT OF NATURAL RESOURCES

HOWARD A. TANNER, Director

WATER QUALITY DIVISION
State of Michigan Office Building
350 Ottawa Avenue, N. W.
Grand Rapids, Michigan 49503

December 5, 1977

Mr. Bruce Buchanan
Technical Superintendent
Menasha Corporation
320 North Farmer Street
Otsego, Michigan 49078

Dear Mr. Buchanan:

Enclosed are two copies each of the "Report of a Toxicity Evaluation" and a "Report of an Industrial Wastewater Survey" conducted at Menasha Corporation during the week of August 29, 1977.

The results of the toxicity evaluation revealed that Menasha's final process effluent was not toxic to fathead minnows under the established test conditions during the study period of August 29-September 2, 1977.

The results of the industrial wastewater survey conducted on August 30-31, 1977, indicate that outfall 002 and the process waste outfall 000, did not meet all of the final limitations in the facility's National Pollutant Discharge Elimination System (N.P.D.E.S.) Permit No. MI 0003824. The daily phenol maximum of 0.3 mg/l was exceeded for outfalls 002 - 2.6 mg/l, and the process outfall 000 - 3.6 mg/l. A total phosphorus concentration of 2.5 mg/l found in the process outfall 000, exceeds the daily maximum limit of 2.0 mg/l. Lastly, the total combined B.O.D. load discharged from outfalls 000 and 002 was 1,710 kg/day, which slightly exceeds the daily maximum permit limitation of 1,695 kg/day.

These and other violations of the company's N.P.D.E.S. Permit were discussed at a "Show Cause Hearing" held on October 26, 1977, at which time, Menasha submitted their corrective action plan to comply with the permit conditions. Some of the plan has already been completed; other elements are still under evaluation; particularly, the biological community of the aeration lagoon following acidification. Revisions to the present permit will also be made to include the second condenser discharge above the dam.

MICHIGAN
THE GREAT LAKES STATE

F 326-1 1 75

7039

MEN03872

Therefore, the two survey reports are being transmitted to provide you with the data collected during the survey period. After you have had an opportunity to review the survey data, I would appreciate any comments or corrections you have on these reports.

Very truly yours,

WATER QUALITY DIVISION

Roger Przybysz

Roger Przybysz,
Water Quality Specialist

RP/mc
Enclosures

cc Karl Zollner

7040

MEN03873

[illegible] RESOURCES
[illegible]
[illegible]

[illegible] Survey
[illegible]
[illegible]

[illegible] was performed during one twenty-four hour survey [illegible] August 30 [illegible]

[illegible] survey [illegible] was exceeded for outfalls [illegible] g/l [illegible] phosphorus [illegible] outfall [illegible] process, which exceeds the daily [illegible] (Table [illegible]

[illegible] operating [illegible] the survey (Table [illegible]

[illegible] (Table 4)

[illegible] the results of the [illegible] at outfall [illegible] was [illegible] and one [illegible] at outfall [illegible] was higher, [illegible] water was lower, while [illegible] at outfall [illegible] was higher, [illegible] were lower (Table 5)

[illegible] survey was to determine the quality and quantity of [illegible] by the Kalamazoo Corporation, to the Kalamazoo River [illegible] with the NPDES Permit No. MI0003824

[illegible]

Kalamazoo Corporation [illegible] the [illegible] a day, 7 days per week, [illegible] per day

The process begins [illegible] chips that are brought to the [illegible] chips are digested [illegible] sulfur [illegible] cooking liquor [illegible] scale [illegible] or rare [illegible] further broken down through [illegible] presses which [illegible] cooking liquor

The [illegible] separate storage tank [illegible] as a roadbed [illegible] vapor [illegible] fluidized reactor [illegible] salt cake. [illegible] to kraft [illegible] for use in their process

After the presses [illegible] enters the stock [illegible] and [illegible] refiners [illegible] scrap [illegible] paper machines. The [illegible] before [illegible] through the [illegible] to the head box [illegible] paper machines

Water Supply, Wastewater Treatment

[illegible]

The [illegible] outfalls [illegible] water [illegible] Outfall [illegible] contains [illegible] water off [illegible] wastewater [illegible] small aeration pond before [illegible]

[illegible] of the [illegible] water from [illegible] with the [illegible] fall [illegible] to the Kalamazoo [illegible] through an unpermitted outfall [illegible]

Water softener backwash, some cooling water [illegible] roof drainage discharges [illegible] the old ash-line pond, outfall [illegible] to the river. Fly and bottom ash from the powerhouse goes to the new ash-lime settling ponds and then to the treatment system

741

[illegible]

Table 1 Analyses of composite samples.

Outfalls	030134 ([illegible])		030134 ([illegible])		030[illegible] ([illegible])		0301[illegible] ([illegible])	
Survey Period From	8-30-77 - 14[illegible]		8-30-77 - 13[illegible]		8-30-77 - 1[illegible]		8-30-77 - 1[illegible]	
To	8-31-77 - 14[illegible]		8-31-77 - 13[illegible]		8-31-77 - 1[illegible]		8-31-77 - 1[illegible]	
Computed flow rate* ([illegible])	1[illegible]		1560		[illegible]		1200	
Highest flow rate ([illegible])	1[illegible]	[illegible] 31/77	1[illegible]	[illegible] 31/77	[illegible]	1137 [illegible] 31/77	3[illegible]	[illegible] 31/77
Lowest flow rate ([illegible])	--		1170 @ 1330 [illegible] 31/77		2[illegible]	1543 [illegible] 30/77	--	
	mg/l	kg/day	mg/l	kg/day	mg/l	kg/day	mg/l	kg/day
5-day BOD	< 5	--	240	370	< 5	--	1[illegible]	1340
COD	41	6.2	1[illegible]	1560	5[illegible]	14[illegible]	37[illegible]	44[illegible]
Suspended solids	2	0.3	100	160	< 2	--	3[illegible]	4[illegible]
Dissolved solids	5[illegible]	[illegible]	12[illegible]	1[illegible]	6[illegible]	17[illegible]	[illegible]	8[illegible]
Settleable solids	--	[illegible]	--	--	--	--	[illegible]	4[illegible]
Orthophosphate-P	--	[illegible]	0.[illegible]	0.3	-		--	[illegible]
Total phosphorus-P	--	--	1.4	2.2	--	--	2.5	[illegible]
Nitrate & nitrite [illegible]	--	--	0.02	0.03	--	--	0.12	0.1[illegible]
Ammonia nitrogen-N	--	--	0.12	0.19	--	--	0.51	[illegible]
Organic nitrogen-N	--	--	5.0	7.8	--	--	27	[illegible]
Phenol	--	--	2.6	4.1	0.[illegible]	0.005	3.6	[illegible]
Total magnesium (Mg)	--	--	--	--	--	--	23	2[illegible]
Total [illegible] ([illegible])	--	--	--	--	--	--	1.2	1.4
Total cobalt ([illegible])	--	--	--	--	-	---	0.5	0.[illegible]
Total zinc (Zn)	--	--	--	--	--	--	0.33	0.4
Total [illegible] ([illegible])	--	--	--	--	--	--	0.[illegible]	0.[illegible]
Potassium ([illegible])	--	--	--	--	--	--	3.3	4.[illegible]
Total vanadium ([illegible])	--	--	--	--	--	--	0.[illegible]	--
Total [illegible] ([illegible])	--	--	--	--	-	--	0.[illegible]	0.[illegible]
			[illegible]				[illegible]	
PCB 1[illegible]			0.[illegible]				[illegible]	
PCB 1[illegible]			[illegible]				[illegible]	
PCB 1[illegible]			[illegible]				[illegible]	

* [illegible]

7042

Date	Time	Temp. °C	pH S.U.	Grease mg/l	[illegible] mg/l	[illegible]	[illegible]	[illegible]	Phosphorus [illegible]	[illegible]	[illegible]	Nitrogen	[illegible]
030139 (001)													
8-30-77	1015	22.5	7.3	[illegible]	7	[illegible]	540	--	-	-			
8-31-77	1100	25.5	7.0	< 1	7	4	[illegible]	-	-	-		-	
030134 (002)													
8-30-77	2300	30	7.8	--	220	81	1100	[illegible]	0.47	1		[illegible]	[illegible]
8-31-77	1310	32	8.0	--	90	121	[illegible]	1.0	-	0.[illegible]		[illegible]	
030055 (004)													
8-30-77	2230	19	7.2	< 1	< 5	2	6[illegible]	[illegible]	--	--		-	
8-31-77	1240	27	7.[illegible]	< 1	6	4	6.0	60	--	-	-	--	
030171 (Process)													
8-30-77	1440	26	8.[illegible]	--	90	110	7100	65.[illegible]	-	[illegible]	0.[illegible]	0.59	
8-31-77	1450	28	9.1	--	120	820	6300	3.[illegible]	--	3.6	0.25	0.55	[illegible]
030053 (Cooling)													
8-30-77	2210	30	7.4	1	6	21	80[illegible]	23	--	--	-	-	
8-31-77	11[illegible]	31.5	7.3	1	8	[illegible]	410	26	--	--	--	-	-
Combined Cooling & Process (003)													
8-30-77	2245	29	7.7	1	--	66	950	[illegible]	0.39	0.7	0.[illegible]	0.46	[illegible]
8-31-77	1115	30	7.[illegible]	< 1	--	160	[illegible]	690	--	1.0	0	0.17	[illegible]

	Phenol mg/l	D.O. mg/l	Settleable solids ml/l
030139 (001)			
8-30-77	2.7	0.7	--
8-31-77 1310	3.3	0.4	--
030055 (004)			
8-30-77 2230	0.02	5.2	--
8-31-77 1240	0.02	5.5	--
030171 (Process)			
8-30-77 1440	4.1	0.1	41
8-31-77 1450	3.9	0.1	260
Combined Cooling & Process (003)			
8-30-77 2245	0.94	--	58
8-31-77 1115	0.32	--	150

1 - Values determined in the field at time of sampling

Manasha [illegible]

Table [illegible] Comparison of survey results with [illegible] facility's NPDES [illegible] data

Parameter (Unit)	NPDES Permit Final Limits Daily Average	Daily Max	Manasha [illegible]	[illegible]	[illegible]	[illegible]
030139 (001)						
Flow (m³/day)	--	--	970	270	[illegible]	-
[illegible] mg/l)	--	-	-	-	5	-
Susp. solids (mg/l)	--	2[illegible]	--	--	2	-
pH (S.U.)	not [illegible] 5 nor [illegible]		--	--	-	-
030134 (002)						
Flow (m³/day)	--	--	1,6[illegible]	[illegible]	[illegible]	
Settleable solids (mg/l)	--	--	85	40	--	
Phenol (mg/l)	-	0.3	--	0.5	[illegible]	
Total phosphorus (mg/l)	-	[illegible]	-	--	[illegible]	[illegible]
pH (S.U.)	not [illegible] 5 nor [illegible] 5		8.[illegible]	8.2	--	7.[illegible]
030055 (004)						
Flow (m³/day)	--	-	-	2,653	[illegible]	
Settleable solids (mg/l)	--	--	[illegible]	904	[illegible]	4
Phenol (mg/l)	--	0.3	-	0.30	[illegible]	
Total phosphorus (mg/l)	--	2.0	--	--	2.5	[illegible]
030053 (Cooling)						
Flow (m³/day)	--	--	20,[illegible]	20,850	--	-
Oil & Grease (mg/l)	--	--	0	0	--	0
BOD5 (mg/l)	--	--	--	6	-	[illegible]
pH (S.U.)	not [illegible] 6.5 nor >9.5		--	7.[illegible]	--	[illegible]
030055 (004)						
Flow (m³/day)	--	--	300	300	242	--
Suspended solids (mg/l)	--	35	2	23	2	-
(kg/day)	-	10.5	0.45	6.8	--	-
Temperature (°C)	--	29	19	19	-	[illegible]
pH (S.U.)	not [illegible] 5 nor [illegible] 5		7.8	8.1	--	7
Combined data for 030134 (002) & 030171 (Process)						
BOD5 (kg/day)	--	1,[illegible]	535	474	1,[illegible]	-
Suspended solids (kg/day)	--	1,[illegible]	539	35	63	-

1 - Survey results are for the composite sample (with sample [illegible] percent [illegible])
To obtain kg/d multiply m³/day by 0.[illegible]
To obtain lbs/day multiply kg/day by 2.[illegible]

MEN03876

... obtained by the Menasha ... Protection Bureau from the ...

	Menasha	E.P.B.
300		2

	Menasha	E.P.B.

Table 8 Comparison of the previous ... results with the results obtained in this survey.

Survey Date From				
To		-77	8-78	
Flow Rate ... day			440	
Phenols				

-?0/4

MEN03877

Figure 1 Menasha Corporation Outfall May 1975

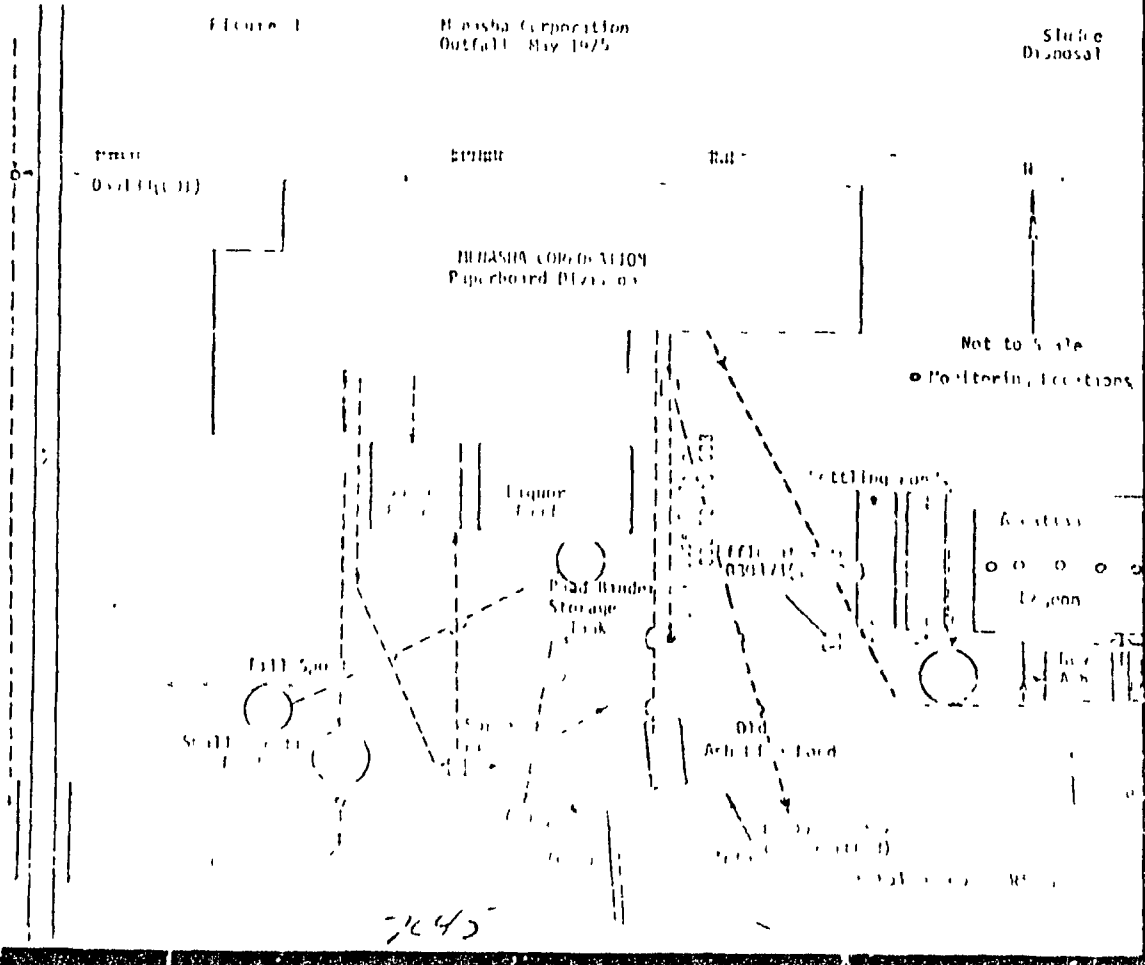

MEN03878

STATE OF MICHIGAN

AL RESOURCES COMMISSION
T. OHNSON
M. ITA A
AN FRIDGEON
F. SNELL
A. H. WHITELEY
AN L. WOLFE
HARLES G. YOUNGLOVE

WILLIAM G. MILLIKEN, Governor

DEPARTMENT OF NATURAL RESOURCES

HOWARD A. TANNER, Director

State Office Building
350 Ottawa Avenue, N. W.
Grand Rapids, Michigan 49503

December 29, 1978

Mr. Bruce Buchanan
Technical Director
Menasha Corporation
320 North Farmer Street
Otsego, Michigan 49078

Dear Mr. Buchanan:

Enclosed are two copies of the "Report of An Industrial Wastewater Survey" conducted at the Menasha Corporation's Otsego Mill on September 18-19, 1978. The report includes the volume of wastewater discharged, and results of the chemical analyses performed on the composite of the collected effluents. In addition, grab samples were obtained for certain determinations.

The results of this survey indicate Menasha's discharges to the Kalamazoo River met the final effluent limitations contained in their N.P.D.E.S. Permit No. MI 0003824 during the survey period.

The survey analytical results, when compared to the company's monthly operating reports and split composite sample for suspended solids and settleable solids, were higher than those reported by the company at outfall 030171 (003), (see Tables 3 and 4).

Two grab samples collected from outfall 030171 contained 100 and 120 mg/l of freon extractables oil and grease (Table 2). While this analytical test is not necessarily specific for oils or greases, to what would you attribute these high concentrations?

The unpermitted discharge of condenser cooling water which discharges above the dam will be handled administratively through our review and evaluation of the company's N.P.D.E.S. Permit renewal application. This was discussed at one of our previous meetings.

Your review and comments regarding the elements contained in the survey report should be submitted by January 31, 1979.

MICHIGAN THE GREAT

7046

MEN03879

We, also, anticipate meeting with you regarding the sludge disposal program sometime prior to the end of January.

If you have any questions regarding the survey, please call our office.

Very truly yours,

WATER QUALITY DIVISION

Roger Przybysz

Roger Przybysz,
Water Quality Specialist

RP mc
Enclosure

. Frank Baldwin
John Bohunsky

7047

MICHIGAN DEPARTMENT OF NATURAL RESOURCES
ENVIRONMENTAL PROTECTION BUREAU
POINT SOURCE STUDIES SECTION

Report of an
Industrial Wastewater Survey
Conducted at
MENASHA CORPORATION
All Outfalls No. 030019
Allegan County
Otsego, Michigan
September 18-19, 1978

Survey Summary

Wastewater monitoring was performed during one twenty-four hour survey period starting Monday, September 18, 1978.

The results of this survey met the final limitations in the facility's National Pollutant Discharge Elimination System (NPDES) Permit, No. MI0003824 (Table 3).

Survey results were compared to the company's September 1978 Monthly Operating Report results. Suspended solids and settleable solids were found in higher concentrations than those reported by the company at outfall 030171 (003) (Table 3).

The composite samples were split with the company for comparison of analytical results. The company reported significantly lower concentrations of suspended solids, settleable solids, and phenol than did the Environmental Protection Bureau laboratory for outfall 030171 (003) (Table 4).

The results of this survey were compared to the previous survey conducted in August 1977. Flows were higher for each outfall during this survey. At outfall 030134 (002) concentrations of BOD_5, COD, and phenol decreased since the last survey. At outfall 030171 (003) concentrations of phenol decreased and potassium increased since the last survey (Table 5).

Survey Comments

Powerhouse cooling water was not flowing during the survey.

Grab samples from outfall 030171 (003) contained 100 and 120 mg/l concentrations of freon extractable oil and grease.

Dissolved oxygen level in the grab sample from outfall 030171 (003) was less than 0.1 mg/l. It appears there is insufficient aeration in the treatment system. This problem has been previously documented.

Plant Processes

Menasha Corporation, Paperboard Division, produces corrugated medium through a non-sulfur pulping process. The mill operates 24 hours a day, 7 days per week, employing about 240 people. Production was considered to be about 90-95% of normal during the survey.

The paper pulp used in the plant is derived from hardwood chips (65%) and recycled waste cardboard (35%). The hardwood chips are digested in a cooking liquor containing sodium carbonate and sodium hydroxide, pulped and refined. The pulp is conveyed through mechanical presses which remove 60% of the cooking liquor. The waste recycled cardboard is hydropulped and mixed with wood chip pulp in a mixing chest. The pulp is then pumped to the two Fourdrinier paper machines.

The spent liquor is either sent to a 500,000 gallon liquor storage pond or a separate storage tank. Excess liquor is either given away to the county for use as a roadbinder or concentrated in evaporators and incinerated in a fluid bed reactor to form a salt cake. The salt cake is reused by the plant.

Water Supply, Wastewater & Treatment

Menasha Corporation obtains process water and a portion of its cooling water from either company wells or the City of Otsego. Powerhouse cooling water is pumped from the Kalamazoo River and the plant's domestic supply is obtained from the city. The company uses an organosulfur biocide to inhibit bacteria growth at the well heads. The water used in the boilers is provided further treatment.

The plant has five outfalls to the Kalamazoo River (Figure 1). Outfall 030138 (001) discharges cooling water from the primary refiners, air compressors, drive magnetic clutch and #1 machine oil cooler plus roof drainage. Outfall 030134 (002) discharges the winder, the digester cooling waters and the contaminants seal water off the #1 machine. The wastewater is treated in a small aeration pond before being discharged.

Condenser cooling water from the powerhouse flows into a monitoring sump. Part of this flow combines with the treated process flows, outfall 030171, and is discharged from outfall 003 to the Kalamazoo River. The rest of the condenser cooling water is discharged to an unpermitted outfall upstream of the dam.

Water softener backwash, some cooling waters and miscellaneous floor and roof drainage discharges through the old ash-lime pond, outfall 030055 (004) to the river. Fly and bottom ash from the powerhouse goes to the ash-lime settling ponds and then to the treatment system.

The white water from the saveall's is discharged to the treatment system. The treatment system consists of an aeration lagoon, clarifier and settling ponds. The effluent from the treatment system, outfall 030171 is mixed with cooling water before being discharged through outfall 003.

Survey Procedure

The flows and samples were obtained as follows:

Outfall	Flow Measurement	Sampling
030138 (001)	12" full channel	Grab composite + individual grabs.
030131 (002)	24" full channel	Automatic air activated sampler + individual grabs.
030171 (003)	24" rectangular weir with end contractions	Automatic scoop type sampler + individual grabs.
030155 (004)	60° V notch weir	Automatic air activated sampler + individual grabs.
030186	None	Individual grabs.

A water level recorder provides a continuous account of the liquid level of head above the crest of a weir. A head versus time graph is obtained for the duration of the survey period. The total volume of wastewater over the weir during the survey period is computed from the graph.

An automatic sampler composites samples at timed intervals. Samples may be proportional to the instantaneous flow over the weir.

A grab composite consists of a series of individual grabs composited into one sample. Four equal volume aliquots were taken randomly during the 24-hour survey period.

An individual grab is a single instantaneous sample.

Samples were analyzed by the Environmental Protection Bureau Laboratories located in Lansing.

Samples were preserved according to Table 6. The results of the physical, chemical and bacteriological analyses are presented in Tables 1 & 2

MEN03883

Menasha Corporation - Otsego

Table [illegible] Analyses of composite samples

Outfalls	030138 (001)		030134 (002)		030171 (003)		030055 (004)	
Survey Period From	9-18-78 - 1310		9-18-78 - 1255		9-18-78 - 1500		9-18-78 - 1405	
To	9-19-78 - 1310		9-19-78 - 1255		9-19-78 - 1500		9-19-78 - 1405	
Input flow rate* (M^3/day)	460		2000		2700		420	
Highest flow rate (M^3/day)	--		2500 - 9-18-78 @ 1509		3100 - 9-19-78 @ 0355		470 - 9-18-78 @ 1420	
Lowest flow rate (M^3/day)	--		1300 - 9-19-78 @ 0452		1900 - 9-19-78 @ 1124		400 - 9-19-78 @ 0940	
	mg/l	kg/day	mg/l	kg/day	mg/l	kg/day	mg/l	kg/day
[illegible]-day [illegible]	3.5	1.7	20	[illegible]0	76	200	3.6	1.5
[illegible]	48	22	87	170	2,700	7,300	65	27
Suspended solids	< 1	--	12	24	330	890	27	11
Dissolved solids	570	260	510	1,000	5,200	14,000	810	340
Settleable solids	--	--	< 12	--	100	300	--	--
Nitrite & nitrate nitrogen-N	--	--	0.04	0.08	0.49	1	--	--
[illegible] nitrogen-N	--	--	0.03	0.06	0.89	2	--	--
[illegible] nitrogen-N	--	--	1.1	2.2	27	73	--	--
Total phosphorus-P	--	--	0.17	0.34	1.9	5	--	--
Orthophosphate-P	--	--	0.01	0.02	--	--	--	--
Phenols	--	--	0.32	0.64	0.15	0.4	0.01	0.004
Total cobalt (Co)	--	--	--	--	0.08	0.2	--	--
Total copper (Cu)	--	--	-		0.08	0.2	--	--
Total zinc (Zn)	--	--	--	--	0.21	0.6	--	--
Total molybdenum (Mo)	--	--	--	--	< 0.02	--	--	--
Magnesium (Mg)	--	--	--	--	20	50	--	--
Potassium (K)	--	--	--	--	42	110	--	--
Manganese (Mn)	--	--	--	--	0.34	0.9	--	--
Vanadium (V)	--	--	--	--	0.04	0.1	--	--
			ug/l		ug/l			
[illegible]			< 0.1		< 0.1			
[illegible]			< 0.1		< 0.1			
[illegible]			< 0.1		< 0.1			

* [illegible] used in the computation of kg/day
[illegible] To obtain [illegible] multiply kg/day by 2.2046

MEN03884

Menasha Corporation - Otsego

Table 2 Analyses of grab samples

Date	Time	Temp.[1] °C	pH[1] S.U.	Oil & Grease mg/l	Fecal coliform cts/100 ml	BOD mg/l	COD mg/l	D.O. mg/l	Susp. solids mg/l	Diss. solids mg/l	Settle. solids mg/l	Nitrite & nitrate nitrogen mg/l
[illegible]												
[illegible]	[illegible]	20	7.5	--	--	--	--	--	--	--	--	--
[illegible]	[illegible]	19	7.3	< 1	--	1.8	46	< 0.1	1	550	--	--
[illegible]	[illegible]	19	7.3	< 1	--	2.4	48	< 0.1	1	550	--	--
[illegible]	[illegible]	21	7.4	--	--	--	--	--	--	--	--	--
[illegible]												
[illegible]	[illegible]	31.5	8.2	--	-	--	--	--	--	--	--	--
[illegible]	[illegible]	30.5	8.1	2	< 100	22	98	4.5	15	510	< 15	0.05
[illegible]	[illegible]	[illegible]	8.2	[illegible]	< 100	21	93	--	10	520	< 10	0.01
[illegible]	[illegible]	[illegible]	[illegible]	--	--	--	-	--	--	--	--	--
[illegible]												
[illegible]	[illegible]	[illegible]	8.6	--	--	--	--	--	--	--	--	--
[illegible]	[illegible]	[illegible]	8.7	[illegible]	--	80	2700	< 0.1	170	5200	< 1	0.62
[illegible]	[illegible]	[illegible]	8.5	[illegible]	--	80	2600	--	180	5400	20	0.71
[illegible]	[illegible]	[illegible]	8.5	--	--	--	--	--	--	--	--	--
[illegible]												
[illegible]	[illegible]	27	8.7	--	--	--	--	--	--	--	--	--
[illegible]	[illegible]	[illegible]	8.7	3	--	3.9	69	4.1	41	830	--	-
[illegible]	[illegible]	[illegible]	8.6	< 1	--	3.6	70	--	9	740	--	--
[illegible]			8	--	--	--	--	--	--	--	--	--

[1] Values determined in the field at time of sampling.

MEN03885

Menasha Corporation - Otsego

Table 2 (continued)

Date	Time	Ammonia nitrogen mg/l	Organic nitrogen mg/l	Total phosphorus mg/l	Ortho-phosphate mg/l	Phenol mg/l
[illegible]						
[illegible]	2015	0.03	1.0	0.10	0.02	0.30
[illegible]	0735	0.03	1.1	0.08	0.03	0.29
[illegible]						
[illegible]	[illegible]	0.89	27	1.4	--	0.16
[illegible]	0950	1.0	27	1.3	--	0.12
[illegible]						
[illegible]	2115	--	--	--	--	0.01
[illegible]	0835	--	--	--	--	0.01

MEN03886

Menasha Corporation - Otsego

Table 3 Comparison of survey results with the facility's NPDES Permit and Monthly Operating Report.

Parameter (Unit)	NPDES Permit Final Limitations	September Monthly Operating Report				Survey Results[1]
	Daily Maximum	Monthly Average	Monthly Maximum	9-18-78	9-19-78	
002 (001)						
Flow (M³/day)	--	515	633	534	489	460
BOD5 (mg/l)	20	5	6	--	--	3.6 (1.8, 2.4)
Susp. solids (mg/l)	20	0	1	--	--	< 1 (1, 1)
pH (S.U.)	not <6.5 nor >9.5	min. 7.5	7.9	--	--	(7.3, 7.3, 7.4, 7.5)
003 55 (004)						
Flow (M³/day)	--	350	1730	300	260	420
Susp. solids (mg/l)	35	7	39	7	4	27 (9, 41)
(kg/day)	10.5	1.8	9.6	1.8	0.9	11
Temperature (°F)	85	66	94	60	64	(61, 63, 64, 81)
pH (S.U.)	not <6.5 nor >9.5	min. 7.4	9.1	8.2	8.1	(7.8, 8.6, 8.7, 8.7)
004 (002)						
Flow (M³/day)	--	1482	1960	1870	1960	2000
BOD5 (mg/l)	--	10	32	24	3	20 (21, 22)
Susp. solids (mg/l)	--	5	31	5	3	12 (10, 15)
Settle. solids (mg/l)	--	8	143	4	4	< 12 (<10, <15)
Phenol (mg/l)	0.3	0.311	0.890	--	0.170	0.32 (0.29, 0.30)
Total phosphorus (mg/l)	2.0	1.08	2.50	--	0.34	0.17 (0.10, 0.08)
pH (S.U.)	not <6.5 nor >9.5	min. 7.6	8.2	7.8	7.9	(8.0, 8.1, 8.2, 8.2)
005 (003)						
Flow (M³/day)	--	2240	2940	2350	2520	2700
BOD5 (mg/l)	--	309	823	127	62	76 (80, 80)
Susp. solids (mg/l)	--	197	327	127	190	330 (170, 180)
Settle. solids (mg/l)	--	10	53	0	0	100 (<1, 20)
Oil & Grease (visual) (mg/l)	--	--	--	--	--	(100, 120)
Phenol (mg/l)	0.3	0.088	0.239	--	0.013	0.15 (0.12, 0.16)
Total phosphorus-P (mg/l)	2.0	2.1	3.5	--	0.82	1.9 (1.3, 1.4)
pH (S.U.)	--	--	--	--	--	(8.5, 8.5, 8.6, 8.7)
006 (combined process from 002 & 003)						
Flow (M³/day)	--	3720	4900	4220	4480	4700
BOD5 (kg/day)	1695	653	1666	343	171	240
Susp. solids (kg/day)	1455	139	676	307	484	914

Survey results are for the composite sample. Grab sample ranges are shown in parantheses ( ).
To obtain MGD multiply M³/day by 0.000264
To obtain lbs/day multiply kg/day by 2.2046

MEN03887

Menasha Corporation - Otsego

Table 4 Comparison of the laboratory analytical results obtained by Menasha Corporation and the Environmental Protection Bureau from the split composite samples.

Details	030132 (001)		030134 (002)		030171 (003)		030055 (004)	
	Menasha	E.P.B.	Menasha	E.P.B.	Menasha	E.P.B.	Menasha	E.P.B.
Flow (M3/day)	90	460	2000	2000	2400	2700	300	420
	mg/l	mg/l	mg/l	mg/l	mg/l	mg/l	mg/l	mg/l
5-day BOD	1	3.6	19	9	68	76	--	--
Suspended solids	9	< 1	9	12	148	330	25	27
Settleable solids	--	--	3	< 12	0	100	--	--
Total phosphorus-P	--	--	0.48	0.17	1.01	1.9	--	--
[illegible]	--	--	0.121	0.32	0.024	0.15	--	--

MEN03888

Menasha Corporation - Otsego

[illegible] 5 [illegible] omparison of the previous survey results with the results obtained in this survey.

[illegible]	030138 (001)		030134 (002)		030171 (003)		030055 (004)	
[illegible] Date From	8-30-77	9-18-78	8-30-77	9-18-78	8-30-77	9-18-78	8-30-77	9-18-78
[illegible] To	8-31-77	9-19-78	8-31-77	9-19-78	8-31-77	9-19-78	8-31-77	9-19-78
[illegible] gal/d	150	460	1560	2000	1200	[illegible]00	240	420
	mg/l	mg/l	mg/l	mg/l	mg/l	mg/l	mg/l	mg/l
[illegible]	< 5	3.6	240	20	120	75	< 5	3.6
[illegible]	[illegible]1	48	1000	87	3700	2700	59	65
[illegible] solids	[illegible]	< 1	100	12	390	330	< 2	27
[illegible] solids	[illegible]	570	1200	510	6900	5200	690	810
[illegible] solids	--	--	--	--	330	100	--	--
[illegible] nitrate nitrogen-N	--	--	0.02	0.04	0.12	0.49	--	--
[illegible] nitrogen-N	--	--	0.12	0.03	0.54	0.89	--	--
[illegible]	--	--	5.0	1.1	27.0	27	--	--
[illegible]	--	--	1.4	0.17	2.5	1.9	--	--
[illegible] phosphate-P	--	--	0.20	0.01	--	--	--	--
[illegible]	--	--	2.6	0.32	3.6	0.15	0.02	0.01
[illegible]	--	--	--	--	0.5	0.08	--	--
[illegible] copper (Cu)	--	--	--	--	0.09	0.08	--	--
[illegible] zinc (Zn)	-	--	--	--	0.33	0.21	--	--
[illegible] molybdenum (Mo)	--	--	-	-	0.05	[illegible].02	--	-
[illegible] (Mg)	--	--	--	--	23	20	--	--
[illegible] (Mn)	--	--	--	--	1.2	0.34	--	--
[illegible] (K)	--	--	--	--	3.3	42	--	--
[illegible]	--	--	--	--	< 0.5	0.04	--	--

MEN03889

Table 6 Sample Preservation

Parameter	Preservative
COD & TOC	10 drops conc. H_2SO_4/250 ml (to pH <2).
Cyanide & Phenolics	Dechlorinate with ascorbic acid (if needed). 10 drops 10 N NaOH (to pH 12)/250 ml.
D.O.	Fixed on site.
Total Metals	2 ml 1:1 HNO_3/250 ml (to pH <2).
Microbiology	2 drops 10% sodium thiosulfate/125 ml to dechlorinate sample.
Oil & Grease	10 drops conc. H_2SO_4/250 ml (to pH <2)

All samples cooled to 4°C upon collection and chain of custody maintained.

Survey by: Martin Rock, Sanitary Engineer
L.J. McDonald, Water Quality Investigator
Joseph Hey, Water Quality Investigator

Contact with Management: Gary Boys

Hydrocarbon Analyses by: Environmental Protection Bureau Laboratory

Physical, Chemical & Bacteriological Analyses by: Environmental Protection Bureau Laboratory

Report by: Martin Rock
L.J. McDonald
Point Source Studies Section
Environmental Services Division
Environmental Protection Bureau
Michigan Department of Natural Resources

Distribution "A"
MM

MEN03890

Figure 1

Menasha Corporation
Outfalls

Sludge
Disposal

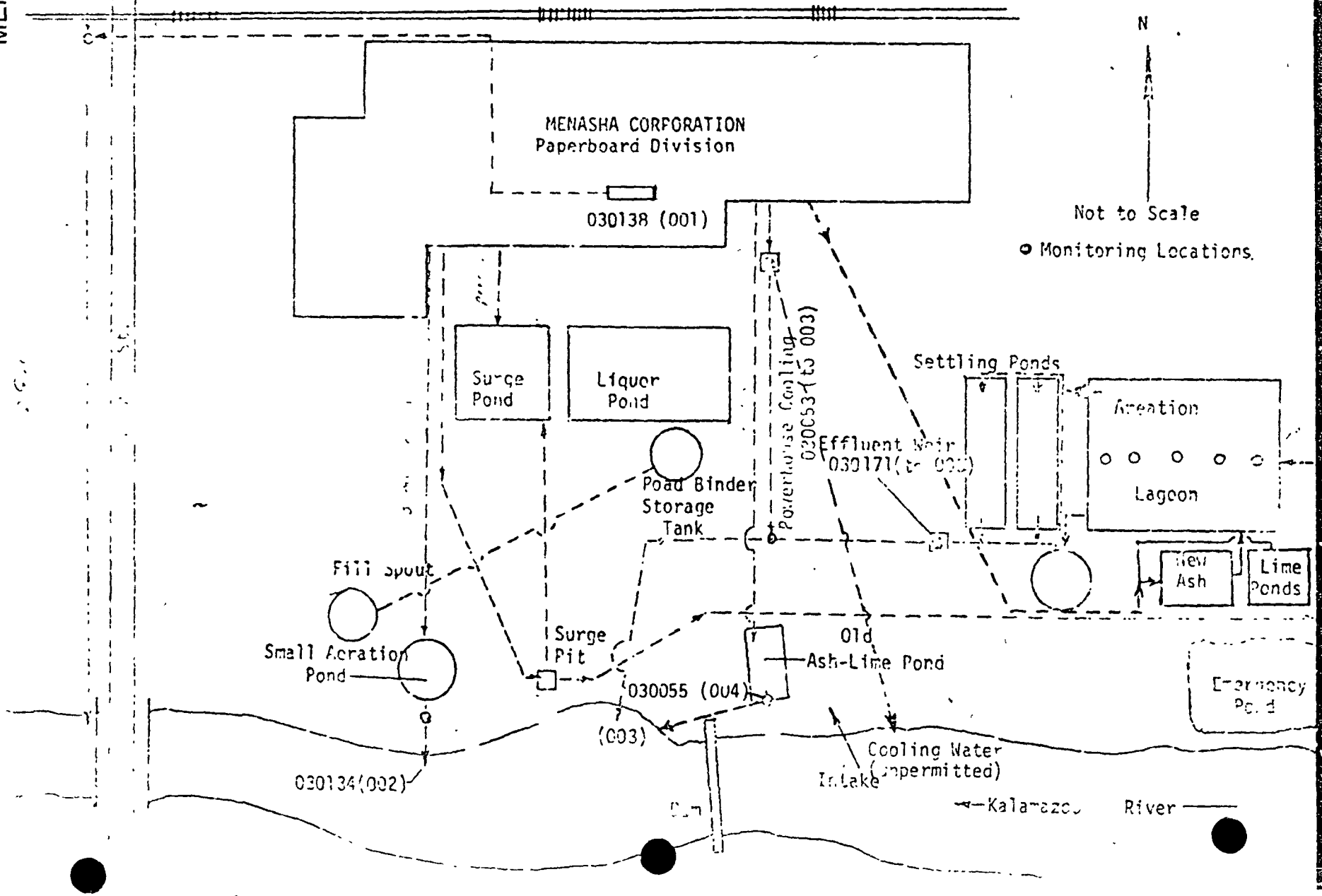

Figure Menasha Corporation - Otsego

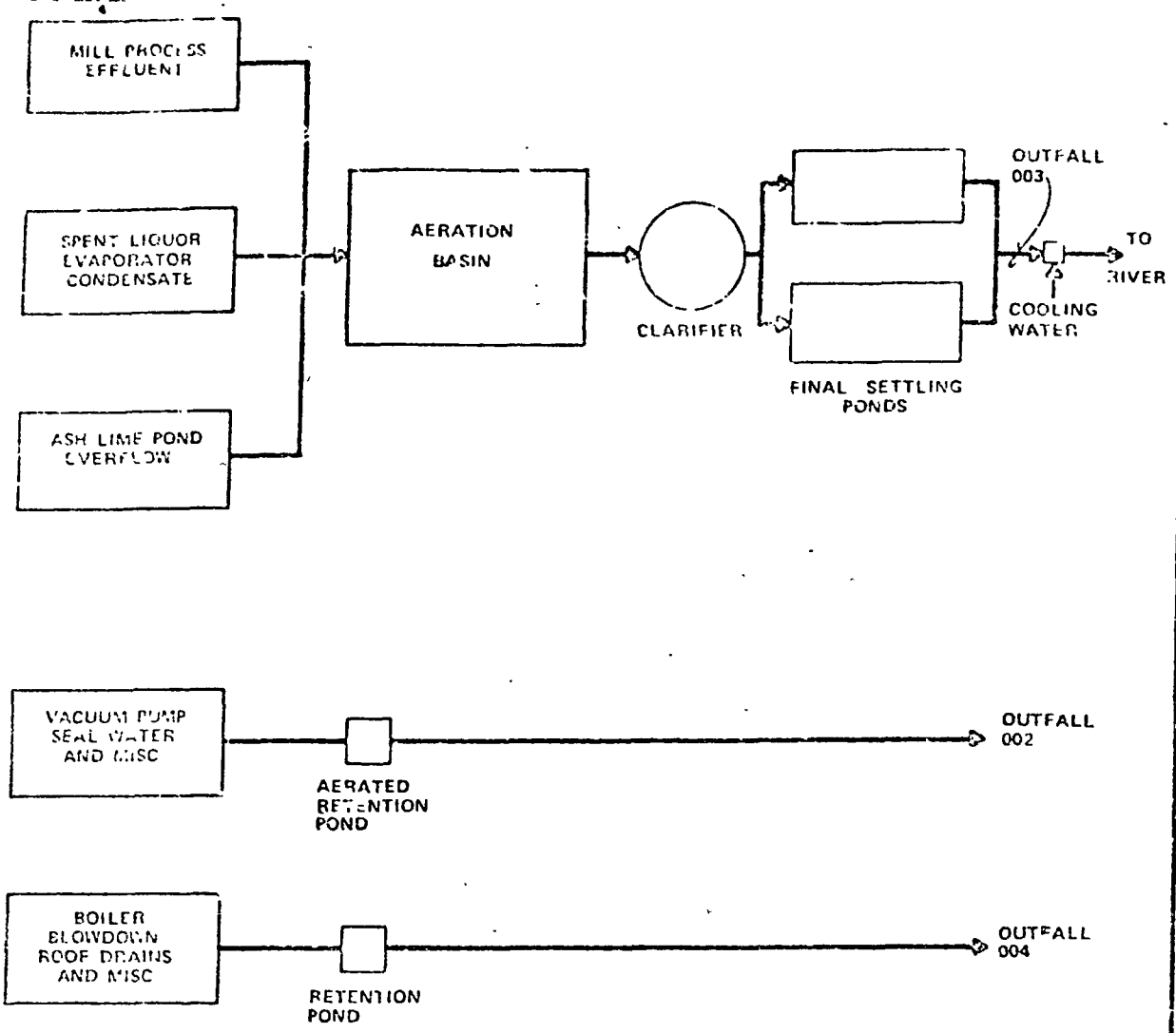

- OUTFAL 001 IS STORM DRAIN
- OUTFALL 000 IS COMPUTED COMBINATION OF 003 PLUS 002

MENASHA CORPORATION
OTSEGO MILL

DISCHARGE OUTFALL
NOMENCLATURE

CH2M HILL

MEN03892

NATURAL RESOURCES COMMISSION
[illegible] HOFFER
[illegible] JOHNSON
[illegible] LAITALA
[illegible] SNELL
[illegible] WHITELEY
[illegible] WOLFE
CARLES G. YOUNGLOVE

WILLIAM G. MILLIKEN Governor
DEPARTMENT OF NATURAL RESOURCES
HOWARD A. TANNER Director
State Office Building
350 Ottawa N. W.
Grand Rapids, Michigan 49503
Phone: 456-6232

July 28, 1982

Mr. John Blauwkamp
Menasha Corporation
320 N. Farmer Street
Otsego, MI 49078

Dear Mr. Blauwkamp:

Enclosed are two (2) copies of the "Report of an Industrial Wastewater Survey" that was conducted at Menasha Corporation, Otsego, on October 5-6, 1981. Flow measurements and samples were collected from this facility's discharges.

Survey results were compared to those values on the company's monthly operating report (MOR) in Table 3. The split sample results are listed in Table 4. Both tables indicate Menasha's results for suspended solids and settleable solids at Outfall 000 were lower than those reported by the survey.

Table 5 lists sample analyses from both the 1980 and 1981 surveys. At Outfall 000, the phenol, BOD_5, and phosphorus parameters have decreased, whereas the settleable solids have increased. An appreciable elevation of COD, BOD_5, and suspended solids has occurred at Outfall 002. Both Outfall 003 and Outfall 004 have remained essentially the same.

Your response regarding the difference between suspended solids results and the changes in the discharge at Outfall 002 should be sent to this office by August 20, 1982. If you should have any questions or comments concerning the enclosed survey, feel free to contact me at this office.

Sincerely,

WATER QUALITY DIVISION

Marge Spruit

Marge Spruit
Water Quality Specialist

MS/mam

CC: WQD Files, Lansing
M. Stifler, Environmental Services Division
S. Ross, Water Quality Division

Enclosures 2

MICHIGAN
THE GREAT LAKE STATE

7084

MICHIGAN DEPARTMENT OF NATURAL RESOURCES
ENVIRONMENTAL PROTECTION BUREAU
POINT SOURCE STUDIES SECTION

Report of an
Industrial Wastewater Survey
Conducted at
MENASHA CORPORATION
All Outfalls No. 030019
NPDES Permit No. MI0003824
Allegan County
Otsego, Michigan
October 5-6, 1981

Survey Summary

Wastewater monitoring was performed during one twenty-four hour survey period starting Monday, October 5, 1981.

The results of this survey are compared to the final limitations in the facility's National Pollutant Discharge Elimination System (NPDES) Permit, No. MI0003824 in Table 3. The survey results exceeded the daily maximum limitation for suspended solids. The company's reported Monthly Operating Report values and the survey grab samples do not support the high survey composite result. The reason for this discrepancy has not been determined.

Survey results are compared to values reported by the company in its Monthly Operating Report (MOR) in Table 3.

Composite samples were split with the company for comparison of analytical results (Table 4).

The results of this survey are compared with the results of the previous survey run June 24-25, 1980 in Table 5.

Plant Processes

Menasha Corporation, Paperboard Division, produces corrugated medium through a non-sulfur pulping process. The mill operates 24 hours a day, 7 days per week employing approximately 220 people. The plant was producing 370 tons per day of corrugated medium at the time of the survey.

The paper pulp used in the plant is derived from 60% hardwood chips and 40% recycled waste cardboard. The hardwood chips are digested in a cooking liquor containing sodium carbonate and sodium hydroxide, pulped and refined. The pulp is conveyed through a mechanical process which removes 60% of the cooking liquor. The waste recycled cardboard is hydropulped and mixed with the woodchip pulp in the mixing chest. The pulp is then pumped to the two fourdrinier paper machines.

7085

MEN03894

Water Supply, Wastewater & Treatment

Menasha Corporation obtains process water and a portion of its cooling water from either company wells or the City of Otsego. [illegible] powerhouse cooling water is pumped from the Kalamazoo River and the plant's domestic supply is obtained from the city. The company uses an organosulfur biocide to inhibit bacteria growth at the well heads. The water used in the boilers is provided further treatment.

The plant has five outfalls to the Kalamazoo River (Figure 1). Outfalls 030138 (001) discharges cooling water from the primary refiners, air compressor drive magnetic clutch and [illegible] machine oil cooler. Outfall 030134 (002) [illegible] the winder, the digester cooling waters and contaminants seal water off the [illegible] machine. The wastewater is treated in a small aeration pond before being discharged.

Condenser cooling water from the powerhouse flows into a monitoring sump, outfall 030053 (003). Part of this flow combines with the treated process flows outfall 030171, and is discharged to the Kalamazoo River just below the [illegible] dam. The rest of the condenser cooling water is discharged upstream of the dam.

Cooling water and miscellaneous floor and roof drainage discharge [illegible] the old ash-lime pond, outfall 030055 (004) to the river. Water softener backwash and fly and bottom ash from the powerhouse goes to the ash-lime settling ponds and then to the treatment system.

The white water from the [illegible] is discharged to the treatment system. The treatment system consists of ammonia addition prior to an aeration [illegible], clarifier and settling ponds. The effluent from the treatment system, outfall 030171 is mixed with cooling water before being discharged.

Survey Procedure

The flows and samples were obtained as follows:

Outfall	Flow Measurement	Sampling Method
030171 (000)	Company 24-inch rectangular weir/ staff installed water level recorder.	Automatic air activated composite and individual grabs.
030134 (002)	Company 24-inch full channel weir/ staff installed water level recorder.	Automatic air activated composite and individual grabs.
030138 (001)	Company 60 degree V-notch weir/ staff instantaneous head reading.	Individual grabs.
030053 (003)	Company estimate.	Grab composite and individual grabs.
030055 (004)	Company 60 degree V-notch weir/ staff water level recorder.	Individual grabs.
Intake	--	Individual grabs.

A water level recorder provides a continuous account of [illegible] level [illegible] head above the crest of a weir. A head versus time graph [illegible] obtained for the duration of the survey period. The total volume of wastew[illegible] over the weir during the survey period is computed from the graph.

An automatic sampler composites samples at timed intervals. Samples may be proportional to the instantaneous flow over the weir.

Extractable organic composite samples are collected by the grab composite method.

A grab composite consists of a series of individual grabs composited into one sample.

An individual grab is a single instantaneous sample.

Samples were analyzed by the Environmental Protection Bureau Laboratories located in Lansing.

Samples were preserved [illegible], to [illegible]. The results of the physical, chemical and bacteriological [illegible] presented in Tables [illegible] & 2. Letter codes for laboratory results are defined in Table 6.

MEN03896

Menasha Corporation - Otsego

Table 1 Analyses of composite samples.

Outfalls	030171 (000)		030134 (002)	
Survey Period From	10-5-81 - 1340		10-5-81 - 1430	
To	10-6-81 - 1340		10-6-81 - 1430	
Computed flow rate[1] (M^3/day)	2,530		1,540	
	mg/l	kg/day	mg/l	kg/day
COD	4,500	11,000	270	420
Phenol	0.140 NA	0.354	0.530 NA	0.816
BOD_5	240	610	47	72
$CBOD_2$	76.	190	29.	45
$CBOD_5$	190.	480	37.	57
$CBOD_8$	350	890	56	86
$CBOD_{12}$	380	960	57	88
$CBOD_{15}$	730	1,800	76	120
$CBOD_{20}$	810 DL	2,000	100	200
Nitrite & nitrate nitrogen-N	1.1 PS	2.8	0.04 PS	0.06
Ammonia nitrogen-N	0.72	1.8	0.03 DL	0.05
Kjeldahl nitrogen-N	29.	73	2.1	3.2
Orthophosphates-P (Diss.)	0.10 PS	0.25	< 0.01 DL	--
Total phosphorus-P	2.3	5.8	0.26	0.40
Suspended solids	890	2,300	32	49
Dissolved solids	7,400	19,000	720	1,100
Settleable solids	210	530	4	6
Total cadmium (Cd)	< 20	--	--	--
Total chromium (Cr)	130	0.33	--	--
Total copper (Cu)	120	0.30	--	--
Total nickel (Ni)	< 50	--	--	--
Total lead (Pb)	60	0.2	--	--
Total zinc (Zn)	190	0.48	--	--
Total manganese (Mn)	510	1.3	--	--
Phenolic Scan	U	--	U	--

1 - Flow rates used in the computation of kg/day.
To obtain MGD multiply M^3/day by 0.0002642
To obtain lbs/day multiply kg/day by 2.205

70 88

MEN03897

Menasha Corporation - Otsego

Table 1 (continued)

Outfall	030053 (003)		030 004)	
Survey Period From	10-5-81 - 14'5		10-5-81 - 1400	
To	10-6-81 - 1415		10-6-81 - 1400	
Computed flow rate[1] (M^3/day)	(25,950)		228	
	mg/l	kg/day	mg/l	kg/day
COD	24	520	42	9.6
Nitrite & nitrate nitrogen-N	0.71	18	0.43	0.098
Ammonia nitrogen-N	0.14	3.6	0.30	0.068
Kjeldahl nitrogen-N	0.81	21	0.73	0.17
Total phosphorus-P	0.09	2	0.22	0.050
Suspended solids	17	440	< 1	--
Dissolved solids	350	9,100	650	150

1 - Flow rates used in the computation of kg/day (obtained from company MPB).
To obtain MGD multiply M^3/day by 0.0002642
To obtain lbs/day multiply kg/day by 2.205

7089

MEN03898

Menasha Corporation - Otsego

Table 2 Analyses of grab samples.

Date	Time	Flow[1] M³/day	Temp.[1] °C	pH[1] S.U.	Susp. solids mg/l	Diss solids mg/l	Settle. solids mg/l	COD mg/l	BOD_5 mg/l	Nitrite & nitrate nitrogen mg/l	Ammonia nitrogen mg/l	Kjeldahl nitrogen mg/l
030171 (000)												
10-5-81	1945	2,600	16.0	8.6	490	7,000	50	4,600	240	1.2 PS	0.92	28.
10-6-81	0745	2,600	17.0	8.5	520	7,400	200	4,800	250	1.2 PS	0.90	23
030134 (002)												
10-5-81	2020	1,820	30.5	8.3	44	730	10	300	50	0.02 PS	0.01 DL	2.0
10-6-81	0825	680	26.0	8.1	30	650	8	190	34	0.01 PS	0.01 DL	.0
030138 (001)												
10-5-81	1440	1,400	29.0	7.8	< 4	410	--	12	--	0.42	0.23	0.47
10-5-81	2030	1,400	31.0	7.7	< 4	340	--	10	--	0.13	0.06	0.19
10-6-81	0835	900	18.5	7.6	< 4	400	-	17	--	0.35	0.29	0.54
030053 (003)												
10-5-81	2015	--	22.0	8.1	13	350	--	20	--	0.69	0.11	0.75
10-6-81	0810	--	22.0	7.8	17	[illegible]	--	26	--	0.7[illegible]	0.[illegible]	1.9[illegible]
030055 (004)												
10-5-81	2005	220	20.0	8.1	< 4	670	--	46	--	0.31	0.28	0.74
10-6-81	0805	260	21.0	8.1	8	440	--	47	-	0.5[illegible]	0.28	[illegible]
[illegible]												
10-5-81	1955	--	13.5	8.0	47	240	--	8	--	0.66	0.11	0.5
10-6-81	0800	--	14.0	8.3	16	330	--	23	--	0.67	0.16	0.9[illegible]

1 - Values determined in the field at time of sampling.

MEN03899

Menasha Corporation - Otsego

Table 2 (continued)

Date	Time	Dissolved Orthophosphate-P mg/l	Total phosphorus-P mg/l	O&G I.R. mg/l	O&G Grav. mg/l	Phenol ug/l	Cadmium ug/l	Chromium ug/l	Copper ug/l	Nickel ug/l
030171 (000)										
10-5-81	1945	0.1[illegible] PS	2.2	< 1	2	180 NA	< 20	100	80	50
10-6-81	0745	0.10 PS	2.3	< 1	< 2	230 NA	< 20	100	[illegible]	< 50
030134 (002)										
10-5-81	2020	< 0.01 DL	0.27	40	26	630 NA	--	--	--	--
10-6-81	0825	< 0.01 DL	0.20	5	< 2	480 NA	--	--	--	--
030138 (001)										
10-5-81	1440	--	0.07	< 1	< 2	--	--	--	--	--
10-5-81	2030	--	0.14	< 1	< 2	--	--	--	--	--
10-6-81	0835	--	0.07	1	< 2	--	--	--	--	--
030153 (003)										
10-5-81	2015	--	0.07	< 1	< 2	--	--	--	--	--
10-6-81	0810	--	0.16	< 1	< 2	--	--	--	--	--
030155 (004)										
10-5-81	2005	--	0.1[illegible]	1	< 2	--	--	--	--	--
10-6-81	0805	--	0.25	< 1	< 2	--	--	--	--	--
Intake										
10-5-81	1955	--	0.[illegible]	< 1	< 2	--	--	--	--	--
10-6-81	0800	--	0.11	< 1	< 2	--	--	--	--	--

Date	Time	Lead ug/l	Zinc ug/l	Manganese ug/l
030171 (000)				
10-5-81	1945	65	180	490
10-6-81	0745	60	180	540

MEN03900

Menasha Corporation - Otsego

Table 3 Comparison of survey results with the facility's NPDES Permit and Monthly Operating Report.

Parameter (unit)	NPDES Permit Final Limitations		October Monthly Operating Report				Survey Results[1]
	Daily Average	Daily Maximum	Monthly Average	Monthly Maximum	10-6-81	10-6-81	
[illegible] (001)							
[illegible]	--	--	[illegible]	[illegible]	[illegible]	[illegible]	2,5[illegible] [illegible]
[illegible]	--	--	[illegible]	[illegible]	[illegible]	259	[illegible] 240, 250
[illegible] solids (mg/l)	--	--	[illegible]	[illegible]	[illegible]	[illegible]	[illegible] 490, [illegible]
[illegible] solids (mg/l)	--	--	[illegible]	[illegible]	48	[illegible]	21[illegible] 50, 2[illegible]
Phenol (ug/l)	300	--	265	666	[illegible]	--	[illegible] (180, 230,
Ortho Phos. Diss (mg/l)	--	[illegible].0	[illegible].91	[illegible]	[illegible]	--	[illegible] 0.12, [illegible]
Ortho Phos. Diss (kg/day)	--	2.6	[illegible].3	[illegible]	[illegible]	--	0.25
[illegible]	not <6.0 nor >9.0		--	[illegible]	[illegible]	[illegible]	-- [illegible]
				min. [illegible]			
[illegible] (002)							
[illegible]	--	--	1,40[illegible]	[illegible]	[illegible]	[illegible]	[illegible] [illegible]
[illegible]	--	--	57	[illegible]	55	[illegible]	[illegible]
[illegible] solids (mg/l)	--	--	[illegible]	[illegible]	[illegible]	[illegible]	[illegible]
[illegible] solids (mg/l)	--	--	[illegible]	[illegible]	[illegible]	[illegible]	[illegible]
[illegible]	[illegible]	--	[illegible]	[illegible]	[illegible]	--	[illegible]
[illegible]	not <6.0 nor >9.0		--	[illegible]	[illegible]	[illegible]	-- [illegible]
				min. [illegible]			
[illegible] (001)							
Flow (M3/day)	--	--	1,780	2,160	[illegible]	[illegible]	-- [illegible] 1,400, 900)
[illegible]	not <6.0 nor >9.0		--	[illegible]	--	[illegible]	-- (7.8, [illegible] 7.6)
				min. [illegible]			
030055 (003)							
Flow (M3/day)	--	--	25,060	26,600	[illegible]	[illegible]	--
Oil & Grease (visual)	No visible film		[illegible]	[illegible]	--	[illegible]	--
Oil & Grease (mg/l)	NA		--	--	--	--	-- [illegible]
Temperature (°C)	--	--	[illegible]	[illegible]	--	[illegible]	-- [illegible] 22.0, 22.0
[illegible]	not <6.0 nor >9.0		--	[illegible]	--	[illegible]	-- [illegible]
				min. [illegible]			
030055 (004)							
Flow (M3/day)	--	-	[illegible]	[illegible]	300	260	228 [illegible] 220, 260)
Suspended solids (mg/l)	30	[illegible]		[illegible]	[illegible]	--	[illegible] <4, 8)
Suspended solids (kg/day)	[illegible]	[illegible]	[illegible]	[illegible]	[illegible]	--	--
[illegible] (°C)	--	-	[illegible]	[illegible]	[illegible]	-	[illegible]
[illegible] (visual)	No visible film						--
[illegible] (mg/l)	NA		--	--		-	
	not <6.0 nor [illegible]		-	-		-	-- [illegible]

Table 4 Comparison of the laboratory analytical results [illegible] by Menasha Corporation - Osego and the Environmental Protection Bureau from the split composite sample.

Outfalls	030171 (000)		030134 (002)	
	Menasha mg/l	E.P.B. mg/l	Menasha mg/l	E.P.B. mg/l
BOD_5	169	240	64	47
Suspended solids	292	890	35	32
Settleable solids	28	210	?	4
Phenol	0.049	0.140	0.623	0.530
Soluble Orthophosphorus-P	< 0.3	--	--	--

Outfall	030055 (004)	
	Menasha mg/l	E.P.B. mg/l
Suspended solids	2	< 4

MEN03902

Menasha Corporation - Otsego

Table 5 Comparison of the previous survey results with the results obtained in this survey.

Outfalls	030171 (000)		030134 (0[illegible])	
Survey Date From	6-24-80	10-5-81	6-24-80	10-5-81
To	6-25-80	10-6-81	6-25-80	10-6-81
Flow Rate (M^3/day)	2,400	2,530	1,590	1,540
	mg/l	mg/l	mg/l	mg/l
COD	5,600	4,500	120	270
Phenol	3.6	0.140	0.59	[illegible]
BOD_5	1,400	240	27	4[illegible]
Nitrite & nitrate nitrogen-N	0.41	1.1	0.01	[illegible]
Ammonia nitrogen-N	1.3	0.72	0.02	0.02
Kjeldahl nitrogen-N	44	29.	1.7	2.1
Orthophosphates-P	0.50	0.10	0.03	[illegible]
Total phosphorus-P	3.8	2.3	0.55	0.[illegible]
Suspended solids	940	890	8	32
Dissolved solids	7,200	7,4[illegible]	530	720
Settleable solids	20	210	2	4
	ug/l	ug/l		
Total copper (Cu)	80	130		
Total lead (Pb)	< 50	60		
Total zinc (Zn)	220	190		
Total manganese (Mn)	390	510		

Outfalls	030053 (003)		030055 (004)	
Survey Date From	6-24-80	10-5-81	6-24-80	10-5-81
To	6-25-80	10-6-81	6-25-80	10-6-81
Flow Rate (M^3/day)	24,900	25,950	233	228
	mg/l	mg/l	mg/l	mg/l
Suspended solids	8	17	< 2	< 4
Dissolved solids	370	350	660	550
COD	32	24	49	42
Nitrite & nitrate nitrogen-N	0.91	0.71	0.34	0.43
Ammonia nitrogen-N	0.31	0.14	0.50	0.30
Kjeldahl nitrogen-N	1.7	0.81	1.2	0.73
Total phosphorus-P	0.26	0.09	0.15	0.22

7094

MEN03903

Table 5 Sample Preservation

Parameter	Preservative
COD/Phenol (Chlorine Absent)	10 drops conc. H_2SO_4/250 ml (to pH <2).
Total Metals	2 ml 1:1 HNO_3/250 ml (to pH <2).
Oil & Grease	10 drops conc. H_2SO_4/250 ml (to pH <2).
Acid & Base-neutral Extractable Purgeable Organics	Dechlorinated (if needed) with sodium thiosulfate (1 drop 0.141 N/mg/l Cl_2/250 ml).

All samples cooled to 4°C and preserved upon collection and chain of custody maintained.

Lab Letter Codes

NA - Analytical method has not yet been approved by laboratory.
DL - Sample was not analyzed using an optimum dilution.
PS - Possible interference may have effected the accuracy of the laboratory result.

Survey by: Mike Stifler, Environmental Engineer
William Long, Water Quality Investigator
Amy Carter, Water Quality Technician

Contact with Management: John Blauwkamp

Certified Operator: Art Brindley

Hydrocarbon Analyses by: Environmental Protection Bureau Laboratory

Physical, Chemical & Bacteriological Analyses by: Environmental Protection Bureau Laboratory

Report by: Mike Stifler
William Long
Point Source Studies Section
Environmental Services Division
Environmental Protection Bureau
Michigan Dept. of Natural Resources

Distribution "A"
MM
3/31/82

7095

MEN03904

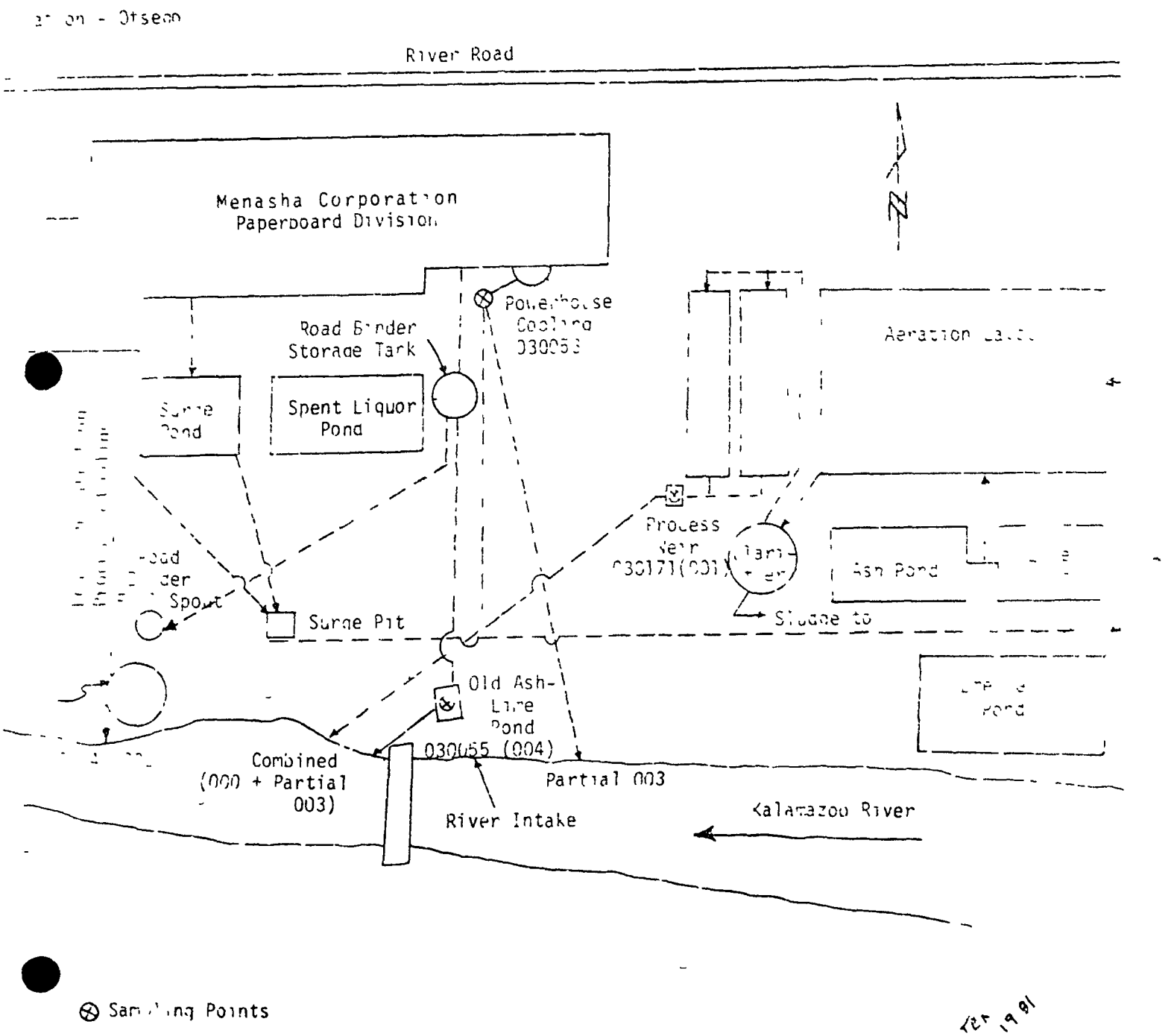

River Road
Menasha Corporation
Paperboard Division
Road Binder
Storage Tank
Spent Liquor
Pond
Surge Pit
Process
Weir
Ash Pond
Sludge to
Old Ash-
Lime
Pond
030055 (004)
Combined
(000 + Partial
003)
Partial 003
River Intake
Kalamazoo River
Sampling Points

MEN03905

STATE OF MICHIGAN

JAMES J BLANCHARD Governor

DEPARTMENT OF NATURAL RESOURCES

RONALD O SKOOG Director

District 12 Headquarters
P.O. Box 355, Plainwell Michigan 49080

RESOURCES COMMISSION
Marlene J. Fluharty
Stewart Myers
Raymond Poupore

May 8, 1984

Mr. John Blauwkamp, P.E.
Technical Manager
Menasha Corporation
Farmer Street
Otsego, Michigan 49078

Dear Mr. Blauwkamp:

Attached is a copy of the Point Source Survey conducted at Menasha Corporation in October 1982. I offer my personal apology for the extended time required to forward this report to you.

I would like to offer the following comments:

1. On page 8, for outfall 000, there is a discrepancy in the values reported on MOR's and the values reported by the Department for flow, suspended solids and settleable solids.

2. On page 9, for outfall 004, there is a discrepancy for flow.

3. On page 9, for outfall 002/000, there is a discrepancy in suspended solids.

Please review this report. Also, please determine what action may be necessary by Menasha to resolve these reported discrepancies.

If you have any questions, do not hesitate to call me at the Plainwell District Office.

Sincerely,

SURFACE WATER QUALITY DIVISION

Garth Aslakson

Garth Aslakson
Water Quality Specialist
Plainwell District
(616) 685-9886

GA:ek

cc: Bev Long

Enclosure

7100

MEN03906

MICHIGAN DEPARTMENT OF NATURAL RESOURCES
ENVIRONMENTAL PROTECTION BUREAU
POINT SOURCE MONITORING SECTION

Report of
Industrial Wastewater Survey
Conducted at
MENASHA CORPORATION
Kalamazoo, MI 49009
NPDES Permit No. MI0003624
Allegan County
Otsego, Michigan
October 12-13, 1982

Wastewater Monitoring

Wastewater monitoring was performed during one twenty-four hour survey which started Tuesday, October 12, 1982.

The results of this survey [illegible] the final limitations in the facility's National Pollutant Discharge Elimination System (NPDES) Permit, No. MI0003624 [illegible] due to a lab accident.

The [illegible] results are also compared to the company's Monthly Operating [illegible] for October, 1982 in Table 3. At outfall 030171 (005) the company [illegible] flow and settleable solids concentration on both days of the [illegible] At the company reported much lower flows. For [illegible] the Cooling Outfall [illegible], the company reported lower suspended solids [illegible] the survey [illegible] comments).

[illegible] were collected at outfalls [illegible] 030171 (005), 030155 (003), and 030155 [illegible] and analyzed by the Department's laboratory. The [illegible] are shown in Table 4. At outfall 030171 (005) the company's results [illegible] that the E.P.B. results for settleable solids and phenol. [illegible] suspended solids compared well for the E.P.B. double-rinsed sample (see the survey comments).

The results of the previous survey conducted in October, 1981 are compared to the results of this survey in Table 5.

Laboratory Tests

[illegible] consultation with the company, the suspended solids analysis [illegible] was done two ways, with the normal three rinses of 20 [illegible] to be the normal rinse. Much lower results (as shown in Tables 1 & 2) were found for the double-rinsed sample. These results indicate that the suspended solids analysis may not be an accurate test for this outfall if Standard Methods 14th Edition is followed. These results will also effect the settleable solids results.

[illegible] was done in conjunction with an Intensive River Survey of the [illegible] staff of the Biomonitoring Section of the Environmental [illegible]

The discharge from outfall 030171 (005) was reduced for 3 to 4 hours due to a plugged line from the clarifier to the lagoon. This accounts for some of the difference between the survey flow and the 10-12-82 company flow (Table 3).

Plant Processes

Menasha Corporation, Paperboard Division, produces corrugated medium through a non-sulfur pulping process. The mill operates 24 hours a day, 7 days per week employing approximately 200 people. The plant was producing [illegible] tons per day of corrugated medium at the time of the survey.

The paper pulp used in the plant is derived from 60% hardwood chips and 40% recycled waste cardboard. The hardwood chips are digested in a cooking liquor containing sodium carbonate and sodium hydroxide, pulped and refined. The pulp is conveyed through a mechanical process which removes [illegible] of the cooking liquor. The waste recycled cardboard from in-plant and out-of-plant sources is hydropulped. The woodchip pulp, out-of-plant waste recycled cardboard pulp, and in-plant waste recycled cardboard pulp are combined in the mixing chest. The pulp is then pumped to the two fourdrinier paper machines. After the paper machine the [illegible] is removed and sold.

Alum is used intermittently (2 or 3 times per month) [illegible] wet is added on an as needed basis. It is used as a wetting agent which increases the ability of the medium to hold the glue.

Water Supply, Wastewater Treatment

Menasha Corporation utilizes process water and a portion of its [illegible] from either company wells on the City of Otsego. The remainder [illegible] pumped from the Kalamazoo River and the plant's domestic supply is obtained from the city. The company uses an inorganic sulfur biocide to inhibit bacteria growth at the well heads. The water used in the boilers is provided further treatment.

The plant has five outfalls to the Kalamazoo River (Figure [illegible]). Outfall 030155 (001) discharges cooling water from the [illegible] drive magnetic clutch and air machine oil cooler. Outfall [illegible] the winder, the dryer cooling waters and contaminants self water off the machine. The wastewater is treated in a small aeration pond before being discharged.

Condenser cooling water from the powerhouse flows into a [illegible] outfall 030155 (003). Part of this flow combines with the treated [illegible] outfall 030171, and is discharged to the Kalamazoo River just below the [illegible] dam. The rest of the condenser cooling water is discharged downstream of the dam.

Cooling water and miscellaneous floor and roof drainage discharges through the old ash-lime pond, outfall 030155 (004), to the river. Water softener back-wash and fly and bottom ash from the powerhouse goes to the ash-lime settling ponds and then to the treatment system.

MEN03907

The white water from the savealls is discharged to the treatment system. The treatment system consists of ammonia addition prior to an aeration lagoon, [illegible] and settling ponds. The effluent from the treatment system, outfall [illegible], is mixed with cooling water before being discharged.

Sample Procedures

The flows and samples were obtained as follows:

Sample Description	Flow Measurement	Sampling Methods & Location
[illegible]	Company installed 24" rectangular weir. Staff installed water level recorder.	Air activated automatic composite sampler and 4 aliquot grab composite + individual grab samples; collected at weir.
[illegible]	Company installed 24" full channel weir. Staff installed water level recorder.	Air activated automatic composite sampler and 4 aliquot grab composite + individual grab samples; collected at weir.
[illegible]	[illegible]	Individual grab samples; collected company's discharge weir.
[illegible]	Company [illegible]	Submergible composite sample and individual grab samples; [illegible] from splitting box.
030055 (004)	**Staff installed 8" rectangular weir and water level recorder.**	Air activated automatic composite sampler + individual grab samples; collected at weir at end of old ash-line pond.

[illegible] level recorder provides a continuous account of the liquid level or [illegible]. A head versus time graph is obtained for the duration of the survey period. The total volume of wastewater over the weir during the survey period is computed from the graph.

[illegible] automatic sampler composites samples at timed intervals. Samples may be [illegible] to the instantaneous flow over the weir.

A submergible sampler obtains samples at a continuous rate.

Extractable organic composite samples are collected by the grab composite method.

A grab composite consists of a series of individual grabs composited into one sample.

[illegible] individual grab is a single instantaneous sample.

[illegible] were analyzed by the Environmental Protection Bureau Laboratories located in Lansing.

[illegible] were preserved according to Table 6. The results of the physical, chemical and bacteriological analyses are presented in Tables 1 & 2. Letter codes for [illegible] results are defined in Table 6. A parameter listing of the organic scans [illegible] in Table 7. Unless otherwise specified, all parameters in the scan were analyzed for.

Menasha Corporation - Otsego

Table 1: Analyses of composite samples.

Outfalls	030171 (003)		000134 (002)	
Survey Period From	10-12-82 @ 1433		10-12-82 @ [illegible]	
To	10-13-82 @ 1435		10-13-82 @ [illegible]	
Computed flow rate (M³/day)	2,750		[illegible],710	
	mg/l	kg/day	mg/l	kg/day
Suspended solids	380	[illegible]	66	[illegible]
Suspended solids[2]	240	660	--	--
Dissolved solids	6,200	17,000	880	1,5[illegible]
Settleable solids	240	660	[illegible]	[illegible]
Conductivity (umhos/cm)	6,300	--	1,050	--
COD	3,400	9,400	[illegible]	[illegible]
TOC	880	2,400	[illegible]	[illegible]
BOD_5	Acc	--	Acc	--
[illegible]	Acc	--	Acc	--
Nitrite & nitrate nitrogen-N	< 0.5 DM	--	[illegible] DM	[illegible]
Ammonia nitrogen-N	1.0 DM	3.3	[illegible] DM	[illegible]
Kjeldahl nitrogen-N	[illegible]	[illegible]	[illegible]	[illegible]
Total phosphorus-P	1.6	4.4	[illegible]	[illegible]
Orthophosphates-P	INT	--	[illegible]	[illegible]
Alkalinity (as $CaCO_3$)	4,2[illegible]	--	[illegible]	--
	ug/l		ug/l	
Phenol	65 NS	0.18	[illegible] NS	[illegible]
Total cadmium (Cd)	[illegible]	--	[illegible]	--
Total chromium (Cr)	[illegible]	0.10	[illegible]	--
Total copper (Cu)	[illegible]	0.2	[illegible]	--
Total nickel (Ni)	< 50	--	< 50	--
Total lead (Pb)	80	0.2	< 50	--
Total zinc (Zn)	150	[illegible]	< 50	--
Total aluminum (Al)	8,300	23	< 1,000	--
Phthalate Esters & Polar Pesticides Scan				
Dimethyl phthalate (DMP)	3.7 LC	0.010	--	--
Diethyl phthalate (DEP)	6.4	0.018	--	--
Dibutyl phthalate (DBP)	5.5	0.015	--	--
Butylbenzyl phthalate (BBP)	0.45	0.0012	--	--
Bis(2-ethylhexyl)phthalate (DEHP)	[illegible]	0.030	--	--
Others	[illegible]	--	--	--
Phenols Scan				
Phenol	--	--	[illegible]	[illegible]
Others	[illegible]	--	[illegible]	--

1 - Flow rates used in the computation of kg/day.
To obtain MGD multiply M³/day by 0.0002642
To obtain lbs/day multiply kg/day by 2.[illegible]

2 - Results determined [illegible] twice the normal [illegible].

1102

MEN03908

MEN03909

[illegible]	[illegible]	[illegible]	[illegible]	[illegible]	[illegible]	[illegible]	[illegible]	[illegible]
[illegible]			[illegible]		65	0	80	150
10-1[illegible]-8[illegible]	[illegible]	[illegible]	[illegible]	[illegible]	65	50	80	140
[illegible]		[illegible]	--	--	--	--	--	--
[illegible]	[illegible]	[illegible]	--	--	--	--	--	--

Menasha [illegible]

[illegible]

NPDES [illegible]

[illegible]	[illegible]	[illegible]	[illegible]	[illegible]	[illegible]	[illegible]	[illegible]
	Average	[illegible]	[illegible]	[illegible]	[illegible]	[illegible]	[illegible]
[illegible]	--	--	[illegible]	2,510	[illegible]	[illegible]	[illegible]
[illegible]	--	--	[illegible]	2[illegible]	[illegible]	[illegible]	[illegible]
[illegible]	--	--	[illegible]	494	[illegible]	[illegible]	[illegible]
[illegible]	--	--	--	--	--	[illegible]	[illegible]
[illegible]	--	--	[illegible]	[illegible]	[illegible]	[illegible]	[illegible]
[illegible]	300	--	[illegible]	[illegible]	--	[illegible]	[illegible]
[illegible]	--	[illegible]	[illegible]	[illegible]	--	[illegible]	[illegible]
[illegible]	--	[illegible]	[illegible]	[illegible]	--	[illegible]	--
[illegible]	not [illegible]	[illegible]	--	[illegible]	[illegible]	[illegible]	[illegible]
				min. [illegible]			
[illegible]							
[illegible]	--	--	[illegible]	[illegible]	[illegible]	[illegible]	[illegible]
[illegible]	--	--	[illegible]	144	96	44	[illegible]
[illegible]	--	--	[illegible]	64	41	[illegible]	[illegible]
[illegible]	--	--	[illegible]	26	19	[illegible]	[illegible]
[illegible]	300	--	[illegible]	418	--	[illegible]	[illegible]
[illegible]	not [illegible]	[illegible]	--	8.3	[illegible]	[illegible]	[illegible]
				min. 8.0			
[illegible]							
[illegible]	--	--	2,120	3,060	3,060	[illegible]	--
[illegible]	not 6.0	[illegible]	--	7.4	7.4	--	(7.7, [illegible]
				min. 7.2			
[illegible]							
[illegible]	--	--	24,[illegible]	25,510	24,750	25,[illegible]	--
[illegible]	[illegible]	[illegible]	0	0	0	--	--
[illegible]	[illegible]	[illegible]	required	--	--	--	[illegible]
Temperature [illegible]	--	--	[illegible]	75	69	--	-- (74, [illegible]
[illegible]	not [illegible]	[illegible]	--	7.8	7.7	--	-- [illegible]
				min. 7.7			

[illegible]

7104

MEN03910

-9-

Table [illegible] Comparison of the [illegible] analytical results obtained by [illegible] Corporation [illegible] and the Environmental Protection Bureau from the split grab [illegible]

Outfalls	030171 (000)		030134 (002)	
Sample Time and Date	10-13-82 @ 0840		10-12-82 @ [illegible]	
	Menasha mg/l	E.P.B. mg/l	Menasha mg/l	E.P.B. mg/l
BOD5	[illegible]	Acc	129	Acc
Suspended solids[2]	163	[illegible]	69	56
Settleable solids	0	120	2[illegible]	[illegible]
Phenol	0.011	0.1	0.219	24
Orthophosphates-P	< 0.07	INT	--	--

Outfall	030055 (004)	
Sample Time and Date	10-13-82 @ 0830	
	Menasha mg/l	E.P.B. mg/l
Suspended solids	3	< 4

2 The E.P.B. result for outfall 030171 for the double-rinsed sample were 170 mg/l.

7105

MEN03911

... results with the ... obtained in ...

... 134 (002)

... Acc

... Acc

... increased between the ... surveys

Menasha Corporation

Table [illegible] (continued)

Outfalls	[illegible] (00[illegible])		[illegible] (0[illegible])	
Survey Date From	[illegible]	10-12-92	[illegible]	[illegible]
To	[illegible]	10-13-92	[illegible]	[illegible]
Flow Rate m3/day	[illegible]	25,[illegible]	228	76[illegible]
	[illegible]	[illegible]	[illegible]	[illegible]
Suspended solids	7	8	< 4	< 4
Dissolved solids	350	390	650	7[illegible]
[illegible]	2[illegible]	29	42	33
Nitrite & nitrate nitrogen-N	0.7[illegible]	1.0	0.4[illegible]	[illegible]
Ammonia nitrogen-N	0.14	0.44	[illegible]	[illegible]
Kjeldahl nitrogen-N	0.[illegible]	1.5	0.73	[illegible]
Total phosphorus-P	0.09	0.18	0.[illegible]	[illegible]

MEN03912

[illegible] Preservation

	Preservative
[illegible] Nutrients [illegible] Absent	5 drops conc. H_2SO_4/250 ml (to pH <2).
	Fixed on site.
	[illegible] HNO_3/250 ml (to pH <2).
	2 drops [illegible] sodium thiosulfate/125 ml to dechlorinate sample
[illegible]	10 drops conc. H_2SO_4/250 ml (to pH <2).
[illegible] Extractables [illegible]	Dechlorinated (if needed) with sodium thiosulfate [illegible] drop [illegible] Cl_2/250 ml).
[illegible]	Dechlorinated (if needed) with sodium thiosulfate [illegible] drop [illegible] Cl_2/250 ml). [illegible] drop [illegible] H_2SO_4 [illegible] ml (to pH <2)

[illegible] as required, [illegible] to 4°C with chain of custody maintained.

[illegible] encountered during analysis resulted in no obtainable result.
[illegible] material was analyzed for but not detected.
[illegible] resulted in no obtainable value.
[illegible] was diluted [illegible] possible matrix interference.
[illegible] method has not been approved for routine use. Due to possible [illegible] recovery, the actual level may have been higher than the reported value.
[illegible] conditions during analysis were not optimum (incorrect incubation [illegible], equipment performance below normal, etc.).

Table 7 Organic Scan Parameter Listing

Phthalate Esters & Polar Pesticides Scan

Bis(2-ethylhexyl) phthalate	Di-N-octyl phthalate
Butyl benzyl phthalate	Dieldrin
Di-N-butyl phthalate	Endosulfan I
Diethyl phthalate	Endrin

Phenols Scan

2-Chlorophenol	2-Nitrophenol
4-Chloro-3-methylphenol	4-Nitrophenol
2,4-Dichlorophenol	Pentachlorophenol
2,4-Dimethylphenol	Phenol
2,4-Dinitrophenol	2,4,5-Trichlorophenol
2-Methyl-4,6-dinitrophenol	2,4,6-Trichlorophenol

Survey by: Peter Ostlund, Environmental Engineer
Edward Hamilton, Water Quality Technician
Richard Irvin, Water Quality Technician

Contact with Management: Gary Roys, Process Chemist

Certified Operator: Keith Kling

Laboratory Analyses by: Environmental Protection Bureau Laboratory

Report by: Peter Ostlund
Richard Irvin
Point Source Monitoring Section
Surface Water Quality Division
Environmental Protection Bureau
Michigan Department of Natural Resources

7107

Distribution "A"
MM
1/3/83

MEN03913

Kimberly Corporation - Otsego

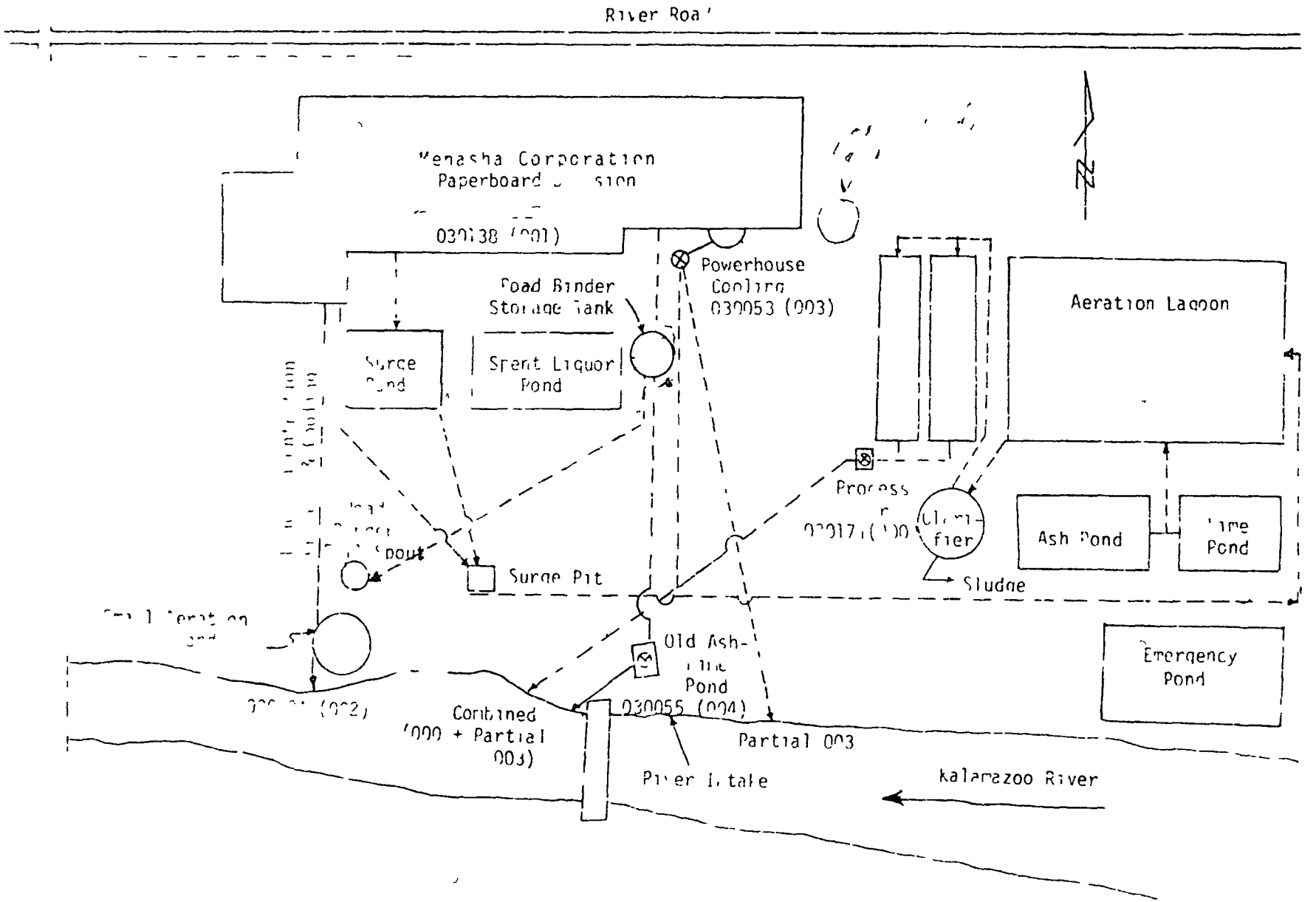

MEN03914

Menasha Corporation - Otsego

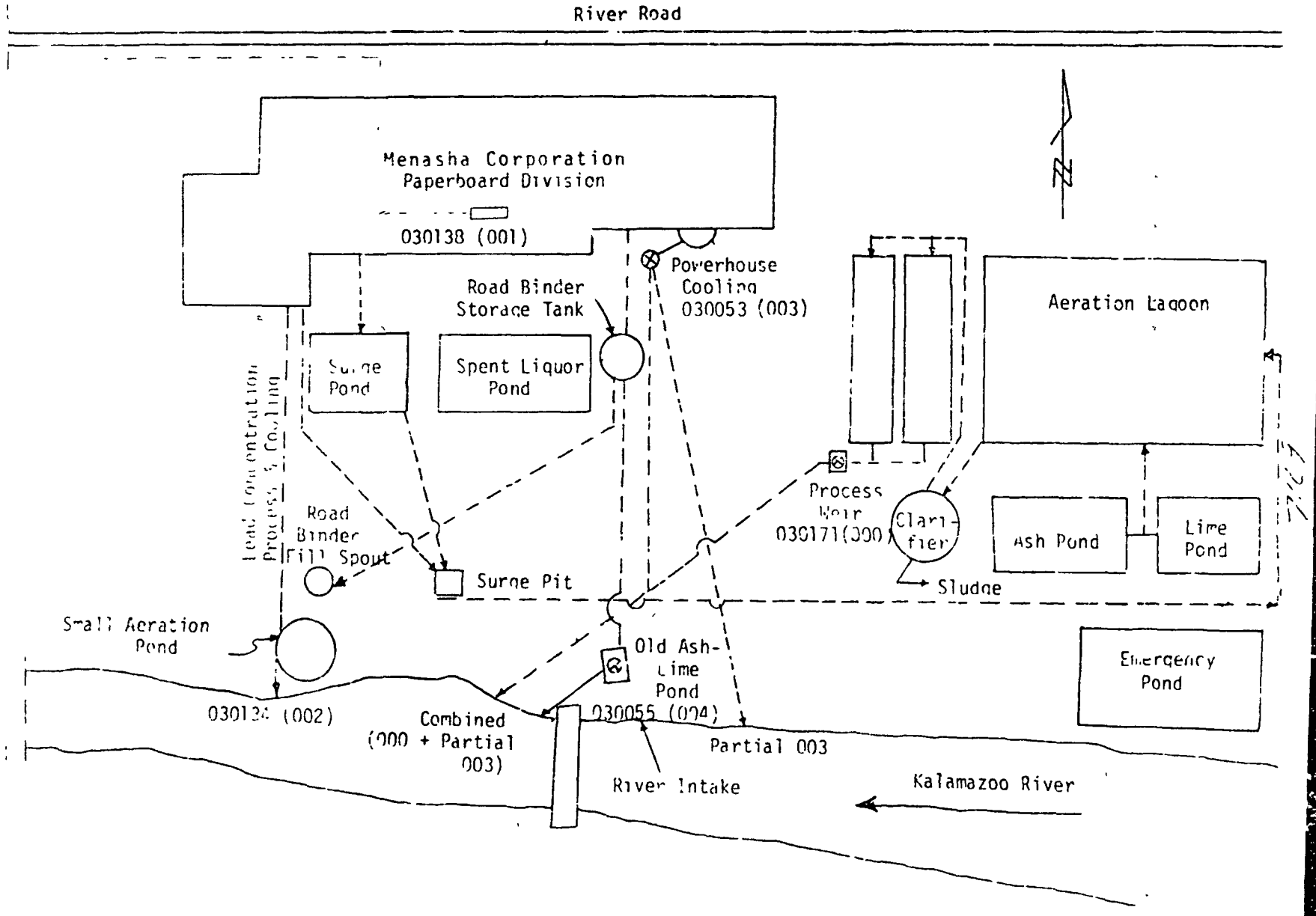

Sampling Points

MEN03915

memo / MENASHA CORPORATION

TO: DNR Inspection File

DATE: 17 June 1983

SUBJECT Hazardous waste inspection of 17 June 1983

FROM: John Blauwkamp

On June 17, 1983, Lynn Spurr of the Plainwell Hazardous Waste Section made her inspection of the mill. The first item on the agenda was to update Lynn's records concerning our EPA I.D. number application. Lynn's records showed only the original application and did not have the update where we informed EPA that the only hazardous waste we would have would be the decreasing solvents and possibly the oil from No. 1 and No. 2 paper machines if we could not get it reprocessed. After some discussion, we came to the understanding that the spent degreasing solvents that contain some of the chlorinated hydrocarbons are considered hazardous waste only if they are collected and disposed of separately. If the spent solvent is used and discharged to our waste treatment system, it is then covered by the NPDES permit rules and is not covered by the hazardous waste rules. As long as the oil from the paper machines is sold to a reprocessor it is also exempt from the hazardous waste disposal rules. Lynn also agreed that our system of washing all used chemical barrels except for polymer and Naptha was sufficient to prevent any of the barrels from being considered hazardous waste. During our tour of the mill, Lynn noted several instances where our management of new and old chemical barrels as well as empty barrels was not as good as it should be. Although these barrels are not subject to her regulation because they were not hazardous waste, she believed they would be of concern to the ground water quality inspectors.

Lynn stated that she has received quite a few calls in the past several months from private citizens who are concerned about the chemical barrels they see at various locations around the mill. Lynn made (4) recommendations as follows:

1. Atlas Barrels in Kalamazoo or DeWitt in Grand Rapids would be able to remove the large number of empty washed barrels for us.

2. The empty and partially empty old Naptha barrels by outfall 002 should be emptied, washed and gotten rid of with the rest of the old barrels.

3. The old barrels that were used for our barrier in the parking lot across from the Hydrapulper area should be removed and dispossed of.

4. The old unused chemical barrels and the barrels with used old in them should be clearly marked to identify the contents of the barrels.

4555

MEN03916

We should also try to use up or get rid of the chemicals in the old barrels before they rust through.

c B. Buchanan
F. Katje
G. Roys

MEN03917

[illegible] RESOURCES
[illegible] BUREAU
[illegible] SECTION

Report [illegible]
[illegible] Evaluation
[illegible] at
[illegible]

[illegible] August [illegible] 1977 [illegible] was conducted [illegible] Menasha Corporation. As part of [illegible] test was performed [illegible] test was [illegible] observed during the test [illegible] the concentration [illegible] the test [illegible] period, could be [illegible]

[illegible] of the process wastes [illegible] Menasha Corporation at Otsego [illegible] acutely toxic [illegible] constituents which may be deleterious to the aquatic [illegible] Kalamazoo River.

[illegible] produces corrugated cardboard [illegible] the neutral sulfite pulping process. The mill operates 24 hours, [illegible] employing 240 people. Normal production is [illegible]

The process begins [illegible] The chips are digested [illegible] sulfite, soda ash and [illegible] chips are further broken down through refiners. The pulp is conveyed [illegible] mechanical presses which removes [illegible]

The spent liquor [illegible] to a 500,000 gallon [illegible] or a separate storage tank. Excess liquor [illegible] for use as a [illegible] concentrated in evaporators and [illegible] fluid bed reactor to form a soda sulfate salt cake. The salt cake [illegible] for use in the process.

After the [illegible] enters the [illegible] to the [illegible] the [illegible] paper and broke from the paper machines. The stock [illegible] before going through the [illegible] to the head box and the [illegible] paper machines.

Water Supply [illegible]

Menasha Corporation [illegible] either [illegible] otherwise [illegible] treatment [illegible] The water used [illegible]

[illegible] discharged from outfall [illegible] to the Kalamazoo River.

[illegible]

[illegible] aerated during the [illegible] period.

The [illegible] fish used in the [illegible] test were fathead minnows *Pimephales promelas* each having an approximate weight of 2 grams. The [illegible] from the [illegible] on [illegible] 1977. The [illegible]

MEN03918

[illegible] transferred [illegible] August [illegible] 1977. They were [illegible] the [illegible] water [illegible] hours prior to testing.

[illegible] selected and distributed to each of [illegible] concentrations of 100, [illegible] effluent were provided [illegible] proportional dilution. [illegible] 100 percent [illegible] water. [illegible] were used [illegible] concentration to provide replication.

[illegible] temperature, and [illegible] were [illegible] the [illegible] laboratory by [illegible]

[illegible] samples were collected from outfall [illegible] and the Kalamazoo River for selected physical and chemical analyses.

[illegible] were preserved according to Table 1.

[illegible] samples were transported to the E.P.A. [illegible] laboratory located [illegible] for selected [illegible] chemical analyses.

[illegible]

[illegible] industrial effluent [illegible] could be calculated.

[illegible]

[illegible] Kalamazoo River [illegible] Results of [illegible] chemical [illegible] Tables [illegible] individual test containers [illegible] Table [illegible].

[illegible]

[illegible] flow rate [illegible] August [illegible] was measured by E.P.A. personnel using a water level recorder [illegible]

[illegible] flow rate of the Kalamazoo River at the point of discharge [illegible] day. For the purpose of evaluating compliance with water quality standards, the Menasha Corporation is allowed a mixing zone defined

[illegible] River for a [illegible] downstream from [illegible] would take up [illegible] percent of the [illegible] as a mixing zone [illegible] day [illegible]

Table 1. Sample Preservation

Parameter	Preservative
[illegible]	Cooled to 4 C
[illegible]	[illegible] H_2SO_4 [illegible] cooled to 4 C
D.O.	Fixed on site.
General Chemistry	Cooled to 4 C.
Total Metals	[illegible]
Nutrients	Cooled to 4 C
Oil & Grease	[illegible] H_2SO_4 [illegible] cooled to 4 C.
Phenolics	[illegible] H_3PO_4 [illegible] Cooled to 4 C.
Sulfides	[illegible] cooled to 4 C.

Table 2. Percent mortality of [illegible] exposed to [illegible] of the Menasha Corporation effluent [illegible] period of July [illegible] August [illegible]

Percent Effluent	Percent Mortality [illegible]			
	24 hours	48 hours	[illegible]	[illegible]
[illegible]	[illegible]	[illegible]	[illegible]	

MEN03919

[illegible]

Sample No
Date

COD	[illegible]	[illegible]	[illegible]
Suspended sol	[illegible]	[illegible]	[illegible]
Total dissolv[illegible]		[illegible]	[illegible]
Settleable [illegible]			[illegible]
Solubl[illegible]			
Total phosph[illegible]		[illegible]	
Nitrate n[illegible]			
Ammonia n[illegible]			[illegible]
Organic n[illegible]		[illegible]	[illegible]
Total chlorides [illegible]		[illegible]	[illegible]
Sulfides (SO_2)			
Phenols		[illegible]	[illegible]
Hydrogen sulfid[illegible]			
Total nickel [illegible]			
Total zinc [illegible]			[illegible]
Total copper (Cu			[illegible]
Molybdenu[illegible]			
[illegible]			
[illegible]			
[illegible]			
Manganese (Mn			[illegible]
Sulfates (S[illegible]		[illegible]	[illegible]
Sulfite			
Color	[illegible]	[illegible]	[illegible]
[illegible]			[illegible]

[illegible]

6972

MEN03920

[illegible] of effluent grab sample taken at Menasha Corporation [illegible] during the period of August 29-September 2, 1977.

[illegible]	[illegible]	[illegible]	[illegible]	[illegible]	[illegible]	Conductivity ([illegible])
[illegible]	[illegible]	[illegible]	[illegible]	[illegible]	[illegible]	[illegible]

[illegible] August 29-September 2, 1977.

[illegible]	[illegible]	[illegible]	[illegible]	[illegible]	[illegible]	[illegible]
8-29-77	[illegible]	[illegible]	[illegible]	[illegible]	[illegible]	[illegible]
8-30-77	[illegible]	[illegible]	[illegible]	[illegible]	[illegible]	[illegible]
8-31-77	[illegible]	[illegible]	[illegible]	[illegible]	[illegible]	[illegible]
[illegible]	[illegible]	[illegible]	[illegible]	[illegible]	[illegible]	[illegible]
9-2-77	[illegible]	[illegible]	[illegible]	[illegible]	[illegible]	[illegible]

MEN03921

Table 1 On-site chemical and physical analyses conducted in the fathead minnow test containers during the survey at Menasha Corporation, Otsego, during the period August 30-September 2, 1977.

Date	Time	[illegible]	Temp. °C	D.O. (mg/l)	pH (S.U.)	Conductivity (µmho)
[illegible]	[illegible]	[illegible]	[illegible]	[illegible]	[illegible]	5400
		[illegible]	[illegible]	[illegible]	[illegible]	[illegible]
		[illegible]	[illegible]	[illegible]	[illegible]	4360
		[illegible]	[illegible]	[illegible]	[illegible]	[illegible]
		[illegible]	[illegible]	[illegible]	[illegible]	[illegible]
		[illegible]	[illegible]	[illegible]	[illegible]	[illegible]
		[illegible]	[illegible]	[illegible]	[illegible]	[illegible]
		[illegible]	[illegible]	[illegible]	[illegible]	[illegible]
		[illegible]	[illegible]	[illegible]	[illegible]	[illegible]
		[illegible]	[illegible]	[illegible]	[illegible]	538
[illegible]	[illegible]	[illegible]	[illegible]	[illegible]	[illegible]	[illegible]
		[illegible]	[illegible]	[illegible]	[illegible]	[illegible]
		[illegible]	[illegible]	[illegible]	[illegible]	[illegible]
		[illegible]	[illegible]	[illegible]	[illegible]	[illegible]
		[illegible]	[illegible]	[illegible]	[illegible]	[illegible]
		[illegible]	[illegible]	[illegible]	[illegible]	[illegible]
		[illegible]	[illegible]	[illegible]	[illegible]	[illegible]
		[illegible]	[illegible]	[illegible]	[illegible]	[illegible]
		[illegible]	[illegible]	[illegible]	[illegible]	[illegible]
[illegible]	[illegible]	[illegible]	[illegible]	[illegible]	[illegible]	[illegible]
		[illegible]	[illegible]	[illegible]	[illegible]	[illegible]
		[illegible]	[illegible]	[illegible]	[illegible]	[illegible]
		[illegible]	[illegible]	[illegible]	[illegible]	[illegible]
		[illegible]	[illegible]	[illegible]	[illegible]	[illegible]
		[illegible]	[illegible]	[illegible]	[illegible]	[illegible]
		[illegible]	[illegible]	[illegible]	[illegible]	[illegible]
		[illegible]	[illegible]	[illegible]	[illegible]	[illegible]
		[illegible]	[illegible]	[illegible]	[illegible]	[illegible]
		[illegible]	[illegible]	[illegible]	[illegible]	[illegible]
[illegible]	[illegible]	[illegible]	[illegible]	[illegible]	[illegible]	[illegible]
		[illegible]	[illegible]	[illegible]	[illegible]	[illegible]
		[illegible]	[illegible]	[illegible]	[illegible]	[illegible]
		[illegible]	[illegible]	[illegible]	[illegible]	[illegible]
		[illegible]	[illegible]	[illegible]	[illegible]	[illegible]
		[illegible]	[illegible]	[illegible]	[illegible]	[illegible]
		[illegible]	[illegible]	[illegible]	[illegible]	[illegible]
		[illegible]	[illegible]	[illegible]	[illegible]	[illegible]
		[illegible]	[illegible]	[illegible]	[illegible]	[illegible]
		[illegible]	[illegible]	[illegible]	[illegible]	[illegible]
[illegible]	[illegible]	[illegible]	[illegible]	[illegible]	[illegible]	[illegible]
		[illegible]	[illegible]	[illegible]	[illegible]	[illegible]
		[illegible]	[illegible]	[illegible]	[illegible]	[illegible]
		[illegible]	[illegible]	[illegible]	[illegible]	[illegible]
		[illegible]	[illegible]	[illegible]	[illegible]	[illegible]
		[illegible]	[illegible]	[illegible]	[illegible]	[illegible]
		[illegible]	[illegible]	[illegible]	[illegible]	[illegible]
		[illegible]	[illegible]	[illegible]	[illegible]	[illegible]
		[illegible]	[illegible]	[illegible]	[illegible]	[illegible]
		[illegible]	[illegible]	[illegible]	[illegible]	[illegible]
		[illegible]	[illegible]	[illegible]	[illegible]	[illegible]
		[illegible]	[illegible]	[illegible]	[illegible]	[illegible]

Survey by: [illegible]
[illegible]
[illegible], Student Assistant

Contact with Management: Bruce Buchanan

Certified Operator: Art [illegible]

Physical & Chemical Analyses: [illegible], Chemist

Report by: [illegible]
[illegible]
Point Source Studies Section
Environmental Services [illegible]
Environmental Protection Bureau
Michigan Department of Natural Resources

Distribution: [illegible]

MEN03922

MICHIGAN DEPARTMENT OF NATURAL RESOURCES
ENVIRONMENTAL PROTECTION BUREAU
POINT SOURCE STUDIES SECTION

Report of Three Static Toxicity Screening Tests
Conducted on Wastewaters Discharged by
MENASHA CORPORATION
Allegan County
Otsego, Michigan
December 18-20, 1979

[illegible]

[illegible] December 18-20, 1979 three 48-hour static toxicity screening tests [illegible] effluent grab samples collected at Menasha Corporation, Otsego. [illegible] conducted with treated process effluent from outfall 030171 (000), [illegible] cooling water. The third test was conducted using a [illegible] effluents from outfalls 030171 (000) and 030053 (003) [illegible] the Kalamazoo River. The macroinvertebrate [illegible] served as the test species.

[illegible] cooling water effluent sample caused some stress, but [illegible] of the daphnids exposed. A 48-hour LCDP could not be determined [illegible] of mortality.

[illegible] effluent, [illegible] the cooling water dilution, was toxic to daphnids [illegible] The 48-hour [illegible] for the two tests were [illegible] with 95% confidence limits of 21% and 41% effluent [illegible] toxicity was greater than would have been predicted based [illegible] chemical constituents in the wastewater. Also, the effluent toxicity [illegible] found in a September, 1979 static daphnid test despite increases [illegible] every parameter measured. The results of the tests could not be explained [illegible] chemical data gathered in these studies.

[illegible]

The process effluent from outfall 030171 (000) was highly colored and turbid, [illegible] difficult to find the test animals in test solutions greater than 5%. [illegible] careful examination of small sample portions, [illegible] daphnid could not be located in the 100% effluent in the test using Lansing city water as the control [illegible] The [illegible] results were based on the exposure of 9 animals to that effluent concentration.

[illegible] Processes

Menasha Corporation, Paperboard Division, produces corrugated medium through non-sulfur pulping process. The paper pulp is derived from hardwood chips (65%)

and recycled waste cardboard (35%). The hardwood chips are digested in a sodium carbonate-sodium hydroxide cooking liquor, pulped and refined. The wood chip pulp is conveyed through mechanical presses which remove 60% of the cooking liquor. The recycled cardboard is hydropulped and combined with the wood chip pulp in a mixing chest. The combined pulp is then formed over two Fourdrinier paper machines.

Water Supply, Wastewater & Treatment

Process and some cooling water is obtained either from company wells [illegible] the City of Otsego. An organosulfur biocide is used at the company well heads to inhibit bacterial growth. Boiler water is provided further treatment. Powerhouse condenser cooling water is pumped directly from the Kalamazoo River.

Water softener backwash, fly and bottom ash from the powerhouse are discharged to the wastewater treatment system via the ash-time settling ponds. White water from the savealls also goes to the treatment system. After [illegible] addition, the wastewaters pass through an aeration lagoon ([illegible] days retention) clarifier and settling ponds. The effluent from the treatment system, outfall 030171 (000) then combines with part of the powerhouse condenser cooling water from outfall 030053 (003) and is discharged to the Kalamazoo River below the company dam.

Test Procedures

During December 17, 1979 water Quality Division personnel [illegible] samples of wastewater and Kalamazoo River water at Menasha Corporation. [illegible] Treated process effluent was sampled prior to dilution at outfall [illegible] and after combining with condenser cooling from outfall [illegible] sample was collected at the company dam. A portion of each effluent sample was preserved and delivered to the Environmental Protection Bureau Laboratory for analysis. The remaining samples were cooled to 4°C and transported to the Point Source Studies Laboratory for toxicity testing.

The 48-hour static toxicity screening tests were conducted according to procedures outlined in the U.S.-EPA publication, Methods for Acute Toxicity Tests with Fish, Macroinvertebrates and Amphibians. The following [illegible] concentrations were prepared [illegible] 10, 5 and 2.5 percent. [illegible] and B were conducted with the process effluent prior to dilution with cooling water [outfall 030171 (000)]. Test C was conducted with the combined process and cooling water effluents. In Test A dechlorinated, activated carbon filtered Lansing city water was used for the diluent and control test solutions. Kalamazoo River water was likewise used in Tests B and C. Duplicate 250 ml glass beakers containing 200 ml of test solution were prepared for each concentration and control.

Daphnia magna (<24 hours old) served as the test species. The animals were acclimated to dechlorinated Lansing city water prior to use. Five daphnids were randomly distributed to each beaker marking the start of the test. Where possible

646

MEN03923

the animals were observed at 24 hours. Those floating were gently bumped down out of the surface film. Mortality was assessed at 48 hours. Death was assumed when, under microscopic examination, no appendage movement or heartbeat was observed and the animal did not respond to gentle prodding. The effluent concentrations lethal to 50 percent of the test organisms (LC50's) were determined by the moving average method.

Beakers containing various effluent and control test solutions but without daphnids were analyzed for selected physical and chemical parameters. Table 1 presents the results of the analyses run at the beginning and end of the 48-hour test period.

A toxicity screening test gives a general indication of effluent toxicity. The data generated should not be used as definitive criteria for evaluating effluent impact on receiving waters.

Results & Discussion

The process effluent from outfall 030171 (000) at Menasha Corporation, Otsego, was toxic to D. magna on an acute (short term) basis. The 48-hour LC50's for Test A, using Kalamazoo City water as the diluent, and Test B using Kalamazoo River water, were [illegible] % effluent. The 95% confidence limits for both tests were 21 [illegible] % effluent (Table 2).

The results of the chemical analyses conducted on preserved portions of the samples used in the tests are presented in Table 3a. Chemical data for a composite sample collected during a September 10-11, 1979 industrial wastewater survey and tested with D. magna during September 12-14 are included for comparison. The LC50 for the September test was estimated to be 9.6% (White, 1975).

The toxicity of Menasha's process effluent in the September and December, 1979 tests was greater than expected, based on the chemical data presented in Table 3a. No parameter concentration seemed high enough to account for the observed mortalities. However, some type of interaction(s) may have taken place or other toxicants may have been present but not determined. The low dissolved oxygen levels may have caused additional stress, but were probably not the sole cause of death. Daphnids exposed to sugar beet wastes with dissolved oxygen concentrations of 0.4 mg/l have shown 90-100% survival in 48-hour static tests (Bonn, 1979 a, b.).

The results of the December tests indicated a decrease in toxicity in spite of the increases in all parameter concentrations except dissolved oxygen. The differences between the September and December toxicity tests also cannot be explained by the chemical data available. A company representative indicated that no process or treatment changes had been made between the two sampling dates. Test temperatures were somewhat higher during the September test and the present test was run using a grab sample of effluent instead of a 24-hour composite. However, neither of these changes are believed to have caused the difference in the test results.

Process effluent from outfall 030171 (000) when combined with cooling water from 030053 (003) caused no daphnid mortality (Table 2). However, ten percent of the test organisms in the two highest effluent concentrations were noticeably stressed. A 48-hour LC50 could not be determined due to the lack of mortality. Based on in-lab conductivity readings the process portion of the combined discharge was estimated to be 14% on December 7, 1979. Fourteen percent process effluent is within the range of test concentrations that showed slight mortality (Test B) but is less than the 48-hour LC50 (29%) determined in the present tests. With the additional dilution received in the river, the combined discharge at the conditions described above should produce no acutely toxic effects in the river.

9969

MEN03924

[illegible] Analyses ran on control and [illegible]

Parameter	Test A % Effluent 0%	25%	100%	[illegible] 0%	[illegible]	[illegible]	[illegible]	[illegible]
[illegible] (mg)	8.5	5.1	0.4	9.3	[illegible]	[illegible]	[illegible]	
Oxygen saturation (%)	93	[illegible]	4	98	[illegible]	4	95	[illegible]
pH (S.U.)	7.4	9.[illegible]	8.6	7.4	[illegible]	[illegible]	[illegible]	[illegible]
Temperature (°C)	19.5	19.[illegible]	[illegible]	19.5	[illegible]	[illegible]	19.5	[illegible]
Conductivity (µmhos)	330	2100	7000	550	[illegible]	[illegible]	550	[illegible]
Alkalinity (mg/l)	[illegible]	-	*	[illegible]		*	[illegible]	*
Hardness (mg/l)	108	--	*	308		*	308	*

* Could not be determined due to effluent color

Parameter	Test A % Effluent 0%	25%	100%	[illegible]	[illegible]	[illegible]	[illegible]	[illegible]	[illegible]
Dissolved oxygen (mg)	[illegible]	3.[illegible]	0.4	[illegible]	[illegible]	[illegible]	[illegible]	6.[illegible]	[illegible]
Oxygen saturation (%)	59	34	4	[illegible]	[illegible]	4	[illegible]	[illegible]	[illegible]
pH (S.U.)	8.1	8.7	8.9	[illegible]	[illegible]	[illegible]	[illegible]	[illegible]	[illegible]
Temperature (°C)	20.5	19.5	[illegible]	[illegible]	[illegible]	[illegible]	[illegible]	14.5	[illegible]
Conductivity (µmhos)	330	2100	7000	550	[illegible]	[illegible]	[illegible]	[illegible]	[illegible]

Test A = Outfall [illegible] 300' downstream [illegible] water
Test B = Outfall [illegible] 300' = [illegible] water
Test C = Combined outfalls [illegible] [illegible] water

[illegible] Determinations for each test concentration [illegible] mortality [illegible] mortality [illegible] effluents

Percent Effluent	Test A Outfall [illegible] Lansing City [illegible] % Dead	% Stressed*	Test B [illegible] % Dead	% Stressed*	Test C [illegible] % Dead	% Stressed*
[illegible]	100		[illegible]		[illegible]	[illegible]
[illegible]	100		[illegible]		[illegible]	[illegible]
50	[illegible]	20	[illegible]	[illegible]	[illegible]	
25	10		[illegible]		[illegible]	
[illegible]	0	-	[illegible]			
[illegible]	0	--	[illegible]			
2.5	0		[illegible]		[illegible]	[illegible]
0 (control)	0	--	[illegible]		[illegible]	[illegible]
	LC50 = 29% effluent		[illegible]			
	95% confidence limits		[illegible]			
	21 - 41% effluent		[illegible]			

* Stressed = animal immobilized or brought bottom in [illegible] weak or [illegible] appendage movement or heartbeat observed

MEN03925

Table [illegible] Quantitative analyses of the grab and composite samples collected from the Menasha Corporation wastewater, outfall 030171 (000).

[illegible]	030171 (000)	030171 (000)
[illegible]	12-[illegible]-79	9/10-11/79
[illegible]	[illegible]15	1400 - 1400
[illegible]	[illegible]	[illegible]
[illegible]	[illegible]	3,000
[illegible]	[illegible]60	260
[illegible]	280	[illegible]
[illegible] phate-P	[illegible]	< [illegible]
[illegible]	[illegible] 4	[illegible] 9
[illegible] trogen-N	0.35	0 33
[illegible]	[illegible] 5	1 34
[illegible]	62	27
[illegible]	[illegible] 2	0 185
[illegible]	0 9	--
[illegible]	2 9	--
[illegible]	[illegible] 5	--
[illegible]	0 34	0.24
[illegible]	0 15	0 09
[illegible]	[illegible]*	--
[illegible]	[illegible]	0 19
[illegible]	[illegible]	--
[illegible]	[illegible]*	--
[illegible]	[illegible]*	[illegible]
[illegible]	[illegible]*	--
[illegible]	[illegible]	[illegible]
[illegible]	[illegible]*	[illegible]
[illegible]	[illegible]	[illegible]
[illegible]	[illegible]	[illegible]
[illegible]	[illegible]	[illegible]

[illegible] laboratory estimated value.

Table 3b Quantitative analyses of an effluent grab sample collected from the Menasha Corporation combined process, cooling water discharge for outfalls 030171 (000) and 030053 (003).

Date	12-[illegible]-79
Time	200
5-day BOD	[illegible]
COD	850
Suspended solids	150
Settleable solids	< 5
Soluble orthophosphate-P	[illegible]
Total phosphorus-P	[illegible]
Nitrite-nitrate nitrogen-N	[illegible]
Ammonia nitrogen-N	[illegible]
Organic nitrogen-N	[illegible]
Phenols	[illegible]
Total sulfides (S)	[illegible]
Total [illegible]	[illegible]
Total nickel [illegible]	[illegible]
Total zinc [illegible]	[illegible]
Total copper [illegible]	[illegible] 009
Total chromium [illegible]	< [illegible]
Total lead [illegible]	[illegible]
Total cadmium	< [illegible]
Total calcium [illegible]	[illegible]*
Total magnesium [illegible]	[illegible]*
Total sodium [illegible]	[illegible]*
Total manganese [illegible]	[illegible]
Total potassium [illegible]	[illegible]*
pH	[illegible]

Note: All values in mg/l except pH (S.U.)
* - EPA laboratory estimated value.

MEN03926

Samples Collected by Marge Spruit, Water Quality Specialist, District 3

Toxicity Evaluation & Report by Bonnie White, Aquatic Biologist
Point Source Studies Section
Environmental Services Division
Environmental Protection Bureau
Michigan Dept of Natural Resources

References

[illegible] Invertebrate toxicity screening test conducted with effluent from Michigan Sugar Company, Sebewaing, Michigan, 11/21-23/79 In Doerfer, G. and [illegible] Report of industrial wastewater survey conducted [illegible] Michigan Sugar Company, Sebewaing, November 19-20, 1979 Mich Dept Natural Resources

[illegible] Report of an invertebrate toxicity test conducted with effluent from [illegible] Sugar Company, Croswell, Michigan, 11/28-30/79 In Thompson, [illegible] Report of an industrial wastewater survey conducted at [illegible] Sugar Company, Croswell, November 25-27, 1979 Mich Dept Natural Resources

[illegible] Report of a toxicity screening test conducted on wastewaters [illegible] by Menasha Corporation, Otsego, Michigan, 9/12-[illegible] In [illegible] and [illegible] Report of an industrial wastewater survey conducted at Menasha Corporation, Otsego, September 10-11, 1979 Mich Dept Natural Resources

MEN03927

JIM ADAMS - OTSEGO

August 24, 197

EPA - SPCC
Spill Prevention Control & Countermeasure

W. ALLAN SCHENCK

I am enclosing a formal EPA Notice of Violation on the above [illegible]

Bruce tells me this plan is prepared [illegible] at [illegible] $1,500.00.

It appears Bruce can [illegible] to do this, advising us if any problem develops

Our deadline to resolve it or [illegible] hearing [illegible]

[illegible]

[illegible]ure

[illegible] Johnson
[illegible] C. Shepard
[illegible] C. Handers
Bruce Buchan

MEN03928

CT SYST 1

SERVICE OF PROCESS TRANSMITTAL FORM

C T Corporation System
The Corporation Trust Company
C T Law Technology, Inc

TO Menasha Corporation
Attn: Richard L. Johnson, Pres.
Box 367
Neenah, Wisconsin 54956
(Authorized Recipient)

TO C T CORPORATION SYSTEM
(C T Office)
Chicago, Ill.
(City) (State)
FROM C T CORPORATION SYSTEM
(Office of Agent)
Per Jam Mulvihill
Detroit, Michigan
(City) (State)
DATE 8/16/77 VIA First Class Mail

VIA [ ] Certified First Class Mail
[ ] Messenger

RE PROCESS SERVED IN MICHIGAN
(Jurisdiction)

FOR MENASHA CORPORATION
(Name of Company)
WISC.
(Domestic State)

Enclosed are copies of legal process served upon the statutory agent of the above company as follows

1 Title of Action TO: Menasha Corporation

2 Document(s) Served SPCC Notice of Violation

3 Court UNITED STATES ENVIRONMENTAL PROTECTION AGENCY

4 Nature of Action A representative from the U. S. Environ. Protect. Agency inspected Dfts. premises located in Otsego, Mich. on 3/17/77 at which time Dft. failed to prepare a SPCC plan, this constituting a violation of the Oil Pollution Prevention Regulations. Failure to respond to this violation

5 On Whom Process was Served will result in an action by the U. S. to collect the full amount of the original assessment.
Rec'd 8/16/77 addressed to Corporation Company agent for Menasha Corporatio via Certified mail from the U. S. Environmental Protection Agency Region

6. Date and Hour of Service V 230 South Dearborn Chicago, Ill. 60604

7 Appearance or Answer Due Within 30 days after receipt.

8 Plaintiff's Attorney(s) Signed by. James McDonald, Director
Enforcement Division
U. S. Environmental Protection Agency
Region V

9 Remarks
dy

RECEIVED AND FORWARDED ON 8/19/77 (Date)

KINDLY ACKNOWLEDGE RECEIPT BY SIGNING THE CARBON COPY AND RETURNING IT TO ➡

BY C T CORPORATION SYSTEM
Per Vivian Lass
Vivian Lass
208 S. La Salle St.
(Address)
Chicago, Ill. 60604

eg/c...

NJ291-11 75 50M Sets

5752

MEN03929

UNITED STATES
ENVIRONMENTAL PROTECTION AGENCY
REGION V
SOUTH DEARBORN ST
CHICAGO ILLINOIS 60604

AUG 11 1977

CERTIFIED MAIL
RETURN RECEIPT REQUESTED

Corporation Company
Registered Agent for
Menasha Corporation
615 Griswald
Detroit, Michigan 48226

RE: SPCC Notice of Violation
Menasha Corporation
Otsego, Michigan

Dear Mr. Bradshaw:

Enclosed please find a Notice of Violation citing the Menasha Corporation for violation of Oil Pollution Prevention Regulations promulgated pursuant to Section 311 of the Federal Water Pollution Control Act, as amended, 33 U.S.C. 1321(j)(1)(C).

As specified in the Notice, you have the right to request a hearing on the violation cited therein. Should this Agency not receive a written request for a hearing within thirty (30) days of your receipt of the enclosed Notice, you will have waived your right to a hearing and the proposed penalty will be assessed and collected.

You may also request an informal settlement conference by contacting Ms. Susan Anthony, an attorney on my staff, at (312) 353-2094. It is the policy of the United States Environmental Protection Agency to encourage resolution of these matters in informal conferences. As detailed in the Notice of Violation the penalty proposed in the Notice may be mitigated during such an informal conference.

We suggest that you read the enclosed Notice of Violation carefully and notify this Agency within the allotted time period of the course of action you intend to take. In the event you have any questions, in the meantime, please do not hesitate to contact Ms. Anthony.

Very truly yours,

James O. McDonald, Director
Enforcement Division

Enclosure

5953

MEN03930

cc: William G. Turney, Chief
Michigan Department of Natural Resources
Environmental Protection Bureau

5954

UNITED STATES

ENVIRONMENTAL PROTECTION AGENCY

REGION V

IN THE MATTER OF:	)	DOCKET NO. SPCC-77-V-109
MENASHA CORPORATION	)	PROPOSED CIVIL PENALTY AND OPPORTUNITY FOR HEARING
Otsego, Michigan	)	

NOTICE OF VIOLATION

NOTICE IS HEREBY GIVEN that you are in violation of the Oil Pollution Prevention Regulations, 40 CFR 112.3, promulgated pursuant to 33 U.S.C. §1321(j)(1)(C).

I

NATURE OF VIOLATION

On March 17, 1977, Mr. Martin G. Trembly, representative of the United States Environmental Protection Agency, visited the Menasha Corporation facility in Otsego, Michigan, located near the Kalamazoo River, a navigable water of the United States, for the purpose of inspecting the Spill Prevention Control and Countermeasure (SPCC) Plan for the facility in which #6 oil is stored. The facility has an above ground storage capacity of 2,000-3,000 gallons. Upon Mr. Trembly's request, Mr. Bruce Buchanan, Technical Superintendent for the facility, was unable to produce an SPCC Plan as required by Federal Regulations.

40 CFR §112.3 requires that the owners or operators of non-transporation related facilities that have an underground storage capacity of greater than 42,000 gallons of oil and/or an above ground storage capacity of greater than 1,320 gallons of oil must prepare SPCC plans as to those facilities. The Menasha Corporation's failure to prepare a plan, in this instance, constitutes a violation of that regulation.

5955

II

PROPOSED CIVIL PENALTY

Section 311(j)(2) of the Federal Water Pollution Control Act, as amended, [33 U.S.C. 1321(j)(2)] and the regulations promulgated thereunder, 40 CFR 112.6 and 40 CFR 114.1 et seq. authorize a civil penalty of up to $5,000 per day for each violation of these regulations. A proposed penalty of $1,000 is deemed appropriate for the above listed violation. Payment may be made by certified or cashier's check, payable to the United States of America, and remitted to:

Regional Hearing Clerk
Region V, U.S. Environmental Protection Agency
230 South Dearborn Street
Chicago, Illinois 60604

III

MITIGATION OF CIVIL PENALTY

You are hereby notified of your right to present written explanations, information, or any other materials in answer to the violation cited in Item I above, or in mitigation of the penalty assessed in Item II. This Office will also consider in mitigation a written commitment, signed and certified by you or on your behalf by a duly authorized officer or director, to comply within a stated reasonable time with all Spill Prevention Control and Countermeasure regulations applicable to the above referenced facility. Any written explanations, information, or any other materials in answer to the charges or in mitigation of the penalty shall be submitted to the Director, Enforcement Division, Region V, U.S. Environmental Protection Agency, 230 South Dearborn, Chicago, Illinois 60604, no later than thirty (30) days following your receipt of this proposed penalty assessment.

5956

IV

OPPORTUNITY TO REQUEST A HEARING

You have the right to request a hearing on this violation or upon the proposed assessment. You have the right to be represented by counsel at such hearing. In order to obtain a hearing, you must submit a written request, signed by you or on your behalf by a duly authorized officer, director, agent, or attorney-in-fact, within thirty (30) days of the receipt of this Notice of Violation. Please address any such request to Director, Enforcement Division, Region V, U.S. Environmental Protection Agency, 230 South Dearborn Street, Chicago, Illinois 60604.

A request for hearing must meet the requirements of 40 C.F.R. 114.5 and shall:

(1) State the name and address of the person requesting the hearing;

(2) Enclose a copy of this Notice of Violation; and

(3) State with particularity the issues to be raised by such person at the hearing.

All hearings will be scheduled at the earliest practicable date.

V

SETTLEMENT CONFERENCE

Regardless of whether you request a hearing, you are extended an opportunity to request an informal conference. A request for an informal conference does not stay the 30-day period during which you must submit a written request for a hearing if a hearing is desired.

To request a settlement conference please write to Ms. Susan Anthony, Legal Support Section, Enforcement Division, Region V, U.S. Environmental Protection Agency, 230 South Dearborn Street, Chicago, Illinois 60604, or telephone Ms. Anthony at (312) 353-2094.

5957

MEN03934

It should be noted that each day of the violation cited above constitutes a new violation and you may be liable for additional penalties. Therefore, your immediate commitment to correct deficiencies and comply with 40 C.F.R. 112 is to your advantage both to protect you from additional liability and as a factor in mitigation of the proposed penalty.

Your failure to respond to this assessment as precribed above or to request a hearing as herein provided will result in an action being commenced by the United States to collect the full amount of the original assessment for this violation.

Dated this 11th day of August, 1977.

James O. McDonald
Director, Enforcement Division
U.S. Environmental Protection Agency
Region V

5958

MEN03935

memo / MENASHA CORPORATION

TO: Notes for File

DATE: 18 February 1980

SUBJECT: Inspection of Waste Treatment Facilities by EPA and DNR Representatives.

FROM: John Blauwkamp
JKB

On Tuesday, February 12, 1980 Willie H. Harris of the EPA and Marge Spruit of the Michigan DNR inspected the mill. The purpose of their visit was to update the EPA's records on our facilities, inspect our waste treatment facilities, and the EPA wants to check up on the State to see that they are doing their job right.

The first thing we did was update the EPA's description of the Mill. Most of this updating involved the change from NSSC to the No sulfur cook and the resulting changes in the operation of the SLI regarding the use of the SLI product. After a quick tour of the mill we examined more of the waste treatment records. One of the things the EPA inspector looked at was the last three months Monthly Operating Reports. He seemed particularly interested in the phosphorous and phenol violations. I explained to him what the situation was on both the phosphorous and phenol violations. He also reviewed our testing procedures to see that they complied with EPA standards. Then we took a ride to the different Outfalls. He inspected the weirs, the samplers and flow recording instruments. We also took a quick ride to the solidwaste disposal site and he made a quick inspection on opacity from No. 1 and No. 4 boiler. He also requested copies of the sulfur content of the coal we were using in the boilers.

cc: B. Buchanan
A. Schenck

JB/kj

6419

MEN03936

memo / MENASHA CORPORATION.

TO: John Blauwkamp

DATE: 15 September 1980

SUBJECT: B.L. Burge - EPA - Visit - August 26 1980

FROM: Gary Roys

At about 8:30 A.M. on August 26, 1980, B.L. Burge from the Environmental Production agency came to Menasha, Otsego, to inspect our waste water treatment testing proceedure and equipment.

Mr. Burge asked me about the type of tests we are running, the Number of our discharge points, and the type of waste treatment system we have. All of which were answered.

He asked to see our record books which contain our waste treatment testing and flow information. After seeing these he seemed to be satisfied with the way we keep records.

He also requested a copy of our M.O.R. for the state of Michigan, which I gave him (July 1980). We also discussed the testing of standard samples that were to be brought to Menasha from someone else from the EPA. He also gave me copies of the proceedures that are required to be followed for this testing. We then went through each testing proceedure for B.O.D., suspended solids, settleable solids, etc. as we do them. He also inspected our laboratory equipment at the same time.

At the conclusion of his visit he stated that he was very impressed with the proceedures that we are using for testing, and with our equipment.

GR/kj

6295

MEN03937

memo / MENASHA CORPORATION

TO: John Blauwkamp

DATE: 15 September 1980

SUBJECT: M. Prembly - EPA Visit on August 26, 1980

FROM: Gary Roys

At about 11:30 A.M. on August 26, 1980, M. Prembly from the Environmental Protection Agency came to Menasha Corporation Otsego. His visit was for a twofold purpose. 1. To take measurements of our discharge weirs, 2) to inspect our boilers for discharge.

At the time of his visit the mill was down a week earlier than intended for the Labor Day shutdown. This was due to a bearing failure on the defibrator. Therefore, any inspection he would have made on our boilers was cancelled.

We went to each weir discharge, these included 000, 001, 002 and 004 weirs. Weir 003-5 was not inspected as we use a pump curve to determine the discharge at this point, and he was informed of how the flows calculations were made. At each weir he measured the size, length, depth and height. Also he asked & was shown where measurements were taken at each weir. He also checked each weir with a level for levelness. He informed me that each weir is okay. He also gave me samples to be tested for B.O.D., orthophosphorous and pH. The results of these tests will be sent to Art Gideon of the Environmental Protection Agency in Ohio.

GR/kj

6294

MENASHA CORPORATION

PAPERBOARD GROUP

June 3, 1985

Linda Koivuniemi
Department of Natural Resources
Surface Water Section
620 10th St.
Plainwell, MI 49080

Dear Linda:

John Blauwkamp and I discussed the report of Philip Gehring of the EPA. We were very discouraged by his report, it was filled with many errors and inaccuracies. In the discussion we had after Mr. Gehring's inspection, we were lead to believe the only major problem he saw was the composite sample from 002 not being refrigerated.

I would like to go through his report page by page and respond to his comments.

On page 1 of the Evaluation Inspection Report:

1. Mr. Gehring comments about the floating debris on our surge pond. This debris is fiber, and to my knowledge, has always been there. When it reaches a level where the volume of the pond is reduced significantly, the fiber is dipped from the pond with a crane. The bank along the river by the pond is also bermed to prevent all that but the most substantial pond overflow from reaching the river. The river is in very minimal danger. Lastly, plans are to close this pond out sometime in 1987.
2. Mr. Gehring says he observed considerable floc and suspended solid overflow the clarifier. Apparently Mr. Gehring's definition of considerable is different than ours. On the day of the inspection, we discharged 600 lbs. of suspended solids below our monthly average limit and about 2400 lbs. below our daily maximum limit.
3. The settling (or polishing) ponds were not in use during Mr. Gehrings inspection. We have proven to ourselves that during periods of erratic temperature (spring and fall), use of the settling ponds can cause permit violations. We believe denitrification occurs during the spring and fall in the sludge in the ponds, this causes the ponds to 'stir themselves' and makes them useless as polishing ponds. The ponds are used when they can significantly reduce our suspended solids

discharge.

4. Mr. Gehring reports the effluent at 002 was discolored, on page 2 he makes the same comment about the effluent at 003. The color is not mentioned on the MOR's because the color is always there. We do not have a limit on color in our permit. This issue has been discussed with the local DNR people in the past.
5. Mr. Gehring was concerned that the composite sample at outfall 002 was not refrigerated. We have since installed a refrigerator at outfall 002 for storing the composite sample

On Page 2

1. Mr. Gehring writes that we are measuring dissolved oxygen in the discharge plume rather than at the end of the pipe at outfall 003. We had explained to Mr. Gehring when he was here that we are measuring the dissolved oxygen at the end of the pipe.
2. Mr. Gehring makes several statements concerning oil at outfall 004. We do realize that oil is a problem at 004. Oil violations have been reported, contrary to Mr. Gehrings statement. The system to prevent oil discharge consists of a stiling tank, that was installed a couple years ago, which allows the oil to reach the surface. Oil absorbent pads and rope are used to remove the oil. The system isn't perfect but I question Mr. Gehrings statement that it is inefficient. Oil does collect above the discharge in the tank because the system was designed to collect the oil there.
3. Mr. Gehring seems overly concerned that limits for BOD and suspended solids apply to the combined discharge from outfall 000 and 002. 002 has been used to divert some of the hydraulic load from the waste treatment system. The monthly operating reports show swings in effluent quality at 002 are small and insignificant (except for the incident during start-up after the press rebuild).
4. Mr. Gehring expresses some concern over the fact that there is no monthly average limit onsummer BOD discharges. It is possible that we could discharge more total BOD in the summer than winter. In fact, this doesn't happen. We have assumed the winter monthly average limit applies in the summer and have had no violations of that limit.
5. Mr. Gehring states that there are no summer limits on suspended solids discharge from weir 000. I wish this were true. Our suspended discharge limit applies to the combined discharges of weir 000 and 002.

Page 3

1. Mr. Gehring states that we have no specific limit for oil and grease at weir 004. While this is true, we have considered oil in the weir as a violation under the weir observation heading. This in effect puts a specific discharge limit of 0 lbs.

   Grease and oil are monitored every day on a grab basis, a monitoring requirement does exist contrary to Mr. Gehrings

...rks.

... Form OMB No. 2040-0003

This is the page that really concerns us. I assume Mr. ...ring rated the permit unsatisfactory because of his mistaken interpretation of parts of the permit and our system and his believe that the limits are not tight enough. I assume Mr. Gehring rated our Self-Monitoring program as marginal because of his mistaken belief of the oil violations at 004 were not reported and the color and turbidity issue. I could find no ...les as to why the effluent/receiving waters and the operations and maintenance were rated as marginal.

Mr. Gehrings comment number 2 is of considerable concern, and I ...ld find no explanation of it anywhere in his report. To be ...d our treatment system is not effective and later in the same report be told our compliance record is good is very confusing. ...w do we meet our permit discharge limits with an ineffective system? Historically our system has been 90-98% effective in removing BOD and 83-90% effective in removing suspended solids.

Mr. Gehrings Supplemental Narrative has the same errors and inaccuracies as mentioned above, plus others.

On page two he mentions observable patches of oil sheen at weir 004 reaching the river. He doesn't mention he caused this when he stirred the weir. Also the patches were 1/4 to 1/2" in diameter.

There is also an error in the list of permit violations. The 7/30 violation was a violation of the daily maximum limit, not the monthly average as is listed.

With the number of errors in Mr. Gehrings report, I feel a meeting should be held between Menasha and the DNR before any actions are taken based on his report.

Sincerely,

Menasha Corporation
Otsego Paperboard Division

Mark T. Reed

Mark T. Reed
Technical Manager

cc: K. Kling
T. Oldham
G. Roys
E. Katje
B. Buchanan
J. Bonham
J. Blauwkamp

MEN03941

NATURAL RESOURCES COMMISSION
THOMAS J. ANDERSON*
MARLENE J. FLUHARTY
STEPHEN V. MONSMA
O. STEWART MYERS
DAVID A. OLSON
RAYMOND POUPORE
HARRY H. WHITELEY

STATE OF MICHIGAN

JAMES J. BLANCHARD, Governor

DEPARTMENT OF NATURAL RESOURCES

GORDON GUYER, DIRECTOR
District 12 Headquarters
P.O. Box 355, Plainwell, Michigan 49080

May 23, 1986

John Blauwkamp
Menasha Corporation
Otsego Mill
320 N. Farmer Street
Otsego, MI 49078

RE: U.S. EPA CEI Report
Written Response Requested by June 13, 1986

Dear Mr. Blauwkamp:

Attached for your review and evaluation is the Compliance Evaluation Inspection Report based on the April 16, 1986 site inspection by Philip E. Gehring, U.S. EPA.

Please review this report for accuracy and respond to this office by June 13, 1986. Since I did not accompany the EPA inspector, I will await your written response to this report before I continue with appropriate compliance activity.

Also, please do not forget the DNR/Menasha meeting May 29, 1986, 10:00 a.m. at Menasha.

If you have questions or concerns, please contact this office.

Sincerely,

SURFACE WATER QUALITY DIVISION

Linda Koivuniemi

Linda Koivuniemi
Plainwell District
(616) 685-9886

LK:cw

cc: Gary Boersen, S.W.
Arnold E. Leder, Chief
Compliance Tracking Unit
U.S. EPA Region V
230 South Dearborn St.
Chicago, IL 60604

4947

R1026-1

MEN03942

Blauwkamp

UNITED STATES
ENVIRONMENTAL PROTECTION AGENCY
REGION 5
230 SOUTH DEARBORN ST
CHICAGO, ILLINOIS 60604

REPLY TO ATTENTION OF
5WQC-TUB-8

5-13-86

Fred Morley, District Supervisor
Surface Water Quality Division
Michigan Dept. of Natural Resources
Plainwell District Headquarters
P.O. Box 355
Plainwell Michigan 49080

Re: U.S. EPA Inspection Reports

Dear Mr. Fred Morley;

Enclosed are two copies of reports on U.S. EPA inspections conducted at the following facilities:

Mead Corporation MI0000787 (CR2-4-15-86)
Menasha Corporation MI 0003824 (CR2-4-16-86)

These reports are sent to your office for transmittal to the dischargers and for appropriate enforcement action, if necessary. One copy may be retained for your file. Please send a copy of your transmittal letter and/or enforcement action to my office.

If you have any questions regarding these inspections, please contact Eugenia Pecyna (312-886-2307

Very truly yours,

Arnold E. Leder

Arnold E. Leder, Chief
Compliance Tracking Unit

Enclosures

cc

4948

MEN03943

UNITED STATES ENVIRONMENTAL PROTECTION AGENCY
REGION V

DATE: 9 MAY 1986

SUBJECT Compliance Evaluation Inspection - Menasha Corporation - Otsego, Michigan (MI0003824, ~~528526~~ 318574)

FROM Philip E. Gehring, Environmental Scientist
THRU: A.R. Winklhofer, Chief, EDO

TO Compliance Tracking Unit, 5WQC
ATTN: Arnold Leder, Chief

As you requested, a reconnaissance inspection was conducted April 16, 1986, at the subject facility. The inspection was for routine coverage. However, the complexity of this facility requires further effort than normally expended for a RI. As per a 4/18/86 telephone conversation with Mariann Baumgartner, the level of effort was raised to a CEI.

The permit for this facility addresses five outfalls and one internal monitoring site and various combinations thereof. Since the draft permit was issued April 12, 1985, the permit limits have been modified through a letter dated May 31, 1985 (see attached). These changes occurred primarily in the loading limits for BOD and suspended solids as calculated for outfalls 000 and 002 on a combined basis. A request to MDNR (Lansing) for the current version of the permit still has failed to be fruitful as they cannot locate the file.

All outfalls were inspected, as well as the waste treatment system and sludge handling operation. Primary company contacts were John R. Blauwkamp, corporate environmental manager, and Mark Reid, technical manager. During the inspection, a number of problems were surfaced. These problems are outlined below and further discussed in the attached narrative.

A. Treatment System

1. White water surge pond is covered with floating debris. The edges of the pond and surrounding area are covered with this debris. The floating debris needs to be contained.

2. Considerable floc and suspended matter overflows the final clarifier.

3. The polishing ponds were not being used because, according to company personnel, the ponds create more problems than they solve.

B. Discharges

1. Outfall 002

a. effluent was discolored - not reported on MORs probably because condition is always discolored.

b. composite samples were not refrigerated.

4749

EPA FORM 1320-6 (REV 3-76)

2. Outfall 003

a. effluent was discolored and turbid - not reported on MORs again probably because this condition is "normal"

b. dissolved oxygen was being measured in discharge plume rather than from the pipe.

3. Outfall 004

a. considerable oil collects above discharge.

b. inefficient recovery system.

c. some oil seen escaping - oil discharge never reported on MORs.

C. Permit

1. Outfall 002

a. loading limits for BOD and suspended solids are combined with outfall 000 loadings. These outfalls are unrelated and outfall 000 loadings totally eclipse those of outfall 002 possibly permitting wide swings in water quality at the outfall 002 discharge.

2. Outfall 000

a. permit conditions for initial loading limits are more stringent than final limits.

b. summer loading limits potentially permit higher monthly average loadings than winter loading limits for BOD.

c. no summer limits are required for suspended solids, while other paper industries in the area have summer limits.

d. phosphorus limits are based on soluble orthophosphorus, while other paper industries in the area are limited for total phosphorus.

3. General

a. special studies of dissolved oxygen appear to be setting up a situation where D.O. monitoring will not be required. These requirements should be kept, and if more stringent limits are required as indicated by BOD or other oxygen-consuming parameters, they should be initiated.

b. a special study for phosphorus is also required which has the potential for eliminating phosphorus limits. A more strict, or at least specific phosphorus limit, should be in place for outfalls receiving wastes other than non-contact cooling waters.

MEN03945

c. a specific oil and grease limit, or at least a monitoring requirement, should be included in the permit for outfall 004.

The facility indicated an interest in relocating outfall 002 with the removal of the limited aeration treatment now being used. They were instructed to make application for this change through the MDNR. My concern is the maintenance of the required 3.0 mg/L D.O. at the discharge point. A modification of the configuration of the outfall 003 was also discussed. It was proposed to submerge this discharge. Again this could impact the D.O. requirement unless they were required to install sampling capability immediately prior to the discharge at the river.

Enclosed are form 3560-3, checklists, selected portions of the permit, facility diagrams, and MOR data. Questions regarding this inspection should be directed to Philip Gehring at FTS 942-7260.

Attachments + supplemental narrative

MEN03946

UNITED STATES ENVIRONMENTAL PROTECTION AGENCY
REGION V

DATE: 9 MAY 1988

SUBJECT: Evaluation of ESD Product: Re: CEI-Menasha Corp., Otsego, MI

Act. #: ~~B20520~~ B18594 PEG

FROM: A. R. Dinklhofer, Chief, 5SE00

TO: Arnold Leder, Chief, 5WQC

The subject product you requested is attached. Please take a few minutes to fill out this evaluation form and return it to me through your Branch Chief or Division Director. This information will help us to better meet your needs and also will provide important feedback to the staff.

Please circle a number from 1 to 5 to indicate your level of satisfaction; 1 is unsatisfactory, 3 is average, and 5 is outstanding. I invite you to be candid in your evaluation and to provide narrative comments to support the numerical rating.

1.) How well did the product satisfy your objectives? 1 2 3 4 5

2.) How do you rate completeness? 1 2 3 4 5

3.) How do you rate quality? 1 2 3 4 5

4.) How do you rate technical completeness? 1 2 3 4 5

4952

MEN03947

5.) How do you rate timeliness? 1 2 3 4 5

6.) What is your overall rating? 1 2 3 4 5

7.) What suggestions do you have for improvement?

8.) How did you or will you use the product?

Thank you for your time and effort. I look forward to receiving your comment within the next few days.

MEN03948

EPA

United States Environmental Protection Agency
Washington D C 20460

NPDES Compliance Inspection Report

Form Approved
OMB No 2040-0003
Approval Expires 7-31-85

Section A. National Data System Coding

Inspection Code	NPDES	yr/mo/day	Inspection Type	Inspector	Activity Type
N	MI 0018214	860416	C	A	3

Remarks

Reserved	Facility Evaluation Rating	BI	QA	Reserved

Section B: Facility Data

Name and Location of Facility Inspected	Entry Time/Date	Permit Effective Date
Monasha Corporation 320 N. Farmer St. Otsego, MI 49078	☒ AM ☐ PM 0800	4/12/85
	Exit Time/Date 1400 4/16/86	Permit Expiration Date 5/31/1990

Name(s) of On-Site Representative(s)	Title(s)	Phone No(s)
Mark Reid	Technical Manager	(616) 692-6141

Name and Address of Responsible Official	Title	Contacted
Arie R Blaauwkamp	Corporate Environmental Manager	☒ Yes ☐ No
	Phone No 616-692-6141	

Section C Areas Evaluated During Inspection

(S = Satisfactory, M = Marginal, U = Unsatisfactory, N = Not Evaluated)

Permit	S	Flow Measurement	N	Pretreatment	M	Operations & Maintenance	
Records/Reports	N	Laboratory	N	Compliance Schedules	S	Sludge Disposal	
Facility Site Review	M	Effluent/Receiving Waters	M	Self-Monitoring Program		Other	

Section D: Summary of Findings/Comments *(Attach additional sheets if necessary)*

[illegible] floating in white water surge pond needs to be controlled from reaching surrounding area.
Treatment system for process wastes is not effective
outfall 002 discolored and composite sample is not iced
outfall 003 discolored and turbid, D.O. being measured in plane rather than at pipe
outfall 004 potential oil discharge problem
BOD and suspended solids limits (loadings) are combined for two outfalls which are unrelated and grossly different in water quality.
[illegible] permit limits allow for higher monthly average loadings than are permitted in [illegible]
Phosphorus limits based on soluble orthophosphorus, similar permits based on total phosphorus
[illegible] studies for D.O and phosphorus may lead to the deletion of monitoring requirements for these parameters

Name and Signature(s) of Inspector(s)	Agency/Office/Telephone	Date
Philip E Fehring	USEPA Reg. II EOO	5/6/86

Name of Reviewer	Agency/Office	Date

Regulatory Office Use Only

	Date	Compliance Status
		☐ Noncompliance ☐ Compliance

Form 3560-3 (Rev. 3-85) Previous editions are obsolete.

4754

MEN03949

NPDES No. MI0003824

Facility Name Menasha Corporation

City and State Otsego, MI

Date of Inspection April 16, 1986

4955

RECORDS, REPORTS, AND SCHEDULES CHECKLIST

A. PERMIT VERIFICATION

YES	NO	N/A	INSPECTION OBSERVATION CONTAINED IN PERMIT
✓			1. Correct name and mailing address of permittee.
✓			2. Facility is as described in permit.
		✓	3 Notification has been given to EPA, State of new, different, increased discharges
		✓	4 Accurate records of influent volume are maintained, when appropriate
✓			5 Number and location of discharge points are as described in the permit
✓			6 Name and location of receiving waters are correct
✓			7 All discharges are permitted

B. RECORDKEEPING AND REPORTING EVALUATION

		✓	RECORDS AND REPORTS ARE MAINTAINED AS REQUIRED BY PERMIT
			1 All required information is available complete and current and
			2 Information is maintained for required period
			3. Analytical results are consistent with the data reported on the IMR's
			4 Sampling and Analysis Data are adequate and include
			a Dates, times, location of sampling
			b Name of individual performing sampling
			c Analytical methods and techniques
			d Results of analysis
			e Dates of analysis
			f Name of person performing analysis
			g. Instantaneous flow at grab sample stations
			5 Monitoring records are adequate and include
			a. Flow, pH, D.O., etc. as required by permit
			b. Monitoring charts
			6. Laboratory equipment calibration and maintenance records are adequate.
			7. Plant Records are adequate* and include
			a. O&M Manual
			b "As-built" engineering drawings
			c. Schedules and dates of equipment maintenance and repairs
			d. Equipment supplies manual
		✓	e. Equipment data cards

* Required only for facilities built with Federal construction grant funds

4956

RECORDS, REPORTS, AND SCHEDULES CHECKLIST

B. Recordkeeping and Reporting Evaluation (continued)

YES	NO	N/A	8. Pretreatment records are adequate and included:
			a. Industrial Waste Ordinance (or equivalent documents)
			b. Inventory of industrial waste contributors, including:
			1. Compliance records
			2. User charge information
			9. SPCC properly completed when required
		✓	10. Best Management Practices Program available when required

C. Compliance Schedule Status Review

✓			THE PERMITEE IS MEETING THE COMPLIANCE SCHEDULE special studies are on schedule
		✓	1. The permitee has obtained necessary approvals to begin construction
			2. Financing arrangements are completed
			3. Contracts for engineering services has been executed
			4. Design plans and specifications have been completed.
			5. Construction has begun
			6. Construction is on schedule
			7. Equipment acquisition is on schedule
			8. Construction has been completed.
			9. Start-up has begun.
		✓	10. The permittee has requested an extension of time.
			11. The permittee has met compliance schedule

4957

MEN03952

RECORDS, REPORTS, AND SCHEDULES CHECKLIST

D. POTW Pretreatment Requires Review

YES	NO	N/A	THE FACILITY IS SUBJECT TO PRETREATMENT REQUIREMENTS
			1. Status of POTW Pretreatment Program
			a. The POTW Pretreatment Program has been approved by EPA. (If not, is approval in progress? _____)
			b. The POTW is in compliance with the Pretreatment Program Compliance Schedule (If not, what is due, and intent of the POTW to remedy)
			2. Status of Compliance with Categorical Pretreatment Standards
			a. How many industrial users of the POTW are subject to Federal or State Pretreatment Standards? _____
			b. Are these industries aware of their responsibility to comply with applicable standards?
			c. Have baseline monitoring reports (403.12) been submitted for these industries?
			Have categorical industries in noncompliance on BMR reports submitted compliance schedules?
			ii. How many categorical industries on compliance schedules are meeting the schedule deadlines? _____
			d. If compliance deadlines has passed, have all industries submitted 90 day compliance reports?
			e. Are all categorical industries submitting the required semiannual report?
			f. Are all new industrial discharges in compliance with new source pretreatment standards?
			g. Has the POTW submitted its annual pretreatment report?
			h. Has the POTW taken enforcement action against noncomplying industrial users?
			i. Is the POTW conducting inspections of industrial contributors?
		N	3. Are the industrial users subject to Prohibited Limits (403.5) and local limits more stringent tha EPA in compliance? (If not, explain why, including need for revision limits.)

4958

MEN03953

FACILITY SITE REVIEW CHECKLIST

YES	NO	N/A	
			1 Standby power or other equivalant provision is provided.
✓			2. Adequate alarm system for power or equipment failures is availab
✓			3. [redacted] handles and disposes of sludge according to applicable Federal, State, and local regulators.
✓			4 All treatment units, other than back-up units, are in service. existing ponds not being used
		X	5 Procedures for facility operation and maintenance exist
			6 Organization plan (chart) for operation and maintenance is provided
			7 Operating schedules are established
			8 Emergency plan for treatment control is established
			9 Operating management control documents are current and include
			a Operating report
			b Work schedule
			c. Activity report (time cards)
			10 Maintenance record system exists and includes
			a. As-built drawings
			b. Shop drawings
			c Construction specifications
			d. Maintenance history
			e. Maintenance costs
			11 Adequate number of qualified operators are on hand.
			12. Established procedures are available for training new operators
			13. Adequate spare parts and supplies inventory and major equipment specifications are maintained.
			14 Instruction files are kept for operation and maintenance of each item of major equipment.
			15. Operation and maintenance manual is available.
		✓	16. Regulatory agency was notified of bypassing. (Dates _____

4959

MEN03954

FACILITY SITE REVIEW CHECKLIST

YES	NO	N/A	
			17 Hydraulic and/or organic overloads are experienced. Reason for overloads _____
			18 Up-to-date equipment repair records are maintained
			19 Dated tags show out of service equipment
		✓	20 Routine and preventive maintenance are scheduled performed on time

4960

MEN03955

PERMITTEE SAMPLING INSPECTION CHECKLIST

A. Permittee Sampling Evaluation

YES	NO	N/A	
			1 Samplings are taken at sites specified in permit.
✓			2. Locations are adequate for representative samples.
		✓	3. Flow proportioned samples are obtained where required by permit
✓			4 Sampling and analysis completed on parameters specified by permit
✓			5. Sampling and analysis done in frequency specified by permit.
✓			6. Permittee is using method of sample collection required by permit Required Method. grabs & composites If not method being used is ( ) Grab ( ) Manual composite ( ) Automatic composite
	✓		7 Sample collection procedures are adequate
	✓		a. Samples refrigerated during compositing yes at 000 no at 002
		✓	b Proper preservation technique used
		✓	c. Container and sample holding times before analyses conform with 40 CFR 136 3
	✓		8 Monitoring and analyses are performed more often than required by permit. If so, results reported in permittee's self-monitoring report

B. Sampling Inspection Procedures and Observations

	X		1 Grab samples obtained
			2. Composite sample obtained Composite frequency _____ Preservation _____
			3. Sample refrigerated during compositing.
			4. Flow proportioned sample obtained.
			5. Sample obtained from facility sampling device.
			6. Sample representative of volume and nature of discharge.
			7 Sample split with permitee.
	✓		8. Chain of custody procedures employed.

MEN03956

FLOW MEASUREMENT

A. Flow Measurement Inspection Checklist-General

YES	NO	N/A	
			1 Primary flow measurement device is properly installed and maintained
X			2. Flow records are properly kept.
X			3 Sharp drops or increases in flow value are accounted for
X			4 Actual flow discharge is measured.
X			5 Influent flow is measured before all return lines for outfall 005 only
		X	6 Effluent flow is measured after all lines
X			7 Secondary instruments (totalizers, recorders, etc.) are properly operated and maintained
		X	8 Spare parts are stocked

B. Flow Measurement Inspection Checklist-Flumes

			1 Flow entering flume appears reasonably well distributed across the channel and free of turbulence, boils, or other distortions
			2 Cross-section velocities at entrance are relatively uniform
			3 Flume is clean and is free of debris or deposits
			4 All dimensions of flume are accurate
			5 Side walls of flume are vertical and smooth
			6 Sides of flume throat are vertical and parallel
			7 Flume head is being measured at proper location
			8. Measurement of flume head is zeroed to flume crest
			9. Flume is of proper size to measure range of existing flow
			10. Flume is operating under free-flow conditions over existing range of flows

MEN03957

FLOW MEASUREMENT

C. Flow Measurment Inspection Checklist - Weirs

YES	NO	N/A	
			1. What type of weir is being used? 90° V-notch for outfall 001 and 004 rectangular for outfalls 002(003) and 002
		X	2. The weir is exactly level.
		X	3. The weir plate is plumb and its top edges are sharp and clean.
X			4. There is free access for air below the nappe of the weir.
X			5. Upstream channel of weir is straight for at least four times the depth of water level, and free from disturbing influences.
X			6. The stilling basin of the weir is of sufficient size and clear of debris.
X			7. Head measurements are properly made by facility personnel.
		X	8. Proper flow tables are used by facility personnel. not checked

D. Flow Measurement Inspection Checklist - Other Flow Devices

			1. Type of flowmeter used _____
			2. What are the most common problems that the operator has had with the flowmeter? _____ _____
			3. Measure Wastewater flow: _____ mgd; Recorded flow: _____ mgd; Error _____ %
			4. Design flow: _____ mgd.
			5. Flow totalizer is properly calibrated.
			6. Frequency of routine inspection by proper operator: _____ /day.
			7. Frequency of maintenance inspections by plant personnel: _____ /year.
			8. Frequency of flowmeter calibration. _____ /month.
			9. Flow measurement equipment adequate to handle expected ranges of flow rates.
			10. Venturi meter is properly installed and calibrated.
			11. Electromagnet flowmeter is properly calibrated.

4963

Supplemental Narrative Information

Menasha Corporation, Otsego, Michigan
MI0003824
April 6, 1986

Wastewater Treatment

The main treatment system for process wastewater begins from a very unsightly white water surge pond. Wastewater from the mill is collected into this pond which is covered with a thick layer of floating debris. The banks of this pond were indistinguishable as the debris also covers the banks and surrounding area. Wastwater from this pond is then pumped over a long distance to the head of the aeration pond. The detention time of this pond is 9-15 days. Other wastewaters entering the aeration pond include lime slurry supernatant, miscellaneous seal and cooling waters, and spent liquor condensate. Some nutrients (phosphates and ammonia) are added to assist bacterial growth when required. Wastewater is pumped from the aeration pond to a small surge tank where ploymer is added, and the flow from the surge tank then enters a small clarifier. Considerable sludge is recovered, but the clarifier effluent is still quite turbid. The clarifier is also equipped with a skimmer which is fairly efficient in removing floating debris. The floating debris is mostly plasticized materials according to company personnel. Two polishing ponds are available but not in use. The treated wastewater is monitored at outfall 000 and discharged through outfall 003 in combination with other waste streams.

A second treatment system provides aeration only. Wastes from heat recovery condensate, shower water, vacuum pump seal water, and non-contact cooling water are collected in a small pond almost completely spanned by a large mechanical aerator. Some heat loss is also accomplished through the mixing process. These treated wastes are discharged through outfall 002.

Outfalls, Flow Measurement, and Sampling

Outfall 001 appeared clear and free of floating debris and foam. Only grab samples are required, and they are collected, in plant, from the approach channel to the 60° V-notched weir used for flow measurements. No visible changes in the appearance of the discharge occur between the in-plant sampling site and the discharge at the river. This discharge is from non-contact cooling water which mixes with some municipal storm water prior to reaching the Kalamazoo River.

Outfall 002 was discolored, dark brown, but appeared clear of suspended matter. The discharge pipe was submerged with a visible plume of bubbles ending in a trace of foam on the river surface. Composite aliquots are collected by an automatic scoop-type sampler located above the 24-inch rectangular weir. Composite sample aliquots are collected into a plastic container for BOD and suspended solids analyses. The composite container is not iced or refrigerated. Flow is continuously monitored as per permit requirements.

Outfall 003 was the worst appearing discharge from this facility. The flow was highly discolored, dark brown, and very turbid. The flow of this discharge includes treated process wastewater from the main treatment system and non-contact cooling water from a splitter box which also discharges to outfall 005. Monitoring for outfall 003 must occur prior to the mixing of cooling water with the treated process wastewater. This monitoring site is designated outfall 000. This site is monitored for BOD, suspended solids, and total residual chlorine with no specified concentration limits. Loading limits do apply for BOD and suspended solids, but these limits also include loadings from outfall 002. These combined loading limits cover two separate and unequal discharges. Large swings in loadings could occur at outfall 002 without consequence to the discharger.

Samples for outfall 003 are collected by automatic sampler from a well mixed clarifier discharge flow. The sample point is just prior to the flow monitoring site which employs a two-foot rectangular weir. Composite samples are refrigerated at this site, and the flow monitoring system appears to be properly installed and maintained.

Outfall 004 receives non-contact cooling water, boiler blowdown, zeolite recharging wastewater, and roof and floor drains. This discharge appeared clear and uncolored, but had observable patches of oil sheen reaching the Kalamazoo River. Considerable amounts of oil appear to reach this discharge point. These oily wastewaters are collected in a large circular sump. Oil collection and control is attempted by spreading many absorbent pads over the surface of the sump and in the discharge channel. This control system appears to be very inefficient and allows for a high potential for greater amounts of oil being discharged. Daily observations is all that is required for oil and grease at this outfall.

Outfall 005 consists of non-contact cooling water from the splitter box. Some of this flow goes to outfall 003 as previously mentioned and the remainder goes to a submerged discharge above a dam adjacent to the company's property. The splitter box is the sample point for outfall 005. Flows are determined by calculation from pump ratings. This water appeared clear and free of floating debris.

Permit Compliance

Compliance with permit conditions has been good. A short list of permit exceedances is attached. Most problems occur at the combined outfall 000/002. Because of the unique combination of outfalls, wide swings in effluent quality can occur at outfall 002 without affecting compliance. Loading of BOD and suspended solids are much greater from outfall 000 than from outfall 002. Permit exceedances, though few, reflect problems from the main treatment system, outfall 000.

Besides the combined limits for discharges of disproportionate loadings, there are additional concerns regarding the application of permit limits for 000/002. Since October 1, 1985, at the 000/002 site, the company has been required to meet final effluent limitations for suspended solids and BOD (winter limits).

The final limits are less stringent than the initial limits (permit conditions attached). In telephone conversations with Gary Boerson and Linda Kaivuniemi of MDNR, I have not been able to obtain a satisfactory explanation for the easing of these limits. In the case of the final effluent limitations for BOD, it appears the summer limits are based on water quality, while winter limits are based on BPT criteria. As a result, no monthly average limit is specified for BOD during the summer. On a monthly average basis, this lack of limitation allows for up to 380 lbs/day additional BOD discharge over winter conditions. Monthly average limitations should be specified and should be more limiting that winter conditions.

Phosphorus limits for outfall 000 currently are initital limitations, with a requirement to submit a report providing the necessary factors to be considered when setting BPT limits on a case-by-case basis. Self-monitoring data indicate the company is easily meeting the initial limits as well as the 1.0 mg/l water quality standard as long as only soluble orthophosphorus was considered. Company officials indicated they would have trouble meeting the 1.0 mg/l limit if it were based on total phosphorus. Other paper industry permit limits in the same river segment are based on total phosphorus.

"Observations" of all outfalls are required daily. At outfall 002, there is no report of discoloration where the condition apparently exists on a continuing basis. At outfall 003, a similar situation occurs for both discoloration and turbidity. The required observation report for outfall 003 is apparently reported as outfall 000. At outfall 004, there are no reports of oil discharges, and from the appearance of this outfall, I would expect some visual oil sightings to be reported. Outfalls 001 and 005 were clear of visual problems and did not appear to have any serious potential visual problems.

Special conditions of the permit require a dissolved oxygen monitoring study to demonstrate outfalls 001, 002, 003, 004, and 005 consistently meet the water quality-based effluent limit of 3.0 mg/l. The purpose of this special condition is to determine the need for further dissolved oxygen monitoring or limits. The limits are already established at 3.0 mg/l. Therefore, the dissolved oxygen monitoring should not impact this number. The BOD data are what might impact the permit limit for dissolved oxygen. On that basis, outfall 003 would definitely be a candidate for requiring a higher D.O. discharge concentration. The monitoring site requirement for this site is "end of pipe". At the outfall 003 site, the facility is sampling in the discharge plume. The company was advised that this practice is not acceptable. The other outfalls are being sampled at appropriate sites for the D.O. monitoring program.

Residuals Management

Sludge handling has been greatly improved in the last three years. Previously, sludge from the process wastewater clarifier was stored and dewatered in a large number of small ponds located in sandy soils with a high potential of contaminating groundwater and possibly drinking water supplies. These ponds

MEN03961

have been dewatered and removed from service. In 1983, a 200,000 gallon covered concrete storage tank was placed in service. Sludge from this tank is applied to company-owned agricultural lands on a 12-month basis. An additional 1.2 MG open pit is also available for temporary sludge storage.

MEN03962

U.S. DEPARTMENT OF COMMERCE
BUREAU OF THE CENSUS
FORM MC-5001

1983 SURVEY OF WATER USE IN MANUFACTURING

[illegible]

BUREAU OF THE CENSUS
[illegible]
Jeffersonville, Indiana 47134

DUE DATE: Within 30 days after receipt

If you cannot file within 30 days, a time extension request should be sent to the address shown; please include your 1-digit Census File Number (CFN).

In correspondence pertaining to this report, please refer to this Census File Number (CFN)

MC-5001

863482 0105 3 10 0140 5001
05 000100 00 00 26005130 2631 0197
NEWASHA CORPORATION
PAPERBOARD DIV
320 W FARMER ST
OTSEGO MI 049078

GENERAL INSTRUCTIONS

This report is required only for the establishment specified in the address block of this report form. Data should be reported on a calendar year basis for 1983. A report is required even if the establishment was operated only part of the year. If your book records are not on a calendar year basis, carefully prepared estimates will be acceptable. Complete each item which is applicable to your establishment.

Report all quantities in millions of gallons per year. Do not report in gallons per minute or gallons per day.

If the gallons used for the year is —	Report as —
5,000,000,000	5,000
5,000,000	5
500,000	1
Less than 500,000	0

If no water is used, treated, or discharged, report "None." If your records on water used are in cubic feet convert to gallons (1 cubic foot equals 7.5 gallons). Reasonably accurate estimates are acceptable.

Brackish water is defined as all water with 1,000 to 10,000 parts per million of dissolved solids.

Saltwater is defined as all water with more than 10,000 parts per million of dissolved solids.

Item 1 — WATER INTAKE BY SOURCE AND BY KIND

a — Include water supplied by a water system (whether municipally or privately owned), the primary purpose of which is the supply of water to the general public. Also include water supplied by systems, the principal function of which is the supply of water to industrial users.

b through d — Include water obtained from your own water supply system, and water obtained from another establishment where the supplier is not primarily a water supplier to the general public and/or industrial users. Include only your own portion of water obtained from a joint water supply system.

e — Other sources than those identified in items 1a through 1d

	MILLIONS OF GALLONS FOR THE YEAR		
	Fresh (1)	Brackish (2)	Salt (3)
Water intake is from —			
a. Public water system	189.		
b. Company surface water system, such as streams or lakes	2447		
c. Company ground water systems, such as wells or deep springs	457		
d. Company tidewater system from estuaries, bays, or oceans			
e. Other sources			
f. TOTAL — Sum of items 1a through 1e →	3034		

Item 2 — WATER INTAKE BY PURPOSE AND BY KIND

a — Water used in production or processing operations is all water that comes directly in contact with products and/or materials, including water which is consumed in the manufacture of products.

b — Include water which is used for cooling and condensing purposes in conjunction with the operation of process equipment, but which does not come in direct contact with products or materials.

c — Sanitary service includes all water used for drinking, lunchroom or cafeteria, and domestic sewage.

d — Self-explanatory.

e — Other uses than those identified in items 2a through 2

	MILLIONS OF GALLONS FOR THE YEAR		
	Fresh (1)	Brackish (2)	Salt (3)
Water is used in —			
a. Production or processing operations	331		
b. Cooling and condensing —			
(1) Steam electric power generation	2447		
(2) Air conditioning	47		
(3) Other cooling and condensing	100		
c. Sanitary services	50		
d. Boiler feed	59		
e. Other uses			
f. TOTAL — Sum of items 2a through 2e should equal item 1f →	3034		

Item 3 — TOTAL WATER INTAKE AND WATER RECIRCULATED AND REUSED BY PURPOSE

If no water was recirculated or reused, mark "No" box in item 3a and skip to item 4.

If water was recirculated or reused —

In column (1) report the sum of columns (1) through (3) for each line in item 2 above.

In column (2) report the estimated quantity of water recirculated or reused. For example: If 100 million gallons of intake water were recirculated twice, report 200 million gallons in this column.

a. Was any water recirculated or reused? (Mark "X" ONE box)

(1) 3002 ☐ No — SKIP to item 4 on page 2
(2) 3001 ☒ Yes — Complete columns (1) and (2)

	MILLIONS OF GALLONS FOR THE YEAR	
	Total intake (1)	Recirculated and reused (2)
Recirculated or reused for —		
b. Production or processing operations	331	3860
c. Cooling and condensing —		
(1) Steam electric power generation		
(2) Air conditioning		
(3) Other cooling and condensing	89	180
d. Sanitary services		
e. Boiler feed	59	78
f. Other uses		
g. TOTAL — Sum of items 3b through 3f →	479	4118

CONTINUE ON PAGE 2 →

2072

MEN03963

	MILLIONS OF GALLONS FOR THE YEAR	
	Untreated (1)	Treated (2)
... (including wine waste) discharged into —		
a. Public utility sewer	401 50	402
b. Streams and rivers	411 2560	412 375
c. Lakes and ponds	421	422
d. Bays and estuaries	431	432
e. Ocean	441	442
f. Ground (wells, spray, seepage, etc.)	451	452
g. Transferred to other users	471	472
h. TOTAL — Sum of items 4a through 4g →	491 2610	492 375

... year ... well ... operated or ... rmate ... utility sewer ... privately owned. ... atory. ... ground from your holding ponds, ... of water is transferred to an ... establishment for spray irrigation, report such ... on line g.

g — Include transfers, to another establishment of either your company or another company after your own use.

Item 5 — WATER DISCHARGED BY METHOD OF TREATMENT

Using the total volume of treated discharge you listed in item 4h, report the percentage being treated by one or more of the methods listed in item 5b. Report to the nearest whole percent. When more than one method of treatment is used, the percentages may add to more than 100 percent.

	MILLIONS OF GALLONS FOR THE YEAR
a. Total treated water discharged (item 4h, column (2))	501 375
	PERCENTS (Report to the nearest whole percent)
b. Method of treatment	
(1) Surface skimming (e.g., oil separation)	510
(2) Neutralization (pH control)	511
(3) Coagulation	512
(4) Flotation	513
(5) Primary settling	514
(6) Biological oxidation, trickling filters, activated sludge, digestion basins, ponds, and lagoons	515 100
(7) Secondary settling	516 53
(8) Filtration	517
(9) Chlorination	518
(10) Other	519

REMARKS

Item 6 — CERTIFICATION — This report is substantially accurate and has been prepared in accordance with instructions.

Name of person to contact regarding this report (Print or type)	Telephone: Area code	Number	Extension	Period covered by this report	FROM: Mo.	Day	Year	TO: Mo.	Day	Year
Gary E. Roys	616	692-6141	258		01	01	83	12	31	83

Address — Number and street			Signature of authorized person	
320 N. Farmer St.			[signature]	
Otsego	State: MI	ZIP code: 49078	Title: [illegible]	Date: [illegible]

2073

MEN03964

memo / MENASHA CORPORATION

TO Dick Thorne DATE January 2 1974

SUBJECT Chart of Paramaters Affecting 003 Effluent BOD for 1974 FROM Bruce Buchanan

cc N. Johnstone
J Scott
Lab (3)

Significant deviations in effluent B.O.D. were noted and obvious correlations recorded for each instance As is to be expected, in most cases no single factor can be isolated as the single cause for a particular incident. Listed below are the major upsets

1 February - March high
1 Low ammonia
2 Low digestor washing
3 High influent B.O.D loading and flows
4 Liquor spills
5 Evaporator running, SLI down 3 way valve leakage of liquor to aeration pond.

April high
1 High influent B.O.D. loading
2 Low digestor washing

August high
1 High influent B.O.D. loading and flow
2 Moderately low ammonia
3 Evaporator running SLI down 3 way valve leakage of liquor

September high
Liquor spills
High influent B.O.D and flows
Moderately high biocide feed just prior to high
4 Note - high ammonia just prior to B.O.D. rise with one low day of ammonia during rise.
5 Evaporator running, SLI down. 3 way valve leakage of liquor

General increases from end of September through end of year
1 High flows through pond * (reduced retention time) * bringing pond down to normal operating level.
2 Moderately high biocide feed.
3 Numerous stock spills. *
* Note - this produces no large scale, immediate rise in B.O.D. but is rather, a long term extended contribution. ie.60 days
4 Evaporator running, SLI down 3 way valve leakage of liquor.

Note must be taken of the fact that the H-130 biocide - even though listed above as a possible contributing cause - was specifically chosen for its rapid biodegradibility and therefore its compatibility with aeration pond systems.

5979

BB/aa

MEN03965

Tom Johnstone

NASHA CORPORATION

PAPERBOARD DIVISION OTSEGO MICHIGAN 49 [illegible]

March 29, 1974

R. J. Courchaine
Chief Engineer
Water Resources Commission
Stevens T. Mason Bldg.
Lansing, Michigan 48926

Dear Mr. Courchaine:

In accordance with part C of the NPDES permit which we received on March 6th we are submitting a progress report on current changes being made and future plans to meet post July, 1975 effluent standards. This progress is outlined below:

A. White Water

1. Current Changes

a. Capacity of saveall is being increased by lowering seal pits and using faster draining filter aid in saveall.

b. Piping is being installed to reduce frequency of direct white water spills to waste treatment system.

c. We have quotes for installing system to recycle vacuum pump sump water to Paper Machine showers.

d. New segment screens are being installed on saveall discs to increase clarity of filtered water.

e. We have installed bar screens in the Paper Machine U-drains to protect white water pumps down stream from plugging.

2. Long Term Plans

a. All Paper Machine white waters and sewer drains and spills from Pulp Mill, Hydrapulper, and Beater Room will be pumped to sidehill scalping screen.

5980

MEN03966

Recovered fiber will be recycled to Hydrapulper.

- Underflow from sidehill screen will be discharged into a large, rectangular grit removal tank and then will be pumped to white water surge chest. White water will be pumped to process and saveall from surge chest as it now is.

- Automatic controls will be put on saveall and seal pits to eliminate manual operation of valves and eliminate all unclarified white water spills to waste treatment system.

The above changes will be made either this year or early next year. An expenditure authorization for these changes will be requested in the near future.

B. Spent Liquor

1. Current Changes

a. A secondary screen is being installed in digester to improve washing efficiency and reduce dissolved solids load on aeration pond.

b. A spill recovery system has been installed to pump liquor spills from Spent Liquor Incinerator to liquor pond and to recycle liquor from pond back to SLI.

c. Digester spill recovery system is being tied into liquor pond to pump liquor spills from digester to pond.

d. We are currently starting up the spent liquor incinerator to burn our spent liquor. It is anticipated that implementing this incinerator and utilizing existing presses at Digester will provide effluent that meets post July 1975 standards, at present pulp [illegible].

5981

MEN03967

7. Long Term Plans

We plan to install a third pulp press early next year to provide improved pulp washing. This installation will allow mill to expand pulp tonnage and remain within post July, 1975 effluent standards. An expenditure authorization will be requested in the near future to provide funds for installation.

C. Waste Treatment

1. Current Changes

a. We are adding a set of two settling ponds after the existing secondary clarifier to improve removal of suspended solids from effluent.

b. We are adding a pumping system to provide activated sludge treatment of effluent in aeration pond. This will be done as a further step in reducing B.O.D. and suspended solids in effluent. Improved stabilization of effluent from pond is expected.

2. Long Term Changes

We have approved and are starting to implement a long term program of spray disposal of our secondary clarifier sludge. Site preparation and plowing has commenced per authorization by Chet Harvey, WRC Basin Engineer.

In time, we will reclaim for spray disposal land areas which are now used for sludge containment. It is expected that this program will take more than one year to do.

I believe the above points present a complete picture of progress which we have made to date in attaining compliance with post July, 1975 standards.

5982

MEN03968

Yours sincerely,

Norman E. Johnstone

Norman E. Johnstone
Technical Superintendent

CC: A. Scherck
E. C. Manders
D. Thorne

jm

MEN03969

MENASHA CORPORATION

October 19, 1976

Mr. R. J. Courchaine
Chief Engineer
Water Resources Commission
Department of Natural Resources
Stevens T. Mason Building
Lansing, MI 48926

Dear Mr. Crouchaine:

Beginning around August 14, 1976, a problem in the Otsego Secondary Waste Treatment System began to become evident. From that point, it has evolved into a bulking problem of major significance. The bulking has not, as yet, been resolved and NPDES specifications with regard to suspended solids and B.O.D.'s are not being met inspite of our best efforts to do so.

The purpose of this letter is to make you and your staff aware of the problem in detail, develope the chronology of events and inform you of potential solutions under investigation.

During the period of August 14, to August 28, the sludge consistency in the secondary clarifier dropped from over three percent to under two percent. Then on August 30, 1976, the suspended solids in the effluent dramatically increased from about 300 mg/l to 900 mg/l. Coincident with these events, an unusually large run of alum sized medium was run August 14 to August 28. The cause of the upset in the secondary waste treatment system was laid on this run of medium. It was felt that as the alum and its effects passed through the system, conditions would return to normal. They did not.

Numerous generally accepted techniques were tried to solve the problem, all without success. Among the techniques employed were the following; increasing F:M ratio (dilution), reseeding, increasing nutrient feed, reducing aeration (the pond was allowed to go anerobic for three alternate 1/2 day periods), biocides were fed to the clarifier, several polyelectrolytes were fed to the clarifier and many other investigations were carried out on a laboratory scale.

By this time, microscopic examination of aeration pond water revealed tremendous quantities of filamentous organizms. The W.R.C. District Office in Grand Rapids was informed the week of September 14th by telephone of our situation and close communications have been maintained regarding progress toward a solution to the problem.

OTSEGO PAPERBOARD MILL FARMER STREET • OTSEGO, MICHIGAN 49078 • PHONE 616 692-6141

6025

Page 2.

The sales representative, an advanced degree microbiologist, for a supplier of Biocides and their central laboratories began work to identify the causative agent (s). Dr. W. O. Pipes of Drexel University, Ph.D. was retained as a consultant and also began work on the problem. Drs Buthala and Isenberg of W.M.U. were also retained as consultants.

On 10-14 76, a meeting was held at the mill with Mr. Chet Harvey and Mr. Roger Przybysz from the Grand Rapids, W.R.C. district office. The history of the situation, and information generated by our laboratory and our consultants was reviewed. The consultants results were preliminary as their work is not complete. There evolved from the meeting several positive suggestions as well as an agreement on the direction for correcting the problem. These steps are being implemented and our consultants are continuing to endeavor to define a procedure for eliminating the three or more organisms which are causing the problem.

The planned course of action is:

1. Increase nutrient - (has been done).
2. Reseed from the clarifier rather than from polishing ponds (has been done).
3. Improve uniformity of phosphorous feed.
4. Duplicate bench studies indicte a shock pH adjustment to 4.0 will correct the problem. These studies are being rechecked under dyramic conditions in 55 gallon pilot equipment. Preliminary results will be available in 2 weeks.
5. The work in the consultants laboratories will be continued as rapidly as possible.

The District W.R.C. office is being kept aware of both our progress and intent, and will be informed well in advance of any full scale attempt to rectify the situation.

Sincerely,

B. T. Buchanan
Technical Superintendent

W. Allen Schenck

W. A. Schenck
General Manager

cc: Chet Harvey

6026

MEN03971

MENASHA CORPORATION

December 30, 1976

Chester Harvey
District Engineer
State of Michigan
Department of Natural Resources
Water Resources Commission
Grand Rapids State Office Building
350 Ottawa Ave., N.W.
Grand Rapids, MI 49502

Re: Your letter to the writer of November 29, 1976.

Dear Mr. Harvey,

One of the criteria of Menasha's NPDES permit that was not being met during the industrial waste water survey was the phenol concentrations in outfall 002 and 003 prior to mixing. Outfall 003 is normally within permit specifications regarding phenols. Those instances during the past several months where outfall 003 significantly exceeded specifications are considered to have been very probably a transposition of samples at the at the laboratory. It is physically impossible for a 9 million gallon pond to make the kind of concentration changes seen with some of the examples in the last several months operating reports. The outside laboratory performing these analyses has been contacted and additional labeling precautions are being taken. Given existing conditions of flow, outfall 003 should be able to be maintained within specifications. Outfall 002, unfortunately, does not have sufficient retention time for biodegradation of phenol in the process water component of this discharge.

We have continued to prod our sodium sulfite supplier with regard to the level of phenol in his product. He has recently informed us that money has been budgeted for process changes that will reduce trace phenol contamination in his product. He expects to have the modifications on stream within 12 months.

The Company has also increased purchases from an alternate sulfite supplier. This suppliers quota has been increased from 1 of 10 to 3 of 10 cars per month. This sulfite has essentially no trace phenol contamination.

6027

OTSEGO PAPERBOARD MILL FARMER STREET • OTSEGO, MICHIGAN 49078 • PHONE 616 692 8.1

MEN03972

The high suspended solids and BOD discharges from outfall 004 have resulted from an additional hydraulic load on the recently commissioned ash lime slurry system. Steps have been taken to reduce the water used in the ash silo and a work order has been issued to install a larger motor on the slurry tank pump so that additional reserve capacity will be present. New control devices and alarms are also being installed on the slurry tank to prevent discharge of this sytem to 004. The above steps should minimize NPDES excedences on 004.

The high settleable solids concentrations found in the process water prior to mixing with non-contact cooling water in outfall 003 has been corrected by the shock pH treatment of the aeration pond. This was done 11-18-76. The sludge bulking problem which resulted in high settleable solids and high suspended solids discharges from 003 is now under control and NPDES permit specifications with regard to solids are being met.

Oil and grease contamination of 002 will be halted at its source when identified. We will begin a search for possible sources and will rectify them as they are found. Discharge of oil is sporadic and will require a concerted effort to locate and correct. The corrective measures identified above for preventing discharges from the ash lime slurry system to outfall 004 will also correct the oil and grease concentration problems seen at the outfall.

The partially submerged weir problem at outfall 003 has been rectified. Process water discharge flow has been reduced to the point that a proper drop is being maintained across the weir.

Potential run off problems along the road binder truck loading area, side hill screen area, and floor drainage from the maintenance shop area have been corrected. A cement slab with curbs and drainage trough have been installed at the end of the side hill screen area, with proper slope to insure drainage of liquids into the Surge pond. In addition, the area from the side hill screen to the road binder truck loading area has been bermed and graded to prevent run-off to the Kalamazoo River.

I would appreciate your comments and thoughts on any or all of the above.

Sincerely,

MENASHA CORPORATION

Bruce T. Buchanan
Technical Superintendent

cc: Carl Zolner
Lansing, Office

BB:kj

6028

MEN03973

STATE OF MICHIGAN

TURAL RESOURCES COMMISSION
CARL T. JOHNSON
E. M. LAITALA
DEAN PRIDGEON
...RY F. SNELL
HARRY H. WHITELEY
JOAN L. WOLFE
CHARLES G. YOUNGLOVE

WILLIAM G. MILLIKEN, Governor

DEPARTMENT OF NATURAL RESOURCES

HOWARD A. TANNER, Director

WATER QUALITY DIVISION
State of Michigan Office Building
350 Ottawa Avenue, N.W.
Grand Rapids, Michigan 49503

1-456-6231

January 6, 1977

Mr. Bruce T. Buchanan,
Technical Superintendent
Menasha Corporation
Otsego, Michigan 49078

Dear Mr. Buchanan:

I have the following comments to make on your letter of December 30, 1976:

In regard to the phenol level in 002 - aside from the reduction that might take place with improved sodium sulfite supplies, if phenol levels from this outlet cannot be improved, some changes in the routing of this volume must be considered.

The balance of your letter addressed itself to all of the issues we raised before and the action or proposed program is satisfactory. We wanted this type of response prior to any annual survey wherein we have repeat comments on the areas of concern.

Considering the time of year, temperature, and the necessary massive pH change, the shock treatment proved to be more successful than anticipated.

Sincerely,

WATER QUALITY DIVISION

Chester Harvey

Chester Harvey,
District Engineer

CH/mc
cc: Karl Zollner
Council
Hand

pol' spec 1/7/77

MICHIGAN

R1026-1 1/75

6029

MEN03974

MENASHA CORPORATION

January 17, 1977

Mr. R. J. Courchaine
Chief Engineering
Water Quality Commission
Department of Natural Resources
Stevens T. Mason Building
Lansing, MI 48926

Gentlemen:

On Friday January 7th, 1977 an unknown quantity of untreat : white water entered the Kalamazoo River from the Otsego Paperboard Division of Menasha Corporat. n. The spill occurred between the hours of 6 A.M. and 10 A.M.. This white water contained approximately 200 parts per million of suspended solids and approximately 1600 parts p million B.O D.

The cause of the spill was a failure of the main pump delivering mill effluent to the secondary waste treatment system. In spite of the fact that there is a light and flow meter to provide warning in case of pump failure, in this case the warning went unnoticed. The surge pond, which receives process water flow in the event that a pump failure, has approximately 200 to 250 thousand gallon reserve capacity. With the proper warning signals available, the surge pond should provide sufficient time for repair or replacement of this pump in the event of failure.

Work is now proceeding to install both audible and visable alarms on the surge pond and the pump in question.

The above measures should significantly reduce the chance of this situation reoccurring.

Sincerely,

MENASHA CORPORATION

Bruce Buchanan

Bruce T. Buchanan
Technical Superintendent

cc: J. Adams
A. Screnck
C. Harvey

BB:kj

OTSEGO PAPERBOARD MILL FARMER STREET • OTSEGO, MICHIGAN 49078 • PHONE 616 692 6141

/ 20

MEN03975

MENASHA CORPORATION

REVIEW OF WASTE TREATMENT OPERATIONS

MENASHA CORPORATION
OTSEGO PAPERBOARD MILL
OTSEGO, MICHIGAN
JUNE 2, 1977

The attached data and documentation is herewith presented: 1) to demonstrate the capability of this waste treatment system to meet compliance specifications under normal conditions; 2) to demonstrate the transition from mesophyllic to thermophyllic and thermophyllic to mesophyllic bacteria every winter and spring resepectively often results in upsets in operational efficiency during this "inversion"; 3) to document mill work, consulting work, action and results associated with the filamentous bulking problem in the waste treatment system during the last quarter of 1976; 4) to document mill work, consulting work, action and results associated with waste treatment difficulties during the first quarter of 1977; 5) to document procedural, maintenance and capital improvements in the waste treatment system, operation of that system, or of equipment that has a direct bearing upon that waste treatment system; 6) to document the history of action taken to resolve the phenols problem in the waste treatment system.

The review of the history of monthly average discharge levels shows that this waste treatment system under normal conditions, has the capability of meeting July 1st 1977 permit specifications. A number of recent improvements are making a significant impact on organic loading to the waste treatment system. These are 1) scalping screen operation which is part of the spill prevention program which directs all effluent from the mill through the Impco disc filter sav -all for removal of fiber and fines, 2) the procedural improvements in pulp washing to improve liquor solids recovery, 3) major improvements in the physical condition of the DKP presses to facilitate better liquor solids recovery.

The above improvements have resulted in a reduction in BOD loading to waste treatment system from approximately 25,000 lbs. a day to 10,000 lbs. per day. This reduced influent loading to the system has resulted in a corresponding decrease in effluent BOD loading.

Additional improvements are planned and are in various stages of completion as listed below; 1) the white water clarification system, phase I, will go on line during the July 4 through 9 shutdown. Clarification and reuse of white water in the mill with result in elimination, of approximately 350 steady state gallons per minute of fresh water into the white water system. Process effluent will thereby be decreased by approximately 50%.

This decrease in hydraulic loading of the waste treatment system should result in improved operational performance through increased detention time, i.e. longer periods for reduction of BODs in the aeration pond, higher levels of D.O. in the aeration pond, better equalization of transient surges (hydraulic, organic and suspended) and improved clarifier performance; 2) Insta-lation of Uhle box separators on #1 paper machine will direct the major process component of outfall of 002 to outfall 003 where sufficient detention time exists for reduction of BOD and for removal of suspended solids. This capital project is also scheduled for completion during the July 4 through 9 shutdown; 3) The chemical addition system for the ash lime slurry tank will allow improved settling of fly ash in the settling ponds and prevent carry over of that material in the supernate to the aeration pond. This should result in improved suspended solids removal in clarifier. 4) Recently completed updates of flow sheets detailing exact location and line sizes of all city water, well water, and fresh water in the entire mill, will allow sources of fresh water to be readily identified and substituted for by white water where feasible, redirected to non-process outfalls or eliminated where feasible.

Documentation of actions taken and work done as a result of system upsets in the fall of 1976 and spring of 1977 are intended to demonstrate that all possible efforts were made toward resolutions of these problems. Neither time, manpower, or money was spared in striving to correct the problem.

Continued efforts have been made to pressure our sulfite supplier to reduce his residual phenol levels. An alternate supplier has been contracted to supply all the sulfite he can. This supply of sulfite is very low in trace phenol levels. Through continued efforts, it now appears that a trade made be feasible whereby Koppers and Reichhold maybe able to swap tonages such that Koppers will be able to suuply all of our sulfite demands. See Jim Adams letter of June 3 on the subject. Should this trade come to fruition, it should bring our phenol concentrations back within specifications.

Although the source of the gel problem which occurred during the first four months of this year has just been tentatively identified by Buckman Labs biologists, we have been able to bring the problem under a level of control which has allowed a return to compliance statis even though the underling problem has not been resolved at this point It appears from the phone discussion with Mr. Luttis, that successful treatment has been effected elsewhere and that at least a possibility exist that this organism can be eliminated from our system. It appears reasonable to assume, based on recent data, that compliance can be met with regard to BOD and suspended solids under existing conditions and that scheduled improvements through reduction of white water hydraulic loading to the system, suspended solids loading, and liquor solids loading and fly ash loading should all contribute to an improved margin of safety with regard to compliance specifications. Further improvement in the system can also be expected should the Buckman treatment for luconostoc be proven feasible and effective.

MEN03977

Phenols concentrations in outfall 002 should be drastically [illegible] by redirecting the process component of this discharge to [illegible] total phenols loading in the system should be dramatically reduced [illegible] the Kopper's sulfite can be traded for the Reichhold material. Should the latter be effected, phenol specification should no longer be as serious a problem at this facility.

MEN03978

MENASHA CORPORATION

June 9, 1977

State of Michigan
Water Resource's Commission
Comprehensive Study Section
Steven T. Mason Building
Lansing, MI 48926

Subject: Operating Report, Menasha Corporation, Otsego Paperboard Div., Month of May 1977

Dear Mr. Courchaine:

Outfall 002

Three of the five phenol tests were out of specifications during the month of May. We are currently working on arrangements to obtain our sulfite from a supplier who has low levels residual phenols. This anticipated change of sulfite suppliers should enable us to keep our phenol levels with in specifications at all of our outfalls.

One of three total phosphorus samples was out of specifications during the month of May. Since this condition has not occurred with in the last year, we suspect there may have been an error in the sample analysis. This original sample was split and sent to two separate laboratories for analysis. The second laboratory's analysis showed a total phosphorus level of .7 MG/L versus the reported out of specification level of 2.2 MG/L.

Combined Outfall 002 and 003

Five of the thirty days exceeded the suspended solids specification during the month of May. In house changes have kept the BOD with in specifications.

Work is continuing both in house and through several consultants to bring the suspended solids back within specifications.

Outfall 000 prior to mixing.

Two of three total phosphorus tests were out of specification during the month of May. Phosphorus residuals have not decreased even through the phosphorus feed concentration was reduced. Further

OTSEGO PAPERBOARD MILL FARMER STREET • OTSEGO, MICHIGAN 49078 • PHONE 616 692 6141

6035

MEN03979

reductions in phosphorus feed will be made to accomplish the necessary reduction in phosphorus residuals.

Outfall 004

Suspended solids in miligrams per liter was above specifications thirteen of thirty days and suspended solids in lbs. per day were above specification thirteen of thirty days. Temperature also was above specification three of thirty days. Three of the high suspended solids and two of high temperatures were caused by the ash-lime slurry tank over flowing to outfall 004. This problem has been corrected by installing higher speed motor on the pump. The third high temperature was caused by excessive condensate temperature.

Two more of the high suspended solids were caused by equipment breakdown. Action has been taken to correct these problems. The rest of the high suspended solids were caused by heavy rain and run-off from the drive and parking areas.

Sincerely,

MENASHA CORPORATION

John R Blauwkamp

John R. Blauwkamp
Process Engineer

cc: J. Adams
G. McConney

JB:kj

6036

MEN03980

STATE OF MICHIGAN

WILLIAM G. MILLIKEN, Governor

DEPARTMENT OF NATURAL RESOURCES

STEVENS T. MASON BUILDING, LANSING, MICHIGAN 48926

HOWARD A. TANNER, Director

WATER RESOURCES COMMISSION
C. WILLIAM COLBURN
JOHN E. GLAB
CHARLES D. HARRIS
JOHN H. MITCHELL, M.D.
CLEAMON E. LAY
STANLEY QUALKENBUSH
JOHN E. VOGT

August 3, 1977

Mr. James S. Adams, General Manager
Otsego Paperboard Division
Menasha Corporation
Farmer Street
Otsego, MI 49078

Re: Notice of Violation No. NV-7-77-01-0099 and Show Cause Hearing

Dear Mr. Adams:

This is in response to your July 11, 1977, letter regarding Notice of Violation No. NV-7-77-01-0099 and the Show Cause Hearing which was scheduled for July 26, 1977. As you know from previous discussions with my staff, we have rescheduled the show cause hearing. The hearing is now scheduled for September 15, 1977 at 10:00 a.m. in our offices on the 8th Floor of the Stevens T. Mason Building, Lansing, Michigan.

The issuance of the Notice of Violation and the rescheduling of the hearing do not extend the July 1, 1977, compliance date. The Show Cause Hearing will provide you with an opportunity to demonstrate compliance or to show cause, if any, why the State of Michigan should not revoke the NPDES permit and/or initiate litigation for full penalities provided under the law.

Your letter and discussions with my staff indicate that recent improvements to your waste treatment system and operating procedures have been implemented which should assure your compliance with final effluent limitations. You should be prepared to support your position during the hearing. Accordingly, we recommend that you do extensive monitoring of your waste effluent between now and the hearing to document the quality of your discharges. Feel free to submit any such information in writing in advance of the hearing date.

Very truly yours,

WATER RESOURCES COMMISSION

Robert J. Courchaine

Robert J. Courchaine
Executive Secretary

RJC/AH:clp
cc. K. Zollner
W. Denniston
C. Harvey
A. Hogarth
P. Zugger

MICHIGAN

R-028-2 6/75

6047

MEN03981

MENASHA CORPORATION

September 9, 1977

Mr. R. J. Courchaine
State of Michigan
Water Resources Commission
Comprehensive Study Section
Steven T. Mason Building
Lansing, MI 48926

Dear Mr. Courchaine:

On June 13, 1977, Allan Schenck, Jim Adams and the writer met with you and members of the Water Quality Division. Present were Carl Zolner, Wayne Denniston, Roger Przybysz, and Chet Harvey. Purpose of the meeting was to discuss the status of the waste treatment difficulties at Menasha, Otsego. Menasha presented a statement with supporting documents and data outlining the efforts and procedures taken to resolve the specific biological waste treatment problem as well as providing a history of waste treatment plant capability.

In response to the underlying biological problem, continued efforts through consultants have been made to find a solution for the filamentous bulking. Dr. Thomas Joyce, of the Institute of Paper Chemistry in Wisconsin, Mr. Michael Harris of CH_2M-Hill, and representatives from Nalco, have made visits to the mill to evaluate the system and the biological problem. Extensive sampling and analytical testing has been accomplished and the results have been forwarded to the consultants. It is hoped that this information would allow the proposal of specific recommendations to sufficiently alter the environment in the waste treatment system such that filamentous bacteria will no longer be the predominant species.

In addition to striving for a specific solution to the biological imbalance, a commitment was made at the June 13 meeting to accomplish specific physical changes to the waste treatment system in order to reduce the impact of the filamentous bacteria on

6048

OTSEGO PAPERBOARD MILL FARMER STREET · OTSEGO, MICHIGAN 49078 · PHONE 616-692 6141

MEN03982

the performance of the waste treatment system. These goals were as follows:

1. Change suppliers of sodium sulfite. This was designed to lower phenol concentrations.

2. Install and commission white water clarification and reuse equipment.

3. Install separating equipment to reduce the organic load on outfall 002.

4. Commission chemical additive treatment program to ash lime ponding system in order to minimize carryover of suspended solids into the aerated stabilization basin.

All of the above have been accomplished and the objectives of each program were met.

From the attached data table, it can be seen that outfall 003 now meets phenol specifications with continued regularity. Outfall 002 exceeded specifications four of six tests but the combined charge of 002 and 003 was predominantly within specifications.

From the data table, the affect of the installation of the white water clarification system was to reduce the process flow to the waste treatment system by approximately 42%. The resultant affect on BODs and suspended solids, however, was not immediately realized due principally to the presence of the filamentous bacteria. A coincidental failure of the combustion dome in the liquor incinerator temporarily raised the waste treatment loading.

Installation of the vacuum side separators on #1 Paper Machine uhle boxes reduced BODs and suspended solids concentrations to outfall 002 by 45 and 53% respectively. Along with the BODs and suspended solids reductions, a corresponding reduction in phenols should be expected. However, the continued difficulty in obtaining accurate and reliable analysis has masked this expected result.

The chemical additive treatment program has markedly reduced suspended solids carryover from the ash lime settling ponds into the aerated stabilization basin. The data showed approximately a 5 to 6 fold reduction in suspended solids concentration.

Due to the fact that the above changes did not alter the physical

MEN03983

environment of waste treatment system enough to eliminate the bulking filamentous organisms, acidization of the aeration pond was undertaken on the afternoon of September 2, 1977. The pH of the aeration pond was reduced from its normal 8.2 to 4.0 with the addition of 100 tons of concentrated sulfuric acid. This acid treatment has again broken up the filamentous organisms and effectively destroyed them with a resultant dramatic decrease in suspended solid concentration at the weir. Sludge consistency in the secondary clarifier has gone from 1 to 3% and suspended solids are now within specifications.

We are actively consulting with CH_2M-Hill, Nalco, and the Institute of Paper Chemistry in an effort to permanently eliminate the filamentous organisms by amending the physical environment such that they cannot become the predominant species. The analytical data generated after sampling during the week of 8/1 has now been forwarded to our consultants for their review and recommendations. It is hoped that the acidization will allow several months of good operation which will enable the consultants to have time to formulate responses and recommendations.

We continue to run maximum recycled paper in our furnish which minimizes BOD loading in the effluent.

Sincerely,

MENASHA CORPORATION

Bruce Buchanan

Bruce Buchanan
Technical Superintendent

BB/k

cc: Mr. Chester Harvey
Mr. Carl Zolner
Mr. Wayne Denniston

92-6

6050

MEN03984

SUMMARY OF FINDINGS

The existing effluent treatment facilities at Mc[illegible] Otsego have been evaluated to determine if deficiencies in the design, application, or operation of these facilities have caused or contributed to permit limit exceedances for BOD and suspended solids (TSS) at outfall 003.

Based on the present state-of-the-art in pulp and paper mill effluent treatment, the existing treatment facilities are a reasonable and proper application of technology to achieve the BOD and TSS permit limitations. Previous BOD and TSS permit limitation exceedances have resulted from extraordinary levels of essentially non-settleable filamentous micro-organisms in the treatment system, and not from identifiable deficiencies in the existing effluent treatment system hardware or operation. Buildup and eventual loss of the filamentous organisms into outfall ~~003~~ 6-003/006 was directly responsible for permit exceedance of both BOD and TSS limitations.

These conclusions are supported by the following specific findings:

1. The total flow, BOD and suspended solids discharges to the treatment system are generally below the national average for NSSC mills, indicating that mill in-plant operations are not causing excessive treatment plant loadings.

2. The aeration basin retention time is more than adequate for BOD oxidation, as evidenced by soluble effluent BOD levels of about 30 mg/l.

3. The aerator horsepower level is adequate for BOD loadings of 16,000 lb/day or more, as evi[illegible]ced by an average basin dissolved oxygen of 1.3 [illegible] at 15,816 lb. BOD/day.

4. Aeration basin mixing is adequate, as evidenced by uniform dissolved oxygen levels measured in a survey of basin dissolved oxygen.

5. Macronutrients (nitrogen and phosphorus) were present in adequate supply at the time of our surveys.

6. The secondary clarifier size is conservatively large by accepted standards for mass load and overflow rate. Special mass flux column studies confirm that additional clarifier capacity would not produce measurable improvement in clarification because the flux properties of the filamentous sludge are so incredibly poor.

7. The BOD entering the treatment system is being almost completely (98 to 99 percent) oxidized to bacterial cells, CO_2 and water. Therefore, the occurrence of excessive BOD in the treated effluent is caused by the carryover of filamentous suspended solids, and is not the result of unoxidized influent BOD.

8. Micronutrient concentrations in the aeration basin were adequate at the time of our survey.

There is no established technology for the control and/or elimination of filamentous organisms. A variety of hypotheses for control of the filaments were tested on bench scale at the mill. The bench scale tests were performed under conditions slightly different than exist in the aeration basin and show that, at least in bench scale, the filaments can

616617/2

be eliminated from the mixed liquor. The data obtained from these tests ~~is~~ are still under analysis, but tends to indicate that filamentous growths are not inevitable. ~~the effluent~~ from the mill does not ~~have a~~ ~~fundamental propensity to "grow" filaments~~. These tests ~~definitely~~ lead us to believe that a permanent solution can ultimately be achieved to eliminate filamentous growths in the system.

A full scale demonstration of the acidification of clarifier influent has shown that effluent TSS and BOD limits can be met in spite of the growth of filaments in the aeration basin. Although we do not feel that this is a preferred ~~cost-effective~~ long-term solution, the technique of continuous acidification of clarifier influent will allow the mill to maintain BOD and TSS permit compliance until a permanent solution ~~is found~~ to the growth of filaments is perfected.

BIOLOGICAL TREATMENT SYSTEM EVALUATION

Background

The treatment system at the Otsego mill features an 8.25 million gallon aeration basin with 5 - 100 H.P. low speed turbine aerators. Effluent from the aeration basin is settled in a 40-foot diameter clarifier. Underflow solids from the clarifier are hauled away to landfill disposal. Overflow from the clarifier passes through one of two parallel final settling ponds and is then discharged into the Kalamazoo River through Menasha Corporation's outfall #003.

During the latter half of 1976, the aeration basin developed a profuse growth of filamentous organisms. The infestation resulted in extremely poor sludge settling characteristics, causing ~~violations to~~ exceedance of the mill's NPDES effluent solids limitations. The mill staff and various consultants undertook extensive studies to determine the cause of and cures for the growth of filaments. The offending organism was tentatively identified as Beggiatoa ~~sp.~~ and/or Thiothrix.

various methods were examined to eliminate the growth of filaments, but the only effective method found was to acidify the aeration basin contents to a pH of approximately 4.5. This technique broke up the filamentous growth and immediately restored settling characteristics to acceptable levels. The aeration basin was acidified in _____ 1976 and the effluent solids concentrations were restored to values well under those allowed by the mill's permit.

In April of 1977, the mill staff observed similar filamentous growth returning to the aeration basin mixed liquor. By May of 1977, the filaments were firmly established and were again causing permit violations due to carryover of solids from the clarifier and final settling ponds.

At the suggestion of other consultants, the mill instituted a program of micronutrient addition to determine whether the filamentous growth might be caused by some micronutrient deficiency. The micronutrient addition did not appear to reduce the growth of the filaments.

Shortly after the second growth of filaments started, Menasha Corporation retained CH2M HILL to examine the wastewater treatment system. Our efforts have been directed toward finding a long-term solution to prevent future reoccurences of filamentous growths in the system ~~or, alternatively~~ and, concurrently, methods to meet effluent permit requirements in spite of the growths.

Intensive Laboratory Testing Surveys

Our analysis of the treatment system has involved several different testing programs by the mill staff and/or outside laboratories:

1. A one-week intensive sampling and laboratory testing program was set up to obtain a more complete analysis of the performance of the treatment system. The intensive testing program included many tests which are not normally run as a part of the mill's routine testing schedule. A summary of the testing results from this program is shown on Figure ___.

The results of this intensive testing program show that the incoming waste loads to the treatment system are after below "average" for a mill of this size and type, indicating that in-mill flow and BOD reduction programs have been effective. The aeration basin provides more than 10 days of retention time and is considered to be adequately sized for this type of waste.

The oxygen uptake rates measured in the aeration basin indicate that the rate of O_2 consumption per pound of BOD removal is slightly higher than would normally be anticipated. The existing aeration equipment, however, consistently maintains a positive D.O. in the basin. We feel that the existing aerators are adequately sized to treat the waste loads into the treatment system.

At the mixed liquor concentrations in the basin (2360 mg/l) and flow rates (770,000 GPD), the solids loading rate to the clarifier is about 10 to 12 lbs. solids/day/ft^2. This loading rate is quite low in comparison to most secondary clarifiers. Our preliminary assessment of the clarifier was that it provides adequate clarification capacity for reasonable sludge flux properties. (see also discussion of field testing of clarifier capacity).

The concentrations of both nitrogen and phosphorous in the aeration basin are adequate for biological treatment.

7499/5

6055

MEN03989

The level of biological activity in the system is excellent. Based on soluble effluent BOD's, the system ~~removes~~ exhibits 98+ percent of the influent BOD.

The solids concentrations in the aeration basin are much higher than would be expected from an aerated-lagoon-type system (no sludge return). The computed sludge yield during the testing program was 0.85 lb. TSS/lb. BOD removed. The mill staff indicated that during the same time frame, the final settling ponds had been emptied by pumping accumulated sludge back to the aeration basins. This practice has since been discontinued, but does possibly explain the inordinately high ~~computed~~ apparent sludge yield.

We conclude from the data that the secondary treatment system is adequately designed to treat the effluent waste loads from the mill. The effluent water quality problems are due to poor liquid-solids separation and are caused by the growth of filaments within the aeration basin.

2. The tentatively identified species of filamentous organism (Beggiatoa (sp)) utilizes reduced sulfur compounds as an energy source. A second series of tests were performed on the aeration basin influent and effluent streams to clarify the form in which sulfur exists through the system.

The results of these tests are as follows:

Sample Point	Sulfate mg/l	Sulfite mg/l	[illegible] mg/l	# of Samples
Mill Process Effluent	829	37.0	1.73	4
SLI Condensate	1.1	2.1	0.83	4
Lime-Ash Pond Overflow	264	1.2	0.30	1
Eff. from Final Settling Ponds	--*	8.2	0.65	4

*results invalid due to residual sulfates from lagoon acidification.

A sulfur mass balance around the system is impossible to compute because of the short duration of the testing program as compared to the detention time in the aeration basin. The tests do indicate that sulfide concentrations in the influent are sufficiently high to stimulate the growth of sulfur bacteria such as Beggiatoa (sp). (The presence of sulfides is not the only causative agent to stimulate the growth of such filaments. Previous researchers have found that, in otherwise favorable environments, filaments have often been associated with sulfide concentrations above 0.3 mg/l.)

The sulfite and sulfide concentrations in the effluent are lower than would be expected from the influent concentrations. We conclude that some oxidation and/or stripping of reduced sulfur compounds occurs in the aeration basin. The residual sulfide concentration in the effluent is high enough to be of concern. (See discussion of bench scale testing for filamentous control. One method to eliminate sulfides is to oxidize sulfides into sulfites by prechlorination of the influent.)

3. Micronutrient concentrations were determined in the effluent from the aeration basin to determine whether an adequate supply of micronutrients is available to the biological population. (Filamentous growths are

sometimes associated with a deficiency of one or more micronutrients.) The test results follows

Micronutrient	Concentration at discharge end of Aeration Basin, mg/l
Cadmium (Cd)	97
Magnesium (Mg)	27
Manganese (Mn)	1.1
Vanadium (V)	<0.2
Potassium (K)	9
Cobalt (Co)	0.08
Iron (Fe)	2.4
Molybdenum (Mo)	<0.2

With the exception of vanadium and molybdenum, all of the tested micronutrient concentrations are high enough to properly support biological growth. The concentrations of V and Mo were below the detection limits of the test used and will be checked again with a more sensitive test.

Field Testing Associated With Treatment System

In conjunction with the laboratory testing programs, two field tests were performed to confirm our conclusions reached after the intensive testing survey:

1. A D.O. profile was run in the aeration basin to confirm that the basin is adequately mixed to oxygenate the entire contents of the basin. D.O.'s were measured at various depths in various locations around the basin. The profile, taken by the mill staff, shows that the basin is essentially completely mixed with little or no D.O. stratification due to depths or distance from the aerators.

2. Past records indicate the clarifier at the mill is adequately sized to remove and thicken solids from the effluent during periods when the filamentous organisms

MEN03992

are not present. During periods of filamentous infestation, however, only a small fraction of the s ds are removed in the clarifier.

An 8-inch diameter by 8-foot tall settling column was sent to the mill to develop a correlation between solids concentration and initial settling velocity during a period of excessive filamentous growth. From the graphic plot of solids concentration vs. initial settling velocity (ISV), a flux curve has been developed to describe the thickening characteristics of the filamentous sludge. (The flux curve method of clarifier sizing was developed by Professor Richard Dick of the University of Illinois. Combinations of mass loadings and sludge underflow concentrations are determined by drawing limiting flux lines tangential to the flux curve.)

The mass flux curve developed at the Otsego Mill is shown on Figure ___. Also shown on the figure is a more "typical" flux curve recently obtained with sludge from a west coast pulp and paper mill wastewater treatment system.

The mass flux curve for the filamentous sludge at the Otsego Mill illustrates that the sludge settles and thickens very poorly. Our interpretation of this curve is that additional clarification facilities would do little or no good in thickening the sludge to greater than 0.4 to 0.5 percent solids, or in achieving measurably improved solids liquid separation in the clarifier.

Bench Scale Testing Associated With Filamentous Control

A series of bench scale tests were set up to determine the effects of several identifiable variables on the filamentous growths in the aeration basin. Five test containers were filled with mixed liquor from the aeration basin, aerated to maintain a D.O. of approximately 2 mg/l, and were batch fed 3 times per day with a composited sample of lagoon influent. Sufficient nitrogen and phosphorus were added to supply biological nutrients. Regular microscopic examinations were made for qualitative interpretation of filamentous growths. The variables tested were as follows:

	Test Container No.				
	1	2	3	4	5
Detention time, days	12	12	12	12	6
Micronutrient addition rate, mg/l	0	10	50	0	0
Prechlorination of feed sample, mg/l Cl	0	0	0	100	0

Test container No. 3 (50 mg/l micronutrients) exhibited very low levels of any types of biological activity, indicating that one or more of the micronutrients were toxic. Container No. 3 was discontinued after several days of observation.

The filamentous populations in the remaining four containers remained high for several days and then began to die off. Visual observations indicated that, at the conclusion of the test, the filamentous bacteria eventually were essentially gone from all four containers. Sludge settling properties were excellent in all four containers but the effluent from container No. 2 appeared to be more turbid than the effluents from containers 1, 4 and 5.

049170/10

Due to the apparent loss of filamentous organisms under the bench scale test conditions, the entire test was repeated for containers 1, 2, 4, and 5. The second test also resulted in a loss of filaments in the test containers.

Operating Modifications for Permit Compliance During Filamentous Conditions

1. Under normal operating conditions, the final settling ponds fill with sludge after 1 to 2 weeks of operation. Whenever one pond is filled with sludge, the flow is diverted to the other pond and sludge is hauled away from the "full" pond. Under filamentous conditions, however, the ponds fill with low-concentration sludge after only 1 to 2 days. Past practice has been to pump the settling pond contents back into the aeration basin because there is not adequate time to haul away all of the accumulated sludge.

   This practice of pumping accumulated sludge back to the aeration basin has been discontinued for the following reasons:

   a. Pumping the solids back to the aeration basin increases MLSS concentrations, reduces sludge settling velocity, and tends to further impair solids-liquid separation in the clarifier.

   b. Anaerobic conditions within the settling ponds provide a favorable environment for filamentous growth. The practice of pumping this material back to the aeration basin has the effect of multiplying any filamentous problem which might exist.

2. Acidification of the entire aeration basin, as previously discussed, has been the only effective way to break up the filamentous organisms in the aeration basin and to restore good sludge settling characteristics.

The disadvantages of acidifying the aeration basin is that, while the treatment breaks up the filaments, it also destroys the bacteria population necessary to treat away the BOD in the mill effluent. Several days of aeration are required to restore a healthy biomass.

The mill staff noted that sludge settling properties improved immediately after acidification. An experimental chemical feeding system was installed to continuously acidify the effluent from the aeration basin before entering the clarifier. The results of this experiment are as follows:

a. During the first days of operation, the sludge settled quite well. Effluent solids from the clarifier were well under NPDES permit limits.

b. After the first few days of operation, part of the acidified sludge began to "float" in the clarifier rather than settling to the bottom. The reason for this shift in performance is not clear at this time. The floating material breaks up in the pipeline between the clarifiers and final settling ponds and settles out before exiting the ponds.

c. The continuous addition of acid to the clarifier influent is not a cost-effective long-term solution to the problem of filamentous growths in the system. It has been shown in a full-scale demonstration, however, that this technique can be used to maintain compliance with both the effluent TSS limits and BOD limits <u>in spite of</u> the growth of filaments.

6062

MEN03996

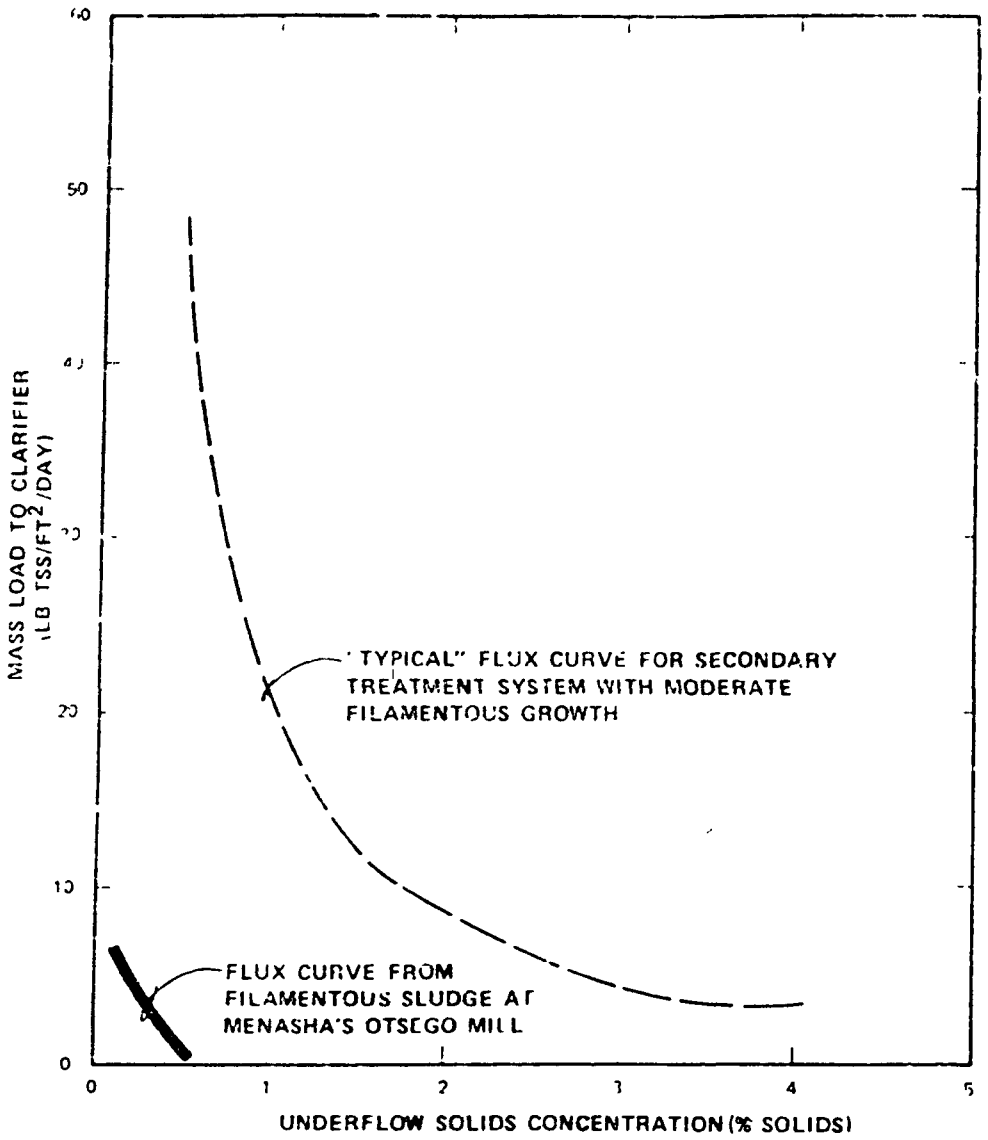

MENASHA CORPORATION
OTSEGO MILL

SECONDARY SLUDGE FLUX CURVES

CH2M HILL

L11087.A0

6063

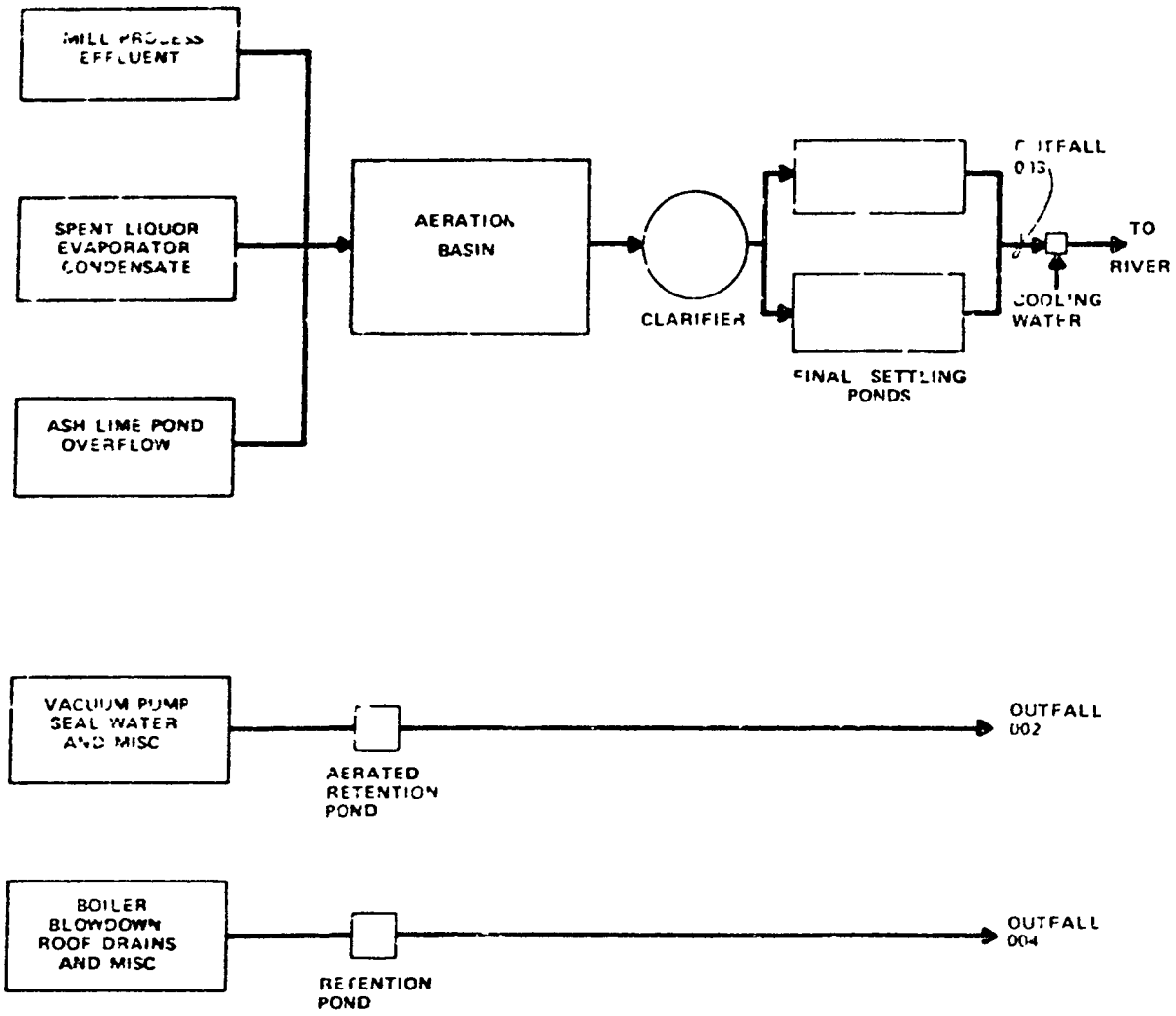

- OUTFALL 001 IS STORM DRAIN
- OUTFALL 000 IS COMPUTED COMBINATION OF 003 PLUS 002

MENASHA CORPORATION
OTSEGO MILL

DISCHARGE OUTFALL NOMENCLATURE

L11087 A0

6064

CH2M HILL

MEN03998

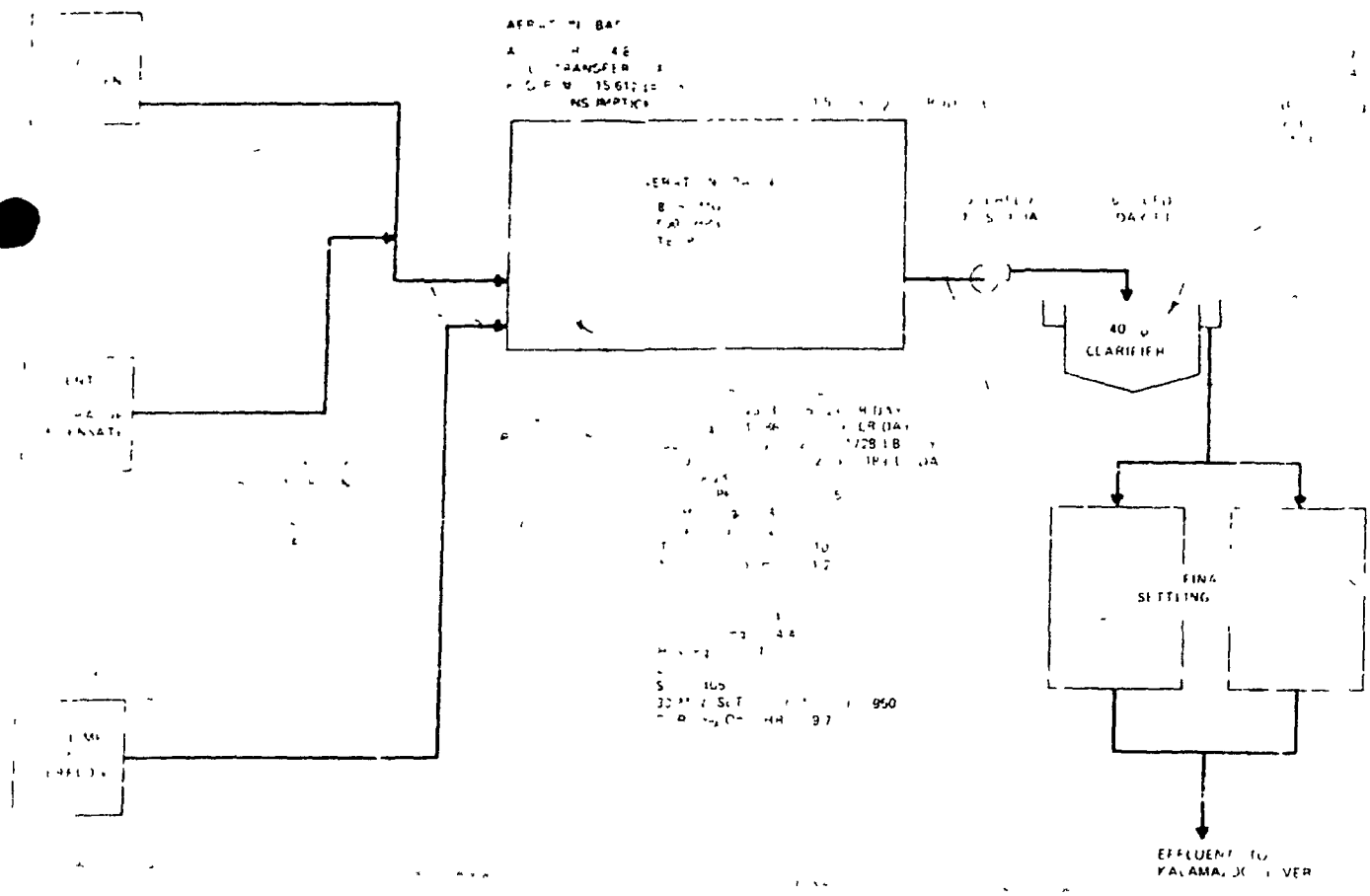

MEN-HA CORPORATION
TSEGO MILL

RESULTS FROM INTENSIVE TESTING PROGRAM

MEN03999

D. C. Shepard
E. C. Manders
Bruce Buchanan
Mac Deason

memo / MENASHA CORPORATION

THE FILES

DATE: June 15, 1977

SUBJECT: Meeting Minutes

FROM: W. ALLAN SCHENCK

Meeting with Michigan DNR June 13, 1977.

On June 13, we met with representatives of Michigan DNR in the Grand Rapids office to present our white paper. This detailed account prepared by Bruce Buchanan and his department outlined with documentation the problems we have had with our effluent treating at Otsego mill and the steps we have taken to solve these problems. We wanted to show the plant is capable of meeting permit limits and that the fact it has not since the fall of 1976 was due to a biological problem for which there is at present no known solution.

Present for the State were Chester Harvey, District Engineer, Carl Zollner, Regional Engineer, Roger Prisby, Project Engineer, and finally Wayne Denniston, Assistant Division Chief for Enforcement. Mr. Zollner and Mr. Denniston are based in Lansing.

For Menasha were Jim Adams, Bruce Buchanan and Allan Schenck.

Mr. Harvey opened the meeting by restating that EPA in the State of Michigan had a list of 20 major dischargers who were not expected to meet permit limits or had a good possibility of not meeting permit limits by July 1, 1977. The EPA had requested the State to take a look at each corporation on this list with the objective of imposing stiff penalties particularly if there was any evidence that the Company had not showed good faith efforts to accomplish the intent of the law. He said we were on this list.

The meeting then went to our white paper and the summary text of 2+ pages was read by Bruce Buchanan.

At the end Mr. Harvey summarized by saying all the things we planned to do would, with one minor exception, be completed after start-up on July 11. He said he thought we had done all we possibly could. He said he thought the reduction of volume was a good step and he said he thought the changes planned to move the process load from 002 outfall to 003 outfall was a sound step. He also said he thought the use of hydrogen peroxide was worth investigating.

Mr. Denniston said his office would advise EPA that as a result of this meeting it was their opinion that we would be in compliance.

In response to questioning by us as to procedure in the event we are not in compliance because we are not certain we can control filamentous, they would first send a letter which would be a notice of non-compliance. This would ask for cause, corrective action, and time table. If satisfactory results do not occur then the notice of violation is issued and this is done in conjunction with the Attorney Generals office. They would have a meeting at that time again seeking a solution to the problem which would be written up

6037

and binding. They did not want to discuss this subject beyond this point but did indicate they felt particularly with a discharger who is not acting in good faith there were several possible courses of action. Among them would be fines, withdrawal of permit which would mean forcing shutdown, ordered to reduce operation, and a consent of decree. Again it seems that the latter would be their preferred route.

Mr. Harvey said what if the bugs get out of control and it is demonstrated there is no known solution. Mr. Denniston said in a black and white proven case one course of action would be request for permit limit review and loosening. As a practical matter, this would run into serious problems on the Kalamazoo River where permits are presumably based on the assimilative capacity of the stream.

There was extensive discussion on phenol. They understand our predicament. We were able to tell them we felt we had a trade with Koppers definitely firmed up. This should solve the problem. Additional help would be longer detention time as well as the transfer of major load from 002 to 003. They did not know for certain the source of our limit of .3 ppm. They thought it was based on a literature survey when permits were being issued and that it was based on an odor and taste limitation rather than toxicity. They said it was used for other paper mills in the state as well as some other industries. Parke Davis at Hollands on Lake Macatawah has a tighter limit.

The survey made on the Kalamazoo River in the summer of 1976 has not been published. They did say that phenols were running 6 to 19 parts per billion. They have set 3 parts per billion in the Detroit River and there is some talk of going to 1 part per billion. The 1976 survey reportedly detected an increase in the level in the river occurring below our outfall.

As a result of their recommendations, the following changes will be made to improve operation or gain additional data.

1. Develop a continuous rather than batch addition of the phosphate nutrient.

2. Winterize the scalping screen so it can be run next winter without question.

3. Analyze effluent going to the aeration pond once a week for phenol. This would be continued until we establish the phenol level is in compliance.

4. We will expedite delivery of the chemical addition pump for the ash lime pond so this can be in operation when we start up on July 11.

5. At the request of Roger Prisby, we will endeavor to start hauling sludge out in the county before our new equipment comes in.

In response to our request, they listed Professor Eckenfelter, Professor Pipes, and the consulting firm of Metcalfe and Eddy as consultants who may be able to help us. We have been in contact with Eckenfelter and he cannot take on additional work. Pipes worked with us on the philamentus problem in 1976 but gave no real concrete help.

MEN04001

In response to Bruce Buchanan's request, they advised that work is proceeding on the new water quality standards. These will probably be in effect by the end of the year and will serve as the basis for reissued permits after that time. After several hearings and rewrites the back bone is still a broad brush increase of 1 part per million from present levels. They admitted they did not know what affect this would have on future permits for different streams and particularly the Kalamazoo River. This is the very reason we submitted written testimony opposing this approach. This meeting was not the time or place to argue this point.

WAS:rp

MEN04002

STATE OF MICHIGAN

WILLIAM G. MILLIKEN, Governor

DEPARTMENT OF NATURAL RESOURCES

HOWARD A. TANNER, Director

WATER QUALITY DIVISION
State of Michigan Office Building
350 Ottawa Avenue, N. W.
Grand Rapids, Michigan 49503

June 17, 1977

Mr. James Adams, General Manager
Otsego Paper Board Division
Menasha Corporation
Otsego, Michigan 49078

Dear Mr. Adams:

On June 13, 1977, members of our staff met with you, Bruce Buchanan, and Allan Schenck to review the status of the wastewater treatment facilities, operations, and planned alterations designed to meet July 1, 1977 performance. Representing the Water Quality Division were Karl Zollner, Wayne Denniston, Roger Przybysz, and Chester Harvey.

Your oxidation lagoon system is the heart of the best practical treatment provided by the company. Our initial review was of the submitted statement and supporting documents and data which outlined the efforts and procedures designed to meet the July 1 goals.

The present system has shown it is capable of meeting permit conditions under normal circumstances. However, there has been an occasional infestation of a "biological organism" that upsets the normal removal of B.O.D. and suspended solids from the raw wastes.

Phenol levels in the effluent has been a serious problem, but basically, have been traced to the sulfite supply. Arrangements have been made to substitute sulfite sources to control the quality in the original pulping chemical. This substitution has been initiated and should show improvement in the July record.

During the normal July shutdown, the mill alterations to the mill white water system will establish additional reuses and piping changes to provide for a substantial reduction in process wastewater. In addition, process waste in 002 will be diverted to the oxidation lagoon system. Therefore, a direct reduction in the load from 002 will take place and the expected increase in oxidation will improve the overall performance. Upon completion, it is anticipated the total reduction in process wastewater will approach 50%.

6040

MEN04003

Chemical additives will be used in the ash-lime pond for improved settling prior to entering the oxidation lagoon This is expected to reduce the colloidal nature of this waste stream.

The scalping screens which are plagued with winter time operation, should be modified to the extent that they can be utilized on a year-round basis.

The above improvements will be instituted during the "July 4th" shutdown, and since the resident time in the oxidation lagoon and clarifier will be increased by a substantial margin, stable daily effluent will not be attained until four to six weeks after going on the line.

An early evaluation of the effluent improvement should be accomplished after stable conditions have been established. Therefore, we are asking for a special report by mid-September on effluent quality.

If it is at all possible, we recommend early use of the base farm site for sludge application. If the present site could be alleviated, it would provide additional time and resting and restoring. You were requested to assess this possibility and respond to us. This response and evaluation should be given to us by July 10, 1977.

We concur in your program to meet the July 1, 1977 goals.

Very truly yours,

WATER QUALITY DIVISION

Chester Harvey

Chester Harvey,
District Engineer

CH/mc
cc: Wayne Denniston
Karl Zoline

604!

MEN04004

memo / MENASHA CORPORATION

Notes for File

DATE: 21 June 77

SUBJECT Minutes of Meeting 13 June 77 with Department of Natural Resources Water Resources Commission, Grand Rapids, MI

FROM: Bruce Buchanan

Present were Roger Przybysz, Chet Harvey, Wayne Dennisten, Carl Zolner, Allan Schenck, Jim Adams, Bruce Buchanan

Meeting was convened at 10:00 AM. in Chet Harvey's office in Grand Rapids. The purpose of the meeting was to review the waste treatment operations white paper prepared for the Otsego Paperboard Div., Menasha Corporation. Chet lead off by reviewing briefly the list of 20 major discharges in the State. They are broken into three principle categories:

1) Those that definitely will not meet specs July 1.
2) Those that might meet specs July 1.
3) Those that will meet specs July 1.

We are on that major discharge list and are in category 2.

The preface to the white paper was read and various specific points discussed.

Mr. Wayne Dennisten of the Enforcement Branch of the DNR elucidated the precedures that would be taken against those facilities that did not meet compliance schedule. Although the official final compliance date is July 1, there will be approximately a two week grace period before enforcement procedures will be initiated. These procedures would be initiated with a notice non-compliance for the particular parameter or parameters not within specifications. This notice will most likely be followed by an informal gathering of Company and State Officials to discuss and gain additional insight into the problem. If the non-compliance continued, a notice of violation would be issued and a show-cause hearing with either the staff of the commission would be scheduled. If the violation could not be rectified, the enforcement action would proceed with a revocation of the NPDES permit. At that point the Company could either inter into a consent order with the DNR in which corrective procedures and time tables would be detailed or the facility would be shut down.

My interpretation of the DNR's position with reference to Menasha at Otsego, was that the details of our waste treatment history showed we had made a "Good Faith" effort to procede with overall improvements of waste water quality and specifically to act in response to the crisis situations that have developed since August of last year. The history of monthly average data showed that with the exception of the unusual

6042

and unnatural conditions that developed during the last eleven months, the waste treatment system is capable of meeting post July 77 compliance standards. The DNR was also informed that it was due to specifically to these difficulties, that plans to continue improvments of waste water quality we pushed significally anead in order to provide some additional margin of safety with respect of upset conditions such as have recently occurred.

A letter will be sent to the State approximately July 10 confirming installation of equipment scheduled for completion during the July 4-9 shutdown. Should the filamentous or gel forming bacteria problems continue post July, I feel that the DNR will look upon this as a non-compliance condition not warranting penalty. The DNR people appeared convenienced that every feasible effort is being made to solve these problems and that continued efforts to resolve this difficult problem and not penalties is what is needed. It was also agreed that a period of 4-8 weeks would be needed for the system to stabilize under the new condition post July 4-9 shutdown.

Phenols were discussed quite extensively and it was found that perhaps two or three other paper mills in Michigan have this same 0.3 PPM discharge specification. The phenols specification is set principally to control taste and odor of fish flesh as a result of phenols and chlorinated phenols. The specifications for waters protected for public drinking supply is 3 PPB in receiving waters outside of the mixing zone. Last years survey showed the Kalamazoo River above Menasha to be a 7.3 PPB and below Menasha, 18 PPB. This indicates that a 7 year 10 day low flow phenols level could reach 40 PPB. The Kalamazoo River however, is not a protected public water supply. It was decided in order follow the progress of the Koppers substitution for Reichhold sulfite, analysis of the aeration pond influent and effluent would be made once a week for phenols concentrations. This would allow the history of the concentration decrease to be properly documented.

Chet Harvey again brought up the question of continuous phosphorous nutrient feed. Chet was informed that we have been pursuing this suggestion, and that several proposals are currently being evaluated and plans are to choose the best one and proceed.

As the meeting was brought to a close, the DNR people were asked if they had any additional consultants they might suggest contacting with regard to the current operational difficulties. Chet suggested Metcalf and Eddie of Boston and Roy F. Weston as people we might reference. The meeting was brought to a close with improved understanding of positions on both sides.

cc: J. Adams
A. Brindley

6043

MEN04006

memo / MENASHA CORPORATION

TO: Jim Adams

DATE: 30 December 1977

SUBJECT: Planned Work on Phenol and Phosphorus Questions - Violations Notice, Show Cause Hearing

FROM: Bruce Buchanan BB

On 11/30/77, you, the writer and Chet Harvey, District DNR Engineer, met to discuss plans for resolving those points brought up at the Show Cause Hearing which were turned over to staff to be worked out with the company. The two points requiring action on our part are phosphorus requirements for the aeration basin and the resultant discharge permit levels for 003 and phenol interference problem at 002 principally, but potentially at 003.

Phosphorus data is currently being determined through weekly samplings of the effluent at 003 for analysis of both total and ortho phosphorus. When sufficient data is obtained, interpretation will allow recommendations for minimal phosphorus discharge specifications to be set. Data gathering base period should be at least three months in length. This testing program is underway.

On the question of phenols. I have been in conversation with T. K. Woo, Head of the State DNR Analytical Laboratories. Arrangements have been made to meet him in Lansing on 5 January 1978. This meeting will serve to inform state laboratory people of the analytical problem and allow them to assist and participate in resolution of the methodology problem. I have also been in conversation with Allan Schenck concerning methods for interference removal and Allan will be providing assistance with regard to interference removal techniques. Allan will also be contacting the Institute of Paper Chemistry to incorporate their thinking.

Resolution of the methodology question could be a relatively long term developmental program. I plan to be keeping the DNR staff apprised of work in progress.

BB/k

cc: Art Brindley
Allan Schenck

6066

MEN04007

BODMAN LONGLEY & DAHLING

[illegible]

[illegible] 46[illegible]

[illegible] 259

[illegible] COUNTY OFFICE
[illegible] BEAVER ROAD
[illegible] 2020
[illegible] MICHIGAN 48084
[illegible]

JOSEPH A. SULLIVAN
COUNSEL

HENRY E. BODMAN
874 963
[illegible] LONGLEY
[illegible] 984
[illegible] BOGLE
[illegible] 977

March 8, 1978

[illegible] Zigger
[illegible] Division
[illegible]

[illegible] receipt of the [illegible] March 3, 19[illegible] from Director Tanner and Mr. Freeman regarding [illegible] of the Menasha [illegible] PES Permit [illegible] out-of-court settlement [illegible] Department in the amount of $10,000

[illegible] to receipt of that letter, you and I discussed additional [illegible] which [illegible] bearing on the proposed settlement and we [illegible] agreed that you [illegible] engage in a further review of that information [illegible] if the Department's settlement proposal may be affected by the same

[illegible] is our further understanding that, in light of this additional study by [illegible] Department, response to your settlement proposal shall be delayed until [illegible] 31, 1978

[illegible] you for your attention and consideration

Yours very truly,

Herold McC. Deason

[illegible]/rcl
[illegible] Stewart Freeman, Esq.
James Adams

6067

MEN04008

STATE OF MICHIGAN

NATURAL RESOURCES COMMISSION
CARL T. JOHNSON
F. M. LAITALA
DEAN PRIDGEON
MARY F. SNELL
HARRY H. WHITELEY
JOAN L. WOLFE
CHARLES G. YOUNGLOVE

WILLIAM G. MILLIKEN, Governor

DEPARTMENT OF NATURAL RESOURCES

STEVENS T. MASON BUILDING, BOX 30028, LANSING, MICHIGAN 48909
HOWARD A. TANNER, Director

March 3, 1978

Certified Mail

Menasha Corporation
320 North Farmer Street
Otsego, Michigan 49078

Attn: Mr. James Adams, General Manager

Gentlemen:

On February 28, 1974, you were issued National Pollutant Discharge Elimination System (NPDES) permit No. MI 0003824. This permit was issued in accordance with the Federal Water Pollution Control Act Amendments of 1972 (P.L. 92-500) and the Michigan Water Resources Commission Act (Act 245, P.A. 1929, as amended). In accordance with the aforementioned acts, this permit restricted the quality of your wastewater discharge to the surface waters of the State of Michigan and contained a schedule for the installation of necessary additional wastewater treatment facilities. On July 5, 1977, you were issued a Notice of Violation and Order to Show Cause for failing to meet the terms and conditions of the permit. In accordance with the terms of that Notice of Violation, you were to appear before staff members of the Michigan Department of Natural Resources to show cause, if any, why the State of Michigan should not revoke your NPDES permit and/or initiate litigation for the full penalties provided for under the law.

A thorough review has been made of your performance under the terms and conditions of your NPDES permit and of the information supplied by you at the Show Cause Hearing. Based upon this review, the Michigan Department of Natural Resources and the Attorney General of the State of Michigan have determined that you have violated your NPDES permit, P.L. 92-500 and Act 245, and that said violations subject your facility to the penalty provisions of Section 10 of Act 245.

Under the Act, the court of appropriate jurisdiction may impose civil penalties of up to $10,000 per day of violation. Based on a full assessment of the facts, however, and in an effort to avoid lengthy litigation, it may be appropriate to settle the above violation out of court. Although the payments made in an out-of-court settlement may be considerably less than the maximum penalty under the law, the amount must fully mitigate any monetary benefit realized by the company through noncompliance with the permit conditions.

MICHIGAN

525 10 76

6068

MEN04009

After careful consideration of all available facts, and after consultation among representatives of the Department, the Attorney General, and the U.S. EPA, it has been determined that a fair and equitable out-of-court settlement of this violation is possible upon your payment of a penalty in the amount of $10,000. This offer for settlement is predicated, of course, on the fact that the Menasha Corporation did gain compliance with the final effluent limitations contained in NPDES permit No. MI 0003824 on August 18, 1977.

If an out-of-court settlement for $10,000 is acceptable to you, please notify us in writing by March 17, 1978.

Please be advised that if settlement is not reached by that date, the State of Michigan will have no alternative but to proceed with further enforcement action which may include revocation of your NPDES permit and/or initiation of litigation for the full penalties provided for under the law.

Sincerely,

Howard A. Tanner

Howard A. Tanner
Director

Stewart H. Freeman

Stewart H. Freeman
Assistant Attorney General

6669

MEN04010

Bruce
Info

BODMAN, LONGLEY & DAHLING

34TH FLOOR 100 RENAISSANCE CENTER

DETROIT MICHIGAN 48243

(313) 259 7777

OAKLAND COUNTY OFFICE
75 WEST BIG BEAVER ROAD
SUITE 2020
TROY MICHIGAN 48084
(313) 362 2110

JOSEPH A SULLIVAN
COUNSEL

HENRY F BODMAN
1874 1963
CLIFFORD B LONGLEY
1888 1954
HENRY C BOGLE
1892 1977

March 30, 1978

Mr. Paul Zugger
Water Quality Division
Department of Natural Resources
Mason Building
Lansing, MI 48909

Re Menasha Corporation

Dear Mr. Zugger.

This will confirm our telephone conversation of today regarding the date for Menasha's response to your proposed settlement offer.

It is our mutual understanding that the EPA regional authorities are continuing their review of supplemental information which you recently forwarded to them, and that no final conclusions or other recommendations on this matter have been reached by them. In view of this, we have agreed to delay any response to your letter until such time as you have received a response from EPA and have contacted me.

It is my understanding that you will be contacting me with the status of this matter at some point no later than April 14, 1978.

Best regards.

Yours very truly,

Herold McC. Deason

HMD/kcl

cc: Stewart Freeman
Jim Adams ✓

6670

MEN04011

memo / MENASHA CORPORATION

TO: Jim Adams

DATE: June , 1978

SUBJECT: Meeting with Grand Rapids DNR
June 8, 1978

FROM: Bruce Buchanan

cc: A. Brindley, J. Blauwkamp, G. Roys, R. Reames
A. Schenck

In attendance were Chet Harvey, Roger Przybysz and the writer. The following principle items were covered;

1. Excursions in phosphorus compliance
2. Excursions in phenols compliance
3. Temperature limit on outfall 004
4. pH limit on outfall 003
5. Permitting and identifying river water discharge outfall above damm
6. NPDES permit renewal

Since the show cause hearing last year, analytical work has been done on total and orthophosphorus levels in effluent from the aerated stabilization basin. These results have been statistically analyzed and a good relationship has been demonstrated between suspended solids and total phosphorus minus orthophosphate. See attached graph. Based on interpretation of this data, it was decided that the phosphorus specification should be amended by substituting orthorphosphorus or soluble phosphorus for the total phosphorus spec. This would allow for adequate control of soluble or available phosphorus and not restrain suspended solids discharges through unnecessary restrictions in phosphorus associated with those biological solids.

Staff agreed to support a recommendation for elimination of phenol monitoring requirements. This support was conditional upon anaytical backup demonstrating lignin interference as the principal source of apparent phenols. Both Prein and Newhof in Grand Rapids and Vulcan labs. in Pontiac are currently working on the above.

Roger Przybysz confirmed that items 3, 4 and 5 will be included on the renewed permit.

Within the next 54 days, a letter should be transmitted to Bob Courchaine, formally requesting an NPDES permit renewal. The law requires that the company request permit renewal 180 days prior to permit expiration. Our existing permit expires January 31, 1979.

I questioned Roger and Chet on the State of Michigan Water Quality Criteria changes.

They have no feel at this time for what the impact will be on our reach of the Kalamazoo River and whether or this will affect BPCTCA standards. They did state ver, that even though BPCTCA standards will be relaxed for some industries in some cases, this will not be the case on water quality limited streams. Infact, they expect some reduction (not quantified as yet) in discharge specifications as a result of the implementation of the new Water Quality Criteria Standards.

This was a good working session with a realistic attitude predominating. Roger indicated that the new permits will be going through an extremely intensive and extensive review process at numerous levels throughout the DNR and EPA. Whether or not the agreements in principle arrived at this staff level meeting and whether or not a realistic and objective attitude will continue to prevail at subsequent levels is questionable

MEN04013

MENASHA CORPORATION

June 27, 1978

Mr Robert J. Courchaine
Executive Secretary
Department of Natural Resources
Water Resources Commission
Stevens T. Mason Building
Lansing, MI 48926

Dear Mr. Courchaine,

On June 14 and June 16 the Otsego Paperboard Division of Menasha Corporation exceeded the daily maximum B.O.D. specification. On June 14, 4434 lbs. of B.O.D. were discharged and on June 16, 4210 lbs. were discharged. On June 16 and 17 we exceeded the suspended solids limits. On June 16, 5800 lbs. of suspended solids were discharged and on June 17, 3247 lbs. were discharged. Since the 18th of June the waste treatment system has been operating with compliance specifications.

The high B.O.D and suspended solids discharges were due to an upset in our waste treatment system. Our data indicates that the upset in the waste treatment system was caused by a spill of spent liquor to the waste treatment system. The liquor spill most likely occurred in the area of our Spent Liquor Incinerator. We are currently engineering a means of isolating the U drains in areas where liquor can be spilled from the effluent to the waste treatment system.

Sincerely,

Menasha Corporation

John R. Blauwkamp

John R. Blauwkamp
Process Engineer /
Bruce Buchanan,
Technical Director

cc: J. Adams
C. Harvey

OTSEGO PAPERBOARD MILL FARMER STREET • OTSEGO, MICHIGAN 49078 • PHONE 616 692 6141

6014

MEN04014

MENASHA CORPORATION

June 30, 1978

Mr. Robert J. Courchaine
Executive Secretary
Department of Natural Resources
Water Resources Commission
Stevens T. Mason Building
Lansing, MI 48926

Dear Mr. Courchaine,

On June 14 and June 16 the Otsego Paperboard Division of Menasha Corporation exceeded the daily maximum B.O.D. specification. On June 14, 4434 lbs. of B.O.D. were discharged and on June 16, 4310 lbs. were discharged. On June 16 and 17 we exceeded the suspended solids limits. On June 16, 3800 lbs. of suspended solids were discharged and on June 17, 3247 lbs. were discharged. Since the 19th of June the waste treatment system has been operating within compliance specifications.

The high B.O.D. and suspended solids discharges mentioned above were due to an upset in our waste treatment system. Our data indicates that the upset in the waste treatment system was caused by a spill of spent liquor to the waste treatment system. The liquor spill most likely occurred in the area of our spent liquor incinerator. We are currently engineering a means of isolating the U drains in areas where liquor can be spilled. This should prevent spills from getting into the effluent to the waste treatment system.

On June 18th we exceeded the daily maximum B.O.D. specification and 3760 lbs. of B.O.D. were discharged. In this case the problem resulted from higher than normal discharge of process water into outfall 002. Immediate corrective action was taken and we returned to compliance status the next day. The installation of part of the equipment for protection of this outfall was completed June 27. The installation of the rest of the protective equipment should be completed by July 14.

Sincerely,

Menasha Corporation

John R. Blauwkamp, Process Engineer
for Bruce Buchanan, Technical
Superintendent

cc: J. Adams
C. Harvey

6075

OTSEGO PAPERBOARD MILL FARMER STREET • OTSEGO, MICHIGAN 49078 • PHONE 616 692 6141

MEN04015

MENASHA CORPORATION

January 19, 1979

Mr. Roger Przybysz
Water Quality Specialist
State Office Building
350 Ottawa Avenue, N.W.
Grand Rapids, MI 49503

In response to your December 29 letter reviewing the September 18 and 19 "Report of an Industrial Waste Water Survey", please record the following responses to questions raised. Paragraph III, comments on the higher values for suspended and settleable solids reported by the State on split samples obtained at outfall 030171. Table IV shows that Menasha reported 148 milligrams per liter of suspended solids and 0 milligrams per liter settleable solids while the Environmental Protection Bureau reported 330 milligrams per liter and 100 milligrams per liter respectively. There are at least 2 probable contributions to this difference. The first is the size of the filter paper used and the loading associated with that filter paper size. Standard Methods for the Examination of Water and Waste Water, 14th addition 1975, section 208D specifies the filtration of 100 milliliters of sample or not more than 200 milligrams total nonfilterable residue. If the analyst attempts to filter anywhere near this quantity of mass or volume on a standard 2.4 centimeter glass fiber paper, extremely erroneous results will be encountered. Due to the gelatinous nature of this sludge, we are now using 5.5 centimeter glass fiber filter paper and loading to no greater than 5 milligrams per square centimeter. The Standard Methods procedure allows loading to 44 milligrams per square centimeter. This loading level is not applicable to hydrophyllic paper mill solids. There is a significant quantity of disolved organic solids present in the discharge that will become entrapped if loading is allowed to approach anywhere near those levels recommended by Standard Methods. As a result, washing will be insufficient to clear the sample pad of dissolved matter. This problem is applicable to both the suspended solids and settleable solids data. Secondly, if a several hour or more delay occurrs between sampling and the time of analysis, floculation and bacterial growth can occur, resulting in an increase in reported

OTSEGO PAPERBOARD MILL FARMER STREET • OTSEGO, MICHIGAN 49078 • PHONE 616-692-614

6089

test results. If the sample can not be analyzed immediately, it should be stored at 4°C to prevent volatilation and growth.

Paragraph IV discusses the free extractable oil and grease values obtained from outfall 030171 on two different graph samples. The 100 and 120 milligram per liter results will be found to be associated with resins, fatty acids and fatty acid esters generated in the pulping process. Identification of these components can be confirmed by infrared or GLC-Mass Spec. analysis.

If there are any questions or comments, please advise.

Best regards,

Menasha Corporation

Bruce Buchanan

Bruce Buchanan
Technical Director

cc: J. Adams
Chet Harvey

MB.kl

6090

MEN04017

memo / MENASHA CORPORATION

TO: J.F. Adams

DATE: March 1979

SUBJECT: Recent Waste Treatment Difficulties Summary

FROM: Bruce Buchanan

The purpose of this review is to as clearly as possible illusidate the cause of recent waste treatment difficulties and to outline actionable alternatives to noncompliance. Before preceeding, as a general guideline, the following conditions should be considered as upper limits for compliance; at 500,000 gallons per day, maximum B.O.D. concentration is 900 ppm. and maximum suspended solids concentration is 750 ppm., at 700,000 g/d the respective numbers are 650 and 550.

The data page data for column 1, 2, 3 and 4 are for outfall 003 at the weir. Column 5 data is influent B.O.D. from the sampler at the surge pit. Additionally, a number of data points have been asterisked. The asterisks keynote points of significant change.

The increases in discharge B.O.D. and suspended solids concentrations as well as the increase in influent B.O.D. concentration during the second and third weeks in October seem to correlate with respect to B.O.D.. The suspended solids increase correlated with ash lime overflow to the aeration pond.

The significant increase in both B.O.D. and suspended solids at discharge during the third week of November again was associated with an increase in influent B.O.D. loading but not a particularly significant one. During the third week of November, aeration pond temperatures dropped significantly from the high fifties to the low fifties and this may have been a contributing factor. The ash lime system was still intermitantly overflowing to the aeration pond.

The quantum jump in B.O.D. values during the second and third weeks of December closely parallelled the increases in B.O.D. loading to the pond during that period. The increase is directly attributable to the loss of No. 1 D.K.P. press during the second week and the increased organic load associated with single pressing. During December, we also innoculated the aeration pond with Kalamazoo Municipal Sludge. This was done during the 12/12 through 12/21 period. The ash lime E.A. was complete the week of 12-13, but malfunctions caused overflows to continue thru the end of the month..

After shutdown, the effect of additional retention time could be seen in the dramatic reduction in the B.O.D. concentrations. The No. 1 D.K.P. press was also put back on line during the second week of January. One very negative factor during

6091

MEN04018

[illegible] ary was the initial high flows of water tha[illegible] decrease [illegible] week [illegible] ghout [illegible] anuary as more [illegible] efforts were placed in this direction. However, [illegible] [illegible] entrations decrea[illegible], suspended solids concentrations increased throughout the month. [illegible] is chang[illegible] maybe partially attributable to the very low aeration pond temperatures [illegible] other undefin[illegible] factors. The ash lime system be a[illegible] functioning normally in mid [illegible]

[illegible] most significant change in February occurred [illegible] third week when [illegible] values increased almost tw[illegible] fold. [illegible] result was the impact of liquor spills from the filtrate tank and the impact of using liquor for chemical make-up. Suspended solids are colloidally dispersed and are nonsettleable although the weekly average data on the data table does not show it, the last several days ha[illegible] shown an encouraging [illegible] towards reduct[illegible] in suspended solids concentrations.

[illegible] order t[illegible] insure compliance with State and Federal Standards, we must look at some of the following alternatives [illegible] our [illegible] method [illegible] 1) [illegible] pulp, 2) [illegible] filtrate tank [illegible] [illegible] complete the [illegible] [illegible] for [illegible] 4) install the [illegible] and engineered SLI drain spill diversion [illegible] 5) install the engineered and work ordered SLI [illegible] switch, 6) utilize [illegible] water for chemical [illegible] until liquor inventories again become critical, 7) [illegible] water flows as low as possible, 8) improve Impco [illegible] [illegible] chemical solids [illegible] [illegible], $500 [illegible], 10) inoculate the [illegible] with [illegible] water, 11) expand the size [illegible] the [illegible] system or otherwise modif[illegible] [illegible] B[illegible] [illegible] handling capacity.

[illegible] are aware we are building another long term history [illegible] which may someday may be addressed by [illegible] of the regulatory agencies. This time around, it might [illegible] be a really significant enforcement action and [illegible] should meet to discuss and review.

department heads

Art suggests doubling NH_3 feed - don't know what may happen
- art says odor of pond has changed to more "typical" → thinks it may be a good sign
Currently nutrients at 1#/100# int. BOD for NH_3
006#/100# " " " PO_4

6092

DATA TABLE

OCTOBER

[illegible]	B.O.D.	Suspended Solids	Flow	Total Solids	Influent B.O.D.
[illegible]	2	3	700	.69	36
	2	5	700	.78	36
	4*	6	600	.95*	43*
[illegible]	4	5	600	1.0	46

NOVEMBER

[illegible]	B.O.D.	Suspended Solids	Flow	Total Solids	Influent B.O.D.
	3	5	500	.88	38
	3	4	600	.84	38
	5*	7*	600	.81	[illegible]*
[illegible]	5	7	700	.86	18

DECEMBER

[illegible]	B.O.D.	Suspended Solids	Flow	Total Solids	Influent B.O.D.
	[illegible]		[illegible]	81	43
	[illegible]*	[illegible]	[illegible]	90*	7*
	25*	6	700	1.0*	[illegible]1
[illegible]	[illegible]	5	[illegible]	1.0	[illegible]

JANUARY

[illegible]	B.O.D.	Suspended Solids	Flow	Total Solids	Influent B.O.D.
	10	[illegible]	400	1.0	36
	12	10*	700	1.2	54*
	8*	1	500	1.1	53
	6	11	400	1.0	54

FEBRUARY

[illegible]	B.O.D.	Suspended Solids	Flow	Total Solids	Influent B.O.D.
[illegible]	7	10	500	.95	5
[illegible]	5	12	500	.90	7
	14*	10	500	1.0*	[illegible]*
[illegible]	--	10	600	1.0*	--

Note

[illegible] B.O.D.'s and suspended solids in hundreds of parts per million [illegible] total solids in percent and flow in thousands of gallons per day.

All months divid[illegible] [illegible] .

6093

memo / MENASHA CORPORATION

TO: Notes for File

DATE: 9 Mar 1979

SUBJECT: Meeting to Discuss Waste Treatment Problems

FROM: Jim Adams

Meeting was held 3:00 P.M., March 8, 1979. Present were Bruce Buchanan, Steve Rosenthal, Al Coleman, Brian Gale, Russ Fisher, Bob Gulbranson, Larry Henseler, Art Brindley and Jim Adams.

Bruce reviewed events during the past three months leading to high BODs and suspendeds. In summary, the system has been overloaded by (1) malfunctions of the ash lime system, (2) too high a liquor load going into waste treatment, (3) too high liquid flows to waste treatment.

Various actions to return waste treatment to its normal operation were discussed.

1. Fix the float on the ash lime system to sound the alarm in the boiler house. Purchasing will seek floating mercury switch; Engineering will repair system.

2. Boiler house operators will be educated to take immediate action if ash lime pond overflows (Steve Rosenthal).

3. Larger overflow line will be installed from filtrate tank to liquor pond. Action by Engineering.

4. Final work will be made to hook up the digester spill recovery system. Engineering anticipates this should be complete by March 15.

5. We will return to using white water for liquor makeup following completion of the sulfite trial on Saturday. Action by Production.

6. Renewed efforts will be made to cut water flows from the mill. Action by Production.

7. Spill system for SLI will be completed. Action Steve Rosenthal.

8. It was agreed that operation of the Impco is poor due to variable consistency of kraft sweetner. System will be taken down for

6094

memo / MENASHA CORPORATION

TO: Notes for File

DATE: 9 M 1979

SUBJECT: Meeting to Discuss Waste Treatment Problems

FROM: Jim Adams

inspection twice weekly. Action by Production.

9. Advantage will be taken of the Easter shut-down to dilute the aeration pond with river water. Action: Technical.

10. A low cost catch box will be made for the solids discharge at the scalping screens to determine if there is material that can be removed. Project will be coordinated by Bruce with assistance if necessary from Production and Maintenance.

11. We will consider ammonia treatment of the aeration pond in two weeks time if the BODs are not coming under control.

JSA/k

cc: Those present

memo / MENASHA CORPORATION

TO: Notes for File

DATE: " , 1979

SUBJECT: Waste Treatment Difficulties Review Meeting of 3/8/79.

FROM: Bruce Buchanan

cc: L. Henseler, Steve Rosenthal, Jim Adams, Brian Gale, R. Fisher, B. Gulbranson, Al Coleman and Art Brindley

The meeting of the above was held in the afternoon of 3/8/79 to discuss action items to improve waste treatment performance. Re: my memo of March 1, 1979 to Jim Adams and department heads.

The following actions were decided upon;

1. At the completion of the sulfite trial on Saturday, March 10, 1979, chemical make-up will utilize white water instead of liquor. Action: Brian Gale

2. The filtrate tank overflow line will be increased from 4" to 8'. Action: Bob Gulbranson

3. The digester spill recovery sump system will be completed as soon as possible. Action: Bob Gulbranson

4. The SLI conductivity switch installation will be completed and made operational. Action: Steve Rosenthal

5. The SLI U-drain changes will be completed at Easter shutdown. Action: Bob Gulbranson

6. A new ash lime overflow alarm will be purchased and installed and operators will be educated as to the necessity of responding to this alarm. Action: Larry Henseler and Steve Rosenthal

7. Production will concentrate on minimizing fresh water use throughout the mill. Action: Brian Gale

8. The Impco Save-all will be shut down twice per week and thoroughly cleaned and inspected and operators will be made aware of the need for best performance. Action: Bob Gulbranson and Brian Gale

9. The Impco clearwell pump repairs and changes will be completed as soon as possible so that the Sinclair system and mill effluent can operate from the clearwell discharge. Action:

10. During the Easter shutdown, as time permits, river water will be added to the aeration pond to dilute and "freshen" the system. Action: Bruce Buchanan

6096

MEN04023

11. Some form of inexpensive, temporary side hill screen will be constructed to see if dewatering can be accomplished for the scalping screens overflow. Action: Price Buchanan

STATE OF MICH

MEN04024

NATURAL RESOURCES COMMISSION
[illegible] JOHNSON
[illegible] LA TALA
[illegible]
[illegible] FUSSELL
[illegible] H. WHITLEY
[illegible]
CHARLES G. YOUNGLOVE

WILLIAM G. MILLIKEN Governor

DEPARTMENT OF NATURAL RESOURCES

STEVENS T. MASON [illegible] BOX 30028 LANSING MICHIGAN 48909

HOWARD A. TANNER Director

May 19, 1978

Herold McC. Deason
Bodman, Longley & Dahling
34th Floor
100 Renaissance Center
Detroit, MI 48243

Re: Menasha Corporation
Otsego, MI

Dear Mr. Deason:

Attached is a copy of the response dated May 9, 1978 I received from Mr. Dale Bryson of the U.S. EPA Region V. The letter is self-explanatory. I will be completing the attached form and returning it to EPA for calculation of the penalities in accordiance with the procedures set forth in the Civil Penalty Policy dated April 11, 1978. I have also attached a copy of that policy.

I am still hopeful that this matter can be resolved outside of litigation. If you have any questions, please call.

Very truly yours,

WATER QUALITY DIVISION

Paul D. Zugger

Paul D. Zugger, Chief
NPDES Compliance Section

Pr./ej
cc: S. Freeman
R. Courchaine
J. Bails
S. Ross
C. Harvey

MICHIGAN

4777

MEN04025

BODMAN, LONGLEY & DAHLING
34TH FLOOR 100 RE[illegible] CENTER
DETROIT MICHIGAN 48243
(313) 259-[illegible]

OAKLAND COUNTY OFFICE
[illegible]

JOSEPH A. S[illegible]
COUNSEL

HENRY E. BODMAN
874-1963
CLIFFORD B. LONGLEY
[illegible]
HENRY [illegible]
[illegible]

March 8, 1978

Mr. Paul Zugger
Water Quality Division
Department of Natural Resources
Mason Building
Lansing, MI 48909

Re: Menasha Corporation

Dear Mr. Zugger:

We are counsel for Menasha Corporation and acknowledge receipt of the letter of March 3, 1978 from Director Tanner and Mr. Freeman regarding violations of the Menasha NPDES Permit and the out-of-court settlement proposed by the Department in the amount of $10,000.

Subsequent to receipt of that letter, you and I discussed additional information which may have a bearing on the proposed settlement and we have agreed that you will engage in a further review of that information to see if the Department's settlement proposal may be affected by the same.

It is our further understanding that, in light of this additional study by the Department, response to your settlement proposal shall be delayed until March 31, 1978.

Thank you for your attention and consideration.

Yours very truly,

Herold McC. Deason

HMD/kcl
cc: Stewart Freeman, Esq.
James Adams

4715

MEN04026

UNITED STATES
ENVIRONMENTAL PROTECTION AGENCY
REGION V
230 SOUTH DEARBORN ST
CHICAGO ILLINOIS 60604

Mr. Paul D. Zugger, Chief
NPDES Compliance Section
Michigan Department of Natural Resources
Post Office Box 30028
Lansing, Michigan 48909

MAY 1978

Dear Mr. Zugger:

After review of the Menasha Corporation waste treatment operations report forwarded by your office on March 10, 1978, the United States Environmental Protection Agency (U.S. EPA) has determined that a civil penalty is appropriate for violation of the final effluent limitation dates in their NPDES permit.

The U.S. EPA Civil Penalty Policy of April 11, 1978, states that in the determination of an appropriate penalty, the period of violation should begin with the earliest provable date of violation and continue until the violator has installed and operated the required equipment, made the required process changes and thus brought itself into compliance. The Menasha Corporation was out of compliance with final effluent limits for 26 months, from July 1, 1975, to September 2, 1977. During this noncompliance period, acidification equipment was installed and several process changes were initiated to reduce the hydraulic and organic loads to the wastewater treatment plant.

The proposed settlement amount of $10,000 for Menasha Corporation was calculated using the formula presented in Mr. Legro's memo of June 3, 1977. This method is no longer acceptable since all penalties must now be determined in accordance with the procedures set forth in the April 11, 1978, Civil Penalty Policy.

A form, summarizing the data required for each case, has been forwarded to the MDNR. This form is to be completed for each case and forwarded to this office. We will then assure that the projected penalty is considered by the national penalty panel and inform you of their findings. We will be happy to assist you in completing the required form or in calculating the appropriate penalty.

As you requested, the Menasha Corporation waste treatment operations report is being returned to you with this letter. If you have any questions regarding Menasha, please contact Mr. Jim Pankanin of my staff at (312) 353-2110.

Very truly yours,

Dale S. Bryson

Dale S. Bryson, Chief
Water & Pesticides Enforcement Branch

RECEIVED
MAY 12 1978
Water Qual. Control

Enclosure

4778

MEN04027

cc: Mr. Jack Betts, Chief
Environmental Enforcement Division, NDNR

4779

MEN04028

UNITED STATES ENVIRONMENTAL PROTECTION AGENCY
REGION V

April 24, 1978

RO-ED-78-A-12a
RO-ED-78-A-14a

Civil Penalty Evaluation Sheet

James O. McDonald, Director
Enforcement Division

TO See Below

Attached is the Civil Penalty Evaluation Sheet that should have been included on the attachment to one of the memoranda that was contained in our earlier RO-ED on civil penalties (RO-ED-78-A-14 and RO-ED-78-A-14 dated April 19, 1978). Headquarters neglected to attach this to that memorandum, so I am issuing this supplemental RO-ED for your information. The attached Evaluation Sheet is required to be used on all future civil penalty evaluations and any reevaluations that take place on past litigation reports. By a copy of this RO-ED, I am asking Dave Kee and Dale Bryson to follow up with their counterparts in each of our States to insure that this Evaluation Sheet is used in connection with State calculated civil penalties.

James O. McDonald

Attachment

Addressees:
Director, Enforcement Division
Deputy Director, Enforcement Division
Chief, Compliance & Engineering Section
Chief, Legal Support Section
Chief, Permit Branch
Chief, Permit Assistance Section
Chief, Permit Processing Section
Chief, Air Enforcement Branch
Chief, Legal Section
Chief, Engineering Section
Chief, Compliance Section
Air Enforcement Branch Professional Staff
Water Enforcement Branch Professional Staff
Permit Branch Professional Staff

4780

EPA FORM 1320-6 (REV. 3-76)

Allan

MEN04029

BODMAN LONGLEY BOGLE & DAHLING

34TH FLOOR 100 [illegible]

DETROIT MICHIGAN 48243

[illegible] 7777

[illegible]
[illegible] HEFTLER
RICHARD D. ROHR
[illegible] SOURIS
CARLTON [illegible] GRUNEWALD
WALTER O. KOCH
ALFRED [illegible] WORTLEY JR
MICHAEL B. LEWISTON
GEORGE D. MILLER JR
[illegible] FELL
JAMES T. HEIMBUCH
HEROLD [illegible] DEASON
[illegible]
[illegible] VAN WYKE
JOSEPH N. BROWN
[illegible]
JAMES [illegible] SCHMANN
[illegible] BRODER
[illegible] KEMSLEY
[illegible]
[illegible]
[illegible] KOCHANEK
[illegible] PERRY
[illegible]

OAKLAND COUNTY OFFICE
[illegible]
SUITE [illegible]
TROY MICHIGAN 48084
[illegible] 362 [illegible]

JOSEPH A. SULLIVAN
COUNSEL

HENRY E. BODMAN
1874 1963
[illegible] LONGLEY
1888 1954
HENRY C. BOGLE
[illegible]
[illegible] ARMSTRONG [illegible]
1887 1975

September 16, 1977

Mr. Paul D. Zugger
Water Quality Division
Department of Natural Resources
P. O. Box 30028
Lansing, MI 48909

Re: Menasha Corporation

Dear Paul:

It was good to talk to you again this morning and as promised, I am writing to confirm the essence of our discussion regarding the discharges of Menasha Corporation in Ostego to the Kalamazoo River.

My understanding, as attorney for Menasha Corporation, is:

1) The "Show Cause" hearing begun on September 15, 1977 is not a proceeding under the Administrative Procedures Act or the hearing rules of the Department or Water Resources Commission. It is, in essence, a Staff Conference with the Company for the exchange of statements regarding the positions of the Staff and Menasha Corporation relative to the discharges to the Kalamazoo River.

2) No action assessing penalties or affecting the NPDES Permit will be taken by the Staff or Commission without full compliance with the Department or Commission rules and the Administrative Procedures Act, including the right to a hearing before a disinterested hearings examiner, submission of evidence with the right to cross examine, and other attributes of a contested case under the Administrative Procedures Act and Commission or Department hearing rules.

3) The tape recording of yesterday's conference does not constitute evidentiary material for use in a formal hearing under the Administrative Procedures Act.

It will not be necessary for you to prepare a transcript of the conference in light of our understandings expressed above, however, I would appreciate your courtesy in sending a copy of the tape to Mr. Adams at the Menasha Ostego Plant.

4828

MEN04030

[illegible] E S DA[illegible]

[illegible] D [illegible]
[illegible]mber [illegible], 1977
[illegible] 2

[illegible]ess I hear from you or Mr. [illegible]reeman to the contrary, we will assume that the [illegible]erstandings as exp[illegible]ssed above are accurate and proceed on this matter [illegible]ordingly,

[illegible]ve dis[illegible]ssed your comments regarding contingency plans with Mr. Adams this [illegible]rnoon a[illegible]d am hopeful that we will be able to resolve this matter at an early [illegible] by agreement between the Company and the Staff.

[illegible]r gards

Very truly yours,

Hoe

Herold McC[illegible] Deason

[illegible]

Stewart Freeman
[illegible] Adams

4829

MEN04031

STATE OF MICHIGAN

DEPARTMENT OF NATURAL RESOURCES

WATER RESOURCES COMMISSION

IN THE MATTER OF

Menasha Corporation
Paperboard Division

NPDES PERMIT NO. MI 0003924

WRC No.: 8-79-05-3174

NOTICE OF NONCOMPLIANCE AND ORDER TO COMPLY

TO: Menasha Corporation
Paperboard Division
320 North Farmer
Otsego, Michigan 49078

Attn: Mr. Bruce Buchanan, Manager, Technical and Utilities

PLEASE BE ADVISED that we have sufficient information to believe that your facility has failed to comply with the terms and conditions of your National Pollutant Discharge Elimination System Permit issued on February 28, 1974.

PURSUANT to the terms of the aforementioned permit (Part I, Section A.5; a.6), any discharge from your facility is limited to the following:

Effluent Characteristics	Outfall No.	Discharge Limitations Daily Maximum
Phenol	002	0.3 mg/l
Phosphorus	000*	2.0 mg/l
Phenol	000*	0.3 mg/l
Temperature	004	85°F

The monthly monitoring report submitted for the month of June 1979 shows that your facility exceeded its authorized discharge limits according to the following:

Date Sampled	Outfall No.	Effluent Characteristics	Reported Value
6-4-79	000*	Total Phosphorus	2.86 mg/l
6-12-79	000*	Total Phosphorus	2.76 mg/l
6-20-79	000*	Total Phosphorus	2.65 mg/l
6-12-79	000*	Phenol	0.645 mg/l
6-5-79	002	Phenol	0.645 mg/l
5-27-79	004	Water Temperature	88°F

000* Prior to mixing with noncontact cooling water.

BE ADVISED that similar excursions occurred in months prior to June 1979. However, they are not being documented in this Notice of Noncompliance. This is not to be construed as a release or waiver of liability for violation occurring prior to the reporting period cited herein.

FURTHER PURSUANT to the terms of the aforementioned permit (Part II, Section A.4 Noncompliance Notification): If for any reason, the permittee does not comply with or will be unable to comply with any daily maximum effluent limitation specified in this permit, the permittee shall provide the Regional Administrator and the State with the following information, in writing, within five (5) days of becomming aware of such condition:

5944

a. A description of the discharge and cause of noncompliance, and

b. The period of noncompliance, including exact dates and times; or, if not corrected, the anticipated time noncompliance is expected to continue, and steps being taken to reduce, eliminate and further prevent recurrence of the noncomplying discharge.

BE ADVISED that the State, to date, has not received the proper noncompliance notification for the violations addressed in this notice.

IT IS THEREFORE ORDERED that a written explanation for the effluent violations cited herein and for failure to submit noncompliance notification be submitted by August 31, 1979 or futher administrative remedies will be instituted.

WATER RESOURCES COMMISSION
MICHIGAN DEPARTMENT OF NATURAL RESOURCES

Robert J. Courchaine

Date Issued: August 3, 1979

Robert J. Courchaine
Executive Secretary

by: Robert F. Babcock

Robert F. Babcock, Chief
NPDES Effluent Compliance Unit

ADDRESS FOR FURTHER CORRESPONDENCE:

Robert F. Babcock, Water Quality Administrator
Michigan Water Resources Commission
Water Quality Division/NPDES Compliance Section
P.O. Box 30028
Lansing, Michigan 48909
Telephone: (517) 373-1947

MEN04033

STATE OF MICHIGAN

DEPARTMENT OF NATURAL RESOURCES

WATER RESOURCES COMMISSION

IN THE MATTER OF

Menasha Corporation
Paperboard Division

NPDES PERMIT NO. MI 0003324

WRC No. NC-5-79-04-3079

NOTICE OF NONCOMPLIANCE AND ORDER TO COMPLY

TO: Menasha Corporation
Paperboard Division
320 North Farmer
Otsego, Michigan 49078

Attn: Mr. Allan Shank, Vice President, Technical Environmental
Menasha Corporation

PLEASE BE ADVISED that we have sufficient information to believe that your facility has failed to comply with the terms and conditions of your National Pollutant Discharge Elimination System Permit issued on February 28, 1974.

PURSUANT to the terms of the aforementioned permit (Part I, Section A.5, A.6), any discharge from your facility is limited to the following:

		Discharge Limitations			
		lbs/day		Other Limitations	
Effluent Characteristics	Outfall Nos.	Daily Average	Daily Maximum	Daily Average	Daily Maximum
BOD_5	000	3725	5590	--	--
Suspended Solids	000	3200	4800	--	--
Phenol	000	--	--	--	0.3 mg/l
Phosphorus	000	--	--	--	2.0 mg/l
Phenol	002	--	--	--	0.3 mg/l
Suspended Solids	004	--	23	--	35 mg/l
Temperature	004	--	--	--	85°F

The monthly monitoring reports (MOR) submitted for the months of December 1978, January 1979, and February 1979 show that your facility exceeded its authorized discharge limits according to the following:

BOD-5 lbs/day Outfall 000

Day	December 1978	January 1979	February 1979
1	*	*	*
2	*	6731	*
3	*	6544	*
4	*	7299	*
5	*	6568	*
6	*	7999	*
7	*	6662	*
8	*	10047	*
9	*	9233	*
10	*	7737	*
11	*	6990	*
12	5744	*	*
13	6207	*	*
14	6698	*	*

5946

MEN04034

Day	December 1978	January 1979	February 1979
15	*	*	*
16	6868	*	*
17	7492	*	*
18	7405	*	*
19	8605	*	5621
20	10497	*	*
21	8926	*	7236
22	8288	*	7194
23	8778	*	7612
24	*	*	7480
25	*	*	9324
26	7618	*	Data Included in March M.O.R.
27	6762	*	Data Included in March M.O.R.
28	*	*	Data Included in March M.O.R.
29	*	*	Data Included in March M.O.R.
30	*	*	Data Included in March M.O.R.
31	*	*	Data Included in March M.O.R.

Suspended Solids lbs/day Outfall 000

Day	December 1978	January 1979	February 1979
3	4920	5451	5317
4	*	5635	*
5	*	7414	*
6	*	7784	*
7	*	6026	*
8	*	7984	*
9	*	6827	*
10	*	6087	*
11	*	7223	*
12	*	*	*
13	*	*	*
14	*	6609	*
15	*	5981	*
16	*	*	5420
17	*	*	5866
20	*	*	6513
21	*	*	6596
22	*	*	5895
23	*	*	5287
25	*	*	5136

Phenol mg/l Outfall 000

Day	Dec. 78	Jan. 79	Feb. 79
2	*	0.406	*
6	*	*	0.673
9	*	0.758	*
12	0.644	*	*
16	*	0.603	*
19	0.629	*	*
26	1.29	0.333	Data Included in March MOR

Phenol mg/l Outfall 002

Day	Jan. 79	Feb. 79
2	0.378	*
16	*	0.333
16	0.333	*
26	0.323	Data Included in March MOR
31	0.497	Data Included in March MOR

MEN04035

Phosphorus mg/l Outfall 000

Day	Nov 78	Dec. 78	Jan. 79	Feb
2	*	*	2.92	*
5	*	7.40	*	*
6	*	*	*	6.15
9	*	*	2.92	
12	*	2.76	*	*
16	*	*	6.04	*
19	*	4.27	*	*
26	*	3.75	5.94	Data Included in March MOR
28	2.29	*	*	Date Included in March MOR
29	*	*	6.88	Data Included in March MOR

Suspended Solids mg/l Outfall 004

Day	Jan. 79
15	42

Temperature of Water (°F) Outfall 004

Day	Feb. 79
12	85°F

FURTHER, the reported monthly averages for the following parameters did not meet permit requirements.

Effluent Characteristics	December 1978	January 1979	February 1979
BOD_5 lbs/day	4960	5248	3886
Suspended Solids lbs/day	3465	4840	4281

* Indicates within limits.

PURSUANT to letters dated December 8, 1978; January 3, 1979; February 6; 1979, and March 15, 1979, the Menasha Corporation has offered a written explanation for these unauthorized and excessive discharges.

IT IS THEREFORE ORDERED that the Menasha Corporation take whatever steps are necessary to achieve and maintain compliance with permit effluent limitations. You are hereby put on notice that the reported excursions are a violation of your NPDES permit. Further administrative remedies will be instituted for continued failure to comply.

WATER RESOURCES COMMISSION
MICHIGAN DEPARTMENT OF NATURAL RESOURCES

Date Issued: May 9, 1979

Robert J. Couchaine
Robert J. Couchaine
Executive Secretary

by: Robert F. Babcock
R. F. Babcock, Chief
NPDES Effluent Compliance Unit

ADDRESS FOR FURTHER CORRESPONDENCE

R. F. Babcock, Water Quality Administrator
Michigan Water Resources Commission
Water Quality Division/NPDES Compliance Section
P.O. Box 30028
Lansing, Michigan 48909

Telephone: (517) 373-1947

5948

MEN04036

STATE OF MICHIGAN

DEPARTMENT OF NATURAL RESOURCES

WATER RESOURCES COMMISSION

IN THE MATTER OF

MENASHA CORPORATION

NPDES PERMIT NO: MI 0003824

WRC NO: NC-7-74-01-0095

NOTICE OF NONCOMPLIANCE

TO: MENASHA CORPORATION
320 North Farmer Street
Otsego, Michigan 49078

Attention: Mr. Norman Johnstone, Technical Supervisor

PLEASE BE ADVISED that we have sufficient information to believe that your facility has failed to comply with the terms and conditions of your National Pollutant Discharge Elimination System Permit issued on February 28, 1974.

Pursuant to the terms of the aforementioned permit you were required to "submit final plans and specifications for said (waste control) facilities to the Chief Engineer of the Michigan Water Resources Commission and obtain his approval thereof on or before June 30, 1974" and to "submit plans for approval . . . necessary to comply with the primary power provision of Section 9 in Part II on or before June 30, 1974."

PLEASE BE ADVISED that the Water Resources Commission has, to date, not received the above mentioned final plans and specifications nor the plans required by the primary power provision of the permit.

THEREFORE, please be advised that unless our Department receives the required final plans and specifications and plans which satisfy the primary power provision of the permit by no later than August 15, 1974, appropriate administrative remedies will be instituted.

WATER RESOURCES COMMISSION
MICHIGAN DEPARTMENT OF NATURAL RESOURCES

Dated: July 19, 1974

By W. G. Turney
W. G. Turney
Assistant Executive Secretary

ADDRESS FOR FURTHER CORRESPONDENCE:

Karl Zollner, Jr., Regional Engineer
Phone: (517) 373-1947
Michigan Water Resources Commission
Water Quality Control Division
Department of Natural Resources
Stevens T. Mason Building
Lansing, Michigan 48926

5949

MEN04037

STATE OF MICHIGAN
DEPARTMENT OF NATURAL RESOURCES
WATER RESOURCES COMMISSION

IN THE MATTER OF
Kimberly-Clark Corporation
Paperboard Division

PERMIT NO. MI 0003871

NOTICE OF NONCOMPLIANCE

TO: Kimberly-Clark Corporation
Paperboard Division
320 North Farmer Street
Otsego, Michigan 49078

Attention: Mr. John R. Blauwkamp, Acting Technical Director

PLEASE BE ADVISED that we have sufficient information to believe that your facility has failed to comply with the terms and conditions of its National Pollutant Discharge Elimination System Permit issued on June 29, 1979.

PURSUANT to the terms of the aforementioned permit (Part I, Section A.2, A.4 and A.5) any discharge from your facility is limited to the following:

	Outfall No.	Discharge Limitations lbs/day Daily Average	lbs/day Daily Maximum	mg/l Daily Average	mg/l Daily Maximum
Soluble Ortho Phosphorus	000*	---	5.8	---	1.0
Total Suspended Solids	004	20	67	30	100
Phenol	002	---	---	0.3	---
pH	004	The pH shall not be less than 6.0 nor greater than 9.0.			
Oil-Grease	002	The discharge shall not contain oil or other substances in amount sufficient to create a visible film or sheen on the receiving waters.			

"The Monthly Operating Reports submitted for the months of August 1979, September 1979, October 1979 and November 1979 show that your facility exceeded its authorized discharge limits according to the following:"

Date Sampled	Outfall No.	Effluent Characteristics	Reported Value Daily Maximum lbs/day	mg/l
8/7/79	000*	Soluble Phosphorus	7.18	1.63
8/14/79	000*	Soluble Phosphorus	7.12	1.35
8/21/79	000*	Soluble Phosphorus	8.27	1.45
9/4/79	000*	Soluble Phosphorus	Within Limits	1.15
10/2/79	000*	Soluble Phosphorus	10.84	2.24
10/9/79	000*	Soluble Phosphorus	18.94	4.58
10/16/79	000*	Soluble Phosphorus	10.59	1.72
10/23/79	000*	Soluble Phosphorus	6.66	1.33
10/29/79	000*	Soluble Phosphorus	13.70	3.20
11/12/79	000*	Soluble Phosphorus	8.90	1.6
11/19/79	000*	Soluble Phosphorus	7.40	1.7
10/31/79	004	Suspended Solids	152	179
10/31/79	004	pH		9.5 S.U.
11/4/79	004	pH		9.3 S.U.
9/10/79	004	Oil-Grease-Visual	N/R	1
9/11/79	004	Oil-Grease-Visual	N/R	1
9/12/79	004	Oil-Grease-Visual	N/R	1
9/17/79	004	Oil-Grease-Visual	N/R	1
9/18/79	004	Oil-Grease-Visual	N/R	1
9/19/79	004	Oil-Grease-Visual	N/R	1
9/28/79	004	Oil-Grease-Visual	N/R	1

6312

received 4 March 80

MEN04038

Date Sampled	Outfall No.	Effluent Characteristics	Reported Value Daily Maximum lbs/day	mg/l
9/10/79	004	Oil-Grease-Visual	N/R	1
9/11/79	004	Oil-Grease-Visual	N/R	1
9/12/79	004	Oil-Grease-Visual	N/R	1
9/17/79	004	Oil-Grease-Visual	N/R	1
9/18/79	004	Oil-Grease-Visual	N/R	1
9/19/79	004	Oil-Grease-Visual	N/R	1
9/28/79	004	Oil-Grease-Visual	N/R	1
9/29/79	004	Oil-Grease-Visual	N/R	1
10/10/79	004	Oil-Grease-Visual	N/R	1
10/11/79	004	Oil-Grease-Visual	N/R	1
10/12/79	004	Oil-Grease-Visual	N/R	1
10/13/79	004	Oil-Grease-Visual	N/R	1
10/14/79	004	Oil-Grease-Visual	N/R	1
10/26/79	004	Oil-Grease-Visual	N/R	1
10/27/79	004	Oil-Grease-Visual	N/R	1
10/30/79	004	Oil-Grease-Visual	N/R	1
10/31/79	004	Oil-Grease-Visual	N/R	1
11/1/79	004	Oil-Grease-Visual	N/R	1
11/5/79	004	Oil-Grease-Visual	N/R	1
11/12/79	004	Oil-Grease-Visual	N/R	1
11/17/79	004	Oil-Grease-Visual	N/R	1
11/20/79	004	Oil-Grease-Visual	N/R	1
11/21/79	004	Oil-Grease-Visual	N/R	1
11/22/79	004	Oil-Grease-Visual	N/R	1
Nov 1979	002	Phenol	0.491 mg/l	N/R

000* Prior to mixing with noncontact cooling water.
N/R Not required according to permit effluent limitations

FURTHER PURSUANT to the terms of the aforementioned permit (Part II, Section A.1 "All discharges authorized herein shall be consistent with the terms and conditions of this permit. The discharge of any pollutant identified in this permit more frequently than or at a level in excess of that authorized shall constitute a violation of the permit."

BE ADVISED that the discharge cited in this Notice of Noncompliance are violations of your NPDES permit No. MI 0003824.

Staff of the Environmental Services Division conducted a Point Source Survey at the Menasha Corporation on September 10, 11, 1979. It was noted that from a split sample the company's results did not compare well with the EPB laboratory results for Suspended Solids, settleable solids and phenol concentrations at outfall 000 according to the following:

Parameter	Test Results Menasha	E.P.B.
Suspended Solids	163 mg/l	260 mg/l
Settleable Solids	5 mg/l	50 mg/l
Phenol	0.086 mg/l	0.185 mg/l

It was further reported that the aerator in the small aeration pond which treats the wastewater discharged through outfall 002 was not in operation during the survey.

BE ADVISED that this is the second Notice of Noncompliance issued since your NPDES permit was reissued on June 29, 1979.

6313

released 4 March 80

MEN04039

IT IS THEREFORE ORDERED that a written explanation be submitted to the Chief of the Water Quality Division by not later than February 29, 1980 for failure to maintain your effluent within the effluent limitations specified in the aforementioned permit and the anticipated date when compliance will be achieved.

Further administrative remedies may be instituted for failure to comply with the above order and for continued violaton of the conditions in NPDES permit No. MI 0003824.

WATER RESOURCES COMMISSION
MICHIGAN DEPARTMENT OF NATURAL RESOURCES

Date Issued:

Robert J. Courchaine

Robert J. Courchaine
Executive Secretary

by: Robert F. Babcock

Robert F. Babcock, Chief
Effluent Compliance Unit

ADDRESS FOR FURTHER CORRESPONDENCE

Robert F. Babcock, Water Quality
Administrator
Michigan Water Resources Commission
Water Quality Division/Surface Water
Compliance Section
P.O. Box 30028
Lansing, Michigan 48909

Telephone: (517) 373-8088

6314

Received 4 March 80

MEN04040

STATE OF MICHIGAN
DEPARTMENT OF NATURAL RESOURCES
WATER RESOURCES COMMISSION

IN THE MATTER OF

Menasha Corporation
Paperboard Division

NPDES PERMIT NO. MI 0003824
WRC No.: NC-12-80-07-3733

NOTICE OF NONCOMPLIANCE

TO. Menasha Corporation
Otsego, Michigan 49078

PLEASE BE ADVISED that we have sufficient information to believe that your facility has failed to comply with the terms and conditions of your National Pollutant discharge Elimination System Permit issued on June 29, 1979.

PURSUANT to the terms of the aforementioned permit (Part I, Section A.2), any discharge from your facility is limited to the following:

Effluent Characteristic	Outfall No.	Discharge Limitations Daily Average
Phenol	002	.3 ug/l

The monthly monitoring report submitted for the month of October 1980 shows that an average concentration of 0.339 ug/l was present in the effluent of Outfall 002 of your facility.

FURTHER, PURSUANT to the terms of the aforementioned permit (Part II, Seciton A.1); "All discharges authorized herein shall be consistent with the terms and conditions of this permit. The discharge of any pollutant identified in this permit more frequently than or at a level in excess of that authorized shall constitute a violation of the permit."

BE ADVISED that the discharges cited in this notice of Noncompliance are violations of NPDES Permit No. MI 0003824.

By letter dated November 10, the Menasha Corporation, Paperboard Division has offered a written explanation for the unauthorized and excessive discharges cited in this Notice of Noncompliance. The letter also stated that; "we are proceeding with the development of the alternate phenol testing procedure . . . we feel confident that the procedure will show that the concentration of phenolic compounds in our effluent is now and always has been well below the 300 ppb limit . . .". Tests are scheduled to be conducted over the next six months.

IT IS THEREFORE ORDERED that the Menasha Corporation, Paperboard Division take whatever steps are necessary to achieve and maintain compliance with permit effluent limitations.

6315

MEN04041

BE ADVISED that failure to comply with the terms and conditions of this notice of Noncompliance may result in further administrative remedies being instituted.

WATER RESOURCES COMMISSION
MICHIGAN DEPARTMENT OF NATURAL RESOURCES

Date issued: [illegible]

Robert J. Courchaine
Robert J. Courchaine
Executive Secretary

by Scott C. Ross
Scott C. Ross, Chief
Industrial Compliance Unit

ADDRESS FOR FURTHER CORRESPONDENCE

[illegible] D. Tummala, Water Quality Specialist
Water Quality Division
P.O. Box 30028
Lansing, Michigan 48909
Telephone: (517) 373-8448

MEN04042

RECEIVED

STATE OF MICHIGAN

DEPARTMENT OF NATURAL RESOURCES

WATER RESOURCES COMMISSION

IN THE MATTER OF

Menasha Corporation
Paperboard Division,

NPDES PERMIT NO. MI 0003824
WRC No.: NC-01-81-08-3777

NOTICE OF NONCOMPLIANCE

TO: Menasha Corporation
Paperboard Division
320 North Farmer Street
Otsego, Michigan 49078

Attention: John R. Brinkkamp, Technical Manager.

PLEASE BE ADVISED that we have sufficient information to believe that your facility has failed to comply with the terms and conditions of your National Pollutant Discharge Elimination System Permit issued on June 29, 1979.

PURSUANT to the terms of the aforementioned permit (Part I, Section A.2), any discharge from your facility is limited to the following:

Effluent Characteristic	Outfall No.	Discharge Limitations mg/l Daily Average
Phenol	000*	0.3

* Process Waste Prior to Mixing with Noncontact Cooling Water.

The monthly monitoring report submitted for the month of November 1980 shows that an average concentration of 0.532 mg/l of phenol was present in your Process Waste Prior to Mixing with Noncontact Cooling Water.

FURTHER, PURSUANT to the terms of the aforementioned permit (Part II, Section A.1); "All discharges authorized herein shall be consistent with the terms and conditions of this permit. The discharge of any pollutant identified in this permit more frequently than or at a level in excess of that authorized shall constitute a violation of the permit."

BE ADVISED that the discharges cited in this Notice of Noncompliance are violations of NPDES Permit No. MI 0003824.

By letter dated November 10, 1980, the Menasha Corporation, Paperboard Division stated that; "we are proceeding with the development of the alternate phenol testing procedure ... we feel confident that the procedure will show that the concentration of phenolic compounds in our effluent is now and always has been well below the 300 ppb limit ... ." Tests are scheduled to be conducted over the next six months.

FURTHER, by letter dated December 9, 1980, the Menasha Corporation, Paperboard Division has offered a written explanation for the unauthorized and excessive discharge cited in this Notice of Noncompliance. This letter also stated that; "... to further establish the validity of the gas chromotography procedure and show that Outfall 000 as well as Outfall 002 is in compliance with the phenol limit we will

MEN04043

be expanding the six month trial on the gas chromatography procedure to include Outfall 006 as well as Outfall 002. We believe that the test will show that both Outfalls are consistently below the 300 ppm phenol limit."

IT IS THEREFORE ORDERED that the Menasha Corporation take whatever steps are necessary to achieve and maintain compliance with permit effluent limitations.

BE ADVISED that failure to comply with the terms and conditions of this Notice of Noncompliance may result in further administrative remedies being instituted

WATER RESOURCES COMMISSION
MICHIGAN DEPARTMENT OF NATURAL RESOURCES

Date Issued: January 22, 1981

Robert J. Courchaine
Robert J. Courchaine
Executive Secretary

by: Scott C. Ross
Scott C. Ross, Chief
Industrial Compliance Unit

ADDRESS FOR FURTHER CORRESPONDENCE

D. D. Tummala, Water Quality Specialist
Water Quality Division
P.O. Box 30028
Lansing, Michigan 48909

Telephone: (517) 373-8448

RECEIVED

6318

MEN04044

STATE OF MICHIGAN

DEPARTMENT OF NATURAL RESOURCES

WATER RESOURCES COMMISSION

IN THE MATTER OF

NPDES PERMIT NO MI 0003824
WRC No NC-02-81-09-3828

Menasha Corporation
Paperboard Division

NOTICE OF NONCOMPLIANCE

TO: Menasha Corporation
Paperboard Division
320 North Farmer Street
Otsego, Michigan 49078

Attention: John R Blauwkamp, Technical Manager

PLEASE BE ADVISED that we have sufficient information to believe that your facility has failed to comply with the terms and conditions of your National Pollutant Discharge Elimination System Permit issued on June 29, 1979

PURSUANT to the terms of the aforementioned permit (Part I, Sections A.2 and A.5), any discharge from your facility is limited to the following:

Effluent Characteristics	Outfall No.	Discharge limitations ug/l Daily Average
Phenol	002	300
Phenol	*000	300

*Treated process wastewater from Outfall 000 through Outfall 003 prior to mixing with noncontact cooling water

The Monthly Operating Report submitted for the month of December 1980 shows that your facility exceeded its authorized discharge limits according to the following.

Effluent Characteristic	Outfall No	Reported Value
Phenol	002	512 ug/l
Phenol	000*	800 ug/l

*Treated process wastewater from Outfall 000 through Outfall 003 prior to mixing with noncontact cooling water

FURTHER PURSUANT to the terms of the aforementioned permit (Part I, Sections A.2.a and A.5.a) grab samples are required for monitoring pH. The December MOR indicated composite samples were collected

FURTHER PURSUANT to the terms of the aforementioned permit (Part II, Section A 1); "All discharges authorized herein shall be consistent with the terms and conditions of this permit. The discharge of any pollutant identified in this permit more frequently than or at a level in excess of that authorized shall constitute a violation of the permit."

BE ADVISED that the discharges cited in this Notice of Noncompliance are violations of NPDES Permit No. MI 0003824.

RECEIVED

1319

MEN04045

FURTHER PURSUANT to the terms of the aforementioned permit (Part I, section B.2) you are required to monitor your discharge and to submit monthly monitoring reports containing the results obtained during the previous month. Said reports are to be postmarked no later than the 10th day of the month following each completed report period.

BE ADVISED that the Monthly Operating Report submitted for the month of December 1980 was late and not received until January 21, 1981.

By letter dated November 10, 1980, the Menasha Corporation, Paperboard Division stated that, "we are proceeding with the development of the alternate phenol testing procedure...we feel confident that the procedure will show that the concentration of phenolic compounds in our effluent is now and always has been well below the 300 ppb limit...". Tests are scheduled to be conducted over the next six months.

FURTHER, by letter dated December 9, 1980, the Menasha Corporation, Paperboard Division stated that, "...to further establish the validity of the gas chromatography procedure and show that Outfall 000 as well as Outfall 002 is in compliance with the phenol limit, we will be expanding the six month trial on the gas chromatography procedure to include Outfall 000 as well as Outfall 002. We believe that the test will show that both outfalls are consistently below the 300 ppm phenol limit."

FURTHER, by letter dated January 9, 1981, the Menasha Corporation, Paperboard Division, has offered a written explanation for the unauthorized and excessive discharge cited in this Notice of Noncompliance. This letter also stated that "... at the end of the six month trial, we will review the data with the DNR's local water quality people. At this time we believe we will have sufficient data to warrant submitting an application to modify the phenol testing requirements of the NPDES permit". The results of the study outlined above may affect testing procedures and/or the effluent limits of the phenol parameter cited herein.

IT IS THEREFORE ORDERED that the Menasha Corporation take whatever steps are necessary to achieve and maintain compliance with permit effluent limitations.

IT IS FURTHER ORDERED that Menasha Corporation, Paperboard Division commence grab sampling for pH as required by Sections A.2.a and A.5.a of NPDES Permit No. MI 0003824 and submit monthly operating reports postmarked by no later than the 10th day of the month following each completed report period.

BE ADVISED that failure to comply with the terms and conditions of this Notice of Noncompliance may result in further administrative remedies being instituted.

WATER RESOURCES COMMISSION
MICHIGAN DEPARTMENT OF NATURAL RESOURCES

Date Issued: February 24, 1981

Robert J. Courchaine
Robert J. Courchaine
Executive Secretary

by: Scott C. Ross
Scott C. Ross, Chief
Industrial Compliance Unit

1320

MEN04046

ADDRESS FOR FURTHER CORRESPONDENCE

D. D. Tummala, Water Quality Specialist
Water Quality Division
P.O. Box 30028
Lansing, Michigan 48909
Telephone: (517) 373-8448

6321

MEN04047

STATE OF MICHIGAN

DEPARTMENT OF NATURAL RESOURCES

WATER RESOURCES COMMISSION

IN THE MATTER OF

Menasha Corporation
Paperboard Division

NPDES PERMIT NO. MI 0003824
WRC No. NC-03-81-10-3865

RECEIVED

NOTICE OF NONCOMPLIANCE

TO: Menasha Corporation
320 North Farmer Street
Otsego, Michigan 49078

Attention: Mr. John R. Blaauwkamp, Technical Manager

PLEASE BE ADVISED that we have sufficient information to believe that your facility has failed to comply with the terms and conditions of your National Pollutant Discharge Elimination System Permit issued on June 29, 1979.

PURSUANT to the terms of the aforementioned permit (Part I, Sections A [illegible] and A.3[illegible]), any discharge from your facility is limited to the following:

Effluent Characteristics	Outfall No.	Discharge Limitations lbs/day Daily Average	Discharge Limitations lbs/day Daily Maximum	Discharge Limitations mg/l Daily Average
BOD_5	000*	3480	5590	
Phenol	000**, 002			3

* Total Process Wastewater
** Process Wastewater Prior to Mixing with Noncontact Cooling Water

The monthly monitoring report submitted for the month of January shows that your facility exceeded its authorized discharge limits according to the following:

Date Sampled	Outfall No.	Effluent Characteristics	Reported Value
01-01-81	000*	BOD_5	6607 lbs/day
01-02-81	000*	BOD_5	7745 lbs/day
01-04-81	000*	BOD_5	7209 lbs/day
01-05-81	000*	BOD_5	8202 lbs/day
01-06-81	000*	BOD_5	6376 lbs/day
01-07-81	000*	BOD_5	6483 lbs/day
01-08-81	000*	BOD_5	8282 lbs/day
01-09-81	000*	BOD_5	7349 lbs/day
01-10-81	000*	BOD_5	7487 lbs/day
01-11-81	000*	BOD_5	8440 lbs/day
01-12-81	000*	BOD_5	8270 lbs/day
01-13-81	000*	BOD_5	7890 lbs/day
01-14-81	000*	BOD_5	6470 lbs/day
01-15-81	000*	BOD_5	7418 lbs/day
01-16-81	000*	BOD_5	8810 lbs/day
01-17-81	000*	BOD_5	6217 lbs/day
01-18-81	000*	BOD_5	8286 lbs/day
01-19-81	000*	BOD_5	6915 lbs/day

C-322

Date Sampled	Outfall No.	Effluent Characteristics	Reported Value
01-20-81	000*	BOD_5	8033 lbs/day
01-21-81	000*	BOD_5	8187 lbs/day
01-23-81	000*	BOD_5	7338 lbs/day
01-24-81	000*	BOD_5	8529 lbs/day
01-25-81	000*	BOD_5	6876 lbs/day
January 1981 Avg.	000*	BOD_5	6873 lbs/day
January 1981 Avg.	000**	Phenol	5.58 mg/l
January 1981 Avg.	002	Phenol	0.429 mg/l

* Total Process Wastewater
** Process Wastewater Prior to Mixing with Noncontact Cooling Water

FURTHER, PURSUANT to the terms of the aforementioned permit (Part II, Section A.1): "All discharges authorized herein shall be consistent with the terms and conditions of this permit. The discharge of any pollutant identified in this permit more frequently than or at a level in excess of that authorized shall constitute a violation of the permit."

BE ADVISED that the discharges cited in this Notice of Noncompliance are vilations of NPDES Permit No. MI 0003824.

By letter dated November 10, 1980, the Menasha Corporation, Paperboard Division stated that; "we are proceeding with the development of the alternate phenol testing procedure ... we feel confident that the procedure will show that the concentraiton of phenolic compounds in our effluent is now and always has been well below the 300 ppb limit ... ." Tests are scheduled to be conducted over the next six months.

FURTHER, by letter dated December 9, 1980, the Menasha Corporation, Paperboard Division stated that; "... to further establish the validity of the gas chromotography procedure and show that Outfall 000 as well as Outfall 002 is in compliance with the phenol limit we will be expanding the six month trial on the gas chromotography procedure to include Outfall 000 as well as Outfall 002. We believe that the test will show that both Outfalls are consistently below the 300 ppm phenol limit."

By letters dated January 9, January 14, January 19, January 22, January 27, January 30, February 2, and February 6, 1981, the Menasha Corporation Paperboard Division has offered a written explanation for BOD_5 excursions cited in this Notice of Noncompliance and listed the measures being taken to prevent recurrence of the noncomplying discharge.

IT IS THEREFORE ORDERED that the Menasha Corporation, Paperboard Division take whatever steps are necessary to achieve and maintain compliance with permit effluent limitations.

MEN04049

BE ADVISED that failure to comply with the terms and conditions of this Notice of Noncompliance may result in further administrative remedies being instituted.

WATER RESOURCES COMMISSION
MICHIGAN DEPARTMENT OF NATURAL RESOURCES

Date Issued: March 24, 1981

Robert J. Courchaine
Robert J. Courchaine
Executive Secretary

by: Scott C. Ross
Scott C. Ross, Chief
Industrial Compliance Unit

ADDRESS FOR FURTHER CORRESPONDENCE

D. D. Tummala, Water Quality Specialist
Water Quality Division
P.O. Box 30028
Lansing, Michigan 48909

Telephone: (517) 373-8448

6324

MEN04050

STATE OF MICHIGAN

DEPARTMENT OF NATURAL RESOURCES

WATER RESOURCES COMMISSION

IN THE MATTER OF

Menasha Corporation
Paperboard Division

NPDES PERMIT NO. MI 0003824
WRC No.: NC-04-81-11-389n

NOTICE OF NONCOMPLIANCE

TO: Menasha Corporation
Paperboard Division
320 North Farter Street
Otsego, Michigan 49078

Attention: Mr. John R. Bleukamp, Technical Manager

PLEASE BE ADVISED that we have sufficient information to believe that your facility has failed to comply with the terms and conditions of your National Pollutant Discharge Elimination System Permit issued on June 29, 1979.

PURSUANT to the terms of the aforementioned permit (Part I, Sections A.2 and A.5), any discharge from your facility is limited to the following:

		Discharge Limitations		
		lbs/day		mg/l
Effluent Characteristics	Outfall No.	Daily Average	Daily Maximum	Daily Average
Phenol	002	-	-	.3
Phenol	000*	-	-	.3
BOD-5	000**	3,480	5,590	

*Process wastes prior to mixing with noncontact cooling water
**Total process wastewater discharge through outfall 002

The monthly monitoring report submitted for the month of February 1981 shows that your facility exceeded its authorized discharge limits according to the following:

Date Sampled	Outfall no.	Effluent Characteristics	Reproted Value
Feb. 1981 Avg.	002	Phenol	0.338 mg/l
Feb. 1981 Avg.	000*	Phenol	7.629 mg/l
1-26-81	000**	BOD-5	6122 lbs/day
1-27-81	000**	BOD-5	6145 lbs/day
1-28-81	000**	BOD-5	6011 lbs/day
Feb. 1981 Avg.	000**	BOD-5	4083 lbs/day

FURTHER, PURSUANT to the terms of the aforementioned permit (Part II, Section A.1); "All discharges authorized herein shall be consistent with the terms and conditions of this permit. The discharge of any pollutant identified in this permit more frequently than or at a level in excess of that authorized shall constitute a violation of the permit."

BE ADVISED that the discharges cited in this Notice of Noncompliance are violations of NPDES Permit No. MI 0003824.

6325

By letter dated November 10, 1980, the Menasha Corporation, Paperboard Division stated that, "we are proceeding with the development of the alternate phenol testing procedure...we feel confident that the procedure will show that the concentration of phenolic compounds in our effluent is now and always has been well below the 300 ppb limit...". Tests are scheduled to be conducted over the next six months.

FURTHER, by letter dated December 9, 1980, the Menasha Corporation, Paperboard Division stated that, "...to further establish the validity of the gas chromatography procedure and show that Outfall 000 as well as Outfall 002 is in compliance with the phenol limit, we will be expanding the six month trial on the gas chromatography procedure to include Outfall 000 as well as Outfall 002. We believe that the test will show that both outfalls are consistently below the 300 ppm phenol limit."

FURTHER, by letter dated January 9, 1981, the Menasha Corporation, Paperboard Division stated that "...at the end of the six month trial, we will review the data with the DNR's local water quality people. At this time we believe we will have sufficient data to warrant submitting an application to modify the phenol testing requirements of the NPDES permit". The results of the study outlined above may affect testing procedures and/or the effluent limits for the phenol parameter cited herein.

FURTHER, a March 6, 1981, letter also stated that "...we plan to meet the District III Water Quality staff sometime in April so that any changes in the phenol testing procedure can be incorporated into our NPDES permit."

By letters dated February 2 and 6, 1981 and March 6, 1981, the Menasha Corporation has offered a written explanation for the unauthorized and excessive discharges cited in this Notice of Noncompliance, and listed measures that have been or are being taken to prevent recurrence of noncomplying discharges.

IT IS THEREFORE ORDERED that the Menasha Corporation take whatever steps are necessary to achieve and maintain compliance with permit effluent limitations.

BE ADVISED that failure to comply with the terms and conditions of this Notice of Noncompliance may result in further administrative remedies being instituted.

WATER RESOURCES COMMISSION
MICHIGAN DEPARTMENT OF NATURAL RESOURCES

Date Issued: April 15, 1981

Robert J. Courchaine
Robert J. Courchaine
Executive Secretary

by: Scott C. Ross
Scott C. Ross, Chief
Industrial Compliance Unit

RECEIVED

ADDRESS FOR FURTHER CORRESPONDENCE

D. D. Tummala, Water Quality Specialist
Water Quality Division
P.O. Box 30028
Lansing, Michigan 48909
Telephone: (517) 373-8448

MEN04052

STATE OF MICHIGAN
DEPARTMENT OF NATURAL RESOURCES
WATER RESOURCES COMMISSION

IN THE MATTER OF

Menasha Corporation
Paperboard Division

NPDES PERMIT NO. MI 0003824
WRC No.: NC-05-81-12-3930

NOTICE OF NONCOMPLIANCE

TO: Menasha Corporation
Paperboard Division
320 N. Farmer Street
Otsego, Michigan 49078

Attn: Mr. John R. Blankamp, Technical Manager

PLEASE BE ADVISED that we have sufficient information to believe that your facility has failed to comply with the terms and conditions of your National Pollutant Discharge Elimination System Permit issued on June 29, 1979.

PURSUANT to the terms of the aforementioned permit (Part I, Sections A.2 and A.5), any discharge from your facility is limited to the following:

Effluent Characteristics	Outfall No.	Discharge Limitations mg/l Daily Average
Phenol	002	.3
	000*	.3

The monthly monitoring report submitted for the month of March 1981 shows that your facility exceeded its authorized discharge limits according to the following:

Month Reported	Outfall No.	Effluent Characteristics	Reported Value
March 1981	002	Phenol	0.36[illegible] mg/l
March 1981	000*	Phenol	0.520 mg/l

*Process wastes prior to mixing with noncontact cooling water.

FURTHER, PURSUANT to the terms of the aforementioned permit (Part II, Section A.1); "All discharges authorized herein shall be consistent with the terms and conditions of this permit. The discharge of any pollutant identified in this permit more frequently than or at a level in excess of that authorized shall constitute a violation of the permit."

BE ADVISED that the discharges cited in this Notice of Noncompliance are violations of NPDES Permit No. MI 0003824.

By letter dated November 10, 1980, the Menasha Corporation, Paperboard Division stated that; "we are proceeding with the development of the alternate phenol testing procedure...we feel confident that the procedure will show that the concentration of phenolic compounds in our effluent is now and always has been well below the 300 ppb limit...". Tests were scheduled to be conducted over the next six months.

6327

MEN04053

FURTHER, by letter dated December 9, 1980, the Menasha Corporation, Paperboard Division stated that; "...to further establish the validity of the gas chromotography procedure and show that Outfall 000 as well as Outfall 007 is in compliance with the phenol limit we are expanding the six month trial on the gas chromatography procedure to include Outfall 000 as well as Outfall 002. We believe that the test will show that both Outfalls are consistently below the 300 ppm phenol limit."

FURTHER by letter dated April 6, 1981, the Menasha Corporation, Paperboard Division, while addressing March excursions stated that "Our meeting with the District III Water Quality staff is currently scheduled for April 28 at 1:15 p.m. in Grand Rapids. At this time we will review the status of the alternate phenol testing procedure...". A letter dated May 5, 1981, stated "there are no excursions in the April 1981 Monthly Operating Report... our meeting with the District III Water Quality staff was held on April 28th in Grand Rapids. At that meeting we reviewed the results of the phenol testing procedure... our final arguments and justification for the new phenol testing procedure will be submitted to the District III staff by the end of May."

IT IS THEREFORE DIRECTED that the Menasha Corporation, Paperboard Division take whatever steps are necessary to achieve and maintain compliance with permit effluent limitations.

BE ADVISED that failure to comply with the terms and conditions of this Notice of Noncompliance may result in further administrative remedies being instituted.

WATER RESOURCES COMMISSION
MICHIGAN DEPARTMENT OF NATURAL RESOURCES

Date Issued May 15, 1981

Robert J. Courchaine
Robert J. Courchaine
Executive Secretary

By: Scott C. Rose
Scott C. Rose, Chief
Industrial Compliance Unit

ADDRESS FOR FURTHER CORRESPONDENCE

D. D. Tummala, Water Quality Specialist
Water Quality Division
P.O. Box 30028
Lansing, Michigan 48909
Telephone: (517) 373-8448

RECEIVED

6328

MEN04054

STATE OF MICHIGAN

DEPARTMENT OF NATURAL RESOURCES

WATER RESOURCES COMMISSION

IN THE MATTER OF

Menasha Corporation

NPDES PERMIT NO. MI 0003824
WRC No.: NC-07-81-13-3990

NOTICE OF NONCOMPLIANCE

TO: Menasha Corporation
Paperboard Division
320 N. Farmer Street
Otsego, Michigan 49078

Attention: Mr. John R. Blaukamp, Technical Manager

PLEASE BE ADVISED that we have sufficient information to believe that your facility has failed to comply with the terms and conditions of your National Pollutant Discharge Elimination System Permit issued on June 29, 1979.

PURSUANT to the terms of the aforementioned permit (Part I, Section A.5), any discharge from your facility is limited to the following:

Effluent Characteristics	Outfall No.	Discharge Limitations mg/l Daily Average
Phenol	000*	0.3

*Process wastes prior to mixing with noncontact cooling water and discharged through Outfall 003

The monthly monitoring report submitted for the month of May 1981 shows that an average concentration of 0.452 mg/l of Phenol was present in the effluent discharged from Outfall 000 (process waste prior to mixing with noncontact cooling waters and discharged through Outfall 003) of your facility.

FURTHER, PURSUANT to the terms of the aforementioned permit (Part II, Section A.1); "All discharges authorized herein shall be consistent with the terms and conditions of this permit. The discharge of any pollutant identified in this permit more frequently than or at a level in excess of that authorized shall constitute a violation of the permit."

BE ADVISED that the discharges cited in this Notice of Noncompliance are violations of NPDES Permit No. MI 0003824.

By letter dated November 10, 1980, the Menasha Corporation, Paperboard Division stated that, "we are proceeding with the development of the alternate phenol testing procedure...we feel confident that the procedure will show that the concentration of phenolic compounds in our effluent is now and always has been well below the 300 ppb limit...". Tests are scheduled to be conducted over the next six months.

6329

FURTHER, by letter dated December 9, 1980, the Menasha Corporation, Paperboard Division stated that, "...to further establish the validity of the gas chromatography procedure and show that Outfall 000 as well as Outfall 002 is in compliance with the phenol limit, we will be expanding the six month trial on the gas chromatography procedure to include Outfall 000 as well as Outfall 002. We believe that the test will show that both outfalls are consistently below the 300 ppm phenol limit."

FURTHER, by letter dated January 9, 1981, the Menasha Corporation, Paperboard Division stated that "...at the end of the six month trial, we will review the data with the DNR's local water quality people. At this time we believe we will have sufficient data to warrant submitting an application to modify the phenol testing requirements of the NPDES permit". The results of the study outlined above may affect testing procedures and/or the effluent limits for the phenol parameter cited herein.

By letter dated June 5, 1981, the Menasha Corporation has offered a written explanation for the unauthorized and excessive discharges cited in this Notice of Noncompliance. This letter also stated that "...the test results of the sixth month trial on GC Procedure and our arguments concerning the procedure have been submitted to the District III water quality staff for review...".

IT IS THEREFORE DIRECTED that the Menasha Corporation take whatever steps are necessary to achieve and maintain compliance with permit effluent limitations.

BE ADVISED that failure to comply with the terms and conditions of this Notice of Noncompliance may result in further administrative remedies being instituted.

WATER RESOURCES COMMISSION
MICHIGAN DEPARTMENT OF NATURAL RESOURCES

Date Issued: July 17 1981

Robert J. Courchaine
Robert J. Courchaine
Executive Secretary

by: Scott C. Ross
Scott C. Ross, Chief
Industrial Compliance Unit

ADDRESS FOR FURTHER CORRESPONDENCE

D. D. Tummala
Water Quality Specialist
Water Quality Division
P. O. Box 30028
Lansing, Michigan 48909

Telephone: (517) 373-8448

RECEIVED

6330

MEN04056

STATE OF MICHIGAN

DEPARTMENT OF NATURAL RESOURCES

WATER RESOURCES COMMISSION

IN THE MATTER OF

Menasha Corporation

NPDES PERMIT NO. MI 0003824
ARC No. NC-10-81-14-407-

NOTICE OF NONCOMPLIANCE

TO: Menasha Corporation
Paperboard Division
320 North Farmer Street
Otsego, Michigan 49078

Attention: Mr. John P. Blaukamp, Technical Manager

PLEASE BE ADVISED that we have sufficient information to believe that your facility has failed to comply with the terms and conditions of your National Pollutant Discharge Elimination System Permit issued on June 29, 1979.

PURSUANT to the terms of the aforementioned permit (Part I, Section A.5), any discharge from your facility is limited to the following:

Effluent Characteristics	Outfall No.	Discharge Limitations mg/l Daily Average	Visual Daily Maximum
Phenol	002	0.3	
Oil & Grease	004		0

The monthly monitoring report submitted for the month of August and September 198. shows that your facility exceeded its authorized discharge limits for Phenol and Oil & Grease respectively according to the following:

Sample Date	Effluent Characteristic	Reported Value mg/l	Daily Maximum
August Average	Phenol	0.345	
8/5/81	Oil & Grease		2
9/16/81	Oil & Grease		1

FURTHER, PURSUANT to the terms of the aforementioned permit (Part II, Section A.1); "All discharges authorized herein shall be consistent with the terms and conditions of this permit. The discharge of any pollutant identified in this permit more frequently than or at a level in excess of that authorized shall constitute a violation of the permit."

BE ADVISED that the discharges cited in this Notice of Noncompliance are violations of NPDES Permit No. MI 0003824.

RECEIVED

6331

MEN04057

By letter dated November 10, 1980, the Menasha Corporation, Paperboard Division stated that, "we are proceeding with the development of the alternate phenol testing procedure...we feel confident that the procedure will show that the concentration of phenolic compounds in our effluent is now and always has been well below the 300 ppb limit...". Tests are scheduled to be conducted over the next six months.

FURTHER, by letter dated December 9, 1980, the Menasha Corporation, Paperboard Division stated that, "...to further establish the validity of the gas chromatography procedure and show that Outfall 000 as well as Outfall 002 is in compliance with the phenol limit, we will be expanding the six month trial on the gas chromatography procedure to include Outfall 000 as well as Outfall 002. We believe that the test will show that both outfalls are consistently below the 300 ppm phenol limit."

FURTHER, by letter dated January 9, 1981, the Menasha Corporation, Paperboard Division stated that "...at the end of the six month trial, we will review the data with the DNR's local water quality people. At this time we believe we will have sufficient data to warrant submitting an application to modify the phenol testing requirements of the NPDES permit". The results of the study outlined above may affect testing procedures and/or the effluent limits for the phenol parameter cited herein.

By letter dated June 5, 1981, the Menasha Corporation stated that "...the test results of the sixth month trial on GC Procedure and our arguments concerning the procedure have been submitted to the District III water quality staff for review...".

By letters dated September 9 and 18, 1981 and October 6, 1981, the Menasha Corporation has offered a written explanation for the unauthorized and excessive discharges cited in this Notice of Noncompliance, and listed measures that have been taken to prevent recurrence of noncomplying discharges.

IT IS THEREFORE DIRECTED that the Menasha Corporation take whatever steps are necessary to achieve and maintain compliance with permit effluent limitations.

BE ADVISED that failure to comply with the terms and conditions of this Notice of Noncompliance may result in further administrative remedies being instituted.

WATER RESOURCES COMMISSION
MICHIGAN DEPARTMENT OF NATURAL RESOURCES

Date Issued: October 27, 1981

Robert J. Courchaine
Robert J. Courchaine
Executive Secretary

by: Scott C. Ross
Scott C. Ross, Chief
Compliance Section

ADDRESS FOR FURTHER CORRESPONDENCE

D.D. Tummala, Water Quality Specialist
Water Quality Division
P.O. Box 30028
Lansing, Michigan 48909
Telephone: (517) 373-8448

OCT 1981 RECEIVED

cc: Permits Section

6332

STATE OF MICHIGAN

DEPARTMENT OF NATURAL RESOURCES

WATER RESOURCES COMMISSION

IN THE MATTER OF

Menasha Corporation
Paperboard Division

NPDES PERMIT NO. MI 0003824

WRC NO: NC-05-82-17-4269

NOTICE OF NONCOMPLIANCE

TO: Menasha Corporation
Paperboard Division
320 North Farmer Street
Otsego, Michigan 49078

Attention: Mr. John R. Blaukamp
Technical Director

PLEASE BE ADVISED that we have sufficient information to believe that your facility has failed to comply with the terms and conditions of your National Pollutant Discharge Elimination System Permit issued on June 29, 1979

PURSUANT to the terms of the aforementioned permit (Part I, Section A.2, A.4, A.5 and A.6), any discharge from your facility is limited to the following:

Effluent Characteristics	Outfall No.	Discharge Limitations lbs/day Daily Average	Daily Maximum	mg/l Daily Average
Phenol	002, 000*			0.3
BOD_5	000**	3,480	5,590	
Total Suspended Solids	000**	3,200	4,800	
Oil-Grease	004	The discharge shall not contain oil or other substances in amounts sufficient to create a visible film or sheen in the receiving waters.		

* Outfall 030179/000 Process Wastewater Prior to Mixing with Noncontact Cooling Water

** Outfall 030186/000 Total Process Wastewater from Outfall 002 and 000.

The monthly monitoring report submitted for the month of February 1982 shows that your facility exceeded its authorized discharge limits according to the following:

MEN04059

Date Sampled	Outfall No	Effluent Characteristics	Reported Value
February 1982 Avg	002	Phenol	0.470 mg/l
February 1982 Avg	000*	Phenol	2.553 mg/l
01-30-82	000**	Total Suspended Solids	14,766 lbs/day
02-06-82	000**	Total Suspended Solids	21,345 lbs/day
02-07-82	000**	Total Suspended Solids	6,411 lbs/day
02-08-82	000**	Total Suspended Solids	12,742 lbs/day
02-09-82	000**	Total Suspended Solids	7,930 lbs/day
02-10-82	000**	Total Suspended Solids	11,143 lbs/day
02-16-82	000**	Total Suspended Solids	6,204 lbs/day
02-19-82	000**	Total Suspended Solids	6,636 lbs/day
02-22-82	000**	Total Suspended Solids	8,190 lbs/day
02-23-82	000**	Total Suspended Solids	9,711 lbs/day
02-24-82	000**	Total Suspended Solids	8,135 lbs/day
02-25-82	000**	Total Suspended Solids	7,242 lbs/day
February 1982 Avg	000**	Total Suspended Solids	[illegible] lbs/day
02-06-82	000**	BOD_5	8,800 lbs/day
02-07-82	000**	BOD_5	6,500 lbs/day
02-08-82	000**	BOD_5	7,670 lbs/day
02-10-82	000**	BOD_5	5,963 lbs/day
02-16-82	000**	BOD_5	5,756 lbs/day
02-17-82	000**	BOD_5	5,995 lbs/day
02-18-82	000**	BOD_5	6,088 lbs/day
February 1982 Avg	000**	BOD_5	4,022 lbs/day
02-04-82	004	Oil-Grease	
02-08-82	004	Oil-Grease	

* Outfall 030.79 000 Process Wastewater Prior to Mixing with Noncontact Cooling Water

** Outfall 030.86 000 Total Process Wastewater from Outfall 002 and 000

FURTHER PURSUANT to the terms of the aforementioned permit (Part II, Section A.1), "All discharges authorized herein shall be consistent with the terms and conditions of this permit. The discharge of any pollutant identified in this permit more frequently than or at a level in excess of that authorized shall constitute a violation of the permit."

ADVISED that the discharges cited in this Notice of Noncompliance are violations of NPDES Permit NO. MI 0003824

BE FURTHER ADVISED that violations of the final effluent limitations contained in your NPDES permit occurred in the months prior to February 1982. Although these violations are not being listed in this Notice of Noncompliance, this is not to be construed as a release or waiver of liability for these violations.

By letters dated February 3, 1982, February 11, 1982, February 16, 1982, February 19, 1982, February 24, 1982, March 2, 1982 and March 10, 1982, the Menasha Corporation has offered a written explanation for the unauthorized and excessive discharges cited in this Notice of Noncompliance

MEN04060

FURTHER, by letter dated March 10, 1982, the Menasha Corporation stated that "we have new consultants from the Institute of Paper Chemistry B.C.A S.I. and CH2M-Hill working with us on the problem. We have scheduled a joint meeting of these consultants for this week, where we will define an action plan that will bring us to resolution of this problem... We will begin working with our consultants on defining what must be done to prevent recurrance of this problem next year."

IT IS THEREFORE DIRECTED that the Menasha Corporation take whatever steps are necessary to achieve and maintain compliance with permit effluent limitations.

IT IS FURTHER DIRECTED that a progress report be submitted to the Water Quality Division by not later than June 11, 1982 on the long range plans to prevent recurrence of these excursions next year.

BE ADVISED that failure to comply with the terms and conditions of this Notice of Noncompliance may result in further administrative remedies being instituted

WATER RESOURCES COMMISSION
MICHIGAN DEPARTMENT OF NATURAL RESOURCES

Date Issued. May 6, 1982

Robert J. Courchaine
Robert J. Courchaine
Executive Secretary

By: D. D. Tummala
D. D. Tummala
Compliance Section

ADDRESS FOR FURTHER CORRESPONDENCE

Water Quality Division
P.O. Box 30028
Lansing, Michigan 48909

Telephone: (517) 373-8448

and

Water Quality Division District Office
State Office Building
350 Ottawa Avenue
Grand Rapids, Michigan 49503
Telephone: (616) 456-6232

RECEIVED

6335

MEN04061

STATE OF MICHIGAN
DEPARTMENT OF NATURAL RESOURCES
WATER RESOURCES COMMISSION

IN THE MATTER OF

Menasha Corporation

NPDES PERMIT NO. MI 0003824

ARC NO. NC-07-82-16-4[illegible]

NOTICE OF NONCOMPLIANCE

TO: Menasha Corporation
Paperboard Division
320 North Farmer St.
Otsego, Michigan 49078

Attention: Mr. John R. Blaukamp, Technical Director

PLEASE BE ADVISED that we have sufficient information to believe that your facility has failed to comply with the terms and conditions of your National Pollutant Discharge Elimination System Permit issued on June 29, 1979.

PURSUANT to the terms of the aforementioned permit (Part I, Section A.5), any discharge from your facility is limited to the following:

Effluent Characteristics	Outfall No.	Discharge Limitations lbs/day Daily Maximum	Discharge Limitations mg/l Daily Maximum
Soluble Phosphorus	000*	5.8	1.0

*Prior to mixing with non-contact cooling water.

The monthly monitoring report submitted for the month of May 1982 shows that your facility exceeded its authorized discharge limits according to the following:

Date	Reported Value Soluble Phosphorus mg/l	Reported Value Soluble Phosphorus lbs/day
5-21-82	2.22	11.11
5-25-82	6.52	27.41
5-29-82	5.6	38.31

FURTHER, PURSUANT to the terms of the aforementioned permit (Part II, Section A.4); "All discharges authorized herein shall be consistent with the terms and conditions of this permit. The discharge of any pollutant identified in this permit more frequently than or at a level in excess of that authorized shall constitute a violation of the permit."

BE ADVISED that the discharges cited in this Notice of Noncompliance are violations of NPDES Permit No. MI 0003824.

By letters dated May 28 and June 9, 1982, the Menasha Corporation has offered a written explanation for the unauthorized and excessive discharges cited in this Notice of Noncompliance, and listed the measures being taken to prevent recurrence of the noncomplying discharges.

IT IS THEREFORE DIRECTED that the Menasha Corporation take whatever steps are necessary to achieve and maintain compliance with permit effluent limitations.

6336

MEN04062

BE ADVISED that failure to comply with the terms and conditions of this Notice of Noncompliance may result in further administrative remedies being instituted.

WATER RESOURCES COMMISSION
MICHIGAN DEPARTMENT OF NATURAL RESOURCES

Robert J. Courchaine

Date Issued: July 29, 1982

Robert J. Courchaine
Executive Secretary

by: D D Tumala

Ms. D. D. Tumala
Compliance Section

ADDRESS FOR FURTHER CORRESPONDENCE

Water Quality Division
P.O. Box 30028
Lansing, Michigan 48909
Telephone: (517) 373-8448

and

Water Quality Division District Office
State Office Building
350 Ottawa Avenue
Grand Rapids, Michigan 49503
Telephone: (616) 456-6232

AUG 1982
RECEIVED

6337

MEN04063

STATE OF MICHIGAN

DEPARTMENT OF NATURAL RESOURCES

WATER RESOURCES COMMISSION

IN THE MATTER OF

NPDES PERMIT NO. MI 0003824

Menasha Corporation
Paperboard Division

WRC NO: NC-08-82-17-4378

RECEIVED

NOTICE OF NONCOMPLIANCE

TO: Menasha Corporation
Paperboard Division
320 N. Farmer Street
Otsego, MI 49098

Attention: John R. Bleukamp, Technical Director

PLEASE BE ADVISED that we have sufficient information to believe that your facility has failed to comply with the terms and conditions of your National Pollutant Discharge Elimination System Permit issued on June 29, 1979.

PURSUANT to the terms of the aforementioned permit (Part I, Section A.5), any discharge from your facility is limited to the following:

Effluent Characteristics	Outfall No.	Discharge Limitations lbs/day Daily Maximum	Discharge Limitations mg/l Daily Maximum
Soluble Phosphorus	000*	5.8	1.0

000* Processed wastewater prior to mixing with noncontact cooling water

The monthly monitoring report submitted for the month of June 1982 shows that your facility exceeded its authorized discharge limits according to the following:

Soluble Phosphorus Outfall 000 (Prior to mixing with noncontact cooling water)

Date Sampled	Reported Value lbs/day	Reported Value mg/l
6/1/82	20.8	6.78
6/6/82	47.6	7.32
6/9/82	41.8	7.88
6/12/82	35.4	5.73
6/15/82	11.9	3.03
6/22/82	7.4	

FURTHER, PURSUANT to the terms of the aforementioned permit (Part II, Section A.1): "All discharges authorized herein shall be consistent with the terms and conditions of this permit. The discharge of any pollutant identified in this permit more frequently than or at a level in excess of that authorized shall constitute a violation of the permit."

BE ADVISED that the discharges cited in this Notice of Noncompliance are violations of NPDES Permit No. MI 0003824.

BE FURTHER ADVISED that violations of the final effluent limitations contained in your NPDES permit occurred in the months prior to June 1982. Although these violations are not being listed in this Notice of Noncompliance, this is not to be construed as a release or waiver of liability for these violations.

6338

MEN04064

By letters dated July 8, 1982 and July 9, 1982, the Menasha Corporation has offered a written explanation for the unauthorized and excessive discharges cited in this Notice of Noncompliance, and listed the measures being taken to prevent recurrence of noncomplying discharges.

IT IS THEREFORE DIRECTED that the Menasha Corporation take whatever steps are necessary to achieve and maintain compliance with permit effluent limitations.

BE ADVISED that failure to comply with the terms and conditions of this Notice of Noncompliance may result in further administrative remedies being instituted.

WATER RESOURCES COMMISSION
MICHIGAN DEPARTMENT OF NATURAL RESOURCES

Robert J. Courchaine

Date Issued: August 25, 1982

Robert J. Courchaine
Executive Secretary

by: _____
D. D. Tummala, Water Quality Specialist
Compliance Section

ADDRESS FOR FURTHER CORRESPONDENCE

Water Quality Division
P.O. Box 30028
Lansing, Michigan 48909
Telephone: (517) 373-8448

and

Water Quality Division District III Office
State Office building
350 Ottawa Avenue
Grand Rapids, Michigan 49503
Telephone: (616) 456-6232

4 AUG 1982 RECEIVED

6339

MEN04065

MENASHA CORPORATION

January 9, 1976

Gentlemen:

These comments are in regard to the monthly operating report forms for Menasha Corp, Paperboard Division, Otsego. MI 49078. December 1975.

1. R. 004
On five occasions, suspended solids specifications were exceeded on this outfall. This problem has been looked into in detail and changes have been made that we hope will solve this problem. I will be in discussion with the district DNR office on this problem.

2. Combined discharge 002 & 003
Suspended solids specification were exceeded on December 18, 1975. Due to a serious problem with filamentous bacteria and resultant sludge bulking, suspended solids got out of control on this date. Steps were taken to alleviate the problem during the December 24 - 30 Christmas 1975 shutdown.

3. R. 002
All four samples taken from this outfall and subsequently analyzed for phenols showed levels in excess of maximum allowable concentrations. This cannot be rationalized as this water is primarily pump seal water and cooling water with only a trace of process water. The process water concentrations are not high enough to account for the levels seen in 002. Additional samples are being sent this month to outside labs for analysis to validate or dispute these results.

4 R. 003 prior to mixing with non contact cooling water. Phosphorous residuals were exceeded once during December. Normal levels of phosphate nutrient addition were not exceeded and were in compliance with standard addition rate formulas for the existing influent loading. I therefore attribute the high residual to the lower overall efficiency of the biological system due to the cold weather.

MENASHA CORPORATION
Bruce Buchanan
Technical Superintendent

BB/dv

OTSEGO PAPERBOARD MILL FARMER STREET • OTSEGO, MICHIGAN 49078 • PHONE 616 692 6141

6099

MEN04066

MENASHA CORPORATION

February 9, 1976

Gentlemen:

Re: Monthly operating report form for Menasha. Month of February 19[illegible].

Note that outfall 004 has recorded six days [illegible] suspended solids in both mg/l and pounds per day, exceeded specifications. In evaluating the cause, no internal source could be found for the overages. The most logical source of high suspended is the contamination in the surface run-off of the area surrounding 004 pond. The entire area around 004 is graded toward 004.

It is felt that during periods of rain and melting snow, there is a significant increase seen in suspended solids at this outfall. Since most of the area around 004 is now graded and paved, a solution to the run-off will be rather difficult. I will formally appraise our district office of this problem

MENASHA CORPORATION
Bruce Buchanan

Bruce Buchanan
Technical Superintendent

BB/dv

OTSEGO PAPERBOARD MILL FARMER STREET • OTSEGO, MICHIGAN 49078 • PHONE 616 692 6141

6100

MEN04067

MENASHA CORPORATION

March 9, 1976

State of Michigan
Water Resource Commission
Comprehensive Studies
Steven T. Mason Building
Lansing, MI 48926

Gentlemen:

There are a number of parameters which are above specification for the February 1976 monthly operating report. An explanation of the overages follows:

Outfall 030053
Re: Suspended Solids

The cold winter weather caused the temperature of the aeration lagoon to drop to a point where suspended solids (in the form of a mini-floc) would not settle. This is generally recognized as a problem encountered during the winter months when the weather is extremely cold. We understand the winter and summer permit limits recognized this phenomina.

Outfall 030055
Re: Suspended Solids

This is a problem which may be a combination of surface run-off and/or overflow of the ash lime slurry tank. A work order has been submitted to install an alarm so that overflow of slurry tank will be immediately noticed and corrected.

Outfall 030134
Re: Phenols

Our raw material supplier has been having difficulty controling his residual phenol levels. We are continuing to work with this supplier toward reduction of this contaminant, but are taking an independent step by increasing puchases from another supplier whose residual phenol concentration is neglegable.

OTSEGO PAPERBOARD MILL FARMER STREET • OTSEGO, MICHIGAN 49078 • PHONE 616-692-6141

6101

MEN04068

Outfall 030186
Re: Suspended Solids

Reference statement concerning outfall 030053.

Menasha Corporation
Bruce Buchanan

Technical Superintendent

BB/dr

6/92

MEN04069

MENASHA CORPORATION

PAPERBOARD DIVISION OTSEGO MICHIGAN 49078 • 616 • 692-6141

September 9, 1976

State of Michigan
Water Resources Commission
Comprehensive Studies Section
Stevens T. Mason Building
Lansing, MI 49926

Gentlemen:

Please reference the following concerning Menasha Corporations August Monthly Operating Report Form.

Outfall 004

Suspended solids discharges exceeded specifications on the 12th and 14th. On both days rain was recorded causing run-off from the surrounding areas. In addition, on the 12th, the ash lime slurry tank overflowed causing solids losses to 004. The latter problem was corrected the same day.

Outfall 002

Phenol concentrations were high on all four samples tested. Reference previous comments on this problem.

Outfall 000

Phosphorus exceeded 2 ppm on one of two tests. This residual varies considerably and the principle objective of keeping aeration pond efficiency at a maximum results in occasional concentrations slightly in excess of specifications.

Both suspended solids and B.O.D. exceeded specifications once each during the month. Both occured on the 6th when outfall 002 saw a dramatic one day increase in B.O.D. and suspended solids. Several possible causes were investigated but none were found.

Bruce Buchanan

Bruce Buchanan
Technical Superintendent

att
dv

6103

MEN04070

MENASHA CORPORATION

November 9, 1976

State of Michigan
Water Resource's Commission
Comprehensive Studies Section
Stevens T. Mason Building
Lansing, MI 48926

Gentlemen;

Concerning Menasha Corporation, Otsego Paperboard Division's October Monthly Operating Report, please record the following

Outfall 002

Specification: Phenol

This outfall exceeded three of four tests above specifications. Source of this chemical is our Sodium Sulfate raw material. Supplier is working to resolve problem.

Outfall 003 Prior to mixing

Specification: Phenol

Spec. exceeded once. Believe this to be a transposition of samples or results. Concentration appears similar to that recorded for 002.

Specification: Phosphorous

Out of a discussion with the district DNR office (W.R.C.) the addition rate of phosphorous has been increased in order to combat sludge bulking problems. The increased phosphorous concentration was expected.

Outfall 000 Combined 002 and 003

Specification: B.O.D. and Suspended Solids

Both parameters exceeded spec. during most of the month. The filamentous bulking problem in the secondary waste treatment system is the cause. Preparing at this time to treat system to resolve problem. District W.R.C. office is being kept informed.

OTSEGO PAPERBOARD MILL FARMER STREET • OTSEGO, MICHIGAN 49078 • PHONE 616 692 6141

6104

Outfall 004

Specification. Suspended Solids lbs/Day & mg/l.

Equipment malfunctions caused high solid losses. Problems with equipment have been resolved.

Specification: Temperature

Exceeded temperature once during month. Excessive high temperature discharge was corrected.

Sincerely,

MENASHA CORPORATION

B. T. Buchanan
Technical Superintendent

6105

MEN04072

BB.

MENASHA CORPORATION

December 9, 1976

State of Michigan
Water Resource Commission
Comprehensive Study Section
Steven T. Mason Building
Lansing, MI 48926
Attention: Mr. Courchaine

Gentlemen:

This letter references Menasha Corporation, Otsego Paperboard Divisions monthly operating report November 1976.

Outfall 002

Exceeded Phenol specifications 3 of 4 times this month. Our alternate supplier of sodium sulfite has had strike and production problems which has resulted in our not being able to get the quantity of material from him that we normally would have. In the first place, he is small, secondary supplier and can not supply any significant percentage of our total sulfite consumption. This fact coupled with union and production problems resulted in our receiving no sodium sulfite from this supplier for the month of November. It is this sulfite that we utilize to dilute the trace Phenol contamination from our main suppliers raw material. Our secondary supplier is now back on line and has material available. This will be utilized to the fullest possible extent.

Combined this charge of 002 and 003

BOD exceeded specifications 5 times during the month of November and suspended solids exceeded specifications 24 times during the month of November. This problem was due primiarily to the sludge bulking situation in the areation pond and has at this point been corrected with shock pH adjustment. We are currently meeting NPDES permits specifications for this outfall.

Outfall 000

Prior to mixing with non-contact cooling water, Phenol concentrations were exceeded 1 of 4 times during the month. This again appears to be a transposition of samples with 002 as there is very little possibility

OTSEGO PAPERBOARD MILL FARMER STREET • OTSEGO MICHIGAN 49078 • PHONE 616-692-6141

that the 9 million gallon aeration pond could range from 20 parts per billion on 10-26 to 1100 parts per billion on 11-3 back down to 17 parts per billion on 11-9. The laboratory preforming these analy[illegible] has been contacted and requested to take additional care to insure that samples are not interchanged.

Phosperous exceeded specifications 3 of 3 times during the month. This was expected as the level of nutrient addition has been doubled in an effort to minimize the effect of the sludge bulking problem and to insure a rapid flourish and a regrowth of bacteria after shock pH adjustment and reseeding. At this time, the higher level of nutrient feed is still being maintained. This was discussed with the Grand Rapids District Office and thought an appropriate step to take during this period of time. This higher level of nutrient feed will be maintained until the flora in the pond are established and stabilized.

Outfall 004

Suspended solids exceeded specifications 9 days during the month and the temperature specification was exceeded three days. A safety backup level control has been installed on the lime slurry tank to prevent overflow to 004 and a high level alarm has also been installed to alert operating personnel to problems as soon as they occur. These steps should reduce the frequency of the suspended solids discharged from the lime slurry tank to 004. The source of the high temperature discharges at 004 have not as yet been located. Investigation to locate this intermediat source is continuing.

Sincerely,

MENASHA CORPORATION

Bruce Buchanan

B.T. Buchanan
Technical Superintendent

kj

cc: W. A. Schenck

MEN04074

MENASHA CORPORATION

January 10,1977

State of Michigan
Water Resource's Commission
Comprehensive Study Section
Steven T. Mason Building
Lansing, MI 48926

Gentlemen:

Concerning Menasha Corporation, Otsego Paperboard Division's monthly operating report please record the following:

Outfall 002 and 003, prior to mixing with non-contact cooling water, recorded concentrations in excess of specification. The exceedence recorded for 11-26 on outfall 003 is not possible in context with the concentration shown in analyses immediately preceding and after the sample in question. Concentrations in 3 out of 4 samples in 002 are feasible, but the 5000 parts per billion recorded for 12-7 does not seem probable. There is sufficient concern at this point regarding the accuracy of analysis to justify changing analical laboratories. Samples for the month of January 1977 will be analyzed at Technological Resources, Inc., Camden, N.J. rather than Nalco Chemical Co., Chicago, Illinois.

Phosphorous 003

During the last quarter of 76, when secondary waste treatment bulking problems were incurred, phosphorous addition rate was doubled. This has continued to date and thus the high phosphorous residual levels. As of this date, phosphorous levels are being returned to normal.

Outfall 000 Combined Discharge of 002 and 003

BOD's exceeded maximum daily discharge specifications two times during the month and exceeded the average monthly specification by approximately 600 lbs The extremely cold temperature for the month of December has significantly affected BOD reduction efficiency. Will be adding additional river water seed during the week of 1-10-77 in an effort to increase efficiency.

OTSEGO PAPERBOARD MILL FARMER STREET • OTSEGO, MICHIGAN 49078 • PHONE 616 692 6141

6/08

Suspended Solids Discharge from 004

[illegible] ash [illegible] slurry system have not as yet been complet
[illegible]gineering work is complete and materials are in route.

Sincerely,

MENASHA CORPORATION

Bruce T. Buchanan

Bruce T. Buchanan
Technical Superintendent

[illegible]

W. A. Schenck
R. Courchaine

MEN04076

MENASHA CORPORATION

10 February 1977

State of Michigan
Water Resource's Commission
Comprehensive Study Section
Steven T. Mason Building
Lansing, MI 48926

Gentlemen:

Concerning Menasha Corporations monthly operating report for the Otsego Paperboard Division, please record the following:

Combined discharge of 002 and 003

Both suspended solids and B.O.D. in pounds per day began exceeding both monthly average and daily maximum specifications on the 11th of last month. A number of steps have been taken to correct this problem, but as of yet no positive results. Nutrient feed rate have been adjusted and last week the pond was reseeded with a new batch of organisms.

The lack of data from the 20th through the 24th on B.O.D.s resulted from contaminated dilution water. The source was identified the problem resolved.

Outfall 003 prior to mixing with non-contact cooling water.

Phenols exceeded specifications one of five tests during the month. This exceedence was only 10 micrograms per liter beyond the 300 microgram per liter specification. Average was 108 micrograms per liter well below specifications. Phosphorous exceeded specifications on both tests and phosphorous addition levels have been reduced by 50%

OTSEGO PAPERBOARD MILL FARMER STREET • OTSEGO, MICHIGAN 49078 • PHONE 616 592-6141

6110

Outfall 004.

Suspended solids both milligrams per liter and pounds per day exceeded specifications 22 and 23 days respectively during the month. The engineering has been completed to correct the problem, but as of yet parts and materials have not been received or installed.

Sincerely,

MENASHA CORPORATION

Bruce T. Buchanan

Bruce T. Buchanan
Technical Superintendent

cc: J. Adams
Mr. Bob Courchaine

kj

MEN04078

MENASHA CORPORATION

9 March 77

State of Michigan
Water Resource's Commission
Comprehensive Study Section
Steven T. Mason Building
Lansing, MI 48926

Dear Mr. Courchaine:

This letter is an explanation of exceedences in the monthly operating report for February 1977 for Menasha Corporation, Otsego Paperboard Division.

Outfall 000 prior to mixing with non-contact cooling water showed one sample for phenols that tested above the 300 part per billion specification. The 64 and 110 part per billion tests that bracket this 3,500 part per billion exceedence again proved the physical impossibility of this value being accurate. We are currently involved in a program of splitting samples for comparative analysis at two different laboratories. From the early results in thus far, there is a complete lack of correlation from lab to lab on a given sample. I do not feel that this data can be relied upon as being anywhere near accurate. Two samples sent out phosphorous analysis during the month both showed levels considerably above maximum specification. Phosphorous nutrient addition levels were reduced again on the 7th of January and as dilution takes place in the aeration pond, residuals at the weir should return to normal levels (about 2 parts per million).

Outfall 004 showed suspended solids discharges above State specification 17 days during the past reporting period. On the 15th of January the line from the ash lime slurry tank to the holding ponds was acid cleaned to remove build up that was restricting flow. Since that time only 2 days were above State specifications and on both of those days rain and associated run off from the parking lot areas was the most probable source of the high suspended solids.

OTSEGO PAPERBOARD MILL FARMER STREET • OTSEGO, MICHIGAN 49078 • PHONE 616 692 6141

6112

State of Michigan
Water Resources Commission
Page 2

Outfall 002 exceeded specifications on phenols for 4 out of 5 samples in the month. I have little if any trust in the test results as different labs can not arrive at comparative values with split samples. The program of sending split samples to different labs until comparative results can be obtained will be continued.

Outfall 000 combined discharge of 002 and 003.

BOD specifications were exceeded 24 days during the month of January and suspended solids were exceeded 27 days. During this reporting period a very unusual phenomena existed in which the entire 9 million gallon aeration pond became very viscous. Due to this unusual situation, no settling occurred and very little BOD reduction occurred. A number of steps have been taken to eliminate this problem and return pond operations to normal. Addition of Biocide and various flocculents as well as nutrient feed adjustments have been made. From the 14th of January river water has been added to the aeration pond at the rate of 400,000 gallons per day to effect both dilution and reseed. This has continued through the week of February 27. At the suggestion of Dr. W. O Pipes of Drexel University whom we consulted on the problem, we hired a organic chemist consultant to work on an analysis of the viscous material. We have also been in conversation with National Oil people concerning this problem. During the week of the 27th of February the viscous character of the aeration pond disappeared and pond operations are now returning to normal. Our consultants have expounded several theories but no definite cause for this occurence has been defined. Work is continuing to resolve the cause.

Held a meeting on February 22 with Mr. Chet Harvey and Mr. Roger Krybyse of the Grand Rapids district DNR office concerning waste water treatment operating problems. The above subjects were reviewed in detail and corrective measures where feasible were outlined.

Sincerely,

MENASHA CORPORATION

Bruce T. Buchanan
Technical Superintendent

cc: J. Adams
G. McConney

MEN04080

MENASHA CORPORATION

6 May 77

State of Michigan
Water Resource's Commission
Comprehensive Study Section
Steven T. Mason Building
Lansing, MI 48926

Subject: Operating Report, Menasha Corporation, Otsego Paperboard Div, Month of April 1977

Dear Mr. Courtrainer:

Outfall 002

Two of four phenol tests were out of specification during the month of April. The supplier of sulfite who has had a problem with high residual levels of phenol in his material has made process changes to reduce the reduction in concentrations. Supplier has submitted a plan for our evaluation and testing has begun to determine the [illegible] of the steps taken.

Combined outfall 002 and 003

Sixteen of thirty one days exceeded both suspended solids and BOD specification during the month of April. Continued efforts are being made to bring these parameters back within specifications. Consultants from a number of disciplines are looking at this problem under our container. In house changes in equipment and improvements in procedures have resulted in significantly reduced loading to the waste treatment system in both BOD and suspended solids. BOD's are now vastly improved within State specification. Suspended solids, although improved are still fluctuating at levels above specs. Work is continuing both in house and through consultants to solve this problem.

Outfall 000 prior to mixing

Phenols were above specifications two of four samples tested and phosphorous was above specifications two of two samples tested. (See explanation of phenol exceedences on outfall 002.)

Phorphorus residuals have not decreased even though phosphorus feed concentration has been reduced. Further reductions in phosphorus feed will be made to accomplish necessary reduction in phosphorus residuals.

OTSEGO PAPERBOARD MILL FARMER STREET • OTSEGO MICHIGAN 49078 PHONE 616 692 6141

6114

MEN04081

Outfall 004

Suspended solids in milligrams per liter was above specifications 10 of 31 days and suspended solids in lbs. per day were above specification 12 of 31 days. Temperature also was above specification 4 of 31 days. Most of the exceedences during this period were caused by heavy rain and run-off from the drive and parking areas. Temperature exceedences were due to excessive cooling water and condensate temperatures. Action has been taken and this problem rectified.

Sincerely,

Menasha Corporation

Bruce T. Buchanan

Bruce T. Buchanan
Technical Superintendent

c: J. Adams
G. Tenney

6115

MEN04082

MENASHA CORPORATION

June 9, 1977

State of Michigan
Water Resource's Commission
Comprehensive Study Section
Steven T. Mason Building
Lansing, MI 48926

Subject: Operating Report, Menasha Corporation, Otsego Paperboard Div., Month of May 1977

Dear Mr. Courchaine:

Outfall 002

Three of the five phenol tests were out of specifications during the month of May. We are currently working on arrangements to obtain our sulfite from a supplier who has low levels residual phenols. This anticipated change of sulfite suppliers should enable us to keep our phenol levels with in specifications at all of our outfails.

One of three total phosphorus samples was out of specifications during the month of May. Since this condition has not occurred with in the last year, we suspect there may have been an error in the sample analysis. This original sample was split and sent to two separate laboratories for analysis. The second laboratory's analysis showed a total phosphorus level of .7 MG/L versus the reported out of specification level of 2.2 MG/L.

Combined Outfall 002 and 003

Five of the thirty days exceeded the suspended solids specification during the month of May. In house changes have kept the BOD with in specifications.

Work is continuing both in house and through several consultants to bring the suspended solids back within specifications.

Outfall 000 prior to mixing.

Two of three total phosphorus tests were out of specification during the month of May. Phosphorus residuals have not decreased even through the phosphorus feed concentration was reduced. Further

OTSEGO PAPERBOARD MILL FARMER STREET • OTSEGO, MICHIGAN 49078 • PHONE 616-692 6141

5/16

MEN04083

reductions in phosphorus feed will be made to accomplish the necessary reduction in phosphorus residuals.

Outfall 004

Suspended solids in miligrams per liter was above specifications thirteen of thirty days and suspended solids in lbs. per day were above specification thirteen of thirty days. Temperature also was above specification three of thirty days. Three of the high suspended solids and two of high temperatures were caused by the ash-lime slurry tank over flowing to outfall 004. This problem has been corrected by installing higher speed motor on the pump. The third high temperature was caused by excessive condensate temperature.

Two more of the high suspended solids were caused by equipment breakdown. Action has been taken to correct these problems. The rest of the high suspended solids were caused by heavy rain and run-off from the drive and parking areas.

Sincerely,

MENASHA CORPORATION

John R Blauwkamp

John R. Blauwkamp
Process Engineer

cc: J. Adams
G. McConney

JB:kj

Gill

MEN04084

MENASHA CORPORATION

August 10, 1977

Mr. Courchaine
State of Michigan
Water Resource's Commission
Comprehensive Study Section
Steven T. Mason Building
Lansing, MI 48926

Dear Sirs,

This letter details explanation of exceedence for Menasha Corporation, Otsego Paperboard Div., Monthly Operating Report July 1977.

Outfall 004.

Suspended solids were high on 6/29 and 6/30. On both days we experienced hard rain and the excessive suspended solids levels were due to run-off. On 7/14 we exceeded temperature specifications by 7 degrees. When temperature was found to exceed specifications search immediately began to locate the source. We were unable to locate the source but a check of weir temperature several hours later were back within specifications.

Outfall 000 Prior to Mixing with Noncontact Cooling Water.

Two samples were tested and found to be an average of 4/10's of a part per million above specification. We have currently begun a testing program to determine the percentage of soluble orthophosphate in comparison to total phosphorous. We have continued to reduce our phosphorous feed levels to a point where there is a concern with regard to the availability of soluble phosphate. With this data in hand we will know whether it is feasible to further reduce phosphate feed levels.

Outfall 002.

Phenol discharges exceeded specifications three of four tests during the month. A change of suppliers of phenol laced raw material should begin showing a reduction of phenol levels. This was effected last month and should show up on this next Months Operating Report.

OTSEGO PAPERBOARD MILL · FARMER STREET · OTSEGO, MICHIGAN 49078 · PHONE 616 692 6141

6118

MEN04085

Outfall 002 and 003 Combined

Suspended solids were above specification 15 of days. The filamentous biological problem is the underlying cause of the suspended solids overages. We are continuing to work with consultants and are preforming extensive testing of the waste treatment system for evaluation by our consultants. Installation of additional waste treatment equipment during the July 4-9 shutdown has begun to show the expected benefits. Installation of this equipment was made to aid in dealing with this unique biological phenomenon. As mentioned earlier, conserted effort is still continuing toward resolution of the underlying biological problem.

Sincerely,

Menasha Corporation

Bruce T. Buchanan
Technical Superintendent
Otsego Paperboard Div.

cc: J. Adams
Mr. Courchaine
Lab. File

6117

MEN04086

MENASHA CORPORATION

March 9,1978

State of Michigan
Water Resources Commission
Comprehensive Studies Section
Box 30028
Lansing, Michigan 48909

Gentlemen:

This letter addresses excursions in permit compliance limits for the Otsego Paperboard Division of Menasha Corporation during the February reporting period. The following items were out of compliance. BOD's and phosphorous for outfall 003 and phenols and phosphorous for outfall 002.

Due to an unexpected failure of the main aeration basin to cope with organic load, BOD maximum daily specifications were exceeded on Feb.23,24 and 25. These excursions were due to maintenance shut down of a portion of the liquor extraction equipment. Historically, shut down of this equipment for maintenance reasons has not caused noncompliance with permit conditions. Maintenance work was completed in a timely fashion and the DKP press was put back on line. It is expected we will soon attain compliance and be able to maintain required specifications thereafter.

Phosphorous specifications are under review with the District office.

Apparent excursions in phenol discharge at 002 are the result of interferences in test procedures. A program is now underway to define an interference removal method. This work is being coordinated with the State DNR Analytical Laboratory and the District DNR office.

Best regards,

MENASHA CORPORATION

Bruce T. Buchanan

Bruce Buchanan
Technical Superintendent

BB/vk

OTSEGO PAPERBOARD MILL FARMER STREET • OTSEGO MICHIGAN 49078 • PHONE 616 692 5[illegible]

6124

MEN04087

MENASHA CORPORATION

April 1, 1978

Robert J. Courchaine
Executive Secretary
Department of Natural Resources
Water Resources Commission
Stevens T. Mason Building
Lansing, Michigan 48926

Gentlemen:

This letter will serve as explanation for the excursions in BOD compliance for the March monthly operating report for the Otsego Paperboard Division of Menasha Corporation. A complete return to compliance status was effected within the first nine days of this reporting period As can be seen from subsequent data in the reporting form, continued inprovement and systems stability is demonstrated.

The excursions in phosphorus specifications and apparent excursions in phenol specifications have been discussed in previous meetings and correspondence.

As an update for the records, sufficient analytical data has been gathered to demonstrate phosphorus requirements. This data is currently being organized and will be transmitted to the Grand Rapids District office. In addition, two independent laboratories have been contracted to perform phenol interference studies. This work is currently in progress. As relevant and significant data on phenol analytical methodology becomes available, it will be transmitted to the Grand Rapids District office and the State Analytical Laboratory.

Sincerely,

MENASHA CORPORATION

Bruce Buchanan
Technical Superintendent

BB/vk
cc: State of Michigan
Comprehensive Studies Section

OTSEGO PAPERBOARD MILL FARMER STREET • OTSEGO, MICHIGAN 49078 • PHONE 616 692 6141

61/25

MEN04088

MENASHA CORPORATION

May 1, 1978

Robert J. Courchaine
Executive Secretary
Department of Natural Resources
Water Resources Commission
Stevens T. Mason Building
Lansing, Michigan 48926

Dear Mr. Courchaine:

On April 18 and again on April 24, the Otsego Paperboard Division of Menasha Corporation exceeded daily maximum BOD specifications. On 4/18, 5920 lbs. of BOD were discharged and on 4/24, 6089 lbs. were discharged. In both cases the problem resulted from higher than normal discharge of process water into outfall 002. Immediate corrective action was taken in both cases, and a return to compliance status was achieved the following day. Further protection against reoccurence is being engineered.

Sincerely,

MENASHA CORPORATION

Bruce Buchanan
Technical Superintendent

BB/vk

cc: J. Adams
C. Harvey

OTSEGO PAPERBOARD MILL FARMER STREET • OTSEGO MICHIGAN 49078 • PHONE 616 692 6141

6/26

MEN04089

MENASHA CORPORATION

June 2, 1978

Robert J. Courchaine
Executive Secretary
Department of Natural Resources
Water Resources Commission
Stevens T. Mason Building
Lansing, Michigan 48926

Gentlemen:

On the 19, 20, and 21 of May, the Otsego Paperboard Division of Menasha Corporation exceeded suspended solids limits. The figures 3418, 3230, and 3220 respectively. Flows were normal and there was no evidence of excessive fiber loss from the mill during this period. There were also no settleable solids evident; therefore, solids were attributable to colloidally suspended particulates.

The waste treatment system is now operating within compliance specifications.

Respectfully,

MENASHA CORPORATION

Bruce T. Buchanan

Bruce T. Buchanan
Technical Superintendent

BB/vk
cc: J. Adams
C. Harvey
Comprehensive Studies

PS: Please note corrected dates

OTSEGO PAPERBOARD MILL FARMER STREET • OTSEGO, MICHIGAN 49078 • PHONE 616 692 6141

6127

MEN04090

MENASHA CORPORATION

June 30, 1978

Mr. Robert J. Courchaine
Executive Secretary
Department of Natural Resources
Water Resources Commission
Stevens T. Mason Building
Lansing, MI 48926

Dear Mr. Courchaine,

On June 14 and June 16 the Otsego Paperboard Division of Menasha Corporation exceeded the daily maximum B.O.D specification. On June 14, 4434 lbs. of B.O.D. were discharged and on June 16, 4310 lbs. were discharged. On June 16 and 17 we exceeded the suspended solids limits. On June 16, 3800 lbs. of suspended solids were discharged and on June 17, 3247 lbs. were discharged. Since the 19th of June the waste treatment system has been operating within compliance specifications.

The high B.O.D. and suspended solids discharges mentioned above were due to an upset in our waste treatment system. Our data indicates that the upset in the waste treatment system was caused by a spill of spent liquor to the waste treatment system. The liquor spill most likely occurred in the area of our spent liquor incinerator. We are currently engineering a means of isolating the floor drains in areas where liquor can be spilled. This should prevent spills from getting into the effluent to the waste treatment system.

On June 18th we exceeded the daily maximum B.O.D. specification and 3760 lbs. of B.O.D. were discharged. In this case the problem resulted from higher than normal discharge of process water into outfall 002. Immediate corrective action was taken and we returned to compliance status the next day. The installation of part of the equipment for protection of this outfall was completed June 27. The installation of the rest of the protective equipment should be completed by July 14.

Sincerely,

Menasha Corporation

John R. Blauwkamp Process Engineer
for Bruce Buchanan, Technical
Superintendent

cc J. Adams
C. Harvey

OTSEGO PAPERBOARD MILL FARMER STREET • OTSEGO MICHIGAN 49078 • PHONE 616 692 6141

6128

MEN04091

MENASHA CORPORATION

July 1[illegible], 1978

State of Michigan
Water Resources Commission
Comprehensive Studies Sec.
Box 30028
Lansing, MI 48909

Gentlemen:

A letter dated June [illegible] from John Blauwkamp detail[illegible] excursions in compliance on June 14, 16 & 17. Two additional excursions occurred during the reporting period. The first, on June 18 when BOD discharged at 3760 lbs. for the day. This was part of the occurrance described in the June 30 letter from Mr. Blauwkamp. The first of two engineering solutions to the liquor spill problem mentioned in the June 30 letter has been completed.

Suspended solids discharged above specifications in both milligrams per liter and pounds per day (273 and 282) for the 1st of June. This was caused by heavy rain which backed up the Kalamazoo River over its banks and flooded the pond and weir at 004.

Sincerely,

Menasha Corporation

Bruce Buchanan

Bruce Buchanan
Technical Superintendent

cc: J. Adams
Robert Courchaine
Department of Natural Resources

kj

OTSEGO PAPERBOARD MILL FARMER STREET • OTSEGO MICHIGAN 49078 • PHONE 616 692 6111

6129

MEN04092

MENASHA CORPORATION

July 25, 1978

State of Michigan
Water Resources Commission
Comprehensive Studies Sec.
Box 30028
Lansing, MI 48909

Gentlemen;

On July 11 and 15, the Otsego Paperboard Division of Menasha Corporation exceeded suspended solids specifications of 3200 lbs. per day by 78 and 25 lbs. respectively. No specific explaination could be found for these excursions. The system is being closely monitored for performance stability. Compliance was being met by a comfortable range both before and after these excursions. No settleable solids were observed or associated with the problem.

Sincerely,

Menasha Corporation

Bruce Buchanan

Bruce Buchanan
Technical Superintendent

cc: J. Adams
R. Courchaine
Department of Natural Resources

OTSEGO PAPERBOARD MILL FARMER STREET • OTSEGO, MICHIGAN 49078 • PHONE 616 692 6141

Col 30

MEN04093

MENASHA CORPORATION

9 August 78

State of Michigan
Water Resources Commission
Comprehensive Studies Section
Box 30028
Lansing, MI 48909

Gentlemen:

On June 27 and 28 and again on July 11 and 15, Suspended solids specifications were exceeded. Pounds per day beyond specification were 1219 lbs , 84 lbs., 78 lbs. and 25 lbs. respectively. These excursions are discussed in previous correspondence. No settleable solids were associated with the periods referenced. There were no evidences of sludge bulking or other biological or physical abnormalities.

Sincerely,

Menasah Corporation

Bruce Buchanan

Bruce Buchanan
Technical Superintendent

BB:kj

cc: Bob Courchaine

OTSEGO PAPERBOARD MILL FARMER STREET • OTSEGO, MICHIGAN 49078 • PHONE 616 692 6141

6134

MEN04094

MENASHA CORPORATION

October 7[illegible]

State of Michigan
Water Resources Commission
Comprehensive Studies Sec.
Box 30028
Lansing, MI 4[illegible]

Enclosing Menasha's September Monthly Operating report [illegible] the following:

- Two tests exceeded limits on outfall 00[illegible] for phosphorus concentration. We are now adding no phosphorus nutrient to the aeration pond in order to control discharge. The average for the month was 0.1 mg/l above the limit.

- Phosphorus limits on outfall 001 were exceeded once this month. There is no phosphorus addition to this system. Monthly average was [illegible].92 mg/l below the discharge limit.

  Phenol specifications were exceeded once. There were no process changes or reasons for the exceedance except for the analytical methodology problems previously discussed. The monthly average was 11 parts per billion above specification.

- Outfall 004 exceeded the suspended solids concentration limit by 4 mg/l once due to rain.

Sincerely,

Menasha Corporation

Bruce E. Buchanan

Bruce Buchanan
Technical Superintendent

cc: Bob Courchaine
Chet Harvey

OTSEGO PAPERBOARD MILL FARMER STREET • OTSEGO MICHIGAN 49078 • PHONE 616 692 0141

6135

MEN04095

Kathy - pls cc Jim

MENASHA CORPORATION

November 10, 1978

State of Michigan
Robert J. Courchaine
Water Resources Commission
Stevens T. Mason Building
Lansing, MI 48926

Gentlemen;

This letter addresses excursions in NPDES compliance specifications for the Otsego Paperboard Division's October monthly operating report.

OUTFALL 002

One of four phenol tests exceeded specification by 52 micrograms per liter. Monthly average was 54% of maximum limit.

OUTFALL 000 PRIOR TO MIXING WITH NON-CONTACT COOLING WATER

Total phosphorus specifications were exceeded three of five tests. The monthly average value was 10% above the maximum limit. All phosphorus nutrient addition to the waste treatment system has been eliminated since 8/9/78.

OUTFALL 000 COMBINED DISCHARGE OF 002 and 003

Suspended solids exceeded the 3200 lb. per day maximum limit four times during the month. Excursions were on October 8 through 1.. Average exceedence was 341 lbs.

There was an approximate 70% increase in suspended solids concentrations at discharge beginning on the 8th. There appears to have been a significant temperature transition just prior to the increase in suspended solids. No other variables have been identified as a possible contribution to this occurrance.

OUTFALL 004

Suspended solids were exceeded in both milligram per liter and pounds per day on the 9th. Temperature was also exceeded the same day.

OTSEGO PAPERBOARD MILL FARMER STREET • OTSEGO, MICHIGAN 49078 • PHONE 616 692-6141

6136

MEN04096

Excessive Zeolite regeneration flow was the probable cause and was corrected immediately after sampling in the morning.

Sincerely,

Menasha Corporation

Bruce T. Buchanan
Technical Superintendent

cc: State of Michigan
Comprehensive Study Section

BB:kj

6137

MEN04097

MENASHA CORPORATION

December 8, 1978

Mr. Robert J. Courchaine
Chief, Water Quality Division
State of Michigan
Department of Natural Resources
Stevens T. Mason Building
Lansing, MI 48926

Gentlemen:

Daily maximum suspended solids were exceeded by the Otsego Paperboard Division, Menasha Corporation, during the month of November, for one day on the 24th. The combined 002 and 003 outfall figure was 5,530#. There was only a slightly increased flow for the day but the concentration in milligrams per liter increased by 140 from the day before and decreased by 230 milligrams per liter the day following. A mechanical problem with the ash lime system may have been a contribution and has been corrected. There were no apparent significant changes in other parameters.

One of the four phenol tests was above the 300 part per billion limit on outfall 002 and the results for 10/31/78 were 534 parts per billion. The apparent phenol problem still exists and the level and type of interference has been further documented by an independent laboratory. The interference removal technique work is nearing completion and the results will be forwarded to the DNR State analytical laboratory for confirmation and approval as soon as they are available.

Best regards,

MENASHA CORPORATION

Bruce Buchanan

Bruce Buchanan
Technical Director

BB/k

cc: Comprehensive Study Section
DNR Grand Rapids Office

OTSEGO PAPERBOARD MILL FARMER STREET • OTSEGO, MICHIGAN 49078 • PHONE 616 692-6141

6138

MEN04099

The phenol and phosphorous excursions were associated with the reduction in biological activity at mid-m

Best regards,

Menasha Corporation

Bruce Buchanan
Technical Director

cc: Comprehensive Study Sec.

6/46

MEN04098

MENASHA CORPORATION

January 3, 1979

Robert J. Courchaine
Executive Secretary, D.N.R.
Water Resources Commission
Stevens T. Mason Building
Lansing, MI 48926

The Otsego Paperboard Division of Menasha Corporation exceeded maximum B.O.D. discharge limits on 11 days during the month of December. Suspended solids were exceeded 3 days. Phenols were above the maximum limit 2 of 4 tests and phosphorous was above maximum limits 4 of 4 tests at outfall 003.

B.O.D.'s first went out of compliance on December 12, returned to compliance for one day on the 15th and was out again from the 16 through the 23rd. Suspended solids exceeded compliance limits on 11/28, 11/30 and 12/3.

Microscopic examination of the aeration pond microflora during the second week in December indicated an unusually low level of higher life forms i.e., stalked cilliates and rotifers. Arrangements were made with the City of Kalamazoo Waste Treatment Plant to use their secondary activated sludge as an inoculum for our aerated lagoon. A truck was rented and the inoculation program begun on December 17. Over the next week, approximately 80,000 gallons of inoculum were introduced into the system. By microscopic examination, there has been a significant increase in higher life forms in the system. B.O.D. concentrations peaked on December 20 and have been gradually although somewhate irraticaly reducing since then. The aerated lagoon biological population is being closely monitored microscopically. Although the problem is not yet completely under control, it is expected that the system will return to compliance status within the next few days.

Suspended solids exceedences were the result of a one day concentration increase for the day of the excursion only. Before and after concentrations were normal for this time of the year. No increases in flow or excessive settleable solids were associated with the excursions.

OTSEGO PAPERBOARD MILL FARMER STREET • OTSEGO, MICHIGAN 49078 • PHONE 616 692-6141

6139

MEN04100

MENASHA CORPORATION

February 6, 1979

Robert J. Courchaine
Executive Secretary, DNR
Water Resources Commission
Stevens T. Mason Building
Lansing, MI 48926

The Otsego Paperboard Division of Menasha Corporation exceeded NPDES permit specifications in the following areas for the month of January, 1979.

Outfall 002 exceeded phenols specifications two of four times. Phase I of the analytical methodology review has been completed. I will be contacting the District Office and forwarding this information for review.

Suspended solids exceeded permit conditions on eleven of thirty one days and B.O.D. exceeded permit conditions on twelve of thirty one days for the combined discharge of outfall 002 and 003. These excursions were the result of the continued impact of reduced biological activity during December. The inoculum from the Kalamazoo Waste Treatment Plant took effect over a slightly longer period of time than we had hoped for. B.O.D. has been in compliance since December 12 and suspended solids has been in compliance since December 16, the entire biological population in waste treatment system looks healthy at this point. There are numerous evidences of higher life forms indicating a high level of activity. The B.O.D. concentrations especially reveal a healthy biological population.

The phenol specification was exceeded one of four tests during the month and the phosphorus specification was exceeded four of four tests. The phenol methodology statement above applies to this excursion. The phosphorus excursions were the result of a deliberate step on our part to improve biological efficiency in the aeration pond. For the last several months of 1978 phosphorus feed to the aeration pond was eliminated in order to achieve compliance

OTSEGO PAPERBOARD MILL FARMER STREET • OTSEGO, MICHIGAN 49078 • PHONE 616 692 6141

6142

with phosphorus discharge limits. When the indications of impared biological activity became evident in December, phosphorus feed was again started in order to insure optimum biological efficiency. The addition levels are now being gradually reduced step by step in order to achieve the lowest possible residuals while maintaining biological efficiency at a maximum.

Outfall 004 exceeded suspended solids concentration limits on one day during December. The pound per day limit was not exceeded. There was no readily apparent cause for the excursion and the monthly average discharge concentration was only 11% of the maximum permissible concentration.

Best regards,

Menasha Corporation

Bruce Buchanan

Bruce Buchanan
Technical Superintendent

CC: Chet Harvey
Comprehensive Studies, Sec.
J. Adams

MEN04102

MENASHA CORPORATION

March 15, 1979

Robert J. Courchaine
Executive Secretary, D.N.R.
Water Resources Commission
Stevens T. Mason Building
Lansing, MI 48926

The Otsego Paperboard Division of Menasha Corporation exceeded NPDES compliance standards in the following areas during the month of February, 1979.

Phenols were exceeded three of three tests during the month at outfall 002.

Outfall 003 exceeded phosphorous specs. three of three tests during the month Levels are deliberately high to insure maximum biological activity Phenols were exceeded two of three tests during the month.

The combined discharge of outfalls 002 and 003 exceeded suspended solids limits six days and exceeded B.O.D. limits eight days during the month. Continued efforts are being made to reduce the frequency and quantity of excursions in both areas. Hydraulic flows have been reduced to an absolute minimum in order to give the secondary treatment system a maximum retention time. Process modifications have now been made to further minimize impact by reducing the load to the waste treatment system. The organic load to the waste treatment system is now at levels the system has been historically able to cope with. With low influent organic load to the system, we expect a return to compliance status very shortly.

Outfall 004 exceeded temperature specification once during the month. The temperature was found to have been

OTSEGO PAPERBOARD MILL FARMER STREET • OTSEGO, MICHIGAN 49078 • PHONE 616-692-6141

6144

MEN04103

due to an incorrect operating procedure and has been modified and corrected.

Sincerely,

Menasha Corporation

Bruce Buchanan
Technical Superintendent

cc: Comprehensive Study Sec.
J. Adams

BB:kj

MEN04104

MENASHA CORPORATION

April 9, 1979

Robert [illegible] Courchaine
Executive Secretary, DNR
Water Resources Commission
[illegible]tevens T. Mason Building
Lansing, MI 489[illegible]

Gentlemen,

This letter addresses excursions [illegible] the NPDES permit for the [illegible] Paperboard Division of Menasha Corporation for the month of March, 1979.

[illegible] mixing with [illegible] contact cooling water [illegible] specifications three times during the month and phenol specifications four times during the month. Phosphorous addition to the aeration pond [illegible] as of this [illegible]. The high apparent [illegible] is a result of lignin and tannin [illegible] with the test method.

[illegible] and 003 exceeded [illegible] days and exceeded suspended [illegible] 1 of 2[illegible] days. The high B.O.D. values [illegible] in the aeration [illegible]. The upset condition is now [illegible] and we are in compliance.

[illegible] exceeded both milligram per liter and pound per day suspended solids limits for 2 of 23 days. Although an effort was made, no source for the high suspended solids [illegible]. Temperature also exceeded [illegible] secs. on 1 of [illegible] days. [illegible] was identified and immediate [illegible] taken.

Sincerely,

Menasha Corporation
Otsego Paperboard Div.

Bruce Buchanan
Manager, Technical & Utilities

Compliance [illegible] Studies Sec.
[illegible] Adams

OTSEGO PAPERBOARD MILL [illegible]

6146

MEN04105

MENASHA CORPORATION

11 May 1979.

Robert J. Courchaine
Executive Secretary, DNR.
Water Resources Commission
Stevens T. Mason Building
Lansing, MI 48926

Gentlemen:

This letter addresses excursions in the NPDES permit for the Month of April for the Otsego Paperboard Division of Menasha Corporation. Phenol levels exceeded permit limits on one of four tests during the month at 002. The phenol limit was 2[illegible] parts per billion above the limit.

Phosphorous exceeded specifications one of two tests at outfall 000 prior to mixing with noncontact cooling water. Phenols were above limits three of four tests. The average excursion was 498 parts per billion above the limit.

Suspended solids in milligrams per liter exceeded limits three days and suspended solids in pounds per day exceeded the maximum for six days at outfall 004. pH exceeded limits on one day and temperature exceeded limits on one day. pH, temperature and solids problems were identified and corrective measures taken.

Sincerely,

Menasha Corporation

Bruce Buchanan
Manager, Technical &
Utilities

cc: Comprehensive Studies Sec.
J. Adams

OTSEGO PAPERBOARD MILL FARMER STREET • OTSEGO MICHIGAN 49078 • PHONE 616-692-6141

6147

MEN04106

MENASHA CORPORATION

1 June 1979

Mr. Robert Courchaine
Executive Secretary, DNR
Water Resources Commission
Stevens T. Mason Building
Lansing, MI 48926

This letter addresses excursions in the Otsego Paperboard Division of Menasha Corporations May monthly operating report.

Outfall 002 prior to mixing with noncontact cooling water exceeded total phosphorous limits on two of two tests during the month. No phosphorous is being feed to the waste treatment system in order to achieve compliance with this specification. Phenols exceeded specifications one of four tests. The last three tests were comfortably in compliance.

Outfall 004 exceeded permit conditions for suspended solids on one day, for pH on three days and for temperature on two days. Corrective measures have been taken to resolve these problems.

Sincerely,

Menasha Corporation

Bruce Buchanan

Bruce Buchanan
Manager, Technical &
Utilities
Otsego Paperboard Div.

cc: Comprehensive Studies Sec.

kj

OTSEGO PAPERBOARD MILL [illegible] MICHIGAN [illegible] • PHONE 616 692 6141

6148

MEN04107

memo : CORPORATION

Tom Clemmons, Ken Hartman, Steve Rosenthal DATE: 26 September 1983

SUBJECT: Excess Oil in the Power House Outfall (004) FROM: John Blauwkamp

On September 23, we came extremely close to having an excess oil violation on the power house outfall. Though we keep oil absorbing pads and oil ropes on the pond, enough oil from the No.4 boiler water feed pump had gotten into the floor drain to cause a nearly continuous oil scheen on the discharge from this outfall. If the oil scheen had been continuous, we would have had a reportable violation. The possible consequences of a violation such as this are as follows:

1. We could receive a $10,000 per day fine.
2. We could be required to make physical changes in the power plant area to prevent the possibility of this reoccurring. This would cost us more than $40,000. Even if we do not incur an economic loss as a result of a particular violation, our credibility would still suffer.

In 1982, after working with the DNR for several months, we got them to agree to change the oil discharge spec. on this outfall such that it would take about a cup per day of oil, instead of a teaspoon per day of oil to cause a violation. This agreement allowed us to avoid spending more than $40,000 to completely reroute the drain system in the power plant. At that time, we assured the DNR we would continue to use very strict oil management procedures in the power plant area and use every reasonable effort to prevent oil from getting in the floor drains. We must keep that promise.

I suggest the following be used as the criteria for determining when corrective actions must be taken to prevent oil from entering the floor drains. A flow of water or puddle of water which has a slight oil scheen on it will most likely not cause a problem. Whenever there are discrete drops of oil in the water or puddles of oil standing on the floor or running to the floor drains, as much oil dry as necessary should be used to prevent the oil from entering the floor drain system.

If you disagree with this criteria, we should discuss the matter to establish criteria that will both get the job done and be practically implementable.

c B. Buchanan
S. Rosenthal
A. Coleman
T. Collins

6750

MEN04108

memo / MENASHA CORPORATION

TO: John Blauwkamp, Tom Clemmons, Ken Hartman, Steve Rosenthal

DATE: 4 October 1983

SUBJECT: Excess Oil in the Power House Outfall

FROM: Tom Collins

Ref: John Blauwkamps' Letter Dated 26 September 1983

On September 22, 1983, #1 paper machine was shutdown for maintenance. In conjunction with this, certain jobs in the power plant were performed on #1 and #4 boilers. One job in particular, inspection of #4 boiler forced draft fan for vibration, relates to the John Blauwkamp letter and in fact is the cause of the close call in respect to the oil violation.

Upon opening #4 F.D. Fan, the fan blades were inspected and (1) blade was found to have a slight build-up. We attempted to scrap this off but were unsuccessful. Reassessment of the overall fan condition, both blading and housing, resulted in a decision to weld in a drain and wash down the interior of the unit.

The interior of the fan was coated with oil impregnated flyash, dirt, etc. The oil was drawn into the fan from a leaking bearing oil seal on the fan west bearing (the seal was replaced on 22 September).

When the fan was washed out, all oil impregnated material went to the drain going to the 004 outfall. This subsequently caused the close call on an excess oil violation.

All suggested corrective actions in John's letter have be followed for some time now. The 004 outfall oil situation has been well within specifications both prior to September 22 and since September 23, to my understanding.

The potential for future 004 outfall oil violations will remain with us until the drain system is modified. Continual monitoring of all systems, corrective action when necessary and good common sense should keep the 004 oil problem in check.

c B. Buchanan
A. Coleman
K. Kling

6751

MEN04109

RAL RESOURCES COMMISSION
ANDERSON
HARTY
MONSMA
MYERS
FORE

STATE OF MICHIGAN

JAMES J BLANCHARD, Governor

DEPARTMENT OF NATURAL RESOURCES

RONALD O SKOOG, Director

District 12 Headquarters
P.O. Box 355, Plainwell, Michigan 49080

August 27, 1984

Mr. John Blauwkamp, Technical Manager
Menasha Corporation
Farmer Street
Otsego, Michigan 49078

Dear Mr. Blauwkamp:

This letter is a follow-up to our August 24, 1984, telephone conversation. In that conversation you stated that Menasha has a need to replace a small pond prior to outfall 004 with a ten-foot diameter enclosed tank. The Department has no objection to this proposal provided NPDES permit limits are met and that the water being discharged via outfall 004 remains unchanged.

If you have any questions, feel free to contact me at the Plainwell District Office.

Sincerely,

SURFACE WATER QUALITY DIVISION

Garth Aslakson

Garth Aslakson
Water Quality Specialist
Plainwell District
(616) 685-9886

GA:ek

6753