SDMS US EPA Region V

Imagery Insert Form

Document ID: 177556

Some images in this document may be illegible or unavailable in SDMS. Please see reason(s) indicated below:

[X] Illegible due to bad source documents. Image(s) in SDMS is equivalent to hard copy.

Specify Type of Document(s) / Comments:

TEXT TOO LIGHT AT THE EDGES OF MANY PAGES

[ ] Includes _____ COLOR or _____ RESOLUTION variations.
Unless otherwise noted, these pages are available in monochrome. The source document page(s) is more legible than the images. The original document is available for viewing at the Superfund Records Center.

Specify Type of Document(s) / Comments:

[ ] Confidential Business Information (CBI).
This document contains highly sensitive information. Due to confidentiality, materials with such information are not available in SDMS. You may contact the EPA Superfund Records Manager if you wish to view this document.

Specify Type of Document(s) / Comments:

[ ] Unscannable Material:
Oversized ____ or ___ Format.
Due to certain scanning equipment capability limitations, the document page(s) is not available in SDMS. The original document is available for viewing at the Superfund Records center.

Specify Type of Document(s) / Comments:

[ ] Document is available at the EPA Region 5 Records Center.

Specify Type of Document(s) / Comments:

Rev. 07/10/02

CHEMICAL DATA ACQUISITION PLAN

NL/TARACORP SUPERFUND SITE GRANITE CITY, ILLINOIS

Prepared for
U.S. Department of the Army
Corps of Engineers, Omaha District
Omaha, Nebraska

October, 1991

Woodward-Clyde

2318 Millpark Dr.
St. Louis, Missouri 63043

WCC Project No. 89MC114Y

The Tech Center
2318 Millpark Drive
Maryland Heights, Missouri 63043
314/429-0100

Woodward-Clyde Consultants

October 29, 1991
89MC114V

Mr. Brad Bradley
U.S. EPA Region V, 5HS-11
230 South Dearborn Street
Chicago, Illinois 60604

Dear Mr. Bradley:

Enclosed for your review are three (3) copies of the Chemical Data Acquisition Plan (CDAP) for the NL/Taracorp Superfund Site Pre-design Field Investigation. Each copy consists of three (3) volumes: the CDAP (Volume 1), the CDAP Appendices (Volume 2), and the Health and Safety Plan (Volume 3).

If you have any questions concerning these documents, please feel free to call either myself of David Pate at 314/429-0100.

Very truly yours,

Kenneth A. Hagg

Kenneth A. Hagg
Senior Consultant

KAH/dkc

cc: Mrs. Terry Buchholz, USACE

TABLE OF CONTENTS

1.0	PROJECT DESCRIPTION		1-1
1.1	INTRODUCTION		1-1
1.2	SITE INFORMATION		1-3
	1.2.1	General Site Features and Geologic Conditions	1-3
	1.2.2	Areas of Concern	1-3
		1.2.2.1 Main Industrial Property	1-3
		1.2.2.2 "Adjacent" Residential Areas	1-4
		1.2.2.3 Remote Fill Locations	1-4
1.3	PREVIOUS INVESTIGATIONS		1-4
	1.3.1	Main Industrial Property	1-4
	1.3.2	"Adjacent" Residential Areas	1-5
	1.3.3	Remote Fill Locations	1-6
	1.3.4	Record Of Decision (ROD)	1-6
1.4	PROJECT PLAN		1-7
	1.4.1	Site Investigations	1-7
	1.4.2	Predesign and Treatability Activities	1-7
1.5	PROJECT SCHEDULE		1-8
2.0	DATA QUALITY OBJECTIVES		2-1
2.1	SITE INVESTIGATION OBJECTIVES		2-1
2.2	DEVELOPMENT OF DATA QUALITY OBJECTIVES		2-2
	2.2.1	Soil	2-2
		2.2.1.1 Data Uses	2-2
		2.2.1.2 Data Types	2-3
		2.2.1.3 Data Needs	2-3
	2.2.2	Geology	2-3
		2.2.2.1 Data Uses	2-3
		2.2.2.2 Data Types	2-4
		2.2.2.3 Data Needs	2-4
	2.2.3	Groundwater	2-4
		2.2.3.1 Data Uses	2-4
		2.2.3.2 Data Types	2-4
		2.2.3.3 Data Needs	2-5
	2.2.4	Residential Inspections	2-5
		2.2.4.1 Data Uses	2-5
		2.2.4.2 Data Types	2-5
		2.2.4.3 Data Needs	2-5
	2.2.5	General Data Quality Needs	2-6
		2.2.5.1 Analytical Level	2-6
		2.2.5.2 Contaminants and Concentrations of Concern	2-7
		2.2.5.3 Detection Limit Requirements	2-8

2.3	QUALITY ASSURANCE OBJECTIVES		2-8
	2.3.1	Level of Effort	2-9
		2.3.1.1 Quality Control (QC) Effort	2-9
		2.3.1.2 Quality Assurance (QA) Effort	2-10
	2.3.2	Measurement of Data Quality Objectives	2-10
		2.3.2.1 Accuracy	2-10
		2.3.2.2 Precision	2-11
		2.3.2.3 Completeness	2-11
		2.3.2.4 Representativeness	2-11
		2.3.2.5 Comparability	2-12
3.0	PROJECT ORGANIZATION AND RESPONSIBILITY		3-1
3.1	RESPONSIBILITIES OF KEY PERSONNEL		3-1
	3.1.1	Program Manager/Responsible Professional	3-1
	3.1.2	Project Manager	3-1
	3.1.3	Project QA/QC Officer	3-2
	3.1.4	Field Operations Manager	3-2
	3.1.5	Site Safety Officer	3-2
	3.1.6	Task Leaders	3-3
	3.1.7	Project Staff	3-3
	3.1.8	QA/QC Coordinator	3-3
3.2	SUBCONTRACTORS		3-4
	3.2.1	Laboratory Analysis of Soil and Groundwater Samples - Environmental Science and Engineering, Inc. (ESE)	3-4
	3.2.2	Laboratory Geotechnical Analysis of Soil Samples - Woodward-Clyde Consultants, Clifton, New Jersey Laboratory	3-5
	3.2.3	Drilling - Layne-Wetern Company, Inc.	3-5
	3.2.4	Aerial Photography - Surdex Corp. (Surdex)	3-5
	3.2.5	Surveying - L.G. Zambrana Consultants, Inc. (Zambrana)	3-5
	3.2.6	Residential Home Inspections - Occusafe, Inc.	3-5
3.3	QUALIFICATIONS OF PERSONNEL		3-6
4.0	FIELD ACTIVITIES		4-1
4.1	RESIDENT HOME SURVEY		4-1
	4.1.1	Identify Residents	4-2
	4.1.2	Contact Residents	4-2
	4.1.3	Set-Up Appointments	4-3

	4.1.4	Conduct Survey	4-3
	4.1.5	Results and Recommendations	4-4
4.2	FIELD SAMPLING PROGRAM		4-4
	4.2.1	"Adjacent" Residential Areas	4-5
		4.2.1.1 Data Needs	4-5
		4.2.1.2 Hand Auger Borings	4-7
	4.2.2	Industrial Site (Taracorp, Trust 454, BV&G, and Rich Oil)	4-7
		4.2.2.1 Data Needs	4-8
		4.2.2.2 Monitoring Wells	4-9
		4.2.2.3 Soil Borings	4-9
	4.2.3	Remote Fill Locations	4-10
		4.2.3.1 Data Needs	4-10
		4.2.3.2 Hand Auger Borings (HAB)	4-11
		4.2.3.3 Soil Borings	4-11
	4.2.4	Sample/Survey Tracking Systems	4-12
		4.2.4.1 Sample Tracking	4-13
		4.2.4.2 Survey Tracking	4-13
4.3	FIELD ACTIVITIES AND PROCEDURES		4-13
	4.3.1	Public Contact	4-13
	4.3.2	Hand Augering and Soil Sampling	4-14
	4.3.3	Drilling and Soil Sampling	4-14
	4.3.4	Monitoring Well Installation and Development	4-14
	4.3.5	Groundwater Sampling	4-15
	4.3.6	Water Level Measurements	4-15
	4.3.7	Permeability	4-15
	4.3.8	Residential Home Survey	4-16
	4.3.9	Utility Check	4-16
4.4	SAMPLE CONTAINERS, PRESERVATION AND HOLDING TIMES		4-16
4.5	DECONTAMINATION		4-16
4.6	FIELD DOCUMENTATION		4-17
	4.6.1	Field Logbook	4-17
	4.6.2	Sample Collection Field Sheet	4-18
	4.6.3	Boring Logs	4-18
	4.6.4	Monitoring Well Installation Log	4-18
	4.6.5	Well Development Log	4-19
	4.6.6	Water Level Data Sheet	4-19
	4.6.7	Resident Mail-In Survey	4-19
	4.6.8	Resident Home Survey Form	4-19

	4.6.9 Daily Quality Control Reports (DQCRs)	4-19
4.7	FIELD SURVEYS	4-20
	4.7.1 Aerial Survey	4-20
	4.7.2 Ground Survey	4-20
4.8	FIELD INSTRUMENT PREVENTATIVE MAINTENANCE AND CALIBRATION	4-21
4.9	FIELD CORRECTIVE ACTION	4-22
5.0	ADDITIONAL ACTIVITIES	5-1
5.1	PSPR	5-1
5.2	TREATABILITY SCOPE OF WORK	5-1
5.3	BORROW EVALUATION FOR THE PROPOSED RCRA-COMPLIANT CAP	5-1
5.4	IDENTIFICATION OF AREA RCRA COMPLIANT LANDFILLS	5-2
6.0	SAMPLE IDENTIFICATION, HANDLING, AND DOCUMENTATION	6-1
6.1	SAMPLE LABELING	6-1
6.2	CHAIN-OF-CUSTODY PROTOCOL	6-1
	6.2.1 Field	6-1
	6.2.2 Laboratory	6-3
6.3	PACKAGING AND SHIPPING	6-3
7.0	LABORATORY ANALYTICAL PROCEDURES	7-1
7.1	SOIL ANALYSIS FOR LEAD	7-1
	7.1.1 Lab Methodology	7-1
	7.1.2 Method Specific Data Quality Objectives	7-1
	7.1.3 Preventative Maintenance	7-2
	7.1.4 Calibration and Frequency	7-3
	7.1.5 Corrective Action	7-3
7.2	GROUNDWATER ANALYSIS	7-5
	7.2.1 Lab Methodology	7-5
	7.2.2 Method Specific Data Quality Objectives	7-5
	7.2.3 Preventive Maintenance	7-6
	7.2.4 Calibration and Frequency	7-6
	7.2.5 Corrective Action	7-8
8.0	DATA REDUCTION, VALIDATION, AND REPORTING	8-1
9.0	INTERNAL QUALITY CONTROL CHECKS	9-1
9.1	FIELD QC CHECKS	9-1

9.2	LABORATORY QC CHECKS		9-1
	9.2.1	Matrix Duplicate	9-3
	9.2.2	Matrix Spike	9-3
	9.2.3	Matrix Spike Duplicate	9-3
	9.2.4	Method Blank	9-4
10.0	PERFORMANCE AND SYSTEMS AUDITS		10-1
10.1	PERFORMANCE AUDITS		10-1
10.2	LABORATORY SYSTEMS AUDITS		10-2
10.3	AUDIT PROCEDURE		10-2
10.4	RESPONSE		10-4
10.5	FOLLOW-UP ACTION		10-4
10.6	AUDIT RECORDS		10-4
11.0	CHEMICAL DATA QUALITY MANAGEMENT (CDQM) DELIVERABLES		11-1
11.1	DAILY QUALITY CONTROL REPORTS (DQCR)		11-1
11.2	QUALITY CONTROL SUMMARY REPORT (QCSR)		11-1
11.3	ANALYTICAL REPORTS		11-2
11.4	SITE INVESTIGATION REPORT		11-3

TABLE 1	PROJECT MILESTONES
TABLE 2	SAMPLING AND ANALYSIS PLAN
TABLE 3	PROJECTED SOIL/WATER ANALYTICAL SAMPLING BREAKDOWN
TABLE 4	LABORATORY QC LEVEL OF EFFORT FOR ANALYTICAL TESTING
TABLE 5	FIELD EQUIPMENT CALIBRATION AND MAINTENANCE REQUIREMENTS
TABLE 6	ANALYTICAL PROCEDURES FOR NL/TARACORP FIELD INVESTIGATIONS
TABLE 7	SAMPLE CONTAINERS, PRESERVATION, AND HOLDING TIMES
TABLE 8	ANALYTICAL METHODS AND REPORTING LIMITS
TABLE 9	ACCURACY AND PRECISION CRITERIA FOR ANALYTICAL TESTING
TABLE 10	MATRIX AND SURROGATE SPIKE CONTROL LIMITS FOR ORGANIC ANALYSIS

FIGURE 1	SITE LOCATION MAP
FIGURE 2	SITE PLAN - INDUSTRIAL AND RESIDENTIAL AREA
FIGURE 3	SITE PLAN - SHAEFFER AND SAND ROAD
FIGURE 4	PROJECT SCHEDULE
FIGURE 5	PROJECT ORGANIZATION
FIGURE 6	PROPOSED WELLS AND GEOTECHNICAL BORINGS - INDUSTRIAL AREA
FIGURE 7	EAGLE PARK ACRES
FIGURE 8	VENICE ALLEYS
FIGURE 9	NONCONFORMANCE AND CORRECTIVE ACTION REPORT
FIGURE 10	AUDIT FLOW CHART
FIGURE 11	LABORATORY AUDIT SHEET
FIGURE 12	AUDIT FINDING REPORT

APPENDIX A	STANDARD OPERATING PROCEDURES
APPENDIX B	ESE LABORATORY QAPP
APPENDIX C	SUMMARY OF ANALYTICAL DATA FROM REMEDIAL INVESTIGATION (RI)

The following definitions apply to terms commonly used in the text of this document:

Accuracy	Nearness of a measurement of the mean (x) of a set of measurements to the true value. Accuracy is evaluated by the percent recovery of sample spikes, analysis of laboratory control samples, and reference materials.
"Adjacent" Residential Areas	Residential areas that are contiguous with the NL Site.
Analytical Batch	The basic unit for analytical quality control is the analytical batch. The analytical batch is defined as samples which are analyzed together with the same method sequence and the same lots of reagents and with the manipulations common to each sample within the same time period or in continuous sequential time periods. (e.g., groundwater, surface water, soil, sediment, etc.)
ARAR	Applicable or Relevant and Appropriate Requirements
ASTM	American Society for Testing and Materials
Batch	A group of samples which behave similarly with respect to the procedures being employed for those samples and which are being processed as a unit.
BFB	Bromofluorobenzene
Calibration Blank	Usually an organic or aqueous solution that is as free of analyte as possible and prepared with the same volume of chemical reagents used in the preparation of the calibration standards and diluted to the appropriate volume with the same solvent (water or organic) used in the preparation of the calibration standard. The calibration blank is used to give the null reading for the instrument response versus concentration calibration curve.
CCB	Continuing Calibration Blank
CCC	Continuing Calibration Compounds

CCV	Continuing Calibration Verification Standard
CDAP	Chemical Data Acquisition Plan
CERCLA	Comprehensive Environmental Response, Compensation, and Liability Act
CFR	Code of Federal Regulations
CHSO	Corporate Health and Safety Officer
CIH	Certified Industrial Hygienist
CLP	U.S. Environmental Protection Agency Contact Laboratory Program
COC	Chain of Custody
Co-Located Samples	Two or more separate samples taken from the same location, but not homogenized.
Comparability	A measure of the confidence with which one data set can be compared with another.
Completeness	A measure of the amount of valid sample data obtained from the measurement system compared to the amount of sample data that are analyze. Valid results are those results which meet or exceed quality control criteria and satisfy quality assurance objectives.
CVAA	Cold Vapor Atomic Adsorption Spectrometry
DFTPP	Decalfuorotiphenyl-phosphine
DOT	Department of Transportation
DQCR	Daily Quality Control Report
DQO	Data Quality Objective
Duplicate	Duplicate samples are two samples taken and analyzed independently. In cases where aliquoting is impossible, as in the case of volatiles, co-located samples must be taken for the duplicate analysis.

ESE	Environmental Science and Engineering, Inc., analytical laboratory subcontractor
Environmental Samples	An environmental sample or field sample is a representative sample of any material (aqueous, nonaqueous, or multi-media) collected from any source for which determination of composition or contamination is requested or required.
EP TOX	Extraction Procedure Toxicity
FOM	Field Operations Manager
FS	Feasibility Study
GC/MS	Gas Chromatography/Mass Spectrometry
GC/ECD	Gas Chromatography/Electron Capture Detection
GFAA	Graphite Furnace Atomic Adsorption
HAB	Hand Auger Boring
Homogenized	In the context of this CDAP, this is interpreted to mean as well mixed and uniform as reasonably possible.
HSA	Hollow Stem Auger
HSC	Health and Safety Coordinator
HSO	Health and Safety Officer
ICP	Inductively Coupled Argon Plasma Emission Spectrometry
ID	Identification
I.D.	Inner Diameter
IDPH	Illinois Department of Public Health
IEPA	Illinois Environmental Protection Agency
Field Blanks	A sample matrix that is as free of analyte as possible and is

transferred from one vessel to another at the sampling site using the sampling technique as closely as possible, including a typical holding time in the sampling equipment, and preserved with the appropriate reagents. This serves as a check on reagents and environmental contamination.

Matrix Spike (MS)	A matrix spike is employed to provide a measure of accuracy for the method used in a given matrix. A matrix spike analysis consists of adding a predetermined quantity of stock solutions of certain analytes to a sample matrix prior to sample extraction/digestion and analysis. The concentration of the spike should be at the regulatory standard level, or the reporting limit for the method if the sample is free of the analyte.
Matrix Spike Duplicate (MSD)	A second matrix spike sample prepared identically to the matrix on which a duplicate analysis to performed to assess the reproducibility of the matrix spike analysis.
Method Detection Limit (MDL)	The minimum concentration of a substance that can be measured and reported with 99 percent confidence that the analyte concentration is greater than zero and is determined from analysis of a sample in a given matrix containing the analyte.
Method Blank	A sample matrix that is as free of analyte as possible and contains all the reagents in the same volume as used in the processing of the samples. The method blank must be carried throughout the complete sample preparation procedure and contains the same reagent concentrations in the final solution as in the sample solution used for analysis. The reagent blank is used to monitor for possible contamination resulting from the preparation or processing of the sample.
NL Site	NL Site is for the National Lead/Taracorp Superfund Site which includes the industrial property, the residential areas, and remote fill locations.
NTU	Nephelometric Turbidity Units
OD	Outer Diameter
PA	Program Administrator

PCB	Polychlorinated Biphenyl
PDFI	Pre-Design Field Investigation
Performance Evaluation Sample	A material of known composition that is analyzed concurrently with test samples during a measurement process. It is used to verify the performance of the analytical system. These samples are provided by the USACE during the laboratory validation process.
PM	Project Manager
ppm	Parts Per Million
Precision	Precision is the agreement between a set of replicate measurements without assumption or knowledge of the true value. Precision is evaluated as the relative percent difference or relative standard deviation for replicate or split samples.
PSPR	Plan for Satisfaction of Permitting Requirements
QAPP	Quality Assurance Program Plan
QA/QC	Quality Assurance/Quality Control
QCSR	Quality Control Summary Report
RAS	CLP Routine Analytical Services
RCRA	Resource Conservation and Recovery Act
Reporting Limit	The reporting limit is the lowest level that can be reliably achieved within specified limits of precision and accuracy during routine laboratory operating conditions as defined in the Laboratory QAPPs in Appendix B.
Representativeness	The degree to which a single measurement is indicative of the characteristics of a larger sample or area or the degree to which data represents field conditions.
RI	Remedial Investigation

Rinsate	Usually reagent water that is as free of analyte as possible and is transported to the site, opened in the field, and poured over or through the sample collection device, collected in a sample container, and returned to the laboratory. This serves as a check on sampling device cleanliness and potential cross-contamination.
ROD	Record of Decision
RPD	Relative Percent Difference, calculated as $$RPD\ (\%) = \frac{\lvert R_1 - R_2 \rvert}{(R_1 + R_2)/2} \times 100$$ where R_1 = first sample value (original) R_2 = second sample value (duplicate)
SAS	CLP Special Analytical Services
SLLR	St. Louis Lead Recyclers
SOP	Standard Operating Procedures
SPCC	System Performance Calibration Compounds
SSHP	Site Safety and Health Plan
SSO	Site Safety Officer
STS	Sample Tracking System
TAL	Target Analyte List
TCLP	Toxicity Characteristic Leaching Procedure
Trip Blank	A sample of reagent water that is as free of organic analyte as possible and is transported to the sampling site and returned to the laboratory without being opened. This services as a check on sample contamination originating from the container or sample transport.
USACE	US Army Corps of Engineers

USACE-MRD	USACE Missouri River Division Laboratory
USACE PM	USACE Project Manager
USDA	US Department of Agriculture
USEPA	US Environmental Protection Agency
USGS	US Geological Survey

1.0
PROJECT DESCRIPTION

1.1 INTRODUCTION

This project is part of the Woodward-Clyde Consultants (WCC) Indefinite Delivery Contract with the U.S. Army Corps of Engineers, Omaha District (USACE), Contract No. DACW45-90-D-0008, for the Pre-Design Field Investigation (PDFI) for the NL/Taracorp Superfund Site (NL Site) located in and near Granite City, Madison, and Venice, Illinois. The purpose of this investigation is to delineate areas where surficial soils will require excavation to achieve the cleanup levels established in the Record of Decision (ROD) for this site (500 parts per million (ppm) for the residential areas and 1000 ppm for the Taracorp, Trust 454, Rich Oil, and BV&G Transport properties).

To accomplish this, the following sequence of tasks will be performed under the present contract:

1. Develop a Chemical Data Acquisition Plan (CDAP) which includes a detailed discussion of all field activities, laboratory activities, and contract deliverables related to the acquisition of Chemical Data for the NL Site PDFI.

2. Develop a Plan for Satisfaction of Permitting Requirements (PSPR) which will include a comprehensive list of permits that will be required in conjunction with the remedial action, including the procedures and time frames required for acquisition of these permits.

3. Perform an interior visual inspection of residences for which access is obtained within the affected site area to identify other potential sources of lead contamination.

4. Complete the field activities and laboratory analytical work required for the PDFI.

5. Evaluate possible borrow sites from which suitable material may be obtained to construct a RCRA-compliant cap to cover the Taracorp waste pile. The quantity of borrow needed for the cap will also be estimated.

6. Construct lead concentration maps for each sampling depth interval for the affected areas. Maps will also be produced which delineate the spacial extent of the hard rubber fill material that will require excavation, treatment and disposal.

7. Estimate the quantities of contaminated soil to be excavated and treated for both on-site and off-site disposal.

8. Identify potential disposal sites for the hard rubber battery casing material and estimate disposal costs and limitations.

9. Develop a Scope of Work for a treatability study for the hard rubber battery casing material.

10. Prepare a Pre-Design Investigation Report.

This CDAP defines the activities and standard operating procedures that are necessary to conduct the site investigation at the NL Site and to provide data of sufficient quality to fulfill the project data quality objectives.

1.2 SITE INFORMATION

The NL Site is located in the cities of Granite City, Madison, and Venice, in Madison County, Illinois, approximately two miles east of St. Louis, Missouri (Figure 1).

1.2.1 General Site Features and Geologic Conditions

The site is located within the portion of the Mississippi River Valley known as the American Bottoms. It is outside of the 100 year flood plain. The area is underlain by a sequence of alluvial, glaciofluvial and glaciolacustrine deposits to a depth of approximately 100 feet. These deposits generally become coarser with depth. Bedrock consists of Carboniferous age limestone, sandstone and shale. The Remedial Investigation (RI) (O'Brien & Gere, 1988) described the surficial soils as typically silty clay to fine sandy loams of the Riley-Landes-Parkesville Association that are generally under grass or forest cover. The site area tends to be flat and poorly drained.

1.2.2 Areas of Concern

This investigation will focus on three principle areas: the main industrial property (currently owned by Taracorp, Trust 454, Rich Oil, and BV&G Transport, formerly known as Tri-City Trucking), the adjacent residential areas (Granite City and Madison), and the remote fill locations containing hard rubber battery casing material from the Taracorp waste pile (Figures 2 and 3).

1.2.2.1 Main Industrial Property

The main industrial property consists of approximately 40 acres of property owned by Taracorp, Trust 454, Rich Oil, and BV&G Trucking, and is the location of a former secondary lead smelting facility (NL/Taracorp) and battery recycling operation (St. Louis Lead Recyclers (SLLR)). This area was designated as Area 1 in the RI; however, for the purposes of this investigation, this area will be referred to as the main industrial property. Two separate waste piles, the Taracorp pile and the SLLR pile, cover a portion of the site. These have a combined volume of approximately 91,000 cubic

yards. Approximately 80% of the material present is blast furnace slag (O'Brien & Gere,1988), with the remainder being a mixture of broken battery case material and lead and iron oxide dust, and miscellaneous debris.

1.2.2.2 "Adjacent" Residential Areas

The "adjacent" residential areas around the main industrial property include approximately 520 acres within the towns of Granite City, and Madison, Illinois. Residences consist of small to moderate size homes on modest size lots. The lead contamination in the soil is a direct result of airborne particulate fallout from the lead smelting operations. In previous studies the residential areas were subdivided into 7 areas designated as Areas 2-8; however for the purposes of this investigation, this numbering sequence will not be used. All residential areas will be considered together, with each lot assigned a six digit alpha-numeric code based on street address.

1.2.2.3 Remote Fill Locations

A number of areas have been identified that used material containing hard rubber battery case material from the Taracorp waste pile as fill. These areas are Eagle Park Acres and Venice (south and southeast of Madison), three areas north of Granite City, and one in Granite City.

1.3 PREVIOUS INVESTIGATIONS

An RI at the NL Site was completed by O'Brien and Gere in September, 1988. The extent of contamination, as defined by the RI for each of the areas of concern, is presented below. A summary of the analytical results from RI is presented in Appendix C.

1.3.1 Main Industrial Property

A series of samples were taken to characterize the nature of the material present in the waste piles. Four types of samples were collected: Blast furnace slag samples,

materials from the upper strata of the primary pile, samples of drummed material, and material from the SLLR pile.

Four composite slag samples were analyzed. The concentrations of lead present in these samples were highly variable, ranging from 15,000 to 37,300 mg/kg. Results of EP Toxicity analyses on these samples indicated that the slag should be characterized as a hazardous waste due to elevated concentrations of lead. Ten samples from the surficial slag pile material in the pile were analyzed. The concentrations of lead present in these samples were also highly variable, ranging from 45,000 to 279,000 mg/kg. Five of these samples were analyzed for EP Toxic metals, with four of five characterized as EP Toxic for lead and one of five for cadmium. Two samples from drummed material were analyzed, with elevated levels of lead and cadmium detected. The drummed waste was also found to be EP Toxic for both lead and cadmium. Three samples were analyzed from the SLLR pile, with lead concentrations ranging from 105,000 to 286,000 mg/kg. These samples were also EP Toxic for lead.

One soil sample was collected from the Taracorp site. The analysis of the sample indicated that it contained a lead concentration of 15,300 mg/kg. No EP Toxicity analysis was run on this sample.

In addition, O'Brien & Gere (1988) conducted a hydrologic investigation that included groundwater sampling of the twelve existing monitoring wells located on or proximate to the Taracorp site. The results of this study indicated that samples collected from wells on site and around the perimeter of the site contained contaminant levels that were very similar to the levels observed in the background wells, with all analytes present at levels below MCL for inorganics, except for lead, cadmium and arsenic. No volatiles have been identified in either the soil or groundwater in the site area.

1.3.2 "Adjacent" Residential Areas

A total of 40 locations were sampled that were within one mile of the Taracorp site, with the majority of these being from the "adjacent" residential areas. Samples were collected from depth intervals of 0-3 inches and 3-6 inches. The analyses of these

samples yielded soil lead concentrations ranging from 136 to 9,250 mg/kg for depths of 0-3 inches, and 45 to 14,700 mg/kg for depths of 3-6 inches. One sample was analyzed for EP Toxicity and was found to be nonhazardous.

1.3.3 Remote Fill Locations

Sixteen samples were analyzed from the remote fill locations in Venice and Eagle Park Acres. Samples were collected from depth intervals of 0-3 inches and 3-6 inches. Lead concentrations for the samples collected from Venice ranged from 200 to 126,000 mg/kg. For the samples collected from Eagle Park Acres, lead concentrations ranged from 63 to 4030 mg/kg.

1.3.4 Record Of Decision (ROD)

The ROD for the NL Site was issued on 30 March 1990. To adequately protect human health and the environment, the ROD requires the removal of all soils and battery case materials with lead concentrations greater than 500 parts per million (ppm) in residential areas, the removal of all soils and battery case material with lead concentrations greater than 1000 ppm in the industrial area, and removal of battery case materials from alleys and driveways. These areas would then be restored to their original state, with the exception of remediated alleys and driveways which would be paved. In addition, the ROD requires an inspection of the interior of each affected residence to identify other potential sources of lead exposure. A list of recommendations on ways to reduce exposure from indoor sources will then be provided to the residents. All of the contaminated material that is excavated will be either incorporated into the main Taracorp waste pile or removed to a RCRA-compliant landfill, as appropriate. A bottom liner will be constructed under the new sections of the Taracorp waste pile. The entire reconfigured pile will then be covered with a RCRA-Compliant cap.

1.4 PROJECT PLAN

The overall objective of this project is to identify activities and provide information for the design of the remedial action for the NL Site. To accomplish this, a variety of tasks must be completed. These include site investigations on both the industrial and residential properties, predesign and treatability activities, and a borrow evaluation to aid in the design of the RCRA-compliant cap.

1.4.1 Site Investigations

The ROD requires removal of soil and battery casing material from the industrial and residential areas with lead concentrations greater than 1000 and 500 ppm, respectively, and the removal of batter case material from alleys and driveways. The ROD also requires removal of battery case material in the industrial, residential, and remote fill areas. The soil sampling, analytical testing, and mapping efforts will attempt to delineate the vertical and areal extent of the lead contamination in these areas. To identify other potential sources of lead within the affected site area, interior visual inspections of residences will be performed at those residences for which access has been obtained. This CDAP discusses the activities and standard operating procedures that will be required to implement the field investigation phase of the project.

1.4.2 Predesign and Treatability Activities

Additional activities are required prior to or concurrent with the initial stages of the PDFI. These activities include: identification of a RCRA-compliant landfill and disposal costs for contaminated material that cannot be disposed of on site; development of a Plan For Satisfaction of Permitting Requirements (PSPR) to include a comprehensive list of permits required in conjunction with any remedial action; a scope of work for a treatability study; and a borrow evaluation to aid in the predesign of the RCRA-compliant cap for the reconfigured Taracorp pile.

1.5 PROJECT SCHEDULE

The proposed schedule for the NL Site Project is shown in Figure 4. As indicated, the project was initiated in July, 1991 and is expected to continue until June, 1992. Anticipated milestones within the project schedule are identified in Table 1. Project milestones, as indicated, are typically associated with project deliverables and with the initiation or completion of major project activities.

Mobilization for most of the major site investigation activities can begin upon receipt of final CDAP approval by the USACE. The schedule anticipates that this approval will be received by late October, 1991. Field investigation activities are expected to extend into January, 1992. Several tasks will commence when the USACE issues the notice to proceed. These include the aerial photographic survey, compilation of the PSPR, the Treatability scope of work, and the identification of and cost estimates related to area RCRA-compliant landfills. This proposed schedule pursues an aggressive approach to meet overall project objectives. Attainment of these project schedule goals requires, in some cases, expedited regulatory and USEPA review.

2.1 SITE INVESTIGATION OBJECTIVES

Additional information is required to proceed with the remedial design for the NL Site. Data must be developed to better estimate quantities of material that will require excavation and possibly require treatment as required by the ROD (USEPA, 1990). The ROD requires that excavated material either be incorporated into the main Taracorp waste pile or be treated and disposed of in a RCRA-compliant landfill, as is appropriate for the source of the excavated material.

Specific objectives of this field investigation include the following:

- Evaluate the horizontal and vertical extent of lead contamination in soil in the main industrial property
- Evaluate the extent of groundwater contamination in the main industrial property
- Evaluate the horizontal and vertical extent of lead contamination in soil in the adjacent residential areas
- Determine the lateral and vertical extent of fill containing hard rubber battery casing material in the remote fill locations identified by the USEPA
- Estimate the volume of material requiring excavation and/or treatment in all the above areas

2.2 DEVELOPMENT OF DATA QUALITY OBJECTIVES

Data Quality Objectives (DQOs) are defined as qualitative and quantitative statements which specify the quality of the data required to support decisions regarding remedial action. DQOs are determined based on the end uses of the data to be collected and, therefore, vary with each intended use. The following paragraphs describe the basis of DQOs for the NL Site.

2.2.1 Soil

2.2.1.1 Data Uses

The following are the intended uses of the data generated concerning surface and subsurface soils:

- To estimate the volumes of material requiring excavation as required by the ROD
- To estimate the quality of material requiring disposal in a RCRA-compliant landfill
- To evaluate potential sources of on-site borrow material from which a RCRA-compliant cap for the Taracorp pile could be constructed

2.2.1.2 Data Types

The following activities are necessary to generate the appropriate data to fulfill soil information needs and intended uses:

- Site inspections
- Aerial photo/site map examinations
- Literature search
- Borings to allow sample collection

- Laboratory analysis for chemical parameters and physical testing

2.2.1.3 Data Needs

The following are general soil data needs identified for field investigations at the NL Site:

- An estimate of the extent of areas requiring removal and or treatment of soil
- An evaluation of soil characteristics including soil type, physical properties, and contaminant concentrations
- The collection of approximately 8,000 soil samples to make the necessary determinations required by the ROD and by the scope of services for this project

2.2.2 Geology

2.2.2.1 Data Uses

Geological data generated during the NL Site investigation will be used for the following purposes:

- An evaluation of potential borrow material from which the RCRA-compliant cap for the Taracorp pile can be constructed (this material must have a hydraulic conductivity of less than 1×10^{-7} cm/sec)
- An evaluation of the influence of geologic characteristics on future remediation activities
- An evaluation of geologic characteristics in the area where the Taracorp pile will be expanded

2.2.2.2 Data Types

The following activities will provide geological and subsurface data for the NL Site:

- Compilation of detailed boring logs, soil characteristics, classification, and descriptions
- Particle size and sorting analyses on approximately 50 soil samples collected from the main industrial site

2.2.2.3 Data Needs

The following geological data needs are identified for the intended data uses:

- An estimate of the continuity of near-surface stratigraphic units
- An estimate of particle size and sorting
- An evaluation of soil characteristics, classifications, and descriptions

2.2.3 Groundwater

2.2.3.1 Data Uses

Groundwater data collected during the NL Site field investigation will be used to estimate the degree to which groundwater quality has been adversely affected by surficial contamination and to estimate the downward mobility of the contaminants.

2.2.3.2 Data Types

The following activities or types of data are necessary to fulfill data quality needs and uses for the groundwater data acquired during the NL Site field investigation:

- Installation of four additional monitoring wells
- Collection and analysis of water samples from both new and existing wells for priority pollutants (18 wells total)

- Slug testing to evaluate aquifer parameters

2.2.3.3 Data Needs

The following groundwater data needs are identified for the intended uses:

- Evaluation of the in-situ permeability of the aquifer
- Establishment of contaminant levels present in the groundwater under the main industrial area
- Identification of the depth to the water table

2.2.4 Residential Inspections

2.2.4.1 Data Uses

Information will be collected that will document other possible sources of lead exposure inside residential dwellings. Visual inspections will be performed at each affected residence where the occupant requests such an inspection. This information will be used to advise residents of other potential sources of lead exposure in their homes.

2.2.4.2 Data Types

The visual inspections of home interiors will generate the appropriate data to fulfill the data needs and intended uses of the residential inspection.

2.2.4.3 Data Needs

These visual home inspections will attempt to identify potential interior sources of lead exposure.

2.2.5 General Data Quality Needs

Factors involved in the assessment of the level of chemical data quality that is necessary include appropriate analytical levels, contaminants of concern, action levels, appropriate detection limits, and samples designated to be critical. The following paragraphs describe the intended level of data quality determined as appropriate for the NL Site field investigation.

2.2.5.1 Analytical Level

As defined by the EPA, the following are the general analytical levels with respect to data quality.

- Level I: Samples are field screened or analyzed using portable instruments. Results are often not compound specific and not quantitative, but results are available in real-time. It is the least costly of the analytical options.
- Level II: Samples are analyzed in the field using more sophisticated portable analytical instruments; in some cases, the instruments may be set up in a mobile laboratory on site. There is a wide range in the quality of the data that can be generated. It depends on the use of suitable calibration standards, reference materials, sample preparation equipment, and training of the operator. Results are available in real-time or several hours.
- Level III: Samples are analyzed in an off-site analytical laboratory. These analyses may or may not use Contract Laboratory Program (CLP) procedures; but, although QA/QC may be rigorous, Level III analyses do not usually use the validation or documentation procedures required of Level IV (CLP) analysis. The laboratory may or may not be a CLP laboratory. Generally, USEPA SW-846 methodologies with specified QA/QC protocols fall into this level.

- Level IV: CLP Routine Analytical Services (RAS). All samples are analyzed in an off-site CLP analytical laboratory following CLP protocols. Level IV is characterized by rigorous QA/QC protocols and documentation.
- Level V: Analysis by nonstandard methods. Samples are analyzed in an off-site analytical laboratory which may or may not be a CLP laboratory. Method development or method modification may be required for specific constituents or detection limits. CLP Special Analytical Services (SAS) are Level V.

In general, for the NL Site field investigation, Level I is to be used for determination of field parameters for groundwater samples and for field screening for health and safety purposes where necessary. Level III is appropriate for all samples sent off site for analysis.

2.2.5.2 Contaminants and Concentrations of Concern

Based on previous investigations, the contaminants of concern at the NL Site fall into the general categories of inorganics for soils and priority pollutants for water. Specifically, the following contaminants are of potential concern at the NL Site:

- Lead (soil)
- Volatile organics (water)
- Semi-volatile organics (water)
- PCBs/Pesticides (water)
- TAL metals (water)

The analytes of concern are discussed in detail in section 7.0 and Table 8 of this document on a site specific basis.

2.2.5.3 Detection Limit Requirements

The detection limits required for Level III analysis are determined on a site-specific basis dependent upon the contaminants of concern and the applicable or relevant and appropriate requirements (ARARs). Details of method and site-specific detection limits are addressed in Section 7.0.

2.3 QUALITY ASSURANCE OBJECTIVES

The overall Quality Assurance (QA) objective for the field investigation at the NL Site is to develop and implement procedures for sampling, laboratory analyses, field measurements, and reporting that provide a quality of data that is consistent with and adequate for the uses intended for that data. The sample set, chemical analytical results, and interpretations must be based on data that meet or exceed quality assurance objectives established for the project. Quality assurance objectives for field measurement systems are also an important aspect of these investigations. These objectives for nonchemical data are discussed in the appropriate Standard Operating Procedures (SOPs). Field and laboratory analytical QA objectives are discussed in the following paragraphs.

Quality assurance objectives are usually expressed in terms of accuracy, precision, completeness, representativeness, and comparability. Target ranges for these parameters are established for analytical testing and field measurements prior to initiation of these activities. Any variances from the quality assurance objectives result in the implementation of appropriate corrective measures and an assessment of the impact of corrective measures on the usability of the data in the decision making process.

2.3.1 Level of Effort

2.3.1.1 Quality Control (QC) Effort

Field duplicates and field blanks will be collected and submitted to the analytical laboratory to provide a means to assess the quality of the data resulting from the field sampling program. Field duplicate samples will be analyzed to check for sampling and laboratory reproducibility as well as analytical precision. Field blank samples will be analyzed to check for procedural contamination and cross-contamination. These blanks will be collected during the sampling effort. Matrix spike and matrix spike duplicate, and laboratory control samples will be analyzed to assess that recoveries falling outside acceptance windows are attributable to sample matrix interferences and not to laboratory analytical errors, as well as to measure the accuracy of the analysis.

The general level of this QC effort for the NL Site will be a minimum of one field duplicate for every 20 investigative soil (5%) and one for every 10 groundwater samples (10%), and a minimum of one field blank for every 10 investigative groundwater samples (10%). The actual frequency may be higher and will be determined in accordance with site-specific objectives. One matrix spike and one matrix spike duplicate sample will be collected for every 40 soil samples (2.5% MS and 2.5% MSD), and for every 10 groundwater samples (10%). The specific level of field QC effort is summarized in Section 4.2 for each respective site and in Tables 2 and 3.

The level of QC effort provided by the laboratory will be equivalent to the level of QC effort specified in USEPA SW 846, Third Edition, as described in the ESE Quality Assurance Program Plan (QAPP) included in Appendix B. The level of QC effort required for specific analytical parameters is summarized in Table 4.

For groundwater sampling, the level of effort for the field measurement of pH consists of premeasurement calibration and postmeasurement verification, using standard reference solutions. The QC effort for the field conductivity measurements will include daily calibration of the instruments, using standard solutions of known conductivity as specified in the appropriate SOPs, and in Table 5.

2.3.1.2 Quality Assurance (QA) Effort

Field duplicates and field blanks will be collected for specific parameters and submitted to an independent government quality assurance laboratory. The USACE Missouri River Division Laboratory (MRD) will be used for this purpose. QA samples shall be taken at the rate of at least 10 percent of the field samples taken for each matrix. USACE personnel will also be involved in general oversight of field activities as additional assurance of adherence to strict QA/QC protocol. The level of QA for each site is summarized in **Tables 2 and 3.**

2.3.2 Measurement of Data Quality Objectives

2.3.2.1 Accuracy

Accuracy is the degree to which a measurement compares to an accepted reference or true value. An evaluation of the accuracy of a measurement system provides an estimate of bias. The accuracy of an analytical method is evaluated by analyzing known reference standards.

The percent recovery achieved by analysis of known reference standards or spiking compounds will be used to define the accuracy for the compounds of interest. One known reference standard is also analyzed for every batch of 20 samples.

The estimated ranges of accuracy for each measurement parameter are defined within the analytical test methods and in Section 7.1 and 7.2 of this CDAP. Acceptable accuracy measures described in the ESE QAPP (**Appendix B**) are also dependent on the sample matrix.

The accuracy of field measurements of pH will be assessed through premeasurement calibrations and postmeasurement verifications, using at least three standard buffer solutions. The two measurements must be within 0.1 standard units of buffer solution values.

2.3.2.2 Precision

Precision is a measure of variability between individual sample measurements under prescribed conditions. Precision can be assessed by replicate measurements of known standards and analysis of duplicate environmental samples. Precision is calculated by a determination of the relative percent difference (RPD) of the duplicate samples.

Replicate measurements of known standards (laboratory control samples) are routinely monitored by the laboratory by comparing the RPD with control limits established at plus three standard deviations from the mean RPD of historical data. Duplicate environmental samples will be submitted from the field at a rate of one duplicate for every 20 environmental samples or per set collected (5%). The objectives for precision are discussed in Section 7.0.

2.3.2.3 Completeness

Completeness is defined as the percentage of the total analytical measurements which are judged to be valid in accordance with the criteria defined in section 7.0. The completeness goal is to generate a sufficient amount of valid data to support the NL Site field investigation objectives.

The data set must contain all QC check analyses verifying precision and accuracy for the analytical protocol. In addition, all data are reviewed in terms of stated goals in order to assess the sufficiency of the data base. Completeness is calculated as the number of valid data points obtained divided by the critical data collected, multiplied by 100. The analytical completeness objective for the NL Site data is 80 percent.

2.3.2.4 Representativeness

Representativeness is the degree to which data accurately and precisely represent a characteristic of a population, parameter variations at a sampling point, or an environmental condition.

Duplicate or co-located samples will be collected and used as a means to assess field representativeness. By definition, duplicate samples are representative of a given point in space and time. Representativeness will also be maintained during the sampling effort by sampling in compliance with the procedures described in Section 4.2 of this document. A summary of the duplicate samples to be collected is provided in Tables 2 and 3.

2.3.2.5 Comparability

Comparability expresses the confidence with which one data set can be compared to another. Comparability can be related to accuracy and precision as these quantities are measures of data reliability. Data are comparable if sampling considerations, collection techniques, measurement procedures, measurement methods, and reporting are equivalent for the samples within a sample set. A qualitative assessment of comparability will be made of applicable data sets.

The organizational structure and responsibility, defined below and in Figure 5, is designed to provide adequate project control and proper quality assurance for site investigative activities at the NL Site. The necessary communication for project and independent review is discussed. The laboratory internal organizational structure is provided in the Laboratory Quality Management plan in Appendix B.

3.1 RESPONSIBILITIES OF KEY PERSONNEL

3.1.1 Program Manager/Responsible Professional

The Program Manager has overall responsibility for WCC to the USACE for all activities on the project, and monitoring the Project Manager's activities. The Program Manager has overall responsibility for the development of the CDAP, for monitoring the quality of the technical and managerial aspects of the project, for implementing the CDAP, and, where necessary, for implementing corrective measures.

3.1.2 Project Manager

The Project Manager has primary responsibility for the completion of all activities on the project. The Project Manager is responsible to the Program Manager and the USACE for day-to-day control of planning, scheduling, cost control and implementation of the project, and for the development of the technical reports, the CDAP, and other project documents. The Project Manager monitors all project personnel in planning, coordinating, and controlling all technical aspects of the tasks.

3.1.3 Project QA/QC Officer

The QA/QC Officer reports to the Program Manager and works directly with the Project Manager and other project personnel. The QA/QC Officer has the responsibility to monitor and verify that the work is done in accordance with the CDAP, the Standard Operating Procedures, and other applicable procedures. The QA/QC Officer also has the responsibility to assess the effectiveness of the QA/QC program and to recommend modifications to the program where applicable. The QA/QC Officer is responsible for verifying that personnel assigned to the project are trained and indoctrinated relative to the requirements of the QA/QC Program. This person is also responsible for reviewing and verifying the disposition of nonconformance and corrective action reports, and for periodic quality assurance audits. The QA/QC Officer will advise the Project Manager on implementation of the QA/QC program, but the QA/QC functions of the QA/QC Officer and QA/QC representatives are independent of the Project Manager. The QA/QC Officer is responsible for coordination with the Government Quality Assurance Laboratory which has been designated as the USACE Missouri River Division Laboratory (MRD).

3.1.4 Field Operations Manager

The Field Operations Manager is (FOM) responsible to the Project Manager for planning, scheduling, cost control, implementation and completion of all field and related activities. The FOM will direct and coordinate the activities of all Field Task Leaders and subcontractors to ensure that the Field Investigation is completed in a timely, professional manner.

3.1.5 Site Safety Officer

The Site Safety Officer (SSO) reports to and works directly with the FOM and other project personnel. The SSO operates under the direction and guidance of the WCC Corporate Health and Safety Officer (CHSO), who is a Certified Industrial Hygienist (CIH) and the regional Health and Safety Officer (HSO). The HSO and the SSO are not CIH's. The SSO has the responsibility to monitor and verify that the work is done

in accordance with the Site Safety and Health Plan written for site investigations at the NL Site. The SSO will advise the FOM regarding health and safety issues, but will function independently of the FOM.

3.1.6 Task Leaders

Each Task Leader is responsible to the Field Operations Manager or Project Manager for planning, scheduling, and completion of assigned project tasks. The Task Leader is responsible for implementing the QA/QC program related to their assigned tasks for the NL Site project.

3.1.7 Project Staff

Each member of the project staff is responsible to the Task Leader or Project Manager for completion of assigned project activities. Members of the project staff are responsible for understanding and implementing the CDAP, Health and Safety Plan, and QA/QC program as it applies to their project activities.

3.1.8 QA/QC Coordinator

A QA/QC Coordinator will be appointed by the QA/QC Officer if deemed to be necessary with approval by the Program Manager, to review, monitor, and report on the conformance to QA/QC program requirements for specific project activities or tasks. A QA/QC Coordinator may audit activities and report to the QA/QC Officer. As QA/QC Coordinator, the designated staff member may also do project-related work, but may not do quality-monitoring on his or her own work. As a QA/QC Coordinator, the designated staff member may also advise the task group(s) on QA/QC methods and practices. The QA Coordinator will maintain a record of quality-monitoring and will inform the QA/QC Officer of these monitoring activities.

3.2 SUBCONTRACTORS

Implementation of the CDAP will require subcontractors for:

- Laboratory chemical analysis of soil and groundwater samples
- Laboratory geotechnical analysis of soil samples
- Exploratory drilling and monitoring well installation and development
- Surveying of boring and monitoring well locations and elevations
- Aerial photography and photogrametric mapping
- Residential home inspection survey

Potential subcontractors have been contacted for laboratory analysis, drilling services, residential home inspections, surveying, aerial photography and photogrametric mapping. The costs for the services necessitated by this CDAP will be obtained from potential subcontractors prior to entering into subcontracting agreements. Qualifications of potential subcontractors are briefly described below; however, inclusion of a particular subcontractor in this document does not preclude the consideration or use of other equally or more qualified firms that are acceptable to the USACE.

3.2.1 Laboratory Analysis of Soil and Groundwater Samples - Environmental Science and Engineering, Inc. (ESE)

ESE offers chemical testing services in geographically convenient locations. ESE participates in the EPA Contract Laboratory Program and is certified by the USACE. A quality assurance/quality control program is maintained independently of the individual laboratories and covers all activities from sample collection through analysis and documentation to data reporting. ESE's laboratory quality control management procedures are provided in Appendix B of the CDAP.

3.2.2 Laboratory Geotechnical Analysis of Soil Samples - Woodward-Clyde Consultants, Clifton, New Jersey Laboratory

Woodward-Clyde's Laboratory in Clifton, New Jersey is experienced in geotechnical testing for the USACE.

3.2.3 Drilling - Layne-Western Company, Inc.

Layne-Western a drilling services company, operates a St. Louis, Missouri office which would serve the NL Site field investigation. The company is experienced in drilling, monitoring well installation, monitoring well development, and decontamination of equipment.

3.2.4 Aerial Photography - Surdex Corp. (Surdex)

Surdex is a photogrammetric engineering firm specializing in aerial photography and photogrammetric mapping. Surdex will be retained to perform the required aerial photography and related photogrammetric mapping.

3.2.5 Surveying - L.G. Zambrana Consultants, Inc. (Zambrana)

Zambrana is a minority owned surveying firm operating in the St. Louis area. Zambrana will be retained by WCC to provide surveying services to document the locations and elevations of all drill rig installed borings and monitoring wells installed as part of the field investigation. All surveying activities will be supervised by a registered land surveyor.

3.2.6 Residential Home Inspections - Occusafe, Inc. (Occusafe)

Occusafe is an industrial hygiene firm that will be retained by WCC to perform the home interior inspections. All inspections will be under the direction of a Certified Industrial Hygienist and EPA Certified Lead Inspector.

3.3 QUALIFICATIONS OF PERSONNEL

[illegible] the project including both employees and [illegible] consultants, will have the qualifications to perform their assigned tasks.

Appraisal of the qualification of technical personnel assigned to the project will be made by the Project Manager. The appraisal will include a comparison of the requirements of the task assignment with the relevant experience and training of the prospective assignee. It will also include a determination of any additional needed training, if any. All documents concerning qualification appraisal will be stored in the project administrative files.

Review of the data presented in the RI/FS reports (O'Brien and Gere, 1989) prepared for the National Lead/Taracorp Site indicates that while the RI/FS was adequate for its intended purpose, additional analysis for the design is needed. Information necessary for remedial design includes:

- Additional information regarding the horizontal and vertical extent of soil contamination necessary to further define or document the estimated quantities of material to be removed.

- Additional remote fill locations have been identified by USEPA where solid rubber fill from the main industrial property has been used. The volume of the fill material in these locations needs to be determined.

- Public hearings conducted by the USEPA indicated the public wanted an inspection of home interiors to determine additional sources of potential lead contamination.

The following discussion outlines field activities associated with collecting the additional required data for compliance with the ROD. Standard Operating Procedures (SOPs) applicable to field activities associated with the NL Site investigation are included in Appendix A.

4.1 RESIDENT HOME SURVEY

In the affected residential areas, a visual inspection of the interior of each residence shall be attempted to identify possible sources of lead exposure. The interior home survey is voluntary and appointments will be scheduled to select a favorable time for the residents. A visual inspection of the interior of each home will be conducted under the direction of an EPA Certified Lead Paint Inspector and a Certified Industrial

[illegible] under subcontract to WOC. WOC will use a computer tracking system to assist with scheduling, management, and report generation of this task.

4.1.1 Identify Residents

The residents, their addresses and telephone numbers to be surveyed will be provided by the USEPA. This data will be incorporated into a database and computer tracking system to identify resident locations, to generate any necessary correspondence to the residents, and to assist in the scheduling of appointments.

4.1.2 Contact Residents

A letter will be sent to each resident explaining the intent and their involvement with the home survey. The letter will include the following items:

- description of the home survey inspection
- procedure of how to set-up home survey appointment
- a local telephone number to assist with scheduling of home inspection appointments
- return survey which identifies the resident's preferred appointment time and date and preferred calling time for scheduling appointments

A copy of this material will be provided to the USACE, USEPA and Illinois EPA (IEPA) to review and comment prior to mailing. Once approved this material will be mailed to the residents prior to start of the home inspection survey.

Prior to this initial resident contact, local public officials will be notified. Officials to be notified will include Illinois EPA, mayor and city engineer for Granite City, Venice, and Madison, and the Illinois Department of Public Health. A press release by USEPA will be issued to inform the residents and the public media of the project.

4.1.3 Set-up Appointments

Scheduling of home survey appointments will begin prior to the start of the survey. The appointments will be scheduled at a time convenient to the resident. A local Granite City telephone number will be provided to enable the residents to contact the WCC Field Office to schedule an appointment. For residents who do not call for an appointment, WCC will attempt to contact them either during their preferred calling hours as indicated on the mail-in survey, or will call them during early evening hours (4:00 p.m.-8:00 p.m.) if no survey was returned. For residents in which no telephone number is available, contact will be attempted by visiting the home during early evening hours. A second attempt will be made to contact any residents who could not be reached on the first attempt. It is estimated that each appointment contact will take approximately 10 minutes.

In the initial start-up phase of the survey, it is anticipated that two employees will work full-time in scheduling appointments. These employees will have a standard operating procedure (SOP No. 11) detailing how to set-up an appointment, type of questions that may be answered directly, and type of questions that should be referred to the designated USEPA Public Relations contact.

4.1.4 Conduct Survey

The resident home surveys will be conducted by Occusafe (WCC-subcontractor), under the direction of a Certified Industrial Hygienist and an EPA Certified Lead Paint Inspector. SOP No. 11 describes the procedures of conducting the home survey.

A two-person crew will be utilized for safety and liability reasons, and to expedite the home survey. Depending on the response from the residents, one to four crews will be utilized. The crews will have scheduled working hours, including weekends and evenings as needed, to accommodate resident's appointment scheduling needs. The average time to survey each home is estimated to be 30 minutes. The time period to complete all resident home surveys is estimated to be 8 to 10 weeks. The home surveys will begin concurrently with the other field activities.

- proper identification and communication between the surveyors and the residents
- complete, consistent, and accurate visual inspection
- professional conduct

4.1.5 Results and Recommendations

After each home survey is conducted, home survey results and recommendations will be presented to the USEPA for review. After USEPA's review, the inspection results will be mailed to the individual residences. The inspection results will inform residents of potential sources of lead contamination within their household along with recommended ways to reduce exposure to this contamination. The results will not be summarized or compiled. A map indicating which homes were inspected also will be provided to the USEPA. Progress and status of the Home Survey Task will be included in the monthly progress report to USACE.

4.2 FIELD SAMPLING PROGRAM

There are several distinct areas within the NL Site that have different data needs and therefore require different sampling approaches. These sampling areas are indicated on Figures 2 and 3. Sampling in the "adjacent" residential areas will be performed using hand auger borings and will estimate horizontal and vertical limits of soil containing lead concentrations exceeding the Record of Decision's (ROD) limit of 500 ppm. Sampling in the main industrial area will be performed using a truck mounted drill rig and will determine geotechnical properties of the underlying soil, estimate the horizontal and vertical extent of soils containing lead contamination in excess of the ROD limit of 1000 ppm in unpaved areas, and determine groundwater contamination levels under the Taracorp property for the Target Compound List. Sampling in the remote fill areas will be performed using a combination of hand augers and a truck

mounted drill rig and will estimate the horizontal and vertical extent of soils containing lead contamination above the ROD limit of 500 ppm, and determine the volume of hard rubber battery casing fill used in these areas. The overall sampling and analysis requirements are summarized in Tables 2 and 3. Further discussion and detail for the background information, data needs, and sampling program for the areas are provided below.

4.2.1 "Adjacent" Residential Areas

Soil samples obtained from the surrounding residential areas during the RI indicated total lead concentrations were 136 mg/kg to 9250 mg/kg for samples taken from 0 to 3 inches in depth and 45 mg/kg to 14,700 mg/kg for samples taken from 3 to 6 inches. The median soil lead concentrations for the 0 to 3 and 3 to 6 inch depths were 725 mg/kg and 498 mg/kg, respectively. The ROD requires that the soil in the residential areas with lead concentrations above 500 ppm be excavated and removed to the Taracorp pile. The ROD emphasized that schools, public areas, and other sensitive areas be identified, sampled, and remediated first.

4.2.1.1 Data Needs

The soil sampling conducted by O'Brien and Gere (RI/FS) was conducted to a depth of 6 inches and at that depth the total lead concentrations in the soil were still above the ROD limit of 500 ppm. Because of the vertical resolution of the 500 ppm limit was not identified, the soil sampling to be conducted in the PDFI will extend to a depth of 12 inches per boring. This sampling depth was chosen because: 1) it will define the vertical extent of lead contamination, or 2) excavating and replacing the soil to this depth will form an adequate barrier against the exposure route of ingestion or inhalation of lead found in deeper soil horizons.

The existing data does not sufficiently delineate the horizontal or vertical extent of soils containing lead contamination above the 500 ppm threshold. This data was obtained by superimposing a rectangular grid over the site and surrounding area. A total of 26 grid locations in residential areas were sampled. To adequately delineate the extent of

[illegible] contamination over 500 ppm the USEPA [illegible] [illegible] determine the areas [illegible] excavation. There will be approximately 2500 sampling locations [illegible] areas to make this determination.

The RI did not sample any schools or public areas during their soil sampling. There will be approximately 67 sampling locations for these areas to determine the extent of soils with lead concentrations above 500 ppm.

There will be approximately two borings per residential lot. Exact sample locations will not be determined in this CDAP; these determinations will be made in the field at the time of sampling as site conditions and constraints dictate. Procedures for locating the sample locations are provided in SOP No. 9. These borings will be sampled at the depth ranges of: 0 to 3 inches, 3 to 6 inches, and 6 to 12 inches. The residential areas that require soil sampling are shown in **Figure 2**. Lead contamination of soils in the residential areas was dependent on the airborne dispersion of lead particles generated by lead smelting operations. Sampling of the residential soils will take place in flat open areas that have not been tilled to show a representative sample of the lead contamination in the soil due to this pathway. Areas that are under trees or cover will not be sampled since they may indicate an unrepresentatively low concentration of lead in the soil. Areas that are near stormwater discharges of impermeable areas (i.e. asphalted areas, roofs) will not be sampled because they would show a unrepresentatively high concentration of lead.

During the RI, one composite sample of soil representing the 0 to 3 inch depth was analyzed for EP Toxic (EP TOX) metals because of its high total lead concentration. Test results indicated the residential soils did not exhibit hazardous characteristics with respect to EP TOX procedure. Since the RCRA hazardous waste characteristic criteria for toxicity is now based on Toxicity Characteristic Leaching Procedure (TCLP) rather than EP TOX, TCLP analysis is required on the contaminated soil to further determine the hazardous characteristics of the soil.

At each boring, soil collected from each sampling depth interval will be homogenized prior to filling each sample jar. These samples will then be tested for total lead concentration. Based on these results, a total of ten samples exhibiting high total lead concentrations from the "adjacent" Residential Areas, and two from schools and public areas will be analyzed for TCLP lead. Samples will not be tested for physical properties. Specific analytical parameters and methods, containers, sample quantities and holding times are shown in Table 7.

4.2.1.2 Hand Auger Borings

The samples in the residential area will be obtained by hand auger borings. Truck mounted or power equipment would increase the property damage and would increase the noise factor in these areas. Samples will be obtained at the discrete depth intervals from the auger bucket. If refusal is encountered before reaching the required depth, the boring will be offset no more than 2 feet from the original location and a second attempt to obtain the remaining samples will be made before sampling operations are stopped at that location.

4.2.2 Industrial Site (Taracorp, Trust 454, BV&G Transport, and Rich Oil)

As part of the RI the slag piles were sampled, characterized, and surveyed; fourteen monitoring wells were installed and sampled; and the horizontal extent of low permeability soils around the piles was determined. The ROD calls for a consolidation of contaminated materials located in the contiguous area to the Taracorp site and possibly extending the pile onto the Trust 454 property. The additional piles located on the Trust 454 properties, by-products of St. Louis Lead Recycler's (SLLR's) recycling program, will be consolidated with the Taracorp pile. Any soil in unpaved areas not directly associated with the piles but in the industrial area will be excavated to the ROD determined 1000 ppm level. The consolidated pile of materials will then be covered with a RCRA-compliant cap with a clay liner to be installed under all newly created portions of the Taracorp pile.

[illegible] the Taracorp pile to be covered with a RCRA-compliant cap. There will be no further chemical testing of the present material in the pile. The RI did not contain adequate information to allow determination of the horizontal or vertical extent of soil contamination on the Trust 454, BV&G Transport, and Rich Oil properties. A total of 15 soil borings, each with a total depth of 15 ft, will be drilled on these properties. The proposed locations for these borings are shown in Figure 6. These borings will be used to define the horizontal and vertical extent of lead contamination in excess of 1000 ppm. Soil samples for geotechnical testing will also be collected from these borings.

Three additional soil borings will be located on the Taracorp property to sample the soil for physical characteristics. These results will be used to determine the suitability of the local soil for possible use in the liner or cap and to aid in the design of the reconfigured pile. The proposed locations of these borings are shown on Figure 6.

Four additional wells need to be installed to better determine the vertical extent of possible contamination of the groundwater. The present wells have detected heavy metal concentrations that are comparable to levels found in background wells. The present monitoring wells are shallow, with the top of the deepest screened interval only 10 to 15 feet below the groundwater surface. Each additional monitoring wells will have a total depth of 70 ft and will be installed with the top of the screened interval approximately 40 to 50 feet below the groundwater surface. The locations of proposed and existing monitoring wells are shown on Figure 6.

The groundwater samples obtained from the Taracorp monitoring wells will be tested for the Target Compound List (Table 8). The soil borings used to determine the extent of lead contamination will be tested for total lead concentrations and physical characterization. Specific analytical parameters and methods, containers, sample quantities and holding times are shown in Table 7. The tests for the soil samples obtained for physical characterization of the soil will include moisture content (all

samples), atterberg limits (10 samples), and grain size (50 samples). The project breakdown for the geotechnical testing is shown in Table 2.

4.2.2.2 Monitoring Wells

Monitoring wells will be constructed with 2-inch ID stainless steel/flush joint casing with a 10-foot section of stainless steel continuous wrap screen. The well casing will be installed with hollow stem augers. The well completion will include a silica sand filter pack around the well screen,followed by a buffer sand layer, a bentonite pellet or slurry seal above the buffer sand, followed by a cement bentonite grout mixture to the ground surface. A concrete pad will be placed around the well with a locking steel protective casing embedded into it. Three protective steel posts will be placed in concrete around the well. Detailed procedures and specifications are outlined in SOP No. 2.

Soil cuttings will handled as described in SOP No. 2. Because of the probable low levels of contamination of the groundwater (based on data from existing monitoring wells), the development water will be disposed of on the Taracorp or SLLR pile. Detailed procedures and specifications are outlined in SOP's Nos. 2 and 6.

The four new monitoring wells will be registered with the Illinois Department of Public Health (IDPH). If a well is abandoned IDPH will be notified and proper documentation will also be filed with IDPH.

4.2.2.3 Soil Borings

The soil boring sampling locations are accessible to truck mounted drilling equipment and will be drilled with hollow stem augers. Samples will be obtained using a 2-inch OD or 3-inch OD stainless steel split-barrel sampler. Soil cutting disposal for soil borings is addressed in SOP No. 1. Soil borings will be grouted to the surface with a cement bentonite mixture.

[illegible] at Eagle Park Acres and [illegible] were [illegible]
[illegible] samples from Eagle Park Acres indicated a lead concentration at 0 to 3 inches ranging from 63 mg/kg to 3280 mg/kg, and at 3 to 6 inches ranging from 91 mg/kg to 4030 mg/kg. The mean values were 1450 mg/kg and 1720 mg/kg respectively. The ROD requires that additional areas be tested for lead contamination because hard rubber battery case material was used as fill. The ROD requires that material in the remote fill areas have lead contamination below 500 ppm, with the exception of alleys and driveways which will be excavated based on visual criteria, backfilled with uncontaminated material, and paved.

4.2.3.1 Data Needs

In subsequent USEPA investigations and during the RI/FS public comment period it was indicated that the areas where hard rubber battery case material was used for fill material were more extensive than presented in the RI/FS. A USEPA representative has indicated that he believes the following areas are locations where battery case material was used as fill: Missouri Avenue (Ill. Rt. 3 and Pontoon Road), Schaeffer Road (Ill. Rt. 3 and I-270), 2230 Cleveland Ave, a farmer's field near Sand Road, five (5) alleys in Venice, and six (6) areas in Eagle Park Acres (Figure 2 and 3).

The RI did not contain sufficient information to determine the volume of fill material used in these remote fill areas. Fifty (50) additional borings will be conducted in these areas by using either hand augers or a truck mounted drill rig. The exact boring locations will be determined in the field. If the fill material at the locations identified to be done by hand augers is too hard to sample using a hand auger, a truck mounted drill rig will be used. Seventy two (72) and forty (40) samples will be collected and analyzed for total lead and TCLP Lead respectively. Samples collected from Eagle Park Acres and Sand Road will be analyzed for total lead. One sample from each boring in those two locations will also be analyzed for TCLP Lead. For the other remote fill areas no samples will be collected for total lead. One sample per boring will be collected and sampled for TCLP Lead, with the exception of the Venice alleys. For the Venice alleys,

ten (10) samples will be collected from the twenty (20) borings and analyzed for TCLP lead. Specific analytical parameters and methods, containers, sample quantities and holding times are shown in Table 7.

The main purpose of these borings is to estimate the volume of fill that was placed in the remote fill areas. The borings will extend through the fill material and will penetrate at least 1 foot of the natural material. Specific areas for Eagle Park Acres and the Venice alleys are shown in **Figure 7** and **8**, respectively. The other remote fill areas are shown in **Figures 2** and **3**.

4.2.3.2 Hand Auger Borings (HAB)

For the samples collected with hand augers, samples will be obtained at the discrete depth intervals from the auger bucket. If refusal is encountered before reaching the required depth, the boring will be offset no more than 2 feet from the original location to make a second attempt to obtain the remaining samples before hand auger sampling operations are stopped at that location. If the fill material is too difficult to sample with hand augers the truck mounted drill rig will be used. Detailed procedures and specifications for soil sampling are outlined in SOP No. 2.

4.2.3.3 Soil Borings

The soil boring sampling locations are accessible to truck mounted drilling equipment and will be drilled with hollow stem augers. Samples will be obtained using a 2-inch OD or 3-inch OD stainless steel split spoon sampler as described in SOP No. 2. Procedures for handling, storage, and disposal of soil cuttings are outlined in SOP No. 2. Soil borings will be grouted to the surface with a cement bentonite grout mixture as outlined in SOP No. 7. Soil boring locations will be determined in the field on a site by site basis, as dictated by conditions and constraints at each locality.

[illegible] tracking systems will use the same data base and [illegible] utilities but each program will be tailored to the specific needs of each activity.

4.2.4.1 Sample Tracking

The Sample Tracking System's purpose is to organize and manage the sampling process. With the CDAP and QAPP as input, the Sample Tracking System has the ability to report holding times for each field collected analytical sample by analysis, matrix, and location. The sample tracking system also reports the required number of QA/QC samples based on the number of samples collected to date and the QAPP sampling requirements.

The STS is a relational database management system; therefore, the Sampling Coordinator can perform queries on data. A unique sample ID allows for easy tracking. A sample ID is composed of the sample's matrix, location, depth, data, and type. A typical sample ID would be 0SLE2047100A0GM. An explanation of the meaning of the sample ID number is provided in SOP No. 5.

The STS enables the Sample Custodian to track the samples from sampling request to receipt at lab, to receipt of the laboratory results. Also, it helps the Sample Custodian to make decisions about sampling to be performed. This is based on the information entered into the database from the CDAP.

The STS reports on exceeded holding times, and for samples and the number of actual samples (sample, duplicate, field blank, matrix spike, and matrix spike duplicate) taken.

The STS can handle several rounds of data for a facility, as well as more than one lab for analysis. The ability to track re-samples is also provided. The Sampling Custodian can track the re-sample back to it's original sample.

Additional information that will be kept in the STS includes time of the sampling event, samplers' initials, requested analysis, comment, cooler number, shipment date, and chain of custody date.

4.2.4.2 Survey Tracking

The Survey Tracking System's purpose is to organize and manage the home survey process. A database provided by the USEPA will contain the resident's names, addresses, and telephone numbers. This database will be used to generate any necessary correspondence to the residents, and to assist in the scheduling of appointments. Once the tracking system generates the initial letter to the resident requesting a time for the inspection, it will keep track of resident's responses, contact attempts, appointment times, and participation in survey. Once an appointment time has been scheduled the tracking system will print a daily schedule for the survey teams, and preprint the home survey inspection forms with the resident's name, address, and appointment time. An example survey form is included in SOP No. 11.

4.3 FIELD ACTIVITIES AND PROCEDURES

4.3.1 Public Contact

Local public officials will be notified that Woodward-Clyde Consultants will be conducting the PDFI and will be starting field activities in their area. Officials to be notified will include the mayor, city engineer, fire and police department for Granite City, Venice, and Madison. A press release by USEPA will be issued to inform the residents and the public media of the project.

A letter will be sent to each resident explaining the involvement of Woodward-Clyde Consultants and the time frame the residential soil sampling will occur for their property. A copy of this material will be provided to the USACE, EPA and Illinois EPA (IEPA) to review and comment prior to mailing. Once approved this material will be mailed to the resident one week prior to their soil sampling.

4.3.2 Hand Augering and Soil Sampling

[illegible] residential [illegible] and public areas samples for analytical testing will be obtained with hand augering equipment. Hand augers will also be used for the first attempt at sampling the Eagle Park Acres and Sand Road sites. Site specific procedures and techniques to be used, along with the appropriate decontamination and QA/QC procedures, are provided in SOP No. 6 in **Appendix A.**

All hand auger holes will be sampled, with material for analytical testing to be collected at specified intervals. Samples will be collected, labeled, stored, and transported in accordance with the procedures outlined in SOP No. 5. Any variations from these procedures and the reasons for these variations will be noted in the appropriate field logbook.

4.3.3 Drilling and Soil Sampling

Where necessary, a truck-mounted drill rig will be used to drill soil borings and obtain discrete soil samples. Site-specific procedures and drilling techniques to be used, along with the appropriate decontamination and QA/QC procedures, are provided in SOP's No. 1 and No. 6.

All borings will be continuously sampled using a 2-inch OD or 3-inch OD stainless steel split-barrel sampler, with material for testing to be collected at specified intervals. Samples will be collected, labeled, stored, and transported in accordance with procedures outlined in SOP No. 5. Any variations from these procedures and the reasons for these variations, will be noted in the appropriate field book.

4.3.4 Monitoring Well Installation and Development

Monitoring wells will be installed using a truck-mounted drill rig capable of installing a well to the specifications outlined SOP No. 2. Drilling and well installation techniques to be used along with the appropriate decontamination and QA/QC procedures are provided in SOP's No. 2 and No. 6. Split-barrel samples will be

collected at a minimum of 5-ft intervals or at changes in lithology, or continuously if deemed necessary by the WCC geologist. Any variations from those procedures, and the reasons for these variations will be noted in the appropriate field logbook.

4.3.5 Groundwater Sampling

For groundwater sampling, site-specific procedures and techniques to be used, along with the appropriate decontamination and QA/QC procedures, are provided in SOP's No. 3 and No. 6. All electronic equipment used during sampling will be tested and calibrated each morning prior to the start of sampling, and will be recalibrated when necessary as specified in SOP No. 3. All calibrations will be recorded in the calibration field logbook. All samples will be collected, stored, labeled and transported in accordance with the procedures outlined in SOP No. 5. Any variations from these procedures and the reasons for these variations will be noted in the appropriate field logbook.

4.3.6 Water Level Measurement

Water level measurements shall be taken in one day for all monitoring wells to evaluate depth to groundwater as specified in SOP No. 8. All measurements will be recorded on water level data sheets.

4.3.7 Permeability

Slug tests will be used to evaluate the hydraulic conductivity of the aquifer. Slug testing is the process of simulating an instantaneous addition or removal of a known volume of water (slug) to or from the well bore and the measurement of the subsequent recovery of the well. Site-specific procedures and techniques to be used, along with the appropriate QA/QC procedures are provided in SOP No. 4. Any variations from these procedures and the reasons for the variations will be noted in the appropriate field logbook.

4.3.8 Resident Home Survey

[illegible] individual home survey will be conducted of all the homes in the [illegible] residential areas. Residences to be surveyed will be given to WCC in a database compiled by the USEPA. The surveys will be conducted by WCC's subcontractor, Occusafe. The specific procedures for conducting the survey are provided in SOP No. 11. Once the survey is complete and the USEPA has reviewed the results, a letter summarizing the findings for each home will be sent to the individual residents.

4.3.9 Utility Check

Prior to any intrusive work a utility check will be performed by WCC and their drilling subcontractor, Layne-Western. For the hand auger borings at the residences, the utilities that will be checked are gas, electric and phone lines. For all other intrusive work a full utility check will be conducted to include but not limited to: gas, electric, water, telephone, and sewer.

4.4 SAMPLE CONTAINERS, PRESERVATION AND HOLDING TIMES

It is expected that only sample containers precleaned and packed according to EPA specifications shall be used. Precautions will be taken to avoid sample contamination. The general requirements for sampling containers, preservation and holding times, along with site-specific requirements, are detailed in Table 7 for each area.

4.5 DECONTAMINATION

All sampling equipment will be decontaminated to prevent cross-contamination of samples. The equipment will be decontaminated when it initially enters the site, between intrusive activities, and before equipment is removed from the site. All decontamination equipment will be inspected prior to use by WCC personnel on site. Decontamination of personnel and equipment will take place at specified decontamination stations. Specific equipment procedures are provided in SOP No. 6

Personnel decontamination procedures are outlined in the Health and Safety Plan and in SOP No. 6.

4.6 FIELD DOCUMENTATION

Field documentation will be sufficient to reconstruct the sampling situation without relying on the memories of the field team members.

4.6.1 Field Logbook

Bound field logbooks with sequentially numbered pages will be used to record all pertinent field data collection activities or observations made. Entries into the field logbook will include, but are not necessarily limited to, the following information:

- Project name
- Date and time
- Sample location
- Sample number
- Sample depth
- Number of aliquots
- Matrix type
- Sampling personnel present
- Type of health and safety clothing/equipment used
- Analyses requested
- Time of sample collection
- Sample preservation, field observations, to include soil descriptions (if relative)
- Weather conditions
- Other project-specific information

Each SOP contains additional task specific items that need to be recorded in the field logbook. In addition, field sketches will be made in the field logbooks when

[illegible] in blue or black ink and no erasures will be allowed. If an incorrect entry is made, the information will be crossed out with a single strike mark and the change initialed and dated by the team member initiating the change.

The field logbooks will be signed and dated at the end of each workday by all persons making entries in that logbook.

Field logbooks will be identified by a project-specified number (i.e., Logbook No. 1 for Project Number 89MC114V, etc.) and stored in the field project files when not in use. At the completion of the field activities, the logbooks will be maintained in the permanent project file.

4.6.2 Sample Collection Field Sheet

A sample collection field sheet will be completed at the time that each sample is collected. The field sheets will contain all pertinent sample information concerning sample collection, preparation, storage, preservation, requested analysis. Also included will be any field measurements taken, equipment used and any calibration data. Example field sampling sheets can be found in SOP No. 1.

4.6.3 Boring Logs

A WCC geologist will complete boring logs for each boring completed by a truck mounted drilling rig. An example boring log, the information to be included on each boring log and the appropriate procedures can be found in SOP No. 1.

4.6.4 Monitoring Well Installation Log

A log documenting well construction will be completed by a WCC geologist for each monitoring well installed on the site. An example log, a summary of the information to be included on each log and the appropriate procedures can be found in SOP No. 2.

4.6.5 Well Development Log

A well development log will be completed by a WCC geologist to document the well development procedures followed for each monitoring well installed. An example well development log, a list of information to be included on these logs and the appropriate procedures can be found in SOP No. 2.

4.6.6 Water Level Data Sheet

All water levels measured in on-site monitoring wells will be recorded on water level data sheet. These sheets will include all pertinent information concerning water levels and monitoring wells. An example data sheet and the appropriate procedures can be found in SOP No. 8.

4.6.7 Resident Mail-In Survey

Residents will be sent a questionnaire asking when would be a preferred time to be contacted to set up an appointment for the home survey.

4.6.8 Resident Home Survey Form

All home survey information will be recorded on a resident home survey form. An example of the resident home survey form is given in SOP No. 11.

4.6.9 Daily Quality Control Reports (DQCRs)

To supplement the information recorded in the field logbook, DQCRs will be completed on a daily basis. Examples of the DQCR to be used are shown in SOP No. 5. DQCRs will be maintained by members of the field sampling team and cross-checked for

[illegible] by the sampling team members and [illegible] and dated by individuals making entries and [illegible] completion. Copies of the DQCR will be forwarded on a weekly basis to the USACE Project Manager for review.

4.7 FIELD SURVEYS

4.7.1 Aerial Survey

Prior to fieldwork WCC's subcontractor, Surdex, will fly an aerial survey mission to map the site area. The deliverable items include but are not limited to: a map of the Taracorp site drawn at a scale of 1" = 30' with a 1' contour interval; a planimetric map of the "adjacent" residential areas drawn at a scale of 1" = 50'; and one 8 1/2" X 11" sheet of each residential lot to be sampled with planimetric field data drawn at a variable scale. Additional information about the aerial survey is available in SOP No. 12.

4.7.2 Ground Survey

The ground surveying will fall into two categories: 1. Field surveying to locate hand auger borings, and preliminary location of soil borings and monitoring wells; and 2. Final surveying of soil borings and monitoring wells, and supplementary ground survey used in preparing the plat maps from the aerial survey.

Field surveying will consist of WCC personnel placing a wooden stake and wooden lathe into the ground at the boring location with the pertinent information written on the lathe. Field surveying will also consist of the hand auger teams documenting the location of the hand auger boring in the appropriate field notebook and plat map.

Final surveying will be conducted by a WCC subcontractor, to determine the location of soil borings and monitoring wells to the nearest foot in relation to the State Plane Coordinate System. The elevation of soil borings will be determined to the nearest

foot. The elevation of monitoring well risers will be determined to the nearest 0.01 foot.

Additional information about the ground surveys is provided in SOP No. 12.

4.8 FIELD INSTRUMENT PREVENTATIVE MAINTENANCE AND CALIBRATION

The calibration and general maintenance of field instrumentation will be the responsibility of the Field Team Leader and Site Safety Officer. All documentation pertinent to the calibration and maintenance of field equipment will be maintained in an active field logbook. Entries made into the logbook regarding the status of any field equipment will contain, but are not necessarily limited to, the following information:

- Date and time of calibration
- Name of person doing calibration
- Type of equipment being services
- Identification number (such as serial number)
- Reference standard used for calibration (i.e. pH of buffer solutions)
- Calibration or maintenance procedure used
- Other pertinent information

Table 5 summarizes the field equipment scheduled for use during the site investigation and required calibration and maintenance.

Equipment that fails calibration and/or becomes otherwise inoperable during the field investigation will be removed from service and segregated to prevent inadvertent use. Such equipment will be properly tagged to indicate that it should not be used until the nature of the problem can be determined. Equipment requiring repair or recalibration must be approved for use by the Field Team Leader or Site Safety Officer prior to placement back into service. Equipment that cannot be repaired or recalibrated will be replaced. Back up equipment will be available to replace defective equipment within 24 hours, so that work may continue in a timely manner.

[illegible] CORRECTIVE ACTION

[illegible] nonconformances with the established quality control procedures will be expeditiously identified and controlled. The USACE project manager is to be notified of any nonconformances within 48 hours after they have been identified. No additional work which is dependent on the nonconforming activity will be allowed until the identified nonconformance is corrected.

The Field Team Leader will review the procedures being implemented in the field for consistency with the established protocols. Sample collection, preservation, and labeling, etc., will be checked for completeness. Where procedures are not strictly in compliance with the established protocol, the deviations will be field documented and reported to the QA/QC Coordinator. Corrective actions will be defined by the Field Team Leader and Project Manager and documented as appropriate. Upon implementation of the corrective action, the Field Team Leader will provide the QA/QC Coordinator with a written memo documenting field implementation. The memo will become part of the project file. An example nonconformance and corrective action report is shown in **Figure 9**.

Additional activities are required either prior to or concurrent with the initial stages of the PDFI. These activities include:

- Plan for Satisfaction of Permitting Requirements (PSPR)
- Treatability scope of work
- Borrow evaluation for the proposed RCRA-compliant cap for the Taracorp Pile
- Identification of a RCRA-compliant landfill and associated costs for disposal of material that cannot be incorporated into the Taracorp Pile

5.1 PSPR

The PSPR will include a comprehensive list of all permits and clearances that will be required in conjunction with the remedial action. The report will include the procedures and time frames that will be required to acquire these permits and clearances. The PSPR will be included as part of the Final Report to the USACE.

5.2 TREATABILITY SCOPE OF WORK

The hard rubber battery casing material that will be excavated from the remote fill locations may require treatment prior to disposal. A scope of work for a treatability study on this material will be developed as part of the PDFI. The scope of work will be included in the final report to the USACE.

5.3 BORROW EVALUATION FOR THE PROPOSED RCRA-COMPLIANT CAP

The Taracorp waste pile is to be covered with a RCRA-complaint cap. A borrow evaluation will be conducted as part of the project to determine possible sites from

which suitable cap material may be obtained. Information sources will include soil surveys, USDA and USGS information and data obtained through the testing portions of this project. The evaluation will include possible on-site sources. Any material used in constructing the cap is required to have a hydraulic conductivity of less than 1×10^{-7} cm/sec. Preliminary estimates for the amount of borrow material needed for construction of a RCRA-compliant cap will also be made. The results of the evaluation will be included in the final report to the USACE.

5.4 IDENTIFICATION OF AREA RCRA COMPLIANT LANDFILLS

This task will involve locating existing RCRA-compliant landfills in the area that could potentially accept material that cannot be incorporated into the Taracorp pile. An estimate of disposal costs will be included. Also, any requirements, regulations and limitations that govern disposal of these materials will also be identified. The results of this task will be included in the final report.

The samples will be collected into pre-washed and quality controlled containers provided by the laboratory. Sample containers, preservation requirements and maximum holding time from valid date of sample received to date of analysis are specified in Table 7. Procedures pertaining to this section include SOP No. 1 Soil Sampling, SOP No. 3 Groundwater Sampling, SOP No. 5 Sample Identification, Handling, Shipping, and Documentation, and SOP No. 6 Decontamination.

6.1 SAMPLE LABELING

A sample numbering system will provide a tracking mechanism to allow information retrieval concerning samples and sampling locations. A unique sample number will be assigned to each sample. Procedures for this system are provided in SOP No. 5.

6.2 CHAIN-OF-CUSTODY PROTOCOL

6.2.1 Field

Each cooler containing samples sent to the analytical laboratory will be accompanied by a chain-of-custody (COC) record. This section describes the procedures for sample documentation utilizing COC protocol. An example form is provided in SOP No. 5.

The primary purpose of the COC procedures is to document the possession of the samples from collection to storage, analysis, and disposal. COC forms will become the permanent records for all sample handling and shipment. The Field Task Leader or their designee will be responsible to the Field Operations Manager for monitoring compliance with COC procedures.

The field team members are responsible for the care and custody of the samples collected until the samples are transferred to another party, dispatched to the

laboratory, or disposed of. The field team, under the direction of the Field Team Leader, is responsible for compliance with COC procedures during fieldwork.

The chain-of-custody procedures are:

- At the time of sample collection, the chain-of-custody form is completed for the sample collected. The sample identification number, sample date, sample time, and size of sample container, analysis requested, and preservation is recorded on this form. All personnel involved in sample collection will sign and date the chain-of-custody form.

- When the form is full or when all samples have been collected that will fit in a single cooler, the field team members will cross-check the form for possible errors and sign the chain-of-custody record. Corrections to be made to the record are done with a single strike mark, dated, and initialed. All entries will be made in blue or black ink.

- A shipping bill will then be completed, and the shipping bill number will be recorded on the COC record. Each cooler will be accompanied by the COC record; the COC record will be sealed in a Ziploc-type bag and taped to the inside of the cooler lid.

To transfer the samples, the individual relinquishing custody of the samples will verify sample numbers, sample condition and will document the sample acquisition and transfer by signing and dating the COC record. This process documents sample custody transfer from the sampler, usually through an express courier, to the analyst in the contracted analytical laboratory. Samples are packaged for shipment and dispatched to the analytical laboratory with the COC record accompanying each cooler.

A copy of each chain-of-custody form is retained by the sampling team for the project file and the original is sent with the samples. The shipping bill will also be retained as part of the documentation for the chain-of-custody records.

In conjunction with data reporting, the analytical laboratory will return the original or a photocopy of the original COC record to the Project Manager for inclusion into the central project file.

6.2.2 Laboratory

Laboratory chain-of-custody, sample storage, and dispersement for analysis and associated documentation are found in the ESE QAPP (Appendix B) for soil samples and in the for groundwater samples.

6.3 PACKAGING AND SHIPPING

Appropriate procedures and safeguards shall be used for all sample packaging and shipping activities. These procedures, described in SOP No. 5 (sample identification, handling, shipping, and documentation), shall be followed to ensure the integrity of all samples shipped for laboratory analysis. All samples will be shipped the same day collected. Samples will be either hand delivered or shipped to the laboratory via an overnight air express carrier. Upon arrival in the laboratory, samples will be checked in by the Laboratory Sample Custodian.

The general laboratory procedures anticipated for the PDFI at the NL Site are summarized in **Table 6**. The specific analyses required for each sampling area are explained in Section 4.2. Method-specific data quality objectives that are applicable to laboratory procedures are specified in **Table 4**. Specific laboratory practices for the methods listed below including sample preparation, sample tracking and documentation are provided in the ESE QAPP (**Appendix B**).

7.1 SOIL ANALYSIS FOR LEAD

7.1.1 Lab Methodology

Soil samples collected from the NL Site will be analyzed for total lead concentration by SW-846 Method 6010. Selected samples will also be analyzed for leachable lead using the Toxicity Characteristic Leaching Procedure (TCLP), SW-846 Method 1311.

The necessary sensitivity and detection limits will be achieved by using the inductively coupled argon plasma spectrometry (ICP) instrumentation. Summaries of analytical methodology and reporting limits are provided in **Tables 6** and **8**, respectively. All soil sample analyses will be conducted by ESE in accordance with the appropriate laboratory SOPs and the ESE QAPP (**Appendix B**).

7.1.2 Method Specific Data Quality Objectives

The analytical method specific DQOs for the NL Site soil samples are precision, accuracy, and sensitivity criteria. The QA objective is to achieve the QC acceptance criteria required by the analytical protocols. In general, the precision, accuracy and sensitivity criteria and methods are those stipulated by SW-846.

The accuracy of laboratory analysis will be determined by testing matrix spike samples

in accordance with the frequencies shown in Table 3. The accuracy goal for total lead [illegible] analysis is in the range of 75% to 125% recovery (Table 10). Precision of laboratory analyses will be determined by testing duplicate samples at a 5% frequency (Table 2). The precision goal for total lead analysis is less than 20% relative percent difference.

For the TCLP-lead analysis the accuracy and precision of laboratory analyses will be determined by testing of duplicates and spiked sampled in accordance with the frequencies shown in **Tables 2, 3 and 4**. Accuracy and precision criteria are shown in **Table 9**.

The sensitivities for the analytical testing are the reporting limits shown in **Table 8**. It is anticipated that these reporting limits will be achieved for the majority of samples. However, any samples not meeting the limits will be documented. Higher detection limits may be required for oily samples and for samples containing high concentrations of contaminants.

7.1.3 Preventative Maintenance

The laboratory is responsible for the maintenance of its laboratory equipment. Preventive maintenance will be provided on a scheduled basis to minimize interruption of analytical work. All instruments will be maintained in accordance with manufacturer's recommendations and normal approved laboratory practice.

Designated laboratory personnel will be trained in routine maintenance procedures for all major instrumentation. When repairs become necessary, they will be made by either trained staff or trained service technicians. The laboratory shall have in place a contingency plan with another ESE laboratory in the event of an equipment failure. All maintenance will be documented and kept in permanent logs. These logs will be available for review by auditing personnel.

Both scheduled and unscheduled maintenance required by operational failures will be recorded. The designated laboratory operations coordinator will review maintenance

records on a regular basis to ensure that required maintenance is occurring. Details of these procedures are provided in the ESE QAPP (Appendix B).

7.1.4 Calibration and Frequency

Total lead analysis of soil samples from the NL Site will involve the ICP analytical instrument. Each ICP unit is calibrated prior to the analyses being performed using criteria prescribed in the appropriate laboratory SOP. The calibration is then verified using standards from an independent source. The linear range of the instrument is established using a linear range verification standard. No values are reported above this upper concentration value without dilution. Frequency of calibration is summarized in Table 4.

A calibration curve is established daily by analyzing a minimum of two standards, one of which is a calibration blank. An interference check standard is analyzed at the beginning of each analytical run to verify that interelement and background correction factors have remained constant. Results outside of the established criteria trigger reanalysis of samples.

7.1.5 Corrective Action

The laboratory department supervisors will review the data generated to verify that all quality control samples have been run as specified in the protocol. Recoveries of matrix spike samples, for consistency with method accuracy, and matrix spike duplicate samples, for method precision, will be evaluated using the data quality goals discussed in Section 7.1.2. Data from the laboratory control samples will be evaluated according to the ESE QAPP (Appendix B). Analytical data generated with laboratory control samples which fall within the established control limits are judged to be in control. Data generated with laboratory control samples that do not fall within control limits are considered suspect, and the sample analysis is repeated or sample results are reported with qualifiers if this is not possible.

Laboratory personnel are alerted that corrective actions may be necessary if:

- QC data are outside the warning or acceptable windows for precision and accuracy established for laboratory control samples
- Blanks contain contaminants at concentrations above the levels specified in the ESE QAPP for any target compound
- Undesirable trends are detected in matrix spike recoveries or relative percent difference (RPD) between matrix spike duplicates
- There are unusual changes in detection limits
- Deficiencies are detected by the laboratory QA director during internal or external audits, or from the results of performance evaluation samples

If any nonconformances in analytical methodologies, quality control sample results, etc., are identified by the bench analyst, corrective actions will be implemented immediately. Corrective action procedures will be handled initially at the bench level by the analyst, who will review the preparation or extraction procedure for possible errors, check the instrument calibration, spike and calibration mixes, instrument sensitivity, etc. The analyst will immediately notify his/her supervisor as to the problem that is identified and the investigation which is being made. If the problem persists or cannot be identified, the matter will be referred to the laboratory supervisor and Program Administrator (PA) for further investigation. Once resolved, full documentation of the corrective action procedure is filed with the laboratory PA and the QA/QC Officer is provided a corrective action memo for inclusion into the project file if data are affected.

Corrective action may include, but will not be limited to:

- reanalyzing suspect samples
- resampling and analyzing new samples
- evaluating and amending sampling and/or analytical procedures

- accepting data with an acknowledged level of uncertainty
- recalibrating analytical instruments
- discarding the data

Data deemed unacceptable following the implementation of the required corrective action measures will not be accepted by the Project Manager and follow-up corrective actions will be explored. Details of laboratory corrective actions are provided in the ESE QAPP in **Appendix B**.

7.2 GROUNDWATER ANALYSIS

7.2.1 Lab Methodology

The methods which will be used for analysis of groundwater samples are listed in **Table 8**. Gas Chromatography/Mass Spectrometry (GC/MS) instrumentation will be utilized for volatile and semi-volatile organics analysis. PCBs and pesticides will be analyzed by Gas Chromatography/Electron Capture Detection (GC/ECD). Metals will be analyzed by ICP and Atomic Absorption. Each analyte to be tested and its respective reporting limit is listed in **Table 8**. All groundwater analyses will be conducted by ESE Laboratory in accordance with the appropriate SOPs and the ESE QAPP (**Appendix B**).

7.2.2 Method Specific Data Quality Objectives

The analytical method specific DQO for the NL Site groundwater samples are precision, accuracy, and sensitivity criteria. The QA objective is to achieve the QC acceptance criteria required by the analytical protocols.

The accuracy and precision of laboratory analyses will be determined by testing duplicates and spiked samples in accordance with the frequencies shown in **Table 4**. Accuracy and precision criteria for the parameters to be tested are shown in **Table 9**. Compounds that will be used as matrix and surrogate spikes for organic analyses, and their control limits, are shown in **Table 10**.

The sensitivities for the analytical testing are reporting limits shown in Table 8. It is anticipated that these reporting limits will be achieved for the majority of samples. Higher detection limits may be required for oily samples and for samples containing high concentrations of contaminants.

7.2.3 Preventive Maintenance

The laboratory is responsible for the maintenance of its laboratory equipment. Details of these procedures are provided in section 7.1.3 and in the ESE QAPP (Appendix B).

7.2.4 Calibration and Frequency

Calibration of instrumentation is required to ensure that the analytical system is operating correctly and functioning at the proper sensitivity to meet established detection limits. Each instrument is calibrated with standard solutions appropriate to the type of instrument and the linear range established for the analytical method. The frequency of calibration and the concentration of calibration standards is determined by the manufacturer's guidelines, the analytical method, or the requirements of special contracts.

Organics

Each day prior to analysis of samples, the GC/MS instrument is tuned with bromofluorobenzene (BFB) for volatile compounds and decafluorotriphenyl-phosphine (DFTPP) for semi-volatile compounds according to the tuning criteria specified in SW-846. No samples are analyzed until the instrument has met tuning criteria.

The instrument is then calibrated for all target compounds. ESE procedures for GC/MS calibration follow SW-846. An initial five point calibration curve is produced. Key compounds referred to as system performance calibration compounds (SPCC) and continuing calibration compounds (CCC) are evaluated on a daily basis to ensure that the system is within calibration. If the daily standard does not meet the established criteria, the system is recalibrated.

For PCBs and pesticides analysis, the GC/ECD initially generates and monitors calibration curves for each target compound. Certified standards will be used to define the linear range of the instrument. The instrument linearity is verified prior to each constituent analysis or every 72 hours of continuous operation. Three separate pesticide evaluation standards containing varying concentrations of Aldrin, Endrin, 4,4'-DDT, and dibutylchlorendate (DBC) are analyzed. The concentrations of the components must meet established criteria specified in the ESE QAPP (**Appendix B**) or the linear verification will be repeated.

A single point calibration is performed for each pesticide/PCB target compound prior to sample analysis and after analysis of 10 samples.

For identification and confirmation of a target compound, a retention time window is established for each target compound and is analyzed over a 72-hour sequence. If a peak is observed in the chromatogram within the retention time window, the presence or absence of the target compound will be "confirmed" via an analysis on a second column of a different polarity.

Metals

Metals analysis involves three types of analytical instrumentation: inductively coupled argon plasma emission spectrometry (ICP), cold vapor atomic absorption spectrometry (CVAA) for mercury analysis, and graphite furnace atomic absorption (GFAA) for arsenic, lead, and selenium.

Each ICP is calibrated prior to analyses being conducted using criteria prescribed in the SW-846. The calibration is then verified using standards from an independent source. The linear range of the instrument is established using a linear range verification check standard. No values are reported above this upper concentration value without dilution. The frequency of calibrations is summarized in **Table 4**.

A calibration curve is established daily by analyzing a minimum of two standards, one of which is a calibration blank. The calibration is monitored every 10 samples by

analyzing a continuing calibration blank (CCB) and a continuing calibration verification standard (CCV). The standard must meet established criteria or the system will be recalibrated and all samples analyzed since the last acceptable calibration check will be reanalyzed.

An interference check standard is analyzed at the beginning and end of each analytical run, and on a continuing basis, to verify that interelement and background correction factors have remained constant. Results outside of the established criteria trigger reanalysis of samples.

Each Atomic Absorption unit is calibrated prior to analyses being conducted. A calibration curve is prepared with a minimum of a calibration blank and three standards and then verified with a standard which has been prepared from an independent source at a concentration near the middle of the calibration range. The calibration is verified on an on-going basis with a mid-point calibration standard and a blank solution. If the on-going calibration standard does not meet established acceptance criteria, the system is recalibrated and all samples analyzed since the last acceptable calibration check are reanalyzed. Frequency of calibrations is summarized in Table 4.

7.2.5 Corrective Action

Laboratory corrective action procedures are provided in section 7.1.5. Details of laboratory corrective actions are provided in the ESE QAPP (Appendix B).

The analytical data generated by the analytical laboratory will be checked for accuracy and completeness. The data validation process for this project will consist of data generation, reduction, and three levels of review.

The first level of review will be conducted by the analytical laboratory which has the initial responsibility for the correctness and completeness of the data. All data are generated and reduced following guidelines specified in the ESE Laboratories QAPP (**Appendix B**). The laboratory will evaluate the quality of the work based on an established set of laboratory guidelines. The review process ensures that:

- Sample preparation information is correct and complete
- Analysis information is correct and complete
- The appropriate SOPs have been followed
- Analytical results are correct and complete
- QC samples are within established control limits
- Blank correction procedures have been followed
- Special sample preparation and analytical requirements have been met
- Documentation is complete (all anomalies in the preparation and analysis have been documented; Out of Control forms, if required, are complete; holding times are documented)

ESE will perform the in-house analytical data reduction and QA review under the direction of the Laboratory QA Director. The Laboratory QA Director and The ESE Project Managers are responsible for advising WCC's Project Manager of any data which were rated "preliminary" or "unacceptable" or other notations which would caution the data user of possible unreliability. Data reduction, QA review, and reporting by the laboratory will be conducted as follows:

- Raw data produced by the analyst is turned over to an independent reviewer
- The independent reviewer assesses the data for attainment of quality control criteria as outlined in EPA SW-846, Third Edition and/or established EPA methods
- Upon acceptance of the raw data the final report is prepared and reviewed by the Project Manager to ensure that the data meet the overall objective of the client

Data Reduction and reporting procedures will be those specified in the SW-846, as indicated in the ESE laboratory QAPP (Appendix B).

The laboratory will prepare and retain full analytical and QC documentation. Such retained documentation will not be hard (paper) copy, but will be on other storage media (i.e., magnetic tape). As needed the laboratory will supply hard copy of the retained information.

The laboratory will report the data in the same chronological order in which the samples were analyzed, along with QC supporting data. The laboratory will provide the following hard copy information in each analytical data package:

- Cover sheet listing the samples including in the report and narrative comments describing problems encountered in analysis

- Tabulated results including matrix specific detection limits for inorganic and organic compounds identified and quantified

- Analytical results for QC sample spikes, sample duplicates, standard procedural blanks, and laboratory control samples

- Tabulation of instrument detection limits determined according to SW-846

For organic analyses, the data packages must include matrix spikes, matrix spike duplicates, and surrogate spike recoveries. The data reduction and validation steps are documented, signed, and dated by the analyst. The laboratory will then forward the data package to WCC for an independent review which will include data validation.

The second level of review will be performed by a WCC data review specialist whose function is to provide an independent validation of the laboratory data package. The validation process will be conducted according to an established set of guidelines entitled "Guidelines for Non-CLP Chemical Data Evaluation" (USEPA, 1988) and will be structured to insure that:

- QC samples are within established guidelines
- Documentation is complete and correct (all anomalies in the preparation and analysis have been documented; Out-of-Control forms, if required, are completed; holding times are documented, corrective action forms are completed, if required and action has been taken to correct the deficiency)
- The data is ready for incorporation into the final report
- The data package is complete and ready for data archive

The data validation review will be structured so that all QC and holding times data are reviewed. If no problems are found with the QC results and holding times in the data package, the review is complete. If any problems are found with the data package, WCC's Project Manager will resolve the problems with ESE.

The reviewer will identify any questionable or out-of-control QC data and interact with the laboratory to correct data deficiencies. Decisions to repeat sample collection and analysis may be made by the Project Manager based on the extent of the deficiencies and their importance in the overall context of the project.

This data review process will be documented by the development of an office memorandum, signed by the reviewer. The reviewed data will then be released to the Project Manager with a narrative statement incorporated into the memorandum that

the data was acceptable, acceptable with reservation, or not acceptable and state for what reasons.

The third level of review will be conducted by the WCC Project QA QC Officer or his/her representative who will randomly audit representative project data packages. This QA audit will include verifying that:

- Holding times were met
- Documentation is complete
- QC results are complete and accurate

WCC assessment of the data package will be accomplished by the joint efforts of the WCC Project QA/QC Officer and Project Manager. The data assessment by the Project Manager will be based on the criteria that the sample was properly collected and handled as specified in this CDAP.

9.1 FIELD QC CHECKS

Field quality control checks will include the review and approval of all field documentation by the Field Task Leader or his or her designee. Signature or initial approval will indicate that the provisions outlined in the CDAP and SSHP have been appropriately implemented.

In addition the Field Task Leader will perform random spot checks on the field team(s) on a daily basis. Conformance with established procedures will be checked and documented in the field logbook. Nonconformances will be corrected and reported to the Project Manager orally, followed by a written memo for inclusion into the project file. Samples identified as nonconforming will be disposed of and new samples obtained. In the event that a serious deficiency (nonconformance) is identified, the sampling team's prior work will also be reviewed.

For water sampling, rinsate samples will be collected as field QC checks. Rinsate samples are check samples which monitor contamination associated with the collection of the sample. Rinsate samples will be collected as indicated in Table 3. The rinsate samples will consist of analyte-free deionized water.

9.2 LABORATORY QC CHECKS

There are two types of quality assurance methodologies used to ensure the production of analytical data of known and documented useable quality: Program quality assurance and analytical method quality control.

The laboratory has a written Quality Assurance/Quality Control (QA/QC) program which provides rules and guidelines to ensure the reliability and validity of work conducted at the laboratory. Compliance with the QA/QC program is coordinated and

monitored by the laboratory Quality Assurance Unit (QAU), which is independent of the operating departments.

The stated objectives of the laboratory QA/QC program are to:

- Ensure that all procedures are documented, including any changes in administrative and/or technical procedures

- Ensure that all analytical procedures are conducted according to sound scientific principles and have been validated

- Monitor the performance of the laboratory by a systematic inspection program and provide for corrective action as necessary

- Collaborate with other laboratories in establishing quality levels, as appropriate

- Ensure that all data are properly recorded and archived

All laboratory procedures are documented in writing as either SOPs or Method Procedures (MPs) which are edited and controlled by the QAU. Internal quality control procedures for analytical services will be conducted by the laboratory in accordance with their standard operating procedures. The analytical method requirements for ESE will be in a manner consistent with the SW-846. These specifications include the types of audits required (sample spikes, surrogate spikes, reference samples, controls, blanks), the frequency of each audit, the compounds to be used for spikes and surrogate spikes, and the quality control acceptance criteria for these audits.

The Laboratory will document, in each data package provided, that analytical QC functions have been met. Any samples analyzed in nonconformance with the QC criteria will be reanalyzed by the laboratory if the laboratory procedures were not in control as assessed by laboratory control samples and other data specific to the analysis, and if sufficient sample volume is available. QC check samples analyzed (method blank,

field blank, etc) will be run concurrently with the sample batch (maximum of 20 environmental samples) to which they are assigned. Method blanks will be analyzed at a rate of 1 in 20. Field blanks will be analyzed at a rate of 1 in 10 for water samples.

9.2.1 Matrix Duplicate

A matrix duplicate is an environmental sample which is divided into two separate aliquots. The aliquots are processed separately and the results compared to evaluate the effects of the matrix on the precision of the analysis. Results are expressed as relative percent difference (RPD) between the duplicate aliquots analyzed. Matrix duplicate analysis will take place at a rate of 1 per batch of 10 (10%) groundwater samples analyzed, and 1 per batch of 20 (5%) soil samples analyzed, and will be designated on the chain-of-custody by field sampling personnel. Extra sample volume will be collected for matrix duplicates.

9.2.2 Matrix Spike

A matrix spike is an environmental sample to which known concentrations of analytes have been added. The matrix spike is taken through the entire analytical procedure and the recovery of analytes calculated. Results are expressed as percent recovery of the known amount spiked. The matrix spike is used to evaluate the effect of the sample matrix on the accuracy of the analysis. Matrix spike analysis will be conducted at a rate of 1 per batch of 10 (10%) groundwater sample and 1 per batch of 40 (2.5%) soil samples. Extra sample volume will be collected for matrix spike samples. These samples will be designated on the chain-of-custody by field sampling personnel. A determination will be made in the field concerning representative matrices.

9.2.3 Matrix Spike Duplicate

A matrix spike duplicate is an environmental sample which is divided into two separate aliquots, each of which is spiked with known concentrations of analytes. The two spiked aliquots are processed separately and the results compared to evaluate the effects

of the matrix on the precision and accuracy of the analysis. Results are expressed as relative percent differences (RPD) between the duplicate samples analyzed and percent recovery. Matrix spike duplicates will be analyzed at the rate 1 per batch of 10 (10%) groundwater samples, and 1 per batch of 40 (2.5%) soil samples, and will be designated on the chain-of-custody by the field sampling personnel. Extra sample volume will be collected for matrix spike duplicate samples.

9.2.4 Method Blank

A method blank consists of analyte-free deionized water. The method blank is carried through each step of the analytical method. Method blanks will be analyzed at a rate of one per batch of 20 (5%) environmental samples analyzed.

Performance and systems audits conducted by WCC shall be performed to (1) determine that the QA program has been documented in accordance with specified requirements, (2) verify by examination and evaluation of objective evidence that the documented program has been implemented, (3) assess the effectiveness of the quality assurance project plan, (4) identify any nonconformances, and (5) verify correction of identified deficiencies.

The audit Flowchart (**Figure 10**) summarizes the audit procedures established in this section. The WCC Project QA/QC Officer (QA/QC Officer) shall be responsible for initiating audits, selecting the audit team and overseeing the audit implementation. The QA/QC Officer in consultation with the Project Manager, shall perform audits to coincide with appropriate activities on this project.

A minimum of one systems audit on field work performance will be conducted by the QA/QC Officer during the field investigation at the NL Site. The Field manager is responsible for the supervising and checking that samples are collected and handled in accordance with the approved project plans and that documentation of field work is adequate and complete. The Project Manager is responsible for overseeing that the project performance audits satisfies the QA objectives, as set out in the CDAP. Reports and technical correspondence will be peer reviewed by an assigned qualified individual, otherwise external to the project, before being finalized.

10.1 PERFORMANCE AUDITS

The QA/QC Officer will evaluate the need for a performance audit with due consideration given to the recommendations of the WCC Project Manager. Performance audits are used to quantitatively assess the accuracy of measurement data through the use of performance and blind check samples. The performance will be audited by the QA/QC Officer or his or her designee.

10.2 LABORATORY SYSTEMS AUDITS

A systems audit of laboratory field operations will be made to review the total data generation process, which includes on-site review of the field operational system, physical facilities for sampling, and equipment calibrations. Systems audits will be performed by WCC personnel prior to the start of this project. These audits are performed annually and when required by specific projects. An additional systems audit may be requested by the WCC QA/QC officer, if warranted.

ESE regularly conducts the following internal audits:

- Quarterly systems audits conducted by the ESE Project QA Manager to review all aspects of laboratory operations

10.3 AUDIT PROCEDURE

This procedure provides requirements and guidance for performing internal and external audits to verify compliance with the elements of this QAPP.

Audit Notification - The Responsible Principal, Senior Project Manager, Project Manager, and if appropriate, other audited entity (e.g., Field Manager and Laboratory Supervisor) shall be notified by the QA/QC Officer of an audit at a reasonable time before the audit is performed. This notification shall be in writing and include such information as the general scope and schedule of the audit and the name of the audit team leader.

Pre-Audit Conference - A pre-audit conference shall be conducted at the audit site with the appropriate manager or designated representative (e.g., Task Leader, Laboratory Supervisor). The purpose of the conference will be to confirm the audit scope, present the audit plan, discuss audit sequence and plan for the post audit conference.

Audit - The audit is then implemented by the audit team.

- Checklists prepared by the audit team and approved by the QA/QC Officer will ensure depth and breadth of audits. The checklist is intended for use as a guide and will not restrict the audit investigation when findings raise further questions that are not specifically included in the checklist. An example laboratory audit sheet is shown in Figure 10.

- Selected elements of the QAPP shall be audited to the depth necessary to determine whether they are being implemented effectively

- Conditions requiring immediate corrective action shall be reported immediately to the Project Manager

Post-Audit Conference - At the conclusion of the audit, a post-audit conference shall be held with the Field Manager, Laboratory Supervisor or designated representative, to present audit finding, recommendations, observations and clarify any misunderstandings. Audit findings shall be concisely stated by the audit team leader on the List of Findings for Post-Audit Conference. The findings will be acknowledged by the Project manager or designated representative by signing the List of Findings.

Audit Report - An audit report will be prepared by the audit team leader and signed by the QA/QC Officer. The report will include the following:

- Description of the audit scope
- Identification of the audit team
- Persons contracted during pre-audit, audit and post-audit activities
- A summary of audit results, including an evaluation statement regarding the effectiveness of the QAPP elements which were audited
- Details of findings and program deficiencies will be reported on an Audit Findings Report (AFR). Each finding and program deficiency shall be identified and described in sufficient detail to assure that corrective action can be effectively carried out by the project organization.
- Recommendations for correcting the findings or improving the QAPP

The audit report shall be addressed to the Project Manager with a copy to the Responsible Principal, Program Manager, and others as appropriate. An example is shown in Figure 12.

10.4 RESPONSE

The Project Manager or designated representative shall respond to the AFR by completing the Corrective Action Reply section of the report form. The response shall be completed within 20 days of receipt and shall clearly state the corrective action for each finding, including action to prevent recurrence and the date the corrective action will be completed.

10.5 FOLLOW-UP ACTION

Follow-up action shall be performed by QA/QC Officer or designated representative to:

- Evaluate the adequacy of the response
- Assure that corrective action is identified and scheduled for each finding
- Confirm that corrective action is accomplished as scheduled

Follow-up action may be accomplished through written communications, re-audit, or other appropriate means and shall be documented by signing the Corrective Action Verified section of the AFR. When all corrective actions have been verified, a memo shall be sent to the Project Manager signifying the satisfactory close to the audit.

10.6 AUDIT RECORDS

Original records generated for all audits shall be retained within the central project files. Records shall include audit reports, written replies, the record of corrective actions, and documents associated with the conduct of the audits which support audit findings and corrective actions as appropriate.

11.1 DAILY QUALITY CONTROL REPORTS (DQCR)

During the field investigation, WCC will provide Daily Quality Control Reports (DQCR) to the USACE. These reports will include the information found in the USACE ER-1110-1-263 Chemical Data Quality Management for Hazardous Waste Remedial Activities, October 1, 1990. These reports will be compiled and sent to the USACE PM once every week (along with the weekly confirmation notice package). Should problems arise, WCC will notify the USACE PM immediately and send the DQCR by express mail on a daily basis until the problem has been corrected. An example DQCR is provided in SOP No. 5.

11.2 QUALITY CONTROL SUMMARY REPORT (QCSR)

A report will be submitted by WCC at the conclusion of the PDFI. The QCSR will contain, but not be limited to, the following information.

1) Project Description. This will include organization and site description.

2) Laboratory QC Activities. This will include a summary of planned laboratory QC activities, a summary of any deviations from planned activities and a summary of the evaluation of the data quality for each analysis and matrix.

3) Field QC Activities. This will include a summary of planned field QC activities, a summary of any deviations from planned activities, and a summary of the evaluation of the quality of the sampling.

4) Data Presentation and Evaluation. This will include an assessment of sampling and analysis techniques, an evaluation of data quality of each matrix and parameter, and an evaluation of the usability of the data.

5) Lessons Learned. This will summarize any suggested changes to field or analytical procedures that could be made to better characterize chemical contamination in future work efforts.

6) DQCR Consolidation. All DQCR's will be consolidated and summarized.

11.3 ANALYTICAL REPORTS

All laboratory analytical reports will follow the same format. Analyses will typically be grouped, by the date the sample was received by the laboratory. In general, a typical analytical report will include:

1) General Discussion: This will include a description of sample types, tests performed, any problems encountered, and any general comments.

2) Analytical Data: Data are reported by sample or by test. All pertinent dates, information and reporting limits are also included.

3) QC Information: All pertinent QC information, including laboratory control samples, method blanks, matrix spikes, matrix spike duplicates, and duplicates will be included.

4) Methodology: Reference for analytical methodology used is cited.

5) Custom Services: Any requested special services are included.

11.4 SITE INVESTIGATION REPORT

A draft report summarizing the activities and findings at the site will be prepared and will include the following elements:

- Information related to the implementation of the investigation
- An estimate of the quantities of materials at the NL Site requiring removal and/or treatment
- Chemical analytical results for the media sampled
- An assessment of the suitability of selected sites as potential borrow areas
- Treatability Scope of Work
- Identification of RCRA-compliant landfill, related disposal costs and limitations
- PSPR

Upon receipt of USACE comments, it is anticipated that a review meeting will be scheduled to discuss the comments and potential resolutions to any deficiencies identified. Following the review meeting, the resolved comments will be incorporated into the draft report and a final report prepared. This document will be transmitted to the appropriate federal, state, and local agencies.

TABLES

TABLE 1

PROJECT MILESTONES

Project Milestones	Date
Submit Draft CDAP for PDSI	August 22, 1991
Submit Final CDAP for PDSI	October 25, 1991
Complete Aerial Photography Survey	December 1, 1991
Initial PDSI Field Work	November 1, 1991
Complete PDSI Field Work	January 24, 1992
Complete Analytical Testing	February 15, 1992
Complete Data Validation	February 20, 1992
Submit Draft PDSI Report	March 15, 1992
Submit Final PDSI Report	May 15, 1992
Final Review With USACE	May 30, 1992

TABLE 2

SAMPLING AND ANALYSIS PLAN
NL/TARACORP SUPERFUND SITE

[illegible]	TYPE Soil	TYPE Water	LOCATIONS	SAMPLE DEPTH (ft)	NUMBER OF SAMPLES	NUMBER OF QC SAMPLES (1)	NUMBER OF QA SAMPLES (2)	TOTAL SAMPLES (3)
Re[illegible]ed Areas	Total Lead	–	2500	0–0.25, 0.25–0.5, 0.5–1.0	7500	751	750	8251
	TCLP Lead	–	10	To be selected	10	3	0	13
[illegible] and	Total Lead	–	67	0–0.25, 0.25–0.5, 0.5–1.0	201	20	20	221
[illegible] Acres	TCLP Lead	–	2	To be selected	2	0	0	2
Eas[illegible] Acres	Total Lead	–	15	Variable	60	7	6	67
	TCLP Lead	–	18	To be selected	18	3	2	21
[illegible]	TCLP Lead	–	20	To be selected	10	3	1	13
Mi[illegible] Avenue ([illegible])	TCLP Lead	–	3	To be selected	3	0	0	3
Sch[illegible] Road ([illegible])	TCLP Lead	–	3	To be selected	3	0	0	3
2[illegible] [illegible]land	TCLP Lead	–	3	To be selected	3	0	1	3
[illegible] Road	Total Lead	–	3	Variable	12	3	1	15
[illegible])	TCLP Lead	–	3	To be selected	3	0	1	3
[illegible] Area	Total Lead	–	10	0–1, 1–2, 2–4, 4–6, 6–8, 8–10, 13–15	70	8	7	78
[illegible]	Geotechnical	–	10	From 2 – 15 ft at 2 ft intervals	60	0	6	60
BA[illegible] [illegible]port	Total Lead	–	3	0–1, 1–2, 2–4, 4–6, 6–8, 8–10, 14–15	21	3	2	24
	Geotechnical	–	2	From 2 – 15 ft at 2 ft intervals	12	0	1	12
[illegible]	Total Lead	–	2	0–1, 1–2, 2–4, 4–6, 6–8, 8–10, 14–15	14	3	2	17
	Geotechnical	–	1	From 2 – 15 ft at 2 ft intervals	6	0	1	6
[illegible]	Geotechnical	–	3	From 2 – 15 ft at 2 ft intervals	18	0	2	18
	–	Volatiles	18	Variable	18	7	7	25
	–	Semi–Volatiles	18	Variable	18	6	6	24
		PCB & Pest.	18	Variable	18	6	6	24
	–	Metals	18	Variable	18	4	4	22
	Total Lead	–	2603		7878	795	785	8673
	TCLP Lead	–	62		52	9	8	61
	Geotechnical	–	16		96	0	10	96
	–	Volatiles	18		18	7	7	25
	–	Semi–Volatiles	18		18	6	6	24
	–	PCB & Pest.	18		18	6	6	24
	–	Metals	18		18	4	4	22

(1) [illegible]ate samples and MS/MSD samples
(2) [illegible] be performed by USACE – MRD Laboratory
(3) [illegible] samples is not included in Total number of samples

TABLE 3

PROJECTED SOIL/WATER ANALYTICAL SAMPLING BREAKDOWN

NL/TARACORP SUPERFUND SITE

Method	Parameter	Field Samples	QUALITY CONTROL: Field Duplicates	Trip Blanks	MS/MSD Samples	Rinsate Samples	Total QC Samples	Total WCC Samples	QUALITY ASSURANCE: Field Duplicates	Trip Blanks	MS/MSD Samples	Rinsate Samples	Total QA Samples
Residential Areas (1)													
3051 / 6010	Total Lead	7500	375	0	188/188	0	751	8251	750	0	0	0	750
1311 / 3010 / 6010	TCLP Lead	10	1	0	0	0	3	13	0	0	0	0	0
Schools and Public Areas (1)													
3051 / 6010	Total Lead	201	10	0	5/5	0	20	221	20	0	0	0	20
1311 / 3010 / 6010	TCLP Lead	2	0	0	0	0	0	2	0	0	0	0	0
Eagle Park Acres (1)													
3051 / 6010	Total Lead	60	3	0	2/2	0	7	67	6	0	0	0	6
1311 / 3010 / 6010	TCLP Lead	18	2	0	1/1	0	3	21	2	0	0	0	2
Venice (1)													
1311 / 3010 / 6010	TCLP Lead	10	1	0	0	0	1	13	1	0	0	0	1
Missouri Ave. (1)	(III RTE3 & Pontoon)												
1311 / 3010 / 6010	TCLP Lead	3	0	0	0	0	0	3	0	0	0	0	0
Schaeffer Road (1)	(III RTE3 & I-270)												
1311 / 3010 / 6010	TCLP Lead	3	0	0	0	0	1	3	0	0	0	0	0
2230 Cleveland Ave. (1)													
1311 / 3010 / 6010	TCLP Lead	3	1	0	1/1	0	0	3	1	0	0	0	1
Sand Road (1)	(Farmer's Field)												
3051 / 6010	Total Lead	12	1	0	1/1	0	3	15	1	0	0	0	1
1311 / 3010 / 6010	TCLP Lead	3	0	0	0	0	0	3	1	0	0	0	1
SLLR Area (1)	(Trust 454)												
3051 / 6010	Total Lead	70	4	0	2/2	0	8	78	7	0	0	0	7
BV&G Transport (1)													
3051 / 6010	Total Lead	21	1	0	1/1	0	3	24	2	0	0	0	2
Rich Oil (1)													
3051 / 6010	Total Lead	14	1	0	1/1	0	3	17	2	0	0	0	2
Taracorp Site Groundwater													
8240	Volatiles	18	2	1	1/1	2	7	25	2	1	1/1	2	7
3510 or 3520 / 8270	Semi-Volatiles	18	2	0	1/1	2	6	24	2	0	1/1	2	6
3510 or 3520 / 8080	PCB&Pesticides	18	2	0	1/1	2	6	24	2	0	1/1	2	6
[illegible] / 6010	Metals(2)	18	2	0	0	2	4	22	2	0	0	2	4
Project Total	Total Lead	7878	395	0	200/200	0	795	8673	788	0	0	0	788
	TCLP Lead	52	5	0	2/2	0	9	61	5	0	0	0	5
	Volatiles	18	2	1	1/1	2	7	25	2	1	1/1	2	7
	Semi-Volatiles	18	2	0	1/1	2	6	24	2	0	1/1	2	6
	PCB&Pesticides	18	2	0	1/1	2	6	24	2	0	1/1	2	6
	Metals(2)	18	2	0	0	2	4	22	2	0	0	2	4

[illegible]

[illegible] collected for Metals include portions for Lead Arsenic and Selenium analyses on GFAA by methods 3020/7421, 7060 and 7740 respectively [illegible] only analyses on CVAA by method 7470

TABLE 4

LABORATORY QC LEVEL OF EFFORT FOR ANALYTICAL TESTING

SOIL ANALYSES

Parameters	Audit	Frequency[1]
Total Lead (ICP)	Initial and Continuing Calibration Verification	Daily and each instrument setup
	Laboratory Control Sample	One per batch or one per 20 samples
	Matrix Blank/Matrix Spike Analysis	One per batch or one per 20 samples
	Laboratory Replicate	One per batch or one per 20 samples
	Interference Check Sample (ICP)	One per batch or one per 20 samples
TCLP - Lead	Laboratory Control Sample	One per batch or one per 20 samples
	Matrix Method Analysis	One per batch or one per 20 samples
	ICP QC level of effort. Same as above for total lead (ICP).	

GROUNDWATER ANALYSES

Parameters	Audit	Frequency[1]
Metals	Calibration Blank (ICP and AA)	Each calibration, beginning and end of each run
	Initial Calibration Verification (ICP and AA)	Daily and each instrument setup
	Continuing Calibration Verification (ICP and AA)	One per 10 samples
	Preparation Blank (ICP and AA)	One per batch or one per 20 samples
	Matrix Spike Analysis (ICP and AA)	One per batch or one per 20 samples
	Duplicate Sample Analysis (ICP and AA)	One per batch or one per 20 samples
	Laboratory QC Sample Analysis (ICP and AA)	Each sample (at least a single analytical spike will be performed to determine if the method of standard addition is required for quantitation
	Duplicate Injections (AA-Furnace)	[illegible]

TABLE 4 (cont'd)

LABORATORY QC LEVEL OF EFFORT FOR ANALYTICAL TESTING
GROUNDWATER ANALYSES

Parameters	Audit	Frequency[1]
Metals (cont'd)	Serial Dilution Analysis (ICP)	Only if concentration a factor of 10 above the instrumental detection limit in the original sample.
Organic (GC/MS) VOC, SVOC	Initial and Continuing Calibration Verification	One per day at the beginning of the day and at the beginning of each 12-hour shift for VOC and SVOC
	Matrix Spike Analysis	One per batch or one per 20 samples
	Matrix Spike Duplicate Analysis	One per batch or one per 20 samples
	Surrogate Spike	Each sample
	Reagent Water Blank	Daily for VOC. Day of extraction or one per 20 samples for SVOC.
PCB's & Pesticides (GC/ECD)	Instrument Lineation Verification	Each run and every 72 hours of continuous operation.
	Continuing Verification	Each target compound or one per each 10 samples.
	Duplicate Sample Analysis	Analysis conducted if a target compound is detected in sample.
	Reagent Water Blank	Each day of extraction or one per 20 samples

Note:
(1) QC audits are to be performed at most frequent interval specified.
TCLP Toxicity Characteristics Leachate Procedure
AA Atomic Absorption
ICP Inductively Coupled Argon Plasma
GC/MS Gas Chromatography/ Mass Spectrophotometry
GC/ECD Gas Chromatography/ Electron Capture Detector

TABLE 5

FIELD EQUIPMENT
CALIBRATION AND MAINTENANCE REQUIREMENTS
NL/TARACORP SUPERFUND SITE

EQUIPMENT	TASK	FREQUENCY (A)	MAINTENANCE
[illegible] Conductivity and Temperature Meter	1. Obtain correction factor by checking observed reading against 2-point known standard solutions. 2. Zero check 3. Temperature internally calibrated by the meter	Prior to each sample	Check batteries daily
pH Meter	1. Immerse electrodes in buffer solution at pH 7 and adjust meter to proper reading. Rinse electrodes and immerse in buffer solution at pH 4 and pH 10 and adjust meter to proper reading. 2. Repeat above procedures until readings are within 0.1 pH units of the buffer solution values. All buffer solutions and rinses should be at the same temperature.	Before each day's use.	Check batteries daily
[illegible] Testing Equipment	1. No calibration is required during its entire service life.		Check for low battery indicator daily

(A) Site conditions may warrant a higher frequency.

TABLE 6
ANALYTICAL PROCEDURES FOR NL/TARACORP FIELD INVESTIGATIONS
NL/TARACORP SUPERFUND SITE

PARAMETER	TECHNIQUE (1) Water	TECHNIQUE (1) Soil	EXTRACTION AND ANALYSIS METHOD (2) Water	EXTRACTION AND ANALYSIS METHOD (2) Soil
Metals	ICP	–	3005/6010	6010
Lead	GFAA	ICP	3020/7421	3051/6010
Arsenic	GFAA	–	3020/7060	–
Selenium	GFAA	–	3020/7740	–
Mercury	CVAA	–	7470	
TCLP – Lead	–	Extraction/ICP	NA	1311/3010/6010
Volatiles	GC/MS	–	8240	
Semi-Volatiles	GC/MS	–	(3510 or 3520)/8270(3)	–
PCB/Pesticides	GC/ECD	–	(3510 or 3520)/8080	–

(1) ICP – Inductively Coupled Plasma
CVAA – Cold Vapor Atomic Absorption Spectrophotometer
GFAA – Graphite Furnace Atomic Absorption Spectrophotometer
GC/MS – Gas Chromatograph/Mass Spectrophotometer
(2) Method numbers from Third Edition, USEPA SW-846
(3) 3510 – Separatory Funnel Liquid-Liquid Extraction
3520 – Continuous Liquid-Liquid Extraction

TABLE 7

SAMPLE CONTAINERS, PRESERVATION, AND HOLDING TIMES

NL/TARACORP SUPERFUND SITE

Method	Parameter	Type of sample	Number of Containers per Sample	Minimum Sample Size	Number of Samples	Number of QA/QC Samples	Preservation	Holding Time
30[illegible] 6010	Total Lead	Soil	4oz wide mouth poly jar with Teflon lined lid	10 g	7878	788/795	4 deg C	6 months
1311 [illegible]010/ [illegible]010	TCLP Lead	Soil	4oz wide mouth poly jar with Teflon lined lid	100 g	52	5/9	4 deg C	6 months
[illegible]	Volatiles	Water	3 x 40mL vials Teflon lined septum caps	120 g	18	7/7	HCl to pH < 2 4 deg C	14 days
3510 [illegible]/ [illegible]	Semi-Volatiles	Water	2 x 1L glass with Teflon lined cap	2 L	18	6/6	4 deg C	7 days (Before Extraction)/40 days (Extraction to Anal.)
35[illegible]	PCB / Pest.	Water	2 x 1L glass with Teflon lined cap	2 L	18	6/6	4 deg C	7 days (Before Extraction)/40 days (Extraction to Anal.)
	Metals	Water	1L Poly *	1L *	18	4/4	Nitric Acid to pH<2 & 4 deg C	6 months
	Lead	Water	1L Poly *	1L *	18	4/4	Nitric Acid to pH<2 & 4 deg C	6 months
	Arsenic	Water	1L Poly *	1L *	18	4/4	Nitric Acid to pH<2 & 4 deg C	6 months
	Selenium	Water	1L Poly *	1L *	18	4/4	Nitric Acid to pH<2 & 4 deg C	6 months
	Mercury	Water	1L Poly *	1L *	18	4/4	Nitric Acid to pH<2 & 4 deg C	[illegible] days

* Analyses for the Metals, Lead, Arsenic, Selenium, and Mercury use the same one liter poly bottle.

TABLE 8

ANALYTICAL METHODS AND REPORTING LIMITS

SOIL ANALYSES

Analyte		Reporting Limit°
Total Lead	Method 6010	5 mg/kg
TCLP - Lead	Method 1311/6010	0.005 mg/L

GROUNDWATER ANALYSES

VOLATILE ORGANICS METHOD 8240

Analyte	CAS Number	Reporting Limit Water Samples (ug/L)
Acrolein	107-02-8	20
Acrylonitrile	107-13-1	20
Benzene	71-43-2	5
Bromodichloromethane	75-27-4	5
Bromoform	75-25-2	5
Bromomethane	74-83-9	5
Carbon Tetrachloride	56-23-5	5
Chlorobenzene	108-90-7	5
Chloroethane	75-00-3	5
Chloroform	67-66-3	5
2-Chloro ethyl vinyl ether	110-75-8	5
Chloromethane	74-83-9	5
Dibromochloromethane	124-48-1	5
1,1-Dichloroethane	75-34-3	5

TABLE 8
(Cont'd)

ANALYTICAL METHODS AND REPORTING LIMITS
GROUNDWATER ANALYSES

VOLITILE ORGANICS (Cont'd)

Analyte	CAS Number	Reporting Limit Water Samples (ug/L)
1,2-Dichloroethane	107-06-2	5
1,1-Dichloroehtylene	75-35-4	5
trans-1,2-Dichloroethane	156-60-5	5
1,2-Dichloropropane	78-87-5	5
trans-1,3-Dichloropropene	10061-02-6	5
Ethyl Benzene	100-41-4	5
Methylene Chloride (dichloromethane)	75-09-2	5
Tetrachloroethene	127-18-4	5
1,1,1-Trichloroethane	71-55-6	5
1,1,2-Trichloroethane	79-00-5	5
Trichloroethene	79-01-6	5
Vinyl Chloride	75-01-4	10

SEMI-VOLATILE ORGANICS METHOD 8270

Acenaphthene	83-32-9	10
Acenaphthylene	208-96-8	10
Anthracene	120-12-7	10
Benzidine	92-87-5	50
Benzo(a)anthracene	56-55-3	10
Benzo(a)pyrene	50-32-8	10
Benzo(b)fluoranthene	205-99-2	10
Benzo(g,h,i) perylene	191-24-2	10
Benzo(k)fluoranthene	207-08-9	10
4-Bromophenyl-phenylether	101-55-3	10

TABLE 8
(Cont'd)

ANALYTICAL METHODS AND REPORTING LIMITS
GROUNDWATER ANALYSES

SEMI-VOLITILE ORGANICS (Cont'd)

Analyte	CAS Number	Reporting Limit[5] Water Samples (ug/L)
Butylbenzylphthalate	85-68-710	10
Bis(2-Chloroethoxy)methane	111-91-1	10
Bis(2-chloroethyl)ether	111-44-4	10
Bis-(2-chloroisopropol)-ether	108-60-1	10
4-Chloroaniline	106-47-8	5
2-Chloronaphthalene	91-58-7	10
2-Chlorophenol	95-57-8	10
4-Chlorophenyl-phenylether	7005-72-3	10
4-Chloro-3-methylphenol	59-50-7	10
Chrysene	218-01-9	10
Di-n-butylphthalate	84-74-2	10
Di-n-octylphthalate	117-84-0	10
Dibenz(a,h)anthracene	53-70-3	10
1,2-Dichlorobenzene	95-50-1	10
1,3-Dichlorobenzene	541-73-1	10
1,4-Dichlorobenzene	106-46-7	10
3,3'-Dichlorobenzidine	91-94-1	20
2,4-Dichlorophenol	120-83-2	10
Diethylphthalate	84-66-2	10
2,4-Dimethylphenol	105-67-9	10
Dimethyl phthalate	131-11-3	5
4,6-Dinitro-2-methylphenol	534-54-1	50
2,4-Dinitrophenol	51-28-5	50
2,4-Dinitrotoluene	121-14-2	10
2,6-Dinitrotoluene	606-20-2	10

TABLE 8
(Cont'd)

ANALYTICAL METHODS AND REPORTING LIMITS
GROUNDWATER ANALYSES

SEMI-VOLITILE ORGANICS (Cont'd)

Analyte	CAS Number	Reporting Limit[a] Water Samples (ug/L)
1,2-Diphenylhydrazine	122-66-7	20
bis(2-Ethylhexyl)phthalate	117-81-7	10
Fluoranthene	206-44-0	10
Fluorene	86-73-7	10
Hexachlorobenzene	118-74-1	10
Hexachlorobutadiene	87-68-3	10
Hexachlorocyclopentadiene	77-47-4	10
Hexachloroethane	67-72-1	10
Indeno(1,2,3-c,d)pyrene	193-39-5	10
Isophorone	78-59-1	10
Naphthalene	91-20-3	10
Nitrobenzene	98-95-3	10
2-Nitrophenol	88-75-5	10
4-Nitrophenol	100-02-7	5
N-Nitrosodimethylamine	62-75-9	50
N-Nitrosodiphenylamine	86-30-6	10
N-Nitroso-di-n-propylamine	621-64-7	10
Pentachlorophenol	87-86-5	10
Phenanthrene	85-01-8	10
Phenol	108-95-2	5
Pyrene	129-00-0	10
1,2,4-Trichlorobenzene	120-82-1	10
2,4,6-Trichlorophenol	88-06-2	10

TABLE 8
(Cont'd)

ANALYTICAL METHODS AND REPORTING LIMITS
GROUNDWATER ANALYSES

PESTICIDES AND PCBS - METHOD 8080

Analyte	CAS Number	Reporting Limit[6] Water Samples (ug/L)
Aldrin	309-00-2	0.04
BHC-alpha	319-84-6	0.04
BHC-beta	319-85-7	0.05
BHC-delta	319-86-8	0.03
BHC-gamma (Lindane)	58-89-9	0.04
Chlordane	12789-03-6	0.05
DDD,4,4-	72-54-8	0.04
DDE,4,4-	72-55-9	0.10
DDT,4,4-	50-29-3	0.10
Dieldrin	60-57-1	0.02
Endosulfan Sulfate	1031-07-8	0.10
Endosulfan, a-	959-98-8	0.02
Endosulfan, b-	33212-65-9	0.04
Endrin	72-20-8	0.05
Endrin aldehyde	7421-93-4	0.1
Heptachlor	76-44-8	0.02
Heptachlor epoxide	1024-57-3	0.04
PCB-1016	12674-11-2	0.22
PCB-1242	53469-21-9	0.50
PCB-1254	11097-69-1	0.5
PCB-1260	11096-82-5	0.5
Toxaphene	8001-35-2	1.0

TABLE 8
(Cont'd)

ANALYTICAL METHODS AND REPORTING LIMITS
GROUNDWATER ANALYSES

METALS

Analyte	Methods	Reporting Limit Water Samples ug/L
Antimony	6010 (ICP)	200
Arsenic	7060 (GFAA)	10
Beryllium	6010 (ICP)	10
Cadmium	6010 (ICP)	10
Chromium (total)	6010 (ICP)	25
Copper	6010 (ICP)	25
Lead	7421 (GFAA)	5
Mercury	7470 (CVAA)	0.2
Nickel	6010 (ICP)	25
Selenium	7740 (GFAA)	5
Silver	6010 (ICP)	10
Thallium	6010 (ICP)	100
Zinc	6010 (ICP)	25

Notes:

(1) Cannot distinguish from N-Nitroso-diphenylamine.

(2) Not consistently recoverable using standard analytical method, and consequently method detection limits cannot be established.

(3) 3-methyl phenol and 4-methyl phenol cannot be differentiated based on their mass spectra and retention times are almost identical. The isomer which is the closest in retention time to the laboratory standard is reported.

(4) These compounds are measured to two isomers.

(5) ICP = Inductively Coupled Plasma Spectrometry
GFAA = Graphite Furnace Atomic Absorption Spectrometry
CVAA = Cold Vapor Atomic Absorption Spectrometry
TCLP = Toxicity Characterstics Leachate Procedure

(6) The Reporting Limit was set at a level above that the laboratory is confident the analyte would be detected and qualified consistently. The reporting limits established are generally between 2 to 5 times the laboratory method detection limit for organics and the instrument detection limit for metals.

TABLE 9

ACCURACY AND PRECISION CRITERIA FOR
ANALYTICAL TESTING

SOIL ANALYSES

Parameters	Audit	Control Limits
ICP	Initial Calibration Verification	75-125%
	Continuing Calibration Verification	75-125%
	Matrix Blank/Matrix Spike Analysis(2)	75-125%
	Lab Duplicate Sample Analysis	<20% RPD
	Laboratory Control Sample(3)	<20% RPD
	Interference Check Sample	± 10%
TCLP	Laboratory Control Sample	<20% RPD
	Matrix Blank	75-125%

GROUNDWATER ANALYSES

Parameters	Audit	Control Limits
Metals		
Atomic Absorption	Calibration Blank	< CRDL
	Initial Calibration Verification	90-110%
	Continuing Calibration Verification	90-110%
	Preparation Blank	< CRDL
	Matrix Spike Analysis(2)	75-125%
	Lab Duplicate Sample Analysis	± CRDL or <20% RPD
	Laboratory Control Sample(3)	80-120%
	Duplicate Injections (GFAA only)	<20% RPD
ICP	Calibration Blank	< CRDL
	Initial Calibration Verification	90-110%
	Continuing Calibration Verification	90-110%
	Preparation Blank	< CRDL
	Matrix Spike Analysis(2)	75-125%
	Lab Duplicate Sample Analysis	± CRDL or <20% RPD
	Laboratory Control Sample(3)	80-120%
	Interference Check Sample	80-120%
	Serial Dilution Analysis(5)	<10% D

TABLE 9 (cont'd)

ACCURACY AND PRECISION CRITERIA FOR
ANALYTICAL TESTING

GROUNDWATER ANALYSES

Parameters	Audit	Control Limits
Volatile and Extractable Organic Compounds		
GC/MS	Initial Calibration Verification	<30% RSD
	Continuing Calibration Verification	<25% D
	Reagent Blank(4)	< CRDL
	Matrix Spike Analysis	(1)
	Surrogate Spike	(1)
PCB's and Pesticides		
GC/ECD	Instrument Lineation Verification	<10% RSD
	Continuing Verification	(6)
	Duplicate Sample Analysis	±CRDL or <20% RPD
	Reagent Water Blank	< CRDL

Notes:
(1) Matrix and surrogate spike recovery limits are shown in Table 10.
(2) If spike recovery is not within limits, then data associated with spike sample is flagged "N".
(3) If % R falls outside control limits, the analyses must be terminated, the problem corrected, and the previous samples associated with that LCS redigested and reanalyzed.
(4) SW-846 protocol allows for certain laboratory contaminants to be up to 5 times the CRDL. These laboratory contaminants will be flagged as such.
(5) If dilution analysis is >10%, a chemical or physical interference must be suspected, and the data for all affected analytes is flagged with an "E".
(6) Target compound matrix spike analysis must be within RPD criteria listed in Table 10.

AA Atomic Absorption
ICP Inductively Coupled Argon Plasma
GC/MS Gas Chromatography/ Mass Spectrophotometry
GC/ECD Gas Chromatography/ Electron Capture Detector
TCLP Toxicity Characterstics Leachate Procedure
LTE Less than or equal to
RPD Relative Percent Difference
CRDL Contract Required Detection Limit
%D Percent Difference
LCS Laboratory Control Sample
%RSD Percent Relative Standard Deviation

TABLE 10

MATRIX AND SURROGATE SPIKE[1]
CONTROL LIMITS FOR ORGANIC ANALYSIS

MATRIX SPIKE/MATRIX SPIKE DUPLICATE

Fraction	Compound	Water (%)[2]	
		Recovery Limits	RPD
VOA	1,1-Dichloroethene	61-145	14
VOA	Trichloroethene	71-120	14
VOA	Chlorobenzene	75-130	13
VOA	Toluene	76-125	13
VOA	Benzene	76-127	11
BN	1,2,4-Trichlorobenzene	39-98	28
BN	Acenaphthene	46-118	31
BN	2,4-Dinitrotoluene	24-96	38
BN	Pyrene	26-127	31
BN	N-Nitroso-di-n-propylamine	41-116	38
BN	1,4-Dichlorobenzene	36-97	28
Acid	Pentachlorophenol	9-103	50
Acid	Phenol	12-89	42
Acid	2-Chlorophenol	27-123	40
Acid	4-Chloro-3-methylphenol	23-97	42
Acid	4-Nitrophenol	10-80	50
Pest	Lindane	56-123	15
Pest	Heptachlor	40-131	20
Pest	Aldrin	40-120	22
Pest	Dieldrin	52-126	18
Pest	Endrin	56-121	21
Pest	4,4-DDT	38-127	27
Pest	Aroclor 1254	(3)	30

TABLE 10
(Cont'd)

SURROGATE SPIKE

Fraction	Compound	Recovery Limits (%) Water
VOA	Toluene-d_8	88-110
VOA	4-Bromofluorobenzene	86-115
VOA	1,2-Dichloroethane	76-114
BN	Nitrobenzene-d_5	35-114
BN	2-Fluorobiphenyl	43-116
BN	p-Terphenyl-d14	33-141
Acid	Phenol-d_5	10-94
Acid	2-Fluorophenol	21-100
Acid	2,4,6-Tribromophenol	10-123
Pesticide	Dibutylchloroendate (DBC)	24-154

Notes:

(1) Spike levels will be in accordance with SW-846.
(2) These limits for matrix spike analyses are for advisory purposes only and will not be used to determine if a sample should be reanalyzed.
(3) Recovery limits for PCBs will be developed as performance data becomes available.

VOA = Volatile Organic Reagent
BN = Base/Neutral Reagent (semi-volatile)
Acid = Acid Reagent (semi-volatile)
Pest = Pesticide Reagent

FIGURES

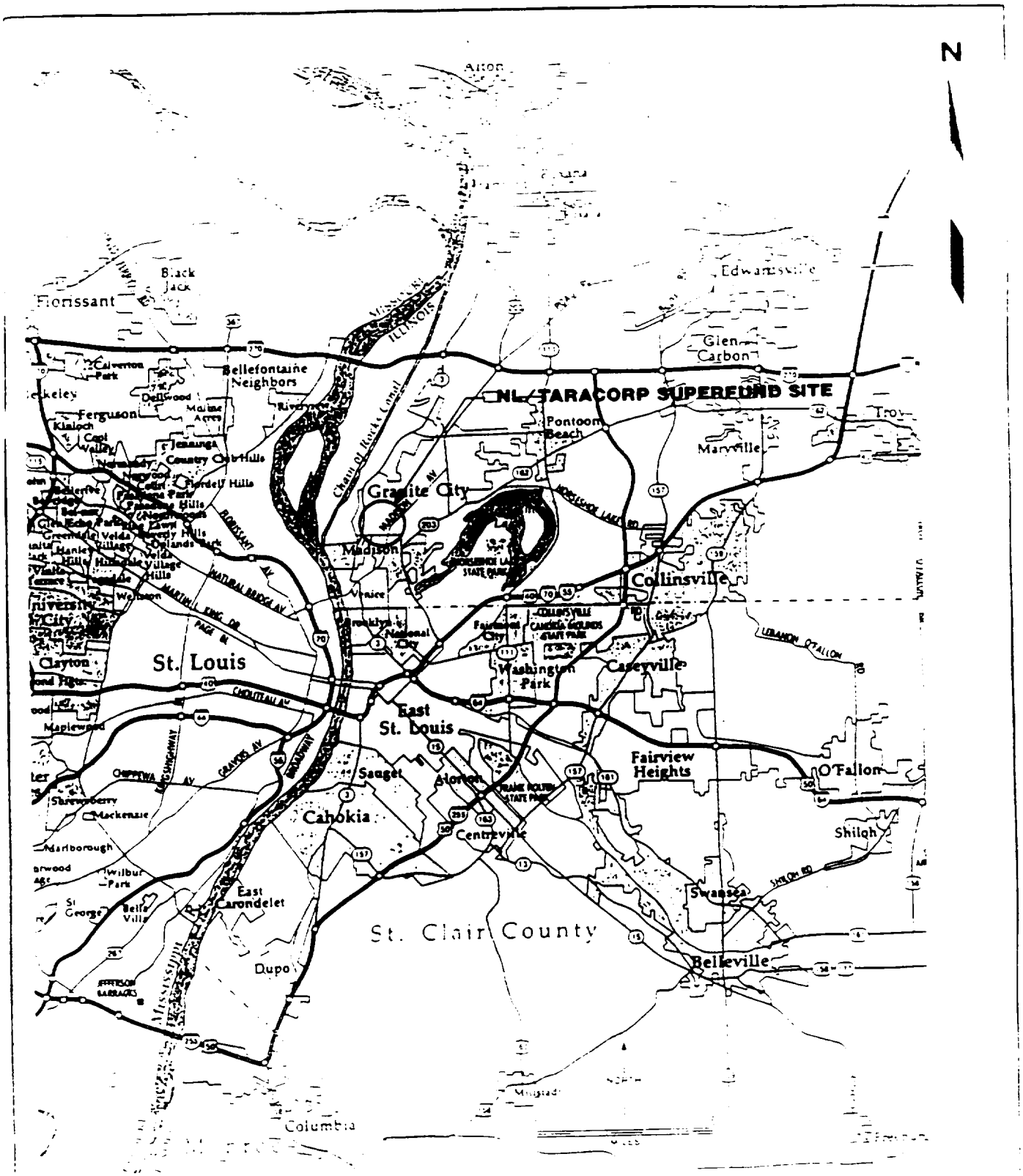

NL/TARACORP SUPERFUND SITE
U.S. ARMY CORPS OF ENGINEERS
GRANITE CITY, ILLINOIS

Woodward-C

DRN BY KMM 16/91
CHKD BY

Site Location Map

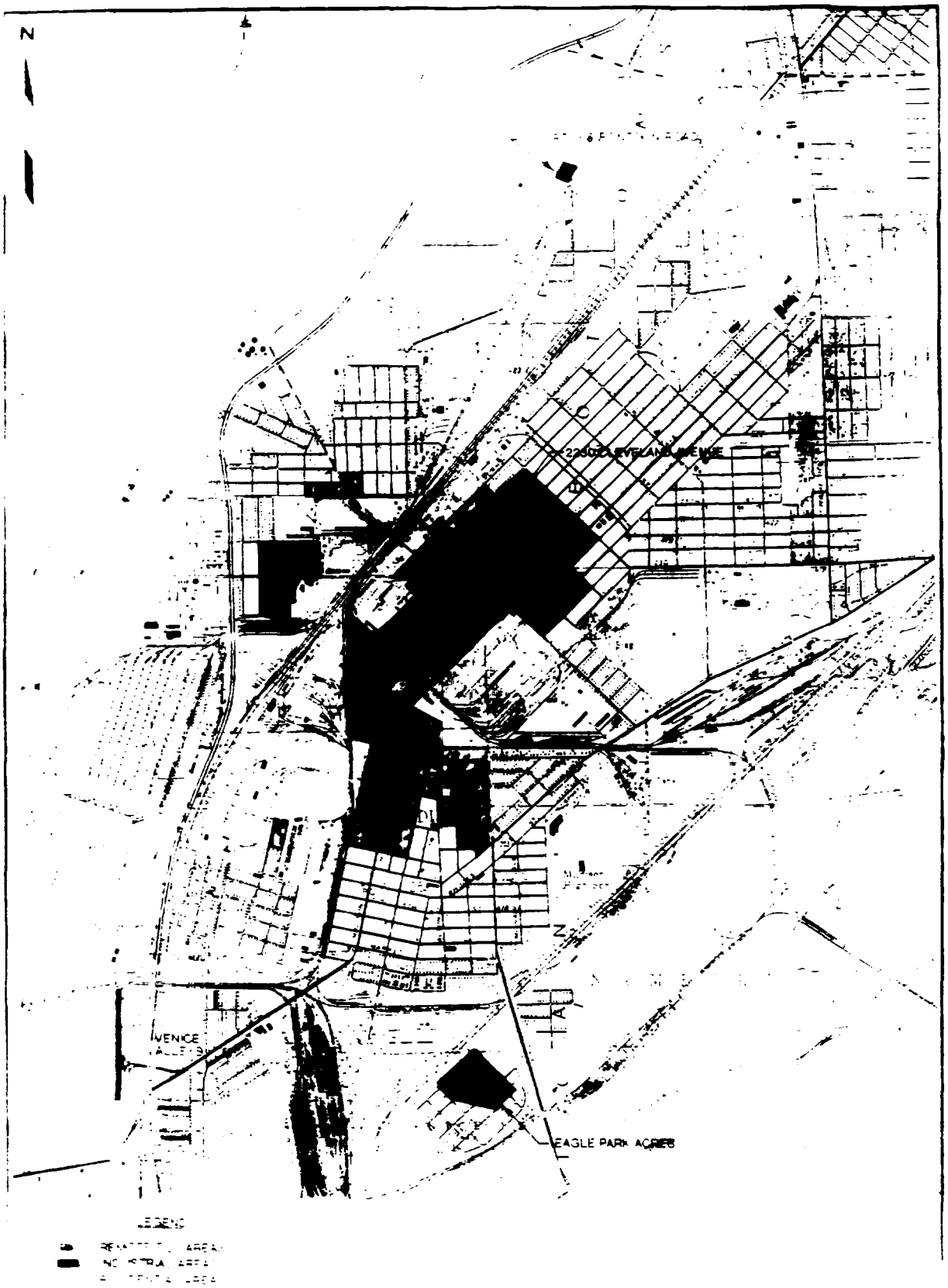

LEGEND

Woodward Clyde Consultants

Site Plan
Industrial and Residential Area

Base map taken from U.S.G.S. - Granite City, IL-MO 1982 and

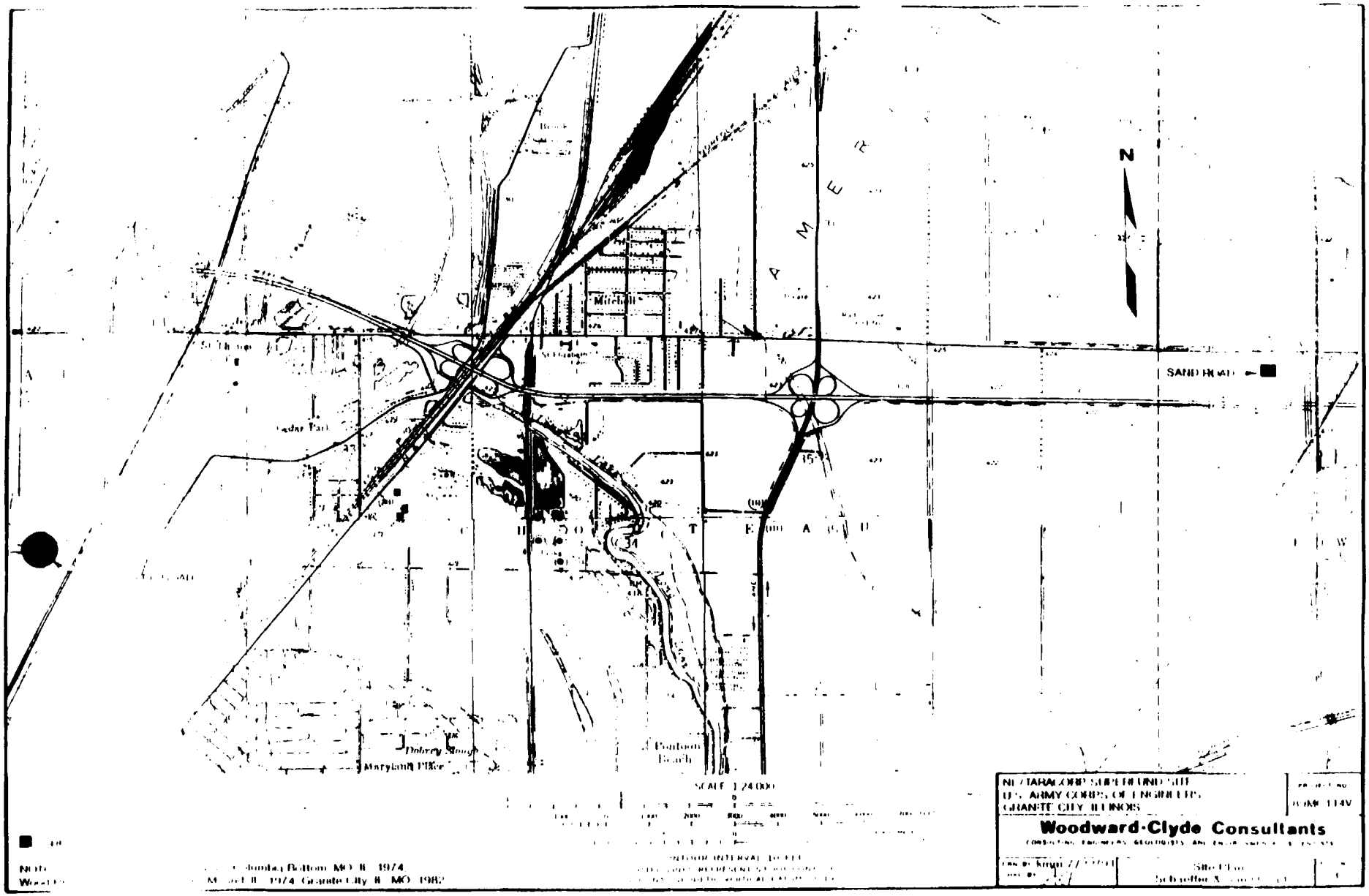
N
SAND ROAD
Mitchell
Cedar Park
Dobrey Slough
Maryland Place
Pontoon Beach
SCALE 1:24 000
NL/TARACORP SUPERFUND SITE
U.S. ARMY CORPS OF ENGINEERS
GRANITE CITY, ILLINOIS
Woodward-Clyde Consultants
Site Plan
Columbia Bottom MO IL 1974
Granite City IL MO 1982

PROJECT SCHEDULE

89MC114V

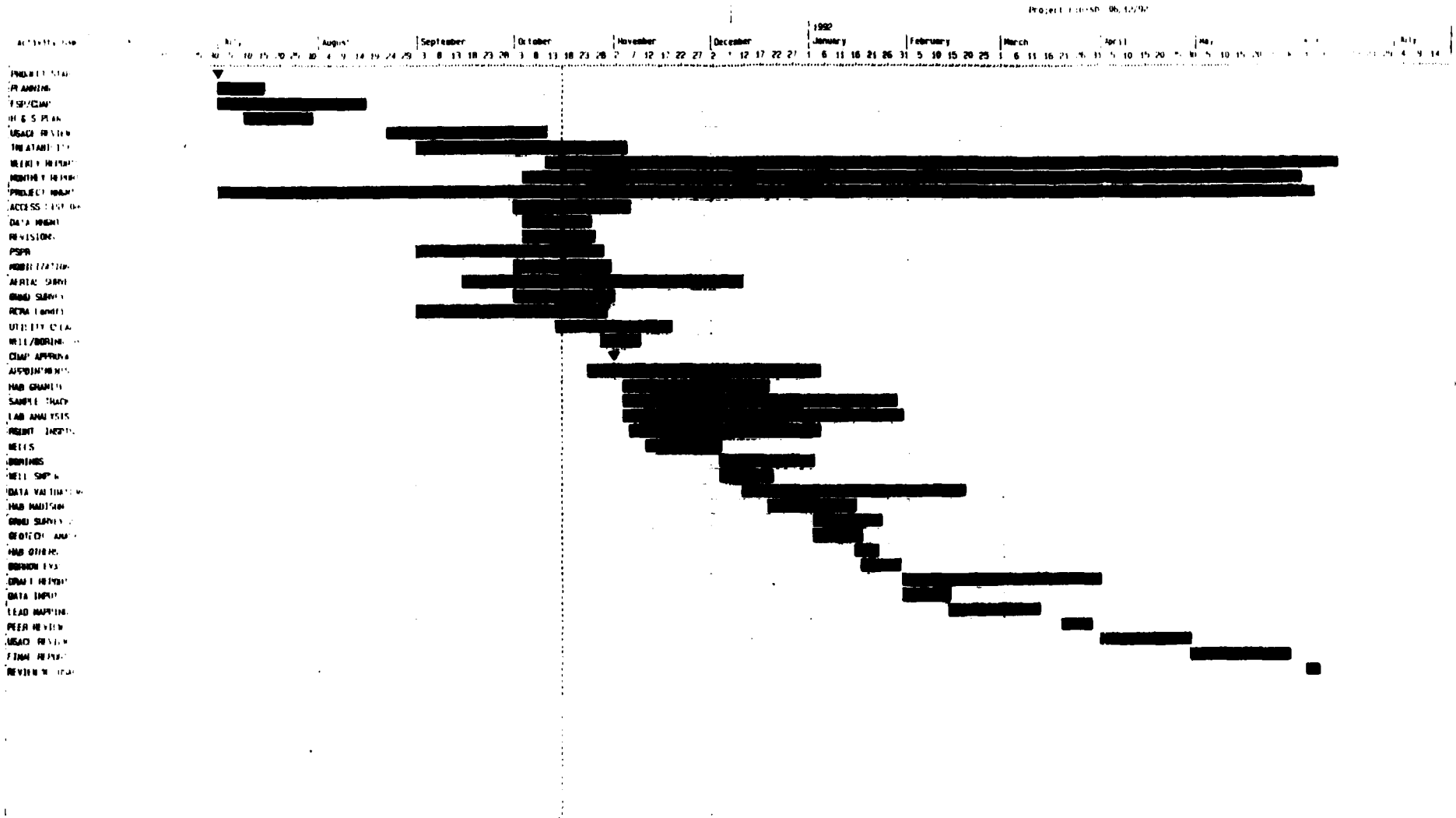

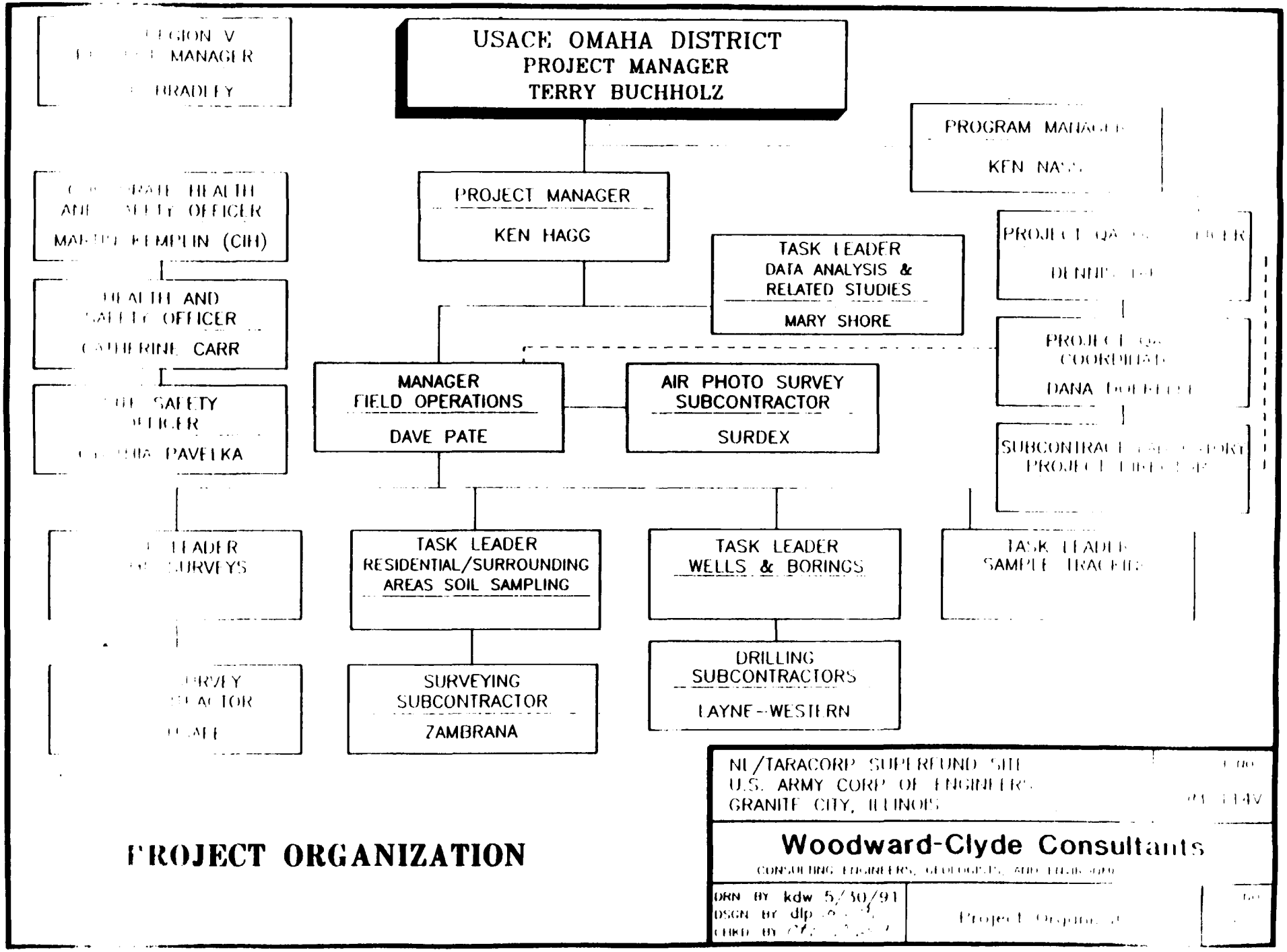

PROJECT ORGANIZATION

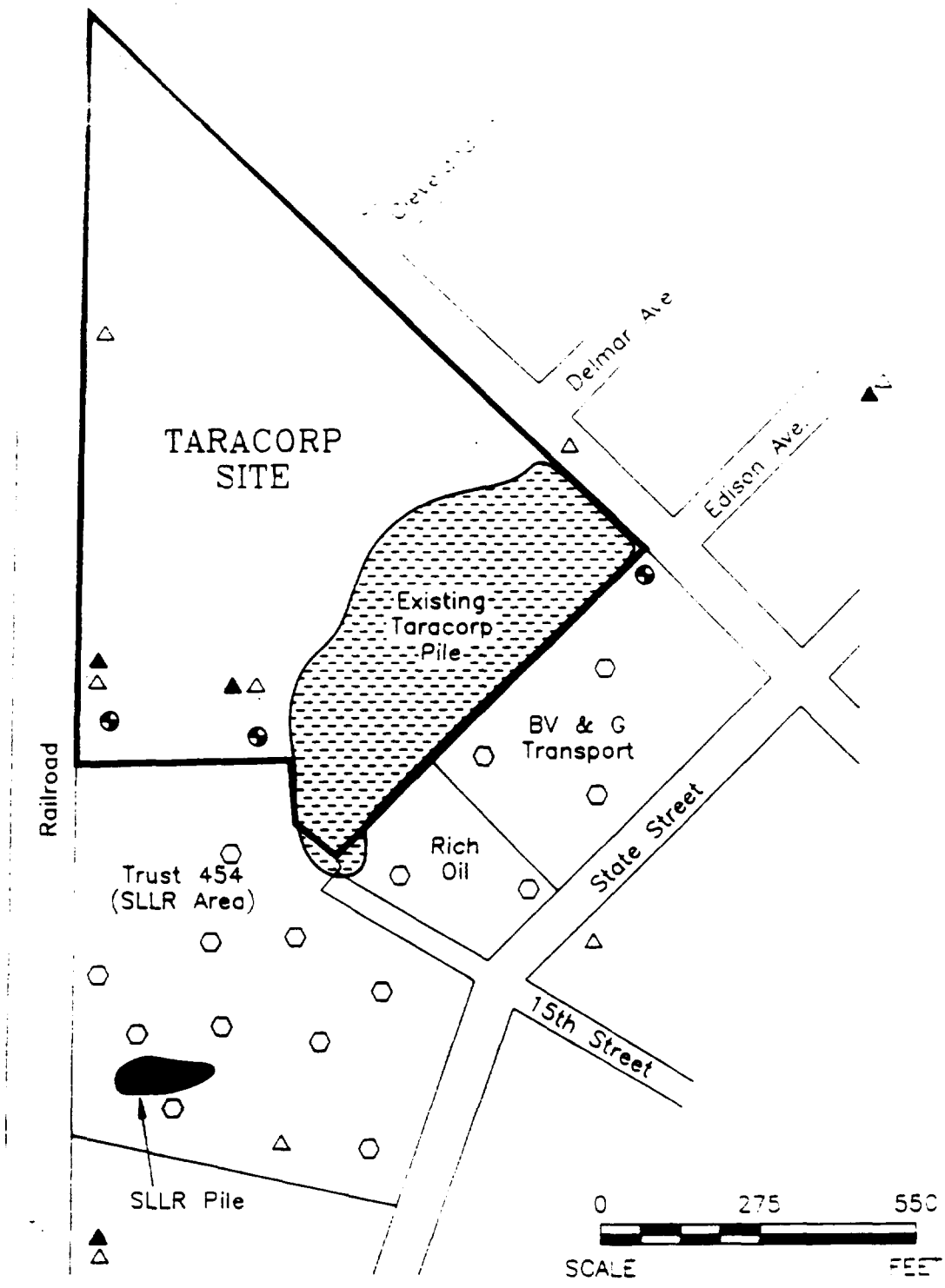

LEGEND

- Proposed Analytical Boring Locations
- Proposed Geotechnical Boring Locations
- Proposed Well Locations
- Existing Well Locations

Reference: Dames & Gere Engineers, Inc.

NL/TARACORP SUPERFUND SITE
U.S. ARMY CORPS OF ENGINEERS
GRANITE CITY, ILLINOIS

PROJECT NO. 89MC[illegible]

Woodward-Clyde Consultants

Engineering & sciences applied to the betterment of man

DRN. BY: KAW 10/14/91
DSGN. BY:
CHKD. BY:

Proposed Wells and Geotechnical Borings – Industrial Area

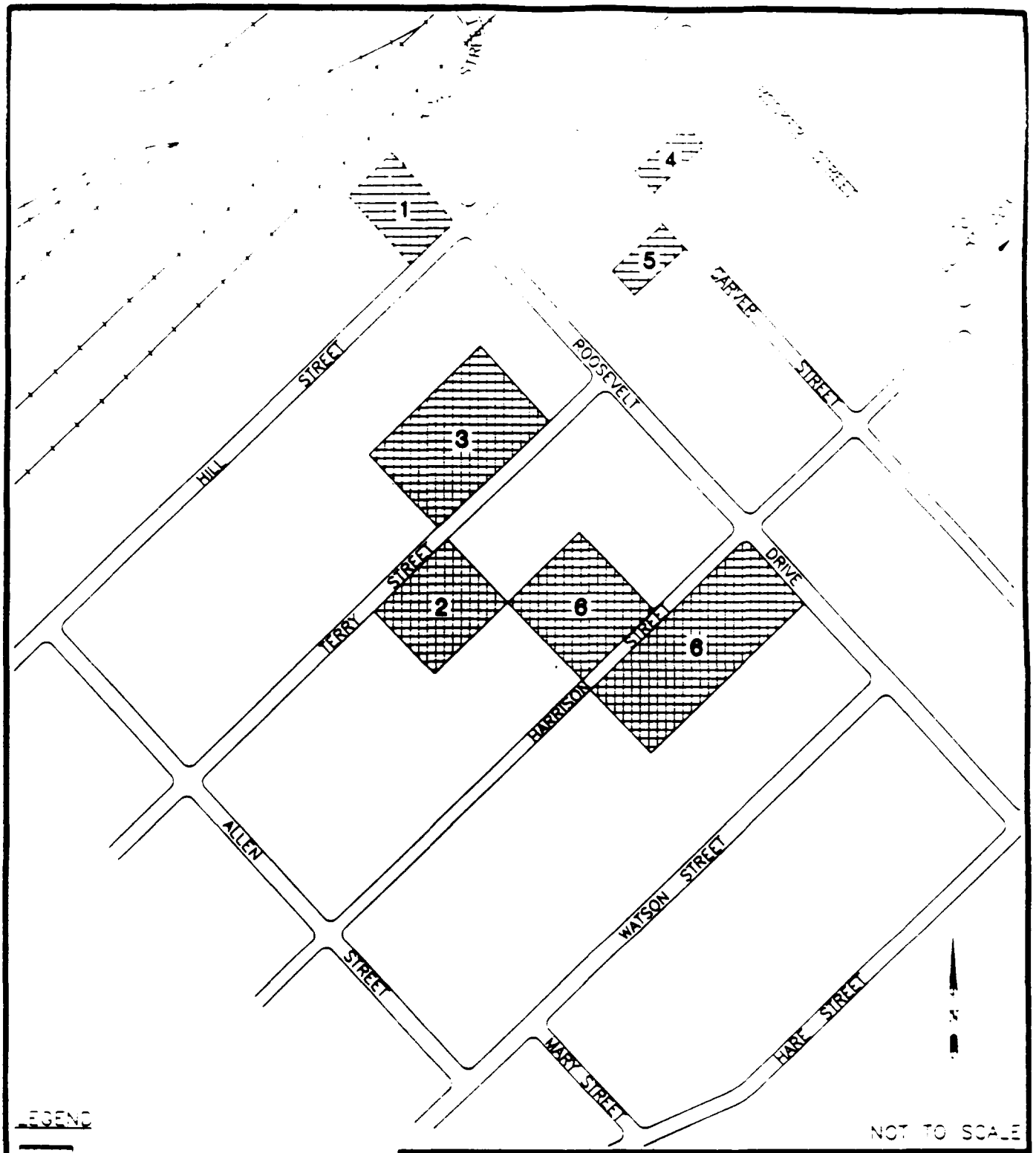

NOT TO SCALE

LEGEND

AREA TO BE SAMPLED

NOTES:

1. MAP BASED ON 1983 MADISON COUNTY TAX ASSESOR'S AERIAL PHOTOGRAPHS

NUMBERS REFER TO SCOPE OF SERVICES NUMBERING FOR EAGLE PARK ACRES.

NL/TARACORP SUPERFUND SITE
U.S. ARMY CORPS OF ENGINEERS
GRANITE CITY, ILLINOIS

PROJECT NO. 89MC114.

Woodward-Clyde Consultants

Engineering & Sciences Applied

DRN. BY: CJ
DSGN. BY: gin
CHKD. BY:

EAGLE PARK ACRES

File name: ...114V\TASK45\BLOCK.DWG Last edi 10/18/91 @ 08:01

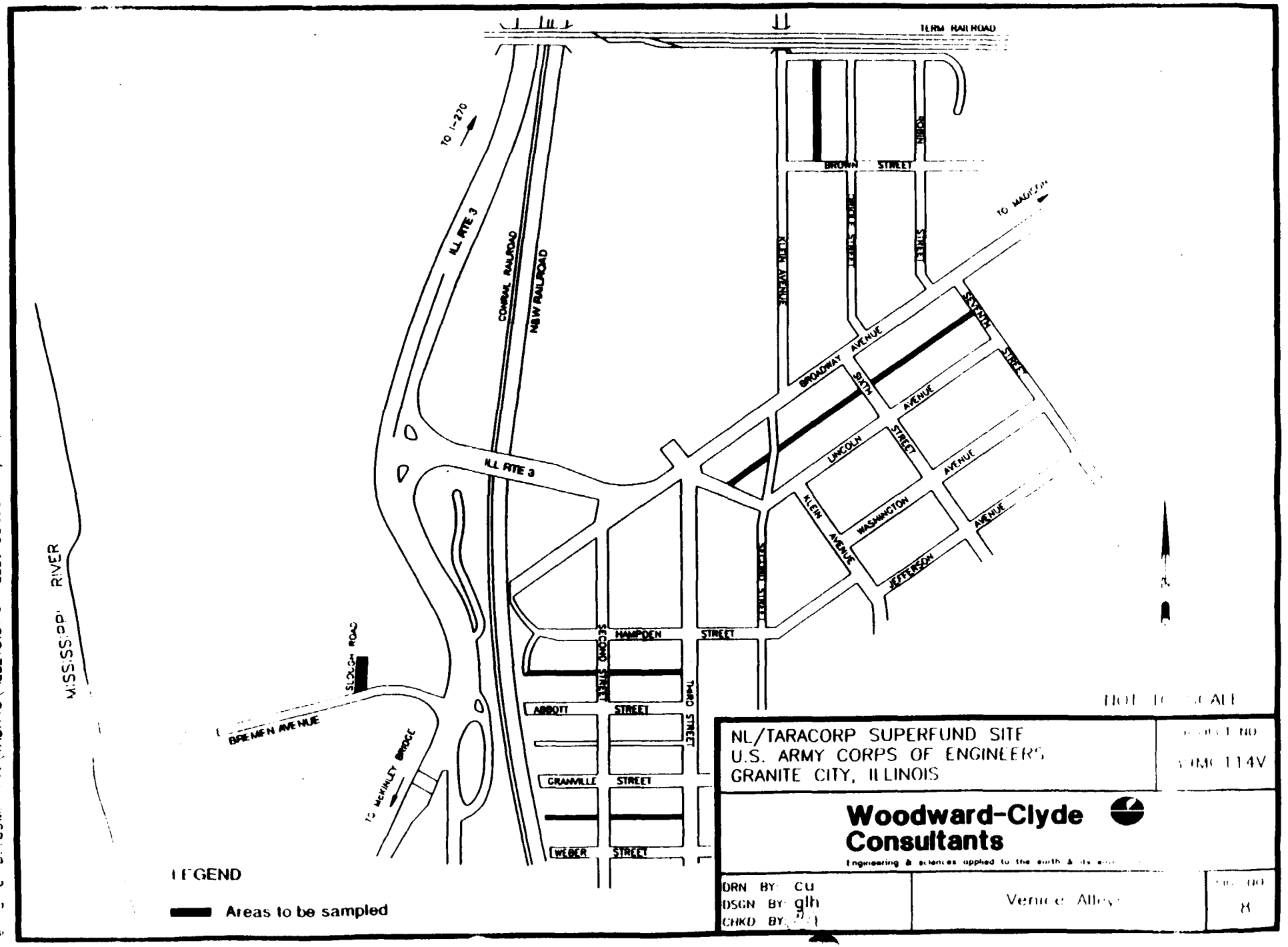

File name D:\89MP114V\TASK45\ALLEYS.DWG Last edited: 10/18/91 @ 09:00

FIGURE 4

NONCONFORMANCE AND CORRECTIVE ACTION REPORT

Date _____

NCR No. _____

SUBMITTAL

To _____

Description of Nonconformance and Cause _____

_____

_____

_____

Proposed Disposition _____

_____

_____

_____

Submitted by _____ Location _____

Approved by _____ Date _____

DISPOSITION (by Project Manager or designee)

Implementation of Disposition Assigned to _____

Actual Disposition _____

_____

_____

_____

_____

Disposition completed on _____
Date

_____
Signature

VERIFICATION

Disposition reviewed and work inspected by _____ on _____

Disposition verified by _____ on _____

(Use additional sheet or memo if needed.)

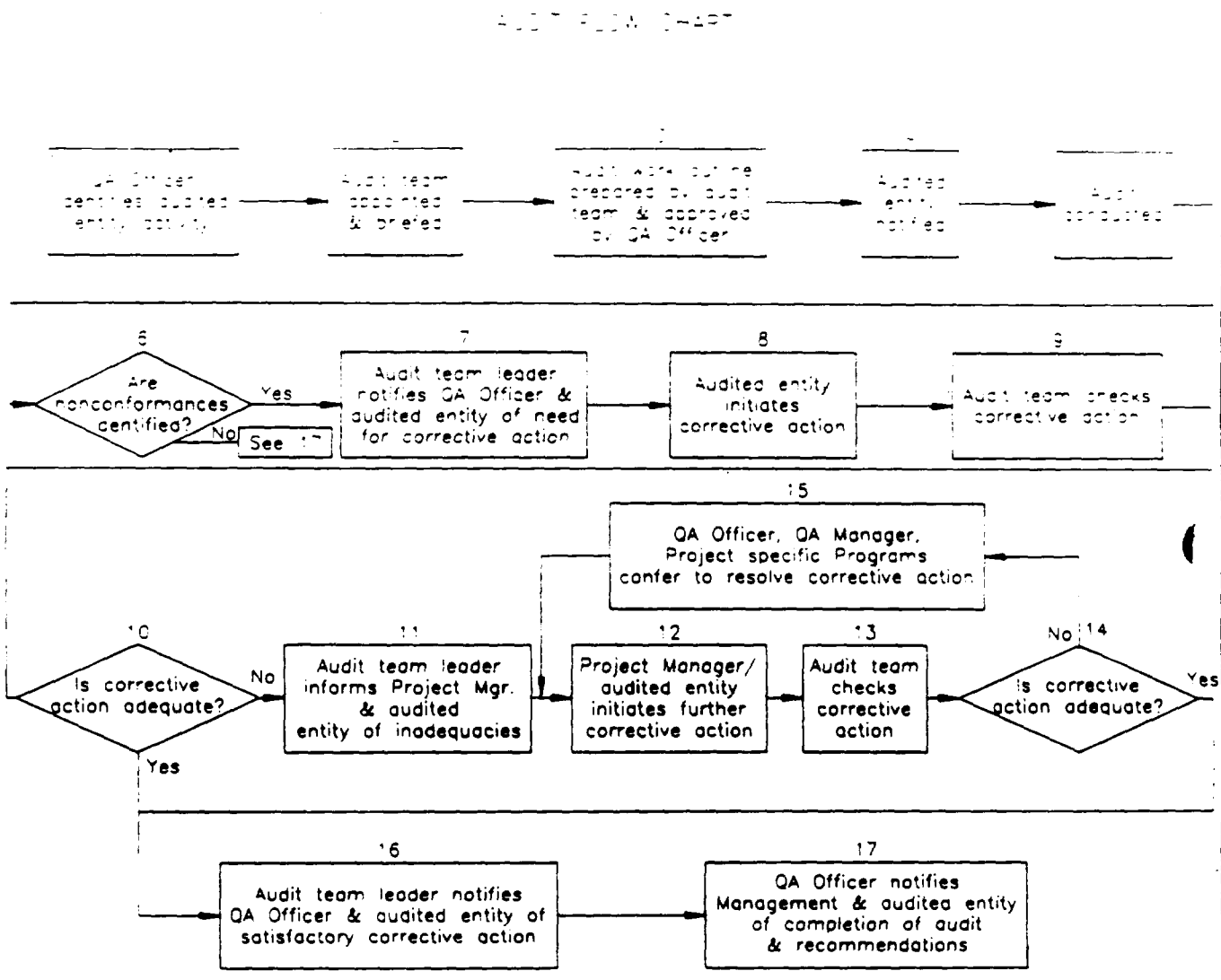

NL/TARACORP SUPERFUND SITE
U.S. ARMY CORPS OF ENGINEERS
GRANITE CITY, ILLINOIS

PROJECT NO. 89MC114V

Woodward-Clyde Consultants

CONSULTING ENGINEERS

DRN. BY: CU 7/22/91
DSGN. BY:
CHKD. BY:

Audit Flow Chart

FIG. NO. 10

File name: 89MP114V\FLOW.DWG Last edited: 08/07/91 @ 12:44

[illegible]

LIST OF FINDINGS FOR
POST AUDIT CONFERENCE

Project _____
Audit No. _____ Date _____
Audit of _____

Sheet ___ of ___

Prepared by WCC Audit Leader _____ Date _____

As a representative of the project or unit audited, I have been advised of the above findings.

Title Date

FIGURE 11

LABORATORY AUDIT SHEET

Woodward-Clyde Consultants

Project_____

Audit No.____ Audit Date_____

Audit Finding No._____

QUALITY ASSURANCE

AUDIT FINDING REPORT

Audited Organization_____

Audited Area_____

10 CFR 50 Appendix B ☐ Requirement _____

WQA-1_____ ☐ _____

QAM _____ ☐ _____

OBSERVATION/FINDING

RECOMMENDATION:

Corrective Action Required Yes ☐ No ☐

Prepared By_____

CORRECTIVE ACTION REPLY

Response Date Due_____

Prepared By_____ Title_____ Date_____

CORRECTIVE ACTION VERIFIED

By_____ Title_____ Date_____

FIGURE 12

AUDIT FINDING REPORT

CHEMICAL DATA ACQUISITION PLAN

APPENDICES

NL/TARACORP SUPERFUND SITE GRANITE CITY, ILLINOIS

Prepared for
U.S. Department of the Army
Corps of Engineers, Omaha District
Omaha, Nebraska

October, 1991

Woodward-Clyde

2318 Millpark Dr.
St. Louis, Missouri 63043

WCC Project No. 89MC114V

APPENDIX A	STANDARD OPERATING PROCEDURES
APPENDIX B	ESE LABORATORY QAPP
APPENDIX C	SUMMARY OF ANALYTICAL DATA FROM REMEDIAL INVESTIGATION (RI)

APPENDIX A

STANDARD OPERATING PROCEDURES

TABLE OF CONTENTS

Section	Page
PURPOSE	A-1
GUIDELINES	A-1
CROSS-REFERENCE	A-1
REQUIRED INFORMATION IN A STANDARD OPERATING PROCEDURE	A-2
Procedure	A-2
Decontamination	A-2
Calibration Procedures and Preventive Maintenance	A-3
Documentation	A-3

STANDARD OPERATING PROCEDURES

SOP NO. 1	SOIL SAMPLING AND DISPOSAL PROCEDURES
SOP NO. 2	MONITORING WELL INSTALLATION AND DEVELOPMENT
SOP NO. 3	GROUNDWATER SAMPLING
SOP NO. 4	SLUG TESTING
SOP NO. 5	SAMPLE IDENTIFICATION, HANDLING, SHIPPING, AND DOCUMENTATION
SOP NO. 6	DECONTAMINATION
SOP NO. 7	BORING ABANDONMENT
SOP NO. 8	WATER LEVEL MEASUREMENT
SOP NO. 9	IDENTIFICATION AND DESCRIPTION OF SAMPLING POINTS
SOP NO. 10	PHYSICAL PROPERTY TESTING
SOP NO. 11	RESIDENTIAL HOME SURVEY
SOP NO. 12	SURVEYING

PURPOSE

The purpose of a Standard Operating Procedure (SOP) is to define the specific procedures and the Quality Assurance/Quality Control (QA/QC) requirements for a sampling or measuring activity in the field or some other activity defined in the Chemical Data Acquisition Plan (CDAP). SOPs will be written to apply to the specific tasks that are used for the National Lead/Taracorp Superfund Site (NL Site) investigation to provide the data necessary to meet the data quality objectives.

GUIDELINES

An SOP will be prepared and approved prior to commencement of any activity utilizing the procedure. An SOP will be prepared for each field activity, including, but not limited to, soil sampling, monitoring well installation, water sampling, and decontamination of equipment. Existing SOPs may be revised to include additional procedures or steps to meet project needs.

Standard Operating Procedures shall be prepared by the Task Leader or other qualified person as designated by the Project Manager. SOPs shall be peer reviewed by the Project Manager and other qualified reviewer(s) prior to submittal for approval. The Project QA Officer shall also review each SOP prior to final submittal to assure that all appropriate QA/QC requirements are addressed.

CROSS-REFERENCE

SOPs serve as subsections of Appendix A to the CDAP and are not intended to be used independently of the CDAP.

The SOPs, together with the CDAP are proposed to satisfy the requirements of the USACE

in defining specific sampling procedures, sample handling and custody procedures, calibration procedures, field analytical procedures, and the QA/QC sampling requirements specific to the SOP.

REQUIRED INFORMATION IN A STANDARD OPERATING PROCEDURE

All SOPs shall be written in a document control format with consecutively numbered pages. Each page shall list the SOP number, revision number, page number, and date. The title page shall include an approvals section. The following sections describe the other sections required in the SOP.

Procedure

The SOP shall provide a step-by-step procedure describing the method to be used to complete the specified activity. The SOP should include an equipment list necessary for completion of the activity. The procedure shall be sufficiently detailed that each person assigned to complete the procedure will use the same method. A sufficiently detailed procedure will reduce the potential for errors related to comparability and representativeness. Detailed procedures related to the use of an instrument need not be included if the instructions provided with the instrument are sufficiently detailed and are available at all times. They also may be included as an attachment to the SOP.

Decontamination

If the procedure requires decontamination, the decontamination procedure shall be referenced in the SOP. Since the field program requires numerous decontamination procedures, these have been combined into a single decontamination SOP.

The decontamination procedure shall include a step-by-step procedure for equipment and personal decontamination, including the number and types of washes and rinses to be completed. Methods for documenting and assessing the completeness of the decontamination (e.g., visual inspection) are also presented.

Calibration Procedures and Preventive Maintenance

If the procedure calls for the use of any instruments, including, but not limited to, pH and conductivity meters the SOP shall include the procedure for calibrating the required instruments. Standards or settings used in calibration should be specified. Preventive maintenance requirements should also be specified in the SOP. Calibration and maintenance procedures from the manufacturer may be included as attachments if the instructions are understandable.

A schedule for calibration and/or maintenance shall be specified in this section. Ranges for acceptable calibration should also be specified.

Documentation

The SOP shall include the procedures for documentation of the data or results produced by a procedure. The objective of this portion of the procedure is to provide a documented history of a sampling or measurement activity and to achieve the quality assurance objectives.

For SOPs that include activities in the field, documentation must begin in the field. The SOP shall include minimum field documentation requirements and specific reporting requirements applicable to the SOP. These may include the following items:

- Type of notebook or form to be used in the field. Forms should be presented as figures in the SOP.

- Minimum items to be reported in the notebook or form. These must include: date, name or initials of the sampler, procedure, location, sample type, sample identification, preservation, or other applicable items.

- Field data reduction methods, including equations and reporting units.

The procedure must specify the verification method for data input.

STANDARD OPERATING PROCEDURE NUMBER 1

SOIL SAMPLING AND DISPOSAL PROCEDURES

STANDARD OPERATING PROCEDURE NUMBER 1

SOIL SAMPLING AND DISPOSAL PROCEDURES

Woodward-Clyde Consultants

St. Louis, Missouri

Project No. 89MC114V

Approvals:	Date:
Doug Hagerty Originator	10/24/91
[illegible] Peer Reviewer	10/24/91
[illegible] for DYT QA/QC Officer	10/24/91
KG Hagerty Project Manager	10/24/91

Disclaimer: This Standard Operating Procedure has been prepared for the sole use of Woodward-Clyde Consultants and may not be specifically applicable to the activities of other organizations.

TABLE OF CONTENTS

Section		Page
1.0	PURPOSE AND SCOPE	1-1
2.0	PROCEDURES FOR ANALYTICAL SOIL SAMPLING	2-1
2.1	EQUIPMENT LIST	2-1
2.2	DECONTAMINATION	2-2
2.3	ANALYTICAL SOIL SAMPLING	2-3
2.3.1	Surface Analytical Soil Sampling	2-3
2.3.2	Subsurface Analytical Soil Sampling	2-4
2.3.3	Geotechnical Soil Sampling	2-5
2.3.4	Soil Cuttings: Handling, and Disposal	2-5
2.4	FIELD QUALITY ASSURANCE/ QUALITY CONTROL SAMPLES	2-7
2.5	SAMPLE IDENTIFICATION, HANDLING, AND DOCUMENTATION	2-8
2.6	DOCUMENTATION	2-8
2.6.1	Field Logbook	2-8
2.6.2	Boring Logs	2-9

LIST OF FIGURES

FIGURE 1. SAMPLE COLLECTION FIELD SHEET

FIGURE 2. SAMPLE BORING LOG

1.0
PURPOSE AND SCOPE

The purpose of this document is to define the standard procedure for collecting soil samples and disposal of soil cuttings. This Standard Operating Procedure (SOP) serves as a supplement to the Chemical Data Acquisition Plan (CDAP). These procedures give descriptions of equipment, field procedures, and QA/QC procedures necessary to collect soil samples. The sample locations and frequency of collection are specified in the CDAP.

The procedures are intended to be used together with the CDAP and several other SOPs. Other SOPs which will supplement this SOP are:

- SOP No. 5 Sample Identification, Handling, Shipping, and Documentation
- SOP No. 6 Decontamination
- SOP No. 7 Boring Abandonment
- SOP No. 9 Identification and Description of Sampling Points
- SOP No. 12 Surveying

Heath and safety procedures and equipment for the investigation are detailed in the Site Safety and Health Plan (SSHP).

Reference Standards

Wherever an ASTM designation is cited in this document, it shall mean the American Society for Testing and Materials Standard Specification of that designation appearing in the "1990 Annual Book of ASTM Standards," published by the American Society for Testing and Materials, 1916 Race Street, Philadelphia, Pennsylvania. "EM 1110-2-1906" refers to United States Department of the Army, "Engineering and Design, Laboratory Soil Testing," 30 November 1970.

Both surface and subsurface soil samples will be collected using either a stainless steel 2-in. O.D. or 3-in. O.D. split-spoon sampler or a stainless steel hand auger apparatus.

2.1 EQUIPMENT LIST

The following list of equipment will be needed to collect soil samples:

Hand Auger Boring Sampling Equipment

- Ballpoint pen, blue or black ink
- Stainless steel hand augering apparatus
- Measuring tape - 100 feet
- Ruler marked in 1/10 foot divisions
- Field books and field sheets
- Map of area
- Stainless steel knife
- Stainless steel bowl and spoon
- Sample bottles provided by the laboratory
- Sample bottle labels
- Label tape (clear)
- Paper towels
- Waterproof and permanent marking pens
- Chain of Custody forms
- Custody seals
- Coolers with ice or blue ice
- Plastic sheeting
- Plastic bags
- Plastic tubs with lid
- Bentonite chips
- 55 gal DOT or USEPA approved drums

- Appropriate health and safety equipment, as specified in the SSHP
- Appropriate decontamination supplies, as specified in SOP No. 6

Drill Rig Sampling Equipment

- Ballpoint pen, blue or black ink
- Drill rig with appropriate drilling and sampling tools
- Measuring tape - 100 feet
- Surveyor's stakes
- Surveyor's flags
- Aluminum foil
- Field books and field sheets
- Boring Logs (1 in. = 1 ft)
- Map of area
- Stainless steel knife
- Stainless steel bowl and spoon
- Sample bottles provided by the laboratory
- Sample bottle labels
- Label tape (clear)
- Paper towels
- Waterproof and permanent marking pens
- Chain of Custody forms
- Custody seals
- Coolers with ice or blue ice
- Plastic bags
- Portland cement
- Powdered bentonite
- 55 gal DOT or USEPA approved drums
- Appropriate health and safety equipment, as specified in the SSHP
- Appropriate decontamination supplies, as specified in SOP No. 6

2.2 DECONTAMINATION

Before drilling or sampling begins, the drilling and sampling equipment will be decontaminated according to the procedures contained in SOP No. 6. Drilling equipment will be decontaminated between boring locations. Sampling equipment will be decontaminated between collection of samples.

2.3 ANALYTICAL SOIL SAMPLING

The procedures for collecting surface and subsurface analytical soil samples are provided in the following sections.

2.3.1 Hand Auger Boring Soil Sampling

- Decontaminate hand auger sampling equipment according to SOP No. 6.
- Record the sample location on a site map and in the field log book according to SOP No. 12.
- Don a clean pair of surgical gloves then nitrile gloves.
- Clear and remove any surface debris such as rocks, as necessary.
- Remove and save sod plug from sample site.
- At each location, collect 3 samples at the following depths: from the ground surface to a depth of 3 in., from 3 in. to 6 in. and from 6 in. to one foot using a hand auger apparatus. Use a separate hand auger bucket for each sample.
- Composite each sample using a separate stainless steel bowls and utensils and place samples in appropriate containers.
- Label, store and document sample according to SOP No. 5.

- Record applicable information on the sample collection Field Sheet (Figure 1).

- Collect excess soil cuttings and dispose of as directed in Section 2.3.4 of this SOP.

- Abandon the boring according to SOP No. 7.

- Decontaminate sampling and drilling equipment according to SOP No. 6.

2.3.2 Drill Rig Soil Sampling

Subsurface analytical soil sampling will begin by auger drilling a boring, using machine driven hollow stem flight augers (HSA) with a 4-1/4 in. minimum inside diameter to accommodate a 2-in. or 3-in. outside diameter stainless steel split-barrel sampler. The sampler head of the stainless steel split-barrel sampler will be provided with a ball check valve and will have open vents. Where necessary for sample recovery, the sampler will also be equipped with a spring-type sample retainer or an equivalent retainer. A HSA center head installed in the bit will be used to prevent soil material coming into the interior of the hollow stem augers. If refusal is encountered before reaching the required depth, the cause of refusal will be identified, if possible, then the boring will be relocated approximately 2 feet from the original boring. A second attempt will be made to obtain the remaining sample(s) before drilling operations are stopped at that location.

The procedure for collecting, labeling, storing, and transporting subsurface soil samples is described below:

- Record the boring location on a site map and in the field log book.

- Don a clean pair of surgical gloves then neoprene gloves.

- Decontaminate drilling and sampling equipment according to SOP No. 6.

- Collect the soil samples using the drilling rig at the intervals stated in the CDAP.

- Open the stainless-steel split-barrel sampler and measure the recovery and scrape off any soil smear zone from the recovered sample with a stainless steel knife.

- Determine and identify the use of the recovered sample. Each sample will always be used for soil classification and stratigraphic logging and may also be used for chemical or geotechnical analysis.

- Samples requiring chemical testing will be homogenized. The individual jars will then be filled.

- Samples requiring geotechnical testing will not be homogenized. They will be put in appropriate containers, labeled and sealed according to SOP No. 5.

The required analyses are stated in the CDAP. The number of additional samples retained for chemical analysis that will be submitted to the analytical laboratory will be a field decision made by the sampling team and the field manager.

- Complete the description of the recovered sample according to the Unified Soil Classification System. This will include visual estimates of grain size, plasticity, and percent sand, silt, and clay.

- Label, store, transport and document the samples according to SOP No. 5.

- Collect excess soil cuttings and dispose of as directed in Section 2.3.4 of this SOP.

- Any boring not used for a well will be abandoned according to SOP No. 7.

2.3.3 Soil Geotechnical Sampling

Soil samples for geotechnical testing will be obtained using a stainless-steel split-barrel sampler. Since these samples are being taken for physical testing only, no special decontamination procedures will be required. The procedure for collecting, labeling, storing and transporting these surface samples will follow SOP No. 5.

2.3.4 Soil Cuttings: Handling, and Disposal

Depending on boring location, excess soil cuttings from each boring will either be collected and placed in USEPA or DOT approved 55-gallon storage drums or disposed of directly on the Taracorp pile or SLLR pile. For the hand auger borings in the "adjacent" residential areas, the excess soil cuttings will be collected and placed in plastic tubs with lids. At the end of each day, the tubs will be emptied into drums at the Taracorp or SLLR piles. For all borings in the remote fill areas, excess soil cuttings will be collected and placed in drums, and the drums will be transported to and stored at the Taracorp or SLLR piles. For borings conducted at the main industrial site, the excess soil cuttings will be collected and directly disposed of on to either the Taracorp or SLLR pile. For soil cuttings to be drummed, the drums will be sealed, labeled, and documented for disposal according to 40 CFR 262.30-39 and Title 35: Illinois Environmental Protection Act, Subtitle G.

The soil cuttings will be segregated according to residue type, placed into drums, sealed, and labeled. All drums will be clearly marked with permanent markers or paint and will include the following:

- Site name and project number
- Waste type (i.e., soil, water)
- location of waste generated (soil borings name and number)
- Date waste collected
- USEPA identification number

The sealed and labeled drums will be transported and stored at the Taracorp pile until determination of the proper disposal method for that material is made.

Documentation for handling and storage of the drums shall include:

- Site name and project number
- Description of waste in each drum
- Location of where waste was collected
- Date waste collected
- Number of drums

After TCLP analysis has been conducted on selected soil samples, drums containing soil cuttings which are hazardous will be labeled, transported, and disposed in accordance to 40 CFR 262-264 and Title 35: Illinois Environmental Protection Act, Subtitle G.

2.4 FIELD QUALITY ASSURANCE/QUALITY CONTROL SAMPLES

Field Quality Assurance/Quality Control (QA/QC) samples are designed to help identify and minimize potential sources of sample contamination due to field procedures and to evaluate potential error introduced by sample collection and handling. All field QA/QC samples are labeled with QA/QC identification numbers and sent to the laboratory with the other samples for analyses. The frequency of QA/QC samples is specified in Table 2 and 3 of the CDAP.

Duplicate Samples

Duplicate samples are samples collected as close as possible to each other in time and space to check for the natural sample variance and the consistency of field techniques and laboratory analysis. The duplicate samples will be collected at the same time as the initial samples. The sample bottles for the lead analyses will be filled first, then the duplicate sample bottles for lead will be filled. The duplicate sample will be handled in the same manner as the primary sample. The duplicate sample will be assigned a QA/QC identification number, stored in an iced cooler, and shipped to the laboratory on the day it is collected.

Matrix Spikes and Matrix Spike Duplicates

Matrix spikes are used to determine the long-term precision and accuracy of the laboratory analytical method on various matrices. For this procedure duplicate samples are collected with the field samples and spiking is done by the lab. Samples are labeled as matrix spikes for the lab. Whenever a matrix spike sample is taken a matrix spike duplicate will be taken at the same sample interval.

2.5 SAMPLE IDENTIFICATION, HANDLING, AND DOCUMENTATION

Samples will be identified, handled and recorded as described in this SOP and SOP No. 5. The parameters for analysis and preservation are specified in Table 7 of the CDAP.

2.6 DOCUMENTATION

Each field activity must be properly documented to facilitate a timely and accurate reconstruction of events in the field. This documentation will be complete enough that the event can be reconstructed at a later date without reliance on memory of field personnel. Sample collection field sheets will be completed for all soil samples submitted for chemical analysis (Figure 1).

2.6.1 Field Logbook

The most important aspect of documentation is thorough, organized, and accurate record keeping. All information pertinent to the investigation will be recorded in a bound logbook with consecutively numbered pages. The first four pages of the logbook will be used for an index, with every entry placed within the index. All entries in logbooks will be made in waterproof ink and corrections will consist of single line-out deletions that are initialed and dated. Entries in the logbook will include the following, as applicable:

- Project name and number
- Sampler's name
- Date and time of sample collection

- Sample number, location, and depth
- Sampling method
- Observations at the sampling site
- Unusual conditions
- Information concerning drilling decisions
- Decontamination observations
- Weather conditions
- Names and addresses of field contacts
- Names and responsibilities of field crew members
- Names and titles of any site visitors
- Location, description, and log of photographs (if taken)
- References for all maps and photographs
- Information concerning sampling changes, scheduling modifications, and change orders
- Summary of daily tasks and scope of work changes required by field conditions
- Signature and date by personnel responsible for observations

Field investigation situations vary widely. No general rules can include each type of information that must be entered in a logbook for a particular site. A site-specific logging procedure will be developed to include sufficient information. The logbooks will be kept in the field team member's possession or in a secure place during the investigation. Following the investigation, the logbooks will become a part of the final project file.

2.6.2 Boring Logs

Boring logs will be completed for each boring by qualified personnel (geologist, geological engineer, or geotechnical engineer). The boring log form is shown on Figure 2.

Boring logs will use a scale of 1 in = 1 ft include the following information:

- Boring location
- Boring identification
- Drilling agency
- Drilling equipment and method
- Auger type and size
- Driller's name
- Date started and completed
- Completion depth
- Logger
- Description of lithologies by depth including soil or rock type, moisture content, color and Unified Soil Classification System (density, plasticity, grain size, and percent sand, clay, and silt present)
- Blow counts (if appropriate)
- Samples collected, intervals and types
- Sample recovery
- Origin of the material (fill, loess, glacial till, glacial outwash, alluvium or colluvium, etc.)
- Other remarks or observations

SOIL SAMPLE COLLECTION FIELD SHEET

WOODWARD-CLYDE CONSULTANTS 2318 MILLPARK DRIVE MARYLAND HEIGHTS, MO 63043 PHONE: 314-429-0100	PROJECT: NL Site PROJECT NO: 89MC114V LOCATION: GRANITE CITY, IL DATE SAMPLED: _____

SAMPLE NO: _____ SAMPLE MATRIX: SOIL

TIME SAMPLED: _____ AREA: _____

SAMPLED BY: _____ SAMPLE TYPE: _____

ANALYSIS REQUIRED	SAMPLE CONTAINER	QTY	SAMPLE PRESERVATION	X
- LEAD	4 oz glass	1	Cool to 4 deg C	
- GEOTECHNICAL	glass/poly	1	3 wraps of tape	

COMMENTS: _____

_____

_____

_____

QA/QC DATA

AIRBILL NO:	DATE SAMPLES SHIPPED:
SHIPPED TO:	Attn:

SIGNATURE(S):

FIGURE 1

HTW DRILLING LOG

HOLE NO.

COMPANY NAME | DRILLING SUBCONTRACTOR | SHEET 1 OF [illegible]

PROJECT | LOCATION

NAME OF DRILLER | MANUFACTURER'S DESIGNATION OF DRILL

SIZES AND TYPES OF DRILLING AND SAMPLING EQUIPMENT

8. HOLE LOCATION

9. SURFACE ELEVATION

10. DATE STARTED | 11. DATE COMPLETED

12. OVERBURDEN THICKNESS | 15. DEPTH GROUNDWATER ENCOUNTERED

13. DEPTH DRILLED INTO ROCK | 16. DEPTH TO WATER AND ELAPSED TIME AFTER DRILLING COMPLETED

TOTAL DEPTH OF HOLE | 17. OTHER WATER LEVEL MEASUREMENTS (SPECIFY)

18. GEOTECHNICAL SAMPLES	DISTURBED	UNDISTURBED	19. TOTAL NUMBER OF CORE BOXES

SAMPLES FOR CHEMICAL ANALYSIS	VOC	METALS	OTHER (SPECIFY)	OTHER (SPECIFY)	OTHER (SPECIFY)	21. TOTAL CORE RECOVERY %

DISPOSITION OF HOLE	BACKFILLED	MONITORING WELL	OTHER (SPECIFY)	23. SIGNATURE OF INSPECTOR

LEV. a	DEPTH b	DESCRIPTION OF MATERIALS c	FIELD SCREENING RESULTS d	GEOTECH SAMPLE OR CORE BOX NO. e	ANALYTICAL SAMPLE NO. f	BLOW COUNTS g	REMARKS h

FIGURE 2

HTW DRILLING LOG

HOLE NO

PROJECT

INSPECTOR

SHEET OF SHEETS

ELEV.	DEPTH	DESCRIPTION OF MATERIALS	FIELD SCREENING RESULTS	DEPTH OF SAMPLE OR CORE BOX NO.	ANALYTICAL SAMPLE NO.	BLOW COUNTS	REMARKS

FIGURE 2 (cont'd)

PROJECT

HOLE NO.

STANDARD OPERATING PROCEDURE NUMBER 2

MONITORING WELL INSTALLATION AND DEVELOPMENT

STANDARD OPERATING PROCEDURE NUMBER 2

MONITORING WELL INSTALLATION AND DEVELOPMENT

Woodward-Clyde Consultants

St. Louis, Missouri

Project No. 89MC114V

Approvals:	Date:
Gregg Hagerty Originator	10/24/91
[signature] Peer Reviewer	10/24/91
[signature] for DYT QA/QC Officer	10/24/91
[signature] Project Manager	10/24/91

Disclaimer: This Standard Operating Procedure has been prepared for the sole use of Woodward-Clyde Consultants and may not be specifically applicable to the activities of other organizations.

TABLE OF CONTENTS

Section		Page
1.0	PURPOSE AND SCOPE	1-1
2.0	PROCEDURES FOR DRILLING AND MONITORING WELL INSTALLATION	2-1
2.1	EQUIPMENT LIST	2-1
2.2	DRILLING AND WELL INSTALLATION PROCEDURES	2-2
2.2.1	Drilling Techniques	2-2
2.2.2	Boring Logs	2-3
2.2.3	Well Material Specifications	2-4
2.2.4	Well Installation Procedure	2-6
2.3	DOCUMENTATION	2-9
2.4	DRILL CUTTINGS AND FLUIDS HANDLING AND DISPOSAL	2-10
3.0	WELL DEVELOPMENT PROCEDURE	3-1
3.1	EQUIPMENT LIST	3-1
3.2	PROCEDURE	3-2
3.3	DOCUMENTATION	3-4
4.0	CALIBRATION	4-1
4.1	pH METER	4-1
4.2	CONDUCTIVITY METER	4-2
4.3	TURBIDITY METER	4-2

LIST OF FIGURES

FIGURE 1. ABOVE GROUND MONITORING WELL CONSTRUCTION DETAILS

FIGURE 2. BORING LOG AND MONITORING WELL CONSTRUCTION LOG

FIGURE 3. WELL DEVELOPMENT LOG

1.0
PURPOSE AND SCOPE

The purpose of this document is to define the standard operating procedures (SOP) and necessary equipment for installation and development of groundwater monitoring wells. The step-by-step procedures described herein are sufficiently detailed to allow field personnel to properly install and develop wells. The well locations are specified in the Chemical Data Acquisition Plan (CDAP).

This SOP serves as a supplement to the CDAP and is intended to be used together with the CDAP and several other SOPs. Other SOPs which will supplement this SOP are:

- SOP No. 1 — Soil Sampling and Disposal Procedures
- SOP No. 5 — Sample Identification, Handling, Shipping, and Documentation
- SOP No. 6 — Decontamination
- SOP No. 7 — Boring Abandonment
- SOP No. 8 — Water Level Measurement
- SOP No. 12 — Surveying

This section details the required equipment, drilling and installation procedures, and documentation procedures for installation of groundwater monitoring wells.

2.1 EQUIPMENT LIST

The following is an equipment list for well installation:

- Well casing and wire wrap screen (304 stainless steel)
- Casing bottom cap (stainless steel)
- Vented top cap
- Bentonite pellets/chips
- Filter pack sand
- Buffer sand
- Portland Type I or II Cement and powdered bentonite for grouting
- Stainless steel centralizers
- Protective well casing with locking cap
- Padlocks keyed alike
- Steel guard posts
- Location map
- Drill rig capable of installing wells to the desired depth in the expected formation materials and conditions
- Plastic bags (Ziploc)
- Self-adhesive labels
- Weighted tape measure
- Water level probe
- Appropriate health and safety equipment, as specified in SSHP
- Appropriate decontamination equipment, as specified in SOP No. 6
- Ballpoint pen, blue or black ink
- Field Log book
- Boring log sheets

- Calculator
- Well construction form
- Well development forms

2.2 DRILLING AND WELL INSTALLATION PROCEDURES

2.2.1 Drilling Technique

The drilling will be performed using a truck mounted drill rig (CME-75 or equivalent). The soil borings and wells will be drilled using Hollow Stem Augers (HSA). The HSA will have a 4.25 inch inside diameter. This is the most common size for the installation of 2-inch inside diameter monitoring wells.

The use of the 4.25 inch HSA provides the ability to collect undisturbed soil samples by removing the center plug and center rods. A 2-inch stainless steel split-barrel sampler is attached to the bottom of the rods and lowered back down inside the augers. A 140-lb hammer is used to drive the split-barrel sampler into the undisturbed soil formation for collection of soil samples.

Following the completion of drilling activities monitoring wells will be installed through the HSA string. Monitoring wells will consist of 2-inch inside diameter, stainless steel (304) screen and riser pipe. Ten feet of wire wrap screen (0.010 slot size) will be used in each monitoring well. Centralizers will be used if needed to stabilize the well string.

After the well string is emplaced, an artificial sand pack will be placed around the screen through the augers to approximately two ft above the top of the screen. The augers will be lifted several inches at a time to allow the sand pack to fill the borehole void.

2.2.2 Boring Logs

Borehole stratigraphy will be logged by examination of the sample cuttings and undisturbed split-barrel soil samples. The data will be recorded on the field boring log and will include the following information:

- Project name and number
- Drilling company name
- Date drilling started and finished
- Type and size of auger
- Well completion details
- Driller's name
- Geologist's name
- Type of drill rig
- Boring number
- Surface elevation (when available)
- Sample depths and times
- Sample ID and type of sample
- Sample characteristics with depth, such as lithology, grain size, sorting, texture, structure, bedding, color, moisture content, and the Unified Soil Classification (if in unconsolidated geologic materials)
- Water levels (1st encountered and 24 hour)
- Drilling observations
- Other pertinent information

Geotechnical soil samples will be collected as described in SOP No. 1 at 5-ft intervals (using a stainless-steel split-barrel sampler) or at changes in lithology. The samples will be described by the field geologist in the field boring log.

2.2.3 Well Materials Specifications

Well Casings

Well casing will consist of new, threaded, flush-joint, 2-in. ID, 304 stainless steel. Glue, lead shot, heat welded joints and/or gaskets will not be used. The tops of all well casings will be fitted with vented caps which can be easily removed by hand.

Stainless steel casing centralizers will be used on wells where needed and will be firmly attached to the casing. Centralizers will be attached at the base and top of the well screen. All well casing will be free of foreign material and steam-cleaned with approved water before use according to procedures in SOP No. 6.

Well Screens

Well screens will consist of new 2-in, I.D. threaded 304 stainless steel with continuous wrap slots. Based on previous experience in the area a screen slot size of 0.01 inches is appropriate. The screen length will be 10 ft. All well screens will have an inside diameter equal to that of the well casing. All screen bottoms will be fitted with a stainless steel threaded cap.

Filter Pack

The filter pack material for the monitoring wells will consist of a medium grained No. 4 to 16 silica sand or equivalent. This grain size is typically used for the soil type in this area. It shall extend from the bottom of the hole to at least 2 ft above the top of the screen.

Buffer Sand

The buffer sand will consist of very fine-grained silica sand and will be placed above the primary filter pack. The purpose of the buffer sand is to prevent the infiltration of the bentonite seal into the primary filter pack.

Bentonite Seal

A bentonite seal shall be installed above the buffer sand in the monitoring wells. The seal will consist of a layer of commercially available sodium bentonite pellets that is approximately 2-ft thick as measured immediately after placement without allowance for swelling. When any portion of the bentonite seal is above the water table, it will be hydrated every 10 minutes for one-half hour with clean water. Four hours shall elapse after hydration before placement of the grout seal. Bentonite slurry seals will be used only when bentonite pellets cannot be placed in the annulus (deeper wells) and the slurry should have a thick batter-like consistency. Slurry seals will be emplaced using the tremie method above the buffer sand and will have a maximum placement thickness of 5 ft.

Cement/Bentonite Grout

The annular space between the well casing and the boring wall will be grouted from the top of the bentonite seal to the ground surface. The grout mixture will contain a maximum of 6% bentonite, based on dry weight, (equivalent to one 94-pound bag of cement to approximately 6 pounds of bentonite powder) and mixed with 8 gallons of water. The grout will be prepared in an above-ground rigid container by first thoroughly mixing the bentonite powder with water and then mixing in the cement.

Grout will be placed in the well annulus with a tremie pipe located within 2 ft of the top of the bentonite seal. The tremmie pipe will be constructed such that the grout will be directed horizontally. The grout will be pumped through the pipe which will be pulled up incrementally until undiluted grout flows from the annular space at ground surface. The tremie pipe will remain below the grout surface while grouting.

Above Ground Completion

A minimum 6-in. diameter (I.D.), 4-ft long, protective steel casing with a lockable steel cap shall be installed over the monitoring well casing which projects above the ground surface. It will be placed about 2 ft below the ground surface, leaving about 2 ft above ground exposure. The protective casing and well riser will be imbedded in a 3 ft

square, 4 in. thick concrete pad, sloped away from the well. ID tags will be attached to the protective casing for easy reference.

Guard Posts

Three 2-in. diameter steel posts will be installed around the wells with above-ground completions. The posts will be located radially from the well casing at a distance of approximately 4 ft. They will be placed approximately 2 ft below the ground surface and have a minimum of 2 ft above ground exposure. These posts will be imbedded in concrete but not in the concrete pad surrounding the well. If hollow guard posts are used, they will be filled with concrete. All above-ground hardware will be painted with a highly visible color.

2.2.4 Well Installation Procedure

The procedure for monitoring well installation using HSAs is as follows:

- Decontaminate all drilling equipment according to procedures outlined in SOP No. 6.

- Advance the boring to the planned depth using nominal 4.25-in. ID hollow stem augers.

- Collect split-spoon soil samples in accordance to ASTM Method D-1586-84 at a minimum of 5 ft intervals or at changes in lithology, or continuously if deemed necessary by the WCC geologist. Collect two samples from the selected screen intervals. Following the guidelines in SOP No. 5 send one sample to WCC and one sample to USACE-MRD.

- Measure the depth of the boring to where water was first encountered, according to SOP No. 8.

- Measure depth of completed boring using a weighted tape.

- Decontaminate all well materials according to SOP No. 6. Following decontamination, all personnel that handle the casing will don a clean pair of surgical gloves.

- Measure each joint of casing, screen, and bottom cap to nearest 0.10 ft.

- Assemble screen and casing as it is lowered into the boring inside the hollow stem augers. Attach stainless steel centralizers as required by lithology and borehole conditions.

- Lower screen and casing until the bottom cap of the screen is about 6 in. above the bottom of the boring.

- Record level of top of casing and calculate depth of screened interval. Adjust screen interval by raising assembly to desired interval if necessary and add sand to raise the bottom of the boring to the bottom cap of the screen.

- Calculate and record the volume of the filter pack, bentonite seal, and grout required for existing boring conditions.

- Begin adding filter pack sand around the annulus of the borehole outside of the casing by tremie pipe. Slowly bump out the augers as the filter sand is added. Depth soundings shall be taken to monitor the level of the sand every 5 ft.

- Allow sufficient time for the filter sand to settle through the water column outside the casing before measuring the sand level.

- Extend the filter pack sand to about 2 ft above the top of the well screen.

- Following the filter pack add 1 foot of buffer sand. Place the buffer sand in the same manner as was described for the filter pack sand.

- Following the buffer sand install a minimum 2-ft-thick seal of bentonite pellets by slowly adding the pellets through the HSA to avoid bridging. The thickness of the completed bentonite seal shall be measured before the pellets are allowed to swell. Deionized water will be added to initiate swelling of the pellets every ten minutes for one-half hour for seals above the water table. The completed bentonite seal shall be allowed to hydrate for approximately four hours.

- Grout the remaining annulus from the top of the bentonite seal to the surface. The grout will be tremied horizontally into the borehole until the annulus is completely filled. The base of the tremie pipe should be placed approximately 2 ft above the bentonite seal, when beginning to pump the grout.

- Run a 5-ft long, 1-3/4 in. diameter pipe through the entire length of the well to verify alignment of the riser. This will be decontaminated between wells according to SOP No. 6.

- After the grout sets for 24 hours it will be checked for settlement. If necessary, additional grout will be added to top off the annulus.

- Measure the water depth after a 24 hour period, according to SOP No. 8.

- After the grout sets, the concrete pad (3 ft by 3 ft by 4 in.) will be placed and the protective casing centered on the well casing riser and inserted into the concrete pad. A temporary spacer will be inserted between the protective casing locking lid and the well cap to prevent the above-ground casing from settling onto the well cap. A metal ID tag indicating well number, date installed, total depth, screen length, and screen depth will be attached to the casing in each well.

- The guard posts will be installed according to Section 2.2.3 of this SOP. The protective casing and posts will be painted a highly visible color.

- A notch will be cut on the north side of the riser for groundwater level measurement procedures as described in SOP No. 3 and SOP No. 8.

- After the well has been surveyed a permanent, non-corrosive metal tag will be affixed to the outer steel protective casing of the well. This tag will clearly identify the well number, depth, screen depth, the United States Corps of Engineers (Omaha District), date installed, and the adjusted top casing elevation.

The monitoring well construction details for a typical installation are shown on Figure 1.

2.3 DOCUMENTATION

Observations and data acquired in the field during drilling and installation of wells will be recorded to provide a permanent record. These observations will be recorded with waterproof ink in a bound weatherproof field book with consecutively numbered pages. Notes will be recorded daily when in the field. The information in the field book will include the following as a minimum:

- Reference elevation for all depth measurements
- Project name and number
- Observer's name
- Well number
- The stratigraphic boundaries and thickness of each different stratum and a brief description of each stratum
- Depth of hole diameter changes
- Depth of static water level and date and time of measurement
- Drilling and well installation observations and measurements
- Decontamination observations as described in SOP No. 6
- Weather conditions

A boring log (Figure 2) will be completed for each boring with the observations recorded in the field book.

Additional documentation for well construction in the field book will include the following:

- Grout, sand, and bentonite volume calculations prior to well installation.
- The quantity and composition of the grout, seals, and filter pack actually used during construction.
- Screen slot size (in inches), slot configuration, outside diameter, nominal inside diameter, schedule/thickness, composition, and manufacturer.
- Coupling/joint design and composition.
- Centralizer design and composition.
- Protective casing composition and nominal inside diameter.
- Start and completion dates.
- Discussion of all procedures and any problems encountered during drilling and well construction.

2.4 Drill Cuttings and Fluids: Handling and Disposal

Depending on well location, excess soil cuttings and drilling fluids from borings will either be collected and placed in USEPA or DOT approved 55-gallon storage drums or disposed of directly on the Taracorp or SLLR pile. For the wells located within the main industrial area, the soil cuttings and drilling fluids may be disposed of directly on to either the Taracorp or SLLR pile. For wells located outside the industrial area (residential areas) the soil cuttings and drilling fluids will be collected and placed into drums; the drums will be transported and stored at either the Taracorp or SLLR piles. The drums will be sealed, labeled, and documented for disposal according to 40 CFR 262.30-39 and Title 35: Illinois Environmental Protection Act, Subtitle G.

The soil cuttings will be segregated according to residue type, placed into drums, sealed, and labeled. Drilling fluids will be in separate drums. All drums will be clearly marked with permanent markers or paint and will include the following:

- Site name and project number
- Waste type (i.e., soil, water)
- Location of waste generated (soil borings name and number)
- Date waste collected
- USEPA identification number

The sealed and labeled drums will be transported and stored at the Taracorp pile until a determination of the proper disposal method for that material is made.

Documentation for handling and storage of the drums shall include:

- Site name and project number
- Description of waste in each drum
- Location of where waste was collected
- Date waste collected
- Number of drums

After TCLP analysis has been conducted on selected soil samples, drums containing soil cuttings which are hazardous will be labeled, transported, and disposed in accordance to 40 CFR 262-264 and Title 35: Illinois Environmental Protection Act, Subtitle G.

The purpose of well development is to remove well drilling fluids, solids, or other particulates which may have been introduced or deposited on the boring wall in a recently installed well during drilling and construction activities. This section describes the equipment, methods, and documentation which shall be used for developing groundwater monitoring wells.

3.1 EQUIPMENT LIST

The following items are required to properly develop groundwater monitoring wells:

- Well keys
- Electronic water level indicator
- Weighted 100-ft tape
- Calculator
- Field notebook
- Ballpoint pen, blue or black ink
- Camera
- Teflon or stainless steel bailer (sized appropriately for well)
- Nylon rope or wireline (for deep wells) for bailing
- Surge block (sized appropriately for well)
- Stainless steel pipe for operating surge block (sized appropriately for well)
- Thermometer
- pH meter (with automatic temperature compensation)
- Conductivity meter
- Turbidity Meter
- Polyethylene or glass container (for field parameter measurements)
- 5-gallon bucket
- 55 gal drums for development water
- Appropriate health and safety equipment, as specified in SSHP

- Appropriate decontamination equipment, as specified in SOP No. 6
- Well completion information

3.2 PROCEDURE

The development of a newly installed monitoring well will proceed only after the cement/bentonite grout has been allowed to set for a minimum of 48 hours. Monitoring well development activities shall be completed prior to purging and groundwater sampling for analytical testing. Before development begins, the development equipment will be decontaminated according to the procedures described in SOP No. 6. Equipment coming in contact with the well will also be decontaminated between wells.

Before development begins, the field personnel will verify that the pH meter, conductivity meter, turbidity meter, and water level probe are operating properly. The conductivity meter requires daily calibration prior to use and must be recalibrated if it has been turned off. The pH meter must be calibrated prior to and after each reading. The turbidity meter will be calibrated as required by equipment specifications. Calibration times and readings will be recorded in the appropriate calibration notebook. Specific instructions for calibrating the meters is given in Section 4.0 of this SOP.

Monitoring well development is accomplished using a surge block or a bailer and a hand pump or submersible pump to flush the screen, sand pack material, and borehole wall of drilling fluids and fine sediment resulting from well drilling and installation activities. This procedure also allows for the removal of fine sediment which may have accumulated within the inner well casing.

Development consists of surging and pumping. A sample of water will be collected for measurement of pH, conductivity, and temperature at the beginning of well development in order to establish a baseline for comparison with the water quality as well development proceeds.

Surging will be done only on wells screened within sand formations. Surging shall be done using a properly fitted surge block. Surging shall be periodically followed by

pumping to remove sediments. Pumping will be done by using a submersible pump. Pumping will be done using a water volume and velocity sufficient to remove sediments in the well. Field measurements of temperature, pH, and specific conductivity will be conducted and recorded on every well volume or 10 bailer volumes, whichever is smaller. Clarity, color, any presence of odors, and other comments regarding water quality are documented in the field notebook and on the well development log. The date, time, and volume of water removed is also recorded at this time. When at least five well volumes have been removed, the field parameters have stabilized within 10% between four consecutive measurements, the sediment thickness at the bottom of the well is less than three inches, and the water is as clear as possible, development is considered complete. Any development in excess of 8 hours requires approval from the USACE project manager. No agents or additives will be used or introduced into the well during development or at any other time.

At the end of a four hour period and/or once development is complete an additional 5 well volumes or three times the volume of water added during the development, whichever is greater, will be removed. If the well is pumped or bailed dry, it will be allowed to recover. Soundings to determine the final well depth and sediment thickness will be taken. One liter of water from the well will be collected in a clear glass jar upon completion of the development. A photograph of the backlit jar will be taken to show the clarity of the water. The turbidity of the water will also be measured at this time according to ASTM D-1889.

The volume of water required for removal during development is calculated using the following method:

1. Measure the depth to water in the well from the measuring point. This is usually a notched point on the top of PVC riser pipe.

2. Measure the total depth of the well from the same measuring point used for measuring the depth to water.

3. Calculate the height of water in the well casing by subtracting the depth of water from the total well depth.

4. Calculate the number of gallons of water corresponding to one well volume. This is done by multiplying the height of water in the well casing by the conversion factor corresponding to the inside diameter of the well casing.

The following equation shall be used to calculate the volume of water to be removed during well evacuation:

$$\underset{\text{(gal)}}{\text{1 Well Casing Volume}} = (\underset{\text{(ft)}}{\text{Total Well Depth}} - \underset{\text{(ft)}}{\text{Water Level Depth}}) \times 0.1632 \text{ gal/ft}$$

Multiply one well casing volume by five to obtain the minimum volume of water to be evacuated.

3.3 DOCUMENTATION

Documentation of observations and data acquired in the field will provide information on well development and also provide a permanent record. These observations and data will be recorded with waterproof ink in a bound weatherproof field book with consecutively numbered pages and on the well development log shown on Figure 3.

As part of the development process, the following information will be recorded in the field book:

- Well designation
- Well location
- Date(s) and time of well development
- Static water level from top of well casing before and after development
- Volume of water in well prior to development
- Volume of water removed and time of removal
- Depth from top of well casing to bottom of well
- Screen length
- Depth from top of well casing to top of sediment inside well, if present, before and after development

- Field measurements of pH, conductivity, and temperature taken before, during and after development
- Physical character of removed water throughout development (color, odor, and turbidity)
- Type and size/capacity of pump and/or bailer
- Description of development technique
- Decontamination observations

4.1 pH METER

The pH meter must be calibrated before and after taking any sample readings. Calibration and operation of the pH meter should follow the manufacturer's specific instructions. In general, calibration is done by adjusting the meter with standard buffers that bracket the expected pH of the field water. Calibration will consist of the following general procedures:

1. Adjust the reading of the pH meter with the electrode placed in the pH 7 buffer by using the calibration knob. Rinse the electrodes with distilled water between buffer adjustments.

2. Adjust the reading of the meter with the electrode placed in the pH 4 buffer with the slope (or temperature) knob.

3. Repeat steps 1 and 2 until the meter gives acceptable readings ($\pm$0.1 pH unit) for all the buffers used for calibration.

Note: Always use the same electrode for measurements that was used in the calibration. Recalibrate the meter if the electrode is replaced. Also, the temperature setting on the pH meter often does not match the sample temperature after calibration. The pH readings will still be accurate in these cases provided that the response to the buffers is correct.

Record the time and the buffer temperature in the pH meter calibration notebook whenever the pH meter is calibrated.

4.2 CONDUCTIVITY METER

The conductivity meter must be calibrated before taking each field measurement. Record time, temperature, and instrument response in the field notebook. Calibration is done by noting the response of the meter to standard conductivity solutions. Standards of double deionized water (approximately 0-1 μmhos/cm) and of 1,000 μmhos/cm should be adequate for the samples expected. If the instrument has a calibration adjustment, set the response to match the standards. Otherwise, simply record the instrument response to the standards in the conductivity meter calibration notebook.

The temperature gauge is internally calibrated within the conductivity meter.

4.3 TURBIDITY METER

The turbidity meter must be calibrated each day before taking field measurements. Record time, temperature, and instrument response in the turbidity meter calibration notebook. Calibration is done by noting the response of the meter to several standard conductivity solutions which bracket the values expected to be measured in the field. Standards of 400, 40, 20 and 4 NTU (nephelometric turbidity units) should be adequate for the samples expected. If the instrument has a calibration adjustment, set the response to match the standards. Otherwise, simply record the instrument response to each standard in the turbidity meter calibration notebook.

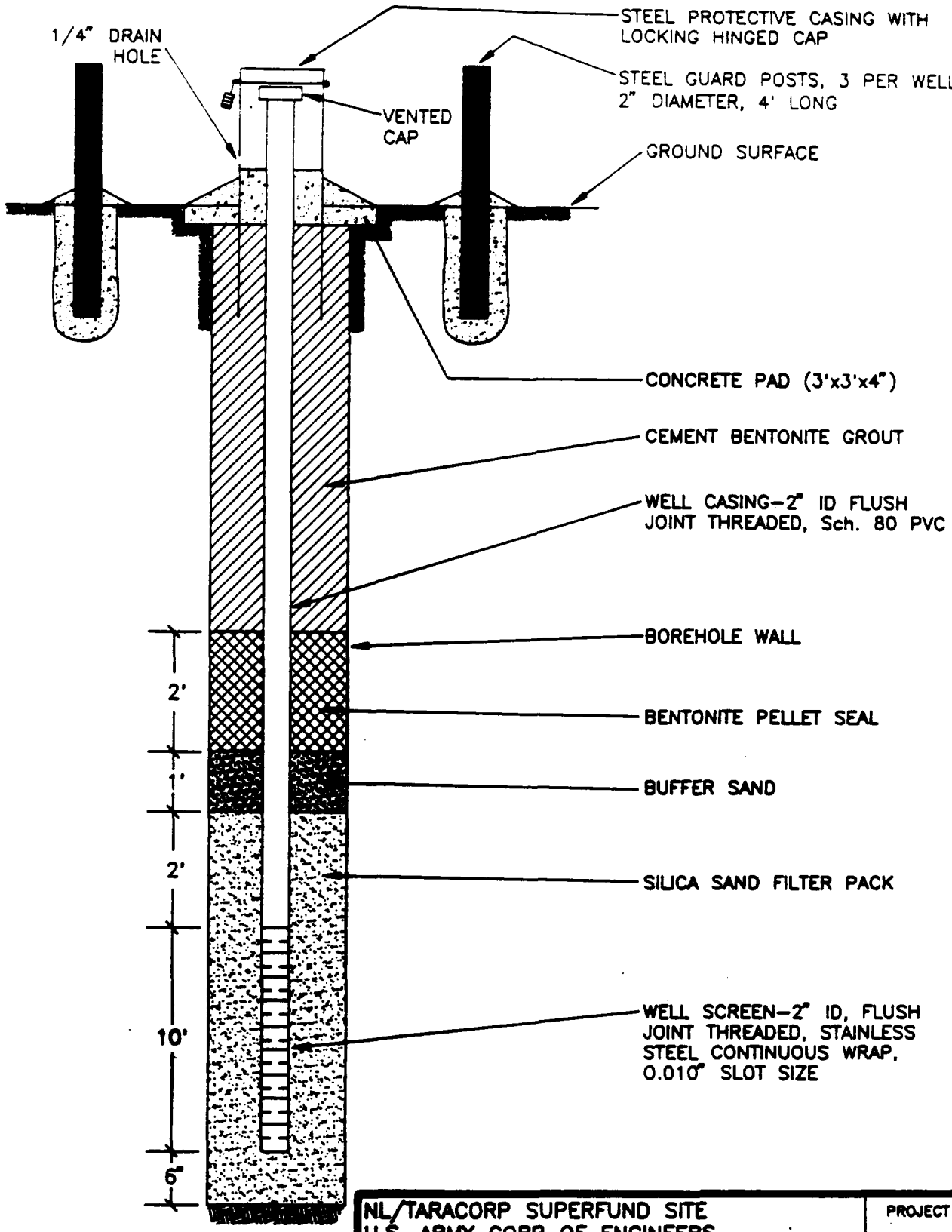

NOT TO SCALE

NL/TARACORP SUPERFUND SITE U.S. ARMY CORP OF ENGINEERS GRANITE CITY, ILLINOIS	PROJECT NO. 89MC114V

Woodward-Clyde Consultants

CONSULTING ENGINEERS, GEOLOGISTS, AND ENVIRONMENTAL SCIENTISTS

DRN. BY: kdw 7/24/91 DSGN. BY: [illegible] CHKD. BY: CFF	Monitoring Well Construction Details	FIG. NO. 1

File name: J:\GRANITE\WELL.DWG Last edited: 10/22/91 ● 09:48

MONITORING WELL INSTALLATION REPORT

Well No. _____

Project _____ Location _____

Project No _____ Installed By _____ Date _____ Time _____

Method of Installation _____

LOG OF BORING AND WELL

BORING		
Depth In Ft.	Description	Symbol

WELL

Type of Well _____

Ground Elev. _____ Top of Riser Elev. _____

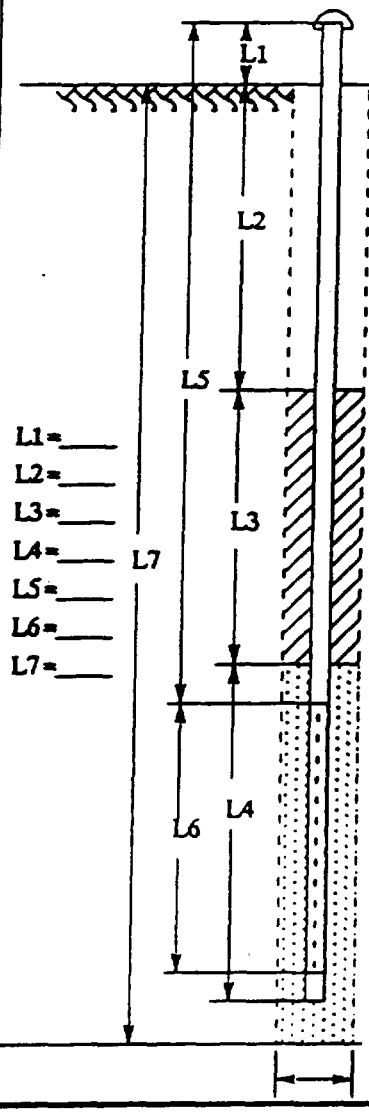

L1= ____
L2= ____
L3= ____
L4= ____
L5= ____
L6= ____
L7= ____

Riser Pipe I.D., in. _____

Type of Pipe _____

Backfill Type Around Riser _____

Top of Seal Elevation _____

Type of Seal Material _____

Top of Filter Elevation _____

Type of Filter Material _____

Size of Opening, in. _____

Diameter of Well Tip, in. _____

Bottom of Screen Elevation _____

Bottom of Riser Elevation _____

Bttm of Boring Elev. _____

Diameter of Boring, in. _____

Remarks _____

Inspected By _____

WOODWARD-CLYDE CONSULTANTS

FIGURE NO 2

WELL DEVELOPMENT LOG

Project: _____ Well No: _____
Project No: _____ Date: _____

WELL MEASUREMENTS

Well inside diameter: _____ ft.
Depth of well casing: _____ ft.
Initial water level: _____ ft.Below MP
Measuring point (MP): _____
Fluid well casing volume: _____ gal.
Air temperature: _____
Weather conditions: _____

SAMPLING MEASUREMENTS

DISCHARGE

Water level (ft. BMP)										
Time										
Discharge (Gal.)										

WATER QUALITY DATA

pH										
Conductivity (uMHOS/cm)										
Temperature (C)										
Color										
Odor										
Turbidity										

Total discharge: _____ Casing volumes removed: _____
Method of disposal of discharged water: _____

QUALITY ASSURANCE

Sampling Method: _____
Method to measure water level: _____
Bailer ropes new or cleaned? _____
pH meter no: _____ Calibrated: _____
Conductivity meter no. _____ Calibrated: _____
Comments: _____

Collected by: _____

STANDARD OPERATING PROCEDURE NUMBER 3

GROUNDWATER SAMPLING

STANDARD OPERATING PROCEDURE NUMBER 3

GROUNDWATER SAMPLING

Woodward-Clyde Consultants

St. Louis, Missouri

Project No. 89MC114V

Approvals:	Date:
Originator	10/24/91
Peer Reviewer	10/24/91
QA/QC Officer	10/24/91
Project Manager	10/24/91

Disclaimer: This Standard Operating Procedure has been prepared for the sole use of Woodward-Clyde Consultants and may not be specifically applicable to the activities of other organizations.

TABLE OF CONTENTS

Section		Page
1.0	PURPOSE AND SCOPE	1-1
2.0	GROUNDWATER SAMPLING PROCEDURES	2-1
2.1	EQUIPMENT LIST	2-1
2.2	SAMPLING PROCEDURE	2-2
2.2.1	Equipment Decontamination	2-2
2.2.2	Instrument Calibration	2-3
2.2.3	Well Purging	2-3
2.2.4	Sample Collection	2-4
2.2.5	Field Quality Assurance/Quality Control Procedures and Sampling	2-6
2.3	SAMPLE IDENTIFICATION, HANDLING, AND DOCUMENTATION	2-7
2.4	DOCUMENTATION	2-7
2.4.1	Field Sampling Data Sheet	2-7
2.4.2	Field Notes	2-8
2.4.3	Well Volume Calculations	2-8
3.0	CALIBRATION	3-1
3.1	pH METER	3-1
3.2	CONDUCTIVITY METER	3-2

LIST OF FIGURES

FIGURE 1 SAMPLE COLLECTION FIELD SHEETS

1.0
PURPOSE AND SCOPE

This document defines the standard procedure for collecting groundwater samples. This Standard Operating Procedure (SOP) serves as a supplement to the Chemical Data Acquisition Plan (CDAP). This procedure gives descriptions of equipment, field procedures, and QA/QC procedures necessary to collect groundwater samples. The sample locations and frequency of collection are specified in the CDAP.

This SOP is intended to be used together with the CDAP and several other SOPs. Sample identification, handling, and documentation procedures are described in SOP No. 5. SOP No. 6 describes decontamination procedures. SOP No. 8 describes the water level measurement technique to be used. Health and safety procedures and equipment that will be required during the investigation are detailed in the Site Safety and Heath Plan (SSHP).

2.1 EQUIPMENT LIST

Equipment used during well purging:

- Ball point pen, blue or black ink
- Well keys
- Electronic water level measurement probe
- Assorted tools (knife, screwdriver, etc.)
- Teflon, or stainless steel bailer (bottom filling)
- Hand pump
- Nylon rope or twine
- PVC pump discharge hose
- Paper towels
- Calculator
- Field notebook
- Waterproof and permanent marker
- 55-gallon drum or holding tank for storing purged water (if necessary)
- Appropriate health and safety equipment, as specified in SSHP
- Well completion information sheet
- Appropriate decontamination equipment, as specified in SSHP

Equipment used during well sampling:

- Electronic water level measurement probe
- Teflon or stainless steel bailers
- Nylon rope or twine
- Thermometer
- pH meter (with automatic temperature compensation)
- Conductivity/temperature meter

- Cooler with ice or blue ice
- Polyethylene or glass jar for measurement of field parameters
- Sample jars and labels. Sample bottles with preservatives added will be obtained from the analytical laboratory. Several extra sample bottles will be obtained in case of breakage or other problems.
- Paper towels
- Field notebook
- Chain of Custody forms
- Custody seals
- Water sample collection form
- Waterproof and permanent marker
- Well completion information sheet
- Appropriate decontamination equipment, as specified in SSHP
- Appropriate health and safety equipment, as specified in SOP No. 6

2.2 SAMPLING PROCEDURE

This section gives the step-by-step procedures for collecting groundwater samples in the field. Observations made during sample collection should be recorded in the field notebook and field data sheet as specified in Section 2.4 of this SOP.

2.2.1 Equipment Decontamination

Before any purging or sampling begins, all well probes, bailers, and other sampling devices shall be decontaminated. Mobile decontamination supplies will be provided so that equipment can be decontaminated in the field. Each piece of purging or sampling equipment shall be decontaminated before sampling operations and between each well. The decontamination solutions shall be replaced with clean solutions between each well. Used solutions will be discharged on to either the Taracorp r SLLR piles. The procedures presented in SOP No. 6, will be followed for decontamination of field equipment and for personnel decontamination.

2.2.2 Instrument Calibration

Electronic equipment used during sampling includes a pH meter with temperature scale and automatic temperature compensation, a conductivity meter, and a water level measurement probe. Before going into the field, the sampler shall verify that these instruments are operating properly. The pH meter requires calibration prior to use every day and the conductivity meter requires calibration prior to each sample. Both meters must be recalibrated if they have been turned off. Temperature is internally calibrated within the conductivity meter. Calibration times and readings will be recorded in individual notebooks to be kept by the field sampler. Specific instructions for calibrating the instruments are given in Section 3.0 of this SOP.

2.2.3 Well Purging

The purpose of well purging is to remove stagnant water from the well and obtain representative water from the geologic formation being sampled while minimizing disturbance to the collected samples. Before a sample is taken, the well will be purged until a minimum of five well casing volumes have been removed or until the well is pumped or bailed dry. All wells shall be sampled within 24 hours of purging. Evacuated well water will be discharged on to either the Taracorp or SLLR piles.

The following procedures will be performed at each well:

- The condition of the outer well casing, concrete well pad, protective posts (if present), and any unusual conditions of the area around the well will be noted in the field logbook.

- The well will be approached from upwind, the well cap unlocked and removed

- The condition of the inner well cap and casing will be noted.

- The water level measurements will be taken according to SOP No. 8. Water level measurements for all wells will be conducted in one day.

- The volume of water in the well casing will be calculated in gallons based on feet of water and casing diameter. (See Section 2.4.3 of this SOP for calculation of volumes.)

- From the above calculation, the five casing volumes to be evacuated will be calculated.

- Five volumes of water in casing will be evacuated with a bailer or pump.

- When evacuating a well using a hand pump, the pump intake should be placed:

  - for low recovery wells (wells which can be pumped dry), the pump intake will be placed at the bottom of the screened interval

  - for high recovery wells (little drawdown with pumping) the pump will be placed at the top of the screened interval

- If the well is bailed or pumped dry during evacuation, it can and will be assumed that the purpose of removing 5 well volumes of water has been accomplished, that is, removing all stagnant water which had prolonged contact with the well casing or air.

2.2.4 Sample Collection

Samples for chemical analysis will be collected within 24 hours after purging is completed. For slow recovering wells, the sample shall be collected after a sufficient

volume is available. The water quality samples shall be taken from within the well screen interval. The following sampling procedure is to be used at each well:

1. Decontaminated sampling equipment will be assembled. If bailers are used, new nylon rope will be used for each well for each sampling event.

2. Identification labels for sample bottles will be filled out for each well.

3. The bailer will be lowered slowly and gently into contact with the water in the well. The bailer will be lowered to the same depth in the well each time, within the screened interval.

4. The bailer will be retrieved smoothly and the water will be slowly drained into the sample containers through the bailer's bottom discharge control device.

5. The individual sample bottles should be filled in the order given below:
   - Volatile organic compounds (VOCs), if any
   - Semivolatiles organic compounds, if any
   - Metals
   - Field test parameters (Ph, specific conductance and temperature)

   VOC sample vials should be completely filled so the water forms a convex meniscus at the top, then capped so that no air space exists in the vial. Check vials to ensure they are air free.

   Fill bottles for metals and semi-volatile almost full.

6. Time of sampling will be recorded.

7. The well cap will be replaced and locked.

8. Field documentation will be completed, including the chain-of-custody.

2.2.5 Field Quality Assurance/Quality Control Procedures and Samples

The well sampling sequence will be dependent on expected levels of contamination in each well, if known, and will be determined prior to sampling. Sampling will progress from the least contaminated well to the most contaminated. Quality assurance/quality control (QA/QC) samples will be collected during groundwater sampling.

Field QA/QC samples are designed to help identify potential sources of sample contamination and evaluate potential error introduced by sample collection and handling. All QA/QC samples are labeled with QA/QC identification numbers and sent to the laboratory with the other samples for analyses.

Rinsate Samples

An equipment rinsate sample of sampling equipment is intended to check if decontamination procedures have been effective. For the well sampling operation, a rinsate sample will be collected from the decontaminated sampling equipment (bailer) or filter equipment before it is used to obtain the sample. Deionized water will be rinsed over the decontaminated sampling apparatus and transferred to the sample bottles. The same parameters that are being analyzed in the groundwater samples will be analyzed in the rinsate samples. The rinsate sample is assigned a QA/QC sample identification number, stored in an iced cooler, and shipped to the laboratory on the day it is collected.

Duplicate Samples

Duplicate samples are samples collected side-by-side to check for the natural sample variance and the consistency of field techniques and laboratory analysis. For the

groundwater sampling a duplicate sample will be collected at the same time as the initial sample. The initial sample bottle for a particular parameter or set of parameters will be filled first, then the duplicate sample bottle for the same parameter(s), and so on until all necessary sample bottles for both the initial sample and the duplicate sample have been filled. The duplicate groundwater sample will be handled in the same manner as the primary sample. The duplicate sample will be assigned a QA/QC identification number, stored in an iced cooler, and shipped to the laboratory on the day it is collected.

Matrix Spikes and Matrix Spike Duplicates

Matrix spikes are used to determine long-term precision and accuracy of the laboratory analytical method on various matrices. For this procedure duplicate samples are collected at the well and spiking is done by the lab. Samples are labeled as matrix spikes for the lab. The matrix spike and duplicate will be collected at the same well.

2.3 SAMPLE IDENTIFICATION, HANDLING, AND DOCUMENTATION

Samples will be identified, handled, and recorded as described in this SOP and in SOP No. 5.

2.4 DOCUMENTATION

2.4.1 Field Sampling Data Sheet

A field sampling data sheet for groundwater samples (Figure 1) will be completed at each sampling location. The data sheet will be completely filled in. If items on the sheet do not apply to a specific location, the item will be labeled as not applicable (NA). The information on the data sheet includes the following:

- Well number
- Date and time of sampling
- Person performing sampling

- Volume of water purged before sampling
- Conductivity, temperature, and pH during evacuation (note number of well volumes)
- Number of samples taken
- Sample identification number
- Preservation of samples
- Record of any QC/QA samples from site
- Any irregularities or problems which may have a bearing on sampling quality

2.4.2 Field Notes

Field notes shall be kept in a bound field book. The following information will be recorded using waterproof ink:

- Names of personnel
- Weather conditions
- Location and well number
- Date and time of sampling
- Condition of the well
- Decontamination information
- Initial static water level and total well depth
- Calculations (e.g., calculation of purged volume)
- Analyses that will be performed by the laboratory
- Equipment calibration information

2.4.3 Well Volume Calculations

The following equation shall be used to calculate the volume of water to be removed during well evacuation:

$$\underset{\text{(gal)}}{\text{1 Well Casing Volume}} = (\underset{\text{(ft)}}{\text{Total Well Depth}} - \underset{\text{(ft)}}{\text{Water Level Depth}}) \times 0.1632 \text{ gal/ft}$$

Multiply the volume of one well casing volume by five (5) to obtain the minimum volume of water to be evacuated.

3.1 pH METER

The pH meter must be calibrated each day before taking any readings of samples and must be recalibrated during the day if it has been turned off after the initial calibration. Calibration and operation of the pH meter will follow the manufacturer's specific instructions. In general, calibration is done by adjusting the meter with standard buffers that bracket the expected pH of the field water. Calibration will consist of the following general procedures:

1. Adjust the reading of the pH meter using the intercept knob with the electrode placed in the pH 7 buffer by using the calibration knob. Rinse the electrodes with deionized water between buffer adjustments.

2. With the electrode placed in the pH 4 buffer, adjust the reading of the meter with the slope knob. Adjust using the temperature knob if the meter has no slope knob.

3. Repeat steps 1 and 2 until the meter gives acceptable readings ($\pm$0.1 pH unit) for all the buffers used for calibration.

Note: Always use the same electrode for measurements that was used in the calibration. Recalibrate the meter if the electrode is replaced. Although the temperature setting on the pH meter often does not match the sample temperature after calibration, the pH readings will still be accurate in these cases provided that the response to the buffers is correct.

Record the time of analysis and temperature of the buffer in the pH meter calibration notebook whenever the pH meter is calibrated.

3.2 CONDUCTIVITY METER

The conductivity meter must be calibrated prior to each field measurement. Record time, temperature, and instrument response in the meter notebook. Calibration is done by noting the response of the meter to standard conductivity solutions. Standards of deionized water (approximately 0-1 μmhos/cm) and of 1000 μmhos/cm should be adequate for the samples expected. If the instrument has a calibration adjustment, set the response to match the standards. Otherwise, simply record in the field notebook the instrument response to the standards.

The temperature gauge is internally calibrated within the conductivity meter.

GROUNDWATER SAMPLE COLLECTION FIELD SHEET

WOODWARD-CLYDE CONSULTANTS 2318 MILLPARK DRIVE MARYLAND HEIGHTS, MO 63043 PHONE: 314-429-0100	PROJECT: NL Site PROJECT NO: 89MC114V LOCATION: GRANITE CITY, IL DATE SAMPLED: _____

SAMPLE NO: _____ SAMPLE MATRIX: GROUNDWATER
TIME SAMPLED: _____ AREA: _____
SAMPLED BY: _____ SAMPLE TYPE: _____

ANALYSIS REQUIRED	SAMPLE CONTAINER	QTY	SAMPLE PRESERVATION	X
- VOLATILES	40 ml vial	3	HCL < 2 pH Cool to 4 deg C	
- SEMIVOLATILES	1 L glass	2	Cool to 4 deg C	
- METALS	1 L poly	1	HNO3 < 2 pH Cool to 4 deg C	
- PCBs/PESTICIDES	1 L glass	2	Cool to 4 deg C	

FIELD ANALYSIS

SAMPLE pH: _____ CONDUCTIVITY: _____ umhos/cm
APPEARANCE: _____ TEMPERATURE: _____ deg C
ODOR: _____

COMMENTS: _____

PURGING

DATE: _____ CASING DIAMETER: _____
ESTIMATED VOLUME REMOVED: _____ TIME STARTED: _____
METHOD: _____ TIME COMPLETED: _____

COMMENTS: _____

QA/QC DATA

AIRBILL NO:	DATE SAMPLES SHIPPED:
SHIPPED TO:	Attn:

SIGNATURE(S):

FIGURE 1

STANDARD OPERATING PROCEDURE NUMBER 4

SLUG TESTING

STANDARD OPERATING PROCEDURE NUMBER 4

SLUG TESTING

Woodward-Clyde Consultants

St. Louis, Missouri

Project No. 89MC114V

Approvals:	Date:
Doug Hagerty Originator	10/24/91
[illegible] Peer Reviewer	10/24/91
[illegible] FOR CYT QA/QC Officer	10/24/91
K A Hogg Project Manager	10/24/91

Disclaimer: This Standard Operating Procedure has been prepared for the sole use of Woodward-Clyde Consultants and may not be specifically applicable to the activities of other organizations.

TABLE OF CONTENTS

Section		Page
1.0	PURPOSE AND SCOPE	1-1
2.0	SLUG TESTING PROCEDURES	2-1
2.1	EQUIPMENT LIST	2-1
2.2	PRE-TEST DATA RECORDING	2-1
2.3	TESTING PROCEDURES	2-2
3.0	SLUG TEST DATA ANALYSIS	3-1

LIST OF FIGURES

FIGURE 1 SLUG TEST DATA SHEET

1.0
PURPOSE AND SCOPE

This document defines the standard procedure for slug testing monitoring wells. This Standard Operating Procedure (SOP) serves as a supplement to the Chemical Data Acquisition Plan (CDAP). This SOP gives descriptions of equipment and field procedures used to estimate the hydraulic conductivity of the aquifer. Hydraulic conductivity will be determined by a positive displacement test and/or a negative displacement test.

This SOP is intended to be used together with the CDAP and several other SOPs. Sample identification, handling, and documentation procedures are described in SOP No. 5. SOP No. 6 describes decontamination procedures. SOP No. 8 describes the water level measurement technique to be used. Health and safety procedures and equipment that will be required during the investigation are detailed in the Site Safety and Heath Plan (SSHP).

2.1 EQUIPMENT LIST

Field equipment to be used for the slug testing activities includes:

- Electronic water level indicator
- Field books
- Slug of known volume for 2-inch diameter wells
- Pressure transducer (10-50 psig)
- Data logger (Hermit) and Operation Manual (Hermit)
- Weighted Measuring tape (100 feet)
- Nylon rope
- Keys to well locks
- Paper towels (organic and lint free)
- Stainless steel knife
- Camera and film
- Waterproof and permanent marking pens
- Clock
- Appropriate health and safety equipment
- Appropriate decontamination equipment

2.2 PRE-TEST DATA RECORDING

Pre-test data will be collected in accordance with the following procedures:

- The well casing will be approached from upwind.

- The well cap will be unlocked and removed.

- Before beginning the slug test, the following information will be recorded:

- Monitoring well identification number or letter

- Location and elevation of the reference point from which water depth measurements are made (notch in the top of the stainless steel well casing)

- Elevation of groundwater with respect to the reference point

- Date and time of test

- Well depth, screen length, riser pipe radius, well screen radius, and radius of gravel pack plus the well screen depth and radius (from the installation record)

- Aquifer or groundwater zone (Lithology) being tested (from the installation record)

- Volume of solid cylinder (slug)

- Type of measuring device used

- Names of personnel conducting test

2.3 TESTING PROCEDURES

Slug testing will be conducted in accordance with the following procedures.

- Decontaminate equipment that will be in contact with the well according to SOP No. 6.

- The static water level in the well and total depth of the well will be determined to the nearest 0.01 foot. The appropriate pressure transducer will be inserted and the Hermit Data Logger activated. The water level

recording interval will be programmed on the data logger to the logarithmic mode.

- The slug of known volume will be instantaneously introduced to (or removed from) the well, taking care to fully submerge (or withdraw) the slug. It is important to remove or add the volume as quickly as possible because the analysis assumes an "instantaneous" change in volume in the well.

- With the moment (time) of volume addition or removal assigned time zero, the depth of water will be measured and recorded. The pressure transducer will monitor water level change. Care must be taken to ensure that the transducer is submerged throughout the test. Once the test has started, the transducer elevation must not be changed.

- The test will continue until the water level has stabilized or 90 percent of the excess head has dissipated.

- The well will be locked upon completion.

- The slug testing equipment will be removed for decontaminated in accordance with procedures discussed in Section 3.0 of this SOP and SOP No. 6.

- Personal protective equipment will be decontaminated or disposed of as appropriate.

- The slug test data will be downloaded from the data logger to a field printer to confirm the successful completion of the test prior to departing the site.

3.0
SLUG TEST DATA ANALYSIS

Slug test data will be evaluated using the method of Bouwer and Rice (1976) and Bouwer (1989). The Bouwer and Rice method is applicable to unconfined and confined aquifers and considers the effect of partial penetration, the radius of the filter pack, and the effective radius of influence of the test.

SLUG TEST DATA SHEET

Date: _____ Personnel: _____

Weather: _____ _____

Well Designation: _____ Project No. _____

Measurement reference point = _____
Measured well inside diameter = _____
Initial depth to water = _____ feet

Total depth of well (below measurement reference point) = _____

SLUG: ____ Large (" dia.) No. of sections = _____
length = _____ feet
____ Small (" dia.) No. of sections = _____
length = _____ feet

WELL INFORMATION:

Elevation top of casing _____
Diameter of drilled borehole _____
Length of screen _____
Distance from top of casing to top of screen _____
Distance from top of casing to bottom of screen _____
Distance from water level to bottom of screen _____

Saturated thickness of aquifer _____

Depth of transducer (from reference point) = _____ feet
Transducer Serial Number _____
Depth of top of slug = _____ feet (= rope length) (compare to initial depth to water)
Depth of bottom of slug = _____ feet (compare to transducer)

Hermic Test Number = _____ (0 to 9)

____ Set test number
____ Set reference depth (= initial depth to water)
____ Pre-run checkout value (press XD) = _____

SLUG INSERTION

Time of day of start of test = _____
Time of day of end of test = _____
Depth to water at end of test (measured) = _____ feet

SLUG REMOVAL:

Depth to water at start of test = _____ feet
Time of day at start of test = _____ feet
Time of day at end of test = _____ feet

Printer dump of test results ____ Step #0
____ Step #1

_____ Field review of test results

COMMENTS

FIGURE NO 1

STANDARD OPERATING PROCEDURE NUMBER 5

SAMPLE IDENTIFICATION, HANDLING, SHIPPING AND DOCUMENTATION

STANDARD OPERATING PROCEDURE NUMBER 5

SAMPLE IDENTIFICATION, HANDLING, SHIPPING AND DOCUMENTATION

Woodward-Clyde Consultants

St. Louis, Missouri

Project No. 89MC114V

Approvals:	Date:
Susan Fogarty Originator	10/24/91
[illegible] Peer Reviewer	10/24/91
[illegible] for OYT QA/QC Officer	10/24/91
K Haggs Project Manager	10/24/91

Disclaimer: This Standard Operating Procedure has been prepared for the sole use of Woodward-Clyde Consultants and may not be specifically applicable to the activities of other organizations.

TABLE OF CONTENTS

Section		Page
1.0	PURPOSE AND SCOPE	1-1
2.0	PROCEDURES FOR SAMPLE IDENTIFICATION, HANDLING, AND DOCUMENTATION	2-1
2.1	SAMPLE IDENTIFICATION	2-1
2.2	SAMPLE LABELING	2-4
2.3	SAMPLE HANDLING AND SHIPPING	2-5
2.3.1	Sample Containers	2-5
2.3.2	Sample Preservation	2-5
2.3.3	Sample Handling and Shipping	2-5
2.3.4	Geotechnical Samples	2-6
2.4	HOLDING TIMES AND ANALYSIS	2-6
2.5	SAMPLE DOCUMENTATION AND TRACKING	2-6
2.5.1	Field Notes	2-6
2.5.2	Daily Quality Control Report	2-8
2.5.3	Chain-Of-Custody Procedures	2-8
2.5.4	Sample Tracking System	2-9

Section | Page

LIST OF FIGURES

FIGURE 1. COMPLETED SAMPLE LABEL

FIGURE 2. EXAMPLE DQCR FORM

FIGURE 3. EXAMPLE CHAIN-OF-CUSTODY

1.0
PURPOSE AND SCOPE

This document defines the standard protocols for sample identification, handling, and documentation. This Standard Operating Procedure (SOP) serves as a supplement to the Chemical Data Acquisition Plan (CDAP) and other SOPs. This procedure is intended to be used together with the CDAP and other SOPs.

2.1 SAMPLE IDENTIFICATION

Samples collected during PDFI activities shall have discrete sample identification numbers. These numbers are necessary to identify and track each of the many samples collected for analysis during the life of this project. In addition, the sample identification numbers will be used in the database to identify and retrieve the analytical results received from the laboratory.

Each sample is identified by a unique code which indicates the matrix type, sampling station, boring number, depth code, and sample type. An example of the sample identification code is:

SLE2047100A00LM

Where S indicates the matrix type, LE2047 the sampling station (2047 Lee Avenue), 1 the boring number, A the depth code, and LM the sample type. The other zeros are for place keeping only.

A single letter will be used to identify the specific type of sample matrix collected. The sample matrix codes, along with the types of samples that may be collected during site investigations include:

W	-	Groundwater sampled from a monitoring well
S	-	Soil sample for chemical analysis
R	-	Rinsate (deionized water)
T	-	Trip blank

The sampling location will be identified by two alpha characters and four numbers and will follow the sample matrix code. For the residential areas the sampling location will

be identified by the street address. For example, LE 2047 represents the residential lot at 2047 Lee Avenue. For the other sampling area, the alpha characters will identify a site code and the boring locations will be in sequential order. The area name identifiers for each area is shown below:

AREA NAME	SITE IDENTIFIER
Rich Oil	RO
BV&G Transport	BV
Trust 454 (SLLR Property)	TR
Taracorp Property	TA
Public Property and Schools	PS
Eagle Park Acres	EP
Venice	VE
Other Remote Areas (Sand Road, Missouri Avenue, Schaeffer Road, Cleveland Rd.	OR

One single number following the sampling location will be the boring number. The depth code, represented by one or two letters, will identify the sample depth interval. The depth code for each sample interval is listed below.

SAMPLE DEPTH INTERVAL	DEPTH CODE
0-3 in.	A
3-6 in.	B
6-12 in.	C
0-6 in.	AB
1-2 ft	D
2-3 ft	E
3-4 ft	F
4-5 ft	G
5-6 ft	H
6-7 ft	I
0-2 ft	J
2-4 ft	K

4-6 ft	L
6-8 ft	M
8-10 ft	N
10-12 ft	O
12-14 ft	P
14-15 ft	Q

The final one to two letter designation identifies the sample types. The sample codes, along with the types of samples include:

SAMPLE TYPE CODE	SAMPLE TYPE NAME
L	Lead Samples
LD	Lead Duplicates
LM	Lead Matrix Spikes
LX	Lead Matrix Spike Duplicates
LQ	Lead Quality Assurance Samples
T	TCLP Lead Samples
TD	TCLP Lead Duplicates
TM	TCLP Lead Matrix Spikes
TX	TCLP Lead Matrix Spike Duplicates
TQ	TCLP Lead Quality Assurance Samples
G	Geotechnical Samples
GQ	Geotechnical Quality Assurance Samples
W	Groundwater Samples
WD	Groundwater Duplicates
WB	Groundwater Rinsate Blanks
WM	Groundwater Matrix Spikes
WX	Grounwater Matrix Spike Duplicates
WQ	Groundwater Quality Assurance Samples
WR	Groundwater Quality Assurance Matrix Spikes
WS	Groundwater Quality Assurance Matrix Spikes Duplicates
WT	Groundwater Quality Assurance Rinsate Blanks
TB	Trip Blanks

The sampling station, sample type, and sample sequence identifiers will be established prior to field activities for each sample to be collected. On-site personnel will obtain assistance in defining any special sampling requirements from the Project Manager.

Samples that are being sent to the Corps of Engineers QA laboratory will have an additional sample identification code. An example of the QA sample identification codes will be:

MRD LIMS #001

The MRD LIMS # will remain constant while the final three numbers is sequentially assigned.

2.2 SAMPLE LABELING

Sample labels will be generated by the sample tracking system prior to beginning field sampling activities each day. The date, time, sampler's signature, and the last field of the sample identification number should not be completed until the time of sample collection. All sample labels shall be filled out using waterproof ink. Each label shall contain the following information:

- Sampler's company affiliation
- Site location
- Sample identification code (i.e., SLE2047100A0LM)
- Date and time of sample collection
- Analyses required
- Method of preservation (if any) used
- Sample matrix (i.e., soil, groundwater)
- Sampler's signature
- QA sample identification code if it is being sent to the QA lab (i.e., MRD LIMS #001)

An example of a completed sample label is shown in Figure 1.

2.3 SAMPLE HANDLING AND SHIPPING

Table 7 of the CDAP summarizes the information contained in this section and also includes the sample holding times for each analyte.

2.3.1 Sample Containers

Certified, commercially clean sample containers shall be obtained from the contract analytical lab. The bottles shall be labeled by the lab to indicate the type of sample to be collected. Required preservatives shall be prepared and placed in the bottles at the laboratory prior to shipment to the site.

The CDAP lists appropriate sample containers for the specific analyses required for this project.

2.3.2 Sample Preservation

Sample preservation efforts shall commence at the time of sample collection and will continue until analyses are performed. Samples will be stored on ice at 4°C in coolers immediately following collection. Additional sample preservation requirements are given in the CDAP. Freezing samples to extend holding times will not be permitted. Chemical preservatives, if necessary, shall be added to the sample containers by the laboratory prior to shipment to the field according to the analytical method listed in Table 7 of the CDAP.

2.3.3 Sample Container Preparation and Shipping

After collection, sample labels will be completed as described in Section 2.2 of this SOP and samples stored on ice at 4°C in an insulated cooler.

The sample containers will be wrapped in protective packing material (bubble wrap). Samples will then be placed right side up in an insulated cooler. The cooler will be

lined with additional bubble wrap and will have a latching lid. Cooling of the samples will be done with ice (double bagged using plastic bags) or with blue ice packs. The chain-of-custody form will be placed in a ziplock plastic bag and taped to the inside of the cooler's lid. Two custody seals signed and dated by the sample custodian will be affixed to either side of each cooler with clear tape. Each cooler will then be sealed using fiberglass reinforced strapping tape. Sample coolers will be either hand delivered or shipped by overnight express carrier for delivery to the analytical laboratory on a daily basis to ensure prompt laboratory receipt and analyses within specific holding times.

2.3.4 Geotechnical Samples

The geotechnical samples will be collected in glass jars and sealed with three wraps of electrical tape to preserve the natural moisture content of the sample. A chain of custody form will not be filled out for geotechnical samples. There is no special preservative or holding requirement beyond the electrical tape.

2.4 HOLDING TIMES AND ANALYSES

The holding time is specified as the maximum allowable time between sample collection and analysis and/or extraction, based on the analyte of interest and stability factors, and preservative (if any) used. Allowable holding times are listed in the CDAP Table 7. Samples should be sent to the laboratory as soon as possible after collection by overnight courier service to minimize the possibility of exceeding holding times.

Chemical constituents and other parameters to be analyzed are listed site-by-site in the CDAP (Table 3).

2.5 SAMPLE DOCUMENTATION AND TRACKING

2.5.1 Field Notes

Documentation of observations and data acquired in the field will provide information on the acquisition of samples and also provide a permanent record of field activities.

The observations and data will be recorded using pens with permanent waterproof ink in a permanently bound weatherproof field log book containing consecutively numbered pages or on field sampling data sheets.

The information in the field book or on the data sheets will include the following as a minimum. Additional information is included in the specific SOPs regarding the data sheets.

- Project name
- Location of sample
- Sampler's printed name and signature
- Date and time of sample collection
- Sample identification code
- Description of samples (matrix sampled)
- Sample depth (if applicable)
- Number and volume of samples
- Sampling methods or reference to the appropriate SOP
- Sample handling, including filtration and preservation, as appropriate for separate sample aliquots
- Analytes of interest
- Field observations
- Results of any field measurements, such as depth to water, Ph, temperature, and conductivity
- Personnel present
- Level of PPE used during sampling

Changes or deletions in the field book should be lined out with a single strike mark and remain legible. Sufficient information should be recorded to allow the sampling event to be reconstructed without relying on the sampler's memory.

Each entry in the field books will be signed by the person making the entry at the end of the day. Anyone making entries in another person's field book will sign and date those entries. Entries will also be entered in the field books index by subject and page number.

2.5.2 Daily Quality Control Report

To supplement the information recorded in the field logbook, daily quality control reports (DQCRs) will also be maintained at every sampling location. An example of the DQCR is shown on **Figure 2.** DQCRs will be maintained by members of the field sampling team and cross-checked for completeness at the end of each day by the sampling team members and Task Leader. They will be signed and dated by individuals making entries and initials by the Task Leader upon completion. The original will be forwarded to the Field Manager with copies forwarded to the USACE PM for review on a weekly basis.

2.5.3 Chain-Of-Custody Procedures

During field sampling activities, traceability of the sample must be maintained from the time the samples are collected until laboratory data are issued. Initial information concerning collection of the samples will be recorded in the field log book as described above. Information on the custody, transfer, handling, and shipping of samples will be recorded on a Chain-of-Custody (COC) form. An example COC form is shown on **Figure 3.** The COC is a two-part carbonless form.

The samplers will be responsible for initiating and filling out the Chain-of-Custody form. The COC will be signed by each sampler when the samplers relinquish the samples to anyone else. One COC form will be completed for each cooler of samples collected daily. The COC will contain the following information:

- Sampler's signature and affiliation
- Project number
- Date and time of collection
- Sample identification number
- Sample type
- Analyses requested
- Number of containers
- Signature of persons relinquishing custody, dates, and times
- Signature of persons accepting custody, dates, and times

- Method of shipment
- Shipping air bill number (if appropriate)

The person responsible for delivery of the samples to the laboratory will sign the COC form, retain the second copy of the COC form, document the method of shipment, and send the original of the COC form with the samples. Upon receipt at the laboratory, the person receiving the samples will sign the COC form and return a photocopy to the Project Manager. Copies of the COC forms documenting custody changes and all custody documentation will be received and kept in the central files. The original COC forms will remain with the samples until final disposition of the samples by the laboratory. The analytical laboratory will dispose of the samples in an appropriate manner when disposal has been authorized by the USACE. After sample disposal, a copy of the original COC will be sent to the Project Manager by the analytical laboratory to be incorporated into the central files.

2.5.4 Sample Tracking

The Sample Tracking System's purpose is to organize and manage the sampling process. The Sample Tacking System (STS) has the ability to report holding times, to apply only the necessary analyses, matrix, and locations, and to report the number of QA/QC samples per samples needed.

The STS is a relational database management system; therefore, the Sampling Coordinator can perform queries on data. A unique sample id makes it easy for tracking samples. A sample id is composed of the sample's matrix, location, depth, data, and type.

The STS enables the Sampling Coordinator to track the samples from sampling request to receipt at lab. Also, it helps the Sampling Coordinator to make decisions to which sampling to perform. This is based on the information entered into the database from the CDAP.

The STS reports on exceeded holding times for samples and the number of actual samples (sample, duplicate, field blank, matrix spike, and matrix spike duplicate) taken.

The STS handles several rounds of data for a facility, as well as more than one lab for analysis. The ability to track re-samples is provided. The Sampling Coordinator can track the re-sample back to its original sample with ease.

Additional information is kept in the STS such as time of the sampling event, samplers' initials, requested analysis, comments, cooler number, shipment date, and chain of custody date.

WOODWARD-CLYDE CONSULTANTS

NL/TARACORP SUPERFUND SITE

SAMPLE NO: SLE2047100A0LM

DATE:_____ NOV 1991 TIME:_____
MATRIX: SOIL
ANALYSIS: Total Lead
4 oz. poly jar
PRESERVATION: 4^0C
SAMPLERS: Page, Mottin
SIGNATURE:_____

FIGURE NO. 1

(SAMPLE FORMAT)

ER 1110-1-263
1 OCT 90

DATE _____

DAY	S	M	T	W	TH	F	S

A-E DAILY QUALITY CONTROL REPORT

WEATHER	Bright Sun	Clear	Overcast	Rain	Snow
TEMP	To 32	32-50	50-70	70-85	85 up
WIND	Still	Moderate	High	Record No.	
HUMIDITY	Dry	Moderate	Humid		

COE PROJECT MANAGER _____

PROJECT _____

JOB NO. _____

CONTRACT NO _____

SUB-CONTRACTORS ON SITE:

EQUIPMENT ON SITE.

WORK PERFORMED (INCLUDING SAMPLING):

SHEET _____ OF _____

FIGURE NO 2

PROJECT _____ REPORT NO. _____

JOB NO. _____ DATE _____

QUALITY CONTROL ACTIVITIES (INCLUDING FIELD CALIBRATIONS)

HEALTH AND SAFETY LEVELS AND ACTIVITIES.

PROBLEMS ENCOUNTERED/CORRECTION ACTION TAKEN:

SPECIAL NOTES.

TOMORROW'S EXPECTATIONS:

BY _____ TITLE _____

Figure 2 (Continued)

CHAIN OF CUSTODY RECORD

SHEET ___ of ___

WOODWARD-CLYDE CONSULTANTS
2318 MILLPARK DR.
MARYLAND HEIGHTS, MISSOURI 63043
314-429-0100

PROJECT NO:	PROJECT NAME:
SAMPLER'S: (Signature)	

DATE	TIME	SAMPLE I.D. NUMBER	NO. OF CONTAINERS	CONTAINER DESCRIPTION / ANALYSES REQUESTED					REMARKS

RELINQUISHED BY: (Signature)	DATE / TIME	RECEIVED BY: (Signature)	DATE / TIME
RELINQUISHED BY: (Signature)	DATE / TIME	RECEIVED AT LAB BY: (Signature)	DATE / TIME
METHOD OF SHIPMENT:		AIRBILL NO:	

FIGURE NO.

STANDARD OPERATING PROCEDURE NUMBER 6

DECONTAMINATION

STANDARD OPERATING PROCEDURE NUMBER 6

DECONTAMINATION

Woodward-Clyde Consultants

St. Louis, Missouri

Project No. 89MC114V

Approvals:	Date:
Originator	10/24/91
Peer Reviewer	10/24/91
QA/QC Officer	10/24/91
Project Manager	10/24/91

Disclaimer: This Standard Operating Procedure has been prepared for the sole use of Woodward-Clyde Consultants and may not be specifically applicable to the activities of other organizations.

TABLE OF CONTENTS

Section		Page
1.0	INTRODUCTION AND TYPES OF CONTAMINATION	1-1
2.0	PROCEDURE	2-1
2.1	EQUIPMENT LIST	2-1
2.2	DECONTAMINATION	2-1
2.2.1	Personnel	2-1
2.2.2	Sampling Equipment	2-2
2.2.3	Drilling and Heavy Equipment	2-3
2.2.4	Equipment Leaving the Site	2-4
2.2.5	Wastewater	2-4
2.2.6	Other Wastes	2-4
2.3	DOCUMENTATION	2-5
3.0	QUALITY ASSURANCE REQUIREMENTS	3-1

This document defines the standard procedure for decontamination. This Standard Operating Procedure (SOP) serves as a supplement to the Chemical Data Acquisition Plan (CDAP) and the Site Safety and Health Plan (SSHP). This procedure is intended to be used together with the CDAP and the other SOPs.

Site and/or Sample Cross-Contamination

The overall objective of multimedia sampling programs is to obtain samples which accurately depict the chemical, physical, and/or biological conditions at the sampling site. Extraneous contaminant materials can be brought onto the sampling location and/or introduced into the medium of interest during the sampling program (e.g. by bailing or pumping of ground water with equipment previously contaminated at another sampling site). Trace quantities of these contaminant materials can consequently be captured in a sample and lead to false positive analytical results and, ultimately, to an incorrect assessment of the contaminant conditions associated with the site. Decontamination of sampling equipment (e.g., bailers, pumps, tubing, soil and sediment sampling equipment), field support equipment (e.g., drill rigs, vehicles), and field personnel is therefore required prior to use at the National Lead/Taracorp Site to ensure that sampling cross-contamination is prevented, and that on-site contaminants are not carried off-site.

2.1 EQUIPMENT LIST

The following is a list of equipment that may be needed to perform decontamination:

All Cases:

- Bristle brushes
- Wash tubs, 3 minimum
- 5-gallon buckets with lids
- Scrapers, flat bladed
- Sponges or paper towels
- Alconox detergent (or equivalent)
- Potable water
- Laboratory-grade double deionized water
- Isopropyl alcohol
- Garden-type hand water sprayers
- Spray bottles
- Plastic sheeting
- Garbage bags

Drill Rig Only:

- High pressure steam cleaner
- Long handled bristle brushes
- Disposal drums (55-gallon with secure lids)

2.2 DECONTAMINATION

2.2.1 Personnel

Specific requirements for personnel decontamination should follow the guidelines identified in the Site Safety and Health Plan. General procedures for decontamination are discussed below.

A temporary personnel decontamination line will be set up outside each sampling location. Decontamination will consist primarily of soap and water washing and water rinse of exterior protective gear followed by doffing of the gear.

The temporary decontamination line should provide space to wash and rinse boots, gloves, and all sampling or measuring equipment prior to placing the equipment into a vehicle, and a container to dispose of used disposable items such as gloves, tape or tyvek (if used).

The decontamination procedure for field personnel shall include:

1. Glove and boot wash in an Alconox solution
2. Glove and boot rinse
3. Duct tape removal
4. Outer glove removal
5. Remove and rinse goggles, hard hat, face shield (if used)
6. Tyvek removal
7. Respirator removal (if used), discard cartridges, rinse respirator
8. Inner glove removal

2.2.2 Sampling Equipment

Soil and water sampling tools (split-barrel samplers, hand-auger, trowels, bailers, etc.) will be cleaned between each use. The following steps will be used to decontaminate soil and water sampling tools:

- Personnel will dress in suitable safety equipment to reduce personal exposure as required by the Site Safety and Health Plan.

- Gross contamination on equipment will be scraped off at the sampling site.

- Equipment that will not be damaged by water will be placed in a wash tub containing Alconox or low-sudsing detergent along with potable water and scrubbed with a bristle brush or similar utensil. Equipment will be rinsed with tap water in a second wash tub followed by in respective order an isopropyl alcohol rinse and deionized water rinse.

- Equipment that may be damaged by water will be carefully wiped clean using a sponge and detergent water and rinsed with deionized water. Care will be taken to prevent any equipment damage.

Following decontamination, equipment will be placed in a clean area or on clean plastic sheeting to prevent contact with contaminated soil. If the equipment is not used immediately, the equipment will be covered or wrapped in plastic sheeting or heavy-duty trash bags to minimize potential airborne contamination.

2.2.3 Drilling and Heavy Equipment

Drilling rigs will be decontaminated at the decontamination station located near the staging area. Mobile decontamination trailers may be used to decontaminate heavy equipment at each site. The following steps may be used to decontaminate drilling and heavy equipment:

- Personnel will dress in suitable safety equipment to reduce personal exposure as required by the Site Safety and Health Plan.

- Equipment showing gross contamination or having caked-on drill cuttings will be scraped with a flat-bladed scraper at the sampling or construction site.

- Equipment that will not be damaged by water, such as drill rigs, augers, drill bits, and shovels, will be sprayed with a hot water, high-pressure washer, then rinsed with potable water. Care will be taken to adequately clean the insides of the hollow-stem augers and backhoe buckets.

Following decontamination, drilling equipment will be placed on the clean drill rig and moved to a clean area. If the equipment is not used immediately, it should be stored in a designated clean area on plastic sheeting and/or sawhorses.

2.2.4 Equipment Leaving the Site

Vehicles used for noncontamination activities shall be cleaned on an as-needed basis, as determined by the Site Safety Officer. On-site cleaning will be required for very dirty vehicles which will be leaving the area. On-site construction equipment such as trucks, drilling rigs, backhoes, trailers, etc., will be pressure washed on-site before the equipment is removed from the site to limit exposure of off-site personnel to potential contaminants.

2.2.5 Wastewater

Used wash and rinse solutions must be containerized and disposed of on the Taracorp or SLLR piles.

2.2.6 Other Wastes

Expendable materials having a low probability of contamination will be collected on a routine basis. These materials (decontaminated expendable personnel protective equipment, ground cloths, domestic refuse, etc.) will be placed into plastic trash bags and temporarily stored at the contamination-reduction zone. At least once a week the materials collected will be put out for municipal trash pickup.

Expendable materials that have a high probability of contamination will be collected and placed into drums. When drums are full they will be sealed. Each drum will be

labeled with its contents and the date, using paint or other permanent marker. Drums will be stored at the Taracorp pile for later handling or disposal.

For disposal of auger cuttings and well development fluids refer to SOP No. 1 and SOP No. 2, respectively.

2.3 DOCUMENTATION

Sampling personnel will be responsible for documenting the decontamination of sampling and drilling equipment. The documentation will be recorded with waterproof ink in the sampler's field notebook with consecutively numbered pages. The information entered in the field book concerning decontamination should include the following:

- Decontamination personnel
- Date and start and end times
- Decontamination observations
- Weather conditions

Equipment rinsate samples will be taken of the decontaminated sampling equipment to verify the effectiveness of the decontamination procedures. The rinsate procedure will include rinsing deionized water through or over a decontaminated sampling tool (such as a split-barrel sampler or Teflon bailer) and collecting the rinsate water into the sample bottles, which will be sent to the laboratory for analysis. The rinsate procedure, including the sample number, will be recorded in the field notebook. Refer to Table 3 of the CDAP for sampling frequency.

STANDARD OPERATING PROCEDURE NUMBER 7

BORING ABANDONMENT

STANDARD OPERATING PROCEDURE NUMBER 7

BORING ABANDONMENT

Woodward-Clyde Consultants

St. Louis, Missouri

Project No. 89MC114V

Approvals:	Date:
Gregg Hagerty Originator	10/24/91
[signature] Peer Reviewer	10/24/91
[signature] for DYT QA/QC Officer	10/24/91
KG Hagg Project Manager	10/24/91

Disclaimer: This Standard Operating Procedure has been prepared for the sole use of Woodward-Clyde Consultants and may not be specifically applicable to the activities of other organizations.

TABLE OF CONTENTS

Section		Page
1.0	PURPOSE AND SCOPE	1-1
2.0	BORING ABANDONMENT PROCEDURES	2-1
2.1	EQUIPMENT LIST	2-1
2.2	ABANDONMENT PROCEDURES	2-1
	2.2.1 Hand Auger Boring	2-1
	2.2.2 Soil Boring	2-2
2.3	DOCUMENTATION	2-2

1.0
PURPOSE AND SCOPE

This document defines the standard procedure for abandoning borings. This Standard Operating Procedure (SOP) serves as a supplement to the Chemical Data Acquisition Plan (CDAP) and gives descriptions of equipment and field procedures necessary to abandon borings.

2.1 EQUIPMENT LIST

The following equipment is needed for Hand Auger boring abandonment:

- Bentonite chips
- Auger cuttings
- Sod plug
- Log book
- Waterproof & permanent marking pens
- Appropriate health and safety equipment

The following is an equipment list for soil boring abandonment:

- Portland cement
- Powdered bentonite
- Drill rig
- Log book
- Boring log sheets
- Waterproof and permanent marking pens
- Tremie pipe
- Appropriate health and safety equipment

2.2 ABANDONMENT PROCEDURES

2.2.1 Hand Auger Borings

Upon completion of sampling the hand auger boring will be filled with bentonite pellets to a depth of 6 inches. Auger cuttings will be used to fill the borehole from the bentonite pellets to the ground surface. The sod plug will be replaced. Any additional soil cuttings will be disposed of according to SOP No. 1.

2.2.2 Soil Borings

Upon completion of drilling, each boring will be abandoned with a grout mixture of cement, bentonite and water. The grout mixture will contain a maximum of 6 percent bentonite (equivalent to one 94-pound bag of cement to approximately 6 pounds of bentonite power) and mixed in approximately 8 gallons of water. The grout mixture will be prepared in an above-ground rigid container by first thoroughly mixing the bentonite with water and then mixing in the cement. The grout will be mixed until it is free of excessive cement/bentonite clumps.

Grout will be placed in the boring with a tremie pipe before the augers are pulled from the hole. The tremie pipe will initially be located about 5 ft above the bottom of the boring. The grout will be pumped through the tremie pipe and the tremie pipe pulled up incrementally with the augers until the boring is grouted to ground surface.

After the grout sets for 24 hours it will be checked for settlement. Additional grout will be added to top off the void, if necessary.

2.3 DOCUMENTATION

Observations and data acquired in the field during boring and boring abandonment will be recorded to provide a permanent record. These observations will be recorded with waterproof black ink in a bound weatherproof field book with consecutively numbered pages.

A boring log will be completed for each boring with the observations recorded in the field book. A note shall be placed on the boring log that the boring was abandoned and grouted with a cement/bentonite mixture to ground surface.

STANDARD OPERATING PROCEDURE NUMBER 8

WATER LEVEL MEASUREMENT

STANDARD OPERATING PROCEDURE NUMBER 8

WATER LEVEL MEASUREMENT

Woodward-Clyde Consultants

St. Louis, Missouri

Project No. 89MC114V

Approvals:	Date:
Originator	10/24/91
Peer Reviewer	10/24/91
QA/QC Officer	10/24/91
Project Manager	10/24/91

Disclaimer: This Standard Operating Procedure has been prepared for the sole use of Woodward-Clyde Consultants and may not be specifically applicable to the activities of other organizations.

TABLE OF CONTENTS

Section		Page
1.0	PURPOSE AND SCOPE	1-1
2.0	WATER LEVEL MEASUREMENT PROCEDURE	2-1
2.1	EQUIPMENT LIST	2-1
2.2	MEASURING PROCEDURE	2-1
2.3	DECONTAMINATION	2-2
2.4	DOCUMENTATION	2-3
3.0	CALIBRATION	3-1

FIGURES

FIGURE 1. WATER LEVEL DATA SHEET

1.0
PURPOSE AND SCOPE

This document defines the standard procedure for measuring water levels in wells. This Standard Operating Procedure (SOP) serves as a supplement to the Chemical Data Acquisition Plan (CDAP). This procedure describes equipment and field procedures necessary to collect water level measurements. The well locations and frequency of measurement are specified in the CDAP. This procedure is intended to be used together with the CDAP and other SOPs. SOP No. 6 describes decontamination procedures which are applicable to this SOP.

2.1 EQUIPMENT LIST

The equipment necessary to measure water levels includes:

- Solinst Model 101 water level meter or equivalent
- Field data sheets
- Field notebook
- Appropriate health and safety equipment, as specified in SSHP
- Appropriate decontamination equipment, as specified in SOP No. 6

2.2 MEASUREMENT PROCEDURE

This section gives the sequence of events to follow when measuring water levels. Appropriate health and safety equipment, as described in the Site Safety and Health Plan (SSHP) should be worn during well opening, well measurement, and decontamination.

- The water level probe shall be decontaminated prior to use in each monitoring well. Decontamination procedures are discussed in SOP No. 6.

- The well will be approached from upwind, the well cap unlocked and removed.

- Observations concerning the well pad, surface or protective casing and other well conditions will be documented in the field notebook.

- The depth of the static water level and the total depth of the well will be measured using an electric water level meter. The measuring point for all the wells shall be the top of PVC or steel monitoring well casing. If a reference mark is not found, then all well readings will be referenced to the north rim of the monitoring well riser pipe for standardization.

- The static water level and the total depth of the well shall be measured with the probe, recorded on the water level data sheet, and then immediately rechecked before the probe is removed from the well. Total depth should be measured to determine the amount of fill in the well and to calculate the well volume.

- All columns of field data sheets shall be completed, including time of measurement. An example water level data sheet is shown as Figure 1. If measurements are taken over a several-day period, the date of each measurement should be clearly indicated on the form. Section 2.4 in this SOP describes the documentation required.

- Care shall be taken to verify the readings during each water level measurement period. Any significant changes in water level will be noted by comparing the most recent measurement with past measurements.

- After any measurement is taken, the water level probe shall be decontaminated.

2.3 DECONTAMINATION

The water level indicator must be decontaminated before use, between wells, and at the conclusion of measurements. The probe will be decontaminated according to the procedure for decontamination of sampling equipment described in SOP No. 6.

Probe decontamination will be completed at the wells and wash and rinse water will be collected and disposed of on either the Taracorp or SLLR Piles.

2.4 DOCUMENTATION

This section describes the documentation necessary for water level measurement.

The water level data sheet, shown as Figure 1, shall be completed during each measuring event. Field data sheets will include date, time, well number, total well depth, water level, static water elevation, and comments. A field notebook will also be kept during water level measurement activities describing decontamination procedures, calibration procedures, monitoring procedures, and other observations during water level measurement. Both the data sheets and notebook shall be neat and legible, and shall be signed and dated by the person completing the page.

The depth to water, in feet below the measuring point, will be subtracted from the measuring point elevation to determine the elevation of the static water level. The resulting elevation shall be checked in the field to see that it is reasonable and that the subtraction was performed correctly. If there is a discrepancy, the well shall be measured again.

The length of the water level measurement probe cord should be calibrated at least once per month or more often as needed to ensure the desired accuracy. The calibration check consists of laying out 100 ft of steel tape next to 100 ft of the probe cord. Note any measurement discrepancies between the two at 2-ft intervals. The probe cord shall be rechecked if there is a possibility it could have been stretched or damaged during water level measurements.

The procedures followed during any calibration and verification of equipment shall be documented in the water level meter calibrations notebook along with any calculations. If a correction is required, the probe will be tagged to indicate the correction.

WATER LEVEL DATA SHEET

Project Number: _____
Project Name: _____
Location: _____

Collected by: _____

Well Number	Date	Time	Method	MP Elev.	Well Depth	Depth to Water	Water Level Elevation	Comments

MP Elev. = Measuring Point Elevation

WOODWARD-CLYDE CONSULTANTS

FIGURE NO 1

STANDARD OPERATING PROCEDURE NUMBER 9

IDENTIFICATION AND DESCRIPTION OF SAMPLING POINTS

STANDARD OPERATING PROCEDURE NUMBER 9

IDENTIFICATION AND DESCRIPTION OF SAMPLING POINTS

Woodward-Clyde Consultants

St. Louis, Missouri

Project No. 89MC114V

Approvals:	Date:
Susan Hagerty Originator	10/24/91
[illegible] Peer Reviewer	10/24/91
[illegible] for DVT QA/QC Officer	10/24/91
[illegible] Project Manager	10/24/91

Disclaimer: This Standard Operating Procedure has been prepared for the sole use of Woodward-Clyde Consultants and may not be specifically applicable to the activities of other organizations.

TABLE OF CONTENTS

Section		Page
1.0	PURPOSE AND SCOPE	1-1
2.0	IDENTIFICATION AND DESCRIPTION PROCEDURE	2-1
2.1	EQUIPMENT LIST	2-1
2.2	PROCEDURE	2-1
	2.2.1 Hand Auger Borings	2-1
	2.2.2 Drill Rig Locations	2-1
	2.2.3 Monitoring Wells	2-2
2.3	DOCUMENTATION	2-2

1.0
PURPOSE AND SCOPE

This document defines the procedure for identification and description of field sampling sites. This Standard Operating Procedure (SOP) serves as a supplement to the Chemical Data Acquisition Plan (CDAP). This procedure will be used to identify sampling locations and describe the locations in such a manner that the sample location may be relocated for repetitive or additional sampling. Sampling points will be selected as described in the CDAP.

2.1 EQUIPMENT LIST

Hand Auger Borings

- Field Notebook
- Waterproof & Permanent Marking Pens
- 100' Measuring Tape
- Plat Map Of Area

Drill rig location

- Field notebook
- Waterproof and permanent marking pens
- Spray paint, Orange
- Wooden stakes
- Sledge hammer

2.2 PROCEDURE

2.2.1 Hand Auger Boring Locations

The location of the hand auger borings will be identified in the field log book to the nearest 0.1 foot referenced to two permanent markers, i.e., house corner, manhole, street, sidewalk. The location will also be clearly identified on the appropriate plat map with distances to the permanent markers on the map. No marking will be placed at the sampling location.

2.2.2 Drill Rig Locations

Sampling locations will be identified by a wooden stake with the top painted bright orange. A wooden lath will be driven into the ground next to the stake at the sampling point. The site name and sampling station number identifiers will be written on the

wooden lath with a permanent waterproof marker. At locations where the stake can not be installed, i.e, alleyway, the location will be marked with an orange X on the ground. The sampling station number will also be painted on the ground next to the sampling location.

2.2.3 Monitoring Wells

The procedure for monitoring wells is the same for drilling locations with the following additions: After the well has been surveyed a permanent, non-corrosive metal tag will be affixed to the outer steel protective casing of the well. This tag will clearly identify the well number, depth, screen depth, the United States Corps of Engineers (Omaha District), and the adjusted top casing elevation. .

2.3 DOCUMENTATION

Identification and description of each sampling site will be recorded in the field notebook. This information shall include:

- Date of location installation
- Description of sampling location
- Type of sample station (see SOP No. 5)
- Location of sampling point relative to adjacent structures (monitoring wells, roads, buildings)
- Description of the installed marker
- Installer's name

STANDARD OPERATING PROCEDURE NUMBER 10

PHYSICAL PROPERTY TESTING

STANDARD OPERATING PROCEDURE NUMBER 10

PHYSICAL PROPERTY TESTING

Woodward-Clyde Consultants

St. Louis, Missouri

Project No. 89MC114V

Approvals:	Date:
Originator	10/24/91
Peer Reviewer	10/24/91
QA/QC Officer	10/24/91
Project Manager	10/24/91

Disclaimer: This Standard Operating Procedure has been prepared for the sole use of Woodward-Clyde Consultants and may not be specifically applicable to the activities of other organizations.

TABLE OF CONTENTS

Section		Page
1.0	PURPOSE AND SCOPE	1-1

LIST OF ATTACHMENTS

1 STANDARD METHOD FOR PARTICLE-SIZE ANALYSIS OF SOILS ASTM D422

2 STANDARD METHOD FOR LABORATORY DETERMINATION OF WATER (MOISTURE) CONTENT OF SOIL, ROCK, AND SOIL-AGGREGATE MIXTURES, ASTM D-2216

3 STANDARD PRACTICE FOR DESCRIPTION AND IDENTIFICATION OF SOILS (VISUAL-MANUAL PROCEDURE), ASTM D-2488

4 STANDARD TEST METHOD FOR LIQUID LIMIT, PLASTIC LIMIT, AND PLASTICITY OF SOILS, ASTM D-4318

1.0
PURPOSE AND SCOPE

This document defines the standard procedures to be used for physical property testing of soil samples. These procedures will be performed in an off-site laboratory. This Standard Operating Procedure (SOP) serves as a supplement to the Chemical Data Acquisition Plan (CDAP). The ASTM standard practices included in the List of Attachments are reproduced in this SOP and provide descriptions of procedures necessary to perform physical property testing.

Designation: D 422 - 63 (Reapproved 1972)[ε1]

Standard Method for Particle-Size Analysis of Soils[1]

This standard is issued under the fixed designation D 422; the number immediately following the designation indicates the year of original adoption or, in the case of revision, the year of last revision. A number in parentheses indicates the year of last reapproval. A superscript epsilon (ε) indicates an editorial change since the last revision or reapproval.

[ε1] NOTE—Section 2 was added editorially and subsequent sections renumbered in July 1984.

1. Scope

1.1 This method covers the quantitative determination of the distribution of particle sizes in soils. The distribution of particle sizes larger than 75 μm (retained on the No. 200 sieve) is determined by sieving, while the distribution of particle sizes smaller than 75 μm is determined by a sedimentation process, using a hydrometer to secure the necessary data (Notes 1 and 2).

NOTE 1—Separation may be made on the No. 4 (4.75-mm), No. 40 (425-μm), or No. 200 (75-μm) sieve instead of the No. 10. For whatever sieve used, the size shall be indicated in the report.

NOTE 2—Two types of dispersion devices are provided: (*1*) a high-speed mechanical stirrer, and (*2*) air dispersion. Extensive investigations indicate that air-dispersion devices produce a more positive dispersion of plastic soils below the 20-μm size and appreciably less degradation on all sizes when used with sandy soils. Because of the definite advantages favoring air dispersion, its use is recommended. The results from the two types of devices differ in magnitude, depending upon soil type, leading to marked differences in particle size distribution, especially for sizes finer than 20 μm.

2. Referenced Documents

2.1 *ASTM Standards:*

D 421 Practice for Dry Preparation of Soil Samples for Particle-Size Analysis and Determination of Soil Constants[2]

E 11 Specification for Wire-Cloth Sieves for Testing Purposes[3]

E 100 Specification for ASTM Hydrometers[4]

3. Apparatus

3.1 *Balances*—A balance sensitive to 0.01 g for weighing the material passing a No. 10 (2.00-mm) sieve, and a balance sensitive to 0.1 % of the mass of the sample to be weighed for weighing the material retained on a No. 10 sieve.

3.2 *Stirring Apparatus*—Either apparatus A or B may be used.

3.2.1 Apparatus A shall consist of a mechanically operated stirring device in which a suitably mounted electric motor turns a vertical shaft at a speed of not less than 10 000 rpm without load. The shaft shall be equipped with a replaceable stirring paddle made of metal, plastic, or hard rubber, as shown in Fig. 1. The shaft shall be of such length that the stirring paddle will operate not less than ¾ in. (19.0 mm) nor more than 1½ in. (38.1 mm) above the bottom of the dispersion cup. A special dispersion cup conforming to either of the designs shown in Fig. 2 shall be provided to hold the sample while it is being dispersed.

3.2.2 Apparatus B shall consist of an air-jet dispersion cup[5] (Note 3) conforming to the general details shown in Fig. 3 (Notes 4 and 5).

NOTE 3—The amount of air required by an air-jet dispersion cup is of the order of 2 ft^3/min; some small air compressors are not capable of supplying sufficient air to operate a cup.

NOTE 4—Another air-type dispersion device, known as a dispersion tube, developed by Chu and Davidson at Iowa State College, has been shown to give results equivalent to those secured by the air-jet dispersion cups. When it is used, soaking of the sample can be done in the sedimentation cylinder, thus eliminating the need for transferring the slurry. When the air-dispersion tube is used, it shall be so indicated in the report.

NOTE 5—Water may condense in air lines when not in use. This water must be removed, either by using a water trap on the air line, or by blowing the water out of the line before using any of the air for dispersion purposes.

3.3 *Hydrometer*—An ASTM hydrometer, graduated to read in either specific gravity of the suspension or grams per litre of suspension, and conforming to the requirements for hydrometers 151H or 152H in Specifications E 100. Dimensions of both hydrometers are the same, the scale being the only item of difference.

3.4 *Sedimentation Cylinder*—A glass cylinder essentially 18 in. (457 mm) in height and 2½ in. (63.5 mm) in diameter, and marked for a volume of 1000 mL. The inside diameter shall be such that the 1000-mL mark is 36 ± 2 cm from the bottom on the inside.

3.5 *Thermometer*—A thermometer accurate to 1°F (0.5°C).

3.6 *Sieves*—A series of sieves, of square-mesh woven-wire cloth, conforming to the requirements of Specification E 11. A full set of sieves includes the following (Note 6):

[1] This method is under the jurisdiction of ASTM Committee D-18 on Soil and Rock and is the direct responsibility of Subcommittee D18.03 on Texture, Plasticity, and Density Characteristics of Soils.

Current edition approved Nov. 21, 1963. Originally published 1935. Replaces D 422 - 62.

[2] *Annual Book of ASTM Standards*, Vol 04.08.

[3] *Annual Book of ASTM Standards*, Vol 14.02.

[4] *Annual Book of ASTM Standards*, Vol 14.03.

[5] Detailed working drawings for this cup are available at a nominal cost from the American Society for Testing and Materials, 1916 Race St., Philadelphia, PA 19103. Order Adjunct No. 12-404220-00.

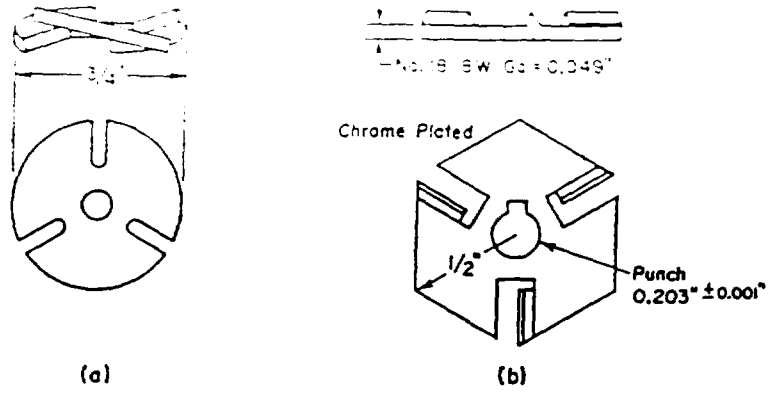

Metric Equivalents					
in.	0.001	0.049	0.203	½	¾
mm	0.03	1.24	5.16	12.7	19.0

FIG. 1 Detail of Stirring Paddles

3-in. (75-mm)	No. 10 (2.00-mm)
2-in. (50-mm)	No. 20 (850-μm)
1½-in. (37.5-mm)	No. 40 (425-μm)
1-in. (25.0-mm)	No. 60 (250-μm)
¾-in. (19.0-mm)	No. 140 (106-μm)
⅜-in. (9.5-mm)	No. 200 (75-μm)
No. 4 (4.75-mm)	

NOTE 6—A set of sieves giving uniform spacing of points for the graph, as required in Section 17, may be used if desired. This set consists of the following sieves:

3-in. (75-mm)	No. 16 (1.18-mm)
1½-in. (37.5-mm)	No. 30 (600-μm)
¾-in. (19.0-mm)	No. 50 (300-μm)
⅜-in. (9.5-mm)	No. 100 (150-μm)
No. 4 (4.75-mm)	No. 200 (75-μm)
No. 8 (2.36-mm)	

3.7 *Water Bath or Constant-Temperature Room*—A water bath or constant-temperature room for maintaining the soil suspension at a constant temperature during the hydrometer analysis. A satisfactory water tank is an insulated tank that maintains the temperature of the suspension at a convenient constant temperature at or near 68°F (20°C). Such a device is illustrated in Fig. 4. In cases where the work is performed in a room at an automatically controlled constant temperature, the water bath is not necessary.

3.8 *Beaker*—A beaker of 250-mL capacity.

3.9 *Timing Device*—A watch or clock with a second hand.

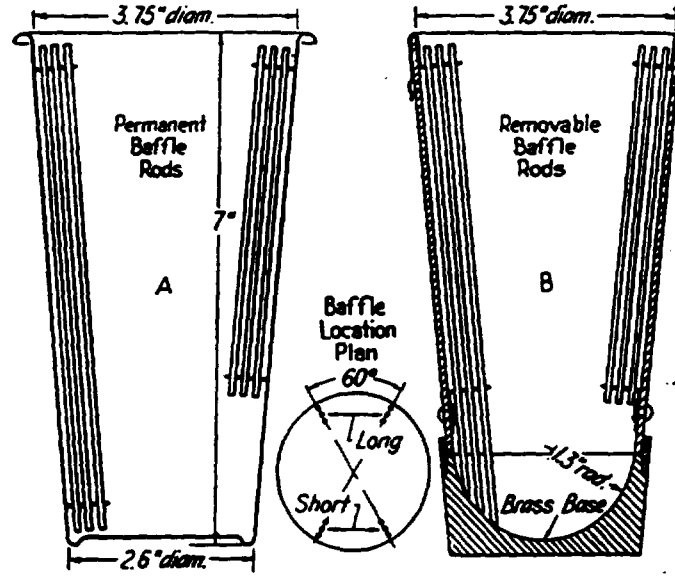

Metric Equivalents			
in.	1.3	2.6	3.75
mm	33	66	95.2

FIG. 2 Dispersion Cups of Apparatus

4. Dispersing Agent

4.1 A solution of sodium hexametaphosphate (sometimes called sodium metaphosphate) shall be used in distilled or demineralized water, at the rate of 40 g of sodium hexametaphosphate/litre of solution (Note 7).

NOTE 7—Solutions of this salt, if acidic, slowly revert or hydrolyze back to the orthophosphate form with a resultant decrease in dispersive action. Solutions should be prepared frequently (at least once a month) or adjusted to pH of 8 or 9 by means of sodium carbonate. Bottles containing solutions should have the date of preparation marked on them.

4.2 All water used shall be either distilled or demineralized water. The water for a hydrometer test shall be brought to the temperature that is expected to prevail during the hydrometer test. For example, if the sedimentation cylinder is to be placed in the water bath, the distilled or demineralized water to be used shall be brought to the temperature of the controlled water bath; or, if the sedimentation cylinder is used in a room with controlled temperature, the water for the test shall be at the temperature of the room. The basic temperature for the hydrometer test is 68°F (20°C). Small variations of temperature do not introduce differences that are of practical significance and do not prevent the use of corrections derived as prescribed.

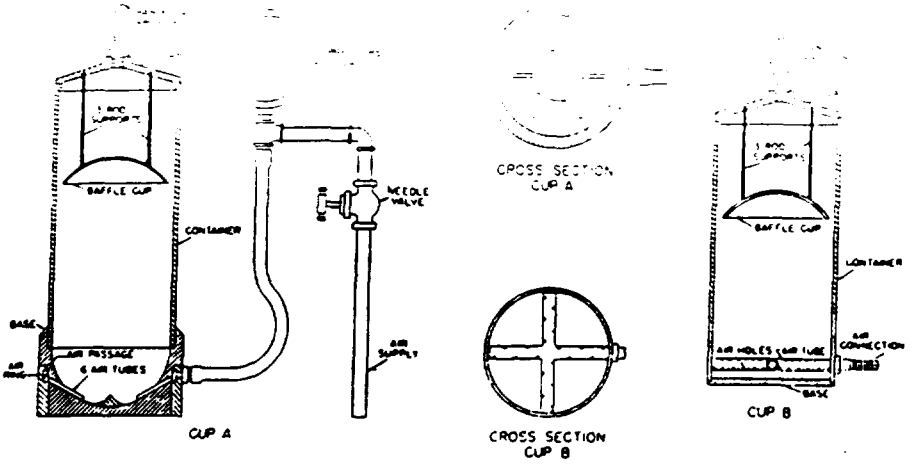

FIG. 3 Air-Jet Dispersion Cups of Apparatus B

5. Test Sample

5.1 Prepare the test sample for mechanical analysis as outlined in Practice D 421. During the preparation procedure the sample is divided into two portions. One portion contains only particles retained on the No. 10 (2.00-mm) sieve while the other portion contains only particles passing the No. 10 sieve. The mass of air-dried soil selected for purpose of tests, as prescribed in Practice D 421, shall be sufficient to yield quantities for mechanical analysis as follows:

5.1.1 The size of the portion retained on the No. 10 sieve shall depend on the maximum size of particle, according to the following schedule:

Nominal Diameter of Largest Particles, in. (mm)	Approximate Minimum Mass of Portion, g
⅜ (9.5)	500
¾ (19.0)	1000
1 (25.4)	2000
1½ (38.1)	3000
2 (50.8)	4000
3 (76.2)	5000

5.1.2 The size of the portion passing the No. 10 sieve shall be approximately 115 g for sandy soils and approximately 65 g for silt and clay soils.

5.2 Provision is made in Section 5 of Practice D 421 for weighing of the air-dry soil selected for purpose of tests, the separation of the soil on the No. 10 sieve by dry-sieving and washing, and the weighing of the washed and dried fraction retained on the No. 10 sieve. From these two masses the percentages retained and passing the No. 10 sieve can be calculated in accordance with 12.1.

NOTE 8—A check on the mass values and the thoroughness of pulverization of the clods may be secured by weighing the portion passing the No. 10 sieve and adding this value to the mass of the washed and oven-dried portion retained on the No. 10 sieve.

SIEVE ANALYSIS OF PORTION RETAINED ON NO. 10 (2.00-mm) SIEVE

6. Procedure

6.1 Separate the portion retained on the No. 10 (2.00-mm) sieve into a series of fractions using the 3-in. (75-mm), 2-in. (50-mm), 1½-in. (37.5-mm), 1-in. (25.0-mm), ¾-in. (19.0-mm), ⅜-in. (9.5-mm), No. 4 (4.75-mm), and No. 10 sieves, or as many as may be needed depending on the sample, or upon the specifications for the material under test.

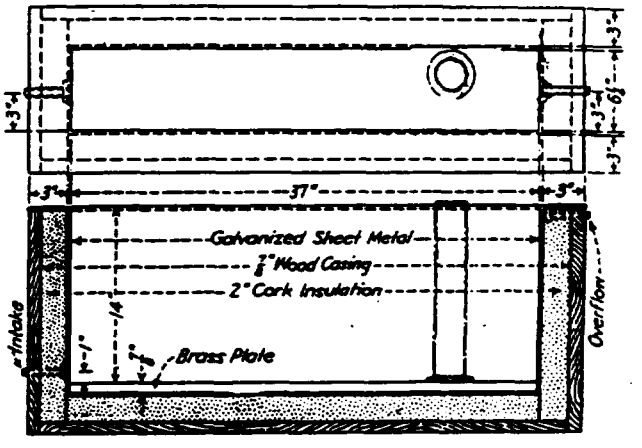

Metric Equivalents

in.	⅞	1	3	6¼	14	37
mm	22.2	25.4	76.2	158.2	356	940

FIG. 4 Insulated Water Bath

6.2 Conduct the sieving operation by means of a lateral and vertical motion of the sieve, accompanied by a jarring action in order to keep the sample moving continuously over the surface of the sieve. In no case turn or manipulate fragments in the sample through the sieve by hand. Continue sieving until not more than 1 mass % of the residue on a sieve passes that sieve during 1 min of sieving. When mechanical sieving is used, test the thoroughness of sieving by using the hand method of sieving as described above.

6.3 Determine the mass of each fraction on a balance conforming to the requirements of 3.1. At the end of weighing, the sum of the masses retained on all the sieves used should equal closely the original mass of the quantity sieved.

HYDROMETER AND SIEVE ANALYSIS OF PORTION PASSING THE NO. 10 (2.00-mm) SIEVE

7. Determination of Composite Correction for Hydrometer Reading

7.1 Equations for percentages of soil remaining in suspension, as given in 14.3, are based on the use of distilled or demineralized water. A dispersing agent is used in the water, however, and the specific gravity of the resulting liquid is appreciably greater than that of distilled or demineralized water.

7.1.1 Both soil hydrometers are calibrated at 68°F (20°C), and variations in temperature from this standard temperature produce inaccuracies in the actual hydrometer readings. The amount of the inaccuracy increases as the variation from the standard temperature increases.

7.1.2 Hydrometers are graduated by the manufacturer to be read at the bottom of the meniscus formed by the liquid on the stem. Since it is not possible to secure readings of soil suspensions at the bottom of the meniscus, readings must be taken at the top and a correction applied.

7.1.3 The net amount of the corrections for the three items enumerated is designated as the composite correction, and may be determined experimentally.

7.2 For convenience, a graph or table of composite corrections for a series of 1° temperature differences for the range of expected test temperatures may be prepared and used as needed. Measurement of the composite corrections may be made at two temperatures spanning the range of expected test temperatures, and corrections for the intermediate temperatures calculated assuming a straight-line relationship between the two observed values.

7.3 Prepare 1000 mL of liquid composed of distilled or demineralized water and dispersing agent in the same proportion as will prevail in the sedimentation (hydrometer) test. Place the liquid in a sedimentation cyclinder and the cylinder in the constant-temperature water bath, set for one of the two temperatures to be used. When the temperature of the liquid becomes constant, insert the hydrometer, and, after a short interval to permit the hydrometer to come to the temperature of the liquid, read the hydrometer at the top of the meniscus formed on the stem. For hydrometer 151H the composite correction is the difference between this reading and one; for hydrometer 152H it is the difference between the reading and zero. Bring the liquid and the hydrometer to the other temperature to be used, and secure the composite correction as before.

8. Hygroscopic Moisture

8.1 When the sample is weighed for the hydrometer test, weigh out an auxiliary portion of from 10 to 15 g in a small metal or glass container, dry the sample to a constant mass in an oven at 230 ± 9°F (110 ± 5°C), and weigh again. Record the masses.

9. Dispersion of Soil Sample

9.1 When the soil is mostly of the clay and silt sizes, weigh out a sample of air-dry soil of approximately 50 g. When the soil is mostly sand the sample should be approximately 100 g.

9.2 Place the sample in the 250-mL beaker and [illegible] 125 mL of sodium hexametaphosphate solution [illegible] Stir until the soil is thoroughly wetted. Allow to soak [illegible] least 16 h.

9.3 At the end of the soaking period, disperse the sample further, using either stirring apparatus A or B. If stirring apparatus A is used, transfer the soil - water slurry from the beaker into the special dispersion cup shown in Fig. 2, washing any residue from the beaker into the cup with distilled or demineralized water (Note 9). Add distilled or demineralized water, if necessary, so that the cup is more than half full. Stir for a period of 1 min.

NOTE 9—A large size syringe is a convenient device for handling the water in the washing operation. Other devices include the wash-water bottle and a hose with nozzle connected to a pressurized distilled water tank.

9.4 If stirring apparatus B (Fig. 3) is used, remove the cover cap and connect the cup to a compressed air supply by means of a rubber hose. A air gage must be on the line between the cup and the control valve. Open the control valve so that the gage indicates 1 psi (7 kPa) pressure (Note 10). Transfer the soil - water slurry from the beaker to the air-jet dispersion cup by washing with distilled or demineralized water. Add distilled or demineralized water, if necessary, so that the total volume in the cup is 250 mL, but no more.

NOTE 10—The initial air pressure of 1 psi is required to prevent the soil - water mixture from entering the air-jet chamber when the mixture is transferred to the dispersion cup.

9.5 Place the cover cap on the cup and open the air control valve until the gage pressure is 20 psi (140 kPa). Disperse the soil according to the following schedule:

Plasticity Index	Dispersion Period, min
Under 5	5
6 to 20	10
Over 20	15

Soils containing large percentages of mica need be dispersed for only 1 min. After the dispersion period, reduce the [illegible] pressure to 1 psi preparatory to transfer of soil - water s[illegible] to the sedimentation cylinder.

10. Hydrometer Test

10.1 Immediately after dispersion, transfer the soil - water slurry to the glass sedimentation cylinder, and add distilled or demineralized water until the total volume is 1000 mL.

10.2 Using the palm of the hand over the open end of the cylinder (or a rubber stopper in the open end), turn the cylinder upside down and back for a period of 1 min to complete the agitation of the slurry (Note 11). At the end of 1 min set the cylinder in a convenient location and take hydrometer readings at the following intervals of time (measured from the beginning of sedimentation), or as many as may be needed, depending on the sample or the specification for the material under test: 2, 5, 15, 30, 60, 250, and 1440 min. If the controlled water bath is used, the sedimentation cylinder should be placed in the bath between the 2- and 5-min readings.

NOTE 11—The number of turns during this minute should be approximately 60, counting the turn upside down and back as two turns

[illegible]

10.3 When it is desired to take a hydrometer reading, carefully insert the hydrometer about 20 to 25 s before the reading is due to approximately the depth it will have when the reading is taken. As soon as the reading is taken, carefully remove the hydrometer and place it with a spinning motion in a graduate of clean distilled or demineralized water.

NOTE 12—It is important to remove the hydrometer immediately after each reading. Readings shall be taken at the top of the meniscus formed by the suspension around the stem, since it is not possible to secure readings at the bottom of the meniscus.

10.4 After each reading, take the temperature of the suspension by inserting the thermometer into the suspension.

11. Sieve Analysis

11.1 After taking the final hydrometer reading, transfer the suspension to a No. 200 (75-μm) sieve and wash with tap water until the wash water is clear. Transfer the material on the No. 200 sieve to a suitable container, dry in an oven at 230 ± 9°F (110 ± 5°C) and make a sieve analysis of the portion retained, using as many sieves as desired, or required for the material, or upon the specification of the material under test.

CALCULATIONS AND REPORT

12. Sieve Analysis Values for the Portion Coarser than the No. 10 (2.00-mm) Sieve

12.1 Calculate the percentage passing the No. 10 sieve by dividing the mass passing the No. 10 sieve by the mass of soil originally split on the No. 10 sieve, and multiplying the result by 100. To obtain the mass passing the No. 10 sieve, subtract the mass retained on the No. 10 sieve from the original mass.

12.2 To secure the total mass of soil passing the No. 4 (4.75-mm) sieve, add to the mass of the material passing the No. 10 sieve the mass of the fraction passing the No. 4 sieve and retained on the No. 10 sieve. To secure the total mass of soil passing the ⅜-in. (9.5-mm) sieve, add to the total mass of soil passing the No. 4 sieve, the mass of the fraction passing the ⅜-in. sieve and retained on the No. 4 sieve. For the remaining sieves, continue the calculations in the same manner.

12.3 To determine the total percentage passing for each sieve, divide the total mass passing (see 12.2) by the total mass of sample and multiply the result by 100.

13. Hygroscopic Moisture Correction Factor

13.1 The hydroscopic moisture correction factor is the ratio between the mass of the oven-dried sample and the air-dry mass before drying. It is a number less than one, except when there is no hygroscopic moisture.

14. Percentages of Soil in Suspension

14.1 Calculate the oven-dry mass of soil used in the hydrometer analysis by multiplying the air-dry mass by the hygroscopic moisture correction factor.

TABLE 1 Values of Correction Factor, a, for Different Specific Gravities of Soil Particles[A]

Specific Gravity	Correction Factor, a
2.95	0.94
2.90	0.95
2.85	0.96
2.80	0.97
2.75	0.98
2.70	0.99
2.65	1.00
2.60	1.01
2.55	1.02
2.50	1.03
2.45	1.05

[A] For use in equation for percentage of soil remaining in suspension when using Hydrometer 152H.

14.2 Calculate the mass of a total sample represented by the mass of soil used in the hydrometer test, by dividing the oven-dry mass used by the percentage passing the No. 10 (2.00-mm) sieve, and multiplying the result by 100. This value is the weight W in the equation for percentage remaining in suspension.

14.3 The percentage of soil remaining in suspension at the level at which the hydrometer is measuring the density of the suspension may be calculated as follows (Note 13): For hydrometer 151H:

$$P = [(100\,000/W) \times G/(G - G_1)](R - G_1)$$

NOTE 13—The bracketed portion of the equation for hydrometer 151H is constant for a series of readings and may be calculated first and then multiplied by the portion in the parentheses.

For hydrometer 152H:

$$P = (Ra/W) \times 100$$

where:

a = correction faction to be applied to the reading of hydrometer 152H. (Values shown on the scale are computed using a specific gravity of 2.65. Correction factors are given in Table 1),

P = percentage of soil remaining in suspension at the level at which the hydrometer measures the density of the suspension,

R = hydrometer reading with composite correction applied (Section 7),

W = oven-dry mass of soil in a total test sample represented by mass of soil dispersed (see 14.2), g,

G = specific gravity of the soil particles, and

G_1 = specific gravity of the liquid in which soil particles are suspended. Use numerical value of one in both instances in the equation. In the first instance any possible variation produces no significant effect, and in the second instance, the composite correction for R is based on a value of one for G_1.

15. Diameter of Soil Particles

15.1 The diameter of a particle corresponding to the percentage indicated by a given hydrometer reading shall be calculated according to Stokes' law (Note 14), on the basis that a particle of this diameter was at the surface of the suspension at the beginning of sedimentation and had settled to the level at which the hydrometer is measuring the density of the suspension. According to Stokes' law:

$$D = \sqrt{[30n/980(G - G_1)] \times L/T}$$

where:

D = diameter of particle, mm,

η = coefficient of viscosity of the suspending medium (in this case water) in poises (varies with changes in temperature of the suspending medium),

L = distance from the surface of the suspension to the level at which the density of the suspension is being measured, cm. (For a given hydrometer and sedimentation cylinder, values vary according to the hydrometer readings. This distance is known as effective depth (Table 2)),

T = interval of time from beginning of sedimentation to the taking of the reading, min,

G = specific gravity of soil particles, and

G_l = specific gravity (relative density) of suspending medium (value may be used as 1.000 for all practical purposes).

NOTE 14—Since Stokes' law considers the terminal velocity of a single sphere falling in an infinity of liquid, the sizes calculated represent the diameter of spheres that would fall at the same rate as the soil particles.

15.2 For convenience in calculations the above equation may be written as follows:

$$D = K\sqrt{L/T}$$

where:

K = constant depending on the temperature of the suspension and the specific gravity of the soil particles. Values of K for a range of temperatures and specific gravities are given in Table 3. The value of K does not change for a series of readings constituting a test, while values of L and T do vary.

15.3 Values of D may be computed with sufficient accuracy, using an ordinary 10-in. slide rule.

NOTE 15—The value of L is divided by T using the A- and B-scales, the square root being indicated on the D-scale. Without ascertaining the value of the square root it may be multiplied by K, using either the C- or CI-scale.

16. Sieve Analysis Values for Portion Finer than No. 10 (2.00-mm) Sieve

16.1 Calculation of percentages passing the various sieves used in sieving the portion of the sample from the hydrometer test involves several steps. The first step is to calculate the mass of the fraction that would have been retained on the No. 10 sieve had it not been removed. This mass is equal to the total percentage retained on the No. 10 sieve (100 minus total percentage passing) times the mass of the total sample represented by the mass of soil used (as calculated in 14.2), and the result divided by 100.

16.2 Calculate next the total mass passing the No. 200 sieve. Add together the fractional masses retained on all the sieves, including the No. 10 sieve, and subtract this sum from the mass of the total sample (as calculated in 14.2).

16.3 Calculate next the total masses passing each of the other sieves, in a manner similar to that given in 12.2.

16.4 Calculate last the total percentages passing by dividing the total mass passing (as calculated in 16.3) by the total mass of sample (as calculated in 14.2), and multiply the result by 100.

TABLE 2 Values of Effective Depth Based on Hydrometer and Sedimentation Cylinder of Specified Sizes[A]

Hydrometer 151H		Hydrometer 152H			
Actual Hydrometer Reading	Effective Depth, L, cm	Actual Hydrometer Reading	Effective Depth, L, cm	Actual Hydrometer Reading	Effective Depth, L, cm
1.000	16.3	0	16.3	31	11.2
1.001	16.0	1	16.1	32	11.1
1.002	15.8	2	16.0	33	10.9
1.003	15.5	3	15.8	34	10.7
1.004	15.2	4	15.6	35	10.6
1.005	15.0	5	15.5		
1.006	14.7	6	15.3	36	10.4
1.007	14.4	7	15.2	37	10.2
1.008	14.2	8	15.0	38	10.1
1.009	13.9	9	14.8	39	9.9
1.010	13.7	10	14.7	40	9.7
1.011	13.4	11	14.5	41	9.6
1.012	13.1	12	14.3	42	9.4
1.013	12.9	13	14.2	43	9.2
1.014	12.6	14	14.0	44	9.1
1.015	12.3	15	13.8	45	8.9
1.016	12.1	16	13.7	46	8.8
1.017	11.8	17	13.5	47	8.6
1.018	11.5	18	13.3	48	8.4
1.019	11.3	19	13.2	49	8.3
1.020	11.0	20	13.0	50	8.1
1.021	10.7	21	12.9	51	7.9
1.022	10.5	22	12.7	52	7.8
1.023	10.2	23	12.5	53	7.6
1.024	10.0	24	12.4	54	7.4
1.025	9.7	25	12.2	55	7.3
1.026	9.4	26	12.0	56	7.1
1.027	9.2	27	11.9	57	7.0
1.028	8.9	28	11.7	58	6.8
1.029	8.6	29	11.5	59	6.6
1.030	8.4	30	11.4	60	6.5
1.031	8.1				
1.032	7.8				
1.033	7.6				
1.034	7.3				
1.035	7.0				
1.036	6.8				
1.037	6.5				
1.038	6.2				

[A] Values of effective depth are calculated from the equation:

$$L = L_1 + \tfrac{1}{2}(L_2 - (V_B/A))$$

where:

L = effective depth, cm,

L_1 = distance along the stem of the hydrometer from the top of the bulb to the mark for a hydrometer reading, cm,

L_2 = overall length of the hydrometer bulb, cm,

V_B = volume of hydrometer bulb, cm^3, and

A = cross-sectional area of sedimentation cylinder, cm^2

Values used in calculating the values in Table 2 are as follows:

For both hydrometers, 151H and 152H:

L_2 = 14.0 cm

V_B = 67.0 cm^3

A = 27.8 cm^2

For hydrometer 151H:

L_1 = 10.5 cm for a reading of 1.000

= 2.3 cm for a reading of 1.031

For hydrometer 152H:

L_1 = 10.5 cm for a reading of 0 g/litre

= 2.3 cm for a reading of 50 g/litre

17. Graph

17.1 When the hydrometer analysis is performed, a graph

TABLE 3 Values of K for Use in Equation for Computing Diameter of Particle in Hydrometer Analysis

Temperature, °C	Specific Gravity of Soil Solids								
	2.45	2.50	2.55	2.60	2.65	2.70	2.75	2.80	2.85
16	0.01511	0.01505	0.01461	0.01457	0.01435	0.01414	0.01394	0.01374	0.01356
17	0.01511	0.01486	0.01462	0.01439	0.01417	0.01396	0.01376	0.01356	0.01338
18	0.01492	0.01467	0.01443	0.01421	0.01399	0.01378	0.01359	0.01339	0.01321
19	0.01474	0.01449	0.01425	0.01403	0.01382	0.01361	0.01342	0.1323	0.01305
20	0.01456	0.01431	0.01408	0.01386	0.01365	0.01344	0.01325	0.01307	0.01289
21	0.01438	0.01414	0.01391	0.01369	0.01348	0.01328	0.01309	0.01291	0.01273
22	0.01421	0.01397	0.01374	0.01353	0.01332	0.01312	0.01294	0.01276	0.01258
23	0.01404	0.01381	0.01358	0.01337	0.01317	0.01297	0.01279	0.01261	0.01243
24	0.01388	0.01365	0.01342	0.01321	0.01301	0.01282	0.01264	0.01246	0.01229
25	0.01372	0.01349	0.01327	0.01306	0.01286	0.01267	0.01249	0.01232	0.01215
26	0.01357	0.01334	0.01312	0.01291	0.01272	0.01253	0.01235	0.01218	0.01201
27	0.01342	0.01319	0.01297	0.01277	0.01258	0.01239	0.01221	0.01204	0.01188
28	0.01327	0.01304	0.01283	0.01264	0.01244	0.01255	0.01208	0.01191	0.01175
29	0.01312	0.01290	0.01269	0.01249	0.01230	0.01212	0.01195	0.01178	0.01162
30	0.01298	0.01276	0.01256	0.01236	0.01217	0.01199	0.01182	0.01165	0.01149

of the test results shall be made, plotting the diameters of the particles on a logarithmic scale as the abscissa and the percentages smaller than the corresponding diameters to an arithmetic scale as the ordinate. When the hydrometer analysis is not made on a portion of the soil, the preparation of the graph is optional, since values may be secured directly from tabulated data.

18. Report

18.1 The report shall include the following:

18.1.1 Maximum size of particles,

18.1.2 Percentage passing (or retained on) each sieve, which may be tabulated or presented by plotting on a graph (Note 16),

18.1.3 Description of sand and gravel particles:

18.1.3.1 Shape—rounded or angular,

18.1.3.2 Hardness—hard and durable, soft, or weathered and friable,

18.1.4 Specific gravity, if unusually high or low,

18.1.5 Any difficulty in dispersing the fraction passing the No. 10 (2.00-mm) sieve, indicating any change in type and amount of dispersing agent, and

18.1.6 The dispersion device used and the length of the dispersion period.

NOTE 16—This tabulation of graph represents the gradation of the sample tested. If particles larger than those contained in the sample were removed before testing, the report shall so state giving the amount and maximum size.

18.2 For materials tested for compliance with definite specifications, the fractions called for in such specifications shall be reported. The fractions smaller than the No. 10 sieve shall be read from the graph.

18.3 For materials for which compliance with definite specifications is not indicated and when the soil is composed almost entirely of particles passing the No. 4 (4.75-mm) sieve, the results read from the graph may be reported as follows:

(1) Gravel, passing 3-in. and retained on No. 4 sieve ..... %
(2) Sand, passing No. 4 sieve and retained on No. 200 sieve ..... %
  (a) Coarse sand, passing No. 4 sieve and retained on No. 10 sieve ..... %
  (b) Medium sand, passing No. 10 sieve and retained on No. 40 sieve ..... %
  (c) Fine sand, passing No. 40 sieve and retained on No. 200 sieve ..... %
(3) Silt size, 0.074 to 0.005 mm ..... %
(4) Clay size, smaller than 0.005 mm ..... %
  Colloids, smaller than 0.001 mm ..... %

18.4 For materials for which compliance with definite specifications is not indicated and when the soil contains material retained on the No. 4 sieve sufficient to require a sieve analysis on that portion, the results may be reported as follows (Note 17):

SIEVE ANALYSIS

Sieve Size	Percentage Passing
3-in.	.....
2-in.	.....
1½-in.	.....
1-in.	.....
¾-in.	.....
⅜-in.	.....
No. 4 (4.75-mm)	.....
No. 10 (2.00-mm)	.....
No. 40 (425-μm)	.....
No. 200 (75-μm)	.....
HYDROMETER ANALYSIS	
0.074 mm	.....
0.005 mm	.....
0.001 mm	.....

NOTE 17—No. 8 (2.36-mm) and No. 50 (300-μm) sieves may be substituted for No. 10 and No. 40 sieves.

The American Society for Testing and Materials takes no position respecting the validity of any patent rights asserted in connection with any item mentioned in this standard. Users of this standard are expressly advised that determination of the validity of any such patent rights, and the risk of infringement of such rights, are entirely their own responsibility.

This standard is subject to revision at any time by the responsible technical committee and must be reviewed every five years and if not revised, either reapproved or withdrawn. Your comments are invited either for revision of this standard or for additional standards and should be addressed to ASTM Headquarters. Your comments will receive careful consideration at a meeting of the responsible technical committee, which you may attend. If you feel that your comments have not received a fair hearing you should make your views known to the ASTM Committee on Standards, 1916 Race St., Philadelphia, PA 19103.

An American National Standard

Standard Method for Laboratory Determination of Water (Moisture) Content of Soil, Rock, and Soil-Aggregate Mixtures[1]

This standard is issued under the fixed designation D 2216; the number immediately following the designation indicates the year of original adoption or, in the case of revision, the year of last revision. A number in parentheses indicates the year of last reapproval. A superscript epsilon (ε) indicates an editorial change since the last revision or reapproval.

1. Scope

1.1 This method covers the laboratory determination of the water (moisture) content of soil, rock, and soil-aggregate mixtures by weight. For simplicity, the word "material" hereinafter refers to either soil, rock, or soil-aggregate mixtures, whichever is most applicable.

1.2 The water content of a material is defined as the ratio, expressed as a percentage, of the mass of "pore" or "free" water in a given mass of material to the mass of the solid material particles.

1.3 This method does not give true representative results for: materials containing significant amounts of halloysite, montmorillonite, or gypsum minerals; highly organic soils; or, materials in which the pore water contains dissolved solids (such as salt in the case of marine deposits). For a material of the previously mentioned types, a modified method of testing or data calculation may be established to give results consistent with the purpose of the test.

2. Summary of Method

2.1 The practical application in determining the water content of a material is to determine the mass of water removed by drying the moist material (test specimen) to a constant mass in a drying oven controlled at 110 ± 5°C and to use this value as the mass of water in the test specimen. The mass of material remaining after oven-drying is used as the mass of the solid particles.

3. Significance and Use

3.1 For many soil types, the water content is one of the most significant index properties used in establishing a correlation between soil behavior and an index property.

3.2 The water content of a soil is used in almost every equation expressing the phase relationships of air, water, and solids in a given volume of material.

3.3 In fine-grained (cohesive) soils, the consistency of a given soil type depends on its water content. The water content of a soil, along with its liquid and plastic limit, is used to express its relative consistency or liquidity index.

3.4 The term "water" as used in geotechnical engineering, is typically assumed to be "pore" or "free" water and not that which is hydrated to the mineral surfaces. Therefore, the water content of materials containing significant amounts of hydrated water at in-situ temperatures or less than 110°C can be misleading.

3.5 The term "solid particles" as used in geotechnical engineering, is typically assumed to mean naturally occurring mineral particles that are not readily soluble in water. Therefore, the water content of materials containing extraneous matter (such as cement, etc), water-soluble matter (such as salt) and highly organic matter typically require special treatment or a qualified definition of water content.

4. Apparatus

4.1 *Drying Oven*, thermostatically-controlled, preferably of the forced-draft type, and maintaining a uniform temperature of 110 ± 5°C throughout the drying chamber.

4.2 *Balances*, having a precision (repeatability) of ±0.01 g for specimens having a mass of 200 g or less, ±0.1 g for specimens having a mass of between 200 and 1000 g, or ±1 g for specimens having a mass greater than 1000 g.

4.3 *Specimen Containers*—Suitable containers made of material resistant to corrosion and a change in mass upon repeated heating, cooling, and cleaning. Containers with close-fitting lids shall be used for testing specimens having a mass of less than about 200 g; while for specimens having a mass greater than about 200 g, containers without lids may be used (Note 1). One container is needed for each water content determination.

NOTE 1—The purpose of close-fitting lids is to prevent loss of moisture from specimens before initial weighing and to prevent absorption of moisture from the atmosphere following drying and before final weighing.

4.4 *Desiccator*—A desiccator of suitable size (a convenient size is 200 to 250-mm diameter) containing a hydrous silica gel. This equipment is only recommended for use when containers having close-fitting lids are not used. See 7.4.1.

5. Samples

5.1 Keep the samples that are stored prior to testing in noncorrodible airtight containers at a temperature between approximately 3 and 30°C and in an area that prevents direct contact with sunlight.

5.2 The water content determination should be done as soon as practicable after sampling, especially if potentially corrodible containers (such as steel thin-walled tubes, paint cans, etc.) or sample bags are used.

6. Test Specimen

6.1 For water contents being determined in conjunction with another ASTM method, the method of specimen selection specified in that method controls.

[1] This method is under the jurisdiction of ASTM Committee D-18 on Soil and Rock and is the direct responsibility of Subcommittee D18.03 on Texture, Plasticity and Density Characteristics of Soils.

Current edition approved May 30, 1980. Published July 1980. Originally published as D 2216 - 63 T. Last previous edition D 2216 - 71.

[illegible] material being tested, and the type of sample [illegible] from another test, bag, tube, split-barrel, etc. In all cases, however, a representative portion of the total sample shall be selected. If a layered soil or more than one soil type is encountered, select an average portion or individual portions or both, and note which portion(s) was tested in the report of the results.

6.2.1 For bulk samples, select the test specimen from the material after it has been thoroughly mixed. The mass of moist material selected shall be in accordance with the following table:

Sieve Retaining More Than About 10 % of Sample	Recommended Minimum Mass of Moist Specimen, g
2.0 mm (No. 10) sieve	100 to 200
4.75 mm (No. 4) sieve	300 to 500
19 mm	500 to 1000
38 mm	1500 to 3000
76 mm	5000 to 10 000

6.2.2 For small (jar) samples, select a representative portion in accordance with the following procedure:

6.2.2.1 For cohesionless soils, thoroughly mix the material, then select a test specimen having a mass of moist material in accordance with the table in 6.2.1. See Note 2.

6.2.2.2 For cohesive soils, remove about 3 mm of material from the exposed periphery of the sample and slice it in half (to check if the material is layered) prior to selecting the test specimen. If the soil is layered see 6.2. The mass of moist material selected should not be less than 25 g or should be in accordance with the table in 6.2.1 if coarse-grained particles are noted. (Note 2).

6.3 Using a test specimen smaller than the minimum mass indicated previously requires discretion, though it may be adequate for the purpose of the test. A specimen having a mass less than the previously indicated value shall be noted in the report of the results.

NOTE 2—In many cases, when working with a small sample containing a relatively large coarse-grained particle, it is appropriate not to include this particle in the test specimen. If this occurs, it should be noted in the report of the results.

7. Procedure

7.1 Select representative test specimens in accordance with Section 6.

7.2 Place the moist specimen in a clean, dry container of known mass (Note 3), set the lid securely in position, and determine the mass of the container and moist material using an appropriate balance (4.2). Record these values.

7.3 Remove the lid and place the container with moist material in a drying oven maintained at 110 ± 5°C and dry to a constant mass (Notes 4, 5, and 6).

NOTE 3—To assist in the oven-drying of large test specimens, they should be placed in containers having a large surface area (such as pans) and the material broken up into smaller aggregations.

NOTE 4—The time required to obtain constant mass will vary depending on the type of material, size of specimen, oven type and capacity, and other factors. The influence of these factors generally can be established by good judgment, and experience with the materials being tested and the apparatus being used. In most cases, drying a test specimen over night (about 16 h) is sufficient. In cases where there is doubt concerning the adequacy of drying, drying should be continued until the mass after two successive periods (greater than ½ h) of drying [illegible]

NOTE 5—[illegible] content values related to the intended use or the basis definition especially for materials containing gypsum or other minerals having significant amounts of hydrated water or for soil containing a significant amount of organic material. In many cases, and depending on the intended use for these types of materials, it might be more applicable to maintain the drying oven at 60 ± 5°C or use a vacuum desiccator at a vacuum of approximately 133 Pa (10 mm Hg) and at a temperature ranging between 23 and 60°C for drying. If either of these drying methods are used, it should be noted in the report of the results.

NOTE 6—Since some dry materials may absorb moisture from moist specimens, dried specimens should be removed before placing moist specimens in the oven. However, this requirement is not applicable if the previously dried specimens will remain in the drying oven for an additional time period of about 16 h.

7.4 After the material has dried to constant mass remove the container from the oven and replace the lid. Allow the material and container to cool to room temperature or until the container can be handled comfortably with bare hands and the operation of the balance will not be affected by convection currents. Determine the mass of the container and oven-dried material using the same balance as used in 7.2. Record this value.

7.4.1 If the container does not have a lid, weigh the container and material right after their temperatures are such that the operation of the balance will not be affected by convection currents or after cooling in a desiccator.

NOTE 7—Cooling in a desiccator is recommended since it prevents absorption of moisture from the atmosphere during cooling.

8. Calculation

8.1 Calculate the water content of the material as follows:

$$w = [(W_1 - W_2)/(W_2 - W_c)] \times 100 = \frac{W_w}{W_s} \times 100$$

where:

w = water content, %,
W_1 = mass of container and moist specimen, g,
W_2 = mass of container and oven-dried specimen, g,
W_c = mass of container, g,
W_w = mass of water, g, and
W_s = mass of solid particles, g.

9. Report

9.1 The report (data sheet) shall include the following:

9.1.1 Identification of the sample (material) being tested, by boring number, sample number, test number, etc.

9.1.2 Water content of the specimen to the nearest 0.1 % or 1 %, depending on the purpose of the test.

9.1.3 Indication of test specimen having a mass less than the minimum indicated in Section 6.

9.1.4 Indication of test specimen containing more than one soil type (layered, etc).

9.1.5 Indication of the method of drying if different from oven-drying at 110 ± 5°C.

9.1.6 Indication of any material (size and amount) excluded from the test specimen.

10. Precision and Accuracy

10.1 Requirements for the precision and accuracy of this test method have not yet been developed.

The American Society for Testing and Materials takes no position respecting the validity of any patent rights asserted in connection with any item mentioned in this standard. Users of this standard are expressly advised that determination of the validity of any such patent rights, and the risk of infringement of such rights, are entirely their own responsibility.

This standard is subject to revision at any time by the responsible technical committee and must be reviewed every five years and if not revised, either reapproved or withdrawn. Your comments are invited either for revision of this standard or for additional standards and should be addressed to ASTM Headquarters. Your comments will receive careful consideration at a meeting of the responsible technical committee, which you may attend. If you feel that your comments have not received a fair hearing you should make your views known to the ASTM Committee on Standards, 1916 Race St., Philadelphia, PA 19103.

Designation: D 2488 – 84[ε1]

Standard Practice for Description and Identification of Soils (Visual-Manual Procedure)[1]

This standard is issued under the fixed designation D 2488; the number immediately following the designation indicates the year of original adoption or, in the case of revision, the year of last revision. A number in parentheses indicates the year of last reapproval. A superscript epsilon (ε) indicates an editorial change since the last revision or reapproval.

[ε1] NOTE—Section 18 was added editorially in January 1989.

1. Scope

1.1 This practice covers procedures for the description of soils for engineering purposes.

1.2 This practice also describes a procedure for identifying soils, at the option of the user, based on the classification system described in Test Method D 2487. The identification is based on visual examination and manual tests. It must be clearly stated in reporting an identification that it is based on visual-manual procedures.

1.2.1 When precise classification of soils for engineering purposes is required, the procedures prescribed in Test Method D 2487 shall be used.

1.2.2 In this practice, the identification portion assigning a group symbol and name is limited to soil particles smaller than 3 in. (75 mm).

1.2.3 The identification portion of this practice is limited to naturally occurring soils.

NOTE 1—This practice may be used as a descriptive system applied to such materials as shale, claystone, shells, crushed rock, etc. (See Appendix X2).

1.3 The descriptive information in this practice may be used with other soil classification systems or for materials other than naturally occurring soils.

1.4 *This standard may involve hazardous materials, operations, and equipment. This standard does not purport to address all of the safety problems associated with its use. It is the responsibility of whoever uses this standard to consult and establish appropriate safety and health practices and determine the applicability of regulatory limitations prior to use.* For specific precautionary statements see Section 8.

1.5 The values stated in inch-pound units are to be regarded as the standard.

2. Referenced Documents

2.1 *ASTM Standards:*

D 653 Terminology Relating to Soil, Rock, and Contained Fluids[2]

D 1452 Practice for Soil Investigation and Sampling by Auger Borings[2]

D 1586 Method for Penetration Test and Split-Barrel Sampling of Soils[2]

D 1587 Practice for Thin-Walled Tube Sampling of Soils[2]

D 2113 Practice for Diamond Core Drilling for Site Investigation[2]

D 2487 Test Method for Classification of Soils for Engineering Purposes[2]

3. Definitions

3.1 Except as listed below, all definitions are in accordance with Terminology D 653.

NOTE 2—For particles retained on a 3-in. (75-mm) US standard sieve, the following definitions are suggested:

Cobbles—particles of rock that will pass a 12-in. (300-mm) square opening and be retained on a 3-in. (75-mm) sieve, and

Boulders—particles of rock that will not pass a 12-in. (300-mm) square opening.

3.1.1 *clay*—soil passing a No. 200 (75-μm) sieve that can be made to exhibit plasticity (putty-like properties) within a range of water contents, and that exhibits considerable strength when air-dry. For classification, a clay is a fine-grained soil, or the fine-grained portion of a soil, with a plasticity index equal to or greater than 4, and the plot of plasticity index versus liquid limit falls on or above the "A" line (see Fig. 3 of Test Method D 2487).

3.1.2 *gravel*—particles of rock that will pass a 3-in. (75-mm) sieve and be retained on a No. 4 (4.75-mm) sieve with the following subdivisions:

coarse—passes a 3-in. (75-mm) sieve and is retained on a ¾-in. (19-mm) sieve.

fine—passes a ¾-in. (19-mm) sieve and is retained on a No. 4 (4.75-mm) sieve.

3.1.3 *organic clay*—a clay with sufficient organic content to influence the soil properties. For classification, an organic clay is a soil that would be classified as a clay, except that its liquid limit value after oven drying is less than 75 % of its liquid limit value before oven drying.

3.1.4 *organic silt*—a silt with sufficient organic content to influence the soil properties. For classification, an organic silt is a soil that would be classified as a silt except that its liquid limit value after oven drying is less than 75 % of its liquid limit value before oven drying.

3.1.5 *peat*—a soil composed primarily of vegetable tissue in various stages of decomposition usually with an organic odor, a dark brown to black color, a spongy consistency, and a texture ranging from fibrous to amorphous.

[1] This practice is under the jurisdiction of ASTM Committee D-18 on Soil and Rock and is the direct responsibility of Subcommittee D18.07 on Identification and Classification of Soils.

Current edition approved Oct. 3, 1984. Published December 1984. Originally published as D 2488 – 66 T. Last previous edition D 2488 – 69 (1975).

[2] *Annual Book of ASTM Standards*, Vol 04.08.

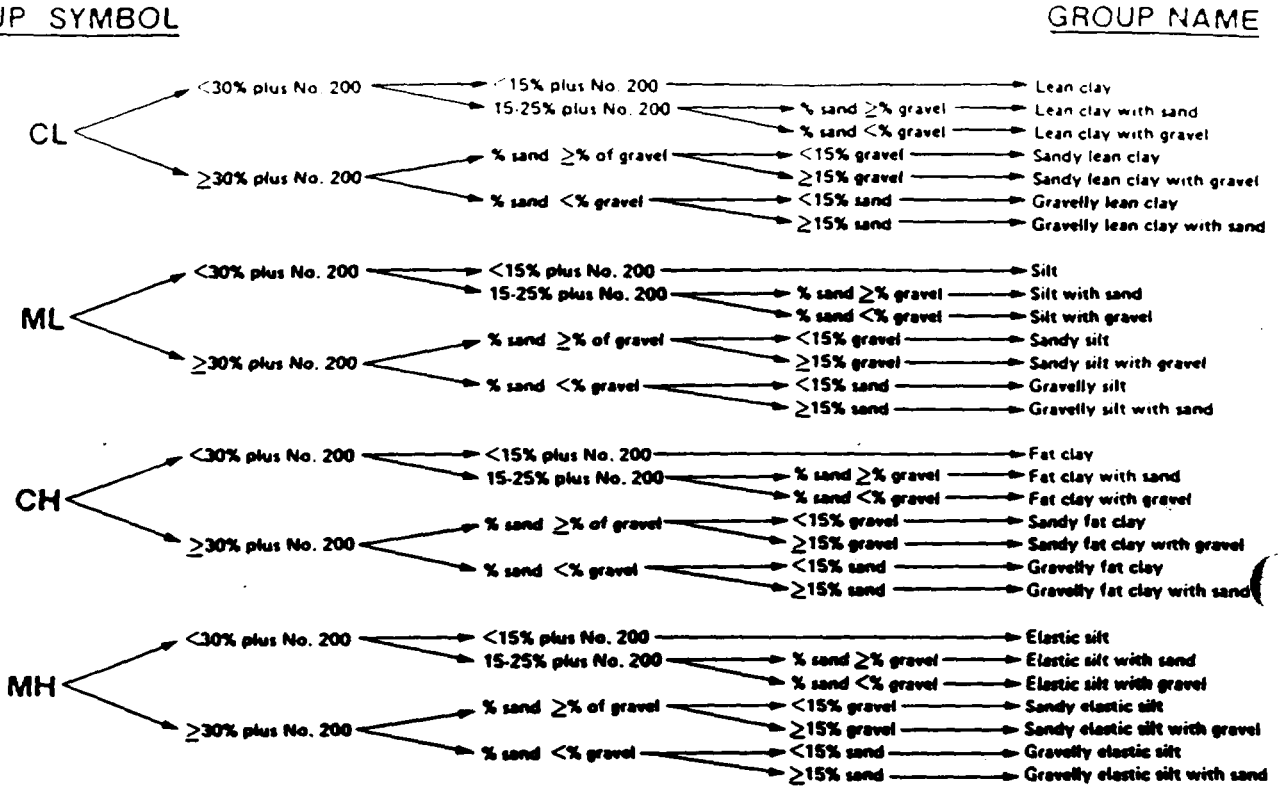

NOTE—Percentages are based on estimating amounts of fines, sand, and gravel to the nearest 5 %.

FIG. 1a Flow Chart for Identifying Inorganic Fine-Grained Soil (50 % or more fines)

3.1.6 *sand*—particles of rock that will pass a No. 4 (4.75-mm) sieve and be retained on a No. 200 (75-µm) sieve with the following subdivisions:

coarse—passes a No. 4 (4.75-mm) sieve and is retained on a No. 10 (2.00-mm) sieve.

medium—passes a No. 10 (2.00-mm) sieve and is retained on a No. 40 (425-µm) sieve.

fine—passes a No. 40 (425-µm) sieve and is retained on a No. 200 (75-µm) sieve.

3.1.7 *silt*—soil passing a No. 200 (75-µm) sieve that is nonplastic or very slightly plastic and that exhibits little or no strength when air dry. For classification, a silt is a fine-grained soil, or the fine-grained portion of a soil, with a plasticity index less than 4, or the plot of plasticity index versus liquid limit falls below the "A" line (see Fig. 3 of Test Method D 2487).

4. Summary of Practice

4.1 Using visual examination and simple manual tests, this practice gives standardized criteria and procedures for describing and identifying soils.

4.2 The soil can be given an identification by assigning a group symbol(s) and name. The flow charts, Figs. 1a and 1b for fine-grained soils, and Fig. 2, for coarse-grained soils, can be used to assign the appropriate group symbol(s) and name. If the soil has properties which do not distinctly place it into a specific group, borderline symbols may be used, see Appendix X3.

NOTE 3—It is suggested that a distinction be made between *dual symbols* and *borderline symbols*.

Dual Symbol—A dual symbol is two symbols separated by a hyphen, for example, GP-GM, SW-SC, CL-ML used to indicate that the soil has been identified as having the properties of a classification in accordance with Test Method D 2487 where two symbols are required. Two

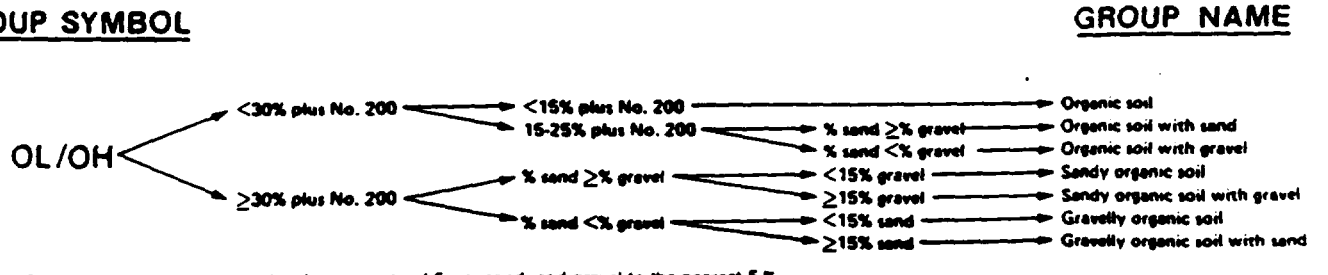

NOTE—Percentages are based on estimating amounts of fines, sand, and gravel to the nearest 5 %.

FIG. 1b Flow Chart for Identifying Organic Fine-Grained Soil (50 % or more fines)

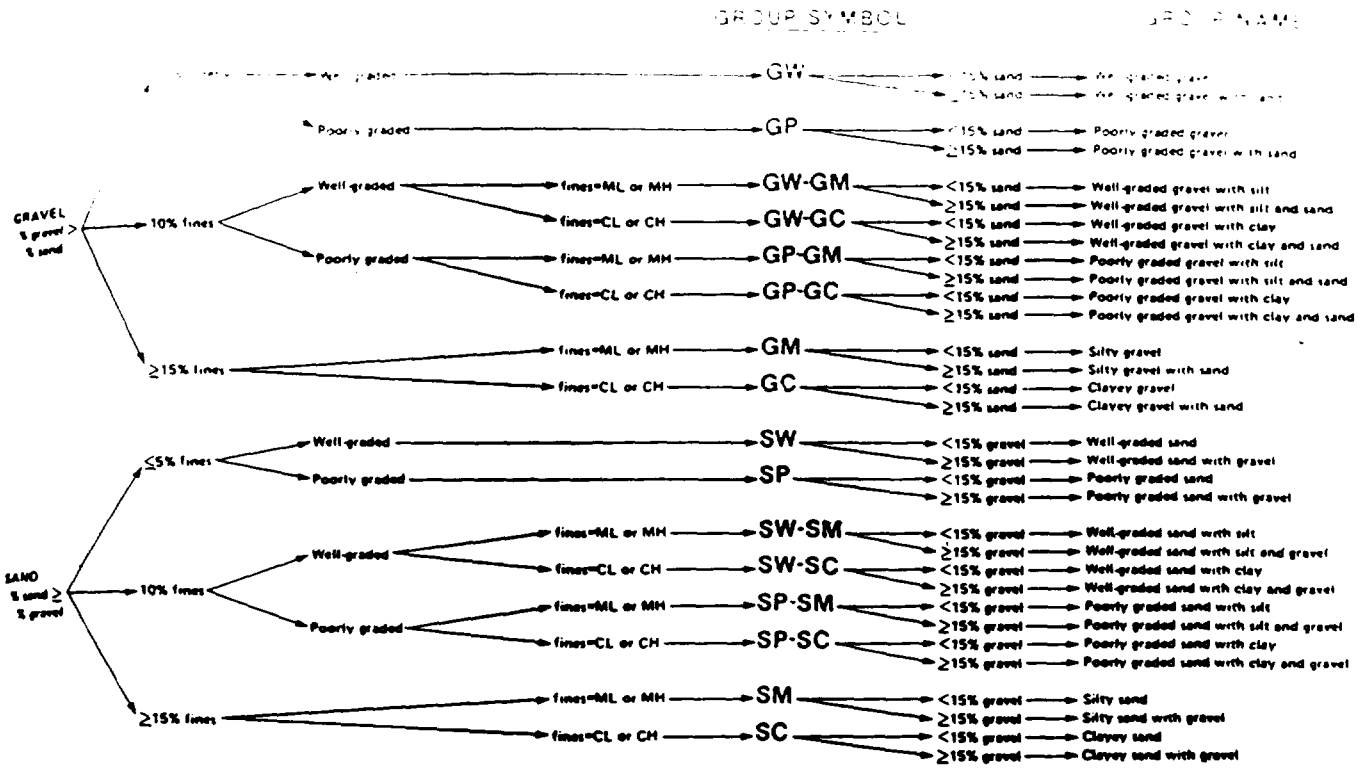

NOTE—Percentages are based on estimating amounts of fines, sand, and gravel to the nearest 5 %.

FIG. 2 Flow Chart for Identifying Coarse-Grained Soils (less than 50 % fines)

symbols are required when the soil has between 5 and 12 % fines or when the liquid limit and plasticity index values plot in the CL-ML area of the plasticity chart.

Borderline Symbol—A borderline symbol is two symbols separated by a slash, for example, CL/CH, GM/SM, CL/ML. A borderline symbol should be used to indicate that the soil has been identified as having properties that do not distinctly place the soil into a specific group (see Appendix X3).

5. Significance and Use

5.1 The descriptive information required in this practice can be used to describe a soil to aid in the evaluation of its significant properties for engineering use.

5.2 The descriptive information required in this practice should be used to supplement the classification of a soil as determined by Test Method D 2487.

5.3 This practice may be used in identifying soils using the classification group symbols and names as prescribed in Test Method D 2487. Since the names and symbols used in this practice to identify the soils are the same as those used in Test Method D 2487, it shall be clearly stated in reports and all other appropriate documents, that the classification symbol and name are based on visual-manual procedures.

5.4 This practice is to be used not only for identification of soils in the field, but also in the office, laboratory, or wherever soil samples are inspected and described.

5.5 This practice has particular value in grouping similar soil samples so that only a minimum number of laboratory tests need be run for positive soil classification.

NOTE 4—The ability to describe and identify soils correctly is learned more readily under the guidance of experienced personnel, but it may also be acquired systematically by comparing numerical laboratory test results for typical soils of each type with their visual and manual characteristics.

5.6 When describing and identifying soil samples from a given boring, test pit, or group of borings or pits, it is not necessary to follow all of the procedures in this practice for every sample. Soils which appear to be similar can be grouped together; one sample completely described and identified with the others referred to as similar based on performing only a few of the descriptive and identification procedures described in this practice.

6. Apparatus

6.1 *Required Apparatus:*

6.1.1 *Pocket Knife or Small Spatula.*

6.2 *Useful Auxiliary Apparatus:*

6.2.1 *Small Test Tube and Stopper* (or jar with a lid).

6.2.2 *Small Hand Lens.*

7. Reagents

7.1 *Purity of Water*—Unless otherwise indicated, references to water shall be understood to mean water from a city water supply or natural source, including non-potable water.

7.2 *Hydrochloric Acid*—A small bottle of dilute hydrochloric acid, HCl, one part HCl (10 *N*) to three parts water (This reagent is optional for use with this practice). See Section 8.

8. Safety Precautions

8.1 When preparing the dilute HCl solution of one part

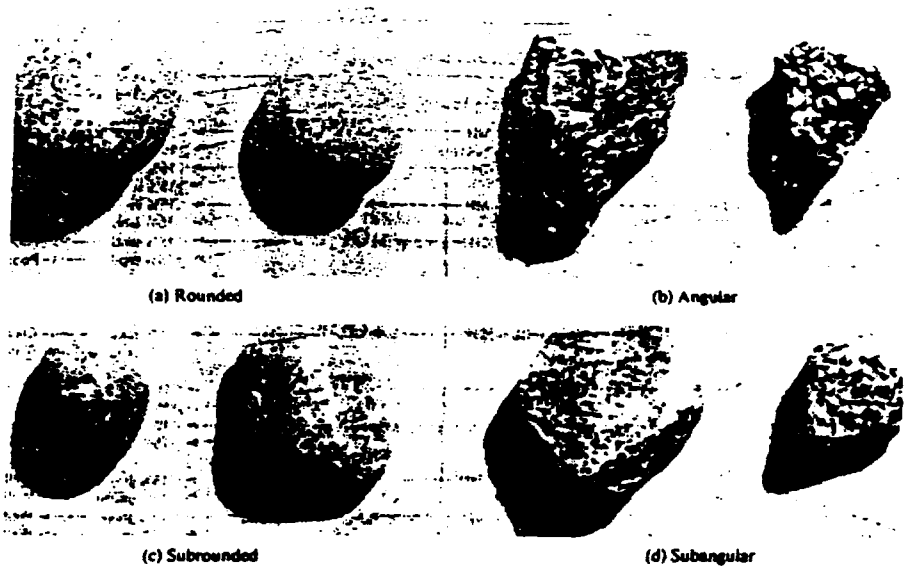

FIG. 3 Typical Angularity of Bulky Grains

concentrated hydrochloric acid (10 *N*) to three parts of distilled water, slowly add acid into water following necessary safety precautions. Handle with caution and store safely. If solution comes into contact with the skin, rinse thoroughly with water.

8.2 **Caution**—Do not add water to acid.

9. Sampling

9.1 The sample shall be considered to be representative of the stratum from which it was obtained by an appropriate, accepted, or standard procedure.

NOTE 5—Preferably, the sampling procedure should be identified as having been conducted in accordance with Practices D 1452, D 1587, or D 2113, or Method D 1586.

9.2 The sample shall be carefully identified as to origin.

NOTE 6—Remarks as to the origin may take the form of a boring number and sample number in conjunction with a job number, a geologic stratum, a pedologic horizon or a location description with respect to a permanent monument, a grid system or a station number and offset with respect to a stated centerline and a depth or elevation.

9.3 For accurate description and identification, the minimum amount of the specimen to be examined shall be in accordance with the following schedule:

TABLE 1 Criteria for Describing Angularity of Coarse-Grained Particles (see Fig. 3)

Description	Criteria
Angular	Particles have sharp edges and relatively plane sides with unpolished surfaces
Subangular	Particles are similar to angular description but have rounded edges
Subrounded	Particles have nearly plane sides but have well-rounded corners and edges
Rounded	Particles have smoothly curved sides and no edges

Maximum Particle Size, Sieve Opening	Minimum Specimen Size, Dry Weight
4.75 mm (No. 4)	100 g (0.25 lb)
9.5 mm (⅜ in.)	200 g (0.5 lb)
19.0 mm (¾ in.)	1.0 kg (2.2 lb)
38.1 mm (1½ in.)	8.0 kg (18 lb)
75.0 mm (3 in.)	60.0 kg (132 lb)

NOTE 7—If random isolated particles are encountered that are significantly larger than the particles in the soil matrix, the soil matrix can be accurately described and identified in accordance with the preceeding schedule.

9.4 If the field sample or specimen being examined is smaller than the minimum recommended amount, the report shall include an appropriate remark.

10. Descriptive Information for Soils

10.1 *Angularity*—Describe the angularity of the sand (coarse sizes only), gravel, cobbles, and boulders, as angular, subangular, subrounded, or rounded in accordance with the criteria in Table 1 and Fig. 3. A range of angularity may be stated, such as: subrounded to rounded.

10.2 *Shape*—Describe the shape of the gravel, cobbles, and boulders as flat, elongated, or flat and elongated if they meet the criteria in Table 2 and Fig. 4. Otherwise, do not mention the shape. Indicate the fraction of the particles that have the shape, such as: one-third of the gravel particles are flat.

10.3 *Color*—Describe the color. Color is an important property in identifying organic soils, and within a given locality it may also be useful in identifying materials of

TABLE 2 Criteria for Describing Particle Shape (see Fig. 4)

The particle shape shall be described as follows where length, width, and thickness refer to the greatest, intermediate, and least dimensions of a particle respectively.

Flat	Particles with width/thickness > 3
Elongated	Particles with length/width > 3
Flat and elongated	Particles meet criteria for both flat and elongated

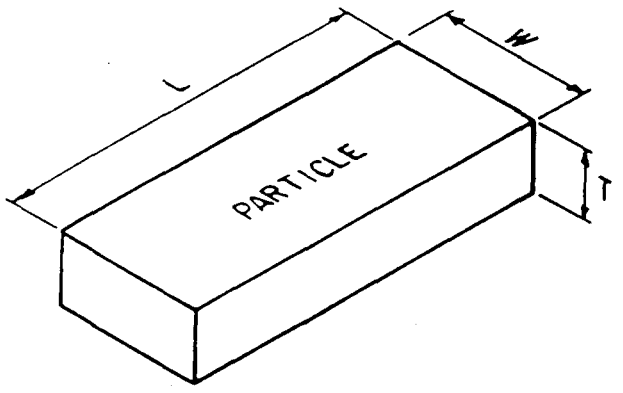

FLAT: W/T > 3
ELONGATED: L/W > 3
FLAT AND ELONGATED:
- meets both criteria

FIG. 4 Criteria for Particle Shape

TABLE 3 Criteria for Describing Moisture Condition

Description	Criteria
Dry	Absence of moisture, dusty, dry to the touch
Moist	Damp but no visible water
Wet	Visible free water, usually soil is below water table

similar geologic origin. If the sample contains layers or patches of varying colors, this shall be noted and all representative colors shall be described. The color shall be described for moist samples. If the color represents a dry condition, this shall be stated in the report.

10.4 *Odor*—Describe the odor if organic or unusual. Soils containing a significant amount of organic material usually have a distinctive odor of decaying vegetation. This is especially apparent in fresh samples, but if the samples are dried, the odor may often be revived by heating a moistened sample. If the odor is unusual (petroleum product, chemical, and the like), it shall be described.

10.5 *Moisture Condition*—Describe the moisture condition as dry, moist, or wet, in accordance with the criteria in Table 3.

10.6 *HCl Reaction*—Describe the reaction with HCl as none, weak, or strong, in accordance with the critera in Table 4. Since calcium carbonate is a common cementing agent, a report of its presence on the basis of the reaction with dilute hydrochloric acid is important.

TABLE 5 Criteria for Describing Consistency

Description	Criteria
Very soft	Thumb will penetrate soil more than 1 in. (25 mm)
Soft	Thumb will penetrate soil about 1 in. (25 mm)
Firm	Thumb will indent soil about ¼ in. (6 mm)
Hard	Thumb will not indent soil but readily indented with thumbnail
Very hard	Thumbnail will not indent soil

10.7 *Consistency*—For intact fine-grained soil, describe the consistency as very soft, soft, firm, hard, or very hard, in accordance with the criteria in Table 5. This observation is inappropriate for soils with significant amounts of gravel.

10.8 *Cementation*—Describe the cementation of intact coarse-grained soils as weak, moderate, or strong, in accordance with the criteria in Table 6.

10.9 *Structure*—Describe the structure of intact soils in accordance with the criteria in Table 7.

10.10 *Range of Particle Sizes*—For gravel and sand components, describe the range of particle sizes within each component as defined in 3.1.2 and 3.1.6. For example, about 20 % fine to coarse gravel, about 40 % fine to coarse sand.

10.11 *Maximum Particle Size*—Describe the maximum particle size found in the sample in accordance with the following information:

10.11.1 *Sand Size*—If the maximum particle size is a sand size, describe as fine, medium, or coarse as defined in 3.1.7. For example: maximum particle size, medium sand.

10.11.2 *Gravel Size*—If the maximum particle size is a gravel size, describe the maximum particle size as the smallest sieve opening that the particle will pass. For example, maximum particle size, 1½ in. (will pass a 1½-in. square opening but not a ¾-in. square opening).

10.11.3 *Cobble or Boulder Size*—If the maximum particle size is a cobble or boulder size, describe the maximum dimension of the largest particle. For example: maximum dimension, 18 in. (450 mm).

10.12 *Hardness*—Describe the hardness of coarse sand and larger particles as hard, or state what happens when the particles are hit by a hammer, for example, gravel-size particles fracture with considerable hammer blow, some gravel-size particles crumble with hammer blow. "Hard" means particles do not crack, fracture, or crumble under a hammer blow.

10.13 Additional comments shall be noted, such as the presence of roots or root holes, difficulty in drilling or augering hole, caving of trench or hole, or the presence of mica.

TABLE 6 Criteria for Describing Cementation

Description	Criteria
Weak	Crumbles or breaks with handling or little finger pressure
Moderate	Crumbles or breaks with considerable finger pressure
Strong	Will not crumble or break with finger pressure

STANDARD OPERATING PROCEDURE NUMBER 12

SURVEYING

STANDARD OPERATING PROCEDURE NUMBER 12

SURVEYING

Woodward-Clyde Consultants

St. Louis, Missouri

Project No. 89MC114V

Approvals:	Date:
Originator	10/24/91
Peer Reviewer	10/24/91
QA/QC Officer	10/24/91
Project Manager	10/24/91

Disclaimer: This Standard Operating Procedure has been prepared for the sole use of Woodward-Clyde Consultants and may not be specifically applicable to the activities of other organizations.

TABLE OF CONTENTS

Section		Page
1.0	PURPOSE AND SCOPE	1-1
2.0	PROCEDURES FOR GROUND SURVEY	2-1
	2.1 HAND AUGER BORINGS	2-1
	2.1.1 Equipment List	2-1
	2.1.2 Procedure	2-1
	2.1.3 Documentation	2-2
	2.2 SOIL BORINGS	2-2
	2.2.1 Equipment List	2-2
	2.2.2 Procedure	2-3
	2.2.3 Documentation	2-3
	2.3 MONITORING WELLS	2-4
	2.3.1 Equipment List	2-4
	2.3.2 Procedure	2-5
	2.3.3 Documentation	2-5
	2.4 CONTROL MONUMENTS	2-6
3.0	PROCEDURES FOR AERIAL SURVEY	3-1
4.0	DOCUMENTATION	4-1

LIST OF ATTACHMENTS

1 - EM 1110-1-1002 Survey Markers and Monumentation.

2 - Corps of Engineers Scope of Work Surveys and Mapping.

The ground surveying will fall into two categories: 1. Field surveying to locate hand auger borings, and preliminary location of soil borings and monitoring wells. This will be done by WCC personnel; 2. Final surveying of soil borings and monitoring wells, and supplementary ground survey used in preparing the plat maps from the aerial survey. This will be done by a licensed land surveyor registered in the State of Illinois.

2.1 HAND AUGER BORINGS

Hand auger borings will be located on the appropriate plat map that has been prepared from the aerial survey and in the field notebook. The borings will be located in the horizontal direction only, there will be no vertical control. The hand auger borings will be located in reference to nearby physical features (i.e. streets, houses, manholes). No marking of the sampling locations will be done.

2.1.1 Equipment List

- 100 ft tape measure
- Plat map of residence
- Waterproof and permanent markers
- Field notebook

2.1.2 Procedure

The location of the hand auger borings will be identified in the field log book to the nearest 0.1 ft referenced to two permanent markers, i.e. house corner, manhole, street, or sidewalk. The location will also be clearly identified on the appropriate plat map with distances to the permanent markers indicated on the map. No marking will be placed at the sampling location.

2.1.3 Documentation

The identification code and description of each sampling location will be recorded in the field notebook and the plat map. The information shall include:

- Date of sampling
- Description of sampling location relative to adjacent structures (roads, buildings, or manholes)
- Sampler's name

2.2 SOIL BORINGS

The soil boring surveys will take place in two phases:

- Preliminary location of the soil boring
- Instrument survey of that location with respect to the state plan coordinates and the local vertical datum

2.2.1 Equipment List

Phase 1

- Field notebook
- Waterproof and permanent marking pens
- Orange spray paint
- Wooden stakes
- Sledge hammer
- Map of the area

Phase 2

- Survey notebook
- Waterproof and permanent marking pens
- Map of the area showing the staked locations of the soil borings
- Any additional equipment necessary to conduct the procedure described below

2.2.2 Procedure

Phase 1

Sampling locations will be identified upon completion by a wooden stake with the top painted bright orange. A wooden lath will be driven into the ground next to the stake at the sampling point. The site name and sampling station number identifiers will be written on the wooden lath with a permanent waterproof marker. At locations where the wooden lath cannot be installed, i.e. alleyway, the sampling station number will be painted on the ground next to the sampling location.

Phase 2

The elevation of the borehole will be determined by instrument survey to the nearest 0.1 foot. The location of each borehole will be located by instrument survey to the nearest 1.0 foot from State Plane coordinates.

2.2.3 Documentation

Phase 1

The identification code and description of each soil boring will be recorded in the field notebook and the area map. The information shall include:

- Date of sampling
- Date of installation of stake
- Description of sampling location relative to adjacent structures (roads, buildings, or manholes)
- Type of sampling station
- Description of installed marker
- Sampler's name
- Installer's name

Phase 2

The identification code and description of each soil boring will be recorded in the surveying notebook. The information will include:

- Date of survey
- Names of the surveying crew
- Weather conditions
- Soil boring identification number
- Elevation of the soil boring to the nearest foot
- Location of the soil boring relative to permanent features in the area
- Recorder's name

2.3 MONITORING WELLS

Monitoring well surveys will take place in two phases:

- Preliminary location of the monitoring well by WCC personnel
- Instrument Survey of that location with respect to the State Plane coordinate System and the local vertical Datum

2.3.1 Equipment List

Phase 1

- Field notebook
- Waterproof and permanent marking pens
- Spray paint, orange
- Wooden stakes
- Sledge hammer
- Map of the area

Phase 2

- Survey notebook
- Waterproof and permanent marking pens

- Map of the area showing the staked locations of the soil borings
- Any additional equipment necessary to conduct the procedure described below

2.3.2 Procedure

Phase 1

Monitoring well locations will be identified upon completion by a wooden stake with the top painted bright orange. A wooden lathe will be driven into the ground next to the stake at the monitoring well. The site name and sampling station number identifiers will be written on the wooden lathe with a permanent waterproof marker.

Phase 2

The coordinates for each monitoring well will be established by instrument survey to the nearest 1.0 foot and referenced to the State Plane coordinate system. A ground elevation and top of riser elevation will be established by instrument survey to the nearest 0.01 foot shall be obtained for each well. The point on the well riser at which the elevation is taken shall be the notch on the north side that was installed by the driller. These elevations shall be referenced to the existing local vertical datum.

2.3.3 Documentation

Phase 1

The identification code and description of each monitoring well shall be recorded in the field notebook and the area map. The information shall include:

- Date of well installation
- Date of installation of stake
- Description of sampling location relative to adjacent structures (roads, buildings, or manholes)

- Type of sampling station (see SOP No. 5)
- Description of installed marker
- Installer's name

Phase 2

The identification code and description of each monitoring well will be recorded in the surveying notebook. The information will include:

- Date of survey
- Weather conditions
- Names of the surveying crew
- Monitoring well identification number
- Elevation of the ground and riser elevation to the nearest one-hundredth of a foot
- Location of the monitoring well to the nearest foot, referenced to the State Plane Coordinate System
- Recorder's name

2.4 CONTROL MONUMENTS

A minimum of three visible permanent horizontal control monuments will be installed in the adjoining areas of Taracorp, BV&G Trucking, Rich Oil, and Trust 454. Type G monuments with 3/4 in. pipe or rebar will be installed. The installation of the monuments should follow the EM 1110-1-1002 Survey Markers and Monumentation document (Attachment 1). Location, selection, and surveying of the monuments locations and surveying the monuments should follow these criteria:

- Monuments shall be placed in strategic locations to be used for but not destroyed by grading or construction
- To be visible from one monument to the next adjacent monument
- Determine State Plane coordinates and 1929 Mean Sea Level elevations (third order contract)

- Compute at least one combination factor for the area, and document the calculations in the field log book. If the terrain varies significantly, additional combination factors may be required for certain areas.

3.0
PROCEDURES FOR AERIAL SURVEY

The aerial survey will be conducted in accordance with **Attachment 2.**

4.0
DOCUMENTATION

Each field activity will be properly documented to facilitate a timely and accurate reconstruction of events in the field without reliance on memory of field personnel at a later date. Field notes shall be recorded in hardbound field books. The leaves of the field books shall contain no less than 50 percent high grade rag stock. All notes shall be neatly entered and shall contain complete records of all field work done. Each notebook page used shall bear the date of the work recorded and the signature of the person recording the information. The names of the personnel in the party shall be listed at the beginning of each days work, and any visitors to the work party will be recorded. The first three pages of each book shall be used for an index. Every page in the book shall be accounted for in the index.

EM 1110-1-1002
14 September 1990

US Army Corps
of Engineers

ENGINEERING AND DESIGN

Survey Markers and Monumentation

ENGINEER MANUAL

TABLE 7 Criteria for Describing Structure

[illegible]	[illegible]
[illegible]	Alternating layers of varying material or color with layers at least 6 mm thick, note thickness
Laminated	Alternating layers of varying material or color with the layers less than 6 mm thick, note thickness
Fissured	Breaks along definite planes of fracture with little resistance to fracturing
Slickensided	Fracture planes appear polished or glossy, sometimes striated
Blocky	Cohesive soil that can be broken down into small angular lumps which resist further breakdown
Lensed	Inclusion of small pockets of different soils, such as small lenses of sand scattered through a mass of clay; note thickness
Homogeneous	Same color and appearance throughout

10.14 A local or commercial name or a geologic interpretation of the soil, or both, may be added if identified as such.

10.15 A classification or identification of the soil in accordance with other classification systems may be added if identified as such.

11. Identification of Peat

11.1 A sample composed primarily of vegetable tissue in various stages of decomposition that has a fibrous to amorphous texture, usually a dark brown to black color, and an organic odor, shall be designated as a highly organic soil and shall be identified as peat, PT, and not subjected to the identification procedures described hereafter.

12. Preparation for Identification

12.1 The soil identification portion of this practice is based on the portion of the soil sample that will pass a 3-in. (75-mm) sieve. The larger than 3-in. (75-mm) particles must be removed, manually, for a loose sample, or mentally, for an intact sample before classifying the soil.

12.2 Estimate and note the percentage of cobbles and the percentage of boulders. Performed visually, these estimates will be on the basis of volume percentage.

NOTE 8—Since the percentages of the particle-size distribution in Test Method D 2487 are by dry weight, and the estimates of percentages for gravel, sand, and fines in this practice are by dry weight, it is recommended that the report state that the percentages of cobbles and boulders are by volume.

12.3 Of the fraction of the soil smaller than 3 in. (75 mm), estimate and note the percentage, by dry weight, of the gravel, sand, and fines (see Appendix X4 for suggested procedures).

NOTE 9—Since the particle-size components appear visually on the basis of volume, considerable experience is required to estimate the percentages on the basis of dry weight. Frequent comparisons with laboratory particle-size analyses should be made.

12.3.1 The percentages shall be estimated to the closest 5 %. The percentages of gravel, sand, and fines must add up to 100 %.

12.3.2 If one of the components is present but not in sufficient quantity to be considered 5 % of the smaller than 3-in. (75-mm) portion, indicate its presence by the term *trace*, for example, trace of fines. A trace is not to be considered in the total of 100 % for the components.

13. Preliminary Identification

13.1 [illegible] fines. Follow the procedures for identifying fine-grained soils of Section 14.

13.2 The soil is *coarse grained* if it contains less than 5 [illegible] fines. Follow the procedures for identifying coarse-grained soils of Section 15.

14. Procedure for Identifying Fine-Grained Soils

14.1 Select a representative sample of the material for examination. Remove particles larger than the No. 40 sieve (medium sand and larger) until a specimen equivalent to about a handful of material is available. Use this specimen for performing the dry strength, dilatancy, and toughness tests.

14.2 *Dry Strength:*

14.2.1 From the specimen, select enough material to mold into a ball about 1 in. (25 mm) in diameter. Mold the material until it has the consistency of putty, adding water if necessary.

14.2.2 From the molded material, make at least three test specimens. A test specimen shall be a ball of material about ½ in. (12 mm) in diameter. Allow the test specimens to dry in air, or sun, or by artificial means, as long as the temperature does not exceed 60°C.

14.2.3 If the test specimen contains natural dry lumps, those that are about ½ in. (12 mm) in diameter may be used in place of the molded balls.

NOTE 10—The process of molding and drying usually produces higher strengths than are found in natural dry lumps of soil.

14.2.4 Test the strength of the dry balls or lumps by crushing between the fingers. Note the strength as none, low, medium, high, or very high in accorance with the criteria in Table 8. If natural dry lumps are used, do not use the results of any of the lumps that are found to contain particles of coarse sand.

14.2.5 The presence of high-strength water-soluble cementing materials, such as calcium carbonate, may cause exceptionally high dry strengths. The presence of calcium carbonate can usually be detected from the intensity of the reaction with dilute hydrochloric acid (see 10.6).

14.3 *Dilatancy:*

14.3.1 From the specimen, select enough material to mold into a ball about ½ in. (12 mm) in diameter. Mold the material, adding water if necessary, until it has a soft, but not sticky, consistency.

14.3.2 Smooth the soil ball in the palm of one hand with the blade of a knife or small spatula. Shake horizontally.

TABLE 8 Criteria for Describing Dry Strength

Description	Criteria
None	The dry specimen crumbles into powder with mere pressure of handling
Low	The dry specimen crumbles into powder with some finger pressure
Medium	The dry specimen breaks into pieces or crumbles with considerable finger pressure
High	The dry specimen cannot be broken with finger pressure. Specimen will break into pieces between thumb and a hard surface
Very high	The dry specimen cannot be broken between the thumb and a hard surface

TABLE 9 Criteria for Describing Dilatancy

Description	Criteria
None	No reaction [illegible]
Slow	Water appears slowly on the surface of the specimen during shaking and does not disappear or disappears slowly upon squeezing
Rapid	Water appears quickly on the surface of the specimen during shaking and disappears quickly upon squeezing

TABLE 10 Criteria for Describing Toughness

Description	Criteria
Low	Only slight pressure is required to roll the thread near the plastic limit. The thread and the lump are weak and soft
Medium	Medium pressure is required to roll the thread to near the plastic limit. The thread and the lump have medium stiffness
High	Considerable pressure is required to roll the thread to near the plastic limit. The thread and the lump have very high stiffness

striking the side of the hand vigorously against the other hand several times. Note the reaction of water appearing on the surface of the soil. Squeeze the sample by closing the hand or pinching the soil between the fingers, and note the reaction as none, slow, or rapid in accordance with the criteria in Table 9. The reaction is the speed with which water appears while shaking, and disappears while squeezing.

14.4 *Toughness:*

14.4.1 Following the completion of the dilatancy test, the test specimen is shaped into an elongated pat and rolled by hand on a smooth surface or between the palms into a thread about ⅛ in. (3 mm) in diameter. (If the sample is too wet to roll easily, it should be spread into a thin layer and allowed to lose some water by evaporation.) Fold the sample threads and reroll repeatedly until the thread crumbles at a diameter of about ⅛ in. The thread will crumble at a diameter of ⅛ in. when the soil is near the plastic limit. Note the pressure required to roll the thread near the plastic limit. Also, note the strength of the thread. After the thread crumbles, the pieces should be lumped together and kneaded until the lump crumbles. Note the toughness of the material during kneading.

14.4.2 Describe the toughness of the thread and lump as low, medium, or high in accordance with the criteria in Table 10.

14.5 *Plasticity*—On the basis of observations made during the toughness test, describe the plasticity of the material in accordance with the criteria given in Table 11.

TABLE 11 Criteria for Describing Plasticity

Description	Criteria
Nonplastic	A ⅛-in. (3-mm) thread cannot be rolled at any water content
Low	The thread can barely be rolled and the lump cannot be formed when drier than the plastic limit
Medium	The thread is easy to roll and not much time is required to reach the plastic limit. The thread cannot be rerolled after reaching the plastic limit. The lump crumbles when drier than the plastic limit
High	It takes considerable time rolling and kneading to reach the plastic limit. The thread can be rerolled several times after reaching the plastic limit. The lump can be formed without crumbling when drier than the plastic limit

14.6 [illegible] fine-grained [illegible] given in 14.7.

14.7 *Identification of Inorganic Fine-Grained Soils:*

14.7.1 Identify the soil as a *lean clay*, CL, if the soil has medium to high dry strength, no or slow dilatancy, and medium toughness and plasticity (see Table 12).

14.7.2 Identify the soil as a *fat clay*, CH, if the soil has high to very high dry strength, no dilatancy, and high toughness and plasticity (see Table 12).

14.7.3 Identify the soil as a *silt*, ML, if the soil has no to low dry strength, slow to rapid dilatancy, and low toughness and plasticity, or is nonplastic (see Table 12).

14.7.4 Identify the soil as an *elastic silt*, MH, if the soil has low to medium dry strength, no to slow dilatancy, and low to medium toughness and plasticity (see Table 12).

NOTE 11—These properties are similar to those for a lean clay. However, the silt will dry quickly on the hand and have a smooth, silky feel when dry. Some soils that would classify as MH in accordance with the criteria in Test Method D 2487 are visually difficult to distinguish from lean clays, CL. It may be necessary to perform laboratory testing for proper identification.

14.8 *Identification of Organic Fine-Grained Soils:*

14.8.1 Identify the soil as an *organic soil*, OL/OH, if the soil contains enough organic particles to influence the soil properties. Organic soils usually have a dark brown to black color and may have an organic odor. Often, organic soils will change color, for example, black to brown, when exposed to the air. Some organic soils will lighten in color significantly when air dried. Organic soils normally will not have a high toughness or plasticity. The thread for the toughness test will be spongy.

NOTE 12—In some cases, through practice and experience, it may be possible to further identify the organic soils as organic silts or organic clays, OL or OH. Correlations between the dilatancy, dry strength, toughness tests, and laboratory tests can be made to identify organic soils in certain deposits of similar materials of known geologic origin.

14.9 If the soil is estimated to have 15 to 25 % sand or gravel, or both, the words "with sand" or "with gravel" (whichever is more predominant) shall be added to the group name. For example: "lean clay with sand, CL" or "silt with gravel, ML" (see Figs. 1a and 1b). If the percentage of sand is equal to the percentage of gravel, use "with sand."

14.10 If the soil is estimated to have 30 % or more sand or gravel, or both, the words "sandy" or "gravelly" shall be added to the group name. Add the word "sandy" if there appears to be more sand than gravel. Add the word "gravelly" if there appears to be more gravel than sand. For example: "sandy lean clay, CL", "gravelly fat clay, CH", or "sandy silt, ML" (see Figs. 1a and 1b). If the percentage of sand is equal to the percent of gravel, use "sandy."

TABLE 12 Identification of Inorganic Fine-Grained Soils from Manual Tests

Soil Symbol	Dry Strength	Dilatancy	Toughness
ML	None to low	Slow to rapid	Low or thread cannot be formed
CL	Medium to high	None to slow	Medium
MH	Low to medium	None to slow	Low to medium
CH	High to very high	None	High

15. Procedure [illegible] Coarse-Grained Soils [illegible]

[illegible] The soil is a gravel if the percentage of gravel is estimated to be more than the percentage of sand.

15.2 The soil is a sand if the percentage of gravel is estimated to be equal to or less than the percentage of sand.

15.3 The soil is a *clean gravel* or *clean sand* if the percentage of fines is estimated to be 5 % or less.

15.3.1 Identify the soil as a *well-graded gravel*, GW, or as a *well-graded sand*, SW, if it has a wide range of particle sizes and substantial amounts of the intermediate particle sizes.

15.3.2 Identify the soil as a *poorly graded gravel*, GP, or as a *poorly graded sand*, SP, if it consists predominantly of one size (uniformly graded), or it has a wide range of sizes with some intermediate sizes obviously missing (gap or skip graded).

15.4 The soil is either a *gravel with fines* or a *sand with fines* if the percentage of fines is estimated to be 15 % or more.

15.4.1 Identify the soil as a *clayey gravel*, GC, or a *clayey sand*, SC, if the fines are clayey as determined by the procedures in Section 14.

15.4.2 Identify the soil as a *silty gravel*, GM, or a *silty sand*, SM, if the fines are silty as determined by the procedures in Section 14.

15.5 If the soil is estimated to contain 10 % fines, give the soil a dual identification using two group symbols.

15.5.1 The first group symbol shall correspond to a clean gravel or sand (GW, GP, SW, SP) and the second symbol shall correspond to a gravel or sand with fines (GC, GM, SC, SM).

15.5.2 The group name shall correspond to the first group symbol plus the words "with clay" or "with silt" to indicate the plasticity characteristics of the fines. For example: "well-graded gravel with clay, GW-GC" or "poorly graded sand with silt, SP-SM" (see Fig. 2).

15.6 If the specimen is predominantly sand or gravel but contains an estimated 15 % or more of the other coarse-grained constituent, the words "with gravel" or "with sand" shall be added to the group name. For example: "poorly graded gravel with sand, GP" or "clayey sand with gravel, SC" (see Fig. 2).

15.7 If the field sample contains any cobbles or boulders, or both, the words "with cobbles" or "with cobbles and boulders" shall be added to the group name. For example: "silty gravel with cobbles, GM."

16. Report

16.1 The report shall include the information as to origin, and the items indicated in Table 13.

NOTE 13—*Example: Clayey Gravel with Sand and Cobbles, GC*—About 50 % fine to coarse, subrounded to subangular gravel; about 30 % fine to coarse, subrounded sand; about 20 % fines with medium plasticity, high dry strength, no dilatancy, medium toughness; weak reaction with HCl; original field sample had about 5 % (by volume) subrounded cobbles, maximum dimension, 150 mm.

In-Place Conditions—Firm, homogeneous, dry, brown

Geologic Interpretation—Alluvial fan

NOTE 14—Other examples of soil descriptions and identification are given in Appendixes X1 and X2.

NOTE 15—If desired, the percentages of gravel, sand, and fines may be stated in terms indicating a range of percentages, as follows:

Trace—Particles are present but estimated to be less than 5 %
Few—5 to 10 %
Little—15 to 25 %
Some—30 to 45 %
Mostly—50 to 100 %

TABLE 13 Checklist for Descriptionist [illegible]

1.	[illegible]
2.	[illegible]
3.	Percent of cobbles or boulders, or both [illegible]
4.	Percent of gravel, sand, or fines, or all three [illegible]
5.	Particle size range
	Gravel—fine, coarse
	Sand—fine, medium, coarse
6.	Particle angularity: angular, subangular, subrounded, rounded
7.	Particle shape: (if appropriate) flat, elongated, flat and elongated
8.	Maximum particle size or dimension
9.	Hardness of coarse sand and larger particles
10.	Plasticity of fines: nonplastic, low, medium, high
11.	Dry strength: none, low, medium, high, very high
12.	Dilatancy: none, slow, rapid
13.	Toughness: low, medium, high
14.	Color (in moist condition)
15.	Odor (mention only if organic or unusual)
16.	Moisture: dry, moist, wet
17.	Reaction with HCl: none, weak, strong
For intact samples:	
18.	Consistency (fine-grained soils only): very soft, soft, firm, hard, very hard
19.	Structure: stratified, laminated, fissured, slickensided, lensed, homogeneous
20.	Cementation: weak, moderate, strong
21.	Local name
22.	Geologic interpretation
23.	Additional comments: presence of roots or root holes, presence of mica, gypsum, etc., surface coatings on coarse-grained particles, caving or sloughing of auger hole or trench sides, difficulty in augering or excavating, etc.

16.2 If, in the soil description, the soil is identified using a classification group symbol and name as described in Test Method D 2487, it must be distinctly and clearly stated in log forms, summary tables, reports, and the like, that the symbol and name are based on visual-manual procedures.

17. Precision and Bias

17.1 This practice provides qualitative information only, therefore, a precision and bias statement is not applicable.

18. Index Terms

18.1 Classification, soil classification, visual classification, soil description, clay, silt, sand, gravel, organic soils.

APPENDIXES

(Nonmandatory Information)

X1. EXAMPLES OF VISUAL SOIL DESCRIPTIONS

X1.1 The following examples show how the information required in 16.1 can be reported. The information that is included in descriptions should be based on individual circumstances and need.

X1.1.1 *Well-Graded Gravel with Sand (GW)*—About 75 % fine to coarse, hard, subangular gravel; about 25 % fine to coarse, hard, subangular sand; trace of fines; maximum size, 75 mm, brown, dry; no reaction with HCl.

X1.1.2 *Silty Sand with Gravel (SM)*—About 60 % predominantly fine sand; about 25 % silty fines with low plasticity, low dry strength, rapid dilatancy, and low toughness; about 15 % fine, hard, subrounded gravel, a few gravel-size particles fractured with hammer blow; maximum size, 25 mm; no reaction with HCl (Note—Field sample size smaller than recommended).

In-Place Conditions—Firm, stratified and contains lenses of silt 1 to 2 in. (25 to 50 mm) thick, moist, brown to gray; in-place density 106 lb/ft^3; in-place moisture 9 %.

X1.1.3 *Organic Soil (OL/OH)*—About 100 % fines with low plasticity, slow dilatancy, low dry strength, and low toughness; wet, dark brown, organic odor; weak reaction with HCl.

X1.1.4 *Silty Sand with Organic Fines (SM)*—About 75 % fine to coarse, hard, subangular reddish sand; about 25 % organic and silty dark brown nonplastic fines with no dry strength and slow dilatancy; wet; maximum size, coarse sand; weak reaction with HCl.

X1.1.5 *Poorly Graded Gravel with Silt, Sand, Cobbles and Boulders (GP-GM)*—About 75 % fine to coarse, hard, subrounded to subangular gravel; about 15 % fine, h[illegible] subrounded to subangular sand; about 10 % silty nonpla[illegible] fines; moist, brown; no reaction with HCl; original field sample had about 5 % (by volume) hard, subrounded cobbles and a trace of hard, subrounded boulders, with a maximum dimension of 18 in. (450 mm).

X2. USING THE IDENTIFICATION PROCEDURE AS A DESCRIPTIVE SYSTEM FOR SHALE, CLAYSTONE, SHELLS, SLAG, CRUSHED ROCK, AND THE LIKE

X2.1 The identification procedure may be used as a descriptive system applied to materials that exist in-situ as shale, claystone, sandstone, siltstone, mudstone, etc., but convert to soils after field or laboratory processing (crushing, slaking, and the like).

X2.2 Materials such as shells, crushed rock, slag, and the like, should be identified as such. However, the procedures used in this practice for describing the particle size and plasticity characteristics may be used in the description of the material. If desired, an identification using a group name and symbol according to this practice may be assigned to aid in describing the material.

X2.3 The group symbol(s) and group names should be placed in quotation marks or noted with some type of distinguishing symbol. See examples.

X2.4 Examples of how group names and symbols can be incororated into a descriptive system for materials that are not naturally occurring soils are as follows:

X2.4.1 *Shale Chunks*—Retrieved as 2 to 4-in. (50 to 100-mm) pieces of shale from power auger hole, dry, brown, no reaction with HCl. After slaking in water for 24 h, material identified as "Sandy Lean Clay (CL)"; about 60 % fines with medium plasticity, high dry strength, no dilatancy, and medium toughness; about 35 % fine to medium, hard sand; about 5 % gravel-size pieces of shale.

X2.4.2 *Crushed Sandstone*—Product of comme. crushing operation; "Poorly Graded Sand with Silt (SP-SM)"; about 90 % fine to medium sand; about 10 % nonplastic fines; dry, reddish-brown, strong reaction with HCl.

X2.4.3 *Broken Shells*—About 60 % gravel-size broken shells; about 30 % sand and sand-size shell pieces; about 10 % fines; "Poorly Graded Gravel with Sand (GP)."

X2.4.4 *Crushed Rock*—Processed from gravel and cobbles in Pit No. 7; "Poorly Graded Gravel (GP)"; about 90 % fine, hard, angular gravel-size particles; about 10 % coarse, hard, angular sand-size particles; dry, tan; no reaction with HCl.

X3. SUGGESTED PROCEDURE FOR USING A BORDERLINE SYMBOL FOR SOILS WITH TWO POSSIBLE IDENTIFICATIONS.

X3.1 Since this practice is based on estimates of particle size distribution and plasticity characteristics, it may be difficult to clearly identify the soil as belonging to one category. To indicate that the soil may fall into one of two possible basic groups, a borderline symbol may be used with the two symbols separated by a slash. For example: SC/CL or CL/CH.

X3.1.1 A borderline symbol may be used when the

[illegible] and [illegible] fine-grained soil. For example: GM/ML or CL/SC.

X3.1.2 A borderline symbol may be used when the percentage of sand and the percentage of gravel are estimated to be about the same. For example: GP/SP, SC/GC, GM/SM. It is practically impossible to have a soil that would have a borderline symbol of GW/SW.

X3.1.3 A borderline symbol may be used when the soil could be either well graded or poorly graded. For example: GW/GP, SW/SP.

X3.1.4 A borderline symbol may be used when the soil could either be a silt or a clay. For example: CL/ML, CH/MH, SC/SM.

X3.1.5 A borderline symbol may be used when a fine-[illegible] that indicate [illegible] compressibility [illegible] high compressibility. For example: CL/CH, MH/ML.

X3.2 The order of the borderline symbols should reflect similarity to surrounding or adjacent soils. For example, soils in a borrow area have been identified as CH. One sample is considered to have a borderline symbol of CL and CH. To show similarity, the borderline symbol should be CH/CL.

X3.3 The group name for a soil with a borderline symbol should be the group name for the first symbol, except for:

CL/CH lean to fat clay
ML/CL clayey silt
CL/ML silty clay

X3.4 The use of a borderline symbol should not be used indiscriminately. Every effort shall be made to first place the soil into a single group.

X4. SUGGESTED PROCEDURES FOR ESTIMATING THE PERCENTAGES OF GRAVEL, SAND, AND FINES IN A SOIL SAMPLE

X4.1 *Jar Method*—The relative percentage of coarse- and fine-grained material may be estimated by thoroughly shaking a mixture of soil and water in a test tube or jar, and then allowing the mixture to settle. The coarse particles will fall to the bottom and successively finer particles will be deposited with increasing time; the sand sizes will fall out of suspension in 20 to 30 s. The relative proportions can be estimated from the relative volume of each size separate. This method should be correlated to particle-size laboratory determinations.

X4.2 *Visual Method*—Mentally visualize the gravel size particles placed in a sack (or other container) or sacks. Then, do the same with the sand size particles and the fines. Then, mentally compare the number of sacks to estimate the percentage of plus No. 4 sieve size and minus No. 4 sieve size present. The percentages of sand and fines in the minus sieve size No. 4 material can then be estimated from the wash test (X4.3).

X4.3 *Wash Test (for relative percentages of sand and fines)*—Select and moisten enough minus No. 4 sieve size material to form a 1-in (25-mm) cube of soil. Cut the cube in half, set one-half to the side, and place the other half in a small dish. Wash and decant the fines out of the material in the dish until the wash water is clear and then compare the two samples and estimate the percentage of sand and fines. Remember that the percentage is based on weight, not volume. However, the volume comparison will provide a reasonable indication of grain size percentages.

X4.3.1 While washing, it may be necessary to break down lumps of fines with the finger to get the correct percentages.

The American Society for Testing and Materials takes no position respecting the validity of any patent rights asserted in connection with any item mentioned in this standard. Users of this standard are expressly advised that determination of the validity of any such patent rights, and the risk of infringement of such rights, are entirely their own responsibility.

This standard is subject to revision at any time by the responsible technical committee and must be reviewed every five years and if not revised, either reapproved or withdrawn. Your comments are invited either for revision of this standard or for additional standards and should be addressed to ASTM Headquarters. Your comments will receive careful consideration at a meeting of the responsible technical committee, which you may attend. If you feel that your comments have not received a fair hearing you should make your views known to the ASTM Committee on Standards, 1916 Race St., Philadelphia, PA 19103.

Standard Test Method for Liquid Limit, Plastic Limit, and Plasticity Index of Soils[1]

This standard is issued under the fixed designation D 4318; the number immediately following the designation indicates the year of original adoption or, in the case of revision, the year of last revision. A number in parentheses indicates the year of last reapproval. A superscript epsilon (ε) indicates an editorial change since the last revision or reapproval.

This test method has been approved for use by agencies of the Department of Defense and for listing in the DoD Index of Specifications and Standards.

1. Scope

1.1 This test method covers the determination of the liquid limit, plastic limit, and the plasticity index of soils as defined in Section 3.

1.1.1 Two procedures for preparing test specimens and two procedures for performing the liquid limit are provided as follows:

A Multipoint test using a wet preparation procedure, described in Sections 10.1, 11, and 12.

B Multipoint test using a dry preparation procedure, described in Sections 10.2, 11, and 12.

C One-point test using a wet preparation procedure, described in Sections 13, 14, and 15.

D One-point test using a dry preparation procedure, described in Sections 13, 14, and 15.

The procedure to be used shall be specified by the requesting authority. If no procedure is specified, Procedure A shall be used.

NOTE 1—Prior to the adoption of this test method, a curved grooving tool was specified as part of the apparatus for performing the liquid limit test. The curved tool is not considered to be as accurate as the flat tool described in 6.2 since it does not control the depth of the soil in the liquid limit cup. However, there are some data which indicate that typically the liquid limit is slightly increased when the flat tool is used instead of the curved tool.

1.1.2 The plastic limit test procedure is described in Sections 16, 17, and 18. The plastic limit test is performed on material prepared for the liquid limit test. In effect, there are two procedures for preparing test specimens for the plastic limit test.

1.1.3 The procedure for calculating the plasticity index is given in Section 19.

1.2 The liquid limit and plastic limit of soils (along with the shrinkage limit) are often collectively referred to as the Atterberg limits in recognition of their formation by Swedish soil scientist, A. Atterberg. These limits distinguish the boundaries of the several consistency states of plastic soils.

1.3 As used in this test method, soil is any natural aggregation of mineral or organic materials, mixtures of such materials, or artificial mixtures of aggregates and natural mineral and organic particles.

1.4 The multipoint liquid limit procedure is somewhat more time consuming than the one-point procedure when both are performed by experienced operators. However, the one-point procedure requires the operator to judge when the test specimen is approximately at its liquid limit. In cases where this is not done reliably, the multipoint procedure is as fast as the one-point procedure and provides additional precision due to the information obtained from additional trials. It is particularly recommended that the multipoint procedure be used by inexperienced operators.

1.5 The correlations on which the calculations of the one-point procedure are based may not be valid for certain soils, such as organic soils or soils from a marine environment. The liquid limit of these soils should therefore be determined by the multipoint procedure (Procedure A).

1.6 The liquid and plastic limits of many soils that have been allowed to dry before testing may be considerably different from values obtained on undried samples. If the liquid and plastic limits of soils are used to correlate or estimate the engineering behavior of soils in their natural moist state, samples should not be permitted to dry before testing unless data on dried samples are specifically desired.

1.7 The composition and concentration of soluble salts in a soil affect the values of the liquid and plastic limits as well as the water content values of soils (see Method D 2216). Special consideration should therefore be given to soils from a marine environment or other sources where high soluble salt concentrations may be present. The degree to which the salts present in these soils are diluted or concentrated must be given consideration if meaningful results are to be obtained.

1.8 Since the tests described herein are performed only on that portion of a soil which passes the 425-μm (No. 40) sieve, the relative contribution of this portion of the soil to the properties of the sample as a whole must be considered when using these tests to evaluate the properties of a soil.

1.9 The values stated in acceptable metric units are to be regarded as the standard. The values given in parentheses are for information only.

1.10 *This standard may involve hazardous materials, operations, and equipment. This standard does not purport to address all of the safety problems associated with its use. It is the responsibility of whoever uses this standard to consult and establish appropriate safety and health practices and determine the applicability of regulatory limitations prior to use.*

[1] This test method is under the jurisdiction of ASTM Committee D-18 on Soil and Rock and is the direct responsibility of Subcommittee D18.03 on Texture, Plasticity, and Density Characteristics of Soils.

Current edition approved Oct. 26, 1984. Published December 1984. Originally published as D 4318 - 83. Last previous edition D 4318 - 83ε[1].

2. Referenced Documents

[illegible]

[illegible] Methods for Reducing Field Samples of Aggregates to Testing Size[2]

D 75 Practice for Sampling Aggregates[2]

D 420 Practice for Investigating and Sampling Soil and Rock for Engineering Purposes[4]

D 653 Terminology Relating to Soil, Rock, and Contained Fluids[4]

D 1241 Specification for Materials for Soil-Aggregate Subbase, Base, and Surface Courses[4]

D 2216 Method for Laboratory Determination of Water (Moisture) Content of Soil, Rock, and Soil-Aggregate Mixtures[4]

D 2240 Test Method for Rubber Property—Durometer Hardness[5]

D 2487 Test Method for Classification of Soils for Engineering Purposes[4]

D 2488 Practice for Description and Identification of Soils (Visual-Manual Procedure)[4]

D 3282 Practice for Classification of Soils and Soil-Aggregate Mixtures for Highway Construction Purposes[4]

E 11 Specification for Wire-Cloth Sieves for Testing Purposes[6]

E 319 Methods of Testing Single-Arm Balances[6]

E 898 Method of Testing Top-Loading, Direct-Reading Laboratory Scales and Balances[6]

3. Definitions

3.1 *Atterberg limits*—originally, seven "limits of consistency" of fine-grained soils were defined by Albert Atterberg. In current engineering usage, the term usually refers only to the liquid limit, plastic limit, and in some references, the shrinkage limit.

3.2 *consistency*—the relative ease with which a soil can be deformed.

3.3 *liquid limit (LL)*—the water content, in percent, of a soil at the arbitrarily defined boundary between the liquid and plastic states. This water content is defined as the water content at which a pat of soil placed in a standard cup and cut by a groove of standard dimensions will flow together at the base of the groove for a distance of 13 mm (½ in.) when subjected to 25 shocks from the cup being dropped 10 mm in a standard liquid limit apparatus operated at a rate of 2 shocks per second.

NOTE 2—The undrained shear strength of soil at the liquid limit is considered to be 2 ± 0.2 kPa (0.28 psi).

3.4 *plastic limit (PL)*—the water content, in percent, of a soil at the boundary between the plastic and brittle states. The water content at this boundary is the water content at which a soil can no longer be deformed by rolling into 3.2 mm (⅛ in.) in diameter threads without crumbling.

3.5 *plastic soil*—a soil which has a range of water content over which it exhibits plasticity and which will retain its shape on drying.

[illegible] *plasticity index*—the difference between the liquid limit and the plastic limit.

3.7 *liquidity index*—the ratio, expressed as a percentage, of (1) the natural water content of a soil minus its plastic limit, to (2) its plasticity index.

3.8 *activity number (A)*—the ratio of (1) the plasticity index of a soil to (2) the percent by weight of particles having an equivalent diameter smaller than 0.002 mm.

4. Summary of Method

4.1 The sample is processed to remove any material retained on a 425-µm (No. 40) sieve. The liquid limit is determined by performing trials in which a portion of the sample is spread in a brass cup, divided in two by a grooving tool, and then allowed to flow together from the shocks caused by repeatedly dropping the cup in a standard mechanical device. The multipoint liquid limit, Procedures A and B, requires three or more trials over a range of water contents to be performed and the data from the trials plotted or calculated to make a relationship from which the liquid limit is determined. The one-point liquid limit, Procedures C and D, uses the data from two trials at one water content multiplied by a correction factor to determine the liquid limit.

4.2 The plastic limit is determined by alternately pressing together and rolling into a 3.2 mm (⅛ in.) diameter thread a small portion of plastic soil until its water content is reduced to a point at which the thread crumbles and is no longer able to be pressed together and rerolled. The water content of the soil at this stage is reported as the plastic limit.

4.3 The plasticity index is calculated as the difference between the liquid limit and the plastic limit.

5. Significance and Use

5.1 This test method is used as an integral part of several engineering classification systems to characterize the fine-grained fractions of soils (see Test Method D 2487 and Practice D 3282) and to specify the fine-grained fraction of construction materials (see Specification D 1241). The liquid limit, plastic limit, and plasticity index of soils are also used extensively, either individually or together with other soil properties to correlate with engineering behavior such as compressibility, permeability, compactibility, shrink-swell, and shear strength.

5.2 The liquid and plastic limits of a soil can be used with the natural water content of the soil to express its relative consistency or liquidity index and can be used with the percentage finer than 2-µm size to determine its activity number.

5.3 The one-point liquid limit procedure is frequently used for routine classification purposes. When greater precision is required, as when used for the acceptance of a material or for correlation with other test data, the multipoint procedure should be used.

5.4 These methods are sometimes used to evaluate the weathering characteristics of clay-shale materials. When subjected to repeated wetting and drying cycles, the liquid limits of these materials tend to increase. The amount of increase is considered to be a measure of a shale's susceptibility to weathering.

[2] *Annual Book of ASTM Standards*, Vol 04.02.
[3] *Annual Book of ASTM Standards*, Vols 04.02, 04.03, and 04.08.
[4] *Annual Book of ASTM Standards*, Vol 04.08.
[5] *Annual Book of ASTM Standards*, Vol 09.01.
[6] *Annual Book of ASTM Standards*, Vol 14.02.

[illegible] amount of organic matter decreases dramatically when the soil is oven-dried before testing. Comparison of the liquid limit of a sample before and after oven-drying can therefore be used as a qualitative measure of organic matter content of a soil.

6. Apparatus

6.1 *Liquid Limit Device*—A mechanical device consisting of a brass cup suspended from a carriage designed to control its drop onto a hard rubber base. A drawing showing the essential features of the device and the critical dimensions is given in Fig. 1. The design of the device may vary provided that the essential functions are preserved. The device may be operated either by a hand crank or by an electric motor.

6.1.1 *Base*—The base shall be hard rubber having a D Durometer hardness of 80 to 90, and a resilience such that an 8-mm (5/16-in.) diameter polished steel ball, when dropped from a height of 25 cm (9.84 in.) will have an average rebound of at least 80 % but no more than 90 %. The tests shall be conducted on the finished base with feet attached.

6.1.2 *Feet*—The base shall be supported by rubber feet designed to provide isolation of the base from the work surface and having an A Durometer hardness no greater than 60 as measured on the finished feet attached to the base.

6.1.3 *Cup*—The cup shall be brass and have a weight, including cup hanger, of 185 to 215 g.

6.1.4 *Cam*—The cam shall raise the cup smoothly and continuously to its maximum height, over a distance of at [illegible] cam rotation [illegible] uniformly accelerated lift curve. The design of the cam and follower combination shall be such that there is no upward or downward velocity of the cup when the cam follower leaves the cam.

NOTE 3—The cam and follower design in Fig. 1 is for uniformly accelerated (parabolic) motion after contact and assures that the cup has no velocity at drop off. Other cam designs also provide this feature and may be used. However, if the cam-follower lift pattern is not known, zero velocity at drop off can be assured by carefully filing or machining the cam and follower so that the cup height remains constant over the last 20 to 45° of cam rotation.

6.1.5 *Carriage*—The cup carriage shall be constructed in a way that allows convenient but secure adjustment of the height of drop of the cup to 10 mm (0.394 in.). The cup hanger shall be attached to the carriage by means of a pin which allows removal of the cup and cup hanger for cleaning and inspection.

6.1.6 *Optional Motor Drive*—As an alternative to the hand crank shown in Fig. 1, the device may be equipped with a motor to turn the cam. Such a motor must turn the cam at 2 ± 0.1 revolutions per second and must be isolated from the rest of the device by rubber mounts or in some other way that prevents vibration from the motor being transmitted to the rest of the apparatus. It must be equipped with an ON-OFF switch and a means of conveniently positioning the cam for height of drop adjustments. The results obtained using a motor-driven device must not differ from those obtained using a manually operated device.

DIMENSIONS

LETTER	A[a]	B[a]	C[a]	E[a]	F	G	H	J[a]	K[a]	L[a]	M[a]
MM	54 ± 0.5	2 ± 0.1	27 ± 0.5	56 ± 2.0	32	10	16	60 ± 1.0	50 ± 2.0	150 ± 2.0	125 ± 2.0

LETTER	N	P	R	T	U[a]	V	W	Z
MM	24	28	24	45	47 ± 1.0	3.8	13	6.5

[a] ESSENTIAL DIMENSIONS

CAM ANGLE DEGREES	CAM RADIUS
0	0.742 R
30	0.753 R
60	0.764 R
90	0.773 R
120	0.784 R
150	0.796 R
180	0.818 R
210	0.854 R
240	0.901 R
270	0.945 R
300	0.974 R
330	0.995 R
360	1.000 R

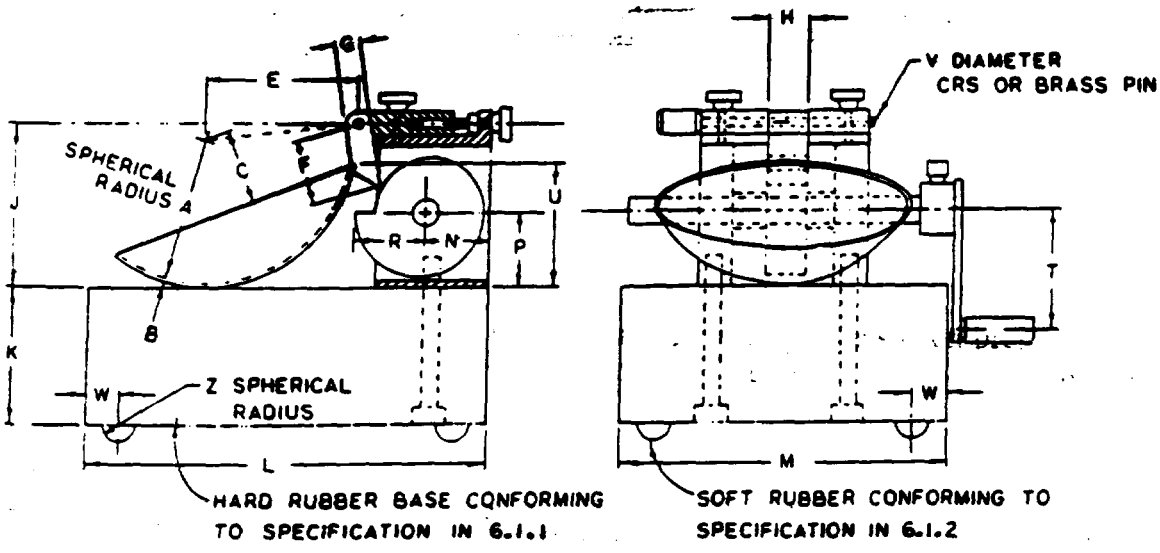

FIG. 1 Hand-Operated Liquid Limit Device

LETTER	G	H	J	K	L	N
MM	10 MINIMUM	13	60	10 ±0.05	60 DEG ±1 DEG	20

[A] ESSENTIAL DIMENSIONS

[a] BACK AT LEAST 15 MM FROM TIP

NOTE: DIMENSION A SHOULD BE 1.9–2.0 AND DIMENSION D SHOULD BE 6.0–6.1 WHEN NEW TO ALLOW FOR ADEQUATE SERVICE LIFE

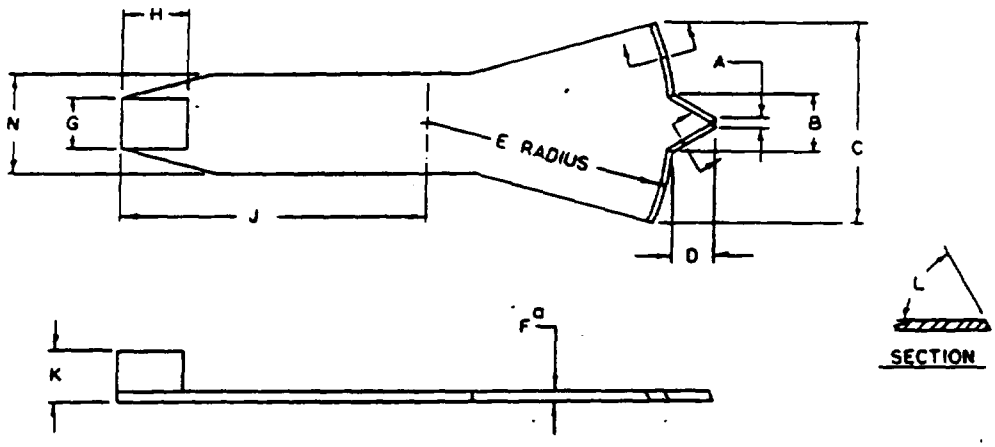

FIG. 2 Grooving Tool (Optional Height-of-Drop Gage Attached)

6.2 *Flat Grooving Tool*—A grooving tool having dimensions shown in Fig. 2. The tool shall be made of plastic or noncorroding metal. The design of the tool may vary as long as the essential dimensions are maintained. The tool may, but need not, incorporate the gage for adjusting the height of drop of the liquid limit device.

6.3 *Gage*—A metal gage block for adjusting the height of drop of the cup, having the dimensions shown in Fig. 3. The design of the tool may vary provided the gage will rest securely on the base without being susceptible to rocking, and the edge which contacts the cup during adjustment is straight, at least 10 mm (⅜ in.) wide, and without bevel or radius.

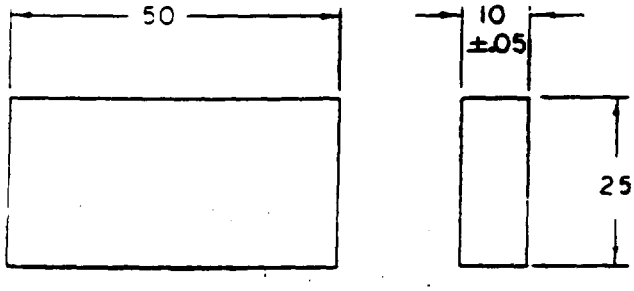

DIMENSIONS IN MILLIMETRES

FIG. 3 Height of Drop Gage

6.4 *Containers*—Small corrosion-resistant containers with snug-fitting lids for water content specimens. Aluminum or stainless steel cans 2.5 cm (1 in.) high by 5 cm (2 in.) in diameter are appropriate.

6.5 *Balance*—A balance readable to at least 0.01 g and having an accuracy of 0.03 g within three standard deviations within the range of use. Within any 15-g range, a difference between readings shall be accurate within 0.01 g (Notes 4 and 5).

NOTE 4—See Methods E 898 and E 319 for an explanation of terms relating to balance performance.

NOTE 5—For frequent use, a top-loading type balance with automatic load indication, readable to 0.01 g, and having an index of precision (standard deviation) of 0.003 or better is most suitable for this method. However, nonautomatic indicating equal-arm analytical balances and some small equal arm top pan balances having readabilities and sensitivities of 0.002 g or better provide the required accuracy when used with a weight set of ASTM Class 4 (National Bureau of Standards Class P) or better. Ordinary commercial and classroom type balances such as beam balances are not suitable for this method.

6.6 *Storage Container*—A container in which to store the prepared soil specimen that will not contaminate the specimen in any way, and which prevents moisture loss. A porcelain, glass, or plastic dish about 11.4 cm (4½ in.) in diameter and a plastic bag large enough to enclose the dish and be folded over is adequate.

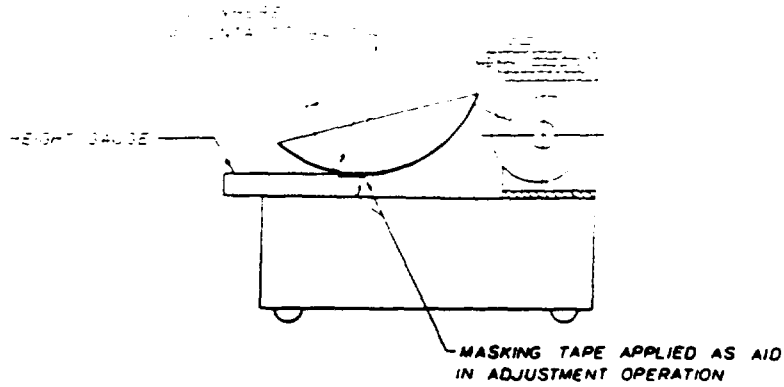

FIG. 4 Calibration for Height of Drop

6.7 *Ground Glass Plate*—A ground glass plate at least 30 cm (12 in.) square by 1 cm (⅜ in.) thick for mixing soil and rolling plastic limit threads.

6.8 *Spatula*—A spatula or pill knife having a blade about 2 cm (¾ in.) wide by about 10 cm (4 in.) long. In addition, a spatula having a blade about 2.5 cm (1 in.) wide and 15 cm (6 in.) long has been found useful for initial mixing of samples.

6.9 *Sieve*—A 20.3 cm (8 in.) diameter, 425-µm (No. 40) sieve conforming to the requirements of Specification E 11 and having a rim at least 5 cm (2 in.) above the mesh. A 2-mm (No. 10) sieve meeting the same requirements may also be needed.

6.10 *Wash Bottle*, or similar container for adding controlled amounts of water to soil and washing fines from coarse particles.

6.11 *Drying Oven*—A thermostatically controlled oven, preferably of the forced-draft type, capable of continuously maintaining a temperature of 110 ± 5°C throughout the drying chamber. The oven shall be equipped with a thermometer of suitable range and accuracy for monitoring oven temperature.

6.12 *Washing Pan*—A round, flat-bottomed pan at least 7.6 cm (3 in.) deep, slightly larger at the bottom than a 20.3-cm (8-in.) diameter sieve.

6.13 *Rod* (optional)—A metal or plastic rod or tube 3.2 mm (⅛ in.) in diameter and about 10 cm (4 in.) long for judging the size of plastic limit threads.

7. Materials

7.1 A supply of distilled or demineralized water.

8. Sampling

8.1 Samples may be taken from any location that satisfies testing needs. However, Methods C 702, Practice D 75, and Recommended Practice D 420 should be used as guides for selecting and preserving samples from various types of sampling operations. Samples which will be prepared using the wet preparation procedure, 10.1, must be kept at their natural water content prior to preparation.

8.2 Where sampling operations have preserved the natural stratification of a sample, the various strata must be kept separated and tests performed on the particular stratum of interest with as little contamination as possible from other strata. Where a mixture of materials will be used in construction, combine the various components in such proportions that the resultant sample represents the actual construction case.

8.3 Where data from this test method are to be used for correlation with other laboratory or field test data, use the same material as used for these tests where possible.

8.4 Obtain a representative portion from the total sample sufficient to provide 150 to 200 g of material passing the 425-µm (No. 40) sieve. Free flowing samples may be reduced by the methods of quartering or splitting. Cohesive samples shall be mixed thoroughly in a pan with a spatula, or scoop and a representative portion scooped from the total mass by making one or more sweeps with a scoop through the mixed mass.

9. Calibration of Apparatus

9.1 *Inspection of Wear:*

9.1.1 *Liquid Limit Device*—Determine that the liquid limit device is clean and in good working order. The following specific points should be checked:

9.1.1.1 *Wear of Base*—The spot on the base where the cup makes contact should be worn no greater than 10 mm (⅜ in.) in diameter. If the wear spot is greater than this, the base can be machined to remove the worn spot provided the resurfacing does not make the base thinner than specified in 6.1 and the other dimensional relationships are maintained.

9.1.1.2 *Wear of Cup*—The cup must be replaced when the grooving tool has worn a depression in the cup 0.1 mm (0.004 in.) deep or when the edge of the cup has been reduced to half its original thickness. Verify that the cup is firmly attached to the cup hanger.

9.1.1.3 *Wear of Cup Hanger*—Verify that the cup hanger pivot does not bind and is not worn to an extent that allows more than 3-mm (⅛-in.) side-to-side movement of the lowest point on the rim.

9.1.1.4 *Wear of Cam*—The cam shall not be worn to an extent that the cup drops before the cup hanger (cam follower) loses contact with the cam.

9.1.2 *Grooving Tools*—Inspect grooving tools for wear on a frequent and regular basis. The rapidity of wear depends on the material from which the tool is made and the types of soils being tested. Sandy soils cause rapid wear of grooving tools; therefore, when testing these materials, tools should be inspected more frequently than for other soils. Any tool with a tip width greater than 2.1 mm must not be used. The depth

[illegible] The depth [illegible] grooving tools can be checked using the depth measuring feature of vernier calipers.

9.2 *Adjustment of Height of Drop*—Adjust the height of drop of the cup so that the point on the cup that comes in contact with the base rises to a height of 10 ± 0.2 mm. See Fig. 4 for proper location of the gage relative to the cup during adjustment.

NOTE 7—A convenient procedure for adjusting the height of drop is as follows: place a piece of masking tape across the outside bottom of the cup parallel with the axis of the cup hanger pivot. The edge of the tape away from the cup hanger should bisect the spot on the cup that contacts the base. For new cups, placing a piece of carbon paper on the base and allowing the cup to drop several times will mark the contact spot. Attach the cup to the device and turn the crank until the cup is raised to its maximum height. Slide the height gage under the cup from the front, and observe whether the gage contacts the cup or the tape. See Fig. 4. If the tape and cup are both contacted, the height of drop is approximately correct. If not, adjust the cup until simultaneous contact is made. Check adjustment by turning the crank at 2 revolutions per second while holding the gage in position against the tape and cup. If a ringing or clicking sound is heard without the cup rising from the gage, the adjustment is correct. If no ringing is heard or if the cup rises from the gage, readjust the height of drop. If the cup rocks on the gage during this checking operation, the cam follower pivot is excessively worn and the worn parts should be replaced. Always remove tape after completion of adjustment operation.

MULTIPOINT LIQUID LIMIT—PROCEDURES A AND B

10. Preparation of Test Specimens

10.1 *Wet Preparation*—Except where the dry method of specimen preparation is specified (10.2), prepare specimens for test as described in the following sections.

10.1.1 *Samples Passing the 425-µm (No. 40) Sieve*—When by visual and manual procedures it is determined that the sample has little or no material retained on a 425-µm (No. 40) sieve, prepare a specimen of 150 to 200 g by mixing thoroughly with distilled or demineralized water on the glass plate using the spatula. If desired, soak soil in a storage dish with small amount of water to soften the soil before the start of mixing. Adjust the water content of the soil to bring it to a consistency that would require 25 to 35 blows of the liquid limit device to close the groove (Note 8). If, during mixing, a small percentage of material is encountered that would be retained on a 425-µm (No. 40) sieve, remove these particles by hand, if possible. If it is impractical to remove the coarser material by hand, remove small percentages (less than about 15 %) of coarser material by working the specimen through a 425-µm (No. 40) sieve using a piece of rubber sheeting, rubber stopper, or other convenient device provided the operation does not distort the sieve or degrade material that would be retained if the washing method described in 10.1.2 were used. If larger percentages of coarse material are encountered during mixing, or it is considered impractical to remove the coarser material by the methods just described, wash the sample as described in 10.1.2. When the coarse particles found during mixing are concretions, shells, or other fragile particles, do not crush these particles to make them pass a 425-µm (No. 40) sieve, but remove by hand or by washing. Place the mixed soil in the storage dish, cover to [illegible]

[illegible] depending on the plasticity and initial water content. Initial mixing times of more than 30 min may be needed for stiff, fat clays.

10.1.2 *Samples Containing Material Retained on a 425-µm (No. 40) Sieve:*

10.1.2.1 Select a sufficient quantity of soil at natural water content to provide 150 to 200 g of material passing the 425-µm (No. 40) sieve. Place in a pan or dish and add sufficient water to cover the soil. Allow to soak until all lumps have softened and the fines no longer adhere to the surfaces of the coarse particles (Note 9).

NOTE 9—In some cases, the cations of salts present in tap water will exchange with the natural cations in the soil and significantly alter the test results should tap water be used in the soaking and washing operations. Unless it is known that such cations are not present in the tap water, distilled or demineralized water should be used. As a general rule, water containing more than 100 mg/L of dissolved solids should not be used for washing operations.

10.1.2.2 When the sample contains a large percentage of material retained on the 425-µm (No. 40) sieve, perform the following washing operation in increments, washing no more than 0.5 kg (1 lb) of material at one time. Place the 425-µm (No. 40) sieve in the bottom of the clean pan. Pour the soil water mixture onto the sieve. If gravel or coarse sand particles are present, rinse as many of these as possible with small quantities of water from a wash bottle, and discard. Alternatively, pour the soil water mixture over a 2-mm (No. 10) sieve nested atop the 425-µm (No. 40) sieve, rinse the fine material through and remove the 2-mm (No. 10) sieve. After washing and removing as much of the coarser material as possible, add sufficient water to the pan to bring the level to about 13 mm (½ in.) above the surface of the 425-µm (No. 40) sieve. Agitate the slurry by stirring with the fingers while raising and lowering the sieve in the pan and swirling the suspension so that fine material is washed from the coarser particles. Disaggregate fine soil lumps that have not slaked by gently rubbing them over the sieve with the fingertips. Complete the washing operation by raising the sieve above the water surface and rinsing the material retained with a small amount of clean water. Discard material retained on the 425-µm (No. 40) sieve.

10.1.2.3 Reduce the water content of the material passing the 425-µm (No. 40) sieve until it approaches the liquid limit. Reduction of water content may be accomplished by one or a combination of the following methods: (*a*) exposing the air currents at ordinary room temperature, (*b*) exposing to warm air currents from a source such as an electric hair dryer, (*c*) filtering in a Büchner funnel or using filter candles, (*d*) decanting clear water from surface of suspension, or (*e*) draining in a colander or plaster of paris dish lined with high retentivity, high wet-strength filter paper.[7] If a plaster of paris dish is used, take care that the dish never becomes sufficiently saturated that it fails to actively absorb water into its surface. Thoroughly dry dishes between uses. During evaporation and cooling, stir the sample often enough to prevent

[7] S and S 595 filter paper available in 32-cm circles, has proven satisfactory.

[illegible] mixture. If soil samples containing [illegible] method of water reduction such as [illegible] will [illegible] minate the soluble salts from the test specimen.

10.1.2.4 Thoroughly mix the material passing the 425-µm (No. 40) sieve on the glass plate using the spatula. Adjust the water content of the mixture, if necessary, by adding small increments of distilled or demineralized water or by allowing the mixture to dry at room temperature while mixing on the glass plate. The soil should be at a water content that will result in closure of the groove in 25 to 35 blows. Return the mixed soil to the mixing dish, cover to prevent loss of moisture, and allow to stand for at least 16 h. After the standing period, and immediately before starting the test, remix the soil thoroughly.

10.2 *Dry Preparation:*

10.2.1 Select sufficient soil to provide 150 to 200 g of material passing the 425-µm (No. 40) sieve after processing. Dry the sample at room temperature or in an oven at a temperature not exceeding 60°C until the soil clods will pulverize readily. Disaggregation is expedited if the sample is not allowed to completely dry. However, the soil should have a dry appearance when pulverized. Pulverize the sample in a mortar with a rubber tipped pestle or in some other way that does not cause breakdown of individual grains. When the coarse particles found during pulverization are concretions, shells, or other fragile particles, do not crush these particles to make them pass a 425-µm (No. 40) sieve, but remove by hand or other suitable means, such as washing.

10.2.2 Separate the sample on a 425-µm (No. 40) sieve, shaking the sieve by hand to assure thorough separation of the finer fraction. Return the material retained on the 425-µm (No. 40) sieve to the pulverizing apparatus and repeat the pulverizing and sieving operations as many times as necessary to assure that all finer material has been [illegible] material retained [illegible] individual sand [illegible]

10.2.3 Place material remaining on the 425-µm [illegible] sieve after the final pulverizing operations in a dish and [illegible] in a small amount of water. Stir the soil water mixture [illegible] pour over the 425-µm (No. 40) sieve, catching the water and any suspended fines in the washing pan. Pour this suspension into a dish containing the dry soil previously sieved through the 425-µm (No. 40) sieve. Discard material retained on the 425-µm (No. 40) sieve.

10.2.4 Adjust the water content as necessary by drying as described in 10.1.2.3 or by mixing on the glass plate, using the spatula while adding increments of distilled or demineralized water, until the soil is at a water content that will result in closure of the groove in 25 to 35 blows.

10.2.5 Put soil in the storage dish, cover to prevent loss of moisture and allow to stand for at least 16 h. After the standing period, and immediately before starting the test, thoroughly remix the soil (Note 8).

11. Procedure

11.1 Place a portion of the prepared soil in the cup of the liquid limit device at the point where the cup rests on the base, squeeze it down, and spread it into the cup to a depth of about 10 mm at its deepest point, tapering to form an approximately horizontal surface. Take care to eliminate air bubbles from the soil pat but form the pat with as few strokes as possible. Heap the unused soil on the glass plate and cover with the inverted storage dish or a wet towel.

11.2 Form a groove in the soil pat by drawing the tool, beveled edge forward, through the soil on a line joining the highest point to the lowest point on the rim of the cup. When cutting the groove, hold the grooving tool against the surface of the cup and draw in an arc, maintaining the tool perpendicular to the surface of the cup throughout its

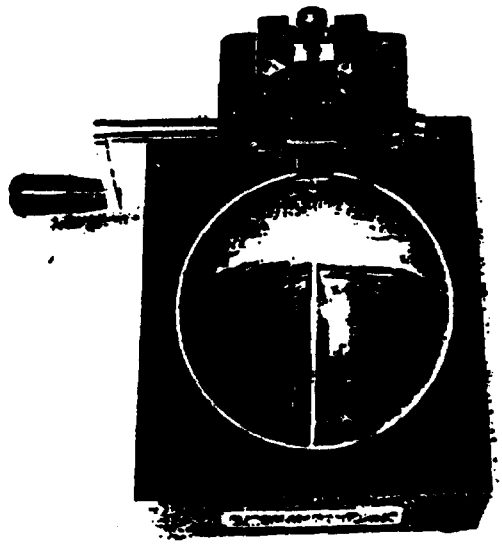

FIG. 5 Grooved Soil Pat in Liquid Limit Device

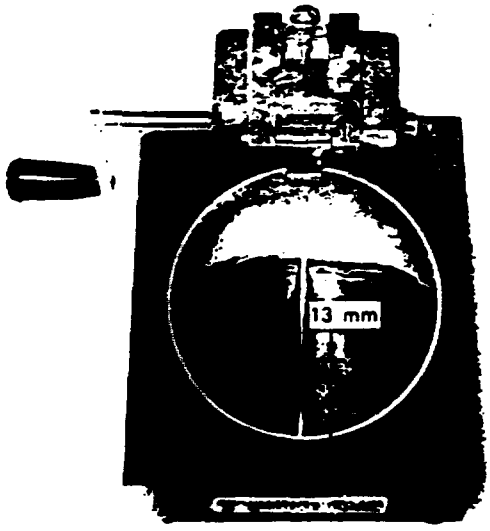

FIG. 6 Soil Pat After Groove Has Closed

movement. See Fig. 5. In soils where a groove cannot be made in one stroke without tearing the soil, cut the groove with several strokes of the grooving tool. Alternatively, cut the groove to slightly less than required dimensions with a spatula and use the grooving tool to bring the groove to final dimensions. Exercise extreme care to prevent sliding the soil pat relative to the surface of the cup.

11.3 Verify that no crumbs of soil are present on the base or the underside of the cup. Lift and drop the cup by turning the crank at a rate of 1.9 to 2.1 drops per second until the two halves of the soil pat come in contact at the bottom of the groove along a distance of 13 mm (½ in.). See Fig. 6.

NOTE 10—*Use the end of the grooving tool, Fig. 2, or a scale to verify that the groove has closed 13 mm (½ in.).*

11.4 Verify that an air bubble has not caused premature closing of the groove by observing that both sides of the groove have flowed together with approximately the same shape. If a bubble has caused premature closing of the groove, reform the soil in the cup, adding a small amount of soil to make up for that lost in the grooving operation and repeat 11.1 to 11.3. If the soil slides on the surface of the cup, repeat 11.1 through 11.3 at a higher water content. If, after several trials at successively higher water contents, the soil pat continues to slide in the cup or if the number of blows required to close the groove is always less than 25, record that the liquid limit could not be determined, and report the soil as nonplastic without performing the plastic limit test.

11.5 Record the number of drops, N, required to close the groove. Remove a slice of soil approximately the width of the spatula, extending from edge to edge of the soil cake at right angles to the groove and including that portion of the groove in which the soil flowed together, place in a weighed container, and cover.

11.6 Return the soil remaining in the cup to the glass plate. Wash and dry the cup and grooving tool and reattach the cup to the carriage in preparation for the next trial.

11.7 Remix the entire soil specimen on the glass plate adding distilled water to increase the water content of the soil and decrease the number of blows required to close the groove. Repeat 11.1 through 11.6 for at least two additional trials producing successively lower numbers of blows to close the groove. One of the trials shall be for a closure requiring 25 to 35 blows, one for closure between 20 and 30 blows, and one trial for a closure requiring 15 to 25 blows.

11.8 Determine the water content, W_N, of the soil specimen from each trial in accordance with Method D 2216. Make all weighings on the same balance. Initial weighings should be performed immediately after completion of the test. If the test is to be interrupted for more than about 15 min, the specimens already obtained should be weighed at the time of the interruption.

12. Calculations

12.1 Plot the relationship between the water content, W_N, and the corresponding number of drops, N, of the cup on a semilogarithmic graph with the water content as ordinates on the arithmetical scale, and the number of drops as abscissas on the logarithmic scale. Draw the best straight line through the three or more plotted points.

12.2 Take the water content corresponding to the intersection of the line with the 25-drop abscissa as the liquid limit of the soil. Computational methods may be substituted for the graphical method for fitting a straight line to the data and determining the liquid limit.

ONE-POINT LIQUID LIMIT—PROCEDURES C AND D

13. Preparation of Test Specimens

13.1 Prepare the specimen in the same manner as described in Section 10, except that at mixing, adjust the water content to a consistency requiring 20 to 30 drops of the

TABLE 1 Factors for Obtaining Liquid Limit from Water Content and Number of Drops Causing Closure of Groove

N Number of Drops	K Factor for Liquid Limit
20	0.974
21	0.979
22	0.985
23	0.990
24	0.995
25	1.000
26	1.005
27	1.009
28	1.014
29	1.018
30	1.022

liquid limit cup to close the groove.

14. Procedure

14.1 Proceed as described in 11.1 through 11.5 except that the number of blows required to close the groove shall be 20 to 30. If less than 20 or more than 30 blows are required, adjust the water content of the soil and repeat the procedure.

14.2 Immediately after removing a water content specimen as described in 11.5, reform the soil in the cup, adding a small amount of soil to make up for that lost in the grooving and water content sampling operations. Repeat 11.2 through 11.5, and, if the second closing of the groove requires the same number of drops or no more than two drops difference, secure another water content specimen. Otherwise, remix the entire specimen and repeat.

NOTE 11—Excessive drying or inadequate mixing will cause the number of blows to vary.

14.3 Determine water contents of specimens as described in 11.8.

15. Calculations

15.1 Determine the liquid limit for each water content specimen using one of the following equations:

$$LL = W_N \left(\frac{N}{25}\right)^{0.121} \quad \text{or}$$

$$LL = K(W_N)$$

where:

N = the number of blows causing closure of the groove at water content,

W_N = water content, and

K = a factor given in Table 1.

The liquid limit is the average of the two trial liquid limit values.

15.2 If the difference between the two trial liquid limit values is greater than one percentage point, repeat the test.

PLASTIC LIMIT

16. Preparation of Test Specimen

16.1 Select a 20-g portion of soil from the material prepared for the liquid limit test, either after the second mixing before the test, or from the soil remaining after completion of the test. Reduce the water content of the soil to a consistency at which it can be rolled without sticking to the hands by spreading and mixing continuously on the glass plate. The drying process may be accelerated by exposing the [illegible] paper that [illegible] surface paper [illegible] wet-strength filter paper.

17. Procedure

17.1 From the 20-g mass, select a portion of 1.5 to 2.0 g. Form the test specimen into an ellipsoidal mass. Roll this mass between the palm or fingers and the ground-glass plate with just sufficient pressure to roll the mass into a thread of uniform diameter throughout its length (Note 12). The thread shall be further deformed on each stroke so that its diameter is continuously reduced and its length extended until the diameter reaches 3.2 ± 0.5 mm (0.125 ± .020 in.), taking no more than 2 min (Note 13). The amount of hand or finger pressure required will vary greatly, according to the soil. Fragile soils of low plasticity are best rolled under the outer edge of the palm or at the base of the thumb.

NOTE 12—A normal rate of rolling for most soils should be 80 to 90 strokes per minute, counting a stroke as one complete motion of the hand forward and back to the starting position. This rate of rolling may have to be decreased for very fragile soils.

NOTE 13—A 3.2-mm (⅛-in.) diameter rod or tube is useful for frequent comparison with the soil thread to ascertain when the thread has reached the proper diameter, especially for inexperienced operators.

17.1.1 When the diameter of the thread becomes 3.2 mm, break the thread into several pieces. Squeeze the pieces together, knead between the thumb and first finger of each hand, reform into an ellipsoidal mass, and reroll. Continue this alternate rolling to a thread 3.2 mm in diameter, gathering together, kneading and rerolling, until the thread crumbles under the pressure required for rolling and the soil can no longer be rolled into a 3.2-mm diameter thread (See Fig. 7). It has no significance if the thread breaks into threads of shorter length. Roll each of these shorter threads to 3.2 mm in diameter. The only requirement for continuing the test is that they are able to be reformed into an ellipsoidal mass and rolled out again. The operator shall at no time attempt to produce failure at exactly 3.2 mm diameter by allowing the thread to reach 3.2 mm, then reducing the rat of rolling or the hand pressure, or both, while continuing the rolling without further deformation until the thread falls apart. It is permissible, however, to reduce the total amount of deformation for feebly plastic soils by making the initial diameter of the ellipsoidal mass nearer to the required 3.2-mm final diameter. If crumbling occurs when the thread has a diameter greater than 3.2 mm, this shall be considered a satisfactory end point, provided the soil has been previously rolled into a thread 3.2 mm in diameter. Crumbling of the thread will manifest itself differently with the various types of soil. Some soils fall apart in numerous small aggregations of particles, others may form an outside tubular layer that starts splitting at both ends. The splitting progresses toward the middle, and finally, the thread falls apart in many small platy particles. Fat clay soils require much pressure to deform the thread, particularly as they approach the plastic limit. With these soils, the thread breaks into a series of barrel-shaped segments about 3.2 to 9.5 mm (⅛ to ⅜ in.) in length.

17.2 Gather the portions of the crumbled thread together and place in a weighed container. Immediately cover the container.

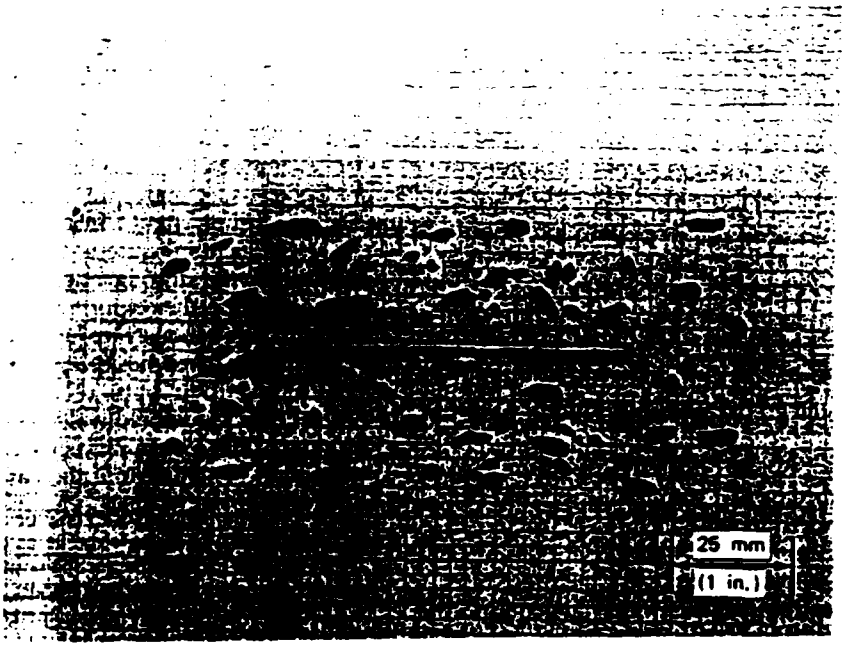

FIG. 7 Lean Clay Soil at the Plastic Limit

17.3 Select another 1.5 to 2.0 g portion of soil from the original 20-g specimen and repeat the operations described in 17.1 and 17.2 until the container has at least 6 g of soil.

17.4 Repeat 17.1 through 17.3 to make another container holding at least 6 g of soil. Determine the water content, in percent, of the soil contained in the containers in accordance with Method D 2216. Make all weighings on the same balance.

NOTE 14—The intent of performing two plastic limit trials is to verify the consistency of the test results. It is acceptable practice to perform only one plastic limit trial when the consistency in the test results can be confirmed by other means.

18. Calculations

18.1 Compute the average of the two water contents. If the difference between the two water contents is greater than two percentage points, repeat the test. The plastic limit is the average of the two water contents.

PLASTICITY INDEX

19. Calculations

19.1 Calculate the plasticity index as follows:

$$PI = LL - PL$$

where:

LL = the liquid limit,

PL = the plastic limit.

Both LL and PL are whole numbers. If either the liquid limit or plastic limit could not be determined, or if the plastic limit is equal to or greater than the liquid limit, report the soil as nonplastic, NP.

20. Report

20.1 Report the following information:

20.1.1 Sample identifying information,

20.1.2 Any special specimen selection process used, such as removal of sand lenses from undisturbed sample,

20.1.3 Report sample as airdried if the sample was airdried before or during preparation,

20.1.4 Liquid limit, plastic limit, and plasticity index to the nearest whole number and omitting the percent designation. If the liquid limit or plastic limit tests could not be performed, or if the plastic limit is equal to or greater than the liquid limit, report the soil as nonplastic, NP,

20.1.5 An estimate of the percentage of sample retained on the 425-μm (No. 40) sieve, and

20.1.6 Procedure by which liquid limit was performed, if it differs from the multipoint method.

21. Precision and Bias

21.1 No interlaboratory testing program has as yet been conducted using this test method to determine multilaboratory precision.

21.2 The within laboratory precision of the results of tests performed by different operators at one laboratory on two soils using Procedure A for the liquid limit is shown in Table 2.

TABLE 2 Within Laboratory Precision for Liquid Limit

	Average Value, $\bar{x}$	Standard Deviation, s
Soil A:		
PL	21.9	1.07
LL	27.9	1.07
Soil B:		
PL	20.1	1.21
LL	32.6	0.98

This standard is subject to revision at any time by the responsible technical committee and must be reviewed every five years and if not revised, either reapproved or withdrawn. Your comments are invited either for revision of this standard or for additional standards and should be addressed to ASTM Headquarters. Your comments will receive careful consideration at a meeting of the responsible technical committee, which you may attend. If you feel that your comments have not received a fair hearing you should make your views known to the ASTM Committee on Standards, 1916 Race St., Philadelphia, PA 19103.

STANDARD OPERATING PROCEDURE NUMBER 11

RESIDENTIAL HOME SURVEY

STANDARD OPERATING PROCEDURE NUMBER 11

RESIDENTIAL HOME SURVEY

Woodward-Clyde Consultants

St. Louis, Missouri

Project No. 89MC114V

Approvals:	Date:
Originator	10/24/91
Peer Reviewer	10/24/91
QA/QC Officer	10/24/91
Project Manager	10/24/91

Disclaimer: This Standard Operating Procedure has been prepared for the sole use of Woodward-Clyde Consultants and may not be specifically applicable to the activities of other organizations.

TABLE OF CONTENTS

Section		Page
1.0	PURPOSE AND SCOPE	1-1
2.0	APPOINTMENT SCHEDULING	2-1
3.0	CONDUCTING HOME INSPECTION SURVEY	3-1

LIST OF FIGURES

FIGURE 1 HOME INSPECTION SURVEY FORM

STANDARD OPERATING PROCEDURE NUMBER 11
HOME INSPECTION SURVEY

1.0
PURPOSE AND SCOPE

The purpose of this document is to define the Standard Operating Procedure (SOP) for conducting the Home Surveys. This SOP serves as a supplement to the Chemical Data Acquisition Plan (CDAP). The procedures for appointments scheduling and visual home inspections are described in this document. Health and safety procedures for the Home Survey are detailed in the Site Safety and Health Plan (SSHP).

To provide assistance to residents wishing to schedule a Home Survey a local Granite City telephone number will be provided. A Scheduling Liaison will be available from the hours of 8:00 a.m. to 6:00 p.m. For after hours, an answering service will be utilized to take messages. The following procedure will be followed for scheduling each appointment:

1. An attempt will be made to contact the resident using the following sequence of methods, depending on the available data provided by the resident and/or the USEPA:

   - Case I: Resident contacts WCC to schedule appointment.

   - Case II: Resident returns mailout resident survey with preference for calling time indicated. Scheduling Liaison attempts to contact the resident at the indicated preference time. If no response, the Scheduling Liaison will attempt to contact the resident again at the indicated preference time, but on a different day of the week.

   - Case III: Resident's phone number is provided by USEPA although resident does not return mail out survey. Scheduling Liaison attempts to contact the resident first during early evening hours (4:00 p.m. to 8:00 p.m.) and second during daytime hours (10:00 a.m. to 4:00 p.m.).

   - Case IV: Resident's phone number is not known. Liaison will use the standard directory assistance to identify the resident's phone number at the appropriate address. If a listing is identified, the resident becomes a Case III. If no phone number is available, the resident becomes a Case V.

   - Case V: Resident does not contact WCC and no phone number is

available. The surveyors during the inspection period will visit the home and attempt to contact the resident. If no one is available, the surveyors will attempt to contact the resident again on a different day, and at a different time of the day.

- A maximum of two attempts will be made to contact each residence.

2. Once the Scheduling Liaison contacts the resident, the following steps should be followed during the conversation.

   1. Provide identification and brief description of the Project.

   2. Provide brief description of the visual home inspection.

   3. Determine if the resident wants to participate in the home survey.

   4. Set-up appointment time and date.

   5. Thank the resident for participation and cooperation.

3. One to two days prior to the home survey, the resident will be contacted to remind them of their appointment.

During any contact with the public, generic questions pertaining to the project and the resident's health and safety may be asked. The Scheduling Liaison will be provided with a list of types of questions they may answer and types of questions that should be referred to the USEPA Public Relations Manager. If any resident's question alters from the provided generic questions, the Scheduling Liaison response should be "I do not have that information, you may want to contact the USEPA to help you."

The appointment scheduling will be organized using a computer tracking system and database to help track communication information, contact attempts, participation in survey, appointment times, and inspection crew schedules.

The home inspection surveyors will be trained professionals in lead inspection. Prior to any surveying, the inspectors will be briefed on information to be provided to the residents and on what type of questions to refer to the USEPA. The inspectors will have good personal hygiene and dress code will include long pants or skirt, collared shirt, a tie, and appropriate footwear; a jacket is not necessary. Each inspector will carry a easily identifiable plastic laminated ID card. The exact type of ID card will be determined by WCC after consultation with the USACE & USEPA prior to the start of any home inspection. The appointments will be scheduled by the Scheduling Liaison and provided to each crew. The crew will be briefed each morning with appointment times and locations of the homes to be surveyed. The crew will stay in contact with their supervisor for changes or cancellations in the scheduling. This will be done on a preestablished schedule to allow monitoring of the safety of the crew as well as communicating schedule changes.

The surveyors will use a Home Inspection Survey Form (Figure 1) to conduct the inspection. Each home inspection survey should follow these steps:

1. Home inspection surveyors should attempt to arrive at the scheduled home within ±5 minutes of the appointment time.

2. Greet the resident and identify him/herself with an ID card.

3. Give brief description of the project and the home inspection survey.

4. Obtain information regarding the resident which includes verifying name, address, phone number, landlord's name, and number of years living in house (Figure 1).

5. Conduct the survey. Have the resident accompany the inspector around the house. Use a systematic approach each time. One inspector will visually inspect

the paint and the plumbing. The second inspector will complete the written report as the survey is being conducted. Overall dust conditions in the house should be noted. For each room, the inspector will determine the condition of the paint. The plumbing will be inspected where it is exposed including the kitchen, all bathrooms and the basement, if present. Inspection of the plumbing will include both pipes and the soldering at joint connection. Make all comments and notations on the form while in the presence of the resident.

6. Thank the resident for their cooperation. Inform the resident that they will receive a copy of the result from the home survey after the USEPA has had an opportunity to review the results. At the present time it is not known when the results will be available.

7. Leave the resident's yard through the front entrance.

During any contact with the public, it is possible that some residents may respond with improper conduct, including verbal abuse. If the resident becomes abusive, or threatens the inspectors in any way, apologize for disturbing them and leave quickly and quietly. Do not antagonize the resident or aggravate the situation. Contact the WCC task leader immediately, who will contact the USEPA designated Public Relations Representative. If physically threatened, contact the local police. If the residents do not wish to participate they are under no obligation to do so. Document the reason the home survey was not conducted on the Home Survey Inspection Form.

If any dog or animal appears to be a threat to the inspector, ask the resident politely to control their animal.

A computer tracking system and database will assist the survey crews with identification of homes to be surveyed each day and the corresponding appointment time. The database will also preprint the home survey inspection forms with the resident's name, address, and appointment time.

FIGURE 1

HOME INSPECTION SURVEY FORM

Appointment Time: (Preprinted) _____

Actual Start Time: _____

Residence ID: _____

Team No.: _____

HOUSEHOLD MEMBER PERSONAL INFORMATION

Name of Respondent: (Preprint by computer) _____

Phone number: (Home) Preprint _____ (Work) Preprint _____

Address: Preprint _____ Please Correct: _____

_____ _____

Do you rent? Yes _____ No _____

If Yes, please list landlord's name, address, and telephone number.

Landlord's name: _____

Address: _____

_____

Phone: _____

How long have you lived in house:

____ 0-5 years ____ 5-10 years ____ 10-20 years ____ 20 or more

Number of people living in house: _____

Other Comments: _____

_____

_____

Inspectors Signatures: (1) _____ Date: _____ Time: _____

(2) _____ Date: _____ Time: _____

	Living Room	Kitchen/ Dining	Bed #1	Bed #2	Bed #3	Bath #1	Bath #2	Utility/ Basement
PAINT CONDITION - INTERIOR								
N/A (Wallpaper, etc.)								
Date Last Stripped								
Date Last Painted								
Paint Good								
Paint Weathered								
Paint Minor Peeling/Chipping								
Paint Major Peeling/Chipping								
POTENTIAL FOR LEAD PIPES								
Plumbing Renovations - Yes/No								
If Yes? Where?								
When Completed?								
Lead Pipes - Yes								
Lead Pipes - Probable								
Lead Pipes - No								
Soldering/Joints - Yes								
Soldering/Joints - Probable								
Soldering/Joints - No								

Dust Conditions for Overall House

_____ No Dust _____ Light Dust _____ Heavy Dust _____ Extreme Dust and Dirt

Condition of:

Furniture _____ New _____ Slightly Worn _____ Worn

Carpeting _____ New _____ Slightly Worn _____ Worn

1.0
PURPOSE AND SCOPE

This document defines the procedure for surveying of field sampling sites and locations. This Standard Operating Procedure (SOP) serves as a supplement to the Chemical Data Acquisition Plan (CDAP). This procedure will be used for mapping sampling sites and locations and describing them in such a manner that the sample location may be relocated for repetitive or additional sampling. Sampling points will be selected as described in the CDAP.

DEPARTMENT OF THE ARMY
US Army Corps of Engineers
Washington, DC 20314-1000

EM 1110-1-1002

DECW-EP

Engineer Manual
No. 1110-1-1002

14 September 1990

Engineering and Design
SURVEY MARKERS AND MONUMENTATION

1. Purpose. This manual establishes criteria and presents guidance for monumentation during various stages of civil and military projects.

2. Applicability. This manual applies to all field operating activities having civil works and military responsibilities.

3. Accompanying Guide Specification. To facilitate contracting for monumentation, accompanying guide specifications have also been developed. This manual is designed to be used in conjunction with the accompanying guide specifications as an aid in contracting for monumentation.

FOR THE COMMANDER:

ALBERT J. GENETTI, JR.
Colonel, Corps of Engineers
Chief of Staff

DEPARTMENT OF THE ARMY
US Army Corps of Engineers
Washington, DC 20314-1000

DEIM-EP

EM 1110-1-1000

Engineer Manual
No. 1110-1-1000

14 September 1991

Engineering and Design
SURVEY MARKERS AND MONUMENTATION

Table of Contents

Subject	Paragraph	Page
CHAPTER 1. INTRODUCTION		
Purpose	1-1	1-1
Applicability	1-2	1-1
Reference	1-3	1-1
Background	1-4	1-1
Scope of Manual	1-5	1-1
Development of a Survey Monumentation Comprehensive Plan	1-6	1-1
Permanent Monuments	1-7	1-2
Temporary Markers	1-8	1-2
Public Relations	1-9	1-2
Metrics	1-10	1-2
Brand Names	1-11	1-2
CHAPTER 2. SITE SELECTION		
General	2-1	2-1
Security	2-2	2-1
Utility	2-3	2-1
Stability	2-4	2-2
Corrosive Environment	2-5	2-4
Safety	2-6	2-5
Satellite Visibility	2-7	2-6
Cost Comparison	2-8	2-7
CHAPTER 3. VERTICAL CONTROL - BENCH MARKS		
Selection of Monument Type Based on Local Site Conditions	3-1	3-1
Construction and Installation Procedures	3-2	3-9
Naming Vertical Control Monuments	3-3	3-17
Marks of Other Organizations	3-4	3-19
Witness Posts and Signs	3-5	3-20

Subject	Paragraph	Page
CHAPTER 4. HORIZONTAL CONTROL MONUMENTS		
Selection of Monument Type Based on Local Site Conditions	4-1	4-1
Construction and Installation Procedures	4-2	4-1
Naming Horizontal Control Monuments	4-3	4-2
Reference and Azimuth Marks	4-4	4-7
Three-Dimensional Monuments	4-5	4-9
Marks of Other Organizations	4-6	4-9
Witness Posts	4-7	4-9
CHAPTER 5. BOUNDARY MONUMENTS		
Installation of Boundary Monumentation	5-1	5-1
Selection of Monument Type Based on Local Site Conditions	5-2	5-1
Construction and Installation Procedures	5-3	5-2
Naming Boundary Monuments	5-4	5-2
Reference Monuments	5-5	5-2
Witness Trees and Corners	5-6	5-3
Boundary Marker Sign	5-7	5-3
CHAPTER 6. DOCUMENTATION		
Monument/Marker Documentation	6-1	6-1

CHAPTER 1

INTRODUCTION

1-1. Purpose. This manual establishes criteria and presents guidance on monumentation installation and documentation for all types of surveys required during the various stages of civil and military projects. The manual is intended to be a guide; however, when the standard Corps monuments are used, they shall be selected and constructed as defined in this manual.

1-2. Applicability. This manual applies to all Corps of Engineers field operating activities.

1-3. Reference. Specifications on naming criteria, standard installation procedures, and accuracy classifications were adopted in part from the National Geodetic Survey (NGS).

1-4. Background. Stable monuments are required for both horizontal and vertical control. Monuments and their stability are integral parts of the accuracy of each survey project. Inaccurate survey control monumentation can contribute to costly errors in all phases of project design and development. Therefore, the purpose of this manual is to establish criteria and present guidance that will insure stable monumentation throughout design, construction, and subsequent maintenance of each Corps project.

1-5. Scope of Manual. This manual provides naming criteria, standard installation procedures, and associated surveying accuracies for horizontal and vertical control and boundary survey markers and monumentation for standard Corps monuments. It should be used as a guide in planning surveys and marker and/or monument installation and identification. The type of marker and/or monument selected for each survey should be tailored to meet the minimum accuracy requirements for the individual project. However, selection should be done within the stated criteria where feasible and practicable, using the guidance provided herein. The accuracy classification of each survey monument is dependent upon the site foundation conditions and the type of monument installation used. All standard Corps monuments as defined herein shall be installed in accordance with this manual. The term "marks" shall be used throughout this manual when referring to both permanent monuments and temporary markers. The term "bench mark" refers to a mark whose elevation is known. Monuments and markers are further defined in paragraphs 1-7 and 1-8.

1-6. Development of a Survey Monumentation Comprehensive Plan. In the earliest phase of project development a survey monumentation plan shall be developed. This plan shall consider monuments required for the life of each project, i.e., planning, acquisition, design, construction, operation, and maintenance. This plan will eliminate surveys performed using different survey

control accuracies and provide a common base for all surveys for each project.

1-7. Permanent Monuments. Permanent monuments shall be defined as monuments that are set in relatively stable material or in a structure for the purpose of preserving the location of either a horizontal control station, the elevation of a point above an adopted datum (bench mark), or the location and/or elevation of any point of special significance when its preservation is required permanently or for longer than 2 years. All monument types shown in the tables in this engineering manual are considered to be permanent.

1-8. Temporary Markers. Temporary markers shall be defined in the same manner as permanent monuments except that preservation is only required for a period of 2 years or less. Temporary markers shall consist of a 1- by 2-inch or larger wooden hub with adjacent guard stakes, a copper nail and washer, P-K nail, or other temporary spike set in relatively stable in situ material. Markers established on structures less than 5 years old shall also be considered temporary.

1-9. Public Relations. The purpose of the Federal government and its contractors is to serve the public. To fulfill this charge, it is imperative to gain the understanding and maintain the goodwill of the public. With these considerations in mind, always obtain the permission of the landowner when setting marks on private property. Responsible officials must also be consulted when a prospective site is located on public or corporate land. If approached in a polite and tactful manner, a hesitant individual may often be persuaded to allow installation of a mark at the desired site. Most citizens may be influenced to take personal interest in having a monument carrying the U.S. Army Corps of Engineers (USACE) designation on their property. To help encourage an individual to cooperate, explain the purpose of these marks, the need for the stability and durability of marks, and the expense involved in replacing them. Under no circumstances shall a mark be installed on an unwilling property owner's land that could provoke hostility toward the Federal government and its contractors.

1-10. Metrics. The use of both the metric and English systems of measurement in this manual is predicated on the common use of both systems by the surveying and mapping professions; i.e., water depths are usually measured in feet, and distances are usually measured in meters as determined by the equipment manufacturers.

1-11. Brand Names. The citation in this report of brand names of commercially available products does not constitute official endorsement or approval of the use of such products.

CHAPTER 2

SITE SELECTION

2-1. General. The most effective precaution that can be taken to assure a mark's stability and survival is to choose an appropriate location. Since there are a wide variety of possible situations that may be encountered when setting a mark, it is virtually impossible to address them all in this manual. Therefore, the ultimate selection of a site is necessarily left to the discretion of the mark setter; however, it is imperative that good judgment be exercised. The resultant accuracy of any survey will be determined in part by the stability of the marks. A mark setter exercising good judgment is defined as an individual who thoroughly evaluates the security, utility, stability, environment, and safety of the mark and its site before establishing the marks. The most important site selection parameters are discussed in the following sections.

2-2. Security. Foremost on the list of evaluation considerations is the mark's susceptibility to damage or destruction. In view of the great expense involved in establishing a mark and the data associated with it, time spent in preservation is worthwhile. It is necessary to anticipate any construction that might occur at the proposed mark location. Is the site selected for marks in the path of a future highway, waterway, ditch, or pipeline? Will an adjacent shopping center or parking lot be expanded in the foreseeable future? Is the prospective mark site near a potentially active mine or quarry? Highway maintenance often involves the widening of the road surface and the straightening of curves. Marks set near the edge of the right-of-way and on the outside of a curve increase their chances for survival. Conversely, the outside of a river bend is not an appropriate site for marks because the effects of erosion may lead to undercuts in the bank. The effects of undercutting may also occur on shoreline scarps where stormy waters slowly erode the embankment. Floodplains should be avoided when otherwise comparable sites are available. Marks located in floodplains may be buried in sediment or washed out due to erosion. Often, sites may be located in areas that provide natural protection for the mark. Locations near the edge of the right-of-way, well away from a highway surface, provide protection for marks. Property fence lines and utility poles usually remain in place for many years and afford good protection for marks. Structures that are of themselves not suitable for mark settings prevent vehicles and equipment from damaging marks that are set adjacent to them. In addition, from a standpoint of survival, Federal, state and local public areas, as well as private property and cemeteries, provide excellent sites for marks.

2-3. Utility. Accessibility of the marks by users should be evaluated in selecting the mark's site. If the mark cannot be found or if the site cannot be conveniently occupied, its worth

is questionable. Are there nearby objects that can be used to reference the mark? Are these objects fairly permanent? Can suitable measurements define a precise point where a hidden mark can be found? To enable the mark setter to establish a mark where its position can be accurately described, familiarity with referencing techniques is required. Marks are usually described in the following manner: Directions are given to the general area in which the mark is located. Normally, this puts the individual within 100 meters (328 feet) of the mark. Then the mark is located by distances and directions from prominent reference objects. These distances and directions establish lines of position (LOP). The prominent objects are referred to here as "origins." At least two LOPs are required to define a point, but additional LOPs are desired in case some reference objects are destroyed. Also, the more nearly perpendicular the angle at which LOPs intersect, the more accurately a position may be determined and the easier it will be to locate the mark. Consideration should be given to the ease with which the location of a mark may be established from reference measurements. It is important that this information be included on the mark documentation as discussed in paragraph 6-1.

2-4. Stability. All marks are subject to the effects of geologic and soil activity. Vertical control marks (bench marks) are particularly vulnerable because this activity results in vertical movements much more so than horizontal motion. Therefore, the following environmental effects should be evaluated when considering a mark site.

a. Advantageous Topographic Features. Crests of hills are good places to set bench marks for three reasons. First, the problem of slope instability is eliminated. Even though the neighboring hillside might be sliding, the summit will generally remain stable. Second, frost heave is less likely with the increased separation from the water table. And third, the consistency of the soil will tend to be more firm.

b. Effects of Soil Grain Size. Whenever soil types can be ascertained, it is preferable to choose a site with coarse-grained soils rather than one with fine-grained soils. Most of the problems associated with soil movements are attributable to the fine particles it contains. The fraction of grain sizes less than 0.02 millimeter governs whether or not a soil is frost susceptible. Soils susceptible to high volume change due to variation in moisture content are normally clays, which are very fine-grained. In addition, poorly drained clays provide environments conducive to corrosion. If an alternative is available, avoid sites with fine-grained soils, especially clays.

c. Effects of Vegetation. The presence of vegetation, particularly trees, has marked influence on the stability of the upper layers of a soil mass. Trees, underbrush, grass, and moss act as insulation, reducing the depth of the active frost zone and thus reducing frost heave. However, the problems associated

[illegible] clays are aggravated by vegetation. In [illegible] rainfall vegetation exerts very little influence on soil volume change. However, when the weather is dry and there is little free water available in the soil, trees and other plants will draw more water out of the soil than is normally lost through evaporation. The result is a lowering of the water table and even greater soil shrinkage. With trees, this effect occurs within a radial distance from the trees roughly equal to their heights. Areas covered with thick vegetation should be avoided even where expansive soils do not exist. Dense vegetation may conceal a monument, making it of much less value than one that is open to view. Marks should not be located near lone trees due to potential disturbances from growing roots.

d. Geological Effects. It is generally not feasible to determine the nature and extent of subsurface geological activity. Nevertheless, it is an important consideration that should never be overlooked when the information or a means of obtaining the information is available. Detailed geological data are very important in locating pockets of unstable ground within a generally stable area. Caverns and underground mines, as well as water and oil-bearing strata subject to pumping, are especially prone to cause significant subsidence. Marks established strictly for geodetic control should not be set in these areas. Whenever possible, sound bedrock should be used for a mark setting. However, it is often difficult to determine whether or not an outcrop is indeed sound bedrock, especially when the decision is based mainly on visual evidence obtained from an exposed portion of the formation. Where a large portion of the outcrop is exposed, try to insure that the section of rock in which the mark will be set is essentially intact with the rest of the outcrop. Carefully examine the surface of the bedrock to insure that it is solid and not in a state of deterioration. The margin of weathered rock can be surprisingly thick. If its surface has begun to crumble or contains deep fissures in close proximity, the outcrop is probably unsound and should not be used as a mark site. In this case, another type of mark or another location may improve stability. Some sedimentary rock, such as montmorillonite, contains detrimental clay minerals. Geological maps or expert advise may help determine if a sedimentary outcrop is expansive and therefore unsuitable as a mark setting. In this case, a site should be located in a structure or another rock outcrop. If this situation is not practical, a rod-type mark should be used. The effects of expansive bedrock due to variations in moisture content is not a problem if there is a sufficient overburden.

e. Man-made Structures. Since structures are subject to movements, fixing a mark on a structure does not assure that it will be a good geodetic control point. Before setting a mark it should be determined whether or not the structure will be as stable as a Type A rod mark (see Table 3-1). If not, use a Type B (see Table 3-1) or any other suitable rod mark. The stability of a large structure may be related to a Type B rod

mark by comparing the depth of the structure's foundation to the required depth of the rod mark sleeve. In addition, the structure should be a multistory design constructed of concrete, masonry, or steel. The Type B rod mark sleeve is set to a depth below that affected by expansive soils and frost heave. For a structure to be of comparable stability, the foundation need not be as deep as the rod mark sleeve. This is attributed to the weight of the structure, which can resist some of the expansive forces exerted by the soil. Also, the structure itself will have a shielding effect on the soil below, making conditions such as temperature and moisture content less variable. If the foundation of a structure is at least a quarter of the specified sleeve depth of a Type B rod mark, the structure is considered stable. Small structures, such as concrete culverts, platforms, retaining walls, bridges, etc., shall never be used for permanent monumentation. Very large bridges can be used if the structural member in which the monument will be set rests directly on bedrock, deep piles, or piers. Most structures are expected to settle both during and after construction. A structure less than 5 years old shall not be considered for vertical control marks unless its foundation is on bedrock. In general, a structure with a long life expectancy should be selected. Modern buildings will probably remain undisturbed for a long time. Older buildings of historical significance may provide a good site for a permanent monument. Caution should be taken to assure that the monument is placed in a location that is an integral part of the structure's foundation or fixed rigidly to it. Placing a permanent monument on an appendage, such as steps entering a building, is unacceptable unless the appendage has its own foundation of sufficient depth. Avoid sites that might be damaged or covered during any additional construction on or near the structure.

f. Miscellaneous Areas to Avoid. Sites near water reservoirs and large rivers, where the water level is variable, can rise and fall due to rebound and compression of the soil. This type of movement can have a significant effect on the precision of geodetic measurements. If possible, marks should be established a few hundred meters from the boundaries of these sources of ground activity. Permafrost has a stabilizing effect on marks anchored to a sufficient depth. Significant expansion and contraction of frozen ground due to temperature variation can occur to a depth of about 10 meters (33 feet). A permanent monument anchored below this depth can be expected to be quite stable. In regions where permafrost normally exists near the surface, sources of thawing can keep the ground in an unfrozen condition to a greater depth than expected. Any body of water, such as a pond, lake, or river, will have this effect. Other influential thawing sources include buildings, roads, pipelines; in short, any mark of civilization.

2-5. Corrosive Environment. The rate at which a material will corrode or deteriorate is affected by its environment. There are two conditions necessary for corrosion to occur. First, the metal being corroded must be in contact with an electrolyte or a

[illegible] of conducting electric current. Electrolyte com- [illegible] widely ranging from a minute amount of nearly [illegible] formed by condensation to seawater. Secondly, there [illegible] a dissimilarity in two areas of the surfaces being cor- [illegible]. This could result from the presence of strains or inclu- sions in an alloy, the contact of dissimilar metals, or a variety of possibilities between these two extremes. The most important environmental factors governing the corrosive character of a soil are the degree of aeration and the presence of any water-soluble salts. Aeration is an important soil characteristic because many metals need exposure to oxygen in order to form a dense, tough layer of metallic oxide on their surfaces. The oxide coating prevents further corrosion by isolating the remaining metal from any electrolytes. Aluminum and steel protect themselves in this manner. Water-soluble salts have an influence on corrosion in two ways. First, the ions that form when salts dissolve improve the capability of the electrolyte to carry current. The greater the ability of the electrolyte to carry current, the faster corrosion will occur. Water with dissolved salts is a better electrolyte than pure water. A second effect of water-soluble salts is the influence they have on the formation of the dense, tough protective oxide layer that forms on the surface of certain metals. Rod marks will at times unavoidably be placed in corrosive soils. As a protective measure, rod marks placed in corrosive soils should be Type B made of Type 316 stainless steel. This material is more resistant to corrosion than other affordable alloys in nearly all environments. Nonetheless, steps may be taken to increase its life span. Stainless steel is most susceptible to corrosion in poorly aerated environments and those in which chlorides are present. Well-aerated soils are generally recognized by their red, yellow, or brown colors resulting from the oxidation of iron compounds commonly found in soils. Sites with this type of soil characteristic provide a good location for permanent monument setting. Poorly aerated soils are usually gray in color due to the lack of sufficient oxygen to oxidize the iron compounds. Soils of this type may also be identified by their poor drainage characteristics. Avoid areas where there is a high concentration of chlorides. Rod marks set along highways, where heavy salting might be done in winter, should be located at least 10 meters (33 feet) from the road surface. In general, setting marks along the edge of the right-of-way is a good practice. Although it will sometimes be impossible, due to project requirements, try to avoid saltwater shorelines. When the purpose of a project is to provide shoreline control, stay off the beach when possible. Another good indication of the corrosive character of a soil may be obtained if one has the capability to measure soil resistivity. The more resistant a soil, the poorer the electrolyte and, consequently, the less corrosive it will be.

2-6. Safety. If a mark extends below ground level, there is a chance of encountering underground cables or pipes during installation. This is especially a concern when drilling a hole for marks requiring sleeves or casings. This situation is more

critical in urban areas than in rural areas. Evidence of underground utility lines often can be observed at the surface. Water lines are marked by valve boxes at most street intersections. Avoiding the area between valve boxes will decrease the chances of hitting a pipe. Fire hydrants are a good indicator of the location of water mains. Hydrants usually are placed within a meter (40 inches) of the line and to the side away from the street centerline. Most water and sewer lines lie under the road surface, but some are placed adjacent to it. Therefore, avoid the area between the street and the sidewalk. Telephone and electrical cables are normally laid from 0.5 to 1 meter (1.6 to 3.3 feet) below the surface. Housing developments built in the 1960s and later are much more likely to have underground cables than those built before that time. The absence of telephone and power poles is conclusive evidence that there are underground cables in the area. However, the presence of utility poles does not necessarily indicate the lack of underground cables. Buried telephone lines usually run directly between junction box pedestals or between telephone poles. Electrical cables may run adjacent to telephone lines. When an electric appliance, such as an air conditioning unit or floodlight, is located apart from other structures, an underground cable to it would probably run directly from a metering device. Gas lines are generally harder to detect. Meters and valves are helpful in locating buried gas lines if they are not situated too far apart. As with telephone cable pedestals, do not drill or drive monuments in an area between visible gas devices. If circumstances permit, the best way to avoid problems is to contact the local metropolitan utilities commission. A utility locator service will locate underground utilities by painting the ground. Do not drill or drive monuments within 60 centimeters (2 feet) of either side of the painted line. In addition, it is wise to develop a habit of looking for "Buried Cable" signs. In conclusion, if other considerations in the site selection will allow, monuments may be set near utility poles, for greater security, avoiding the areas between adjacent poles.

2-7. Satellite Visibility. In addition to permanence, utility, and stability, satellite visibility must also be considered when selecting sites for monumentation for Global Positioning System (GPS) type surveying. The proximity of existing bench marks should also be considered when performing dynamic surveying. Sites that provide maximum visibility above the horizon, plus 15 degrees, should be selected. Any obstructions above 15 degrees will potentially block satellite signals. The site ideally should have visibility in all directions above 15 degrees; however, in some locations at specific times, an obstruction in one or possibly two directions may not affect the ability to use the site for GPS surveying. Existing bench marks should be utilized as often as possible as GPS monuments, or new marks should be located as close as possible to known vertical control. For maximum utility and economical use, maximum effort should be made to locate all GPS type monuments within 100 feet of easy access to vehicular ground transportation.

2-8. Costs Comparison. Experience has shown that the earth's crustal movement is dynamic in both the vertical and horizontal directions to various degrees at different sites. This is [illegible] by a combination of several factors such as regional crustal plate movements, removal of subsurface fluids, soil shrinking and swelling, soil freezing and thawing, growth of vegetation, construction of new structures, and settlement of old structures. When developing a monumentation plan, a comparison should be made between the cost of additional monument installation and additional leveling to more stable areas that require less costly monuments. The average cost of second-order and third-order leveling per mile is presently $800 and $480, respectively. The average cost to install a Type A rod monument to 50 feet of depth is presently $280. Additional depth beyond 50 feet will average $3 per foot. In developing the cost comparison, future uses of the mark must be considered; e.g., if marks will be used frequently, there will be an additional future cost of leveling in locations where marks are constructed away from the immediate site where they are needed. In most cases, the cost of repeated or additional leveling will far exceed the extra cost required to install the most stable monument at the site where needed.

CHAPTER 3

VERTICAL CONTROL - BENCH MARKS

3-1. Selection of Monument Type Based on Local Site Conditions. Types of marks to be used for vertical control are a function of the order of accuracy of the survey, the intended use of the data collected, and the site conditions. The types of monuments that can be used for vertical control, depending on local site conditions, are identified in Table 3-1. Construction and installation details are discussed in the following paragraphs.

Table 3-1

Site Conditions and Monument Types for Vertical Control

Site Conditions	Order of Accuracy			
	High	1	2	3
Rock outcrops, large boulders, bedrock concrete structures (more than 5 years old)	C	C	C	C
Granular soils (sand and gravel)	B	A,B	A	F,G
Glaciated soils (till)	B	A,B	A	F,G
Fine-grained soils (silts and clays with high bearing strengths)	B	A,B	A	F,G
Fine-grained soils (silts and clays with low bearing strengths)	B	A,B	A	A
Construction fill (disturbed earth)	B	A,B	A	A
Permafrost	E	E	D,E	D
Marsh	B	B	B	A
Subsidence area	B	B	B	A

a. Type A - Deep Rod - Aluminum with Finned Section. Type A rod marks (Figure 3-1) should be used when sound bedrock or substantially stable structures are not available. The mark is provided with extra horizontal stability required for three-dimensional surveys, which makes the mark a suitable GPS mark. This mark should not be used in highly corrosive environments.

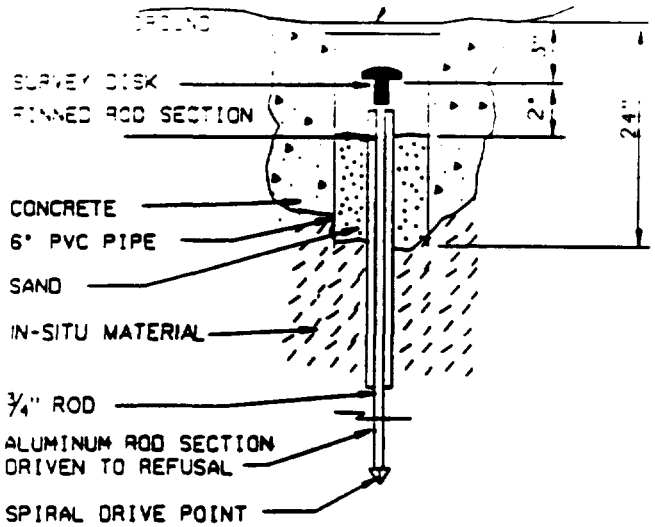

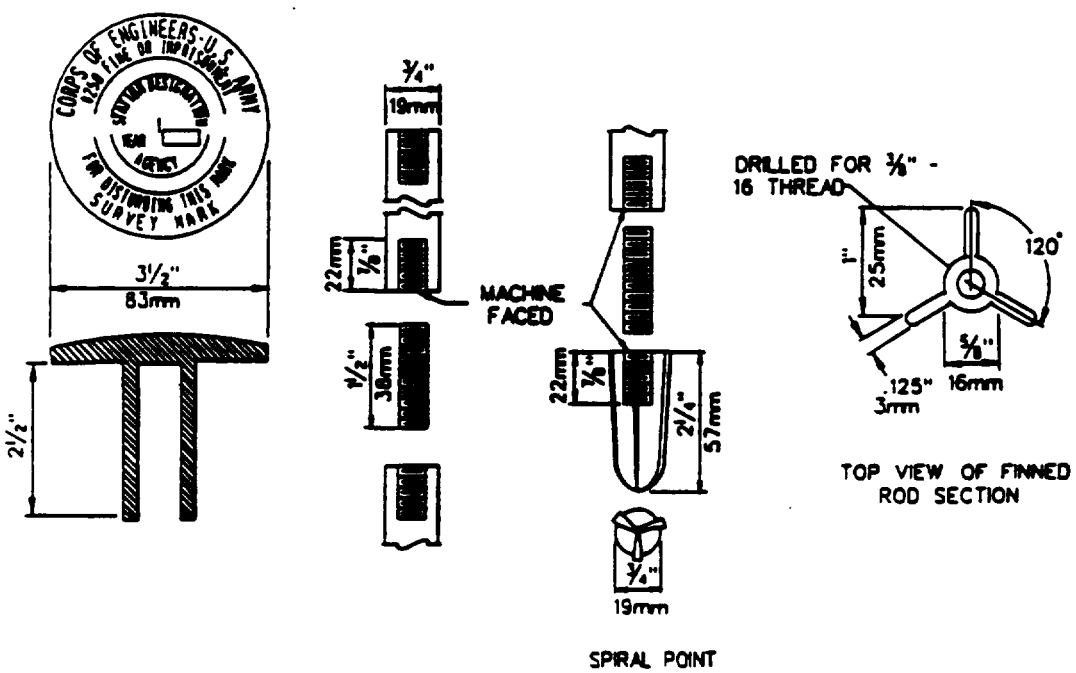

USE FOR VERTICAL, HORIZONTAL AND BOUNDARY CONTROL

Figure 3-1. Type A monument - deep rod - 3-foot finned section

Table 3-1 indicates the recommended use for the Type A monument.

b. Type B - Deep Rod - Stainless Steel with Sleeve. Type B rod marks (Figure 3-2) should also be used when sound bedrock or substantially stable structures are not available. Type B rod marks shall always be used in highly corrosive environments. Since this mark is also provided with horizontal stability, it may also be used as a three-dimensional monument.

c. Type C - Disk in Bedrock or Concrete Structures. Sound bedrock is the most desirable location for a bench mark as illustrated by Type C monument (Figure 3-3); it provides the most stable setting in terms of both underground activity and potential disturbances. Always use bedrock when a suitable outcrop exists. As a rule of thumb, a bedrock outcrop is considered acceptable if the distance between adjacent joints and fissures is greater than 1 meter (40 inches).

d. Type D - Deep Rod - Frost Resistant (Anchored in Permafrost). Changes in bench mark position caused by frost heave can occur where soil freezes and thaws annually. This problem is most severe where annual frost penetrates deeply. Figure 3-4 illustrates the maximum depth of frost in meters for the United States. Significant subsurface movement of soil in permafrost areas can occur to depths of up to 9 meters (30 feet), and conventional bench marks can be moved several inches due to frost heave in winter and subsequent settlement during summer thaws. Type D monuments are frost-resistant bench marks designed to be anchored in permafrost (Figure 3-5).

e. Type E - Deep Rod - Frost Resistant (Anchored Below Permafrost). The primary difference between the Type E rod and the Type D rod is that the Type E will be anchored below permafrost as illustrated in Figure 3-6. Type E monuments shall be selected when the greatest monument stability is required in a permafrost area.

f. Type F - Shallow Rod - Finned, No Casing. The Type F shallow rod mark may be used in granular soils such as sands and gravels, glaciated soils or fine-grained soils such as silts and clays with high bearing strengths. The Type F rod mark is suitable for third order accuracy. If higher order accuracy is needed, then the Type A or Type B rod mark should be selected. The Type F rod mark is illustrated in Figure 3-7. Type F monuments shall also be used for reference and azimuth marks.

g. Type G - Disk in 3/4-inch Pipe or on Rebar. The Type G rod mark is selected for the same sites as the Type F mark; the primary difference is construction and installation details. The Type G rod mark is illustrated in Figure 3-8. Type G monuments shall be selected in lieu of Type F monuments when circumstances will allow the construction of the Type G monument.

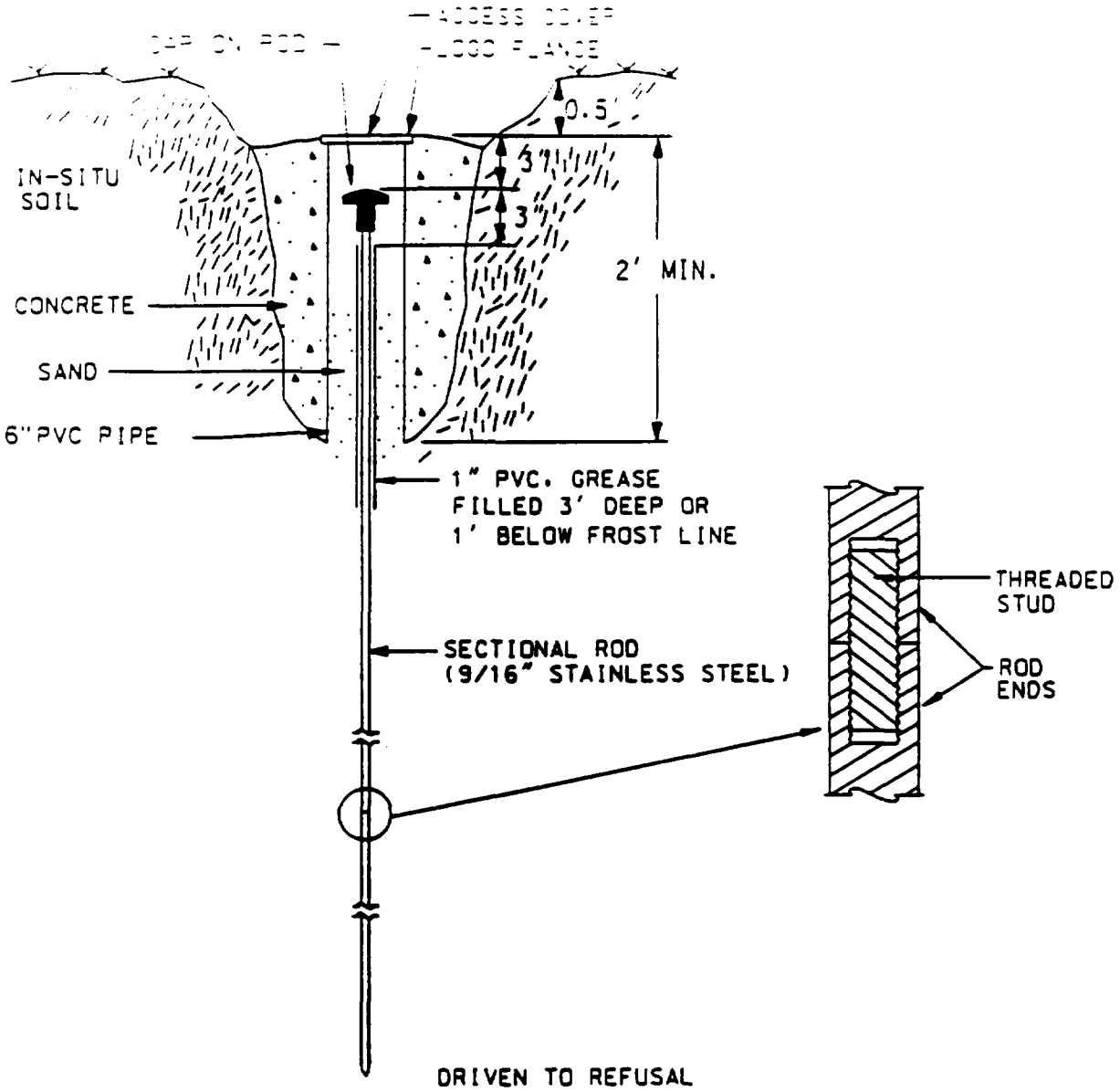

USE FOR VERTICAL AND HORIZONTAL CONTROL

Figure 3-2. Type B monument - deep rod - stainless steel with sleeve

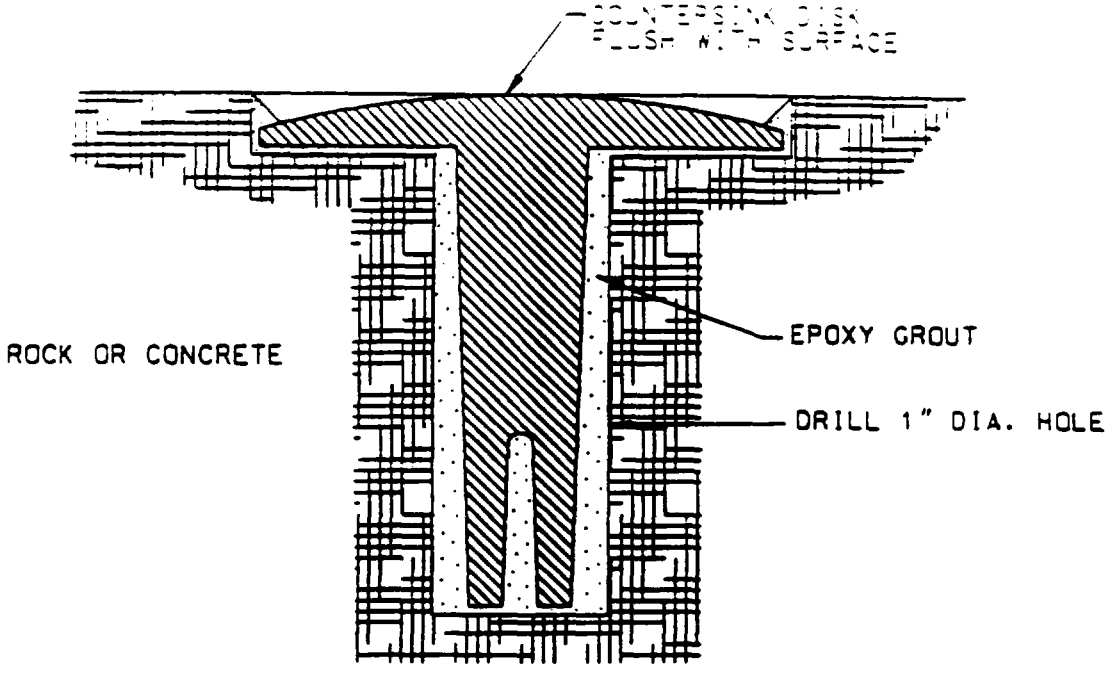

USE FOR VERTICAL, HORIZONTAL AND BOUNDARY CONTROL

Figure 3-3. Type C monument - disk in rock or precast concrete

h. **Deep Bench Marks in Clay.** When the site geology is known to consist of sensitive clays, the Type B rod mark should be used. The PVC sleeve should extend through the sensitive clay layer. The anchored section should be driven to refusal. When the site geology is known to consist of lacustrine clays, the Type B rod mark should be used. The PVC sleeve should extend through the highly desiccated soil.

i. **Natural or Ready-Made Bench Marks.** Occasionally, a natural or ready-made bench mark setting, which cannot accommodate a brass disk, will exist that would be more stable than a rod mark.

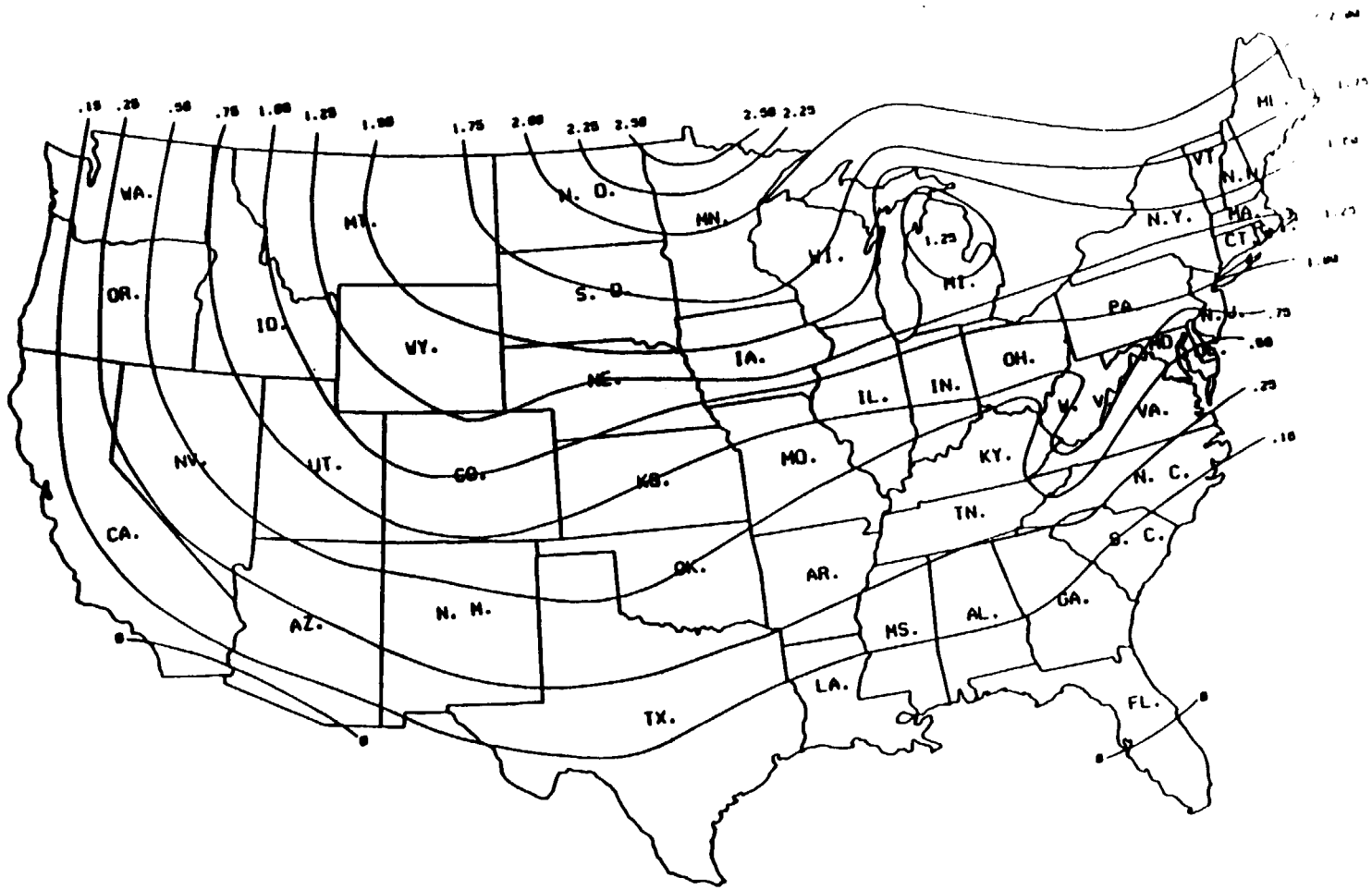

Figure 3-4. Maximum depth of frost (meters)

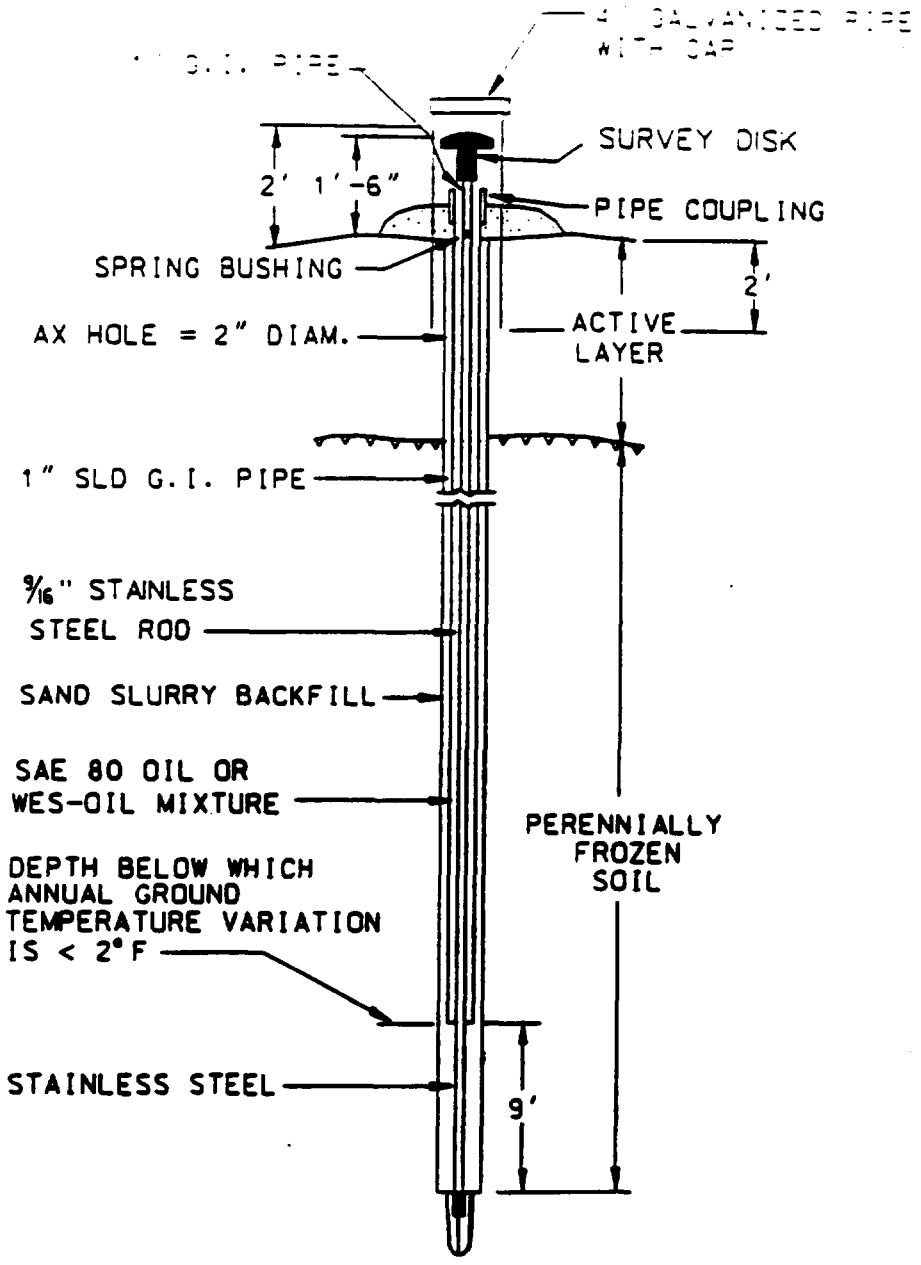

ANCHORAGE IN PERMAFROST

USE FOR VERTICAL AND HORIZONTAL CONTROL

Figure 3-5. Type D monument - deep rod - frost resistant in permafrost.

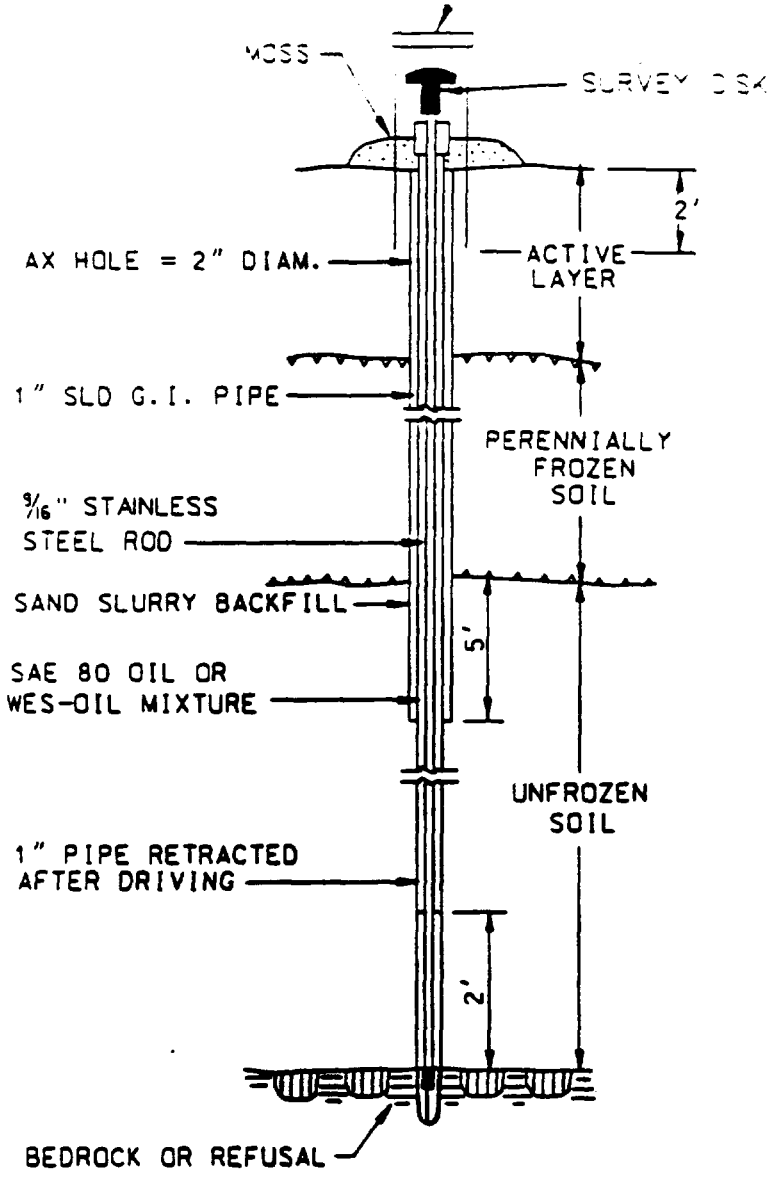

ANCHORAGE BELOW PERMAFROST

USE FOR VERTICAL AND HORIZONTAL CONTROL

Figure 3-6. Type E monument - deep rod - frost resistant below permafrost

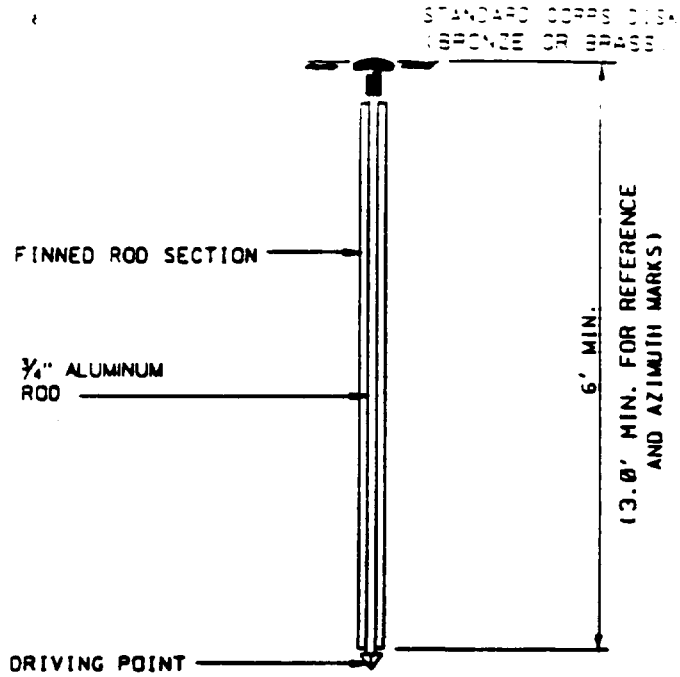

USE FOR HORIZONTAL, BOUNDARY, REFERENCE AND AZIMUTH CONTROL

Figure 3-7. Type F monument - disk on shallow rod

An example is a deep well casing. It would resist not only near-surface movements but also, to a degree, movements originating in the subsurface, such as subsidence from pumping. A good illustration of this can be seen in Santa Clara Valley, California, where well casings project prominently because of ground subsidence. These settings should not be ignored simply because a disk cannot be mounted on them. Settings of this type may furnish excellent references for elevations, provided they extend at least three times as deep as the required sleeve depth for a Type B rod mark in that area. It is important to select a good point of reference for the elevation of this type of bench mark. A prominent protrusion can be used if it is definite and has a good high point on which to rest a rod. Alternatively, a cross may be etched with deep, fine lines on a spot accessible to a leveling rod or tape. If possible, stamp or etch the bench mark designation and year nearby.

3-2. Construction and Installation Procedures. All USACE survey disks and access covers shall be stamped using 3.17-millimeter (1/8-inch) steel dies. All stamping shall deform the disk surface by a minimum of 1 millimeter (0.0394 inch).

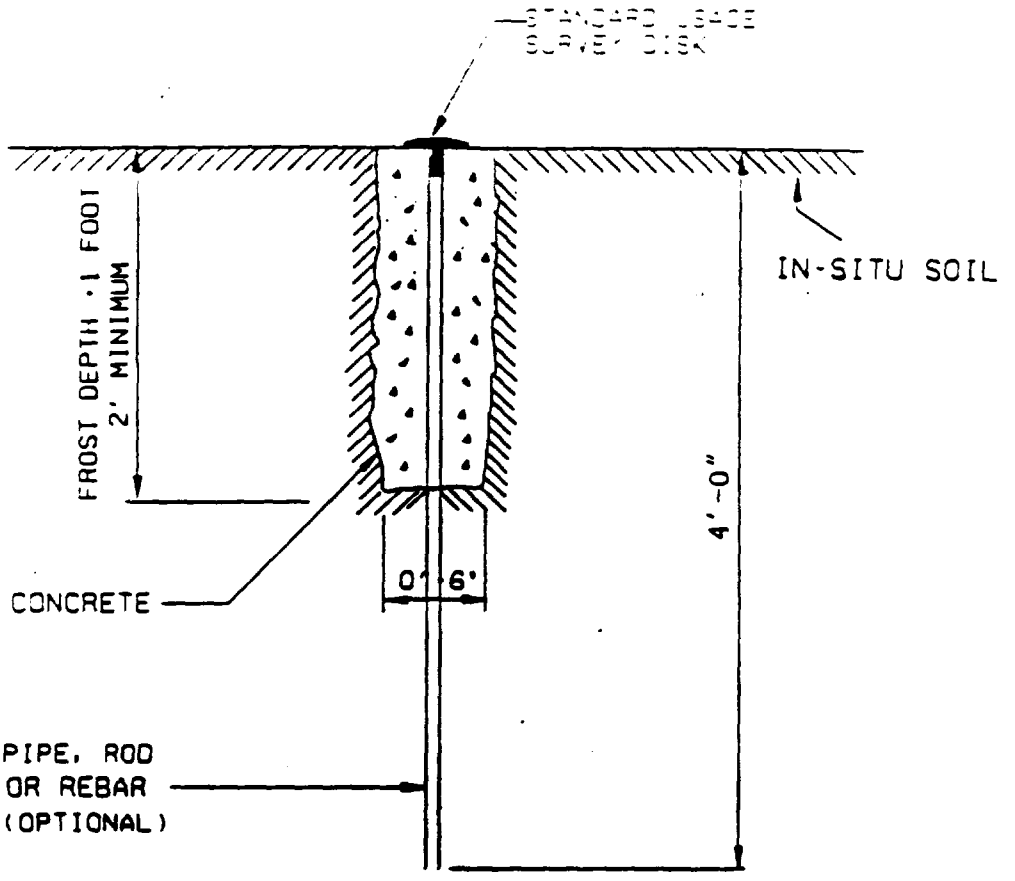

Figure 3-8. Type G monument - disk in cast-in-place concrete

a. Type A - Deep Rod - Aluminum with Finned Section. The construction details are shown in Figure 3-1. The mark is assembled from 3- and/or 4-foot sections of 3/4-inch aluminum alloy rod. The casement is constructed of a 15.2-centimeter (6-inch) PVC pipe 0.6 meter (24 inches) long, fitted with an aluminum access cover at the top. The access cover is imprinted with the information shown in Figure 3-9. The mark name shall be stamped on the access cover at "Mark Designation." The cover and pipe are placed around the top of the mark. Approximately 20 liters (2/3 cubic foot) of concrete is poured around the PVC pipe and access cover to hold them in place and to aid in recovery. The top 4-foot rod section is finned to provide horizontal stability. This type of monument is designed to prevent near-surface soil movements from disturbing the monuments. The rod assembly is driven or pressed to refusal into the soil so that it is anchored below the layers of disturbance. Refusal is defined as the depth at which the rod refuses to drive further or until a driving rate of 60 seconds or less per foot is achieved with a power reciprocating rod driver such as a Pionjar Model 120 or similar device

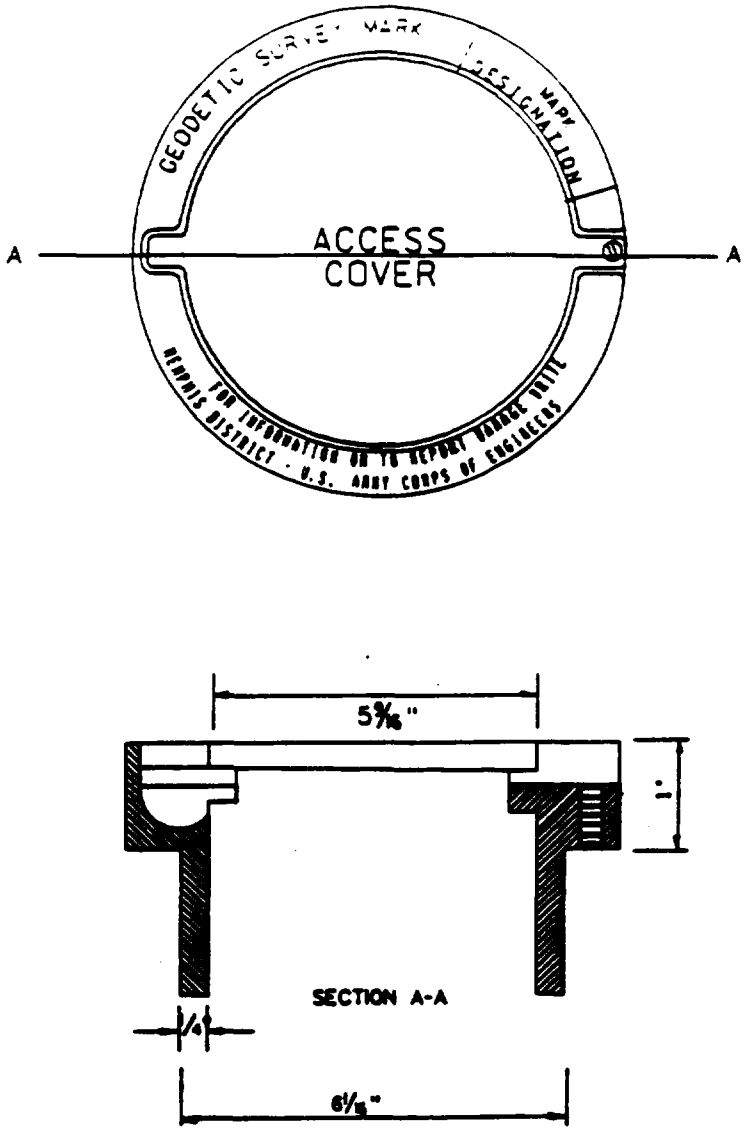

Figure 3-9. Standard access cover

with equivalent driving force of 26.9 foot-pounds/blow and an average of 2,500 blows per minute. The procedure for setting a Type A rod mark is as follows:

(1) Using an appropriate solvent for PVC, glue the aluminum flange to one end of a 0.6-meter (24-inch) section of 15.2-centimeter (6-inch) PVC pipe.

(2) Dig a hole 30 centimeters (12 inches) in diameter to a depth of 0.6 meter (2 feet).

(3) Drive the first section of rod in the center of the hole. Make sure it remains plumb while driving. Couple another section of rod tightly to the first and continue to drive the assembly. To obtain tight joints, hand tighten the sections and then apply another one-quarter turn with a wrench or wrenches. Repeat this procedure until the driving rate is near refusal. The last rod section shall be a 3-foot finned rod section driven such that its top is 3 inches below the surface.

(4) Stamp the name and year on the USACE disk (Figure 3-10) and drive the disk onto the rod. The disk should be driven on the rod about 1 inch.

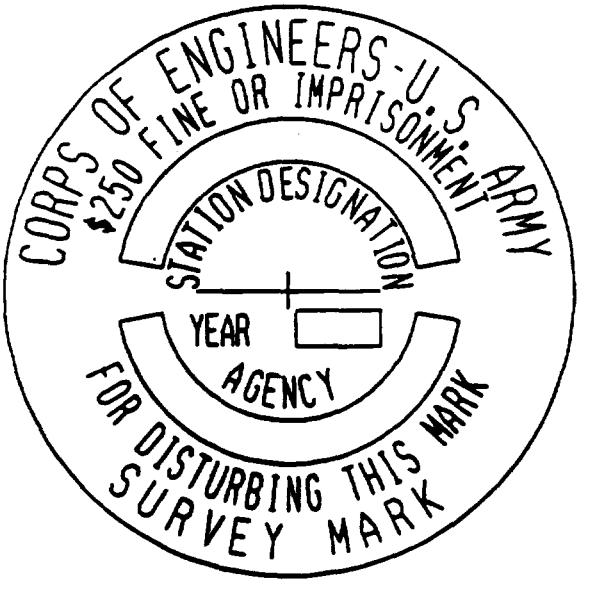

RECESSED LETTERS
3-1/2 INCH DIAMETER
BRASS/BRONZE

Figure 3-10. Standard survey disk

(5) Center the PVC pipe and access cover assembly over the rod. Backfill inside the pipe with sand to about 5 centimeters (2 inches) below the top of the rod.

(6) Mix about 20 liters (2/3 cubic foot) of concrete and place around the outside of the PVC pipe. Finish the top surface of the concrete so that it slopes slightly away from the top of the access cover.

b. Type B - Deep Rod - Stainless Steel with Sleeve. The construction details are shown in Figure 3-2. The rod is assembled from 3- and/or 4-foot sections of 1.43-centimeter (9/16-inch) Type 316 stainless steel coupled with threaded studs of the same material. The rod itself anchors the datum point to

a stable stratum of soil. For the most stable mark, the sleeve is required to isolate the rod from soil movements occurring above the stable stratum. The sleeve may be omitted if no soil movements are expected; however, stability will be reduced. To avoid movements caused by frost heave and soil shrinking and swelling, extend the sleeve to the maximum depth to where these types of soil movements are expected to occur. The procedure for setting a Type B rod mark is identical to that of the Type A rod mark with the exception of the sleeve and the finned section.

(1) Using an appropriate solvent cement for PVC, glue the aluminum flange to one end of a 0.6-meter (24-inch) section of 15.2-centimeter (6-inch) PVC pipe.

(2) Construct the sleeve by gluing a PVC cap, with a drill hole of adequate diameter to accommodate the rod, on each end of a 1-meter (3-foot) or longer section of 2.54-centimeter (1-inch) schedule 40 PVC pipe. Fill the sleeve with an insoluble, non-corrosive, cold weather type grease.

(3) Dig a hole 30 centimeters (12 inches) in diameter to a depth slightly greater than 1 meter (3 feet) or the depth required to place the sleeve pipe base 30 centimeters (1 foot) below the frost line.

(4) Taking care not to deform its end, by using a drive adapter, drive the first section of 1.43-centimeter (9/16-inch) stainless steel rod down to just above ground level. Make sure it remains plumb while driving. Couple another section of rod tightly to the first and continue to drive the assembly as noted in paragraph 3-2a.

(5) Insert the capped 1-meter (3-foot) or longer grease-filled section of 2.54-centimeter (1-inch) PVC pipe over the 1.43-centimeter (9/16-inch) rod. The PVC sleeve should extend at least 30 centimeters (1 foot) below the local frost line if the frost line is deeper than 90 centimeters (3 feet). The rod should protrude approximately 5 centimeters (2 inches) above the sleeve.

(6) Stamp the name and year on the survey mark disk (Figure 3-10) and drive the disk onto the rod.

(7) Backfill around the outside of the sleeve with sand to about 60 centimeters (24 inches) below ground. Install the 0.6-meter (24-inch) section of 15.2-centimeter (6-inch) PVC pipe with aluminum access cover over and around the sleeve and rod.

(8) Backfill the inside of the 15.2-centimeter (6-inch) PVC pipe with sand around the outside of the sleeve and rod to about 2.54 centimeters (1 inch) below the top of the sleeve.

(9) Pour concrete around the outside of the pipe and finish as outlined in paragraph 3-2a.

[illegible] Type [illegible] Disk in Bedrock or Concrete Structure. The Standard USACE disk (Figure 3-10) is made of brass or bronze. It is 3.9 centimeters (1.5 inches) in diameter with a spherical surface to support the foot of a leveling rod. Information is printed on this surface to identify the monument and to aid the user in obtaining important data. So as not to interfere with placement of the leveling rod, logo information is recessed in the surface of the disk. A deformed shank, about 7.5 centimeters (3 inches) long, is attached to the bottom surface of the disk to help prevent the disk from being dislodged from the monument. In addition, disks with tubular shanks are used when driven on rod marks. The step-by-step procedure for setting the disk in bedrock is as follows:

(1) Stamp the designation and year on the top surface using 3.17-millimeter (1/8-inch) steel dies.

(2) Pick a fairly level and accessible spot on the outcrop that is intact with the bulk of the rock.

(3) Drill a hole 2.5 centimeters (1 inch) in diameter about 10 centimeters (4 inches) deep into the bedrock. Recess the area around the top of the hole to a diameter slightly larger than that of the disk. When the installation is completed, the top surface of the disk should set level and flush with the surrounding rock. Caution: Safety goggles should be worn when drilling into bedrock or masonry.

(4) Remove any rock powder from the hole and recessed area. Fill the drilled hole with clean water and then pour in the epoxy or non-shrink grout. Mixing of the ingredients may be done in the hole. Premixed grout may be used if desired. By adding more water and grout, mix enough grout so that an extra amount is available for the underside of the disk and, if applicable, the inside of the shank. A properly mixed grout should be thick but still workable.

(5) Fill the depression on the underside of the disk with the additional grout. If the disk has a tubular shank, fill the shank with grout. This step is very important; it will prevent highly undesirable voids under the disk once it is in place.

(6) Place the shank of the disk into the drilled hole and press the mark firmly into place. Work the excess grout completely around the outer edge of the disk, making sure that it is smooth and flush with the top surface. An exposed edge of the disk would provide an area that could be used by someone to dislodge the disk. Excess fresh grout on the upper surface of the disk can easily be cleaned off.

(7) Sprinkle some dry cement on the exposed surface of the disk; then rub it with a clean rag using circular strokes. This will clean the disk very nicely, removing all excess grout from its surface and recessed letters. Rubbing the wet grout around

the edge of the disk in the same manner will do no harm. In fact, this is often done intentionally to finish its surface and prevent cracking. Brush away loose cement and make sure that the finished product has a very neat appearance.

(8) To prevent heavy rains from ruining its surface and/or to prevent the disk from being tampered with, the grout must be covered until it is set and dry. A piece of wood, cardboard, heavy paper, or any other similar biodegradable material will suffice.

(9) The installation is not complete until all accumulated trash has been picked up. Leave the monument location in a neat and orderly appearance.

When setting a disk in a massive concrete or masonry structure, first make sure the structure is stable. The required foundation depth is at least equal to a quarter of the specific sleeve depth of a Type B mark (Figure 3-2). The disk may be mounted vertically in a wall of a structure but should be set horizontally if possible. The procedure for setting a disk horizontally in a structure is identical to that for setting one in bedrock. Again, make sure safety goggles are worn when drilling into masonry or concrete. For a vertical setting, the hole for the disk's shank must be drilled horizontally; therefore, the mortar must be mixed separately. When drilling into brick or other soft material, a hammer and star drill should be used rather than heavy power equipment. This prevents the possibility of extensive damage to the exterior. The inside of the drilled hole should be wetted before any mortar is applied. After placing the shank of the disk into the mortar-filled hole, the disk should be worked to the bottom edge of the hole. This will prevent the possibility that the disk will settle askew while the mortar is curing.

d. Type D - Deep Rod - Frost Resistant (Anchored in Permafrost). Construction of this type of monument should be accomplished when the ground is frozen. Plywood should be used in the work area to minimize surface disturbances that destroy the organic mat around the bench mark leading to deepening of the active frost layer and possible instability of the monument. The installation of this bench mark design is outlined below.

(1) Carefully position the drill rig so that disturbance of the moss cover will be kept to a minimum. Place a suitable length of NX (4-inch) casing through the active layer into the perennially frozen ground to prevent thawed material and surface water from entering the hole. Drill a hole to a depth of 39 feet with AX (2-inch) size drill equipment, using an AX core barrel if samples are desired; otherwise, use an AX non-coring bit. If caving occurs, AX drill casing should be placed to the bottom of the hole. When the hole is completed, bail out all the water.

(2) Connect the drive point to a section of 3/16-inch stainless steel or aluminum rod and lower it into the hole to a depth of 8 feet. String a 10-foot length of 1-inch pipe over an 11-foot length of the rod. With vice grips or another device securely clamped to the top of the inner pipe to prevent it from sliding out of the 1-inch casing, raise the two pipes vertically above the hole and connect the rods. Retaining a hold on the outside pipe, lower the assembly into the hole, adding successive sections of rod and 1-inch pipe until the drive point rests on the bottom. Secure the 1-inch pipe so that it projects about 6 inches above the ground. The inner pipe should protrude above the outer pipe.

(3) Holding the pipes in this position, carefully backfill the hole with a sand-slurry mix so that it just pours easily. If drill casing has been used, withdraw it carefully so that the relative positions of the bench mark rod and pipe are maintained as the hole caves in around them. To ensure that the lower portion of the datum pipe is adequately surrounded by soil, it may be necessary to fill the lower part of the hole with the slurry before removing the drill casing. If this is the case, even greater care is required to maintain the relative positions of the bench mark rod and pipe as the drill casing is removed.

(4) Remove the NX casing from the active layer and backfill the hole to the ground surface, carefully replacing the moss cover around the pipes.

(5) Fill the annular space between the inner and outer pipes with an SAE 80 gear oil or a special wax-oil mixture. This mixture can be made up of 70 percent oil (such as Mentor 29) and 30 percent wax (such as Socony Mobil Cerise AA) by weight, mixed after heating to about 200°F. The mixture is poured into the assembled sections of pipe and allowed to congeal before the pipes are placed in the drill hole.

(6) Install the "spring bushing" inside the top of the 1-inch pipe casing. The top of the rod shall be rounded to provide a single point of contact. Center punch the datum point for a three-dimensional monument.

(7) A 4-foot length of 4-inch pipe with pipe cap shall be driven into the ground over the bench mark assembly to provide protection.

e. Type E - Deep Rod - Frost Resistant (Anchored Below Permafrost). Construction of this type of monument should be accomplished when the ground is frozen. Plywood should be used in the work area to minimize surface disturbances that destroy the organic mat around the bench mark leading to deepening of the active frost layer and possible instability of the monument. The installation of this bench mark design is outlined below.

1. Following the same procedures given above, drill an AX hole to a depth 5 feet below the perennially frozen layer.

2. If the unfrozen soil underlying the permafrost is relatively soft, complete the installation by driving the 2.54-centimeter (1-inch) pipe and the rod to refusal; then retracting the 2.54-centimeter (1-inch) pipe 0.6 meter (2 feet) above the refusal point.

(3) If the unfrozen soil is stony or very stiff, it may be necessary to extend the borehole to bedrock or other resistant material. In this case, the installation may then be completed by following the procedures used for anchoring bench marks in permafrost previously discussed.

f. Type F - Shallow Rod - Finned, No Casing. The construction details are illustrated in Figure 3-7. The Type F mark is constructed of two 90-centimeter (3-foot) aluminum alloy finned rod sections with a USACE disk driven on the top section. The rods are driven or pressed into the soil such that the USACE disk is flush with the ground surface.

g. Type G - Disk in 3/4-inch Pipe or on Rebar. The construction details are illustrated in Figure 3-8. The Type G mark is constructed by excavating a 15-centimeter (6-inch)-diameter by 60-centimeter (2-foot)-deep hole. In areas where the maximum frost depth is greater than 2 feet, the excavated depth should be 1 foot below the maximum frost depth. The USACE disk may be driven into a 4-foot by 3/4-inch diameter pipe or on a 4-foot by No. 5 reinforcement steel bar (rebar). The pipe or bar assembly is then driven into the center of the hole until the disk is slightly above the surface. The hole is then filled with concrete to the disk. The use of a pipe or rebar is optional. The disk may be pushed directly into the fresh concrete; however, a magnet shall be placed in the concrete if pipe or rebar is omitted.

3-3. Naming Vertical Control Monuments. A vertical control point, commonly referred to as a "bench mark" (BM), should be identified by a number or by an alphanumeric symbol stamped on the respective disk marker (or otherwise inscribed on the bench mark monument or access cover). In principle, the name that identifies a vertical control point for publication purposes should be the same as the name that actually appears on the marker. However, extraneous information, which is not part of the name, frequently appears on the marker. For example, the name of a bench mark should not include the elevation. The name does not generally include the "year mark set". Tidal and water level stations should also be named in accordance with these instructions.

a. Maximum Character Length. A bench mark name must not exceed 25 alphanumeric characters (including all imbedded

blanks". Abbreviate and/or edit a name as necessary to conform to this limit.

b. Organization Acronym. A name should always include the acronym or abbreviation of the agency or organization that set the mark if it is not precast or stamped on the survey marker (for example, USE for U.S. Engineers). In addition, a District or Division acronym may also be included as part of the name if it is not precast or stamped in the marker. The agency and/or organization acronym should not be stamped on the disk as part of the name. However, they may be appended to the name for publication.

Example Names

2903
V 16 RIRR

c. Special Characters. The only special characters permitted in a bench mark name are the blank ( ), plus (+), minus or hyphen (-), equals (=), slash (/), and decimal point (.). When used, these special characters must not be separated from adjacent characters by any blanks. Commas and parentheses are not allowed to appear in a bench mark name.

Example Names

CH 1174=297+00 A
H 23

d. Character Groupings. All alpha and numeric character groupings in a name must be separated by a blank. Care should be taken that only one blank is used for this purpose. Two blanks in a row will be interpreted as the end of the name.

Example Names

MEM 123 B
BEALE 17 B
TT 1 7 B

e. Unacceptable Names. The characters "NO" or "NO." should not be included in the name when used as the abbreviation for the word number. A period may not appear imbedded in or adjacent to a grouping of alpha characters. However, a decimal point may appear imbedded in, or adjacent to, a grouping of numeric characters. Non-specific descriptive terms such as "bench mark," "BM," "chiseled square," "bolt," "red," "nail," or "spike" should

not be used as part of the name. The elevation should not be stamped on the disk marker or otherwise inscribed on the bench mark monument.

Acceptable Example Names

MI 14.2
4419.
PALMER NE BASE

f. Multiple Names. For bench marks that carry multiple stamped names, the information imprinted should be concatenated with the equal sign (=) used as a separator (subject to the 25-character total length limit).

Example Names

H 13=872 2621 TIDAL USE
STA 3=MI 182.5 USE
LEE RM 1=R 13 USE

g. Reset Names. When resetting marks, always use a new unique name for each station reset. Do not use "Reset" as part of the name.

h. Temporary Bench Marks. A temporary bench mark (TBM) must carry the letters "TBM" as the first three characters of the name.

Example Names

TBM 1 A
TBM 14

3-4. Marks of Other Organizations. If a satisfactory vertical control monument of another organization is found at the project site in good condition, it may be used without alteration as the station mark of a new USACE Survey Monument. In case the existing mark of the other organization is not in good condition for a station mark, a new station mark should be established in the vicinity, and the mark of the other organization should be used as an extra reference mark. The stamping of additional marks should be done as indicated in this manual. Care should be taken not to displace a mark of another organization in horizontal position, or even in vertical position if there is a possibility that it could be used as a bench mark. The mark should not be altered without permission from the organization that established it.

3-14. Witness Posts and Signs. In order to aid in the preservation and to serve as a means of easy recovery of monuments being established, a witness post should be set adjacent to the monument or near one of the reference marks at each station. This post should be 1.8 meters (6 feet) in length and be set to a minimum of 1 meter (3 feet) above the ground surface. The post should have the standard witness post sign attached (Figure 3-11). Witness posts shall be set for monuments of third-order accuracy and above, established along public highways, in rural districts, along the rights-of-way of railroads, and along the shorelines of rivers and lakes. They need not be set for monuments established along business streets, in residential sections of cities, on the grounds of a school or a church, in cemeteries, in cultivated farmlands, or on bare mountain tops. For survey monuments established below grade or in cultivated fields and marked with an underground mark, the post shall be set at a reference mark.

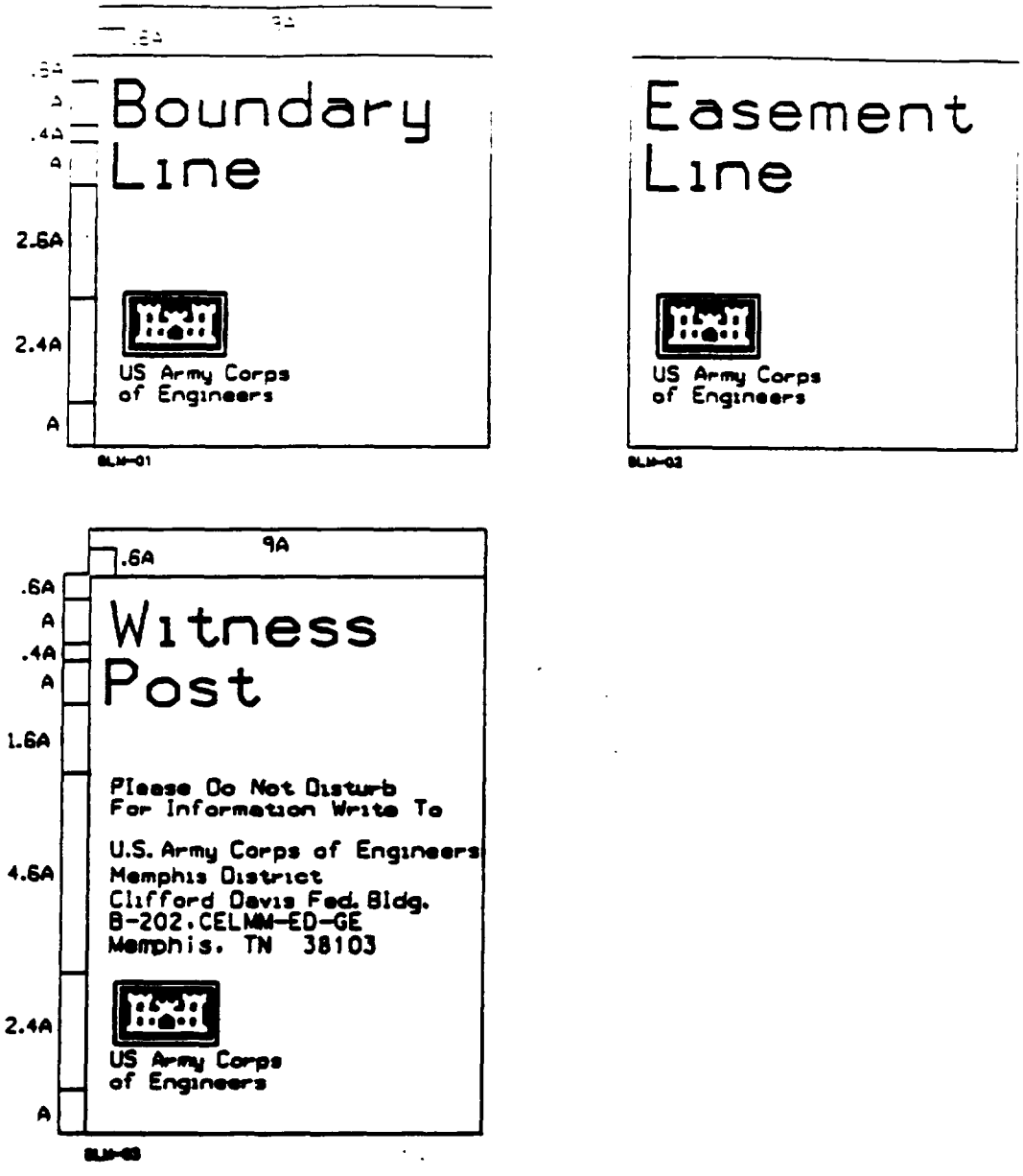

SIGN TYPE	LEGEND SIZE (A)	PANEL SIZE	POST SIZE	SPECIFICATION CODE	MOUNTING HEIGHT	COLOR BKG/LGD
BLM-01	.3437	3.5"x3.5"	4"x4"	SCP-7	36" MIN.	WH/BK
BLM-02	.6875	6"x6"	4"x4"	SCP-7	36" MIN.	WH/BK
BLM-03	.3125	2.875"x2.875"	3.75"x.5"	SCP-10	36" MIN.	WH/BK

Figure 3-11. Standard property markers

CHAPTER 4

HORIZONTAL CONTROL MONUMENTS

4-1. Selection of Monument Type Based on Local Site Conditions. Types of monuments to be used for horizontal control are a function of the order of accuracy of the survey, of the intended use of the data collected, and of the location provided. The various monuments that should be used to provide horizontal control only are identified in Table 4-1. The site selection criteria have previously been discussed in paragraph 3-1. If higher order accuracy other than that illustrated in Table 4-1 is desired, then a Type A rod mark should be used. High precision engineering and deformation studies require extremely stable monuments, i.e, instrument pedestals and force-centering devices. Other rod type monuments in this manual may also be used for horizontal control as well as vertical control.

4-2. Construction and Installation Procedures. Construction details for rod marks have been previously discussed in paragraphs 3-2a. through 3-2g. Instrument pedestals shall be

Table 4-1

Site Conditions and Monument Types for Horizontal Control

Site Conditions	Order of Accuracy			
	High	1	2	3
Rock outcrops, large boulders, bedrock concrete structures (more than 5 years old)	C	C	C	C
Granular soils (sand and gravel)	G	G	G	F,G
Glaciated soils (till)	G	G	G	F,G
Fine-grained soils (silts and clays with high bearing strengths)	G	G	G	F,G
Fine-grained soils (silts and clays with low bearing strengths)	G	G	G	G
Construction fill (disturbed earth)	G	G	G	G
Permafrost	E	E	D	G
Marsh	A,B	A,B	A,B	A,B
Subsidence area	A,B	A,B	A,B	A,B

constructed as shown in Figure 4-1. The centering device should be constructed as outlined in Figures 4-2 and 4-3 and should have a protective cover. It is recommended that soil and or geotechnical specialists be consulted prior to construction of instrument pedestals. All USACE survey disks and access covers shall be stamped using 3.17-millimeter (1/8-inch) steel dies. All stampings shall deform the disk surface by a minimum of 1 millimeter (0.039 inch).

a. Pedestal in Soil. For a monument pedestal in soil (Figure 4-1a), a 1.2-meter (4-foot) square concrete footing shall be constructed below the frost line. The thickness of the footing will be 0.6 meter (2 feet). A 25.4-centimeter (10-inch)-diameter steel pipe pedestal filled with concrete will be attached to the footing with five #4 ribbed rebars placed on 10-centimeter (4-inch) centers embedded in the footing and pedestal for a minimum of 50 centimeters (20 inches). A centering device as shown in Figures 4-2 and 4-3 shall be placed in the center of the pedestal. A protective cover and casing of 45.7-centimeter (18-inch)-diameter steel pipe shall be placed over the pedestal and extended from the top of the footing to approximately 1.22 meters (4 feet) above the ground surface.

b. Pedestal on Rock. For a control monument on rock, the construction is similar to the construction for a control monument in soil as illustrated in Figure 4-1b. All fractured and weathered material shall be removed from the rock. Then the rebars shall be epoxy grouted into the top of sound rock with five #4 ribbed rebars on 10-centimeter (4-inch) centers. The rebar shall be epoxy grouted into the rock for a minimum distance of 50 centimeters (20 inches) and should extend into the bottom of the pedestal at least 25 centimeters (10 inches). The protective covering, casing, pedestal, and centering device will be constructed in the same manner as a control monument in soil.

c. Centering Devices. The forced centering device shown in Figure 4-2 shall be installed in the top center of the instrument pedestal. The bottom of the centering device shall be embedded 5.7 centimeters (2.25 inches) in the concrete. The forced centering device shown in Figure 4-3 attaches to the base of the instrument and forces the instrument to center on the pedestal device.

d. Structure Insert. A structure insert is grouted in the existing concrete structure at selected locations (Figure 4-4). The top surface is rounded to provide a point for precise leveling. The center is tapped and threaded to fit a standard prism 5/8-inch by 11-inch thread. A 5/8-inch brass plug or bolt should be screwed into the threads when not in use. The insert shall be made from 1-1/4-inch hex stainless steel stock. The structure insert is illustrated in Figure 4-4.

4-3. Naming Horizontal Control Monuments. Intelligible names should be assigned as primary identifiers of horizontal control

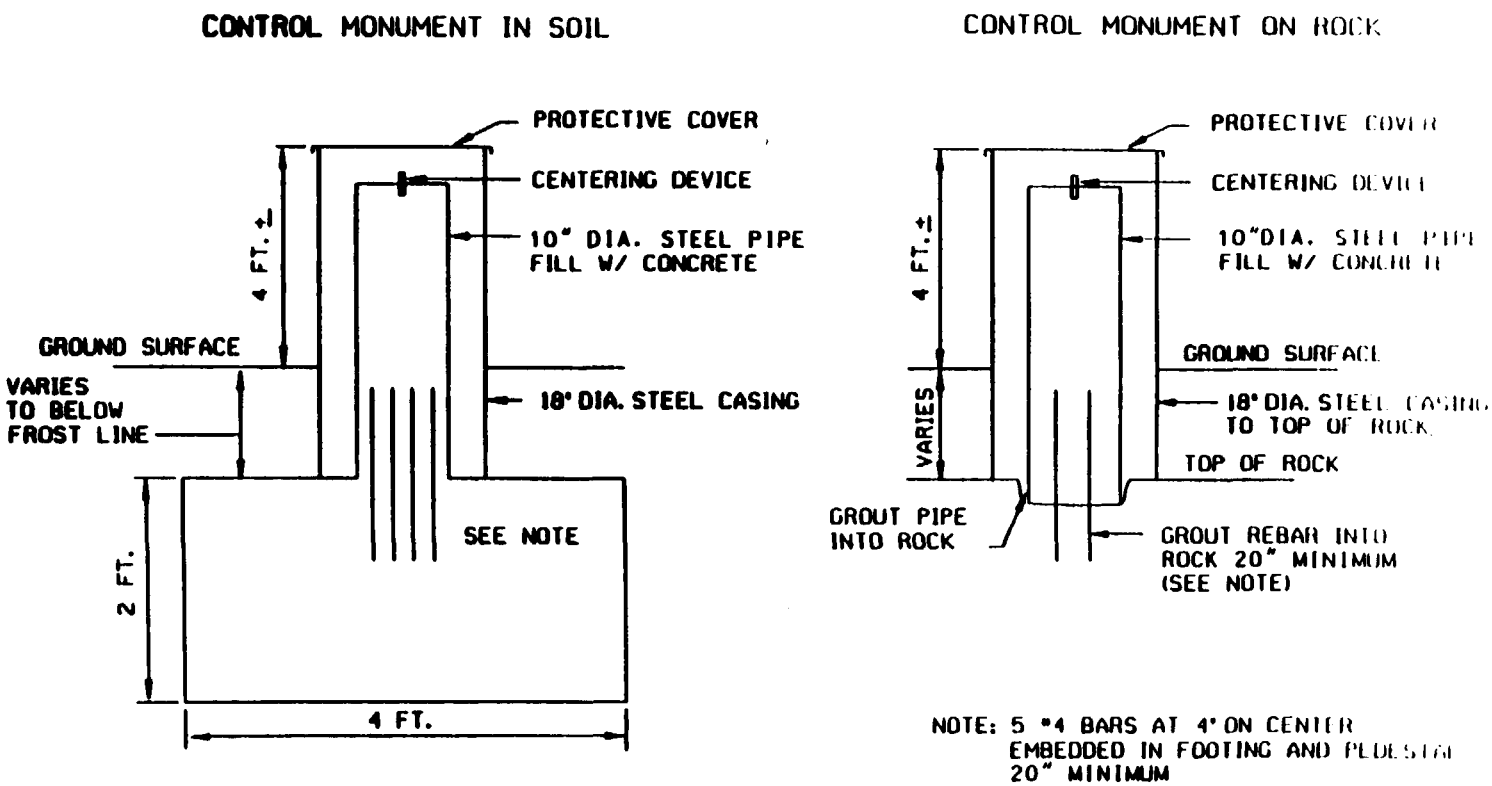

Figure 4-1. Instrument pedestal

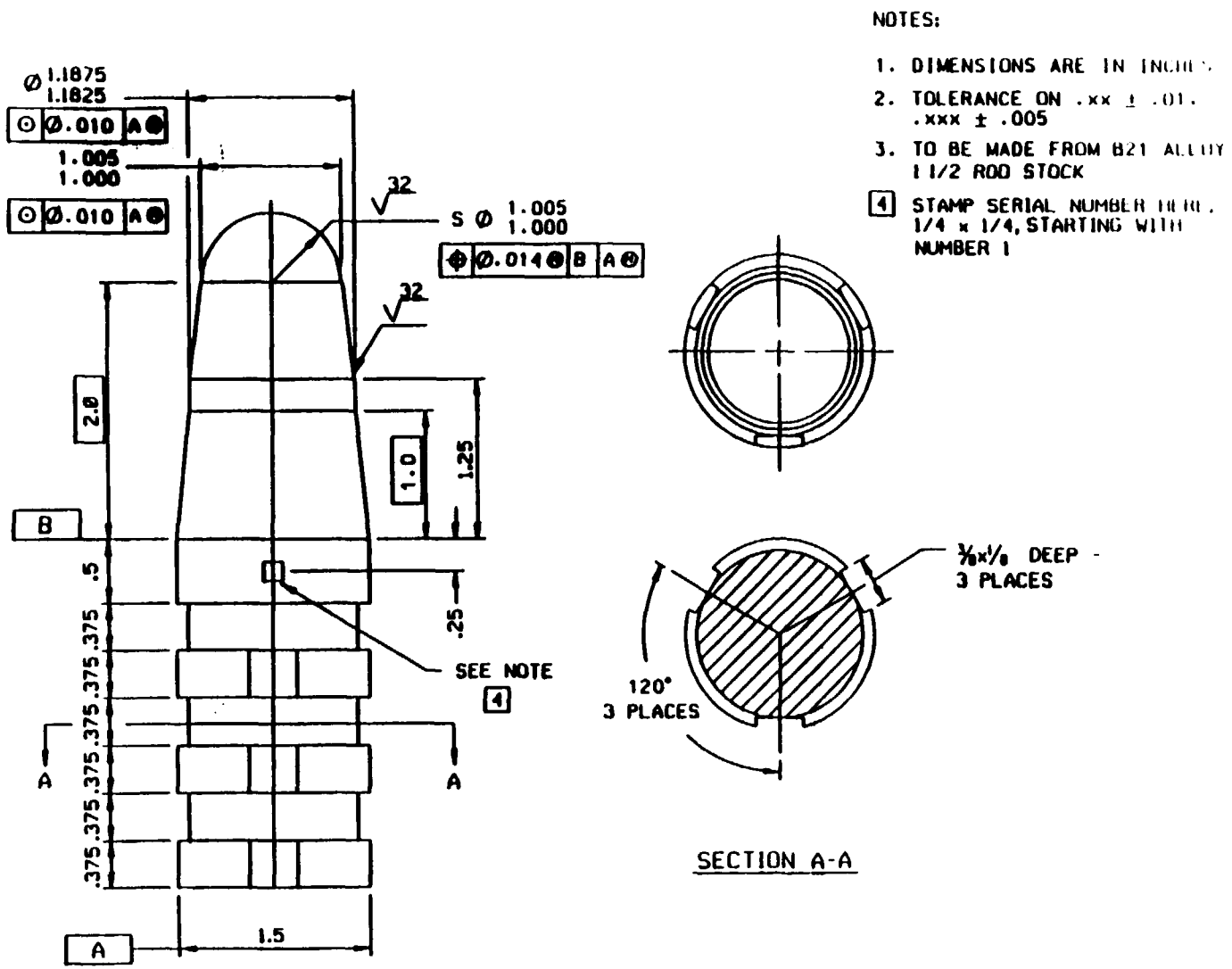

Figure 4-2. Instrument pedestal forced centering device

NOTES:

1. DIMENSIONS ARE IN INCHES.
2. TOLERANCE ON .xx ± .01, .xxx ± .005
3. TO BE MADE FROM B21 ALLOY 2" ROUND STOCK
4. FOR ASSEMBLY - USE 1/4-20 UNC-2A, 1/4" LONG SET SCREW
5. ALL MACHINE SURFACES ARE 32

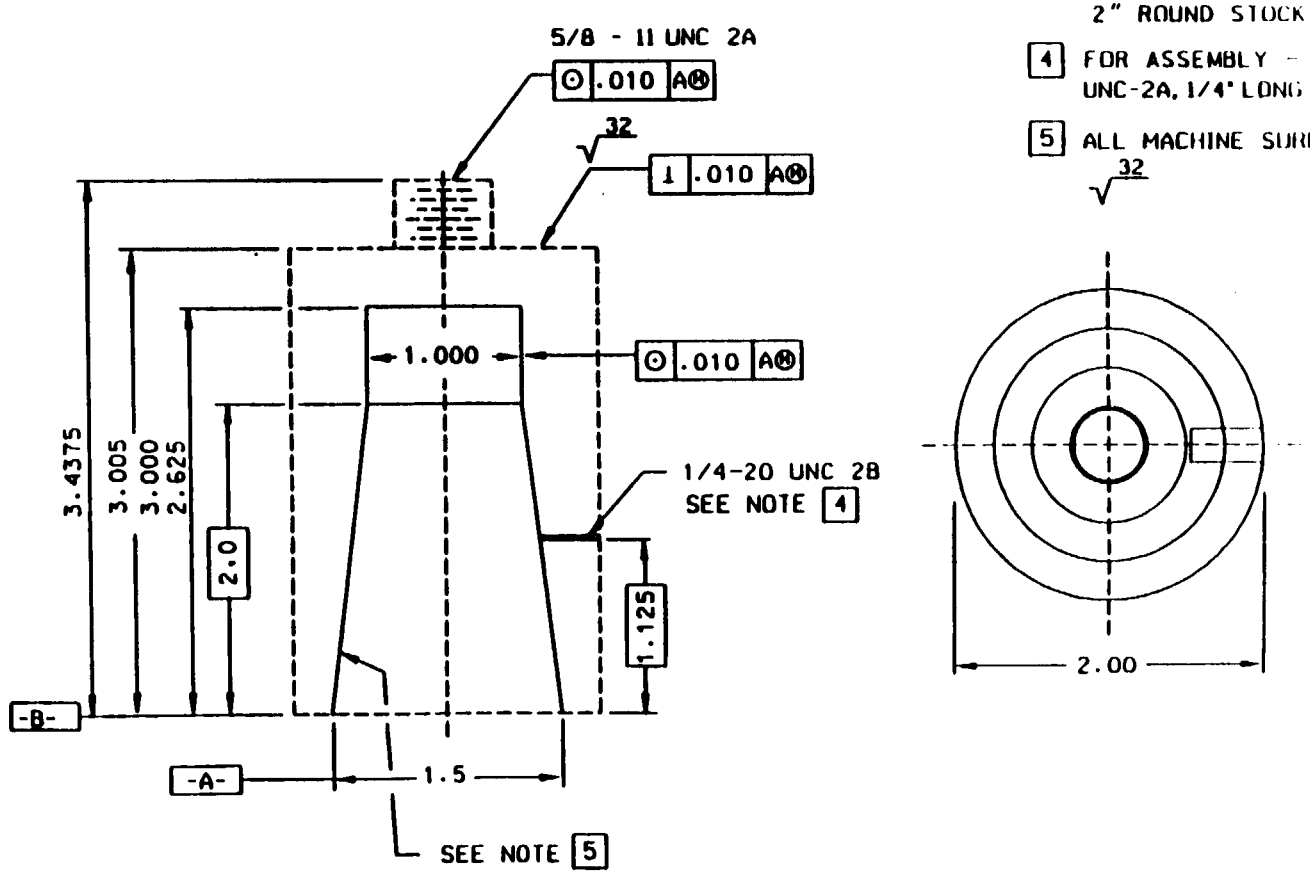

Figure 4-3. Instrument forced centering device

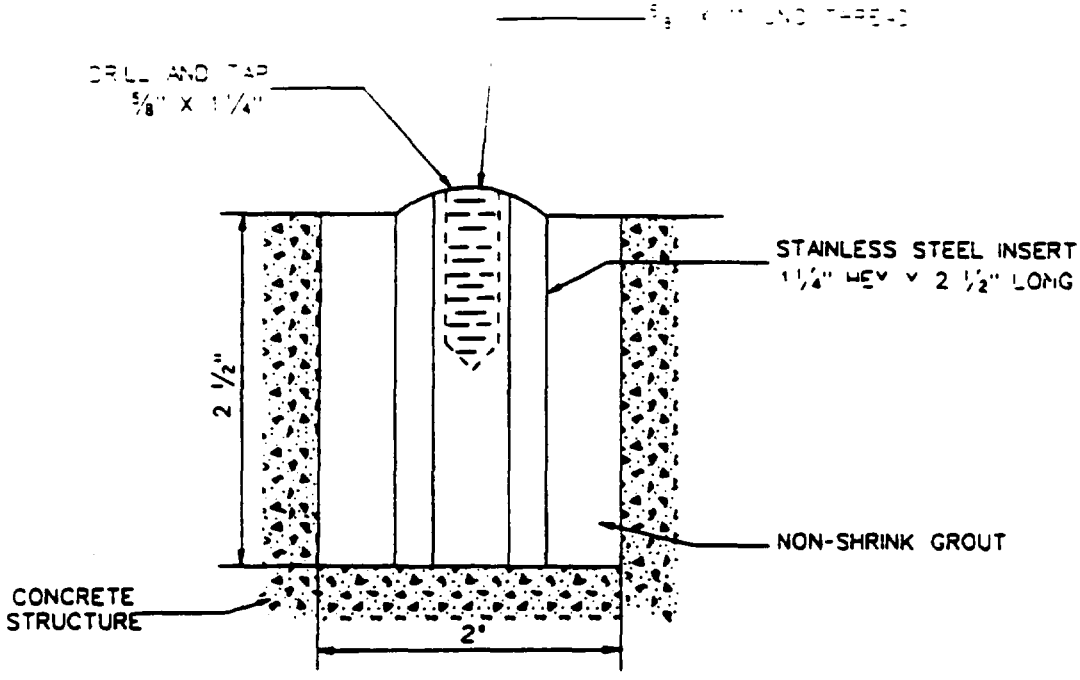

Figure 4-4. Structure insert

points. A properly chosen station name should in itself be descriptive and/or indicative of the general location of the respective horizontal control point.

a. **Maximum Character Length.** The name of a monumented horizontal control point should be concise, being limited in length to a maximum of 30 characters.

b. **Monumented Point.** In addition to the "year mark set" another date is associated with every survey point whether it is a monumented horizontal control point or an unmonumented recoverable landmark. This additional information, referred to as the "year established," is the year in which observations were first performed for the purpose of determining the position of the horizontal control point. The "year established" should also reflect the year in which the original description of that control point was prepared. The "year established" and "year-mark-set" of a monumented horizontal control point are often identical. Additional information on network design, geometry, and connections is located in a separate engineering manual that is currently in preparation.

c. Unmonumented Point. Another type of horizontal control point is an unmonumented recoverable landmark such as a flagpole or church spire. The name of a horizontal control point of this type must be sufficiently descriptive in order to identify the respective landmark (frequently a specific feature of the landmark). For this reason, the name of this type of control point is usually lengthy. The length of a station name, including all embedded blanks, should be limited to 30 characters. The same limit applies to the name or designation of a reference mark (RM) or azimuth mark (AZ MK). Accordingly, the name of every horizontal control point, as well as the name or designation of an RM or AZ MK, should be abbreviated so that it does not exceed 30 characters.

d. Abbreviating Lengthy Names. When a lengthy name of a horizontal control point is contracted to the 30-character limit, the abbreviation and/or editing of the station name should be accomplished with due regard to the following fact. The names of reference and azimuth marks should be formed by appending the symbols RM 1, RM 2, ..., RM 13, etc., and AZ MK (possibly AZ MK 2, AZ MK 3, etc.) to the station name of the control point. For this reason, the name of a horizontal control point that has peripheral reference marks and/or azimuth marks may have to be further contracted to 24 characters (possibly less). This contraction is necessary to allow the reference and azimuth mark names to conform to the 30-character limit. The abbreviation "ECC." (for eccentric) should never be stamped on a disk. Each standard disk utilized to mark a horizontal control point should be stamped with the station name, year set, and organization (District) designated on the marker. Each recorded station, which is re-marked, should be stamped with the original name of the station, the original date of establishment, and the year in which it is reset. All information imprinted on any disk used for station and reference marks should be stamped with 3.17-millimeter (1/8-inch) dies.

4-4. Reference and Azimuth Marks. Reference and azimuth marks should be constructed similar to their respective control monuments. Type F and Type G monuments (Figures 3-7 and 3-8) may be used as reference and azimuth monuments. However, these types of marks need only extend a minimum of 91 centimeters (3 feet) below natural ground. In areas having permafrost, marks should be anchored about 60 centimeters (2 feet) in the permafrost. Reference marks and azimuth marks should be identified by standard USACE disk markers with an arrow as the survey point symbol created by stamping a "V" on either end of the line indicating the center. The markers are set in such a way that the arrow points toward the respective horizontal control point. Three reference marks should be established for first- and second-order control networks in the immediate vicinity (less than 30 meters (100 feet)) of a monumented horizontal control point. The reference marks may be natural landmarks or manmade monuments. In addition, if a well-defined permanent object (natural or manmade) is not available, one azimuth mark shall be established for

first- and second-order control networks not less than 1.4 kilometer (1.25 mile) away when feasible. This will provide an azimuth reference point that is visible from ground level at the horizontal control point. Azimuth and reference marks are not required for third-order networks or when adjacent control points have intervisibility and are not closer than 0.4 kilometer (0.25 mile). Vertical and horizontal control type monuments may be used for reference and azimuth marks.

a. Naming Reference Marks. The originally established reference marks of a horizontal control point should be assigned sequential numbers (for example, NO 1, NO 2, etc). Any subsequently established reference mark should be assigned the next unused number in the sequence, even if one or more of the previously established reference marks may have been destroyed. The standard practice is to stamp the name of the horizontal control point to which a reference mark refers above the arrow (station designation) that appears in the center of the disk marker. The number of the reference mark, NO 1, NO 2, etc., is stamped immediately below the arrow. The year in which the reference mark was set is stamped in the block marked "year." The name or designation of a reference mark (RM) must not exceed 30 characters in length. It should normally consist of the name of the horizontal control point to which the respective RM belongs with the symbol RM 1, RM 2, ..., RM 13, etc., appended for reference marks NO 1, NO 2, ..., NO 13, etc. No additional information should be added to the name of an RM, except when the numbering system described above has not been followed, or when two or more reference marks associated with a horizontal control point have identical names. In this case, the "year mark set" should be further appended to make the respective names unique (for example, KELLEY RM 1974 and KELLEY RM 1975, if the RM set in 1975 has not been stamped "NO 2"). Considering that the total length of RM name must not exceed 30 characters, the name of the horizontal control point must itself be limited to 24 characters to allow for any appended symbols (RM 1, RM 2, etc.). The name of the horizontal control point must be taken as it appears on the disk, except for possible further abbreviation and/or editing that may be required. If old reference marks are found to be in poor condition, they should be destroyed and reset. The new reference mark should be numbered with the next consecutive unused number, regardless of the existence or absence of any of the reference marks.

b. Naming Azimuth Marks. The same procedures used to name reference monuments shall be used for azimuth marks. If more than one azimuth mark is involved, a number should be assigned and stamped on the azimuth disk marker. Symbols such as AZ MK should be appended to the control point designation when only one azimuth mark is present. Symbols such as AZ MK 2, AZ MK 3, etc., should be appended when two or more azimuth marks are installed. The complete designation station name plus AZ MK 2, etc., shall not exceed the 30-character limit.

[illegible] for Agency Monuments. Occasionally, an existing monumented survey point of another agency may be used for a reference mark or, more frequently, for an azimuth mark. Such a survey point must be treated as a control point. If it can be positioned or if its geodetic position is available from other sources, this data should be provided in the description; otherwise, give its name or designation.

4.5 Three-Dimensional Monuments. With the increasing use of space system measurement techniques, such as the Navstar Global Positioning System (GPS), it is important that station markers be stable in all three dimensions (Three-Dimensional Monuments). When selecting sites for high precision primary networks or for deformation monitoring, it is recommended that soil and geotechnical specialists be consulted. The type monument best suited for a given condition will depend on factors previously discussed. To meet the requirements of permanent and stable monumentation, the three-dimensional monuments should be metal disks set in rock outcrops or large masses of concrete, Type C (Figure 3-3), and deep-driven rod monuments, Types A and B (Figures 3-1 and 3-2). The name or designation of individual monuments used for both horizontal and vertical control networks of third order or better should be limited to 25 characters. Neither the "year established" nor the "year mark set" should appear as a part of the station name. Designation criteria for vertical control monuments, as outlined in paragraph 3-3, should also be used for all three-dimensional monuments.

4-6. Marks of Other Organizations. If a satisfactory horizontal control monument of another organization is found at the project site in good condition, it may be used without alteration as the station mark of a new USACE Survey Monument. Reference marks and azimuth marks should be placed, as necessary, to bring the station installation up to the requirements of this manual. In case the existing mark of the other organization is not in good condition for a station mark, a new station mark should be established in the vicinity, and the mark of the other organization should be used as an extra reference mark. The stamping of additional marks should be done as indicated in this manual. Care should be taken not to displace a mark of another organization in horizontal position, or even in vertical position if there is a possibility that it could be used as a bench mark. The mark should not be altered without permission from the organization that established it.

4-7. Witness Posts. In order to aid in preservation and to serve as a means of easy recovery of monuments being established, a witness post should be set adjacent to the monument or near one of the reference marks at each station. This post should be 1.8 meters (6 feet) in length and be set to a minimum of 1 meter (3 feet) above the ground surface. The post should have the standard witness post sign attached (Figure 3-11). Witness posts will be set for monuments of third-order accuracy and above, established along public highways, in rural districts, along the

rights-of-way of railroads, and along the shorelines of rivers and lakes. They need not be set for monuments established along business streets, in residential sections of cities, on the grounds of a school or a church, in cemeteries, in cultivated farmlands, or on bare mountain tops. For survey monuments established below grade or in cultivated fields, the post shall be set at a reference mark.

CHAPTER 5

BOUNDARY MONUMENTS

5-1. Installation of Boundary Monumentation. The installation and the types of monuments used for boundary monumentation should be under the control of the Real Estate Division. Site conditions, the value of the property, the legal description of the property, encroachment possibilities, and local laws and customs are some factors that dictate the economics and practicality of where and what type of monument should be installed. In the absence of specific instructions from the Real Estate Division, the criteria presented in this chapter are offered as guidance.

5-2. Selection of Monument Type Based on Local Site Conditions. The type of monument to be used for boundaries is a function of the site conditions. The different monuments that may be used to mark boundaries are identified in Table 5-1. Construction details are illustrated in Figures 3-1, 3-3, 3-7, and 3-8. All boundary monuments shall be constructed with the standard USACE survey disk.

Table 5-1

Site Conditions and Monument Types for Boundary Control

Site Conditions	Monument Types
Rock outcrops, large boulders, bedrock concrete structures (more than 5 years old)	C
Granular soils (sand and gravel)	F,G
Glaciated soils (till)	F,G
Fine-grained soils (silts and clays with high bearing strengths)	F,G
Fine-grained soils (silts and clays with low bearing strengths)	G
Construction fill (disturbed earth)	G
Permafrost	G
Marsh	A
Subsidence area	A

5-3. Construction and Installation Procedures. The standard USACE survey boundary disk shall be used as boundary monuments constructed as Type C, Type F, or Type G. All USACE survey disks shall be stamped using 0.1[illegible]-millimeter (1.5-inch) steel dies. All stampings shall deform the disk by a minimum of 1 millimeter (0.0394 inch).

a. Monuments in Concrete or Rock. Refer to Type C monument installation in paragraph 3-2c.

b. Drive-in Aluminum Rod Monuments. The Type F monument is illustrated in Figure 3-7 and constructed as outlined in paragraph 3-2f.

c. Poured-in-Place Concrete. Monuments that are poured in place should be constructed as illustrated in Figure 3-8 for a Type G monument.

5-4. Naming Boundary Monuments. Monuments may be identified by code numbers or alphanumeric symbols as outlined in paragraph 4-3. Monuments may be identified by a name or a designation of a specific corner. All monuments shall be constructed with a USACE survey disk (Figure 3-10) and shall have the right of way (R/W) or boundary stamped thereon.

5-5. Reference Monuments. A reference monument is an accessory and is employed in situations where a regular permanent monument locating the site of a corner cannot be established. Also, reference monuments are required in areas where the corner monument would be liable to destruction and/or bearing trees or nearby bearing objects are not available. When the true point for a corner lies within an unimproved roadway, in such a place as to interfere with travel, an iron rod, pin, or Type F monument shall be buried in the ground at the true corner point. If bearing trees or nearby bearing objects are not available, at least two reference monuments should be established at suitable places outside of the roadway. Allowance should be made for grading, cuts, fills, or other road improvement when placing the reference monuments. If the surface of the roadway is gravel, macadam, or bituminous-topped, approval from the proper authorities should be obtained before placing the point. In the case of a hard surface, a survey disk or "P-K" nail should be placed at the true point. Two reference monuments ordinarily suffice in public survey practice, but four may be employed if desirable. When two monuments are used, they are usually placed equidistant and in opposite directions from the true point. An acceptable alternative is the placement of the monuments so that the lines connecting them with the corner point are approximately perpendicular to each other. If four monuments are used, they should be placed in opposite directions in each of the four quadrants. When the true point is in an engineered road with established right-of-way lines, it is desirable to locate the reference monument on the intersection of those right-of-way lines and the true property

lines that establish the corner point. Appropriate identification as defined in paragraph 4-4 shall be included.

5-6. Witness Trees and Corners. Each property corner, reference monument and witness corner shall be witnessed by at least three healthy witness (sometimes called "tie" or "reference") trees a minimum of 15 centimeters (6 inches) in diameter and at least 1.2 meters (4 feet) tall. When possible, all witness trees shall be blazed, facing the corner set they reference. Witness trees must also be marked with an x facing the corner at an elevation height of 120 to 150 centimeters (4 to 5 feet) above the ground. Care should be taken to cut the cross to a sufficient depth to leave a set of permanent narrow marks forming a cross with lines about 25 centimeters (10 inches) long. Witness trees to witness corners should be scribed with the symbols W.C. (witness corner). Tree blazing and marking should not be done without the specific permission of the landowner.

a. Witness/Reference/Tie Distance Measurement. All distance measurements shall be horizontal and taken to the center of the tree.

b. Witness/Reference/Tie Directions. The bearing of each distance measurement shall be observed and recorded. A compass is sufficiently precise for this measurement.

c. Witness Corner Monuments. Where physically impossible to set a monument, a witness corner(s) should be set on each converging boundary line, no closer than 150 centimeters (5 feet) from the corner point. All witness corners, identified as W.C., shall be marked with a USACE disk. The distance to the true corner shall be stamped on the disk, along with an arrow indicating the direction.

d. Natural or Physical Monuments. Natural monuments are permanent objects that are works of nature, such as streams, rivers, ponds, lakes, bays, trees, ledges, rock outcrops, and other definitive terrestrial features. A tree standing at a corner may be marked only when permissible. Care should be taken to cause only superficial damage to the tree. Blazing should penetrate the bark and leave an open cut no wider than 8 centimeters (3 inches) and no longer than 25 centimeters (10 inches). Corner trees should be marked with four-way blazes (blazed on all four sides). Trees on a boundary line (line trees) should be face blazed with one hack above and one hack below, on opposite sides of the tree, along a line 120 to 150 centimeters (4 to 5 feet) above the ground. Permission should be obtained before marking any trees. Selected trees within 90 centimeters (3 feet) of the line should be marked with three hacks facing the line and face blazed on opposite sides of the marks 120 to 150 centimeters (4 to 5 feet) above the ground.

5-7. Boundary Marker Sign. In order to aid in the preservation and to serve as a means of easy recovery of newly established

monuments, a 4- by 4-inch wooden post or equivalent marker shall be set adjacent to the station monument or near one of the reference marks of each station, preferably at the station mark. This post should be a minimum of 170 centimeters (5.5 feet) in length and should be set to project a minimum of 90 centimeters (3 feet) above the ground surface. The post should be painted white with a marker having a legend of black letters attached as indicated by the boundary line or easement line markers shown in Figure 3-11.

CHAPTER 6

DOCUMENTATION

6-1. Monument Marker Documentation. Each permanent monument constructed or recovered should be documented by completing DA Form 1959, Description or Recovery of Horizontal Control Station, illustrated in Figure 6-1.

a. Monument Name. The monument name shall conform to that outlined in the manual and as stamped on the disk. Longitude and latitude shall be scaled from maps for marks with vertical control only. The order of accuracy shall be determined as defined by Federal Geodetic Control Committee specifications. Monument type shall be designated as outlined by this manual. Additional instructions on the completion of DA Form 1959 are located on the back of the form.

b. Computer Data Base Storage. For those using computer data bases for storage and retrieval of control data, a suggested format is illustrated in Figure 6-2. Use of this format is optional and modification of data elements is allowed to meet local needs. Additional instructions on the use of this format are located on the back of Figure 6-2.

S A M P L E

COUNTRY: United States	TYPE OF MARK: [illegible] (20ft deep)	STATION: Q-11-1-89	
LOCALITY: Shelby Co., TN	STAMPING ON MARK: Q-11-1-89	AGENCY CALL OF MARK: Corps of Engineers Memphis District	ELEVATION: 272.548 FT XXX
LATITUDE: 35-21-14.05966	LONGITUDE: 89-57-09.62619	DATUM: NAD 83	DATUM: NGVD 29
NORTHING: 395,295.637 FT XXX	EASTING: 790,128.928 FT XXX	GRID AND ZONE: Lambert - Tennessee	ESTABLISHED BY AGENCY: Memphis District
NORTHING: 3,916,554.324 XX (M)	EASTING: 776,914.451 XX (M)	GRID AND ZONE: UTM - 15	DATE: 11/02/89 ORDER: 3rd

TO OBTAIN Tennessee GRID AZIMUTH ADD 2° 18' 50.6" TO THE GEODETIC AZIMUTH

TO OBTAIN UTM-15 GRID AZ. (ADD)(SUB.) 1° 45' 51.8" TO THE GEODETIC AZIMUTH

OBJECT	AZIMUTH OR DIRECTION (GEODETIC)(GRID)	BACK AZIMUTH	GEOD. DISTANCE (FEET)	GRID DISTANCE (METERS) (FEET)
Q-11-2-89	93° 56' 05".5	93° 56' 14".5	1277.040	TN-1277.002ft
				UTM-389.450m

First Order horizontal control mark was established by the Memphis District Corps of Engineers in November 1989. To reach the station from the intersection of U. S. Hwy 51 and Shelby Road, go West on Shelby Rd. for 2.8 miles to Shake Rag Road and the station on the left. The station is 49.0' SE of the intersection of Shelby and Shake Rag Road, 35.2' NE of a power pole, 58.4' W of the C/L of a gravel drive over a culvert leading to the residence at the site, and 2' N of a witness post. The disk is 0.7' below the surface of the access cover. The access cover is 0.2' below ground level and 0.5' below road level. The disk and access cover are stamped Q-11-1-89.

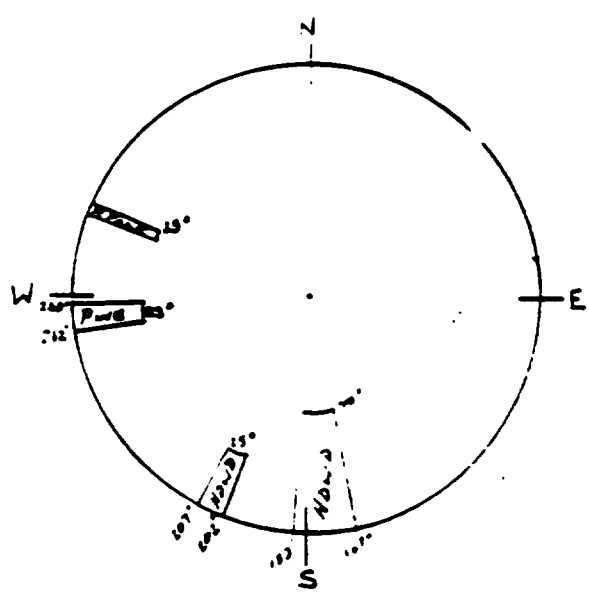

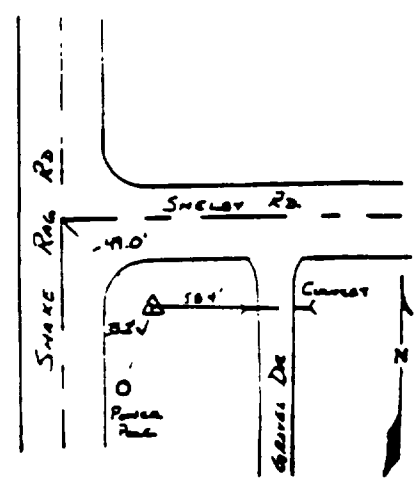

SKETCH

DA FORM 1 OCT 84 1959 REPLACES DA FORMS 1959 AND 1960, 1 FEB 59, WHICH ARE OBSOLETE.

DESCRIPTION OR RECOVERY OF HORIZONTAL CONTROL STATION
For use of this form, see TM 5-237; the proponent agency is TRADOC.

Figure 6-1. Description or Recovery of Horizontal Control Station Form (Continued)

SAMPLE

NOTES ON COMPLETION OF FORM

1. GENERAL: This form may be used in the field or, as an office form to record and publish positions, descriptions, and related data.

2. FIELD USE OF FORM: The information required should be obtained and recorded *AT THE STATION SITE*. The field engineer should fill in only the information available and applicable to field use. In general, the geographic and grid positions, azimuths, distances, and elevations should not be filled in at field level except when the information is required for an immediate specific purpose.

a. ORIGINAL DESCRIPTION OF NEW STATION: The type of mark used for the station, reference marks, and azimuth marks, and a description of each must be given in the text of the description. If a disk is used, the identity of the agency whose name is cast in the disk and all of the letters and numbers stamped on the mark which identify the organization establishing or setting the mark should be given. In many areas the use of disks is not desirable because of their loss, due to vandalism or superstition. Less conspicuous marks should be used under these conditions. This requires exact statements of the character of the marks. Information for all marks as to the elevation above or below ground and approximate elevation above or below nearby prominent features is important. At least three measurements within .01 foot should be made from the station to any permanent marks, features, or structures that would permit relocating the spot where an instrument was centered. Good judgment should be exercised as to how far these measurements should be made. It is recommended that they be made to items which are not in the immediate vicinity of the station. Angles should also be turned to these items, particularly where an azimuth mark or marks have been established.

b. VIEW: Provide information on height of tower or stand used in occupying or establishing the station and information on view from a normal tripod, i.e., a 50-foot tower was used at the station; view from a tripod height is clear to the south and east but is obstructed by rise in ground *(by 50 foot trees)* to the north and west.

c. PHOTOGRAPHIC IDENTIFICATION: Provide when possible, two measurements from the station to natural or cultural features which might be visible on aerial photography and a description of the terrain. If photographs are available identify the station thereon and note estimated accuracy of the identification.

d. NOTES ON RECOVERED STATIONS: A diligent search should be made for *ALL* previously established stations in the vicinity and no station should be reported as destroyed unless conclusive evidence of destruction is present. A statement of the diligence of the search and reason for the non-recovery of a previously established mark is required. If the spot where a station mark was located can be reproduced by measurement given in the description, the station is not destroyed. The reproduced spot should be tied in by azimuth and distance and the estimated accuracy of the reproduced location given. If a new mark is set in the exact location of a previously established but destroyed mark, the designation of the station should be identical with the original with only a new date added to its designation. If a new disk is set in the approximate location of the old station, the same should be preserved but the number "2" and a new date should be added.

(DESCRIBED) (RECOVERED) BY	
Carol A. Waite	
PROJECT	
GPS 12 - Big Creek	
DATE	FIELD BOOK
Nov 1989	N/A

☆ U.S. Government Printing Office: 1989—491-003/43188

Figure 6-1. (Concluded)

MONUMENT MARKER DOCUMENTATION

1. Name of Monument Q-11-1-89
2. Quad Sheet MILLINGTON
3. City nearest city, town, community, etc. SLOANVILLE
4. County SHELBY
5. State TN
6. River *
7. River Mile *
8. Lake/Reservoir *
9. Date established 2 NOV 89
10. Elevation 272.648
11. Latitude 35-21-14.05966
12. Longitude 89-57-09.62619
13. Datum Vertical: NGVD 29 Horizontal: NAD 83
14. Order of Accuracy Vertical: 3rd Horizontal: 1st
15. Monument Type A Type of Rods * 23 ft.
16. Highway/Road * SHELBY
17. Section *
18. Township *
19. Range *
20. Baseline Station *
21. Levee District *
22. Levee Mile Post (LMP) *
23. Railroad *
24. Bayou *
25. Ditch/Creek * BEAR
26. Pumping Station *

* - If applicable

27. Description: TO REACH THE STATION FROM THE INTERSECTION OF US HWY 51 AND SHELBY RD, GO WEST ON SHELBY RD FOR 2.8 MI TO SHAKE RAG RD AND THE STATION ON THE LEFT. THE STATION IS 49.0'SE OF THE INTERSECTION OF SHELBY AND SHAKE RAG RD, 35.2'NE OF A POWER POLE, 58.4'W OF THE C/L OF A GRAVEL DRIVE OVER A CULVERT LEADING TO THE RESIDENCE AT THE SITE, AND 2'N OF A WITNESS POST. THE DISK IS 0.7' BELOW THE SURFACE OF THE ACCESS COVER. THE ACCESS COVER IS 0.2' BELOW GROUND LEVEL AND 0.5' BELOW ROAD LEVEL. THE DISK AND ACCESS COVER ARE STAMPED Q-11-1-89

Sketch

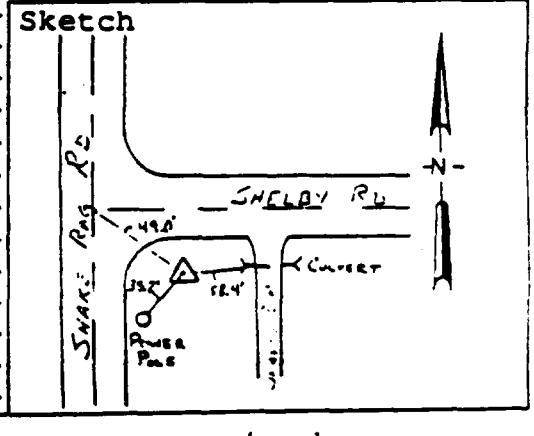

Figure 6-2. Suggested format for monument/marker documentation (Continued)

GUIDELINES ON COMPLETION OF FORMAT

1. General. This format may be used in the field offices to record positions, descriptive and related data, or for direct entry to a database program.

2. Use of Format. Descriptive data and other information available in the field should be recorded at the station site. All other applicable data should be added to the format as this information becomes available. Information equivalent to data items 1 thru 5, 9 thru 15, and 27 should be completed for each mark. All other items should be completed only as applicable.

1. The name or station designation of the mark.
2. The name of the 15-minute quad where the mark is located.
3. The name of the city, town, or community near the mark.
4. The county in which the mark is located.
5. The state in which the mark is located.
9. The month, day, and year the mark was established.
10. The elevation of the top of the disk or rod of the mark. For horizontal-only marks, the elevation should be interpolated to the nearest half meter.
11. The exact latitude (at least three decimal places) of mark. For vertical-only marks, the latitude should be scaled to the nearest second.
12. The exact longitude (at least three decimal places) of the mark. For vertical-only marks, the latitude should be scaled to the nearest second.
13. The datum surface to which the horizontal and vertical positions of the mark are referenced.
14. The order and class of accuracy to which the horizontal and vertical positions were established. State if scaled or interpolated.
15. The single letter designation of the monument type. If metal rods, pipe, or rebar were used, state the depth to which they were driven.
27. The text of the description shall include, but is not limited to the following.
    a. A one-paragraph narrative providing specific directions on how the monument may be reached from a readily locatable landmark, such as a public building in a nearby town or the crossroads of prominent highways.
    b. At the station site, pinpoint the location of the mark with distance and direction from at least three reference objects in the immediate vicinity.
    c. Vertical reference should be provided by giving the mark's distance above, below, or level with a nearby reference object or ground surface.
    d. The distance and direction to the mark from the witness post should be provided.
    e. If disk is used, provide the identity of the agency whose name is cast in the disk and all the letters and numbers stamped on the disk that identify the name of the mark and the organization setting it (i.e. the exact stamping on the disk).

Figure 6-2. (Concluded)

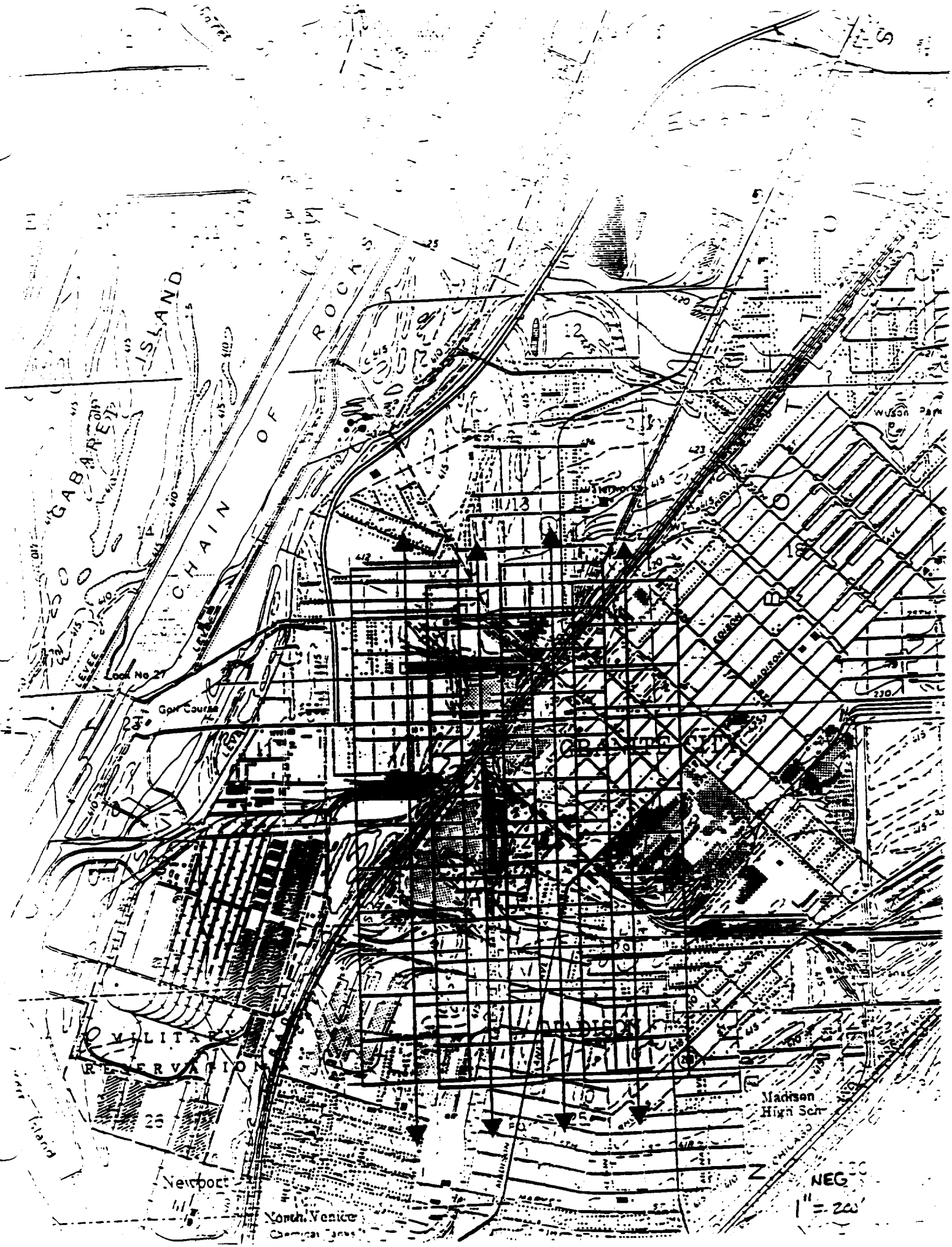

GABARET ISLAND
CHAIN OF ROCKS
LEVEE
Lock No 27
Golf Course
MILITARY RESERVATION
Madison High Sch
Newport
North Venice
Chemical Tanks
Wilson Park
EDISON
MADISON
NEG
1" = 200'

42'30"
MADISON
(MONKS MOUND)
NEG SCALE
1" = 250'

SCOPE OF WORK
SURVEYS AND MAPPING
GRANITE CITY, ILLINOIS

1.0 GENERAL: The work done under this contract consists of furnishing all services, labor, plant, equipment, materials and transportation necessary to produce vertical black and white aerial photography and photogrammetric mapping via CADD/GIS type software, supplemented by ground surveys for detail of the Granite City, Illinois, Taracorp site and vicinity.

The first area will be flown at a negative scale of 1"=330' (Exhibit A). The area will be mapped at a scale of 1"=30' with a 1' contour interval. The mapping will be supplemented by a field survey.

The second area will be flown at a scale of 1"=330' (Exhibit A). The area will be planimetrically mapped at a scale of 1"=50' (no contours). Planimetric mapping will be required to support a means for automatic production of lot inventory and grading plans for each residential lot. One 8-1/2"x 11" sheet will be needed for each lot - generated automatically from the planimetric mapping via GIS type software. ARC/INFO from ESRI has the capability to perform this function via command language macros.

2.0 EXHIBITS: The following expendable exhibits are furnished by the Government.

Exhibit "A": Illustrates the area to mapped at a scale of 1"=30'; 1' contour interval and the area to be planimetrically mapped at a scale of 1"=50'.

Exhibit "B": 30" x 42" Omaha District sheet for aerial photo index.

Exhibit "C": EM 1110-1-1002 Survey Markers and Monumentation.

Exhibit "D": EM 1110-1-1807 Standards Manual for U.S. Army Corps of Engineers Computer Aided Design and Drafting (CADD) Systems (applicable excerpts).

Exhibit "E": Diskettes containing sheet layout, font library, cell library and seed file for Omaha District Standards.

3.0 FLIGHT OPERATIONS:

3.1 Aircraft: The aircraft furnished under this contract shall be capable of stable performance at any altitude and air speed and shall be equipped with essential navigation and photographic instruments and accessories, all maintained in operational condition during the period of this contract, and all subject to the approval of the Contracting Officer's Representative. No windows shall be interposed between the camera lens system and the terrain. Also, the camera lens system shall not be in the direct path

of any exhaust gases or oil from aircraft engines.

3.2 Flight Plan: The minimum area of to be photographed are as indicated on maps provided for each photographic assignment. The Contractor shall design the flight line(s) for the photography to obtain proper stereoscopic photographic coverage.

3.3 Scale of Photography: The flight height above the average elevation of the ground shall be such that the negatives have an average scale suitable for attaining required photogrammetric measurement, map scale, contour interval and accuracy.

3.4 Overlap: Unless otherwise directed by the Contracting Officer's Representative, the overlap shall be sufficient to provide full stereoscopic coverage of the area to be photographed, as follows:

3.4.1 Endlap: Unless otherwise specified, the endlap shall average between sixty-five (65) and seventy (70) percent.

3.4.2 Sidelap: The sidelap shall be at least fifteen (15) percent on each side.

3.5 Crab: Any series of two or more consecutive photographs crabbed in excess of eight (8) degrees as measured from the mean flight path of the airplane, as indicated by the principal points of the consecutive photographs, may be considered unsuitable photographs for mapping. Average crab for any flight line shall not exceed 5 degrees.

3.6 Tilt: Negatives exposed with the optical axis of the aerial camera in a vertical position are desired. Tilt (angular departure of the aerial camera axis from a vertical line at the instant of exposure) in any negative of more than three (3) degrees, an average tilt of more than one (1) degree for the entire project, or tilt between any two successive negatives exceeding five (5) degrees may be unsuitable for mapping.

3.7 Substitute Photography: In flight lines rephotographed to obtain substitute photography for unsuitable photography, all negatives shall be exposed to comply with flight specifications, including scale and overlap requirements. The joining end negatives in the replacement strip shall result in complete stereoscopic coverage.

3.8 Flying Conditions: Unless otherwise specified, photography shall be accomplished between the hours of 10:00 a.m. and 2:00 p.m., Local Standard Time, on days when well-defined images can be obtained. No sun spots will be allowed. Photography shall not be attempted when the ground is obscured by haze, smoke or dust, snow or when the clouds or cloud shadows appear on more than five (5) percent of the area of any one photograph without the permission of the Contracting Officer's Representative. Photography shall not contain shadows caused by topographic relief or sun angle, whenever such shadows can be avoided during the time of year the photography must be taken. Any day containing two or more consecutive hours of suitable flying conditions, in any sizable portion of the area not yet photographed, will be considered a suitable day for aerial photography.

3.9 Flight Log: For each flight day, the pilot or cameraman shall

prepare a flight log containing the date, project name, aircraft used and names of crew members. In addition, the following shall be prepared for each flight line, altitude, camera, magazine serial number, f-stop, shutter speed, beginning and ending exposure numbers and times, and any other comments relative to the flight conditions. The flight logs shall be delivered to the Contracting Officer's Representative as specified in the work order.

4.0 AERIAL CAMERA:

4.1 **Type of Camera:** A single lens precise aerial mapping camera equipped with a high resolution, distortion free lens shall be used on all assignments. The camera shall function properly at the necessary altitude and under expected climatic conditions, and shall expose a 9-inch square negative. The lens cone shall be so constructed that the lens and focal plane are at the calibrated focal length. Fiducial markers and marginal data markers comprise an integral unit or are otherwise fixed in rigid orientation with one another. Dimensional changes brought about by variations of temperature or other conditions shall not be of such magnitude as would cause deviation from the calibrated focal length in excess of plus or minus 0.05 millimeters or would preclude determination of the principal point location to within plus or minus 0.003 millimeters.

4.2 **Calibration:** The aerial camera(s) furnished by the Contractor shall have been calibrated by the U.S. Geological Survey within three (3) years of award of this contract. Camera features and acceptable tolerances are as follows:

4.2.1 **Focal Length:** The calibrated focal length of the lens shall be 153 millimeters, plus or minus 3 millimeters, measured to the nearest .001 millimeter.

4.2.2 **Platen:** The focal plane surface of the platen shall be flat to within 0.013 millimeters and shall be truly normal to the optical axis of the lens. The camera shall be equipped with means of holding the film motionless and flat against the platen at the instant of exposure.

4.2.3 **Fiducial Marks:** The camera shall be equipped with a minimum of four (4) fiducial marks, with eight (8) preferable, for accurately locating the principal point of the photograph. The lines joining opposite pairs of fiducial marks shall intersect at an angle within one minute of 90 degrees.

4.2.4 **Lens Distortion:** The absolute value of radial distortion measured at maximum aperture, as stated in the calibration report, shall not exceed .01 millimeter. The tangential distortion shall not exceed .005 millimeters.

5.0 AERIAL FILM:

5.1 **Type of Film Required:** The contractor shall furnish appropriate black and white aerial film of a quality that is equal or superior to 4 mil Kodak Double-X Aerographic 2405 (Estar Base) panchromatic film. Only fresh, fine grain, dimensionally stable, and safety base aerial film shall be used.

Outdated film shall not be used.

5.2 Processing of Exposed Film: The processing, including development and fixation, and washing and drying of all exposed photographic film shall result in negatives free from chemical or other stains, containing normal and uniform density, and fine-grain quality. Before, during and after processing, the film shall not be rolled tightly on drums or in any way stretched, distorted, scratched, or marked, and shall be free from finger marks, dirt, or blemishes of any kind.

5.3 Quality of Photography: The photographic negatives shall be taken so as to prevent appreciable image movement at the instant of exposure (i.e. use a forward motion compensator [FMC]). The negatives shall be free from static marks, shall have uniform tone, and shall have the proper degree of contrast for all details to show clearly in the dark-tone areas and high-lighted areas as well as in the half-tones between the dark and the light. Negatives having excessive contrast or negatives low in contrast may be rejected.

5.4 Unexposed Film: Whenever any part of an unexposed roll of film remains in the camera, before such film is used on a subsequent day, a minimum three-foot section of the roll of film shall be rolled forward unexposed immediately proceeding the beginning of photography.

5.5 Labeling: Each negative shall be labeled clearly with the following: DATE, PROJECT SCALE, CONTRACT NO., FLIGHTLINE-FRAME. The frame numbers shall be sequential within each flight line and shall be in the upper right hand corner of the negative to be read as one looks northerly along the flight line (or easterly when lines are east-west). All lettering and numbering of negatives shall be one-fifth (1/5) inch high and shall result in easily read, sharp, and uniform letters and numbers.

5.6 Deliveries: All negatives shall be delivered to the Contracting Officer's Representative on winding spools, in plastic canisters, with each canister labeled to show the name and address of the contracting agency, name of the project, designated roll number (provided by the Contracting Officer's Representative), numbers of the first, and last numbered negatives of each strip, date of each strip, approximate scale, focal length of lens in millimeters, contract number and the name and address of the Contractor who accomplished the photography. At least three (3) feet of clear film shall be left on or spliced to each end of the roll. All splices shall be of a permanent nature.

6.0 CONTACT PRINTS:

6.1 Material: All contact prints shall be made on medium weight (RC) semi-matte paper stock approved by the Contracting Officer's Representative.

6.2 Processing and Quality: The processing shall result in finished photographic prints having fine-grain quality, normal uniform density, and such tone and degree of contrast that all photographic details of the negative from which they are printed show clearly in the dark-tone areas and high light areas as well as in the half tones between the dark and the high light. Excessive variance in tone or contrast between individual prints will be cause

for their rejection. All prints shall be clear and free of stains, blemishes, [illegible] and with light fog or streaks, creases, scratches, and other defects which will interfere with their use or in any way decrease their [illegible].

6.3 **Trimming:** All contact prints shall be trimmed to neat and uniform dimensional lines along image edges (without loss of image) leaving distinctly the camera marks. Prints lacking fiducial marks shall be rejected.

6.4 **Deliveries:** All pristine contact prints shall be delivered to the Contracting Officer's Representative in a smooth, flat, and usable condition.

7.0 PHOTOGRAPHIC INDEX:

7.1 **General:** This item shall consist of one or more photographic negatives, as necessary, and photographic print or prints thereof, of an assembly of aerial photographs forming an index of the project aerial photography.

7.2 **Assembly:** The index shall include photographic prints made from all negatives of the photography taken and accepted for the project. The prints shall be trimmed to a neat and uniform edge along the photographic image without removing the fiducial marks. The photographs shall be overlap-matched by conjugate images on the flight-line with each photograph identification number clearly shown. The photographs for each adjacent flight-line strip shall overlap in the same direction. Airbase lengths shall be averaged in the image matching of successive pairs of photographs on flight-lines, and adjoining flight-line assemblies shall be adjusted in length by incremental movement along the flight-line as necessary.

7.3 **Labeling and Titling:** For geographic orientation, appropriate notations shall appear on the index, naming or otherwise identifying important and prominent geographic and land use features. All overlay lettering and numbering shall be neat and readable. In addition, a north arrow, sheet index, if applicable, and a title block shall appear on each index. Title block shall contain project name, contractor's name, contract agency name, date of photography and scale of photography.

7.4 **Scale and Size:** The photo index negative shall be prepared at a scale about one-third (1/3) of the original negative scale, except that a slightly smaller photo index scale can be used if all exposures for one project fit the required format on a single sheet. Each photo index negative shall be on a 30" by 42" district sheet (see exhibit "B").

7.5 **Photographic Copying and Printing:** The index shall be copied on photographic film so that prints can be made by contact method. The index shall be positive.

7.6 **Processing and Quality:** All photographic prints of the index shall comply with the stipulations for contact prints in paragraph 6.2 of these instructions.

8.0 DIAPOSITIVES:

8.1 Type of Diapositive: All black and white diapositive transparencies shall be equal or superior to .130-inch thick Kodak Aerial Plotting Plates or .007-inch thick Dupont Diapositive Film, No. CT-7.

8.2 Processing and Quality: All diapositives shall comply with the stipulations for contact prints in paragraph 6.2 of these instructions.

8.3 Data Recording: All diapositive transparencies shall include information on the film which aids in correlation of the photography with the data produced by positioning equipment, airborne profile recorders, and other airborne instruments. Also, other data useful during map compilation shall be recorded.

9.0 GROUND CONTROL:

9.1 Targets: All ground control used as photographic control points will be premarked prior to obtaining aerial photography. Targets shall be of adequate size, and provide good photographic contrast so they will be clearly distinct in stereoscopic models.

9.2 Control Surveys: All horizontal and vertical control surveys required for photogrammetric mapping shall conform to third-order standards and shall be accomplished using third-order methods, or better procedures, and equipment. Ensure area to be mapped is fully bounded by Horizontal and Vertical control. Taracorp piles must be held to vertical mapping standards.

9.3 Photogrammetric Control: For elevational and planimetric mapping the contractor shall establish all necessary horizontal and vertical control points and targets required to maintain accuracies within National Map Accuracy Standards. Each point shall be an image of an existing object or be a finite photographic pattern which is clearly identifiable both on the ground and on the photographs, or be the photographic target. The accuracy of all photogrammetric control surveys shall be as stipulated in paragraph 9.2 of this instructions. For planimetric mapping, the contractor shall establish the minimum number of horizontal and vertical control points and targets required to maintain horizontal accuracy within National Map Accuracy Standards.

9.4 Datums: Use National Geodetic Vertical Datum 1929 and 1927 or 1983 North American Datum State Plane zone.

9.5 Control Photographs: All horizontal and vertical control points including supplemental control points shall be marked and labeled with appropriate point identification number. All control points not premarked shall be neatly pin-pricked and described on the back of the photograph. No point shall be pin-pricked on more than one photograph.

10.0 AEROTRIANGULATION:.

10.1 General: The Contractor will determine the X, Y & Z coordinates for all photogrammetric control points using fully analytical

aerotriangulation methods

[illegible] photogrammetric instruments shall have [illegible] measuring the X and Y photographic coordinates [illegible] photographic reference marks, targets, photographic [illegible] and artificially marked points to achieve the required accuracies.

10.3 Accuracy: Analytical aerotriangulation shall be of suitable accuracy to produce mapping within National Mapping Accuracy Standards. This requirement includes being able to plot, from stereoplotter interpretation of target location, the horizontal control points to within one one-hundreth (1/100) of an inch of its true position as expressed by field adjusted plane coordinates for the point.

10.4 Supplemental Control: All supplemental control points will be physically drilled (pugged) on the aerial photo. Insofar as practical, there shall be no less than six (6) supplemental control points established for each stereoscopic model. A supplemental control point shall be located at or near each corner of the model, preferably, in the overlap area between adjacent models and strips. A ground control point may be substituted for a supplementary control point if it is located in the same general area of one of six (6) positions described herein.

10.5 Control Points: The image of all ground control and supplemental control points shall be appropriately marked and identified on a set of contact prints. The identifying number for each supplemental control point shall be related to the photograph on which it appears and not exceed (4) digits.

10.6 Deliveries: All materials including, a X,Y and Z coordinate listing of supplemental control points, final adjustment including computations with error of closure, the aerotriangulation solution printouts, and diapositives, and any roll-film negatives used by the Contractor shall be provided to the Contracting Officer's Representative as specified in detailed specification work order.

11.0 STEREO COMPILATION: (Applies to Both Scales of Mapping Required)

11.1 General: The area to be mapped is identified in paragraph 1.0 of this scope.

11.2 Stereoplotter Requirement: All map compilation shall be accomplished with an optical-train, first-order stereoplotter. Direct enlargement from negative scale to compilations scale shall range from six (6) to eight (8) diameters and be within the stereoplotter's capability to produce maps having required accuracies specified in these instructions, as applicable.

11.3 Map Contents (also see paragraph 13.3.1):

11.3.1 Coordinate Grid: Grid ticks of the applicable State Plane Coordinate System shall be properly annotated at the top and right edges of each sheet within the map data. Spacing of the grid ticks shall be five (5) inches.

11.3.2 Control: All horizontal and vertical ground control determined by field methods shall be shown on the map.

11.3.3 Planimetry: The maps shall contain all planimetric features which are visible or identifiable on, or are interpretable from aerial photographs, including, but not limited to, buildings, roads, sidewalks, rivers, reservoirs, railroads, power poles, wooded areas, individual trees, bridges, piers, and dams.

11.3.4 Topography: Where applicable, the map shall contain all representable and specified topographic features which are visible or identifiable on, or are interpretable from aerial photography. Each contour shall be drawn sharp and clear as a solid line, except through densely wooded areas where the ground cannot be seen and where it is obscured by an overhanging bluff or ledge. In such ground hidden places, the contours shall be shown as dashed (broken) lines. Every fifth contour (index contour) shall be accentuated as a heavier line than the intermediate four and shall be numbered according to its actual elevation above mean sea level. Whenever index contours are closer than one-quarter (1/4)-inch, and the ground slope is uniform, the intermediate four may be omitted. Labeling or numbering of contours shall be placed so that the elevation is readily discernible. Labeling of intermediate contours may be required in areas of low relief.

11.3.5 Spot Elevations: Spot elevations determined photogrammetrically shall be shown on maps in proper position at water level on the shoreline of lakes, reservoirs, ponds and the like; on hilltops; in saddles; at the bottom of depressions; at intersection and along centerlines well traveled roads; principal street in cities, railroads, levees, and highways, and at centerline of end of bridges. In areas where contours are more than three inches apart at map scale, spot elevations shall also be shown and the horizontal distance between the contours and such spot elevations or between the spot elevations shall not exceed two (2) inches at scale of delivered maps.

11.3.6 Match Lines: Match lines shall be provided so that each sheet may be joined accurately to adjacent sheets. See paragraph 14.1 for data window requirements.

11.3.7 Symbols and Names: The symbols to be used for major planimetric and topographic features shall be in accordance with symbols provided by the Contracting Officer's Representative. The names of cities, towns, villages, rivers, streams, roads, streets, highways, and other features of importance shall be obtained by the Contractor. All names and numbers shall be legible and clear in meaning and shall not interfere with map features.

11.3.8 Lot Ownership: Lot line overlay information shall be gathered by the contractor from Granite City and delineated in the residential areas of the 1" = 50' planimetric mapping. A note in the map margin shall indicate the source and reliability of lot information.

11.4 Compilation History: A compilation history (model diagram) shall be prepared for each stereoscopic model used to accomplish the mapping. History shall include, but not be limited to the final photographic fit to X, Y and Z coordinates of ground and supplemental control points and any other

[illegible] in the model orientation and compilation process. History [illegible] project name, flight date, photo scale, map scale [illegible] operator [illegible]

[illegible] Quality: The professional standards of [illegible] shall [illegible] throughout the mapping process. All symbols, lines, letters and numbers shall be clear and legible and conform with the standards specified by the Contracting Officer's Representative in accordance with detailed specifications in work order.

12.0 QUALITY OF WORK AND MATERIALS:

12.1 Work: The Contractor shall be responsible for field checking and editing the photogrammetrically made measurements and compiled maps to ascertain their completeness and accuracy. Also, the Contractor shall make additions and corrections necessary to complete the maps and photogrammetrically made measurements.

12.2 Materials: All materials, supplies or articles required for work which are not covered herein shall be standard products of reputable manufacturers and entirely suitable for the intended purpose. They shall be new, unused and subject to approval by the Contracting Officer's Representative.

13.0 SUPPLEMENTAL FIELD SURVEYS: (Applies to 1"=30'mapping only)

13.1 General: Supplemental field surveys and/or premarking of small features will be required to collect the level of detail and accuracy required by this mapping. This work and any other ground work at the site including primary and photogrammetric ground control will require crew personnel who have had baseline physicals and 40 hour course "Health and Safety for Hazardous Waste Operations" per OSHA 29 CFR 1910.120. The Taracorp site, exhibit "A" Orange, will be topographically surveyed where needed as a supplement to the aerial survey at a density compatible with 1" = 30' accuracy and incorporated with the 1" = 30'; 1 foot contour interval mapping.

13.2 Control; A minimum of three intervisible permanent horizontal control monuments shall be established adjacent to the site. These monuments are to be placed in strategic locations so as to be used for but not destroyed by grading or construction. They are to be assigned 3rd order State Plane coordinates and 1929 Mean Sea Level elevations. The contractor shall compute one combination factor for the area, as a minimum requirement. Additional combination factors may be required for certain sections if the terrain varies significantly. The respective combination factor, or factors, shall be noted on each segment. (Reference enclosed EM 1110-1-1002 Survey Markers and Monumentation for guidance in establishing these markers, Exhibit "C".) Type C monuments with 3/4" pipe or rebar will be the minimum accepted monument for third order horizontal and vertical control required.

13.3 Topographic Surveys: The supplemental data required will be ground surveyed by use of a total station and data collector for automatic topo recording. Accuracy of ground shots will be held to +/- 0.1 foot in all dimensions. Hardened surface elevations will be held to +/-0.1 foot horizontally and +/-0.05 foot vertically. Topographic surveys will be

referenced to primary control established on benchmarks described above. Secondary networks will be used to set temporary marks from which the data may be radially collected. Primary points may be used for radial data collection.

13.3.1 Planimetric Features: All surfaces features within the area to be surveyed shall be shown and identified on the 1 inch = 30 feet mapping. These features may be surveyed photogrammetrically or on the ground. All features must be shown, however, and will be held to National Map Accuracy Standards. The phrase "surface features" is intended to include, but is not necessarily limited to, the following:

13.3.1.1 Power lines and communication lines, street light poles, guy wires, vaults (including handholes and manholes), transformers and substations.

13.3.1.2 Sanitary and industrial sewer manholes and storm drainage structures, such as culverts, headwalls, inlets, cleanouts, and manholes. Always obtain an elevation at the flow line at the bottom of all the pipes connected to a manhole or inlet (invert elevations). Clearly identify the size, direction and type of each pipe. Obtain the pipe invert elevation upstream and downstream of all manholes by popping all manholes, and inlets even if beyond the limits of the required topo. Provide sketches where needed for detail and clarity.

13.3.1.3 Water, gas and other above-ground pressure pipes. Locate all fire hydrants, hose bibs, valve meter, regulators, etc. within the limits of the area to be surveyed. Include location of pressure pipes on the topo map. Use sketched inserts where needed for detail and clarity.

13.3.1.4 Roads, drive, walks, and railroads. All roads shall have elevations at 30 feet intervals along the centerline and each edge of road. Type of surface shall be shown by text.

13.3.1.5 Fences (location, type and height).

13.3.1.6 Trees. Locate tree line of masses and locate individual trees. Indicate type and average diameter on topo sheets. The diameter is measured five feet above natural ground. Show all trees that are individually isolated outside of the tree line by appropriate symbol.

13.3.1.7 Ditches, streams, canals.

13.3.1.8 Other visible surface features. Locate any storage tanks, radio antennas, or other surface features visible and located within the area to be surveyed. Areas with active erosion shall be noted and located.

13.3.1.9 Underground utilities will be shown on the finished map. Location of underground utility lines should be from the most accurate information available. The source of utility information shall be noted on the map. Field location by respective utility agencies is desirable over as-built or historical utility drawings. The type and size of each utility shall be annotated.

13.3.2 Established Elevations: Spot elevations affecting the

[illegible] shall be provided, such as ground elevations, [illegible] elevations, roads, railroads, finished floors, utility lines, drainage structures, monitoring wells, etc., shall be to the closest one-hundredth of a foot (0.01).

13.3.2.1 Manholes, inlets, and all drainage structures. Indicate type, and show top, bottom, and all pipe invert elevations to the closest 0.01 foot. Provide the dimensions for all headwalls.

13.3.2.2 Provide top back of curb and toe of gutter elevations along existing pavements to the closest 0.5 foot. If necessary, provide a sketch to clearly show the type of curb and gutter. Show at least three sets of curb elevations around curves (Point of Tangency, Point On Curve, Point of Curvature).

13.3.2.3 Provide natural grade at building line, including spot elevations at all building corners to the closest 0.1 foot for natural ground. Provide at least one finished floor elevation inside each permanent building to the closest 0.05 foot.

13.4 Monitoring Wells: Each monitoring well within the topo limits shall be located in the field, plotted at the appropriate coordinate point on the topo sheet, and identified by number, coordinates (to the closest 1.0 foot), ground elevation (to the closest 0.1 foot), and the elevation of the concrete pad or survey marker (if one is set in the pad) and the top of the casing (to the closest 0.05 foot). A tabulated list of the monitoring wells shall be prepared and submitted. The tabulation shall consist of the designated number of the well, the X and Y coordinates, and all of the required elevations. If wells need to be staked in the field prior to drilling, horizontal and vertical coordinates of staked locations shall be listed in the tabulation and shown on the map. Staked locations shall be designated as proposed monitoring wells.

13.5 Core Borings: The core borings required for the geotechnical investigation shall be located, and tied into the coordinate system (to the closest foot). Top of ground elevations (to the closest tenth of a foot) shall be obtained at each core boring. Each core boring shall then be plotted at the appropriate coordinate point on the topo sheet and identified by number, coordinates and ground elevation. A tabulated list of the core borings shall be prepared and submitted. The tabulation shall consist of the designated hole number, the X and Y coordinates, and the ground elevation for each boring. If borings need to be staked in the field prior to drilling, horizontal and vertical coordinates of staked locations shall be listed in the tabulation and shown on the map. Staked locations shall be designated as proposed core borings.

13.6 Field Notes: All field notes shall be recorded in hardbound field books. The leaves of the field books shall contain no less than 50 percent high grade rag stock (such as in K&E Field Book 82-0012). All notes shall be neatly entered and shall contain complete records of all field work done. Each notebook page used shall bear the date of the work recorded thereon and

the first initials and last names of the personnel in the party shall be listed at the beginning of each days work. The first three pages of each book shall be used for an index. Every used page in the book shall be accounted for in the index.

13.7 Mapping Accuracy Requirements: All mapping shall meet the following horizontal and vertical accuracy requirements for a mapping scale of 1 inch = 30 feet with 1 foot contour intervals.

13.7.1 Contours: Ninety percent of the elevations determined from the contours of the topographic maps shall have an accuracy with respect to their true elevation of one-half of the contour interval or better, and the remaining ten percent of such elevations shall not be in error by more than one contour interval. In checking elevations taken from the map, the apparent vertical error may be decreased by assuming a horizontal displacement of one-thirtieth of an inch. (e.g. 30/30 = 1.00).

13.7.2 Coordinate Tic Marks: The plotted position of each coordinate tic mark shall not vary by more than one-hundredth of an inch at map scale from the true value.

13.7.3 Horizontal Control: Each horizontal control point shall be plotted to an accuracy of one-hundredth of an inch at map scale of its true position as expressed by the coordinates published for the point. Elevations shall be shown if available.

13.7.4 Planimetric Features: Ninety percent of all planimetric features which are well defined on the photographs shall be plotted so that their position on the finished maps is accurate to within at least one-fortieth of an inch at map scale of their true coordinate position, and none of the features shall be misplaced on the finished map by more than one-twentieth of an inch from their true coordinate position.

13.7.5 Spot Elevations: Ninety percent of all spot elevations placed on the maps shall have an accuracy of at least one-fourth the contour interval, and the remaining 10 percent shall not be in error by more than one-half the contour interval.

14.0 DIGITAL DATA REQUIREMENTS: Data is to be delivered in Intergraph format. Reference Standards Manual for U.S. Army Corps of Engineers Computer-Aided Design and Drafting (CADD) Systems. Exhibits "D" and "E".

14.1 Sheet Layout: A data window approximately 26" x 28" shall be utilized on each sheet. Sheets shall match adjoining sheets along the data window lines. A sheet index comprised of main roads, rivers and features overlaid with the data window grid and sheet numbers shall be on each sheet in the right hand margin area. The appropriate sheet shall be cross-hatched to indicate location.

14.2 Legend: A legend in a separate level shall be shown on each sheet in the right hand margin area. Symbols used for the mapping shall be shown and explained by text.

14.3 Notations: Notes concerning the date of photography or data

[illegible] plane zone with combination factor used, source of data [illegible] specification [illegible] source of utility information and [illegible]

15.0 DELIVERABLE ITEMS: Items and data to be delivered to the U.S. Army Corps of Engineers - Omaha District are as follows:

15.1 Originals of all field books, sketches and computations: All of these items shall be suitably bound, and clearly marked and identified.

15.2 Control Listing:. A tabulated list of all control points showing the adjusted coordinates and elevations (to the closest one hundredth of a foot) established and/or used for this survey with descriptions.

15.3 Marker Documentation Sheets for established primary control: See p. 6-5 of EM 1110-1-1002 for example.

15.4 Wells and Borings: Tabulated lists of all monitoring wells, soil borings, test pits, etc. found or staked, showing horizontal coordinates to the closest 1.0 foot and all of the required elevations to the closest 0.1 foot or 0.05 foot as applicable.

15.5 Scale: All maps shall be plotted at a scale of 1 inch = 30 feet on or 1 inch = 50 feet as applicable on 30 inch by 42 inch vellum sheets. All drawings shall be generated by the CADD system. One original copy of each final drawing shall be delivered to the Omaha District. Sheets will be separate and trimmed.

15.6 CADD Files: Surface files in .TTN format shall also be delivered if available. If .TTN format is not available then an ASCII file of coordinate points, break lines, etc. used to generate contours shall be provided. Data files shall be written to 9 track, 1600 bpi or 6250 bpi density tapes written with VAX backup or copy command or ASCII equivalent. If the data in separate files can be fit onto no more than three 5-1/4 inch 1.2 Mb diskettes then, it may be delivered on diskette rather than tape.

16.0 GEOGRAPHIC INFORMATION SYSTEM TYPE SOFTWARE:

16.1 General: The GIS will be used to assist in lot inventory and supplement replacement of items removed from lot. The lot inventory will include but not be limited to plants, trees, landscaping, etc. The software used will be determined by the contractor. However, the software must be able to do the following functions:

(a) Calculate volume of soil to be removed.

(b) Overlay lot lines with associated address and ownership information.

(c) Generate 8-1/2 x 11" sheet of every lot with planimetric field data. Lot inventory will be dimensioned on these maps. Include appropriate grid and scale on each map. Scale may vary depending on size and shape of the lot.

(d) The contractor may digitize the lot inventory. To facilitate calculation of replacement costs and reduce paper usage. (optional)

17.0 Items Relating to the Aerial Mission to be Delivered:

(a) The original sets of negatives.

(b) One (1) complete set of pristine contact prints.

(c) One (1) complete set of diapositives providing stereo coverage of the project areas.

(d) One (1) copy of the current USGS calibration sheet on the camera used for this project.

(e) Photo index(s) and index negative(s).

18.0 **PLACE OF DELIVERY:**

District Engineer
U.S. Army Engineer District, Omaha
Attn: Surveys and Mapping Section
215 North 17th Street
Omaha, Nebraska 68102-4910

19.0 **DATE OF DELIVERY:** Date of delivery shall not exceed 60 days from the date that the mission was flown.

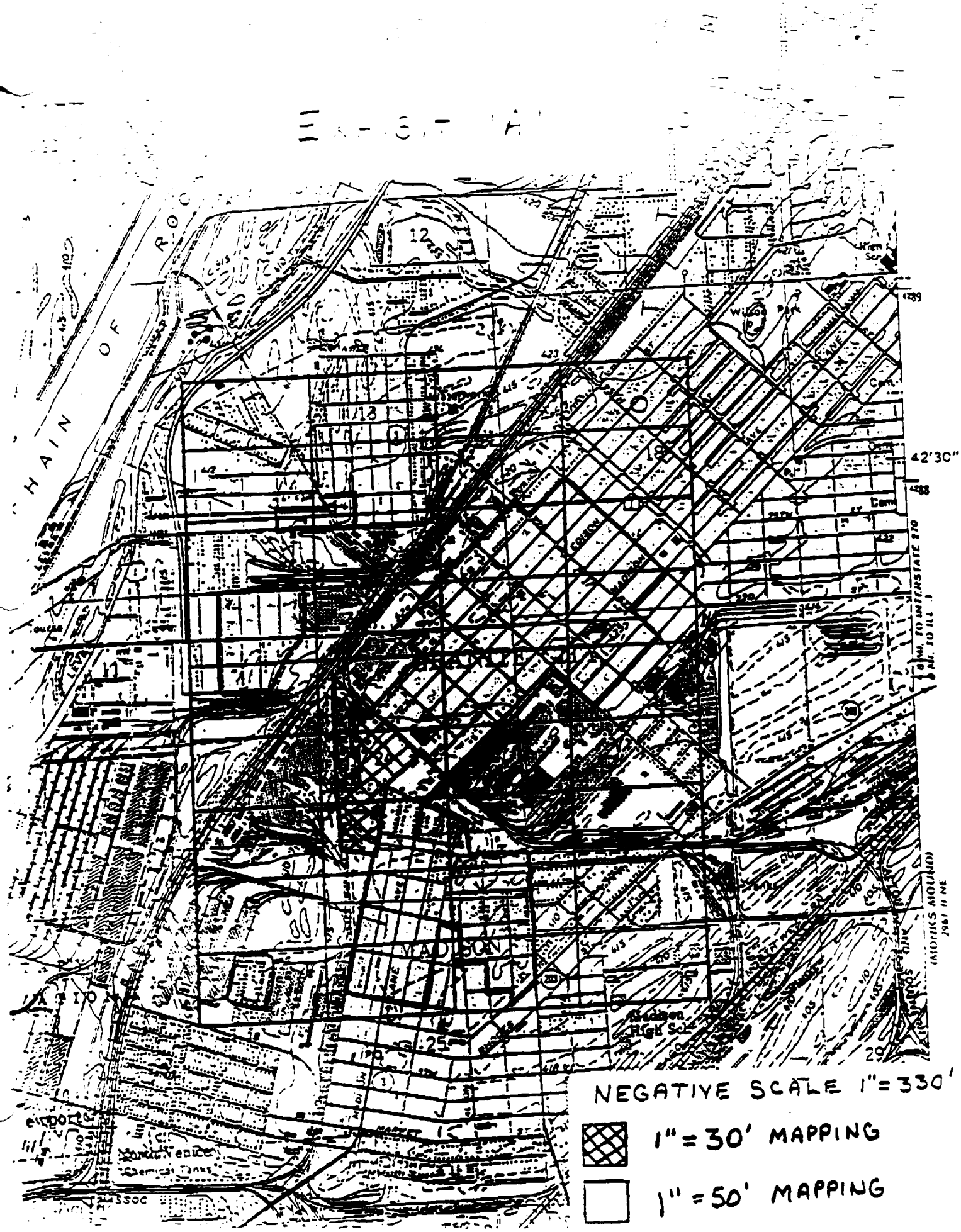
42'30"
MADISON
NEGATIVE SCALE 1"=330'
1"=30' MAPPING
1"=50' MAPPING

APPENDIX B

ESE QUALITY ASSURANCE PLAN

MASTER QUALITY ASSURANCE PLAN FOR CHEMICAL ANALYSES OF ENVIRONMENTAL SAMPLES

ENVIRONMENTAL SCIENCE & ENGINEERING, INC.
ST. LOUIS CHEMISTRY LABORATORY

Prepared by:

QUALITY ASSURANCE DIVISION
St. Louis, Missouri

August 1991

Environmental Science & Engineering, Inc.
A CILCORP Company

CONTROL # [illegible]

[illegible]QAS[illegible]SDMQAP
• Section No. [illegible]
• Revision No. [illegible]
• Date [illegible]
• [illegible]

MASTER QUALITY ASSURANCE PLAN FOR CHEMICAL ANALYSES

ENVIRONMENTAL SCIENCE & ENGINEERING, INC.
11665 Lilburn Park Road
St. Louis, Missouri 63146-3535
314/567-4600

Prepared by

ENVIRONMENTAL SCIENCE & ENGINEERING, INC.
11665 Lilburn Park Road
St. Louis, Missouri 63146-3535
314/567-4600

Francis Y. Huang Date 8/2/91

Francis Y. Huang, Ph.D.
Associate Vice President
Director, ESE St. Louis Analytical Chemistry Laboratory

Jeffrey W. Siria Date 8-2-91

Jeffrey W. Siria
Manager, ESE St. Louis Analytical Chemistry Laboratory

[illegible] Date 8-2-91

Judith O. Zwicker, Ph.D.
Quality Assurance Supervisor, St. Louis Office

TABLE OF CONTENTS

QA Plan Elements

Section		No. of Pages	Revision Date
1.0	TITLE PAGE	1	07/03/91
2.0	TABLE OF CONTENTS	30	07/11/91
3.0	STATEMENT OF POLICY	2	07/03/91
4.0	ORGANIZATION AND RESPONSIBILITY	4	07/03/91
5.0	QUALITY ASSURANCE OBJECTIVES	21	07/03/91
6.0	SAMPLING PROCEDURES	6	07/09/91
7.0	SAMPLE CUSTODY	11	07/09/91
8.0	ANALYTICAL PROCEDURES	15	07/09/91
9.0	CALIBRATION AND FREQUENCY	21	07/10/91
10.0	PREVENTATIVE MAINTENANCE	3	07/10/91
11.0	QUALITY CONTROL CHECKS AND ROUTINES TO ASSESS PRECISION, ACCURACY, AND METHOD DETECTION LIMITS	14	07/10/91
12.0	ANALYTICAL DATA	20	07/10/91
13.0	CORRECTIVE ACTION	16	04/12/91
14.0	PERFORMANCE AND SYSTEM AUDITS	3	04/23/91
15.0	QA REPORTS TO MANAGEMENT	1	03/09/91
16.0	RESUMES	1	03/09/91

FIGURES

Figure		No. of Pages	Revision Date
4-1	St. Louis Laboratory Organization	1	07/03/91
6-1	Field Trip Approval Form	1	07/09/91
7-1	Sample Chain-of-Custody Log Sheet	1	07/09/91
7-2	Cooler Receipt Form	1	07/09/91
7-3	Batch Update Request Form	1	07/09/91
9-1	Initial Calibration Forms	3	07/10/91
9-2	Continuing Calibration Forms	3	07/10/91
12-1	Flowchart of CLASS Program	1	07/10/91
12-2	Final Results Output from the Data Program	1	07/10/91
12-3	Data Validation Checklist	7	07/10/91
13-1	Quality Assurance Corrective Action Request and Routing Form	1	07/10/91
14-1	Deliverable Review Sheet	1	07/10/91

	Volatile Organics—Groundwater and Surface Water Samples: Summary of Practical Quantitation Limits, Precision, and Accuracy at the ESE St. Louis Chemistry Laboratory	2	07/03/91
5-2	Extractable Organics—Groundwater and Surface Water Samples: Summary of Practical Quantitation Limits, Precision, and Accuracy at the ESE St. Louis Chemistry Laboratory	3	03/03/91
5-3	TRPH and Oil and Grease—Groundwater and Surface Water Samples: Summary of Practical Quantitation Limits, Precision, and Accuracy at the ESE St. Louis Chemistry Laboratory	1	07/03/91
5-4	General Parameters—Groundwater and Surface Water Samples: Summary of Practical Quantitation Limits, Precision, and Accuracy at the ESE St. Louis Chemistry Laboratory	1	07/03/91
5-5	Total Recoverable Metals—Groundwater and Surface Water Samples: Summary of Practical Quantitation Limits, Precision, and Accuracy at the ESE St. Louis Chemistry Laboratory	1	07/03/91
5-6	Anions—Groundwater and Surface Water Samples: Summary of Practical Quantitation Limits, Precision, and Accuracy at the ESE St. Louis Chemistry Laboratory	1	07/03/91
5-7	Pesticides/PCBs—Groundwater and Surface Water Samples: Summary of Practical Quantitation Limits, Precision, and Accuracy at the ESE St. Louis Chemistry Laboratory	1	07/10/91
5-8	Herbicides—Groundwater and Surface Water Samples: Summary of Practical Quantitation Limits, Precision, and Accuracy at the ESE St. Louis Chemistry Laboratory	1	07/10/91
5-9	Volatile Organics—Soil and Sediment Samples: Summary of Practical Quantitation Limits, Precision, and Accuracy at the ESE St. Louis Chemistry Laboratory	2	07/03/91
5-10	Extractable Organics—Soils and Sediment Samples: Summary of Practical Quantitation Limits, Precision, and Accuracy at the ESE St. Louis Chemistry Laboratory	3	07/03/91
5-11	TRPH and Oil and Grease—Soils and Sediment Samples: Summary of Practical Quantitation Limits, Precision, and Accuracy at the ESE St. Louis Chemistry Laboratory	1	07/03/91
5-12	Total Recoverable Metals—Soils and Sediment Samples: Summary of Practical Quantitation Limits, Precision, and Accuracy at the ESE St. Louis Chemistry Laboratory	1	07/03/91

TABLES (Continued)

Table		No. of Pages	Revision Date
5-13	Pesticides/PCBs--Soil and Sediment Water Samples: Summary of Practical Quantitation Limits, Precision, and Accuracy at the ESE St. Louis Chemistry Laboratory	1	07/10/91
5-14	Herbicides--Soil and Sediment Water Samples: Summary of Practical Quantitation Limits, Precision, and Accuracy at the ESE St. Louis Chemistry Laboratory	1	07/10/91
6-1	Containers, Preservation Techniques, and Holding Times	2	07/09/91
8-1	Glassware Cleaning Procedures	1	07/09/91
8-2	Reagent Storage	1	07/09/91
8-3	TCLP Constituents, Regulatory levels, and Total Concentrations Used for "Hazardous" Classification in Solids for Disposal Proposal	2	07/09/91
8-4	St. Louis Chemistry Laboratory Non-TCLP Constituents Concentrations Used for "Hazardous" Classification	1	07/09/91
9-1	ESE Chemistry Laboratory Equipment (St. Louis, Missouri)	2	07/10/91
9-2	Standard Sources and Preparation at the ESE St. Louis Chemistry Laboratory	2	07/10/91
9-3	Mass Intensity Specifications for DFTPP and BFB	1	07/10/91
9-4	Standardization of Titrating Solutions at the ESE St. Louis Chemistry Laboratory	1	07/10/91
10-1	Preventative Maintenance of Instruments at the ESE St. Louis Chemistry Laboratory	2	07/10/91
11-1	Field QC Samples	1	07/10/91
11-2	Minimum QC Sample Requirements for a Batch (Up to 20 Samples)	1	03/26/91
11-3	QC Control Ranges for Surrogate Recoveries	1	07/10/91
11-4	Methods Used to Generate Precision and Accuracy Targets at the ESE St. Louis Chemistry Laboratory	1	07/10/91
13-1	Summary of Corrective Action Procedures for Metals Analyzed by Graphite and Cold Vapor Atomic Absorption Spectroscopy	2	04/12/91

[illegible]	Summary of Corrective Action Procedures for Metals Analyzed by Inductively Coupled Plasma Emission Spectroscopy	2	04/12/91
13-3	Summary of Corrective Action Procedures for Inorganics, Oil and Grease, Petroleum Hydrocarbons, TOX, and Radionuclides	2	04/12/91
13-4	Summary of Corrective Action Procedures for Organics Analyzed by Gas Chromatography and High Pressure Liquid Chromatography	3	04/12/91
13-5	Summary of Corrective Action Procedures for Organics by Gas Chromatography/Mass Spectrometry	3	04/12/91

3.0 STATEMENT OF POLICY

All major chemical analyses conducted by the Environmental Science & Engineering, Inc. (ESE) St. Louis Chemistry Laboratory for its clients must be performed in accordance with this Master Quality Assurance (QA) Plan.

This QA plan will be the basis for all project-specific QA plans related to analysis of environmental samples except where alternate QA plans are required by the client. Separate QA Plans cover drinking water and air/industrial hygiene samples.

This QA plan will be filed with the client and/or local regulatory agency and, once approved, may be referenced in lieu of repetitive submission of plans in which only a percent of the information is changed.

3.1 PROJECT-SPECIFIC INFORMATION

To employ this Master QA Plan for projects performed under a consent order, enforcement action, or other agreement, a project-specific QA Project Plan (QAPP) must be completed by ESE project management and ESE Project QA Supervisor. Specific forms might be designed to provide the project-specific QA information, some of which may not be addressed in this Master QA Plan.

3.2 DOCUMENT CONTROL

This document periodically will be revised as changes in procedures become necessary. Upon approval from the client, changes will be documented by the date and revision number of each section. The document coordinator will keep a distribution list of each person who receives the document. When a section is revised, the revision date will replace the original date in the heading code; the revision number will be changed; the table of contents will be updated; and copies of pages with changes will be sent to everyone on the distribution list. Each document sent out will have a unique control number.

These procedures will apply once the plan has been finalized and implemented; these procedures will not apply to draft documents.

[illegible] and an analytical laboratory capable of comprehensive analytical services

The organization chart for the ESE St. Louis Chemistry Laboratory is presented in Figure 4-1. The laboratory address and phone number are:

Environmental Science & Engineering, Inc.
11665 Lilburn Park Road
St. Louis, Missouri 63146-3535
314/567-4600

The Chemistry Laboratory Director is responsible for the overall management of the analytical laboratory. He is responsible for approving all analytical procedures and associated QC procedures.

The Laboratory Project Manager acts as liaison between the field/client and laboratory operations and is responsible for the following:

1. Coordination of sample analyses to meet project objectives;
2. Production of analytical reports and QC summaries; and
3. Answering questions regarding analytical results or routing these questions to the appropriate person.

The Laboratory Sample Control Officer of the Sample Management Department acts as liaison between field and laboratory operations and is responsible for the following:

1. Receipt of sample custody from field members, verification of sample integrity, and transfer of sample fractions to appropriate analytical departments;
2. Sampling container preparation and shipping; and
3. Coordination of sample analyses to meet project objectives.

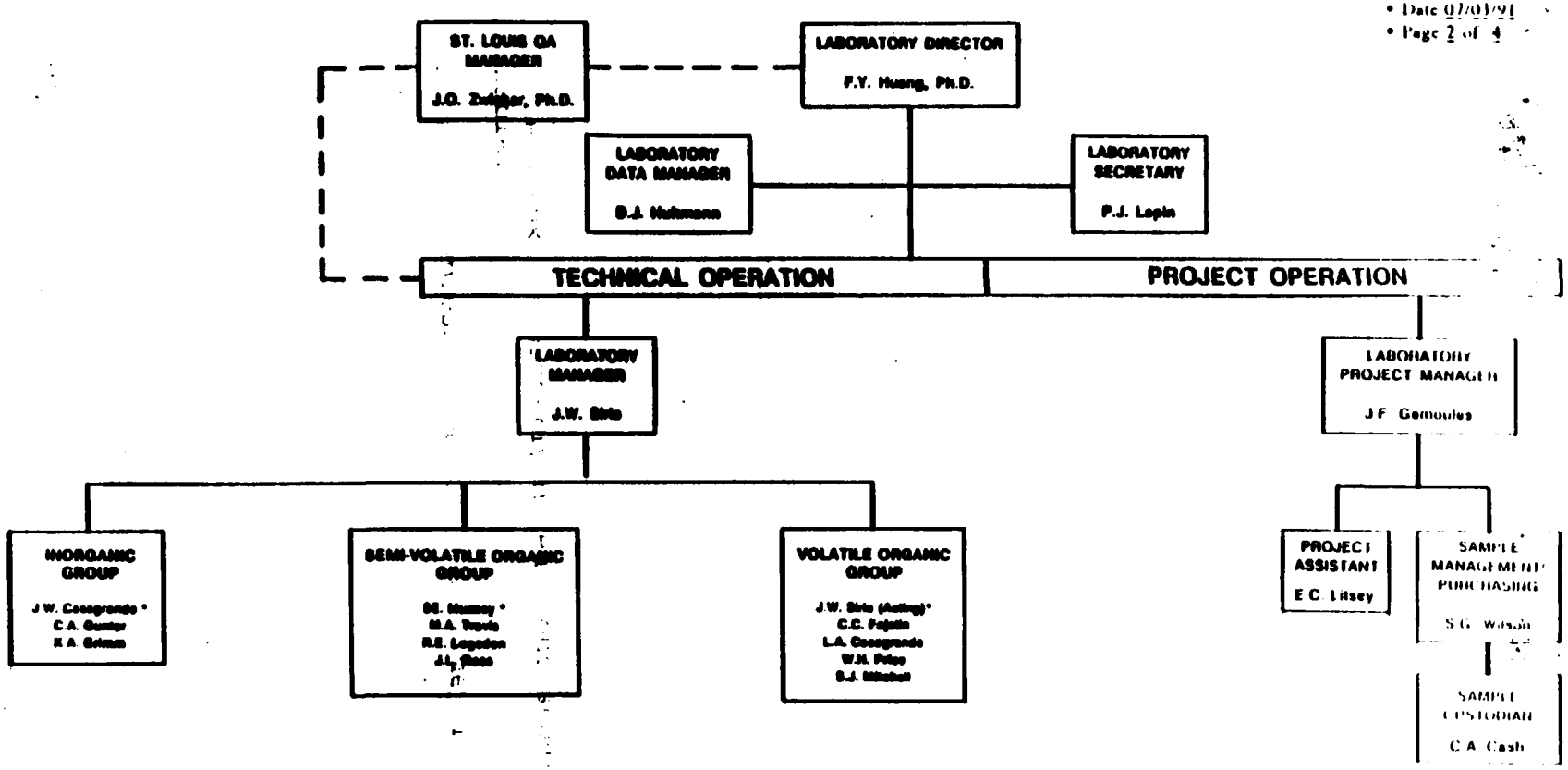

* Group Leader

Figure 4-1
ST. LOUIS LABORATORY ORGANIZATION

ESE Environmental Science & Engineering, Inc.

The Laboratory Manager oversees the daily operation of technical groups and is responsible for:

1. Evaluation of analytical reports including coordination with the Project QA Supervisor to assure that the data are validated prior to release outside of ESE;
2. Review of any QC deficiencies reported by the technical groups; and
3. Coordination of any data changes resulting from review by the QA Supervisor and/or Project Manager.

The Laboratory Data Manager oversees ESE's computerized data management system and is responsible for the following:

1. Maintaining ESE's Chemical Laboratory Analysis Scheduling System (CLASS) (refer to Section 12.1);
2. Approval and supervision of all personnel allowed to access CLASS;
3. Approval of all changes made to CLASS; and
4. Storage of chain-of-custody logsheets, CLASS analytical batches, and all computerized data.

The Analytical Group Leaders are responsible for provision of consistent and accurate laboratory data produced by analysts under their supervision. These individuals are responsible to the Project Manager to assure that all personnel under their direction are knowledgeable of the QA/QC requirements of the project and that all QC and technical review procedures are followed and documentation is provided.

The QA Supervisor reports to the ESE St. Louis Office Manager and ensures that specific QA and primary technical operations are coordinated efficiently. The QA Supervisor is independent of the project team and the laboratory and is responsible for the following:

1. Approval of all QA/QC procedures used on the project;
2. Maintenance of the Master QA Plan and completion of documents which provide project-specific QA information;
3. Performance and/or system audits of laboratory, field, and engineering operations to assure compliance with the QA project plan (QAPP);

4. Review and validation of laboratory data for compliance with precision, accuracy, and completeness objectives;
5. Introduction of performance evaluation samples into the analytical flow scheme as needed;
6. Notification of the Project Manager of any QC deficiencies discovered during audits;
7. Provision of guidance and coordination to rapidly resolve any QA/QC problems;
8. Maintenance of all project QA records and assembly of project QA data for inspection by ESE project management;
9. Independent review to assure the quality of all deliverables or outputs from the ESE project team to the client; and
10. Interaction and communication with client QA personnel to resolve QA/QC problems specific to the project.

It is the responsibility of all project personnel as well as the laboratory analysts, project scientists, and field team members to perform and document the required QA/QC procedures.

It is the responsibility of laboratory analysts to perform preliminary QC checks to ensure that each batch of data being generated passes all required QC criteria. Field team members must bring any unusual observation or analytical problem to the immediate attention of the Field Team Leader and the Project Manager. It is the Project Manager's responsibility to notify the QA Supervisor of all field QC problems.

5.0 QUALITY ASSURANCE OBJECTIVES

Analyses performed for this project will use standard U.S. Environmental Protection Agency (EPA) analytical procedures for analysis of water and soil/sediment unless otherwise specified. EPA precision and accuracy data and historic ESE data have been used as the basis for developing acceptance criteria for assessing the precision and accuracy of the generated data. Historic data produced by ESE will be used to update these criteria as such data become available. Criteria to be used are given in Tables 5-1 through 5-8 for groundwater and surface water analyses and Tables 5-9 through 5-14 for soil and sediment analyses. For multi-analyte methods, precision and accuracy criteria are given only for selected analytes to be used in spiking for method control purposes. A minimum percent completeness (defined in Section 11.3.3) for each parameter is 90. The following is a brief explanation of the terms which appear in Tables 5-1 through 5-14.

Precision: Evaluated based on the relative percent difference (RPD) of duplicate spikes. Both precision and RPD are defined in Section 11.3.1.

Accuracy: Evaluated based on the percent recovery of each spike (see Section 11.3.2 for definition).

Table 5-1. Volatile Organics--Groundwater and Surface Water Samples: Summary of Practical Quantitation Limits, Precision, and Accuracy at the ESE St. Louis Chemistry Laboratory* (Page 1 of 2)

Parameter	Practical Quantitation Limit †,** (µg/L)	Spiking Level† (µg/L)	Method Criteria** Precision (%RPD)	Method Criteria** Accuracy (% Recovery)
Acetone††	100	--	--	--
Benzene	5	50	6	84 to 110
Bromodichloromethane	5	--	--	--
Bromoform	5	--	--	--
Bromomethane	5	--	--	--
2-Butanone††	100	--	--	--
Carbon disulfide††	100	--	--	--
Carbon tetrachloride	5	--	--	--
Chlorobenzene	5	50	6	88 to 108
Chloroethane	5	--	--	--
Chloroform	5	--	--	--
Chloromethane	5	--	--	--
bis-2-Chlorovinylether	5	--	--	--
Dibromochloromethane	5	--	--	--
1,1-Dichloroethane	5	--	--	--
1,1-Dichloroethylene	5	--	--	--
1,2-Dichloroethane	5	--	--	--
cis-1,2-Dichloroethylene	5	--	--	--
trans-1,2-Dichloroethylene	5	50	5	83 to 103
1,2-Dichloropropane	5	--	--	--
cis-1,3-Di-chloropropylene	5	--	--	--
trans-1,3-Dichloropropylene	5	--	--	--
Ethylbenzene	5	--	--	--
2-Hexanone††	50	--	--	--
Methylene chloride	5	--	--	--
4-Methyl-2-pentanone	5	--	--	--
Styrene	5	--	--	--
1,1,2,2-Tetrachloroethane	5	--	--	--
Tetrachloroethylene	5	--	--	--
Toluene	5	50	8	86 to 118

Table 5-1. Volatile Organics--Groundwater and Surface Water Samples: Summary of Practical Quantitation Limits, Precision, and Accuracy at the ESE St. Louis Chemistry Laboratory* (Page 2 of 2)

Parameter	Practical Quantitation Limit †,** (µg/L)	Spiking Level† (µg/L)	Method Criteria** Precision (%RPD)	Method Criteria** Accuracy (% Recovery)
1,1,1-Trichloroethane	5	--	--	--
1,1,2-Trichloroethane	5	--	--	--
Trichloroethylene	5	50	7	77 to 101
Vinyl acetate††	50	--	--	--
Vinyl chloride	5	--	--	--
o-Xylene	5	--	--	--
p-Xylene	5	--	--	--
m-Xylene	5	--	--	--
Surrogates (All samples spiked at indicated levels):				
Toluene-d8	--	50	--	88 to 110
Bromofluorobenzene	--	50	--	86 to 115
1,2-Dichloroethane-d4	--	50	--	76 to 114

* SW-846 Methods 5030 and 8260, Revision 0 (12/87), Test Met315hods for Evaluating Solid Waste, EPA-SW-846, 3rd Edition.
† Based on a 5 mL sample.
** Criteria are for SW-846 Method 8260, Revision 0, December 1987.
†† Not on SW-846 Method 8260 list, criteria from SW-846 Method 8240.

Source: ESE, 1991.

Table 5-2. Extractable Organics--Groundwater and Surface Water Samples: Summary of Practical Quantitation Limits, Precision, and Accuracy at the ESE St. Louis Chemistry Laboratory* (Page 1 of 3)

Parameter	Practical Quantitation Limit †,** (µg/L)	Spiking Level† (µg/L)	Method Criteria** Precision (%RPD)	Method Criteria** Accuracy (% Recovery)
Acenaphthene	10	100	31	46 to 118
Acenaphthylene	10	--	--	--
Anthracene	10	--	--	--
Benzo(a)anthracene	10	--	--	--
Benzo(b)fluoranthene	10	--	--	--
Benzo(k)fluoranthene	10	--	--	--
Benzo(a)pyrene	10	--	--	--
Benzo(g,h,i)perylene	10	--	--	--
Butylbenzylphthalate	10	--	--	--
4-Bromophenylphenylether	10	--	--	--
4-Chloroaniline	20	--	--	--
bis (2-Chloroethoxy)methane	10	--	--	--
bis (2-Chloroethyl)ether	10	--	--	--
bis (2-Chloroisopropyl)ether	10	--	--	--
2-Chloronaphthalene	10	--	--	--
4-Chlorophenylphenylether	10	--	--	--
Chrysene	10	--	--	--
Dibenzo(a,h)anthracene	10	--	--	--
Dibenzofuran	10	--	--	--
Di-n-butylphthalate	10	100	40	11 to 117
1,2-Dichlorobenzene	10	--	--	--
1,3-Dichlorobenzene	10	--	--	--
1,4-Dichlorobenzene	10	100	28	36 to 97
3,3'-Di-chlorobenzidine	20	--	--	--
Diethylphthalate	10	--	--	--
Dimethylphthalate	10	--	--	--
2,4-Dinitrotoluene	10	100	38	24 to 96
2,6-Dinitrotoluene	10	--	--	--
Di-n-octylphthalate	10	--	--	--
bis (2-Ethylhexyl)phthalate	10	--	--	--

Table 5-2. Extractable Organics--Groundwater and Surface Water Samples: Summary of Practical Quantitation Limits, Precision, and Accuracy at the ESE St. Louis Chemistry Laboratory.* (Page 2 of 3)

Parameter	Practical Quantitation Limit †,** (µg/L)	Spiking Level† (µg/L)	Method Criteria** Precision (%RPD)	Method Criteria** Accuracy (% Recovery)
Fluoranthene	10	--	--	--
Fluorene	10	--	--	--
Hexachlorobenzene	10	--	--	--
Hexachlorobutadiene	10	--	--	--
Hexachlorocyclopentadiene	10	--	--	--
Hexachloroethane	10	--	--	--
2-Methylnapthalene	10	--	--	--
2-Nitroaniline	50	--	--	--
3-Nitroaniline	50	--	--	--
4-Nitroaniline	50	--	--	--
N-Nitrosodiphenylamine	10	--	--	--
N-Nitroso-di-n-propylamine	10	100	38	41 to 116
Indeno(1,2,3-cd)pyrene	10	--	--	--
Isophorone	10	--	--	--
Naphthalene	10	--	--	--
Nitrobenzene	10	--	--	--
Phenanthrene	10	--	--	--
Pyrene	10	100	31	26 to 127
1,2,4-Trichlorobenzene	10	100	28	39 to 98
Benzoic Acid	50	--	--	--
Benzyl-Alcohol	20	--	--	--
4-Chloro-3-methylphenol	20	200	42	23 to 97
2-Chlorophenol	10	200	40	27 to 123
2,4-Dichlorophenol	10	--	--	--
2,4-Dimethylphenol	10	--	--	--
2,4-Dinitrophenol	50	--	--	--
4,6-Dinitro-2-methylphenol	50	--	--	--
2-Methylphenol	10	--	--	--
4-Methylphenol	10	--	--	--
2-Nitrophenol	10	--	--	--

Table 5-2. Extractable Organics--Groundwater and Surface Water Samples: Summary of Practical Quantitation Limits, Precision, and Accuracy at the ESE St. Louis Chemistry Laboratory* (Page 3 of 31)

Parameter	Practical Quantitation Limit †,** (µg/L)	Spiking Level† (µg/L)	Method Criteria** Precision (%RPD)	Method Criteria** Accuracy (% Recovery)
4-Nitrophenol	50	200	50	10 to 80
Pentachlorophenol	50	200	50	9 to 103
Phenol	10	200	42	12 to 89
2,4,5-Trichlorophenol	10	--	--	--
2,4,6-Trichlorophenol	10	--	--	--
Surrogates (All samples spiked at indicated levels):				
Nitrobenzene-d5	--	100	--	35 to 114
2-Fluorobiphenyl	--	100	--	43 to 116
Terphenyl-d14	--	100	--	33 to 141
Phenol-d6	--	200	--	10 to 94
2-Fluorophenol	--	200	--	21 to 100
2,4,6-Tribromophenol	--	200	--	10 to 123

* SW-846 Methods 3510 and 8270, Test Methods for Evaluating Solid Waste, EPA-SW-846, 3rd Edition, Revision 1 (12/87).
† Based on a 1 L sample.
** Criteria from Method 8270.

Source: ESE, 1991.

Table 5-3. TRPH and Oil and Grease--Groundwater and Surface Water Samples: Summary of Practical Quantitation Limits, Precision, and Accuracy at the ESE St. Louis Chemistry Laboratory

Parameter	Practical Quantitation Limit †,†† (mg/L)	Spiking Level† (mg/L)	Method Criteria†† Precision (%RPD)	Method Criteria†† Accuracy (% Recovery)
TRPH*	1	25	25	80 to 120
Oil and Grease**	1	25	25	80 to 120

* SW-846 Methods 9070 Revision 0 (9/86) and 9073, Draft, Revision 0 (12/90), Test Methods for Evaluating Solid Waste, EPA-SW-846, 3rd Edition.

† Based on a 500 mL sample.

** EPA 413.2, Methods for Chemical Analysis of Water and Wastes (EPA-600/4-79-020), March 1984.

†† Standard criteria.

Source: ESE, 1991.

Table 5-4. General Parameters--Groundwater and Surface Water Samples: Summary of Practical Quantitation Limits, Precision, and Accuracy for Parameters at the ESE St. Louis Chemistry Laboratory

Parameter	Practical Quantitation Limit (mg/L)	Spiking Level (mg/L)	Method Criteria†† Precision (%RSD)	Method Criteria†† Accuracy (% Recovery)
Alkalinity*	8 (as $CaCO_3$)	200 (as $CaCO_3$)	15	85-115
TDS†	10	--	20	--
Cyanide**	0.02	0.05	20	75-125
Phenolics***	0.02	0.4	20	80-120

* EPA Method 310.1, Methods for Chemical Analysis of Water and Wastes (EPA-600/4-79-020), March 1984.
† EPA Method 160.1, Methods for Chemical Analysis of Water and Wastes (EPA-600/4-79-020), March 1984.
** EPA Method 9010, Test Methods for Evaluating Solid Waste, EPA-SW-846, 3rd Edition (12/87).
†† Standard criteria.
*** EPA Method 420.1, Methods for Chemical Analysis of Water and Wastes (EPA-600/4-79-020), March 1984.

Source: ESE, 1991.

Table 5-5. Total Recoverable Metals--Groundwater and Surface Water Samples: Summary of Practical Quantitation Limits, Precision, and Accuracy at the ESE St. Louis Chemistry Laboratory.

Parameter	Reference*	Practical Quantitation Limit †,** (µg/L)	Spiking Level† (µg/L)	Method Criteria** Precision (%RPD)	Method Criteria** Accuracy (% Recovery)
Aluminum	EPA 3005/6010	200	2,000	20	75 to 125
Antimony	EPA 3005/6010	60	500	20	--
Arsenic	EPA 7060 EPA 3005/6010	10	40 2,000	20	75 to 125
Barium	EPA 3005/6010	200	2,000	20	75 to 125
Beryllium	EPA 3005/6010	5	50	20	75 to 125
Cadmium	EPA 3005/6010	2	50	20	75 to 125
Calcium	EPA 3005/6010	5,000	--	--	--
Chromium	EPA 3005/6010	10	200	20	75 to 125
Cobalt	EPA 3005/6010	50	500	20	75 to 125
Copper	EPA 3005/6010	25	250	20	75 to 125
Iron	EPA 3005/6010	100	1,000	20	75 to 125
Lead	EPA 3020/7421 EPA 3005/6010	5	20 300	20	75 to 125
Magnesium	EPA 3005/6010	5,000	--	--	--
Manganese	EPA 3005/6010	15	500	20	75 to 125
Mercury	EPA 7470	0.2	1	20	75 to 125
Nickel	EPA 3005/6010	40	500	20	75 to 125
Potassium	EPA 3005/6010	5,000	--	--	--
Selenium	EPA 7740 EPA 3005/6010	5	10 2,000	20	75 to 125
Silver	EPA 3005/6010	10	50	20	--
Sodium	EPA 3005/6010	5,000	--	--	--
Thallium	EPA 7841 EPA 3005/6010	10	50 2,000	20	75 to 125
Vanadium	EPA 3005/6010	50	500	20	75 to 125
Zinc	EPA 3005/6010	20	500	20	75 to 125

* Test Methods for Evaluating Solid Waste, EPA-SW-846, 3rd Edition.
† Based on a 100 mL sample.
** Standard criteria.

Source: ESE, 1991.

Table 5-6. Anions--Groundwater and Surface Water Samples: Summary of Practical Quantitation Limits, Precision, and Accuracy at the ESE St. Louis Chemistry Laboratory

Parameter	Reference*	Practical Quantitation Limit †,** (mg/L)	Spiking Level** (mg/L)	Method Criteria†† Precision (RPD)	Method Criteria†† Accuracy (% Recovery)
Cl^-	EPA 300.0	0.25	5.12	20	80 to 120
$SO_4^=$	EPA 300.0	0.25	5.12	20	80 to 120
NO_2^- (as N)	EPA 300.0	0.25 (as N)	5.12 (as N)	20	80 to 120
NO_3^- (as N)	EPA 300.0	0.25 (an N)	5.12 (as N)	20	80 to 120
OPO_4^- (as P)	EPA 300.0	0.25 (as P)	5.12 (as P)	20	80 to 120
F^-	EPA 340.2	0.25	1.00	20	80 to 120

* Methods for Chemical Analysis of Water and Wastes, EPA-600/4-84-017, March 1984.
† Taken as 10 times the method detection limit from each method.
** Based on a 20 mL sample; 25 mL for F.
†† Standard criteria.

Source: ESE, 1991.

Table 5-7. **Pesticides--Groundwater and Surface Water Samples:** Summary of Practical Quantitation Limits, Precision, and Accuracy at the ESE St. Louis Chemistry Laboratory*

Parameter	Practical Quantitation Limit (µg/L)	Spiking Level (µg/L)	Method Criteria Precision (RPD)	Method Criteria Accuracy (% Recovery)
Aldrin	.04	0.228	22	42 to 122
alpha-BHC	.03	--	--	--
beta-BHC	.06	--	--	--
delta-BHC	.09	--	--	--
gamma-BHC (Lindane)	.04	0.208	15	32 to 127
alpha-Chlordane	.14	--	--	--
gamma-Chlordane	.14	--	--	--
4,4'-DDD	.11	--	--	--
4,4'-DDE	.04	--	--	--
4,4'-DDT	.12	0.555	27	25 to 160
Dieldrin	.02	0.555	18	36 to 146
Endosulfan I	.14	--	--	--
Endosulfan II	.04	--	--	--
Endrin	.06	0.54	21	30 to 147
Endrin ketone	.10	--	--	--
Heptachlor	.03	0.246	20	34 to 111
Heptachlorepoxide	.83	--	--	--
Methoxychlor	1.76	--	--	--
Toxaphene	2.40	--	--	--
Arochlor 1016	.65	1.5	50	50 to 114
Arochlor 1221	1.30	--	--	--
Arochlor 1232	.65	--	--	--
Arochlor 1242	.65	--	--	--
Arochlor 1248	.65	--	--	--
Arochlor 1254	.65	--	--	--
Arochlor 1260	.65	3.27	50	8 to 127
Surrogates (All samples spiked at indicated levels):				
Dibutylchloroendate†	--	0.2	--	24-154

* SW-846, 3rd Edition, Revision 1 (12/87); Method 3510 and 40 CFR Part 136 Appendix Method 608.
† Used for pesticides only.

Source: ESE, 1991.

Table 5-8. **Herbicides--Groundwater and Surface Water Samples:** Summary of Practical Quantitation Limits, Precision, and Accuracy at the ESE St. Louis Chemistry Laboratory*

Parameter	Practical Quantitation Limit (µg/L)	Spiking Level (µg/L)	Method Criteria †	
			Precision (RPD)	Accuracy (% Recovery)
2,4-D	1.2	6.26	50	23 to 131
2,4,5-TP (Silvex)	.17	.786	50	15 to 141

* SW-846, 3rd Edition, Revision 1 (12/87); Method 3510 and 40 CFR Part 136 Appendix Method 615.

† Recovery ranges from Method 1618 since 615 gives no recovery ranges.

Source: ESE, 1991.

Table 5-9. **Volatile Organics--Soil and Sediment Samples:** Summary of Practical Quantitation Limits, Precision, and Accuracy at the ESE St. Louis Chemistry Laboratory* (Page 1 of 2)

Parameter	Practical Quantitation Limit †,** (µg/kg)	Spiking Level† (µg/kg)	Method Criteria** Precision (%RPD)	Method Criteria** Accuracy (% Recovery)
Acetone††	100	--	--	--
Benzene	5	50	21	66 to 142
Bromodichloromethane	5	--	--	--
Bromoform	5	--	--	--
Bromomethane	5	--	--	--
2-Butanone††	100	--	--	--
Carbon disulfide††	100	--	--	--
Carbon tetrachloride	5	--	--	--
Chlorobenzene	5	50	21	60 to 133
Chloroethane	5	--	--	--
Chloroform	5	--	--	--
Chloromethane	5	--	--	--
bis-2-Chlorovinylether	5	--	--	--
Dibromochloromethane	5	--	--	--
1,1-Dichloroethane	5	--	--	--
1,1-Dichloroethylene	5	--	--	--
1,2-Dichloroethane	5	--	--	--
cis-1,2-Dichloroethylene	5	--	--	--
trans-1,2-Dichloroethylene	5	50	22	59 to 172
1,2-Dichloropropane	5	--	--	--
cis-1,3-Di-chloropropylene	5	--	--	--
trans-1,3-Dichloropropylene	5	--	--	--
Ethylbenzene	5	--	--	--
2-Hexanone††	50	--	--	--
Methylene chloride	5	--	--	--
4-Methyl-2-pentanone	5	--	--	--
Styrene	5	--	--	--
1,1,2,2-Tetrachloroethane	5	--	--	--
Tetrachloroethylene	5	--	--	--

Table 5-9. Volatile Organics--Soil and Sediment Samples: Summary of Practical Quantitation Limits, Precision, and Accuracy at the ESE St. Louis Chemistry Laboratory* Page 2 of 2.

Parameter	Practical Quantitation Limit †,** (µg/kg)	Spiking Level† (µg/kg)	Method Criteria** Precision (%RPD)	Method Criteria** Accuracy (% Recovery)
Toluene	5	50	21	59 to 139
1,1,1-Trichloroethane	5	--	--	--
1,1,2-Trichloroethane	5	--	--	--
Trichloroethylene	5	50	24	62 to 137
Vinyl acetate	50	--	--	--
Vinyl chloride	5	--	--	--
o-Xylene	5	--	--	--
p-Xylene	5	--	--	--
m-Xylene	5	--	--	--
Surrogates (All samples spiked at indicated levels):				
Toluene-d8	5	50	--	81 to 117
Bromofluorobenzene	5	50	--	74 to 121
1,2-Dichloroethane-d4	5	50	--	70 to 121

* Methods 5030 and 8260, Test Methods for Evaluating Solid Waste, EPA-SW-846, 3rd Edition, Revision 0.
† Based on a 5 g sample.
** Criteria are for Method 8240. Data for soils does not exist at this time for Method 8260.
†† Not on SW-846 Method 8260 list, criteria from SW-846 Method 8240.

Source: ESE, 1991.

Table 5-10. Extractable Organics--Soils and Sediment Samples: Summary of Practical Quantitation Limits, Precision, and Accuracy at the ESE St. Louis Chemistry Laboratory* (Page 1 of 3)

Parameter	Practical Quantitation Limit †,** (µg/kg)	Spiking Level† (µg/kg)	Method Criteria** Precision (RPD)	Method Criteria** Accuracy (% Recovery)
Acenaphthene	660	3,333	19	31 to 137
Acenaphthylene	660	--	--	--
Anthracene	660	--	--	--
Benzo(a)-anthracene	660	--	--	--
Benzo(b)-fluoranthene	660	--	--	--
Benzo(k)-fluoranthene	660	--	--	--
Benzo(a)pyrene	660	--	--	--
Benzo(g,h,i)-perylene	660	--	--	--
Butylbenzyl-phthalate	660	--	--	--
4-Bromophenylphenylether	660	--	--	--
4-Chloroaniline	1,300	--	--	--
bis (2-Chloroethoxy)methane	660	--	--	--
bis (2-Chloroethyl)ether	660	--	--	--
bis (2-Chloroisopropyl)ether	660	--	--	--
2-Chloronaphthalene	660	--	--	--
4-Chlorophenylphenylether	660	--	--	--
Chrysene	660	--	--	--
Dibenzo(a,h)anthracene	660	--	--	--
Dibenzofuran	660	--	--	--
Di-n-butylphthalate	660	3,333	47	29 to 135
1,2-Dichlorobenzene	660	--	--	--
1,3-Dichlorobenzene	660	--	--	--
1,4-Dichlorobenzene	660	3,333	27	28 to 104
3,3'-Dichlorobenzidine	1,300	--	--	--
Diethylphthalate	660	--	--	--
Dimethylphthalate	660	--	--	--
2,4-Dinitrotoluene	660	3,333	47	28 to 89
2,6-Dinitrotoluene	660	--	--	--
Di-n-octylphthalate	660	--	--	--
bis (2-Ethylhexyl)phthalate	660	--	--	--

Table 5-10. Extractable Organics--Soils and Sediment Samples: Summary of Practical Quantitation Limits, Precision, and Accuracy at the ESE St. Louis Chemistry Laboratory* (Page 2 of 3)

Parameter	Practical Quantitation Limit †,** (µg/kg)	Spiking Level† (µg/kg)	Method Criteria** Precision (RPD)	Method Criteria** Accuracy (% Recovery)
Fluoranthene	660	--	--	--
Fluorene	660	--	--	--
Hexachlorobenzene	660	--	--	--
Hexachlorobutadiene	660	--	--	--
Hexachlorocyclopentadiene	660	--	--	--
Hexachloroethane	660	--	--	--
2-Methylnapthalene	660	--	--	--
2-Nitroaniline	3,300	--	--	--
3-Nitroaniline	3,300	--	--	--
4-Nitroaniline	3,300	--	--	--
N-Nitrosodiphenylamine	660	--	--	--
N-Nitroso-di-n-propylamine	660	3,333	38	41 to 126
Indeno(1,2,3-cd)pyrene	660	--	--	--
Isophorone	660	--	--	--
Naphthalene	660	--	--	--
Nitrobenzene	660	--	--	--
Phenanthrene	660	--	--	--
Pyrene	660	3,333	36	35 to 142
1,2,4-Tri-chlorobenzene	660	3,333	23	38 to 107
Benzoic Acid	3,300	--	--	--
Benzyl-Alcohol	1,300	--	--	--
4-Chloro-3-methylphenol	1,300	6,667	33	26 to 103
2-Chlorophenol	660	6,667	50	25 to 102
2,4-Dichlorophenol	660	--	--	--
2,4-Dimethylphenol	660	--	--	--
2,4-Dinitrophenol	3,300	--	--	--
4,6-Dinitro-2-methylphenol	3,300	--	--	--
2-Methylphenol	660	--	--	--
4-Methylphenol	660	--	--	--
2-Nitrophenol	660	--	--	--

Table 5-12. Extractable Organics--Soils and Sediment Samples: Summary of Practical Quantitation Limits, Precision, and Accuracy at the ESE St. Louis Chemistry Laboratory,* Page 3 of 3

Parameter	Practical Quantitation Limit †,** (µg/kg)	Spiking Level† (µg/kg)	Method Criteria** Precision (RPD)	Method Criteria** Accuracy (% Recovery)
4-Nitrophenol	3,300	6,667	50	11 to 114
Pentachlorophenol	3,300	6,667	47	17 to 109
Phenol	660	6,667	35	26 to 90
2,4,5-Trichlorophenol	660	--	--	--
2,4,6-Trichlorophenol	660	--	--	--
Surrogates (All samples spiked at indicated levels):				
Nitrobenzene-d5	--	3,333	--	23 to 120
2-Fluorobiphenyl	--	3,333	--	30 to 115
Terphenyl-d14	--	3,333	--	18 to 137
Phenol-d6	--	6,667	--	24 to 113
2-Fluorophenol	--	6,667	--	25 to 121
2,4,6-Tribromophenol	--	6,667	--	19 to 122

* Methods 3550 and 8270, Test Methods for Evaluating Solid Waste, EPA-SW-846, 3rd Edition, Revision 1 (12/87).
† Based on a 30 gram dry-weight sample.
** Criteria from Method 8270.

Source: ESE, 1991.

Table 5-11. TRPH and Oil and Grease--Soil and Sediment Samples: Summary of Practical Quantitation Limits, Precision, and Accuracy at the ESE St. Louis Chemistry Laboratory

Parameter	Practical Quantitation Limit †,†† (mg/kg)	Spiking Level† (mg/kg)	Method Criteria††	
			Precision (%RPD)	Accuracy (% Recovery)
TRPH*	6.25	62.5	25	80 to 120
Oil and Grease**	62.5	6.25	25	80 to 120

* SW-846 Methods 9071, Revision 0 (9/86) and 9073, Revision 0 (12/90), Test Methods for Evaluating Solid Waste, EPA-SW-846, 3rd Edition.
† Based on a 40 g sample for TRPH and a 20 g sample for oil and grease.
** EPA 413.2, Methods for Chemical Analysis of Waters and Wastes (EPA-600/4-79-020), March 1984.
†† Standard criteria.

Source: ESE, 1991.

Table 5-12. Total Recoverable Metals--Soils and Sediment Samples: Summary of Practical Quantitation Limits, Precision, and Accuracy at the ESE St. Louis Chemistry Laboratory

Parameter	Reference*	Practical Quantitation Limit †,** (mg/kg)	Spiking Level† (mg/kg)	Method Criteria** Precision (%RPD)	Method Criteria** Accuracy (% Recovery)
Aluminum	EPA 3050/6010	20	200	20	75 to 125
Antimony	EPA 3050/6010	6	50	20	75 to 125
Arsenic	EPA 3050/7060 EPA 3050/6010	1	4.0	20	75 to 125
Barium	EPA 3050/6010	20	200	20	75 to 125
Beryllium	EPA 3050/6010	0.5	5.0	20	75 to 125
Cadmium	EPA 3050/6010	0.5	5.0	20	75 to 125
Calcium	EPA 3050/6010	500	--	--	--
Chromium	EPA 3050/6010	1	20	20	75 to 125
Cobalt	EPA 3050/6010	5.0	50	20	75 to 125
Copper	EPA 3050/6010	2.5	25	20	75 to 125
Iron	EPA 3050/6010	10	--	--	--
Lead	EPA 3050/7421 EPA 3050/6010	0.5	2.0	20	75 to 125
Magnesium	EPA 3050/6010	500	--	--	--
Manganese	EPA 3050/6010	1.5	50	20	75 to 125
Mercury	EPA 7471	0.1	0.5	20	75 to 125
Selenium	EPA 3050/7740 EPA 3050/6010	0.5	1.0	20	75 to 125
Silver	EPA 3050/6010	1	5.0	20	75 to 125
Sodium	EPA 3050/6010	500	--	--	--
Thallium	EPA 3050/7841 EPA 3050/6010	1.0	5.0	20	75 to 125
Vanadium	EPA 3050/6010	5.0	50	20	75 to 125
Zinc	EPA 3050/6010	2.0	50	20	75 to 125

* Test Methods for Evaluating Solid Waste, EPA-SW-846, 3rd Edition, Revision 1 (12/87).
† Based on a 1.0 g dry weight sample, except mercury which is 0.2 g.
** Standard criteria.

Source: ESE, 1991.

Table 5-13. Pesticides--Soil and Sediment Samples: Summary of Practical Quantitation Limits, Precision, and Accuracy at the ESE St. Louis Chemistry Laboratory*

Parameter	Practical Quantitation Limit (µg/kg)	Spiking Level (µg/kg)	Method Criteria Precision (RPD)	Method Criteria Accuracy (% Recovery)
Aldrin	2.68	7.60	43	42 to 122
alpha-BHC	2.01	--	--	--
beta-BHC	4.02	--	--	--
delta-BHC	6.03	--	--	--
gamma-BHC (Lindane)	2.68	6.93	5.0	32 to 127
alpha-Chlordane	9.38	--	--	--
gamma-Chlordane	9.38	--	--	--
4,4'-DDD	7.37	--	--	--
4,4'-DDE	2.68	--	--	--
4,4'-DDT	8.04	18.5	50	25 to 160
Dieldrin	1.34	18.5	38	36 to 146
Endosulfan I	9.38	--	--	--
Endosulfan II	2.68	--	--	--
Endrin	4.02	18.0	45	30 to 147
Endrin ketone	16.0	8.20	--	34 to 111
Heptachlor	2.01	8.33	31	35 to 130
Heptachlorepoxide	55.61	--	--	--
Methoxychlor	117.92	--	--	--
Toxaphene	160.80	--	--	--
Arochlor 1016	43.55	50.0	50	50 to 114
Arochlor 1221	87.10	--	--	--
Arochlor 1232	43.55	--	--	--
Arochlor 1242	43.55	--	--	--
Arochlor 1248	43.55	--	--	--
Arochlor 1254	43.55	--	--	--
Arochlor 1260	43.55	108.8	50	8 to 127
Surrogates (All samples spiked at indicated levels):				
Dibutylchloroendate		6.67	--	20 to 150(CLP)

* SW-846, 3rd Edition, Revision 1 (12/87); Methods 3550 and 8080.
† Advisory limits only.

Source: ESE, 1991.

Table 5-14. Herbicides--Soil and Sediment Samples: Summary of Practical Quantitation Limits, Precision, and Accuracy at the ESE St. Louis Chemistry Laboratory*

Parameter	Practical Quantitation Limit (µg/kg)	Spiking Level (µg/kg)	Method Criteria †	
			Precision (RPD)	Accuracy (% Recovery)
2,4-D	24	125.3	50	23 to 131
2,4,5-TP (Silvex)	3.4	15.72	50	15 to 141

* SW-846, 3rd Edition, Revision 1 (12/87); Methods 3550 and 8150.
† From Method 1618; Method 8150 gives no ranges.

Source: ESE, 1991.

6.0 SAMPLING PROCEDURES

The ESE St. Louis Laboratory provides sampling containers and custody forms for its clients. ESE's engineering units conduct field sampling for major projects. The sampling activities will be coordinated with laboratory management.

6.1 PREFIELD ACTIVITY

ESE policy dictates that prefield briefing meetings/conference calls be held prior to any field investigations involving the collection of laboratory samples. These meetings are intended to assure that all necessary departments are aware of the field activity and can plan accordingly. As a minimum, the ESE Project Manager must schedule a meeting with the Laboratory Project Manager and the QA Supervisor.

A Field Trip Plan Approval Form (Figure 6-1) is filled out, and approval is documented by the signatures of the personnel on the form. For regional offices, the date of the conference call is placed on the signature line.

6.2 SAMPLING CONTAINERS, PRESERVATION TECHNIQUES, AND HOLDING TIMES

The Field Team Leader is responsible for proper sampling, labeling of samples, preservation, and shipment of samples to the laboratory to meet required holding times. Table 6-1 identifies the proper containers, preservation techniques, and maximum holding times established by EPA (40 CFR Part 136 Table II, 1989). The holding times in Table 6-1 are from time of sampling. The validity of samples which exceed the goals will be determined by the ESE Chemistry Laboratory Director on a case-by-case basis.

Trial preservation may be necessary for concentrated hazardous/industrial wastes to assure adequate preservation or if reactions are suspected; the volume of preservation added should be recorded in the field notes. For example, acidification of some wastes may liberate toxic gases (e.g., cyanide gas) or result in foaming. In such cases, preservation should be omitted, samples should be shipped to the laboratory as soon as possible, and appropriate comments must be included on the sample logsheet and chain-of-custody.

Project No. _____

FIELD TRIP PLAN APPROVAL FORM

Project Name: _____

Field Trip Site: _____

Project/Task Manager: _____

Field Team Leader: _____

Laboratory Coordinator: _____

Field Team Members:

_____ _____
_____ _____
_____ _____
_____ _____

SCHEDULING INFORMATION:

Field Trip Briefing Mtg _____ (Date) _____ (Time)
Departure Hunter _____ (Date) _____ (Time)
Site Arrival _____ (Date) _____ (Time)
Site Departure _____ (Date) _____ (Time)
Arrive Hunter _____ (Date) _____ (Time)

PLANNING INFORMATION:

The following information must be attached (check to indicate):

_____ Sampling and Shipping Schedule: Lab/Field Contacts Established
_____ Sampling Location Layout
_____ Samples to be Collected and Fraction
_____ List of all Parameters to be Measured On-Site
_____ List of Field Equipment Requested
_____ Contact with CEMRD-ED-L to Obtain Bottles and Alert for Analysis.

APPROVALS:

_____ _____
Laboratory Coordinator (Date) Project/Task Manager (Date)

_____ _____
Field Team Leader (Date) QA Manager (Date)

REMARKS: _____

Figure 6-1
FIELD TRIP APPROVAL FORM

Environmental Science & Engineering, Inc.

Table 6-1. Containers, Preservation Techniques, and Holding Times (Page 1 of 3)

Fraction Code		Parameters (Groups)	Container Size/Type	Preservation	Holding Time
I. WATER/WASTEWATER					
C	(1)	Anions (Chloride, Nitrate-N/ Nitrite-N, O-Phosphate-P, Sulfate, Fluoride)	Polyethylene bottle (125 mL)	Chill at 4°C	28 days (Note 1)
	(2)	Alkalinity, Acidity, Sp. Conductance	Polyethylene bottle (250 mL)	Chill at 4°C	14 days
	(3)	Residues (TS, TSS, VS, TDS)	Polyethylene bottle (250 mL)	Chill at 4°C	7 days
	(4)	BOD	Polyethylene bottle (1 L)	Chill at 4°C	48 hours
	(5)	Settleable Matter	Polyethylene bottle (1 L)	Chill at 4°C	48 hours
	(6)	Hexavalent Chromium	Polyethylene bottle (250 mL)	Chill at 4°C	24 hours
S	(1)	COD, TOC	Glass (125 mL)	Chill at 4°C, H_2SO_4 to pH<2	28 days
	(2)	Total-N (Kjeldahl), Ammonia-N	Polyethylene bottle (1 L)	Chill at 4°C, H_2SO_4 to pH<2	28 days
O		Oil and Grease, TRPH (Extractable)	Glass (500 mL) (Note 2)	Chill at 4°C, H_2SO_4 to pH<2	7 days (extraction) 28 days (analyses)
Z		Total Phenolics (4-AAP)	Glass (500 mL)	Chill at 4°C, H_2SO_4 to pH<2	28 days
N	(1)	Metals (Without Mercury), Hardness	Polyethylene bottle (250 mL)	HNO_3 to pH<2 (Note 3)	6 months
	(2)	Metals (including Mercury)	Polyethylene bottle (500 mL)	HNO_3 to pH<2 (Note 3)	28 days
R		Gross Alpha/Beta Radium	Polyethylene bottle (1 L)	HNO_3 to pH<2	28 days

Table 6-1. Containers, Preservation Techniques, and Holding Times (Page 2 of 3)

Fraction Code	Parameters (Groups)	Container Size/Type	Preservation	Holding Time
EC (1)	Pesticides, PCBs	Glass, amber (1 L)(Note 2)	Chill at 4°C	7 days (extraction) 40 days (analyses)
(2)	Herbicides	Glass, amber (1 L)(Note 2)	Chill at 4°C	7 days (extraction) 40 days (analyses)
MS (1)	Acid and Base/ Neutral Extractables (GC/MS, including PNAs only by GC/MS)	Glass, amber (1 L)(Note 2)	Chill at 4°C	7 days (extraction) 40 days (Analyses)
(2)	PNAs by HPLC	Glass, amber (1 L)(Note 2)	Chill at 4°C	7 days (extraction) 40 days (analyses)
(3)	Nitroaromatics (Explosives)	Glass, amber (500 mL) (Note 2)	Chill at 4°C	7 days (extraction) 40 days (analyses)
V (1)	Volatile Organic-Wastewater/ Surface Water	Two 40 mL glass vials with teflon-lined septum caps	Chill at 4°C, 2 drops 1:1 HCl to pH<2	14 days
(2)	Volatile Organics-Drinking Water	Two 125 mL glass vials with teflon-lined septum caps	Chill at 4°C, 2 drops 1:1 HCl/ 50 mg ascorbic acid	14 days
VP	Purgeable Aromatics/ BT(E)X/Purgeable TRPH	Two 40 mL glass vials with teflon-lined septum caps	Chill at 4°C, 2 drops 1:1 HCl to pH<2	14 days
B	Cyanide (Total and Amendable)	Polyethylene bottle (1 L)	Chill at 4°C/ NaOH to pH>12	14 days

Table 6-1. Containers, Preservation Techniques, and Holding Times (Page 3 of 3)

Fraction Code	Parameters (Groups)	Container Size/Type	Preservation	Holding Time
X	TOX	Two 250 mL glass teflon-lined septum cap	Chill at 4°C	14 days
H	Sulfide	Polyethylene (500 mL)	Chill at 4°C, Zinc Acetate, NaOH to pH>9	7 days
II.	SOIL/SOLID WASTES (Moisture Content < 30%)			
SS a)	Anions, TOC	2 oz. glass	Chill at 4°C	14 days
b)	Total Metals	4 oz. glass	Chill at 4°C	6 months
c)	Total-N, Ammonia-N, Total Phenolics	4 oz. glass	Chill at 4°C	28 days
d)	Semi-Volatile Organics (BNA, Pesticides/PCBs, explosives, PNAs)	4 oz. glass	Chill at 4°C	14 days (extraction) 40 days (analyses)
e)	Oil and Grease, TRPH (Extractable)	4 oz. glass	Chill at 4°C	14 days (extraction) 40 days (analyses)
f)	TCLP (Complete or Partial Parameters)	4 oz. glass	Chill at 4°C	14 days to leachate generation/ analyses follow individual protocol
VS	Purgeables [VOA, BT(E)X, TRPH]	2 oz. glass	Chill at 4°C	14 days
III.	SLUDGES (Moisture Content > 30%)			
	Double the size of containers as in II.			

Note 1: Nitrate/Nitrite and Orthophosphate, 48 hours.
Note 2: Extra containers for SPs and SPMs. Do not split of sample.
Note 3: For dissolved metals, samples must be field filtered before being added to pre-preserved bottles.

Source: Environmental Science & Engineering, Inc. 1991.

With hazardous samples it may be necessary to rinse the outer portion of sample containers with deionized (DI) water prior to packaging for shipment. The latest Department of Transportation (DOT) procedures for shipment of environmental samples will be used in all cases. The quantity of acids or bases added as preservatives generally should not exceed 0.15 percent by weight or the samples must be shipped as corrosives.

The quality of the preservation techniques and sampling containers are verified by running equipment blanks and trip blanks as described in Section 11.3.

6.3 SAMPLE CONTAINERS AND LABORATORY WATER CONTROL

ESE uses commercially cleaned sample containers from reliable sources. At a minimum, only type 200 series pre-cleaned sample containers will be used. The types of sample containers used by the ESE St. Louis Chemistry Laboratory are summarized in Table 6-1. Precleaned sample containers from the provider are stored in an area away from the analytical areas of the laboratory until needed. Occasional audits of containers to document freedom from contaminants will be performed to supplement the various blanks (see Section 11.3) that are frequently and routinely analyzed to provide similar QC data. Any analytes above the detection limit in any field blank or trip blank will signal the need to check the corresponding lot of containers for contamination.

DI water is defined as ESE water that has been treated by passing it through a standard resin column and an activated carbon unit. The water contains no detectable (i.e., ESE's routine detection limits) heavy metals or inorganic compounds of analytical interest and is relatively free of organic compounds. The water is acceptable for the initial rinsing of laboratory glassware and field equipment. Ultra-pure water, used for equipment and field blanks, is defined as ESE water that has been additionally treated through a Milli-Q treatment system and contains no organic compounds of analytical interest above ESE's routine detection limits. Organic-free water, used for trip blanks (refer to Section 11.3), is Milli-Q water which has been boiled at atmospheric pressure, cooled, and then purged for at least 15 minutes with helium.

DI water other than ESE treated water may be used if it is of documented equivalent quality. Use of commercially deionized or distilled water is discouraged because it often contains phthalate esters.

7.0 SAMPLE CUSTODY AND TRANSPORTATION

The primary objective of sample custody is to create an accurate written verified record, which can be used to trace the possession and handling of the samples from the moment of collection until receipt by the laboratory. Adequate sample custody will be achieved by means of approved field and analytical documentation.

A sample for this project is defined to be in someone's custody if:

1. It is in one's actual physical possession;
2. It is in one's view, after being in one's physical possession;
3. It is in one's physical possession and then locked or otherwise sealed so that tampering will be evident; or
4. It is kept in a secure area, restricted to authorized personnel only.

7.1 FIELD SAMPLE DOCUMENTATION

Field procedures will be designed to minimize sample handling and transfers. During sampling, the field crews will record the following information in field notebooks using indelible ink:

1. The unique sample number as obtained from the sample label,
2. Source of sample (including name, location, and sample type),
3. Date and time of sample collection,
4. Preservatives used,
5. Name(s) of collector(s), and
6. Field data (pH, temperature, and specific conductance).

Each sample is identified by affixing the pressure-sensitive gummed label produced by the laboratory data management prefield setup (PFS) program. Each label has a unique combination of field group name and sequence number, a standardized sample preservation code (i.e., C for chilled, N for nitric acid), and the station identification (ID). Each label also has spaces for the field team to write in the date and time of sample collection, sampler's signature, and a new station ID if different than the original station ID. New station IDs may be necessary due to changes in field and/or sampling conditions which require substitution of sampling stations. All changes in station ID are clearly noted in

permanent ink on the sample label, chain-of-custody form, and logsheet and must be approved by the Field Team Leader.

The sample container is then placed in a cooler along with chain-of-custody forms produced by the PFS program (Figure 7-1). Each collected sample fraction contained in the transportation case is specified on the chain-of-custody form by circling the appropriate fraction code. Other field information such as sample type, sample collection time and date, new station code (if different from tentative station ID), and field analysis results (e.g., pH, temperature) also are entered onto the chain-of-custody form. The method of shipment is entered on the bottom of the chain-of-custody form, and the sampler signs and dates the chain-of-custody form. The chain-of-custody form is placed in a waterproof container and sealed in the cooler along with the samples to which it applies. The transportation seal or lock will not be opened until the samples arrive in the analytical laboratory and are checked in by the Sample Control Officer or designate. The Field Team Leader will alert the Laboratory Project Manager to pertinent shipping information at the end of each sampling day.

7.2 PACKING AND SHIPPING

The packing and shipping procedures for low concentration samples from Sample Handling Protocol for Low, Medium and High Concentration Samples of Hazardous Waste (Appendix F, ER 1110-1-263, 10/1/90) will be used as a guideline:

- Bottle lids, except for VOC vials, will be secured with strapping tape or evidence tape;
- The volume level on water samples will be marked with a grease pencil (permanent ink markers may contain target compounds and contaminate the sample);
- The cooler will be cushioned with an inert material such as bubble wrap;
- Bottles will be packed so that they do not touch;
- All samples except metal samples will be packed in ice to 4°C after sampling and during shipment;
- One trip blank (Section 11.1) will be sent with each cooler containing VOC water samples;

CHAIN-OF-CUSTODY

ENVIRONMENTAL SCIENCE
AND ENGINEERING, INC.
PROJECT NUMBER:

11-28-90

PROJECT NAME: TEST

FIELD GROUP: TEST

ESE #	FRACTIONS (CIRCLE)	HAZARD CODE	COLLECTION DATE	COLLECTION TIME	SAMPLE I.D. (Only the first 10 Char. will be used)
TEST*1	SS		/ /	:	TEST 3
TEST*2	SS		/ /	:	TEST 3
TEST*3	SS		/ /	:	TEST 3
TEST*4	SS		/ /	:	TEST 3
TEST*5	SS		/ /	:	TEST 3

NOTE -PLEASE ENTER SAMPLE ID; UP TO 10 ALPHANUMERIC CHARACTERS MAY BE USED.
-CIRCLE FRACTIONS COLLECTED. ENTER DATE,TIME,FIELD DATA (IF REQUIRED), HAZARD CODE AND NOTES
-HAZARD CODES: I-IGNITABLE C-CORROSIVE R-REACTIVE T-TOXIC WASTE H-OTHER ACUTE HAZARD; IDENTIFY SPECIFICS IF KNOWN
-PLEASE RETURN LOGSHEETS WITH SAMPLES TO ESE

	RELINQUISHED BY: (NAME/ORGANIZATION/DATE/TIME)	RECEIVED BY (NAME/ORGANIZATION/DATE/TIME)
1		
2		

OTHER FIELD NOTES FOR FIELD GROUP TEST:

LAB NOTES:

Figure 7-1
SAMPLE CHAIN-OF-CUSTODY LOG SHEET

ESE Environmental Science & Engineering, Inc

- After all sample bottles are in place, the cooler will be filled with more bubble-wrap or inert packing material;
- Paper work will be checked for completeness and put into a plastic bag and taped to the inside top of the cooler;
- The drain will be taped shut;
- The cooler will be wrapped with strapping tape at two locations and labeled clearly;
- Signed and dated custody seals will be placed on the front right and back left of the cooler; and
- Shipments containing VOC samples will be sent within 24 hours. All shipments will be sent by overnight Federal Express.

7.3 LABORATORY SAMPLE DOCUMENTATION

Upon arrival in the laboratory, samples will be checked in by the Sample Control Officer or designate using the Cooler Receipt Form (Figure 7-2). All samples contained in the shipment will be compared to the logsheet(s) to assure that all samples designated on the logsheet have been received. Any changes in station ID from the originally established station ID are noted. The Sample Control Officer will note any special remarks concerning the shipment and indicate an analysis due date.

Samples are placed in appropriate storage areas and chemists notified. Access to samples is limited to authorized personnel, and a sample check-out list is maintained. Internal chain-of-custody records are started for samples at the time they are removed from storage for processing and/or analysis. All internal transfers of samples/subsamples are recorded on appropriate forms. These internal chain-of-custody records will be kept with other laboratory records. Samples remain in storage until it becomes unnecessary to retain them (60 days unless otherwise agreed upon), at which time their disposition is noted (see Section 8.4.3).

7.4 PROCEDURES FOR SUBCONTRACTING SAMPLE ANALYSIS

When it is necessary to subcontract sample analysis, the Laboratory Project Manager is responsible for arrangements with a subcontractor to perform sample analysis. All subcontractor laboratories used for projects must be approved by the Project Manager. Any subcontracted laboratories to be utilized for a specific project will be designated as

ESE Cooler # _____
Client Cooler # _____

COOLER RECEIPT FORM

Project: _____ Date/Time Received: _____

USE OTHER SIDE OF THIS FORM TO NOTE FURTHER DETAILS CONCERNING CHECK-IN PROBLEMS AND TO SPECIFY AND DESCRIBE ANY ACTION(S) REGARDING THE RESOLUTION(S) OF PROBLEMS. IF SHIPMENT WAS ACCEPTED AND IF REQUESTED, NOTE ON BACK THE ADDRESS WHERE THE EMPTY COOLER WAS RETURNED AND LIKEWISE IF THE SHIPMENT WAS REJECTED.

IF INFORMATION IS MISSING OR THERE ARE PROBLEMS NOTIFY LABORATORY PROJECT MANAGER SO THAT HE CAN NOTIFY THE PROJECT MANAGER IMMEDIATELY.

A. PRELIMINARY EXAMINATION PHASE: Date/Time cooler was opened: _____

by (print) _____ (sign) _____

1. Did cooler come with a shipping slip (air bill, etc.)? . . . . . YES NO
   If YES, attach and enter carrier and air bill number here: _____
2. Were custody seals on outside of cooler? . . . . . YES NO
   If YES, how many and where: _____
   If YES, enter the following: seal date: _____, seal name: _____
3. Were custody seals unbroken and intact at the date and time of arrival? . . . . . YES NO
4. Were custody papers sealed in a plastic bag and taped inside to the lid? . . . . . YES NO
5. Were custody papers filled out properly (ink, signed, etc.)? . . . . . YES NO
6. Were custody papers complete? All sample IDs legible and useable? . . . . . YES NO
   Turnaround time included? . . . . . YES NO
7. Did you sign custody papers in the appropriate place? . . . . . YES NO
8. Was project identifiable from custody papers? If YES, enter project name at the top of this form. . YES NO
9. Have designated person initial here to acknowledge receipt of cooler: _____ (date) _____

B. LOG-IN PHASE: Date samples were logged-in: _____ by (all those involved must sign below):

(print) _____ (sign) _____

9. Describe packing: _____
10. If required, was enough ice used? . . . . . YES NO
11. Were all bottles sealed in separate plastic bags . . . . . YES NO
12. Did all bottles arrive unbroken and in good condition? . . . . . YES NO
13. Were all bottle labels complete (ID, date, time, signature, preservative, etc.)? . . . . . YES NO
14. Did all bottle labels agree with custody papers? If NO, indicate discrepancies on back. . . . . YES NO
15. Were correct containers used for the tests indicated? . . . . . YES NO
16. Were correct preservatives used when required? . . . . . YES NO
17. Was a sufficient amount of sample sent for tests indicated? . . . . . YES NO
18. Bubbles present in VOA vials? If YES, list by ID#: _____ . YES NO
19. Was lab. project manager called and status discussed? If NO, give details on the back of this form. YES NO
20. Who was called? _____ By whom? _____ on (date) _____

Figure 7-2
COOLER RECEIPT FORM

Environmental Science & Engineering, Inc.

such in the QAPP. It is the responsibility of the Project Manager and/or Laboratory Project Manager to obtain QC data from the subcontracted laboratory to show that the laboratory is capable of performing the requested analyses at the proper detection limits and accuracy and precision criteria. Samples sent to a subcontractor laboratory must include a sufficient number of check samples or spiked samples and duplicates to document the quality of data received from the subcontractor. The QA Supervisor has the option to submit a reference sample along with a batch of samples as a QA check.

The samples should be chilled prior to and during shipment. A logsheet indicating samples and fractions sent must accompany the samples to the subcontractor. The subcontractor should sign and date the logsheet upon receipt of the samples. A copy of the signed logsheet will be returned to ESE and placed in the project file.

7.5 ELECTRONIC DATA RECORDS

ESE has developed CLASS (copyright 1989), which is an automated in-house data management system that integrates information from sample collection, laboratory analyses, and QC requirements, and calculates, checks, stores, and reports data in a variety of formats. The CLASS system resides on a Novell Arcnet (using Novell SFT, version 2.1) IBM-PC compatible network with 480 megabytes of storage and is connected to 20 personal computers (PCs) throughout the chemistry laboratories and offices. CLASS is managed by the Laboratory Data Manager. All data from analyses performed by the laboratory are managed and stored using CLASS.

The database is stored, manipulated, and retrieved using a database manager, Advanced Revelation (copyright COSMOS, Inc.). The file structure and indexing provided by Advanced Revelation allow easy retrieval, grouping, formatting of data. Incorporated into the system is the ability to combine field data, analytical results, and QC data and produce specially formatted project-specific reports, statistical analyses, plots, and electronic files.

The CLASS system manages the flow of samples and data through the laboratory. Prior to sampling, the Laboratory Project Manager provides information on the number of samples, site identifications, parameters to be analyzed, and estimated collection dates. This information is entered into CLASS and is used to produce sample labels and chain-of-custody logsheets (see Figure 7-1). A unique ESE number is assigned to each sample, and

labels with that number and the site identification are placed on each container for that sample. At each site, samples are collected and placed in the appropriate prelabeled containers. Sampling information is recorded on the chain-of-custody logsheet. Samples accompanied by the chain-of-custody logsheet are sent to the laboratory where they are checked and processed by the Sample Control Officer. Samples are stored in the coldroom at 4°C. The samples, along with the date of collection and site identification, are logged into the CLASS system. Original logsheets are placed in the temporary file until the final report is produced, at which time they are attached to the final report. A copy of the final report is kept by the Laboratory Project Manager.

ESE uses a combination of EPA Storage and Retrieval (STORET) numbers and company-designed method codes to designate parameters required for analysis. Each STORET-method combination has its own laboratory QC requirements specific to that analytical method programmed in the computer. A list of all required parameters is logged into the computer with each sample. This list name appears on the field logsheet.

The sampling information is entered into the computer to activate the parameter list for the samples collected and received by the laboratory.

The ESE CLASS system uses a batch method for analyzing, checking QC, and calculating final results of samples. Prior to analyzing a batch of samples, the analyst will designate a specified group of samples in the computer and the sample-parameter status will be updated to IL (in laboratory). The analytical batch is assigned a unique batch control number, which is stored with all final data, so data can be checked and original documentation can be retrieved.

The analysis of each laboratory batch usually consists of a multistage process. In the first stage, instrument calibration, the ESE data management system includes several QC checks. The linear or quadratic regression equation and correlation coefficient are calculated from the calibration curve data, and the correlation coefficient is tested to determine whether it is within an acceptable range specific to the analysis. Method blank and control spike information are then entered, and results are calculated and checked against control limits for that method. Sample responses are entered into the batch, and final concentrations are calculated for each sample. Responses are checked to assure that

they are bracketed by the standard curve. The batch printout includes a QC summary showing the automated QC checks, such as holding times, the presence of spikes, and acceptable spike recoveries. Any discrepancies are flagged by the computer for the analyst.

The batch printout also documents that the analyst has checked data entries and provided all required documentation for the analysis. The batch printout is checked, signed and dated by the analyst, and reviewed and signed by the Group Leader or a designated reviewer.

Analysts use the PC to reserve samples for analysis, calculate final concentrations, and interactively check calibration curves and QC results. By allowing the analyst to enter data directly and check QC and sample results, the analyst is notified of QC problems. When the analyst has entered the curve and QC and sample data, the batch printout, as well as checklists, worksheets, copies of notebook pages and any other pertinent documentation (such as chromatograms), are placed in a file folder with the assigned batch number and submitted to the Laboratory Manager.

The Laboratory Manager processes the batch in the computer to verify QC and to update the sample records and final calculated concentrations.

Each employee is assigned an access code for entry into the CLASS system, and the access rights are assigned on an individual basis. Laboratory personnel and project coordinators are not permitted to update sample records without authorization by the Laboratory Manager. All personnel with an access code may retrieve information from the system.

Once a batch has been finalized by the Laboratory Manager, the batch is locked and data cannot be changed. If a data change is necessary a batch update request form (Figure 7-3) must be completed. This form requires the reason for the change, the approval of the Analytical Group Leader, and/or the Laboratory Manager. The Laboratory Manager unlocks the file, the original batch folder is pulled, the analyst makes the change, the form is stapled to the new batch printout, and the updated batch is reviewed and approved by

ANALYTICAL BATCH UPDATE REQUEST AND RECORD

(This form shall be filed with data batch file as permanent record)

Batch No._____

Requested by :_____

Changes to be made :

Reasons:

Approved/Acknowledged by: _____ Date: _____

Definalization/Change
Processed by: _____ Date: _____

Figure 7-3
BATCH UPDATE REQUEST FORM

ESE Environmental Science & Engineering, Inc.

the Laboratory Manager. The Laboratory Project Manager is requested to produce a new report if necessary.

The batch folders, with all supporting documentation, are filed by batch number in the batch storage room which is secured from other areas of the office. These may be signed out for review by analysts, project team members, or QA personnel. A monitoring system is used to track folders that have been checked out. Batch folders and project files are kept a minimum of 5 years.

Laboratory management personnel can use the computer to monitor the flow of data through the system. Data can be accessed and reported by sampling event, project, or any subset of samples and parameters. The CLASS system enables the laboratory management personnel to:

1. Produce a variety of summary reports of analytical data;
2. Produce sample holding times/analyses dates/collection times reports;
3. Calculate statistics such as mean, maximum, minimum, and standard deviation;
4. Calculate analytical data using alternate units;
5. Produce a data file to be read into the Statistical Analysis System (SAS) for in-depth statistical analysis;
6. Summarize QC by parameter; and
7. Produce a project-specific export-data file.

A log of electronic transfers is kept by the Laboratory Data Manager.

The Laboratory Data Manager maintains the CLASS system. Every change made to a program is documented electronically at the end of the program with the date, employee number, and a brief description of the change.

The Laboratory Manager validates at least one data point per batch reviewed by recalculations from the raw values for verification that the computer is performing calculations correctly.

The database is backed up Monday through Friday using data cartridge tapes. Archived electronic data are stored in special files accessible by the Laboratory Data Manager.

Laboratory management personnel can access the status of all data, including archived samples (using CLASS), and request that sample data be restored for review.

7.6 DOCUMENT CONTROL AND REVIEW

Document control includes the maintenance of project files. All project files will be maintained by the Project Manager. All documents will be kept in project files. Project personnel may keep their own files; however, all official and original documents will be placed in the official project file.

All laboratory records, including batch forms, logsheets, and computerized worksheets are kept in a batch file in the sample control center. Field logs are maintained by the Field Team Leader in a project field file.

The Project QA Supervisor will independently maintain a QA file for each project. At the end of the project, the QA project file will be turned over to the Project Manager. The following documents will be placed in the QA project file:

1. QA records maintained throughout the investigation;
2. Documentation of QA system and performance audits;
3. Documentation of all unusual findings or observations;
4. Documentation of all QA corrective actions;
5. All official QA correspondence received or issued relating to the investigation, including records of telephone calls;
6. One copy of all QA deliverable review sheets; and
7. Any other QA documents related to the project or follow-up activities related to the investigation.

8.0 ANALYTICAL PROCEDURES

Standard analytical procedures to be used in this project for chemical analysis of water and soil are referenced in Section 5.0 (see Tables 5-1 through 5-14).

8.1 STANDARD PROCEDURES

Analytical Group Leaders will ensure that only these standard analytical methods are employed by the staff. Standard Methods Manuals are required for all Departments and development of the Standard Analytical Procedures (SAPs) are ultimately the responsibility of the Group Leaders. The methods cited in these documents will be the methods normally used. Any deviation from the standard method must be documented in the analyst notebook and approved by the Group Leader and the Laboratory Manager.

8.2 NONSTANDARD METHODS VALIDATION

Any deviations from standard methods shall be pre-approved by client with concurrence of the QA Supervisor.

If other than standard analytical methods become necessary due to a change in work scope, it is necessary to validate the analytical method. The responsible Analytical Group Leader must establish a thorough method validation so that the method selected measures the reported parameter with the necessary precision, accuracy, and detection limit and without severe interference by other constituents in the sample. Minor modifications of standard methods do not require method validation. The application of a standard method to new analytes or matrices requires method validation.

The following subsections constitute the minimum requirements for initial establishment of the accuracy, precision, and detection limit of nonstandard methods.

For each parameter of interest, three replicate spike samples will be prepared from laboratory blank water (for water methods) or an uncontaminated "standard" appropriate matrix (for soil or tissue methods) at one appropriate analyte concentration. In addition one representative sample matrix spike will be prepared. Spiked samples will be analyzed according to the method. An unspiked "standard" matrix blank or unspiked laboratory

blank water and an unspiked sample blank will be analyzed. The spiking concentration should be representative of the average expected concentration in the samples to be analyzed and should be selected such that the final extract or aliquot can be analyzed with less than tenfold dilution in the mid-range of the calibration curve. Sample matrix spikes should be at least two times the background level in the sample.

Accuracy (Recovery)--The minimum requirement for initial establishment of accuracy for nonstandard methods follow:

1. Calculate the found concentration for each spiked sample as follows:

   R = blank-corrected measured concentration = measured concentration in spiked sample minus the measured concentration in unspiked (blank) sample.

2. Calculate the percent recovery for each spiked sample as follows:

   $$P = \frac{R}{S} \times 100\%$$

   where: R = blank-corrected measured concentration, and

   S = target concentration for each spiked sample.

3. Calculate the average percent recovery and relative standard deviation of the percent recovery for the spiked samples as follows:

   $$\bar{P} = \frac{P_1 + P_2 + P_3}{3} = \text{average percent recovery}$$

   Where P_1, P_2, and P_3 = percent recovery for the three spiked samples.

   $$S_r = \sqrt{\frac{1}{n-1}\left[\sum_{i=1}^{n} P_i^2 - \left(\sum_{i=1}^{n} P_i\right)^2\right]} = \textit{standard deviation of } \bar{P}$$

   Where n = number of recovery values, and

   P_i = percent recovery spiked sample "i".

   $$RS_r = \frac{S_r}{\bar{P}} \times 100\% = \text{relative standard of P}$$

   Assess the recovery in the sample matrix for suitability of the method.

Precision--The minimum requirements for initial establishment of precision for nonstandard methods follow:

1. Calculate the RPD between each pair of replicate standard matrix spike samples.

$$RPD_1 = \frac{R_1 - R_2}{(R_1 + R_2)/2} \times 100$$

$$RPD_2 = \frac{R_1 - R_3}{(R_1 + R_3)/2} \times 100$$

$$RPD_3 = \frac{R_2 - R_3}{(R_2 + R_3)/2} \times 100$$

2. Calculate the average RPD for the standard matrix spikes.

$$RPD = \frac{RPD_1 + RPD_2 + RPD_3}{3}$$

Detection Limit--The method detection limit of the method is the lowest sample concentration which can be reliably recovered and measured in the sample matrix with a low background level. Statistically based procedures to determine absolute method detection limits (MDL) are available from EPA methods (40 CFR, Part 136 Appendix B). The reported detection limit for a method will be subject to the judgment of the analyst and the Group Leader and should take into account background levels, instrument baseline noise, spiking recoveries and the lowest calibration standards analyzed. In general (except for those methods where the detection limit is derived from instrument considerations), the reported detection limit for a method must not be less than the sample concentration equivalent to one-half the lowest standard concentration analyzed.

Method validation results should be recorded and submitted to the Laboratory Manager and Project QA Supervisor prior to the initiation of analysis. Before analysis begins, the Laboratory Manager and Project QA Supervisor will assure that the method meets the performance criteria required by the project.

Once the method is validated, these initial validation data are periodically revised, updated, and improved using the data acquired during the laboratory's routine analytical QC program.

8.3 SAMPLE TYPES DETERMINATION

Unless otherwise requested, samples for analyses will be subjected to the following rules for the determination of types for appropriate procedures:

1. For samples to be analyzed as water samples:
   a. Visual measurement to have LESS than 0.5 percent solid: Homogenize the samples and proceed as liquid samples.
   b. Visual measurement to have MORE than 0.5 percent solid: Rough filter through No. 41 filter paper. Analyze ONLY the aqueous phase.
2. For samples to be analyzed as soil samples:
   a. Visual measurement to have LESS than 0.5 percent FREE water: Homogenize the samples and proceed as solid samples.
   b. Visual measurement to have MORE than 0.5 percent FREE water: Rough filter through No. 41 filter paper. Analyze the solids.

8.4 LABORATORY OPERATIONS

8.4.1 Glassware Cleaning Procedures

Dirty glassware is drained of solvents and rinsed either with an appropriate solvent or with tap water, if soils or other residues are still remaining, before they are taken to the ESE washroom for cleaning. Glassware from the Metals Department is always rinsed with tap water prior to being taken to the washroom. It is the responsibility of each chemist to clean his/her own glassware.

All laboratory glassware (i.e., volumetric flasks, separatory funnels, extraction tubes, beakers, graduated cylinders, and others) is cleaned according to the analysis/parameter group listed in Table 8-1. These cleaning procedures are subject to change depending on the requirements of the projects.

Table 8-1. Glassware Cleaning Procedures

Analysis/Parameter	Cleaning Protocol*
Extractable Organics (GC/MS)	1,2,3,4,5,17
Extractable Organics (GC)	1,2,3,4,5,10
Purgeable Organics (GC/MS)	1,2,4,7,13
Purgeable Organics (GC)	1,4,8,13
HPLC Analyses	1,2,3,4,5,16
Trace Metals	1,2,3,4,12
Nutrients	1,2,3,4
Minerals	1,2,3,4
Residues	1,2,3,4,14
Cyanide, Phenols	1,2,3,4
Petroleum Hydrocarbons, Oil and Grease	1,2,3,4,14,15
COD	1,2,3,4

Note: HPLC = High pressure liquid chromatography
EDB = 1,2-Dibromomethane
DBCP = 1,2-Dibromo-3-chloropropane
THMS = Trihalomethanes
HCl = Hydrochloric acid
HNO_3 = Nitric acid

* Cleaning Procedures

1. Remove all labels using sponge or acetone.
2. Wash with hot soapy water (use Liquinox® soap only) using brushes to scrub inside of glassware, stopcocks, and other small pieces if possible.
3. Rinse three times with warm tap water.
4. Rinse three times with deionized water.
5. Rinse thoroughly with pesticide grade acetone.
6. Rinse with pesticide grade methylene chloride.
7. Rinse with pesticide grade methanol.
8. Rinse with HPLC grade methanol.
9. Rinse with purge and trap grade methanol.
10. Rinse with pesticide grade hexane.
11. Acid rinse with 1:1 HCl, using only metals grade HCl.
12. Acid rinse with dilute HNO_3 and then with deionized water prior to use.
13. Bake at 80°C for 3 to 4 hours.
14. Bake at 180°C for 3 to 4 hours.
15. Rinse with freon prior to use.
16. Rinse with pesticide grade acetonitrile and pesticide grade methanol prior to use, if needed.
17. Rinse with pesticide grade methylene chloride immediately prior to use.

Source: ESE, 1991.

8.4.2 Reagent Storage

The procedures for storing reagents in the laboratory are presented in Table 8-2.

8.4.3 Laboratory Waste Disposal

It is important that all waste materials generated in the laboratory be disposed of promptly and properly. The following subsections describe the procedures for handling laboratory wastes.

Procedures of Disposal of Samples

Samples stored in the laboratory will be handled as follows:

1. Samples will be disposed of sixty (60) days after the sampling date or sample receipt date unless a longer storage time is authorized by the Laboratory Manager.
2. Prior to disposal, the Sample Control Officer (SCO) will compile a list of samples for disposal using the Laboratory Sample Disposal Notice (Notice) to be taken to the Laboratory Project Manager for "hazardous" classification based on the analytical results of the samples. The Notice and analytical results are then forwarded to the Laboratory Manager for second party review and disposal authorization. Analytical results will be returned to the Laboratory Project Manager. The signatures on the Notice will authorize the disposal of the samples and the samples will be disposed. The disposal dates will be entered and the Notice filed as a sample disposal record.
3. The Laboratory Project Manager must follow the Guidelines for Sample Disposal listed later in this section to determine if the sample is "hazardous".
4. Non-hazardous soil samples will be disposed of in the dumpster. All labels on containers must be removed prior to disposal.
5. Non-hazardous water samples will be disposed of by the SCO in the following manner:
   a. Water samples will be poured down the designated sink with a 10X dilution.
   b. During disposal in the sink, a faucet upstream from the sink being used must be turned on to provide additional water flow.

Table 8-2. Reagent Storage

Reagent	Method of Storage
Solvents	The back-up solvents that are not accessible to the analyst are stored in original containers in the original boxes in a vented storage room. The solvents that the analysts have access to are stored in a double-walled flammable liquid storage cabinet. Purchasing personnel transfer solvents from the storage room to the storage cabinets when notified by the organic technician. Note: Methanol used for volatile organic analyses is stored in the GC-Volatiles and GC/MS-Volatiles analysis area.
Inorganic acids	Stored in original containers in the metals prep lab in the department's cabinet designated for acids only.
Organic acids	Stored in original containers in the inorganic chemistry lab in the department's cabinet designated for acids only.
Caustics	Stored in original containers in the inorganic chemistry lab. Note: Caustic reagents are stored in separate cabinets from the acids.
Other reagents	Stored in designated cabinets in each department. Standards that require storage at 4°C or at 0°C are stored in each department's refrigerators or freezers designated for standards only.

Source: ESE, 1991.

c. Empty sample containers should be triple rinsed and disposed of by breaking them in the dumpster. All labels must be removed prior to disposal.

6. If samples are deemed to be "hazardous", the specific compounds for which the sample is deemed hazardous should be identified as the reason in the Notice. Any additional information (i.e., known contamination which was not tested for) should also be addressed.

7. The SCO will separate the hazardous samples from non-hazardous and store in the designated area for lab-pack services. The Notice and reports shall be retained in a specific file for use in filing the manifest.

Disposal of Standards and Solutions

As standards and solutions are made, the solvent, constituents, date, and initials must be put on the container. This information must be on the container before it is offered for disposal. Standards containing any amount of organic solvents must not be poured down the sink. Aqueous standards of organic or inorganic (metals, etc.) compounds which do not exceed the concentration levels in the Guidelines for Sample Disposal may be poured down the designated sink with ample dilution. Standards and solutions that are suspected of being hazardous will be turned over to the SCO who will fill out the Notice to start the disposal procedure. There will be no holding time limits for standards and solutions for disposal; however, it is recommended that disposal be done as frequently as possible.

Disposal of Solvent Wastes

All waste solvents should be disposed of in the red waste solvent containers located inside the laboratories. Solvents should be segregated according to the designated chemical types and placed only in the appropriate waste solvent containers. Whenever the containers are full, the chemists are responsible for transferring the contents to the proper storage drums in the hazardous waste storage facility. The type, amount, date and initials of the chemist will be recorded on the Used Solvent Record. The Laboratory Project Manager is responsible for the scheduling of pick-up services.

Disposal of Old or Contaminated Chemicals

Commercial chemicals that are out of date or contaminated should be left in their original containers. The label should be secured on the container. The date and initials should be marked on the container. The chemicals shall be handed to the SCO to store with hazardous samples for pick-up.

Disposal of 2 mL Autosampler Vials

These are to be collected in boxes and segregated by major solvent. The box should be sealed, and the date and initials should be clearly marked on the box. Also, any additional data (i.e., highly toxic, strong odor, etc.) should be marked on the box. The collection and segregation of vials are the responsibility of the chemists. The vials shall not be held more than sixty (60) days from sample receipt. The Laboratory Project Manager will coordinate pick-up services.

Disposal of Additional Waste Material

Frequently, wastes are generated during sample processing in the laboratory. The wastes shall be retained for hazard determination before disposal. The contents must be clearly marked on the container or on an accompanying analysis report. Again, clearly date and initial the container. The containers shall be boxed and marked with the project number, and if possible, the sample ID for tracking purposes. The SCO will handle the material as samples and start the disposal procedure.

Disposal of Unmarked Containers, or Unknowns

Unmarked containers or unknowns will be brought to the attention of the Laboratory Manager. Unknowns should not be allowed to accumulate or be misplaced. Unknowns cannot be taken for disposal until they are identified. If they cannot be identified, they will be treated as hazardous materials.

Disposal of Processed Samples and Sample Digests

Soil samples which have been extracted with a solvent should be disposed of in properly marked waste sample containers in the laboratory. These containers should have a closed lid to prevent solvent fumes from entering the laboratory air. Periodically, the contents of

this container should be allowed to air dry in a hood and disposed in the trash by the chemists.

Water samples which have been solvent extracted should be disposed of at the sink in the organic wet lab with at least a ten-fold dilution.

Soil samples which have been acid digested and filtered are considered to be non-hazardous and can be disposed in the laboratory trash.

The acid digests of samples shall be combined, analyzed, and go through the same disposal procedure.

Non-hazardous acid digest of samples shall be disposed of in the sink in the general chemistry laboratory with at least a ten-fold dilution. The sample digest will be neutralized before discharging to the sewer.

Guidelines for Laboratory Waste Disposal–Definitions

1. The regulations of the RCRA Solid Waste Disposal Act as shown in 40 CFR part 260 will be used as the basis of the guidelines set forth for the laboratory waste disposal practice.
2. The laboratory wastes are defined as the following:
   a. Samples with holding time exceeding sixty (60) days from the date of collection or submittal to the laboratory. If longer holding time is requested by clients or the Laboratory Project Manager, the sixty days guideline is waived and the agreed holding time will be used.
   b. Spent chemicals, spent solvents, unused portions of samples, and materials generated in the laboratory during the processing of samples for analyses.
   c. Organic extracts of samples and acid digests of samples exceeding holding times, normally six (6) months.
   d. Expired standards for analyses.
3. Only hazardous wastes require special disposal procedure. No treatment of hazardous wastes is allowed in the laboratory with the exception of dilution of

acid or base solutions. Commercial pick-up is the only method for disposal of hazardous wastes for the St. Louis Analytical Chemistry Laboratory.

4. A conservative approach will be taken in the determination of the hazard of wastes. Any waste possessing the RCRA characteristics or containing concentrations of "TESTED" parameters exceeding certain levels as addressed in section II hereafter will be treated as "hazardous" wastes. "TESTED" parameters are those requested by clients with reasonable knowledge about the samples. The laboratory will make the assumption the parameters requested for analyses are those of concern. The laboratory is not in the position whatsoever to determine the presence of any other non-requested parameters. However, the knowledge of the sampling site might be used for the determination of disposal method. Clients will be requested to provide a statement that there are no other hazardous substances likely to be present other than those tested for or to provide a list of other hazardous substance known to be present but not requested to test for.

5. Once the wastes are declared to be hazardous, the holding time on the premises will be governed by the state regulations for small generators, normally nine (9) months for up to 13,200 pounds (refer to the "Missouri DNR Hazardous Waste Management Reference Manual for small-Quantity Generators").

Guidelines for Laboratory Waste Disposal--Criteria

Any wastes having the following characteristics or exceeding the concentration criteria shall be considered hazardous and must be disposed of in the approved manner:

1. The waste possesses one or all the RCRA characteristics:
   a. Ignitability - having a flash point of less than 140°F (60°C) by Pensky-Martin closed cup. (Example: samples contaminated with flammable solvents-hexane, ether, gasoline, diesel, etc.).
   b. Corrosivity - having a pH of ≤ 2.0 or ≥ 12.5 (Example: strongly acidic or basic wastes).
   c. Reactivity - normally unstable or explosive; reacts violently with air or water; containing reactivity sulfide of ≥ 500 mg/kg; containing reactivity

cyanide of ≥ 250 mg/kg. (Note: samples containing more than 10% TNT are considered explosive)

d. Toxicity

(1) Leachate of the solid sample has been tested and is found to contain the parameters listed in the Toxicity Characteristic Leaching Procedure (TCLP) or Synthetic Precipitation Leaching Procedure (SPLP) with concentrations exceeding the regulation levels as shown in column 1 of Tables 8-3 and 8-4 of this Guideline.

(2) Water or liquid waste is analyzed and is found to contain toxicity parameters with concentration exceeding that in column 1 of Tables 8-3 and 8-4.

2. Solid or soil waste is analyzed and is found to contain the toxicity parameters with concentration, on total and dry weight basis, exceeding that on column 2 of Tables 8-3 and 8-4.

3. Any sample not having the known characteristics of 1. above and not exceeding the concentration criteria of 2. above, but because of the physical nature or source of sampling site or other information about the sample may be reasonably assumed to contain significant levels of organics, metals, and/or oils, tars, etc., should be designated as hazardous by the Laboratory Project Manager and disposed of in the approved manner.

4. Samples collected from non-specific sources as addressed in 40 CFR 261.31 and from specific sources as in 40 CFR 261.32 shall be designated as hazardous wastes.

5. Commercial chemicals shall be designated as hazardous unless otherwise determined by the Laboratory Manager. 40 CFR 261.33 shall be consulted for the determination.

Table 8-3. TCLP Constituents, Regulatory Levels, and Total Concentrations Used for "Hazardous" Classification in Solids for Disposal Proposal (Page 1 of 2)

EPA HW No.	Constituents	TCLP Regulatory Level (mg/L)	Solid Disposal* Criteria (mg/kg)
Metals			
D004	Arsenic	5.0	100
D005	Barium	100.0	2000
D006	Cadmium	1.0	20
D007	Chromium	5.0	100
D008	Lead	5.0	100
D009	Mercury	0.2	4
D010	Selenium	1.0	20
D011	Silver	5.0	100
Volatile Organics			
D018	Benzene	0.5	10
D019	Carbon tetrachloride	0.5	10
D021	Chlorobenzene	100.0	2000
D022	Chloroform	6.0	120
D028	1,2-Dichloroethane	0.5	10
D029	1,1-Dichloroethylene	0.7	14
D035	Methyl ethyl ketone	200.0	4000
D039	Tetrachloroethylene	0.7	14
D040	Trichloroethylene	0.5	10
D043	Vinyl chloride	0.2	4
Semi-Volatile Organics			
D023	O-Cresol	200.0	4000
D024	M-Cresol	200.0	4000
D025	P-Cresol	200.0	4000
D026	Cresol	200.0	4000
D027	1,3-Dichlorobenzene	7.5	150
D030	2,4-Dinitrotoluene	0.13	2.6
D032	Hexachlorobenzene	0.13	2.6
D033	Hexachloro-1,3-butadiene	0.5	10
D034	Hexachloroethane	3.0	60
D036	Nitrobenzene	2.0	40
D037	Pentachlorophenol	100.0	2000
D038	Pyridine	5.0	100
D041	2,4,5-Trichlorophenol	400.0	8000
D042	2,4,6-Trichlorophenol	2.0	40

Table 8-3. TCLP Constituents, Regulatory Levels, and Total Concentrations Used for "Hazardous" Classification in Solids for Disposal Proposal (Page 2 of 2)

EPA HW No.	Constituents	TCLP Regulatory Level (mg/L)	Solid Disposal* Criteria (mg/kg)
Pesticides:			
D020	Chlordane	0.03	0.6
D012	Endrin	0.02	0.4
D031	Heptachlor (+ Epoxide)	0.008	0.16
D013	Lindane	0.4	8
D014	Methoxychlor	10.0	200
D015	Toxaphene	0.5	100
Herbicides:			
D016	2,4-D	10.0	200
D017	2,4,5-TP (silvex)	1.0	20

* Assume the constituents will be leached fully.

Source: Federal Register, March 29, 1990.

Table 8-4. St. Louis Chemistry Laboratory Non-TCLP Constituents Concentration Criteria for "Hazardous" Classification

Constituents	Water Concentration (mg/L)	Solid Concentration (mg/kg)
Metals and Inorganics (Note 1)		
Copper	100	---
Iron	30	---
Manganese	5	---
Zinc	500	---
Fluoride	190	3800
Sulfide (non-ionized)	5	100
Cyanide (total)	1.5	30
Volatile Organics		
Acrylonitrile*	5.0	100
Bis (2-chloroethyl) ether*	0.05	1
Methylene chloride*	8.6	172
1,1,1,2-Tetrachloroethane	10.0	200
1,1,2,2-Tetrachloroethane*	1.3	26
1,1,1-Trichloroethane*	30	600
1,1,2-Trichloroethane*	1.2	24
Carbon disulfide*	14.4	288
Toluene*	14.4	288
Other chlorinated hydrocarbon	5.0	100
Semi-Volatiles		
1,2-Dichlorobenzene*	4.3	86
Isobutanol*	36	720
Phenol*	14.4	288
2,3,4,6-Tetrachlorophenol*	1.5	30
Other alcohols	400	8000
Non-TCLP Pesticides/Herbicides	0.10	2
Polychlorinated biphenyls (PCBs)	2.5	50
Dioxin	**	**
Total Recoverable Petroleum Hydrocarbons (TRPH)†	100	200

Note 1: The metal and inorganic concentrations are obtained based on 100X of drinking water maximum contamination levels (MCL).

* Proposed EPA toxicity characteristic constituents.

† Based on 200 times of TCLP benzene criteria in accordance with the Missouri UST clean-up objective.

** Any detected level.

Source: Federal Register, March 29, 1990.

9.0 CALIBRATION AND FREQUENCY OF LABORATORY INSTRUMENTS

Calibration controls will be required for analytical operations of this project. Each instrument will be calibrated in a manner consistent with EPA calibration protocols and/or ESE standard practice. Calibration will be documented in a parameter notebook or the analyst's notebook. Table 9-1 contains a complete list of the analytical instrumentation at the ESE St. Louis Chemistry Laboratory.

Specific calibration requirements for major classes of analytical procedures are described below.

9.1 Standard Receipt and Traceability

All standards are purchased from recognized vendors who provide certification and traceability statements. The vendors do not always provide a certificate with each batch of standards but do provide statements of traceability. Orders for standards are originated by a request from the Group Leader to the Sample Management/Purchasing Department. Standards are ordered and received by this department and are logged in upon receipt. The standards and certification are transferred to the Group Leader who marks the date of receipt on the container and paperwork and logs the standards into the appropriate Standards Log. Each Standards Log is numbered and each page numbered for easy reference. Standards which have expired are disposed of (see Section 8.4.3) with the disposal date noted in the Standards Log. Records of manufacturer's certification or traceability are kept by the Group Leaders with the Standards Logs.

The Standard Analytical Procedure (SAP) for each method describes in detail the sources and preparation of all working standards. These procedures are summarized in Table 9-2 for each analysis described in Section 5.0. Each Standards Log provides traceability from the purchased neat standards or stock solutions through to the working standards used on a given day. A copy of each page necessary to trace the working standard back to the purchased standards is kept in the batch file folder for each analysis. These are checked by the QA Supervisor for each batch validated to check that standards are not out of date and that calculations are correct.

Table 9-1. ESE Chemistry Laboratory Equipment (St. Louis, Missouri) (Page 1 of 2)

Item	Manufacturer	Model
Gas Chromatograph/Mass Spectrometer/ Computer (3) with Capillary*	Finnigan	INCOS 50
SuperIncos Data System	Finnigan	IDOS IV
Library Data Base (42K)	NBS/EPA	
EPA CLP Software	Finnigan	QA Formaster II
Automated Purge and Trap (4)	Teledyne	LSC-2
Automated Purge and Trap Sampler (4)	Tekmar	ALS-110
Atomic Absorption Spectrophotometer*	Perkin Elmer	5100
Data System	Perkin Elmer	7700
Graphite Furnace System	Perkin Elmer	HGA-600
Background Corrector	Perkin Elmer	Zeeman 5100
Printer	Perkin Elmer	PR 310
Autosampler (2)	Perkin Elmer	AS-60, AS-51
Inductively Coupled Argon Plasma Spectrophotometer (ICAP)	Thermo Jarrell Ash	61
Data System	IBM	System 2
Mercury Analyzer	Perkin Elmer	50B
Gas Chromatograph (7)*	Varian (3)	3400(ECD/FID/PID/NPD/ Hall)
	Hewlett-Packard (4)	5890(FID/CECD/Hall/PID)
Autosampler (5)	Varian (2)	8000
	Hewlett-Packard (3)	7673A
High Pressure Liquid Chromatography (HPLC)	Waters	510 (UV Detector 484)
Autosampler	Waters	712 WISP
Laboratory Integrator	Varian (1)	4290
	Hewlett-Packard (3)	3393A
GC Data System (3)	Nelson/Perkin Elmer	2600
Ion Chromatograph	Dionex	2000 i/SP
COD Reactor	Hach	16500
Infrared Spectrometer	Perkin Elmer	781
UV/VIS Spectrometer (2)	Hach	DR/3
	Shimadzu	UV-16
Cyanide Distillation Apparatus	Scientific Products	
Laboratory Recorder	Linseis	L6512
Analytical Balance* (2)	Mettler (1)	AE166
	Scientific Products (1)	S/P180
Specific Conductivity Meter	Hach	44600
Rotary Extractor (3)	Analytical Testing and Consulting Service	DC-18

Table 9-1. ESE Chemistry Laboratory Equipment, St. Louis, Missouri (Page 2 of 2)

Item	Manufacturer	Model
TCLP Zero Headspace Extractor (15)	Analytical Testing and Consulting Service	C-102
Rotavapor Concentrator (2)	Buchi	RE111 and R110
Microwave Sample Digestor*	CEM Corporation	MSD-2000
Cooling System	Neslab	RTE110
Flash Point Tester	Precision Scientific	74537
Pressure Filtration System	Millipore	YT30 142 HW
pH/Ion Meter	Hach	19200
Automatic Gel Permeation Chromatograph (GPC) (2)	Analytical Bio-Chemistry Laboratories, Inc.	1002-A, 1002-B
Wrist Action Shaker	Burrell	75
Blue M Oven (3)	Blue M	
Muffle Furnace	Thermolyne	FA 1635
Constant Temperature Bath	Napco	230A
Centrifuge	IEC	
Sonicator (2)	Branson	2200
Organic Free Water System	Millipore	Milli-Q
Laboratory Data System*		
Network Center	Novell	286B
Tape Drive (126 MB)	Emerald	NOV 120-9100
Data Stations (10)	Multitech	ACER 900
Laser Printer (3)	Quadram	Quadlaser I
Line Printer (4)	Panasonic	KX-P1592

* Under service contracts by manufacturers and independent service companies.

Source: ESE, 1991.

Table 9-2. Standard Sources and Preparation at the ESE St. Louis Chemistry Laboratory, Page 1 of 2

Instrument Group (Parameters)	Standard Source	How Received	Source Storage	Preparation from Source	Lab Stock Storage	Preparation Frequency
GC/MS (VOA)	Supelco Chem Service	Neat Solutions >200 ppm	Frozen Frozen	Primary stocks are prepared from stocks	Frozen	Semi-annually
				Working standards are prepared from primary or source stocks	N/A	Daily
GC/MS (BNA)	Supelco	Neat Solutions <1 mg/mL	Refrigerated Refrigerated	Working standards are prepared from source stocks	Refrigerated	Semi-annually or as needed
	Chem Service	Neat Solutions <1 mg/mL	Refrigerated Refrigerated	Working standards are prepared from source stocks	Refrigerated	Semi-annually or as needed
	Cambridge	Neat	Refrigerated	Primary stocks prepared from source stocks	Refrigerated	Semi-annually or as needed
				Working standards are prepared from source stocks	Refrigerated	Semi-annually or as needed
GC (VOA)	Supelco	Solutions >1,000 µg/mL	Frozen	Primary stocks are prepared from source stocks	Frozen	Semi-annually
	Ultra Scientific	Solutions >1,000 µg/mL	Frozen	Working standards are prepared from the primary stocks	Frozen	Every 2 weeks
	Chem Service	Neat Solutions >1,000 µg/mL	Frozen			
GC (Pesticides/PCBs/ Herbicides)	Chem Service	Neat	Frozen	Primary stocks are prepared from source stocks Working standards are prepared from the primary stocks	Refrigerated	Semi-annually
AA/ICAP (Metals)	Inorganic Ventures	Neat Solutions 1,000 ppm Solutions 10,000 ppm	Room temp.	Primary stocks are made from source stocks	2% HNO_3 Room Temp.	Every 3 months or as needed
				Intermediate standards are prepared from primary stocks		Daily
				Working standards are prepared from intermediate standards		Daily
IR Spectrophotometer (TRPH; Oil and Grease)	Mallinckrodt Baxter Fisher	Liquid (Neat)	Room temp.	Reference oil stock is prepared from source stock	Refrigerated	Semi-annually
				Standard and spike stocks are prepared from reference oil stock	Refrigerated	Semi-annually
				Working standards are prepared from standard stock		Daily

Table 9-2. Standard Sources and Preparation at the ESE St. Louis Chemistry Laboratory (Page 2 of 2)

Instrument Group Parameters)	Standard Source	How Received	Source Storage	Preparation from Source	Lab Stock Storage	Preparation Frequency
UV Spectrophotometer (Cyanide; Phenol)	Mallinckrodt	Dry (Neat)	Room temp.	Primary stocks are prepared from source stocks	Refrigerated	Semi-annually
				Intermediate stocks are prepared from primary stocks	Refrigerated	Semi-annually
				Working stocks are prepared from intermediate stocks	Refrigerated	Semi-annually
Ion Chromatograph (Anions)	Mallinckrodt	Dry (Neat)	Room temp.	Primary stocks standards are prepared from oven dried source stocks	Refrigerated	Monthly or as needed
				Combination standard is prepared from primary stock	Refrigerated	Weekly
				Working standards are prepared from the combination stock		Daily
Ion Specific Electrode (F)	Fisher	Dry (Neat)	Room temp.	Primary stock standard is prepared from the dry source	Room temp.	Semi-annually
				Working standards are prepared from the primary stock		

Source: ESE, 1991.

9.2 INSTRUMENT CALIBRATION

9.2.1 Gas Chromatograph (GC) Calibration

Standard Curve Calibration--Working standard solutions will be prepared by sequential dilution of a single stock standard solution to cover the analytical working range of the method. These may be either composite standards of more than one analyte or single-analyte solutions. The concentrations will be adjusted to take into account the instrument and method upper and lower limits of linearity, and the instrumental and method detection limit. A minimum of three working standard concentrations covering the working range and a blank will be prepared and analyzed. The working standards and the blank will be analyzed at the beginning of the analytical run and at least one midlevel standard reanalyzed at the end. In addition, during extended runs covering more than a 12-hour period at least one midlevel standard should be analyzed midway through the sample run to assure constant instrument response.

Three primary means of measuring chromatographic peak response will generally be used: area, peak height, and peak height x width-at-half-height. In cases where peaks are small and broad or tail severely, peak height measurement is preferable.

The working curve will be produced by plotting the standard response for each standard versus the concentration of each standard from the initial calibration run. The concentrations of the standards may be expressed in units of mass injected, or in terms of the concentration of the standard solution, if the injection volume is constant for standards and samples. QC acceptance criteria for working curves are:

1. The working curve possesses a minimum of three points and a blank;
2. The correlation coefficient of the curve exceeds 0.995.
3. The response for the midlevel standard analyzed at the end of the run is within 20 percent of response for same standard at beginning of run. (Exceptions to this criteria may be allowed for detectors which normally show greater than 20 percent response drift during a normal run period).
4. The calibration curve brackets the response for all samples.

Failure to meet Criteria 1 and 2 will necessitate rerunning the standard curve, with new standards if necessary, and reanalysis of the analytical batch. Failure to meet Criterion 3 will require reanalysis of all samples with detectable levels of analytes.

The concentration (or amount) of the injected sample will be obtained by entering the response for the sample into the working curve equation and determining the sample concentration after all appropriate extract and sample dilution factors have been applied.

Single-Point Calibration--This procedure will utilize a single standard concentration to calculate a response factor which allows daily sample concentrations to be calculated. Single-point calibration should be used only with approval of the Group Leader and for selected chromatographic methods where the analysis of a complete standard curve for each analyte with each instrumental run is impractical due to run time or other technical considerations. Prior to use of this procedure at least one initial standard curve for each analyte must be run to establish the working linear range of the method. Response factors for daily or single calibration standards must be within 25 percent of the equivalent standard response factor obtained during initial calibration. The response factor will be calculated by dividing the standard concentration for the working standard by the peak response [in square millimeters (mm^2), millimeter (mm), or area counts]. Failure to meet this criterion will require recalibration and reanalysis of samples with reportable level of analytes.

9.2.2 Gas Chromatograph/Mass Spectrometer (GC/MS) Tuning and Calibration Instrument Tuning

Daily instrument tuning will be practiced to assure that the instrument is calibrated and in proper working condition. The GC/MS will be tuned daily with perfluorotributylamine (these outputs are contained in the instrument tuning log) for analyses. Bromofluorobenzene (BFB) is used as a reference tuning compound for all volatiles analyses. All performance for semi-volatile analyses will be monitored with decafluorotriphenylphosphine (DFTPP) as the tuning reference compound. All mass intensity specifications for BFB and DFTPP are contained in Table 9-3.

Table 9-3. Mass Intensity Specifications for DFTPP and BFB

Key Ions	Ion Abundance Criteria
For DFTPP*	
51	30.0 to 60.0 percent of mass 198
68	Less than 2.0 percent of mass 69
70	Less than 2.0 percent of mass 69
127	40.0 to 60.0 percent of mass 198
197	Less than 1.0 percent of mass 198
198	Base peak, 100 percent relative abundance
199	5.0 to 9.0 percent of mass 198
275	10.0 to 30.0 percent of mass 198
365	Greater than 1.00 percent of mass 198
441	Present but less than mass 443
442	Greater than 40.0 percent of mass 198
443	17.0 to 23.0 percent of mass 442
For BFB*	
50	15.0 to 40.0 percent of the base peak
75	30.0 to 60.0 percent of the base peak
95	Base peak, 100 percent relative abundance
96	5.0 to 9.0 percent of the base peak
173	Less than 2.0 percent of mass 174
174	Greater than 50.0 percent of the base peak
175	5.0 to 9.0 percent of mass 174
176	Greater than 95.0 percent but less than 101.0 percent of mass 174
177	5.0 to 9.0 percent of mass 176

* Reference: EPA Contract Laboratory Program (CLP), Statement of Work for Organic Analysis, Multi-Media Multi-Concentration, February 1988.

Source: ESE, 1991.

Calibration--The calibration procedures of GC/MS in EPA Methods 8240, 8260, 8250/8270 and CLP will be followed explicitly. Two calibration procedures are implemented in the GC/MS operation: initial and continuing calibration. The initial calibration is constructed by analyzing a minimum of five levels of standard compounds. The relative response factors (RRF) for the individual compounds will be determined as:

$$RRF = \frac{A_c/Q_c}{A_c/Q_{is}} = \frac{A_c\ Q_{is}}{A_{is}\ Q_c}$$

where: A = integrated area taken from the extracted ion current profile,
Q = quantity of material,
c = compound, and
is = internal standard.

The average RRF is calculated for each compound as shown in Figure 9-1. A group of compounds are selected as System Performance Check Compounds (SPCC). The minimum acceptable RRF for these compounds should be 0.30 and 0.050 for volatile and semi-volatile SPCCs, respectively.

Some compounds are also selected from the initial calibration as the calibration check compounds (CCCs). Using the RRFs from the initial calculation, the percent relative standard deviation (% RSD) for CCCs) are calculated as:

$$\% RSD = (SD/X) \times 100$$

where: RSD = Relative Standard Deviation,
X = Mean of five initial RRFs for a compound, and
SD = standard deviation of average RRF for a compound.

The percent RSD for each individual CCCs should be less than 30 percent.

6A
VOLATILE ORGANICS INITIAL CALIBRATION DATA

Lab Name: _____ Contract: _____

Lab Code: _____ Case No.: _____ SAS No.: _____ SDG No.: _____

Instrument ID: _____ Calibration Date(s): _____ _____

Matrix: (soil/water) _____ Level: (low/med) _____ Column: (pack/cap) _____

Min $\overline{RRF}$ for SPCC(#) = 0.300 (0.250 for Bromoform) Max %RSD for CCC(*) = 30.0%

LAB FILE ID: RRF20 = _____ RRF50 = _____
RRF100= _____ RRF150= _____ RRF200= _____

COMPOUND	RRF20	RRF50	RRF100	RRF150	RRF200	$\overline{RRF}$	% RSD
Chloromethane #							#
Bromomethane							
Vinyl Chloride *							*
Chloroethane							
Methylene Chloride							
Acetone							
Carbon Disulfide							
1,1-Dichloroethene *							*
1,1-Dichloroethane #							#
1,2-Dichloroethene (total)							
Chloroform *							*
1,2-Dichloroethane							
2-Butanone							
1,1,1-Trichloroethane							
Carbon Tetrachloride							
Vinyl Acetate							
Bromodichloromethane							
1,2-Dichloropropane *							*
cis-1,3-Dichloropropene							
Trichloroethene							
Dibromochloromethane							
1,1,2-Trichloroethane							
Benzene							
trans-1,3-Dichloropropene							
Bromoform #							#
4-Methyl-2-Pentanone							
2-Hexanone							
Tetrachloroethene							
1,1,2,2-Tetrachloroethane #							#
Toluene *							*
Chlorobenzene #							#
Ethylbenzene *							*
Styrene							
Xylene (total)							
Toluene-d8							
Bromofluorobenzene							
1,2-Dichloroethane-d4							

FORM VI VOA 1/87 Rev.

* From Test Methods for Evaluation Solid Waste, SW-846, 3rd Edition, Revision 1 (12/87). These compounds with practical quantitation limits greater than 5 ng/l will not be detectable at 20 ng.

Figure 9-1
INITIAL CALIBRATION FORMS
(Page 1 of 3)

Environmental Science & Engineering, Inc.

6B

SEMIVOLATILE ORGANICS INITIAL CALIBRATION DATA

Lab Name: _____ Contract: _____

Lab Code: _____ Case No.: _____ SAS No.: _____ SDG No.: _____

Instrument ID: _____ Calibration Date(s): _____ _____

Min $\overline{RRF}$ for SPCC(#) = 0.050 Max %RSD for CCC(*) = 30.0%

LAB FILE ID: RRF20 = _____ RRF50 = _____
RRF80 = _____ RRF120= _____ RRF160= _____

COMPOUND	RRF20	RRF50	RRF80	RRF120	RRF160	$\overline{RRF}$	% RSD
Phenol							
bis(2-Chloroethyl)ether							
2-Chlorophenol							
1,3-Dichlorobenzene							
1,4-Dichlorobenzene							
Benzyl alcohol							
1,2-Dichlorobenzene							
2-Methylphenol							
bis(2-Chloroisopropyl)ether							
4-Methylphenol							
N-Nitroso-di-n-propylamine							
Hexachloroethane							
Nitrobenzene							
Isophorone							
2-Nitrophenol							
2,4-Dimethylphenol							
Benzoic acid							
bis(2-Chloroethoxy)methane							
2,4-Dichlorophenol							
1,2,4-Trichlorobenzene							
Naphthalene							
4-Chloroaniline							
Hexachlorobutadiene							
4-Chloro-3-methylphenol							
2-Methylnaphthalene							
Hexachlorocyclopentadiene							
2,4,6-Trichlorophenol							
2,4,5-Trichlorophenol							
2-Chloronaphthalene							
2-Nitroaniline							
Dimethylphthalate							
Acenaphthylene							
2,6-Dinitrotoluene							
3-Nitroaniline							
Acenaphthene							
2,4-Dinitrophenol							
4-Nitrophenol							

FORM VI SV-1 1/87 Rev.

* From Test Methods for Evaluating Solid Waste, SW-846, 3rd Edition, Revision 1 (12/87). These compounds with practical quantitation limits greater than 5 ng/l will not be detectable at 20 ng.

Figure 9-1
INITIAL CALIBRATION FORMS
(Page 2 of 3)

Environmental Science & Engineering, Inc.

6C

SEMIVOLATILE ORGANICS INITIAL CALIBRATION DATA

Lab Name: _____ Contract: _____

Lab Code: _____ Case No.: _____ SAS No.: _____ SDG No.: _____

Instrument ID: _____ Calibration Date(s): _____ _____

Min $\overline{RRF}$ for SPCC(#) = 0.050 Max %RSD for CCC(*) = 30.0%

LAB FILE ID: RRF20 = _____ RRF50 = _____
RRF80 = _____ RRF120= _____ RRF160= _____

COMPOUND	RRF20	RRF50	RRF80	RRF120	RRF160	$\overline{RRF}$	% RSD
Dibenzofuran							
2,4-Dinitrotoluene							
Diethylphthalate							
4-Chlorophenyl-phenylether							
Fluorene							
4-Nitroaniline							
4,6-Dinitro-2-methylphenol							
N-Nitrosodiphenylamine (1)*							*
4-Bromophenyl-phenylether							
Hexachlorobenzene							
Pentachlorophenol*							*
Phenanthrene							
Anthracene							
Di-n-butylphthalate							
Fluoranthene*							*
Pyrene							
Butylbenzylphthalate							
3,3'-Dichlorobenzidine							
Benzo(a)anthracene							
Chrysene							
bis(2-Ethylhexyl)phthalate							
Di-n-octylphthalate*							*
Benzo(b)fluoranthene							
Benzo(k)fluoranthene							
Benzo(a)pyrene*							*
Indeno(1,2,3-cd)pyrene							
Dibenz(a,h)anthracene							
Benzo(g,h,i)perylene							
Nitrobenzene-d5							
2-Fluorobiphenyl							
Terphenyl-d14							
Phenol-d6							
2-Fluorophenol							
2,4,6-Tribromophenol							

1) Cannot be separated from Diphenylamine

FORM VI SV-2 1/87 Rev.

* From Test Methods for Evaluation Solid Waste, EPA-SW-846, 3rd Edition, Revision 1 (12/87). These compounds with practical quantitation limits greater than 5 ng/l will not be determined at 20 ng.

Figure 9-1
INITIAL CALIBRATION FORMS
(Page 3 of 3)

Environmental Science & Engineering, Inc.

The continuing calibration shall be performed after a 12-hour shift using two levels of standard as shown in Figure 9-2. After the SPCC is met, calculate the percent difference of PRs for CCs:

$$\% \text{ Difference} = [(RRF_i - RRF_c)/(RRF_i)] \times 100$$

where: RRF_i = Average RRF from initial calibration, and
RRF_c = RRF from current verification check standard.

If the difference is larger than 20 percent, this is considered to be a warning limit. If the value for each CCC is <25 percent, the initial calibration is valid. If the difference for any CCC is larger than 25 percent, corrective action must be taken. If no source of problem can be determined after corrective action has been taken, a new five-point calibration MUST be generated.

9.2.3 Atomic Absorption Spectrometer (AAS)

Stock Solutions--Stock solutions of 1,000 parts per million (ppm) are purchased from vendors. These stock solutions are certified by the vendor for purity and concentration.

Atomic Absorption Spectroscopy (AAS) 10-ppm Intermediate Solutions--Volumetric dilutions will be made from the stock solutions in order to obtain intermediate solutions (10 ppm). These intermediate solutions may be used as working standard solutions for flame analyses. For more sensitive graphite furnace and hydride analyses, volumetric dilutions will be made from the 10-ppm intermediate solutions to produce working standard solutions.

Atomic Absorption Spectroscopy Working Standard Solutions--These solutions will be derived as described above. Dilutions of the working standard solutions will be made to produce the standard curve. The working standard solutions will be prepared daily.

Atomic Absorption Spectroscopy Standard Curve Calibration--Working standard solutions will be prepared to cover the analytical working range of the method; these may be either composite standards of more than one metal or single-metal solutions. The standard concentrations will be adjusted to take into account the instrument and method, upper and

7A

VOLATILE CONTINUING CALIBRATION CHECK *

Lab Name: _____ Contract: _____

Lab Code: _____ Case No.: _____ SAS No.: _____ SDG No.: _____

Instrument ID: _____ Calibration Date: _____ Time: _____

Lab File ID: _____ Init. Calib. Date(s): _____ _____

Matrix: (soil/water) _____ Level: (low/med) _____ Column: (pack/cap) _____

Min RRF50 for SPCC(#) = 0.300 (0.250 for Bromoform) Max %D for CCC(*) = 25.0%

COMPOUND	RRF	RRF50	%D
Chloromethane	#		#
Bromomethane			
Vinyl Chloride	*		*
Chloroethane			
Methylene Chloride			
Acetone			
Carbon Disulfide			
1,1-Dichloroethane	*		*
1,1-Dichloroethane	#		#
1,2-Dichloroethane (total)			
Chloroform	*		*
1,2-Dichloroethane			
2-Butanone			
1,1,1-Trichloroethane			
Carbon Tetrachloride			
Vinyl Acetate			
Bromodichloromethane			
1,2-Dichloropropane	*		*
cis-1,3-Dichloropropene			
Trichloroethene			
Dibromochloromethane			
1,1,2-Trichloroethane			
Benzene			
trans-1,3-Dichloropropene			
Bromoform	#		#
4-Methyl-2-Pentanone			
2-Hexanone			
Tetrachloroethene			
1,1,2,2-Tetrachloroethane	#		#
Toluene	*		*
Chlorobenzene	#		#
Ethylbenzene	*		*
Styrene			
Xylene (total)			
Toluene-d8			
Bromofluorobenzene			
1,2-Dichloroethane-d4			

FORM VII VOA 1/87 Rev.

* From Test Methods for Evaluating Solid Waste, SW-846, 3rd Edition, Revision 1 (1987). These compounds with poorer quantitation limits greater than 5 ng/l will not be detectable at 20 ng.

Figure 9-2
CONTINUING CALIBRATION FORMS
(Page 1 of 3)

ESE Environmental Science & Engineering, Inc.

78

SEMIVOLATILE CONTINUING CALIBRATION CHECK

Lab Name: _____ Contract: _____

Lab Code: _____ Case No.: _____ SAS No.: _____ SDG No.: _____

Instrument ID: _____ Calibration Date: _____ Time: _____

Lab File ID: _____ Init. Calib. Date(s): _____ _____

File ID: _____ Init. Calib. Date(s): _____ _____

RRF50 for SPCC(#) = 0.050 Max %D for CCC(*) = 25.0%

COMPOUND	RRF	RRF50	%D
Phenol	*		*
bis(2-Chloroethyl)ether			
2-Chlorophenol			
1,3-Dichlorobenzene			
1,4-Dichlorobenzene	*		*
Benzyl alcohol			
1,2-Dichlorobenzene			
2-Methylphenol			
bis(2-Chloroisopropyl)ether			
4-Methylphenol			
N-Nitroso-di-n-propylamine	#		#
Hexachloroethane			
Nitrobenzene			
Isophorone			
2-Nitrophenol	*		*
2,4-Dimethylphenol			
Benzoic acid			
bis(2-Chloroethoxy)methane			
2,4-Dichlorophenol	*		*
1,2,4-Trichlorobenzene			
Naphthalene			
4-Chloroaniline			
Hexachlorobutadiene	*		*
4-Chloro-3-methylphenol	*		*
2-Methylnaphthalene			
Hexachlorocyclopentadiene	#		#
2,4,6-Trichlorophenol	*		*
2,4,5-Trichlorophenol			
2-Chloronaphthalene			
2-Nitroaniline			
Dimethylphthalate			
Acenaphthylene			
2,6-Dinitrotoluene			
3-Nitroaniline			
Acenaphthene	*		*
2,4-Dinitrophenol	#		#
4-Nitrophenol	#		#

FORM VII SV-1 1/87 Rev.

* From Test Methods for Evaluation Solid Waste, SW-846, 3rd Edition, Revision 1 (12/87). These compounds with previous quantitation limits greater than 5 ng/µl will not be detectable at 20 ng.

Figure 9-2
CONTINUING CALIBRATION FORMS
(Page 2 of 3)

Environmental Science & Engineering, Inc.

7C

SEMIVOLATILE CONTINUING CALIBRATION CHECK +

Lab Name: _____ Contract: _____

Lab Code: _____ Case No.: _____ SAS No.: _____ SDG No.: _____

Instrument ID: _____ Calibration Date: _____ Time: _____

Lab File ID: _____ Init. Calib. Date(s): _____ _____

Min RRF50 for SPCC(#) = 0.050 Max %D for CCC(*) = 25.0%

COMPOUND	$\overline{RRF}$	RRF50	%D
Dibenzofuran			
2,4-Dinitrotoluene			
Diethylphthalate			
4-Chlorophenyl-phenylether			
Fluorene			
4-Nitroaniline			
4,6-Dinitro-2-methylphenol			
N-Nitrosodiphenylamine (1) *			*
4-Bromophenyl-phenylether			
Hexachlorobenzene			
Pentachlorophenol *			*
Phenanthrene			
Anthracene			
Di-n-butylphthalate			
Fluoranthene *			*
Pyrene			
Butylbenzylphthalate			
3,3'-Dichlorobenzidine			
Benzo(a)anthracene			
Chrysene			
bis(2-Ethylhexyl)phthalate			
Di-n-octylphthalate *			*
Benzo(b)fluoranthene			
Benzo(k)fluoranthene			
Benzo(a)pyrene *			*
Indeno(1,2,3-cd)pyrene			
Dibenz(a,h)anthracene			
Benzo(g,h,i)perylene			
Nitrobenzene-d5			
2-Fluorobiphenyl			
Terphenyl-d14			
Phenol-d6			
2-Fluorophenol			
2,4,6-Tribromophenol			

(1) Cannot be separated from Diphenylamine

FORM VII SV-2 1/87 Rev.

+ From Test Methods for Evaluation Solid Waste, EPA-SW-846, 3rd Edition, Revision 1 (12/87). These compounds with practical quantitation limits greater than 5 ng/l will not be detectable at 20 ng.

Figure 9-2
CONTINUING CALIBRATION FORMS
(Page 3 of 3)

Environmental Science & Engineering, Inc.

lower limits of linearity, and the instrumental detection limit. A minimum of three standard concentrations covering the working range and a blank will be prepared and analyzed. The working standards and the blank will be analyzed at the beginning of the analytical run and at least one midlevel standard analyzed at the end of the run to check for constant instrument response.

The working curve will be produced by plotting the standard response for each standard versus the concentration of each standard from the initial calibration run. QC acceptance criteria for working curves are:

1. The working curve possesses a minimum of three points and a blank.
2. The correlation coefficient of the line exceeds 0.995.
3. The response for the midlevel standard analyzed at the end of the run is within 20 percent of response for same standard at beginning of run.
4. The calibration curve brackets the response for all samples.

Failure to meet Criteria 1 and 2 will necessitate rerunning the standard curve, with new standards if necessary, and reanalysis of the analytical batch. Failure to meet Criterion 3 will require reanalysis of all samples with detectable levels of analytes.

The concentration of the sample is obtained by entering the response for the sample into the working curve equation and determining the sample concentration after all appropriate digestate and sample dilution factors have been applied.

9.2.4 Inductively Coupled Argon Plasma Spectrophotometer (ICAP)

ICAP Working Solution--A working solution is a multi-element calibration standard used to calibrate the instrument prior to operation. This solution is obtained daily by volumetric dilution of the stock solution. The working solution will be verified daily by a reference standard made from a different source than that for calibration.

ICAP Single Point Calibration--This procedure utilizes a single standard concentration and a blank to obtain an interval response factor from which daily sample concentrations are calculated.

A standard curve for each analyte must be run at least quarterly to establish the working linear range of the ICAP. Calculated concentrations must be within 5 percent of actual concentrations.

An independently prepared multi-element check reference standard is analyzed with each run to verify the calibration standard. The check standard must be within 10 percent of the known concentration or within stated 95 percent confidence limits, or a new calibration standard must be prepared and the instrument recalibrated.

9.2.5 Gravimetric Methods Calibration

The analytical balances will be calibrated semiannually by the proper service personnel. The semiannual calibration will be documented by a tag on the instrument. A set of National Bureau of Standards (NBS) certified weights must be used to check the calibration daily. This check will be performed by the first analyst to use the balance during the day. Results will be recorded in the instrument notebook.

9.2.6 Infrared Spectrophotometer Calibration

The calibration consists of two procedures:

1. Verification of wavelength of usable wavelength range--The operator will perform this calibration semiannually according to manufacturer's procedure using the filter provided.
2. Construction of a calibration curve of response versus concentration of standard solutions--The operator will calibrate the instrument at each use as follows (typically):
   a. Power-on and allow instrument to warm up for 30 minutes.
   b. Select wavelength and mode (absorbance or transmittance).
   c. Insert blank solution and adjust to zero absorbance or 100 percent transmittance.
   d. Record responses for standard solutions of various concentrations.
   e. Verify zero reading; if variance is greater than 5 percent, repeat Step c through Step e.

Results will be recorded as part of the analysis.

9.2.7 Ion Chromatograph

Calibration of the ion chromatograph will consist of two procedures:

1. Monthly calibration of the cell constant after cleaning of the electrodes. This procedure will be performed following directions in the Maintenance and Service section of the manual and will be recorded in the IC Cell Calibration Log.
2. Daily calibration curves will be prepared according to SAP 436. The correlation coefficient for the calibration curve for each analyte must be greater than 0.995 or the curve and samples will be rerun. At the end of each batch (maximum of 20 samples), a continuing calibration verification check sample will be run and must be within ±20 percent of the initial standard.

9.2.8 Electrode

The calibration will be performed daily by preparation of five standards as described in SAP 436. The 1.00 mg/L standard will be used to calibrate the ion meter by setting the calibration knob to 1.00 and then locking the knob in place. The other standards will then be run and their responses recorded to create a calibration curve. The correlation coefficient of the curve must be greater than 0.995.

9.2.9 Alkalinity Analyses

The calibration of the pH meter consists of the following items:

1. Set power switch to go on.
2. Place the electrode in pH 4 buffer solution and disperse a small amount of electrolyte solution.
3. Set the mode switch to pH and adjust the CAL control for a reading equal to pH 4.0.
4. Place the electrode in pH 7 buffer and repeat steps 2 and 3. Lock the control.
5. Place the electrode in pH 10 buffer, disperse a small amount of electrode solution and adjust the SPAN control to a pH of 10.00. Lock the control.
6. The instrument is now standardized for pH measurement.

9.2.10 Total Dissolved Solids

Analytical balances will be cleaned and calibrated annually by manufacturers' representatives. The accuracy of analytical balances will be checked daily using standard weights. The Class S standard weights will be calibrated and certified annually. It is imperative that the balance logbooks be maintained daily.

The Project QA Officer will check the instrument logbooks and/or parameter notebook to verify calibration. Analytical problems with the calibration procedure will result in corrective action recommended to the Laboratory Manager before final approval of the data (see Section 13.0).

9.3 STANDARDIZATION OF TITRATING SOLUTION

The standardization of titrating solutions is presented in Table 9-4.

Table 9-4. Standardization of Titrating Solutions at the ESE St. Louis Chemistry Laboratory

Solutions Requiring Standardization	Sources of Standards	Frequency of Standardization
$AgNO_3$ for CN^-	Mallinckrodt	Semi-annually
H_2SO_4 for Alkalinity	Mallinckrodt	At each use
HCl for Alkalinity	Fisher Scientific	At each use

Source: ESE, 1991.

10.0 PREVENTATIVE MAINTENANCE

To minimize the occurrence of instrument failure and other system malfunction, a preventative maintenance program for laboratory instruments has been implemented. The preventive maintenance performed for each major piece of field and analytical equipment is listed in Table 10-1.

10.1 DOCUMENTATION

A maintenance log will be kept for each instrument. All routine maintenance and all repairs will be recorded in these logs. A schedule of maintenance needs will be kept at the front of the log to remind each chemist to perform regular maintenance.

10.2 CONTINGENCY PLANS

Preventative maintenance and a supply of often needed parts will limit the amount of downtime for all instruments. In case of major repairs, downtime may be sufficient to cause a problem in analyzing samples within holding times. In such instances, arrangements will be made to have samples analyzed at one of the other ESE analytical laboratories which is approved by the FDER. Lists of repair personnel and parts are maintained with the maintenance logs for easy access.

Table 10-1. Preventative Maintenance of Instruments at the ESE St. Louis Chemistry Laboratory (Page 1 of 2)

Instrument	Activity	Frequency
GC	Change septum	Daily
	Check carrier gas and detector gas pressure	Daily
	Change carrier gas and/or detector gas	Pressure < 100 psi
	Change molecular sieves and oxygen traps	Quarterly or after every 30 tanks of gas
	Change first 1/4" of packing and glass wool	Quarterly or as need arises
	Remove first foot of capillary column	As need arises
	Clean detector	Quarterly or as need arises
	Replenish ECD solvents	Weekly
	Change ion exchange resin	Every 60 days
	Replace nickel tubing	Quarterly or as need arises
	Check system for gas leaks	At each column change and after any power failure
GC/MS	Change septum	Daily
	Check carrier gas and detector gas pressure	Daily
	Change carrier gas and/or detector gas	Pressure < 100 psi
	Change molecular sieves and oxygen traps	Quarterly or after every 30 tanks of gas
	Change first 1/4" of packing and glass wool	Quarterly or as needed
	Remove first foot of capillary column	As need arises
	Clean ionizing source	When DFTPP tuning or calibrations begin to deteriorate
	Check system for gas	At each column change and after any power failure
Ion Chromatography	Check piston seal	Weekly
	Leaks or spills on chromatography module	Weekly
	Check air and liquid lines for dislocation or crimping	Weekly
	Clean cell electrodes	Monthly
pH/Ion Meter	Electrodes stored in deionized water	When not in use
	Hole for adding internal filling solution plugged	When not in use
	Chamber rinsed with DI water and filling solution replaced	If dry

Table 10-1. Preventative Maintenance of Instruments at the ESE St. Louis Chemistry Laboratory (Page 2 of 2)

Instrument	Activity	Frequency
Analytical Balances	Clean pans and compartment	Before and after each use
	Check alignment and balance	Before and after each use
	Cleaned and calibrated	Annually by service contract
IR Spectrophotometer	Dust cover placed over instrument	When not in use
	Check cell windows	At each use
	Cell windows polished or replaced	When cloudy (about every 4 months)
	Pen rod wiped with tissue	Monthly
	Source element examined for cracks and hot spots	Monthly
	Baseline adjustment	baseline LED flashes
	Zero adjustment	Checked daily
UV/VIS Spectrophotometer	Sample compartment floor checked for spilled liquid	Before and after each measurement
	Lenses on the left side of the sample compartment checked for contamination	Weekly
ICAP	Washable air filter for axial fan cleaned	Every 3 weeks
	Intelligent controller filter cleaned	Every 3 weeks
	Vacuum pump oil changed	Every 6 months
	Plasma torch cleaned	When orifice clogged or elevated and non-reliable blank readings
Atomic Absorption Furnace	Clean furnace windows	Daily
	Check plumbing connections	Daily
	Change graphite tube	Daily or as needed (approximately every 50 analyses)
	Check gases	Daily
	Check optics	Annually (by manufacturer)

Source: ESE, 1991.

11.0 QUALITY CONTROL CHECKS AND ROUTINES TO ASSESS PRECISION, ACCURACY, AND METHOD DETECTION LIMITS

11.1 FIELD QUALITY CONTROL BLANKS AND DUPLICATES

Three types of sample blanks may be processed: trip blanks, field blanks, and equipment blanks. The analytical data derived from these blanks necessary to assess field operations: contaminant-free sample containers, preserving reagents, and equipment; potential onsite environmental contamination; personnel expertise in sample collection; and problems that may occur in sample storage and transport. Requirements for field QC samples are summarized in Table 11-1.

11.1.1 Trip Blanks

Trip blanks for volatile organic compounds consist of sample bottles filled in the laboratory with organic-free water (see Section 6.3) and any applicable preservatives or additives. They are sent to the sampling location with sampling kits and are returned unopened from the sampling location with the samples. These blanks should be included for shipping and analysis with every cooler of samples for volatile organic analysis shipped from the field.

Frequency: One trip blank will be provided per cooler used for storing and transporting volatile sample vials.

11.1.2 Equipment Blanks

Aqueous equipment blanks for water samples are processed after field decontamination by rinsing decontaminated sampling equipment (bailers, soil samplers, etc.) with ultra-pure water obtained from the laboratory. The rinse water is collected in sample bottles, preserved, and handled in the same manner as the samples.

Frequency: At least one equipment blank is required for each water and solid matrix analytical group and must be collected at the beginning of sampling episode. At least one equipment blank must be submitted for each type of equipment used in the sampling process that must be field cleaned. If a piece of equipment is cleaned more than 20 times in one sampling event, equipment blanks must be submitted at a rate of 5 percent for each

Table 11-1. Field QC Samples

QC Samples	Water	Soil
Trip blank*	1 per cooler	NA
Equipment blank	5% per day	5% per day
Field duplicates:		
1-4 samples	5% per event	5% per event
≥5 samples	(minimum of 1)	(minimum of 1)

Note: All parameters must meet QC sample type and frequency requirements. Numbers calculated from percent specification will be rounded up to nearest whole numbers.

* For volatile samples only.

Source: ESE, 1991.

equipment type. For each equipment blank collected, aliquots must be taken and properly preserved for each method group.

11.1.3 Field Duplicates

Sample duplicates are collected to assure the precision of the sampling and analytical processes. For field efforts consisting of collection of one to four samples, no sample duplicates are required. For field efforts consisting of collection of five or more samples, 5 percent of the samples will be duplicated (rounded up to the nearest whole number) (see Table 11-1).

For the purpose of determining the number of duplicates to be taken, a sample is considered to be both station- and parameter list/analytical method-specific. As an example, if six locations are being sampled for each of three parameter lists, one duplicate, analyzed for each of the compounds on each of the three parameter lists, is required. Each duplicate will be a blind sample, meaning the sample bottles will be labeled with a sample number but no site designation. It is therefore critical for the field team to record the sample number and site identification in the field notes. Great care must be taken in collecting duplicates to assure that both samples represent the matrix being sampled.

11.2 GENERAL LABORATORY QUALITY CONTROL REQUIREMENTS

Analytical QC procedures are those steps taken by the laboratory in day-to-day activities to achieve the desired accuracy, precision, reliability, and comparability of analytical data. Each analytical chemistry department manager and analyst is responsible for performing the analysis in accordance with the defined quality control practices outlined in this manual.

For all analyses performed by ESE, the QC checks described in this section are mandatory unless alternate procedures are given in the Project QA Plan or otherwise agreed upon by the Laboratory Project Manager and the Project QA Supervisor. For HTW sample analyses, the quality control requirements addressed in the methods of SW-846, 3rd Edition and CLP shall be followed explicitly. Table 11-2 summarizes minimum QC

sample requirements. Section 11.3 describes precision and accuracy calculations used to control samples. Section 5.0 contains acceptance criteria for this project. Group Leaders are responsible for reviewing QC acceptance criteria for each method performed by their group. EPA precision and accuracy data should be used as a basis for developing acceptance criteria for assessing the precision and accuracy of generated data, but periodically, the QC criteria should be revised based on project or client requirements and the historical performance of the method. Permanent changes to the acceptance criteria must be approved by the Laboratory Manager and will be incorporated into this document in accordance with Section 3.2, Document Control.

Unless described otherwise in the methods used, for QC purposes the number of samples which are extracted and/or prepared for instrumental analysis as one group in one 24-hour period or during several days in a 1-week period will constitute one batch. The number and type of QC samples specified in Table 11-2 will apply to this batch/lot of samples. For example, a group of samples which are extracted on the same day and (if required) undergo concentration and clean-up procedures on subsequent days would be considered one batch for QC purposes. Also a set of samples which are extracted over several days in a 1-week period may be considered one batch as long as the minimum number of QC samples specified in Table 11-2 are also extracted. In this case QC samples should be spread over the several days.

For analyses where no sample extraction or preparation is required, the number of samples which can be analyzed as one set during a 24-hour period will determine the number of samples per batch for QC purposes.

When required by the Project QA Plan, the QA Supervisor may insert into the batch either a spiked sample or a duplicate of a previously analyzed sample for quality control purposes. The Project QA Supervisor will monitor the results of this sample to ensure that the analyst meets quality assurance criteria for the project.

Control spikes will be spiked into sample matrix. Duplicate aliquots will be taken from the homogenized samples, spiked, and analyzed. The relative percent difference between

Table 11-2. Minimum QC Sample Requirements for a Batch (Up to 20 Samples) or 5 Percent of the Samples Over 20

Analyte Type	Surrogate Spike*	SPM1	SPM2†	SP1**	MB††	RP***	CCV†††
Organic Analysis (GC/MS and GC)	All (Table 11-3)	1	1	1 (with surrogate and selected analytes)	1	--	1
Metal Analysis (GFAA)	--	1	--	1 (with selected analytes)	1	1	1
(ICAP)	--	1	--	1 (with selected analytes)	1	1	1
Miscellaneous Methods (colorimetric, spectrophotometric and titrimetric)	--	1	1	1 (with all the analytes)	1	--	1
Ion Chromatography	--	--	--	2 (with all the analytes)	1	1	1
pH, Residue, Moisture	--	--	--	--	1	1	1 (pH only)

* Surrogate compound and criteria from percent recoveries shall fall within the specified range (Table 11-3). Dilution of samples to bring the analyte concentration into the linear range of calibration may dilute the surrogates below the quantification limit; evaluation of analytical quality then will rely on the quality control embodied in the check, spiked and duplicate spiked samples.

† Sample matrix spike (SPM1) and sample matrix spike duplicate (SPM2) spiking levels and criteria are given in Tables 5-1 through 5-10. The selection of sample for spiking will be done by either the submitters or the laboratory. When the concentration of analyte in the sample is anticipated to be greater than 0.1 percent, no spike is required.

** The reagent matrix spike (SP1) is spiked at the same levels and has the same criteria as SPM1. For aqueous samples, reagent water is used as a blank matrix; however, a universal blank matrix does not exist for solid samples, and therefore, no matrix is used and spiking will be done on reagent blank instead. For CLP metals analyses, a solid check sample will be used.

†† The reagent or method blank (MB) is an aliquot of analyte-free water or soil carried through the procedure with all the reagents used as for samples.

*** Sample replicate (RP) is an aliquot of sample carried through the same procedure and analysis as the sample.

††† The continuing calibration verification (CCV) standard is a midlevel standard to check the calibration curve.

Source: ESE, 1991.

the spike and the replicate spike will be used to assess analytical precision. Selection of the sample to be split and spiked may be made by the submitters or by the laboratory.

For reagent blanks, all analytes of interest should be less than the quantitation limit, except for the following compounds, which should be less than five times (5Xt) the reported quantitation limit:

1. Acetone,
2. 2-Butanone,
3. Methylene chloride,
4. Phthalate ester, and
5. Toluene.

QC check samples will be analyzed in duplicate semi-annually. These samples will be provided by the QA department blind to the analyst. In the following subsections, those criteria marked with an asterisk (*) are those criteria that will be used to control the sample analysis.

11.2.1 Gas Chromatography/Mass Spectrometry Minimum Quality Control

For GC/MS analyses the following minimum QC checks will apply for each analytical batch (up to 20 samples/batch):

1. All samples spiked with surrogates. Acceptance criteria for surrogates appear in Table 11-3.
*2. At least one control spike in sample matrix with selected actual analytes and surrogates at preset level will be analyzed.
*3. At least one replicate control spike in sample matrix with selected actual analytes and surrogates at preset levels will be analyzed. The matrix spike compounds, RPD, and recovery QC limits are shown in Tables 5-1 to 5-4.
4. At least one check sample spike in blank matrix will be analyzed (spiked with surrogates and selected analytes).
5. At least one reagent blank will be analyzed.
6. Continuing calibration check shall be run and checked against criteria of RF for SPCCs and percent difference for CCCs as described in Section 9.2.

Table 11-3. QC Control Ranges for Surrogate Recoveries*

Method	Surrogate	Percent Recovery (water)	Percent Recovery (soil)
Volatiles	toluene-D(8)	88-110	81-117
	bromofluorobenzene (BFB)	86-116	74-121
	1,2-dichloroethane-D(4)	76-114	70-121
Semi-Volatiles:			
Base/Neutrals	nitrobenzene-D(5)	35-114	23-120
	2-fluorobiphenyl	43-118	30-116
	terphenyl-D(14)	33-141	18-137
Acids	phenol-D(6)	10-94	24-113
	2-fluorophenol	21-100	26-121
	2,4,6-tribromophenol	10-123	10-122
Pesticides	dibutylchlorendate†	24-154	20-150

* Recoveries are from Test Methods for Evaluating Solid Waste, EPA SW-846, 3rd Edition.

† For pesticides only, not PCBs.

Source: ESE, 1991.

7. Instrument tuning protocols will be performed and be within criteria prior to analysis (see Section 9.2).
8. A trip blank will be analyzed with each field group of samples (volatiles only).

11.2.2 Gas Chromatography Minimum Quality Control

For GC analyses the following minimum requirements will apply for each analytical batch (up to 20 samples/batch):

1. Surrogate will be spiked if needed in the protocol; i.e., dibutylchlorendate for pesticide analysis.
*2. At least one control spike in sample matrix at preset level will be analyzed.
*3. At least one replicate control spike in sample matrix at preset level will be analyzed.
4. At least one check sample spike in blank matrix will be analyzed (spiked with surrogate and selected analytes).
5. At least one reagent blank will be analyzed.
6. At least three standards will be run for a standard curve.
7. Correlation coefficient will be greater than 0.995.
8. Samples will be within concentration range of standards.
9. Midlevel calibration standard repeated at end of run and response must be within 20 percent of initial response.
10. Detection limits for each parameters will be determined semi-annually and checked to ensure they meet limits specified for the field group.

11.2.3 TRPH and Oil and Grease Minimum Quality Control

For TRPH and Oil and Grease analyses, the following minimum internal quality control checks will apply for each analytical batch (up to 20 samples/batch):

1. A calibration blank and four standards will be run for the calibration curve.
2. A calibration blank will be run after the four standards and must be within 5 percent variance or the curve must be rerun.
3. A reagent blank (MB) will be run and must be less than the PQL or the samples must be reextracted and rerun.
*4. At least one control spike in sample matrix (SPM1) will be run.

*5. At least one replicate control spike in sample matrix (SPM2) will be run.
6. At least one check sample spike in blank matrix (SP1) will be analyzed.
7. At least one continuing calibration verification standard will be run and must be within ±20 percent of the corresponding calibration standard.

11.2.4 Graphite Furnace Atomic Absorption Spectroscopy Minimum Quality Control

For AAS analyses the following QC checks will apply for each analytical batch (up to 20 samples/batch):

*1. At least one control spike in sample matrix at preset level will be analyzed.
2. At least one check sample spike in blank matrix will be analyzed (spiked with all analytes).
3. At least one reagent blank will be analyzed.
*4. At least one sample replicate will be analyzed.
5. At least one post digestion spike at preset level will be analyzed.
6. At least three standards will be analyzed for a standard curve.
7. Correlation coefficient will be greater than 0.995.
8. Samples will be within concentration range of the standards.
9. Detection limits for analytes will be determined semi-annually and checked to ensure they meet limits specified for the field group.

NOTE: Post-digestion spikes are used to verify the presence or absence of matrix interference of metal analyses.

11.2.5 ICAP Minimum Quality Control

For samples digested and/or analyzed by ICAP, the following QC checks will apply for each batch (up to 20 samples/batch):

*1. At least one control spike in sample matrix at preset level will be analyzed.
*2. At least one spike in standard matrix method blank will be analyzed.
3. At least one standard matrix method blank will be analyzed.
*4. At least one sample replicate will be analyzed.
5. One calibration standard will be run daily.

6. Check standard analyzed with each batch and concentration must be within 10 percent of known concentration or within 95 percent confidence interval.
7. Samples will be within concentration range of instrument.
8. Detection limits for each parameter will be determined semi-annually and checked to ensure they meet limits specified for the field group.

11.2.6 General Parameter Minimum Quality Control

For general parameters using the ion chromatography, UV/VIS spectrophotometer, colorimetric, and titrametric methods, the following minimum internal quality control checks will apply for each analytical batch (up to 20 samples/batch):

1. At least one reagent blank (MB).
2. At least one duplicate sample (RP) will be run.

*3. At least one control spike in sample matrix (SPM1) will be run.

*4. At least one replicate control spike in sample matrix (SPM2) will be run.

5. At least one calibration verification standard will be run.

11.2.7 Gravimetric Analysis Minimum Quality Control

For gravimetric analyses, one replicate for each analytical batch (up to 20 samples/batch) will be run. This must have an RPD of 20 percent.

11.3 PROCEDURES USED TO ASSESS DATA PRECISION, ACCURACY, AND COMPLETENESS

The procedures to be used to determine the target criteria in Tables 5-1 through 5-14 are listed in Table 11-4. The methods of calculation for precision and accuracy are given in Section 11.3.1 and 11.3.2, respectively.

Table 11-4. Methods Used to Generate Precision and Accuracy Targets at the ESE St. Louis Chemistry Laboratory*

Method	Purpose	Concentration Level†	Method Reference
Matrix Spikes	Accuracy	Low	All analyses except pH, residues, moisture. Data will not be used when concentration in sample is >4 times the spiking level or when there are verified matrix interference or inhomogeneity problems. For multi-element analyses, selected analytes are used for spiking.
		Medium	All analyses (see above for restrictions).
Matrix Spike Duplicates	Precision	Low	All analyses except metals, pH, residues, and moisture.
Replicate Spikes	Precision	Low	Metals analyses (ICAP and GFAA), pH, residues, and moisture.
		Medium	All analyses.

* For some analyses we have not calculated recovery and precision from in-house data. For these, we have used target criteria from the methods or CLP criteria. These are indicated in the tables.

† Low level concentrations are from MDL to 5XMDL. Medium level concentrations are from 5XMDL to the upper end of the linear range.

Source: ESE, 1991.

11.3.1 Precision

Precision is a measure of agreement among measurements performed using the same test procedure. Precision will be assessed for applicable parameters by calculating the RPD of duplicate or duplicate spike samples as follows:

$$RPD = \frac{R_1 - R_2}{(R_1 + R_2)/2} \times 100$$

where: R_1 and R_2 = concentration of duplicates 1 and 2 or duplicate spikes 1 and 2, respectively.

This calculated RPD value is compared to the maximum value considered acceptable for this project (refer to Section 5.0). The values given in Section 5.0 are precision objectives for this project and are based on EPA criteria. These maximum values represent the upper control limit for the analysis. Since an absolute value is used for the difference between R1 and R2, there is no lower control limit.

11.3.2 Accuracy

Accuracy is the degree of agreement between a sample's target value (known concentration) and the actual measured value. Accuracy for this project is measured by calculating the percent recovery (R) of known levels of spike compounds into appropriate sample matrices. Percent recovery is calculated as follows:

$$R = 100 \times \left[\left(\frac{[(Spike\ Sample\ Conc.)(Sample + Spike\ Vol.)]}{[(Spike\ Conc.)(Spike\ Vol.)]} \right) - \left(\frac{[(Sample\ Vol.)(Sample\ Conc.)]}{[(Spike\ Conc.)(Spike\ Vol.)]} \right) \right]$$

The following equation is an example of how this would be calculated:

1 mL of spike with concentration of 100 ppb

10 mL of sample with concentration of 10 ppb

spiked sample concentration of 20 ppb

$$= \frac{(20)(11) - (10)(10)}{(1)\ (100)} = 100 \times \frac{120}{100} = 120 \text{ percent}$$

Each calculated R value is compared to the accuracy criteria listed in Section 5.0. The accuracy ranges provided in Section 5.0 are based on the mean accuracy measured or

expected (based on EPA data) for each parameter plus or minus three standard deviations of the mean.

If RPD or R values do not meet acceptance criteria as specified in Section 5.0, results reported in all samples processed as part of the same set must be labeled as suspect, and the samples may need to be repeated. The Project QA Supervisor will be notified and the necessary corrective action implemented.

11.3.3 Completeness

Completeness is defined by EPA as "a measure of the amount of valid data obtained from a measurement system compared to the amount that was expected to be obtained under correct normal conditions" (EPA, 1980). A completeness of at least 90 percent for each parameter is the objective for this project. Following completion of the analytical testing, percent completeness will be calculated as follows:

$$\text{Completeness (\%) for parameter y} = \frac{\text{\# of valid y values reported}}{\text{\# of samples collected for analysis of y}} \times 100$$

If completeness is less than 90 percent for any parameter(s), the Project Manager will be notified immediately. The Project Manager is responsible for determining if resampling will be necessary to meet project objectives and will inform the QA Supervisor and Laboratory Project Manager of his decision.

11.3.4 Control Charts

The ESE St. Louis Chemistry Laboratory is instituting the use of control charts for tracking spike recoveries, replicate differences, and method blank results for all analyses. Control charts will be updated on a quarterly basis. These will be reviewed by the Group Leader responsible for the analyses and by the QA officer. The criteria developed with the control charts for accuracy (percent recovery) and precision (relative percent difference) will be used in the CLASS system for determining whether a given set of analysis has passed the QC criteria. The criteria are part of each storet-method code in the CLASS system and are compared to the results of the spikes, replicates, and method blanks for each batch automatically. In addition to this procedure, control charts including

the data and criteria from the previous quarter will be printed weekly with new data points plotted to observe trends. By the end of the subsequent quarter, two quarters of data will be present on the plot. For seldom run analyses, the frequency will be reduced.

11.4 METHOD DETECTION LIMITS AND PRACTICAL QUANTITATION LIMITS

Method detection limits (MDL) and practical quantitation limits (PQL) will be determined semi-annually. The MDL will be determined following the procedures outlined in 40 CFR Part 136, Appendix B. The PQL will be calculated at the same time as 10 times the standard deviation (S_{pooled}) calculated for the MDL. The updated MDLs and PQLs will replace the old ones in the laboratory Standard Analytical Procedures (SAPs) and this Comprehensive Quality Assurance Plan.

12.0 ANALYTICAL DATA

12.1 DATA REDUCTION

Data transfer and reduction are essential functions in summarizing information to support conclusions. It is essential that these processes are performed accurately and, in the case of data reduction, accepted statistical techniques are used. ESE's Chemical Laboratory Analysis Scheduling System (CLASS) will be used for data reduction final calculations.

The data flow scheme for CLASS is presented in Figure 12-1. An example final result summary is shown in Figure 12-2. For each task, a CLASS output data batch will be generated. The output batch will include standard curves, QC data, and sample data.

CLASS is set up so that each storet number/method code combination is associated with a given SAP. The SAP describes the method including calculations. The appropriate equations are entered into CLASS for the storet number/method code combination. It is the responsibility of each analyst to:

1. Set up a batch in CLASS;
2. Enter all raw data into CLASS (instrument response, sample site, final volume, dilution factor, etc.);
3. To check input data;
4. To check one calculation/batch;
5. To sign CLASS output after checking;
6. To review and sign CLASS outputs from analysts in the same group; and
7. To prepare a batch folder containing batch output and raw data (see Section 12.2).

For routine analyses performed at the ESE laboratory, sample response and other sample data information will be entered into the computer by the analyst which will calculate:

1. Regression line for standards,
2. Relative percent difference for replicates,
3. Spiked recoveries,
4. Reference sample concentrations, and
5. Sample concentrations.

Field Trip Preparation
- --define parameters for analysis
- --assign temporary station codes
- --define sample fractions
- --produce labels and logsheets

Sample Login
- --activate samples
- --set permanent station codes
- --store collection time and date
- --store field data

Schedule Analyses
- --list of samples available for each parameter sorted by due date

Input. Results
- --reserve analysis
- --input calibration, quality control and sample data

Quality Control
- --calculate calibration curve, spike, replicate and reference sample quality control

Calculate Results
- --calculate and store final sample concentrations

Intersample QC
- --check for data inconsistencies
- --perform interparameter calculations

Reports
- --produce reports of sample data, quality control, and statistical analyses

Figure 12-1
FLOWCHART OF THE CLASS PROGRAM

Environmental Science & Engineering, Inc.

ENVIRONMENTAL SCIENCE & ENGINEERING, INC.
ST. LOUIS LABORATORY

STATUS: FINAL

PAGE= 1

PROJECT NAME: DRINKING WATER EXAMPLE
PROJECT NUMBER: 9999999 0100 REPORT DATE: 07-10-91
SAMPLE MATRIX: DRINKING WATER DATE RECEIVED: 07-03-91
PROJECT MANAGER: JOHN F. GEMOULES LAB MANAGER/QC REVIEW: JEFFREY W. SIRIA

SAMPLE I.D.: DW-SITE 1
LAB I.D.: DW-1
COLLECTION DATE: 07/02/91

PARAMETER	CAS NUMBER	UNITS	RESULTS	ANALYSIS DATE	ANALYST
BENZENE	71-43-2	UG/L	<1.00	07-08-91	JWS
BROMOBENZENE	71-43-2	UG/L	<1.00	07-08-91	JWS
BROMODICHLOROMETHANE	75-27-4	UG/L	<1.00	07-08-91	JWS
BROMOFORM	75-25-2	UG/L	<1.00	07-08-91	JWS
BROMOMETHANE	74-83-9	UG/L	<1.00	07-08-91	JWS
CARBON TETRACHLORIDE	56-23-5	UG/L	<1.00	07-08-91	JWS
CHLOROBENZENE	108-90-7	UG/L	<1.00	07-08-91	JWS
CHLOROETHANE	75-00-3	UG/L	<1.00	07-08-91	JWS
CHLOROFORM	67-66-3	UG/L	<1.00	07-08-91	JWS
CHLOROMETHANE	74-87-3	UG/L	<1.00	07-08-91	JWS
2-CHLOROTOLUENE	74-87-3	UG/L	<1.00	07-08-91	JWS
4-CHLOROTOLUENE	74-87-3	UG/L	<1.00	07-08-91	JWS
DIBROMOCHLOROMETHANE	124-48-1	UG/L	<1.00	07-08-91	JWS
DIBROMOMETHANE	25620-62-6	UG/L	<1.00	07-08-91	JWS
1.2-DICHLOROBENZENE	95-50-1	UG/L	<1.00	07-08-91	JWS
1.3-DICHLOROBENZENE	541-73-1	UG/L	<1.00	07-08-91	JWS
1.4-DICHLOROBENZENE	106-46-7	UG/L	<1.00	07-08-91	JWS
1.1-DICHLOROETHYLENE	75-35-4	UG/L	<1.00	07-08-91	JWS
1.2-DICHLOROETHANE	107-06-2	UG/L	<1.00	07-08-91	JWS
1.1-DICHLOROETHANE	75-34-3	UG/L	<1.00	07-08-91	JWS
CIS-1.2-DICHLOROETHYLENE	75-34-3	UG/L	<1.00	07-08-91	JWS
TRANS-1.2-DICHLOROETHYLENE	156-60-5	UG/L	<1.00	07-08-91	JWS
1.2-DICHLOROPROPANE	78-87-5	UG/L	<1.00	07-08-91	JWS
1.3 DICHLOROPROPANE	78-87-5	UG/L	<1.00	07-08-91	JWS
2.2-DICHLOROPROPANE	594-20-7	UG/L	<1.00	07-08-91	JWS
1.1-DICHLOROPROPYLENE	563-58-6	UG/L	<1.00	07-08-91	JWS
CIS-1.3-DICHLOROPROPYLENE	10061-01-5	UG/L	<1.00	07-08-91	JWS
TRANS-1.3-DICHLOROPROPYLENE	10061-02-6	UG/L	<1.00	07-08-91	JWS
ETHYLBENZENE	100-41-4	UG/L	<1.00	07-08-91	JWS
METHYLENE CHLORIDE	75-09-2	UG/L	<1.00	07-08-91	JWS
STYRENE	100-42-5	UG/L	<1.00	07-08-91	JWS
1.1.1.2-TETRACHLOROETHANE	100-42-5	UG/L	<1.00	07-08-91	JWS
1.1.2.2-TETRACHLOROETHANE	79-34-5	UG/L	<1.00	07-08-91	JWS
TETRACHLOROETHYLENE	127-18-4	UG/L	<1.00	07-08-91	JWS
TOLUENE	108-88-3	UG/L	<1.00	07-08-91	JWS
1.1.1-TRICHLOROETHANE	71-55-6	UG/L	<1.00	07-08-91	JWS
1.1.2-TRICHLOROETHANE	79-00-5	UG/L	<1.00	07-08-91	JWS
TRICHLOROETHYLENE	79-01-6	UG/L	<1.00	07-03-91	JWS
1.2.3-TRICHLOROPROPANE	79-01-6	UG/L	<1.00	07-08-91	JWS
VINYL CHLORIDE	75-01-4	UG/L	<1.00	07-08-91	JWS
O-XYLENE	75-01-4	UG/L	<1.00	07-08-91	JWS
M/P-XYLENE	75-01-4	UG/L	<1.00	07-08-91	JWS

Figure 12-2
FINAL RESULTS OUTPUT FROM THE DATA PROGRAM

Environmental Science & Engineering, Inc.

Linear or quadratic equations will be used to calculate final data for laboratory analyses requiring a calibration curve:

$$\text{Concentration} = \text{Intercept} + M\ (\text{Response}) + M2\ (\text{Response})^2$$

The selection of calculation method depends on the methodology of analyses and is addressed in the individual standard analytical procedures (SAPs). These are described below by analysis.

12.1.1 Purgeable Organics (VOC)

Purgeable organics by GC/MS are calculated as follows for water samples:

$$\text{Concentration } (\mu g/L) = \frac{(A_{ss})\ (Q_{is})\ DF}{(RRF)(A_{is})(PV)}$$

Where: A_{ss} = area from the extracted ion profile of the primary characteristics ion for the target analyte in the sample,

Q_{is} = quantity of the internal standard [nanogram (ng)],

RRF = response factor (see Section 9.2),

A_{is} = area from the extracted ion profile of the primary characteristic ion of the internal standard in the sample, and

PV = purge volume (mL).

For soil samples, the purge volume is replaced by the sample weight in grams multiplied by the moisture factor (MF) to yield concentrations in $\mu g/kg$ dry. The moisture factor is

$$\left(\frac{100-M}{100}\right)$$

where M is the percent moisture.

12.1.2 Extractable Organics (BNA of SV)

Acid and base/neutral extractables are calculated as follows for water samples:

$$\text{Concentration } (\mu g/L) = \frac{(A_{ss})(Q_{is})}{(A_{is})(RRF)} \times \frac{1}{FE} \times \frac{1}{V} \times DF$$

where: A_{ts} = area from the extracted ion profile of the primary characteristic ion for the target analyte in the sample;

A_{is} = area from the extracted ion profile of the primary characteristic ion of the internal standard in the sample;

Qi_s = quantity of the internal standard (ng);

RRF = relative response factor (see Section 9.2);

FE = fraction extract analyzed = $\frac{\text{Volume injected } (\mu L)}{\text{extract volume } (\mu L)}$

V = sample volume (mL); and

DF = dilution factor = $\frac{\text{final extract volume for injection (mL)}}{\text{extract volume prior to dilution (mL)}}$

μL = microliter

For soils, the sample volume is replaced by the sample weight in grams multiplied by MF to yield concentrations in $\mu g/kg$ dry.

12.1.3 TRPH and Oil and Grease

The absorbance of samples and standards are measured by constructing a straight baseline over the range of the scan, drawing a straight vertical line from the tip of peak at 2930 cm^{-1} to the baseline and measuring the height of peak in mm as the absorbance.

Construct calibration curve by entering absorbance (peak height) and concentration of standards (mg/L). Enter peak height (in mm) of sample as response, final extract volume in liters, sample volume in liters and dilution factor as needed.

$$\text{Concentration (mg/L)} = \frac{R \times FV \times D}{SV}$$

where: R = oil in extract, in mg/L, determined from calibration plot of peak height versus mg/L oil in standards;

FV = final volume of Freon extract, in liters;

D = dilution factor, if any; and

SV = volume of sample, determined by refilling sample bottles to the mark in liters.

12.1.4 Metals

For ICAP and GFAA the responses in mg/L are calculated by the software for each instrument. This response (R) along with sample volume (SV) or weight (SW), percent moisture (M) for soils, final volume (FV), and dilution factor (DF) are entered into CLASS and the concentration calculated as

$$Concentration\ (mg/L\ or\ mg/kg) = \frac{R \times FV \times DF}{SV\ or\ SW\left(\frac{100-M}{100}\right)}$$

For mercury, the percent transmission (%T) is read from the instrument meter for standards, samples, and QC samples. The %T is manually converted to absorbance. The absorbance is entered into CLASS along with the standard concentrations, final volume (FV), sample volume (SV), or weight (SW, and dilution factors. CLASS calculates the linear calibration curve and the concentration.

$$Concentration\ (mg/L\ or\ mg/kg) = \frac{R \times FV \times DF}{SV\ or\ SW\left(\frac{100-M}{100}\right)}$$

12.2 DOCUMENTATION OF RAW DATA

All manual documentation of raw data will be done on appropriate forms or in notebooks. All notebooks used will be with pre-numbered pages. All raw data entries shall be made in indelible ink. Any blank portions of data forms or notebook pages shall be crossed out in ink and signed/initialed by the analyst.

Completed batch forms will be stored in files arranged numerically by batch number. Strip charts, copies of parameter notebooks, and QC charts will be stored for each parameter.

When the data set is complete for each sampling effort, the computer can be used to organize the information in the field group in a variety of formats. The final reports will be reviewed by the Laboratory Project Manager and the Project QA Supervisor.

12.2.1 Gas Chromatograph

Prior to analysis, the analyst must obtain a file folder and all applicable logsheets and data sheets.

Extraction Logsheet--An extraction logsheet, filled out by the analyst performing the sample extraction, will accompany each lot of samples throughout analysis. This sheet will include at least the following data:

1. Project name and number,
2. Extractor's initials,
3. Type of sample matrix,
4. Field group name;
5. Sample numbers,
6. Date extracted,
7. Analyte group [e.g., pentachlorophenol (PCP), polynuclear aromatics (PNAs), pesticides and PCBs],
8. Initial volume or wet weight of sample extracted,
9. Initial/final pH (water sample),
10. Extraction solvent,
11. Final volume/solvent,
12. Date of cleanup (if required),
13. Notes and comments affecting the extraction procedure, and
14. Appearance of each sample and method of homogenization.

After extraction is complete, extraction logsheets will be filed in the batch folder and accompany the extracted samples to the instrumental analyst. Each extract vial will be properly labeled. Each label will contain the following information:

1. Field group name and sample number,
2. Date extracted, and
3. Extractor's initials.

Instrument Logbooks--During analysis the following information will be recorded in the instrument notebook:

1. A log of the types of analyses run on the instrument, to include:
   a. Column conditions and temperature zones,
   b. Sample numbers or other identification of samples,
   c. Reference to a notebook page describing the analysis,
   d. Analysis date, and
   e. Detector used [e.g., flame ionization detector (FID), electron capture detector (ECD), etc.].
2. Service records.

Chromatograms--At the time of analysis, the analyst will include on the chromatogram the following information:

1. Instrument and detector conditions,
2. Date and time of analysis,
3. Analyst's initials,
4. Field group name,
5. Sample number and other identification for each chromatogram,
6. Dilution factor, if any, for each sample.

The chromatograms will be placed in the batch file folder.

Chromatographic Logsheets--For each analysis, the analyst will record all pertinent information on a standard curve data sheet and chromatographic data logsheet. The standard curve data sheet lists the standards, their concentrations, and the respective responses. The chromatographic data sheet lists the samples in order of injection and the factors needed for calculating the concentrations.

After the analysis and data reduction are complete, the chromatograms and worksheets will be stored in the batch file folder and the folder will be placed in each department's designated filing location.

Standards--Prior to analysis, stock standard solutions and working solutions covering the working range of the method will be prepared. Procedures used in preparing the standards will be recorded in preparer's laboratory notebook. The following information must be recorded:

1. Reference standard source,
2. Lot number,
3. Date of preparation,
4. Analyst's signature or initials,
5. Actual weight measured,
6. Volumetric flask volume,
7. Calculated concentration,
8. Solvent, and
9. Dilutions.

Immediately after an analytical standard has been prepared, the standard will be transferred to an amber glass vial or bottle, and properly labeled. Standards must be refrigerated when not in immediate use.

12.2.2 Gas Chromatograph/Mass Spectrometer

Prior to analysis, the extracting analyst must obtain a batch file folder and all applicable data sheets and logsheets.

Extraction Logsheet--Once a batch has been established, the sample extraction and analysis procedure begins. A GC/MS extraction logsheet, filled out by the analyst performing the sample extraction, will accompany the batch throughout analysis. This sheet will include at least the following data:

1. Project name and number,
2. Analyst's initials,
3. Type of sample matrix,
4. Field group name,
5. Sample numbers,
6. Date extracted,

7. Analyte group (i.e., acids, base/neutrals),
8. Initial volume or wet weight of sample extracted,
9. Initial/final pH,
10. Extract solvent,
11. Final volume/solvent,
12. Date of cleanup (if required),
13. Notes and comments affecting the extraction procedure, and
14. Appearance of each sample and method of homogenization.

After extraction, extraction logsheets will be filed in the batch file folder and accompany the extracted samples to the instrument analyst. The extract vial will be properly labeled. The label will contain the following information:

1. Field group name and sample number,
2. Date extracted, and
3. Extractor's initials.

Sample Screening--Sample extracts might be screened by gas chromatography employing flame ionization detection (GC/FID) prior to GC/MS analysis to permit dilution of extracts (as required) to concentration levels compatible with the GC/MS instrument and column capabilities.

Spectral Data and Gas Chromatograph/Mass Spectrometer Computer Quantitation Report--The quantitative sample and standard data generated by the GC/MS data system and all mass spectral information will be labeled according to standard procedures and placed in the batch file folder. Manual data reduction sheets also will be placed in this folder.

Standards--Prior to analysis, stock standard solutions and working solutions covering the working range of the instrument are prepared. Procedures used in preparing the standards must be recorded in the preparer's laboratory notebook. The following information will be recorded:

1. Reference standard source,
2. Lot number,

3. Data of preparation,
4. Analyst's signature or initials,
5. Actual weight (or volume) measured,
6. Volumetric flask volume,
7. Calculated concentration,
8. Solvent, and
9. Dilutions.

The analytical standard will be transferred immediately to a properly labeled glass amber bottle or vial after preparation. Standards must be refrigerated when not in use.

Gas Chromatograph/Mass Spectrometer Instrument Logbooks--Whenever the GC/MS is used for sample analysis the appropriate information will be recorded in an instrument logbook.

Compound Identification--Compound identification will be made in terms of the full-scan mass spectrum generally obtained in the electron impact mode at 70 electronvolts (eV). Compound identification will require the presence of all significant major ions at the appropriate relative abundance as obtained with an authentic compound or reference spectrum from a reputable literature source. The selection of significant ions is strongly compound-dependent, because of this and other considerations, the identification of compounds will entail considerable professional judgment and experience.

The most convincing evidence for compound identification is comparison of spectrum with that of an authentic compound obtained under identical operation conditions. When this is not possible due to compound availability, computer identification or manual library search will be employed.

When no tentative matches are found in the library, identification will be based on application of known fragmentation patterns, empirical correlations, and isotope abundance data.

Compound Quantitation--The technique of extracted ion current profiles will be employed for the preliminary qualitative searching and for quantitation of individual compounds. Appropriate internal standards will be employed to permit quantitation in term of the relative response to these internal standards. Concentration calculations and data reduction procedures are given in Section 8.1.

Spiking with Internal Standards--All samples will be spiked with quantitation standards just prior to the GC/MS analysis (Section 9.2). Appropriate internal standards will be selected for the remaining categories.

Gas--Chromatograph/Mass Spectrometer Instrumental Detection Limits--The instrumental detection limit refers to the least quantity of material required to provide a total mass spectrum of sufficient quantity to permit compound identification. The mass spectrum must contain all major ions with the appropriate relative abundance within 35 percent of either an authentic compound analyzed under identical conditions or an appropriate reference spectrum from the literature.

Data Management--Output from the GC/MS/DS is variable, depending on the project. However, all raw data such as mass chromatograms will be stored on magnetic tape. The final results will be submitted to the data center by project, site description, and sample number. The raw calculation sheets will be kept in the GC/MS room by these same identifiers. From the calculation sheets the frame reference number (FRN) is obtained. All magnetic tapes are kept in sequential order with respect to the FRN. By following this sequence, it is possible to obtain all raw data for a particular sample number. All raw data are stored in the GC/MS room and all final numbers are kept in the data center.

12.2.3 Trace Metals

Data System Outputs--At the time of analysis (for ICAP and flameless atomic absorption), the following information will be recorded on the computer data outputs:

1. Analysts name, initials, or employee number,
2. Date of analysis,
3. Element of interest,

4. Instrument condition
5. Sample matrix, and
6. Comments.

During analysis, the analyst will indicate on the data system output sample numbers, QC samples, blanks, and standards.

After the data has been reduced and transferred to CLASS, the data system outputs are filed in the data batch.

Laboratory Notebooks--Each analyst will maintain their own laboratory notebook. After each analysis, the analyst will record in the notebook the following information:

1. Problems encountered during the digestion/analysis,
2. Comments about the samples and/or analytical procedure,
3. Date of analysis,
4. Analyst's signature or initials,
5. Element,
6. Sample matrix,
7. Instrument conditions,
8. Sample numbers,
9. Quality Control data,
10. Raw data, and
11. Blank subtracted responses.

Standards--Stock standard solutions are purchased from vendors. These stock solutions are certified by the vendor for purity and concentration. Storage conditions recommended by the vendor will be observed for standards.

Volumetric dilutions are made from the stock solution in order to obtain working solutions. Serial dilutions are then made from the working solutions to obtain working standards to be used to generate standard curves. Working standard solution are properly labeled with the following information:

1. Preparer's name or initials,
2. Date of preparation,
3. Element(s), and
4. Concentration.

12.2.4 Anions

Prior to analysis, the analyst will obtain a batch file folder. Manual documentation of raw data will be done on appropriate log forms or in notebooks. Forms will be bound in numbered logbooks with prenumbered pages and notebooks will be numbered and have numbered pages. Entries will be made in indelible ink. Any blank portions of data forms or notebook pages will be crossed out and initialled by the analyst.

Raw Data for Ion Chromatograph Analyses--Once a batch has been established, the sample analysis procedure begins. A copy of the Ion Chromatograph Run Log describing the preparation of the standards and samples will be placed in the batch folder. This page will include at least the following data:

1. Project name and number,
2. Analyst's initials,
3. Date,
4. Batch number,
5. SAP used,
6. Sample IDs,
7. Instrument conditions,
8. Dilution factors, and
9. Notes and comments affecting the analysis.

Chromatograms will be labelled with date, time, analyst, and instrument parameters and filed in the batch folder.

Raw Data for Fluoride Analyses--Once a batch has been established, the sample analysis procedure will begin. A copy of the appropriate pages from the describing the preparation

of the samples and analysis results will be placed in the batch folder. This page will include at least the following data:

1. Project name and number,
2. Analyst's initials,
3. Date,
4. Reagents used,
5. SAP used,
6. Sample IDs,
7. Electrometer readings in mV,
8. Volume of samples, and
9. Notes and comments affecting analyses.

12.2.5 GENERAL PARAMETERS

Prior to analysis, the analyst will obtain a batch file folder. Manual documentation of raw data will be done on appropriate log forms or in notebooks. Forms will be bound in numbered logbooks with prenumbered pages and notebooks will be numbered and have numbered pages. Entries will be made in indelible ink. Any blank portions of data forms or notebook pages will be crossed out and initialled by the analyst.

Raw Data for Alkalinity Analyses—Once a batch has been established, the sample analysis procedure begins. A copy of the analyst's notebook page describing the preparation of the standards and samples and analysis results will be placed in the batch folder. This page will include at least the following data:

1. Project name and number,
2. Analyst's initials,
3. Type of sample matrix,
4. Field group name,
5. SAP used,
6. Sample numbers,
7. Date,
8. Initial volume,
9. Initial pH,

10. Volume of acid added.
11. Calculated alkalinity in mg $CaCO_3$/L, and
12. Notes and comments affecting the analysis.

Raw Data for TDS Analyses--Once a batch has been established, the sample analysis procedure will begin. A copy of pages from the Total Dissolved Solids Analysis Log describing the preparation of the samples and analysis results will be placed in the batch folder. This page will include at least the following data:

1. Project name and number,
2. Analyst's initials,
3. Type of sample matrix,
4. Field group name,
5. SAP used,
6. Sample numbers,
7. Date,
8. Initial weight of crucible,
9. Weight of crucible and samples,
10. Volume of samples,
11. Final weight, and
12. Notes and comments affecting analyses.

12.3 DATA VALIDATION

All analytical data will initially be reviewed by laboratory personnel for technical merit, accuracy of transfers, and compliance with QC criteria. Any required changes/corrections identified will be made at this time.

The Project QA Supervisor will validate a portion of all preliminary data by field group. Laboratory data will be reviewed for compliance with precision, accuracy, and completeness objectives. Tasks included in the validation review are listed in a data validation checklist (Figure 12-3). Preliminary data may be circulated and reviewed in-house, but all data reported to the client by the Project Manager must first be validated by the QA Supervisor.

CHEMISTRY DATA VALIDATION

Page 1 of __
6/28/90

PROJECT NAME _____ AUDITOR _____
FIELD GROUP _____ QA INITIATION DATE _____
PROJECT NUMBER _____ QA COMPLETION DATE _____

GENERAL-SECTION I

QA PLAN FOLLOWED (circle one): MASTER SPECIAL OTHER _____
If Master circles was a Project QA Supplement prepared? YES NO

CHAIN-OF-CUSTODY LOGSHEETS REVIEWED? YES NO
If yes, did they meet the QA plan requirements? YES NO

FIELD NOTES REVIEWED? YES NO
If yes, did they meet the QA plan requirements? YES NO

TOTAL NUMBER OF DATA POINTS IN FIELD GROUP: _____
NUMBER OF DATA POINTS REVIEWED: _____
NUMBER OF INCORRECT DATA POINTS REPORTED: _____

TOTAL NUMBER OF BATCHES IN FIELD GROUP: _____
NUMBER OF BATCHES REVIEWED: _____
NUMBER OF INCORRECT BATCHES REPORTED: _____

MATRIX (circle one): GROUNDWATER SURFACE WATER SOIL SEDIMENT AIR

HOLDING TIMES ACCEPTABLE: YES NO
If no, attach Section IV

METHOD BLANKS ACCEPTABLE: YES NO
If no, attach Section V

SPIKES ACCEPTABLE: YES NO
If no, attach Section VI

SURROGATES ACCEPTABLE: YES NO
If no, attach Section VII

Figure 12-3
DATA VALIDATION CHECKLIST
(Page 1 of 7)

Environmental Science & Engineering, Inc.

Field Group: _____
Date: _____

CHEMISTRY DATA VALIDATION

Page __ of __
6/28/90

DATA VALIDATION-SECTION II

Total data points reviewed

QC REQUIREMENTS	PARAMETER BATCH
Were samples analyzed using the methods specified in the QA plan?	
Were the required number of standards and spiked samples analyzed with each batch?	
Were spike recoveries within the acceptable criteria stated in the QA plan?	
Were 3 standards and blank run?	
Was the correlation coefficient >=0.995?	
Do the stds. bracket the sample responses?	
Is the continuing cal. std. acceptable?	
Is the method blank <±CRDL?	
Instrument tuning acceptable? (GC/MS only)	
Surrogate recoveries acceptable? GC/MS only)	
Calibration blank acceptable? (ICAP only)	
Interference check sample acceptable? (ICAP only)	
Was a quality control (reference) sample acceptable?	
Were the data free of errors? If not, total the number of data points in error.	
Randomly select one or more values and trace back through the calculations to the raw data.	#ck'd #error

If requirements were met, mark a check in the box; if they were not met mark NO and explain below or on a separate sheet.
NA - Not Applicable

Figure 12-3
DATA VALIDATION CHECKLIST
(Page 2 of 7)

ESE Environmental Science & Engineering, Inc.

Field Group: _____
Date: _____

CHEMISTRY DATA VALIDATION

Page __ of __
6/28/90

SAMPLE IDS CORRELATED TO BATCH #S-SECTION III

Lab Sample I.D.	Field Sample I.D.	Date Sampled	Analytes Parameters	Batch #

Figure 12-3
DATA VALIDATION CHECKLIST
(Page 3 of 7)

Environmental Science & Engineering, Inc.

Field Group: _____
Date: _____

CHEMISTRY DATA VALIDATION

Page __ of __
6/28/90

HOLDING TIMES EXCEEDED-SECTION IV

ANALYTES	LABORATORY SAMPLES	COLLECT. DATE	EXTR. DATE	ANAL. DATE	DAYS EXCEEDED

NA-NOT APPLICABLE

COMMENTS:

Figure 12-3
DATA VALIDATION CHECKLIST
(Page 4 of 7)

Environmental Science & Engineering, Inc.

Field Group: _____

Date: _____

CHEMISTRY DATA VALIDATION

METHOD BLANKS REPORTED >0-SECTION V

ANALYTE	BATCH	MB CONCENTRATION (µg/l)	CRITERIA (DETECTION LIMIT) (µg/l)

Figure 12-3
DATA VALIDATION CHECKLIST
(Page 5 of 7)

Environmental Science & Engineering, Inc.

Field Group: _____
Date: _____

CHEMISTRY DATA VALIDATION

Page __ of __
6/28/90

SPIKES OUTSIDE CONTROL LIMITS-SECTION VI

SPIKE	ANALYTE	BATCH	%RECOVERY	RPD*
SP1.SP2				
SPM1.SPM2				
ACCEPTANCE LIMITS				
SP1.SP2				
SPM1.SPM2				
ACCEPTANCE LIMITS				
SP1.SP2				
SPM1.SPM2				
ACCEPTANCE LIMITS				
SP1.SP2				
SPM1.SPM2				
ACCEPTANCE LIMITS				
SP1.SP2				
SPM1.SPM2				
ACCEPTANCE LIMITS				
SP1.SP2				
SPM1.SPM2				
ACCEPTANCE LIMITS				
SP1.SP2				
SPM1.SPM2				
ACCEPTANCE LIMITS				

%RPD = RELATIVE PERCENT DIFFERENCE
NA = NOT APPLICABLE

Figure 12-3
DATA VALIDATION CHECKLIST
(Page 6 of 7)

Environmental Science & Engineering, Inc.

Field Group: _____

Date: _____

CHEMISTRY DATA VALIDATION

SURROGATES OUTSIDE CONTROL LIMITS-SECTION VII

Sample I.D.	Surrogate	%Recovery	Criteria

Figure 12-3
DATA VALIDATION CHECKLIST
(Page 7 of 7)

Environmental Science & Engineering, Inc.

12.4 DATA REPORTING

After the validation process has been completed, data will be compiled into an acceptable format and submitted to the client. Standard CLASS final results summary forms will be used for data reporting. If specified by the contract, CLP or SW-846 forms will be used. Existing forms will be modified or equivalent forms generated for reporting parameters not included on CLP/SW-846 forms.

A typical report will contain a memorandum or cover letter describing the sample receiving dates, analytical methods, and discussion of QC problem; a section containing tabular results; a section of QC summary; and a section of chain-of-custody of all the samples.

13.0 CORRECTIVE ACTION

Corrective action is necessary when any measurement system fails to follow this QA Plan. Items which may need corrective action range from a minor problem of a field team member failing to sign a field form to a major problem of an analyst using an improper analytical method. For this reason, corrective action protocols must be flexible.

In general, items needing corrective action fall into three "correction" categories: short-term, long-term, and QC; each requiring different action.

Short-Term Corrective Actions--These actions consist of minor and major problems which can be corrected immediately. Examples include failure to date or sign a field form, and errors in data entry. Corrective action is initiated by verbally calling attention to the problem followed by written notification.

Long-Term Corrective Actions--The actions consist of minor and major problems which require a series of actions to resolve the problem. The actions to be taken are coordinated by the QA Supervisor, and a QA corrective action and routing form (Figure 13-1) is used to track the action. An example of this type of corrective action is as follows:

Problem--A field team member fails to calibrate an HNU meter in the field prior to use.

Corrective Action--The problem is identified by the person originating the corrective action, responsibility is assigned to an appropriate person (may be someone other than person failing to calibrate the meter), an appropriate standard gas is selected, the gas is ordered, receipt of the shipment gas is verified that the order is filled properly, training of field members in the use of the gas is required, and the HNU is calibrated in the field during the next field trip. The QA Supervisor audits this process to assure that it is completed in an expeditious manner.

Quality Control Corrective Action--Consists of corrective action following a failure to meet QC criteria specified in this QA Plan and the analytical methods. Actions taken consist of two types: those resolved within each analytical department and those

QUALITY ASSURANCE CORRECTIVE ACTION REQUEST AND ROUTING FORM

1. Identification of a Problem: CA# _____

Originator: _____ Date: _____

Nature of Problem: _____

_____

_____

_____

2. Determination of Required Action:

Responsibility Assigned to: _____ Due Date: _____

Recommended Action: _____

_____

_____

_____

3. Implementation of Required Action:

Responsibility Assigned to: _____ Due Date: _____

Recommended Action: _____

_____

_____

_____

4. Completion of Required Action:

Action Taken: _____

Results: _____

_____

_____

Person Completing Action: _____ Date: _____

QA Officer: _____ Date: _____

[illegible]
1/7/91

Figure 13-1
QUALITY ASSURANCE CORRECTIVE ACTION REQUEST AND ROUTING FORM

ESE Environmental Science & Engineering, Inc.

resolved outside the department. Examples outlining the differences between these two types of corrective action are as follows:

WITHIN DEPARTMENT ACTION

QC Failure	Department Action
Tuning results for GC/MS fail criteria in Methods 8240 and 8270	Analyst re-tunes instrument
RPD and percent recoveries fail criteria (refer to Section 3.0) and sample holding times have not expired	Analyst investigates problem and re-runs analyses (see Special Corrective Action)
Standard curve correlation coefficient is less than 0.995	Analyst investigates problem and re-runs curve and samples
Sample response falls outside calibration curve	Analyst dilutes sample into range of curve

OUTSIDE DEPARTMENT ACTION

QC Failure	Department Action
Holding times are exceeded	Notify Project Manager and QA Supervisor; resampling may be necessary
RPD and percent recoveries fail criteria (refer to Section 3.0) and sample holding times have expired	Notify Project Manager and QA Supervisor; resampling may be necessary if a significant number of QA failures occur (see Special Corrective Action)
Holding times are exceeded	Notify Project Manger, Laboratory Coordinator, and QA Supervisor; resampling may be necessary

Correction actions may be initiated for each measurement system (individual disciplines) by subproject managers or other responsible individuals such as the Department Manager or Division Manager. Corrective actions will also be initiated at the request of the client QA Officer. The Project QA Supervisor, along with the Project Manager, will be

responsible for approving the corrective action in the same fashion as if it had been initiated as a project QA function.

Special Corrective Action--In many cases, the failure to meet QC criteria specified in QA Plan is due to the nature of samples, since the precision and accuracy evaluation is based on an assumption that the sample used for analyses contains homogenous analytes in various part of sample. If the samples cannot be economically homogenized in the laboratory or the artificial disturbance of sample nature is not desired, failure in QC can be mistakenly regarded as poor laboratory performance. These situations have been found frequently in soil sample analyses. In this situation, the following actions will be taken:

1. For samples homogenized in the laboratory but have sample replicate failure in metal analyses, perform post digestion spikes for both sample and replicate. If the post digest recovery is acceptable, no further action to be taken. The sample shall be marked "inhomogeneity" in the report. If the past digest recovery is not acceptable, an instrument check shall be performed to check the stability of instrument calibration. If the calibration is still valid, the samples shall be redigested and reanalyzed.
2. For samples that have sample matrix spike RPD failure, perform standard matrix spike (SP) analyses immediately following the SPMs. If SP passes the QC criteria, the sample can be reported as nonhomogeneous in nature. If SP fails, recalibrate the instrument and reanalyze the SPMs. If failure still occurs, respike, redigest, and reanalyze batch.

Corrective Actions for Specific Types of Analyses--

Corrective actions for specific types of analyses are listed in Tables 13-1 through 13-5.

Table 13-1. Summary of Corrective Action Procedures for Metals Analyzed by Graphite Furnace and Cold Vapor Atomic Absorption Spectroscopy

Quality Control	Acceptance Criteria	Corrective Action
Initial calibration verification standard (ICV)	+/- 10% of true value	Rerun standard, if still out of control, recalibrate instrument.
Calibration blank (ICB)	< the absolute value of the MDL	Rerun the blank, if still out of control, reprocess and reanalyze the blank.
Calibration curve correlation coefficient	≥ 0.995	Rerun calibration standards, if still out of control, prepare new calibration standards and recalibrate the instrument or document why data are acceptable.
Calibration curve	Brackets all sample responses	Dilute and reanalyze within the calibration curve range or document why data are acceptable if reanalysis is not possible.
Continuing calibration verification standard (CCV)	+/- 20% of true value	Rerun standard, if still out of control, recalibrate instrument and reanalyze samples run since last acceptable CCV.
Method blank (MB)	< the absolute value of the MDL	Determine the cause of the blank problem, redigest set, if necessary, or document why data are acceptable.

Table 13-1. Summary of Corrective Action Procedures for Metals Analyzed by Graphite Furnace and Cold Vapor Atomic Absorption Spectroscopy (Continued, Page 2 of 2)

Quality Control	Acceptance Criteria	Corrective Action
Standard matrix spike (SP) check standard	75 to 125%	Determine and correct problem, redigest and reanalyze samples, if necessary, or document why data are acceptable.
Sample matrix spike	75 to 125%	If standard matrix spike analytes are within control limits, qualify the data. If not, determine and correct the problem, redigest and reanalyze samples, if necessary, or document why data are acceptable.
Sample matrix spike	20%	If standard matrix spike analytes are within control limits, qualify the data. If not, determine and correct the problem, redigest and reanalyze samples, if necessary, or document why data are acceptable.

Note: DL = detection limit.
RPD = relative percent difference.

Source: ESE.

Table 13-2. Summary of Corrective Action Procedures for Metals Analyzed by Inductively Coupled Plasma Emission Spectroscopy

Quality Control	Acceptance Criteria	Corrective Action
Initial calibration verification standard (ICV)	+/- 10% of true value	Rerun standard, if still out of control, recalibrate instrument.
Calibration blank (ICB)	≤ the absolute value of the MDL	Rerun the blank, if still out of control, reprocess and reanalyze the blank.
Interference check standard (ICS)	+/- 20% of true value	Rerun standard, if still out of control, recalibrate instrument and reverify calibration.
Continuing calibration verification standard (CCV)	+/- 10% of true value	Rerun standard, if still out of control, recalibrate instrument and and reanalyze all samples run since last acceptable CCV or document why data are acceptable.
Method blank (MB)	≤ the absolute value of the MDL	Determine the cause of the blank problem; redigest samples if necessary or document why data are acceptable.

Table 13-2. Summary of Corrective Action Procedures for Metals Analyzed by Inductively Coupled Plasma Emission Spectroscopy (Continued, Page 2 of 2)

Quality Control	Acceptance Criteria	Corrective Action
Standard matrix spike (SP) or QC check sample	75 - 125%	Determine and correct problem, redigest and reanalyze samples, if necessary, or document why data are acceptable.
Sample matrix spike	75 - 125%	If standard matrix analytes are within control limits, qualify the data. If not, determine and correct problem, reanalyze samples, if necessary, or document why data are acceptable.
Sample matrix spike duplicate	±20%	If standard matrix analytes are within control limits, qualify the data. If not, determine and correct the problem, reanalyze the samples, if necessary, or document why data are acceptable.

Note: DL = detection limit.
RPD = relative percent difference.

Source: ESE.

Table 13-3. Summary of Corrective Action Procedures for Inorganics, Oil and Grease, Petroleum Hydrocarbons, TOX, and Radionuclides

Quality Control	Acceptance Criteria	Corrective Action
Calibration curve correlation coefficient	≥ 0.995	Rerun calibration standards if still out of control prepare new calibration standards and recalibrate the instrument, or document why data are acceptable.
Calibration curve	Brackets all sample responses	Dilute and reanalyze samples within the calibration curve range, or document why data are acceptable.
Calibration blank	≤ the absolute value of the MDL	out of control, reprocess and reanalyze the blank.
Continuing calibration verification standard (CCV)	+/- 20% of true value	Rerun standard, if still out of control, recalibrate instrument and reanalyze samples run since last acceptable CCV or document why data are acceptable.
Method blank (MB)	≤ the absolute value of the MDL	Determine the cause of the blank problem, reanalyze samples, if necessary, or document why data are acceptable.
Sample replicate (RP)*	±25%	Determine and correct problem, reanalyze sample, if necessary, or document why data are acceptable.

Table 13-3. Summary of Corrective Action Procedures for Inorganics, Oil and Grease, Petroleum Hydrocarbons, TOX, and Radionuclides (Continued, Page 2 of 2)

Quality Control	Acceptance Criteria	Corrective Action
Standard matrix spike (SP) check standard	80 - 120%	Determine and correct problem, reanalyze samples if necessary or document why data are acceptable.
Sample matrix spike	80 - 120%	If standard matrix analytes are within control limits, qualify the data. If not, determine and correct the problem, reanalyze samples, if necessary, or document why data are acceptable.
Sample matrix spike duplicate	25%	If standard matrix analytes are within control limits, qualify the data. If not, determine and correct the problem, reanalyze the samples, if necessary, or document why the data are acceptable.

Note: DL = detection limit.
RPD = replicate percent difference.

*Sample replicate is only required for residues, pH, specific conductivity, turbidity, and radionuclide analyses.

Source: ESE.

Table 13-4. Summary of Corrective Action Procedures for Organics Analyzed by Gas Chromatography and High Pressure Liquid Chromatography

Quality Control	Acceptance Criteria	Corrective Action
Calibration curve correlation coefficient	≥ 0.995	Rerun calibration standards, if still out of control, prepare new calibration standards and recalibrate the instrument, or document why the data are acceptable.
Calibration curve	Brackets all sample responses	Dilute and reanalyze samples within the calibration curve range, or document why data are acceptable.
Continuing calibration standard (CCS)	+/- 15% of standard initial response for GC (except for NPD which is +/-25%) and +/- 10% of standard initial response for HPLC	Rerun standard, if still out of control, recalibrate instrument and reanalyze samples when last CCS is acceptable, or document why data are acceptable.
Method blank (MB)	≤ the absolute value of the MDL	Determine and correct cause of the blank problem, reanalyze the samples, if necessary, or document why data are acceptable.
Method blank (MB)	≤ 5x the absolute value of the MDL for methylene chloride, acetone, toluene, and xylene. ≤ the absolute value of MDL for all others.	Reanalyze another MB. If second MB exceeds criteria, clean and recalibrate analytical system or document why data are acceptable.

Table 13-4. Summary of Corrective Action Procedures for Organics Analyzed by Gas Chromatography and High Pressure Liquid Chromatography (Continued, Page 2 of 3)

Quality Control	Acceptance Criteria	Corrective Action
Standard matrix spike (SP)	See Tables 5-7, 5-8, 5-13 and 5-14	Determine and correct the problem, reanalyze samples if necessary, or document why data are acceptable.
Sample matrix spike	See Tables 5-7, 5-8, 5-13 and 5-14	If standard matrix spike analytes are within control limits, qualify the data. If not, determine and correct the problem, reanalyze samples, if necessary, or document why data are acceptable.
Sample matrix spike duplicate	See Tables 5-7, 5-8, 5-13 and 5-14	If standard matrix analytes are within control limits, qualify the data. If not, determine and correct the problem, reanalyze samples, if necessary, or document why data are acceptable.
Surrogates* (SUR)	See Tables 5-7, 5-8, 5-13 and 5-14	If surrogates in the MB or SP are within control limits, qualify data. If not, reanalyze samples with surrogates outside criteria or document why data are acceptable.

Table 13-4. Summary of Corrective Action Procedures for Organics Analyzed by Gas Chromatography and High Pressure Liquid Chromatography (Continued, Page 3 of 3)

Note: NPD = nitrogen-phosphorus detector.
DL = detection limit.
RPD = relative percent difference.
GC = gas chromatography.
HPLC = high pressure liquid chromatography.

*Surrogate/surrogates will only be spiked in samples if specified by the method.

Source: ESE.

Table 13-5. Summary of Corrective Action Procedures for Organics by Gas Chromatography/Mass Spectrometry

Quality Control	Acceptance Criteria	Corrective Action
DFTPP or BFB instrument tuning	See Table 9-3 for tuning criteria	Retune instrument until within criteria.
Initial calibration standards	Percent RSD of RF of the calibration check compounds (CCC) are ≤ 30 percent (≤35 percent for Method 625)	Rerun calibration standards, if still out of criteria, prepare new calibration standards and rerun standards.
One-point daily calibration	RFs of CCCs are ≤25 percent (≤20 percent for Method 625) from average RFs in the initial calibration	Rerun standard, if still out of control, rerun calibration curve, or document why data are acceptable.
Method blank (MB)	≤ the absolute value of the MDL for all nonvolatile organics	Evaluate the impact of the presence of any target analytes in the method blank, the presence of low concentrations of phthalate may be acceptable. Reextract and reanalyze samples if presence of target analytes are unacceptable or document why data are acceptable. Background substraction may be applied.

Table 13-5. Summary of Corrective Action Procedures for Organics by Gas Chromatography/Mass Spectrometry (Continued, Page 2 of 3)

Quality Control	Acceptance Criteria	Corrective Action
Method blank (MB)	≤ 5x the absolute value of the MDL for methyline chloride, acetone, toluene, and xylenes. ≤ the absolute value of MDL for all other volatile organics.	Reanalyze another MB. If second MB exceeds criteria, clean and recalibrate the analytical system or document why data are acceptable.
Surrogate (SUR)	See Tables 5-1, 5-2, 5-9 and 5-10 for percent recovery control limits	If surrogates in the MB or SP are within limits, qualify the data. If not, reanalyze samples with surrogates outside criteria or document why data are acceptable.
Standard matrix spike (SP)	See Tables 5-1, 5-2, 5-9 and 5-10 for percent recovery control limits	If surrogates in the MB are within control limits, qualify the data. If surrogates in the MB are not within control limits, determine and correct the problem, reextract and reanalyze the sample, if necessary or document why data are acceptable.

Table 13-5. Summary of Corrective Action Procedures for Organics by Gas Chromatography/Mass Spectrometry (Continued, Page 3 of 3)

Quality Control	Acceptance Criteria	Corrective Action
Sample matrix spike	See Tables 5-1, 5-2, 5-9 and 5-10 for percent recovery control limits	If standard matrix spike compounds are within criteria, qualify the data. If not, check surrogates in the MB or SP, if within criteria, qualify the data. If both QCs are outside criteria, determine and correct the problem, reanalyze the samples or document why the data are acceptable.
Sample matrix spike duplicate	See Tables 5-1, 5-2, 5-9 and 5-10 for RPD control	If standard matrix spike compounds are within criteria, qualify the data. If not, check surrogates in the MB or SP, if within criteria, qualify the data. If both QCs are outside criteria, determine and correct the problem, reanalyze the samples if necessary or document why data are acceptable.

Note: DL = detection limit.
RPD = relative percent difference.

Source: ESE.

14.0 PERFORMANCE AND SYSTEM AUDITS

Two types of audit procedures will be used to assess and document performance of project staff: system audits and performance audits. These are performed at frequent intervals under the direction of the Project QA Supervisor. These audits form one of the bases for corrective action requirements and constitute a permanent record of the conformance of measurement systems to QA requirements.

System audits are inspections of training status, records, QC data, calibrations, and conformance to standard operating procedures without the analysis of check samples. System audits will be performed periodically on laboratory, office, and field operations.

The system audit protocol is summarized as follows:

1. Field Operations--The Project QA Supervisor will periodically check:
   a. Field notebooks, logsheets, bench sheets, tracking forms, and report any inconsistencies and/or omissions;
   b. Field sampling plans; and
   c. Sample site briefing package.
2. Laboratory Operations--The Project QA Supervisor will periodically check:
   a. Parameter and/or laboratory notebooks;
   b. Instrument logbooks;
   c. Sample log-in, dispensing, and labeling for analysis;
   d. Updating of QC criteria for spike recoveries. In addition, the Project QA Supervisor will monitor analyses to assure complete adherence to approved analytical methods.
3. Final Reports--The Project QA Supervisor will review all final reports and deliverables to the client.

Performance audits will include conductance of field audits and evaluation and analysis of check samples. In-house performance audits for all measurement systems will be conducted with a minimum frequency of once every 6 months. Periodically, field audits will be performed on select projects to assure that field procedures such as field instrument calibration and usage, sampling procedures, and sampling equipment decontamination

conducted in the field are performed according to the QA plan. A performance evaluation sample from EPA will be analyzed periodically along with the regular samples.

ESE will submit to external audits by the client and/or other regulatory agencies, if requested.

The St. Louis Chemistry Laboratory is certified as an environmental laboratory by the states of Florida, Illinois, Oklahoma, Kansas, and Wisconsin. At present, the laboratory is in the process of applying for certification from the states of Missouri, and Tennessee. In addition to state certification, the laboratory has been audited and approved for analytical services for the U.S. Army Corps of Engineers Defense Environmental Restoration Act (DERA) program, Air Force RI/FS projects, and USEPA Region V state superfund programs.

ESE routinely participates in performance test sample programs (WP and WS) administered by EPA, Environmental Monitoring Support Laboratory--Cincinnati (EMSL-CI).

The results of these interlaboratory studies periodically will be evaluated by the Project QA Supervisor during the project as part of the performance audits.

Peer review of all deliverable reports and data supporting this project will be performed by technically qualified individuals from each major discipline represented in the deliverable. Figure 14-1 is a sample Deliverable Review Sheet to be used for all DER projects.

WORD PROCESSING FORM

Project #: _____ Date Started: _____

Project Name: _____ Due Date: _____

Authors: _____ Due to Client: _____

___ Text	___ Bind	___ Regular Mail
___ Tables	___ Staple	___ Federal
___ Appendix	___ Other	___ Other
___ Graphics	_____	_____

DISK NAME/SPECIAL INSTRUCTIONS: _____

Date In	# of Pages	Instructions	Date Completed	Initials

NUMBER OF COPIES:

____/Client ____/In-House ____/G'ville ____/Misc. _____/Total

Copies to: _____

TECHNICAL REVIEWERS: _____ EDITORIAL REVIEWERS: _____

Date	Reviewer Initials	Sections	Date	Reviewer Initials	Sections

APPROVED BY: _____

Figure 14-1
DELIVERABLE REVIEW SHEET

ESE Environmental Science & Engineering, Inc.

15.0 QA REPORTS TO MANAGEMENT

QA activities are reported to management by the Project QA Supervisor in three ways:

1. Verbal notification of significant QA deficiencies immediately upon discovering the problem,
2. Written interim QA reports, and
3. Written final QA reports.

A final QA report will be prepared for each project. For projects of extended duration, interim reports will be prepared quarterly, or more frequently at the request of management. The necessity for interim reports must be specified in the Master QA Plan Supplement (Appendix A).

The contents of both interim and final QA reports will be similar, except the final report will include a summary of the interim reports.

The following items will be addressed in the reports:

1. An assessment of the precision and accuracy data associated with sample data generated during the report period,
2. Outcome of any corrective actions initiated during the report period,
3. Results of any QA audits performed during the report period,
4. Results of the QA data validation (refer to Section 8.3) performed during the report period, and
5. Any recommended solution to significant QA problems.

16.0 RESUMES

Following are resumes of key laboratory personnel at the St. Louis Chemistry Laboratory.

JAMES W. CASAGRANDE
Associate Scientist I
Metals Analysis Group Leader

PROFESSIONAL RESUME

SPECIALIZATION

Environmental Metals Analysis, Atomic Absorption and Inductively Coupled Plasma Emission Spectrophotometry, Method Development

RECENT EXPERIENCE

Environmental Science and Engineering, Inc., St. Louis, Missouri--1989 to present.

Metals Analysis Chemist--Operates the inductively coupled argon plasma (ICAP) spectrometer for trace metals analyses in environmental samples. Supervising technicians in the sample preparations and operation of atomic absorption spectrometer (AA) for low level metals analyses. Responsible for the scheduling of sample analyses and quality control of the laboratory.

MetaTrace, Inc., Earth City, Missouri--1986 to 1989

Metals and Inorganic Chemist--Performed chemical analyses for trace metals using ICAP and AA for various governmental agencies. Responsible for sample preparation for inorganic and radiological analyses.

Waste Management Group Leader--Responsible for the management of laboratory waste disposal and handling.

L.C. Metals, Granite City, Illinois--1986

Chemist--Performed chemical analysis on scrap metal samples for quality control.

EDUCATION

B.S.	(expected 1991)	Chemistry	University of Missouri-St. Louis
A.A.	1986	Chemical Technology	St. Louis Community College

LAURA A. CASAGRANDE
Specialist II
General Chemistry Analyst

PROFESSIONAL RESUME

SPECIALIZATION
General Chemistry Analyses, Ion Chromatography, IR Spectrometry, EP And TCLP Extraction

EXPERIENCE
Environmental Science and Engineering, Inc., St. Louis, Missouri--1988 to present.
General Chemistry Chemist--Responsible for the analyses of general (classical) parameters such as cyanide, phenolics, nitrogen, and sulfur contents of samples. Operates ammonia nitrogen selective electrode potentiometer and ion chromatograph for anions in water and soil samples. Responsible for the sample preparation by EPA extraction procedure (EP) and toxicity characteristic leaching procedure (TCLP) for the evaluation of hazardous characteristics of solid wastes.

Chevron Chemical Corp., Maryland Heights, Missouri--1987 to 1988
Laboratory Analyst--Sample preparation for instrumental analyses, operations of liquid chromatography and spectrometers, and data entry in the quality control laboratory.

EDUCATION
Associate 1987 Chem Tech. St. Louis Community College-Florissant Valley

Printed on Recycled Paper
C:\MKR\ES50 S3\LAC.1

CHRISTINE C. FAJATIN
Scientist
Metals Chemist

PROFESSIONAL RESUME

SPECIALIZATION

Metals Analyses, Atomic Absorption Spectrophotometry and Inductively Coupled Plasma Emission, Mercury Cold Vapor Analyses, Sample Preparation

EXPERIENCE

Environmental Science and Engineering, Inc., St. Louis, Missouri--1989 to present.

Metals Analyses Chemist--Responsible for the operation of atomic absorption spectrophotometer for metals analyses by graphite furnace technique. Operates ICAP and mercury cold vapor analyzer for the analysis of water and soil/sediment samples. Responsible for the sample preparation for instrumental analyses on ICAP and AA.

EDUCATION

B.S. 1988 Chemistry St. Louis University

JOHN F. GEMOULES
Staff Scientist
Chemistry Laboratory Project Manager

PROFESSIONAL RESUME

SPECIALIZATION

Analytical Chemistry, Environmental Sampling and Analysis, Analytical Method Development, Gas Chromatography, Gas Chromatography/Mass Spectrometry, Laboratory Coordination.

EXPERIENCE

Environmental Science and Engineering, Inc., St. Louis, Missouri, 1986 to present.

Analyses of Volatile Halocarbons in Water by GC/PID/HALL, Monsanto Chemical Company, St. Peters, Missouri--Ground water study for purgeable halocarbons in the aquifer. Analyses performed on purge and trap GC.

Laboratory Certification of Purgeable Organic Compound for ESE Midwest Regional Chemistry Laboratory--Successfully analyzed performance evaluation samples by the states of Florida and Wisconsin.

Analyzed Soil Samples for Contaminants in Cleanup Project, Mallinckrodt Inc., St. Louis, Missouri--Confirmatory analyses of site samples were performed for long-term project. Work performed using GC/ECD.

Method Development and Validation of Pesticide Analysis, Monsanto Chemical Company, St. Louis, Missouri, Project Chemist--Conducted and validated analytical techniques for the determination of Alachlor and Atrazine in water and surface water.

Remedial Investigation and Feasibility Study, Sharpe Army Depot, Stockton, California, Onsite Laboratory Analyses --Provided rapid turnaround on soil samples. Onsite work included sample prep, GC/ECD analysis, QA/QC duties, and final results to RI/FS team in less than 24 hours.

Environmental Science and Engineering, Inc., Gainesville, Florida, 1985 to 1986.

Analyses of Volatiles in Water, Soil, and Air for Various Clients, GC/MS, Analyses Conducted for Various Government and Industrial Clients--Responsible for GC/MS analysis of volatiles in water and soil, as well as air analyses by cryofocusing capillary GC/MS. Analyses conducted for various government and industrial clients.

Ambient Air Analysis for Volatile Organics by Tenax Adsorbent and Ambient Air Analysis for Non-Volatile Organics by Polyurethane Foam, Rocky Mountain Arsenal (RMA), Denver, Colorado, U.S. Army Toxic and Hazardous Materials Agency, Project Chemist--Work involved analyses of samples from RMA. Responsible for analysis of Tenax traps for volatiles by gas chromatograph. The effluent from the GC is also analyzed by the mass spectrometer. Semi- or non-volatile compounds in ambient air are collected on polyurethane foam which is soxhlet extracted and analyzed by GC/MS. Responsible for processing of the data from the non-volatiles analysis.

Chemical Waste Management, Willsonville, Illinois, 1984 to 1985.
Supervisor, Analytical Laboratory--Responsible for supervising seven chemists in hazardous waste organic analyses. Responsible for operation and maintenance of gas chromatograph and GC/MS, and identification of hazardous waste materials and quantitative analysis of PCBs and pesticides. Also performed quantitative analysis of industrial organic vapor by GC. Implemented corporate QA/QC program for most instrumental methods. Also assisted in streamlining the flow of sample and information to final report form, which resulted in the successful completion of the first laboratory and QA/QC audit.

Warner-Jenkinson Company, St. Louis, Missouri, 1980 to 1984.
Research Chemist--Worked in Color Production Department, Research Division. Responsible for development of new synthetic methods in the production of food, drug, and cosmetic colors and color intermediates. Instrumentation included HPLC and UV/IVS spectrophotometer. Scaled workable projects up to pilot plant. Successfully synthesized Shaffer's salt and Cresidiene Sulfonic Acid on the laboratory scale.

Department of Public Works, City of Edwardsville, Illinois, 1972 to 1976.
Engineering Technician--Duties included surveying; drafting; general engineering and initial design of projects for water, street, and sewer departments. Other duties included the processing of claims.

EDUCATION

M.S.	1980	Chemistry	Southern Illinois University
B.S.	1977	Chemistry	Southern Illinois University

PROFESSIONAL ASSOCIATIONS
American Chemical Society

KIMBERLY A. GRIMM
Assistant III
Extraction Technician

PROFESSIONAL RESUME

SPECIALIZATION
Organic Sample Extraction, Sample Preparation/Clean Up, Gel Permeation Chromatography

EXPERIENCE
Environmental Science and Engineering, Inc., St. Louis, Missouri--1990 to present.
Extraction Technician--Responsible for preparation of samples requiring GC and GC/MS analyses. Duties include the process of samples in accordance with specific methods such as CLP and other EPA methodologies. Operates the gel permeation chromatograph (GPC) for the clean up of extracts from soil, sediment, and animal tissue samples.

MetaTrace, Inc., Earth City, Missouri--1988 to 1990.
Lab Technician--Performed environmental sample preparation for pesticides, PCBs, BNAs, herbicides, nitroaromatics, phenols, and cyanides.

EDUCATION
H.S. 1983 Granite City North High School, Granite City, Illinois

CATHARINE ANN GUNTER
Scientist
Metals Chemist

PROFESSIONAL RESUME

SPECIALIZATION

Metals Analyses, Atomic Absorption and Inductively Coupled Plasma Emission Spectrophotometry, Mercury Cold Vapor Analyses, Sample Preparation

EXPERIENCE

Environmental Science and Engineering, Inc., St. Louis, Missouri--1990 to present.
Metals Analyses Chemist--Operates the mercury cold vapor analyzer for the determination of mercury in water and soil/sediment samples. Responsible for the sample preparation for instrumental analyses on ICAP and AA.

Environmetrics, Maryland Heights, Missouri--1988 to 1990
ICP Analyst--Responsibilities included trace metal analysis and preparations of water, soil, and hazardous waste samples. Performed EP toxicity and TCLP leachate generations. Involved in disposal of laboratory and sample waste disposal including completion of manifests.

Enviropact, Inc., St. Louis, Missouri--1986 to 1988
Laboratory Analyst--Performed trace metals analysis using flame and furnace atomic absorption spectroscopy. Responsible for sample preparation for AA, GC, and GC/MS analysis. Involved in general chemical analysis as well as serving as a liaison between laboratory and clients.

EDUCATION

B.S. 1985 Environmental Chemistry Southwest Missouri State University

FRANCIS Y. HUANG, Ph.D.
Associate Vice President
Director, St. Louis Chemistry Laboratory

PROFESSIONAL RESUME

SPECIALIZATION

Environmental Sampling and Analysis, Analytical Chemistry, Environmental Fate and Assessment Studies, Trace Organic Residue Analysis, Chemical Research and Development, Hazardous Waste Analysis, Toxic Organic Destruction Studies, Gas Chromatography, Gas Chromatography/Mass Spectrometry, High Pressure Liquid Chromatography and Laboratory Management

SELECTED PROJECT EXPERIENCE

Environmental Science and Engineering, Inc., St. Louis, Missouri, 1987 to present.

Laboratory Director for Various Industrial and Governmental Projects--Responsible for laboratory certification, personnel training, analytical method development, establishing laboratory quality control system, supervising clerk, technical functions of laboratory, and project management.

Environmental Samples Chemical Analyses for Air Force Bases (Continental U.S.A. and Hawaii) Regional Project Director--Supervising the laboratory operations of analytical support to the corporate project for Air Force Environmental Task Force for site investigations. The project involved the coordination of sample collection, transportation, laboratory methodologies evaluations, data QA/QC, and reporting.

Analytical Support and Method Development for Investigation of Explosion of a Gas Station, St. Louis, Missouri, Project Director--Conducted analyses of environmental samples from the explosion site for traces of fuel to determine the potential causes of the incident.

Environmental Sampling and Analysis for Environmental Audit Projects, Chicago, Illinois; St. Albans, Missouri, Laboratory Manager/Subproject Director--Managed laboratory analyses for the audit survey. Work involved method selection, trace organic and inorganic analysis in water, soil, and sediment samples.

Underground Storage Tank Investigations Chemical Analysis (Des Moines, Iowa; Chicago, Illinois; St. Louis, Missouri, Laboratory Project Director--Supervised and coordinated laboratory analyses of soil and water samples collected from underground petroleum product storage sites for fuel hydrocarbon content along with other aromatic pollutants.

Raba-Kistner Consultants Inc., San Antonio, Texas, Director, Analytical Chemistry Department, 1980 to 1987.

Environmental Assessment and Chemical Analyses of Pesticide Formulation Plants, San Antonio, Texas, Project Director--Conducted planning for drilling, monitor well installation, sampling and analyses for uncontrolled environment around pesticide plants with negligent waste management. The sites were under investigation by the Texas Water Commission, and EPA Region VI. A well-planned sampling protocol was developed and executed by company personnel. Analytical results were used

for remedial actions and involved selection of decontamination alternatives including removal and biological treatment.

Chemical Analyses of Environmental Samples from Ocean and River Dredging Operations, Corps of Engineers, Galveston District, Project Director--Contracted by the Corps of Engineers for chemical analysis services on environmental samples collected from the Gulf of Mexico Coast Dredging Operation. The samples consisted of sea waters of various salinity, sediments, marine biological, and river water. The environmental impact studies of these dredging activities included analysis for pesticides, PCBs, polynuclear aromatic hydrocarbons, and heavy metals. Biological accumulation of pollutants in fish and marine organisms was also studied.

Emergency Response Chemical Analyses of Environmental Pollutants of Derailment Accidents, San Antonio, Texas, Laboratory Manager--Supervised sampling and laboratory analysis of environmental samples collected from two railroad derailment sites involving spills of sulfuric acid and organic chemicals such as formaldehyde and ethylene glycols. Remedial actions were taken immediately after the laboratory results became available. Method developments were conducted shortly after the accidents occurred.

Priority Pollutant Analyses in Municipal Wastewater and Municipal Solid Waste Landfill Ground Water Monitoring Wells, Laboratory Manager--Analyses for various cities in Texas, including Austin, San Antonio, Corpus Christi, Kerrville, Del Rio, Laredo, and Kingsville, involved complete priority pollutant analyses in samples from municipal facilities such as wastewater treatment plants, wastewater discharge, landfill runoff, and ground water monitoring wells in solid waste landfills.

Air Sampling Program for Municipal Wastewater Treatment Plants in South and North Texas, Project Manager--Designed sampling techniques and developed analytical methods for the analyses of trace organic compounds during environmental impact studies.

Industrial Consulting Service for Hazardous Waste Treatment and Disposal Method Studies for Petroleum and Natural Gas Companies in Texas, New Mexico, and Louisiana--Provided consulting for the methods of proper treatment of wastes in compliance with governmental regulations for energy-related facilities.

Hazardous Waste Analyses for Site Cleanup for U.S. Air Force Bases, San Antonio, Texas--Supervised the analyses of various toxic compounds in Air Force facilities. The results were utilized for environmental assessment and the determination of remedial actions.

Institute of Applied Science, North Texas State University, Denton, Texas, Research Assistant and Associate, 1976 to 1980.

Destruction of Pollutants in Water and Wastewater Research, Research Associate--Conducted the process design and reactor construction in an EPA-funded project studying the feasibility of ozone and ozone with ultraviolet radiation as a disinfectant. Studied the mechanism of the decomposition of polychlorinated

biphenyls (PCBs) in aqueous media and identified the by-products. A pilot-scale study was contracted by EPA based on the laboratory studies.

Wastewater Treatment Feasibility Studies in Santa Claude Valley Water District, California, and North Texas, Research Associate--Evaluated the chlorination processes of the wastewater treatment plants for drinking water supplies. Chlorinated by-products were isolated and identified to provide plant engineers the recommendations of process design to maximize the efficiency of chlorination while reducing the harmful products.

Method Development of Micro-extraction Procedure for Halogenated Hydrocarbons in Drinking Water--Conducted an EPA-funded project to develop a simple trapping system for small chlorinated by-products in drinking water source for the risk assessment of human consumption.

EDUCATION

Ph.D. 1979 Analytical Chemistry North Texas State University-Denton
B.S. 1972 Chemistry Tunghai University-Taiwan

PROFESSIONAL REGISTRATION

Certified Professional Chemist (CPC) - American Institute of Chemists

PROFESSIONAL ASSOCIATIONS

American Chemical Society
American Society for Testing and Materials
American Association for Advancement of Sciences
American Industrial Hygienist Association
American Institute of Chemists

PATENT

U.S. Patent 4,478,736. Composition and Process for the Treatment of Clay Slimes.

PUBLICATIONS

Glaze, W.H., G.R. Peyton, and F.Y. Huang. 1977. "Ozone and Ozone/UV Destruction of Trihalomethane Precursors and Other Refractory Organic Compounds in Water," Proceedings of the Symposium on Advanced Ozone Technology, Toronto, Canada.

Huang, F.Y. 1978. "Analytical Methods for the Determination of Polar Organic Compounds in Water at Trace Levels," Dallas Society of Analytical Chemists Annual Meeting.

Glaze, W.H., G.R. Peyton, and F.Y. Huang. 1978. "Applications of HPLC for Analysis of Environmental Samples and Their Oxidation and Chlorination Products," 34th ACS Southwest Regional Meeting, Corpus Christi, Texas.

Glaze, W.H., G.R. Peyton, and F.Y. Huang. 1978. "A Comparison of Ozone and Ozone and Ozone/UV for the Destruction of Refractory Organic Compounds in Water,"

The Ozone Technology Symposium of International Ozone Institute, Los Angeles, California.

Glaze, W.H., F.Y. Huang, G.R. Peyton, and F.Y. Saleh. 1979. "Analysis of Disinfection By-Products in Water and Wastewater," International Journal of Environmental Analytical Chemistry, Vol. 7.

Peyton G.R., F.Y. Huang, and Glaze, W.H.,. 1979. "Treatment of Potential Drinking Water Supply Problems with Ozone and Ozone/UV," The 4th International Ozone Conference, Houston, Texas.

Glaze, W.H., G.R. Peyton, F.Y. Huang, J.L. Burleson, and P.C. Jones. 1980. "Oxidation of Water Refractory Species by Ozone with Ultraviolet Radiation," U.S. EPA-600/80-110, Municipal Environmental Research Laboratory, U.S. Environmental Protection Agency.

Huang, F.Y. 1981. "The Current Analytical Techniques for Environmental Water Pollutants," 63rd Annual Texas Water Utility Association Short School, Texas A&M University.

Glaze, W.H., G.R. Peyton, and F.Y. Huang. 1983. "Destruction of Pollutants in Water with Ozone in Combination with Ultraviolet Radiation," 1. and 2. Environmental Science and Technology, Vol. 16.

Huang, F.Y. 1984. "Ion Chromatography-The Instrument and its Application in Analytical Chemistry," Proceedings of Sixth Annual Science, Engineering and Technology Seminars, Houston, Texas.

Huang, F.Y. 1986. "Environmental Chemistry - An Overview of the Science and Technologies," Sun City Laboratory Analyst's Association and Texas A&M University 4H Program Seminar, El Paso, Texas.

Huang, F.Y. 1987. "Environmental Pollutions and Solutions - The Treatments of Hazardous Wastes," Annual Science and Biomedical Lectures, Incarnate Word College, San Antonio, Texas.

DEAN J. HUHMANN
Laboratory Data Manager

PROFESSIONAL RESUME

SPECIALIZATION

Data Base Management, Laboratory Applications, Program Development, PC Communications, Data Reduction and Statistics

EXPERIENCE

Environmental Science and Engineering, Inc., St. Louis, Missouri, June 1987 to present.

Chemistry Laboratory Data Management--Operates laboratory data base management system for Midwest Regional Chemistry Laboratory. Develops applications software for analytical data evaluation, laboratory budgeting system, QA/QC monitoring, samples control logs, and office administration usage. Supervises the data communications between the corporate laboratory computer and Midwest Regional Laboratory.

Biological Data Management--Developed and maintains software for the evaluation and synthesis of biological data collected on a wide variety of projects to evaluate environmental impacts. The system is designed to be versatile and efficient to enable ecological data to be quantified taxonomically. Additionally, this data base interacts with statistical data bases to enable interaction between biological data and other physical/chemical parameters to be evaluated.

Data Management System Development for Environmental Projects--Developed dBase III data base management system for reduction and statistical analysis of ground water remediation project.

Sports Stats, Inc., 1984 to 1987.

High School Athletic Software Development, Head Programmer--Developed and maintained BASIC software packages for the IBM PC/XT, Apple IIe/IIc, and TRS-80 personal computers. These packages were designed to be used mainly in the area of high school sports administration. Also provided technical support to customers both in the office and on the phone.

Wang Computer Operator--Assisted in the collection, entry, and distribution of statistical sports information. Operated a Wang 2200 computer in all phases of its operation. These duties included: system start-up and shutdown, transmission of information via telecommunication, hard disk backup, word processor system reorganization and maintenance, and BASIC program maintenance.

EDUCATION

B.S. 1986 Management Information Systems SIU - Edwardsville

ETHAN C. LITSEY
Staff Scientist

PROFESSIONAL RESUME

SPECIALIZATION

Gas Chromatography, Atomic Absorption Spectroscopy, Sample Management, Project Coordinator, Laboratory Report Generation

EXPERIENCE

Environmental Science & Engineering, Inc., St. Louis, Missouri. 1991 to present.
Project Management Assistant--Responsible for the laboratory data report generation and project progress monitoring. Assists the Laboratory Project Manager in scheduling, client coordination, sample control, laboratory QA/QC evaluation, and marketing.

Monsanto Chemical Co., St. Louis, Missouri. 1990 to 1991.
Research Technician--Performed sample preparation for agricultural applications of chemicals. Conducted GC analyses of trace chemical residues.

American Bottoms Regional Wastewater Treatment Plant, Sarget, Illinois, 1988-1990.
Chemist II--Managed samples and equipment for trace metals determinations, pesticide/herbicide analysis, and total organic carbon analyses using Atomic Absorption Spectroscopy (AA-flame, furnace, and cold vapor), Gas Chromatography (GC) and Total Organic Carbon Analysis (TOC).

Prairie Farms Dairy Inc., O'Fallon, Illinois, 1986.
Laboratory Technician--Responsible for quality control testing for ice cream products and raw materials, microbiological testing, formulation/adjustment of production batches and use of computer applications in data entry and keeping accurate records.

EDUCATION

B.S. 1986 Chemistry McKendree College

RAYMOND E. LOGSDON
Senior Associated Scientist

PROFESSIONAL RESUME

SPECIALIZATION

Gas and High Pressure Liquid Chromatography, Atomic Absorption Spectroscopy, Continuous Flow Analysis, and Analytical Organic and Inorganic Chemistry

EXPERIENCE

Environmental Science & Engineering, Inc., St. Louis, Missouri. 1991 to present.

GC Chemist--Responsible for maintenance and operation of gas and liquid chromatographs for the analysis of pesticides, PCBs, agricultural chemicals, industrial hygiene analysis, and various organic compounds. Responsible for analytical organic method development for gas and liquid chromatography analysis.

Ralston-Purina Company, St. Louis, Missouri. 1980 to 1991.

Group Leader--Responsible for the coordination of the Organic Analysis Group which performed analytical determinations on food, feed, beverage, and ingredient matrices. Conducted independent research directed towards the development of new methodologies.

Analytical Chemist--Performed various analyses of food, feed, beverage, and ingredient matrices including drugs, fat and water soluble vitamins, pesticides, PCBs, preservatives, fatty acids, heavy metals and inorganic ions.

Sigma Chemical Company, St. Louis, Missouri. 1979 to 1980.

Production Chemist--Extracted, isolated, purified, and evaluated enzymes and other proteins derived from plant and animal sources. Developed expertise in the use of plant-size equipment allowing scale-up of procedures from bench-top to production runs.

EDUCATION

B.S.	1979	Chemistry	Southwest Missouri State University
A.A.	1976	General Studies	St. Louis Community College--Meramec

ASSOCIATIONS

Association of Official Analytical Chemists

STEVEN J. MITCHELL, B.S.
Chemist, Gas Chromatograph/Mass Spectrometry Laboratory

PROFESSIONAL RESUME

SPECIALIZATION

Environmental Organic/Inorganic Analysis, Gas Chromatography, Atomic Absorption Spectrometry

EXPERIENCE

Mr. Mitchell has had more than 3 years of analytical chemistry and support experience in the following areas of environmental sample analysis: gas chromatographic and atomic absorption spectrometric quantitation, inorganic sample preparation and digestion methods, and EPA procedures for organic extractions, glassware cleaning, and sample container preservation.

Environmental Science & Engineering, Inc., St. Louis, Missouri, February 1991 to present.

GC Volatiles Chemist--Responsible for the analysis of environmental samples using GC purge/trap techniques for volatile organics operating two gas chromatographs and preparing samples by EPA extraction procedures.

Pima County Wastewater Management, Tucson, Arizona, August to December 1990.

Laboratory Assistant--Responsible for sample bottle and glassware cleaning according to EPA specifications in an inorganic laboratory. Performed weekly and monthly laboratory safety checks.

Turner Laboratories, Tucson, Arizona, January to May 1990.

Organic Chemist--Utilized gas chromatography to quantitate volatile/semivolatile organics in water and soil samples. Operated two gas chromatographs, infrared spectrophotometer, and total organic carbon instrument. Performed EPA-based extractions.

Environmental Trace Substances Research Center, Columbia, Missouri, June 1988 to May 1989.

Research Laboratory Technician--Determined arsenic and selenium levels in plant, animal, soil, water, and food samples by atomic absorption spectrometry. Operated two atomic absorption spectrophotometers. Digested environmental samples.

EDUCATION

B.S. 1986 Chemical Engineering University of Missouri-Columbia

SUSAN E. MUZZEY
Senior Associate Scientist I
GC Chemist

PROFESSIONAL RESUME

SPECIALIZATION

Analytical Organic Chemistry and Method Development, Environmental Organic Analyses, Industrial Hygiene Analysis, Pesticide and PCB Residue Analysis, Agrichemical Residue Analysis, Feed and Food Ingredient Analysis, Gas Chromatography, High Pressure Liquid Chromatography

EXPERIENCE

Environmental Science and Engineering, Inc., St. Louis, Missouri, 1990 to present.
GC Chemist--Responsible for the maintenance and operation of gas chromatographs for the residue analysis of pesticides, PCBs, agricultural chemicals, industrial hygiene analyses, and for various organic chemicals. Responsible for analytical organic method development for gas chromatography analysis.

SCI Environmental, Inc., Chesterfield, Missouri, 1989 to 1990.
Senior Chemist--Responsible for gas chromatography laboratory start-up and development of laboratory procedures for the analysis of petroleum residues, volatile organics, pesticides, PCBs, and herbicides in environmental samples. Performed gas chromatography analyses for EPA evaluation studies and routine organic residues.

Monsanto Chemical Company, St. Louis, Missouri, 1989.
Instrument Technician--Responsible for GC analysis and characterization of specialty chemicals including hydraulic fluids and heat transfer fluids for special short-term project.

MetaTrace, Inc., Earth City, Missouri, 1988 to 1989.
Instrument Technician--Responsible for GC analysis of pesticide, PCB, and herbicide residues in environmental samples. Performed GC and HPLC method validation studies on agrichemical products for major chemical companies.

Attorney, St. Louis, Missouri, 1984 to 1988.
Provided legal and technical consulting and litigation support for major areas defense law firms on toxic chemical and hazardous waste spills.

Ralston Purina Company, St. Louis, Missouri, 1975 to 1981.
Pesticide and PCB Analysis, Research Chemist--Performed routine GC residue analysis on agricultural products, feeds, foods, and ingredients. Responsible for instrument maintenance and development of quality control programs for USDA, FDA, and EPA compliance.

Nutritional Labeling, Research Chemist--Performed GC, HPLC and spectrophotometric analysis on various food and feed products to ensure compliance with nutritional labeling requirements for water- and fat-soluble vitamins, fatty acids, preservatives, and amino acids.

Special Projects, Research Chemist--Performed non-routine instrument and chemical analyses including ethanol content of wines, sodium benzoate in pickles, lidocaine ampoules quality control, chlordane forensic analysis, protein content of mushrooms, and characterization of unknown feed contaminants.

Method Development, Research Chemist--Responsible for trouble-shooting routine analyses and development of new analytical procedures for the organic analysis laboratory. Projects included validation of EPA GC methods for herbicides in water and HPLC analysis of water-soluble vitamins, sugars, alfatoxins, and antibiotic residues.

Applied Science Labs, Inc., State College, Pennsylvania, 1974 to 1975.
Chemist--Responsible for the synthesis of sterols for medical research and for the production of radioactively-labeled sterols, fatty acids, and fatty alcohols.

EDUCATION

J.D.	1984	Law	St. Louis University School of Law
B.S.	1974	Chemistry	Pennsylvania State University

PROFESSIONAL CERTIFICATIONS

Licensed to practice law in the State of Missouri

PUBLICATIONS

Dunmire, D.L., S.E. Otto (Muzzey). "High Pressure Liquid Chromatographic Determination of Sugars in Various Food Products." Journal of the Association of Official Analytical Chemists, Volume 62, No. 1 (1979). Presented at the annual convention of the AOAC, Washington, DC, 1977.

Muzzey, S.E. "The Safe Drinking Water Act and the Realities of Groundwater Pollution." 27 St. Louis University Law Journal (1983).

Printed on Recycled Paper

WADE H. PRICE
Associate Scientist II/GC Chemist

PROFESSIONAL RESUME

SPECIALIZATION
Environmental Volatile Organic Analyses, Gas Chromatography, Gas Chromatograph/ Mass Spectrometer, UST Chemical Analyses, Pesticide/PCB Analyses, Laboratory Automatic Data System

EXPERIENCE
Environmental Science and Engineering, Inc., St. Louis, Missouri, 1989 to present.
GC Chemist--Responsible for operation of gas chromatographs for the analyses of volatile organics and petroleum hydrocarbons. Acts as the assistant GC/MS operator for the GC/MS volatile laboratory for EPA Methods 624 and 8240.

Analysis of Petroleum Contaminants in Support of Underground Storage Tank (UST) Leak Investigation--Responsible for the operation of volatile organic analyses (VOA) task force in the laboratory for petroleum residues analyses including benzene, toluene, ethylbenzene, and xylenes (BTEX).

Responsible for the fingerprint identification of gasoline in environmental samples using GC with various detectors.

Resources Conservation Company, Bellevue, Washington, 1988 to 1989.
Pesticide/PCB Chemist--Attained data describing PCB and pesticide contamination in soils, oils, and waters by gas chromatographic methods. Assured performance by EPA QA/QC guidelines and methods.

Sigma Chemical Company, St. Louis, Missouri, 1987 to 1988.
Chemist--Performed QC analysis using traditional wet chemistry techniques. Responsible for group waste solvent disposal.

Monsanto Chemical Company, St. Louis, Missouri, 1987.
Technician--Conducted chemical analyses for fungicides and herbicides in the Agriculture Chemical Technology Division and implemented inventory control system and computer graphics capabilities in pilot plant operation for Animal Sciences Division.

EDUCTION
B.S. 1985 Chemistry Pacific Lutheran University, Tacoma, Washington

PROFESSIONAL ASSOCIATIONS
American Chemical Society

JANA L. ROSS
Specialist II
Extraction Analyst

PROFESSIONAL RESUME

SPECIALIZATION
Organic Sample Extraction, Sample Preparation/Clean Up, Gel Permeation Chromatography

EXPERIENCE
Environmental Science and Engineering, Inc., St. Louis, Missouri--1989 to present.
Sample Extraction Specialist--Responsible for preparation of samples requiring GC and GC/MS analyses. Duties include the process of samples in accordance with specific methods such as CLP and other EPA methodologies. Operates the gel permeation chromatograph (GPC) for the cleanup of extracts from soil, sediment, and animal tissue samples.

MetaTrace, Inc., Earth City, Missouri--1988 to 1989.
Lab Technician--Performed environmental sample preparation for organics analysis including pesticides, herbicides, PCBs, BNAs, and nitroaromatics. Also prepared samples for metals analysis, phenols, and cyanides.

Evirodyne Engineering, Inc., St. Louis, Missouri--1987 to 1988.
Chemical Technician--Performed environmental sample preparation for GC and GC/MS analyses including doxins.

EDUCATION

A.S.	1987	Chemistry	Belleville Area College, Belleville, Illinois
A.S.	1987	Foreign Languages	Belleville Area College, Belleville, Illinois

JEFFREY W. SIRIA
Laboratory Manager/Staff Scientist

PROFESSIONAL RESUME

SPECIALIZATION

Analytical Chemistry, Analytical Method Development, Environmental Sampling and Analysis, Hazardous Waste Analysis, Industrial Hygiene Sampling and Analysis, Chemical Research and Development, Gas Chromatography, Gas Chromatography/Mass Spectrometry, High Pressure Liquid Chromatography, Optical Spectroscopy, and Laboratory Management

EXPERIENCE

Environmental Science and Engineering, Inc., St. Louis, Missouri, 1989 to present.

Laboratory Management for Various Industrial Projects--Responsible for laboratory quality control, analytical method development and management of various projects involving analysis of trace level organics in air, water, and food samples.

Emergency Response Chemical Analysis of Environmental Pollutants in Soils--Supervised laboratory analysis of soil samples taken from area around underground storage tanks for trace level organic and inorganic parameters and coordinated 24-and 48-hour response to client.

Senior Scientist, Industrial Testing Laboratories, Inc., St. Louis, Missouri, 1980-1989.

Environmental and Industrial Hygiene Accreditation Programs Management--Supervised and performed organics analyses for initiation of AIHA and EPA certifications and quarterly performance evaluations. Responsible for start-up of gas chromatograph/mass spectrometer and assisted in start-up of plasma emission spectrophotometer used for certification analyses.

Emergency Response Chemical Analyses of PCBs in Soil--Performed analyses and coordinated 24-hour response for remedial clean-up of California work site. GC/EC analysis performed on more than 300 samples taken from the site of a transformer explosion, including waters, oils, and sludges.

Monitoring of PCBs in Hazardous Wastes--Responsible for method development and laboratory start-up for monitoring PCBs in various wastes. Preparation and analysis of samples designed for immediate turnaround as complete characterization required prior to acceptance for processing in Waterbury, Connecticut.

Perchloroethylene Stack Emissions Study for Dry Cleaning Equipment Modifications--Performed analyses and assisted in system design of dry cleaning units for compliance with New Jersey EPA air quality regulations. Responsible for analyses used to evaluate cartridge regeneration of perchloroethylene in detergent systems.

Residential Evaluations for Health Risk Assessment--Conducted sampling and analysis of various airborne contaminants in home, including formaldehyde, chlordane, organic solvents and permanent gases. Involved investigative analysis and legal testimony for product liability on numerous occasions.

Site Evaluation for OSHA Compliance for Airborne Nuisance Dust--Conducted two-week sampling of steel foundry and coordinated gravimetric and X-ray fluorescence analysis of samples for total and amorphous silica.

X-Ray Photoelectron Spectroscopy Studies of Charging Effects on Metal Oxide Surfaces--Performed XPS analysis on 15 elements in metal oxides and salts in solid state. Externally applied silver used for normalization of binding energies altered by surface charging effects.

Method Development and Chemical Analysis of Part-Per-Billion Levels of Surfactants in Industrial Discharges--Assisted in the development of methodologies used for monitoring trace levels of linear alkylbenzenesulfonates, alcohol ethoxylates, and sultones in wastewaters and sludges.

Product Deformulation and Characterization of Industrial Detergent Systems--Supervised and performed chemical analyses to aid studies of product performance using gas and high pressure liquid chromatography, infrared spectroscopy, and wet chemical techniques. Assisted in the formulation and modification of new detergent systems for various commercial applications.

Chemical Analysis of Wines for Contamination with Methyl Alcohol--Performed gas chromatographic analyses on more than 250 wine samples imported from Italy. Coordinated 24-hour response to distributors requiring certification that wine was free of methyl alcohol prior to sale.

Evaluation of Alcoholic Beverages for Calorie and Alcohol Content--Performed analysis using gas chromatography and adiabatic calorimetry on more than 300 wine cooler and beer samples. Also performed headspace analysis to determine pressure and permanent gas composition.

Chemical Analysis of Dental Pastes and Gels for Hydrolyzable Fluoride--Conducted studies involving sample preparation and analysis of various toothpastes and related products using ion-selective electrode techniques. Included method development for determining free and hydrolyzable fluoride and the associated rates of hydrolysis.

Analytical Chemist, Louisville Water Company, Louisville, Kentucky, 1977-1980.
Ohio River Sanitation Commission (ORSANCO) River Water Monitoring Program--Performed analyses and coordinated monitoring for trace volatile halogenated organics at the Crescent Hill Filtration Plant for quality profile and spill response on the Ohio River. Developed protocol for the use of Hewlett-Packard gas chromatographs using electrolytic conductivity detection for system network.

Hydrogen Peroxide as a Treatment for Disinfection and Reduction of Trihalomethane Formation in Potable Waters--In-house publication from laboratory studies on bacteriological quality control with disinfectant systems other than chlorine.

Granular Activated Carbon Filtration for Organics Removal in Source Waters--Performed studies on removal of halogenated organics formed via chlorination as well as removal of humic precursors prior to chlorination using coagulation/powdered activated carbon.

Pre- and Post-Ammoniation Treatment in Plant Process Waters for Combined Chlorine Residuals in the Louisville Water Company Distribution System--Conducted studies on the effects of chlorine quenching for both bacteriological quality and trihalomethane formation reduction. In-house report following 6-month plant-scale study.

Analytical Chemist, Reagent Chemical and Research, Jeffersonville, Indiana, 1976-1977.

Generation and Evaluation of Adsorption Isotherms for Synthetic Magnesium Silicates--Performed studies relating to the adsorption rates and capacities of plant product for use in regeneration of various oils and polyglycols.

EDUCATION

Ph.D.	(expected 1991)	Chemistry (Inorganic)	University of Missouri-St. Louis
M.S.	1986	Chemistry (Analytical)	University of Missouri-St. Louis
B.S.	1975	Chemistry	Murray State University

PROFESSIONAL ASSOCIATIONS

American Chemical Society

PUBLICATIONS

Baldwin, R.P., J.F. Price, J.W. Siria. "Application of Chemically Modified Electrodes to Organic Voltammetric Analysis." Proceedings, National Meeting of the American Chemical Society, Honolulu, Hawaii, April 1979.

Hubbs, S.A., M. Goers, J.W. Siria. "Use of Alternate Disinfectants at Louisville for Trihalomethane Control." Proceedings, American Water Works Association Seminar on Controlling Organics in Drinking Water, San Francisco, California, June 1979.

Hubbs, S.A., M. Goers, J.W. Siria. "Plant Scale Examination and Control of a Chlorine Dioxide-Chloramine Process at the Louisville Water Company." Proceedings, Third Conference on Water Chlorination - Environmental Impact and Health Effects, Colorado Springs, Colorado, October 1979. Water Chlorination, Volume 3 (R.L. Jolley, *et al*, editors) Ann Arbor Publishing, Ann Arbor, Michigan.

Siria, J.W., R.P. Baldwin. "Adsorption Pre-Concentration and Analysis of Dopamine at Platinum Electrode Surfaces." Analytical Letters, 13(A7), pp. 577-588 (1980).

Duke, D.T., J.W. Siria, B.D. Burton, D.W. Amundsen. "The Control of Trihalomethanes in Drinking Water." Proceedings, 50th Annual Conference of the Kentucky-Tennessee Section of the American Water Works Association, Memphis, Tennessee, November 1978. Journal of the American Water Works Association, Volume 72, No. 8, pp. 470-476 (1980).

Anderson, G.K., G.J. Lumetta, J.W. Siria. "Photochemical Studies of Diphosphine-platinum Oxalate Complexes." Proceedings, Midwest Regional Meeting of the American Chemical Society, St. Louis, November 1989.

MICHAEL A. TRAVIS
Senior Associate Scientist II
GC/MS Group Leader

PROFESSIONAL RESUME

SPECIALIZATION

Environmental Organic Analysis, Gas Chromatography/Mass Spectrometry, Forensic Chemistry, Organic Analysis Method Development

EXPERIENCE

Environmental Science and Engineering, Inc., St. Louis, Missouri, 1987 to present.

Group Leader, Gas Chromatograph/Mass Spectrometry Laboratory--Responsible for the operation and maintenance of gas chromatography/mass spectrometers. Supervising chemist in the laboratory for GC/MS analyses.

GC/MS Extractable Organic Analysis Task Force for Environmental Samples for Various Air Force Bases, Project Chemist--Responsible for the planning, coordinating, and supervision of various types of environmental samples for organic pollutants using GC/MS techniques. A comprehensive CLP protocol was used for this task.

Identification of Pollutants in Ground Water for Environmental Audit Programs, Project Chemist--Conducted GC/MS analyses for priority pollutants in samples collected from various sites for environmental audit programs.

Contaminants Analyses in Environmental Samples from Reactor Accident in a Chemical Plant, St. Louis, Missouri, Project Chemist--Responsible for the analyses to identify any contaminants on agricultural products suspected to be polluted with chemicals from a reactor explosion. The results were used for litigation.

Envirodyne Engineers, St. Louis, Missouri, 1985-1987.

Chemist III (GC/MS)--Responsible for the analysis of environmental samples by gas chromatograph/mass spectrometer for volatile organic substances and base/neutral extractables (priority pollutants). Duties also included analysis of environmental samples and personal monitors for the presence of 2,3,7,8 TCDD as well as total dioxins and furans by GC/MS. Experienced with Hewlett-Packard SIDS and RTE VI data systems; model numbers 5985, 5996, and MSD GC/MS.

St. Louis County Police Department, St. Louis, Missouri, 1982-1985.

Forensic Scientist (Sr.)--Responsible for the analysis and interpretation of criminal evidence including drugs, alcohol content, arson and explosion debris, and serology. Duties also included problem-solving, research and development of new methods, training new forensic scientists, and expert witness for courtroom testimony. Appointed acting laboratory supervisor which included supervision of three forensic scientists, two firearm examiners, and one clerk.

McCluer High School, Florissant, Missouri, 1978-1982.

Chemistry Teacher--Taught general chemistry and advanced chemistry with emphasis on analytical and organic chemistry.

EDUCATION

B.A. 1976 Chemistry St. Louis University

PROFESSIONAL ASSOCIATIONS

American Chemical Society

JUDITH O. ZWICKER, Ph.D.
Quality Assurance and
Health and Safety Supervisor

PROFESSIONAL RESUME

SPECIALIZATION

Quality Assurance, Health and Safety, Air Quality Studies, Data Analysis

EXPERIENCE

RI/FS at Crab Orchard NPL Site, USACE-Omaha, Quality Assurance Supervisor--The RI/RA/FS for the DOD Operable Unit includes areas previously identified to be of concern in a confirmation study performed in 1988 as well as areas of potential concern currently unidentified. A detailed records survey will be conducted to obtain information regarding currently unidentified areas of concern such as burning grounds, red and yellow water disposal areas and underground tanks. Contaminants of concern at the site include explosives, metals, solvents, polycyclic aromatic hydrocarbons (PAHs), and possibly pesticides. The potential presence of unexploded ordnance is also of concern. A detailed Work Plan, Site Safety and Health Plan, and Quality Assurance Project Plan will be prepared to define the scope of the RI and identify specific sampling locations and sampling methodologies. RI activities will include installation of groundwater monitoring wells, surface water and sediment sampling, surface and subsurface soil sampling, and trenching operations to confirm the presence of unexploded ordnance. Upon completion of the RI, a baseline RA will be conducted to determine if the operable unit presents an endangerment to human health and the environment. An FS will then be conducted on the basis of the findings of the RA.

Remedial Investigation/Feasibility Study, Koppers Wood Treating Plant, Carbondale, Illinois, Quality Assurance Supervisor--Contaminants of concern at the site include creosote and pentachlorophenol in soil, ground water, surface water, and sediment. Project being conducted under the terms of consent agreements between Koppers Company and Illinois EPA, the Illinois Office of the Attorney General, and USEPA, Region V. The RI involves collection of two rounds of samples from a 53 well monitoring network; completion of more than 190 soil borings with the collection of over 1,000 soil samples; and sampling of private wells, surface water, sediments, air, and aquatic organisms to determine contaminant levels. Results of the RI were incorporated into an Endangerment Assessment and Feasibility Study to identify a recommended alternative for site remediation.

Remedial Investigation/Feasibility Study at Koppers Wood Treating Plant NPL Site, Galesburg, Illinois, Quality Assurance Supervisor--ESE performed Remedial Investigation/Feasibility Study (RI/FS) and provided other associated remedial action assistance for cleanup at an NPL wood treating plant site. Work was performed under the terms of a Consent Agreement between the plant, the Illinois EPA, and the Illinois Office of the Attorney General. The RI included: installation of 27 additional monitoring wells; three rounds of sampling from the 52 well monitoring network; sampling of private wells; pump tests; a shallow seismic geophysical survey; collection of over 1,000 soil samples; sampling of surface waters and sediments; sampling of lagoon sludges; and air monitoring for PNAs, phenols and cresols. An Endangerment

Assessment was prepared to define contaminant transport pathways and levels of endangerment to the public and the environment. Remedial technologies evaluated under the FS included: onsite incineration, onsite landfilling, biological treatment of soil, capping, ground water extraction wells and interceptor trenches, and a range of ground water treatment concepts. The FS was prepared in accordance with the provisions of SARA, CERCLA, and the NCP.

Quality Assurance Supervisor--In this capacity, has reviewed organic and inorganic analyses performed with Contract Laboratory Procedures (CLP) as well as the usual laboratory analytical procedures; have performed system audits on the laboratory and have been involved in the laboratory certification procedure.

Health and Safety Supervisor--In this capacity, has supervised office medical surveillance program and health and safety training program.

JZ Consulting, St. Louis, Missouri--August 1988 to September 1989.
Consultant--Assisted the Quality Assurance subcontractor, Environmental Solutions, Inc., for a multi-site remote sensing study in New Jersey. The project involved the determination of concentrations of target compounds in the air above several hazardous waste sites using Fourier Transform InfraRed Spectroscopy, Long Path Ultra Violet Spectroscopy, and LIDAR instrumentation. Performed full AHERA sampling and analysis for the walls of five dormitory buildings at a private school in St. Louis, Missouri. Performed a study to determine concentrations of vapors of several hazardous chemicals known to be used in a printing facility of a moderate size St. Louis company. Area samples were collected using OSHA/NIOSH methods. Determined PM-5 and total particulate loading for area samples to assist in ventilation renovation for a welding facility at an Illinois plant.

AeroVironment, Inc., Monrovia, California--July 1987 to August 1988.
Senior Scientist--Analyzed and evaluated data for determining the precision and accuracy of various air quality samplers and methods used during the Southern California Air Quality Study (1987) involving determination of gaseous and particulate samples at 11 sites throughout the Los Angeles basin. Analyzed and wrote a report on the equivalence, precision and predictability of mass and elemental concentrations from 13 different samplers used in several multi-year Western air quality studies supported by the EPA, the Electric Power Research Institute (EPRI), the National Park Service (NPS), and the Department of Defense. Wrote a statistical method to be used by various groups working on SCENES (Subregional Cooperative Electric Utility, National Park Service, Department of Defense and Environmental Protection Agency Study). The method allowed a consistent approach to the comparison of data from different methods such as samplers, sampling media, or analytical techniques.

AeroVironment, Inc., Midwest Office, St. Louis, Missouri--February 1987 to July 1987.
Consultant--Prepared a report on the methodology used by the EPA in assigning the Threshold Planning Quantities for the 402 Acutely Toxic Chemicals under SARA Title III Section 302 for the Chemical Manufacturers Association.

Mallinckrodt, Inc., Corporate Analytical Research Group, St. Louis, Missouri--October 1986 to December 1986.

Temporary Analyst--Analyzed chemical samples for quality assurance, MSDS sheets, and environmental impact using microbore, capillary and packed column gas chromatography.

Washington University, Department of Mechanical Engineering, St. Louis, Missouri--May 1983 to April 1984.

Research Associate--Analyzed data related to the Baltimore-Washington urban plume. Data included chemical, meteorological and source emissions.

Meteorology Research, Inc., Santa Rosa, California--August 1979 to August 1981.

Consultant--Was involved in quality assurance, data analysis and report writing for a multi-year visibility project in the desert Southwest, Project VISTTA (Visibility Impairment due to Sulfur Transport and Transformation in the Atmosphere). Project involved the comparison of various methods of sulfur sample collection and analysis, determination of plume dispersion and the transformation of sulfur and NO_2 in power plant and copper smelter plumes, determination of the relative impact of power plant and copper smelter plumes in the region, and an understanding of other sources of visibility impairment in the region.

EDUCATION

Ph.D.	1973	Physical Chemistry	Brown University, Providence, RI
B.S.	1965	Chemistry	UCLA

PROFESSIONAL CERTIFICATION

AHERA - Accredited Asbestos Building Inspector (Reaccredited 9/89)

ASSOCIATIONS

Air and Waste Management Association

PUBLICATIONS

Zwicker, Judith and Ronald Lovett. (work in progress) "When Does a Pair Correlation Function Fix the State of an Equilibrium System?"

Watson, J.G., C.F. Rogers, N.F. Robinson, W.H. Albright, J.O. Zwicker, C.V. Mathai, and I.H. Tombach. April 1989. "An Intercomparison of Aerosol Samplers Used in Western Visibility Studies." Report prepared for The Electric Power Research Institute by the Desert Research Institute and AeroVironment, Inc.

Pankratz, D. and J.O. Zwicker. December 1987. "Nitrate Sampling in Shenandoah, Mt. Rainier and Rocky Mountain National Parks." Report prepared for the National Park Service by AeroVironment, Inc. AV-FR-87/688.

Zwicker, J.O. and L. Matamala. August 1988. "Statistical Analysis for Intercomparison Studies." Report prepared for the Electric Power Research Institute by AeroVironment, Inc. AV-TM-88/613.

Fitz, Dennis and Judith Zwicker. March 1988. "Design and Testing of the SCAQS Sampler for the SCAQS Study, 1987." Report prepared for the California Air Resources Board. AV-FR-87/649.

Zwicker, J.O, E.S. Macias, *et al.* 1981. "Chemistry and Visual Impact of the Plumes from the Four Corners Power Plant and San Manuel Copper Smelter." Report submitted to the EPA, Contract 68-02-3225.

Macias, E.S, J.O. Zwicker, and W.H. White. 1981. "Regional Haze Case Studies in the Southwestern U.S.--II. Source Contributions." Atmospheic Environment 15, 1987-98.

Macias, E.S, J.O. Zwicker, and W.H. White. 1981. "Regional Haze Case Studies in the Southwestern U.S.--I. Source Contributions." Atmospheic Environment 15, 1971-86.

Zwicker, J.O. and R. Yaris. 1975. "Augmented Random Phase Approximation." J. Chem. Phys. 62(4), 1276-84.

Zwicker, J.O. 1974. "Pressure-Induced Spectra of Axially Symmetric and Slightly Asymmetric Quadrupolar Molecules." J. Chem. Phys. 60(12), 4780-89.

Gilmour, J.B., J.O. Zwicker, J. Katz and R.L. Scott. 1967. "Fluorocarbon Solutions at Low Temperatures, V." J. Phys. Chem. 71(10), 3259-69.

APPENDIX C

APPENDIX C
SUMMARY OF PAST ANALYTICAL TESTING

TABLE OF CONTENTS

Section		Page
1.0	INTRODUCTION	1
2.0	WASTE PILES CHEMICAL CHARACTERIZATION	2
2.1	TARACORP PILE (SLAG PILE)	2
2.2	SLLR PILE	3
3.0	SOIL SAMPLES CHEMICAL CHARACTERIZATION	4
3.1	TARACORP SITE AREA	4
3.2	GRANITE CITY, VENICE, AND MADISON RESIDENTIAL AREAS	4
3.3	EAGLE PARK FILL AREA	5
3.4	VENICE FILL AREA	5
4.0	GROUNDWATER CHEMICAL CHARACTERIZATION	6

LIST OF TABLES

C-1 WASTE PILE CHARACTERIZATION SUMMARY

C-2 SOIL CHEMICAL CHARACTERIZATION SUMMARY

C-3 GROUNDWATER CHEMICAL CHARACTERIZATION SUMMARY

APPENDIX C

SUMMARY OF PAST ANALYTICAL TESTING

1.0
INTRODUCTION

This appendix summarizes analytical test results from the "Remedial Investigation Study" conducted by O'Brien & Gere Engineers, Inc. in September 1988. The Remedial Investigation (RI) conducted field investigations for groundwater, waste piles, soils, surface water, and air to identify areal extent and concentration levels of contaminants. The summary includes analytical results of the waste piles sampling, soil sampling and groundwater sampling. Air and surface water characterization were not included in this summary because they do not pertain to the CDAP.

A series of waste piles present on the Taracorp property and Trust 454 were analyzed for metals and EP Toxicity metals. The largest pile, referred to in the RI as the slag pile and in the CDAP as the Taracorp pile, consists of wastes including slag, matte, hard rubber and plastic from battery cases, lead and iron oxide. The pile also contains 25-35 drums of raw dross and bag house dust. The total volume of the slag pile is approximately 85,000 cubic yards or 250,000 tons. From the RI field investigations, it is estimated on a tonnage basis 50% is blast furnace slag, 20% is battery case material, 20% is lead oxide dust, 3% is antimonial lead, and miscellaneous debris (OH Materials, 1987).

The other smaller waste piles on Trust 454 are located south-southwest of the slag pile on the Taracorp property and are a result of SLLR's recycling of the slag pile. The largest of these piles is known as the SLLR pile and consists of hard rubber battery case chips and lead and iron oxide. The SLLR pile contains approximately 3,900 cubic yards (yd^3) of material. The other small waste piles appear to be comprised largely of slag and matte and are approximately 1,400 yd^3, 70 yd^3, and 1,000 yd^3 in volume.

2.1 TARACORP PILE (SLAG PILE)

During the RI, three types of samples from the Taracorp pile were collected and analyzed. The sample types were (1) blast furnace slag, (2) upper strata material, and (3) drummed material (dross and bag house dust). The analytical results for the slag samples are summarized in **Table C-1**.

A total of four composite blast furnace slag samples were collected from the Taracorp pile. Each composite slag sample represented a quadrant area of the pile. Based on wet weight of the samples, constituents of concern with high concentrations were lead (15,000 - 373,000 mg/kg), cadmium (19 - 126 mg/kg), arsenic (620 - 2200 mg/kg), and chromium (7.5 - 23.2 mg/kg). Other metal constituents tested for and detected were zinc, antimony, copper, iron, manganese, mercury, nickel, silver, and barium

(Table C-1). EP Toxicity analytical results had concentration ranges for lead of 147 - 312 mg/L, for cadmium of 0.02 - 0.06 mg/L, and for arsenic of 0.005 - 0.021 mg/L. The high EP Toxicity lead concentrations characterize the slag as a hazardous waste.

The upper strata material was sampled at 10 locations within the Taracorp pile. The samples had constituent concentrations similar to the blast furnace slag material samples. Based on wet weight, constituent concentrations ranged were 45,000 - 279,000 mg/kg for lead, 6 - 640 mg/kg for cadmium, 130 - 12,000 mg/kg for arsenic, and 5 - 36 mg/kg for chromium. Five of the samples were analyzed for EP Toxic metals. EP Toxicity analytical results had ranges of 20 - 69 mg/L for lead, 0.02 - 6.29 mg/L for cadmium, and 0.005 - 0.019 gm/L for arsenic. The EP Toxicity lead concentrations were sufficient to characterize the material as hazardous. One sample was also EP Toxic for cadmium.

Two samples were collected from the dross and bag house dust material located within the drums. Both samples were analyzed for the selected metals and one sample was analyzed for EP Toxic metals (Table C-1). Constituents detected in the sample and with high concentrations were lead (237,000 - 273,000 mg/kg), zinc (245,000 - 260,000 mg/kg), cadmium (23 - 2,700 mg/kg), and chromium (17.3 - 24.9 mg/kg).

2.2 SLLR PILE

Three material samples were collected from the SLLR pile which consists mainly of hard rubber battery case chips. The samples were tested for the selected metals in Table C-1, and one sample was analyzed for EP Toxic metals. The samples had concentration ranges of 105,000 - 286,000 mg/kg for lead, 15 - 7,000 mg/kg of cadmium, 5.6 - 4,100 mg/kg for arsenic, and 7 - 40 mg/kg for chromium. Other constituent concentrations are summarized in Table C-1. The EP Toxicity analytical results demonstrated that the SLLR pile sample was EP Toxic for lead.

The soils investigation for the NL Site RI included the collection and analysis of 98 surface soils from 52 locations on and off the industrial site. Actual sampling locations are included in the RI Report. Composite samples were taken at depths of 0 to 3 inches and 3 to 6 inches from grade. The 0 to 3 inch soil samples were analyzed for lead, cadmium, arsenic, chromium, zinc, and antimony. The 3 to 6 inch samples were only analyzed for lead. One sample within the residential area was analyzed for EP Toxic metals.

The analytical results of the soil samples are summarized into four areas of sampling (1) Taracorp site area, (2) Granite City, Venice, and Madison residential areas, (3) Eagle Park fill area, and (4) Venice fill area. Summary of the analytical results obtained from the RI Report is provided in Table C-2. All concentrations are based on wet weight or the moisture content of the sample at the time of sampling.

3.1 TARACORP SITE AREA

Three soil samples at one location was only collected at the Taracorp site area, because majority of the area is paved with asphalt or cement. The lead concentration at this location ranged from 1300 - 14,800 mg/kg for the 0" - 3" depth sample and was 41,000 mg/kg for the 3" - 6" depth sample. The 0" - 3" depth sample contained 71.1 mg/kg of arsenic, 11.0 mg/kg of chromium, 142 mg/kg of zinc, and 52 mg/kg of antimony.

3.2 GRANITE CITY AND MADISON RESIDENTIAL AREAS

118 soil samples were collected at 40 locations in the Granite City, Venice, and Madison residential areas surrounding the industrial site. A rectangular grid was superimposed over the site and surrounding properties encompassing an area of approximately 575 acres within 0.5 mile radius of the site (RI Report, 1988). The soil samples were initially analyzed for lead and after review of the initial data, the surface soil samples (0"-3" depth) were analyzed for lead, cadmium, arsenic, chromium, zinc,

and antimony.

The average lead concentrations for the 0"-3" depth samples was 905 mg/kg and for the 3"-6" depth samples was 1150. The range of soil lead concentrations were 112 mg/kg to 8180 mg/kg and 41 mg/kg to 12,000 mg/kg for the 0"-3" samples and 3"-6" samples, respectively. The one soil sample tested by the EP Toxicity procedure had a total lead concentration of 3110 mg/kg (dry weight) and had a EP Toxicity lead concentration less than the detection limit.

The other metals analyzed in the soil samples (0"-3" depth) had concentration ranges for cadmium of 2 - 12 mg/kg, for arsenic of 2.7 - 53.3 mg/kg, for chromium of 15 - 142 mg/kg, for zinc of 120 -2540 mg/kg, and for antimony of 2 - 60 mg/kg.

3.3 EAGLE PARK FILL AREA

In the Eagle Park Acres fill area eight samples were collected. The area was tested due to battery case chips were allegedly taken and used as paving and fill materials. Locations of the samples are shown in Figure 15 of the RI Report. A composite sample was obtained for 0"-3" depth and 3"-6" depth below grade. The metal concentrations observed in the soil samples ranged from 19 mg/kg to 2920 mg/kg for lead. Other metal constituent concentrations are summarized in Table C-2.

3.4 VENICE FILL AREA

Eight samples from seven locations were collected in the Venice fill area where battery case chips were used as paving and fill materials. Six of the eight samples were of paving material collected from alleys; the other samples consisted of soil approximately one foot from the edge of a paved alley. For the 0"-3" depth samples, the lead concentration had a mean of 17,500 mg/kg and ranged from 124 mg/kg to 110,000 mg/kg. The 3" - 6" depth sample consisting of soil had a lead concentration of 5,210 mg/kg. Other constituents of concern, sampled from 0" to 3" depth, were cadmium (2 - 4 mg/kg), arsenic (2.85 - 40.8 mg/kg), chromium (9 - 696 mg/kg), zinc (247 - 766 mg/kg) and antimony (4 -495 mg/k).

Groundwater sampling and analysis were conducted during the RI Field Investigation. The monitoring wells were installed proximate to and on the site as a two phase groundwater investigation which began in October, 1982.

Data obtained from the test borings completed as groundwater monitoring wells indicate the aquifer is unconfined and is composed of sand and silt with some clay extending to at least 35 ft below the surface. Groundwater level is at an average depth of 24 ft below the surface.

Groundwater sampling was conducted in January, April, August, and November 1987 for the RI Field Investigation. Constituents tested included metals, total dissolved solids (TDS), and sulfates (Table C-3). Total lead concentration for all monitoring wells had a mean of 0.33 mg/L. Other metal constituents of concern had mean concentrations of 0.65 mg/L for cadmium, 0.017 mg/L for arsenic, 7.1 mg/L for zinc, and 5.5 mg/L manganese (Table C-3). Monitoring wells 108S (shallow well) and 108D (deep) for most constituents appeared to have the highest concentrations. Well 108D had elevated average concentrations for sulfate - 1760 mg/L, TDS-4320 mg/L, cadmium - 3.9 mg/LO, manganese - 25 mg/L, nickel - 0.74 mg/L, and zinc - 42 mg/L (RI Report, 1988).

TABLE C-1
WASTE PILE CHEMICAL CHARACTERIZATION SUMMARY
NL/TARACORP SUPERFUND SITE

Parameter	Type	Units	Taracorp Pile									SLLR Pile		
			Upper Strata Material			Drummed Material			Blast Furnace Slag Pile					
			Number of Samples	Range(1)	Mean(1)	Number of Samples	Range(1)	Mean(1)	Number of Samples	Range(1)	Mean(1)	Number of Samples	Range(1)	Mean(1)
Lead	Pile Waste	mg/kg	10	45000-279000	138400	2	237000-273000	255000	4	15000-37300	29325	3	105000-286000	193666
	EP Tox.	mg/l	5	20-69	38	1	1900	1900	2	147-312	229	1	160	160
Cadmium	Pile Waste	mg/kg	10	6-640	99	2	23-2700	1361	4	19-126	58	3	15-7000	2345
	EP Tox.	mg/l	5	0.02-6.29	1.3	1	10.19	10.19	2	0.02-0.06	0.04	1	0.04	0.04
Arsenic	Pile Waste	mg/kg	10	130-12000	1761	2	<5	<5	4	620-2200	1305	3	5.6-4100	1962
	EP Tox.	mg/l	5	0.005-0.019	0.01	1	<0.005	<0.005	2	0.005-0.021	0.013	1	0.108	0.108
Chromium	Pile Waste	mg/kg	10	5-36	11	2	17.3-24.9	21	4	7.5-23.2	12.2	3	7-40	25
	EP Tox.	mg/l	5	<0.05	<0.05	1	<0.05	<0.05	2	<0.05	<0.05	1	<0.05	<0.05
Zinc	Pile Waste	mg/kg	10	15.3-13840	2301	2	245000-260000	252500	4	2430-19170	8660	3	383-42100	14341
	EP Tox.	mg/l	-	-	-	-	-	-	-	-	-	-	-	-
Antimony	Pile Waste	mg/kg	10	630-6400	2361	2	81	81	4	410-1600	1002	3	200-2900	1566
	EP Tox.	mg/l	-	-	-	-	-	-	-	-	-	-	-	-
Copper	Pile Waste	mg/kg	10	2.9-17000	2564	2	89-140	114	4	5800-11000	9450	3	260-4900	1870
	EP Tox.	mg/l	-	-	-	-	-	-	-	-	-	-	-	-
Iron	Pile Waste	mg/kg	10	413-336000	46628	2	5010-7120	6065	4	210000-340000	280000	3	8240-33700	18646
	EP Tox.	mg/l	-	-	-	-	-	-		-	-	-	-	-
Manganese	Pile Waste	mg/kg	10	20-2290	492	2	106-140	123	4	717-1600	1065	3	180-350	265
	EP Tox.	mg/l	-	-	-	-	-	-	-	-	-	-	-	-
Mercury	Pile Waste	mg/kg	10	0.5-1.6	0.7	2	-	-	4	0.5	0.5	3	0.5-2.0	1.3
	EP Tox.	mg/l	5	<0.0025	<0.0025	1	<0.0025	<0.0025	2	<0.0025	<0.0025	1	<0.0025	<0.0025
Nickel	Pile Waste	mg/kg	10	6.5-423	81	2	13.2-20.3	16.7	4	337-1210	622	3	28.7-54	38.4
	EP Tox.	mg/l	-	-	-	-	-	-	-	-	-	-	-	-
Selenium	Pile Waste	mg/kg	10	2	2	2	-	-	4	<2	<2	3	<2	<2
	EP Tox.	mg/l	5	<0.02	<0.02	1	-	-	2	<0.02	<0.02	1	<0.02	<0.02
Silver	Pile Waste	mg/kg	10	5-24.2	10.5	2	6-15.5	10.5	4	5-6.7	5.6	3	5.3-19.0	11.0
	EP Tox.	mg/l	-	-	-	-	-	-	-	-	-	-	-	-
Barium	Pile Waste	mg/kg	10	115-458	224	2	20-38	29	4	212-1097	618	3	173-240	203
	EP Tox.	mg/l	5	0.2-0.26	0.21	1	0.21	0.21	2	0.25-0.49	0.37	1	0.2	0.2

(1) - Detection limits are included in range and mean calculations

TABEL C-2
SOIL CHEMICAL CHARACTERIZATION SUMMARY
NL/TARACORP SUPERFUND SITE

Parameter	Type	Depth (inches)	Units	Taracorp & Trust 454 Property			Granite City & Madison Residential Areas			Eagle Park			Venice		
				Number of Samples	Range(1)	Mean(1)	Number of Samples	Range(1)	Mean(1)	Number of Samples	Range(1)	Mean(1)	Number of Samples	Range(1)	Mean(1)
Lead	Soil	0-3	mg/kg(*)	2	1300-14800	8050	78	112-8180	905	8	19-2920	1117	15	124-110000	17475
		3-6	mg/kg(*)	1	41000	41000	40	41-12000	1150	4	72-3250	1358	1	5210	5210
	EP Tox.	0-3	mg/l	0	-	-	1	<0.20	<0.20	0	-	-	0	-	-
Cadmium	Soil	0-3	mg/kg(*)	1	<2	<2	38	2-12	4	7	2-4	2.8	4	2-4	3.2
	EP Tox.	0-3	mg/l	0	-	-	1	<0.20	<0.20	0	-	-	0	-	-
Arsenic	Soil	0-3	mg/kg(*)	1	71.1	71.1	38	2.7-53.3	16.6	7	3.3-9.9	7.5	4	2.85-40.8	14.4
	EP Tox.	0-3	mg/l	0	-	-	1	0.09	0.09	0	-	-	0		
Chromium	Soil	0-3	mg/kg(*)	1	11.0	11.0	38	15-142	40	7	12-33	24	4	9-696	169
	EP Tox.	0-3	mg/l	0	-	-	1	<0.05	<0.05	0	-	-	0	-	-
Zinc	Soil	0-3	mg/kg(*)	1	142	142	38	120-2540	590	7	67-827	417	4	247-766	448
	EP Tox.	0-3	mg/l	0	-	-	-	-	-	0	-	-	0	-	-
Antimony	Soil	0-3	mg/kg(*)	1	52	52	38	2-60	10	7	3-10	6.8	4	4-495	82
	EP Tox.	0-3	mg/l	0	-	-	-	-	-	0	-	-	0	-	

(1) - Detection limits are included in range and mean calculations
(*) - All concentrations are given in wet weight

TABLE C-3
GROUNDWATER CHEMICAL CHARACTERIZATION SUMMARY
NL/TARACORP SUPERFUND SITE

Parameter	Type	Taracorp Site		
		Number of Samples	Range(1) (mg/l)	Mean(1) (mg/l)
Lead(*)	Groundwater	25	0.005–0.013	0.006
Lead(Total)	Groundwater	9	0.005–0.72	0.33
Cadmium(*)	Groundwater	25	0.001–6.9	0.65
Arsenic(*)	Groundwater	25	0.005–0.1	0.017
Chromium(*)	Groundwater	25	<0.005	<0.005
Zinc(*)	Groundwater	25	0.02–44	7.1
Antimony(*)	Groundwater	25	<0.02	<0.02
Copper(*)	Groundwater	25	0.01	0.01
Iron(*)	Groundwater	25	0.1–22	4.6
Manganese(*)	Groundwater	25	0.025–29.4	5.5
Mercury(*)	Groundwater	25	<0.0005	<0.0005
Nickel(*)	Groundwater	25	0.01–0.94	0.134
Selenium(*)	Groundwater	25	0.002–0.055	0.006
Silver(*)	Groundwater	25	<0.005	<0.005
Barium(*)	Groundwater	25	<1	<1
TDS	Groundwater	17	360–4400	1223
Sulfates	Groundwater	17	78–1850	534

(1) – Detection limits are included in range and mean calculations
(*) – Filtered samples

SITE SAFETY AND HEALTH PLAN

NL/TARACORP SUPERFUND SITE GRANITE CITY, ILLINOIS

Prepared for
U.S. Department of the Army
Corps of Engineers, Omaha District
Omaha, Nebraska

October, 1991

Woodward-Clyde

2318 Millpark Dr.
St. Louis, Missouri 63043

WCC Project No. 89MC114V

Section		Page
	GLOSSARY OF SITE SAFETY AND HEALTH ACRONYMS	G-1
	APPROVALS	AP-1
1.0	INTRODUCTION	1
2.0	PROJECT SAFETY ORGANIZATION	2
3.0	SITE INFORMATION	3
3.1	SITE DESCRIPTION	3
3.2	BACKGROUND	3
4.0	FIELD ACTIVITIES	5
4.1	SAMPLING OBJECTIVES	5
4.2	UTILITY CLEARANCE AND PERMITS	5
4.3	RESIDENTIAL HOME SURVEY	5
4.4	HAND AUGER BORINGS AND SAMPLING	6
4.5	SOIL BORINGS	6
4.6	MONITORING WELL INSTALLATION AND SAMPLING	7
4.7	AERIAL AND GROUND CONTROL SURVEYS	7
4.8	SCHEDULE	7
5.0	HAZARD ASSESSMENT	8
5.1	CHEMICAL HAZARDS	8
5.2	PHYSICAL HAZARDS	8
5.3	BIOLOGICAL HAZARDS	9
	5.3.1 Wildlife	9
	5.3.2 Ticks and Tick-Borne Diseases	9
6.0	RISK EVALUATION	12
6.1	NON-INTRUSIVE ACTIVITIES	12
6.2	INTRUSIVE ACTIVITIES	12
6.3	DETECTABILITY	13
7.0	GENERAL HEALTH AND SAFETY REQUIREMENTS	14
7.1	HEALTH AND SAFETY CLEARANCE	14
7.2	SAFETY BRIEFING	14
7.3	DISTRIBUTION OF SSHP	15
7.4	DOCUMENTATION	15

Section		Page
7.5	INCIDENT REPORTING	16
7.6	SAFETY COMPLETION REPORT	16
7.7	PROHIBITED ACTIVITIES	17
7.7	VISITOR CLEARANCES	17
7.8	LABORATORY CONSIDERATIONS	18
8.0	SITE SPECIFIC HEALTH AND SAFETY REQUIREMENTS	19
8.1	SPECIAL MEDICAL TESTS	19
8.2	SPECIAL TRAINING REQUIREMENTS	19
8.3	SITE CONTROL	19
8.4	WORK ZONES	19
8.5	ENGINEERING CONTROLS	20
8.6	PERSONAL PROTECTIVE EQUIPMENT	20
	8.6.1 Level "D" Protection	20
	8.6.2 Modified Level "D" Protection	21
	8.6.3 Level "C" Protection	21
8.7	OTHER EQUIPMENT	22
8.8	EXPOSURE MONITORING GUIDELINES	23
	8.8.1 Instrumentation	23
	8.8.2 Dust Monitoring Guidelines	23
	8.8.3 Level of Protection/Action Guidelines	27
8.9	DECONTAMINATION PROCEDURES	29
	8.9.1 General	29
	8.9.2 Personnel Decontamination	29
	8.9.3 Equipment Decontamination	32
8.10	CONTROL OF FIELD-WORK GENERATED WASTE MATERIALS	32
9.0	EMERGENCY RESPONSE	33
9.1	RESPONSE PROCEDURES	33
	9.1.1 Physical Injury	33
	9.1.2 Fire/Explosion	33
9.2	DIRECTIONS TO NEAREST HOSPITAL	34
10.0	SITE PERSONNEL/ASSIGNMENTS	35
11.0	SPILL CONTAINMENT	36

TABLE 1 LIST OF CONTAMINANTS
TABLE 2 EMERGENCY CONTACTS
TABLE 3 SITE PERSONNEL/ASSIGNMENTS

FIGURE 1 SITE LOCATION MAP
FIGURE 2 SITE PLAN, INDUSTRIAL AND RESIDENTIAL AREA
FIGURE 3 SITE PLAN, SCHAEFFER & SAND ROAD
FIGURE 4 ROUTE TO HOSPITAL
FIGURE 5 OSHA POSTER

ATTACHMENT A	HEAT/COLD STRESS (HS-102/HS-103)
ATTACHMENT B	SAFETY COMPLIANCE AGREEMENT/SAFETY BRIEFING FORM
ATTACHMENT C	ACCIDENT/INCIDENT REPORT
ATTACHMENT D	SAFETY COMPLETION REPORT
ATTACHMENT E	GILIAN OPEATING MANUAL FOR AIR SAMPLING
ATTACHMENT F	RESPIRATOR INSPECTION, CARE, MAINTENANCE AND STORAGE

APR	Air Purifying Respirator
CDAP	Chemical Data Acquisition Plan
CHSA	Corporate Health and Safety Administrator
CHSO	Corporate Health and Safety Officer
CIH	Certified Industrial Hygienist
EOG	Eastern Operating Group
EPA	Environmental Protection Agency
FOM	Field Operations Manager
GLOG	Great Lakes Operating Group
HAB	Hand Auger Borings
HSA	Hollow Stem Auger
HSC	Health and Safety Coordinator
HSO	Health and Safety Officer
IDLH	Immediately Dangerous to Life and Health
MCL	Maximum Contaminant Level
MSHA	Mine Safety and Health Administration
ND	None Detected
NIOSH	National Institute For Occupational Safety and Health
NL	National Lead
OSHA	Occupational Safety and Health Act
PASP	Personal Air Sampling Pump
PM	Project Manager
PPE	Personal Protective Equipment
ROD	Record of Decision
SLLR	St. Louis Lead Recyclers
SOP	Standard Operating Procedure
SSHP	Site Safety and Health Plan
SSO	Site Safety Officer
STEL	Short Term Exposure Limit
TCLP	Toxicity Characteristic Leaching Procedure
TLV	Threshold Limit Value
WCC	Woodward-Clyde Consultants

APPROVALS

Project Name: NL/Taracorp Superfund Site

Project Number: 89MC114V

Project Manager: Ken Hagg

Date of Issue: 31 July 1991

Effective Dates: 31 July 1991 through 31 July 1992

APPROVALS:

Project Manager (PM)	10/24/91 Date
Field Operations Manager (FOM)	Date
Site Safety Officer (SSO)	Date
Health and Safety Officer (HSO)	10·24·91 Date
Corporate Health and Safety Officer (CHSO) (CIH)	10/23/91 Date

1.0
INTRODUCTION

This Site Safety and Health Plan (SSHP) establishes guidelines and requirements for the safety of personnel during the field activities associated with the pre-design field investigation for the NL Industries/Taracorp Superfund Site. This SSHP is in compliance with applicable sections of 29 CFR 1910.120 and was prepared for exclusive use by employees of WCC and its subcontractors. This SSHP shall not be used for work other than that described in Section 4.0, nor shall it be modified or used after the expiration date without written approval of the PM, FOM, HSC, HSO and CHSO. All Employees of Woodward-Clyde Consultants (WCC) and WCC subcontractors involved in this project are required to abide by the provisions of this plan. The USACE and state authorities may choose to adopt or develop their own SSHP to protect their on-site employees, although WCC will not take responsibility for compliance of on-site personnel employed by these authorities. All WCC on-site personnel are required to read this plan and sign the attached Compliance Agreement.

The SSHP guidelines and requirements presented are based on a review of available information and evaluation of potential hazards. This plan outlines the health and safety procedures and equipment required for activities at this site to minimize the potential of exposure of field personnel. This plan may be modified by the Project Manager (PM), the Field Operations Manager (FOM), the Health and Safety Coordinator (HSC), the Health and Safety Officer (HSO), and the Corporate Health and Safety Officer (CHSO) in response to additional information obtained regarding the potential hazards to field personnel.

The FOM has overall responsibility for implementing this SSHP. The Site Safety Officer (SSO), reports to the FOM, directs day-to-day health and safety activities in the field and must be present at the work site whenever work is being conducted at the site by employees of the Contractor or its Subcontractors. The CHSO, HSO and HSC are responsible for advising the FOM and SSO on health and safety matters and monitoring compliance. The FOM, SSO, HSC, HSO and CHSO have the authority to suspend work when the health or safety of field personnel or the public is threatened and to remove individuals from the site for engaging in activities that jeopardize the health and safety of themselves or others.

3.1 SITE DESCRIPTION

The NL/Taracorp Superfund Site is located in and near the cities of Granite City, Madison, and Venice in Madison County, Illinois. The site is located approximately two miles east of St. Louis, Missouri (**Figure 1**). The site area is located within a portion of the Mississippi River Valley known as the American Bottoms. Although the site is located outside of the 100 year flood plain its topography tends to be flat and poorly drained. The site geology is described in the Chemical Data Acquisition Plan (CDAP).

3.2 BACKGROUND

The NL/Taracorp Superfund Site consists of three principle areas: The main industrial property (currently owned by Taracorp, Trust 454, Rich Oil, and BV&G Transport, formerly known as Tri-City Trucking), the adjacent residential areas (in and near Granite City, Venice, and Madison), and remote fill locations containing hard rubber battery casing material from the Taracorp waste pile (**Figures 2 & 3**).

The main industrial site covering approximately 40 acres consists of three areas: the Taracorp Property, the Trust 454 property, Rich Oil property, and the BV&G Transport property. The Taracorp property, part of the main industrial property, is the location of a former secondary lead smelting facility. The site was used for various other manufacturing operations from before the turn of the century to 1903. From 1903 to 1983 the secondary lead smelting operations were conducted at this site. During 1983 lead smelting operations were discontinued and the equipment dismantled. The waste pile consists primarily of blast furnace slag and battery case material. The Trust 454 property, containing the St. Louis Lead Recyclers (SLLR) pile is located adjacent to and south of the Taracorp property. The SLLR area was used to recycle the Taracorp waste materials, primarily the battery case materials. SLLR separated the lead bearing waste from the plastic and rubber components. The lead was to be remelted by Taracorp and the plastic and rubber shipped off-site for recycling. SLLR ceased operations in 1983

and residual waste from the operations remained at the site. The SLLR pile consists primarily of hard rubber battery case material. The BV&G Transport Property is located to the east of the Taracorp property and is used to park and service trucks.

The adjacent residential areas consists of approximately 520 acres (approximately 55 city blocks) surrounding the main industrial property. The residential areas are located within the cities of Granite City, Venice, and Madison, Illinois. These areas have been affected primarily by airborne particulate fallout from the NL Industries and Taracorp lead smelting operation.

The remote fill locations are located at Missouri Avenue (IL Rt. 3 and Pontoon Road), Schaeffer Road (IL Rt. 3 and I-270), 2230 Cleveland Avenue, farmer's field near Sand Road; five alleys in Venice, and six areas in Eagle Park Acres. The remote fill is reported to have been hauled from the Taracorp waste pile and previous investigations indicate that it consists primarily of hard rubber battery casing materials.

Following a remedial investigation and a feasibility study, a Record of Decision (ROD) was issued in 1990. The ROD, among other things, requires the removal of all soils and battery case materials with lead concentrations greater than 500 ppm in the residential areas and 1000 ppm in the industrial area. The remediated areas will then be restored to a condition similar to their original state.

4.1 SAMPLING OBJECTIVES

The remedial design site investigation consists of soil and groundwater sampling. The objective of the sampling is to delineate the vertical and areal extent of the contamination in areas identified above, to provide information for the pre-design and treatability activities, and to provide information for the remedial design. The CDAP presents the standard operating procedures and the specific field protocols to be followed during the site investigation. The following tasks will be performed during the implementation of the CDAP:

- Field Mobilization
- Utility Clearance and Permits
- Residential Home Survey
- Hand Auger Borings (HAB) and Sampling
- Soil Borings and Sampling
- Monitoring Well Installation and Sampling

4.2 UTILITY CLEARANCE AND PERMITS

No sampling will be done during this task. Utility clearance and permits will be required prior to intrusive activities.

4.3 RESIDENTIAL HOME SURVEY

No sampling will be done during this task. The residential home surveys will require entering residential homes for visual inspections to identify possible sources of lead exposure.

4.4 HAND AUGER BORINGS AND SAMPLING

HAB soil samples will be collected from the "adjacent" residential areas and from the remote fill locations. Two (2) - one (1) ft deep HABs will be drilled in each of the 1250 "adjacent" residential lots and three (3) analytical samples collected from each HAB (7500 analytical samples). Three (3) HABs at least one (1) ft deep will be drilled in each of the 5 unpaved areas identified as remote fill locations in Eagle Park Acres. Two (2) analytical samples will be collected from each of the HABs (60 analytical samples). HABs will also be collected from schools and parks, it is estimated that 67 HABs at least one (1) ft deep will be drilled, three (3) analytical samples will be collected from each HAB (201 analytical samples). All of the analytical samples will be analyzed for total lead; in addition, TCLP lead analysis will be conducted on samples as specified in the CDAP.

4.5 SOIL BORINGS

Soil borings will be drilled at the Trust 454 (SLLR) area, Taracorp area, BV&G Transport, and Rich Oil and five remote fill areas. Ten (10) - Fifteen (15) ft deep borings will be drilled in the unpaved areas of the Trust 454 property. Seven (7) analytical samples will be collected from each boring at 1 ft to 2 ft intervals to 15 ft (70 analytical samples). Geotechnical samples will also be collected at each of the 10 boring locations at 2.0 ft intervals to the bottom of the boring (60 geotechnical samples). Three (3) - Fifteen (15) ft deep borings will be drilled in the proposed liner at the Taracorp property. No analytical samples will be collected from these borings. Geotechnical samples will be collected at 2 ft intervals to 15 ft depth (18 geotechnical samples). Three (3) borings will be drilled at the BV&G Transport property. Seven (7) analytical samples will be collected from each boring at 1 to 2 ft intervals to 15 ft (21 analytical samples). Geotechnical samples will also be collected at 2 boring locations at 2.0 ft intervals to 15 ft (12 geotechnical samples). Two (2) borings will be drilled at the Rich Oil property. Seven (7) analytical samples will be collected from each boring at 1 to 2 ft intervals to 15 ft (14 analytical samples). Geotechnical samples will be collected at 1 boring location at 2 ft intervals to 15 ft (6 geotechnical borings). Four borings will be drilled in each of the five alleys in Venice identified as containing fill materials from the Taracorp waste pile. Ten (10) TCLP analytical sample will be

collected from the twenty (20) borings; borings will also be used to determine depth of fill. For Eagle Park Acres, fifteen (15) borings will be drilled in the six (6) areas to determine the depth of fill. Sixty (60) analytical samples will be collected from borings at varying intervals. In each of the remaining four remote fill areas three borings will be drilled at each location. For the Sand Road area, four (4) analytical samples will be collected for each area and for the other areas one (1) TCLP lead sample will be collected from each boring; borings will also be used to determine horizontal and vertical extent of fill materials obtained from the Taracorp waste pile. All of the analytical samples will be analyzed for total lead. Refer to the CDAP for the procedures for determining sampling locations.

4.6 MONITORING WELL INSTALLATION AND SAMPLING

Four (4) monitoring wells will be installed in seventy (70) ft deep borings around the Taracorp waste pile. No soil samples will be collected from these 4 well borings. Groundwater samples will be collected from these 4 wells and from the 14 existing wells located on the near the industrial area. Groundwater samples will be collected at each of the 18 wells on semi-annual basis for 30 years. Groundwater samples will be analyzed for the Target Compound List. Refer to CDAP for sampling locations.

4.7 AERIAL AND GROUND CONTROL SURVEYS

The proposed boring, HAB and well locations will be established in the field prior to beginning the subsurface exploration activities. The actual horizontal location, of the borings and wells will be established by instrument survey. The elevations for top of ground, top of water, and top of well riser at the well locations will be established by instrument survey. The elevations for top of ground at the boring locations will be established by instrument survey. HAB locations will not be established by instrument survey.

4.8 SCHEDULE

Field operations schedule shall be completed prior to work on-site.

5.1 CHEMICAL HAZARDS

Previous investigations concluded that waste pile materials, adjacent residence surface soils and remote fill location soils are contaminated with heavy metals. The primary metal of concern is lead in soils. Heavy metals were also detected in groundwater samples collected from the wells located on and near the industrial site. The levels detected in these samples are below Maximum Contaminant Levels (MCLs) for inorganic chemicals with the exception of cadmium. No volatiles have been identified in either the soil or groundwater.

Table 1 lists the chemical compounds identified during the previous investigations at the site. All tables are located at end of SSHP text. The table identifies the highest observed concentrations, the area at which the compound was identified, the Threshold Limit Value (TLV) concentration, the Short Term Exposure Limit (STEL) concentration, the concentration at which the compound becomes Immediately Dangerous to Life and Health (IDLH), the warning concentration, symptoms or effects of exposure, the Photo-Ionization Potential for each compound, if applicable, and toxicology.

5.2 PHYSICAL HAZARDS

The activities to be performed under the provisions of this plan involve the potential exposure to large machinery, specifically the drilling equipment. Vegetation and terrain may pose additional physical hazards. Personnel should be aware that the protective equipment worn may limit manual dexterity, hearing, visibility and may increase the difficulty of performing some tasks.

Personnel protective equipment places an additional strain on the wearer when performing work that requires physical activity. Heat exhaustion or heat stroke are possible, especially during warm weather. All personnel should be cognizant of the physical condition of fellow workers. Personnel should also be aware of cold stress as

another physical hazard. A detailed description and treatment of heat/cold stress are included as a part of Attachment A.

WCC will obtain utility clearance, permits, and have local utility companies mark utility locations prior to beginning drilling or sampling operations. The locations must be considered as being approximate. Be aware and always suspect the existence of underground utilities such as electrical, power, gas, petroleum, telephone, sewer and water.

Special precaution must be taken when operating machinery (i.e., drill rig) in the vicinity of electrical power lines. Electricity can shock, burn and result in death. All overhead electrical power lines are to be considered energized and dangerous. Walk completely around the machine before beginning work at a site in the vicinity of power lines. Determine what the minimum distance from any point on the machine to the nearest power line will be when operating. Do not raise a mast or boom, or operate the machine if this distance is less than 20 ft.

5.3 BIOLOGICAL HAZARDS

5.3.1 Wildlife

Wildlife at the site should be avoided. Assume that all animals are potentially dangerous. A person who is bitten by an animal may become infected by tetanus or rabies.

5.3.2 Ticks and Tick-Borne Diseases

Field personnel should be aware of an increased occurrence of tick-borne disease in the United States. Common carriers are the white-footed mouse and the white tailed deer. These animals are the most prevalent in the areas where suburban environments abut open field or woodlands. Although exposure is increased in these areas, other carriers, such as dogs and horses, can be found in a variety of environments.

All field personnel should take proper precautions to limit exposure to ticks and tick-borne disease. These include:

- Cinching and taping clothing at ankle and wrists, especially the ankles. Ticks lie low on grass blades and shrubs. They encounter your feet, ankles or lower legs and then crawl upward.

- Wear light-colored clothing to facilitate spotting the ticks, and checking your clothing periodically. Be especially careful in terrain with tall grass, bushes or woods.

- Use a tick repellent on skin or clothing. Always read the labels before using. Clothing repellents should never be used on the skin.

- Recognize the signs of a bite or an infection. It takes several hours for a tick to attach and feed; removing it promptly lessens the chance of being infected.

Pregnant women should be particularly careful since the effects of Lyme disease upon the fetus is unknown.

If a tick is discovered on the skin, it is important to remove the entire insect as soon as possible. The most effective method is to grasp the tick as close as possible to the mouth with tweezers or thin, curved forceps. Then, without jerking, pull it upward steadily (a small amount of skin may be removed in the process).

After removing the tick, disinfect the bite with rubbing alcohol or povidone iodine (Betadine). Don't handle the tick; spirochetes could enter the body through breaks in the skin. Dispose of it in alcohol or flush it down the drain. Check the bite occasionally for at least two weeks to see if a rash forms. If it does, you've been infected and should seek treatment promptly.

The rash appears at the bite location from two days to a few weeks after the bite. It usually starts as a small red spot that expands as the spirochetes spread beyond the

bite. Most commonly, the rash develops into a reddish circle or oval about two to three inches in diameter. It fades with or without treatment after a few weeks.

Much larger rashes - anywhere from 6 to 20 inches in diameter - may also occur, especially on the back. Despite their size, large rashes may be easy to miss because they're often very faint.

Other variants include a rash with a red perimeter and a clear center and the so-called bull's-eye rash, which consists of several concentric red rings. Rashes may vary in shape, depending on where they occur on the body. Frequent sites are the thigh, groin and armpits. People often develop rashes in more than one place.

Early symptoms may include profound fatigue, a stiff neck, and flu-like symptoms such as headache, chills, fever and muscle ache. Since tick bites don't always produce a rash, those symptoms alone may warrant a medical check for possible Lyme infection-especially if they occur in summer and you live in an area that is endemic for Lyme disease.

Without treatment, the spirochetes usually multiply and the disease progressively worsens. The second stage, occurring within weeks to months of the bite, may affect the heart and nervous system. Third is the chronic arthritic stage, which begins up to a year or more after the bite.

6.1 NON-INTRUSIVE ACTIVITIES

Non-intrusive activities that will be performed at the site consist of the following:

- Field mobilization/demobilization
- Residential Home Survey
- Decontamination
- Field surveys
- General support activities carried on outside of the exclusion zone

The mobilization/demobilization, residential home surveys, field surveys and general support activities are considered to be low hazard. These activities will be performed in the open. It is unlikely that direct contact by site personnel with hazardous substances will occur during the performance of these activities.

The decontamination activities are considered to be a low to medium hazard. Direct contact by site personnel with hazardous substances is possible during the decontamination of personnel and equipment. Exposure could occur by contact with decontamination fluids, spent Personal Protective Equipment (PPE) and through the handling of equipment. Inhalation, ingestion and dermal contact exposure routes are indicated.

6.2 INTRUSIVE ACTIVITIES

Intrusive activities that may be performed at the site consist of the following:

- Drilling and soil sampling

- Well installation

- Well development and groundwater sampling

- Groundwater level measurements

Drilling and soil sampling, well installation, development and sampling activities associated with the exploration are considered to be a medium hazard. Direct contact by site personnel with hazardous substances is likely. Exposure could occur by contact with contaminated equipment, or by the handling of samples. Ingestion and dermal contact exposure routes are indicated. Since the inorganic compounds detected at the site are not volatile they should not present a significant inhalation hazard unless site activities or wind generate dust and the dust contains high concentrations of the inorganic compounds previously detected.

Groundwater level measurement activity if required to confirm depth to water table is considered to be a low hazard. Direct contact with hazardous substances is possible. Exposure could occur by contact with contaminated equipment. Ingestion and dermal contact exposure routes are indicated.

6.3 DETECTABILITY

Visual observation may be used to assess whether dust levels encountered during the performance of the work require upgrade of PPE.

7.1 HEALTH AND SAFETY CLEARANCE

Contractor employees except those persons conducting only residential home surveys must obtain health and safety clearances before beginning work at the site. To obtain clearance, an employee must have (1) been certified within the past 12 months by an approved physician as being physically fit to wear respiratory protective devices and to work with hazardous chemical substances, (2) successfully completed a 40-hour basic health and safety training course (Level C), which fulfills the requirements of 29 CFR 1910.120 and (3) passed a respirator fit test with isoamyl acetate and/or irritant smoke as indicators. Site managers and supervisors must have successfully completed an 8-hour manager's health and safety course in addition to all other clearance requirements.

Physical examination protocols and basic training requirements which meet the requirements of 29 CFR 1910.120 are described in Sections 3.0 and 4.0, respectively, of WCC's Hazardous Waste Management Practice Health and Safety Manual, dated November 1990.

Subcontractor employees must also have similar medical, training and respirator fit clearances and will be required to provide proof of clearance before beginning work.

The names of all Contractor and Subcontractor employees that perform work at the site must be recorded daily and the record maintained in the health and safety file.

7.2 SAFETY BRIEFING

Before on-site work commences, all Contractor and Subcontractor employees assigned to work at the site must be briefed by the SSO or a HSO on their work assignments and the site-specific health and safety requirements contained in this plan. The SSO/HSO giving the briefing should test the knowledge and understanding of the provisions of this SSHP and shall not allow anyone who does not appear to understand the

provisions perform work in exclusion areas. The dates of briefing sessions and attendees must be recorded and the records maintained in the health and safety file.

7.3 DISTRIBUTION OF SSHP

Before site work begins, a copy of this SSHP must be provided to each Contractor and Subcontractor employee assigned to work at the site as well as to an authorized representative of each firm subcontracted by the Contractor to perform work at the site. Individuals assigned to work at the site must acknowledge receipt of the plan and agree to comply with its provisions by completing and signing the compliance agreement included with this SSHP as **Attachment B.** The Site Safety Officer is responsible for ensuring that a copy of the plan is available on site whenever work is in progress.

7.4 DOCUMENTATION

The SSO will document implementation of this SSHP. The SSO will set up a file to receive health and safety related records and activity reports. This file should contain the following:

- Signed copies of the Compliance Agreement
- Copies of safety equipment operations manuals
- Records of usage and calibration of environmental monitoring equipment
- Employee injury/exposure incident reports
- Records of safety violations and remedial actions taken

A health and safety field logbook will be maintained on-site and should contain the following information: weather conditions, employees on-site, level of personal protection worn, monitoring instrumentation readings (average, peak and background), subjects discussed during site health and safety briefings, and safety violations.

7.5 INCIDENT REPORTING

In the event of an accident or incident, the SSO will immediately notify the WCC Project Manager, Health and Safety Officer, and the Corporate Health and Safety Officer. Types of accidents or incidents that are considered reportable are:

- Illness resulting from chemical exposure or unknown causes
- Physical injury, including an injury that does not require medical attention
- Fire, explosion, and flashes resulting from activities performed by WCC and its subcontractors
- Infractions of safety rules and requirements
- Unexpected chemical exposures
- Near accidents

Work will be suspended to correct the cause of the accident/incident and to modify this plan as necessary.

A WCC accident/incident report form (Attachment C) must be submitted to the Project Manager and the Health and Safety Officer within 24 hours of occurrence.

7.6 SAFETY COMPLETION REPORT

The SSO will prepare a safety completion report at the end of field activities which will include: a critical review of this plan; exposure monitoring data; summary of incidents and actions taken; and recommendations for improving health and safety at similar sites. Refer to Attachment D for report form.

7.7 PROHIBITED ACTIVITIES

The following activities are prohibited:

- Smoking, eating, drinking, chewing gum or tobacco, storing food or food containers while in the exclusion and contamination-reduction zones. Good personnel hygiene should be practiced by field personnel to avoid ingestion of contaminants or spread of contaminated materials.

- Use of drugs, alcohol, or controlled substances while on site

- Approach or entry into areas or spaces where toxic or explosive concentrations of gas or dust may exist without proper equipment available to enable safety entry

- Wearing respirators while sporting facial hair that could interfere with proper respirator fit

- Wearing contact lenses while in the exclusion and contamination-reduction zones

- Unauthorized removal (souvenir collection) of hazardous material from the site

7.8 VISITOR CLEARANCES

Visitors will require clearances by the SSO or a HSO. Visitors will only be allowed in support zone areas unless compliance with this SSHP is acknowledged in conformance with Section 7.3. Support zone areas are any areas within the site not specified as the exclusion or contamination reduction zone.

7.9 LABORATORY CONSIDERATIONS

Analysis of all samples from the site will be handled by the contract laboratory. The laboratory director shall be informed that the samples may contain hazardous levels of contaminants that would require special handling procedures to prevent risk to the health and safety of laboratory personnel.

8.1 SPECIAL MEDICAL TESTS

Baseline blood lead level testing and exit blood lead level testing will be performed on personnel required to enter the exclusion zones. Additional testing beyond this is not anticipated. Sampling and analysis will be performed in accordance with 29 CFR 1910.1025.

8.2 SPECIAL TRAINING REQUIREMENTS

OSHA 40-hour health and safety course and a minimum of three (3) days of supervised field training will be required by all personnel covered by this SSHP other than those conducting nothing except residential home surveys. All new personnel, other than those conducting residential home surveys, having completed the 40-hour training course and having no supervised field training will be required to complete three (3) days of field training under the direct supervision of a qualified/experienced field person prior to conducting work without direct supervision. This training time will be documented by the employee and the SSO. Home survey personnel will not be required to have the basic 40-hour health and safety or any other special health and safety training.

8.3 SITE CONTROL

Site control measures beyond those existing will not be required. Proposed site activities do not appreciably change existing conditions and therefore additional controls will not be required.

8.4 WORK ZONES

A 25 ft radius exclusion zone will be established around the drill rig at each boring having a planned depth greater than 10 ft. The zone will be delineated by warning

tape or a string of flags. Delineating exclusion zones will not be required for groundwater or shallow soil sampling. The exclusion zone at this location will be limited to the immediate areas of sampling.

A temporary decontamination reduction zone for personnel and small equipment will be set up outside each sampling location (i.e. for hand auger boring this will be behind sampling team truck).

A personnel support zone will be established at the field office. The field office location will be identified prior to initiating work activities. The support zone will consist of a field office and staging/parking area. The field office will be equipped with electrical power, telephone, air conditioning, potable water and sanitary facilities. The field office will be utilized for sample storage, for supply/equipment storage and as a personnel refuge.

8.5 ENGINEERING CONTROLS

The field team will endeavor to position the drill rig and sampling equipment facing upwind while conducting intrusive activities. It is recognized that it will not always be possible to achieve the desired orientation due to physical restraints of the site. Additional engineering controls will not be required.

8.6 PERSONAL PROTECTIVE EQUIPMENT

All activities on site except the residential home inspections will meet one of the following levels of personal protective equipment. The residential home inspection will be conducted in street clothes and do not require specific personal protective equipment.

8.6.1 Level "D" Protection

Activities performed at United States Environmental Protection Agency (EPA) Level "D" will require site personnel to wear the following protective ensemble:

- Hard hat (when working around heavy equipment)
- Safety glasses with side shields or goggles
- Coverall or Tyvek™ (optional)
- Work gloves (optional)
- Safety shoes or boots (Steel toed and shanked when working around heavy equipment)

EPA Level "D" is considered to be the minimum protection for personnel at the site.

8.6.2 Modified Level "D" Protection

Activities performed at EPA Modified Level "D" will require site personnel to wear the following protective ensemble:

- Hard hat (when working around heavy equipment)
- Safety glasses with side shields or goggles (goggles and face shield for activities where splash hazard exists)
- Coverall, Tyvek™ or Rytex™ (navy blue or brown) taped at wrist and boot interface (Polycoated for activities where splash hazard exists) (If coverall, tyvek, or rytex with elastic at wrist and ankle interface are used, no taping at wrist and boot interface is required).
- Undergloves, latex
- Outergloves, Neoprene (Nitrile for hand auger sampling)
- Boots, calf-high, Neoprene or PVC, steel toed and shanked

8.6.3 Level "C" Protection

Activities performed at EPA Level "C" will require site personnel to wear the following protective ensemble:

- Hard hat
- Air purifying respirator (APR),full-face
- APR high efficiency particulate (HEPA) filter cartridges
- Tyvek™ or Rytex™ taped at wrist and boot interface (Polycoated for activities where splash hazard exists)
- Undergloves, latex
- Outergloves, Neoprene
- Boots, calf-high, Neoprene or PVC, steel toed and shanked

Respiratory cartridges used will bear National Institute for Occupational Safety and Health (NIOSH) and Mine Safety and Health Administration (MSHA) approvals for dust, fumes, and mists. A high efficiency particulate filter will be used. Respirator cartridges will be changed daily, or at the time of detected breakthrough.

8.7 OTHER EQUIPMENT

A fire extinguisher will be within easy access on the drill rig and at the support zone (trailer). An extinguisher that can be used on Class A, B and C fires will be provided.

A general purpose first aid kit meeting the requirements of 29 CFR 1926.50 will be within easy access at the support zone (trailer). The first aid kit will include a portable

eye wash. A portable eyewash will consist of a 32 oz. eyewash bottle that holds enough water to wash eyes for approximately 2 to 3 minutes.

Two-way radios with interacting frequency or mobile phones may be required by each work party. A base station will be established at the support zone (trailer).

8.8 EXPOSURE MONITORING GUIDELINES

8.8.1 Instrumentation

Personnel engaged in any field activities at the site will be monitored using the following equipment:

- Personal air monitoring system and filter for total lead

No volatile organic contaminants have been identified at the site. Therefore, no instrumentation will be required to monitor for organic contamination.

The personnel air monitoring systems will be used for the collection of exposure data.

8.8.2 Dust Monitoring Guidelines

Air quality data for 1986, highest quarterly average was 0.44 ug/m^3 total lead, and more recent data indicates that ambient air quality is well below the ambient air quality standard of 1.5 ug/m^3. Personnel engaged in intrusive field activities at the site will be monitored using a personnel air sampling pump (PASP) to collect exposure data for inorganic lead. Dust exposure monitoring will be performed using a Gilian technologies Gil-Air CF or equivalent instrument to monitor respirable dust in the breathing zone. Refer to **Appendix** D for maintenance and calibration. A minimum of one sample will be collected by each work party during the first work day of intrusive activities (hand auger borings, soil borings and well installation). Laboratory analysis of the PASP samples shall have a 24-hour or 48-hour turn around time.

If laboratory analysis of the PASP particulate filter indicates no exposure, further personnel sampling is not required. No exposure is considered a sample collected over a 8 hours period having a minimum flow rate of 1000 cc/min, a maximum analytical reporting limit of 5 ug/filter and a result of None Detected (ND).

If PASP analytical results indicate a result between 5 ug/filter and 24 ug/filter for an 8 hour collection period, a flow rate of 1000 cc/min and a maximum reporting limit of 5 ug/filter then exposure sampling will continue on a daily basis during intrusive activities (hand auger borings, soil borings and well installation).

If PASP analytical results indicated a result of 24 ug/filter or greater for an 8 hour collection period, a flow rate of 1000 cc/min and a reporting limit of 5 ug/filter then PPE will be upgraded to Level "C" Protection. Also, the PM and the CHSO will be contacted and health and safety procedures reviewed. If analytical results of follow-up PASP samples are below 24 ug/filter work activities may be downgraded to Modified Level "D" Protection.

A. Backup calculations for personal air sampling pump analysis:

Determine: Reporting Limit For Method 6010 in mg/m^3

Given:

- Reporting limit = 5 ug/filter maximum
- Sample collection period = 480 minutes
- Average flow rate 1000 cc/minute

Solution: Reporting limit = x

- $z = (\text{Flow Rate x time})\ (10^6\ cc/m^3)$
- $x = (5\ ug/filter)/(z)$
- $x = (5\ ug/filter)/[(1000\ cc/min)x(480\ min.)/(10^6\ cc/m^3)]$
- $x = 10.42\ ug/m^3 = 0.01\ mg/m^3$

use 0.01 mg/m^3 as reporting limit.

Determine: Action level for upgrade to Level "C"

Given:

- Occupational Health and Safety Administration (OSHA) PEL = 0.05 mg/m^3
- 8 hour work day
- Reporting Limit = 0.01 mg/m^3
- Flow Rate = 1000 cc/min.(minimum)

Solution: x = Sample volume to reach PEL

$x = [(1000\ cc/min.)/(10^6\ cc/m^3)] \times (480\ min.)$

$x = 0.48\ m^3/Filter$

z = maximum lead per filter to be below PEL

$z = (0.05\ mg/m^3) \times (0.480\ m^3/filter)$

z = 0.024 mg/filter

z = 24 ug/filter

Use action level of 24 ug/filter for upgrade to Level "C" PPE. These calculations are used to determine an action level for upgrade to Level "C" PPE, for a complete description of Level of Protection/Action Guidelines refer to Section 8.8.3.

B. <u>Backup calculation for visible dust action level</u>

Maximum concentrations of lead in soils (O'Brien & Gere - 1988).

Lead = 95,500 mg/kg = 95,500 ppm = 9.55%

OSHA PEL = 0.05 mg/m^3 for lead

$$\frac{9.55\%}{100\%} = \frac{0.05\ mg/m^3}{x}$$

$x = 0.52\ mg/m^3$ (Total Particulate)

Apply a Safety Factor of 2

$x/2 = 0.26\ mg/m^3$

Use 0.26 mg/m^3 as action level[1] This calculation was executed to evaluate the worst case total particulate that may be encountered at the site. Refer to Section 8.8.3 for complete information on Action Guidelines.

A nuisance dust level of 10 mg/m^3 has been established and it is at this level that dust becomes readily visible. Visible dust has been established as the action level. When worker(s) observe visible signs of dust work shall stop and the area evacuated.

C. <u>Determine exposure (e) of 5 minutes at 10 mg/m^3</u>

$e = \{[(5\ min.)/(60\ min/hour)] \times (10\ mg/m^3)\}/(8\ hours)$
$e = 0.1043\ mg/m^3$ TWA

Safety Factor = x/e
Safety Factor = $(0.52\ mg/m^3)/(0.104\ mg/m^3)$
Safety Factor = 5

This calculation was executed to evaluate exposure of 5 minutes of visible dust levels at 10 mg/m^3 compared to the total particulate required to reach the PEL. For complete information on Action Guidelines, refer to Section 8.8.3.

Work shall be stopped and the area evacuated when:

- Unusual odors are detected
- Symptoms of exposure occur in any individual while on the job, refer to **Table 1**

---

[1]*This a simplified worst case evaluation, does not consider the following major factors:*
- *particulate size*
- *bioavailability from these particulate; and*
- *others*

- Worker(s) observes visible signs of organic contamination

- Visible dust is generated.

Upon suspension of work, the SSO shall direct the field personnel to move to a safe place. The PM and the CHSO will be contacted and health and safety procedure will be reassessed before work may resume. An addendum to this health and safety plan may be required.

8.8.3 Level of Protection/Action Guidelines

The following activities will be conducted at EPA Level "D" Protection:

- Field mobilization/demobilization
- Utility Clearance and Permits

Level "D" action guidance: Work shall be stopped and the area evacuated when:

- unusual odors are detected
- symptoms of exposure occur in any individual while on the job
- worker observes visible signs of organic contamination
- visible dust is generated

The following activities will be conducted at EPA Modified Level "D" Protection:

- Decontamination
- Hand auger borings (HAB) and sampling
- Soil borings
- Well installation
- Well development and groundwater sampling
- Groundwater level measurements

Modified Level "D" action guidance:

- If PASP analytical results indicate a result between 5 ug/filter and 24 ug/filter for an 8 hour collection period, a flow rate of 1000 cc/min. and a reporting limit of 5 ug/filter then exposure sampling will continue on a daily basis during intrusive activities (hand auger borings, soil borings and well installation).

The SSO will stop work and the work party will upgrade to Level "C" protection if:

- If PSAP analytical results indicated a result of 24 ug/filter or greater for an 8 hour collection period, a flow rate of 1000 cc/min and a reporting limit of 5 ug/filter. Also the PM and the CHSO will be contacted and health and safety procedures reviewed.

Work shall be stopped and the area evacuated when:

- Unusual odors are detected
- Symptoms of exposure occur in any individual while on the job
- Workers observe visible signs of organic contamination
- Visible dust is generated

The SSO will stop work and downgrade to Modified Level "D" Protection"

- If analytical results of follow-up PASP samples are below 24 ug/filter work activities may be downgraded to Modified Level "D" Protection.

<u>No field activities identified will be conducted at EPA Level "C" Protection</u>:

Level "C" action guidance: Work will remain stopped pending assessment and evaluation by the SSO and HSO.

8.9 DECONTAMINATION PROCEDURES

8.9.1 General

Decontamination of equipment and personnel will be performed to limit the migration of contaminants off-site and between work zones at the site.

Equipment and other tools will be cleaned prior to site entry to remove grease, oil, encrusted dirt or other materials. Special attention will be given to the rear portions of drill rigs, auger flights (inside and outside), drill rods and sampling tools. The SSO will inspect all equipment prior to use on-site.

Reusable drilling equipment, auger flights, and any other tools used for intrusive work will be decontaminated between borings. Cleaning may consist of scraping and scrubbing to remove encrusted materials followed by a soap and water wash and potable water rinse using a high-pressure hot water cleaning unit. Following decontamination, clean equipment will be stored on plastic sheeting and/or sawhorses if not immediately reused.

Soil and water sampling tools (split-spoons, hand-auger, trowel, bailers, etc.) will be cleaned between each use by soap and water wash, potable water rinse, isopropyl alcohol rinse, and deionized water rinse. Following decontamination, equipment will be stored on plastic sheeting or covered with plastic sheeting or garbage bags if not immediately reused. Decontamination fluids will be collected, and disposed of on SLLR pile or Taracorp pile.

At the conclusion of work at the site, the drill rig and other equipment will be thoroughly cleaned using the methods previously described. The SSO will inspect all equipment leaving the site for adequacy of decontamination.

8.9.2 Personnel Decontamination

Personnel decontamination will be conducted at a temporary decontamination area setup outside each sampling area (i.e., at sampling team truck for hand auger

sampling). Decontamination will consist primarily of soap and water washing and water rinse of exterior protective gear followed by doffing of the gear.

The general decontamination sequence for activities conducted at Modified Level "D" follows:

1. Wash outer gloves and boots
2. Rinse outer gloves and boots
3. Remove tape at wrists and boot interface
4. Remove coverall
5. Remove outer gloves
6. Remove and rinse goggles and hard hat
7. Remove inner gloves.

The general decontamination sequence for activities conducted at Level "C" follows:

1. Wash and rinse coverall with hand pump sprayer
2. Wash outer gloves and boots
3. Rinse outer gloves and boots
4. Remove tape at wrists, boot and hood interface
5. Remove outer gloves
6. Remove and rinse hard hat

7. Remove coverall

8. Remove APR, discard cartridges, rinse APR

9. Remove inner gloves.

Gloves and coveralls should be removed by turning inside out. Ground cloths, gloves, coveralls and APR cartridges will be placed into plastic trash bags and stored at the contamination reduction zone.

Decontamination fluids will be collected and will be disposed of on the SLLR pile or the Taracorp pile.

Respirators will be rinsed with potable water in the field after each use and will be cleaned at the end of the day using a soap and water wash followed by a potable water rinse. Respirators will be inspected daily for damage, missing parts and proper function. See **Attachment 5.**

Reusable protective equipment worn by personnel performing field activities will be rinsed with potable water after each use and will be cleaned at the end of each day in the manner prescribed for respirators. Reusable items will be air-dried and placed into plastic bags for storage.

Decontamination equipment and supplies consist of the following:

- Potable water
- Washtubs, 3 minimum
- Alconox, follow mixing instructions
- Brushes, hand sprayers
- Plastic sheet
- 5-gallon buckets with lids
- Garbage bags
- Scrapers, flat bladed
- Sponges or paper towels

- Double deionized or distilled water

8.9.3 Equipment Decontamination

Heavy equipment (i.e., drill rig, HSA) decontamination will be conducted at the contamination-reduction zone. Heavy equipment will be steam rinsed with potable water, steam washed with soap and potable water and steam rinsed with potable water using a hot water, high pressure cleaner. Refer to SOP No. 6 in the CDAP for additional decontamination requirements.

Decontamination fluids will be collected and will be disposed of on the SLLR pile or the Taracorp pile.

8.10 CONTROL OF FIELD-WORK GENERATED WASTE MATERIALS

Expendable materials having a low probability of contamination will be collected on a routine basis. The materials will be placed into trash bags and will be temporarily stored at the contamination-reduction zone. At least once a week the materials collected will be put out for the municipal trash pickup. Expendable materials include:

- Decontaminated expendable personnel protective equipment
- Ground cloths
- Domestic refuse

For materials having a high probability of contamination refer to SOP No. 1 and 2. These sections describe the site specific requirements for collection and disposal of auger cuttings and well development fluids.

Drum labeling will consist of painting a number of the outside wall of the drum, and identification with a self-adhesive label indicating project number, contents, date and initials of the person affixing the label. Chain-of-custody procedures presented in SOP No. 5 of the CDAP will be followed. Drum lids will be kept secure at all times.

9.1 RESPONSE PROCEDURES

In the event that an emergency situation arises such as an injury, illness, or fire, the appropriate immediate response must be taken by the first person to recognize the situation. Emergency contacts are given in **Table 2.** The Site Manager, with assistance from the SSO, has responsibility and authority for coordinating all emergency response activities until proper authorities arrive and assume control.

9.1.1 Physical Injury

In case of injuries to personnel, first aid (first aid kits meet the requirements of 29 CFR 1926.50) treatment will be initiated immediately by trained personnel. In case of serious injuries, the victim will be transported to a medical center as soon as possible. Minor injuries may be treated on site, but all injuries will be examined by trained medical personnel. Victims of serious bites or stings will be taken to a medical center. In the event an injured person is contaminated with chemicals or radionuclides, the person shall be taken to a medical center as soon as possible. Decontamination shall be performed to prevent further exposure only if it will not aggravate the injury. Treatment of life-threatening or serious injuries will always be considered first.

9.1.2 Fire/Explosion

Fire emergency will be handled by immediately notifying the fire department. Only if the fire appears to be small and easily extinguishable will personnel attempt to control it with fire extinguishers available in the work area. Otherwise, immediate evacuation of the area is indicated. In the event of an explosion, all personnel shall be evacuated and the fire department notified. No one shall reenter the area until it has been cleared by explosives safety personnel.

9.2 DIRECTIONS TO NEAREST HOSPITAL

HOSPITAL: Saint Elizabeth's Medical Center
2100 Madison Avenue
Granite City, Illinois 62040
(618) 798-3000

ROUTE TO HOSPITAL: Exit site onto State Street travel north to 16 th Street turn right (southeast) and travel two (2) blocks to Madison Avenue, turn left (north-northeast) on Madison Avenue and travel five (5) blocks to 21 st Street. The Hospital is located in the east-southeast corner of Madson Avenue to 21 st Street.

DISTANCE TO HOSPITAL: The distance from the NL/Taracorp property to the hospital is approximately 3/4 mile.

Hospital route map is included as **Figure 4**.

10.0
SITE PERSONNEL/ASSIGNMENTS

Table 3 lists the personnel qualified to work at the site. Personnel assignments are also listed. Personnel will not receive final clearance to work at the site until they meet health and safety provisions of sections 7.1 through 7.3.

11.0
SPILL CONTAINMENT

A written Spill Containment Program is not required for this project.

TABLE 3
SITE PERSONNEL / ASSIGNMENTS

NAME	FIRM/ REGION	CLEARANCE	ASSIGNMENT
Robert R.Billman	WCC-STL	C-S-F	Geologist
Dana Doefler	WCC-STL	C-S	Chemist
Jeffery L. Fouse	WCC-STL	C-S-F	Engineer
Jorge Y. Garcia	WCC-STL	C	Geologist, FTL(wells,borings)
Gregg Hagerty	WCC-STL	C-S	Engineer, FTL(HAB's)
Kenneth Hagg	WCC-STL	Pending	Engineer, PM
Thomas P.Hart	WCC-STL	C	Engineer
Timothy M. Hicks	WCC-STL	C	Technician
James B. Hummert	WCC-STL	C-F	Engineer
Kimberly J. Ilenda	WCC-STL	C	Biologist
Frank Ligion	WCC-STL	C	Technician
Franziska-Y. D. Malsy	WCC-STL	C-S-F	Engineer
James Mayo	WCC-STL	C-F	Engineer
Peter M. Merten	WCC-STL	C-F	Engineer, HSC
Karen Meyer	WCC-STL	C	Engineer
Thomas J. Mottin	WCC-STL	C	Engineer
Eric Page	WCC-STL	C	Geologist
David Pate	WCC-STL	C-S-F	Geologist, FOS

TABLE 3
SITE PERSONNEL / ASSIGNMENTS

NAME	FIRM/ REGION	CLEARANCE	ASSIGNMENT
Cynthia Pavelka	WCC-STL	C-S-F	Engineer, SSO, FTL(Home Insp.)
Wendy Reinbolt	WCC-STL	C	Engineer
Ray Scherrer	WCC-STL	C-F	Technician
Mary Shore	WCC-STL	C-F	Engineer
Rudolph Torrini	WCC-STL	C-F	Engineer
Mark Wallace	WCC-STL	C-F	Technician
Martin G. Kemplin	WCC-WYN	B-C-S-F	CHSO
Catherine Carr	WCC-CLV	B-C-S-F	HSO

Abbreviations

Assignment:

PM - Project Manager

FOS - Field Operations Supervisor

FTL - Field Team Leader

SSO - Site Safety Officer

HSC - Health and Safety Coordinator

HSO - Health and Safety Officer

CHSO - Corporate Health and Safety Officer

Clearance:

B - EPA Level "B" Certified

C - EPA Level "C" Certified

S - Supervisor Certified

F - Multimedia Standard First Aid Certified

SITE HEALTH AND SAFETY PLAN FORM

Health and Safety Program

LIST OF CONTAMINANTS
TABLE 1

KEY				
	Abs = Skin Absorption	T = Tailings	Ing = Ingestion	Con = Skin &/or Eye Contact
	NA = Not Available	S = Soil	U = Unknown	GW = Ground Water
	NE = No Evidence	A = Air	Inh = Inhalation	SW = Surface Water

CONTAMINANT	HIGHEST OBSERVED CONCENTRATION (specify units and media)	LOCATION	PEL/TLV ppm or mg/m3 (specify)	WARNING CONCENTRATIONS IDLH ppm or mg/m3 (specify)	WARNING CONCENTRATIONS ppm or mg/m3 (specify)	EXPOSURE ROUTE	SYMPTOMS/EFFECTS OF EXPOSURE	PHOTO IONIZATION POTENTIAL	TOXI-COLOGY
Antimony	52 mg/kg (Soil) 495 mg/kg (Soil) 10 mg/kg (Soil)	NL/TARA Venice Eagle Park Ac.	TLV 0.5 mg/m3	80 mg/m3		Inh Con	Nose, throat, mouth irritation; cough; dizziness; headache; nausea, vomiting, diarrhea; cramps; insomnia, anorexia; skin irritation; unable to smell; cardiac abnormalities in antimony trichloride exposures.	9.1 eV	
Arsenic	71.1 mg/kg (Soil) 40.8 mg/kg (Soil) 9.3 mg/kg (Soil) 0.101 mg/l (Water)	NL/TARA Venice Eagle Park Ac. Well 101S	PEL 0.010 mg/m3 Ceiling 0.002 mg/m3	100 ppm	1 ppm	Inh Abs Ing Con	Ulceration of nasal septum, dermatitis, gastro-intestinal disturbances, peripheral neuropathy, respiratory irritation, hyperemia pigmentation of skin.	8.9 – 11.0 eV	Carcinogen
Cadmium dust	5 mg/kg (Soil) 4 mg/kg (Soil) 3 mg/kg (Soil) 6.9 mg/l (Water)	NL/TARA Venice Eagle Park Ac. Well 108D	TLV 0.05 mg/m3 PEL 0.2 mg/m3	50 mg/m3 Ca	inadequate	Inh Ing	Pulminary edema, dyspnea, cough, tight chest, substernal pain; headache; chills, muscle aches; nausea, vomiting, diarrhea; absence of the sense of smell; emphysema, protein loss through urine, mild anemia.	NA	Carcinogen
Chromium metals & insoluable salts (as Cr)	142 mg/kg (Soil) 696 mg/kg (Soil) 33 mg/kg (Soil)	NL/TARA Venice Eagle Park Ac.	TLV 0.5 mg/m3 PEL 1 mg/m3	NE	NA	Inh Ing	Histologic fibrosis of lungs.	NA	Carcinogen
Chromium: (soluable Chromic& Chromous Salts)			TLV 0.5 mg/m3	NE	NA	Ing Con	Dermal sensitization.	NA	Suspected Carcinogen
Lead	41,000 mg/kg (Soil) 95,500 mg/kg (Soil) 3,250 mg/kg (Soil) 0.013 mg/l (Water)	NL/TARA Venice Eagle Park Ac. Well 106D	TLV 0.05 mg/m3	700 mg/m3	NA	Inh Ing Con	Lassitude, insomnia, pallor, eye grounds, anorexia, weight loss, malnutrition, constipation, abdominal pain, colic, hypotense, anemia, gum lead line, tremors wrist paralysis, encephalopathy, nephropathy.	NA	Suspected Carcinogen
Manganese	29.4 mg/l (Water)	Well 108D	PEL 5 mg/m3 (dust) TLV 1 mg/m3 (fumes)	NE		Inh Ing	Parkinson's; asthenia, insomnia, mental confusion; metal fume fever; dry throat,cough tight chest, dyspnea, rales; flu-like fever; low back pain; vomiting; malaise; fatigue.	NA	

SITE HEALTH AND SAFETY PLAN FORM

Health and Safety Program

LIST OF CONTAMINANTS
TABLE 1

K	Abs = Skin Absorption	T = Tailings	Ing = Ingestion	Con = Skin &/or Eye Contact
E	NA = Not Available	S = Soil	U = Unknown	GW = Ground Water
Y	NE = No Evidence	A = Air	Inh = Inhilation	SW = Surface Water

CONTAMINANT	HIGHEST OBSERVED CONCENTRATION (specify units and media)	LOCATION	PEL/TLV ppm or mg/m3 (specify)	IDLH ppm or mg/m3 (specify)	WARNING CONCENTRATIONS ppm or mg/m3 (specify)	EXPOSURE ROUTE	SYMPTOMS/EFFECTS OF EXPOSURE	PHOTO IONIZATION POTENTIAL	TOXI-COLOGY
Selenium	0.003 mg/l (Water)	Well 104S & Well 106D	TLV 0.2 mg/m3	U	0.0002 mg/m3	Inh Abs Ing Con	Irritation of the eyes, nose, throat; disturbed vision; headaches; chills, fever; dyspnea, bronchitis; metal taste, garlic breath; gastro-intestinal distress; dermatitis; eye and skin burns.	11.94 eV (REM II)	
Zinc (Zinc oxide) (dust)	738 mg/kg (Soil) 766 mg/kg (Soil) 514 mg/kg (Soil) 44 mg/l (Water)	NL/TARA Venice Eagle Park Ac. Well 108D	TLV 10.0 mg/m3	NE	NE	Inh	Sweet metal taste, dry throat, cough, chill, fever, tight chest, difficult breathing, bubbling sounds in bronchi during breathing, low pulmonary function headache, blurred vision, back pain, vomiting, nausea, fatigue, lassitude, malaise	NE	NE

TABLE 2
EMERGENCY CONTACTS

Name	Telephone Number
24-Hour Hotline for Toxic Exposure Treatment	(513) 421-3063
USEPA Environmental Response Team	(201) 321-6660
U.S.Coast Guard Environmental Response Team	(800) 424-8802
Association of American Railroads Response Team	(202) 293-4048
Chemtrec	(800) 424-9300
WCC CHSA, Phil Jones	(215) 825-3000
WCC Consulting Physician, Peter Greany	(714) 535-8221
WCC EOG-CHSO, Martin Kemplin	(201) 785-0700
WCC GLOG-HSO, Catherine Carr	(216) 349-2708
WCC St. Louis BU Manager, William Durbin	(314) 429-0100
WCC Project Manager, Ken Hagg	(314) 429-0100
Hospital, Saint Elizabeth's Medical Center	(618) 798-3000
Ambulance	(618) 877-4747
Fire Department, Granite City	(618) 877-6111
Fire Department, Venice	(618) 877-2114
Fire Department, Madison	(618) 876-4300
Police Department, Granite City	(618) 877-6111
Police Department, Venice	(618) 877-2114
Police Department, Madison	(618) 876-4300

TABLE 2 (Continued)
EMERGENCY CONTACTS

Name	Telephone Number
Illinois Department of Public Health	(618) 656-6680
Posion Control Center, Springfield	(800) 252-2022
Poison Control Center, Cardinal Glennon	(314) 772-5200
State Environmental Agency, IEPA	(800) 656-6680
State Police, Il. State Highway Patrol	(618) 346-3600
Federal Emergency Management Agency	(800) 245-5554

FIGURES

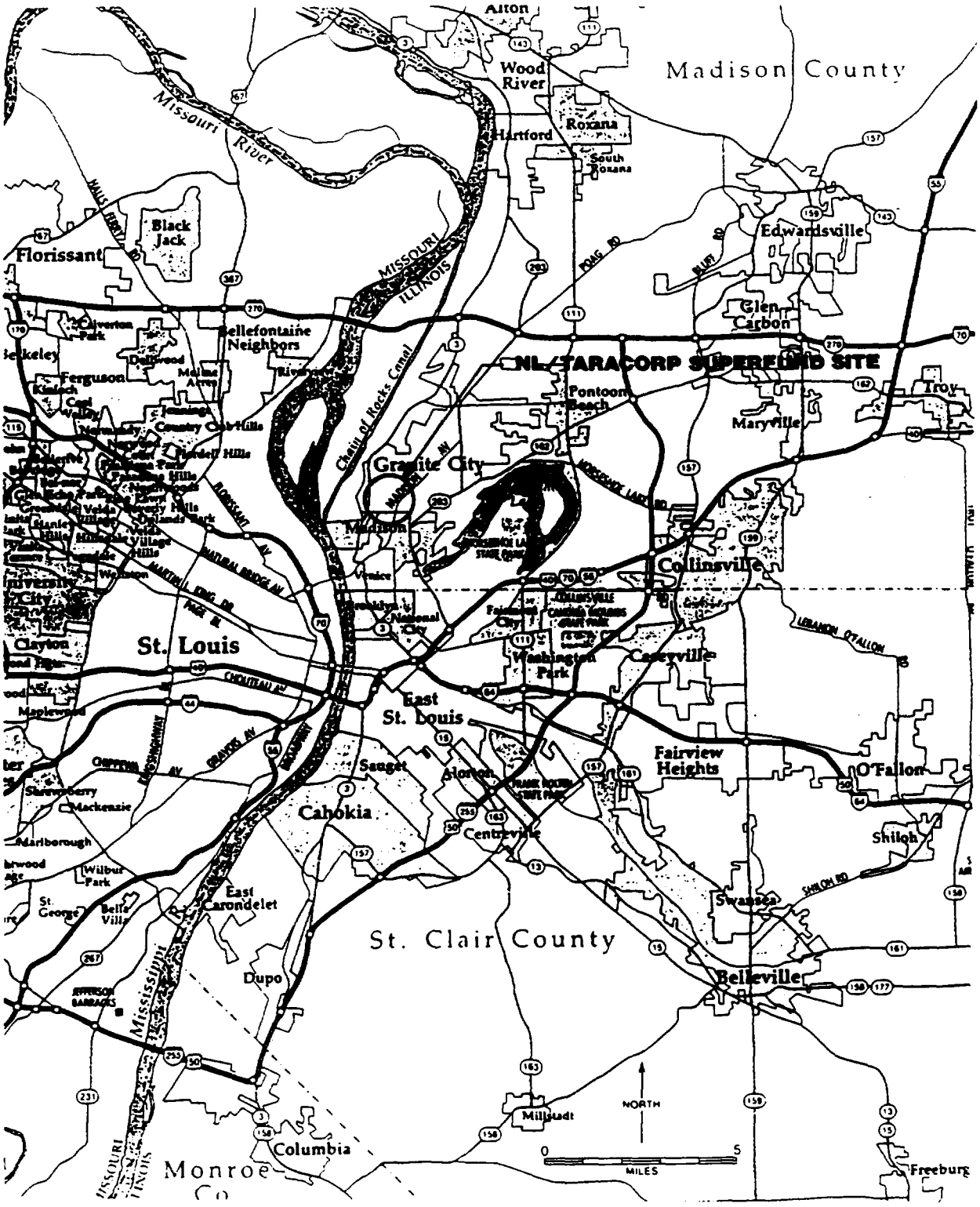

NL/TARACORP SUPERFUND SITE U.S. ARMY CORPS OF ENGINEERS GRANITE CITY, ILLINOIS	PROJECT NO. 89MC114V

Woodward-Clyde Consultants

CONSULTING ENGINEERS, GEOLOGISTS, AND ENVIRONMENTAL SCIENTISTS

DRN. BY: kmm 7/16/91 CHKD BY:	Site Location Map	FIG. NO. 1

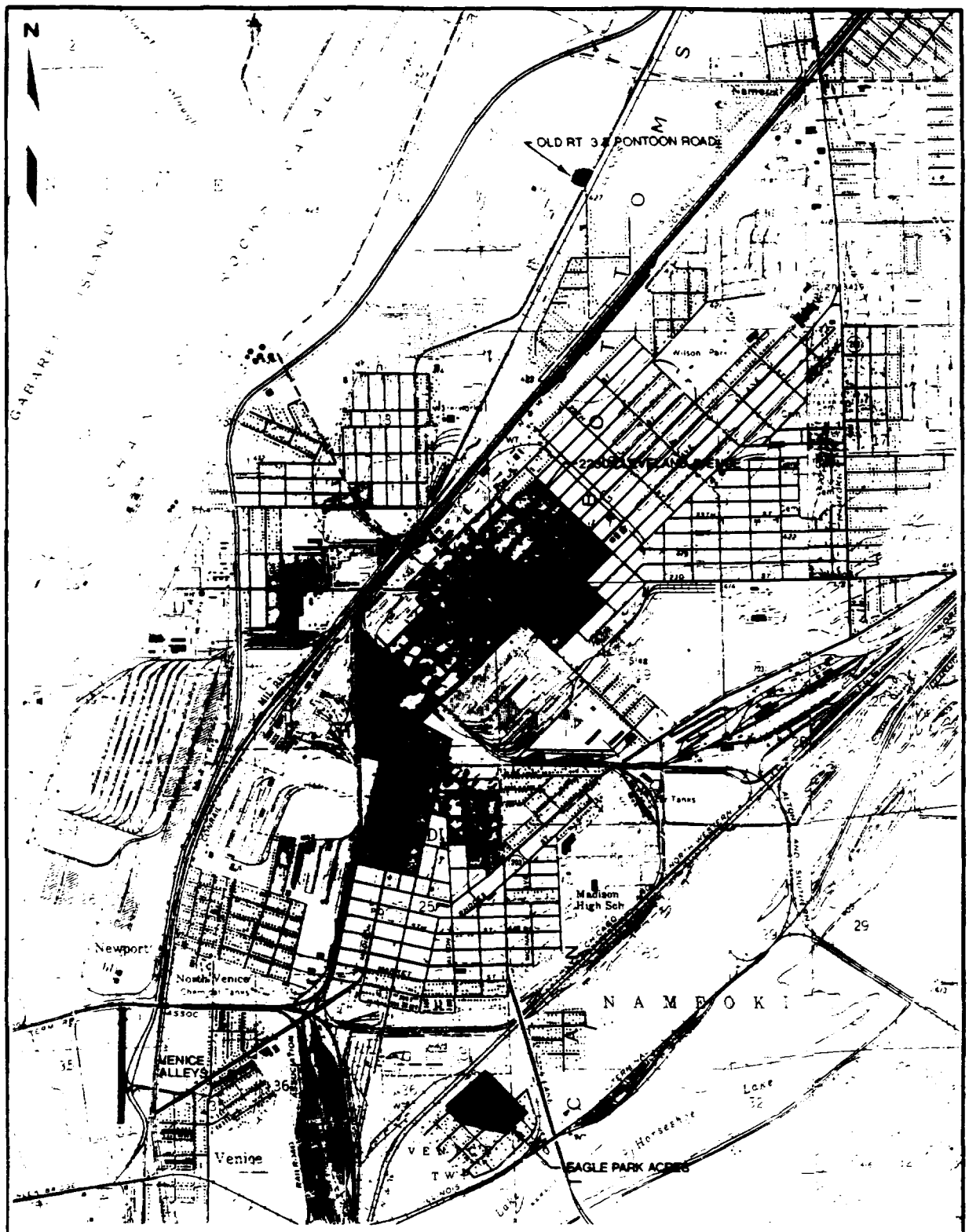

LEGEND

- REMOTE FILL AREAS
- INDUSTRIAL AREAS
- RESIDENTIAL AREAS

SCALE 1:24 000

CONTOUR INTERVAL 10 FEET
DOTTED LINES REPRESENT 5-FOOT CONTOURS
NATIONAL GEODETIC VERTICAL DATUM OF 1929

NOTE: Drawing taken from U.S.G.S - Granite City, IL-MO, 1982 and Monks Mound, IL, 1974

NL/TARACORP SUPERFUND SITE U.S. ARMY CORPS OF ENGINEERS GRANITE CITY, ILLINOIS	PROJECT NO 89MC114V
Woodward-Clyde Consultants CONSULTING ENGINEERS, GEOLOGISTS, AND ENVIRONMENTAL SCIENTISTS	
DRAWN BY kmm 7/22/91 CHKD BY	Site Plan Industrial and Residential Area FIG. NO 2

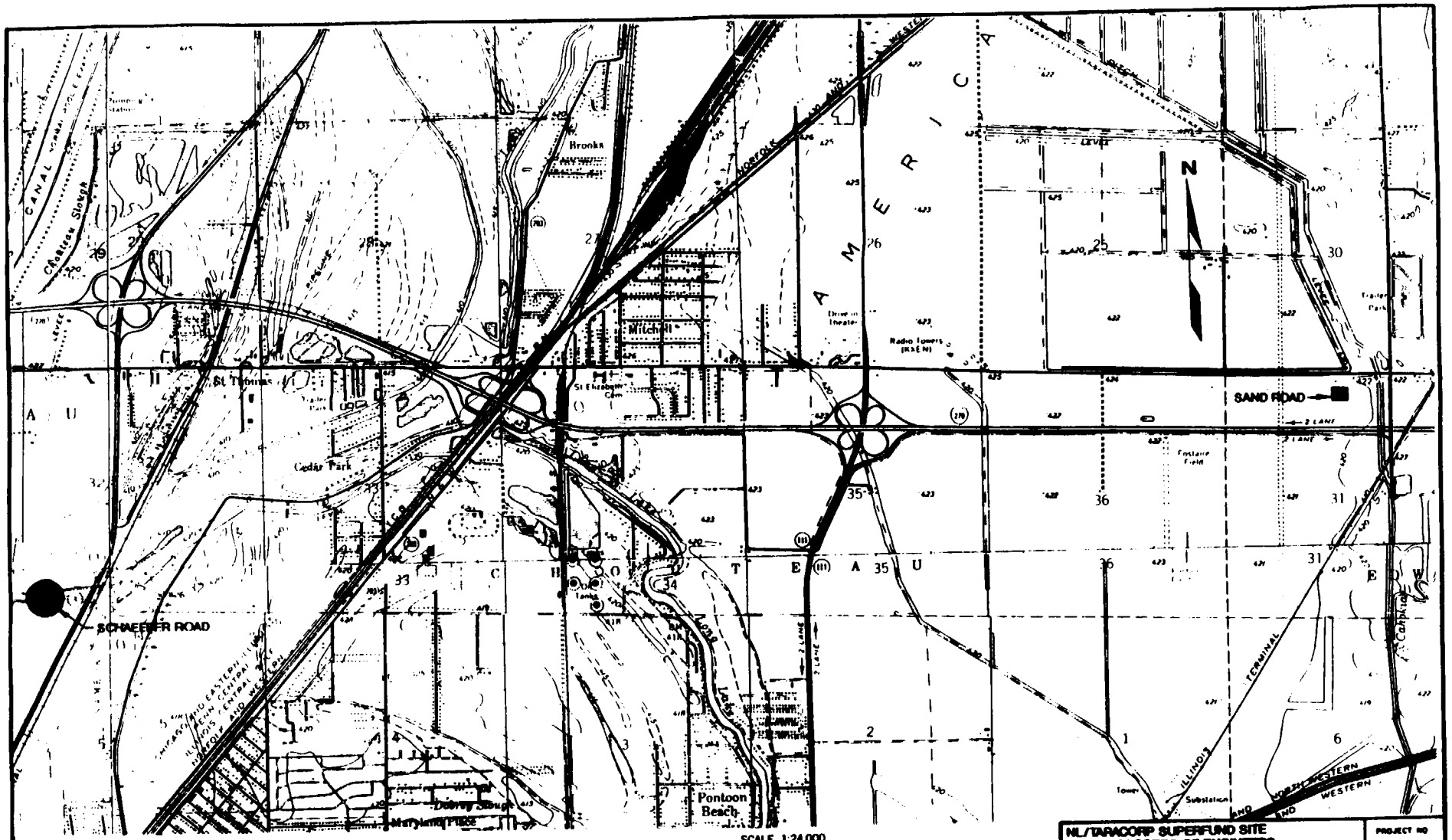

SCALE 1:24 000

1 MILE

1000 0 1000 2000 3000 4000 5000 6000 7000 FEET

1 KILOMETER

CONTOUR INTERVAL 10 FEET
DOTTED LINES REPRESENT 5-FOOT CONTOURS
NATIONAL GEODETIC VERTICAL DATUM OF 1929

LEGEND

■ REMOTE FILL AREAS

NOTE: Drawing taken from U.S.G.S - Columbia Bottom, MO-IL, 1974; Wood River, IL-MO, 1974; Monks Mound, IL, 1974; Granite City, IL-MO, 1982.

NL/TARACORP SUPERFUND SITE U.S. ARMY CORPS OF ENGINEERS GRANITE CITY, ILLINOIS	PROJECT NO 89MC114V
Woodward-Clyde Consultants CONSULTING ENGINEERS, GEOLOGISTS, AND ENVIRONMENTAL SCIENTISTS	
DRN BY kmm 7/22/91 CHKD BY	Site Plan Schaeffer & Sand Road FIG NO 3

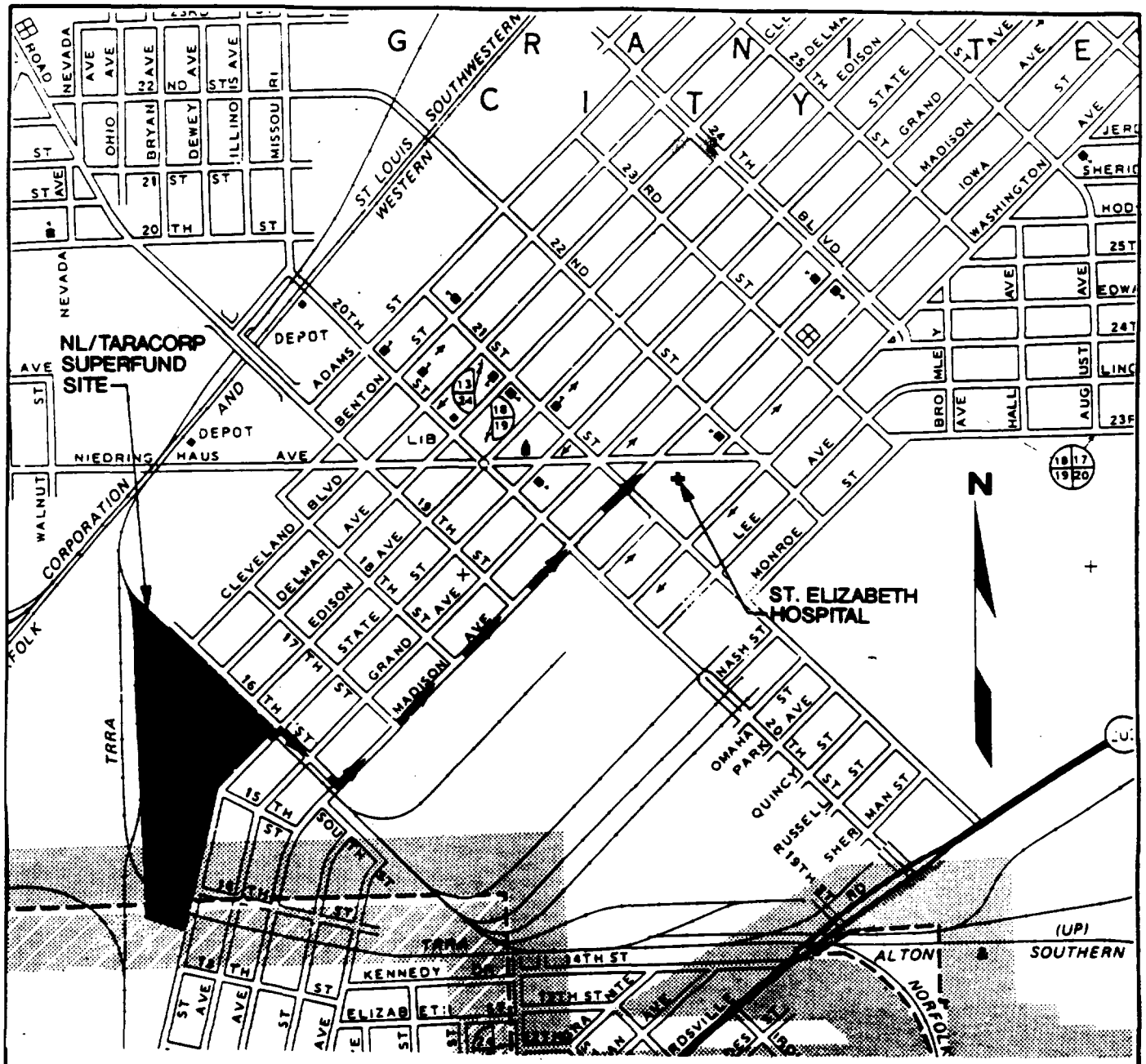

REFERENCE: General Highway Map, Venice and Nameoki Townships, Madison County, Prepared by USDOT

SCALE

0 1200 2400 3600 4800 6000 FEET

0 .1 .2 .3 .4 .5 .6 .7 .8 .9 1.0 MILE

0 2 4 6 8 1.0 KILOMETER

LEGEND

- SCHOOL
- HOSPITAL
- POST OFFICE
- PUBLIC BUILDING

NL/TARACORP SUPERFUND SITE
U.S. ARMY CORPS OF ENGINEERS
GRANITE CITY, ILLINOIS

PROJECT NO. 89MC114V

Woodward-Clyde Consultants
CONSULTING ENGINEERS, GEOLOGISTS, AND ENVIRONMENTAL SCIENTISTS

DRN. BY: fdm 7/25/91
CHKD. BY:

Route to Hospital

FIG. NO. 4

BRUNING 40 522 70328 01

JOB SAFETY & HEALTH PROTECTION

The Occupational Safety and Health Act of 1970 provides job safety and health protection for workers by promoting safe and healthful working conditions throughout the Nation. Requirements of the Act include the following:

Employers

All employers must furnish to employees employment and a place of employment free from recognized hazards that are causing or are likely to cause death or serious harm to employees. Employers must comply with occupational safety and health standards issued under the Act.

Employees

Employees must comply with all occupational safety and health standards, rules, regulations and orders issued under the Act that apply to their own actions and conduct on the job.

The Occupational Safety and Health Administration (OSHA) of the U.S. Department of Labor has the primary responsibility for administering the Act. OSHA issues occupational safety and health standards, and its Compliance Safety and Health Officers conduct private inspections to help ensure compliance with the Act.

Inspection

The Act requires that a representative of the employer and a representative authorized by the employees be given an opportunity to accompany the OSHA inspector for the purpose of aiding the inspection.

Where there is no authorized employee representative, the OSHA Compliance Officer must consult with a reasonable number of employees concerning safety and health conditions in the workplace.

Complaint

Employees or their representatives have the right to file a complaint with the nearest OSHA office requesting an inspection if they believe unsafe or unhealthful conditions exist in their workplace. OSHA will withhold, on request, names of employees complaining.

The Act provides that employees may not be discharged or discriminated against in any way for filing safety and health complaints or for otherwise exercising their rights under the Act.

Employees who believe they have been discriminated against may file a complaint with their nearest OSHA office within 30 days of the alleged discrimination.

Citation

If upon inspection OSHA believes an employer has violated the Act, a citation alleging such violations will be issued to the employer. Each citation will specify a time period within which the alleged violation must be corrected.

The OSHA citation must be prominently displayed at or near the place of alleged violation for three days, or until it is corrected, whichever is later, to warn employees of dangers that may exist there.

Proposed Penalty

The Act provides for mandatory penalties against employers of up to $1,000 for each serious violation and for optional penalties of up to $1,000 for each nonserious violation. Penalties of up to $1,000 per day may be proposed for failure to correct violations within the proposed time period. Also, any employer who willfully or repeatedly violates the Act may be assessed penalties of up to $10,000 for each such violation.

Criminal penalties are also provided for in the Act. Any willful violation resulting in death of an employee, upon conviction is punishable by a fine of not more than $10,000, or by imprisonment for not more than six months, or by both. Conviction of an employer after a first conviction doubles these maximum penalties.

Voluntary Activity

While providing penalties for violations, the Act also encourages efforts by labor and management, before an OSHA inspection, to reduce workplace hazards voluntarily and to develop and improve safety and health programs in all workplaces and industries. OSHA's Voluntary Protection Programs recognize outstanding efforts of this nature.

Such voluntary action should initially focus on the identification and elimination of hazards that could cause death, injury, or illness to employees and supervisors. There are many public and private organizations that can provide information and assistance in this effort, if requested. Also, your local OSHA office can provide considerable help and advice on solving safety and health problems or can refer you to other sources for help such as training.

Consultation

Free consultative assistance, without citation or penalty, is available to employers, on request, through OSHA supported programs in most State departments of labor or health.

More Information

Additional information and copies of the Act, specific OSHA safety and health standards, and other applicable regulations may be obtained from your employer or from the nearest OSHA Regional Office in the following locations:

Atlanta, Georgia
Boston, Massachusetts
Chicago, Illinois
Dallas, Texas
Denver, Colorado
Kansas City, Missouri
New York, New York
Philadelphia, Pennsylvania
San Francisco, California
Seattle, Washington

Telephone numbers for these offices, and additional area office locations, are listed in the telephone directory under the United States Department of Labor in the United States Government listing.

Washington, D.C.
1985
OSHA 2203

William E. Brock, Secretary of Labor

U.S. Department of Labor
Occupational Safety and Health Administration

Under provisions of Title 29, Code of Federal Regulations, Part 1903.2(a)(1) employers must post this notice (or a facsimile) in a conspicuous place where notices to employees are customarily posted.

Figure 5

ATTACHMENTS

ATTACHMENT A

HEAT/COLD STRESS (HS-102/HS-103)

102.0 HEAT STRESS

102.1 PURPOSE

The purpose of this OP is to provide general information on heat stress and the methods that can be utilized to prevent or minimize the occurrence of heat stress.

Adverse climatic conditions are important considerations in planning and conducting site operations. Ambient temperature effects can include physical discomfort, reduced efficiency, personal injury, and increased accident probability. Heat stress is of particular concern while wearing impermeable protective garments, since these garments inhibit evaporative body cooling.

102.2 REQUIREMENTS

The NIOSH criteria document for heat stress recommends that environmental monitoring and other preventive measures be adopted in hot work environments. However, the provisions are not directly applicable to employees who are required to wear impermeable protective clothing. The reason for this exception is that impermeable clothing prevents the evaporation of sweat, which is one of the most important cooling mechanisms of the body. There is no recognized health standard protection for workers wearing impermeable protective clothing and respirators in hot environments.

The ACGIH has adopted a TLV for heat stress. These guides relate to work/rest regimes.

102.3 ADDITIONAL HAZARD

The use of Personal Protective Equipment of the types commonly used for hazardous waste work can place stress on the body. One common problem with the use of personal protective equipment, especially in hot environments, is heat stress. Protective clothing can cause excessive sweating and can prevent the body from properly regulating body temperature.

102.4 TYPES OF HEAT STRESS

Heat stress is the aggregate of environmental and physical work factors that constitute the total heat load imposed on the body. The environmental factors of heat stress are the air temperature, radiant heat exchange, air movement, and water vapor pressure. Physical work contributes to the total heat stress of the job by producing metabolic heat in the body in proportion to the intensity of the work. The amount and type of clothing also affect the heat stress.

Heat strain is the series of physiological responses to heat stress. When the strain is excessive for the exposed individual, a feeling of discomfort or distress may result, and, finally, a heat disorder may ensue. The severity of strain will depend not only on the magnitude of the prevailing stress, but also on the age, physical fitness, degree of acclimatization, and dehydration of the worker.

Heat disorder is a general term used to describe one or more of the following heat-related disabilities or illnesses:

- <u>Heat Cramps</u> - painful intermittent spasms of the voluntary muscles following hard physical work in a hot

environment. Cramps usually occur after heavy sweating, and often begin at the end of a work shift.

- Heat Exhaustion - profuse sweating, weakness, rapid pulse, dizziness, nausea, and headache. The skin is cool and sometimes pale and clammy with sweat. Body temperature is normal or subnormal. Nausea, vomiting, and unconsciousness may occur.

- Heat Stroke - sweating is diminished or absent. The skin is hot, dry, and flushed. Increased body temperature, which, if uncontrolled, may lead to delirium, convulsions, coma, and even death. Medical care is urgently needed.

102.5 METHODS OF CONTROLLING HEAT STRESS

As many of the following control measures as are appropriate to site conditions should be utilized to aid in controlling heat stress:

- Provide for adequate liquids to replace lost body fluids and replace water and salt lost from sweating. Encourage personnel to drink more than the amount required to satisfy thirst. Thirst satisfaction is not an accurate indicator of adequate salt and fluid replacement.

- Replace fluids with water, commercial mixes such as Gatorade or Quick Kick, or a combination of these.

- Establish a work regimen that will provide adequate rest periods for cooling down. This may require additional shifts of workers.

- Wear cooling devices such as vortex tubes or cooling vests beneath protective garments.

- Take all breaks in a cool rest area (77°F is best).

- Remove impermeable protective garments during rest periods.

- Do not assign otner tasks to personnel during rest periods.

- Inform personnel of the importance of adequate rest, acclimation, and proper diet in the prevention of heat stress.

102.6 MONITORING

102.6.1 TEMPERATURE

The heat stress of an area can be monitored by the Wet Bulb Globe Temperature Index (WBGT) technique. Where heat stress is a possibility, a heat stress monitoring device, such as the Wibget Heat Stress Monitor (Reuter Stokes) can be utilized.

The WBGT shall be compared to the Threshold Limit Values (TLV) outlined by the ACGIH TLV guides, and a work-rest regiment can be established in accordance with the WBGT. Note that 5 degrees C must be subtracted from the TLVs for heat stress listed to compensate for the wearing of impermeable protective clothing.

102.6.2 MEDICAL

In addition to the provisions of the WCC medical surveillance program, on-site medical monitoring of personnel should be performed by qualified medical personnel for projects where heat stress is a major concern. Blood pressure, pulse, body temperature (oral), and body weight loss should be taken and recorded.

Heart Rate: Count the radial pulse during a 30-second period as early as possible in the rest period. If the heart rate exceeds 110 beats per minute at the beginning of the rest period, shorten the next work cycle by one-third and keep the same. If the heart rate still exceeds 110 beats per minute at the next rest cycle, shorten the following work cycle by one-third.

Oral Temperature: Use a clinical thermometer or similar device to measure the oral temperature at the end of the work period (before drinking liquids). If the oral temperature exceeds 99.6F (37.6C), shorten the next work cycle by one-third without changing the rest period. If the oral temperature still exceeds 99.6F (37.6C) at the beginning of the next rest period, shorten the following work cycle by one-third.

Do not permit a worker to wear a semipermeable or impermeable garment if his/her oral temperature exceeds 100.6F (38.1C).

Body Water Loss: Measure body weight on a scale accurate to ±0.25 pounds at the beginning and end of each work day (also lunch break, if possible) to see if enough fluids are being taken to prevent dehydration. Weights should be taken while the employee wears similar clothing or, ideally, nude. The body water loss should not exceed 1.5 percent total body weight loss in a work day.

Portable water and Gatorade or other electrolyte replacement fluid should be available. Workers should be encouraged to drink fluids during rest periods.

Physiological Monitoring: Initially, the frequency of physiological monitoring depends on the air temperature adjusted for solar radiation and the level of physical work (see Table 2). The length of the work cycle will be governed by the frequency of the required physiological monitoring.

102.7 REFERENCES

American Conference of Governmental Industrial Hygienists, Threshold Limit Values for Chemical Substances in the Work Environment, 1984 - 1985.

Olishifski, J.B., Fundamentals of Industrial Hygiene, National Safety Council, 1983.

National Institute for Occupational Safety and Health, The Industrial Environment, Its Evaluation and Control, 1973.

/H&S2

HEAT STRESS

FROM

OCCUPATIONAL EXPOSURE TO HOT ENVIRONMENTS, NIOSH

Revised Criteria 1986

NIOSH

U.S. DEPARTMENT OF HEALTH AND HUMAN SERVICES
PULBIC HEALTH SERVICE
CENTERS FOR DISEASE CONTROL
NATIONAL INSTITUTE FOR OCCUPATIONAL SAFETY AND HEALTH

1. Heatstroke

The classical description of heatstroke includes: (1) a major disruption of central nervous function (unconsciousness or convulsions); (2) a lack of sweating; and (3) a rectal temperature in excess of 41°C (105.8°F) [4,59,75,76]. The 41°C rectal temperature is an arbitrary value for hyperpyrexia, because the disorder has not been produced experimentally in humans so that observations are made only after the admission of patients to hospitals, which may vary in time from about 30 minutes to several hours after the event. In some heatstroke cases, sweating may be present [76]. The local circumstances of metabolic and environmental heat loads which give rise to the disorder are highly variable and are often difficult or impossible to reconstruct with accuracy. The period between the occurrence of the event and admission to a hospital may result in a quite different medical outcome from one patient to another depending on the knowledge, understanding, skill, and facilities available to those who render first aid in the intervening period. Recently, the sequence of biologic events in some fatal heatstroke cases have been described [77].

Heatstroke is a MEDICAL EMERGENCY, and any procedure from the moment of onset which will cool the patient improves the prognosis. Placing the patient in a shady area, removing outer clothing and wetting the skin, and increasing air movement to enhance evaporative cooling are all urgently needed until professional methods of cooling and assessment of the degree of the disorder are available. Frequently, by the time a patient is admitted to a hospital, the disorder has progressed to a multisystem lesion affecting virtually all tissues and organs [77]. In the typical clinical presentation, the central nervous system is disorganized, and there is commonly evidence of fragility of small blood vessels, possibly coupled with the loss of integrity of cellular membranes in many tissues. The blood-clotting mechanism is often severely disturbed, as are liver and kidney functions. It is not clear, however, whether these events are present at the onset of the disorder, or whether their development requires a combination of a given degree of elevated body temperature and a certain period for tissue or cellular damage to occur. Postmortem evaluation indicates there are few tissues which escape pathological involvement. Early recognition of the disorder or its impending onset, associated with appropriate treatment, considerably reduces the death rate and the extent of organ and tissue involvement. An ill worker should not be sent home or left unattended without a physician's specific order.

2. Heat Exhaustion

Heat exhaustion is a mild form of heat disorder which readily yields to prompt treatment. This disorder has been encountered frequently in experimental assessment of heat tolerance. Characteristically, it is sometimes but not always accompanied by a small increase in body temperature (38°-39°C or 100.4°-102.2°F). The symptoms of headache, nausea, vertigo, weakness, thirst, and giddiness are common to both heat exhaustion and the early stage of heatstroke. There is a wide interindividual variation in the ability to tolerate an increased body

temperature; some individuals cannot tolerate rectal temperatures of 38°-39°C, and others continue to perform well at even higher rectal temperatures [78].

There are, of course, many variants in the development of heat disorders. Failure to replace water may predispose the individual to one or more of the heat disorders and may complicate an already complex situation. Therefore, cases of hyperpyrexia can be precipitated by hypohydration. It is unlikely that there is only one cause of hyperpyrexia without some influence from another. Recent data suggest that cases of heat exhaustion can be expected to occur some 10 times more frequently than cases of heatstroke [59].

3. Heat Cramps

Heat cramps are not uncommon in individuals who work hard in the heat. They are attributable to a continued loss of salt in the sweat, accompanied by copious intake of water without appropriate replacement of salt. Other electrolytes such as Mg^{++}, Ca^{++}, and K^{+} may also be involved. Cramps often occur in the muscles principally used during work and can be readily alleviated by rest, the ingestion of water, and the correction of any body fluid electrolyte imbalance.

4. Heat Rashes

The most common heat rash is prickly heat (miliaria rubra), which appears as red papules, usually in areas where the clothing is restrictive, and gives rise to a prickling sensation, particularly as sweating increases. It occurs in skin that is persistently wetted by unevaporated sweat, apparently because the keratinous layers of the skin absorb water, swell, and mechanically obstruct the sweat ducts [21,79,80]. The papules may become infected unless they are treated.

Another skin disorder (miliaria crystallina) appears with the onset of sweating in skin previously injured at the surface, commonly in sunburned areas. The damage prevents the escape of sweat with the formation of small to large watery vesicles which rapidly subside once sweating stops, and the problem ceases to exist once the damaged skin is sloughed.

Miliaria profunda occurs when the blockage of sweat ducts is below the skin surface. This rash also occurs following sunburn injury, but has been reported to occur without clear evidence of previous skin injury. Discrete and pale elevations of the skin, resembling gooseflesh, are present.

In most cases, the rashes disappear when the individuals are returned to cool environments. It seems likely that none of the rashes occur (or if they do, certainly with greatly diminished frequency) when a substantial part of the day is spent in cool and/or dry areas so that the skin surface can dry.

Although these heat rashes are not dangerous in themselves, each of them carries the possibility of resulting patchy areas which are anhidrotic, and thereby adversely affects evaporative heat loss and thermoregulation. In experimentally induced miliaria rubra, sweating capacity recovers within 3-4 weeks [79,80]. Wet and/or damaged skin could absorb toxic chemicals more readily than dry unbroken skin.

C. Chronic Heat Disorders

Some long term effects from exposure to heat stress (based on anecdotal, historical, and some epidemiologic and experimental evidence) have been suggested. Recently, the evidence was reviewed by Dukes-Dobos who proposed a three-category classification of possible heat-related chronic health effects [77]. The three categories are Type I - those related to acute heat illnesses such as reduced heat tolerance following heatstroke or reduced sweating capacity; Type II - not clear clinical entities, but are similar to general stress reactions; and Type III - which includes anhidrotic heat exhaustion, tropical neurosthenia, and increased incidence of kidney stones. The primary references cited in the review are suggestive of some possible chronic heat effects. However, the available data do not contribute information of value in protecting workers from heat effects. Nevertheless, the concept of chronic health effects from heat exposure may merit further formal laboratory and hot industry investigations.

TABLE IV-1.--Classification, medical aspects, and prevention of heat illness

Category and clinical features	Predisposing factors	Underlying physiologic disturbance	Treatment	Prevention
1. Temperature Regulation Heatstroke				
Heatstroke: (1) Hot dry skin usually red, mottled or cyanotic; (2) t_{re}, 40.5°C (104°F) and over; (3) confusion, loss of consciousness, convulsions, t_{re} continues to rise; fatal if treatment delayed	(1) Sustained exertion in heat by unacclimatized workers; (2) Lack of physical fitness and obesity; (3) Recent alcohol intake; (4) Dehydration; (5) Individual susceptibility; and (6) Chronic cardiovascular disease	Failure of the central drive for sweating (cause unknown) leading to loss of evaporative cooling and an uncontrolled accelerating rise in t_{re}, there may be partial rather than complete failure of sweating	Immediate and rapid cooling by immersion in chilled water with massage or by wrapping in wet sheet with vigorous fanning with cool dry air, avoid overcooling, treat shock if present	Medical screening of workers, selection based on health and physical fitness, acclimatization for 5-7 days by graded work and heat exposure, monitoring workers during sustained work in severe heat
2. Circulatory Hypostasis Heat Syncope				
Fainting while standing erect and immobile in heat	Lack of acclimatization	Pooling of blood in dilated vessels of skin and lower parts of body	Remove to cooler area, rest recumbent position, recovery prompt and complete	Acclimatization, intermittent activity to assist venous return to heart
3. Water and/or Salt Depletion				
(a) Heat Exhaustion				
(1) Fatigue, nausea, headache, giddiness; (2) Skin clammy and moist; complexion pale, muddy, or hectic	(1) Sustained exertion in heat; (2) Lack of acclimatization; and (3) Failure to replace water lost in sweat	(1) Dehydration from deficiency of water; (2) Depletion of circulating blood volume; (3) Circulatory strain from	Remove to cooler environment, rest recumbent position, administer fluids by mouth, keep at rest	Acclimatize workers using a breaking-in schedule for 5 to 7 days, supplement dietary salt only

(continued)

TABLE IV-1.--Classification, medical aspects, and prevention of heat illness

Category and clinical features	Predisposing factors	Underlying physiologic disturbance	Treatment	Prevention
flush; (3) May faint on standing with rapid thready pulse and low blood pressure; (4) Oral temperature normal or low but rectal temperature usually elevated (37.5°-38.5°C) (99.5°-101.3°F); water restriction type: urine volume small, highly concentrated; salt restriction type: urine less concentrated, chlorides less than 3 g/L		competing demands for blood flow to skin and to active muscles	until urine volume indicates that water balances have been restored	during acclimatization, ample drinking water to be available at all times and to be taken frequently during work day
(b) Heat Cramps				
Painful spasms of muscles used during work (arms, legs, or abdominal); onset during or after work hours	(1) Heavy sweating during hot work; (2) Drinking large volumes of water without replacing salt loss	Loss of body salt in sweat, water intake dilutes electrolytes, water enters muscles, causing spasm	Salted liquids by mouth, or more prompt relief by I-V infusion	Adequate salt intake with meals; in unacclimatized workers supplement salt intake at meals
4. Skin Eruptions				
(a) Heat Rash (miliaria rubra; "prickly heat")				
Profuse tiny raised red vesicles (blister-like) on affected areas, pricking sensations during heat exposure	Unrelieved exposure to humid heat with skin continuously wet with unevaporated sweat	Plugging of sweat gland ducts with retention of sweat and inflammatory reaction	Mild drying lotions, skin cleanliness to prevent infection	Cool sleeping quarters to allow skin to dry between heat exposures

(Continued)

TABLE IV-1.--Classification, medical aspects, and prevention of heat illness

Category and clinical features	Predisposing factors	Underlying physiologic disturbance	Treatment	Prevention
(b) Anhidrotic Heat Exhaustion (miliaria profunda)				
Extensive areas of skin which do not sweat on heat exposure, but present gooseflesh appearance, which subsides with cool environments; associated with incapacitation in heat	Weeks or months of constant exposure to climatic heat with previous history of extensive heat rash and sunburn	Skin trauma (heat rash; sunburn) causes sweat retention deep in skin, reduced evaporative cooling causes heat intolerance	No effective treatment available for anhidrotic areas of skin, recovery of sweating occurs gradually on return to cooler climate	Treat heat rash and avoid further skin trauma by sunburn, periodic relief from sustained heat
5. Behavioral Disorders				
(a) Heat Fatigue--Transient				
Impaired performance of skilled sensorimotor, mental, or vigilance tasks, in heat	Performance decrement greater in unacclimatized and unskilled worker	Discomfort and physiologic strain	Not indicated unless accompanied by other heat illness	Acclimatization and training for work in the heat
(b) Heat Fatigue--Chronic				
Reduced performance capacity, lowering of self-imposed standards of social behavior (e.g., alcoholic overindulgence), inability to concentrate, etc.	Workers at risk come from temperate climates, for long residence in tropical latitudes	Psychosocial stresses probably as important as heat stress, may involve hormonal imbalance but no positive evidence	Medical treatment for serious cases, speedy relief of symptoms on returning home	Orientation on life in hot regions (customs, climate, living conditions, etc.)

Adapted from Reference 73.

OPERATING PROCEDURE NO. HS-103

103.0 Cold Stress

103.1 Purpose

The purpose of this OP is to provide information on cold stress and procedures for preventing and dealing with cold stress. Adverse climatic conditions of cold are important considerations in planning and conducting site operations. Ambient temperature effects can include physical discomfort, reduced efficiency, personal injury, and increased accident probability.

103.2 Types of Cold Stress Effects

Persons working outdoors in temperatures at or below freezing may be frostbitten. Extreme cold for a short time may cause severe injury to the surface of the body, or result in profound generalized cooling, causing death. Areas of the body that have high surface-area-to-volume ratio such as fingers, toes, and ears, are the most susceptible.

Local injury resulting from cold is included in the generic term frostbite. There are several degrees of damage. Frostbite of the extremities can be categorized into:

- Frost nip or initial frostbite: characterized by suddenly blanching or whitening of skin.
- Superficial frostbite: skin has a waxy or white appearance and is firm to the touch, but tissue beneath is resilient.
- Deep frostbite: tissues are cold, pale, and solid; extremely serious injury.

Another form of cold stress that can be quite serious is hypothermia. Hypothermia results when the body loses heat faster than it can produce it. When this situation first occurs, blood vessels in the skin constrict in an attempt to conserve vital internal heat. Hands and feet are first affected. If the body continues to lose heat, involuntary shivers begin. This is the body's way of attempting to produce more heat, and it is usually the first real warning sign of hypothermia. Further heat loss produces speech difficulty, forgetfulness, loss of manual dexterity, collapse, and finally death.

Systemic hypothermia is caused by exposure to freezing or rapidly dropping temperature. Its symptoms are usually exhibited in five stages:

1. shivering;
2. apathy, listlessness, sleepiness, and (sometimes) rapid cooling of the body to less than 95°F;
3. unconsciousness, glassy stare, slow pulse, and slow respiratory rate;
4. freezing of the extremities; and finally
5. death.

103.3 Climatic Factors

Two factors influence the development of a cold injury: ambient temperature and the velocity of the wind. Wind chill is used to describe the chilling effect of moving air in combination with low temperature. For instance, 10°F with a wind of 15 miles per hour (mph) is equivalent in chilling effect to still air at -18°F. See the wind chill chart in Table 103-1.

As a general rule, the greatest incremental increase in wind chill occurs when a wind of 5 mph increases to 10 mph. Additionally, water conducts heat 240 times faster than air. Thus, the body cools suddenly when chemical-protective equipment is removed if the clothing underneath is perspiration soaked.

103.4 Exposure Limits

Typical exposure limits for work in cold are presented in Table 103-2, as a guide for establishing work schedules.

103.5 Control Measures

The dead air space between the warm body and clothing and the outside air is essential. Clothing is worn to keep the body warmth in and the cold out. Usually, no one type of clothing is best for all weather conditions. Denim is relatively loosewoven, that not only allows water to penetrate, but permits wind to blow away the body heat that should remain trapped between the body and clothing worn. Duck or goose down is good for stopping wind, but is of little use when wet. Clear plastic or closely woven nylon is good protection from wind and rain but offers little insulation against cold.

Many layers of relatively light clothing with an outer shell of windproof material maintain body temperature much better than a single heavy outer garment worn over ordinary indoor clothing. The more air cells each of these clothing layers has, the more efficient it insulates against body heat loss. Make sure that clothing allows some venting of perspiration. Because wet skin will freeze more rapidly than dry skin, use all feasible means to keep as dry as possible. Make full use of windbreaks and avoid exposing skin to direct effects of the wind. Problems are created by the need to wear layers of special clothing that make the wearer very clumsy in performing many routine work procedures. Increased body dimensions must also be considered if tight spaces are encountered.

103.6 References

Olishefsky, J.B., Fundamentals of Industrial Hygiene, National Safety Council, 1983.

TABLE 103-1. WIND CHILL CHART.

Wind Speed (in mph)	Actual Thermometer Reading (F)									
	50	40	30	20	10	0	-10	-20	-30	-40
calm	50	40	30	20	10	0	-10	-20	-30	-40
5	48	37	27	16	6	-5	-15	-26	-36	-47
10	40	28	16	4	-9	-21	-33	-46	-58	-70
15	36	22	9	-5	-18	-36	-45	-58	-72	-83
20	32	18	4	-10	-25	-39	-53	-67	-82	-96
25	30	16	0	-15	-29	-44	-59	-74	-88	-104
30	28	13	-2	-18	-33	-48	-63	-79	-94	-109
35	27	11	-4	-20	-37	-53	-69	-85	-100	-116
40	26	10	-6	-21	-37	-53	-69	-85	-100	-116
Over 40 mph (little added effect)	LITTLE DANGER (for properly clothed person				INCREASING DANGER (danger from of exposed			GREAT DANGER freezing flesh)		

The human body senses "cold" as a result of both the air temperature and the wind velocity. Cooling of exposed flesh increases rapidly as the wind velocity goes up. Frostbite can occur at relatively mild temperatures if wind penetrates the body insulation. For example, when the actual air temperature of the wind is 40 F (4.4 C) and its velocity is 30 mph (48 km/h), the exposed skin would perceive this situation as an equivalent still air temperature of 13 F (-11 C).

TABLE 103-2 MAXIMUM DAILY TIME LIMITS FOR EXPOSURE AT LOW TEMPERATURES.

Temperature Range		Maximum Daily Exposure
Celcius (degrees)	Fahrenheit (degrees)	
0 to -18	30 to 0	No limit, providing that the person is properly clothed.
-18 to -34	0 to -30	Total work time; 4 hours. Alternate one hour in and one hour out of the low-temperature area.
-34 to -57	-30 to -70	Two periods of 30 minutes each, at least 4 hours apart. Total low temperature work time allowed: one hour. (Note that some difference exists among individuals: one report recommends 15-minute periods--not over four periods per work 8-hour shift; another limits periods to one hour out of every four, with a low chill factor, i.e., no wind; a third says that continuous operation for 3 hours at -53 has been experienced without ill effect.
-57 to -73	-70 to -100	Maximum permissible work time: 5 minutes during an 8-hour working day. At these extreme temperatures, completely enclosed headgear, equipped with a breathing tube running under the clothing and down the leg to preheat the air, is recommended.

Source: NSC Data Sheet 465, Cold Room Testing of Gasoline and Diesel Engines.

ATTACHMENT B

COMPLIANCE AGREEMENT

SAFETY COMPLIANCE AGREEMENT AND DOCUMENTATION OF SITE SAFETY BRIEFING

DATE _____ TIME _____

SITE LOCATION _____ PROJECT NUMBER _____

SITE SAFETY OFFICER _____ PROJECT MANAGER _____

TOPICS COVERED DURING BRIEFING:

___ EXTENT AND CONCENTRATION OF CHEMICAL HAZARDS ON SITE

___ HEALTH EFFECTS OF CHEMICAL HAZARDS

___ PHYSICAL HAZARDS ON SITE

___ LEVELS OF PROTECTION REQUIRED

___ MONITORING PROCEDURES

___ ACTION LEVELS

___ DECONTAMINATION PROCEDURES

___ LOCATION OF EMERGENCY NUMBERS

___ ROUTE TO THE HOSPITAL

___ LOCATION OF EMERGENCY EQUIPMENT (FIRST AID KIT, FIR FIGHTING EQUIPMENT . . .)

___ VERIFICATION THAT HEALTH AND SAFETY PLAN HAS BEEN RECEIVED AND READ

_____

_____

I, the undersigned, have received a copy of the safety plan for the referenced project. I have read the plan, understand it, and agree to comply with all of the health and safety requirements. I understand that I may be prohibited from working on the project for violating any of the requirements. In addition I have been verbally briefed on the topics noted above.

ATTENDEES:

NAME	COMPANY	DOCUMENTATION (SSO MUST SEE VERIFICATION BEFORE INITIALLING COLUMN) 40 HR	FIT	MEDICAL
1. (print)_____ (signature)_____				
2. (print)_____ (signature)_____				
3. (print)_____ (signature)_____				

22362 (C:\UUNE\22362.FRM 06-13-90) (JEM)

I, the undersigned, have received a copy of the safety plan for the referenced project. I have read the plan, understand it, and agree to comply with all of the health and safety requirements. I understand that I may be prohibited from working on the project for violating any of the requirements. In addition I have been verbally briefed on the topics noted above.

DOCUMENTATION (SSO MUST SEE VERIFICATION BEFORE INITIALLING COLUMN)

ATTENDEES:

NAME	COMPANY	40 HR	FIT	MEDICAL
4. (print)_____ (signature)_____				
5. (print)_____ (signature)_____				
6. (print)_____ (signature)_____				
7. (print)_____ (signature)_____				
8. (print)_____ (signature)_____				
9. (print)_____ (signature)_____				
10.(print)_____ (signature)_____				
11. (print)_____ (signature)_____				
12. (print)_____ (signature)_____				

ATTACHMENT C

ACCIDENT/INCIDENT REPORT FORM (WCC Form 502)

FORM HS-502
WCC HEALTH AND SAFETY INCIDENT REPORT

Project Name _____

Project Number _____

Date of Incident _____

Time of Incident _____

Location _____

TYPE OF INCIDENT (Check all applicable items)

☐ Illness ☐ Injury ☐ Fire, explosion, flash ☐ Vehicular accident

☐ Property Damage ☐ Unexpected exposure ☐ Health & safety infraction

☐ Other (describe) _____

PROJECT NAME _____ **LOCATION** _____

DESCRIPTION OF INCIDENT (Describe what happened and possible cause; identify individuals involved, witnesses, and their affiliations; and describe emergency or corrective action taken.)

_____
_____
_____
_____
_____
_____
_____
_____
_____
_____
_____
_____
_____
_____
_____
_____

Reporter: _____ _____ _____
Print Name Signature Date

Reporter must deliver this report to the Business Unit Health and Safety Officer within 24 hours of the reported incident for medical treatment cases and within five days for other incidents.

Reviewed by _____ _____
Business Unit Health & Safety Officer Date

Distribution:

___ Corporate Health and Safety Administrator
___ Corporate Health and Safety Officer
___ Project Manager
___ Personnel Office (medical treatment cases only).

ATTACHMENT D

SAFETY COMPLIANCE REPORT FORM

SAFETY COMPLETION REPORT

(This report must be submitted to the Business Unit Health and Safety Officer within five days after completion of the project.)

Report Completed By: _____ Date Completed: _____

Project Name:_____

Project Number:_____

1. Evaluation of Health and Safety Plan (Add a page if additional space is needed.)

   a. Was the plan adequate? _____

   b. Did the plan adequately anticipate chemical and physical hazards actually present at the site? _____

   c. What situations were discovered that were not anticipated in the health and safety plan? _____

   d. How were these situations handled? _____

   e. Was the recommended personal protective equipment, such as gloves, respirators, eye, face and whole body skin protection appropriate to protect employees from chemical hazards? _____

   f. If not, what should be improved in future plans of this type? _____

2. Exposure Data

   a. Were any employees exposed to chemical or physical hazards as a result of failure of personal protective equipment or other problem?_____ If yes, give names of employees: _____

   b. Was monitoring performed? ____

   c. What type of monitoring?

      _____ area monitoring

      _____ personal (on-employee) monitoring

d. What type of monitoring equipment was used?

_____ personal air sampling pumps

_____ colorimetric indicator ("Draeger") tubes

_____ vapor badges

&1

_____ film badges or TLD badges (radiation)

_____ charcoal sorbent tube samples

direct reading instruments, including:

_____ HNU
_____ OVA
_____ OVM
_____ Combustible gas
_____ Oxygen deficiency
_____ Hydrogen Sulfide
_____ Carbon monoxide

e. Summary of Sampling Results (Attach additional pages if more space is needed.)

(Report here the air quality sampling results, sampling locations, work activities during sampling, documentation of instrument calibration, weather conditions during sampling, and sampling frequency. Report should minimally contain a summary of all sampling completed within the breathing zone.)

APPENDIX E

GILIAN OPERATING MANUAL FOR AIR SAMPLING

Gilian

Operating Manual for the Gil-Air Constant Flow Air Sampling System

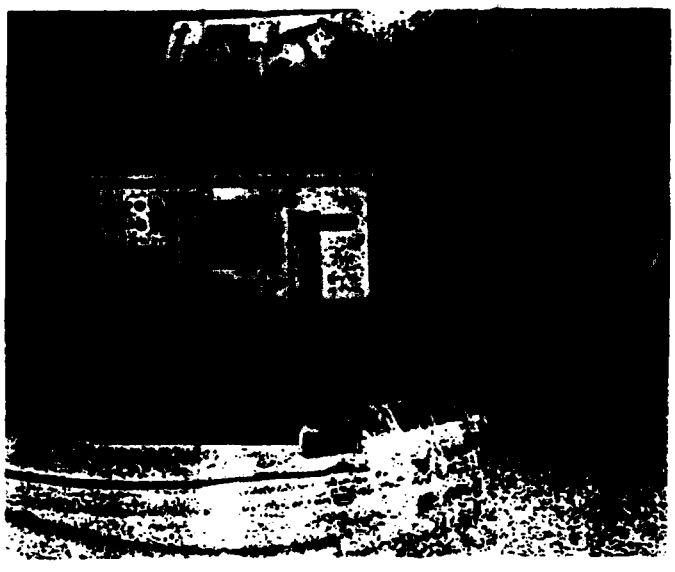

The Gil-Air Sampler

Non-Timer Models:
Gil-Air S
Gil-Air EF
Gil-Air CF
Gil-Air CP
Gil-Air U

Timer Models:
Gil-Air S C
Gil-Air EF C
Gil-Air CF C
Gil-Air CP C
Gil-Air U C

Instruction Manual for the Gil-Air Sampling System

TABLE OF CONTENTS

Warranty and Service Policies	page 4
1.0 Introduction	page 5
2.0 General Description	page 6
3.0 High Flow Operation	page 10
3.2 Low Flow Operation	page 11
4.0 Maintenance	page 15
4.2 Changing the Pump Filter	page 18
4.3 Leak Test	page 20
4.4 Calibration	page 21
5.0 Gil-Air Specifications	page 23

Diagrams

Figure 1, table 1 - Gil-Air Features	pages 8, 9
Figure 2, table 2 - Gil-Air Pump with Low Flow Modules	pages 12, 13
Figure 3, table 3 - Battery Pack Replacement	pages 16, 17
Figure 4, table 4 - Pump Filter Replacement	pages 18, 19
Figure 5 - Leak Testing Configurations	page 20
Figure 6 - Calibration Set-up for 1.0 & 2.7 LPM	page 22

Operating Manual for the Gil-Air Air Sampling System

1.0 INTRODUCTION

The features of the Gil-Air constant flow Air Sampling System are the result of the latest state-of-the-art advances in solid state electronics and modular design techniques. It is a personal air monitoring system designed with the user's needs in mind. Many of its features have been incorporated after evaluation of current sampler technology and the needs of our customers and clients. The unique modular design permits the user to start with a basic high flow unit and add low flow and timing capabilities so the sampler need never become obsolete. In addition, this modular approach permits simplified repairs and reduced maintenance resulting in minimum down time and maximum sampling versatility. The performance features found in the Gilian line of air samplers and sampling equipment offer convenience, versatility and the confidence of valid sampling data.

This manual contains the operation, maintenance and spare parts information for the Gil-Air Constant Flow Air Sampling System.

2.0 GENERAL DESCRIPTION

see Figure 1

Non-Timer Models:	Timer Models:
Gil-Air S - standard configuration	Gil-Air S C - clock model
Gil-Air EF - with Econo Flow module	Gil-Air EF C - Econo-Flow w/ clock
Gil-Air CF - with Constant Flow module	Gil-Air CF C - Constant Flow w/ clock
Gil-Air CP - with Const. Pressure module	Gil-Air CP C - Const. Press. w/ clock
Gil-Air U - with Const. Flow/Pressure modules	Gil-Air U C - Const. Flow/ Press. w/ clock

The sampler consists of a Pneumatic System, a Control System, and a rechargable Battery Pack, all housed in a sturdy Lexan case. One of three Low-Flow Modules may be attached to the unit and communicates with the Pneumatic System through an opening in the top of the case. The basic sampler's dynamic flow range is from 500 to 3000 cc/min.
The low flow range is obtained with the use of a low flow module:

Constant Low Flow - from 5 to 500 cc/min., backpressures to 25" H_2O
Constant Pressure - from 0 to 750 cc/min., backpressures to 18" H_2O
Econo-Flow (bypass) - a simple means to set flows below 500 cc/min.

2.1 THE PNEUMATIC SYSTEM - The Pneumatic System consists of the pump and integral damper assembly (patent pending), filter assembly, flow indicator, connective tubing, and, optionally, a Low-Flow Module held in place by two screws.

2.1.1 THE PUMP is a DC motor driven, single piston unit incorporating the patented Gilian preloaded valving sytem. A plastic housing fully encloses the pump mechanism to minimize noise and protect against contamination.

2.1.2 THE DAMPER ASSEMBLY is an integral part of the pump assembly and consists of a plastic housing retaining two silicone diaphragms separated by a compression spring.
The damper housing provides an air passage connecting the volume between the diaphragms with the inlet side of the pump, and exposes the opposite side of one diaphragm to the volume enclosing the pump mechanism. This enclosed volume provides a pneumatic couple between the pumping and damping diaphragms, dramatically improving damper performance.

2.1.3 THE FILTER ASSEMBLY features a see-through housing with a filter monitoring lens which allows you to compare a clean, sealed portion of the filter to the "as is" condition of the rest of the filter. It is fitted flush to the case exterior for protection of the integral air intake boss. The outer housing is retained by four screws and can be removed without dissasembly of the case. Two o-rings seal the filter membrane; the outer seal insures an air tight passage through the sampler, the inner seal preserves a small area of the filter membrane for comparison with the area in service.

2.1.4 THE FLOW INDICATOR is a rotameter(+-20% accuracy) visible through the case front and useful for monitoring flows between 500 and 4000 cc/min.. The performance range of the Gil-Air reaches flows up to 3000 cc/min.

2.1.5 **LOW FLOW MODULES** are available as add-on accessories for sampling between 1 and 750 cc/min. Three types of module may alternatively be fitted: Constant flow--this module is designed for single tube sampling and will maintain constant flow to 25" H_2O backpressure, Constant Pressure--this module is designed for multiple-tube sampling and maintains a constant suction pressure of approximately 20" H_2O at the sampler's inlet, and Bypass--this module provides for low flow sampling where flow compensation is unnecessary.

2.2 **THE CONTROL SYSTEM** consists of an electronic control board and an optional timer board.

2.2.1 **THE CONTROL BOARD** includes the flow control and compensation circuitry, and provides the following external features: on-off switch, flow control pot., flow fault indicator, and battery charge indicator.

2.2.1.1 **THE FLOW CONTROL AND COMPENSATION CIRCUITRY** is designed to maintain flow within +-5% of the initial set point while the pump is subjected to changes in load. Sensing pump load via the motor current, the system compensates for any changes by applying a proportional voltage to the motor, thereby adjusting pump speed to maintain flow.

2.2.1.2 **THE FLOW FAULT INDICATOR** will illuminate if the pump is unable to maintain the set flow within +-5%. This can occur if the pump is operated outside its specified performance ranges, or when the battery pack has insufficient charge. After 30 to 60 seconds of continuous operation under fault conditions, the pump will stop. This delay is provided so that a momentary obstruction of flow will not result in an unnecessary shutdown of the system.
For units equipped with the optional timer board, shutdown under fault will preserve the run time in the display. This allows the user to salvage the sample.

2.2.1.3 **THE BATTERY CHARGE INDICATOR** will illuminate when the sampler is turned on and the battery pack is fully charged. Since the circuit is activated by the slight over-voltage condition common in a fully-charged battery, the indicator will normally turn off after the sampler runs for a short period of time.

2.2.2 **THE OPTIONAL TIMER BOARD** - displays the elapsed run time in minutes and includes a pause feature. Pressing the Hold button will stop the pump and lock the time display; pressing the Run button will restart the pump and the quartz timer.

2.3 **THE RECHARGABLE BATTERY PACK** - The Gil-Air sampler utilizes a rechargable 4.8 volt Ni-Cad battery pack that is UL listed and rated instrinsically safe.
The assembly includes a current limiting circuit for explosion protection and is completely sealed against contamination.
2.4 **OPTIONAL RFI SHIELDING CASE HOUSING** - The Gil-Air is also available in an RFI shielded housing, a sturdy 1/8" case embedded with carbon material to dissipate RFI (Radio Frequency Interference). This is ideal for areas where hand held radios and RFI emmitting equipment are present.

Table 1
Nomenclature
(refer to Figure 1)

Figure/ Item	Description
1-1	Battery Fault Indicator
1-2	Flow Fault Indicator
1-3	Flow Control Adjust Pot
1-4	On-Off Switch
1-5	Anti-Tamper Cover Plate, Flow Controls
1-6	Rotameter
1-7	Rechargeable Battery Pack
1-8	Internal/ External Vent Switch
1-9	Standard Cover Plate
1-10	See-Through Filter Housing
	(A) Air Intake Boss
	(B) Filter Check Lens
1-11	Re-Charging Port
1-12	Built-In Stainless Steel Belt Clip
1-13	LCD Timer Display
1-14	Hold button - halts sampling
1-15	Run Button - resume sample
1-16	Anti-Tamper Cover Plate, Timer
1-17	2.7 LPM Calibration Pot
1-18	1.0 LPM Calibration Pot

Figure 1
Gil-Air Features

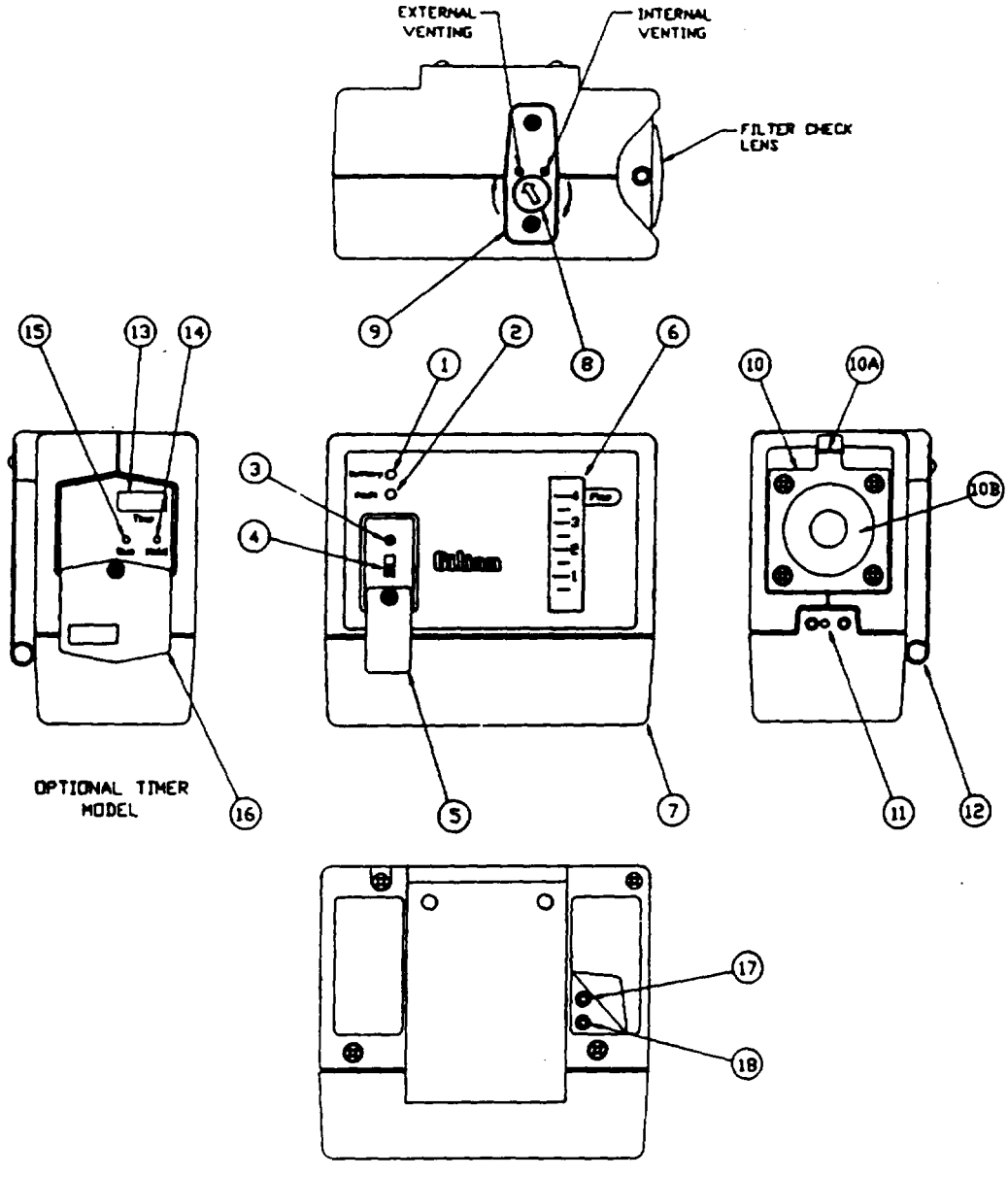

3.0 OPERATION

3.1.0 HIGH FLOW (500cc to 3 LPM)
3.1.1 Setting Up for High Flow Sampling - refer to figures 1 & 2, tables 1& 2

A) Charge the unit for a minimum of 16 hours prior to use, noting that the battery pack may be charged either installed or removed from the sampler. Refer to Section 4.0 for detailed instructions regarding battery pack charging and maintenance procedures.

B) Connect the sampling head (cyclone,impinger,filter holder,etc.) via connective tubing to the intake boss of the filter housing (1-10a). Note that for bag-sampling, a discharge air boss(2-19) may be fitted to the top of the sampler in lieu of the standard cover plate (1-9).

C) Using a flat-head screwdriver, adjust the internal/external vent (1-8) as desired. Selecting the open circle position will vent the pump's discharge external to the sampler's case (recommended for moist or corrosive sampling environments), selecting the closed circle will vent internally (recommended for dust laden environments).

D) Using a small phillips-head screwdriver, back out the holding screw of the anti-tamper cover (1-5) to expose the flow controls beneath. Note that it is not necessary to fully remove the cover, it will automatically rotate out of the way as the retaining screw is backed out.

E) Using a small flat screwdriver, turn the unit on by moving the ON/OFF switch (1-4) to the up position. The green LED (1-1) should illuminate indicating a fully-charged battery pack.

F) With the same small screwdriver, adjust the flow control pot (1-3) to the desired flow by refering to the built-in rotameter (1-6). When setting the flow below 1 LPM, oscillation of the rotameter ball will be visible if the load on the pump is minimal. This is perfectly normal. To aid in setting flows below 1 LPM, a small restrictor (2-13)supplied with the sampler may be fitted into the pump's intake boss (1-10a). This will load the pump and help stabilize the rotameter ball. Note that the back pressure capability remaining to service the sampling head will be reduced accordingly. **NOTE: Be sure to remove the restrictor accessory when sampling above 1 LPM.**

G) Should it become necessary to temporarily interrupt the sampling process, use the RUN and HOLD buttons located behind the Timer's anti-tamper cover (1-16). The point of a pen or pencil will be helpful in pressing the buttons. Pressing the HOLD button (1-14) will stop the pump and interrupt the timer, and a flashing pointer will appear in the upper left corner of the display. Pressing the RUN button (1-15) will restart the pump and resume the timing process.

H) When the sampling process is completed, the sampler should be turned off using the ON/OFF switch (1-4) located under the front anti-tamper cover (1-5). The elapsed run time will be saved in the timer display until the unit is restarted. If a fault condition causes the sampler to shut down, the elapsed time will be saved and the red fault indicator (1-2) will illuminate.

3.2 Low Flow Operation

3.2.1 **LOW FLOW** (up to 500cc/min) - refer to figure 2 and table 2

The Gil-Air Sampling System offers three modes of low-flow sampling: Constant Flow, Constant Pressure, and Bypass. In each case the appropriate Module is fitted to the top of the sampler and communicates with the pump through the opening beneath the top insert plate (2-9). Both the Constant Flow and Constant Pressure Modules are equiped with an ON/OFF switch control (2-6) allowing these units to be functionally engaged or disengaged without physical removal from the sampler.

3.2.2 CONSTANT LOW FLOW - The Constant Low Flow Module (Gilian part no. 800518) is suitable for sampling between 5 and 300cc/min., and will maintain a constant low flow through the sampling head (i.e. tube holder) despite changes in load--the maximum load being 25" of water. The device utilizes an internal pressure regulator to maintain a constant pressure drop, and hence a constant flow, through an externally adjustable flow control valve discharging to atmosphere. Since the discharge flow is maintained constant and the sampling system is otherwise closed, the inlet flow must remain constant as well.

3.2.2..1 CONSTANT LOW FLOW MODULE OPERATION

Note: Installation or removal of any low flow module must be done in a clean environment while the sampler is turned OFF. Contamination of the air passages between the pump and the low flow module may result in a failure of the system.

Make sure the o-ring seals(2-12) of the low flow module are properly seated into the top of the pump assembly and that the mating boss(2-2) clears the case opening (2-15) prior to securing the mounting screws (2-4). Use a flat screwdriver to engage the notch in the module's ON/OFF control (2-6) as shown. With the Module in the OFF position, turn the sampler ON and adjust the flow to between 1.0 and 1.5 LPM using the flow adjust pot (2-3). Switch the Module ON and use a fine screwdriver to engage the flow control valve (2-5) through the access hole. Note that the sampler's built-in rotameter will not be useful at flows below 500cc/min; an external flow measuring device, such as a Gillibrator or calibrated rotameter, must be used. Refering to figure 5, the system's performance should be checked by applying a load of 20 - 25" H_2O and verifying that the flow recovers to within +-5%. Note that at very low flow rates it may take several minutes for the flow to recover. This is perfectly normal.

Table 2
Nomenclature
(refer to Figure 2)

Figure/ Item	Description
2-1	Constant Flow Module (or Constant Pressure Module)
2-2	Mating Boss
2-3	Flow Control Adjust Pot
2-4	Holding screws (2), flow module
2-5	Flow Module Flow Adjust Valve
2-6	Flow Module Engage Switch - ON/ OFF
2-7	Econo-Flow Module
2-8	Econo-Flow Module Adjust Valve
2-9	Standard Cover Plate
2-10	See-Through Filter Housing
2-11	Re-charging Port
2-12	Pump seating O-rings
2-13	Flow Restrictor Accessory
2-15	Case Opening for Module Installation
2-19	Discharge Air Boss

Figure 2
Gil-Air Pump with Low Flow Module Accessories

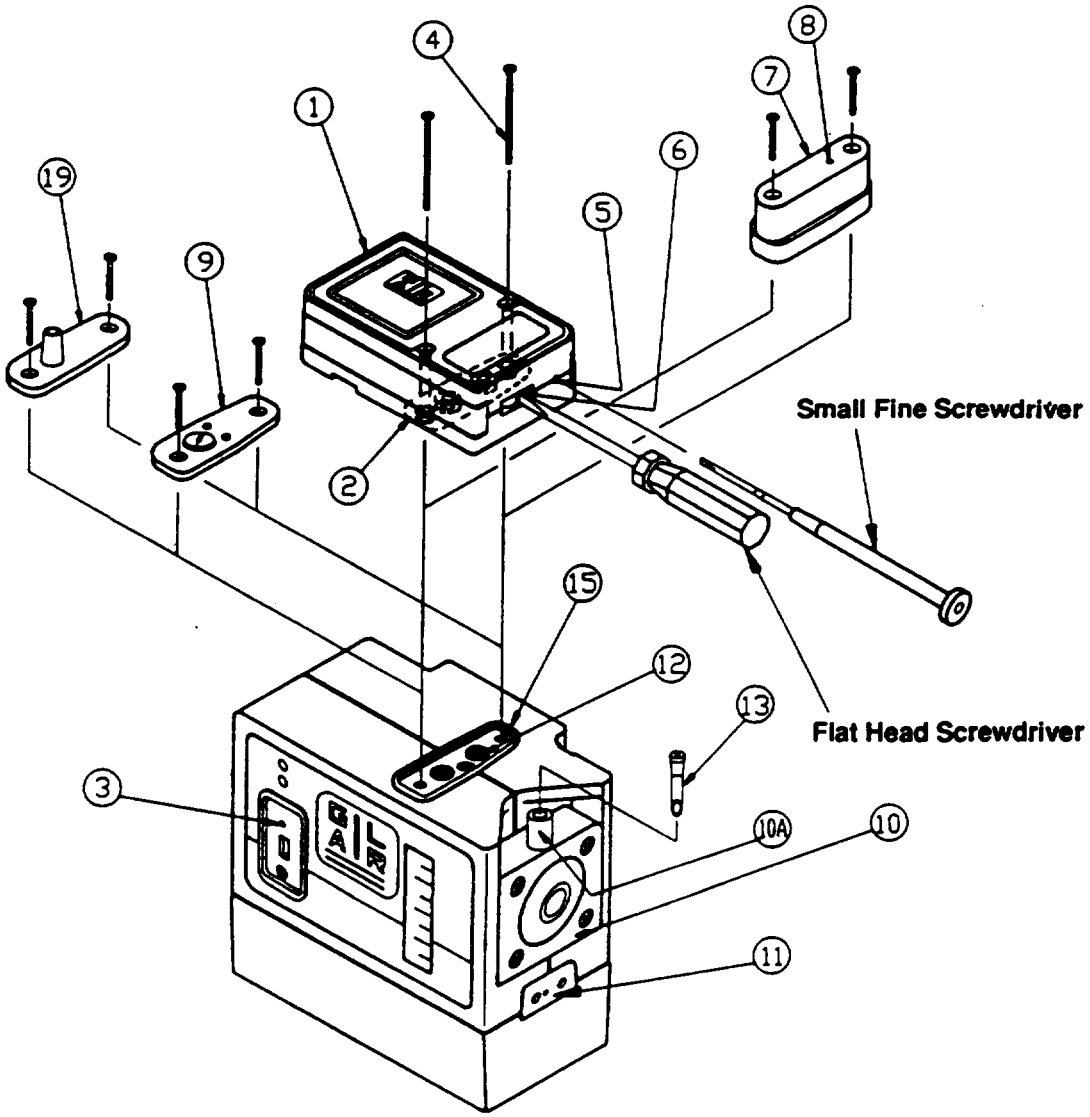

Low Flow Operations (continued)

Refer to figure 2, table 2

3.2.2 THE CONSTANT PRESSURE MODULE - The Constant Pressure Module (Gilian part no. 800519) is suitable for multiple tube sampling between 1 and 500 cc/min and can be used in conjunction with Gilian's Universal Tube Holder System to perform multiple tube sampling. The Module's internal regulator maintains a constant pressure--approximately 18" H_2O--at the sampler's inlet while allowing changes in total flow through the system. With a constant pressure in the tube holder manifold, the flow through each tube can be set independently without affecting the flow(s) through the adjacent tube(s). Total sampling tube combined flows cannot exceed 500 cc/min.

3.2.2.1 CONSTANT PRESSURE OPERATION - The Constant Pressure Module is installed in the same manner as the Constant Flow Module; refer to section 3.2.1.1 for this procedure. Once installed, set the module's ON/OFF switch (2-6) to the OFF position and adjust the sampler's flow to between 1 and 1.5 LPM. Set the module ON/OFF control to the ON position. Performance should be checked in conjuction with the test set-up shown in figure 5. With the load valve closed, the pressure should be 18" +/- 2" H_2O. Open the load valve until the flow is approximately 750cc/min. The pressure should not vary more than 2" H_2O.

Once the system's performance has been checked, the Tube Holder System can be connected. Fit each sorbent tube to an appropriately sized Tube Holder and connect the outlet of the Manifold to the inlet of the sample. Set the flow through each tube by adjusting the corresponding flow control valve in the Manifold. The flow through each tube should be measured with a calibrated device connected to the inlet of that tube holder. A Gilibrator or conventional bubble flow meter is preferable since the pressure drop through this type of device is negligible.

3.2.3 BYPASS MODULE (Econo-Flo) - The Bypass Module (Gilian part no. 800520) provides an economical and simple means for adjusting flows below 500cc/min. An externally controllable amount of air is allowed to flow between the pressure and suction sides of the pump effectively "bypassing" the external load. By adjusting the amount of bypass flow, the net flow through the sampler can be reduced to 20cc/min. while the pump continues to run at a stable speed. Note that this system is non-compensating and is therefore not recommended for sampling in situations where flow accuracy is required .

3.2.3.1 BYPASS OPERATION - The Bypass Module is installed in the same manner as the Constant Flow Module; refer to section 3.2.1.1. Make sure the bypass-flow adjust-valve (2-8) is closed clockwise. Turn the sampler on and set the flow to appx. 1.0 LPM. Open the bypass-flow adjust-valve (2-8) counter-clockwise. For sampling below 100 cc/min., fit the Bypass Restrictor (2-13) into the inlet of the filter housing(2-10a). Attach the connective tubing, sampling head and flowmeter; a Gilibrator or conventional bubble tube is recommended since the pressure drop through this type of device is negligible. The flow may now be increased by slowly closing the adjust-valve.

Fully closing the bypass-flow adjust-valve (2-8) will allow the sampler to be operated in the high-flow mode without removing the bypass (econo-flow) module (2-7).

NOTE: Be sure to remove the Flow Restrictor (2-13) before operating sampler above 100 cc/min.

4.0 MAINTENANCE

4.1 BATTERY PACK - CHARGING AND MAINTENANCE

The Gil-Air sampler utilizes a rechargable 4.8 volt Ni-Cad battery system. A permanently sealed assembly, the battery pack includes current-limiting components in accordance with UL intrinsic safety requirements.

4.1.1 BATTERY PACK REPLACEMENT - refer to figure 3 and table 3

To remove the battery pack, place the sampler on a level surface and remove the lower case screws (3-1) as shown. Lift the sampler vertically away from the battery pack. When refitting the battery pack, make sure that the charging port (3-11) is aligned with the case cut-out directly below the filter housing (3-4) and that the battery connect terminals (3-5) are carefully aligned with the circuit board contacts before gently lowering the sampler onto the pack.
Refit the case screws (3-1). Do Not Overtighten!

4.1.2 CHARGING

The GILAIR battery pack (3-2) is charged through a built-in jack (3-11) and may therefore be charged in place or while removed from the sampler. Using a single or multi-station charging system, a fully discharged battery pack will normally take 16 to 20 hours to fully recharge; charging at the standard charge rate for more than 24 hours is not recommended. Note that the charging plug is polarized to prevent improper insertion.

4.1.3 BATTERY PACK CARE AND MAINTENANCE

The GILAIR battery pack is completely sealed and is not user serviceable. However, proper charging habits can help maximize the performance and extend the service life of the system. The following is a list of general recommendations.

1. Use only GILIAN charging systems properly labeled for use with the Gil-Air battery system. Charging by any other means may result in incorrect charge rates and cause permanent damage to the battery system.
2. Charge the battery system at or near room temperature. Charging at elevated temperatures causes cell overheating and leads to a premature deterioration of performance.
3. Do not overcharge batteries. Overcharging can lead to cell overheating and premature deterioration of performance. If the system must remain on charge for more than 24 hours, the trickle mode of charge should be selected after about 20 hours. A GILIAN Multi-Station Charging System will automatically select the trickle rate after an appropriate period of normal-rate charging.
4. Do not short the battery terminals or the charging jack. Shorting will result in irreversible damage to the battery pack.
5. If the pump is not scheduled to be used for a long period of time (several weeks) it is recommended that it be stored at or near room temperature in a dry environment.

Table 3
Nomenclature
(refer to Figure 3)

Figure/ Item	Description
3-1	Lower case holding screws, (2)
3-2	Rechargeable Battery Pack
3-4	Case cut-out below Filter Housing
3-5	Battery Connect Terminals
3-11	Re-charging Port

Figure 3
Battery Pack Replacement

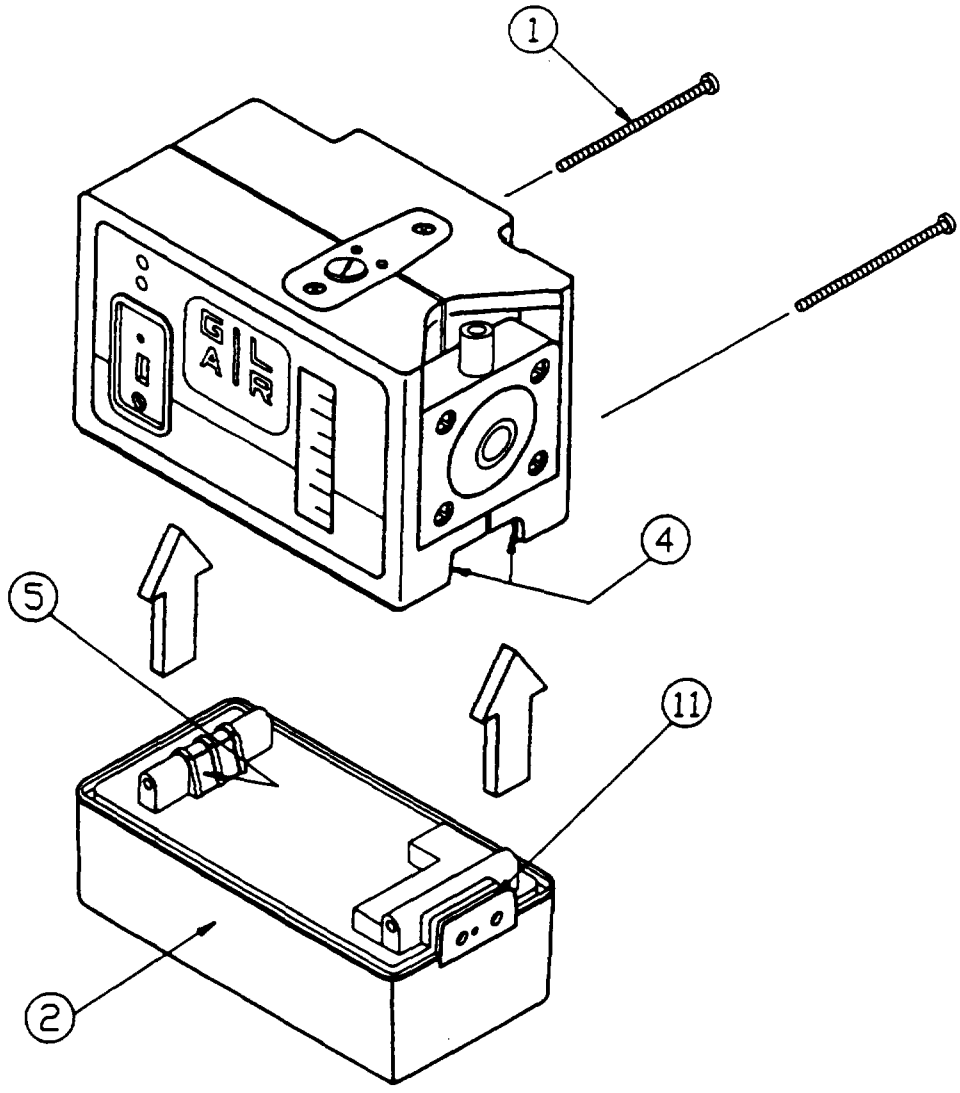

4.2 CHANGING THE PUMP FILTER

refer to figure 4

The pump's inlet filter should normally be changed every 250 hours of operation--sooner if subjected to a dusty environment. The filter housing is designed to provide a visual indication of the filter's condition. If the active (peripheral) area of the filter membrane appears to be darkened or discolored in comparison with the inactive (central) area, then the filter membrane should be replaced. Blow all dirt and debris from filter housing and the case area surrounding it, and remove the four screws (4-1) retaining the outer filter housing (4-2). Discard the filter membrane (4-3)and two o-rings, (4-4 & 4-5). Wash the outer filter housing in mild soap and water and allow to dry thoroughly. To reassemble, fit the new membrane with the new larger o-ring (4-4) to the outer housing, and replace with the new smaller o-ring (4-5). Be sure smaller O-ring is properly seated within the inner housing (4-6). Cross-tighten the retaining screws and leak-test the system. (refer to figure 5 for proper leak testing procedure.)

Table 4
Nomenclature
(refer to Figure 4)

Figure/ Item	Description
4-1	Battery Pack Retaining Screws, (4)
4-2	Filter Housing, outer
4-3	Filter Membrane
4-4	"O"-ring, large
4-5	"O"-ring, small
4-6	Filter Housing, inner

Figure 4
Pump Filter Replacement

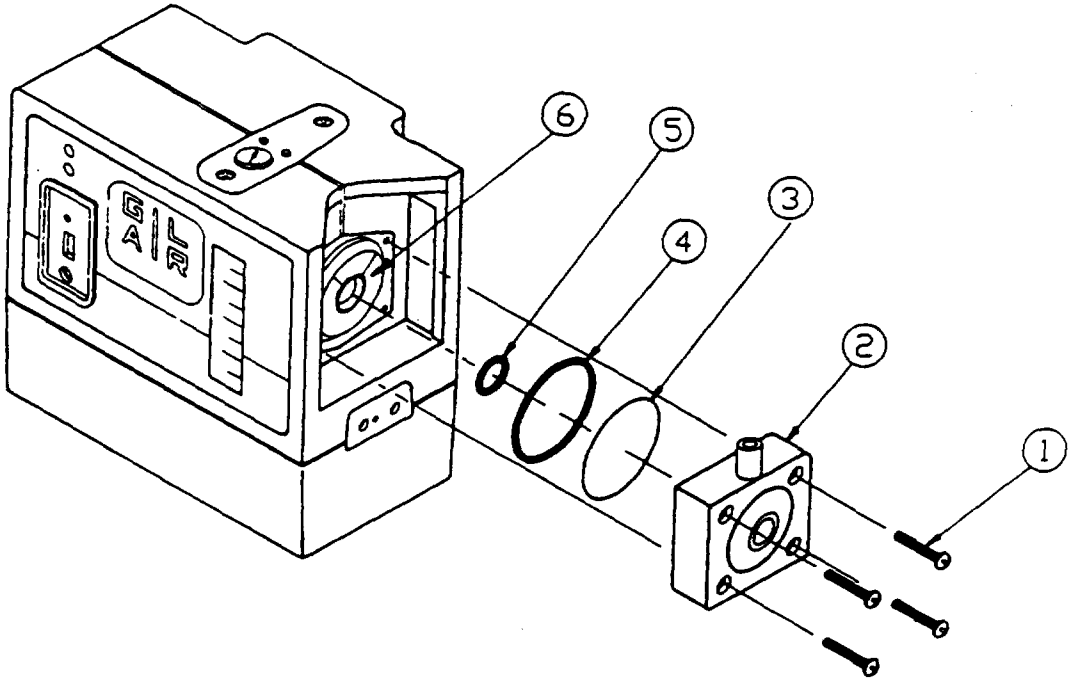

4.3 LEAK TEST

refer to figure 5

Install the discharge air boss (Gilian part no. 201169). Connect the pump's inlet, to the calibrator panel, draw 20" of vacuum through the discharge boss and close the system. If after the system stabilizes, the needle in the pressure gauge continues to move more than 1 division in 30 seconds, a leakage problem may exist. An alternate manometer set-up, see figure 5 bottom, may be used to make a more accurate leakage measurement. In either case the leak integrity of the test equipment should be verified first.

CAUTION:

DO NOT TURN THE PUMP ON WHILE THE MANOMETER IS ATTACHED. TURNED ON, LIQUID WILL BE DRAWN INTO THE SAMPLER, DAMAGING THE SYSTEM.

Figure 5
Leak Testing Configurations

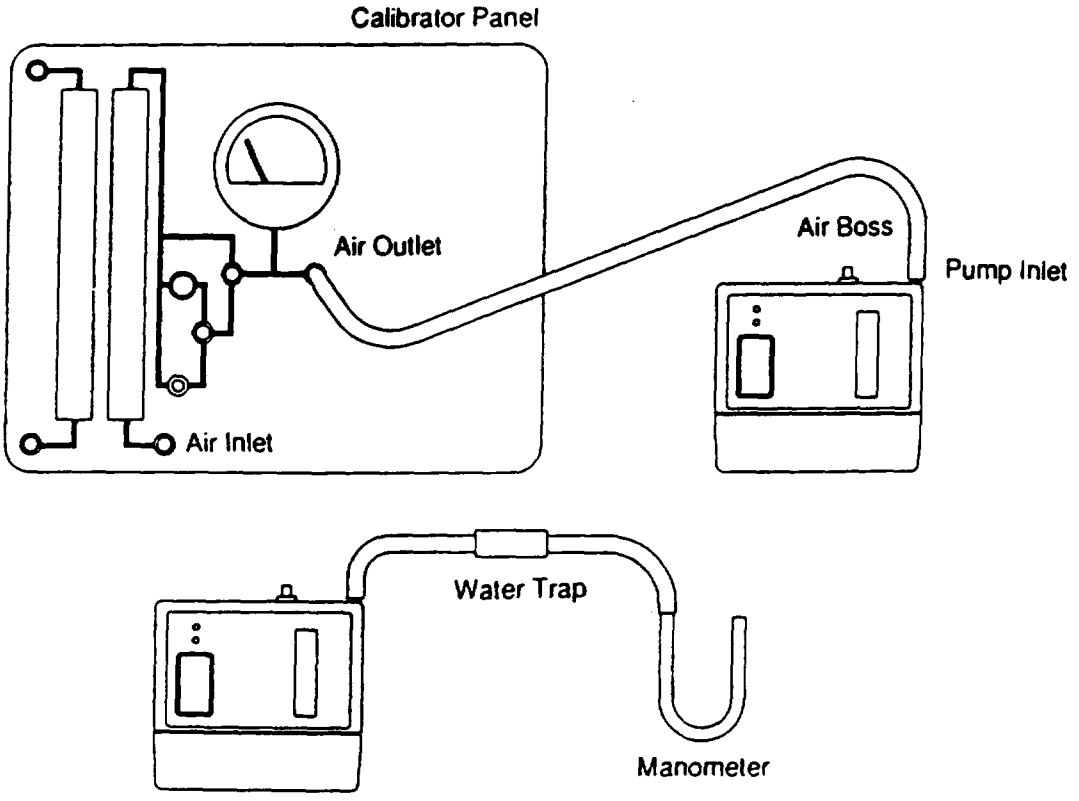

4.4 CALIBRATION

The Gil-Air Sampler is designed to maintain the set flow (within +-5%) subject to changes in load. If, due to excessive load, the pump is unable to maintain flow within 5%, it will eventually shut down on fault. Since the performance of the fault system is dependent on the accuracy of load compensation, calibration of the compensation circuitry should be frequently checked and carefully maintained. The system is checked and adjusted at two flow levels--1.0 and 2.7 LPM--as outlined below.

4.4.1 CALIBRATION AT 1.0 LPM -
refer to figure 6

Make sure the sampler is fitted with a fully charged battery pack before attempting to check or adjust the calibration. Set the pump flow at 1.0 LPM using a precision rotameter or film flowmeter (Gilibrator). Allow the pump about one minute to stabilize and readjust the flow if necessary. Apply 30"H_2O load. After allowing the unit to stabilize, no measurable change in flow should be observed.

If an adjustment is necessary, peel back the label on the right side of the case rear to expose the calibration control access holes. The lower hole provides access to the 1.0 LPM calibration pot (see figure 1, item 1-18). With a small flat screwdriver, turn this calibration pot until the flow with 30" load is returned to the original set point 1.0 LPM. Recheck the flow with no load. If necessary, reset the no-load flow to 1.0 LPM, using the flow control on the front of the sampler (see figure 1, item 1-3), and repeat the calibration process.

4.4.2 CALIBRATION AT 2.7 LPM -
refer to figure 6

Allow the pump to stabilize at 2.7 LPM with no load. Apply 15" H_2O load, allow the pump to re-stabilize, and note any CHANGE in the flow. Remove the load. Use the 2.7 LPM calibration pot ,figure 1, item (1-17) to change the flow by ten times the change noted above. Use the flow adjust pot figure 1, item (1-3) to reset the flow to 2.7 LPM. Re-apply 15" load and repeat the calibration process until no change in flow is noted. Since an adjustment to either calibration pot can affect the overall calibration, both calibration points (1.0 and 2.7 LPM should always be re-checked.

EXAMPLE 1 - Flow Increases:

Flow at set point	2.700 LPM
Flow at 15" load	2.750 LPM
Flow Change	.050 LPM
10 X flow change	.500 LPM
Calibration set point	3.200 LPM

EXAMPLE 2 - Flow Decreases:

Flow at set point	2.700 LPM
Flow at 15" load	2.650 LPM
Flow Change	-.050 LPM
10 X flow change	-.500 LPM
Calibration set point	2.200 LPM

Figure 6
Calibration configuration for 1.0 & 2.7 LPM

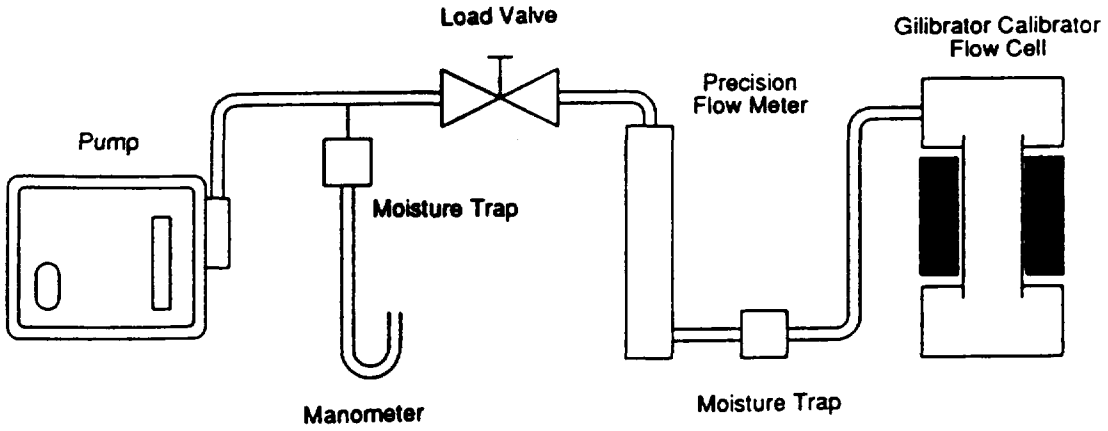

5.0 Gil-Air Specifications

Operating Range:
High Flow: 500 to 3000 cc/min.

Low Flow: Series of (3) optional plug-in, low flow control modules
(1) Econo-Flow Module: 1 to 500 cc/min. at up to 35" of water. Flow control is achieved by screwdriver to the top of the flow module and fine tune restriction as required by adjustment of the Universal Tube Holders variable flow controller.

2) Constant Low Flow module: 5 to 300 cc/min., in conjunction with the Universal Tube Holder System, at up to 30" of water. This patented module provides constant flow and will maintain flow accuracy over an extended pressure range. Will maintain +\-5% flow accuracy.

(3) Constant Pressure module: 1 to 500 cc/min. using an active pressure regulator which is set to 20" W.C. This is achieved in conjunction with the Universal Tube Holder Systems variable flow controllers. This unique system will allow the user very accurate low flows as well as take two or more simultaneous, independently settable samples.

Pressure Range:

500 cc - 20" H_2O		2000 cc - 25"
1000 cc - 30"		3000 cc - 20"
		3500 cc - 10"

Flow Control: +\- 5% of set point.

Flow Indicator: Built-in rotameter, range 500 to 4000 cc/min. with 500 cc/div from 1/2 to 4 liters.

Flow Fault Indicator LED: Fault indicator will light if the unit is operated out of its performance envelope for a period of 15 to 30 seconds.

Battery Test LED: indicates that the battery will provide a minimum of 8 hours of continuous operation over the operating range.

Battery Pack System: Rechargeable Ni-CAD, 4.8V, 1.4 AH designed to meet all UL requirements. Contains receptacle for charging out of the pump.

Timing Module: - "C" Timer: provides elapsed-time clock display, automatic fault shut-down and pause/ hold function.

Compact Size: 3 9/16" W x 3 15/16" H x 2" D

Weight: 21 ounces

Temperature: Operating (-20° c to 45° c), Storage (-40° c to 45° c), Charging (5° c to 45° c)
Intrinsically Safe: UL listed for Class I Groups A,B,C & D Class II Groups E,F & G and Class III, for explosive gas and dust atmospheres.

Additional Features:
See-through external filter housing with filter monitor lens
Built-in belt clip.

Warranty: The Gil-Air Sampler is guaranteed for (1) year against defects in parts and\or workmanship.

ATTACHMENT F

RESPIRATOR INSPECTION, CARE, MAINTENANCE, AND STORAGE

OPERATING PROCEDURE NO. HS-203

203.0 Respirator Inspection, Care, Maintenance, and Storage

203.1 Purpose

The purpose of this document is to provide guidance on the proper care and use of respiratory protective devices, to assist in adequately protecting personnel as well as complying with OSHA respiratory protection standard 1910.134. Guidance in the selection of respiratory devices is provided in OP No. HS 201.

203.2 Applicability

This procedure is applicable for use in caring for half-face and full-face respirators of either air-purifying or air supplying type. Proper care of respirators is essential for their satisfactory performance. Of importance is respirator inspection, care, maintenance, and storage.

203.3 Requirements

OSHA requires, as part of an inspection program, that all respirators be leak checked, a determination that the complete assembly is gas tight. Follow field inspection procedures to examine the freshly cleaned, reassembled respirator.

Cleaning and Disinfecting - OSHA 1910.134 states "routinely used respirators shall be collected, cleaned and disinfected as frequently as necessary to ensure that proper protection is provided..." and that emergency use respirators "shall be cleaned and disinfected after each use."

The OSHA standard states that "replacement or repair shall be done by experienced persons with parts designed for the respirator". Besides being contrary

to OSHA requirements, substitution of parts from a different brand or type of respirator invalidates approval (i.e., NIOSH, MSHA) of the device.

OSHA requires that respirators be stored to protect against:

- dust;
- sunlight;
- heat;
- extreme cold;
- excessive moisture;
- damaging chemicals; and
- mechanical damage.

The OSHA standard suggests that respirators be in their original cartons, however, this may provide only minimal protection from mechanical damage.

203.4 Inspection

203.4.1 Air-Purifying Respirators

Routinely used air-purifying respirators should be checked as follows before and after each use:

1. Examine the facepiece for:

   - excessive dirt
   - cracks, tears, holes or physical distortion of shape from improper storage
   - inflexibility of rubber facepiece (stretch and knead to restore flexibility)
   - cracked or badly scratched lenses in full facepieces

- incorrectly mounted full facepiece lenses, or broken or missing mounting clips
- cracked or broken air-purifying element holder(s), badly worn threads or missing gasket(s), if required.

2. Examine the head straps or head harness for:

   - breaks
   - loss of elasticity
   - broken or malfunctioning buckles and attachments
   - excessively worn serrations on head harness, that might permit slippage (full facepieces only)

3. Examine the exhalation valve for the following after removing its cover:

   - foreign material, such as detergent residue, dust particles or human hair under the valve seat
   - cracks, tears or distortion in the valve material
   - improper insertion of the valve body in the facepiece
   - cracks, breaks, or chips in the valve body, particularly in the sealing surface
   - missing or defective valve cover
   - improper installation of the valve in the valve body

4. Examine the air-purifying element for:

   - incorrect cartridge, canister or filter for the hazard
   - incorrect installation, loose connections, missing or worn gasket or cross threading in the holder
   - expired shelf-life date on the cartridge or canister

- cracks or dents in the outside case of the filter, cartridge or canister, indicated by the absence of sealing material, tape, foil, etc., over the inlet.

5. If the device has a corrugated breathing tube, examine it for:

   - broken or missing end connectors
   - missing or loose hose clamps
   - deterioration, determined by stretching the tube and looking for cracks.

6. Examine the harness of a front- or back-mounted gas mask for:

   - damage or wear to the canister holder, that may prevent its being held in place
   - broken harness straps for fastening.

203.4.2 Atmosphere-Supplying Respirators

For a routinely used atmosphere-supplying device, use the following procedures:

1. If the device is a tight-fitting facepiece, use the procedures outlined under air-purifying respirators, except those pertaining to the air-purifying elements.
2. If the device is a hood, helmet, blouse or full suit, use the following procedures:
   - examine the hood, blouse or full suit for rips and tears, seam integrity, etc.
   - examine the protective headgear, if required, for general condition with emphasis on the suspension inside the headgear.

- examine the protective face shield, if any, for cracks or breaks or impaired vision
- make sure the protective screen is intact and secured correctly over the face shield.

3. Examine the air supply systems for:

- integrity and good condition of air supply lines and hoses, including attachment and end fittings
- correct operation and condition of all regulators, or other air flow regulators.

In addition to the above, for self-contained breathing apparatus (SCBA) units also determine that:

- The high pressure cylinder of compressed air or oxygen is sufficiently charged for the intended use, preferably fully charged.
- On closed circuit SCBA, a fresh canister of CO_2 (carbon dioxide) sorbent is installed.
- On open circuit SCBA, the cylinder has been recharged if less then 25 percent of the useful service time remains.

All SCBAs are required to have a warning device that indicates when the 25 percent level is reached. However, it is recommended that an open-circuit SCBA be fully charged before use.

203.4.3 Respirator Disassembly

The used respirators should be collected and deposited in a central location. They are taken to an area where the filters, cartridges or canisters are removed and discarded. Canisters should be damaged or marked to prevent accidental reuse. If facepieces are equipped with reusable dust filters, they may be cleaned

with compressed air in a hood. This prevents dust from getting into the room and affecting the respirator personnel. If SCBA are used, tanks are removed and connected to an area where the SCBA regulators and low-air warning devices are tested. SCBA facepieces are cleaned like air-purifying respirator facepieces.

203.4.4 Defects Found in Field Inspection

If defects are found during any field inspection, two remedies are possible. If the defect is minor, repair and/or adjustment may be made on the spot. If it is major, the device should be removed from service until it can be repaired. (A spare unit should replace the unit removed from service.) **Under no circumstances should a device that is known to be defective remain in the field.**

203.4.5 Inspection During Cleaning

Because respirator cleaning usually involves some disassembly, it presents a good opportunity to examine each respirator thoroughly. The procedures outlined above for a field inspection should be used. Respirators should be inspected after cleaning operations and reassembly have been accomplished.

203.5 Respirator Care

When used routinely, respirators should be exchanged daily for cleaning and inspection. Where respirators are used only occasionally, the exchange period could be weekly or monthly. Workers maintaining their own respirators should be thoroughly briefed on cleaning and disinfecting them. Although workers may not be required to maintain their own respirators, briefing on the cleaning procedure will encourage their acceptance of a respirator by providing knowledge of what is a clean, disinfected, properly maintained device. This is particularly important where respirators are not individually assigned.

Where respirators are individually assigned (a practice to be encouraged), they should be identified to ensure that the worker always receives the same device. Identification markers must not penetrate the facepiece, block the filter, cartridge parts or exhaust valves.

When a relatively small number of respirators are used, or where workers clean their own respirators, the generally accepted procedure is washing with detergent and warm water using a brush, thoroughly rinsing in clean water, and drying in a clean place. Precautions should be taken to prevent damage from rough handling during this procedure.

When large numbers of respirators are used, it is recommended that centralized cleaning and maintenance be performed and that specialized equipment and personnel trained in respirator maintenance be utilized.

203.5.1 Cleaning and Sanitizing

The actual cleaning may be done in a variety of ways. A commercial dishwasher can be used. A standard domestic clothes washer may also be used if a rack is installed around the agitator to hold the facepieces in fixed positions. If the facepieces are placed loose in the washer, the agitator may damage them. A standard domestic dishwasher may be used, but it is not preferred because it does not immerse the facepieces. Any good detergent may be used followed by a disinfecting rinse or a combination disinfectant-detergent for a one step operation. Disinfection is not absolutely necessary if the respirator is reused by the same person. However, where individual issue is not practical, disinfection is strongly recommended. Reliable, effective disinfectants may be made from readily available household solutions, including:

- Hypochlorite solution (50 ppm of chlorine) made by adding approximately two milliliters of bleach (such as Chlorox) to one liter

of water, or two tablespoons of bleach per gallon of water. A two-minute immersion disinfects the respirators.

- Aqueous solution of iodine (50 ppm of iodine) made by adding approximately 0.8 milliliters of tincture of iodine per liter of water, or one teaspoon of tincture of iodine per gallon of water. Again, a two-minute immersion is sufficient.

If the respirators are washed by hand, a separate disinfecting rinse may be provided. If a washing machine or dishwasher is used, the disinfectant must be added to the rinse cycle; the amount of water in the machine at that time will have to be measured to determine the correct amount of disinfectant.

To prevent damaging the rubber and plastic in the respirator facepieces, the cleaning water should not exceed 140°F, but it should not be less than 120°F to ensure adequate cleaning. In addition, if commercial or domestic dishwashers are used, the drying cycle should be eliminated, since the temperatures reached in these cycles may damage the respirators.

203.5.2 Rinsing

The cleaning and disinfected respirators should be rinsed thoroughly in water (140°F maximum) to remove all traces of detergent and disinfectants. This is very important for preventing dermatitis.

203.5.3 Drying

The respirators may be allowed to dry in room air on a clean surface. They may also be hung from a horizontal wire, like drying clothes, but care must be taken not to damage or distort the facepieces. Another method is to equip a standard steel storage cabinet with an electric heater that has a built-in circulating fan, and to replace the solid steel shelves with steel mesh.

203.5.4 Reassembly and Inspection

The clean, dry respirator facepieces should be reassembled and inspected in an area separate from the disassembly area to avoid contamination. The inspection procedures have been discussed; special emphasis should be given to inspecting the respirators for detergent or soap residue left by inadequate rinsing. This appears most often under the seat of the exhalation valve, and can cause valve leakage or sticking.

The respirator should be thoroughly inspected and all defects corrected. New or retested cartridges and canisters should be installed, and the completely reassembled respirator should be tested for leaks.

203.6 Maintenance and Repair

Maintenance personnel must be thoroughly trained. They must be aware of the limitations and never try to replace components or make repairs and adjustments beyond the manufacturer's recommendations, unless they have been specially trained by the manufacturer.

These restrictions apply primarily to maintenance of the more complicated devices, especially closed- and open-circuit SCBA, and more specifically, regulator valves and low pressure warning devices. These devices should be returned to the manufacturer or to a trained technician for adjustment or repair. There should be no major problems in repairing and maintaining most respirators, particularly the commonly used air-purifying type.

An important aspect of any maintenance program is having enough spare parts on hand. Only continual surveillance of replacement rates will determine what parts and quantities should be kept in stock. It is desirable to have a recording system to indicate spare parts usage and the inventory on hand.

For SCBA devices, the facepiece should be combined with the tested regulator and the fully charged cylinder, and an operational check performed.

203.7 Respirator Storage

Damage and contamination of respirators may take place if they are stored on a workbench, or in a tool cabinet or toolbox, among heavy tools, greases and dirt. Freshly cleaned respirators should be placed in heat-sealed, ziplock, or other reusable plastic bags until reissue. They should be stored in a clean, dry location away from direct sunlight. They should be placed in a single layer with the facepiece and exhalation valve in an undistorted position to prevent rubber or plastic from taking a permanent distorted "set".

Air-purifying respirators kept ready for non-routine or emergency use should be stored in a cabinet with individual compartments. The storage cabinet should be readily accessible, and all workers should be made aware of its location, as is done for fire extinguishers. Preventing serious injury from the inhalation of a toxic substance depends entirely on how quickly workers can get to the emergency respirators.

A chest or wall-mounted case may be used for storing SCBA for use in emergencies. Again, the location of SCBA should be well-known and clearly marked. Unlike fire extinguishers, however, they should be located in an area that will predictably remain uncontaminated. Putting on a SCBA in a highly contaminated atmosphere such as might be created by massive release of a toxic material may take too long a time to perform safely in that area. Therefore, the first reaction should be to escape to an uncontaminated area, then put on the SCBA, that should be located there, and re-enter the hazardous area for whatever task must be done. Exceptions to this rule may be encountered, and only a thorough evaluation of the process and escape routes will permit a final decision about the correct storage location for SCBA. Respirators should be stored in a plastic bag inside a rigid container.

Workers who are adequately trained should develop a respect for respirators that will be an automatic incentive to protect respirators from damage. Besides providing better assurance of adequate protection, this training will lower maintenance costs by decreasing damage.

203.8 Recordkeeping

Records should be maintained to document that proper care and maintenance has been performed on respiratory protection devices. Records should indicate when and what was done to each respirator, and also by whom.

203.9 References

U.S. Department of Labor, OSHA, Safety and Health for General Industry (29 CFR Part 1910), Respiratory Protection 1910.134, U.S. Department of Labor Occupational Safety and Health Administration.

American National Standard, Practices for Respiratory Protection, ANSI Z88.2-1980, American National Standards Institute.

Birkner, L.R., Respiratory Protection A Manual and Guideline, American Industrial Hygiene Association, 1980.