SDMS US EPA REGION V -1

SOME IMAGES WITHIN THIS DOCUMENT MAY BE ILLEGIBLE DUE TO BAD SOURCE DOCUMENTS.

APPENDIX C-K
K.08 10/16/92
161203

REMEDIAL INVESTIGATION REPORT
LENZ OIL SERVICE, INC. SITE
LEMONT, ILLINOIS

VOLUME II OF II

REVISION: 1

SUBMITTED BY:

LENZ OIL SETTLING RESPONDENTS

OCTOBER 16, 1992

PREPARED BY:

ENVIRONMENTAL RESOURCES MANAGEMENT-NORTH CENTRAL, INC.
102 WILMOT ROAD, SUITE 300
DEERFIELD, ILLINOIS 60015
PROJECT NO. 0252

APPENDIX B

WELL CONSTRUCTION LOGS

STS Job No. 22132

Lenz Oil Service
Jeans Road
Lemont, Illinois

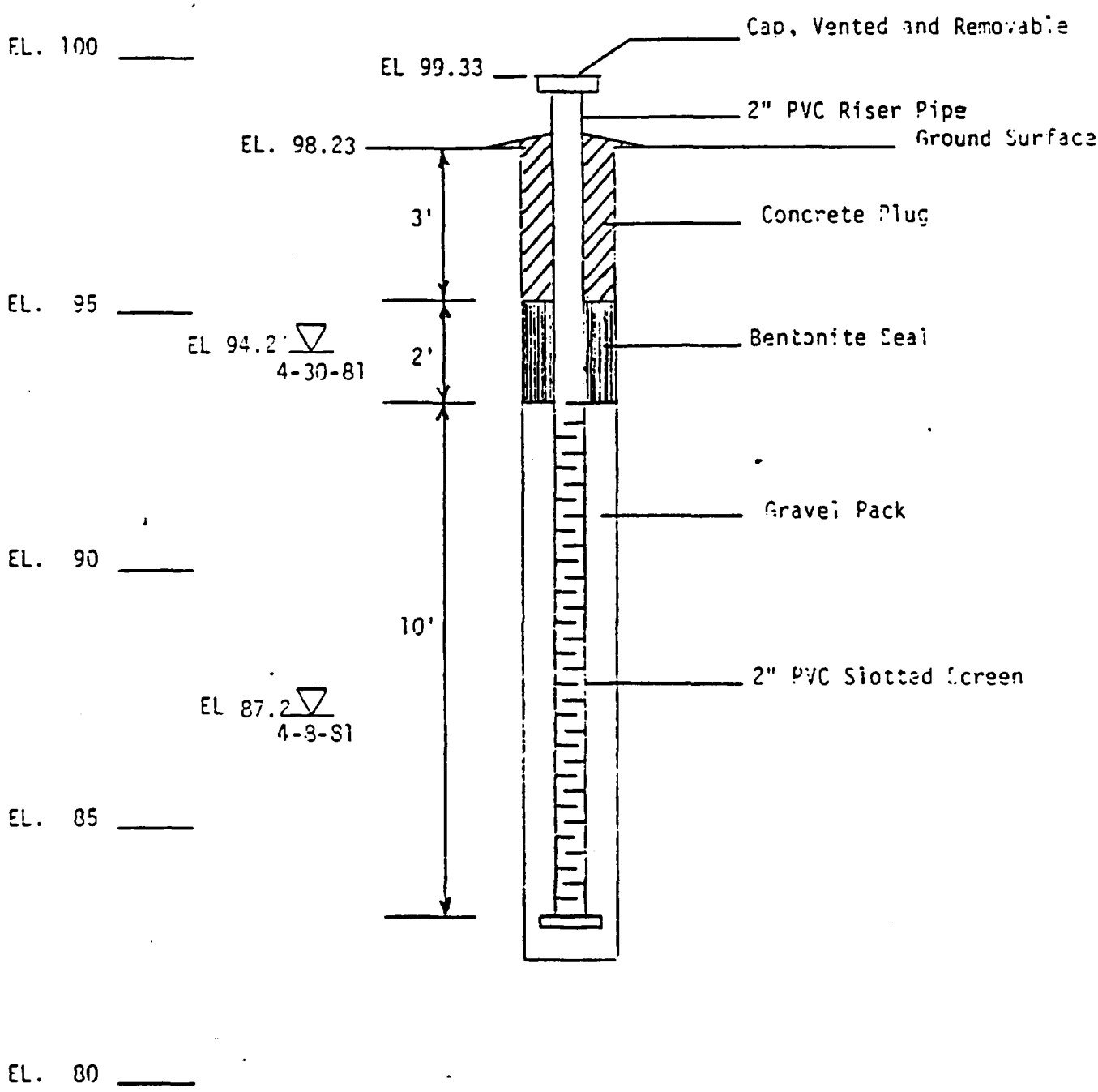

OW-1

CONSTRUCTION DETAILS

Lenz Oil Service
Jeans Road
Lemont, Illinois

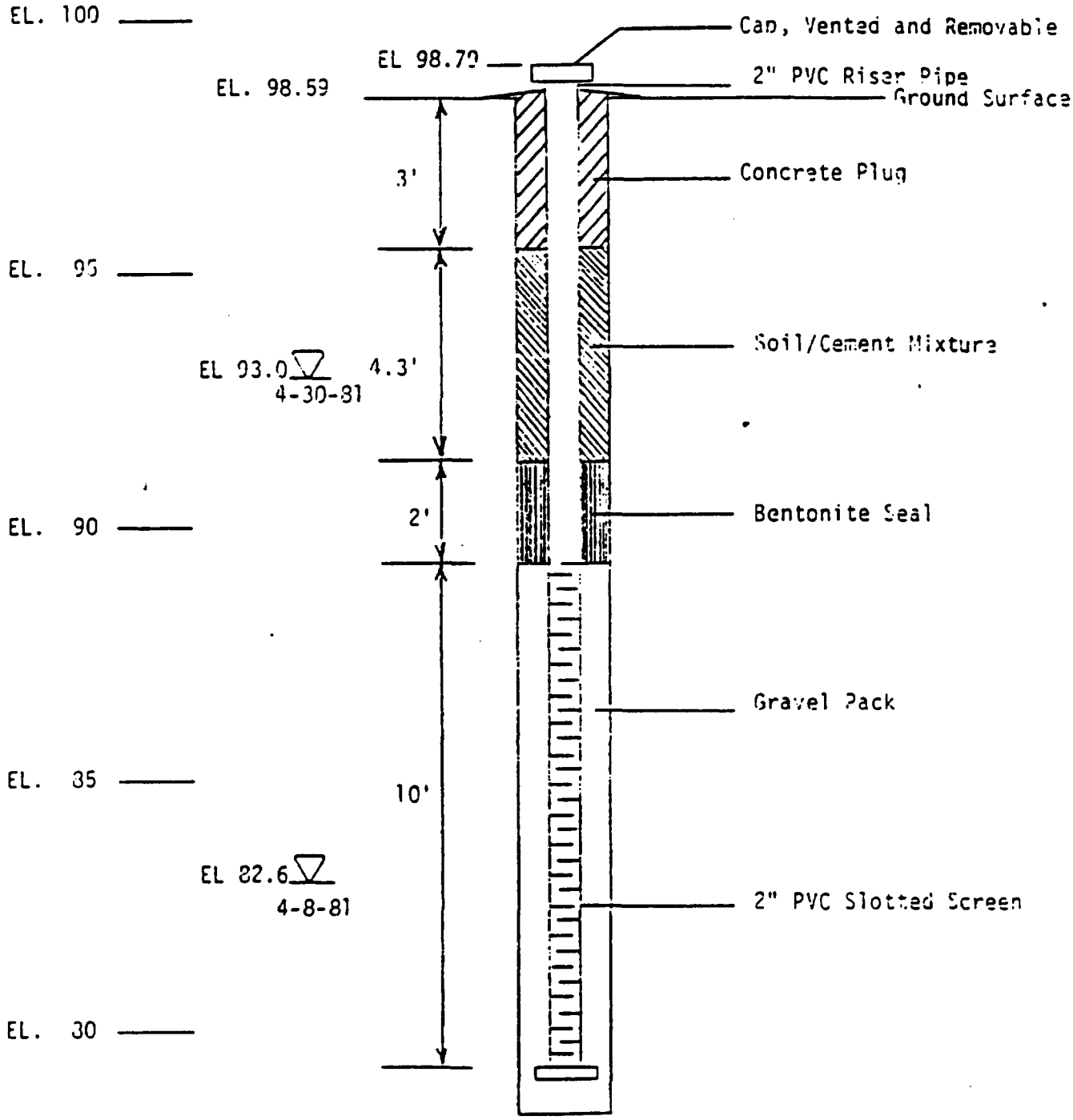

OW-2

CONSTRUCTION DETAILS

MONITOR WELL CONSTRUCTION

Location: Lemont
Site No.: Lenz Oil
Well No.: 101-M
Prepared by: D Grede

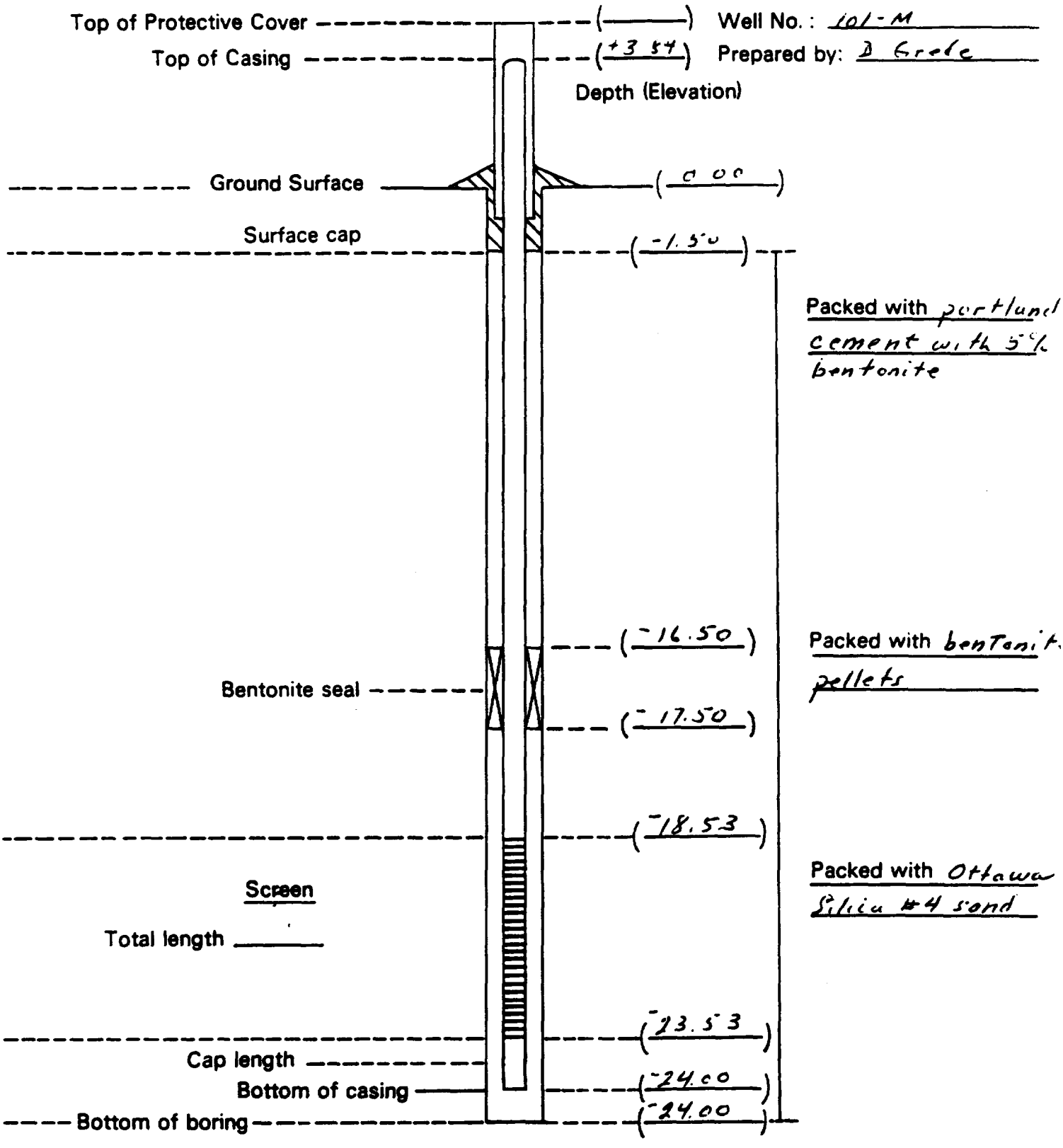

Pipe: Type and quantity 2" 316 Stainless Steel, flush threaded, .01" continuous wire wound screen. 2-10' risers, 1-2' riser, 1-5' screen, 1 cap and plug.

IL 532-1952
LPC 222 1/88

MONITOR WELL CONSTRUCTION

Location: Lemont
Site No.: Len2O.1
Well No.: G101L
Prepared by: D. Grede

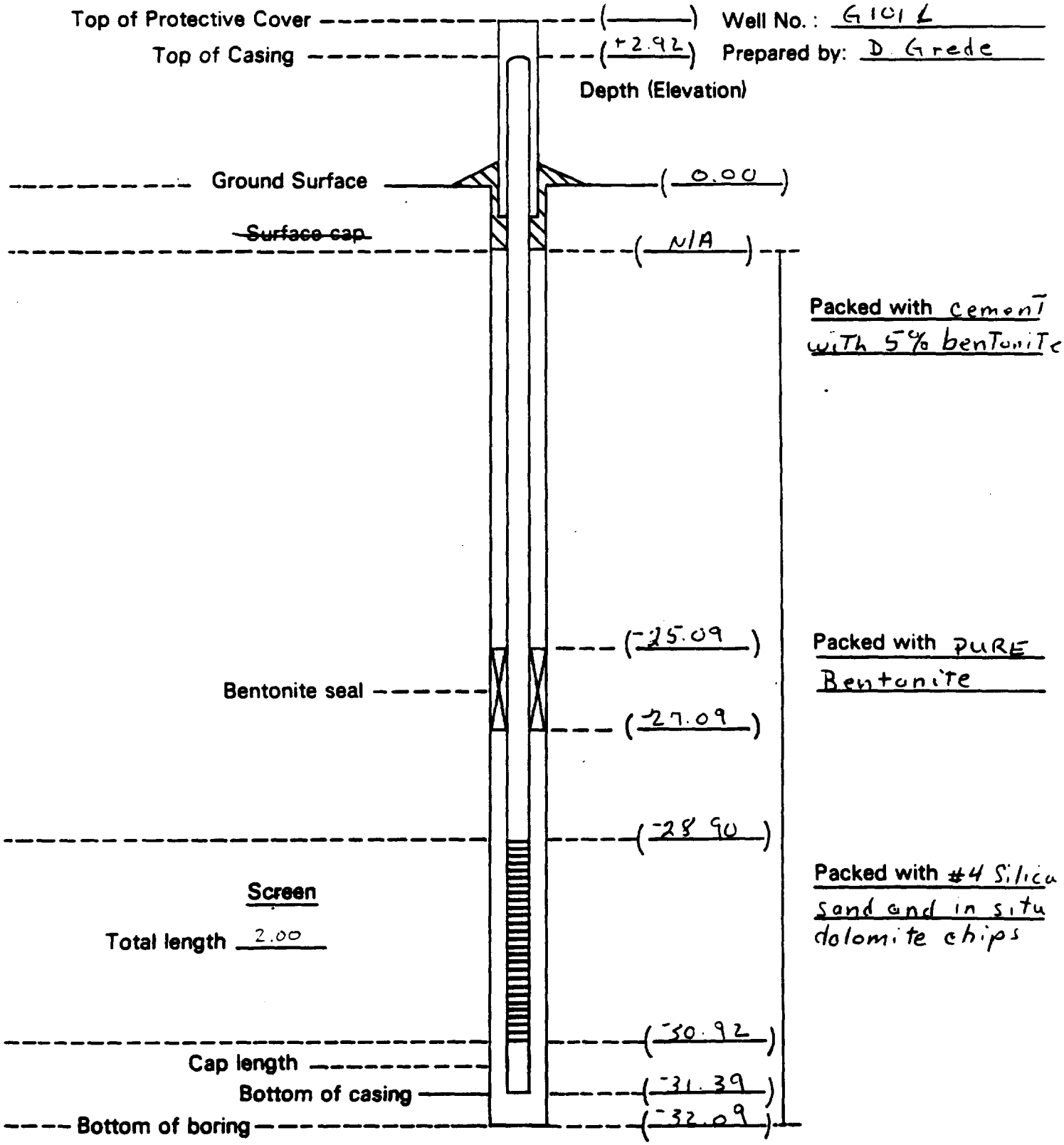

Pipe: Type and quantity 2" 316 Stainless Steel, flush threaded, .01 Continuous wire wrapped screen - 316 stainless steel. 1 cap, 1-3' screen, 1-3' Riser and 3-10' Risers

IL 532-1952
LPC 222 1/88

MONITOR WELL CONSTRUCTION

Location: Lemont
Site No.: Lenz Oil
Well No.: 101 D
Prepared by: J. Grede

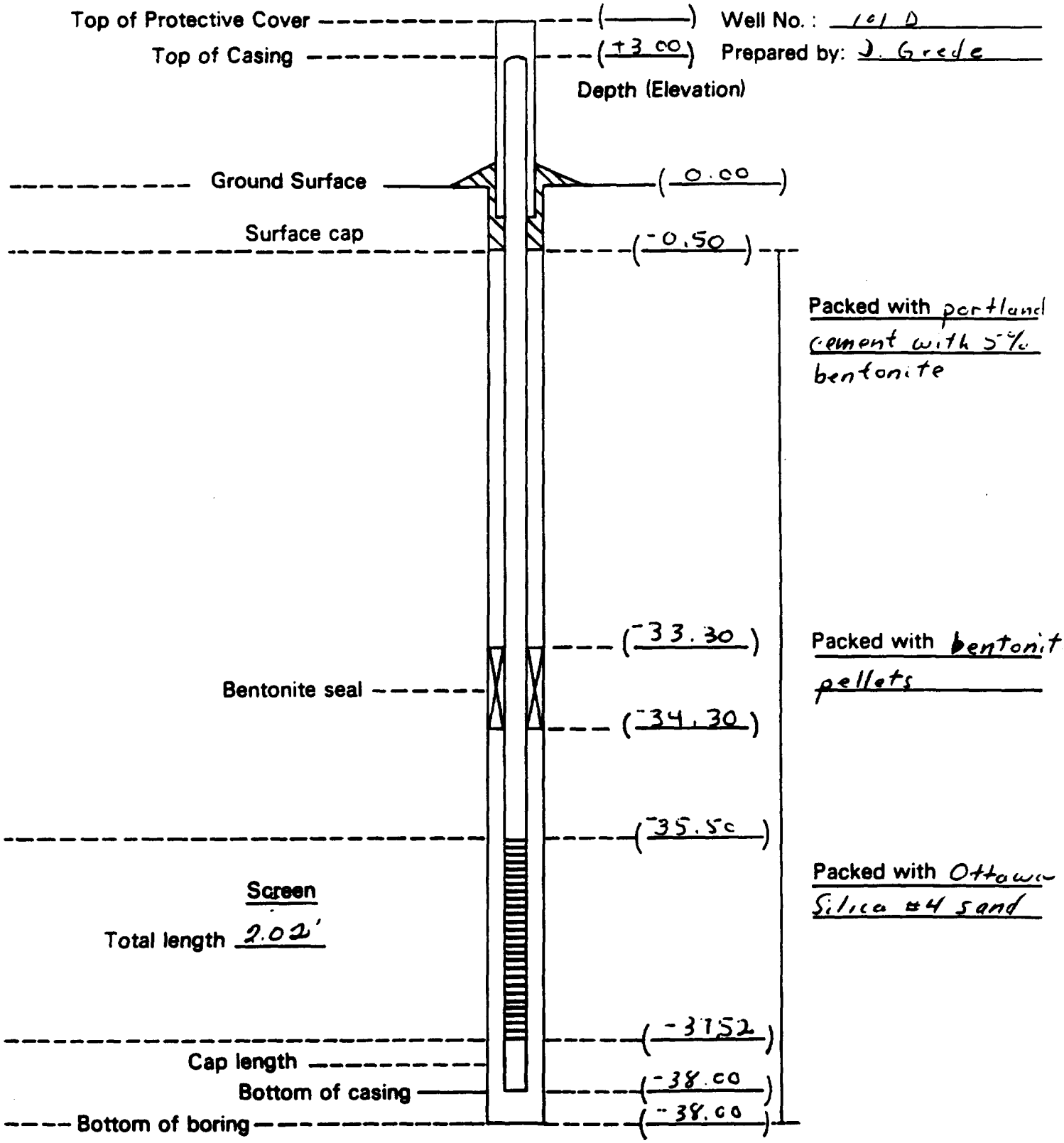

Pipe: Type and quantity 316 Stainless steel - flush jointed with 01" wire - wound screen. 4-10' risers, 1-2' screen, plug. Removed 1.76' from top riser.

IL 532-1452
LPC 222 1/88

MONITOR WELL CONSTRUCTION

Location: Lemont-Lenz Oil
Site No.: _____
Well No.: G102L
Prepared by: DWGrede

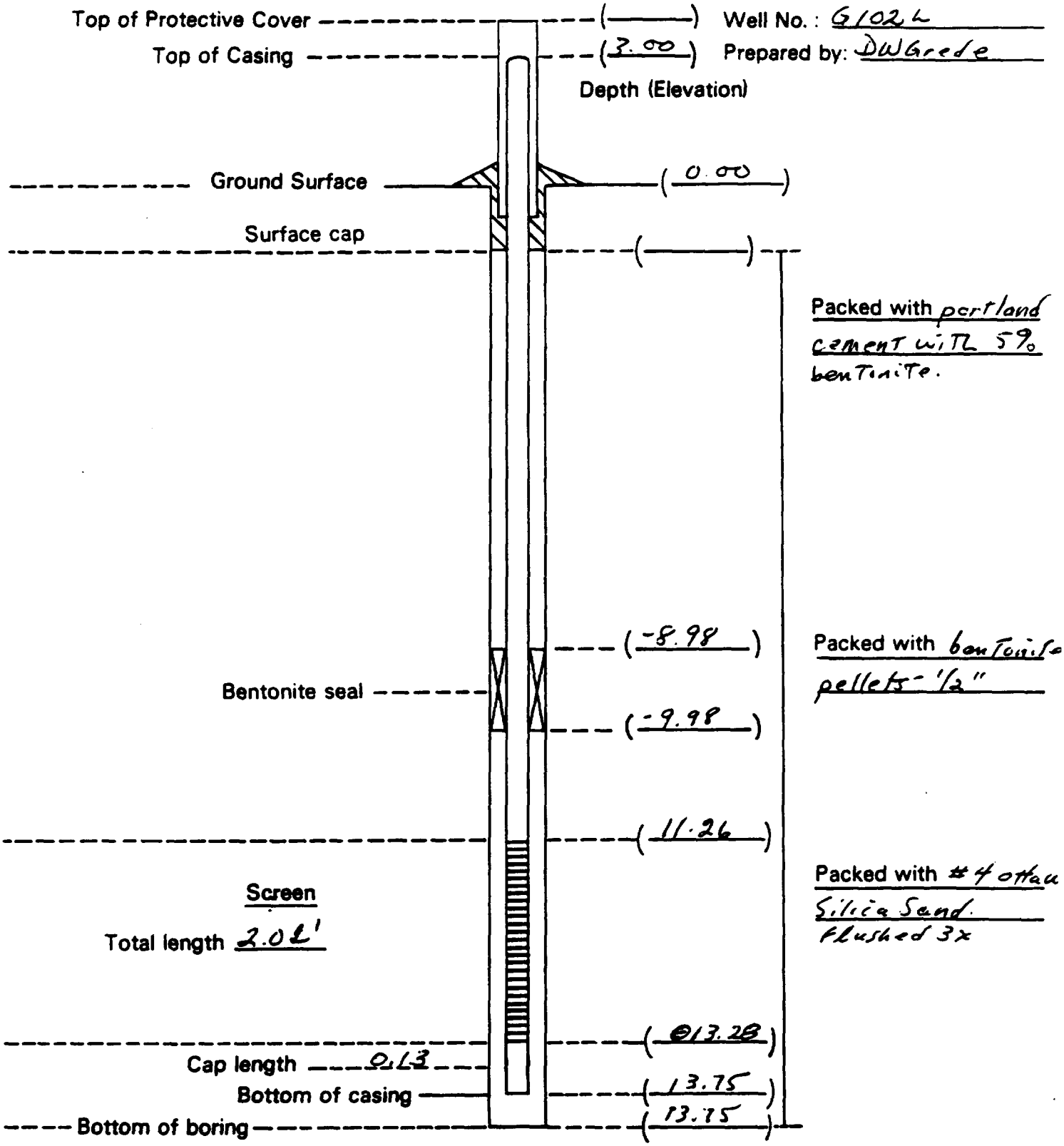

Pipe: Type and quantity 316 Stainless Steel, flush jointed, .01" slot wire wound 316 Stainless steel screen, 1 plug, 12' screen, 1-10' riser and 1-5' riser at which 1.18' was removed for a 3.00' stick up.

IL 532-1452
LPC 222 1/88

MONITOR WELL CONSTRUCTION

Location: Lemont
Site No.: Lenz Oil
Well No.: 102-D
Prepared by: D. Grede

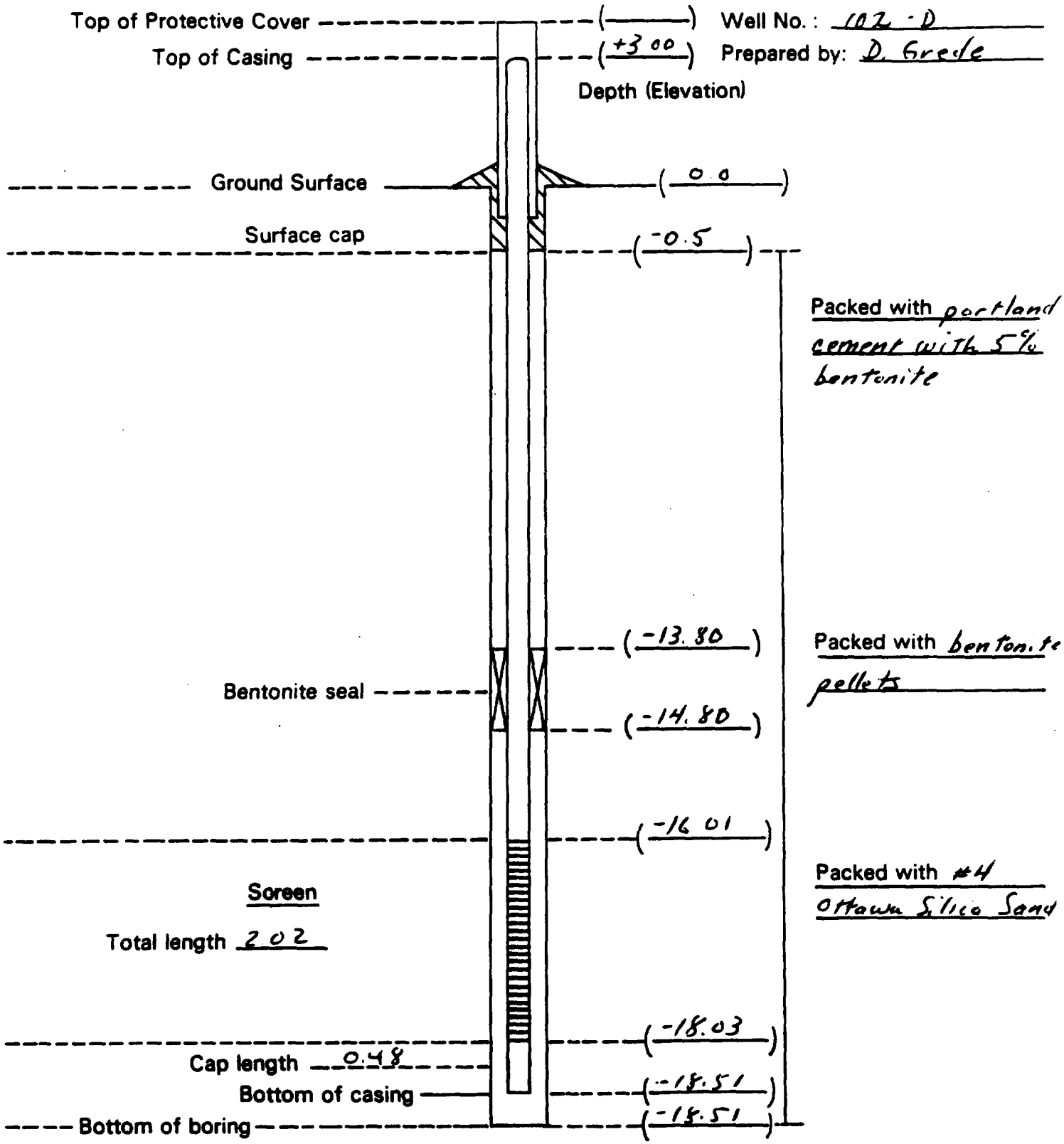

Pipe: Type and quantity 316 Stainless steel, flush jointed, .01" continuous wire wraped screen. 5/28/86 1-Plug, 1-2' screen, 2-10' Risers

IL 532-1452
IDPH 222 1/88

MONITOR WELL CONSTRUCTION

Location: Lemont
Site No.: Kenz Oil
Well No.: 104 L
Prepared by: D. W. Grede

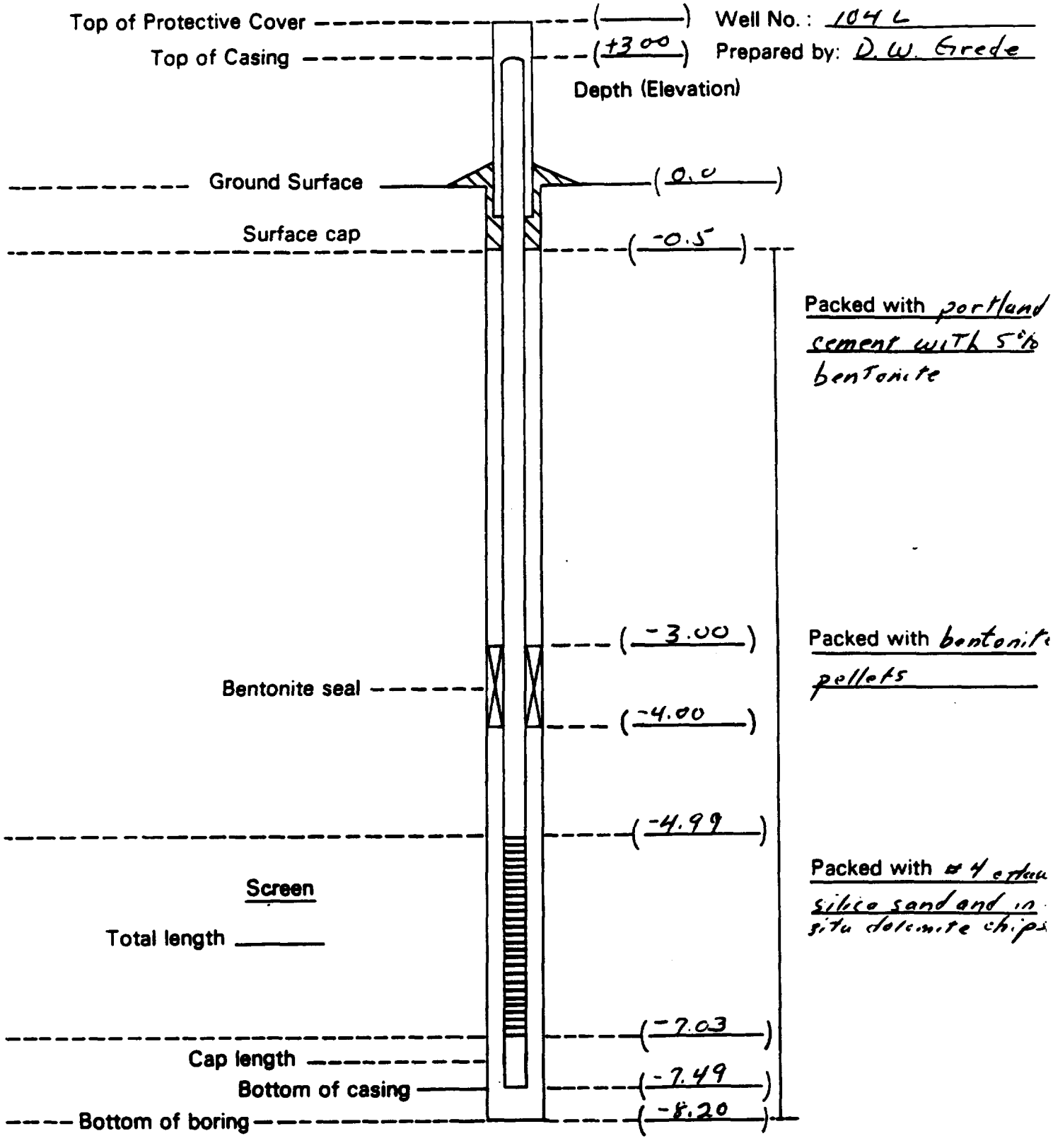

Pipe: Type and quantity 316 Stainless steel, flush jointed. .01" continuous wire wound screen. 1 cap, 1-2' screen, 1-2' riser, 1-5' riser, 1-1' cutoff piece.

IL 532-1952
LPC 222 1/88

MONITOR WELL CONSTRUCTION

Location: Lamont-Lanz C
Site No.:
Well No.: 104D
Prepared by: DLGrooba 5/14/86

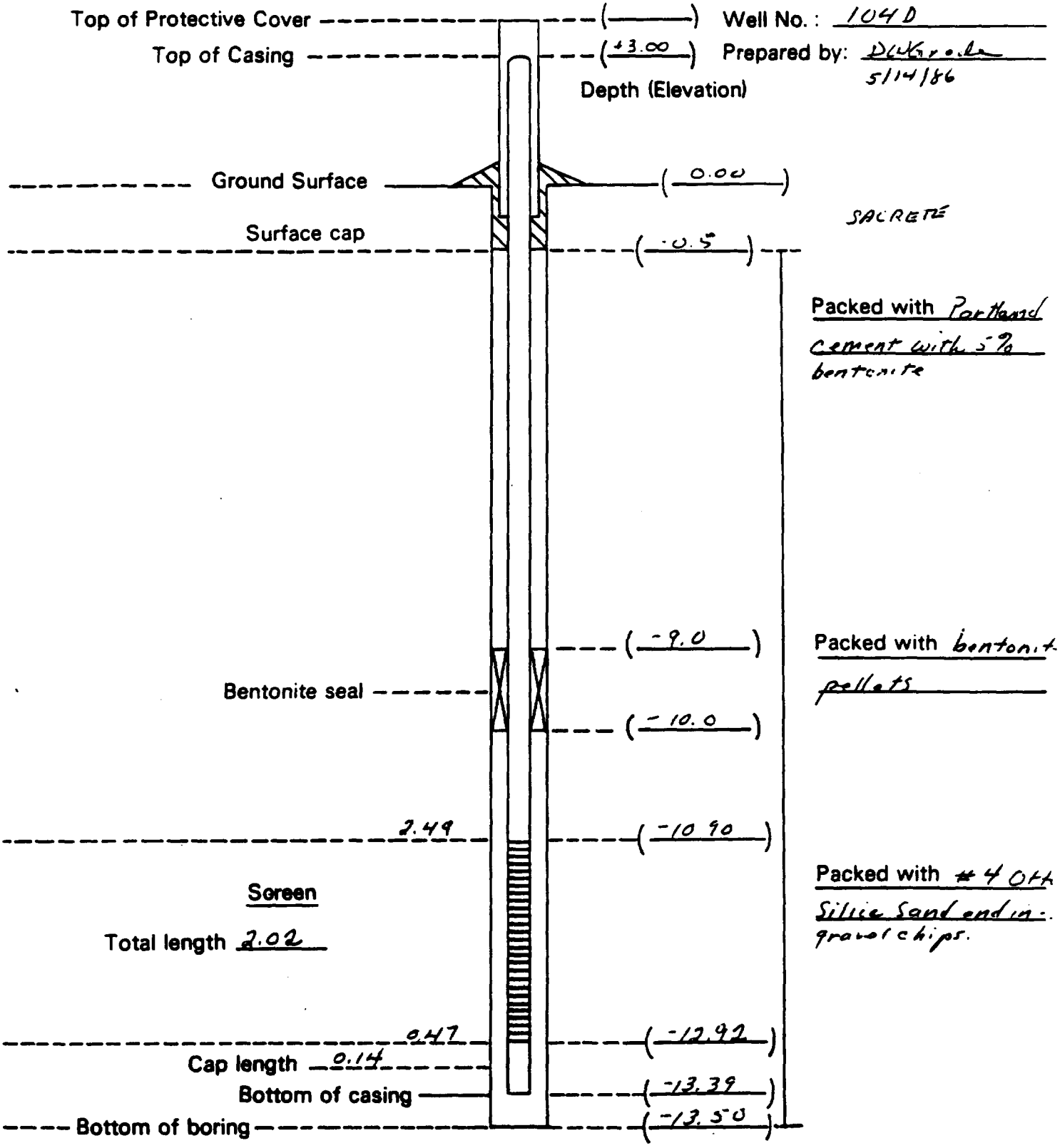

Pipe: Type and quantity 316 Stainless Steel, flush jointed, .01 wire wound screen 1 plug, 1-2' screen, 1-10' riser, 1-5' riser. Removed 1.45' from top for stick up = 3.0', Protective cover (4") and American 5100 lock.

IL 532-1952
LPC 222 1/88

WEHRAN ENGINEERING
CONSULTING ENGINEERS

WELL CONSTRUCTION DESIGN

Job: 06369
Well Number: L105S

Date: 7/16/86
Time taken to install: 2.5 hr
Name: A. BLACKMER

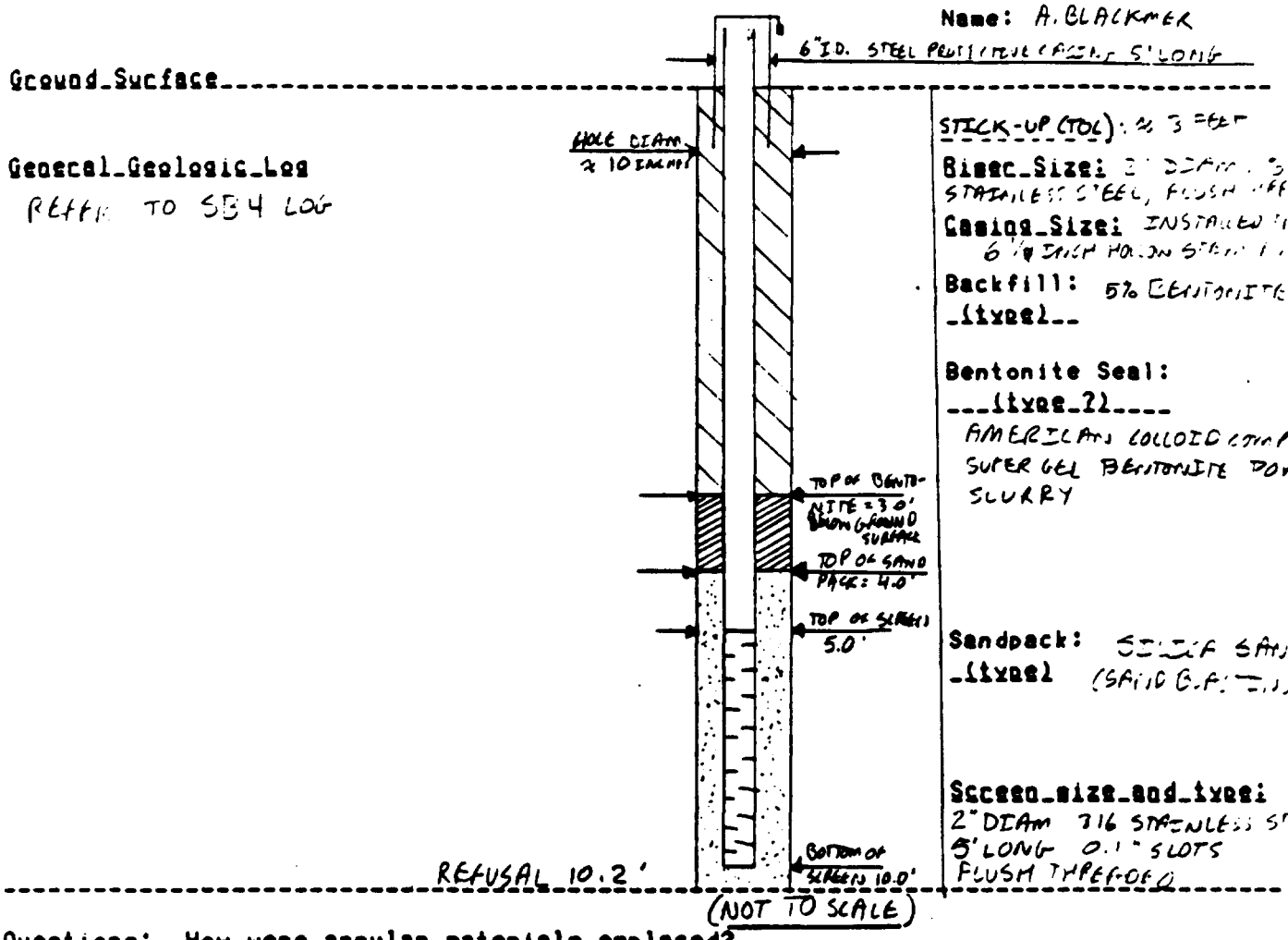

STICK-UP (TOC): ≈ 3 FEET

Riser Size: 2" DIAM. 316 STAINLESS STEEL, FLUSH THREADED

Casing Size: INSTALLED THROUGH 6 1/4 INCH HOLLOW STEM AUGERS

Backfill: 5% BENTONITE GROUT
(type)

Bentonite Seal:
(type ?)
AMERICAN COLLOID COMPANY SUPER GEL BENTONITE POWDER SLURRY

Sandpack: SILICA SAND (SAND GRADING SAND
(type)

Screen size and type:
2" DIAM 316 STAINLESS STEEL
5' LONG 0.1" SLOTS
FLUSH THREADED

General Geologic Log
REFER TO SB4 LOG

Questions: How were annular materials emplaced?
SAND PACK POURED INTO ANNULAR SPACE; BENTONITE SEAL AND GROUTED TREMMIED

How were depths to materials measured?
CHECKED WITH TAPE AND WEIGHT

How developed?
AIR LIFT

How long?
4 HOURS

What parameters were measured?
- PARAMETERS MEASURED DURING PURGE FOR SAMPLING
- RELATIVE TURBIDITY DURING DEVELOPMENT

Drilling and Installation Chronology:
REFER TO CHRONOLOGY OF L105S AND L105D

Comments and Problems:
NO PROBLEMS ENCOUNTERED

WEHRAN ENGINEERING
CONSULTING ENGINEERS

WELL CONSTRUCTION DESIGN

Job: C6369
Well Number: L105D

Date: 7/21/86
Time taken to install: 4.5
Name: A. BLA[illegible]

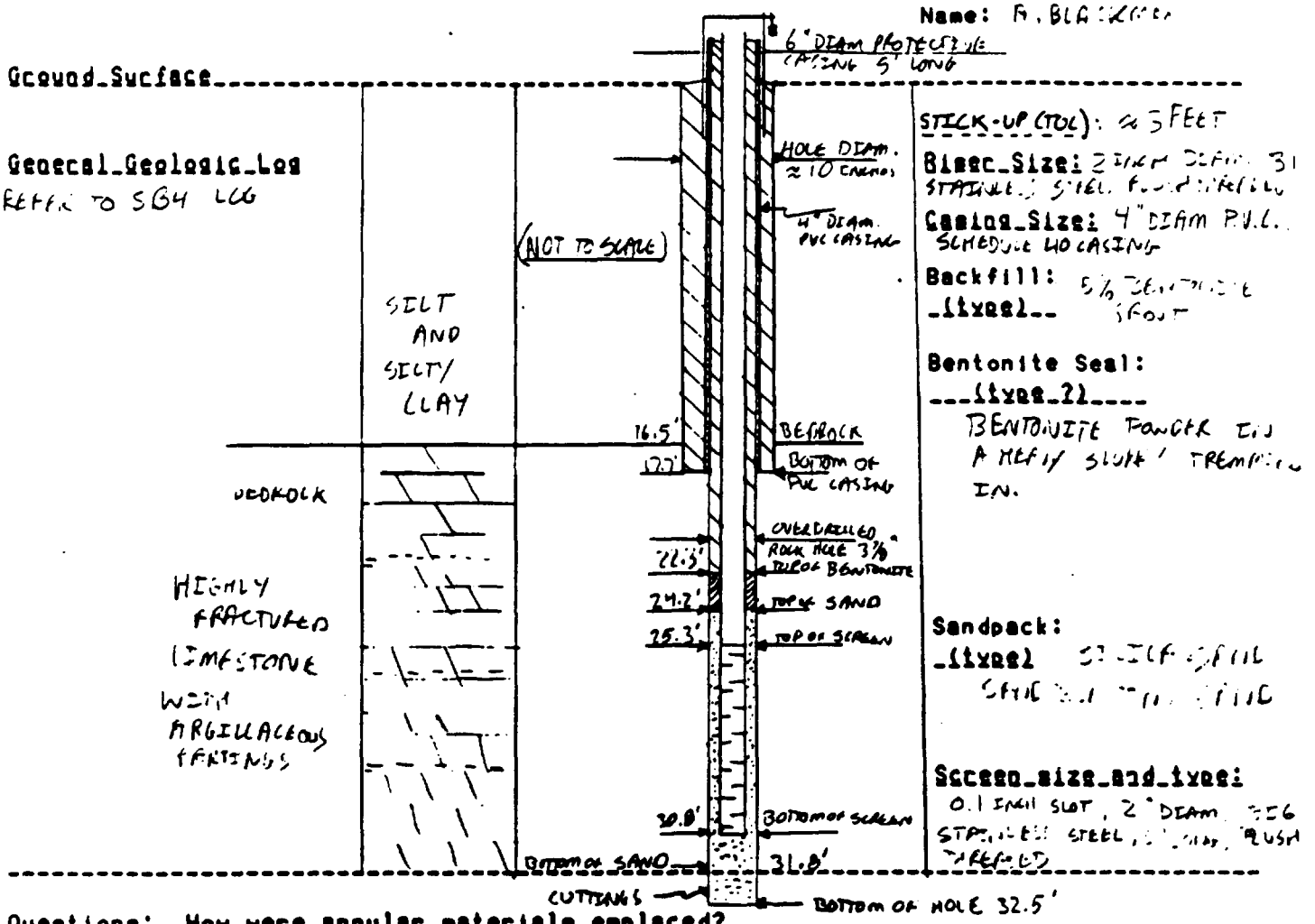

General Geologic Log
REFER TO SB4 LOG

Riser Size: 2 INCH DIAM. 31 STAINLESS STEEL FLUSH THREADED

Casing Size: 4" DIAM PVC. SCHEDULE 40 CASING

Backfill: 5% BENTONITE GROUT
(type)

Bentonite Seal:
(type 2)
BENTONITE PANCAKE IN A MEDIUM SLURRY TREMIED IN.

Sandpack:
(type) SILICA SAND
SAND [illegible]

Screen size and type:
0.1 INCH SLOT, 2" DIAM 316 STAINLESS STEEL, [illegible], FLUSH THREADED

Questions: How were annular materials emplaced?
SAND PACK POURED THROUGH FUNNEL DRY, BENTONITE SEAL AND GROUT TREMMIED

How were depths to materials measured?
CHECKED WITH TAPE AND WEIGHT

How developed?
AIR LIFT

How long?
4 HOURS

What parameters were measured?
- PARAMETERS MEASURED DURING PURGE FOR SAMPLING
- RELATIVE TURBIDITY DURING DEVELOPMENT

Drilling and Installation Chronology:
REFER TO CHRONOLOGY OF L105S, L105D AND SB4

Comments and Problems:
HAD PROBLEMS FLUSHING CUTTINGS BECAUSE OF LOSS OF CIRCULATION WITH [illegible] FRACTURES. SOLUTION: OVERDRILLED HOLE LET CUTTINGS FLOW INTO SUMP, INSTALLED SAND PACK ON TOP OF CUTTINGS

WEHRAN ENGINEERING
CONSULTING ENGINEERS

WELL CONSTRUCTION DESIGN

Job: 06369
Well Number: L106S

Date: 7/23/86
Time taken to install: [illegible]
Name: [illegible]

Ground Surface

General Geologic Log
Refer to log SB3

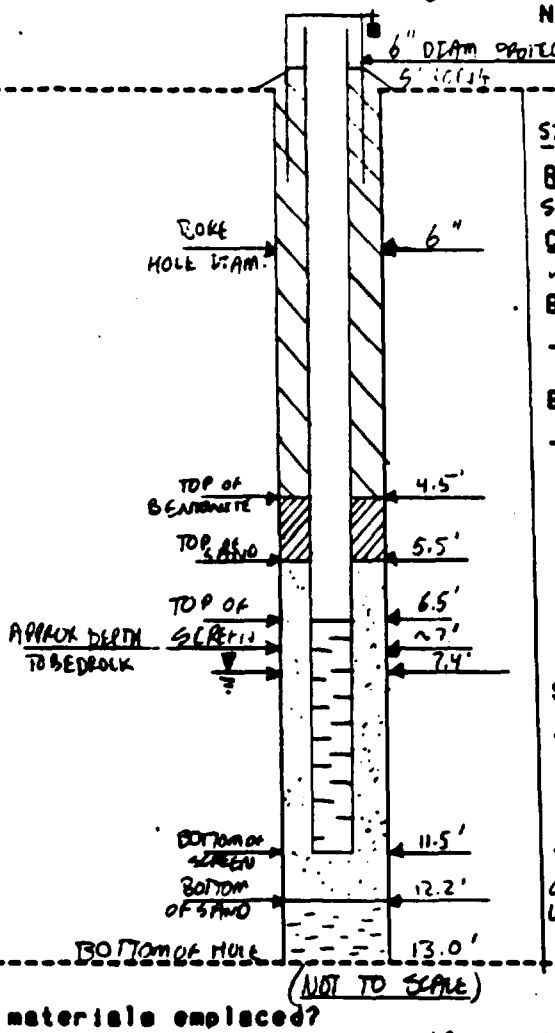

STICK-UP (TOC): 0.5'

Riser Size: 2 INCH DIAM 3
STAINLESS STEEL, FLUSH THREADED

Casing Size: BORE HOLE DRILLED WITH 5 7/8 INCH TRICONE BIT

Backfill:
Type: 5% BENTONITE GROUT

Bentonite Seal:
Type 2
1/2 INCH DIAMETER BENTONITE PELLETS

Sandpack: SILICA SAND
Type: (GRADED [illegible] SAND)

Screen size and type:
0.1 SLOT 2 INCH DIAM., 316 STAINLESS STEEL, 5' LONG, FLUSH THREADED

Questions: How were annular materials emplaced?
SAND PACK AND BENTONITE PELLETS DRY POURED, GROUT TREMMIED
How were depths to materials measured?
TAPE AND WEIGHT
How developed?
AIR LIFT
How long?
5 HOURS
What parameters were measured?
- PARAMETERS INCREASING DURING PURGE FOR SAMPLING
- RELATIVE TURBIDITY DURING DEVELOPMENT

Drilling and Installation Chronology:
REFER TO CHRONOLOGY OF L106 AND SB3

Comments and Problems:
NO PROBLEMS ENCOUNTERED

WEHRAN ENGINEERING
CONSULTING ENGINEERS

WELL_CONSTRUCTION_DESIGN

NOT COMPLETED

Job: 06369
Well Number: L106D

Date: 7/21/86
Time taken to install:
Name: A. BLACKMAN

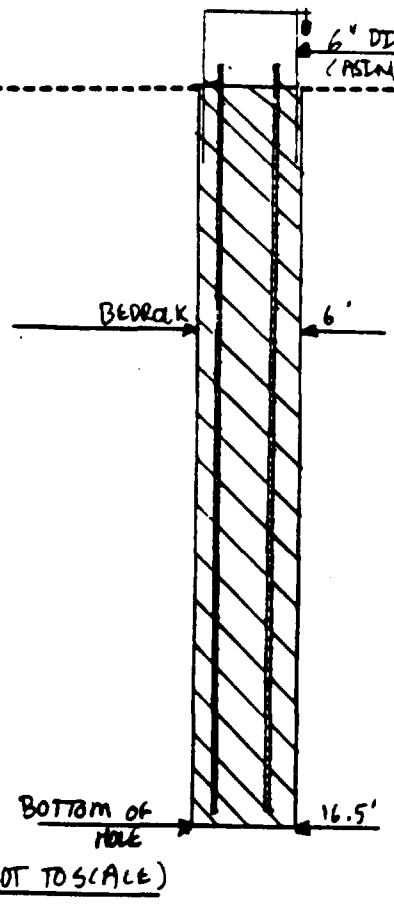

STICK-UP (TOC):

General_Geologic_Log
REFER TO LOG FOR GB3/L106

Bisec_Size:

Casing_Size: 4" PVC CASING

Backfill:
(type) ~5% BENTONITE GROUT

Bentonite Seal:
___(type_?)____

Sandpack:
_(type)

Screen_size_and_type:

Questions: How were annular materials emplaced?

How were depths to materials measured?

How developed? How long?

What parameters were measured?

Drilling_and_Installation_Chronology:

Comments_and_Problems:
WELL NEVER COMPLETED

APPENDIX C

TECHNICAL MEMORANDUM NO. 2

TECHNICAL MEMORANDUM NO. 2
SOIL GAS INVESTIGATION
REMEDIAL INVESTIGATION
PHASE I, TASK 1

LENZ OIL SERVICE, INC.
LEMONT, ILLINOIS

REVISION: 1

SUBMITTED BY:

LENZ OIL SETTLING RESPONDENTS

MAY 2, 1991

PREPARED BY:

ENVIRONMENTAL RESOURCES MANAGEMENT-NORTH CENTRAL, INC.
102 WILMOT ROAD, SUITE 300
DEERFIELD, ILLINOIS 60015

PROJECT NO. 0252

TABLE OF CONTENTS

		Page
LIST OF TABLES		
LIST OF FIGURES		
1.0	INTRODUCTION	1-1
2.0	SOIL GAS INVESTIGATION METHODOLOGY	2-1
2.1	Sampling Locations	2-1
2.2	Sampling Procedures	2-2
3.0	ANALYTICAL RESULTS	3-1
4.0	CONCLUSIONS	4-1
5.0	MODIFICATIONS TO MONITORING WELL LOCATIONS	5-1
REFERENCES		
APPENDICES		
A	Soil Gas Data Validation	
B	Soil Gas - Laboratory Analytical Results and Supporting QC Documentation	

LIST OF TABLES

Number	Description	Following Page
2-1	Soil Gas Sampling Locations	2-2
2-2	Target Compounds and Associated Detection Limits	2-2
3-1	Soil Gas Investigation Sampling Results	3-1

LIST OF FIGURES

Number	Description	Following Page
2-1	Soil Gas Sampling Locations	2-2
3-1	Soil Gas Investigation Sampling Results	3-1
3-2	Generalized Geologic Conditions Controlling Soil Gas Sampling	3-2
5-1	Proposed Ground Water Sample Locations	5-1

1.0 INTRODUCTION

This Technical Memorandum presents the results of the Soil Gas Investigation conducted as part of the Phase I, Task 1 activities of the Remedial Investigation/Feasibility Study (RI/FS) for the Lenz Oil site. The site is located at the northeast quadrant of the intersection between Route 83 and Jeans Road in Lemont, Illinois. The Soil Gas Investigation was conducted over an area east and southeast of the Lenz Oil site property.

As noted in the Work Plan, the specific objective of the Soil Gas Investigation was to identify a ground water contaminant plume, if any, downgradient of the Lenz Oil site. The results of the Soil Gas Investigation, as well as the results of the fracture analyses presented in Technical Memorandum No. 1, will be used to finalize the placement of downgradient monitoring wells.

Section 3.0 of this memorandum, presents a discussion of the sample analytical results. Modifications to the preliminary locations of monitoring wells are proposed in Section 5.0. All soil gas sampling activities were conducted in accordance with the Lenz Oil Work Plan and the Sampling and Analysis Plan (SAP), unless otherwise indicated.

2.0 SOIL GAS INVESTIGATION METHODOLOGY

The following subsections summarize the methodology employed during the Phase I, Task 1 Soil Gas Investigation at the Lenz Oil site. Reference is made to the Lenz Oil Work Plan and SAP where appropriate.

2.1 Sampling Locations

The Soil Gas Investigation was conducted in the open area east and southeast of the Lenz Oil site as shown in Figure 2-1. Sampling points were located at 50-foot intervals, along the east-west grid lines, which were spaced 100 feet apart, as described in the SAP. This grid system was surveyed and established by licensed surveyors from Patrick Engineering, Inc.

During the early stages of the investigation, bedrock was encountered at depths as shallow as 6 to 8 inches below the ground surface. As a result, it was impossible to drive the sampling probes down to the intended depth of 36 inches at all locations, as indicated in the SAP. Consequently, the probes were driven to the maximum depth possible, which was generally down to the weathered bedrock. Coarse dolomite gravel and cobbles or the actual bedrock itself prevented advancing the soil gas probe beyond this depth. In addition, the sampling locations were slightly modified as a result of the physical inaccessibility to the exact grid intersects because of vegetation interference or rough terrain. These modifications were implemented after approval was secured from the Illinois Environmental Protection Agency (IEPA) representative at the site, who provided project oversight during the field activities. These were the only modifications made to the SAP.

All of the sample locations are listed in Table 2-1 and Figure 2-1. Table 2-1 presents the actual depths to which the probes were driven. A total of 32 investigative soil gas samples were collected from depths ranging from 16 to 36 inches from the ground surface. This number does not include QC samples or blanks.

2.2 Sampling Procedures

Soil gas samples were collected according to the methodology outlined in the SAP. As noted previously, 32 investigative samples were collected. In addition, four field duplicate samples, two MS/MSD sample pairs, five field blanks, and five trip blanks were collected, resulting in a total of 50.

All samples were properly preserved, packaged, and shipped to PACE Laboratories in Minneapolis, Minnesota for analysis according to the protocols described in the SAP. The soil gas samples were analyzed for the contaminants and associated detection limits presented in Table 2-2. These parameters were chosen because of their confirmed presence in the soils and ground water at the site.

The project-required detection limits for soil gas were calculated by modifying those for ground water, using Henry's Law Constant and a conversion factor for expressing concentrations in parts per million by volume (ppmV). The derivation of the detection limits is presented in Appendix A of the Lenz Oil Quality Assurance Project Plan (QAPP). As shown in Table 2-2, the method detection limits achieved by PACE Laboratories are consistently lower than the project-required detection limits.

TABLE 2-1
LENZ OIL

SOIL GAS INVESTIGATION SAMPLING LOCATIONS

(Page 1 of 2)

SAMPLE I.D.	LOCATION COORDINATES	PROBE DEPTH (inches)
LO-1A1-SG	4+00N, 7+00E	36
LO-1A2-SG	4+00N, 6+50E	18
LO-1A3-SG	4+00N, 6+00E	18
LO-1A4-SG	4+00N, 5+50E	18
LO-1A4-SGFS	4+00N, 5+50E	20
LO-1A5-S5	4+00N, 5+00E	34
LO-1A6-SG	4+00N, 4+50E	18
LO-1A7-SG	4+00N, 4+00E	35
LO-1A8-SG	4+00N, 3+50E	28
LO-1A8-SGMS	4+00N, 3+50E	30
LO-1A8-SGMSD	4+00N, 3+50E	30
LO-1A9-SG	4+00N, 3+00E	36
LO-1B1-SG	3+00N, 7+00E	18
LO-1B2-SG	3+00N, 6+50E	18
LO-1B3-SG	2+90N, 6+00E	16
LO-1B4-SG	3+00N, 5+50E	18
LO-1B5-SG	3+00N, 5+10E	18
LO-1B6-SG	3+15N, 4+55E	18
LO-1B7-SG	3+00N, 4+00E	18
LO-1B8-SG	3+00N, 3+50E	18
LO-1B8-SGMS	3+00N, 3+50E	18

NOTES: Sample locations are relative to the grid system shown in Figure 2-1. QC samples are designated as MS/MSD - matrix spike/matrix spike duplicate; FS and FD are interchangeable suffixes denoting field duplicate samples. Trip and field blanks are not shown.

TABLE 2-1
LENZ OIL

SOIL GAS INVESTIGATION SAMPLING LOCATIONS

(Page 2 of 2)

SAMPLE I.D.	LOCATION COORDINATES	PROBE DEPTH (inches)
LO-1B8-SGMSD	3+00N, 3+50E	18
LO-1B9-SG	3+00N, 3+00E	19
LO-1C1-SG	2+00N, 6+95E	18
LO-1C2-SG	2+00N, 6+50E	18
LO-1C3-SG	2+00N, 6+00E	18
LO-1C4-SG	2+00N, 5+50E	18
LO-1C4-SGFS	2+00N, 5+50E	18
LO-1C5-SG	2+00N, 5+00E	18
LO-1C6-SG	2+00N, 4+50E	18
LO-1C6-SGFS	2+00N, 4+50E	18
LO-1C7-SG	2+00N, 4+00E	18
LO-1C8-SG	2+00N, 3+50E	18
LO-1C9-SG	2+00N, 3+00E	18
LO-1C10-SG	2+00N, 2+50E	18
LO-1C10-SGFD	2+00N, 2+50E	18
LO-1C11-SG	1+80N, 2+20E	18
LO-1C12-SG	2+00N, 1+50E	18
LO-1C13-SG	2+00N, 1+00E	18
LO-1CD14-S	1+50N, 0+75E	18

NOTES: Sample locations are relative to the grid system shown in Figure 2-1. QC samples are designated as MS/MSD - matrix spike/matrix spike duplicate; FS and FD are interchangeable suffixes denoting field duplicate samples. Trip and field blanks are not shown.

TABLE 2-2

TARGET COMPOUNDS AND ASSOCIATED DETECTION LIMITS

COMPOUND	PRDL (1) (ppmV)	MDL (2) (ppmV)	MDL (3) (ppmV)
1,2-dichloroethane	0.05	0.05	0.04
1,2-dichloroethene (cis)	0.40	0.05	0.04
1,2-dichloroethene (trans)	0.33	0.10	0.08
Trichloroethene	0.34	0.04	0.03
1,1,1-Trichloroethane	0.18	0.04	0.03
Toluene	0.34	0.06	0.05
Xylenes (total)	0.32	0.05	0.04

Notes:

(1) Project-required detection limits for soil gas in ppmV, calculated from the project-required detection limits for ground water (see Appendix A of the QAPP).

(2) Method detection limits (MDL) achieved by laboratory for all samples except L0-1C1-SG. Values are based on a sample volume of 25L.

(3) MDL for sample LO-1C1-SG; these values have been adjusted for a sample volume of 29.4L.

PROJECT:	REPORT:	DRAWN:	CHECKED:	DATE:	APPROVED:	CLIENT NAME:
0252	TM2	GW		4/29/91		LENZ OIL

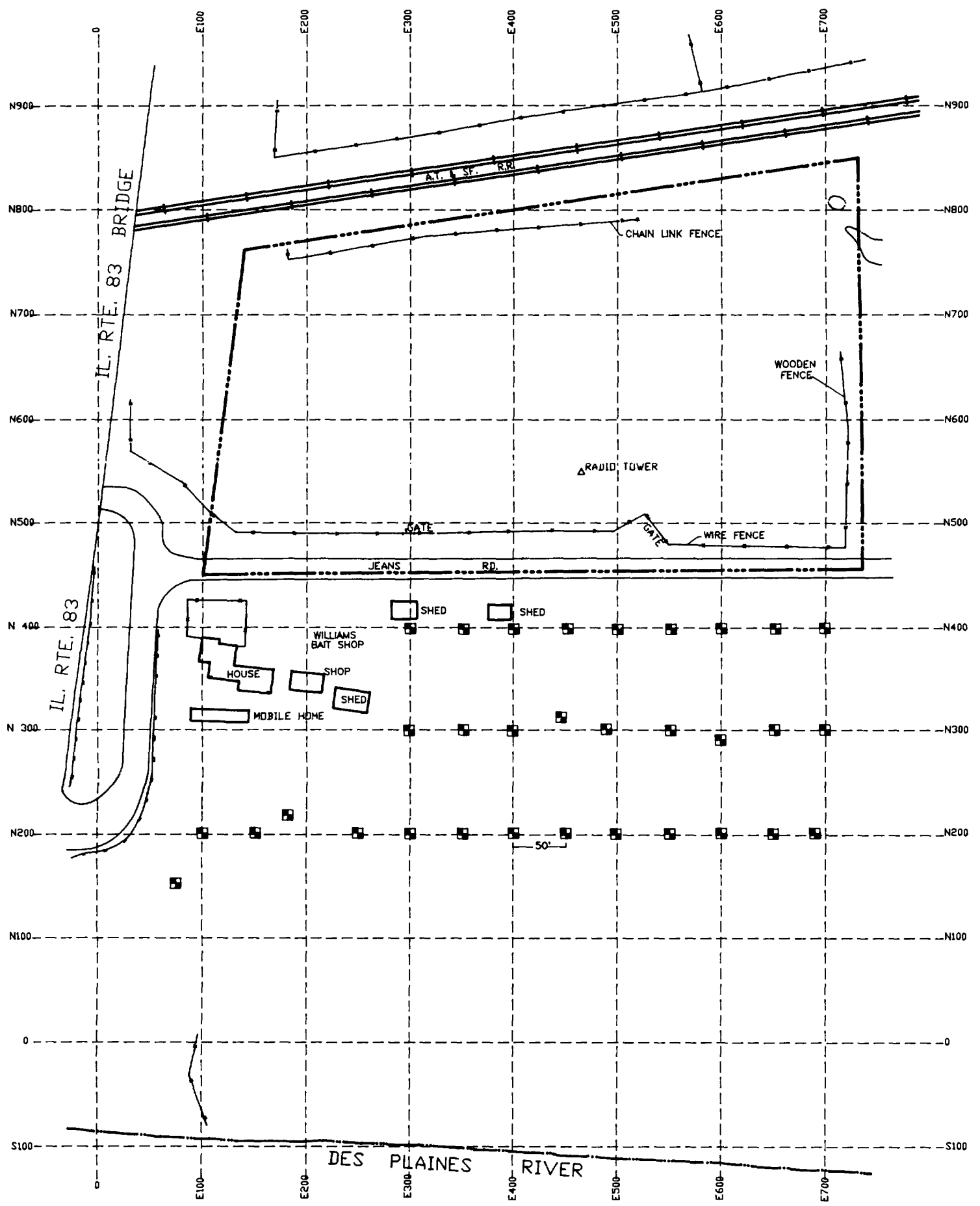

APPROX. SCALE (ft.)
0 120

SYMBOL LEGEND:

- PROPERTY LINE
- FENCE LINE
- RAILROAD
- SOIL GAS SAMPLING LOCATION
- WATER SURFACE

FIGURE 2-1

SOIL GAS SAMPLING LOCATIONS
LENZ OIL SITE

ERM

In addition to the laboratory analyses, field HNu readings of the soil gas were taken at each sampling location through the sample train set ups, as described in the Lenz Oil SAP. All HNu readings were zero.

3.0 ANALYTICAL RESULTS

Table 3-1 presents the laboratory analytical results for the soil gas samples. These data have been validated according to Appendix I of the Lenz Oil QAPP, Standard Operating Procedures for Soil Gas Data Validation. No qualification of the data was necessary. The validation shows that the data are acceptable for the intended uses, except for one field blank analysis (LO-1C1-SGFB) that was qualified as unusable (R). The data validation results are discussed in Appendix A of this Memorandum, and the raw data are presented in Appendix B.

As indicated in Table 3-1, only 2 of the 32 soil gas samples show positive results for any of the target analytical parameters designated for the site. Analytical results for all of the other samples are below the method detection limits. The laboratory result for sample LO-1B9-SG shows concentrations of 0.23 ppmV and 0.10 ppmV for 1,2-dichloroethane and trichloroethene, respectively. A concentration of 0.05 ppmV 1,1,1-trichloroethane was reported for sample LO-1B7-SG. These results are also illustrated on Figure 3-1. The limited number of positive detections does not permit these data to be presented on an isopleth map.

The following technical issues should be considered in reviewing the soil gas analytical data:

1. The shallow nature of the bedrock precluded driving the soil gas probes to the intended depth of 3 feet below ground surface (bgs), and collecting samples closer to the ground water surface. The probability of observing detectable contaminant concentrations at lower depths may have been higher.

PROJECT	REPORT	DRAWN	CHECKED	DATE	APPROVED	CLIENT NAME
0252	TM2	GW		4/29/91		LENZ OIL

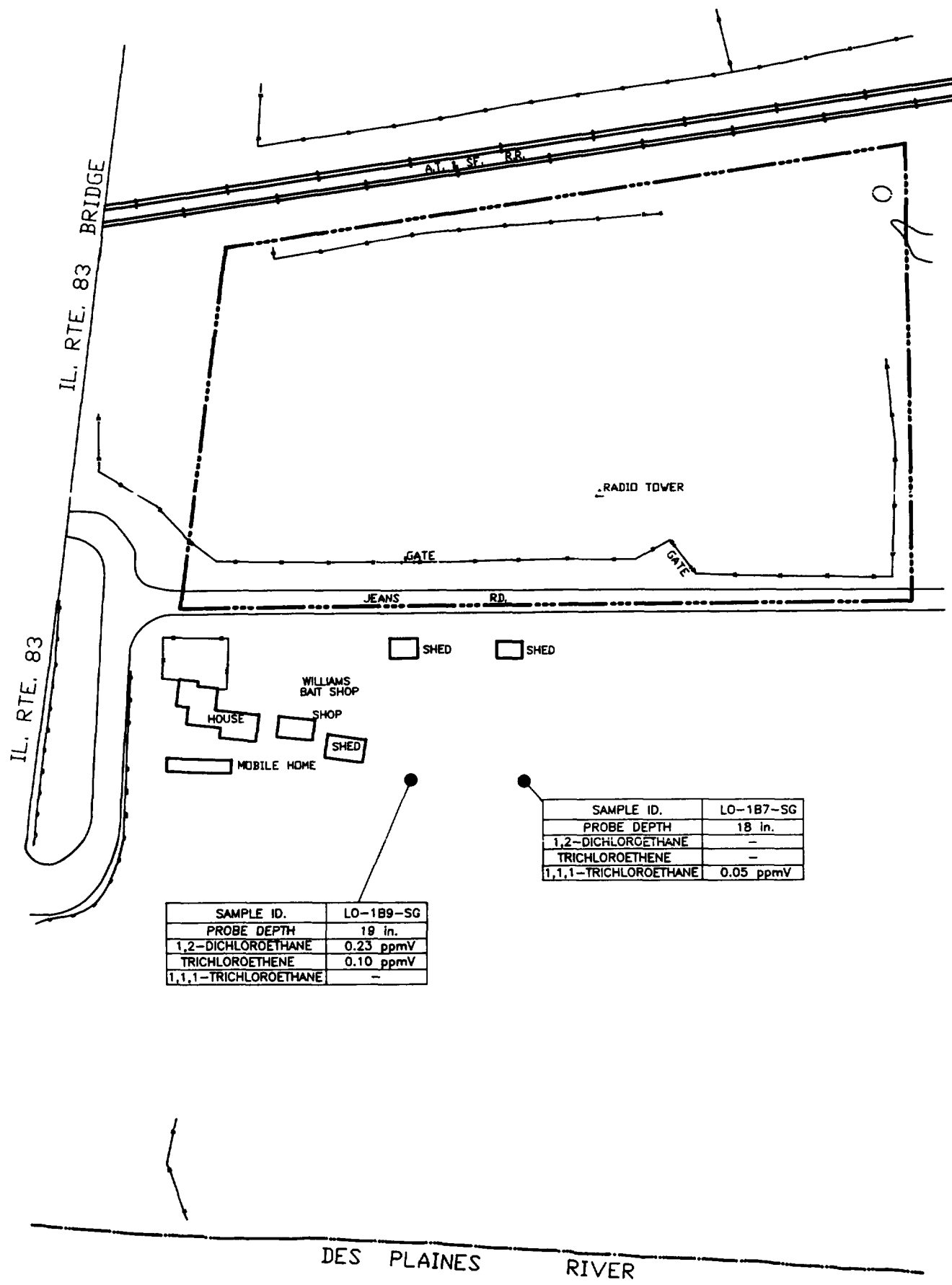

SAMPLE ID.	LO-1B7-SG
PROBE DEPTH	18 in.
1,2-DICHLOROETHANE	–
TRICHLOROETHENE	–
1,1,1-TRICHLOROETHANE	0.05 ppmV

SAMPLE ID.	LO-1B9-SG
PROBE DEPTH	19 in.
1,2-DICHLOROETHANE	0.23 ppmV
TRICHLOROETHENE	0.10 ppmV
1,1,1-TRICHLOROETHANE	–

SYMBOL LEGEND:

- PROPERTY LINE
- FENCE LINE
- RAILROAD
- SOIL GAS SAMPLE LOCATION WITH IDENTIFIED CONTAMINATION
- – COMPOUND NOT DETECTED
- WATER SURFACE

FIGURE 3-1

SOIL GAS INVESTIGATION SAMPLING RESULTS LENZ OIL SITE

ERM

TABLE 3-1

LENZ OIL
SOIL GAS INVESTIGATION SAMPLING RESULTS
(Page 1 of 7)

	SAMPLE I.D.	LO-1A1SG	LO-1A1SGFB	LO-1A2SG	LO-1A3SG	LO-1A4SG	LO-1A4SGFS	LO-1A5SGFS	LO-1A6SG
	QC QUALIFIER		Field Blank				Field Duplicate	Field Duplicate	
	PROBE DEPTH	36	NA	18	18	18	20	34	18
ANALYTE	MDL								
1,1,1-Trichloroethane	0.04	<0.04	<0.04	<0.04	<0.04	<0.04	<0.04	<0.04	<0.04
1,2-Dichloroethane	0.05	<0.05	<0.05	<0.05	<0.05	<0.05	<0.05	<0.05	<0.05
Toluene	0.06	<0.06	<0.06	<0.06	<0.06	<0.06	<0.06	<0.06	<0.06
Trichloroethene	0.04	<0.04	<0.04	<0.04	<0.04	<0.04	<0.04	<0.04	<0.04
Xylenes (Total)	0.05	<0.05	<0.05	<0.05	<0.05	<0.05	<0.05	<0.05	<0.05
cis-1,2-Dichloroethene	0.05	<0.05	<0.05	<0.05	<0.05	<0.05	<0.05	<0.05	<0.05
trans-1,2-Dichloroethene	0.10	<0.10	<0.10	<0.10	<0.10	<0.10	<0.10	<0.10	<0.10
Field HNu Reading	-----	0	0	0	0	0	0	0	0

Notes:

(1) All results are in ppmV.
(2) Positive detections are enclosed in square brackets.
(3) MDL = Method detection limits achieved by laboratory. All MDLs are based on a sample volume of 25 L, except for the MDLs for sample LO-1C1SG which were adjusted for a sample volume of 29.4L.
(4) NA = Not applicable.
(5) R = Unusable.

TABLE 3-1

LENZ OIL
SOIL GAS INVESTIGATION SAMPLING RESULTS
(Page 2 of 7)

	SAMPLE I.D.	LO-1A7SG	LO-1A8SG	LO-1A8SGMS	LO-1A8GMSD	LO-1A9SG	LO-1B1SG	LO-1B2SG	LO-1B3SG
	QC QUALIFIER			Matrix Spike	Matrix Spike Duplicate				
	PROBE DEPTH	35	28	30	30	36	18	18	16
ANALYTE	MDL								
1,1,1-Trichloroethane	0.04	<0.04	<0.04	<0.04	<0.04	<0.04	<0.04	<0.04	<0.04
1,2-Dichloroethane	0.05	<0.05	<0.05	<0.05	<0.05	<0.05	<0.05	<0.05	<0.05
Toluene	0.06	<0.06	<0.06	<0.06	<0.06	<0.06	<0.06	<0.06	<0.06
Trichloroethene	0.04	<0.04	<0.04	<0.04	<0.04	<0.04	<0.04	<0.04	<0.04
Xylenes (Total)	0.05	<0.05	<0.05	<0.05	<0.05	<0.05	<0.05	<0.05	<0.05
cis-1,2-Dichloroethene	0.05	<0.05	<0.05	<0.05	<0.05	<0.05	<0.05	<0.05	<0.05
trans-1,2-Dichloroethene	0.10	<0.10	<0.10	<0.10	<0.10	<0.10	<0.10	<0.10	<0.10
Field HNu Reading	-----	0	0	0	0	0	0	0	0

Notes:

(1) All results are in ppmV.
(2) Positive detections are enclosed in square brackets.
(3) MDL = Method detection limits achieved by laboratory. All MDLs are based on a sample volume of 25 L, except for the MDLs for sample LO-1C1SG which were adjusted for a sample volume of 29.4L.
(4) NA = Not applicable.
(5) R = Unusable.

TABLE 3-1

LENZ OIL
SOIL GAS INVESTIGATION SAMPLING RESULTS
(Page 3 of 7)

	SAMPLE I.D.	LO-1B4SG	LO-1B5SG	LO-1B6SG	LO-1B7SG	LO-1B8SG	LO-1B8SGFB	LO-1B8SGMS	LO-1B8SGMSD
	QC QUALIFIER						Field Blank	Matrix Spike	Matrix Spike Duplicate
	PROBE DEPTH	18	18	18	18	18	18	18	18
ANALYTE	MDL								
1,1,1-Trichloroethane	0.04	<0.04	<0.04	<0.04	[0.05]	<0.04	<0.04	<0.04	<0.04
1,2-Dichloroethane	0.05	<0.05	<0.05	<0.05	<0.05	<0.05	<0.05	<0.05	<0.05
Toluene	0.06	<0.06	<0.06	<0.06	<0.06	<0.06	<0.06	<0.06	<0.06
Trichloroethene	0.04	<0.04	<0.04	<0.04	<0.04	<0.04	<0.04	<0.04	<0.04
Xylenes (Total)	0.05	<0.05	<0.05	<0.05	<0.05	<0.05	<0.05	<0.05	<0.05
cis-1,2-Dichloroethene	0.05	<0.05	<0.05	<0.05	<0.05	<0.05	<0.05	<0.05	<0.05
trans-1,2-dichloroethene	0.10	<0.10	<0.10	<0.10	<0.10	<0.10	<0.10	<0.10	<0.10
Field HNU Reading	-----	0	0	0	0	0	0	0	0

Notes:

(1) All results are in ppmV.
(2) Positive detections are enclosed in square brackets.
(3) MDL = Method detection limits achieved by laboratory. All MDLs are based on a sample volume of 25 L, except for the MDLs for sample LO-1C1SG which were adjusted for a sample volume of 29.4L.
(4) NA = Not applicable.
(5) R = Unusable.

TABLE 3-1

LENZ OIL
SOIL GAS INVESTIGATION SAMPLING RESULTS
(Page 4 of 7)

	SAMPLE I.D.	LO-1B9SG	LO-1B9SGFB	LO-1C1SG	LO-1C1SGFB	LO-1C2SG	LO-1C3SG	LO-1C4SG	LO-1C4SGFB
	QC QUALIFIER		Field Blank		Field Blank				Field Blank
	PROBE DEPTH	19	18	18	18	18	18	18	18
ANALYTE	MDL								
1,1,1-Trichloroethane	0.04	<0.04	<0.04	<0.03	<0.04R	<0.04	<0.04	<0.04	<0.04
1,2-Dichloroethane	0.05	[0.23]	<0.05	<0.04	<0.05R	<0.05	<0.05	<0.05	<0.05
Toluene	0.06	<0.06	<0.06	<0.05	<0.06R	<0.06	<0.06	<0.06	<0.06
Trichloroethene	0.04	[0.10]	<0.04	<0.03	<0.04R	<0.04	<0.04	<0.04	<0.04
Xylenes (Total)	0.05	<0.05	<0.05	<0.04	<0.05R	<0.05	<0.05	<0.05	<0.05
cis-1,2-Dichloroethene	0.05	<0.05	<0.05	<0.04	<0.05R	<0.05	<0.05	<0.05	<0.05
trans-1,2-Dichloroethene	0.10	<0.10	<0.10	<0.08	<0.10R	<0.10	<0.10	<0.10	<0.10
Field Hnu Reading	-----	0	0	0	0	0	0	0	0

Notes:

(1) All results are in ppmV.
(2) Positive detections are enclosed in square brackets.
(3) MDL = Method detection limits achieved by laboratory. All MDLs are based on a sample volume of 25 L, except for the MDLs for sample LO-1C1SG which were adjusted for a sample volume of 29.4L.
(4) NA = Not applicable.
(5) R = Unusable.

TABLE 3-1

LENZ OIL
SOIL GAS INVESTIGATION SAMPLING RESULTS
(Page 5 of 7)

	SAMPLE I.D.	LO-1C5SG	LO-1C6SG	LO-1C6SGFS	LO-1C7SG	LO-1C8SG	LO-1C9SG	LO-1C10SG	LO-1C10SGFD
	QC QUALIFIER			Field Duplicate					Field Duplicate
	PROBE DEPTH	18	18	18	18	18	18	18	18
ANALYTE	MDL								
1,1,1-Trichloroethane	0.04	<0.04	<0.04	<0.04	<0.04	<0.04	<0.04	<0.04	<0.04
1,2-Dichloroethane	0.05	<0.05	<0.05	<0.05	<0.05	<0.05	<0.05	<0.05	<0.05
Toluene	0.06	<0.06	<0.06	<0.06	<0.06	<0.06	<0.06	<0.06	<0.06
Trichloroethene	0.04	<0.04	<0.04	<0.04	<0.04	<0.04	<0.04	<0.04	<0.04
Xylenes (Total)	0.05	<0.05	<0.05	<0.05	<0.05	<0.05	<0.05	<0.05	<0.05
cis-1,2-Dichloroethene	0.05	<0.05	<0.05	<0.05	<0.05	<0.05	<0.05	<0.05	<0.05
trans-1,2-Dichloroethene	0.10	<0.10	<0.10	<0.10	<0.10	<0.10	<0.10	<0.10	<0.10
Field HNu Reading	-----	0	0	0	0	0	0	0	0

Notes:

(1) All results are in ppmV.
(2) Positive detections are enclosed in square brackets.
(3) MDL = Method detection limits achieved by laboratory. All MDLs are based on a sample volume of 25 L, except for the MDLs for sample LO-1C1SG which were adjusted for a sample volume of 29.4L.
(4) NA = Not applicable.
(5) R = Unusable.

TABLE 3-1

LENZ OIL
SOIL GAS INVESTIGATION SAMPLING RESULTS
(Page 6 of 7)

	SAMPLE I.D.	LO-1C10SGFB	LO-1C11SG	LO-1C12SG	LO-1C13SG	LO-1CD14SG	LO-1A1SGTB1	LO-1SGTB2	LO-1SGTB3
	QC QUALIFIER	Field Blank					Trip Blank	Trip Blank	Trip Blank
	PROBE DEPTH	18	18	18	18	18	18	18	18
ANALYTE	MDL								
1,1,1-Trichloroethane	0.04	<0.04	<0.04	<0.04	<0.04	<0.04	<0.04	<0.04	<0.04
1,2-Dichloroethane	0.05	<0.05	<0.05	<0.05	<0.05	<0.05	<0.05	<0.05	<0.05
Toluene	0.06	<0.06	<0.06	<0.06	<0.06	<0.06	<0.06	<0.06	<0.06
Trichloroethene	0.04	<0.04	<0.04	<0.04	<0.04	<0.04	<0.04	<0.04	<0.04
Xylenes (Total)	0.05	<0.05	<0.05	<0.05	<0.05	<0.05	<0.05	<0.05	<0.05
cis-1,2-Dichloroethene	0.05	<0.05	<0.05	<0.05	<0.05	<0.05	<0.05	<0.05	<0.05
trans-1,2-Dichloroethene	0.10	<0.10	<0.10	<0.10	<0.10	<0.10	<0.10	<0.10	<0.10
Field HNu Reading	-----	0	0	0	0	0	NA	NA	NA

Notes:

(1) All results are in ppmV.
(2) Positive detections are enclosed in square brackets.
(3) MDL = Method detection limits achieved by laboratory. All MDLs are based on a sample volume of 25 L, except for the MDLs for sample LO-1C1SG which were adjusted for a sample volume of 29.4L.
(4) NA = Not applicable.
(5) R = Unusable.

TABLE 3-1

LENZ OIL
SOIL GAS INVESTIGATION SAMPLING RESULTS
(Page 7 of 7)

	SAMPLE I.D.	LO-1SGTB4	LO-1SGTB5						
	QC QUALIFIER	Trip Blank	Trip Blank						
	PROBE DEPTH	18	18						
ANALYTE	MDL								
1,1,1-Trichloroethane	0.04	<0.04	<0.04						
1,2-Dichloroethane	0.05	<0.05	<0.05						
Toluene	0.06	<0.06	<0.06						
Trichloroethene	0.04	<0.04	<0.04						
Xylenes (Total)	0.05	<0.05	<0.05						
cis-1,2-Dichloroethene	0.05	<0.05	<0.05						
trans-1,2-Dichloroethene	0.10	<0.10	<0.10						
Field HNu Reading	-----	NA	NA						

Notes:

(1) All results are in ppmV.
(2) Positive detections are enclosed in square brackets.
(3) MDL = Method detection limits achieved by laboratory. All MDLs are based on a sample volume of 25 L, except for the MDLs for sample LO-1C1SG which were adjusted for a sample volume of 29.4L.
(4) NA = Not applicable.
(5) R = Unusable.

2. As illustrated in the generalized geologic section (Figure 3-2), the shallow bedrock aquifer at the site is anisotropic, consisting of a fractured dolomite with low primary porosity and relatively high secondary porosity. The secondary porosity has developed preferentially alone vertical joints and horizontal bedding planes in the dolomite. As a result, soil gas contaminants may be unevenly distributed above the plume. Therefore, sampling points located directly above vertical joints, and the resultant solution cavities, are more likely to exhibit positive detects from the ground water plume than those positioned above unfractured dolomite. As shown on Figure 3-2, migration of volatile contaminants from the aquifer is enhanced by the presence of vertical fractures and solution cavities in the dolomite (i.e., below sample point A). Whereas bedrock without extensive fracturing and solution cavities does not readily allow migration of equivalent quantities of volatile contaminants (i.e., below sample point B).

3. There is no way to determine which specific sample points may have intercepted vertical fractures connected to the ground water, but it is assumed that the density of the sampling grid provided adequate data to effectively evaluate plume migration, given the geologic constraints described above.

PROJECT:	REPORT:	DRAWN	CHECKED	DATE:	APPROVED	CLIENT NAME:
0252	TM2	MO		4/30/91		LENZ OIL

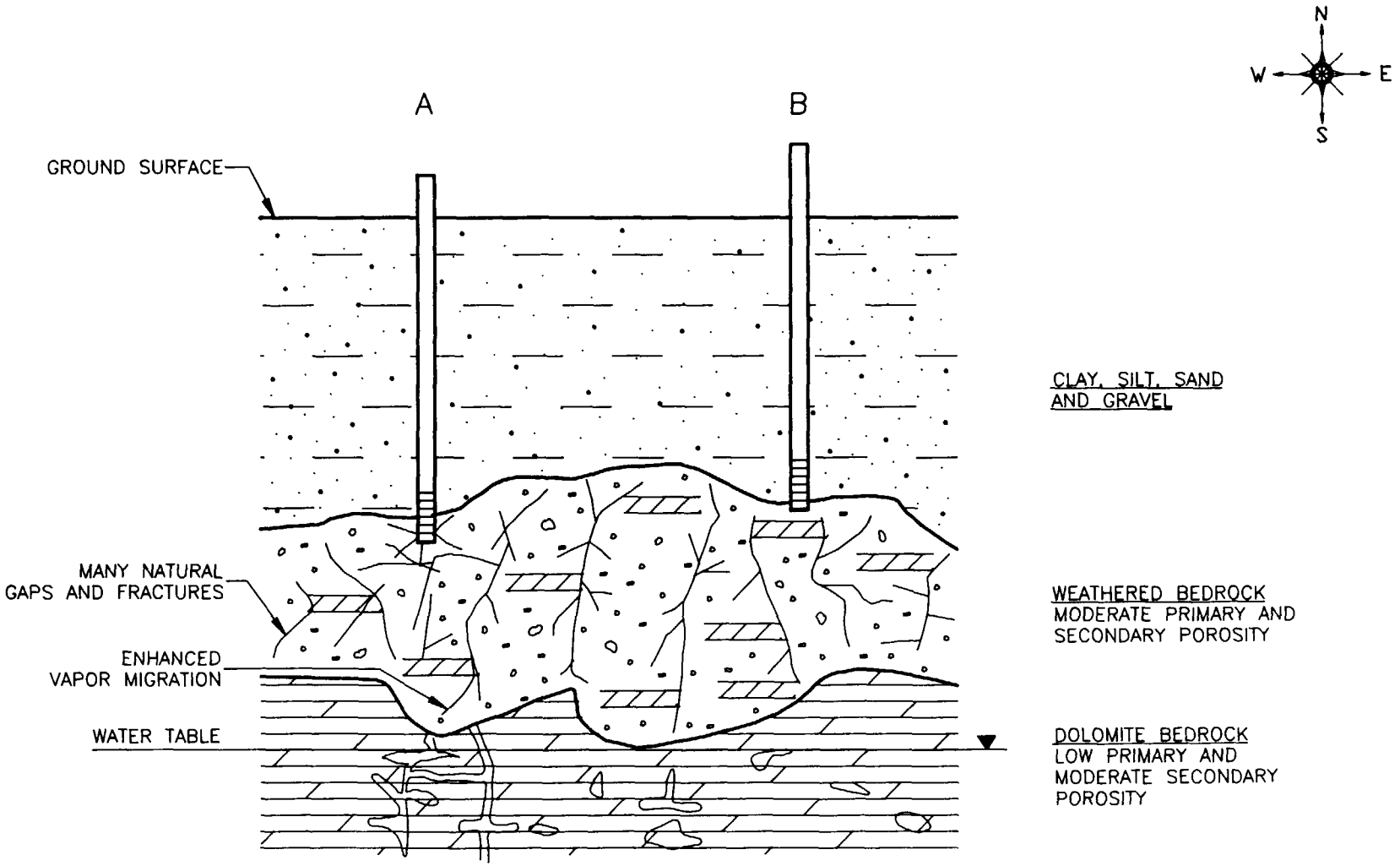

NOT DRAWN TO SCALE

FIGURE 3-2

GENERALIZED GEOLOGIC CONDITIONS CONTROLLING SOIL GAS SAMPLING LENZ OIL SITE

ERM

It is important to note that the two analytical samples with positive detections are located on the same east-west grid line, within 100 feet of each other (see Figure 3-1). If the soil gas collected at these locations can be attributed solely to ground water contamination, then the analytical results suggest that the contaminant plume has migrated at least 200 feet southeast of the Lenz Oil site.

4.0 CONCLUSIONS

Based on the Soil Gas Investigation results, the following general conclusions can be made:

1. Soil gas samples collected south of the Lenz Oil site generally showed no detectable concentrations of the VOCs analyzed. Only two of the 32 investigative samples showed positive detections, both at concentrations less than 0.5 ppmV.

2. If the two positive detections are related solely to ground water contamination, then the plume has migrated at least 200 feet southeast of the site. The three contaminants identified in soil gas samples are:

   - 1,1,1-trichloroethane,
   - 1,2-dichloroethane, and
   - trichloroethene.

   These compounds were found in the primary contaminant sources identified at the Lenz Oil site and in the area soils, as documented in Technical Memorandum No. 1.

3. The distribution of the identified soil gas contamination is consistent with the previously predicted southeastern flow direction of ground water at the site. Soil gas samples were not collected

from the area northeast of the site; therefore, the extent of plume migration was not evaluated in that direction using soil gas.

4. The low concentrations and limited detections of VOCs in the soil gas samples may be indicative of (1) anisotropy in the bedrock aquifer and/or (2) low concentrations of ground water contamination near the distal portions of the ground water plume.

5. The Soil Gas Investigation results can be used, in conjunction with the fracture analysis and previous investigation results, to guide the location of monitoring wells to be installed southeast of the Lenz Oil site.

5.0 MODIFICATIONS TO MONITORING WELL LOCATIONS

As described in Technical Memorandum No. 1, the results of the regional bedrock fracture analyses conducted in the vicinity of the site demonstrate that the monitoring well locations and depths proposed in the Lenz Oil RI/FS Work Plan are sufficient to meet the objectives of the ground water investigation. Therefore, none of the preliminary monitoring well locations or depths have been modified as a result of the regional fracture analysis.

However, because contamination was detected in two soil gas samples, located approximately 100 feet southeast of monitoring well cluster G-102, two of the preliminary monitoring well cluster locations should be modified to better delineate the southeastern extent of ground water contamination. Specifically, monitoring well clusters MW-03 and MW-06 should be located further southeast of the site than the preliminary locations. To avoid interfering with potential agricultural activities in the field southeast of the Lenz Oil site, ERM-North Central proposes relocating monitoring well clusters MW-03 and MW-06 on southeast edge of the Williams field at the locations shown on Figure 5-1. These wells will serve to evaluate the southeastern extent of the ground water contaminant plume.

In Revision O of this Technical Memorandum, it was proposed that monitoring well cluster MW-02 be located approximately 200 feet southeast of its preliminary location. The rationale for the proposed change was presented in the Technical Memorandum and expanded in a letter to USEPA, dated March 25, 1991. USEPA and IEPA rejected the proposal in letters dated February 21, 1991, April 1, 1991, and in a telephone conversation dated April 15, 1991. Although the preliminary location of MW-02 presented in the Work Plan may be too close to the probable source area to meet its stated objectives, the participating respondents have agreed to install MW-02 at the location presented in the Work Plan. According to USEPA and IEPA,

PROJECT:	REPORT:	DRAWN:	CHECKED:	DATE:	APPROVED:	CLIENT NAME:
0252	TM2	GW		4/29/91		LENZ OIL

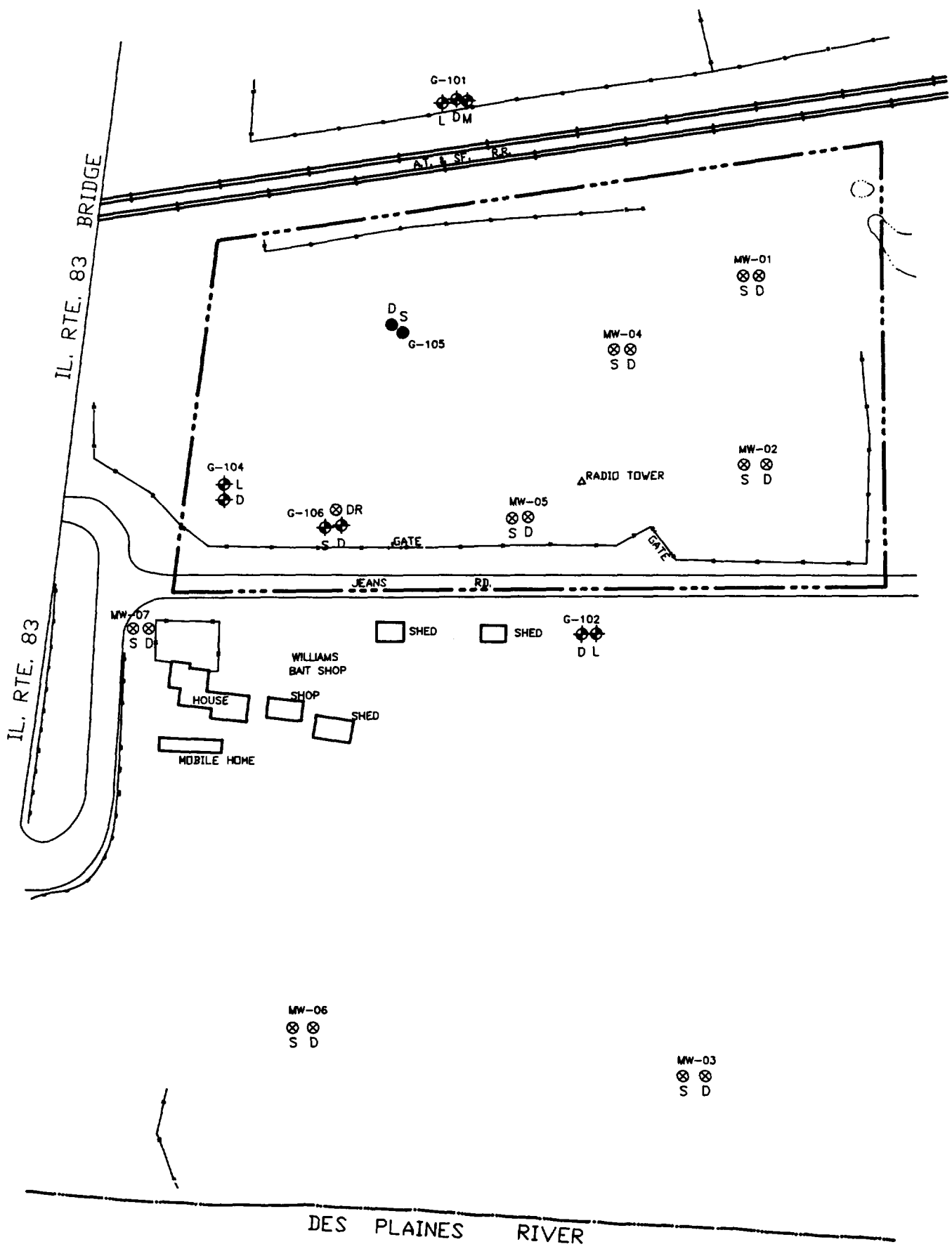

SYMBOL LEGEND:

	PROPERTY LINE
	FENCE LINE
	RAILROAD
	WATER SURFACE
	EXISITING MONITORING WELL
	PROPOSED MONITORING WELL
	EXISITING MONITORING WELL TO BE ABANDONED
G-XXX	IEPA MONITORING WELL CLUSTER

WELL DEPTH NOTATION:

D	DEEP WELL
DR	DEEP WELL REPLACEMENT
G101L	INTERMEDIATE DEPTH WELL
M,L AND S	SHALLOW WELLS

FIGURE 5-1

PROPOSED GROUND WATER SAMPLE LOCATIONS LENZ OIL SITE

ERM

the purpose of installing the well cluster at that location is to verify the presence of any contaminant plume in that area.

The preliminary locations of well clusters MW-01, MW-04, MW-05 and MW-07 meet the stated objectives of these wells and, therefore, modification of these preliminary locations is not necessary. The southwestern extent of the plume will be evaluated by well cluster MW-07 and the northeastern extent of the plume will be evaluated by well cluster MW-01. Well clusters MW-04 and MW-05 will assist in determining the type and magnitude of ground water contamination near the probable contaminant source.

REFERENCES

ERM-North Central, Inc., Remedial Investigation/Feasibility Study Sampling and Analysis Plan, Lenz Oil Service, Inc., Lemont, Illinois, November 12, 1990.

ERM-North Central, Inc., Remedial Investigation/Feasibility Study Work Plan, Lenz Oil Service, Inc., Lemont, Illinois, November 12, 1990.

ERM-North Central, Inc., Remedial Investigation/Feasibility Study Quality Assurance Project Plan, Lenz Oil Service, Inc., Lemont, Illinois, November 12, 1990.

APPENDIX A

SOIL GAS DATA VALIDATION

TABLE OF CONTENTS

		Page
List of Tables		
1.0	**INTRODUCTION**	A-1
2.0	**DATA VALIDATION SUMMARY**	A-1
2.1	Holding Times	A-2
2.2	Blanks	A-2
2.3	Instrument Calibration	A-2
2.3.1	Initial Calibration	A-2
2.3.2	Continuing Calibration	A-3
2.4	Surrogate Spike Recovery	A-3
2.5	Internal Standard Areas	A-3
2.6	Matrix Spike/Matrix Spike Duplicates	A-4
2.7	Field Duplicates	A-5
3.0	**MISCELLANEOUS**	A-5
3.1	Chromatograms	A-5
3.2	Calculation Checks	A-6
3.3	Data Deliverables	A-6
4.0	**CONCLUSIONS**	A-6

LIST OF TABLES

Number	Description	Following Page
A-1	Evaluation of Sample Holding Times	A-2

1.0 INTRODUCTION

This appendix presents the data validation results for laboratory analytical data generated during the Soil Gas Investigation conducted as Phase I, Task 1 of the Remedial Investigation/ Feasibility Study (RI/FS) for the Lenz Oil site. The investigation was performed in January 1991, and involved the collection of soil gas samples from 32 locations, downgradient from the Lenz Oil site. Two matrix spike/matrix spike duplicates (MS/MSD), four field duplicates, five field blanks, and five trip blanks were collected for Quality Assurance/Quality Control (QA/QC) purposes. All samples were shipped to PACE Laboratories, Inc. in Minnesota, and were analyzed for 1,1,1-trichloroethane, 1,2-dichloroethane, toluene, trichloroethene, xylenes (total), and cis- and trans-1,2-dichloroethene.

The data validation was conducted in accordance with the procedures contained in Appendix I of the Lenz Oil RI/FS Quality Assurance Project Plan (QAPP), the Standard Operating Procedure for Soil Gas Data Validation. No QC criteria exceeded the control limits were identified, except for sample LO-1C1-SGFB. Because no internal standard was injected, the analytical results for this sample are qualified unusable (R). No qualification was necessary for the other analytical data, which are considered acceptable.

2.0 DATA VALIDATION SUMMARY

The following subsections itemize each aspect of the data validation procedure according to Appendix I of the QAPP.

2.1 Holding Times

All sample tubes were analyzed within 7 days from the date of collection, except for the MS/MSD duplicate pair associated with sample LO-1B8-SG (PACE Nos. 1232.7MS and 1233.5MSD), which were collected on January 12, 1991 and analyzed on January 23, 1991 (see Table A-1). The MS/MSD analysis was performed to obtain recovery information for the method. Therefore, the holding times do not affect the quality of the data.

No qualification of these data is necessary.

2.2 Blanks

None of the target compounds were detected in either the field or the trip blanks. In addition, the laboratory method blanks, which consisted of an aliquot of carbon disulfide spiked with surrogate (decane) and internal standard (bromofluorobenzene) compounds did not contain any analytes on the target list above the method detection limits.

No qualification of these data is necessary.

2.3 Instrument Calibration

2.3.1 Initial Calibration

The percent Relative Standard Deviation (% RSD) for all analytes, and for each set of analyses conducted was less than the QC control limits of 30 percent.

TABLE A-1

EVALUATION OF SAMPLE HOLDING TIMES

(Page 1 of 4)

			DATE		
	SAMPLE ID.	QA/AC QUALIFIER	COLLECTED	RECEIVED	ANALYZED
1	LO-1-A1SG		1/09/91	1/10/91	1/15/91
2	LO-1-A1SG-FB	Field Blank	1/09/91	1/10/91	1/15/91
3	LO-1-A1SG-TB1	Trip Blank	1/09/91	1/10/91	1/15/91
4	LO-1-A2SG		1/10/91	1/12/91	1/15/91
5	LO-1A3SG		1/10/91	1/12/91	1/15/91
6	LO-1A4SG		1/10/91	1/12/91	1/15/91
7	LO-1A4SG-FS	Field Duplicate	1/10/91	1/12/91	1/15/91
8	LO-1A5SG		1/10/91	1/12/91	1/15/91
9	LO-1A6SG		1/10/91	1/12/91	1/15/91
10	LO-1A7SG		1/10/91	1/12/91	1/15/91
11	LO-1A8SG		1/10/91	1/12/91	1/15/91
12	LO-1A8SG-MS	Matrix Spike	1/10/91	1/12/91	1/15/91
13	LO-1A8SG-MSD	Matrix Spike Duplicate	1/10/91	1/12/91	1/15/91

Notes:

(1) - Samples are presented in the order of collection.

TABLE A-1

EVALUATION OF SAMPLE HOLDING TIMES

(Page 2 of 4)

	SAMPLE ID.	QA/AC QUALIFIER	DATE COLLECTED	DATE RECEIVED	DATE ANALYZED
14	LO-1A9SG		1/10/91	1/12/91	1/15/91
15	LO-1B9SG		1/10/91	1/12/91	1/15/91
16	LO-1B9SG-FB	Field Blank	1/10/91	1/12/91	1/15/91
17	LO-1SG-TB2	Trip Blank	1/10/91	1/12/91	1/15/91
18	LO-1B1SG		1/11/91	1/12/91	1/16/91
19	LO-1B2SG		1/11/91	1/12/91	1/16/91
20	LO-1B3SG		1/11/91	1/12/91	1/16/91
21	LO-1B4SG		1/11/91	1/12/91	1/16/91
22	LO-1B5SG		1/11/91	1/12/91	1/16/91
23	LO-1B6SG		1/11/91	1/12/91	1/16/91
24	LO-1B7SG		1/11/91	1/12/91	1/16/91
25	LO-1C1SG-FB	Field Blank	1/11/91	1/12/91	1/16/91
26	LO-1C1SG		1/11/91	1/12/91	1/16/91

Notes:

(1) - Samples are presented in the order of collection.

TABLE A-1

EVALUATION OF SAMPLE HOLDING TIMES

(Page 3 of 4)

	SAMPLE ID.	QA/AC QUALIFIER	DATE		
			COLLECTED	RECEIVED	ANALYZED
27	LO-1C4SG-FS	Field Duplicate	1/1191	1/12/91	1/16/91
28	LO-1C4SG		1/11/91	1/12/91	1/16/91
29	LO-1C5SG		1/11/91	1/12/91	1/16/91
30	LO-1SG-TB3	Trip Blank	1/11/91	1/12/91	1/16/91
31	LO-1C2SG		1/12/91	1/14/91	1/19/91
32	LO-1C3SG		1/12/91	1/14/91	1/19/91
33	LO-1C6SG		1/12/91	1/14/91	1/19/91
34	LO-1C6SG-FS	Field Duplicate	1/12/91	1/14/91	1/19/91
35	LO-1B8SG-FB	Field Blank	1/12/91	1/14/91	1/19/91
36	LO-1B8SG		1/12/91	1/14/91	1/19/91
37	LO-1B8SG-MS	Matrix Spike	1/12/91	1/14/91	1/23/91
38	LO-1B8SG-MSD	Matrix Spike Duplicate	1/12/91	1/14/91	1/23/91
39	LO-1SG-TB4	Trip Blank	1/12/91	1/14/91	1/19/91

Notes:

(1) - Samples are presented in the order of collection.

TABLE A-1

EVALUATION OF SAMPLE HOLDING TIMES

(Page 4 of 4)

			DATE		
	SAMPLE ID.	QA/AC QUALIFIER	COLLECTED	RECEIVED	ANALYZED
40	LO-1C7SG		1/14/91	1/15/91	1/19/91
41	LO-1C8SG		1/14/91	1/15/91	1/19/91
42	LO-1C9SG		1/14/91	1/15/91	1/19/91
43	LO-1C10SG		1/14/91	1/15/91	1/19/91
44	LO-1C10SG-FB	Field Blank	1/14/91	1/15/91	1/19/91
45	LO-1C10SG-FD	Field Duplicate	1/14/91	1/15/91	1/20/91
46	LO-1C11SG		1/14/91	1/15/91	1/20/91
47	LO-1C12SG		1/14/91	1/15/91	1/20/91
48	LO-1C13SG		1/14/91	1/15/91	1/20/91
49	LO-1CP14SG		1/14/91	1/15/91	1/20/91
50	LO-1SG-TB5	Trip Blank	1/14/91	1/15/91	1/20/91

Notes:

(1) - Samples are presented in the order of collection.

No qualification of these data is necessary.

2.3.2 Continuing Calibration

The percent Difference (% D) for all analytes and for each set of analyses conducted was less than the QC limit of 25 percent.

No qualification of these data is necessary.

2.4 Surrogate Spike Recovery

All surrogate (decane) spike recoveries for each sample analyzed were within the QC limits of 75 to 125 percent.

No qualification of these data is necessary.

2.5 Internal Standard Areas

All internal standard areas were within the QC control limits of 50 to 200 percent as compared to the associated calibration standard, except for sample LO-1C1-SGFB (PACE No. 1070.7 - primary-front), which was not injected with the internal standard. The laboratory-reported results for this sample were taken from a confirmation column by using external calibration. Therefore, the analytical results for this sample are qualified as unusable (R).

Also, sample LO-1C13-SG (PACE No. 1342.2 - primary-front) was injected with double the required concentration of the internal standard (20 μg/L instead of 10 μg/L). This resulted in double the internal standard area. If this area is divided by two, the reported value is within the QC control limits.

No qualification of the data is necessary.

2.6 Matrix Spike/Matrix Spike Duplicates

Two MS/MSD sample pairs corresponding to native samples LO-1A8-SG and LO-1B8-SG were collected as part of the Soil Gas Investigation. As noted previously in Section 2.1 of this appendix, the MS/MSD pair for sample LO-1B8-SG were not analyzed until 11 days after sample collection. The primary tubes had been extracted and analyzed 7 days after collection, but not as an MS/MSD pair. Because of some evaporation of carbon disulfide, the recoveries were high, and were considered to give erroneous information. Therefore, the secondary tubes were analyzed.

Matrix spike recoveries for both MS/MSD pairs (LO-1A8-SGMS/MSD and LO-1B8-SGMS/MSD) were within the QC control limits of 75 to 125 percent. The calculated RPD for each pair of spike recoveries were was within the QC control limits of $\pm$20 percent.

Therefore, no qualification of the native unspiked sample results (LO-1A8-SG and LO-1B8-SG) is necessary.

2.7 Field Duplicates

As noted previously, four field duplicates were collected. The analytical results for these samples and their corresponding native samples are all below detection limits. Therefore, percent differences cannot be calculated, and no qualification of these data is necessary.

3.0 MISCELLANEOUS

All the raw laboratory data were obtained from PACE Laboratory, Inc. These included chromatograms, equipment calibration, and other data. The following subsections present examination results of chromatograms, spot checks of calculations, and other data deliverables.

3.1 Chromatograms

The chromatograms for all sample injections were checked, and the retention times for all compounds were consistent with the laboratory standards. Compound concentrations were determined by using the correct QC standard values and areas.

False readings for trans-1,2-dichloroethene were discovered on chromatogram columns DB-5 and DB-1701. This problem was caused by coelution with carbon disulfide. Another column identified as DB-Wax was used to separate the two compounds; and all samples, blanks, and standards were also analyzed on this column for the sole reason of qualifying the trans-1,2-dichloroethene concentration.

3.2 Calculation Checks

Summaries of the laboratory analytical results were spot checked. These spot checks of contaminant concentrations were performed by using the reported chromatogram areas of selected samples and QC standards.

No errors in the calculations or in data transcriptions were discovered.

3.3 Data Deliverables

PACE Laboratories has submitted all data deliverables according to Appendices B and I of the Lenz Oil QAPP, PACE Standard Operating Procedures, and Standard Operating Procedure for Soil Gas Data Validation, respectively.

4.0 CONCLUSIONS

The results and discussion presented in this appendix show that the laboratory analytical results for the Lenz Oil Soil Gas Investigation samples do not exhibit any anomalies. Therefore, the data are considered acceptable.

APPENDIX B

SOIL GAS - LABORATORY ANALYTICAL RESULTS AND SUPPORTING QC DOCUMENTATION

pace INCORPORATED
THE ASSURANCE OF QUALITY

REPORT OF LABORATORY ANALYSIS

ERM - North Central, Inc.
102 Wilmot Road
Suite 300
Deerfield, IL 60015

January 18, 1991
PACE Project
Number: 910110505

Attn: Mr. Dave Edwards

Lenz Oil LO1991A

PACE Sample Number:			10 0007382	10 0007390	10 0007404
Date Collected:			01/09/91	01/09/91	01/09/91
Date Received:			01/10/91	01/10/91	01/10/91
Parameter	Units	MDL	LO-1A1-SG	LO-1A1-SGFB	LO-1A1-SGTB1
ORGANIC ANALYSIS					
INDIVIDUAL PARAMETERS					
1,1,1-Trichloroethane	ppm	0.04	ND	ND	ND
1,2-Dichloroethane	ppm	0.05	ND	ND	ND
Toluene	ppm	0.06	ND	ND	ND
Trichloroethylene	ppm	0.04	ND	ND	ND
Xylene	ppm	0.05	ND	ND	ND
cis-1,2-Dichloroethylene	ppm	0.05	ND	ND	ND
trans-1,2-Dichloroethylene	ppm	0.10	ND	ND	ND

MDL Method Detection Limit
ND Not detected at or above the MDL.

The data contained in this report were obtained using EPA or other approved methodologies. All analyses were performed by me or under my supervision.

James J. Matteson
FOR
Liesa A. Shanahan
Organic Chemistry Manager

1710 Douglas Drive North
Minneapolis, MN 55422
TEL: 612-544-5543
FAX: 612-525-3377

PACE, Inc.
Soil Gas Analysis QC Sheet

Client Name: ERM - North Central
Project Name: Lenz Oil
PACE Project Number: 910110.505

Instrument ID: B
Primary Column ID: 30 meter, 0.32 mm I.D
Supelco DB-5

PACE Sample #	Tube (Prime or Second)	Tube Section	Analysis Date	Surrogate Recovery Decane (%)
738.2	Prime	Front	1/15/91	114
		Back		104
739.0		Front		114
		Back		104
740.4		Front		108
		Back		99
Q.C. spike	—	—	1/15/91	97

PACE Sample #	Tube (Prime or Second)	Tube Section	Analysis Date	Surrogate Recovery Decane (%)

Surrogate QC Limits
are 75%-125%.

Comments

PACE, Inc.
Soil Gas Analysis QC Sheet

Client Name: ERM - North Central
Project Name: Lenz Oil
PACE Project Number: 910110.505

Instrument ID: 8
Primary Column ID: 30 meter, 0.32 mm I.D
Supelco DB-5

PACE Sample #	Tube (Prime or Second)	Tube Section	Analysis Date	Matrix Spike Recovery (%)					
				1	2	3	4	5	6
Q.C. spike	—	—	1/15/91	80	88	94	93	94	94

Matrix Spike QC Limits are 75%-125%.

1 = cis-1,2-Dichloroethene
2 = 1,1,1-Trichloroethane
3 = Trichloroethene
4 = Toluene
5 = m,p-Xylene
6 = ~~p-Xylene~~ o-xylene MEB 1/17/91

Comments

PACE, Inc.
Soil Gas Analysis QC Sheet
Method Blank Summary

Client Name: ERM - North Central
Project Name: Lenz Oil
PACE Project Number: 910110.505

Instrument ID: B
Primary Column ID: 30 meter, 0.32 mm I.D
Supelco DB-5

Date Analyzed	Target Compounds
1/15/91	none found

Comments:

PACE, Inc.
Soil Gas Analysis Calibration Summary

Client Name: ERM - North Central
Project Name: Jerg oil
PACE Project Number: 910110.505

Instrument ID: B
Primary Column ID:
Analysis Date: 30 meter, 0.32 mm I.D Supelco DB-5

Initial Calibration Summary

Analytes	Standards (ug/ml) 5	10	50	100	500	AVE.	%RSD
cis-1, 2-Dichloroethene	0.401	0.470	0.575	0.578	0.577	0.520	16
trans-1, 2-dichloroethene	6.39×10^{-4}	6.16×10^{-4}	6.33×10^{-4}	5.96×10^{-4}	6.18×10^{-4}	6.20×10^{-4}	3
1, 2-Dichloroethane	0.371	0.388	0.518	0.561	0.589	0.465	29
Trichloroethene	0.347	0.395	0.453	0.463	0.461	0.424	12
1, 1, 1-Trichloroethane	0.446	0.446	0.464	0.458	0.446	0.453	2
Toluene	2.04	2.14	2.37	2.29	2.26	2.22	6
m, p-Xylene (Total) MEG 1/18/91	~~1.43~~ 2.22	2.24	2.40	2.33	2.31	2.30	3
o-Xylene	2.22	2.21	2.39	2.32	2.31	2.29	3
Decane (SS)	2.17	2.16	2.29	2.20	2.20	2.20	2

Continuing Calibration Summary

Analytes	Analysis Date	Standard ug	% Diff.	Analysis Date	Standard	% Diff.
cis-1, 2-Dichloroethene	1/15/91	45	10			
trans-1, 2-dichloroethene	↓	41	17			
1, 2-Dichloroethane	1/17/91	47	5			
Trichloroethene	1/15/91	45	11			
1, 1, 1-Trichloroethane	↓	46	8			
Toluene	↓	48	7			
m, p-Xylene (Total)	↓	48	5			
o-Xylene	↓	50	5			
Decane (SS)	—	—	—			

Comments: 1) TRANS-1,2 DICHLOROETHANE WAS RUN ON A SINGLE COLUMN - SUPELCO DB-WAX, 30 meters, 0.25 micron film thickness

2) TRANS-1,2 DICHLOROETHANE WAS CALIBRATED WITH STANDARDS OF 10 ug/ml, 1.5, 50, 100, & 500

pace INCORPORATED
THE ASSURANCE OF QUALITY

REPORT OF LABORATORY ANALYSIS

ERM - North Central, Inc.
102 Wilmot Road
Suite 300
Deerfield, IL 60015

January 18, 1991
PACE Project
Number: 910112502

Attn: Mr. Dave Edwards

0252JI Lenz Oil

PACE Sample Number:			10 0010502	10 0010510	10 0010529
Date Collected:			01/10/91	01/10/91	01/10/91
Date Received:			01/12/91	01/12/91	01/12/91
Parameter	Units	MDL	LO-1A2-SG	LO-1A3-SG	LO-1A4-SG
ORGANIC ANALYSIS					
INDIVIDUAL PARAMETERS					
1,1,1-Trichloroethane	ppm	0.04	ND	ND	ND
1,2-Dichloroethane	ppm	0.05	ND	ND	ND
Toluene	ppm	0.06	ND	ND	ND
Trichloroethylene	ppm	0.04	ND	ND	ND
Xylene	ppm	0.05	ND	ND	ND
cis-1,2-Dichloroethylene	ppm	0.05	ND	ND	ND
trans-1,2-Dichloroethylene	ppm	0.10	ND	ND	ND

MDL Method Detection Limit
ND Not detected at or above the MDL.

1710 Douglas Drive North
Minneapolis, MN 55422
TEL: 612-544-5543
FAX: 612-525-3377

Offices Serving: Minneapolis, Minnesota; Tampa, Florida; Iowa City, Iowa; San Francisco, California; Kansas City, Missouri; Los Angeles, California; Charlotte, North Carolina; Asheville, North Carolina; New York, New York; Pittsburgh, Pennsylvania

An Equal Opportunity Employer

pace INCORPORATED
THE ASSURANCE OF QUALITY

REPORT OF LABORATORY ANALYSIS

Mr. Dave Edwards
Page 2

January 18, 1991
PACE Project
Number: 910112502

0252JI Lenz Oil

Parameter	Units	MDL	10 0010537	10 0010545	10 0010553
PACE Sample Number:			10 0010537	10 0010545	10 0010553
Date Collected:			01/10/91	01/10/91	01/10/91
Date Received:			01/12/91	01/12/91	01/12/91
			LO-1A4-SGFS	LO-1A5-SG	LO-1A7-SG
ORGANIC ANALYSIS					
INDIVIDUAL PARAMETERS					
1,1,1-Trichloroethane	ppm	0.04	0.12	ND	ND
1,2-Dichloroethane	ppm	0.05	ND	ND	ND
Toluene	ppm	0.06	ND	ND	ND
Trichloroethylene	ppm	0.04	ND	ND	ND
Xylene	ppm	0.05	ND	ND	ND
cis-1,2-Dichloroethylene	ppm	0.05	ND	ND	ND
trans-1,2-Dichloroethylene	ppm	0.10	ND	ND	ND

MDL Method Detection Limit
ND Not detected at or above the MDL.

1710 Douglas Drive North
Minneapolis, MN 55422
TEL: 612-544-5543
FAX: 612-525-3377

Offices Serving: Minneapolis, Minnesota; Tampa, Florida; Iowa City, Iowa; San Francisco, California; Kansas City, Missouri; Los Angeles, California; Charlotte, North Carolina; Asheville, North Carolina; New York, New York; Pittsburgh, Pennsylvania

An Equal Opportunity Employer

pace INCORPORATED
THE ASSURANCE OF QUALITY

REPORT OF LABORATORY ANALYSIS

Mr. Dave Edwards
Page 3

January 18, 1991
PACE Project
Number: 910112502

0252JI Lenz Oil

PACE Sample Number:			10 0010561	10 0010570	10 0010588
Date Collected:			01/10/91	01/10/91	01/10/91
Date Received:			01/12/91	01/12/91	01/12/91
Parameter	Units	MDL	LO-1A6-SG	LO-1A8-SG	LO-1A8-SGMS (MS/MSD)
ORGANIC ANALYSIS					
INDIVIDUAL PARAMETERS					
1,1,1-Trichloroethane	ppm	0.04	ND	ND	ND
1,2-Dichloroethane	ppm	0.05	ND	ND	ND
Toluene	ppm	0.06	ND	ND	ND
Trichloroethylene	ppm	0.04	ND	ND	ND
Xylene	ppm	0.05	ND	ND	ND
cis-1,2-Dichloroethylene	ppm	0.05	ND	ND	ND
trans-1,2-Dichloroethylene	ppm	0.10	ND	ND	ND

MDL Method Detection Limit
ND Not detected at or above the MDL.

1710 Douglas Drive North
Minneapolis, MN 55422
TEL: 612-544-5543
FAX: 612-525-3377

Offices Serving: Minneapolis, Minnesota; Tampa, Florida; Iowa City, Iowa; San Francisco, California; Kansas City, Missouri; Los Angeles, California; Charlotte, North Carolina; Asheville, North Carolina; New York, New York; Pittsburgh, Pennsylvania

An Equal Opportunity Employer

pace INCORPORATED
THE ASSURANCE OF QUALITY

REPORT OF LABORATORY ANALYSIS

Mr. Dave Edwards
Page 4

January 18, 1991
PACE Project
Number: 910112502

0252JI Lenz Oil

PACE Sample Number:			10 0010596	10 0010600	10 0010618
Date Collected:			01/10/91	01/10/91	01/10/91
Date Received:			01/12/91	01/12/91	01/12/91
Parameter	Units	MDL	LO-1A9-SG	LO-1B9-SG	LO-1B9-SGFB
ORGANIC ANALYSIS					
INDIVIDUAL PARAMETERS					
1,1,1-Trichloroethane	ppm	0.04	ND	ND	ND
1,2-Dichloroethane	ppm	0.05	ND	0.23	ND
Toluene	ppm	0.06	ND	ND	ND
Trichloroethylene	ppm	0.04	ND	0.10	ND
Xylene	ppm	0.05	ND	ND	ND
cis-1,2-Dichloroethylene	ppm	0.05	ND	ND	ND
trans-1,2-Dichloroethylene	ppm	0.10	ND	ND	ND

MDL Method Detection Limit
ND Not detected at or above the MDL.

1710 Douglas Drive North
Minneapolis, MN 55422
TEL: 612-544-5543
FAX: 612-525-3377

Offices Serving: Minneapolis, Minnesota; Tampa, Florida; Iowa City, Iowa; San Francisco, California; Kansas City, Missouri; Los Angeles, California; Charlotte, North Carolina; Asheville, North Carolina; New York, New York; Pittsburgh, Pennsylvania

An Equal Opportunity Employer

pace INCORPORATED
THE ASSURANCE OF QUALITY

REPORT OF LABORATORY ANALYSIS

Mr. Dave Edwards
Page 5

January 18, 1991
PACE Project
Number: 910112502

0252JI Lenz Oil

PACE Sample Number:			10 0010626
Date Collected:			01/10/91
Date Received:			01/12/91
			LO-1-
Parameter	Units	MDL	SGTB2
ORGANIC ANALYSIS			
INDIVIDUAL PARAMETERS			
1,1,1-Trichloroethane	ppm	0.04	ND
1,2-Dichloroethane	ppm	0.05	ND
Toluene	ppm	0.06	ND
Trichloroethylene	ppm	0.04	ND
Xylene	ppm	0.05	ND
cis-1,2-Dichloroethylene	ppm	0.05	ND
trans-1,2-Dichloroethylene	ppm	0.10	ND

MDL Method Detection Limit
ND Not detected at or above the MDL.

The data contained in this report were obtained using EPA or other approved methodologies. All analyses were performed by me or under my supervision.

James J. Matteson
FOR
Liesa A. Shanahan
Organic Chemistry Manager

1710 Douglas Drive North
Minneapolis, MN 55422
TEL: 612-544-5543
FAX: 612-525-3377

Offices Serving: Minneapolis, Minnesota; Tampa, Florida; Iowa City, Iowa; San Francisco, California; Kansas City, Missouri; Los Angeles, California; Charlotte, North Carolina; Asheville, North Carolina; New York, New York; Pittsburgh, Pennsylvania

An Equal Opportunity Employer

PACE, Inc.
Soil Gas Analysis QC Sheet

Client Name: ERM - North Central
Project Name: Lenz Oil
PACE Project Number: 910112.502

Instrument ID: B
Primary Column ID: 30 meter, 0.32 mm I.D. Supelco DB-5

PACE Sample #	Tube (Prime or Second)	Tube Section	Analysis Date	Surrogate Recovery Decane (%)
1050.2	Prime	Front	1/15/91	106
		Back		105
1051.0		Front		114
		Back		106
1052.4		Front		111
		Back		103
1053.7		Front		107
		Back		102
1054.5		Front		114
		Back		102
MS-1055.8		Front		109
1055.3		Front		112
		Back		104
1056.1		Front		112
		Back		106
57.0		Front		110
		Back		103
1058.8		Front		110
		Back		103
1059.6		Front		110
		Back		102

PACE Sample #	Tube (Prime or Second)	Tube Section	Analysis Date	Surrogate Recovery Decane (%)
MSD-1058.8	Prime	Front	1/15/91	106
1060.0		Front		111
		Back		104
1061.8		Front		113
		Back		106
1062.6		Front		112
		Back		108
~~1063~~				
QC. spike	—	—		99

Surrogate QC Limits
are 75%-125%.

Comments sample # 1060.0 has interferences present in the chromatogram

PACE, Inc.
Soil Gas Analysis QC Sheet

Client Name: ERM - North Central
Project Name: Lenz Oil
PACE Project Number: 910112.502

Instrument ID: B
Primary Column ID: 30 meter, 0.32 mm I.D. Supelco DB-5

PACE Sample #	Tube (Prime or Second)	Tube Section	Analysis Date	Matrix Spike Recovery (%)					
				1	2	3	4	5	6
MS 1058.8	Prime	Front	1/15/91	102	105	103	100	100	97
MSD 1058.8	Prime	Front	↓	100	99	100	100	101	99
R.C. spike	—	—	↓	77	87	92	93	95	95

Matrix Spike QC Limits are 75%-125%.

1 = cis-1,2-Dichloroethene
2 = 1,1,1-Trichloroethane
3 = Trichloroethene
4 = Toluene
5 = m,p-Xylene
6 = ~~p-Xylene~~ o-xylene MRB 1/17/91

Comments

PACE, Inc.
Soil Gas Analysis QC Sheet
Method Blank Summary

Client Name: ERM - North Central
Project Name: Lenz Oil
PACE Project Number: 910112.502

Instrument ID: B
Primary Column ID: 30 meter, 0.32 mm I.D. Supelco DB-5

Date Analyzed	Target Compounds
1/15/91	none found

Comments:

PACE, Inc.
Soil Gas Analysis Calibration Summary

Client Name: ERM - North Central
Project Name: Jerry oil
PACE Project Number: 910112.502

Instrument ID: B
Primary Column ID:
Analysis Date: 30 meter, 0.32 mm I.D. Supelco DB-5

Initial Calibration Summary

Analytes	Standards (ug/ml) 5	10	50	100	500	AVE.	%RSD
cis-1, 2-Dichloroethene	0.401	0.470	0.575	0.578	0.577	0.520	16
trans-1, 2-dichloroethene	6.39×10^{-4}	6.16×10^{-4}	6.73×10^{-4}	5.96×10^{-4}	6.18×10^{-4}	6.20×10^{-4}	3
1, 2-Dichloroethane	0.271	0.338	0.518	0.561	0.389	0.465	29
Trichloroethene	0.347	0.395	0.453	0.463	0.461	0.424	12
1, 1, 1-Trichloroethane	0.446	0.446	0.469	0.458	0.446	0.453	2
Toluene	2.04	2.14	2.37	2.29	2.26	2.22	6
m, p-Xylene (Total) MEG 1/18/91	~~1.43~~ 2.22	2.24	2.40	2.33	2.31	2.30	3
o-Xylene	2.22	2.21	2.39	2.32	2.31	2.29	3
Decane (SS)	2.17	2.16	2.29	2.20	2.20	2.20	2

Continuing Calibration Summary

Analytes	Analysis Date	Standard ug	% Diff.	Analysis Date	Standard	% Diff.
cis-1, 2-Dichloroethene	1/15/91	45	10			
trans-1, 2-dichloroethene	↓	41	17			
1, 2-Dichloroethane	1/17/91	47	5			
Trichloroethene	1/15/91	45	11			
1, 1, 1-Trichloroethane		46	8			
Toluene		48	7			
m, p-Xylene (Total)		48	5			
o-Xylene		50	5			
Decane (SS)	—	—	—			

Comments: 1) TRANS-1,2 DICHLOROETHANE WAS RUN ON A SINGLE COLUMN - SYPELCO DB-WAX, 30 meters, 0.25 micron film thickness

2) TRANS-1,2 DICHLOROETHANE WAS CALIBRATED WITH STANDARDS OF 10 ug/ml, 15, 50, 100, & 500

pace INCORPORATED
THE ASSURANCE OF QUALITY

REPORT OF LABORATORY ANALYSIS

ERM - North Central, Inc.
102 Wilmot Road
Suite 300
Deerfield, IL 60015

January 18, 1991
PACE Project
Number: 910112503

Attn: Mr. Dave Edwards

Lenz Oil 0252JI

PACE Sample Number:			10 0010634	10 0010642	10 0010650
Date Collected:			01/11/91	01/11/91	01/11/91
Date Received:			01/12/91	01/12/91	01/12/91
Parameter	Units	MDL	LO-1B1-SG	LO-1B2-SG	LO-1B3-SG
ORGANIC ANALYSIS					
INDIVIDUAL PARAMETERS					
1,1,1-Trichloroethane	ppm	0.04	ND	ND	ND
1,2-Dichloroethane	ppm	0.05	ND	ND	ND
Toluene	ppm	0.06	ND	ND	ND
Trichloroethylene	ppm	0.04	ND	ND	ND
Xylene	ppm	0.05	ND	ND	ND
cis-1,2-Dichloroethylene	ppm	0.05	ND	ND	ND
trans-1,2-Dichloroethylene	ppm	0.10	ND	ND	ND

MDL Method Detection Limit
ND Not detected at or above the MDL.

pace INCORPORATED
THE ASSURANCE OF QUALITY

REPORT OF LABORATORY ANALYSIS

Mr. Dave Edwards
Page 2

January 18, 1991
PACE Project
Number: 910112503

Lenz Oil 0252JI

PACE Sample Number:			10 0010669	10 0010677	10 0010685
Date Collected:			01/11/91	01/11/91	01/11/91
Date Received:			01/12/91	01/12/91	01/12/91
Parameter	Units	MDL	LO-1B4-SG	LO-1B5-SG	LO-1B6-SG
ORGANIC ANALYSIS					
INDIVIDUAL PARAMETERS					
1,1,1-Trichloroethane	ppm	0.04	ND	ND	ND
1,2-Dichloroethane	ppm	0.05	ND	ND	ND
Toluene	ppm	0.06	ND	ND	ND
Trichloroethylene	ppm	0.04	ND	ND	ND
Xylene	ppm	0.05	ND	ND	ND
cis-1,2-Dichloroethylene	ppm	0.05	ND	ND	ND
trans-1,2-Dichloroethylene	ppm	0.10	ND	ND	ND

MDL Method Detection Limit
ND Not detected at or above the MDL.

1710 Douglas Drive North
Minneapolis, MN 55422
TEL: 612-544-5543
FAX: 612-525-3377

Offices Serving: Minneapolis, Minnesota; Tampa, Florida; Iowa City, Iowa; San Francisco, California; Kansas City, Missouri; Los Angeles, California; Charlotte, North Carolina; Asheville, North Carolina; New York, New York; Pittsburgh, Pennsylvania

An Equal Opportunity Employer

pace INCORPORATED
THE ASSURANCE OF QUALITY

REPORT OF LABORATORY ANALYSIS

Mr. Dave Edwards
Page 3

January 18, 1991
PACE Project
Number: 910112503

Lenz Oil 0252JI

PACE Sample Number:			10 0010693	10 0010707	10 0010715
Date Collected:			01/11/91	01/11/91	01/11/91
Date Received:			01/12/91	01/12/91	01/12/91
			LO-1B7-	LO-1C1-	LO-1C1-
Parameter	Units	MDL	SG	SGFB	SG
ORGANIC ANALYSIS					
INDIVIDUAL PARAMETERS					
1,1,1-Trichloroethane	ppm	0.03	-	-	ND
1,1,1-Trichloroethane	ppm	0.04	0.05	ND	-
1,2-Dichloroethane	ppm	0.04	-	-	ND
1,2-Dichloroethane	ppm	0.05	ND	ND	-
Toluene	ppm	0.05	-	-	ND
Toluene	ppm	0.06	ND	ND	-
Trichloroethylene	ppm	0.03	-	-	ND
Trichloroethylene	ppm	0.04	ND	ND	-
Xylene	ppm	0.04	-	-	ND
Xylene	ppm	0.05	ND	ND	-
cis-1,2-Dichloroethylene	ppm	0.04	-	-	ND
cis-1,2-Dichloroethylene	ppm	0.05	ND	ND	-
trans-1,2-Dichloroethylene	ppm	0.08	-	-	ND
trans-1,2-Dichloroethylene	ppm	0.10	ND	ND	-

MDL Method Detection Limit
ND Not detected at or above the MDL.

1710 Douglas Drive North
Minneapolis, MN 55422
TEL: 612-544-5543
FAX: 612-525-3377

Offices Serving: Minneapolis, Minnesota; Tampa, Florida; Iowa City, Iowa; San Francisco, California; Kansas City, Missouri; Los Angeles, California; Charlotte, North Carolina; Asheville, North Carolina; New York, New York; Pittsburgh, Pennsylvania

An Equal Opportunity Employer

pace INCORPORATED
THE ASSURANCE OF QUALITY

REPORT OF LABORATORY ANALYSIS

Mr. Dave Edwards
Page 4

January 18, 1991
PACE Project
Number: 910112503

Lenz Oil 0252JI

PACE Sample Number:			10 0010723	10 0010731	10 0010740
Date Collected:			01/11/91	01/11/91	01/11/91
Date Received:			01/12/91	01/12/91	01/12/91
			LO-1C4-	LO-1C4-	LO-1C5-
Parameter	Units	MDL	SG	SGFS	SG
ORGANIC ANALYSIS					
INDIVIDUAL PARAMETERS					
1,1,1-Trichloroethane	ppm	0.04	ND	ND	ND
1,2-Dichloroethane	ppm	0.05	ND	ND	ND
Toluene	ppm	0.06	ND	ND	ND
Trichloroethylene	ppm	0.04	ND	ND	ND
Xylene	ppm	0.05	ND	ND	ND
cis-1,2-Dichloroethylene	ppm	0.05	ND	ND	ND
trans-1,2-Dichloroethylene	ppm	0.10	ND	ND	ND

MDL Method Detection Limit
ND Not detected at or above the MDL.

1710 Douglas Drive North
Minneapolis, MN 55422
TEL: 612-544-5543
FAX: 612-525-3377

Offices Serving: Minneapolis, Minnesota; Tampa, Florida; Iowa City, Iowa; San Francisco, California; Kansas City, Missouri; Los Angeles, California; Charlotte, North Carolina; Asheville, North Carolina; New York, New York; Pittsburgh, Pennsylvania

An Equal Opportunity Employer

pace INCORPORATED
THE ASSURANCE OF QUALITY

REPORT OF LABORATORY ANALYSIS

Mr. Dave Edwards
Page 5

January 18, 1991
PACE Project
Number: 910112503

Lenz Oil 0252JI

PACE Sample Number:			10 0010758
Date Collected:			01/11/91
Date Received:			01/12/91
Parameter	Units	MDL	LO-1-SGTB3
ORGANIC ANALYSIS			
INDIVIDUAL PARAMETERS			
1,1,1-Trichloroethane	ppm	0.04	ND
1,2-Dichloroethane	ppm	0.05	ND
Toluene	ppm	0.06	ND
Trichloroethylene	ppm	0.04	ND
Xylene	ppm	0.05	ND
cis-1,2-Dichloroethylene	ppm	0.05	ND
trans-1,2-Dichloroethylene	ppm	0.10	ND

MDL Method Detection Limit
ND Not detected at or above the MDL.

The data contained in this report were obtained using EPA or other approved methodologies. All analyses were performed by me or under my supervision.

James J. Matteson
FOR
Liesa A. Shanahan
Organic Chemistry Manager

1710 Douglas Drive North
Minneapolis, MN 55422
TEL: 612-544-5543
FAX: 612-525-3377

PACE, Inc.
Soil Gas Analysis QC Sheet

Client Name: ERM North Central
Project Name: Lenz Oil
PACE Project Number: 910112.503

Instrument ID: B
Primary Column ID: 30 meter, 0.32 mm I.D. Supelco DB-5

PACE Sample #	Tube (Prime or Second)	Tube Section	Analysis Date	Surrogate Recovery Decane (%)
CS2 blk	—	—	1/16/91	98
1063.4	Prime	Front		110
		Back		104
1064.2		Front		113
		Back		105
1065.0		Front		111
		Back		103
1066.9		Front		112
		Back		105
1067.7		Front		109
		Back		107
Q.C. spike	—	—		96
1068.5	Prime	Front		98
		Back		101
1069.3		Front		110
		Back		103
1070.7		Front		110
		Back		105
1071.5		Front		111
		Back		101

PACE Sample #	Tube (Prime or Second)	Tube Section	Analysis Date	Surrogate Recovery Decane (%)
1072.3	Prime	Front	1/16/91	112
		Back		105
Q.C. spike	—	—		97
1073.1	Prime	Front		112
		Back		102
1073.1	Secondary	Front		109
		Back		100
1074.0	Prime	Front		113
		Back		103
1075.2		Front		110
		Back		102
Q.C. spike	—	—		96

Surrogate QC Limits
are 75%-125%.

Comments sample 1070.7 Primary - Back → Surrogate recovery taken off of confirmation column (DB-1701)

PACE, Inc.
Soil Gas Analysis QC Sheet

Client Name: EKM - North Central
Project Name: Lenz Oil
PACE Project Number: 910112.503

Instrument ID: B
Primary Column ID: 30 meter, 0.32 I.D. Supelco DB-5

PACE Sample #	Tube (Prime or Second)	Tube Section	Analysis Date	Matrix Spike Recovery (%)					
				1	2	3	4	5	6
Q.C. spike	—	—	1/16/91	98	96	97	94	95	95
Q.C. spike	—	—		98	98	100	95	95	95
Q.C. spike				99	98	98	95	95	95

Matrix Spike QC Limits are 75%-125%.

1 = cis-1,2-Dichloroethene
2 = 1,1,1-Trichloroethane
3 = Trichloroethene
4 = Toluene
5 = m,p-Xylene
6 = p-Xylene

Comments

PACE, Inc.
Soil Gas Analysis QC Sheet
Method Blank Summary

Client Name: ERM - North Central
Project Name: Lenz Oil
PACE Project Number: 910112-503

Instrument ID: B
Primary Column ID: 30 meter, 0.32 I.D
Supelco DB-5

Date Analyzed	Target Compounds
1/16/91	none found

Comments:

PACE, Inc.
Soil Gas Analysis Calibration Summary

Client Name: ERM - North Central
Project Name: Lenz Oil
PACE Project Number: 910112.503

Instrument ID: B
Primary Column ID: 30 meter, 0.32 ID DB-5
Analysis Date: 1-15-91

Initial Calibration Summary

Analytes	Standards (ug/ml) 5	10	50	100	500	AVE.	%RSD
cis-1, 2-Dichloroethene	0.401	0.470	0.575	0.578	0.577	0.520	16
trans-1, 2-dichloroethene	6.39×10^{-4}	6.16×10^{-4}	6.33×10^{-4}	5.46×10^{-4}	6.18×10^{-4}	6.20×10^{-4}	3
1, 2-Dichloroethane	0.271	0.388	0.518	0.561	0.589	0.465	29
Trichloroethene	0.347	0.395	0.453	0.463	0.461	0.424	12
1, 1, 1-Trichloroethane	0.446	0.446	0.464	0.458	0.446	0.453	2
Toluene	2.04	2.14	2.37	2.29	2.26	2.22	6
m, p-Xylene (Total) MRB 1/18/91	~~1.43~~ 2.22	2.24	2.40	2.33	2.31	2.30	3
o-Xylene	2.22	2.21	2.39	2.32	2.31	2.29	3
Decane (SS)	2.17	2.16	2.29	2.20	2.20	2.20	2

Continuing Calibration Summary

Analytes	Analysis Date	Standard ug	% Diff.	Analysis Date	Standard	% Diff.
cis-1, 2-Dichloroethene	1/16/91	49	1			
trans-1, 2-dichloroethene	1/17/91	110	~~14~~ 11			
1, 2-Dichloroethane	1/18/91	46	6			
Trichloroethene	1/16/91	98	3			
1, 1, 1-Trichloroethane	↓	98	1			
Toluene		103	0			
m, p-Xylene (Total)		206	0			
o-Xylene		105	0			
Decane (SS)						

MRB 1/18/91

Comments: 1) TRANS-1,2 DICHLOROETHANE WAS RUN ON A SINGLE COLUMN - SUPELCO DB-WAX, 30 meters, 0.25 micron film thickness

2) TRANS-1,2 DICHLOROETHANE WAS CALIBRATED WITH STANDARDS of 10 ug/ml, 25, 50, 100, & 500

pace INCORPORATED
THE ASSURANCE OF QUALITY

REPORT OF LABORATORY ANALYSIS

ERM - North Central, Inc.
102 Wilmot Road
Suite 300
Deerfield, IL 60015

January 21, 1991
PACE Project
Number: 910115501

Attn: Mr. Dave Edwards

0252 JI/Lenz Oil

PACE Sample Number:			10 0012262	10 0012270	10 0012289
Date Collected:			01/12/91	01/12/91	01/12/91
Date Received:			01/14/91	01/14/91	01/14/91
Parameter	Units	MDL	LO-IC2-SG	LO-IC3-SG	LO-IC6-SG
ORGANIC ANALYSIS					
INDIVIDUAL PARAMETERS					
1,1,1-Trichloroethane	ppm	0.04	ND	ND	ND
1,2-Dichloroethane	ppm	0.05	ND	ND	ND
Toluene	ppm	0.06	ND	ND	ND
Trichloroethylene	ppm	0.04	ND	ND	ND
Xylene	ppm	0.05	ND	ND	ND
cis-1,2-Dichloroethylene	ppm	0.05	ND	ND	ND
trans-1,2-Dichloroethylene	ppm	0.10	ND	ND	ND

MDL Method Detection Limit
ND Not detected at or above the MDL.

1710 Douglas Drive North
Minneapolis, MN 55422
TEL: 612-544-5543
FAX: 612-525-3377

Offices Serving: Minneapolis, Minnesota; Tampa, Florida; Iowa City, Iowa; San Francisco, California; Kansas City, Missouri; Los Angeles, California; Charlotte, North Carolina; Asheville, North Carolina; New York, New York; Pittsburgh, Pennsylvania

An Equal Opportunity Employer

pace INCORPORATED
THE ASSURANCE OF QUALITY

REPORT OF LABORATORY ANALYSIS

Mr. Dave Edwards
Page 2

January 21, 1991
PACE Project
Number: 910115501

0252 JI/Lenz Oil

PACE Sample Number:			10 0012297	10 0012300	10 0012319
Date Collected:			01/12/91	01/12/91	01/12/91
Date Received:			01/14/91	01/14/91	01/14/91
Parameter	Units	MDL	LO-IC6-SGFS	LO-B8-SGFB time 1423	LO-B8-SG time 1613
ORGANIC ANALYSIS					
INDIVIDUAL PARAMETERS					
1,1,1-Trichloroethane	ppm	0.04	ND	ND	ND
1,2-Dichloroethane	ppm	0.05	ND	ND	ND
Toluene	ppm	0.06	ND	ND	ND
Trichloroethylene	ppm	0.04	ND	ND	ND
Xylene	ppm	0.05	ND	ND	ND
cis-1,2-Dichloroethylene	ppm	0.05	ND	ND	ND
trans-1,2-Dichloroethylene	ppm	0.10	ND	ND	ND

MDL Method Detection Limit
ND Not detected at or above the MDL.

1710 Douglas Drive North
Minneapolis, MN 55422
TEL: 612-544-5543
FAX: 612-525-3377

Offices Serving: Minneapolis, Minnesota; Tampa, Florida; Iowa City, Iowa; San Francisco, California; Kansas City, Missouri; Los Angeles, California; Charlotte, North Carolina; Asheville, North Carolina; New York, New York; Pittsburgh, Pennsylvania

An Equal Opportunity Employer

pace INCORPORATED
THE ASSURANCE OF QUALITY

REPORT OF LABORATORY ANALYSIS

Mr. Dave Edwards
Page 3

January 21, 1991
PACE Project
Number: 910115501

0252 JI/Lenz Oil

PACE Sample Number:			10 0012327	10 0012335	10 0012343
Date Collected:			01/12/91	01/12/91	01/12/91
Date Received:			01/14/91	01/14/91	01/14/91
			LO-1B8-SGMS	LO-1B8-SGMS	LO-1-SGTB4
Parameter	Units	MDL	time 1617	time 1620	time 1435
ORGANIC ANALYSIS					
INDIVIDUAL PARAMETERS					
1,1,1-Trichloroethane	ppm	0.04	ND	ND	ND
1,2-Dichloroethane	ppm	0.05	ND	ND	ND
Toluene	ppm	0.06	ND	ND	ND
Trichloroethylene	ppm	0.04	ND	ND	ND
Xylene	ppm	0.05	ND	ND	ND
cis-1,2-Dichloroethylene	ppm	0.05	ND	ND	ND
trans-1,2-Dichloroethylene	ppm	0.10	ND	ND	ND

MDL Method Detection Limit
ND Not detected at or above the MDL.

1710 Douglas Drive North
Minneapolis, MN 55422
TEL: 612-544-5543
FAX: 612-525-3377

Offices Serving: Minneapolis, Minnesota; Tampa, Florida; Iowa City, Iowa; San Francisco, California; Kansas City, Missouri; Los Angeles, California; Charlotte, North Carolina; Asheville, North Carolina; New York, New York; Pittsburgh, Pennsylvania

An Equal Opportunity Employer

pace INCORPORATED
THE ASSURANCE OF QUALITY

REPORT OF LABORATORY ANALYSIS

Mr. Dave Edwards
Page 4

January 21, 1991
PACE Project
Number: 910115501

0252 JI/Lenz Oil

PACE Sample Number:			10 0013161	10 0013170	10 0013188
Date Collected:			01/14/91	01/14/91	01/14/91
Date Received:			01/15/91	01/15/91	01/15/91
Parameter	Units	MDL	L01C7SG	L01C8SG	L01C9SG
ORGANIC ANALYSIS					
INDIVIDUAL PARAMETERS					
1,1,1-Trichloroethane	ppm	0.04	ND	ND	ND
1,2-Dichloroethane	ppm	0.05	ND	ND	ND
Toluene	ppm	0.06	ND	ND	ND
Trichloroethylene	ppm	0.04	ND	ND	ND
Xylene	ppm	0.05	ND	ND	ND
cis-1,2-Dichloroethylene	ppm	0.05	ND	ND	ND
trans-1,2-Dichloroethylene	ppm	0.10	ND	ND	ND

MDL Method Detection Limit
ND Not detected at or above the MDL.

1710 Douglas Drive North
Minneapolis, MN 55422
TEL: 612-544-5543
FAX: 612-525-3377

Offices Serving: Minneapolis, Minnesota; Tampa, Florida; Iowa City, Iowa; San Francisco, California; Kansas City, Missouri; Los Angeles, California; Charlotte, North Carolina; Asheville, North Carolina; New York, New York; Pittsburgh, Pennsylvania

An Equal Opportunity Employer

pace INCORPORATED
THE ASSURANCE OF QUALITY

REPORT OF LABORATORY ANALYSIS

Mr. Dave Edwards
Page 5

January 21, 1991
PACE Project
Number: 910115501

0252 JI/Lenz Oil

PACE Sample Number:			10 0013196	10 0013200	10 0013218
Date Collected:			01/14/91	01/14/91	01/14/91
Date Received:			01/15/91	01/15/91	01/15/91
Parameter	Units	MDL	L01C10SG	L01C10SGFD	L01C10SGFB
ORGANIC ANALYSIS					
INDIVIDUAL PARAMETERS					
1,1,1-Trichloroethane	ppm	0.04	ND	ND	ND
1,2-Dichloroethane	ppm	0.05	ND	ND	ND
Toluene	ppm	0.06	ND	ND	ND
Trichloroethylene	ppm	0.04	ND	ND	ND
Xylene	ppm	0.05	ND	ND	ND
cis-1,2-Dichloroethylene	ppm	0.05	ND	ND	ND
trans-1,2-Dichloroethylene	ppm	0.10	ND	ND	ND

MDL Method Detection Limit
ND Not detected at or above the MDL.

1710 Douglas Drive North
Minneapolis, MN 55422
TEL: 612-544-5543
FAX: 612-525-3377

Offices Serving: Minneapolis, Minnesota; Tampa, Florida; Iowa City, Iowa; San Francisco, California; Kansas City, Missouri; Los Angeles, California; Charlotte, North Carolina; Asheville, North Carolina; New York, New York; Pittsburgh, Pennsylvania

An Equal Opportunity Employer

pace INCORPORATED
THE ASSURANCE OF QUALITY

REPORT OF LABORATORY ANALYSIS

Mr. Dave Edwards
Page 6

January 21, 1991
PACE Project
Number: 910115501

0252 JI/Lenz Oil

PACE Sample Number:			10 0013226	10 0013234	10 0013242
Date Collected:			01/14/91	01/14/91	01/14/91
Date Received:			01/15/91	01/15/91	01/15/91
Parameter	Units	MDL	L01C11SG	L01C12SG	L01C13SG
ORGANIC ANALYSIS					
INDIVIDUAL PARAMETERS					
1,1,1-Trichloroethane	ppm	0.04	ND	ND	ND
1,2-Dichloroethane	ppm	0.05	ND	ND	ND
Toluene	ppm	0.06	ND	ND	ND
Trichloroethylene	ppm	0.04	ND	ND	ND
Xylene	ppm	0.05	ND	ND	ND
cis-1,2-Dichloroethylene	ppm	0.05	ND	ND	ND
trans-1,2-Dichloroethylene	ppm	0.10	ND	ND	ND

MDL Method Detection Limit
ND Not detected at or above the MDL.

1710 Douglas Drive North
Minneapolis, MN 55422
TEL: 612-544-5543
FAX: 612-525-3377

Offices Serving: Minneapolis, Minnesota; Tampa, Florida; Iowa City, Iowa; San Francisco, California; Kansas City, Missouri; Los Angeles, California; Charlotte, North Carolina; Asheville, North Carolina; New York, New York; Pittsburgh, Pennsylvania

An Equal Opportunity Employer

pace INCORPORATED
THE ASSURANCE OF QUALITY

REPORT OF LABORATORY ANALYSIS

Mr. Dave Edwards
Page 7

January 21, 1991
PACE Project
Number: 910115501

0252 JI/Lenz Oil

PACE Sample Number:			10 0013250	10 0013269
Date Collected:			01/14/91	01/14/91
Date Received:			01/15/91	01/15/91
Parameter	Units	MDL	L01C14SG	L01SFTB5
ORGANIC ANALYSIS				
INDIVIDUAL PARAMETERS				
1,1,1-Trichloroethane	ppm	0.04	ND	ND
1,2-Dichloroethane	ppm	0.05	ND	ND
Toluene	ppm	0.06	ND	ND
Trichloroethylene	ppm	0.04	ND	ND
Xylene	ppm	0.05	ND	ND
cis-1,2-Dichloroethylene	ppm	0.05	ND	ND
trans-1,2-Dichloroethylene	ppm	0.10	ND	ND

MDL Method Detection Limit
ND Not detected at or above the MDL.

The data contained in this report were obtained using EPA or other approved methodologies. All analyses were performed by me or under my supervision.

Liesa Shanahan

Liesa A. Shanahan
Organic Chemistry Manager

1710 Douglas Drive North
Minneapolis, MN 55422
TEL: 612-544-5543
FAX: 612-525-3377

Offices Serving: Minneapolis, Minnesota; Tampa, Florida; Iowa City, Iowa; San Francisco, California; Kansas City, Missouri; Los Angeles, California; Charlotte, North Carolina; Asheville, North Carolina; New York, New York; Pittsburgh, Pennsylvania

An Equal Opportunity Employer

PACE, Inc.
Soil Gas Analysis QC Sheet

Client Name: ERM - North Central
Project Name:
PACE Project Number: 910115.501

Instrument ID: B
Primary Column ID: 30 meter, 0.32 mm I.D
Supelco DB-5

PACE Sample #	Tube (Prime or Second)	Tube Section	Analysis Date	Surrogate Recovery Decane (%)
Calib std	—	-	1/19/91	97
~~Cyl std~~				
1226.2	Prime	Front		114
		Back		104
1227.0		Front		111
		Back		105
1228.9		Front		113
		Back		105
1229.7		Front		111
		Back		104
1230.0		Front		111
		Back		106
Q.C. spike	—	—		96
1231.9	Prime	Front		104
		Back		103
32.7		Front		117
		Back		103
1233.5		Front		110
		Back		103
1234.3		Front		110
		Back		105

MRB 1/22/91

PACE Sample #	Tube (Prime or Second)	Tube Section	Analysis Date	Surrogate Recovery Decane (%)
1316.1	Prime	Front	1/19/91	110
		Back		103
Q.C. spike	—	—		95
Calib std	—	—		95
1317.0	Prime	Front		99
		Back		103
1318.8		Front		110
		Back		103
1319.6		Front		109
		Back		102
1320.0		Front		110
		Back		105
1321.9		Front		108
		Back		104
Q.C. spike	—	—	1/20/91	95
1322.6	Prime	Front		112
		Back		103
1323.4		Front		111
		Back		105
1324.2		Front		111
		Back		104

Surrogate QC Limits
are 75%-125%.

Comments

PACE, Inc.
Soil Gas Analysis QC Sheet

Client Name: ERM - North Central Inc.
Project Name:
PACE Project Number: 910115.501

Instrument ID: 6
Primary Column ID: 30 meter, 0.32 mm I.D
Supelco DB-5

PACE Sample #	Tube (Prime or Second)	Tube Section	Analysis Date	Surrogate Recovery Decane (%)
~~13205~~				
13250	Prime	Front	1/20/19	109
		Back		107
13269		Front		110
		Back		104
Q.C. spike				92

MRB 1/22/91

PACE Sample #	Tube (Prime or Second)	Tube Section	Analysis Date	Surrogate Recovery Decane (%)

Surrogate QC Limits
are 75%-125%.

Comments

PACE, Inc.
Soil Gas Analysis Calibration Summary

Client Name: ERM - North Central
Project Name:
PACE Project Number: 910115.501

Instrument ID: B
Primary Column ID: 30 meter, 0.32 mm I.D., Supelco DB-5
Analysis Date: 1/18 & 19/91

Initial Calibration Summary

Analytes	Standards (ug/ml) 5	10	50	100	500	AVE.	%RSD
cis-1, 2-Dichloroethene	0.401	0.470	0.575	0.578	0.577	0.520	16
trans-1, 2-dichloroethene	6.39×10^{-4}	6.16×10^{-4}	6.33×10^{-4}	5.96×10^{-4}	6.18×10^{-4}	6.20×10^{-4}	3
1, 2-Dichloroethane	0.271	0.388	0.518	0.561	0.589	0.465	29
Trichloroethene	0.347	0.395	0.453	0.463	0.461	0.424	12
1, 1, 1-Trichloroethane	0.446	0.446	0.469	0.458	0.446	0.453	2
Toluene	2.04	2.14	2.37	2.29	2.26	2.22	6
m, p-Xylene (Total) MEG 1/18/91	~~1.43~~ 2.22	2.24	2.40	2.33	2.31	2.30	3
o-Xylene	2.22	2.21	2.39	2.32	2.31	2.29	3
Decane (SS)	2.17	2.16	2.29	2.20	2.20	2.20	2

Continuing Calibration Summary

Analytes	Analysis Date	Standard ug	% Diff.	Analysis Date	Standard	% Diff.
cis-1, 2-Dichloroethene	1/19/91	45	9	1/20/91	93	7
trans-1, 2-dichloroethene	1/18/91	58	17	1/19/91	108	9
1, 2-Dichloroethane	1/19/91	53	8	1/20/91	47	4
Trichloroethene	↓	48	6	↓	95	7
1, 1, 1-Trichloroethane	↓	46	7	↓	95	5
Toluene	↓	49	5	↓	100	3
m, p-Xylene (Total)	↓	100	3	↓	102	2
o-Xylene	↓	51	3	↓	104	1
Decane (SS)						

Comments: 1) TRANS-1,2 DICHLOROETHANE WAS RUN ON A SINGLE COLUMN - SUPELCO DB-WAX, 30 meters, 0.25 micron film thickness

2) TRANS-1,2 DICHLOROETHANE WAS CALIBRATED WITH STANDARDS @ 10 ug/ml, 25, 50, 100, & 500

PACE, Inc.
Soil Gas Analysis QC Sheet

Client Name: ERM - N sta central
Project Name:
PACE Project Number: 910115.501

Instrument ID: B
Primary Column ID: 30 meter, 0.32 mm I.D
Supelco DB-5

PACE Sample #	Tube (Prime or Second)	Tube Section	Analysis Date	Matrix Spike Recovery (%)					
				1	2	3	4	5	6
Q.C. spike			1/19/91	100	98	97	94	95	95
Q.C. spike			1/19/91	101	100	100	96	95	96
Q.C. spike			1/19/91	99	97	99	95	96	96
Q.C. spike			1/20/91	93	95	93	94	94	95

Matrix Spike QC Limits are 75%-125%.

1 = cis-1,2-Dichloroethene
2 = 1,1,1-Trichloroethane
3 = Trichloroethene
4 = Toluene
5 = m,p-Xylene
6 = p-Xylene

Comments

PACE, Inc.
Soil Gas Analysis QC Sheet
Method Blank Summary

Client Name: ERM - North Central
Project Name:
PACE Project Number: 910115.501

Instrument ID: B
Primary Column ID: 30 meter, 0.32 mm I.D
Supelco OB-5

Date Analyzed	Target Compounds
1/19/91	no Target compounds found.

Comments:

PACE, Inc.
Soil Gas Analysis QC Sheet

Client Name: ERM - North Carolina
Project Name:
PACE Project Number: 910115.501

Instrument ID: B
Primary Column ID: 30 meter, 0.32 mm I.D.
Supelco DB-5

PACE Sample #	Tube (Prime or Second)	Tube Section	Analysis Date	Surrogate Recovery Decane (%)
1232.7 MS	Second	Front	1/23/91	115
	↓	Back	↓	102
1237.5 MSD		Front		112
		Back		103

PACE Sample #	Tube (Prime or Second)	Tube Section	Analysis Date	Surrogate Recovery Decane (%)

Surrogate QC Limits
are 75%-125%.

Comments

PACE, Inc.
Soil Gas Analysis QC Sheet
Method Blank Summary

Client Name: ERM-NORTH CENTRAL
Project Name:
PACE Project Number: 910115.501

Instrument ID: B
Primary Column ID: 30 meter, 0.32 mm I.D. Supelco DB-5

Date Analyzed	Target Compounds
1/23/91	No Target compounds found

Comments:

PACE, Inc.
Soil Gas Analysis Calibration Summary

Client Name: ERM - North Central
Project Name: LEN2 soil
PACE Project Number: 910115.501

Instrument ID: B
Primary Column ID: 30 meter, 0.32 mm I.D. Supelco DB-5
Analysis Date: 1/23/91

Initial Calibration Summary

Analytes	Standards (ug/mL) 5	10	50	100	500	AVE.	%RSD
cis-1, 2-Dichloroethene	0.341	0.492	0.565	0.481	0.493	0.474	17
trans-1, 2-dichloroethene	—	—	—	—	—		
1, 2-Dichloroethane	—	—	—	—	—		
Trichloroethene MAB 1/24/91	~~0.371~~ ~~0.457~~	0.361	0.445	0.395	0.403	0.395	8.3
1, 1, 1-Trichloroethane	0.457	0.421	0.449	0.384	0.386	0.419	8.1
Toluene	2.03	2.08	2.27	2.02	1.98	2.08	5.5
m, p-Xylene (Total)	2.24	2.20	2.35	2.12	2.04	2.19	5.4
o-Xylene	2.29	2.23	2.36	2.12	2.04	2.21	5.8
Decane (SS)	2.23	2.16	2.26	2.05	1.97	2.13	5.7

Continuing Calibration Summary

Analytes	Analysis Date	Standard ug	% Diff.	Analysis Date	Standard	% Diff.
cis-1, 2-Dichloroethene	1/23/91	49	103			
trans-1, 2-dichloroethene		—	—			
1, 2-Dichloroethane		—	—			
Trichloroethene		50	98			
1, 1, 1-Trichloroethane		49	99			
Toluene		51	98			
m, p-Xylene (Total)		100	98			
o-Xylene		51	97			
Decane (SS)		—	—			

Comments:

PACE, Inc.
Soil Gas Analysis QC Sheet

Client Name: ERM - North Carolina
Project Name: LEN2 oil
PACE Project Number: 910115.501

Instrument ID: B
Primary Column ID: 30 meter, 0.32 mm I.D. Supelco DB-5

PACE Sample #	Tube (Prime or Second)	Tube Section	Analysis Date	Matrix Spike Recovery (%)					
				1	2	3	4	5	6
1232.7 MS	SECOND	FRONT	1/23/91	107	108	109	108	107	103
	↓	BACK	↓	99	100	100	98	97	95
1233.5 MSD		Front		103	106	108	105	104	100
		Back		100	102	101	100	99	97

Matrix Spike QC Limits are 75%-125%.

1 = cis-1,2-Dichloroethene
2 = 1,1,1-Trichloroethane
3 = Trichloroethene
4 = Toluene
5 = m,p-Xylene
6 = ~~p-Xylene~~ o-xylene

MRB 1/24/91

Comments

PACE, Inc.

Client Name: ERM - North Central
Project Name: LEN2 oil
Project #: 910110.505
Instr. ID: B

Mid-level Standard-

Date/Time: 1/15/91 6:00PM
File ID:
Column ID: 30 meter, 0.32 I.D. Supelco DB-5

Soil Gas Analysis Internal Standard Area Summary

		Bromofluoro-benzene Area	RT			Bromofluoro-benzene Area	RT
	Mid-level Std.	378	9.37		Mid-level Std.		
	Upper Limit	756			Upper Limit		
	Lower Limit	189			Lower Limit		
	PACE Sample No.				PACE Sample No.		
1	~~[illegible]~~			21			
2	738.2 Pmmng-F	343	9.38	22			
3	Pmmng-B	340	9.37	23			
4	739.0 Pmmng-F	317	9.37	24			
5	Pmmng-B	372	9.37	25			
6	740.4 Pmmng-F	327	9.37	26			
7	Pmmng-B	344	9.37	27			
8	12.C spike	358	9.37	28			
9				29			
10				30			
11				31			
12				32			
13				33			
14				34			
15				35			
16				36			
17				37			
18				38			
19				39			
20				40			

MRB 1/23/91

QC Limits for Area

UPPER LIMIT = +100% of internal standard area
LOWER LIMIT = -50% of internal standard area.

Retention Time QC Limits

Retention time window is +/- 0.50 minutes.

PACE, Inc.

Client Name: ERM - North Central
Project Name: LENZ oil
Project #: 910112.502
Instr. ID: 8

Mid-level Standard-

Date/Time:
File ID:
Column ID: 30 meter, 0.32 I
Angelus PB-5

Soil Gas Analysis Internal Standard Area Summary

		Bromofluorobenzene Area	RT			Bromofluorobenzene Area	RT
	Mid-level Std.	378	9.37		Mid-level Std.		
	Upper Limit	756			Upper Limit		
	Lower Limit	189			Lower Limit		
	PACE Sample No.				PACE Sample No.		
1	1050.2 Primary-F	345	9.37	21	1059.6 Primary-F	317	9.37
2	Primary-B	326	9.37	22	Primary-B	336	9.37
3	1051.0 Primary-F	315	9.37	23	1058.8 MSD	370	9.37
4	Primary-B	336	9.38	24	1060.0 Primary-F	324	9.37
5	1052.9 Primary-F	321	9.37	25	Primary-B	343	9.37
6	Primary-B	341	9.37	26	1061.8 Primary-F	319	9.37
7	1053.7 Primary-F	354.	9.37	27	Primary-B	337	9.37
8	Primary-B	341	9.37	28	1062.6 Primary-F	337	9.37
9	1054.5 Primary-F	309	9.37	29	Primary-B	334	9.37
10	Primary-B	334	9.37	30	Q.C. spike	340	9.37
11	~~Q.C. spike~~			31			
12	1058.8 MS	340	9.37	32			
13	1055.3 Primary-F	322	9.37	33			
14	Primary-B	327	9.37	34			
15	1056.1 Primary-F	314	9.37	35			
16	Primary-B	330	9.37	36			
17	1057.0 Primary-F	316	9.37	37			
18	Primary-B	332	9.37	38			
19	1058.8 Primary-F	326	9.37	39			
20	Primary-B	339	9.37	40			

MRB 1/23/91

QC Limits for Area

UPPER LIMIT = +100% of internal standard area
LOWER LIMIT = -50% of internal standard area.

Retention Time QC Limits

Retention time window is +/- 0.50 minutes.

PACE, Inc.

Client Name: ERM - North Carolina
Project Name: LENZ oil
Project #: 910112.503
Instr. ID: B

Mid-level Standard-

Date/Time: 1/16/91 3:39 P.M.
File ID:
Column ID: 30 meter, 0.32 mm I.
Supelco DB-5

Soil Gas Analysis Internal Standard Area Summary

		Bromofluorobenzene Area	RT			Bromofluorobenzene Area	RT
	Mid-level Std.	356	9.37		Mid-level Std.		
	Upper Limit	712			Upper Limit		
	Lower Limit	178			Lower Limit		
	PACE Sample No.				PACE Sample No.		
1	CS2 blk	349	9.37	21	1072.3 Primary-F	325	9.37
2	1063.4 Primary-F	337	9.38	22	Primary-B	348	9.37
3	Primary-B	330	9.38	23	Q.C. spike	363	9.37
4	1064.2 Primary-F	308	9.38	24	1073.1 Primary-F	337	9.37
5	Primary-B	332	9.38	25	Primary-B	355	9.37
6	1065.0 Primary-F	324	9.37	26	1074.0 Primary-F	339	9.37
7	Primary-B	342	9.37	27	Primary-B	336	9.37
8	1066.9 Primary-F	321	9.37	28	1075.8 Primary-F	335	9.37
9	Primary-B	333	9.37	29	Primary-B	~~53~~ 348	9.37
10	1067.7 Primary-F	320	9.37	30	Q.C. spike	363	9.37
11	Primary-B	333	9.37	31			
12	Q.C. spike	343	9.37	32			
13	1068.5 Primary-F	317	9.37	33			
14	Primary-B	310	9.37	34			
15	1069.3 Primary-F	321	9.37	35			
16	Primary-B	335	9.37	36			
17	1070.7 Primary-F	329	9.37	37			
* 18	Primary-B	—	—	38			
19	1071.5 Primary-F	329	9.37	39			
20	Primary-B	341	9.37	40			

MPB 1/23/91

QC Limits for Area
UPPER LIMIT = +100% of internal standard area
LOWER LIMIT = -50% of internal standard area.

Retention Time QC Limits
Retention time window is
+/- 0.50 minutes.

* no internal std. injected into sample, reported values taken from ~~DB~~ confirmation column (DB-1701) using external calibration

PACE, Inc.

Client Name: ERM - North Central
Project Name: LENZ oil
Project #: 910115.501
Instr. ID: B

Mid-level Standard-

Date/Time: 1/19/91 1:58 P.M.
File ID:
Column ID:

Soil Gas Analysis Internal Standard Area Summary

		Bromofluoro-benzene Area	RT			Bromofluoro-benzene Area	RT
	Mid-level Std.	413	9.37		Mid-level Std.		
	Upper Limit	826			Upper Limit		
	Lower Limit	206			Lower Limit		
	PACE Sample No.				PACE Sample No.		
1	CS2 blk	362	9.37	21	1316.1 Primary-F	338	9.37
2	1226.2 Primary-F	340	9.37	22	Primary-B	349	9.37
3	Primary-B	385	9.37	23	Q.C. spike	357	9.37
4	1227.0 Primary-F	381	9.37	24			
5	Primary-B	356	9.37	25			
6	1228.9 Primary-F	343	9.37	26			
7	Primary-B	352	9.37	27			
8	1229.7 Primary-F	345	9.37	28			
9	Primary-B	353	9.37	29			
10	1230.0 Primary-F	337	9.37	30			
11	Primary-B	393	9.37	31			
12	Q.C. spike	387	9.37	32			
13	1231.9 Primary-F	323	9.37	33			
14	Primary-B	355	9.37	34			
15	1232.7 Primary-F	318	9.37	35			
16	Primary-B	353	9.37	36			
17	1233.5 Primary-F	336	9.37	37			
18	Primary-B	359	9.37	38			
19	1234.3 Primary-F	362	9.37	39			
20	Primary-B	357	9.37	40			

QC Limits for Area

UPPER LIMIT = +100% of internal standard area
LOWER LIMIT = -50% of internal standard area.

Retention Time QC Limits

Retention time window is +/- 0.50 minutes.

PACE, Inc.

Client Name: ERM - [illegible]
Project Name: LEN2 OU
Project #: 910115.501
Instr. ID: B

Mid-level Standard-

Date/Time: 1/20/91 2:50 A.M.
File ID:
Column ID: 30 meter, 0.32 mm I.D. Supelco DB-5

Soil Gas Analysis Internal Standard Area Summary

		Bromofluorobenzene Area	RT			Bromofluorobenzene Area	RT
	Mid-level Std.	388	9.37		Mid-level Std.		
	Upper Limit	776			Upper Limit		
	Lower Limit	194			Lower Limit		
	PACE Sample No.				PACE Sample No.		
1	1317.0 Primary-F	330	9.37	21	1326 Primary-B	365	9.37
2	Primary-B	357	9.37	22			
3	1318.8 Primary-F	345	9.37	23			
4	Primary-B	353	9.37	24			
5	1319.6 Primary-F	329	9.37	25			
6	Primary-B	348	9.37	26			
7	1320.0 Primary-F	345	9.37	27			
8	Primary-B	349	9.37	28			
9	1321.8 Primary-F	342	9.38	29			
10	Primary-B	348	9.38	30			
11	Q.C. Spike	376	9.38	31			
12	1322.6 Primary-F	378	9.37	32			
13	Primary-B	355	9.37	33			
14	1323.4 Primary-F	351	9.37	34			
15	Primary-B	355	9.37	35			
* 16	1324.2 Primary-F	688	9.37	36			
17	Primary-B	358	9.37	37			
18	1325.0 Primary-F	347	9.37	38			
19	Primary-B	360	9.37	39			
20	1326.9 Primary-F	351	9.37	40			

QC Limits for Area
UPPER LIMIT = +100% of internal standard area
LOWER LIMIT = -50% of internal standard area.

Retention Time QC Limits
Retention time window is
+/- 0.50 minutes.

* 1324.2 Primary Front — sample was accidentally injected with 20 ul of the internal std — area count is double normal

PACE, Inc.

:nt Name: ERM - North Central
Project Name: LEN2 oil
Project #: 910115.501
Instr. ID: B

Mid-level Standard-

Date/Time: 1/23/91 4:00 P.M.
File ID:
Column ID: 30 meter, 0.32 I.D
Supelco DB-5

Soil Gas Analysis Internal Standard Area Summary

		Bromofluoro-benzene Area	RT			Bromofluoro-benzene Area	RT
	Mid-level Std.	355	9.38		Mid-level Std.		
	Upper Limit	710			Upper Limit		
	Lower Limit	178			Lower Limit		
	PACE Sample No.				PACE Sample No.		
1	CS2 blk	367	9.38	21			
2	1232.7 (MS) Front	356	9.38	22			
3	Back	345	9.38	23			
4	1233.5 (MSD) Front	332	9.38	24			
5	Back	347	9.38	25			
6				26			
				27			
8				28			
9				29			
10				30			
11				31			
12				32			
13				33			
14				34			
15				35			
16				36			
17				37			
18				38			
19				39			
20				40			

QC Limits for Area
UPPER LIMIT = +100% of internal standard area
LOWER LIMIT = -50% of internal standard area.

Retention Time QC Limits
Retention time window is
+/- 0.50 minutes.

ERM-North Central, inc.

90110505 LO1991A 121

Sample Chain of Custody

W.O.No.: 0252JI
Project Name: LENZ OIL
Sampler: BBM, HVJ, CVB

ERM Sample Number	Date	Time	COMP	GRAB	Station Location	Number of Containers	1,2 DCA, 1,2 DCE	TCE, 1,1,1 TCA	TOLUENE, XYLENE				Remarks
													FEDX # 8194625810
1	1/9/91	1650		✓	LO-1A1-SG~~B~~ BBA	1	✓	✓	✓				TWO TUBES PER SAMPLE
2	1/9/91	1730		✓	LO-1A1-SGFB	1	✓	✓	✓				CONTAINER.
3	1/9/91	1700		✓	LO-1-SGTB1	1	✓	✓	✓				
													ALL SAMPLES COOLED
													AT 4°C.
				*	7 DAY TURNAROUND								LO-1A1-SG (PRIMARY - LOT # CT-1625)
				*	FOLLOW LENZ OIL SOP								" " (SECONDARY-LOT # CT-1629)
					FOR SOIL GAS ANALYSIS								LO-1A1-SGFB (PRIMARY LOT # CT-1630)
													" " (SECONDARY LOT # CT 1528)
													LO-1-SGTB1 - LOT # CT-1561 & # CT-1565

Sample Relinquished by:	Date	Time	Sample Received by:	Date	Time	Reason for Transfer
[signature] CT3009	1/9/91	1845	Fed-X	1-9-91	1845	Shipping
			Madeline Mullu	1/10	9:45	

NOTES: White & Yellow copies accompany sample shipment to laboratory. Yellow copy retained by laboratory. White copy to be returned to ERM for files. Pink copy retained by sampler. Gold copy extra copy as needed

ERM-North Central, inc.

COC#- L011091D

Sample Chain of Custody

W.O.No.: 0252JI

Project Name: LENZ OIL

Sampler: BBM, HVJ, CJB, DPE

FEDX# 8194625795

ERM Sample Number	Date	Time	COMP	GRAB	Station Location	Number of Containers	1,2 DCA, 1,2 DCE	TCE, 1,1,1 TCA	TOLUENE, XYLENE				Remarks
1	1/10/91	11:00		✓	LO-1A2-SG 1050.2	1	✓	✓	✓				PRIMARY LOT# CT 1592, SEC.# CT 1595
2		1106		✓	LO-1A3-SG 1051.0	1	✓	✓	✓				PRIMARY LOT# CT 1556, SEC.# CT 1594
3		1111		✓	LO-1A4-SG 1052.9	1	✓	✓	✓				PRIMARY LOT# CT 1589, SEC.# CT 1593
4		1116		✓	LO-1A4-SGFS 1053.7	1	✓	✓	✓				PRIMARY LOT# CT 1591, SEC.# CT 1586
5		1247			LO-1A5-SG 1054.5	1	✓	✓	✓				PRIMARY LOT# CT 1562, SEC.# CT 1587
6		1240			LO-1A7-SG 1055.3	1	✓	✓	✓				PRIMARY LOT# CT 1590, SEC.# CT 1588
													- ALL SAMPLES COOLED AT 4°C
				*	7 DAY TURNAROUND								- TWO TUBES PER SAMPLE
				*	FOLLOW LENZ OIL SOP								CONTAINER
					FOR SOIL GAS ANALYSIS								

Sample Relinquished by:	Date	Time	Sample Received by:	Date	Time	Reason for Transfer
[signature]	1/10/91	1900	FEDX	1/10/91	1900	SHIPPING
			MSL-Pere	1/12/91	1100	

COPIES: White & Yellow copies accompany sample shipment to laboratory. Yellow copy retained by laboratory. White copy to be returned to ERM for files. Pink copy retained by sampler. Gold copy extra copy as needed

ERM-North Central, Inc.

COC#-LO11091B2

Sample Chain of Custody

W.O.No.: 0252JI

Project Name: LENZ OIL

Sampler: BBM, DPE, HVJ, CJB

FEDX# 8194625795

ERM Sample Number	Date	Time	COMP	GRAB	Station Location	Number of Containers	1,2 DCA	TCE	1,1,1 TCA	TOLUENE, XYLENE			Remarks
7	1/10/91	1615		X	LO-1A6-SG 1056.1	1	✓	✓	✓				PRIMARY Lot#CT 1574 Sec.#CT 1566
8		1620		✓	LO-1A8-SG 1057.0	1	✓	✓	✓				PRIMARY Lot#CT 1564 Sec#CT 1560
9		1619		✓	LO-1A8-SG MS 1058.8	2	✓	✓	✓	(MS/MSD)			PRIMARY Lot#CT 1567 1571 Sec#CT 1569 1575
10		1631		✓	LO-1A9-SG 1059.6	1	✓	✓	✓				PRIMARY Lot#CT 1573 Sec.#CT 1570
11		1715		✓	LO-1B9-SG 1060.0	1	✓	✓	✓				PRIMARY Lot#CT 1645 Sec#CT 1572
12		1640		✓	LO-1B9-SG FB 1061.8	1	✓	✓	✓				PRIMARY Lot#CT 1568 Sec#CT 1649
13		1610		✓	LO-1-SG TB2 1062.6	1	✓	✓	✓	BBM			~~PRIMARY Lot#CT BBM Sec#CT~~
				X	7 DAY TURNAROUND								– ALL SAMPLES COOLED AT 4°C.
				*	FOLLOW LENZ OIL SOP								– TWO TUBES PER SAMPLE CONTAINER
					FOR SOIL GAS ANALYSIS								

Sample Relinquished by:	Date	Time	Sample Received by:	Date	Time	Reason for Transfer
[signature]	1/10/91	1900	FED-X	1/10/91	1900	SHIPPING
			MSL-Lace	1/12/91	1100	

COPIES: White & Yellow copies accompany sample shipment to laboratory. Yellow copy retained by laboratory. White copy to be returned to ERM for files. Pink copy retained by sampler. Gold copy extra copy as needed

9101(3

ERM-North Central, inc.

COC# LO 11191C

Sample Chain of Custody

W.O.No.: 0252JI

Project Name: LENZ OIL

Sampler: BBM, HVJ, CJB, DPE 013904

FEDX# 8194625806

ERM Sample Number	Date	Time	COMP	GRAB	Station Location	Number of Containers	1,2DCA, 1,2DCE	TCE, 1,1,1 TCA	TOLUENE, XYLENE				Remarks
1	1/11/91	1043		✓	LO-1B1-SG 1063.4	1	✓	✓	✓				PRIMARY LOT#CT 1598 SEC#CT 1612
2		1047		✓	LO-1B2-SG 1064.2	1	✓	✓	✓				PRIMARY LOT#CT ~~1611~~ 1644 BBR SEC#CT 1651
3		1050		✓	LO-1B3-SG 1065.0	1	✓	✓	✓				PRIMARY LOT#CT 1646 SEC#CT 1650
4		1054		✓	LO-1B4-SG 1066.9	1	✓	✓	✓				PRIMARY LOT#CT 1706 SEC#CT 1610
5		1057		✓	LO-1B5-SG 1067.7	1	✓	✓	✓				PRIMARY LOT#CT 1609 SEC#CT 1613
6		1200		✓	LO-1B6-SG 1068.5	1	✓	✓	✓				PRIMARY LOT#CT 1640 SEC#CT 1636
7		1101		✓	LO-1B7-SG 1069.3	1	✓	✓	✓				PRIMARY LOT#CT 1614 SEC#CT 1611
				*	7 DAY TURNAROUND								- ALL SAMPLES COOLED AT 4°C
				*	FOLLOW LENZ OIL SOP								- TWO TUBES PER SAMPLE
					FOR SOIL GAS ANALYSIS								CONTAINER

Sample Relinquished by:	Date	Time	Sample Received by:	Date	Time	Reason for Transfer
[signature]	1/11/91	1900	FEDX	1/11/91	1900	SHIPPING

COPIES: White & Yellow copies accompany sample shipment to laboratory. Yellow copy retained by laboratory. White copy to be returned to ERM for files. Pink copy retained by sampler. Gold copy extra copy as needed

ERM-North Central, inc.

COC# L01119IC2

Sample Chain of Custody

W.O.No.: 0252JI

Project Name: LENZ OIL

Sampler: BBM, HWJ, CJB, DPE

FEDX# 8194625806

ERM Sample Number	Date	Time	COMP	GRAB	Station Location	Number of Containers	1,2DCA, 1,2DCE	TCE, 1,1,1 TCA	TOLUENE, XYLENE				Remarks
8	1/11/91	1400		✓	LO-1C1-SGFB 1070.7	1	✓	✓	✓				PRIMARY Lot#CT 1615 Sec#CT 1637 *
9		1738		✓	LO-1C1-SG 1071.5	1	✓	✓	✓				PRIMARY Lot#CT 1635 Sec#CT 1637
~~10~~				✓	~~LO-1C2-SG~~	~~1~~	✓	✓	✓				~~PRIMARY Lot#CT Sec#CT~~ BBM
~~11~~		~~1500~~		✓	~~LO-1C3-SG~~	~~1~~	✓	✓	✓				~~PRIMARY Lot#CT Sec#CT~~ BBM
12		1457		✓	LO-1C4-SG 1072.3	1	✓	✓	✓				PRIMARY Lot#CT 1576 Sec#CT 1592
13		1453		✓	LO-1C4-SGFS 1073.1	1	✓	✓	✓				PRIMARY Lot#CT 1583 Sec#CT 1588
14		1500		✓	LO-1C5-SG 1074.0	1	✓	✓	✓				PRIMARY Lot#CT 1634 Sec#CT 1538
15		1630		✓	LO-1-SGTB3 1075.8	1	✓	✓	✓				- ALL Samples cooled at 4°C
				*	7 DAY TURNAROUND								- Two tubes per sample container
					* FOLLOW LENZ OIL SOP FOR SOIL GAS ANALYSIS								

Sample Relinquished by:	Date	Time	Sample Received by:	Date	Time	Reason for Transfer
[signature]	1/11/91	1900	FED X	1/11/91	1900	SHIPPING
	* SECONDARY SAMPLE FOR LO-1C1-SGFB BROKE					

COPIES: White & Yellow copies accompany sample shipment to laboratory. Yellow copy retained by laboratory. White copy to be returned to ERM for files. Pink copy retained by sampler. Gold copy extra copy as needed

ERM-North Central, inc.

COC#L011291D

Sample Chain of Custody

W.O.No.: 0252JI | Project Name: LENZ OIL

Sampler: BBM, HVJ, CJB, DPE

FEDX# 8194625736

ERM Sample Number	Date	Time	COMP	GRAB	Station Location	Number of Containers	1,2 DCA, 1,2 DCE,	TCE, 1,1,1 TCA	TOLUENE, Xylene				Remarks
1	1/12/91	1045		✓	LO-1C2-SG	1	✓	✓	✓	12	26.	2	Primary Lot#CT 1597, Sec#CT 1605
2		1129		✓	LO-1C3-SG	1	✓	✓	✓		27.	0	Primary Lot#CT 1599, Sec#CT 1580
3		1310		✓	LO-1C6-SG	1	✓	✓	✓		28.	9	Primary Lot#CT 1596, Sec#CT 1604
4		1316		✓	LO-1C6-SGFS	1	✓	✓	✓		29.	7	Primary Lot#CT 1578, Sec#CT 1584
5		1423		✓	LO-1B8-SGFB	1	✓	✓	✓		30.	0	~~Primary Lot#CT~~ ~~, Sec#CT~~ NO CT #'s
6		1613		✓	LO-1B8-SG	1	✓	✓	✓		31.	9	~~Primary Lot#CT~~ ~~, Sec#CT~~
7		1612 & 1620		✓	LO-1B8-SGMS	2	✓	✓	✓		32.	7	~~Primary Lot#CT~~ ~~, Sec#CT~~
8		1435		✓	LO-1-SGTB4	1	✓	✓	✓		33.5 34.3		~~Lot #'s~~
		*7 DAY TURNAROUND											— ALL SAMPLES COOLED AT 4°C
		*FOLLOW LENZ OIL SOP FOR SOIL GAS ANALYSIS											— TWO TUBES PER SAMPLE CONTAINER

Sample Relinquished by:	Date	Time	Sample Received by:	Date	Time	Reason for Transfer
[signature]	1/12/91		FED X	1/12/91		SHIPPING
			Madeline Mullin '/14			

*SAMPLE LO-1C1-SG WAS TAKEN AT 1800 HOURS INSTEAD OF 1738 AS LABEL SHOWS AND COC FROM 1/11/91. THE SAMPLE VOLUME SHOULD BE ADJUSTED TO 29.4 LITERS INSTEAD OF THE 25 LITERS THE SOP REQUIRES. PLEASE ANALYZE ACCORDINGLY.

COPIES: White & Yellow copies accompany sample shipment to laboratory. Yellow copy retained by laboratory. White copy to be returned to ERM for files. Pink copy retained by sampler. Gold copy extra copy as needed

ERM Northcentral, Inc.

COC # L01197

Sample Chain of Custody

W.O.No.: 0252 JI

Project Name: LENZ OIL

Sampler: HVJ, CJB, DPE

FED X #
8194625725

ERM Sample Number	Date	Time	COMP	GRAB	Station Location	Number of Containers	1,2 DCA, 1,2 DCE	TRICHLOROETHYLENE, 1,1,1 TCA	TOLUENE, ETHYLBENZENE, XYLENE	CHLOROFORM, CHLOROETHANE	Remarks
1	1/14/91	1100		✓	L01C7SG 1316.1	1	✓	✓	✓		NO CT #'s FOR THIS
2		1107		✓	L01C8SG 1317.0	1	✓	✓	✓		BATCH OF SAMPLES
3		1105		✓	L01C9SG 1318.8	1	✓	✓	✓		
4		1057		✓	L01C10SG 1319.6	1	✓	✓	✓		ALL SAMPLES COOLED TO 4°C
5		1101 1045		✓	L01C10SGFD 1320.0	1	✓	✓	✓		
6		1045		✓	L01C10SGFB 1321.8	1	✓	✓	✓		
7		16:16		✓	L01C11SG 1322.6	1	✓	✓	✓		
8		15:32		✓	L01C12SG 1323.4	1	✓	✓	✓		
9		15:38		✓	L01C13SG 1324.2	1	✓	✓	✓		
10		15:48		✓	L01C14SG 1325.0	1	✓	✓	✓		
11		16:30		✓	L01SGTB5 1326.9	1	✓	✓	✓		

Sample Relinquished by:	Date	Time	Sample Received by:	Date	Time	Reason for Transfer
[illegible]	1/14/91		FED X	1/14/91		SHIP TO LAB

COPIES: White & Yellow copies accompany sample shipment to laboratory. Yellow copy retained by laboratory. White copy to be returned to ERM for files. Pink copy retained by sampler. Gold copy extra copy as needed

APPENDIX D

DEVIATIONS FROM THE APPROVED SOIL INVESTIGATION

CHANGES IN THE SAMPLE COLLECTION METHODOLOGY AND WORK PLAN
SOIL BORINGS CONDUCTED AT THE LENZ OIL SERVICE SITE
PHASE I REMEDIAL INVESTIGATION/FIELDWORK = 1/91-2/91

	Changes in the Field	Work Plan	Justification
1	Visqueen liner was punctured at 4 boreholes: SB-11 SB-5 SB-7 SB-6 Backfilled with bentonite pellets to seal perforation	The samping will be limited to shallow depths to avoid puncturing the visqueen liner and possibly allowing contaminated groundwater to migrate into the clean backfill	As directed by IEPA Project Manager
2	Used high pressure hot water cleaning equipment	Pressurized steam cleaning equipment	Standard Operating Procedures (SOP) for IEPA Drill Rig when decontaminating equipment and supplies
3	The 3 MS/MSD samples were not designated in the field	Field samples will be collected and designated for matrix spike/matrix spike duplicate (MS/MSD) analysis	Instructed by laboratory that they would select randomly the sample to test
4	SB-01, SB-02, and SB-03 were moved several feet to the Northeast	Need to receive approval from U.S. EPA through ERM-North Central, Inc. to make changes in the work plan/sampling and analysis plan	Moved due to the presence of a major gas pipeline in the areas designated as collection points
5	Started at SB-01 on the west side of the site. U.S. EPA requested that work be initiated on the east side	Not Addressed	Historical information indicated that construction debris and chemical contamination were more likely located on the east side. Therefore to prevent cross-contamination, work was initiated on the west side.

6	Used a 2-foot split spoon sampler with 4 six-inch brass liners to sample at 7.5 to 9.5 feet of SB-22. Sampling methodology was not the one specified in the QAPjP. There was no U.S. EPA oversight when sample was taken.	Continuous sampler	High OVA readings forced delays in sampling due to health and safety reasons. A field sample was taken for qualitative purposes since the U.S. EPA oversight contractor was not notified that field activities had resumed
7	Samples SB-23, SB-16, SB-15, SB-21, SB-14, and SB-18 were damaged during transit, therefore breaking the Chain-of-Custody		At the Chicago airport, TWA broke the seal to check the coolers for bombs due to the increased security precautions as a result of the Iraq war. Resampling at these borehole locations was done.
8	SB-12 moved several feet to the west	Need to receive approval from U.S. EPA through ERM-North Central, Inc. for changes in the work plan	OVA readings greater than 1,000 with strong odors and white smoke coming out of the hollow-stem augers at the original SB-12 location
9	Used IEPA Field Boring Log	Specifies Geologic Drill Log in Figure 2-5 of the Data Management Plan	Substitution directed by IEPA Project Manager
10	Only 1 field blank for VOCs (2 X 40 ml) was taken	Should have taken a minimum of 5 field blanks (1 field blank/10 samples). All parameters were to be collected: (a) TCL volatile (b) TCL semivolatile organics TCL PCBs TCL Pesticides (c) TAL Metals TAL Cyanide	Oversight by IEPA Project Manager
11	Trip blank taken	Trip blanks are not required for soil samples	

12	The IEPA Chain-of-Custody was used	The Chain-of-Custody from ERM-North Central, Inc. was specified in the QAPjP (Figure 5-5)	IEPA personnel were familiar with the Agency's Chain of Custody
13	Trip blanks were not included on sample tracking form or field data form		Oversight by IEPA Project Manager
14	Several entries on field data forms were corrected by scribbling out error	Errors were to be corrected by crossing out with 1 line	Oversight by IEPA Project Manager
15	There were 17 soil intervals not sampled	Specified by Work Plan	See attached table for explanation
16	Used depth of soil interval as part of the soil coding	Depths wee to be identified by letter codes	Due to the variation in soil intervals collected in the field, it was determined by the IEPA geologist that actual depths should be utilized to avoid confusion
17	Field Blank on sample tracking form should not have depth designation		Oversight by IEPA Project Manager
18	Two intervals: SB-21 9.5'-14.5' SB-22 7.5'-9.5' were not analyzed for all parameters specified in the Work Plan		See attached table for explanation
19	Sample analysis request form (Figure 3-2 in Data Management Plan) was not utilized	Specifies the use of this form	IEPA Chain-of-Custody includes the information
20	Corrective action form (Figure 13-1 in QAPjP) was not used		

CHANGES IN THE SAMPLE COLLECTION METHODOLOGY AND WORK PLAN
SEDIMENT AND OFF-SITE SOIL SAMPLING CONDUCTED AT THE LENZ OIL SERVICE SITE
PHASE I REMEDIAL INVESTIGATION/FIELDWORK = 1/91-2/91

	Changes in the Field	Work Plan	Justification
1	A decontaminated stainless steel spoon and bucket were used to collect the samples. Sampler wore long neoprene gloves.	A stainless stell Eckman dredge or hand auger will be used to obtain bottom sediment grab samples at the center point of each cross-section if surface water is present in the ditch. If no water is present in the ditch, a stainless steel trowel or hand auger will be used to collect a sediment grab sample	Substitution directed by IEPA Project Manager
2	Used high pressure hot water cleaning equipment	Pressurized steam cleaning equipment	Standard Operating Procedures (SOP) for IEPA Drill Rig when decontaminating equipment and supplies
3	MS/MSD samples were not designated in the field for volatile organics and semivolatile organic parameters	Field samples will be collected and designated for matrix spike/matrix spike duplicate (MS/MSD) analysis	Instructed by laboratory that they would select randomly the sample to test
4	A trip blank for sediments and a trip blank for surface soils were collected	Trip blanks were not required for either soil or sediment samples	Oversight by IEPA Project Manager
5	Only 1 field blank for VOCs (2 X 40 ml) was taken	All parameters were to be collected: (a) TCL volatile (b) TCL semivolatile organics TCL PCBs TCL Pesticides (c) TAL Metals TAL Cyanide	Oversight by IEPA Project Manager

6	The IEPA Chain-of-Custody was used	The Chain-of-Custody from ERM-North Central, Inc. was specified in the QAPjP (Figure 5-5)	IEPA personnel were familiar with the Agency's Chain of Custody
7	Sample analysis request form (Figure 3-2 in Data Management Plan) was not utilized	Specifies the use of this form	IEPA Chain-of-Custody includes the information
8	Corrective action form (Figure 13-1 in QAPjP) was not used		Oversight by IEPA Project Manager
9	The trip blanks taken were not included on the sample tracking form or field data form		Oversight by IEPA Project Manager

CHANGES IN THE SAMPLE COLLECTION METHODOLOGY AND WORK PLAN
SURFACE WATER SAMPLING CONDUCTED AT THE LENZ OIL SERVICE SITE
PHASE I REMEDIAL INVESTIGATION/FIELDWORK = 1/91-2/91

	Changes in the Field	Work Plan	Justification
1	Approximately 12 to 14 inches of ice was chopped through to get to the	Not addressed	Due to freezing conditions, an axe was required in order to reach the sampling point
2	Used high pressure hot water cleaning equipment	Pressurized steam cleaning equipment	Standard Operating Procedures (SOP) for IEPA Drill Rig when decontaminating equipment and supplies
3	MS/MSD samples were not designated in the field for volatile organics and semivolatile organic parameters	Field samples will be collected and designated for matrix spike/matrix spike duplicate (MS/MSD) analysis	Instructed by laboratory that they would select randomly the sample to test
4	Extra volume was not collected for MS/MSD analysis of volatile organics and semivolatile organics	Triple the volatile organics sample volume and double the semivolatile organics sample volume	Oversight by IEPA Project Manager
5	Only 1 field blank for VOCs (2 X 40 ml) was taken	All parameters were to be collected: (a) TCL volatile (b) TCL semivolatile organics TCL PCBs TCL Pesticides (c) TAL Metals TAL Cyanide	Oversight by IEPA Project Manager
6	The IEPA Chain-of-Custody was used	The Chain-of-Custody from ERM-North Central, Inc. was specified in the QAPjP (Figure 5-5)	IEPA personnel were familiar with the Agency's Chain of Custody
7	SW03FDTB on the IEPA Chain-of-Custody should read SW03TB		Oversight by IEPA Project Manager

8	Seven trip blanks were taken		Could have prepared shipment so only 1 trip blank would have been required (1 trip blank/cooler)
9	Sample analysis request form (Figure 3-2 in Data Management Plan) was not utilized	Specifies the use of this form	IEPA Chain-of-Custody includes the information
10	Corrective action form (Figure 13-1 in QAPjP) was not used		Oversight by IEPA Project Manager

CHANGES IN THE SAMPLE COLLECTION METHODOLOGY AND WORK PLAN
HEALTH AND SAFETY PLAN
PHASE I REMEDIAL INVESTIGATION/FIELDWORK = 1/91-2/91

	Changes in the Field	Work Plan	Justification
1	Personal Safety Certification Form and Site Safety Meeting Log in the Data Management Plan were not completed by personnel on-site	Required in Work Plan	Oversight by IEPA Project Manager
2	Visitor and Employee Log Daily Sign-In/ Sign-Out sheets were not maintained	Required in Work Plan	Oversight by IEPA Project Manager
3	Certification of Completion of Initial, Site-Specific Health & Safety Training forms in the Health & Safety Plan were not completed by personnel working on-site	Required in Work Plan	Oversight by IEPA Project Manager

APPENDIX E

FRACTURE ANALYSIS

APPENDIX E

FRACTURE ANALYSIS

INTRODUCTION

An investigation was performed to gather information regarding the orientation, spacing, width, lateral extent, and interconnectedness of bedrock fractures in the vicinity of the Lenz Oil site. Because much of the surficial aquifer is composed of fractured limestone, fractures are undoubtedly a dominant factor that controls the ground water flow direction and velocity. The regional network of fractures is defined by data from previous investigations near the site, field investigations of outcrops around the site, and site-specific investigations of cores. This Appendix presents the methodology and results of those investigations.

GEOLOGICAL SETTING

The Lenz Oil site is located on the crest of the Kankakee Arch, near the northeastern edge of the Illinois Basin. The southeastern extent of the Sandwich Fault Zone is located approximately 23 miles southwest of the Lenz Oil site at its closest approach. Although all of these structural features are presently inactive, the local character of the bedrock has been strongly influenced by historical geological activities. For example, in the vicinity of the Lenz Oil site, the Silurian strata are nearly horizontal because the site is

on the crest of the Kankakee Arch. Joints in the brittle Silurian dolomite occur in three mutually orthogonal sets, two of which are vertical and one of which is horizontal (Nicholas and Healy, 1988). The vertical sets of joints were caused by structural deformation (i.e., the tensile stress from the subsidence of the Michigan and Illinois Basins and the uplift of the Wisconsinan and Kankakee Arches). However, the horizontal set was formed as a result of carbonate dissolution along bedding planes. According to Zeizel and others (1962), the orientation of bedrock valleys in DuPage County is controlled by these major joint sets.

PREVIOUS INVESTIGATIONS

The U.S. Geological Survey conducted research into the orientation and spacing of joint sets in the Silurian dolomite as part of their study to determine the geologic and hydrologic factors that control the migration of tritium from a closed, low-level radioactive waste disposal site, located approximately 1.5 miles southeast of the Lenz Oil site (Nicholas and Healy, 1988). The joint analyses performed by Nicholas and Healy (1988) included lineament mapping, bedrock surface mapping, and studies of joint orientations exposed in outcrops of the Silurian dolomite. The orientations of 156 vertical joints measured in two quarries were plotted on a rose diagram by using a 1-unit length per joint and grouping the joints into 5-degree sectors (Figure E-1). A total of 106 linear structural features were mapped on aerial photographs of the 25-square-mile area surrounding the low-level radioactive waste disposal site. These linear features were plotted on a rose diagram by using a 1-unit length per 1,000 feet of lineament length and grouping the lineaments into 5-degree sectors (Figure E-1). The rose diagram of the vertical joint orientations shows two orthogonal sets of joints: one set of joints with an azimuth of 40 degrees, and the other set with an azimuth of 130

degrees. The rose diagram of the lineaments reveals three major sets: two of which correspond to the vertical joint sets and one that is oriented at 20 degrees azimuth and has no apparent analogy among the vertical joint sets.

Zeizel and others (1962) and Foote (1982) have shown that the frequency and aperture of vertical joints in the vicinity of the Lenz Oil site decrease with depth below the bedrock surface. This interpretation is based on the assumption that private wells are generally set opposite the most productive portion of an aquifer, which would be the most highly fractured portion of the aquifer in the case of the Silurian dolomite. By plotting well frequency versus depth of penetration into the Silurian dolomite, Zeizel and others (1962) concluded that the upper 60 feet of the dolomite is the most productive portion of the aquifer. Although unconfirmed by direct field measurements, significant fractures probably extend at least 60 feet into the dolomite; however, this conclusion is preliminary and may not accurately describe the bedrock below the Lenz Oil site.

According to Nicholas and Healy (1988), horizontal joints along bedding planes are evident in outcrops and in borings drilled at the low-level radioactive waste disposal site. Outcrops along the northern side of the Des Plaines River Valley display prominent horizontal joints that are hundreds of feet long. Many of the joints are weathered, and some are several inches wide. Because the correlation of horizonal joints between borings at the low-level radioactive waste disposal site is excellent, the joints are likely to be continuous for at least 1,600 feet in the subsurface (Nicholas and Healy, 1988). The apertures of the subsurface horizonal joints were measured to be as wide as 2 feet. There is also evidence that many horizontal joints have been infilled with sediment ranging in size from clay to sand.

Nicholas and Healy (1988) have classified all of the horizontal joints in the area of study into two groups: subregional and regional. Joints that are areally extensive are considered regional joints; whereas joints that are located in bedrock highs and truncated at the bedrock surface are classified as subregional joints. The subregional joints are more commonly filled with glacial sediment than the regional joints. Based on their interpretation of borehole geophysical logs, Nicholas and Healy (1988) have identified major regional joints at elevations of approximately 415, 440, 525, 550, and 565 feet above sea level.

ERM-NORTH CENTRAL INVESTIGATION

As proposed in Section 5.1.9 of the Lenz Oil Remedial Investigation/Feasibility Study (RI/FS) Work Plan, Environmental Resources Management-North Central, Inc. (ERM-North Central) conducted: (1) a regional fracture analysis to independently verify the findings of previous investigations, and (2) a site-specific fracture analysis to evaluate the nature of fractures below and downgradient of the site (ERM-North Central, 1990a). These field investigations were conducted between March 16 and April 7, 1991.

ERM-North Central performed a reconnaissance of the area within approximately 1.5 miles of the site to locate outcrops of the Silurian dolomite to be used for the collection of the regional fracture data. The Des Plaines River Channel, the Chicago Sanitary and Ship Canal, the Illinois and Michigan Canal, and the Calumet Sag Channel were all investigated for bedrock exposures. Silurian dolomite outcrops were observed in many areas along these canals and channels, but many of the outcrops appeared to have been disturbed by construction activities. The best undisturbed bedrock exposures were found at or near the Sag Quarries Recreation Area in the Palos Forest Preserve (T37N,

R11E, Sections 13 and 14). This area contains abandoned quarries and extensive bedding plane exposures of the Silurian dolomite. The seven outcrops selected for collection of joint data are shown on Figure E-2.

The distribution of the 278 joint orientation measurements, which were collected from the seven outcrops, are shown on Table E-1 and Figure E-3. The orientations of the joints were plotted on rose diagrams by grouping the joints into 5-degree sectors and plotting 1-unit length per joint (Figure E-3). Information regarding the spacing, width, and continuity of the joints was also collected.

The site-specific joint data were obtained during the installation of deep monitoring wells at the site. The bedrock at the location of each deep monitoring well was cored by using an NX rock coring system. After the rock coring was completed at each boring, the core was logged by an ERM-North Central geologist according to the methods described in Section 5.1 of the Sampling and Analysis Plan (ERM-North Central, 1990b). The depth, thickness, and apparent angle of each bedrock fracture were noted on the boring logs, and a summary presentation of all of the fracture data was prepared to permit an interpretation of the nature and extent of the fractures (Figure E-4).

The rose diagram of all of the regional joint measurements taken by ERM-North Central (Figure E-3) shows three discrete sets of joints: (1) a primary set exhibiting an average azimuth of 132-degree, (2) a secondary set exhibiting an average azimuth of 47-degree, and (3) a tertiary set exhibiting an average azimuth of 25-degree. Although these results closely approximate the results of Nicholas and Healy (1988), ERM-North Central's data show a bimodal distribution of the primary joint set orientations (Figure E-3a). The joint sets exhibit two prominent orientation nodes, one at 115-degree to 125-degree and the other at 130-degree to 140-degree.

Because the bimodal distribution may be a result of construction activities along the Calumet Sag Channel, ERM-North Central separated these data into two groups: (1) measurements collected near the channel (i.e., Outcrops #1 through #5) and measurements collected away from the channel (i.e., Outcrops #6 and #7). The measurement data from each group were tabulated (Table E-1) and plotted on rose diagrams (Figures E-3b and E-3c). The primary joint set measurements taken from outcrops near the channel (Figure E-3b) show the same bimodal distribution as the entire data set (Figure E-3a). However, the primary joint set data collected from the outcrops away from the channel form a single node at 130-degree to 150-degree (Figure E-3c). This suggests that joints exhibiting an orientation of 115-degree to 125-degrees are only found along the Calumet Sag Channel and, thus, may be artifacts of blasting and construction along the channel and not representative of natural conditions. The joint orientation data from outcrops away from the channel (Figure E-3c) are the least likely to have been affected by man-made causes and, thus, are considered the most representative of the regional vertical joint orientation patterns. These data suggest the presence of: (1) a primary joint set with an average azimuth of 135 degree, (2) a secondary joint set oriented at right angles to the primary joint set with an average azimuth of 45 degree, and (3) a minor tertiary joint set with an average azimuth of 20 degree. These results are very similar to the vertical joint orientation results reported by Nicholas and Healy (1988).

Because no information regarding the spacing and width of the vertical joints was found in the published literature, ERM-North Central collected these measurements from the previously described seven outcrops. The width (or aperture) of the primary and secondary joints varies from tightly closed to approximately 4 inches, and the exposed joints are generally wider than the unexposed joints, as a result of weathering. The spacing for the primary joints ranges from 0.5 to 36 inches and averages approximately

12 inches. The spacing for the secondary joints ranges from 8 to 24 inches and averages approximately 14 inches. The length and depth of the joints could not be accurately discerned because of limited bedrock exposure. Where present, the tertiary joints are prominent and laterally extensive, but they were infrequently observed.

The site-specific fracture data from the borings (Figure E-4) revealed the presence of several discrete fracture zones that can be correlated between cores. The shallowest fracture zone occurs in borings MW-3D, MW-6D, and G106DR at an average elevation of 587 feet. This fracture zone ranges from 0.5 to 1.4 feet in thickness and is composed primarily of horizontal fractures. Because the top of the bedrock is below 587 feet at the other boring locations, this fracture zone does not appear in the other cores.

The next major fracture series occurs in the cores from MW-3D, MW-4D, MW-6D, and possibly MW-7D and G106DR. This fracture zone varies in thickness from 0.3 to 0.8 of a foot and is composed of a combination of horizontal and high-angle fractures. Because the rock quality in MW-7D and G106DR is very poor at the elevation of this fracture series, positive identification of the fracture series in these cores was not possible.

At an elevation of 574 feet, a minor fracture zone was identified in three of the six cores that intersected this elevation. The fracture zone was apparent in borings MW-4D, MW-5D, and MW-6D at a thickness of 0.6 to 1.2 feet. Although the fracture zone is not obvious in boring MW-3D, four horizontal bedding planes were logged at the same elevation in boring MW-3D. Because weathered rubble was present in boring MW-7D and G106DR at an elevation of 574 feet, the fracture zone could not be identified.

A major fracture zone with a thickness between 1.0 and 2.8 feet was also encountered at an elevation between 568 and 571 feet in all of the cores, except MW-3D. However, three horizontal fractures are present in the MW-3D core at this elevation. This fracture zone probably represents one of the major regional fracture zones identified by Nicholas and Healy (1988), who reported the presence of a major horizontal fracture zone at an elevation of 565 feet.

The deepest set of major horizontal and vertical fractures that was observed during the RI is located at an elevation of 562 to 563 feet. This fracture zone, which was identified in cores from MW-1D, MW-3D, MW-4D, and MW-5D, is composed primarily of high-angle fractures with thicknesses that range from 1.1 to 1.7 feet.

As shown on Figure E-4, minor fracture zones occur at elevations of 551, 555, and 559 feet. These minor fracture zones are generally thin and not as laterally persistent as the major fracture zones.

TABLE E-1

VERTICAL JOINT ORIENTATION DATA
LEMONT, ILLINOIS AREA
(Page 1 of 3)

Joint Azimuth Degree	All Outcrops	Outcrops #1-#5 (1)	Outcrops #6 and #7 (2)
0-5	1	1	0
5-10	1	1	0
10-15	3	2	1
15-20	3	1	2
20-25	5	3	2
25-30	2	2	0
30-35	3	2	1
35-40	4	3	1
40-45	11	6	5
45-50	24	15	9
50-55	20	15	5
55-60	19	16	3
60-65	6	5	1
65-70	1	1	0

TABLE E-1

VERTICAL JOINT ORIENTATION DATA
LEMONT, ILLINOIS AREA
(Page 2 of 3)

Joint Azimuth Degree	All Outcrops	Outcrops #1-#5 (1)	Outcrops #6 and #7 (2)
70-75	1	0	1
75-80	0	0	0
80-85	1	1	0
85-90	0	0	0
90-100	2	2	0
100-105	1	1	0
105-110	2	2	0
110-115	5	4	1
115-120	5	4	1
120-125	19	14	5
125-130	23	15	8
130-135	17	8	9
135-140	29	12	17
140-145	29	11	18

TABLE E-1

VERTICAL JOINT ORIENTATION DATA
LEMONT, ILLINOIS AREA
(Page 3 of 3)

Joint Azimuth Degree	All Outcrops	Outcrops #1-#5 [1]	Outcrops #6 and #7 [2]
145-150	24	12	12
150-155	7	3	4
155-160	5	3	2
160-165	1	1	0
165-170	1	0	1
170-175	0	0	0
175-180	3	2	2
Total	278	167	111

Notes:

(1) Outcrops #1 through #5 are located near the Calumet Sag Channel and may have been disturbed by construction activities.

(2) Outcrops #6 and #7 are located away from the Calumet Sag Channel and are probably undisturbed.

PROJECT	REPORT	DRAWN	CHECKED	DATE	APPROVED
0252	TM1	MO		10/8/92	

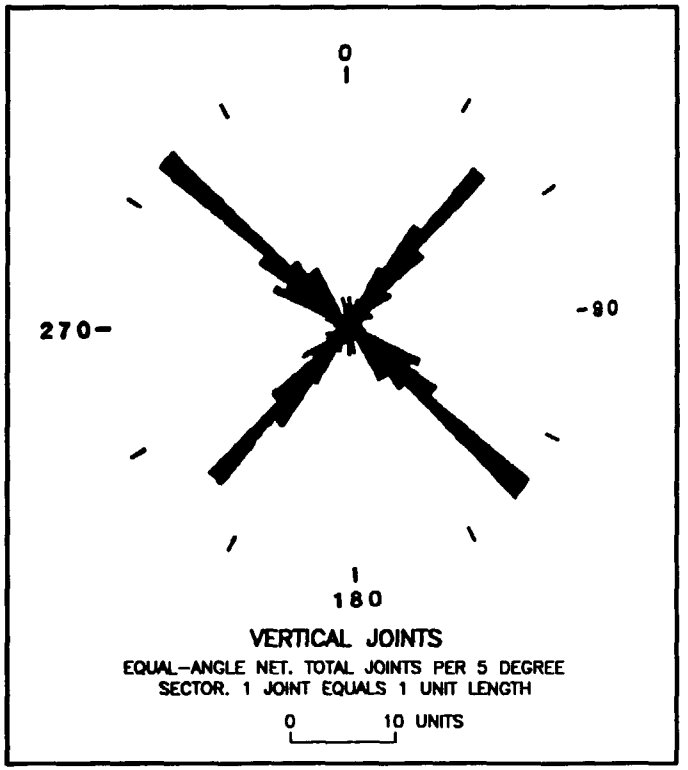

A

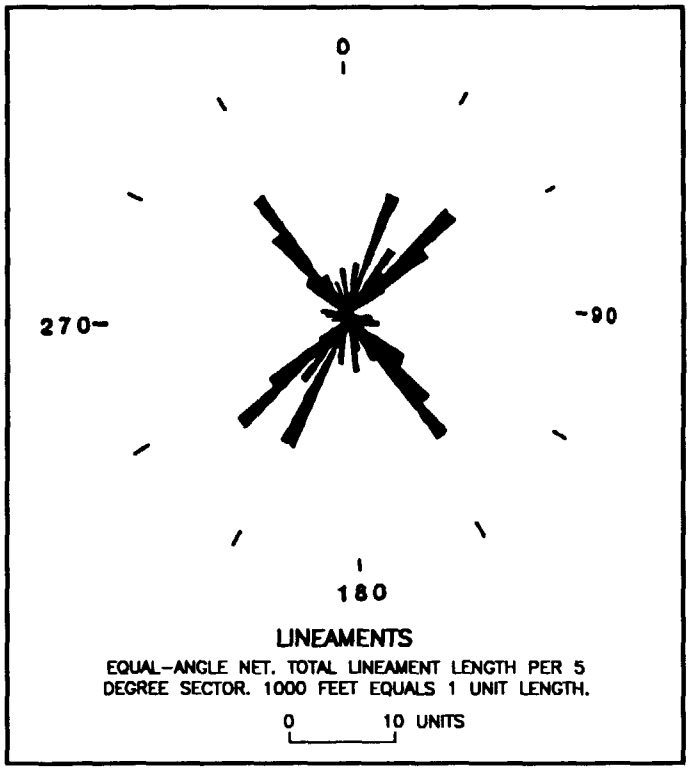

B

NOTE: ORIENTATIONS ARE IN DEGREES AZIMUTH; ZERO DEGREES IS TRUE NORTH. MODIFIED FROM NICHOLAS AND HEALY (1988).

FIGURE E-1

UNITED STATES GEOLOGICAL SURVEY VERTICAL JOINT AND LINEAMENT ORIENTATION DATA LEMONT, ILLINOIS AREA

ERM

SDMS US EPA REGION V

COLOR-RESOLUTION - 2

IMAGERY INSERT FORM

The following page(s) of this document include color or resolution variations. Unless otherwise noted, these pages are available in monochrome. The original document is available for viewing at the Superfund Records Center.

SITE NAME	LENZ OIL
DOC ID #	161203
DESCRIPTION OF ITEM(S)	OUTCROP LOCATION MAP FIGURE E-2
PRP	RMD
DOCUMENT VARIATION	_X_ COLOR OR _X_ RESOLUTION
DATE OF ITEM(S)	10/16/92
NO. OF ITEMS	1
PHASE	REM
OPERABLE UNITS	
PHASE (AR DOCUMENTS ONLY)	____ Remedial ____ Removal ____ Deletion Docket ____Original ____ Update # ____ Volume ____ of ___
COMMENT(S)	

SAG BRIDGE QUADRANGLE
ILLINOIS
7.5 MINUTE SERIES (TOPOGRAPHIC)
1963
PHOTOREVISED 1973
PHOTOINSPECTED 1978

N
W E
S

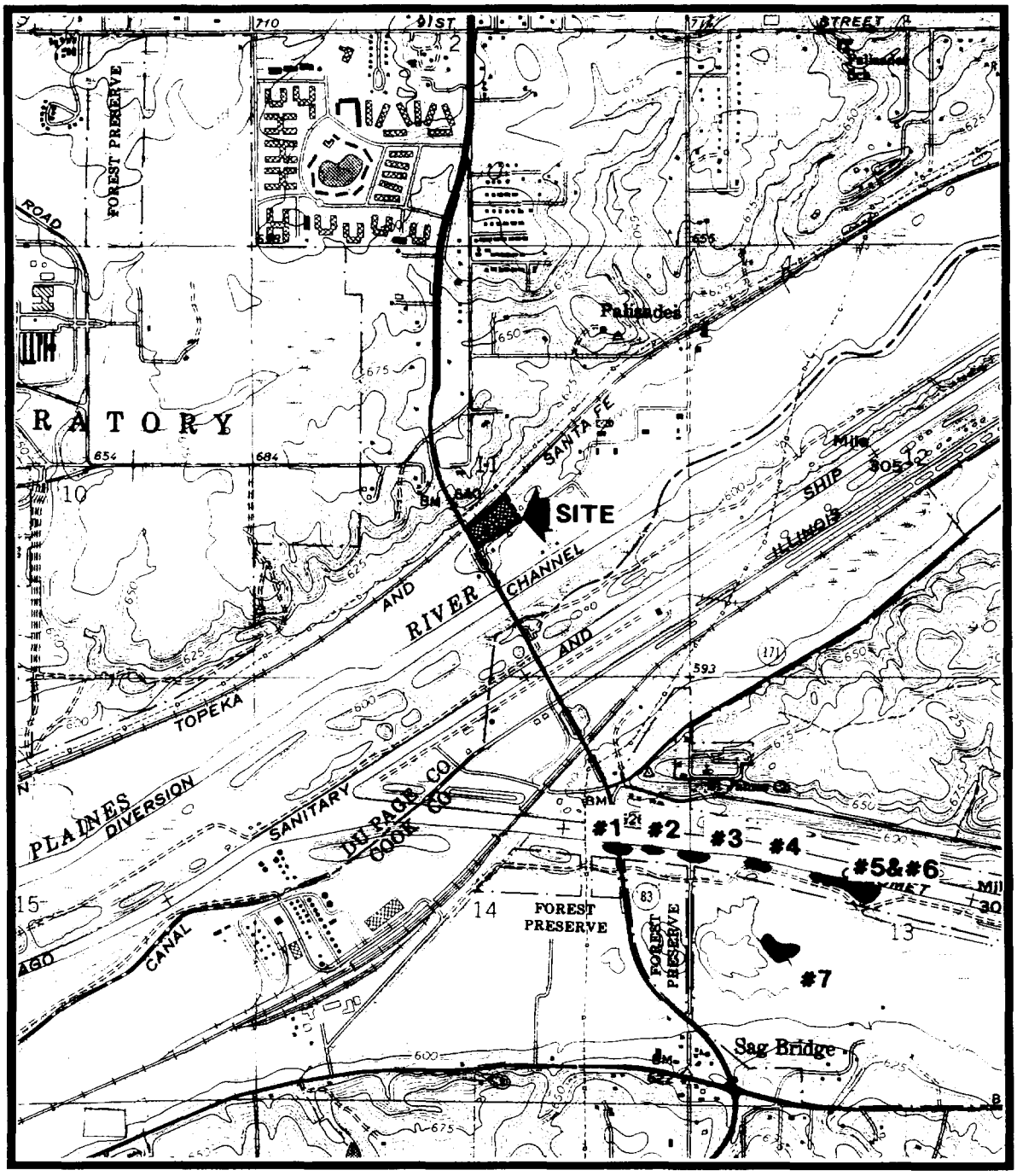

SCALE 1:24000

1 .5 0 1 MILE

CONTOUR INTERVAL 5 FEET

FIGURE E-2

OUTCROP LOCATION MAP
LENZ OIL SITE
LEMONT, ILLINOIS

SYMBOL LEGEND:
OUTCROP USED FOR JOINT MEASUREMENTS

ERM

PROJECT:	0252-7
REPORT:	RI
DRAWN:	BLAS-
CHECKED:	
DATE:	10/14/92
APPROVED:	
CLIENT NAME:	LENZ OIL

PROJECT	REPORT	DRAWN	CHECKED	DATE	APPROVED
0252	TM1	MO		10/8/92	

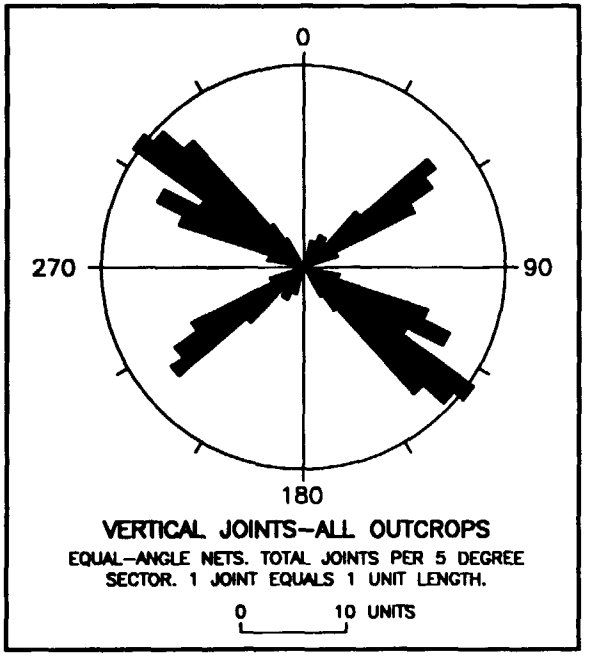

A

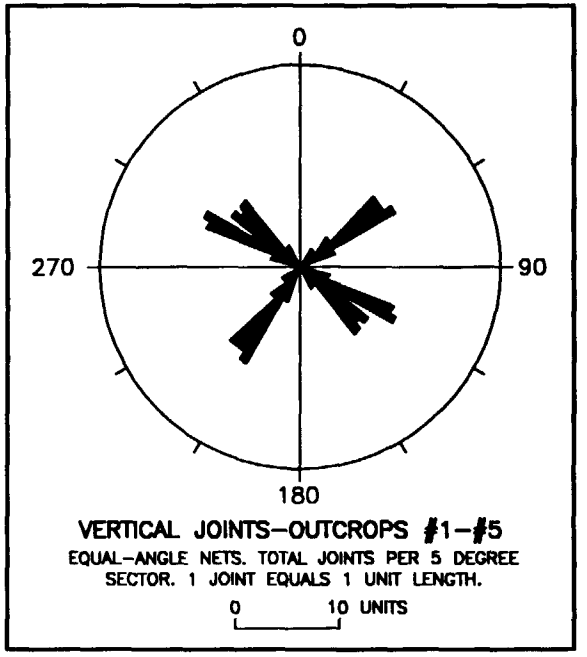

B

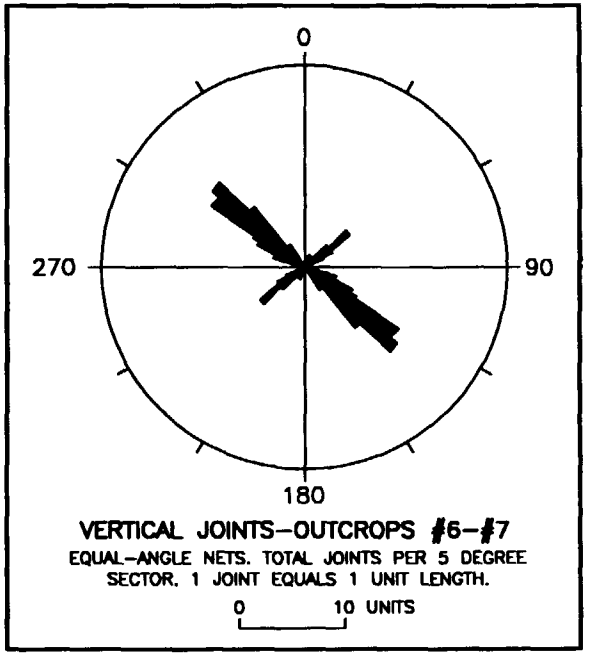

C

NOTE: ORIENTATIONS ARE IN DEGREES AZIMUTH.
ZERO DEGREES IS TRUE NORTH.

FIGURE E-3

ERM-NORTH CENTRAL, INC., VERTICAL JOINT ORIENTATION DATA
LEMONT, ILLINOIS AREA

ERM

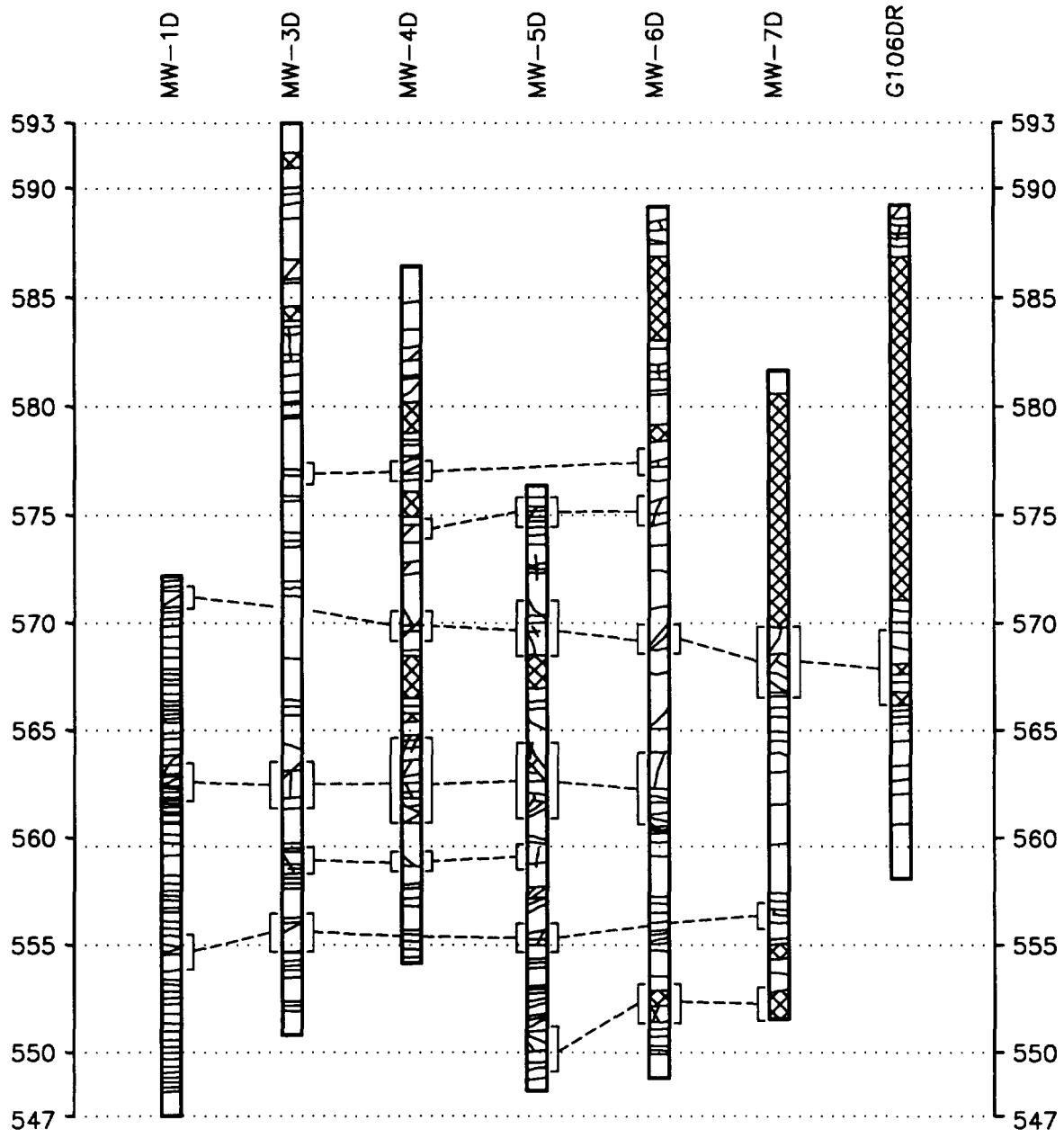

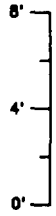

VERTICAL SCALE: 1 INCH=8 FEET
UNITS IN FEET ABOVE MEAN SEA LEVEL

SYMBOL LEGEND:

- HORIZONTAL FRACTURES
- HIGH ANGLE FRACTURES
- RUBBLY ZONE
- CORRELATED FRACTURE ZONE

FIGURE E-4

SITE-SPECIFIC FRACTURE DATA
LENZ OIL SITE
LEMONT, ILLINOIS

ERM

CLIENT NAME	LENZ OIL
APPROVED	
DATE	10/14/92
CHECKED	
DRAWN	MO
REPORT	RI
PROJECT	0252-7

APPENDIX F

SOIL BORING LOGS

IEPA PHASE I SOIL BORING LOGS

Illinois Environmental Protection Agency — Field Boring Log — Page 1 of 1

Site File No 0438020003 County DuPage Boring No SB-01 Monitor Well No 11A

Site File Name Lemont / Lenz Oil Service Inc Surface Elev ____ Completion Depth 12.5

Fed ID No ____ Auger Depth 12.5 Rotary Depth N

Quadrangle SAG Bridge Sec. 11 T 37N R 11E Date: Start 1-16-91 Finish 1-16-91

Boring Location see site map

Drilling Equipment CME 75 3 3/4" HSA 5 ft. Continuous Sampler (CS)

Personnel: G - Sherri Otto; D - Paul Mason; H - Bob Marks Jr.; H - Bill Walkenbach

Elev.	DESCRIPTION	Depth in feet	Sample No	Sample Type	Sample Recovery	Penetrometer	N Values (Blows)	OVA or HNU readings	REMARKS
	0-2.5 Sand, Gravel Fill material Sample Time 11:50 VOA (2) 2oz. Amber PCBs/Pest (1) 32oz " Metals/CN (1) 32oz	0-2	SB-01 0-5 ft.	CS	2				OVA 3.2 HNu 0
	2.5-5.0 Sand, Gravel Fill Material	2-5		CS	1.35				OVA >1,000 HNu 0
	5.0-7.5 Black and Gray ~~clay~~ Silt with some clay and gravel Sample Time 12:26 p.m. VOA (2) 2oz. amber PCBs/Pest. (1) 32oz. Metals/CN (1) 32oz.	5-7	SB-01-5-7.5 ft.	CS	3.1				OVA > 1,000 HNu 0
	7.5-9.5 Black and Gray Silt with water Mostly water. Sheen on water	7-9	NA	CS	.4				OVA 100
	9.5-12.5 Gray Weathered Dolomite Sandy layer just above bedrock Sample Time 12:54 VOA (2) 2oz amber PCB/Pest (1) 32oz Metals/CN (1) 32oz.	9-12	SB-01-9.5-12.5	CS	2.8				OVA 400
	Boring Completed at 12.5	12-14							

Illinois Environmental Protection Agency — Field Boring Log — Page ___ of ___

Site File No 0438080003 County DuPage Boring No SB-02 Monitor Well No ___

Site File Name Lemont / Lenz Oil Service Inc. Surface Elev ___ Completion Depth 8.7

Fed ID No ___ Auger Depth 8.7 Rotary Depth N/A

Quadrangle SAG Bridge Sec. 11 T 37N R 11E Date: Start 1-16-91 Finish 1-16-91

Boring Location See site map

Drilling Equipment CME 75 3 3/4 inch HSA

Personnel: G - S. Oddo; D - P. Mason; H - R. Mathis Jr; H - C. Walterbach

Elev.	DESCRIPTION	Depth in feet	Sample No	Sample Type	Sample Recovery	Penetrometer	N Values (Blows)	OVA or HNU readings	REMARKS
	0-2.5 Concrete in sample above Gravel and Cement Fill Material Sample Time 3:24 1524 CST VOA (2) 2oz BNA/Pest (1) 32oz. Metals/CN (1) 32oz	1 2	SB-02 0-4.5	CS	2.2				HNu 0 OVA not operable
	2.5-4.5 Brown - Lt Brown Silt and Gravel Fill Material	3 4		CS	1.2				HNu 0 OVA Not operable
	4.5-5.6 Gray Sandy Silt 5.6-6.3 Black Oily clayey Silt 6.3-7.5 Black Oily silt Sample Time 1540 CST VOA (2) 2oz. BNA/Pest (1) 32oz. Metals/CN (1) 32oz.	5 6 7	SB-02 4.5-7.5	CS	2.3				Arborhide OVA 40. At sample OVA >1000
	7.5-8.7 Top 0.2 ft. sand Black clayey Silt Bottom 1.0 ft. Black Peat Bedrock at 8.7 ft.	8	SB-02 7.5-8.7	CS	2.4				OVA at sample shoe 700 OVA at head of sample >1000
	Boring Completed at 8.7	9 10							
	Sample SB-02 - 7.5-8.7 Sample Time 1555 CST VOA (2) 2oz. BNA/Pest. (1) 32oz Metal/CN (1) 32oz.	11 12 13							

Illinois Environmental Protection Agency — Field Boring Log

Site File No 0438020003 County Du Page Boring No SB-03 Monitor Well No NA

Site File Name Lement / Kenz Oil Surface Elev. _____ Completion Depth 2.5

Fed. ID No _____ Auger Depth 2.5 Rotary Depth N

Quadrangle SAG Bridge Sec. 11 T 37N R 11E Date Start 1-16-91 Finish 1-16-91

Boring Location See site map

Drilling Equipment CME 75 3 3/4 inch HSA

Personnel: G - S. Otto; D - P. Mason; H - B. Mathis; H - B. Waltenbach

Elev.	DESCRIPTION	Depth in feet	Sample No	Sample Type	Sample Recovery	Penetrometer	N Values (Blows)	OVA or HNU readings	REMARKS
	0-2.5 Black Sandy Gravel Fill Material Sample Time 1640 CST VOA (2) 2oz. BNA/Pest. (1) 32oz. Metal/CN (1) 32oz Bedrock at 2.5	1 2	SB-03 0-2.5	CS	1.7				OVA at Sample Shoe 71000
	Boring Completed at 2.5	3 4 5 6 7 8 9 10							

Site File No 0438020003 County DuPage Boring No SB-04 Monitor Well No NA

Site File Name Lemont Lenz Oil Services Inc Surface Elev _____ Completion Depth 5.0

Fed ID No _____ Auger Depth 5.0 Rotary Depth NA

Quadrangle SAG Bridge Sec. 11 T 37N. R 11E. Date Start 2/4/91 Finish 2/4/91

Boring Location See site map

Drilling Equipment CME 75 3 3/4" HSA 5' Continuous Sampler (CS)

Personnel: G - S. Otto; D - P. Mason; H - B. Mathis Jr.; H - B. Walkenbach

Elev.	DESCRIPTION	Depth in feet	Sample No	Sample Type	Sample Recovery	Penetrometer	N Values (Blows)	OVA or HNU readings	REMARKS
	0-2.5 Black sand, gravel, Ash. Top 0.5 frozen Sample Time 1804 CST Metals/CN (1) 32oz bottle TCLP (1) 32oz.	1, 2	SB-04 0-2.5	CS	1.85				OVA at augers 4 HNu ND OVA at shoe 15 HNu ND OVA at head 5
	2.5-5.0 Black sand, gravel, Ash Sample Time 1816 CST Metals/CN (1) 32oz bottle TCLP (1) 32oz.	3, 4, 5	SB-04 2.5-5.0	CS	0.65				OVA at augers 2 HNu ND OVA at shoe 150 HNu 1 OVA at head 9 HNu ND
		6, 7, 8, 9, 10, 11, 12, 13							HNu 11.7 bamp

Illinois Environmental Protection Agency

Field Boring Log

Site File No 0438020003 County Du Page Boring No SB-05 Monitor Well No NA

Site File Name Lemont Lenz Oil Services Inc. Surface Elev _____ Completion Depth _____

Fed ID No _____ Auger Depth _____ Rotary Depth _____

Quadrangle SAG Bridge Sec. 11 T 37N R 11E Date: Start 2/4/91 Finish 2/4/91

Boring Location See site map

Drilling Equipment CME 75 3 3/4" HSA
5 ft continuous sampler (CS)

Personnel
G - S. Otto
D - P. Mason
H - B. Mathis Jr
H - B. Walkenbach

Elev.	DESCRIPTION	Depth in feet	Sample No	Sample Type	Sample Recovery	Penetrometer	N Values (Blows)	OVA w HNU readings	REMARKS
	0-4.7 Black sand, gravel Ash with a piece of black plastic Sample Time 1706 CST Metals/CN (1) 32oz. TCLP (1) 32oz.	1 2 3 4	SB-05 2.5-4.7	CS	2.25				OVA at augers Not work OVA at sample shoe 1 HNu 110 OVA at sample head HNu 110
	5.0-8.5 At 1.3 ft. from top of sample, black plastic. Above 1.3 ft black, sand, gravel, Ash. Gray dolomite in shoe of sampler Sample Time 1724 CST VOA (2) 2oz. BNA/Pest. (1) 32oz Metals/CN (1) 32oz. TCLP (1) 32oz.	5 6 7 8 9 10	SB-05 5.0-8.5	CS	1.3				OVA at shoe HNu 10 OVA at head 39 HNu 2
	Bed rock at 8.5 feet	11							HNu 11.7 Lamp
	* 1/2 bucket of bentonite pellets was placed in the bottom of the boring before backfilling hole with cuttings.								

Site File No 0438020003 County DuPage Boring No SB-06 Monitor Well No NA

Site File Name Lemont Lenz Oil Services Inc. Surface Elev _____ Completion Depth 8.7

Fed ID No _____ Auger Depth 8.7 Rotary Depth NA

Quadrangle SAG Bridge Sec. 11 T 37N R 11E Date Start 2-5-91 Finish 2-5-91

Boring Location see site map

Drilling Equipment CME 75 3 3/4" HSA
5' continuous sampler (CS)

Personnel
G - S Otto
D - P. Mason
H - B Mathis Jr.
H - B. Walkenback

Elev.	DESCRIPTION	Depth in feet	Sample No	Sample Type	Sample Recovery	Penetrometer	N Values (blows)	OVA or HNU readings	REMARKS
	0-5 Black sand gravel Ash Sample SB-06 2.5-5.0 Time 937 Metals / CN (1) 32oz bottle TCLP (1) 32oz. Also took 1 set of duplicate samples	1 2 3 4 5	SB-06 2.5-5.0	CS	1.5				OVA at augers 6.4 OVA at sample stoc 10 HNu 3 OVA at head NO HNu NO
	5-8.7 Dark brown Ash above 8 ft. At 8 ft. black plastic from 8-8.7 strong petro odor. sheen on sample Mostly clayey silt with pieces of wire, Fill Mat. Sample SB-06 5-8.7 Time 948 VOA (2) 2oz bottles BNA/Pest. (1) 32oz. Metals /CN (1) 32oz. TCLP (1) 32oz. Bedrock at 8.7	6 7 8 9 10 11	SB-06 5.0-8.7	CS	1.6				OVA at augers >1000 HNu NO OVA at sample stoc >1000 OVA at head 37 HNu used 11.7 lamp
	Note. Placed 1/2 bucket of bentonite pellets into bottom of boring before backfilling hole with cuttings								

Illinois Environmental Protection Agency — **Field Boring Log** — Page 1 of 1

Site File No. 043802C003 County DuPage Boring No. SB-07 Monitor Well No. NA

Site File Name Lemont Lenz Oil Services Inc. Surface Elev _____ Completion Depth 5

Fed. ID No. _____ Auger Depth 9.0 Rotary Depth NA

Quadrangle Sag Bridge Sec. 11 T. 37N R 11E Date: Start 2-4-91 Finish 2-4-91

Boring Location see site map

Drilling Equipment CME 75 3 3/4 inch HSA

Personnel: G - S. Otto; D - P. Mason; H - B. Mathis Jr; H - B. Walkenbac

Elev.	DESCRIPTION	Depth in feet	Sample No	Sample Type	Sample Recovery	Penetrometer	N Values (Blows)	OVA or HNU readings	REMARKS
	0-5 Black sand and gravel, Ash Rig chatter	1							OVA at augers: 3 HNu NO
		2							OVA at shoe 7 HNu 10
	2.5-5.0 Sample Time 1617 CST Metals/CN (1) 32g. TCLP (1) 32g.	3	SB-07 2.5-5.0	CS	1.6				OVA at head NO HNu NO
		4							
		5							
	5.0-9 Black sand, gravel Ash Black plastic in shoe of sampler. While drilling, load rig chatter at 8 feet. Sample Time 1630 CST VOA (2) 2g. BNA/Pest. (1) 32g. Metals/CN (1) 32g. TCLP (1) 32g.	6	SB-07 5.0-9.0	CS	2.17				OVA at augers [illegible] OVA at shoe 8[illegible] HNu 90
		7							lled augers cu[illegible] hole had >10[illegible]
		8							on OVA at boreho[illegible] HNu 60.
		9							
		10							
		11							HNu 11.7 lamp

Site File No CW3020003 County DuPage Boring No SB-08 Monitor Well No NA

Site File Name Lemont Lenz Oil Services Inc. Surface Elev _____ Completion Depth 5.0

Fed ID No _____ Auger Depth 5.0 Rotary Depth NA

Quadrangle SAG Bridge Sec. 11 T 37N R 11E Date Start 2-5-91 Finish 2-5-91

Boring Location see site map

Drilling Equipment CME 75 3 3/4" HSA
CME 5' Continuous Sampler (CS)

Personnel: G - S. Otto; D - P. Mason; H - B. Mathis Sr; H - B. Walkenbach

Elev.	DESCRIPTION	Depth in feet	Sample No	Sample Type	Sample Recovery	Penetrometer	N Values (Blows)	OVA or HNU readings	REMARKS
	0-2.5 Dark brown sand, gravel, silt Ash with pieces of black plastic Sample Time 9:03 CST Metals /CN (1) 32oz. bottle TCLP (1) 32oz. bottle	1 2	SB-08 0-2.5'	CS	1.8				OVA at augers 10 OVA at sample shoe 20 HNu 18 HNu at head NO
	2.5-5.0 Dark brown sand, gravel, silt, Ash, Fill Mat. Sample Time 9:05 CST Metals /CN (1) 32oz. bottle TCLP (1) 32oz.	3 4 5	SB-08 2.5-5.0	CS	1.9				OVA at augers 62 HNu .6 OVA at sample head 10 HNu NO OVA at shoe 720 HNu 3
		6 7 8							HNu used 11.7 lamp

Illinois Environmental Protection Agency — Field Boring Log — Page 1 of 1

Site File No 0438020003 County Du Page Boring No SB-09 Monitor Well No NL

Site File Name Lemont Lenz Oil Services Inc. Surface Elev _____ Completion Depth 7.0

Fed ID No _____ Auger Depth 7.0 Rotary Depth NL

Quadrangle SAG Bridge Sec. 11 T 37N R 11E Date Start 2-5-91 Finish 2-5-91

Boring Location see site map

Drilling Equipment CME 75 3¼" HSA 5' Continuous Sampler (CS)

Personnel: G. S. Ortto; D. P. Mason; H. B. Mathis Sr.; H. B. Walker back

Elev.	DESCRIPTION	Depth in feet	Sample No	Sample Type	Sample Recovery	Penetrometer	N Values (Blows)	OVA or HNU readings	REMARKS
	0-5 Dark brown sand gravel Ash Sample SB-09 2.5-5.0 Time 1050 Metals/CN (1) 32oz bottle TCLP (1) 32oz.	1 2 3 4	SB-09 2.5-5.0	CS	1.5				OVA at augers 78 HNu ND OVA at shoe 650 HNu ND OVA at head .5 HNu ND
	5-7 Dark gray silt with trace gravel. Sample SB-09 5-7 Time 1056 VOA (2) 2oz bottles BNA/Pest. (1) 32oz. Metals/CN (1) 32oz TCLP (1) 32oz.	5 6 7 8 9 10 11	SB-09 5-7	CS	1.8				OVA at augers HNu 1.5 OVA at shoe >1000 HNu 1.0 OVA at head 48 HNu 11.7 temp

Illinois Environmental Protection Agency — Field Boring Log — Page 1 of 1

Site File No 0438020003 County DuPage Boring No SB-10 Monitor Well No NP

Site File Name Lemont Lenz Oil Services Inc. Surface Elev _____ Completion Depth 5.0

Fed ID No _____ Auger Depth 5.0 Rotary Depth 1.0

Quadrangle SAG Bridge Sec. 11 T. 37N R 11E Date: Start 2-4-91 Finish 2-4-91

Boring Location see site map

Drilling Equipment CME 75 3 3/4 inch HSA

Personnel: G - S. Otto; D - P. Nason; H - B. Marbis Jr.; H - B. Walkowiak

Elev.	DESCRIPTION	Depth in feet	Sample No	Sample Type	Sample Recovery	Penetrometer	N Values (Blows)	OVA or HNU readings	REMARKS
	0-2.5 Dark brown silty sludge bottom .4 gravel. Top .5 frozen Sample Time 1551 Metals/CN (1) 32oz. TCLP (1) 32 oz.	1, 2	SB-10 0-2.5	CS	2.1				OVA at augers 1.0 HNU (11.7 lamp) 2 OVA at shoe 4 OVA at head 2.2
	2.5-5.0 Black sand, gravel, Ash Sample Time 1600 CST Metals/CN (1) 32oz. TCLP (1) 32oz.	3, 4	SB-10 2.5-5.0	CS	1.8				OVA at augers >100 HNU 15 OVA at shoe 20 HNU 2 OVA at head ND HNU ND
		5, 6, 7, 8, 9, 10							HNU 11.7 lamp

Illinois Environmental Protection Agency — Field Boring Log — Page 1 of 1

Site File No: 1438020003 — County: DuPage — Boring No: SB-11 — Monitor Well No: NA

Site File Name: Lemont Lenz Oil Services Inc. — Surface Elev: ____ — Completion Depth: 5.0

Fed ID No: ____ — Auger Depth: 5.0 — Rotary Depth: NA

Quadrangle: SAG Bridge — Sec. 11 — T 37N. — R 11E — Date: Start 2-5-91 — Finish 2-5-91

Boring Location: see site map

Drilling Equipment: CME 75 3 3/4" HSA, 5' Continuous Sampler (CS)

Personnel: G - S. Otto; D - P. Mason; H - B. Mathis Jr.; H - B. Walkenbach

Elev	DESCRIPTION	Depth in feet	Sample No	Sample Type	Sample Recovery	Penetrometer	N Values (Blows)	OVA or HNU readings	REMARKS
	0-2.5 Dark brown sand, gravel, silt. Sample Time 828. Metals/CN (1) 32oz jar. TCLP (1) 32oz.	1, 2	SB-11 0-2.5	CS	1.35				OVA at augers 20; OVA at sample shoe >1000; HNu at shoe 10; OVA at head 1; HNu NO
	2.5-5.0 Dark brown sand, gravel, silt with pieces of black plastic. Sample Time 835. Metals/CN (1) 32oz. TCLP (1) 32oz.	3, 4	SB-11 2.5-5.0	CS	1.0				OVA at augers 900; HNu 10.5; OVA at sample shoe >1000; HNu 50; OVA at head 100; HNu NO.
		5, 6, 7, 8, 9, 10							HNu 11.7 lamp

Site File No 0438020003 County DuPage Boring No SB-12 Monitor Well No NA

Site File Name Lemont Lenz Oil Services Inc. Surface Elev _____ Completion Depth 8.0

Fed ID No _____ Auger Depth 8.0 Rotary Depth NA

Quadrangle SAG Bridge Sec. 11 T 37N. R 11E Date. Start 2-5-91 Finish 2-5-91

Boring Location see site map

Drilling Equipment CME 75 3 3/4" HSA
5' Continuous Sampler (CS)

Personnel: G - S. Otto; D - P. Mason; H - B. Mathis Jr.; H - B. Walkenbach

Elev	DESCRIPTION	Depth in feet	Sample No	Sample Type	Sample Recovery	Penetrometer	N Values (Blows)	OVA or HNU readings	REMARKS
	0-5 Dark Brown gravel, silt Fill Mat. Sample 2.5-5.0 Time 1120 Metals / CN (1) 32oz Bottle TCLP (1) 32oz.	1, 2, 3, 4	SB-12 2.5-5.0	CS					OVA at augers 100; HNu .5; OVA at shoe 100; HNu .5; OVA at head .6; HNu NO
	5-8.0 Dark brown gravel, silt Fill Mat. Very strong odors, white smoke from inside H.S Augers. Bedrock at 7.0	5, 6, 7		CS	0.9				OVA at augers >100; HNu 40; OVA at shoe 900; HNu 154; OVA at head >100
	Jim Janssen moved SB-12 because this was not inside the excavated area.	8, 9, 10							HNu 11.7 lamp
	New SB-12 location 73 1/2 ft from SB-11 to New SB-12; 74 ft from SB-18 to New SB-12								

Illinois Environmental Protection Agency — Field Boring Log — Page 1 of 1

Site File No 0438020003 County DuPage Boring No New SB-12 Monitor Well No NA

Site File Name Lemont Lenz Oil Services Inc. Surface Elev _____ Completion Depth 2.8

Feed ID No _____ Auger Depth 2.8 Rotary Depth N

Quadrangle SAG Bridge Sec. 11 T 37N R 11E Date: Start 2-5-91 Finish 2-5-91

Boring Location see site map 73 1/2 ft. from SB-11
74 ft. from SB-18

Drilling Equipment CME 75 3 3/4" HSA
5' continuous sampler (CS)

Personnel: G - S. Otto; D - P. Mason; H - B. Mathis Jr.; H - B. Walkenbach

Elev	DESCRIPTION	Depth in feet	Sample No	Sample Type	Sample Recovery	Penetrometer	N Values (Blows)	OVA or HNU readings	REMARKS
	0-2.8 Dark brown gravel		SB-12 0-2.8						OVA auger >1000
	Auger refusal at 2.8	1							HNu 11.5
	SB-12 0-2.8 Time 1507	2		CS	1.1				
	VOA (2) 2 oz bottles								
	BNA/Pest (1) 32 oz	3							
	Metals/CN (1) 32 oz								
	TCLP (1) 32 oz.	4							HNu 11.7 bump

Site File No C43802CCC3 County DuPage Boring No SB-13 Monitor Well No NA

Site File Name Lemont Lenz Oil Services Inc. Surface Elev _____ Completion Depth 1.7

Fed ID No _____ Auger Depth 1.7 Rotary Depth NA

Quadrangle SAG Bridge Sec. 11 T 37N R 11E Date Start 2-6-91 Finish 2-6-91

Boring Location see site map

Drilling Equipment CME 75 3 3/4 inch HSA 5' Continuous Sampler (CS)

Elev	DESCRIPTION	Depth in feet	Sample No	Sample Type	Sample Recovery	Penetrometer	N Values (Blows)	OVA or HNU readings	REMARKS
	0-1.7 Augers locked up due to concrete and metal Fill Material. Sample Time 1010 VOA (2) 2oz bottles BNA/Pest. (1) 32oz Metals/CN (1) 32oz.	1	SB13 0-2.7	CS	1.1				
		2							
		3							
		4							

Personnel
G - S Otto
D - P. Mason
H - B. Mathis Jr.
H - B. Walkenbach

Illinois Environmental Protection Agency — **Field Boring Log** — Page 1 of 1

Site File No. 0438020003 County Du Page Boring No. SB-14 Monitor Well No NA

Site File Name Lemont Lenz Oil Service Inc. Surface Elev _____ Completion Depth 4

Fed ID No _____ Auger Depth 4.5 Rotary Depth _____

Quadrangle SAG Bridge Sec. 11 T. 37N R 11E Date: Start 1-29-91 Finish 1-29-91

Boring Location see site map

Drilling Equipment CME 75 3 3/4 inch HSA

Personnel: G - S Otto; D - P. Mason; H - A. Mathis Jr.; H - B. Walkenbach

Elev.	DESCRIPTION	Depth in feet	Sample No	Sample Type	Sample Recovery	Penetrometer	N Values (Blows)	OVA or HNU readings	REMARKS
	0-2.5 Fill Material Gravel, metal wire, black visqueen	1, 2	SB-14 0-4.5	CS	2.08				OVA at augers >100; HNU at augers 3; OVA at shoe >1000
	2.5-4.5 Dark brown silt, sand and Gravel At 3.9 Bedrock, gray dolomite	3, 4		CS	1.95				OVA at shoe >1000; OVA at head 10
	Sample Time 1020 CST VOA (2) 2oz. BNA/Pest. (1) 32oz. Metals/CN (1) 32oz. Boring Completed at 4.5	5							

Site File No IL3802CCC3 County DuPage Boring No SB-14-R Monitor Well No NA

Site File Name Lemont Lenz Oil Services Inc. Surface Elev. _____ Completion Depth 4.5

Fed ID No _____ Auger Depth 4.5 Rotary Depth NA

Quadrangle SAG Bridge Sec. 11 T 37N R 11E Date: Start 2/4/91 Finish 2/4/91

Boring Location see site map 1.7 ft. S of SB-14

Drilling Equipment CME 75 3 3/4" HSA

Personnel
G - S. Otto
D - P. Mason
H - B. Mathis Jr.
H - B. Walkenbach

Elev.	DESCRIPTION	Depth in feet	Sample No	Sample Type	Sample Recovery	Penetrometer	N Values (Blows)	OVA or HNU readings	REMARKS
	0-4.5 Dark brown Fill Material gravel silt, fibrous material black plastic material. Bedrock in shoe Sample Time 1425 CST VOA (2) 2oz. BNA/Pest. (1) 32oz. Metals/CN (1) 32oz.	1 2 3 4 5 6	SB-14-R 0-4.5	CS	1.35				OVA at augers 0 OVA at shoe 100 OVA at head 40

Illinois Environmental Protection Agency — **Field Boring Log** — Page 1 of 1

Site File No. 0438020003 County DuPage Boring No SB-15 Monitor Well No NA

Site File Name Lemont Lenz Oil Services Inc. Surface Elev _____ Completion Depth 12'

Fed. ID No. _____ Auger Depth 12.5 Rotary Depth N.

Quadrangle SAG Bridge Sec. 11 T. 37N R 11E Date: Start 1-28-91 Finish 1-28-91

Boring Location see site map

Drilling Equipment CME 75 3 3/4 inch HSA

Personnel: G - S. Otto; D - P. Mason; H - B. Mathis Jr.; H - B. Walkenbach

Elev.	DESCRIPTION	Depth in feet	Sample No	Sample Type	Sample Recovery	Penetrometer	N Values (Blows)	OVA or HNU readings	REMARKS
	0-2.5 Sand, gravel, Fill Material	1, 2	SB-15 0-4.5	CS	1.5'				OVA at auger 20; OVA at shoe 10; Drill Rig chatter
	2.5-4.5 Same as above. Bottom 0.6 greenish gray clayey silt. Sample Time 1551; VOA (2) 2oz.; BNA/Pest. (1) 32oz.; Metals/CN (1) 32oz.	3, 4	SB-15 0-4.5	CS	1.45				OVA at augers 100; OVA at shoe >100; OVA at head 6
	4.5-9.5 Cobble in shoe, very poor recovery. Greenish gray silt, very wet. Sheen on inside walls of sampler. Petroleum type odor	5, 6, 7, 8, 9		CS	0.67				OVA at auger; OVA at shoe 60; OVA at head 20
	9.5-12.5 Gray weathered Bedrock very wet, very strong petroleum type odor. Sample Time 1617 CST; VOA (2) 2oz.; BNA/Pest. (1) 32oz.; Metals/CN (1) 32oz.	10, 11, 12	SB-15 9.5-12.5	CS	2.2				OVA at shoe 10; OVA at head 88
	Boring Completed at 12.5	13							

Site File No 0438120003 County DuPage Boring No SB-15-B Monitor Well No NA

Site File Name Lemont Lenz Oil Services Inc. Surface Elev _____ Completion Depth 9.5

Fed ID No _____ Auger Depth 9.5 Rotary Depth NA

Quadrangle SAG Bridge Sec. 11 T 37N. R 11E. Date: Start 2/4/91 Finish 2/4/91

Boring Location see site map 1 Ft. S of SB-15

Drilling Equipment CME 75 3 3/4" HSA

Personnel: G - S. Otto; D - P. Mason; H - B. Mathis Jr.; H - B. Walkenbach

Elev.	DESCRIPTION	Depth in feet	Sample No	Sample Type	Sample Recovery	Penetrometer	N Values (Blows)	OVA or HNU readings	REMARKS
	0-2.5 Dark brown sand, gravel, silt Fill Mat.	1, 2		CS	1.7				OVA at augers 4; OVA at head 1; OVA at shoe NO
	2.5-4.5 Black gravel silt. Bottom .5 greenish yellow clay silt. Sample Time 1324 CST; VOA (2) 2 oz.; BNA/Pest (1) 32g.; Metals/CN (1) 32g.; Took duplicate sample	3, 4	SB-15-A 2.5-4.5	CS	2.5				OVA at shoe 250; OVA at head 44
	4.5-9.5 Yellowish gray silt with trace gravel. Chips of bedrock. Sheen on augers and sample. One foot above bottom of sample black staining with petro. type odor. Sample Time 1343 CST; VOA (2) 2 oz.; BNA/Pest (1) 32g.; Metals/CN (1) 32g.	5, 6, 7, 8, 9	SB-15-B 4.5-9.5	CS	2.4				OVA at shoe 100; OVA at head 150
	Bedrock at 9.0	10, 11, 12, 13, 14							

Illinois Environmental Protection Agency

Field Boring Log

Site File No 0438020003 County DuPage Boring No SB-16 Monitor Well No NA

Site File Name Lemont Lenz Oil Service Inc. Surface Elev. _____ Completion Depth 4.5

Fed. ID No _____ Auger Depth 4.5 Rotary Depth NA

Quadrangle SAG Bridge Sec. 11 T 37N R 11E Date: Start 1-28-91 Finish 1-28-91

Boring Location see site map

Drilling Equipment CME75 3 3/4 inch HSA

Personnel: G - S. Otto; D - P Mason; H - B. Mathis Jr.; H - B. Walkenbach

Elev.	DESCRIPTION	Depth in feet	Sample No	Sample Type	Sample Recovery	Penetrometer	N Values (Blows)	OVA or HNU readings	REMARKS
	0-4.5 Dark brown gravel, silt, Fill Material Sample Time 1519 CST VOA (2) 2oz BNA/Pest (1) 32oz Metals/CN (1) 32oz. Bedrock at 4.5 Greenish gray powdered.	1 2 3 4	SB-16 0-4.5	C5	1.35				OVA at shoe 1.0
				C5	0.3				OVA at auger >1000 HNu. 1.5
	Boring Completed at 4.5	5 6 7 8 9 10							

Site File No 0438020003 County DuPage Boring No SB-16-R Monitor Well No NA

Site File Name Lemont / Lenz Oil Services Inc. Surface Elev _____ Completion Depth 4.5

Fed ID No _____ Auger Depth 4.5 Rotary Depth NA

Quadrangle SAG Bridge Sec. 11 T 37N R 11E Date: Start 2/4/91 Finish 2/4/91

Boring Location see site map 1.6ft SW of SB-16

Drilling Equipment CME 75 3 3/4" HSA

Personnel: G - S. Otto; D - P Mason; H - B Mathis Jr.; H - B. Walkenbach

Elev.	DESCRIPTION	Depth in feet	Sample No	Sample Type	Sample Recovery	Penetrometer	N Values (Blows)	OVA or HNU readings	REMARKS
	3-4" of water at surface								OVA at augers 50
	0 - 2.5 Dark brown sand gravel, silt Fill Mat. Rig chatter	1, 2	SB-16-R 0-4.5	CS	1.73				OVA at shoe 100; OVA at head 6
	2.5-4.5 Greenish yellow silt with chips of bedrock throughout	3, 4		CS	1.17				OVA at augers 25; OVA at shoe 40; OVA at head 100
	Bedrock at 4.5								
	Sample Time 1254 CST								
	VOA (2) 2 oz.	5							
	BNA/Pest (1) 32 oz.								
	Metals/CN (1) 32 oz.	6							
		7							
		8							
		9							
		10							

Field Boring Log Page 1 of 1

Site File No 043902 CC03 County DuPage Boring No SB-17 Monitor Well No NA

Site File Name Lemont Lenz Oil Services Inc. Surface Elev _____ Completion Depth 3.8

Fed ID No _____ Auger Depth 3.8 Rotary Depth N

Quadrangle SAG Bridge Sec. 11 T 37N R 11E Date: Start 2-6-91 Finish 2-6-91

Boring Location see site map

Drilling Equipment CME 75 3 3/4" HSA Continuous 5' Sampler (CS)

Personnel: G. S. Otto; D. P. Mason; H. B. Marks Jr; H. B. Walkenhorst

Elev	DESCRIPTION	Depth in feet	Sample No	Sample Type	Sample Recovery	Penetrometer	N Values (Blows)	OVA or HNU (readings)	REMARKS
	0-3.8 Black Ash Top 0.4 frozen Auger refusal at 3.8 from metal and demo fill mat. Sample Time 940 VOA (2), 2oz bottles BNA/Pest (1) 32 oz Metals/CN (1) 32 oz. Took rinsate 2 VOA bottles.	1 2 3 4 5	SB-17 0-3.8	CS	1.45				

Illinois Environmental Protection Agency — Field Boring Log — Page 1 of 1

Site File No.: 0438020003 County: DuPage — Boring No. SB-18 — Monitor Well No: NA

Site File Name: Lemont Lenz Oil Service Inc. — Surface Elev: — Completion Depth: 14.5

Fed. ID No.: — Auger Depth: 14.5 — Rotary Depth: NA

Quadrangle: SAG Bridge — Sec. 11 T. 37N R 11E — Date: Start 1-29-91 Finish 1-29-91

Boring Location: see site map

Drilling Equipment: CME 75 3 3/4 inch HSA

Personnel: G - S. Otto; D - P. Mason; H - B. Marks Jr.; H - B Walkenback

Elev.	DESCRIPTION	Depth in feet	Sample No	Sample Type	Sample Recovery	Penetrometer	N Values (Blows)	OVA or HNU (readings)	REMARKS
	0-2.5 F, 11 Material 0-.8 silt back-f,11 .8-2.5 Black ash	1, 2	SB-18 0-4.5	CS	1.4				OVA at augers 40-5 OVA at shoe 420
	2.5-4.5 Silt, sand + Gravel. Sample Time 1152 CST VOA (2) 2oz. BNA/Pest (1) 32oz. Metals/CN (1) 32oz.	3, 4	SB-18 0-4.5	CS	.85				OVA at augers twice had flam out. >1000 HNU 200±
	4.5-7.5 Dark gray silt	5, 6, 7	SB-18 4.5-9.5	CS	.9				OVA at augers >100 HNU at
	7.5-9.5 Dark gray silt Sample Time 1215 VOA (2) 2oz. BNA/Pest. (1) 32oz. Metals/CN (1) 32oz.	8, 9	SB-18 4.5-9.5	CS	1.0				OVA at augers >10 HNU 20
	9.5-12.5 No Recovery	10, 11, 12		CS	0				OVA at augers 2 HNU 10
	12.5-14.5 No Recovery	13, 14		CS	0				OVA at augers >1 HNU 10
	Bedrock at 12.5								
	Boring Completed at 14.5	15							

Site File No 0438020003 County DuPage Boring No SB-18-R Monitor Well No NA

Site File Name Lemont Lenz Oil Services Inc. Surface Elev _____ Completion Depth 12.5

Fed ID No _____ Auger Depth 12.5 Rotary Depth N

Quadrangle SAG Bridge Sec. 11 T 37N R 11E Date Start 2-6-91 Finish 2-6-91

Boring Location see site map 1.5 ft. S of SB-18

Drilling Equipment CME 75 3 3/4" HSA 5' Continuous Sampler

Personnel: G - S. Otero; D - B. Mason; H - B. Mathis Jr; H - B Walkenback

Elev.	DESCRIPTION	Depth in feet	Sample No	Sample Type	Sample Recovery	Penetrometer	N Values (Blows)	OVA or HNU readings	REMARKS
	0-2.5 Top 0.8 Silt .8-1.75 Black Ash Sample Time 1055 VOA (2) 2oz bottles BNA/Pest. (1) 32oz. Metals/CN (1) 32oz.	1 2	SB-18-R 0-2.5	CS	1.75				
	2.5-4.5 No recovery	3 4		CS	0				
	4.5-9.5 Dark greenish gray Silt, black oil streaks throughout Sample 7.5-9.5 Time 1104 VOA (2) 2oz bottles BNA/Pest. (1) 32oz. Metals/CN (1) 32oz.	5 6 7 8 9	SB-18-R 7.5-9.5	CS	4.8				HNu at shoe - HNu at head ~0
	9.5-12.5 Brown Silt with black oil streaks Sample Time 1110 VOA (2) 2oz bottles BNA/Pest (1) 32oz. Metals/CN (1) 32oz.	10 11 12	SB-18-R 9.5-12.5	CS	28				HNu at head 2 HNu at shoe N.
		13							HNu 11.7 1

Site File No 0438020003 County Du Page Boring No SB-19 Monitor Well No NA

Site File Name Lemont Lenz Oil Services Inc. Surface Elev _____ Completion Depth _____

Fed ID No _____ Auger Depth _____ Rotary Depth NA

Quadrangle SAG Bridge Sec. 11 T 37N R 11E. Date: Start 2-5-91 Finish 2-5-91

Boring Location see site map

Drilling Equipment CME 75 3 3/4" HSA 5' Continuous Sampler (CS)

Personnel: G - S. Otto; D - P. Mason; H - B. Mathis Jr.; H - B. Walkenbach

Elev.	DESCRIPTION	Depth in feet	Sample No	Sample Type	Sample Recovery	Penetrometer	N Values (blows)	OVA or HNU readings	REMARKS
	0-2.6 Dark brown silt, gravel, sand very strong petro. odor Bedrock in shoe of sampler Auger refusal at 2.6 Sample 0-2.6 Time 1600 VOA (2) 2oz. bottles BNA/Pest. (1) 32oz. Metals/CN (1) 32oz.	1 2 3 4 5 6	SB-19 0-2.6	CS	1.7				OVA at augers >1000 HNu 3 HNu 11.7 loop

Site File No 0438020003 County DuPage Boring No SB-20 Monitor Well No NA

Site File Name Lemont Lenz Oil Services Inc. Surface Elev _____ Completion Depth 12.9

Fed ID No _____ Auger Depth 12.9 Rotary Depth NA

Quadrangle SAG Bridge Sec. 11 T 37N. R 11E Date Start 2-6-91 Finish 2-6-91

Boring Location see site map

Drilling Equipment CME 75 3 3/4" HSA
5' Continuous Sampler (CS)

Personnel
G - S. Otto
D - P. Mason
H - B. Martis Jr.
H - B. Walkenback

Elev.	DESCRIPTION	Depth in feet	Sample No	Sample Type	Sample Recovery	Penetrometer	N Values (Blows)	OVA or HNU readings	REMARKS
	0-2.5 Fill Mat. Chips of concrete	1, 2		CS	1.1				OVA not working HNu at augers ND
	2.5-4.5 Greenish gray clayey Silt Till Top 0.8 concrete fill mat. Sample Time 819 VOA (2) 2oz. bottles BNA / Pest. (1) 32oz. Metals / CN (1) 32oz.	3, 4	SB-20 2.5-4.5	CS	1.5				HNu at augers ND
	4.5-9.5 Greenish gray clayey Silt Till Sample Time 830 VOA (2) 2oz bottles BNA / Pest (1) 32oz. Metals / CN (1) 32oz.	5, 6, 7, 8, 9	SB-20 4.5-9.5	CS	4.0				HNu at augers
	9.5-12.9 Top 0.7 Black peat like mat. light greenish gray Silt with lenses of peat. Bottom 0.25 Gray dolomite Sample Time 903 VOA (2) 2oz bottles BNA / Pest. (1) 32oz. Metals / CN (1) 32oz.	10, 11, 12, 13	SB-20 9.5-12.9	CS	2.4				

Illinois Environmental Protection Agency — Field Boring Log — Page 1 of 1

Site File No: C438C2CCC3 County: DuPage — Boring No: SB-21 — Monitor Well No: NA

Site File Name: Lemont Lenz Oil Service Inc — Surface Elev: — Completion Depth: 18.3

Fed ID No: — Auger Depth: 18.3 — Rotary Depth: NA

Quadrangle: SAG Bridge — Sec. 11 — T. 37N — R. 11E — Date: Start 1-29-91 — Finish 1-29-91

Boring Location: see site map

Drilling Equipment: CME 75 3 3/4 inch HSA

Personnel:
G - S. Otto
D - P. Mason
H - B. Marlis Jr.
H - B. Walkenbach

Elev.	DESCRIPTION	Depth in feet	Sample No	Sample Type	Sample Recovery	Penetrometer	N Values (Blows)	OVA or HNU readings	REMARKS
	0-2.5 Dark brown silt and gravel Fill Material Top 0.5 Frozen Sample Time 825 CST VOA (2) 2oz. BNA/Pest. (1) 32oz. Metals/CN (1) 32oz	1 2 3 4	SB-21 0-4.5	CS	1.3				OVA at augers 5 OVA at shoe 6
			SB-21	CS	0.4				OVA at shoe 20
	4.5-7.5 Fill, Trash, fiberous material in shoe	7.5		CS	0				OVA at augers 7 OVA at shoe >100
	7.5-9.5 Fill, Trash, wire	9.5		CS	0				OVA at augers 3 Rig chatter
	9.5-12.5 Fill, Trash, fiberous	12.5		CS	.5				OVA at breathing zone >100 OVA at shoe >10 HNu at augers
	12.5-14.5 A piece of wire, sheen on inside of sampler	14.5		CS	0				HNu at auger
	14.5-18.3 Trash with rock chips Gray weathered Bedrock very wet, sheen Sample Time 947 CST VOA (2) 2oz. BNA/Pest (1) 32oz. Metals/CN (1) 32oz.	18.3	SB-21 14.5-18.3	CS	.9				OVA at augers 3 HNu at augers OVA at shoe 5 OVA at head >1
	Boring Completed 18.3								

Illinois Environmental Protection Agency — **Field Boring Log** — Page 1 of 1

Site File No. 0438082 COC3 County DuPage Boring No SB-21-R Monitor Well No N/A

Site File Name Lemont Lenz Oil Services Inc. Surface Elev _____ Completion Depth 14.5

Fed ID No _____ Auger Depth 14.5 Rotary Depth _____

Quadrangle SAG Bridge Sec. 11 T. 37N R 11E Date: Start 2-6-91 Finish 2-6-91

Boring Location see site map 1.6 ft. S of SB-21

Drilling Equipment CME 75 3 3/4" HSA 5' Continuous Sampler (CS)

Personnel: G - S. Otto; D - P. Mason; H - D. Marks Jr.; H - B. Walkenbach

Elev.	DESCRIPTION	Depth in feet	Sample No	Sample Type	Sample Recovery	Penetrometer	N Values (Blows)	OVA or HNU readings	REMARKS
	0-2.5 Dark brown gravel, silt, wood, trash Fill Material Sample Time 1144 VOA (2) 2 oz. bottles BNA/Pest (1) 32 oz. Metals/CN (1) 32 oz.	1 2	SB-21-R 0-2.5	CS	1.7				HNu at augers 2 HNu at shoe 9
	2.5-4.5 Wire and fibrous material wrapped around augers Drillers upgraded to level C	3 4		CS	0				HNu at augers 15
	4.5-9.5 0 Recovery Fill Material, Trash	5 6 7 8 9		CS	0				
	9.5-14.5 Gray Fill Material mostly water with sheen, very strong odor, metal wire and gray chips of dolomite Sample Time 1216 VOA (2) 2 oz bottles BNA/Pest (1) 32 oz. No Metals/CN Not enough sample	10 11 12 13 14 15	SB-21-R 9.5-14.5	CS					HNu at augers 6 HNu at shoe 5

Site File No. 0938020003 County DuPage Boring No SB-22 Monitor Well No NA

Site File Name Lemont / Lenz Oil Service Inc. Surface Elev. _____ Completion Depth 9.5

Fed ID No. _____ Auger Depth 7.5 Rotary Depth NA

Quadrangle SAG Bridge Sec. 11 T 37N R 11E Date Start 1-17-91 Finish 1-17-91

Boring Location see site map

Drilling Equipment CME 75 3 3/4 inch HSA

Personnel: G - S. Otto; D - P. Mason; H - B. Martis; H - B. Walkenbach

Elev.	DESCRIPTION	Depth in feet	Sample No	Sample Type	Sample Recovery	Penetrometer	N Values (Blows)	OVA or HNU readings	REMARKS
	0-2.5 Black Sand Gravel and Silt Fill Material Sample Time 8.39 CST VOA (2) 2oz BNA/Pest (1) 32oz Metals/CN (1) 32oz	1 2	SB-22 0-2.5	CS	1.4				OVA at borehole >100. OVA at sample shoe 20
	2.5-4.5 Black, Sand, Gravel, Silt, Fill Material	3 4		CS	1.6				OVA at Sample Shoe >100c
	4.5-7.5 Stopped drilling >100 at breathing zone using OVA Description. Same as 2.5-4.5 Didnt sample due to unsafe conditions. No SCBAs on site.	5 6 7		CS					OVA at Sample Shoe >1000
	7.5-9.5 Used 6" brass tubes inside split spoon sampler. Wrapped the bottom (2) tubes in aluminum foil and capped ends with Plastic caps. Sample Time 1700 Gray dolomite in shoe of sampler.	8 9	SB-22 7.5-9.5	CS Off.			2/4/4/8		OVA at Sample 40-80
	Bedrock at 9.5	10							
	Boring Completed at 9.5	11							

Illinois Environmental Protection Agency — Field Boring Log — Page 1 of 1

Site File No 0438020003 County DuPage Boring No SB-23 Monitor Well No NA

Site File Name Lemont Lenz Oil Service Inc Surface Elev ____ Completion Depth 7.5

Fed. ID No ____ Auger Depth 7.5 Rotary Depth N

Quadrangle SAG Bridge Sec. 11 T 37N R 11E Date: Start 1-28-91 Finish 1-28-91

Boring Location See site map

Drilling Equipment CME 75 3 3/4 inch HSA

Personnel: G - S. Oakes; D - P. Masch; H - B. Mattis Jr.; H - B. Walkenbach

Elev.	DESCRIPTION	Depth in feet	Sample No	Sample Type	Sample Recovery	Penetrometer	N Values (Blows)	OVA or HNU readings	REMARKS
	0-4.5 Dark brown gravel, silt, Fill Material Top 0.1 New white rock strong solvent type odor from 2.5-4.5 Sample Time 1356 CST VOA (2) 2oz. BNA/Pest./(1) 32oz. Metals/CN (1) 32oz.	1, 2	SB-23 0-4.5	CS	1.0				OVA at augers 30 OVA at shoe 100
		3, 4	SB-23 0-4.5	CS	0.9				OVA at augers >1000 HNU 200 OVA at shoe 100 OVA at head 500
	4.5-7.5 Weathered Bedrock Greenish Gray powdered rock. Bedrock at 5.0 ft. Sample Time 1439 VOA (2) 2oz. BNA/Pest. (1) 32oz. Not enough sample for Metals/CN	5, 6, 7	SB-23 4.5-7.5	CS	0.5				OVA at augers 16 HNU 135
	Boring complete at 7.5	8, 9, 10							

Site File No 0438020003 County DuPage Boring No SB-23-R Monitor Well No NA

Site File Name Lemont / Lenz Oil Service Inc. Surface Elev. _____ Completion Depth 5.5

Fed. ID No _____ Auger Depth 5.5 Rotary Depth NA

Quadrangle SAG Bridge Sec. 11 T 37N. R 11E. Date: Start 2-4-91 Finish 2-4-91

Boring Location see site map 1.5 ft. NE of SB-23

Drilling Equipment CME 75 3 3/4" HSA

Personnel: G - S. Otto; D - P. Mason; H - G. Mathis Jr.; H - B. Walkenbach

Elev.	DESCRIPTION	Depth in feet	Sample No	Sample Type	Sample Recovery	Penetrometer	N Values (Blows)	OVA or HNU readings	REMARKS
	0-2.8 Fill Mat.	1		CS	2.8				OVA at augers 1.5
		2							
	2.8-4.5 Dark Brown gravel, silt Fill Mat. thin metal wire in cuttings Rig chatter Sample Time 1215 CST VOA (2) 2 oz. BNA/Pest (1) 32 oz. Metals/CN (1) 32 oz.	3	SB-23-R 2.8-4.5						OVA at augers >100 OVA at sample shoe 200 OVA at sample head 65
		4		CS	1.8				
	4.5-5.5 Dark Brown silty sand Bottom 0.5 greenish yellow chips of dolomite No sample: poor recovery	5		CS	0.43				OVA at augers >100 OVA at sample shoe 30 OVA at sample head 50
		6							
		7							
		8							
		9							
		10							

IEPA PHASE II SOIL BORING LOGS

Illinois Environmental Protection Agency — **Field Boring Log** — Page 1 of 1

Site File No 0438020003 County DuPage Boring No SB04 Monitor Well No NA

Site File Name Lemont / Lenz Oil Surface Elev _____ Completion Depth 8

Fed ID No _____ Auger Depth 8 ft. Rotary Depth NA

Quadrangle SAG Bridge Sec. 11 T. 37N. R 11E. Date: Start 2-14-92 Finish 2-14-92

Boring Location See site map

Drilling Equipment CME 75 3 3/4" HSA 5 ft. Continuous Sampler (CS)

Personnel: G - S. Otto; D - P. Mason; H - R. Marks Jr.; H - B. Walkenbach

Elev	DESCRIPTION	Depth in feet	Sample No	Sample Type	Sample Recovery	Penetrometer	N Values (Blows)	OVA or HNU readings	REMARKS
	0-5ft. Top .55 top soil, black silt roots abundant. Bottom Black Ash Sample Time 8:50 1 8oz. VOA 1 32oz. BNA/Pest. 1 8oz. Metals + Duplicates 8:52	1 2 3 4 5	0508040AS + AD	CS	2.6				Background OVA 9 HNU 1 While drilling OVA 9 HNU 1 Sample shoe OVA 9 HNU 1 Sample head OVA 9 HNU 1
	5-8ft Black Ash, wet Sample Time 9:00 1 8oz. VOA 1 32oz. BNA/Pest. 1 8oz. Metals	6 7 8	0508040BS	CS	1.9				While drilling OVA 9 HNU 1 Sample shoe OVA 9 HNU 1 Sample head OVA 9 HNU 1
	Black plastic on lead auger teeth (Plastic retained by T. Fitzgerald) 25 lbs. of bentonite and 1 94# bag of cement was placed in borehole.	9 10 11							

Illinois Environmental Protection Agency — Field Boring Log

Site File No 0438020003 County DuPage Boring No SB08 Monitor Well No NA

Site File Name Lemont / Lenz Oil Surface Elev _____ Completion Depth 7.5

Fed ID. No _____ Auger Depth 7.5ft. Rotary Depth NA

Quadrangle SAG Bridge Sec. 11 T. 37N. R 11E. Date: Start 2-14-92 Finish 2-14-92

Boring Location See site map

Drilling Equipment CME 75 3 3/4" HSA 5 ft. Continuous Sampler (CS)

Personnel: G - S. Otto; D - P. Mason; H - R. Marhis Jr.; H - B. Walkenbach

Elev.	DESCRIPTION	Depth in feet	Sample No	Sample Type	Sample Recovery	Penetrometer	N Values (Blows)	OVA or HNU readings	REMARKS
	0-5ft. Top .7 top soil, black Silt, roots abundant. Bottom 1.0 Black Ash Sample Time 9:15 1 8oz. VOA 1 32oz. BNA/Pest. 1 8oz. Metals	1 2 3 4	L05B08AS	CS	1.7				Background OVA 9 HNU 1 While drilling OVA 9 HNU 1 Sample shoe OVA 9 HNU 1 Sample head OVA 9 HNU 1
	5-7.5ft. Black Ash Sample Time 9:25 1 8oz. VOA 1 32oz. BNA/Pest. 1 8oz. Metals	5 6 7	L05B08BS	CS	1.7				While drilling OVA 9 HNU 1 Sample shoe OVA 9 HNU 1 Sample head OVA 9 HNU 1
	25lbs of bentonite was placed in the bottom of the bore hole.	8 9							

Illinois Environmental Protection Agency **Field Boring Log** Page 1 of 1

Site File No. 0438020003 County DuPage Boring No. SB10 Monitor Well No. NA

Site File Name Lemont / Lenz Oil Surface Elev _____ Completion Depth 7.5

Fed. ID. No. _____ Auger Depth 7.5ft Rotary Depth NA

Quadrangle SAG Bridge Sec. 11 T. 37N. R. 11E. Date: Start 2-14-92 Finish 2-14-92

Boring Location See site map

Drilling Equipment CME 75 3 3/4" HSA 5 ft. Continuous Sampler (CS)

Personnel: G - S. Otto; D - P. Mason; H - R. Marhis Jr.; H - B. Walkenbach

Elev.	DESCRIPTION	Depth in feet	Sample No	Sample Type	Sample Recovery	Penetrometer	N Values (Blows)	OVA or HNU readings	REMARKS
	0-5ft. Top 0.4 Black Silt top soil, roots abundant. Bottom Black Ash Sample Time 10:15 1 8oz. VOA 1 32oz. BNA/Pest. 1 8oz. Metals	1 2 3 4	10SB10A5	CS	1.7				Background OVA 9 HNU 1 While drilling OVA 9 HNU 1 Sample shoe OVA 9 HNU 1 Sample head OVA 9 HNU 1
	5-7.5 Black Ash Sample Time 10:20 1 8oz. VOA No BNA/Pest. No Metals Not enough sample recovery	5 6 7	10SB10B5	CS	0.4				While drilling OVA 9 HNU 1 Sample shoe OVA 9 HNU 1 Sample head OVA 9 HNU 1
	Water in bore hole at 6.5 ft. 25 lbs of bentonite was placed in the bottom of the bore hole.	8							

Illinois Environmental Protection Agency — Field Boring Log

Site File No 0438020003 County DuPage Boring No SB11 Monitor Well No NA

Site File Name Lemont / Lenz Oil Surface Elev _____ Completion Depth 7.6

Fed ID No _____ Auger Depth 7.5 ft Rotary Depth NA

Quadrangle SAG Bridge Sec. 11 T. 37N. R 11E. Date: Start 2-14-92 Finish 2-14-92

Boring Location See site map

Drilling Equipment CME 75 3 3/4" HSA 5 ft. Continuous Sampler (CS)

Personnel: G - S. Otto; D - P. Mason; H - R. Marhis Jr.; H - B. Walkenbach

Elev.	DESCRIPTION	Depth in feet	Sample No	Sample Type	Sample Recovery	Penetrometer	N Values (Blows)	OVA or HNU readings	REMARKS
	0-5 ft. Top .2 black silt top soil, roots abundant. Bottom black ash.	1	LOSB11A5 and AD	CS	1.7				Background OVA 9 HNU 1
	Sample Time 9:45 1 8oz. VOA 1 32oz. BNA/Pest. 1 8oz. Metals + Duplicates 9:50	2							While drilling OVA 9 HNU 1
		3							Sample shoe OVA HNU 1
		4							Sample head OVA 9 HNU 1
	5-7.5 ft. Black Ash	5	LOSB11B5	CS	1.9				While drilling OVA 9 HNU 1
	Sample Time 9:55 1 8oz. VOA 1 32oz. BNA/Pest. 1 8oz. Metals	6							Sample shoe OVA 9 HNU 1
		7							Sample head OVA 9 HNU 1
	Hole dry	8							
	25 lbs of bentonite was placed in the bottom of the borehole								

Illinois Environmental Protection Agency **Field Boring Log** Page 1 of 1

Site File No. 0438020003 County Du Page Boring No. SB-12 Monitor Well No. NA

Site File Name Lemont / Lear Oil Surface Elev. _____ Completion Depth 8.1

Fed ID No. _____ Auger Depth 8.1 ft Rotary Depth NA

Quadrangle SAG Bridge Sec. 11 T. 37N. R 11E. Date: Start 2-13-92 Finish 2-13-92

Boring Location See site map

Drilling Equipment CME 75 3 3/4" HSA 5 ft. Continuous sampler (CS)

Personnel: G - S. Otto; D - P. Mason; H - R. Mathis Jr.; H - B. Wilkenbach

Elev.	DESCRIPTION	Depth in feet	Sample No	Sample Type	Sample Recovery	Penetrometer	N Values (Blows)	OVA or HNU readings	REMARKS
	0-5 ft. Dark brown clayey Silt with gravel and pebbles Sample Time 12:50 1 8oz. VOA 1 32oz. BNA/Pest 1 8oz. Metals	1 2 3 4 5	LOSB12AS	CS	2.2				Background OVA 10 HNU 3 While drilling OVA – HNU 20 At bore hole OVA 1% HNU 50 Sample head OVA 15 HNU 3 Sample shoe OVA .03% HNU .
	5-8.1 ft. Tan to light gray highly fractured, weathered bedrock Sample Time 1:05 1 8oz. VOA 1 32oz. BNA/Pest. 1 8oz. Metals Auger Refusal at 8.1 ft. bore hole dry	6 7 8 9 10	LOSB12BS	CS	2.6				While drilling OVA 30 HNU 8 Sample shoe OVA .2% Sample head OVA 50

Illinois Environmental Protection Agency — **Field Boring Log** — Page 1 of 1

Site File No. ON3802000 3 County Du Page Boring No. New SB-14 Monitor Well No. NA

Site File Name Lemont / Lenz Oil Surface Elev. _____ Completion Depth 12.1

Fed ID No. _____ Auger Depth 12.1 ft. Rotary Depth NA

Quadrangle SAG Bridge Sec. 11 T. 37N. R 11E. Date: Start 2-11-92 Finish 2-11-92

Boring Location See site map

Drilling Equipment CME 75 3 3/4" HSA 5 ft Continuous sampler (CS)

Personnel: G - S. Otto; D - P. Mason; H - R. Morris Jr.; H - B. Wilkenbach

Elev.	DESCRIPTION	Depth in feet	Sample No	Sample Type	Sample Recovery	Penetrometer	N Values (Blows)	OVA or HNU readings	REMARKS
	0-5 ft. No sample taken	1, 2, 3, 4							Background OVA 0 HNU 0 While drilling OVA 20 HNU 3 Sample shoe OVA 2 HNU 1. Sample head OVA 0 HNU 9
	5-10 ft. Dark brown to black sand and gravel. Bottom 1.4 of 5ft. sampler wet. Sample Time 2:25 1 8oz. VOA 1 32oz. BNA/Pest. No Metals not enough recovery	5, 6, 7, 8, 9	LO SB14 5-10ft.	CS	0.8				While drilling OVA 200 HNU 6 Sample shoe OVA 100 HNU 20 Sample head OVA 200 HNU 0
	10-12.1 ft. Black silty clayey Sand with gravel and pebbles throughout. Black streaks throughout with coal tar type odor, very wet. Auger Refusal at 12.1 ft. Sample Time 3:35 1 8oz VOA 1 8oz. Metals 1 32oz BNA/Pest. Water measured in open bore hole at 4.0 ft b.g.s.	10, 11, 12, 13	LO SB14 10-12.1	CS	1.2				While drilling OVA 20 Sample shoe OVA 2 HNU 14 Sample head OVA 200 HNU 19 Filled bore hole with bentonite and cement.

Illinois Environmental Protection Agency — **Field Boring Log** — Page 1 of 1

Site File No 0438020003 County Du Page Boring No. SB-19 Monitor Well No NA

Site File Name Lemont / Lenz Oil Surface Elev _____ Completion Depth 11.5

Fed. ID. No. _____ Auger Depth 11.5 ft. Rotary Depth NA

Quadrangle SAG Bridge Sec. 11 T. 37N. R 11E. Date: Start 2-13-92 Finish 2-13-92

Boring Location See site map

Drilling Equipment CME 75 3 3/4" HSA
5 ft. Continuous sampler (CS)

Personnel: G - S. Otto; D - P. Mason; H - R. Morris Jr.; H - B. Wilkenbach

Elev.	DESCRIPTION	Depth in feet	Sample No	Sample Type	Sample Recovery	Penetrometer	N Values (Blows)	OVA or HNU readings	REMARKS
	0-5 ft. Dark brown clayey Silt with some gravel.	1, 2, 3, 4, 5		CS	2.25				Background OVA 10 HNU 3 Sample head OVA 0 HNU 3 Sample shoe OVA 60 HNU 13
	5-10 ft. Top .7 black oily wood, cinders. Very wet, heavy oil odor .7-2.3 Dark greenish gray to black silty Clay with some gravel, trace roots 2.3-3.7 Light brown rock, dolomite Sample Time 11:25 1 8oz. VOA 1 32oz. BNA/Pest. 1 8oz. Metals	6, 7, 8, 9	10SB19AS + AD	CS	3.7				While drilling OVA 20 HNU 2 Sample head OVA 25 HNU 0 Sample shoe OVA .037 HNU 9
	10-11.5 ft. Gray very coarse sand with dolomite rock, large chips. very wet Auger Refusal 11.5 ft. Sample Time 11:35 1 8oz. VOA 1 32oz BNA/Pest. 1 8oz. Metals	10, 11, 12, 13	#10SB19BS	CS	1.5				While drilling OVA 12 Sample head OVA 30 HNU 8 Sample shoe OVA 70 HNU 6
	Backfilled borehole with bentonite and cement	14, 15							

Illinois Environmental Protection Agency — **Field Boring Log** — Page 1 of 1

Site File No 0438020003 County DuPage Boring No SB22 Monitor Well No NA

Site File Name Lemont / Lenz Oil Surface Elev _____ Completion Depth 15 ft

Fed. ID No _____ Auger Depth 15 ft Rotary Depth NA

Quadrangle SAG Bridge Sec. 11 T. 37N. R 11E. Date: Start 2-13-92 Finish 2-13-9

Boring Location see site map

Drilling Equipment CME 75 3 3/4" HSA 5 ft. Continuous Sampler (CS)

Personnel: G - S. Otto; D - P. Mason; H - R. Markis Jr.; H - B. Walkenbach

Elev.	DESCRIPTION	Depth in feet	Sample No	Sample Type	Sample Recovery	Penetrometer	N Values (Blows)	OVA or HNU readings	REMARKS
	0-5ft. Dark brown clayey Silt with some gravel and pebbles Sample Time 3:00 1 8oz. VOA 1 32oz BNA/Pest. 1 8oz Metals	1, 2, 3, 4, 5	LOSB22AS	CS	1.8				Background OVA 9 HNU 3 While drilling OVA 9 HNU 3
	5-10 ft Dark brown clayey Silt with gravel and pebbles throughout Sample Time 3:10 1 8oz. VOA 1 32oz BNA/Pest 1 8oz. Metals + Duplicates 3:12	6, 7, 8, 9, 10	LOSB22BS and BD	CS	2.7				While drilling OVA 9 HNU 3 At borehole OVA 5 Sample shoe OVA .1 HNU 3 Sample head OVA .0 HNU 4
	10-15 ft. Top 2.8 Dark brown coarse to very coarse Sand with gravel, very wet Bottom gray highly weathered dolomite bedrock Sample Time 3:35 1 8oz. VOA 1 32oz. BNA/Pest. 1 8oz. Metals	11, 12, 13, 14, 15	LOSB22CS	CS	4.4				While drilling OVA .05 Sample shoe OVA .0 Sample head OVA 50 HNU 3

Backfilled hole with bentonite and cement

Illinois Environmental Protection Agency — **Field Boring Log** — Page 1 of 1

Site File No 0438020003 County Du Page Boring No SB-201 Monitor Well No NA

Site File Name Lemont / Lenz Oil Surface Elev. _____ Completion Depth 5 ft.

Fed ID No. _____ Auger Depth 5 ft. Rotary Depth NA

Quadrangle SAG Bridge Sec. 11 T. 37N. R 11E. Date: Start 2-10-92 Finish 2-10-92

Boring Location See site map

Drilling Equipment CME 75 3 3/4" HSA 5 ft. Continuous sampler (CS)

Personnel: G - S. Otto; D - P. Mason; H - R. Morris Jr.; H - B. Wilkenbach

Elev.	DESCRIPTION	Depth in feet	Sample No	Sample Type	Sample Recovery	Penetrometer	N Values (Blows)	OVA or HNU readings	REMARKS
	0-3 ft Dark brown Silt with gravel Sample Time 2:45 1 8oz. VOA 1 32oz BNA/Pest. 1 8oz. Metals	1 2 3	20SB201AS	CS	1.15				Background OVA 0 HNU 1 While drilling OVA 0 Sample shoe OVA 0 HNU 1 Sample head OVA 0 HNU 2
	3-5 ft. Black Silt with gravel, petro. odor, yellow clay at bottom Sample Time 2:50 1 8oz. VOA 1 32oz BNA/Pest 1 8oz Metals	4 5	20SB201BS	CS	1.1				While drilling OVA 0 Sample shoe OVA 0 HNU
	Boring Completed at 5 feet								

Illinois Environmental Protection Agency — **Field Boring Log** — Page 1 of 1

Site File No 0438020003 County Du Page Boring No SB-202 Monitor Well No NA

Site File Name Lemont / Lenz Oil Surface Elev. ____ Completion Depth 5 ft

Fed ID No. ____ Auger Depth 5 ft. Rotary Depth NA

Quadrangle SAG Bridge Sec. 11 T. 37N. R 11E. Date: Start 2-10-92 Finish 2-10-92

Boring Location See site map

Drilling Equipment CME 75 3 3/4" HSA 5 ft Continuous sampler (CS)

Personnel: G - S. Otto; D - P. Mason; H - P. Morris Jr; H - B. Wilkenback

Elev.	DESCRIPTION	Depth in feet	Sample No	Sample Type	Sample Recovery	Penetrometer	N Values (Blows)	OVA or HNU readings	REMARKS
	0-3 ft. Dark bluish gray clayey Silt, black streaks throughout. Top 1 ft. sand and gravel. Sample Time 2:00. 1 8oz. VOA, 1 32oz. BNA/Pest., 1 8oz. Metals	1, 2	1058202AS	CS	2.2				Background OVA 0 HNU 4; While drilling OVA: ; Sample shoe OVA 10 HNU 4; Sample head OVA 0 HNU 10
	3-5 ft. Dark brown to black silty Sand with a greenish silty clay seam ≈.3 thick at bottom of sample. Sample Time 2:15. 1 8oz VOA, 1 8oz. Metals, 1 32oz BNA/Pest.	3, 4	1058202AS	CS	1.9				While drilling OVA 5; Sample shoe OVA >10 HNU 7; Sample head OVA 0 HNU 7
	Boring Completed at 5 ft.	5							

Illinois Environmental Protection Agency — **Field Boring Log** — Page 1 of 1

Site File No 0438020003 County Du Page Boring No SB203 Monitor Well No NA

Site File Name Lemcit / Lenz Oil Surface Elev _____ Completion Depth 5 ft.

Fed. ID No. _____ Auger Depth 5 ft. Rotary Depth NA

Quadrangle SAG Bridge Sec. 11 T. 37N. R 11E. Date: Start 2-11-92 Finish 2-11-92

Boring Location See site map

Drilling Equipment CME 75 3 3/4" HSA 5 ft Continuous sampler (CS)

Personnel: G - S. Otto; D - P. Mason; H - R. Mathis Jr.; H - B. Wilkenbach

Elev.	DESCRIPTION	Depth in feet	Sample No	Sample Type	Sample Recovery	Penetrometer	N Values (Blows)	OVA or HNU readings	REMARKS
	0-3 ft. Brown Sand and Gravel Sample Time 10:40 1 8oz. VOA 1 32oz. BNA/Pest. 1 8oz. Metals	1 2	L0SB203AS	CS	0.9				Background OVA 0 HNU 0 While drilling OVA 0 HNU 0 Sample shoe OVA 0 HNU 0 Sample head OVA 0 HNU 1
	3-5 ft. Dark brown demo debris; brick, wood, with sand + gravel Sample Time 10:50 1 8oz VOA No BNA/Pest No Metals Not enough to sample	3 4 5	L0SB203BS	CS	0.6				While drilling OVA 10 Sample shoe OVA 30 HNU Sample head OVA 3 HNU 1
	Boring Completed 5 ft.								

Illinois Environmental Protection Agency **Field Boring Log** Page 1 of 1

Site File No. 0438020003 County Du Page Boring No 58-204 Monitor Well No NA

Site File Name Lemont / Lenz Oil Surface Elev ____ Completion Depth 5 ft.

Fed ID No. ____ Auger Depth 5 ft. Rotary Depth NA

Quadrangle SAG Bridge Sec. 11 T. 37N. R. 11E. Date: Start 2-11-92 Finish 2-11-92

Boring Location see site map

Drilling Equipment CME 75 3 3/4" HSA 5 ft. Continuous sampler (CS)

Personnel: G - S. Otto; D - P. Mason; H - R. Morris Jr.; H - B. Wolkenbach

Elev.	DESCRIPTION	Depth in feet	Sample No	Sample Type	Sample Recovery	Penetrometer	N Values (Blows)	OVA or HNU readings	REMARKS
	0-3 ft. Dark brown silty Clay, top 0.4 Sand and gravel. Sample Time 10:15 1 8 oz. VOA 1 32 oz BNA/Pest. 1 8 oz Metals	1	1058204AS	CS	1.6				Background OVA 0 HNU 0; While drilling OVA 0 HNU 0; Sample head OVA 0 HNU 0; Sample shoe OVA 0 HNU 0
	3-5 ft. Dark gray to black clayey Silt top 0.6 Black oily muck with phenol type odor. Bottom 1.1 Clayey Silt Sample Time 10:25 1 8 oz VOA 1 32 oz BNA/Pest. 1 8 oz. Metals	2 3 4	1058204BS	CS	1.7				While drilling OVA 0 HNU 1; Driller note sewage type odor. Sample shoe OVA 100 HNU 3.5; Head OVA 67 HNU
	Boring Completed 5 ft.	5							

Illinois Environmental Protection Agency — **Field Boring Log** — Page 1 of 1

Site File No 0438020003 County Du Page Boring No SB205 Monitor Well No NA

Site File Name Lemont / Lenz Oil Surface Elev _____ Completion Depth 5 ft

Fed ID No _____ Auger Depth 5 ft. Rotary Depth NA

Quadrangle SAG Bridge Sec. 11 T. 37N. R 11E. Date: Start 2-10-92 Finish 2-10-92

Boring Location See site map

Drilling Equipment CME 75 3 3/4" HSA 5 ft Continuous sampler (CS)

Personnel: G - S. Otto; D - P. Mason; H - R. Mathis Jr.; H - B. Wilkenbach

Elev.	DESCRIPTION	Depth in feet	Sample No	Sample Type	Sample Recovery	Penetrometer	N Values (Blows)	OVA or HNU readings	REMARKS
	0-3ft. 0-.7 Sand and gravel .7-1.5 Dark brown silt with trace gravel. Sample Time 1:35 1 8oz. VOA 1 32oz. BNA/Pest. 1 8oz. Metals	1 2	LOSB205AS	CS	1.5				Background OVA 0 HNU 4 While drilling OVA 0 Sample shoe OVA 0 HNU 5 Sample head OVA 0 HNU 5.5
	3-5ft. 0-.7 Brown Silt and Gravel Sample Time 1:45 1 8oz. VOA 1 32oz. BNA/Pest. 1 8oz. Metals	3 4	LOSB205BS	CS	0.7				Sample shoe OVA 25 HNU 6 Sample head OVA [illegible]
	Boring Completed at 5 ft.	5							

Illinois Environmental Protection Agency **Field Boring Log** Page 1 of 1

Site File No 0438020003 County Du Page Boring No SB-206 Monitor Well No. NA

Site File Name Lemont / Lenz Oil Surface Elev. _____ Completion Depth 5 ft

Fed. ID No. _____ Auger Depth 5 ft Rotary Depth NA

Quadrangle SAG Bridge Sec. 11 T. 37N. R 11E. Date: Start 2-10-92 Finish 2-10-92

Boring Location See site map

Drilling Equipment CME 75 3 3/4" HSA
5 ft. Continuous sampler (CS)

Personnel
G - S. Otto
D - P. Mason
H - R. Mathis Jr.
H - B. Wilkenbach

Elev.	DESCRIPTION	Depth in feet	Sample No	Sample Type	Sample Recovery	Penetrometer	N Values (Blows)	OVA or HNU readings	REMARKS
	0-3 ft. 0-.6 Sand and Gravel .6-1.0 Brown Silt Bottom .3 Black oil on Silt, petroleum. Sample Time 12:50 1 8oz. VOA 1 32oz. BNA/Pest. 1 8oz Metals	1 2	LOSB206AS	CS	1.3				Background OVA 0 HNU 4 While drilling OVA 7 HNU 4 Sample shoe OVA 150 HNU 5 Sample head OVA 0 HNU 4
	3-5 ft. 0 Recovery, Rock in cutting head Moved rig 2 ft. north, sampled 3-5 ft. interval again, still 0 recovery.	3 4 5			0				
	Boring Completed at 5 ft.								

Illinois Environmental Protection Agency — **Field Boring Log** — Page 1 of 1

Site File No. 0439020003 County Du Page Boring No SB207 Monitor Well No NA

Site File Name Lemont / Lenz Oil Surface Elev. ____ Completion Depth 5

Fed. ID No. ____ Auger Depth 5 ft. Rotary Depth NA

Quadrangle SAG Bridge Sec. 11 T. 37N. R 11E. Date: Start 2-11-92 Finish 2-11-92

Boring Location See site map

Drilling Equipment CME 75 3 3/4" HSA
5 ft Continuous sampler (CS)

Personnel: G - S. Otto; D - P. Mason; H - R. Morris Jr.; H - B. Wilkenbach

Elev.	DESCRIPTION	Depth in feet	Sample No	Sample Type	Sample Recovery	Penetrometer	N Values (Blows)	OVA or HNU readings	REMARKS
	0-3 ft. Brown Sand and Gravel Sample Time 9:35 1 8oz. VOA 1 32oz. BNA / Pest. 1 8oz Metals	1 2	L058307AS	CS	1.3				Background OVA 0 HNU 0 While drilling OVA 0 Sample shoe OVA 7 HNU 1 Sample head OVA 0 HNU 1
	3-5 ft. Lt. brown and lt. gray mottled clayey Silt with some gravel and pebbles, iron staining throughout Sample Time 9:40 1 8oz VOA 1 8oz Metals 1 32oz BNA/Pest	3 4 5	L058307BS	CS	2.05				While drilling OVA 0 Sample shoe OVA 10 HNU Sample head OVA 2 HNU 1.5
	Boring Completed at 5 ft.								

Illinois Environmental Protection Agency — **Field Boring Log** — Page 1 of 1

Site File No 0438020003 County Du Page Boring No SB 208 Monitor Well No NA

Site File Name Lemont / Lear Oil Surface Elev _____ Completion Depth 5 ft

Fed ID No _____ Auger Depth 5 ft Rotary Depth NA

Quadrangle SAG Bridge Sec. 11 T. 37N. R 11E. Date: Start 2-11-92 Finish 2-11-92

Boring Location See site map

Drilling Equipment CME 75 3 3/4" HSA
5 ft. Continuous sampler (CS)

Personnel: G - S. Otto; D - P. Mason; H - R. Mathis Jr.; H - B. Wilkenbach

Elev	DESCRIPTION	Depth in feet	Sample No	Sample Type	Sample Recovery	Penetrometer	N Values (Blows)	OVA or HNU readings	REMARKS
	0-3 ft. Top 1.2 Silty Gravel Lt. Brown 1.2-2.15 Lt. Brown clayey Silt with some gravel and large pebbles Sample Time 9:00 1 8oz. VOA 1 32oz. BNA/Pest 1 8oz Metals	1 2	L0582208AS L0582208AD	CS	2.15				Background OVA 1 HNU 0 While drilling OVA 1 HNU 0 Sample shoe OVA 1 HNU 0 Sample head OVA 1 HNU 2
	3-5 ft. Light brown clayey Silt with some gravel and large pebbles Sample Time 9:20 1 8oz. VOA 1 32oz BNA/Pest. 1 8oz. Metals	3 4 5	L0582208BS	CS	1.1				While drilling OVA 1 Sample shoe HNU 2 Sample head OVA 2.
	Boring Completed at 5 ft.								

Illinois Environmental Protection Agency — **Field Boring Log** — Page 1 of 1

Site File No. 0438020003 County Du Page Boring No SB-209 Monitor Well No NA

Site File Name Lemont / Lear Oil Surface Elev. _____ Completion Depth 5.1

Fed ID No. _____ Auger Depth 5 ft Rotary Depth NA

Quadrangle SAG Bridge Sec. 11 T. 37N. R 11E. Date: Start 2-10-92 Finish 2-10-92

Boring Location See site map

Drilling Equipment CME 75 3 3/4" HSA
5 ft. Continuous sampler (CS)

Personnel: G - S. Otto; D - P. Mason; H - R. Morris Jr.; H - B. Wilkenbach

Elev.	DESCRIPTION	Depth in feet	Sample No	Sample Type	Sample Recovery	Penetrometer	N Values (Blows)	OVA or HNU readings	REMARKS
	0-3ft. 0-.7 Sand and gravel .7-2.0 Reddish brown Silt Sample Time 12:15 1 8oz VOA 1 32oz BNA/Pest 1 8oz. Metal	1 2	LOSB209AS	CS	2.0				Background OVA 0 HNU 0 OVA while drilling 0 Sample shoe OVA 0 HNU 0 Sample head OVA 0 HNU 1
	3-5ft. Brown with gray mottling Sandy Silt iron staining throughout Sample Time 12:35 1 4oz. VOA 1 32oz. BNA/Pest 1 8oz. Metal	3 4	LOSB209BS	CS	1.5				Sample shoe OVA 0 HNU 2 Sample head OVA HNU 0
	Boring Completed at 5.0 ft.	5							

Illinois Environmental Protection Agency

Field Boring Log

Site File No 0438020003 County DuPage Boring No. SB-210 Monitor Well No. NA

Site File Name Lemont / Lenz 0.1 Surface Elev. _____ Completion Depth NA

Fed. ID No. _____ Auger Depth NA Rotary Depth NA

Quadrangle SAG Bridge Sec. 11 T 37N. R 11E. Date: Start 2-11-92 Finish 2-11-92

Boring Location see site map

Drilling Equipment CME 75 3 3/4" HSA 5 ft. continuous sampler

Personnel: G - S. Orto; D - P. Mosch; H - A. Mathis Jr.; H - B Walkenbach

Elev.	DESCRIPTION	Depth in feet	Sample No	Sample Type	Sample Recovery	Penetrometer	N Values (Blows)	OVA or HNU readings	REMARKS
	Encountered concrete pad at 0.9 ft. below surface, auger refusal. Moved rig 5 ft. again hit concrete pad at 0.9 ft. Moved rig a 3rd time, hit concrete pad at 0.5 ft.								

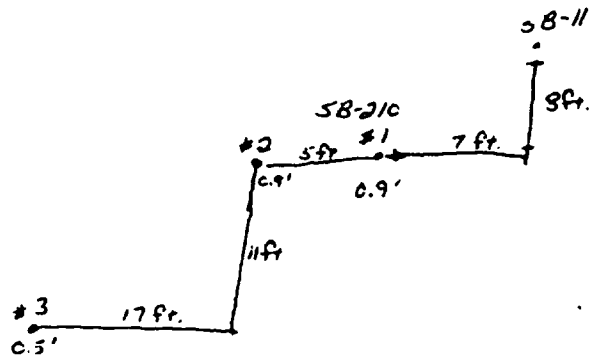

Illinois Environmental Protection Agency — **Field Boring Log** — Page 1 of 1

Site File No 0438020003 County Du Page Boring No SB211 Monitor Well No NA

Site File Name Lemont / Lear Oil Surface Elev _____ Completion Depth _____

Fed ID No _____ Auger Depth _____ Rotary Depth _____

Quadrangle SAG Bridge Sec. 11 T. 37N. R 11E. Date: Start 2-11-92 Finish 2-11-92

Boring Location See site map

Drilling Equipment CME 75 3 3/4" HSA 5 ft Continuous sampler (CS)

Personnel: G - S. Otto; D - P. Mason; H - R. Morris Jr; H - B. Wilkenbach

Elev.	DESCRIPTION	Depth in feet	Sample No	Sample Type	Sample Recovery	Penetrometer	N Values (Blows)	OVA or HNU readings	REMARKS
	0-3 ft. Top 1.1 Dark brown sandy gravelly Silt. Bottom .5 Dark brown clayey Silt with petro. type odor. Sample Time 1:15; 1 8oz. VOA; 1 32oz BNA/Pest.; 1 8oz. Metals	1, 2	10SB211A5	CS	1.65				Background OVA 0 HNU 0; While drilling OVA 3 HNU 0; Sample shoe OVA 10 HNU 20; Sample head OVA 0
	3-5 ft. Top .9 Light Brown clayey Sand Bottom .7 light brown sand fine to med. grain, piece of dolomite bedrock .25 in size. Sample Time 1:25; 1 8oz VOA; 1 32oz BNA/Pest.; 1 8oz. Metals	3, 4	10SB211B5	CS	1.65				While drilling OVA 1 HNU 3; Sample shoe OV HNU; Sample head OVA 2 HNU 10
	Boring Completed at 5 ft.	5, 6, 7							

Illinois Environmental Protection Agency **Field Boring Log** Page 1 of 1

Site File No ON3802 0003 County Du Page Boring No SB212 Monitor Well No NA

Site File Name Lemont / Lear Oil Surface Elev _____ Completion Depth 2.9

Fed ID No. _____ Auger Depth 2.9 ft. Rotary Depth NA

Quadrangle SAG Bridge Sec. 11 T. 37N. R 11E. Date: Start 2-11-92 Finish 2-11-92

Boring Location See site map

Drilling Equipment CME 75 3 3/4" HSA
5 ft. Continuous sampler (CS)

Personnel:
G - S. Otto
D - P. Mason
H - R. Mathis Jr.
H - B. Wilkenbach

Elev.	DESCRIPTION	Depth in feet	Sample No	Sample Type	Sample Recovery	Penetrometer	N Values (Blows)	OVA or HNU readings	REMARKS
	0-3 ft. Light brown to brown silty sand and gravel, dolomite rock chips throughout sample Sample Time 1:50 1 8oz. VOA 1 32oz BNA/Pest. 1 8oz. Metals	1 2	LOSB212AS	CS	1.65				Background OVA 0 HNU 0 While drilling OVA 0 HNU 3 Sample shoe OVA 2 HNU 20 Sample head OVA 2 HNU 20
	Auger Refusal at 2.9 ft.	3							
		4							
		5							

ERM-NORTH CENTRAL, INC. SOIL BORING LOGS

ERM - North Central, Inc.
Environmental Resources Management

GEOLOGIC DRILL LOG

PROJECT	PROJECT NUMBER	SHEET NO.	HOLE NO.
Lenz Oil RI/FS	0252	1 OF 3	MW-01D

SITE	COORDINATES	ANGLE FROM HORIZ	BEARING
LENZ OIL RI/FS	N 723; E 616	Vertical	------

BEGUN	COMPLETED	DRILLER	DRILLING EQUIPMENT	BORING DIA.	TOTAL DEPTH
3-6-91		FOX DRILLING	CME-75	11.5"	47.0

CORE RECOVERY (FT./%)	CORE BOXES	SAMPLES	EL. TOP CASING	GROUND EL.	DEPTH/EL. GROUND WATER	DEPTH/EL. TOP OF ROCK
28.9/41	4	0		602.1	/ /	22.4/

SAMPLE DEVICE	CASING LEFT IN HOLE: DIA./LENGTH	LOGGED BY:
2"x2' Split Spoon/NX Core Barrel		Dirk Kaiser

Samples/R. Core: Sample No. Time	Rec. (ft)	Length(ft)	Blow Count RQD(%)	Contaminant Screening: Amb. Air* VOC(ppm)	Sample ** VOC(ppm)	Visual Observ.	LAYER ELEV. DEPTH (602.1)	DEPTH	GRAPHICS	SAMPLE	DESCRIPTION AND CLASSIFICATION	NOTES ON: WATER LEVELS, WATER RETURN, CHARACTER OF DRILLING, ETC.
SS-1 08:30	1.4	2.0	17 17 9 8	0.0	0.5		600.1 2.0				0-2':GRAVEL: Dusky yellow green (10GY 3/2), .3' gravel, with very fine grained silt, very moist 1.1' same as above, very oily	Drilling: Smooth
SS-2 08:41	1.4	2.0	8 10 10 24	0.0	0.5		598.1 4.0				2-4':SAND AND GRAVEL: Medium light gray (5N5), medium grained, SAND, with a trace of gravel, oil, moist 0.4' olive black (5Y 2/1) SILTY CLAY, with trace of wood pieces, gravely, with some sand, purple sand lens 2mm thick	
SS-3 08:48	0.3	2.0	2 3 8 15	0.0	0.0			5			0.5' light gray (7N7) well sorted, medium grained, SAND, trace small gravel, grading to very coarse oily sand with trace gravel, moist	Driller indicates possible water table
SS-4 08:53	1.6	2.0	3 1 5 6	0.0	0.0						4-12':SILT: Olive black (5Y 2/1), very fine grained silt trace of organic roots, moist 0.6' Same as above, very moist 1.0' mottled, light gray (6N6), moderate olive brown (5Y 4/4), CLAYEY SILT, with well rounded, sub-angular, pebbles, moist	
SS-5 09:00	0.1	2.0	8 2 8 9	0.0	0.0						Same as above, very soft, moist	
SS-6 09:15	0.6	2.0	6 9 1 15	0.0	0.0		590.1 12.0	10			Same as above, very soft, very moist	
SS-7 09:25	0.4	2.0	12 22 29 27	0.0	0.0						12-18':SAND AND GRAVEL: Medium light gray (6N6), very angular, dolomite fragments, saturated	
SS-8 09:42	0.7	2.0	6 12 22 18	0.0	0.0			15			Same as above, with some medium light gray (6N6) silt	Drilling: Tough
SS-9 10:02	1.1	2.0	52 24 36 26	0.0	0.0		584.1 18.0				Same as above, without the silt, saturated	
SS-10 10:13	1.5	2.0	40 30 76 32	0.0	0.0						18-22.4':SILT: Medium gray (5N5), very fine grained, gravelly, saturated 0.7' angular, dolomite chips, saturated	

CONTAMINANT SCREENING NOTES
*HNu w/10.2 eV ** Split Spoon Screenin

SITE: LENZ OIL RI/FS

HOLE NO. MW-01D

ERM - North Central, Inc.
Environmental Resources Management

GEOLOGIC DRILL LOG

PROJECT	PROJECT NUMBER	SHEET NO.	HOLE NO.
Lenz Oil RI/FS	0252	2 OF 3	MW-01D

Samples/R. Core: Sample # / Time	Rec. (ft)	Length (ft)	Blow Cnt / RQD(%)	Contaminant Screening: Amb Air* VOC(ppm)	Sample** VOC(ppm)	Visual Observ.	LAYER ELEV. / DEPTH	DESCRIPTION AND CLASSIFICATION	NOTES ON: WATER LEVELS, WATER RETURN, CHARACTER OF DRILLING, ETC.
SS-11 11:12	1.2	2.0	24 32 220	0.0	0.0			Same as above, with 0.1" silty lens, saturated	
SS-12 11:34	0.7	2.0	125	0.0	0.0		579.7 / 22.4	Same as above	Bedrock
RUN 1 15:20	2.4	2.4					575.7 / 26.4	22.4-47.0': **RACINE FORMATION** Yellowish gray (5Y 8/1), finely crystalline, **DOLOMITE**, with some interclasts, peloids, occasional zones of wavy laminae of clay, heavy minerals, calcite, some quartz infillings, moderately vuggy	
							575.1 / 27.0	Auger and Ream to 27'	
RUN 2 16:20	5.0	5.0					570.1 / 32.0	Same as above	
RUN 3 16:55	9.9	10.0					560.1 / 42.0	Same as above, with some fossils 40.55'-40.60': Sand lens (?)	
RUN 4 17:15	5.0	5.0						Same as above, with peloids of a very white clay textured material (?)	

DEPTH: 25, 30, 35, 40

GRAPHICS / SAMPLE

ERM - North Central, Inc.
Environmental Resources Management

GEOLOGIC DRILL LOG

PROJECT	PROJECT NUMBER	SHEET NO.	HOLE NO.
Lenz Oil RI/FS	0252	3 OF 3	MW-01D

Samples/R. Core: Sample # / Time	Rec. (ft)	Length (ft)	Blow Cnt / RQD(%)	Contaminant Screening: Amb Air* VOC(ppm)	Sample** VOC(ppm)	Visual Observ.	LAYER ELEV. / DEPTH	DEPTH	GRAPHICS	SAMPLE	DESCRIPTION AND CLASSIFICATION	NOTES ON: WATER LEVELS, WATER RETURN, CHARACTER OF DRILLING, ETC.
							555.1 / 47.0					
											End of boring, 47'	
								50				
								55				
								60				
								65				

ERM - North Central, Inc.
Environmental Resources Management

GEOLOGIC DRILL LOG

PROJECT	PROJECT NUMBER	SHEET NO.	HOLE NO.
Lenz Oil RI/FS	0252	1 OF 2	MW-02D

SITE	COORDINATES	ANGLE FROM HORIZ	BEARING
LENZ OIL RI/FS	N 0; E 0	Vertical	------

BEGUN	COMPLETED	DRILLER	DRILLING EQUIPMENT	BORING DIA.	TOTAL DEPTH
4-24-91	4-25-91	FOX DRILLING	CME-75	11.5"	43.0

CORE RECOVERY (FT./%)	CORE BOXES	SAMPLES	EL. TOP CASING	GROUND EL.	DEPTH/EL. GROUND WATER	DEPTH/EL. TOP OF ROCK
0.0/0	0	0		0.0	6.0/-6.0 /	15.5/

SAMPLE DEVICE	CASING LEFT IN HOLE: DIA./LENGTH	LOGGED BY:
2"x2' Split Spoon/NX Core Barrel		Dirk Kaiser

Samples/R. Core: Sample No. Time	Rec. (ft)	Length(ft)	Blow Count RQD(%)	Contaminant Screening: Amb. Air* VOC(ppm)	Sample ** VOC(ppm)	Visual Observ.	LAYER ELEV. DEPTH	DEPTH	GRAPHICS	SAMPLE	DESCRIPTION AND CLASSIFICATION	NOTES ON: WATER LEVELS, WATER RETURN, CHARACTER OF DRILLING, ETC.
	1.0	2.0	20 12 7 12	0.0	0.0		0.0				0-5.8':SILTY SAND & GRAVEL: light olive brown (5Y5/6), poor sorting, dry	
	0.7	2.0	4 12 13 13	0.0	0.0							
	1.2	2.0	5 9 16 14	0.0	0.0			5				
	1.4	2.0	6 6 6 9	0.0	0.0		-5.9 5.9				5.8-6.0': Color change to med. grey (5N5), very moist in tip of spoon	
							-7.3 7.3				6-7.3':SAND: light brown, well sorted, fine grained, saturated	
	1.0	2.0	16 17 27 25	0.0	0.0						7.3-8':SILT medium grey (5N5), very soft, saturated. As Above - some gravel, stiff, moist	
	0.8	2.0	- - - -	0.0	0.0		-9.9 9.9	10			10.0-15.5': GRAVEL with silt, sandy, poorly sorted, angular, saturated.	
	1.0	2.0	85 175	0.0	0.0							
	0.8	1.5	111 116 116	0.0	0.0			15				
							-15.5 15.5					
		2.5									22.4-47.0':RACINE FORMATION Yellowish gray (5Y 8/1), finely crystalline, DOLOMITE, with some interclasts, peloids, occasional zones of wavy laminae of clay, heavy minerals, calcite, some quartz infillings, moderately vuggy	Lost all water return
		4.5										

CONTAMINANT SCREENING NOTES
*HNu w/10.2 eV ** Split Spoon Screenin

SITE: LENZ OIL RI/FS

HOLE NO. MW-02D

ERM - North Central, Inc.
Environmental Resources Management

GEOLOGIC DRILL LOG

PROJECT	PROJECT NUMBER	SHEET NO.	HOLE NO.
Lenz Oil RI/FS	0252	2 OF 2	MW-02D

Samples/R. Core: Sample # / Time	Rec. (ft)	Length (ft)	Blow Cnt / RQD(%)	Contaminant Screening: Amb Air* VOC(ppm)	Sample** VOC(ppm)	Visual Observ.	LAYER ELEV. DEPTH	DEPTH	GRAPHICS	SAMPLE	DESCRIPTION AND CLASSIFICATION	NOTES ON: WATER LEVELS, WATER RETURN, CHARACTER OF DRILLING, ETC.
		3.8						25				
		6.3						30				
		10.0						35				
								40				
							-43.0					
							43.0				End of boring, 43'	

ERM - North Central, Inc.
Environmental Resources Management

GEOLOGIC DRILL LOG

PROJECT	PROJECT NUMBER	SHEET NO.	HOLE NO.
Lenz Oil RI/FS	0252	1 OF 2	MW-03D

SITE	COORDINATES	ANGLE FROM HORIZ	BEARING
LENZ OIL RI/FS	N 10; E 586	Vertical	------

BEGUN	COMPLETED	DRILLER	DRILLING EQUIPMENT	BORING DIA.	TOTAL DEPTH
3-21-91	3-22-91	FOX DRILLING	CME-75	11.5"	44.0

CORE RECOVERY (FT./%)	CORE BOXES	SAMPLES	EL. TOP CASING	GROUND EL.	DEPTH/EL. GROUND WATER	DEPTH/EL. TOP OF ROCK
40.0/90	5	0	597.87	595.3	6.0/589.3 /	2.3/

SAMPLE DEVICE	CASING LEFT IN HOLE: DIA./LENGTH	LOGGED BY:
2"x2' Split Spoon/NX Core Barrel		Dirk Kaiser

Samples/R. Core: Sample No. Time	Rec. (ft)	Length(ft)	Blow Count RQD(%)	Contaminant Screening: Amb. Air* VOC(ppm)	Sample ** VOC(ppm)	Visual Observ.	LAYER ELEV. DEPTH	DEPTH	GRAPHICS	SAMPLE	DESCRIPTION AND CLASSIFICATION	NOTES ON: WATER LEVELS, WATER RETURN, CHARACTER OF DRILLING, ETC.
							595.3					
SS01	0.5	2.0		0.0	0.0						0-2.3': TOPSOIL - Black and Dark Brown mottled, some clay, some fine sand, grass, roots, soft, moist.	
							593.0 / 2.3					Bedrock at 2.3'
											2.3-44.0': RACINE FORMATION: Yellowish gray (5Y 8/1), Finely crystalline, dolomite, with some intraclasts and peloids, occasional zones of wavy laminae, fractured with clay, heavy mineral and calcite infillings, some open fractures, slightly fossiliferous	
							591.3 / 4.0					
Run#1	10.0	10.0		0.0				5			4.0-14.0': Run#1 4.0-4.5': Highly Fractured	Water table at -6'
								10			10.8-11.5': Highly Fractured	
							581.3 / 14.0					
Run#2	10.0	10.0		0.0				15			14.0-24.0': Run#2	

CONTAMINANT SCREENING NOTES
*HNu w/10.2 eV **Split Spoon Screening

SITE: LENZ OIL RI/FS

HOLE NO. MW-03D

ERM - North Central, Inc.
Environmental Resources Management

GEOLOGIC DRILL LOG

PROJECT	PROJECT NUMBER	SHEET NO.	HOLE NO.
Lenz Oil RI/FS	0252	2 OF 2	MW-03D

Samples/R. Core: Sample # / Time	Rec. (ft)	Length (ft)	Blow Cnt / RQD(%)	Contaminant Screening: Amb Air* VOC(ppm)	Sample** VOC(ppm)	Visual Observ.	LAYER ELEV. DEPTH	DEPTH	GRAPHICS	SAMPLE	DESCRIPTION AND CLASSIFICATION	NOTES ON: WATER LEVELS, WATER RETURN, CHARACTER OF DRILLING, ETC.
							571.3					
Run#3	10.0	10.0		0.0			24.0	25			24.0-34.0': Run#3	
								30			29.9': 1" very fine grained sandstone lense, CaCO3 cemented	
							561.3					
Run#4	10.0	10.0		0.0			34.0	35			34.0-44.0': Run#4	
								40			37.5': 2-3" vug	
							551.3					
							44.0				End of boring, 44.0'.	

ERM - North Central, Inc.
Environmental Resources Management

GEOLOGIC DRILL LOG

PROJECT	PROJECT NUMBER	SHEET NO.	HOLE NO.
Lenz Oil RI/FS	0252	1 OF 3	MW-04D

SITE	COORDINATES	ANGLE FROM HORIZ	BEARING
LENZ OIL RI/FS	N 658; E 507	Vertical	------

BEGUN	COMPLETED	DRILLER	DRILLING EQUIPMENT	BORING DIA.	TOTAL DEPTH
3-13-91	3-14-91	W. Holloman	CME-75	9.0"	46.0

CORE RECOVERY (FT./%)	CORE BOXES	SAMPLES	EL. TOP CASING	GROUND EL.	DEPTH/EL. GROUND WATER	DEPTH/EL. TOP OF ROCK
28.0/95	4	15	602.80	600.5	▽ 5.0/595.5 5.0 ▼ /	17.5/

SAMPLE DEVICE	CASING LEFT IN HOLE: DIA./LENGTH	LOGGED BY:
2"x2' Split Spoon/NX Core Barrel		Dirk Kaiser

Samples/R. Core: Sample No. Time	Rec. (ft)	Length(ft)	Blow Count RQD(%)	Contaminant Screening: Amb. Air* VOC(ppm)	Sample ** VOC(ppm)	Visual Observ.	LAYER ELEV. DEPTH 600.5	DEPTH	GRAPHICS	SAMPLE	DESCRIPTION AND CLASSIFICATION	NOTES ON: WATER LEVELS, WATER RETURN, CHARACTER OF DRILLING, ETC.
SS-A 09:30	2.0	2.0	11 18 35 36	0.0	1.0						0.0-1.5': GRAVELLY SANDY CLAY Black, oil stained, limestone fragments 1.5-2.0': SAND & GRAVEL Orange-brown, coarse grained sand, limestone up to 1"	
SS-B 09:45	1.8	2.0	20 13 36 92	0.0	0.0						2.0-2.7': CLAY Black, organic, with limestone fragments 2.7-3.5': GRAVEL Orange-yellow to light grey, weathered	
SS-C 09:50	1.0	2.0	49 62 20 13	0.0	0.0			▽ 5			3.5-4.0': GRAVEL & CLAY Light grey stained black, weathering 4.0-4.5': CLAY Black, organic Water Table @ 5.0' 4.5-6.0': As Above - with limestone fragments up to 3" in diameter.	
SS-D 10:05	0.0	2.0	2 1 2 3	0.0	0.8						6.0-8.0': No recovery	
SS-E 10:15	1.2	2.0	2 5 7 9	0.0	0.8						8.0-8.5': SILTY CLAY Black, organic, with light grey limestone fragments 8.5-9.5': CLAY Olive-brown, dense 9.5-10.0': As Above - stained black (oily?), wet, no odor	
SS-F 10:30	0.5	2.0	11 17 19 13	0.0	0.6			10			10.0-11.0': As Above - with limestone fragments 11.0-12.0': GRAVEL Light grey, limestone, covered with a dark oily liquid	
SS-G 11:15	1.0	2.0	39 67 30 42	0.0	0.0						12.0-14.0': As Above	
SS-H 11:50	2.0	2.0	32 51 67 170	0.0	0.0			15			14.0-16.0': As Above - fractured, ground up	
SS-I	1.0	1.5	96 65 100	0.0	0.0						16.0-17.5': As Above	
RUN 1 08:50 09:15	3.8	4.3		0.0			583.0 17.5				17.5-46.0': RACINE FORMATION: Yellowish gray (5Y 8/1), Finely crystalline, dolomite, with some intraclasts and peloids, occasional zones of wavy laminae, fractured with clay, heavy mineral and calcite infillings, some open	

CONTAMINANT SCREENING NOTES
*HNu w/10.2 eV **Split Spoon Screening

SITE: LENZ OIL RI/FS
HOLE NO.: MW-04D

ERM - North Central, Inc.
Environmental Resources Management

GEOLOGIC DRILL LOG

PROJECT	PROJECT NUMBER	SHEET NO.	HOLE NO.
Lenz Oil RI/FS	0252	2 OF 3	MW-04D

Samples/R. Core: Sample # / Time	Rec. (ft)	Length (ft)	Blow Cnt / RQD(%)	Contaminant Screening: Amb Air* VOC(ppm)	Sample** VOC(ppm)	Visual Observ.	LAYER ELEV. DEPTH	DEPTH	GRAPHICS	SAMPLE	DESCRIPTION AND CLASSIFICATION	NOTES ON: WATER LEVELS, WATER RETURN, CHARACTER OF DRILLING, ETC.
											fractures, horizontal and high angle fractures. 20.6-21.8': Highly fractured	
							578.7					
RUN 2 09:25 09:50	4.7	4.7		0.0			21.8					
								25			24.5-25.5': highly fractured	
							574.0					
RUN 3 10:00 10:25	3.5	6.5		0.0			26.5					
								30				
											32.5': Sand Seam - 0.7mm, calcite cemented, very fine grained	
							567.5					
RUN 4 11:00 11:30	5.5	5.5		0.0			33.0				32.6-34.4': highly fractured	
								35			34.6-35.0': highly fractured	
							562.0					
RUN 5 11:40 12:00	2.8	2.8		0.0			38.5					
								40				
							559.2					
RUN 6 12:05 12:15	4.7	4.7		0.0			41.3					

ERM - North Central, Inc.
Environmental Resources Management

GEOLOGIC DRILL LOG

PROJECT	PROJECT NUMBER	SHEET NO.	HOLE NO.
Lenz Oil RI/FS	0252	3 OF 3	MW-04D

Samples/R. Core: Sample # / Time	Rec. (ft)	Length (ft)	Blow Cnt / RQD(%)	Contaminant Screening: Amb Air* VOC(ppm)	Sample** VOC(ppm)	Visual Observ.	LAYER ELEV. DEPTH	DEPTH	GRAPHICS	SAMPLE	DESCRIPTION AND CLASSIFICATION	NOTES ON: WATER LEVELS, WATER RETURN, CHARACTER OF DRILLING, ETC.
							554.5 / 46.0					
											End of Boring - 46.0' Total loss of water during drilling to formation: MW-04D: 2610 gallons MW-04S: 0 gallons	
								50				
								55				
								60				
								65				

ERM - North Central, Inc.
Environmental Resources Management

GEOLOGIC DRILL LOG

PROJECT	PROJECT NUMBER	SHEET NO.	HOLE NO.
Lenz Oil RI/FS	0252	1 OF 3	MW-05D

SITE	COORDINATES	ANGLE FROM HORIZ	BEARING
LENZ OIL RI/FS	N 515; E 424	Vertical	------

BEGUN	COMPLETED	DRILLER	DRILLING EQUIPMENT	BORING DIA.	TOTAL DEPTH
2-26-91	3-4-91	FOX DRILLING	CME-75	7.5"	54.5

CORE RECOVERY (FT./%)	CORE BOXES	SAMPLES	EL. TOP CASING	GROUND EL.	DEPTH/EL. GROUND WATER	DEPTH/EL. TOP OF ROCK
28.9/41	4			603.9	/	26.5/

SAMPLE DEVICE	CASING LEFT IN HOLE: DIA./LENGTH	LOGGED BY:
2"x2' Split Spoon/NX Core Barrel		Dirk Kaiser

Samples/R. Core: Sample No. Time	Rec. (ft)	Length(ft)	Blow Count RQD(%)	Contaminant Screening: Amb. Air* VOC(ppm)	Sample ** VOC(ppm)	Visual Observ.	LAYER ELEV. DEPTH 603.9	DEPTH	GRAPHICS	SAMPLE	DESCRIPTION AND CLASSIFICATION	NOTES ON: WATER LEVELS, WATER RETURN, CHARACTER OF DRILLING, ETC.
SS-1 08:40	1.5	2.0	9 12 13 10	0.0	0.0						Light olive gray (5Y 5/2), silty, ASH, small pebbles to cobbles, non-homogenous 0.6'-0.9': Same as above with oil 0.9'-1.5': Dusky yellow (5Y 6/4), SAND, cobbly to silty, moist	
SS-2 08:50	1.2	2.0	9 5 12 21	0.0	0.0						-Same as above, with pebbles and cobbles, angular, well rounded, moist to wet	
SS-3 09:00	1.1	2.0	41 15 53 64	0.0	0.0			5			Mottled dusky yellow (5Y 6/4) and yellowish gray (5Y 7/2), sub-angular, cobbles, SANDS, GRAVELS, and DOLOMITE, moist	
SS-4 09:14	1.6	2.0	9 14 17 22	0.0	0.0						-Same as above, moist	
SS-5 09:22	1.6	2.0	16 21 23 28	0.0	4-20						1.1': Same as above 0.5': Black, angular, DOLOMITE, stained, saturated, sulfer smell	
SS-6 09:40	0.9	2.0	9 7 6 4	0.0	1.1			10			-Same as above, oil, saturated	
SS-7 09:50	1.3	2.0	3 2 4 10	0.0	1.0						Light olive gray (5Y 6/1), silty, sandy, gravel, dolomite chips, oily stain, saturated	
SS-8 10:00	1.0	2.0	8 8 6 7	0.0	0.5			15			-Same as above, not as oily as above, saturated	
SS-9 10:10	1.1	2.0	10 21 52 31	0.0	1.0						-Same as above, saturated	
SS-10 10:15	0.8	2.0	13 4 2 8	0.0	0.0						-Same as above, saturated	

CONTAMINANT SCREENING NOTES
*HNu w/10.2 eV **Split Spoon Sreening

SITE	HOLE NO.
LENZ OIL RI/FS	MW-05D

ERM - North Central, Inc.
Environmental Resources Management

GEOLOGIC DRILL LOG

PROJECT	PROJECT NUMBER	SHEET NO.	HOLE NO.
Lenz Oil RI/FS	0252	2 OF 3	MW-05D

Samples/R. Core Sample # Time	Rec. (ft)	Length (ft)	Blow Cnt RQD(%)	Contaminant Screening Amb Air* VOC(ppm)	Sample** VOC(ppm)	Visual Observ.	LAYER ELEV. DEPTH	DEPTH	GRAPHICS	SAMPLE	DESCRIPTION AND CLASSIFICATION	NOTES ON: WATER LEVELS, WATER RETURN, CHARACTER OF DRILLING, ETC.
SS-11 10:21	0.9	2.0	4 4 19 11	0.0	0.5						-Same as above, 1"-2" dolomite cobbles	
SS-12 10:33	1.0	2.0	13 17 11 12	0.0	0.0						-Same as above, but light gray (7N7)	
SS-13 10:42	0.9	2.0	10 12 100	0.0	0.0			25			-Same as above	
	0.0	0.5		0.0	0.0		577.4					
RUN 1 15:20	9.0	9.0		0.0			26.5	30 35			**RACINE FORMATION**: Yellowish gray (5Y 8/1), Finely crystalline, dolomite, with some intraclasts and peloids, occasional zones of wavy laminae, fractured with clay, heavy mineral and calcite infillings, some open fractures, slightly fossiliferous -Clay infillings in fracture @ 36.0'-36.8' 0.01" wide.	
							568.4					
RUN 2 16:20	8.0	8.0		0.0			35.5	40			-Same as above	
							560.4					
RUN 3 16:55	5.5	5.5		0.0			43.5					

ERM - North Central, Inc.
Environmental Resources Management

GEOLOGIC DRILL LOG

PROJECT	PROJECT NUMBER	SHEET NO.	HOLE NO.
Lenz Oil RI/FS	0252	3 OF 3	MW-05D

Samples/R. Core: Sample # / Time	Rec. (ft)	Length (ft)	Blow Cnt / RQD(%)	Contaminant Screening: Amb Air* VOC(ppm)	Sample** VOC(ppm)	Visual Observ.	LAYER ELEV. / DEPTH	DEPTH	GRAPHICS / SAMPLE	DESCRIPTION AND CLASSIFICATION	NOTES ON: WATER LEVELS, WATER RETURN, CHARACTER OF DRILLING, ETC.
RUN 4 17:15	5.5	5.5		0.0			554.9 / 49.0	50			
							549.4 / 54.5	55		End of boring, 54.5'	
								60			
								65			

ERM - North Central, Inc.
Environmental Resources Management

GEOLOGIC DRILL LOG

PROJECT	PROJECT NUMBER	SHEET NO.	HOLE NO.
Lenz Oil RI/FS	0252	1 OF 2	MW-06D

SITE	COORDINATES	ANGLE FROM HORIZ	BEARING
LENZ OIL RI/FS	N 67; E 203	Vertical	------

BEGUN	COMPLETED	DRILLER	DRILLING EQUIPMENT	BORING DIA.	TOTAL DEPTH
3-18-91	3-19-91	FOX DRILLING	CME-75	11.5"	44.0

CORE RECOVERY (FT./%)	CORE BOXES	SAMPLES	EL. TOP CASING	GROUND EL.	DEPTH/EL. GROUND WATER	DEPTH/EL. TOP OF ROCK
44.0/80	5	0	595.95	593.4	2.0/591.4 /	/

SAMPLE DEVICE	CASING LEFT IN HOLE: DIA./LENGTH	LOGGED BY:
2"x2' Split Spoon/NX Core Barrel		Dirk Kaiser

Samples/R. Core: Sample No. Time	Rec. (ft)	Length(ft)	Blow Count RQD(%)	Contaminant Screening: Amb. Air* VOC(ppm)	Sample ** VOC(ppm)	Visual Observ.	LAYER ELEV. DEPTH	DEPTH	GRAPHICS	SAMPLE	DESCRIPTION AND CLASSIFICATION	NOTES ON: WATER LEVELS, WATER RETURN, CHARACTER OF DRILLING, ETC.
							593.4					
SS01 10:40	1.2	2.0	2 2 3 12	0.0	0.0						0-0.7': TOPSOIL - Black organic clay, sandy, grass, roots, soft, moist. 0.7-2.0': As Above - Orange to yellow orange with weathered limestone fragments	Water Table
							591.2 2.2					
							589.4 4.0				2.6-44.0': RACINE FORMATION: Yellowish gray (5Y 8/1), Finely crystalline, dolomite, with some intraclasts and peloids, occasional zones of wavy laminae, fractured with clay, heavy mineral and calcite infillings, some open fractures, slightly fossiliferous	Bedrock at 2.6' Casing driven to 3.3' Hole reamed to 4.0' prior to coring
Run#1	9.0	9.3		0.0				5			4.0-13.3': Run#1 4.0-4.5': Highly Fractured 6.5-10.2': Highly fractured	
								10			11.5-12.3': Mg nodules in fractures	
							580.1 13.3					
Run#2	6.0	6.7		0.0				15			13.3-20.0': Run#2 14.5-15.0': Heavily fractured	
							573.4					

CONTAMINANT SCREENING NOTES
*HNu w/10.2 eV ** Split Spoon Screenin

SITE	HOLE NO.
LENZ OIL RI/FS	MW-06D

ERM - North Central, Inc.
Environmental Resources Management

GEOLOGIC DRILL LOG

PROJECT	PROJECT NUMBER	SHEET NO.	HOLE NO.
Lenz Oil RI/FS	0252	2 OF 2	MW-06D

Samples/R. Core: Sample # / Time	Rec. (ft)	Length (ft)	Blow Cnt / RQD(%)	Contaminant Screening: Amb Air* VOC(ppm)	Sample** VOC(ppm)	Visual Observ.	LAYER ELEV. / DEPTH	DEPTH	GRAPHICS	SAMPLE	DESCRIPTION AND CLASSIFICATION	NOTES ON: WATER LEVELS, WATER RETURN, CHARACTER OF DRILLING, ETC.
Run#3	9.0	9.0		0.0			20.0				20.0-29.0': Run#3	
								25				
							564.4					
Run#4	10.0	10.0		0.0			29.0				29.0-39.0': Run#4	
								30				
											32.5-32.7': Highly fractured	
								35				
							554.4					
Run#5	5.0	5.0					39.0				39.0-44.0': Run#5	
								40				
											41.0-42.5': Highly fractured	
							549.4				43.5-43.6': Highly fractured	
							44.0				End of boring at 44.0'	

ERM - North Central, Inc.
Environmental Resources Management

GEOLOGIC DRILL LOG

PROJECT	PROJECT NUMBER	SHEET NO.	HOLE NO.
Lenz Oil RI/FS	0252	1 OF 3	MW-07D

SITE	COORDINATES	ANGLE FROM HORIZ	BEARING
LENZ OIL RI/FS	N 375; E 18	Vertical	------

BEGUN	COMPLETED	DRILLER	DRILLING EQUIPMENT	BORING DIA.	TOTAL DEPTH
3-28-91	4-1-91	FOX DRILLING	CME-75	7.5"	53.8

CORE RECOVERY (FT./%)	CORE BOXES	SAMPLES	EL. TOP CASING	GROUND EL.	DEPTH/EL. GROUND WATER	DEPTH/EL. TOP OF ROCK
28.8/	3			608.0	▽ 23.0/585.0 /	24.0/

SAMPLE DEVICE	CASING LEFT IN HOLE: DIA./LENGTH	LOGGED BY:
2"x2' Split Spoon/NX Core Barrel		Dirk Kaiser

Samples/R. Core: Sample No. Time	Rec. (ft)	Length(ft)	Blow Count RQD(%)	Contaminant Screening: Amb. Air* VOC(ppm)	Sample ** VOC(ppm)	Visual Observ.	LAYER ELEV. DEPTH	DEPTH	GRAPHICS	SAMPLE	DESCRIPTION AND CLASSIFICATION	NOTES ON: WATER LEVELS, WATER RETURN, CHARACTER OF DRILLING, ETC.
							608.0					
SS-1 08:35	1.1	2.0	4 32 29 15	0.0	0.0		607.1 0.9				0-1.0': TOPSOIL - Moderate brown (5 YR 3/4), trace sand, moist	
							606.1 1.9				1.0-2.0': GRAVEL - Dark yellowish orange (10 YR 6/6)	
SS-2 08:40	0.6	2.0	11 9 9 13	0.0	0.0						2.0-4.0': GRAVELLY CLAY - Moderate yellowish brown, some iron stains, some sand, dry	
SS-3 08:55	1.1	2.0	11 4 4 6	0.0	0.0			5			4.0-6.8': As Above - soft, moist	
SS-4 09:05	1.4	2.0	2 3 8 6	0.0	0.0		600.6 7.4				6.8-7.4': As Above - Grading to dusky yellow green	
SS-5 09:10	1.2	2.0	8 15 28 24	0.0	0.0		599.4 8.6				7.4-8.6': SAND/FILL? - Black, very fine grained, hard, trace cinders (?)	
SS-6 09:25	1.2	2.0	31 90 67 50	0.0	0.0			10			8.6-10.0': SILTY SAND - Grayish yellow (5 Y 8/4), some gravel, moderately sorted, trace silt, moist 10.0-12.0': As Above - with cobbles of dolomite	
SS-7 10:20	1.8	2.0	39 67 136 106	0.0	0.0						12.0-14.0': As Above - mottled gray in spots	
SS-8 10:40	2.0	2.0	31 55 64 65	0.0	0.0			15			14.0-24.0': As Above - Color change at 15.0' to medium light grey (N6), moist	
SS-9 11:25	1.5	2.0	37 65 81 131	0.0	0.0							
SS-10 11:50	1.5	2.0	38 54 59 67	0.0	0.0							

CONTAMINANT SCREENING NOTES
*HNu w/10.2 eV **Split Spoon Screening

SITE	HOLE NO.
LENZ OIL RI/FS	MW-07D

ERM - North Central, Inc.
Environmental Resources Management

GEOLOGIC DRILL LOG

PROJECT	PROJECT NUMBER	SHEET NO.	HOLE NO.
Lenz Oil RI/FS	0252	2 OF 3	MW-07D

Samples/R. Core: Sample # / Time	Rec. (ft)	Length (ft)	Blow Cnt / RQD(%)	Contaminant Screening: Amb Air* VOC(ppm)	Sample** VOC(ppm)	Visual Observ.	LAYER ELEV. / DEPTH	DESCRIPTION AND CLASSIFICATION	NOTES ON: WATER LEVELS, WATER RETURN, CHARACTER OF DRILLING, ETC.
SS-11 12:10	1.5	2.0	14 50 34 24	0.0	0.0				
SS-12 13:15	1.8	2.0	13 24 36 100	0.0	0.0			23.0 Saturated at 23.0', water rising to 14.0'	
							584.0 24.0	24-53.8': **RACINE FORMATION**: Yellowish gray (5Y 8/1), Finely crystalline, dolomite, with some intraclasts and peloids, occasional zones of wavy laminae, fractured with clay, heavy mineral and calcite infillings, some open fractures, slightly fossiliferous 25.0-35.2': Highly fractured	
Run#1	3.0	3.0		0.0	0.0		580.0 28.0		
Run#2	3.8	3.8		0.0	0.0		576.2 31.8		
Run#3	3.2	3.2		0.0	0.0		573.0 35.0		
Run#4	4.0	4.0		0.0	0.0		569.0 39.0	37.7-37.9': Highly fractured	
Run#5	9.0	9.0		0.0	0.0				

DEPTH: 25, 30, 35, 40

GRAPHICS / SAMPLE

ERM - North Central, Inc.
Environmental Resources Management

GEOLOGIC DRILL LOG

PROJECT	PROJECT NUMBER	SHEET NO.	HOLE NO.
Lenz Oil RI/FS	0252	3 OF 3	MW-07D

Samples/R. Core: Sample # / Time	Rec. (ft)	Length (ft)	Blow Cnt / RQD(%)	Contaminant Screening: Amb Air* VOC(ppm)	Sample** VOC(ppm)	Visual Observ.	LAYER ELEV. / DEPTH	DEPTH	GRAPHICS	SAMPLE	DESCRIPTION AND CLASSIFICATION	NOTES ON: WATER LEVELS, WATER RETURN, CHARACTER OF DRILLING, ETC.
							560.0					
Run#6	5.8	5.8		0.0	0.0		48.0					
								50			50.1-50.7': Highly fractured	
											52.8-53.8': Highly fractured	
							554.3 / 53.7					
											End of Boring at 53.8'	
								55				
								60				
								65				

ERM - North Central, Inc.
Environmental Resources Management

GEOLOGIC DRILL LOG

PROJECT	PROJECT NUMBER	SHEET NO.	HOLE NO.
Lenz Oil RI/FS	0252	1 OF 2	MW08S

SITE	COORDINATES	ANGLE FROM HORIZ	BEARING
LENZ OIL RI/FS	N 550; E 142	Vertical	------

BEGUN	COMPLETED	DRILLER	DRILLING EQUIPMENT	BORING DIA.	TOTAL DEPTH
2-13-92	2-14-92	W. Holloman	Fox Drilling, Mobil D-65	7.25"	22.5

CORE RECOVERY (FT./%)	CORE BOXES	SAMPLES	EL. TOP CASING	GROUND EL.	DEPTH/EL. GROUND WATER	DEPTH/EL. TOP OF ROCK
12.5/	2	0	602.48	599.7	▽ / ▼ /	5.7/

SAMPLE DEVICE	CASING LEFT IN HOLE: DIA./LENGTH	LOGGED BY:
2"x2' Split Spoon/NX Core Barrel	Monitoring Well 8S	Dirk Kaiser

Samples/R. Core: Sample No. Time	Rec. (ft)	Length(ft)	Blow Count RQD(%)	Contaminant Screening: Amb. Air* VOC(ppm)	Sample ** VOC(ppm)	Visual Observ.	LAYER ELEV. DEPTH (599.7)	DESCRIPTION AND CLASSIFICATION	NOTES ON: WATER LEVELS, WATER RETURN, CHARACTER OF DRILLING, ETC.
SS-1 10:00	1.5	2.0	2 8 36	0.0	0.0	None	599.4 0.3 599.1 0.6	0-0.25':FILL: Brick, glass, roots, organic material, sand and gravel. 0.25-0.6':CLAY: Light yellow brown, saturated.	
SS-2 10:11	0.8	1.0	35 50/6"	0.0	0.0	None			
SS-3 10:18	1.9	2.0	65 65 75 78	0.0	0.0	None	594.8 4.9	0.6-1.1':SILTY CLAY: Dark brown, pebbly, moist. 1.1-2.0':SILTY SAND: Yellow, fine grained, some pebbles, well rounded, some iron staining. 2-3.0':SILTY SAND: With, some broken gravel, trace clay, moist. 3-5.0':SILTY SAND: As above, stiffer.	
RUN 1 14:00 14:15	2.5	6.0		0.0	0.0	None		5.0-11.0':DOLOMITE: Rubbly, not consolidated bedrock, probably boulders.	
RUN 2 15:01 15:15	3.0	3.0		0.0	0.0	None		11-14.0':DOLOMITE: Core is mostly rubble, 6" piece of banded quartzite from between 12 to 13.5', banding is at 60 degree angle from center of core, several heavy metals can be seen along band.	
RUN 3 15:45 15:50	2.0	2.0		0.0	0.0	None		14-16.0:DOLOMITE: Rubbly dolomite.	
RUN 4 16:06 16:14	5.0	5.0		0.0	0.0	None		16-21.0'DOLOMITE: As above.	

DEPTH: 5, 10, 15

GRAPHICS / SAMPLE

CONTAMINANT SCREENING NOTES
*HNu w/10.2 eV **SS Screening

SITE: LENZ OIL RI/FS

HOLE NO.: MW08S

ERM - North Central, Inc.
Environmental Resources Management

GEOLOGIC DRILL LOG

PROJECT	PROJECT NUMBER	SHEET NO.	HOLE NO.
Lenz Oil RI/FS	0252	2 OF 2	MW08S

Samples/R. Core: Sample # / Time	Rec. (ft)	Length (ft)	Blow Cnt / RQD(%)	Contaminant Screening: Amb Air* VOC(ppm)	Sample** VOC(ppm)	Visual Observ.	LAYER ELEV. DEPTH	DEPTH	GRAPHICS	SAMPLE	DESCRIPTION AND CLASSIFICATION	NOTES ON: WATER LEVELS, WATER RETURN, CHARACTER OF DRILLING, ETC.
							578.7 / 21.0				End of Boring at 21.0' Set Monitoring Well MW08S in Borehole.	
								25				
								30				
								35				
								40				

ERM - North Central, Inc.
Environmental Resources Management

GEOLOGIC DRILL LOG

PROJECT	PROJECT NUMBER	SHEET NO.	HOLE NO.
Lenz Oil RI/FS	0252	1 OF 2	MW08S

SITE	COORDINATES	ANGLE FROM HORIZ	BEARING
LENZ OIL RI/FS	N 550; E 142	Vertical	------

BEGUN	COMPLETED	DRILLER	DRILLING EQUIPMENT	BORING DIA.	TOTAL DEPTH
2-13-92	2-14-92	W. Holloman	Fox Drilling, Mobil D-65	7.25"	22.5

CORE RECOVERY (FT./%)	CORE BOXES	SAMPLES	EL. TOP CASING	GROUND EL.	DEPTH/EL. GROUND WATER	DEPTH/EL. TOP OF ROCK
12.5/	2	0	602.48	599.7	/ /	5.7/

SAMPLE DEVICE	CASING LEFT IN HOLE: DIA./LENGTH	LOGGED BY:
2"x2' Split Spoon/NX Core Barrel	Monitoring Well 8S	Dirk Kaiser

Samples/R. Core: Sample No. / Time	Rec. (ft)	Length (ft)	Blow Count / RQD (%)	Contaminant Screening: Amb. Air* VOC (ppm)	Sample ** VOC (ppm)	Visual Observ.	LAYER ELEV. / DEPTH (599.7)	DEPTH	GRAPHICS / SAMPLE	DESCRIPTION AND CLASSIFICATION	NOTES ON: WATER LEVELS, WATER RETURN, CHARACTER OF DRILLING, ETC.
SS-1 10:00	1.5	2.0	2 8 36	0.0	0.0	None	599.4 / 0.3 / 599.1 / 0.6			0-0.25':FILL: Brick, glass, roots, organic material, sand and gravel.	
										0.25-0.6':CLAY: Light yellow brown, saturated.	
SS-2 10:11	0.8	1.0	35 50/6"	0.0	0.0	None					
SS-3 10:18	1.9	2.0	65 65 75 78	0.0	0.0	None				0.6-1.1':SILTY CLAY: Dark brown, pebbly, moist. 1.1-2.0':SILTY SAND: Yellow, fine grained, some pebbles, well rounded, some iron staining.	
							594.8 / 4.9	5		2-3.0':SILTY SAND: With, some broken gravel, trace clay, moist. 3-5.0':SILTY SAND: As above, stiffer.	
RUN 1 14:00 14:15	2.5	6.0		0.0	0.0	None				5.0-11.0':DOLOMITE: Rubbly, not consolidated bedrock, probably boulders.	
								10			
RUN 2 15:01 15:15	3.0	3.0		0.0	0.0	None				11-14.0':DOLOMITE: Core is mostly rubble, 6" piece of banded quartzite from between 12 to 13.5', banding is at 60 degree angle from center of core, several heavy metals can be seen along band.	
RUN 3 15:45 15:50	2.0	2.0		0.0	0.0	None		15		14-16.0:DOLOMITE: Rubbly dolomite.	
RUN 4 16:06 16:14	5.0	5.0		0.0	0.0	None				16-21.0'DOLOMITE: As above.	

CONTAMINANT SCREENING NOTES
*HNu w/10.2 eV **SS Screening

SITE: LENZ OIL RI/FS

HOLE NO. MW08S

ERM - North Central, Inc.
Environmental Resources Management

GEOLOGIC DRILL LOG

PROJECT	PROJECT NUMBER	SHEET NO.	HOLE NO.
Lenz Oil RI/FS	0252	2 OF 2	MW08S

Samples/R. Core: Sample # / Time	Rec. (ft)	Length (ft)	Blow Cnt / RQD(%)	Contaminant Screening: Amb Air* VOC(ppm)	Sample** VOC(ppm)	Visual Observ.	LAYER ELEV. DEPTH	DEPTH	GRAPHICS	SAMPLE	DESCRIPTION AND CLASSIFICATION	NOTES ON: WATER LEVELS, WATER RETURN, CHARACTER OF DRILLING, ETC.
							578.7 / 21.0				End of Boring at 21.0' Set Monitoring Well MW08S in Borehole.	
								25				
								30				
								35				
								40				

APPENDIX G

WELL CONSTRUCTION DIAGRAMS

WELL CONSTRUCTION LOG

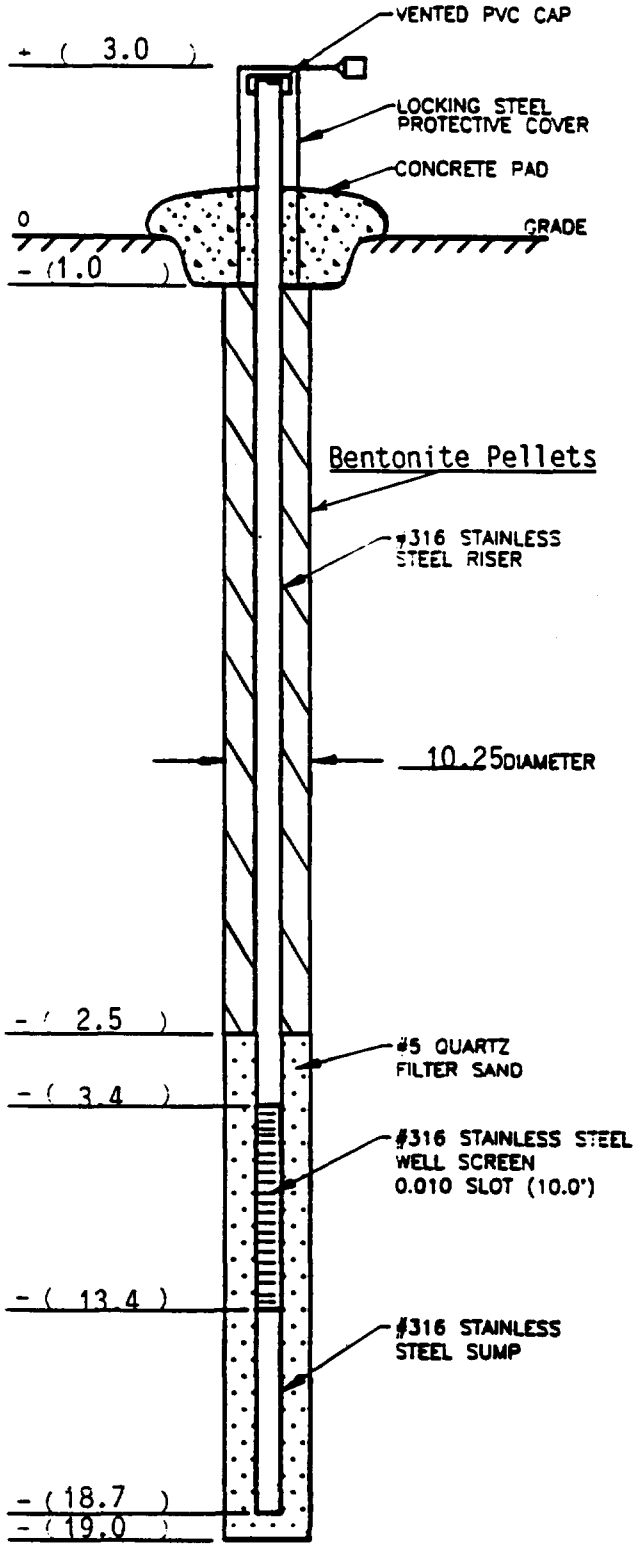

NOT DRAWN TO SCALE

ERM JOB # 0252

PROJECT Lenz Oil WELL MW01S
TOWN/CITY Lemont
COUNTY DuPage STATE IL
ELEVATION
GRADE 602.88 MSL
TOP OF CASING 600.04 MSL (M.P.)
SURVEY BY Patrick Engineering, Inc.
INSTALLATION DATE(S) 3/11/91
DRILLING METHOD HSA
DRILLING CONTRACTOR Fox Drilling, Inc.
DRILLING FLUID DuPage County Municipal Water Supply
DEVEOLPMENT TECHNIQUE(S) AND DATE(S)
Centrifugal Pump/Bailing

FLUID LOSS DURING DRILLING 0 GAL
WATER REMOVED DURING DEVELOPMENT 360 GAL
STATIC DEPTH TO WATER
FEET BELOW M.P. 7.17 DATE 5 / 9 / 91
PUMPING DURATION ____ HOURS
YIELD ____ gpm DATE ___/___/___
REMARKS

PREPARED BY Dirk Kaiser, ERM

ERM

project	0252
drawn	TMG
design	CHM
checked	
date	6/20/91
approved	
client and	KMZ - LENZ OIL

WELL CONSTRUCTION LOG

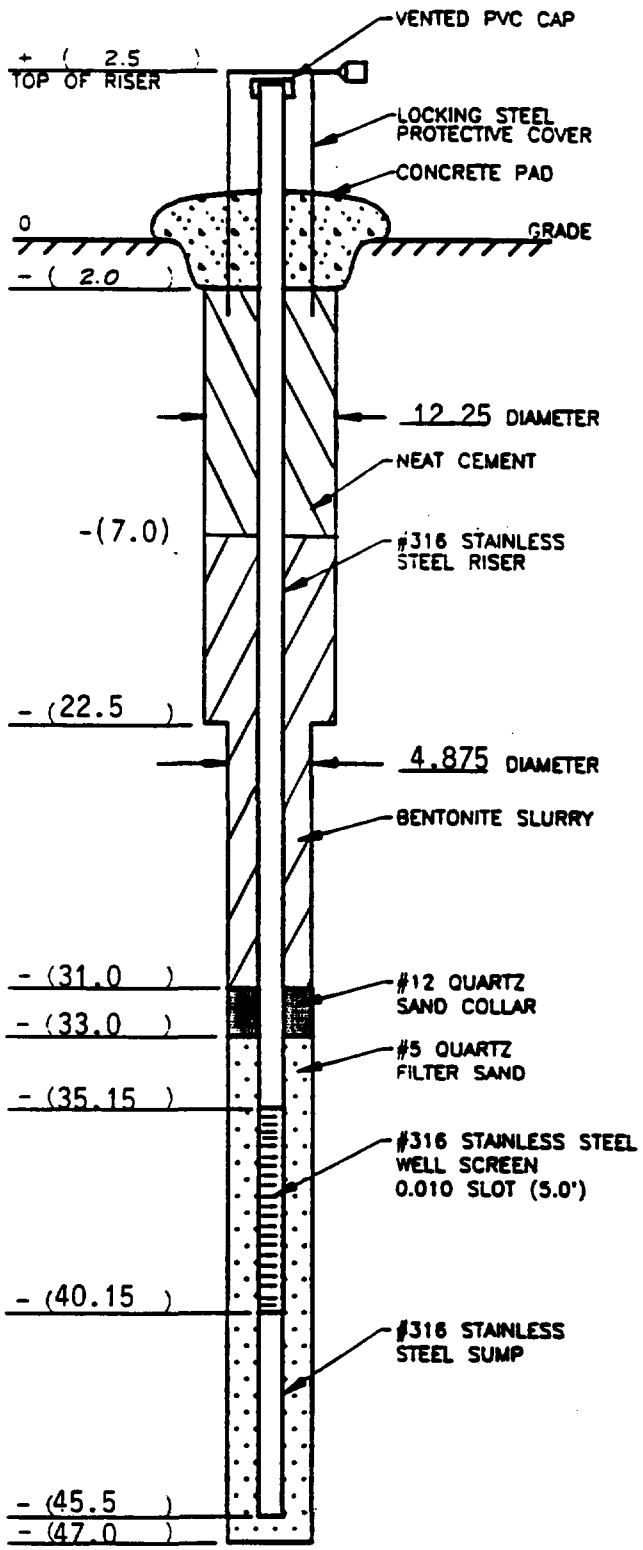

NOT DRAWN TO SCALE

ERM JOB # 0252

PROJECT Lenz Oil WELL MW01D
TOWN/CITY Lemont
COUNTY DuPage STATE Il
ELEVATION
GRADE 599.91 MSL
TOP OF CASING 602.11 MSL (M.P.)
SURVEY BY Patrick Engineering, Inc.
INSTALLATION DATE(S) 3/7/91
DRILLING METHOD HSA/Rotory
DRILLING CONTRACTOR Fox Drilling, Inc.
DRILLING FLUID DuPage County Municipal Water Supply
DEVEOLPMENT TECHNIQUE(S) AND DATE(S)
Centrifugal Pump
Bailing

FLUID LOSS DURING DRILLING 1525 GAL
WATER REMOVED DURING DEVELOPMENT 1850 GAL
STATIC DEPTH TO WATER
FEET BELOW M.P. 8.84 DATE 5 / 9 / 91
PUMPING DURATION ____ HOURS
YIELD ____ gpm DATE ___/___/___
REMARKS

PREPARED BY Dirk Kaiser, ERM

CLIENT NAME: RMZ - LENZ OIL
APPROVED
DATE: 6/20/91
DESIGNED
DRAWN: CMM
REVIEW: TMJ
PROJECT: 0252

ERM

WELL CONSTRUCTION LOG

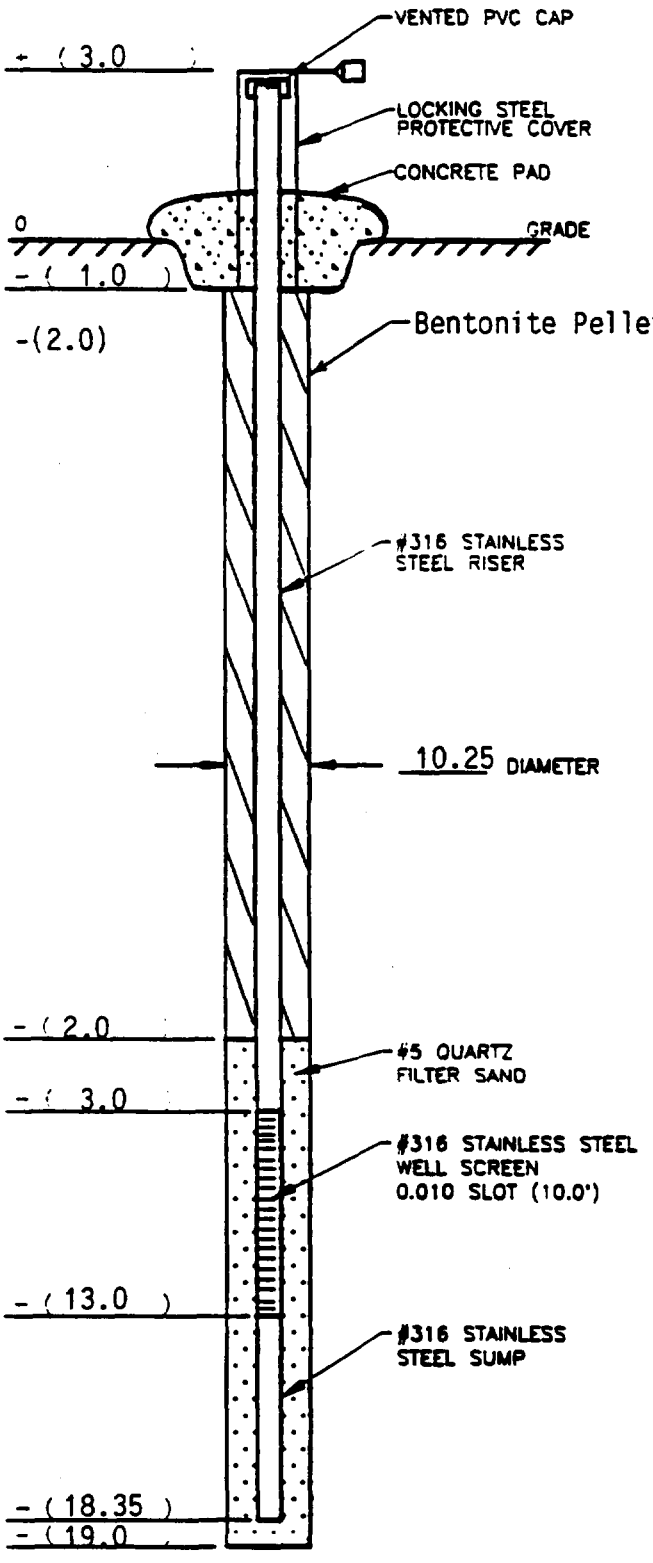

NOT DRAWN TO SCALE

ERM JOB # 0252

PROJECT Lenz Oil WELL MW02S
TOWN/CITY Lemont
COUNTY DuPage STATE IL
ELEVATION
GRADE 600.28 MSL
TOP OF CASING 603.23 MSL (M.P.)
SURVEY BY Patrick Engineering, Inc.
INSTALLATION DATE(S) 4/25/91
DRILLING METHOD HSA
DRILLING CONTRACTOR Fox Drilling, Inc.
DRILLING FLUID DuPage County Municipal Water Supply
DEVELOPMENT TECHNIQUE(S) AND DATE(S)
Centrifugal Pump/Bailing

FLUID LOSS DURING DRILLING 10 GAL
WATER REMOVED DURING DEVELOPMENT 205 GAL
STATIC DEPTH TO WATER
FEET BELOW M.P. 7.95 DATE 5 / 9 /91
PUMPING DURATION HOURS
YIELD gpm DATE / /
REMARKS

PREPARED BY Dirk Kaiser, ERM

ERM

PROJECT	0252
DRAWN	TMJ
CHKD	CMM
DATE	6/20/91
APPROVED	
CLIENT	EMZ - LENZ OIL

WELL CONSTRUCTION LOG

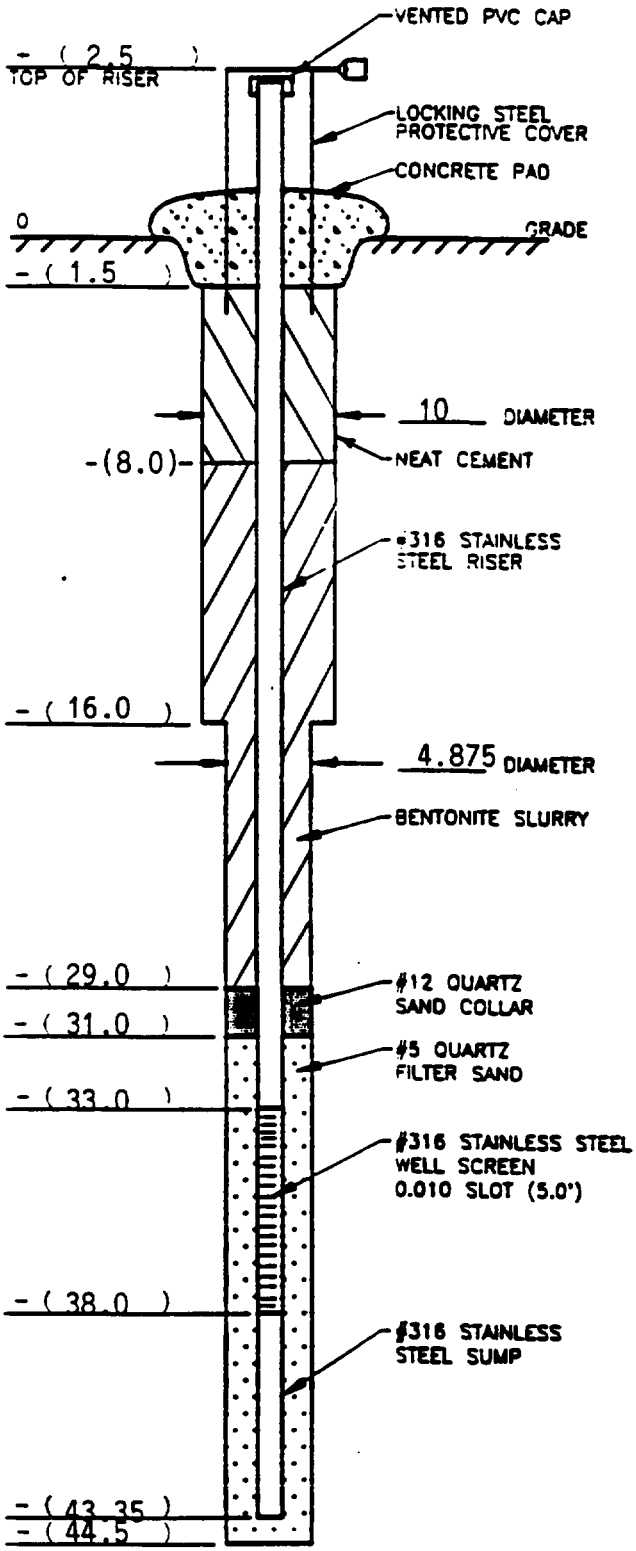

NOT DRAWN TO SCALE

ERM JOB # 0252

PROJECT Lenz Oil WELL MW02D
TOWN/CITY Lemont
COUNTY DuPage STATE Il
ELEVATION
GRADE 600.30 MSL
TOP OF CASING 602.63 MSL (M.P.)
SURVEY BY Patrick Engineering, Inc.
INSTALLATION DATE(S) 4/24/91
DRILLING METHOD HSA/Rotory
DRILLING CONTRACTOR Fox Drilling, Inc.
DRILLING FLUID DuPage County Municipal Water Supply
DEVEOLPMENT TECHNIQUE(S) AND DATE(S)
Centrifugal Pump
Bailing

FLUID LOSS DURING DRILLING 1630 GAL
WATER REMOVED DURING DEVELOPMENT 1650 GAL
STATIC DEPTH TO WATER
FEET BELOW M.P. 9.73 DATE 5 / 9 / 91
PUMPING DURATION ____ HOURS
YIELD ____ gpm DATE ___/___/___
REMARKS

PREPARED BY Dirk Kaiser, ERM

PROJECT 0252 | DRAWN TMB | CHKD GMM | DATE 6/20/91 | APPROVED | SLDW NO KMZ - LENZ OIL

ERM

WELL CONSTRUCTION LOG

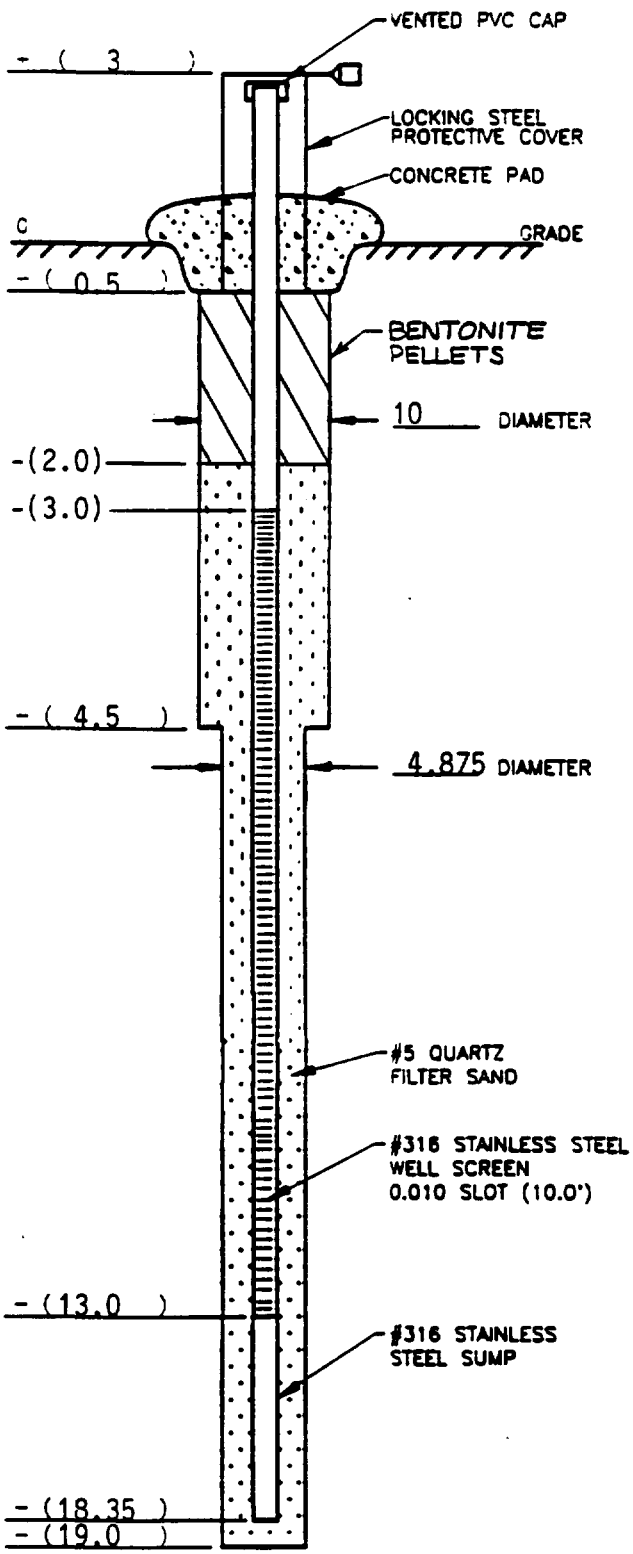

NOT DRAWN TO SCALE

ERM JOB # 0252

PROJECT Lenz Oil WELL MW03S
TOWN/CITY Lemont
COUNTY DuPage STATE IL
ELEVATION
GRADE 597.91 MSL
TOP OF CASING 597.91 MSL (M.P.)
SURVEY BY Patrick Engineering, Inc.
INSTALLATION DATE(S) 4/4/91
DRILLING METHOD HSA/Rotory
DRILLING CONTRACTOR Fox Drilling, Inc.
DRILLING FLUID DuPage County Municipal Water Supply
DEVELOPMENT TECHNIQUE(S) AND DATE(S)
Centrifugal Pump
Bailing
FLUID LOSS DURING DRILLING 358 GAL
WATER REMOVED DURING DEVELOPMENT 360 GAL
STATIC DEPTH TO WATER
FEET BELOW M.P. 6.54 DATE 5 / 9 / 91
PUMPING DURATION ____ HOURS
YIELD ____ gpm DATE ___/___/___
REMARKS

PREPARED BY Dirk Kaiser, ERM

ERM

CLIENT: RMZ - LENZ OIL
APPROVED
DATE: 8/20/91
DRAWN: CMM
DESIGN: TMJ
PROJECT: 0252

WELL CONSTRUCTION LOG

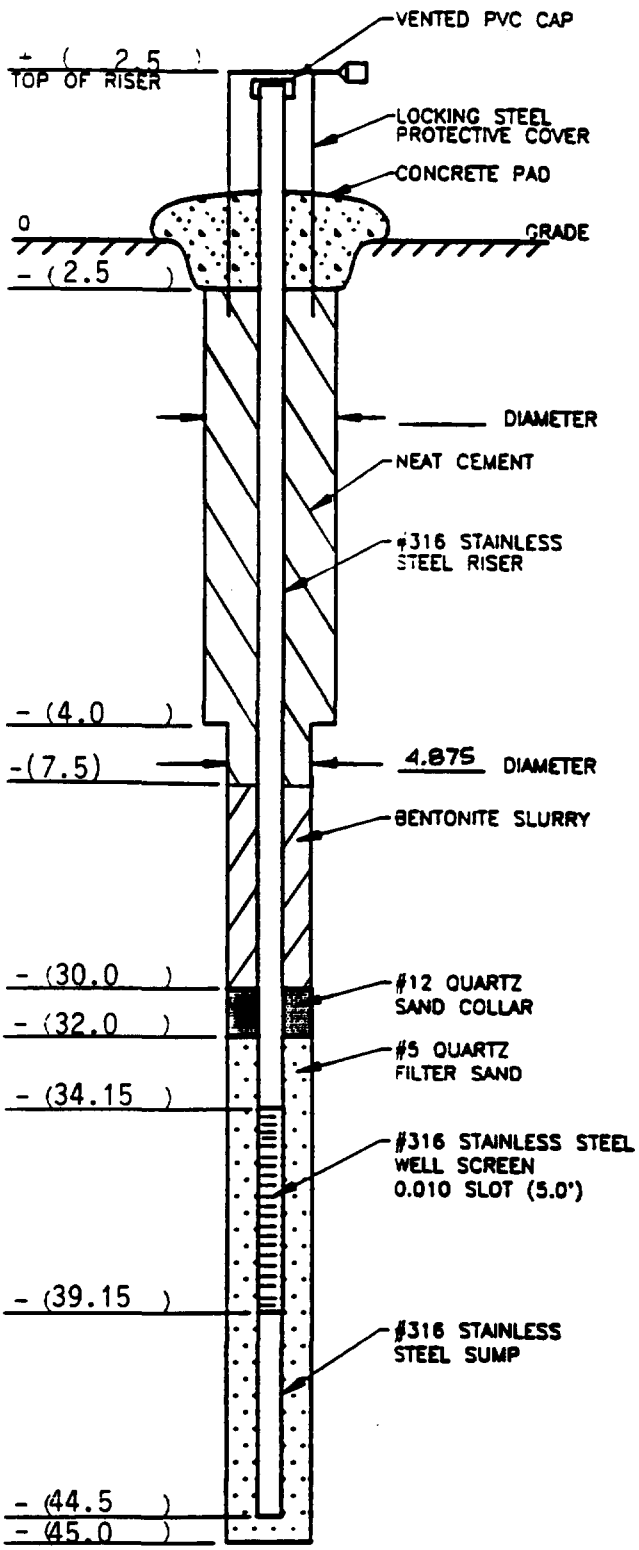

NOT DRAWN TO SCALE

ERM JOB # 0252

PROJECT Lenz Oil WELL MW03D
TOWN/CITY Lemont
COUNTY DuPage STATE Il
ELEVATION
GRADE 595.31 MSL
TOP OF CASING 597.87 MSL (M.P.)
SURVEY BY Patrick Engineering, Inc.
INSTALLATION DATE(S) 3/21-3/22, 1991
DRILLING METHOD HSA/Rotory
DRILLING CONTRACTOR Fox Drilling, Inc.
DRILLING FLUID DuPage County Municipal Water Supply
DEVEOLPMENT TECHNIQUE(S) AND DATE(S)
Centrifugal Pump
Bailing

FLUID LOSS DURING DRILLING 3500 GAL
WATER REMOVED DURING DEVELOPMENT 3530 GAL
STATIC DEPTH TO WATER
FEET BELOW M.P. 5.83 DATE 5 / 9 /91
PUMPING DURATION HOURS
YIELD gpm DATE / /
REMARKS

PREPARED BY Dirk Kaiser, ERM

ERM

PROJECT 0252 | DRAWN TM3 | DESIGNED CMM | DATE 6/20/91 | APPROVED | CLIENT KMZ - LENZ OIL

WELL CONSTRUCTION LOG

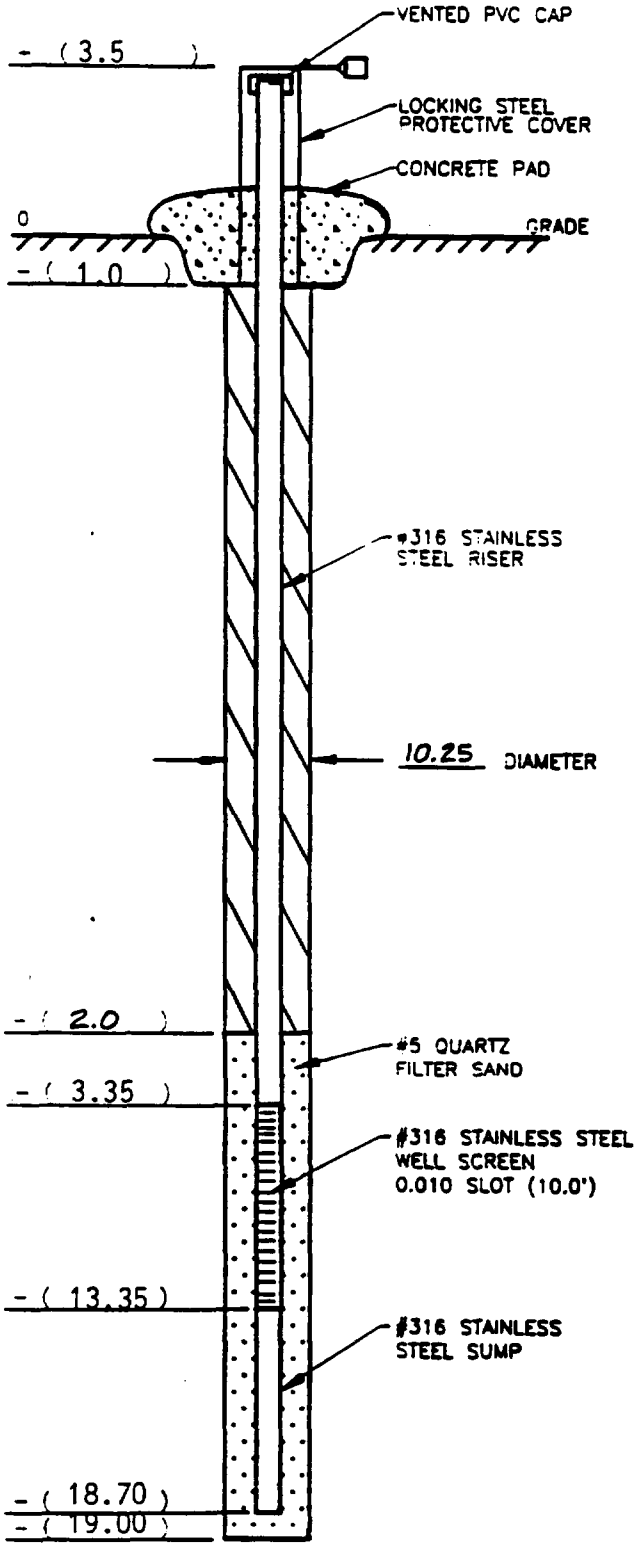

NOT DRAWN TO SCALE

ERM JOB # 0252

PROJECT Lenz Oil WELL MW04S
TOWN/CITY Lemont
COUNTY DuPage STATE IL
ELEVATION
GRADE 600.55 MSL
TOP OF CASING 603.35 MSL (M.P.)
SURVEY BY Patrick Engineering, Inc.
INSTALLATION DATE(S) 4/15/91
DRILLING METHOD HSA
DRILLING CONTRACTOR Fox Drilling, Inc.
DRILLING FLUID DuPage County Municipal Water Supply
DEVEOLPMENT TECHNIQUE(S) AND DATE(S)
Centrifugal Pump/Bailing

FLUID LOSS DURING DRILLING 400 GAL
WATER REMOVED DURING DEVELOPMENT 415 GAL
STATIC DEPTH TO WATER
FEET BELOW M.P. 7.97 DATE 5 / 9 / 91
PUMPING DURATION ____ HOURS
YIELD ____ gpm DATE ___/___/___
REMARKS

PREPARED BY Dirk Kaiser, ERM

PROJECT 0252 | DRAWN TWS | CHKD CNM | DATE 6/20/91 | APPROVED | CLIENT NAME IDNZ - LENZ OIL

ERM

WELL CONSTRUCTION LOG

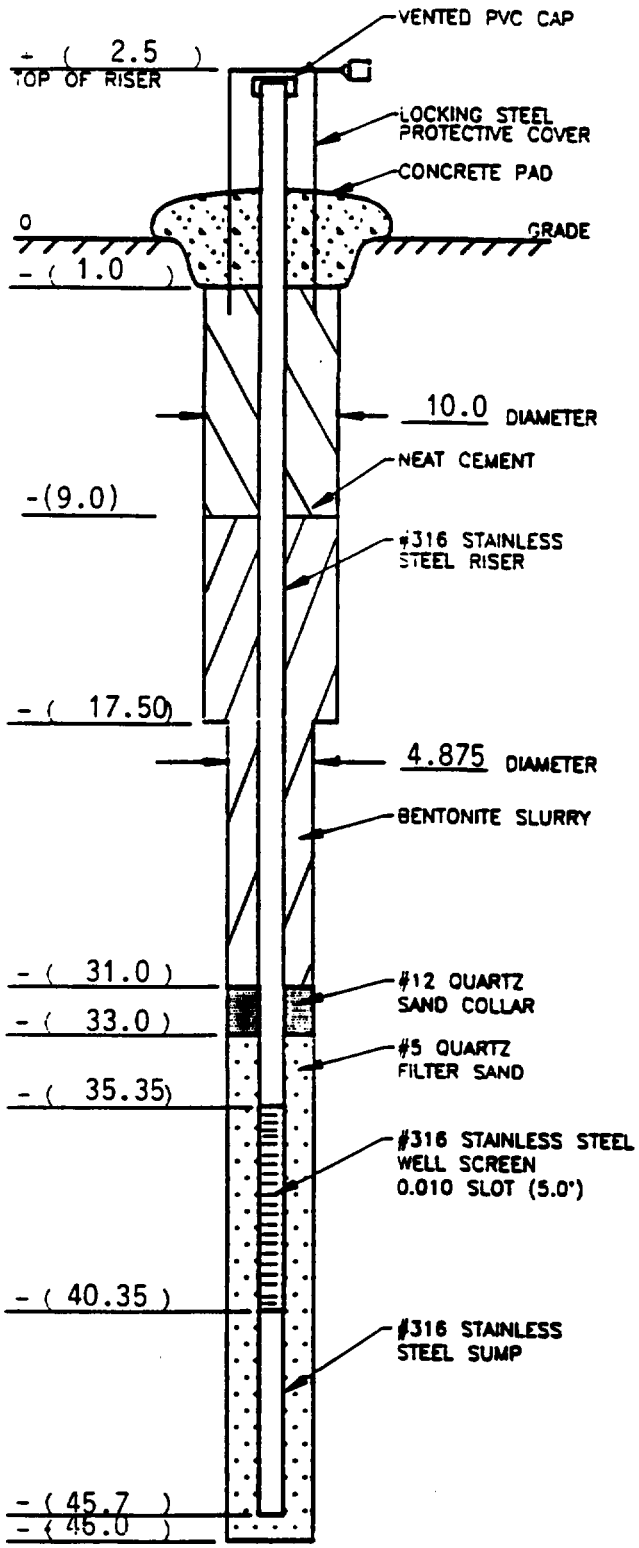

ERM JOB # 0252

PROJECT Lenz Oil WELL MW04D
TOWN/CITY Lemont
COUNTY DuPage STATE Il
ELEVATION
GRADE 600.51 MSL
TOP OF CASING 602.80 MSL (M.P.)
SURVEY BY Patrick Engineering, Inc.
INSTALLATION DATE(S) 3/14/91
DRILLING METHOD HSA/Rotory
DRILLING CONTRACTOR Fox Drilling, Inc.
DRILLING FLUID DuPage County Municipal Water Supply
DEVEOLPMENT TECHNIQUE(S) AND DATE(S)
Centrifugal Pump
Bailing

FLUID LOSS DURING DRILLING 3000 GAL
WATER REMOVED DURING DEVELOPMENT 3075 GAL
STATIC DEPTH TO WATER
FEET BELOW M.P. 10.16 DATE 5 / 9 / 91
PUMPING DURATION HOURS
YIELD gpm DATE / /
REMARKS

PREPARED BY Dirk Kaiser, ERM

NOT DRAWN TO SCALE

ERM

CLIENT NAME KMZ - LENZ OIL
APPROVED
DATE 6/20/91
DESIGNED
DRAWN CMN
REVISED TMO
PROJECT 0252

WELL CONSTRUCTION LOG

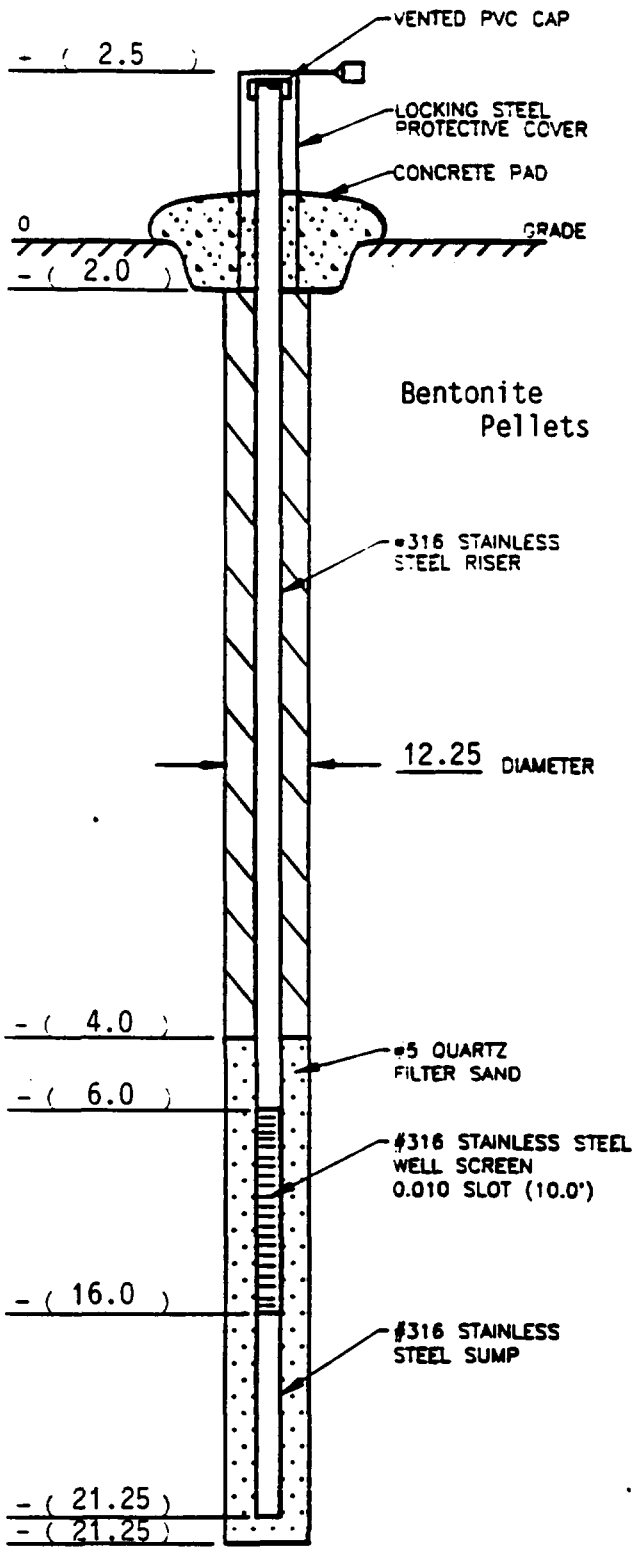

NOT DRAWN TO SCALE

ERM JOB # 0252

PROJECT Lenz Oil WELL MW05S
TOWN/CITY Lemont
COUNTY DuPage STATE IL
ELEVATION
GRADE 600.07 MSL
TOP OF CASING 603.92 MSL (M.P.)
SURVEY BY Patrick Engineering, Inc.
INSTALLATION DATE(S) 3/5/91
DRILLING METHOD HSA
DRILLING CONTRACTOR Fox Drilling, Inc.
DRILLING FLUID DuPage County Municipal Water Supply
DEVEOLPMENT TECHNIQUE(S) AND DATE(S)
Centrifugal Pump/Bailing

FLUID LOSS DURING DRILLING 0 GAL
WATER REMOVED DURING DEVELOPMENT 90 GAL
STATIC DEPTH TO WATER
FEET BELOW M.P. 8.85 DATE 5 / 9 / 91
PUMPING DURATION ____ HOURS
YIELD ____ gpm DATE ___/___/___
REMARKS

PREPARED BY Dirk Kaiser, ERM

PROJECT 0252 | DRAWN TMS | CHKD CMM | DATE 8/20/91 | APPROVED | CLIENT NAME KMZ - LENZ OIL

WELL CONSTRUCTION LOG

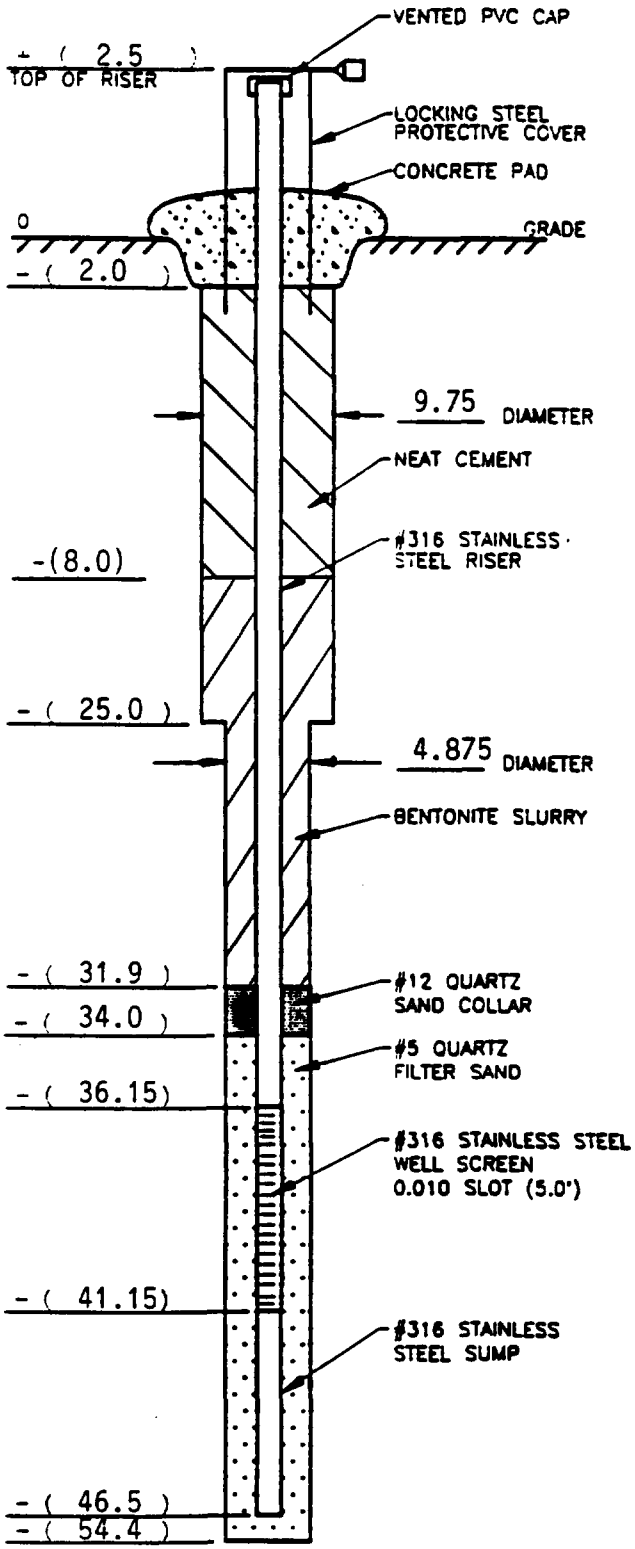

NOT DRAWN TO SCALE

ERM JOB # 0252

PROJECT Lenz Oil WELL MW05D
TOWN/CITY Lemont
COUNTY DuPage STATE Il
ELEVATION
GRADE 601.26 MSL
TOP OF CASING 603.91 MSL (M.P.)
SURVEY BY Patrick Engineering, Inc.
INSTALLATION DATE(S) 3/4/91
DRILLING METHOD HSA/Rotory
DRILLING CONTRACTOR Fox Drilling, Inc.
DRILLING FLUID DuPage County Municipal Water Supply
DEVEOLPMENT TECHNIQUE(S) AND DATE(S)
Centrifugal Pump
Bailing

FLUID LOSS DURING DRILLING 1865 GAL
WATER REMOVED DURING DEVELOPMENT 1920 GAL
STATIC DEPTH TO WATER
FEET BELOW M.P. 11.37 DATE 5 / 9 / 91
PUMPING DURATION ____ HOURS
YIELD ____ gpm DATE ___/___/___
REMARKS

PREPARED BY Dirk Kaiser, ERM

PROJECT: 0252 | DRAWN: TMJ | CHKD: CMN | DATE: 6/20/91 | PREPARED | CLIENT NAME: KMZ - LENZ OIL

ERM

WELL CONSTRUCTION LOG

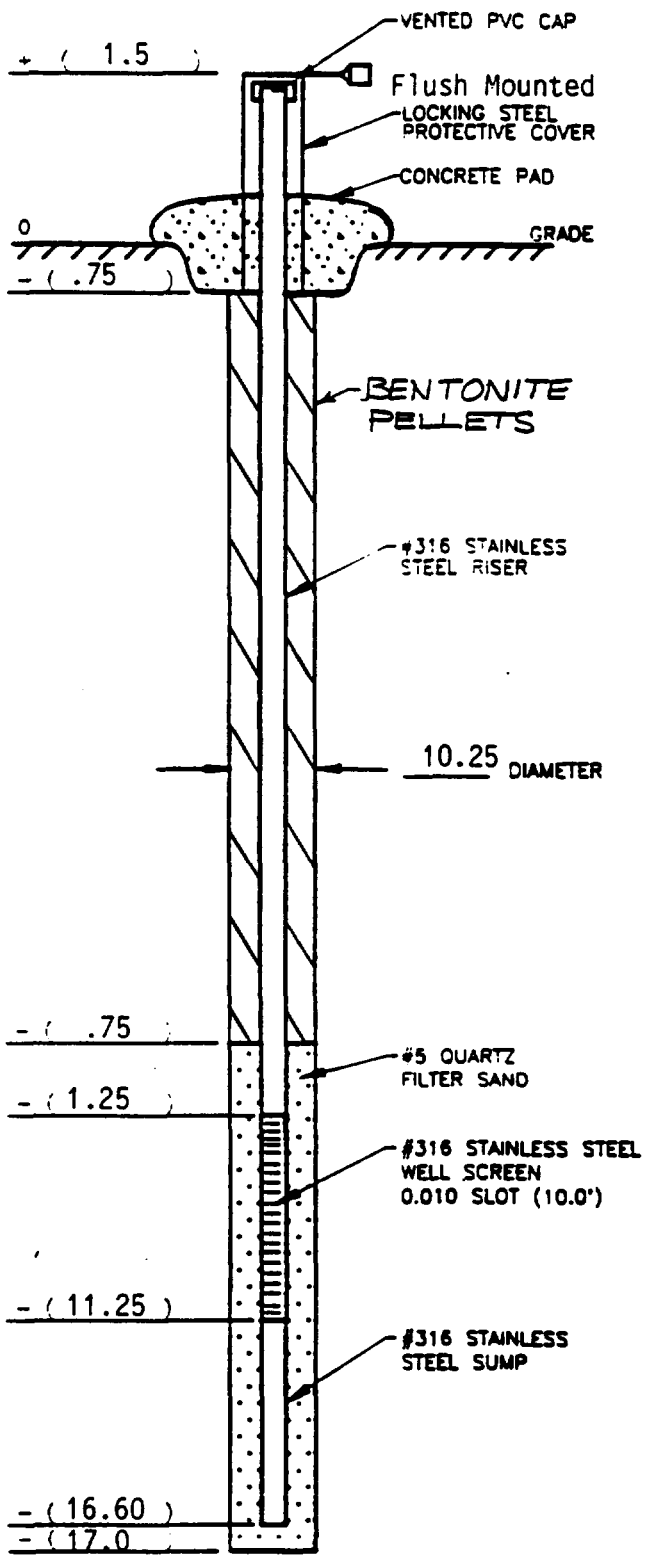

NOT DRAWN TO SCALE

ERM JOB # 0252

PROJECT Lenz Oil WELL MW06S
TOWN/CITY Lemont
COUNTY DuPage STATE IL
ELEVATION
GRADE 593.60 MSL
TOP OF CASING 594.04 MSL (M.P.)
SURVEY BY Patrick Engineering, Inc.
INSTALLATION DATE(S) 3/20/91
DRILLING METHOD HSA
DRILLING CONTRACTOR Fox Drilling, Inc.
DRILLING FLUID DuPage County Municipal Water Supply
DEVELOPMENT TECHNIQUE(S) AND DATE(S) Centrifugal Pump/Bailing

FLUID LOSS DURING DRILLING 150 GAL
WATER REMOVED DURING DEVELOPMENT 180 GAL
STATIC DEPTH TO WATER FEET BELOW M.P. 1.63 DATE 5 / 9 / 91
PUMPING DURATION ____ HOURS
YIELD ____ gpm DATE ___/___/___
REMARKS

PREPARED BY Dirk Kaiser, ERM

ERM

PROJECT	0252
DRAWN	TMJ
CHK	CMM
DESIGNED	
DATE	6/20/91
APPROVED	
CLIENT NAME	KMZ - LENZ OIL

WELL CONSTRUCTION LOG

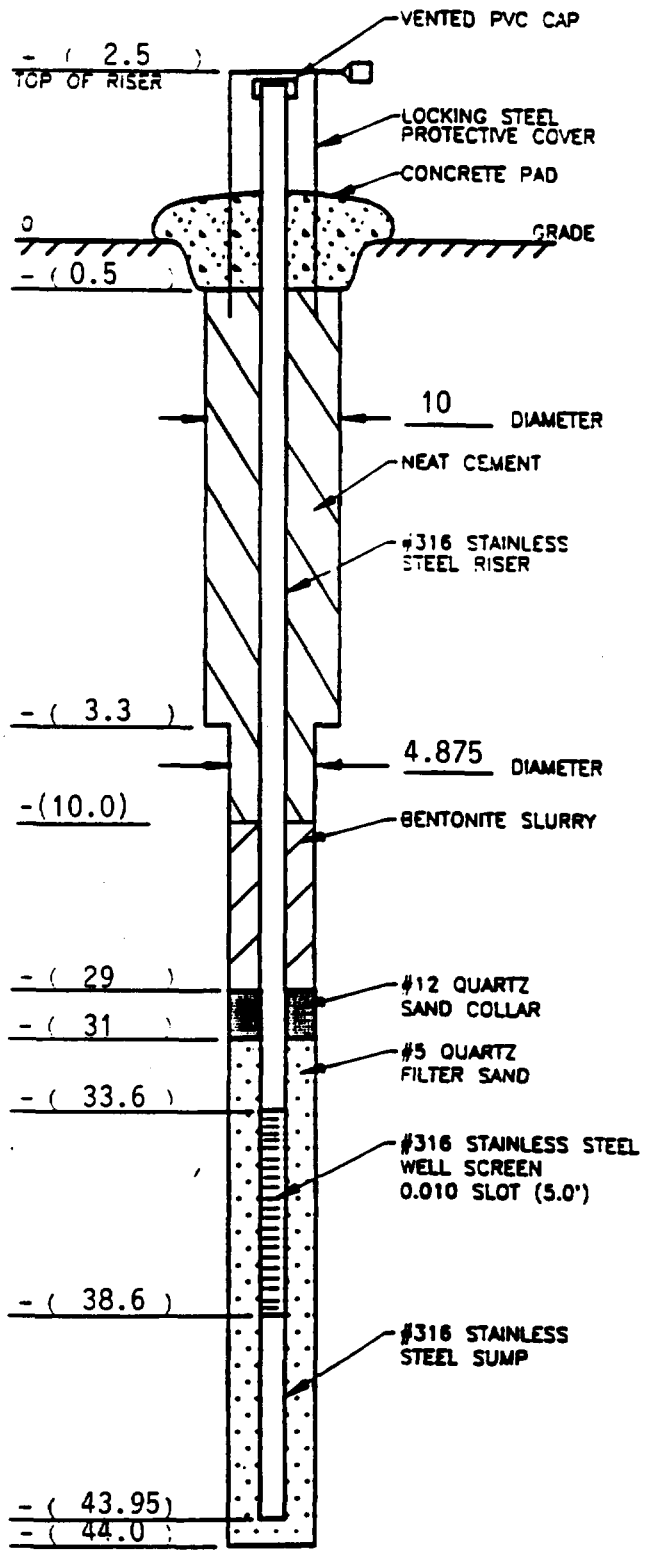

NOT DRAWN TO SCALE

ERM JOB # 0252

PROJECT Lenz Oil WELL MW06D
TOWN/CITY Lemont
COUNTY DuPage STATE Il
ELEVATION
GRADE 593.37 MSL
TOP OF CASING 595.95 MSL (M.P.)
SURVEY BY Patrick Engineering, Inc.
INSTALLATION DATE(S) 3/19/91
DRILLING METHOD HSA/Rotory
DRILLING CONTRACTOR Fox Drilling, Inc.
DRILLING FLUID DuPage County Municipal Water Supply
DEVEOLPMENT TECHNIQUE(S) AND DATE(S)
Centrifugal Pump
Bailing

FLUID LOSS DURING DRILLING 800 GAL
WATER REMOVED DURING DEVELOPMENT 825 GAL
STATIC DEPTH TO WATER
FEET BELOW M.P. 4.26 DATE 5 / 9 / 91
PUMPING DURATION ____ HOURS
YIELD ____ gpm DATE ___/___/___
REMARKS

PREPARED BY Dirk Kaiser, ERM

ERM

PROJECT 0252 | DRAWN TM3 | DESIGN CMM | DATE 6/20/91 | APPROVED | PLANT NAME KMZ - LENZ OIL

WELL CONSTRUCTION LOG

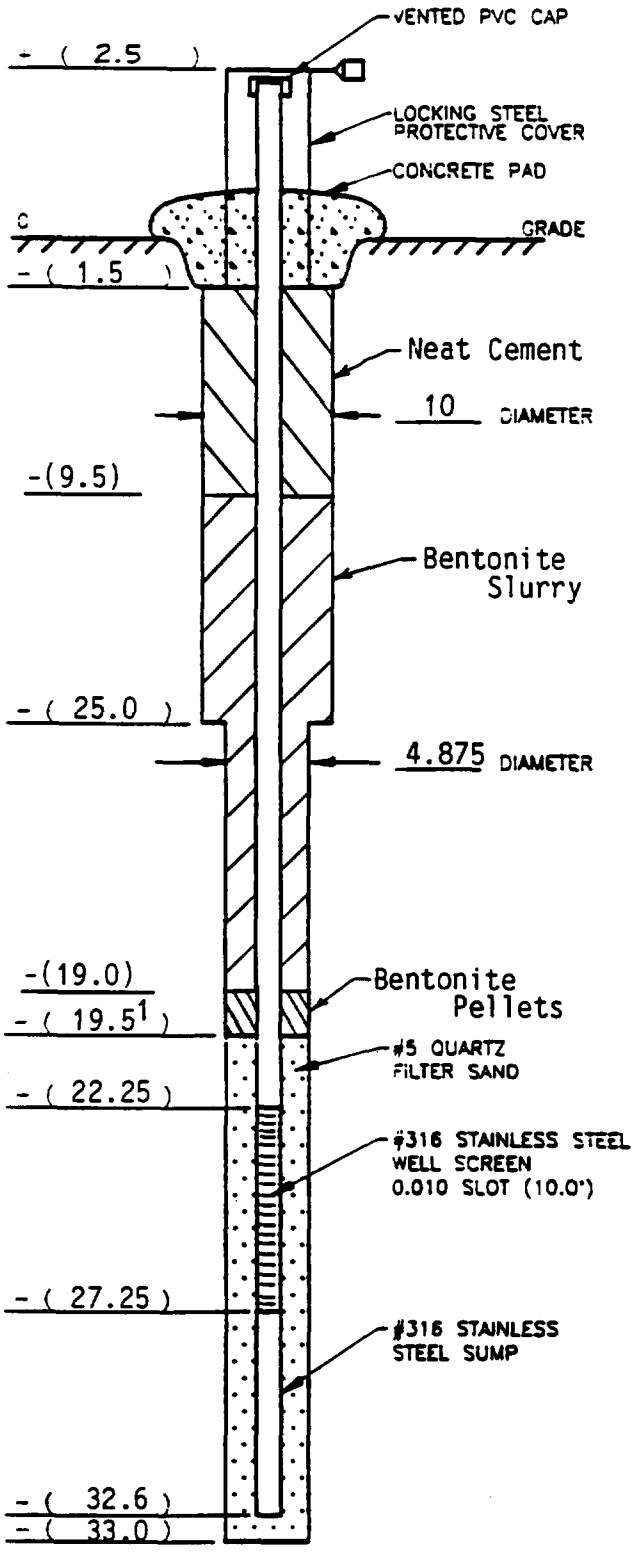

NOT DRAWN TO SCALE

ERM JOB # 0252

PROJECT Lenz Oil WELL MW07S
TOWN/CITY Lemont
COUNTY DuPage STATE IL
ELEVATION
GRADE 605.59 MSL
TOP OF CASING 608.26 MSL (M.P.)
SURVEY BY Patrick Engineering, Inc.
INSTALLATION DATE(S) 4/3/91
DRILLING METHOD HSA/Rotory
DRILLING CONTRACTOR Fox Drilling, Inc.
DRILLING FLUID DuPage County Municipal Water Supply
DEVEOLPMENT TECHNIQUE(S) AND DATE(S)
Centrifugal Pump
Bailing

FLUID LOSS DURING DRILLING 50 GAL
WATER REMOVED DURING DEVELOPMENT
Hand Bailed GAL
STATIC DEPTH TO WATER
FEET BELOW M.P. 16.31 DATE 5 / 9 / 91
PUMPING DURATION HOURS
YIELD gpm DATE / /
REMARKS

PREPARED BY Dirk Kaiser, ERM

PROJECT 0252 | APPROVED TM3 | DRAWN CMM | DESIGNED | DATE 6/20/91 | APPROVED | CLIENT NAME IOMZ - LENZ OIL

ERM

WELL CONSTRUCTION LOG

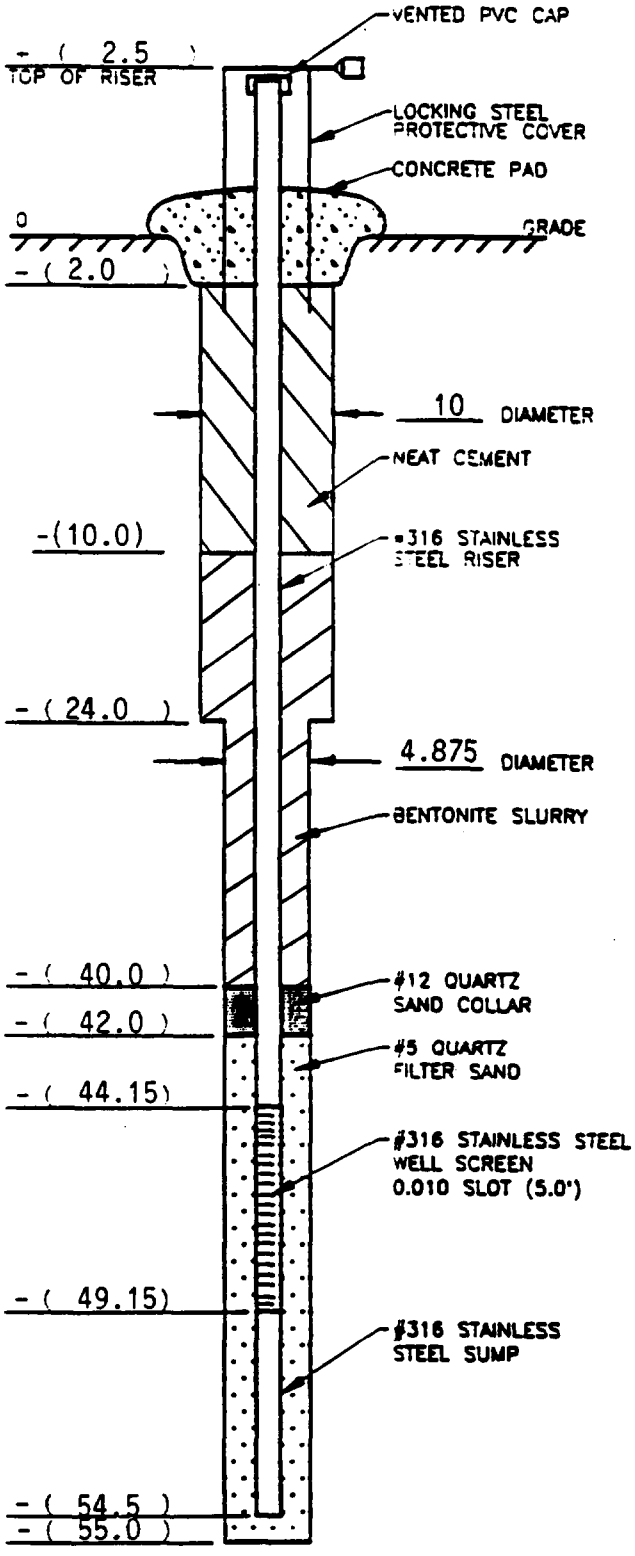

NOT DRAWN TO SCALE

ERM JOB # 0252

PROJECT Lenz Oil WELL MW07D
TOWN/CITY Lemont
COUNTY DuPage STATE Il
ELEVATION
GRADE 605.41 MSL
TOP OF CASING 607.98 MSL (M.P.)
SURVEY BY Patrick Engineering, Inc.
INSTALLATION DATE(S) 4/1/91
DRILLING METHOD HSA/Rotory
DRILLING CONTRACTOR Fox Drilling, Inc.
DRILLING FLUID DuPage County Municipal Water Supply
DEVEOLPMENT TECHNIQUE(S) AND DATE(S)
Centrifugal Pump
Bailing

FLUID LOSS DURING DRILLING 549 GAL
WATER REMOVED DURING DEVELOPMENT 650 GAL
STATIC DEPTH TO WATER
FEET BELOW M.P. 15.80 DATE 5/ 9/ 91
PUMPING DURATION HOURS
YIELD gpm DATE / /
REMARKS

PREPARED BY Dirk Kaiser, ERM

PROJECT 0252 | DRAWN TMS | DESIGNED CMM | DATE 6/20/91 | APPROVED | CLIENT DWG KMZ - LENZ OIL

ERM

WELL CONSTRUCTION LOG

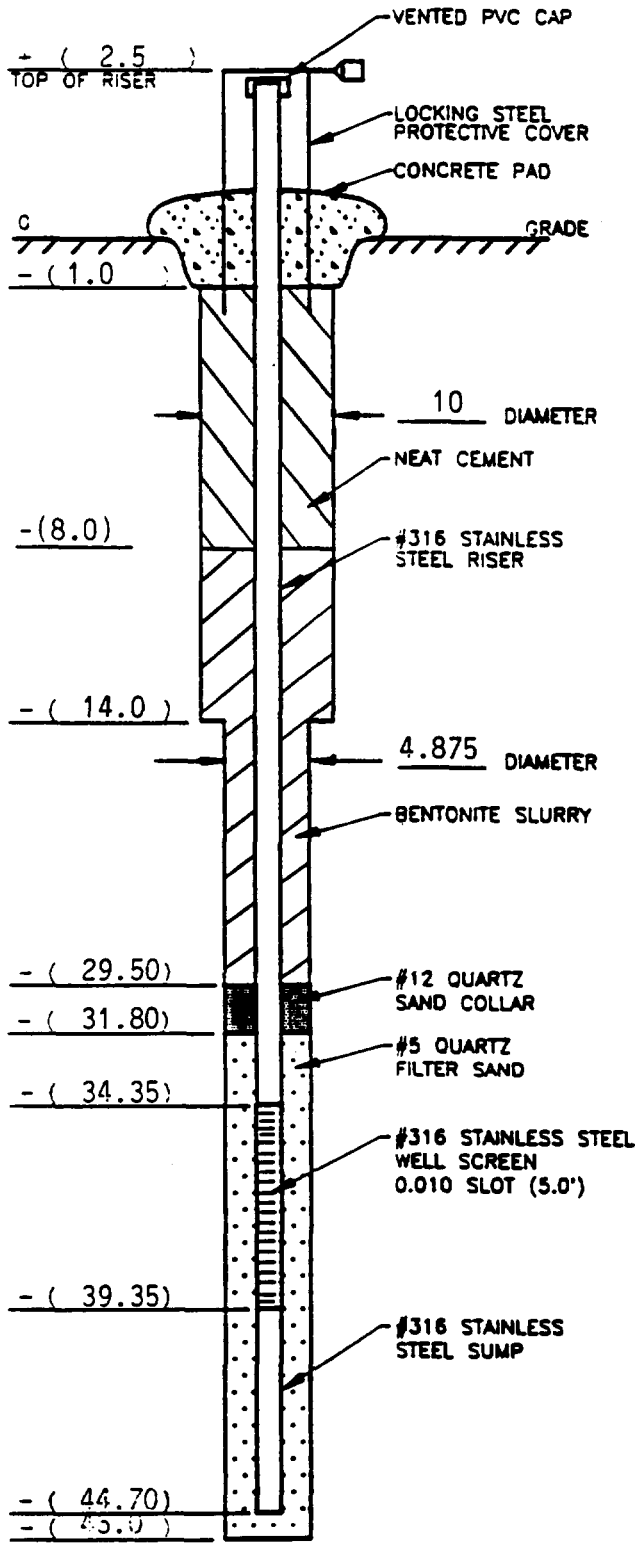

NOT DRAWN TO SCALE

ERM JOB # 0252

PROJECT Lenz Oil WELL G106DR
TOWN/CITY Lemont
COUNTY DuPage STATE Il
ELEVATION
GRADE 601.11 MSL
TOP OF CASING 603.28 MSL (M.P.)
SURVEY BY Patrick Engineering, Inc.
INSTALLATION DATE(S) 3/25-3/26 1991
DRILLING METHOD HSA/Rotory
DRILLING CONTRACTOR Fox Drilling, Inc.
DRILLING FLUID DuPage County Municipal Water Supply
DEVEOLPMENT TECHNIQUE(S) AND DATE(S)
Centrifugal Pump
Bailing
FLUID LOSS DURING DRILLING 1022 GAL
WATER REMOVED DURING DEVELOPMENT 1030 GAL
STATIC DEPTH TO WATER
FEET BELOW M.P. 10.86 DATE 5 / 9 / 91
PUMPING DURATION ____ HOURS
YIELD ____ gpm DATE ___/___/___
REMARKS

PREPARED BY Dirk Kaiser, ERM

PROJECT 0252 | DRAWN TMD | CHKD CMN | DATE 6/20/91 | APPROVED | CLIENT REQ KMZ - LENZ OIL

WELL CONSTRUCTION LOG

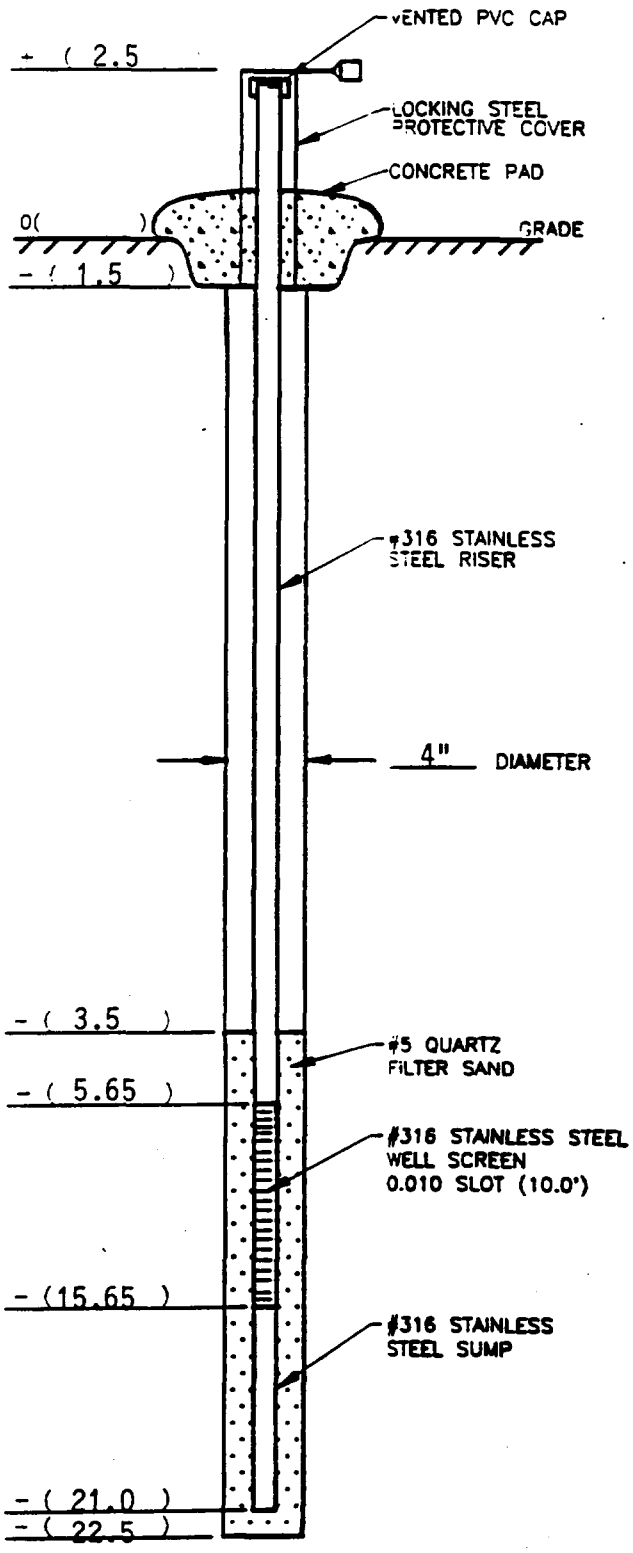

NOT DRAWN TO SCALE

ERM JOB # 0252

PROJECT Lenz Oil WELL MW08S
TOWN/CITY Lemont
COUNTY DuPage STATE IL
ELEVATION
GRADE _____ MSL
TOP OF CASING _____ MSL (M.P.)
SURVEY BY _____
INSTALLATION DATE(S) 2/14/92
DRILLING METHOD HSA/Rotary
DRILLING CONTRACTOR Fox Drilling, Inc.
DRILLING FLUID DuPage County Municipal Water Supply
DEVEOLPMENT TECHNIQUE(S) AND DATE(S)
Centrifugal Pump
Bailer

FLUID LOSS DURING DRILLING 1,150 GAL
WATER REMOVED DURING DEVELOPMENT 1,200 GAL
STATIC DEPTH TO WATER
FEET BELOW M.P. _____ DATE ___/___/___
PUMPING DURATION _____ HOURS
YIELD _____ gpm DATE ___/___/___
REMARKS
2-inch I.D. #316 Stainless Steel Matl.
All units in feet

PREPARED BY Dirk Kaiser, ERM

ERM

PROJECT 0252 | DRAWN TMS | DRAWN CMM | DESIGNED | DATE 6/20/91 | APPROVED | CLIENT NAME RMZ - LENZ OIL

APPENDIX H

MONITORING WELL DEVELOPMENT WATER ANALYTICAL RESULTS

1A
VOLATILE ORGANICS ANALYSIS DATA SHEET

EPA SAMPLE NO.

LO-TANK/001RE

Lab Name: ARDL, INC. Contract: LENZ OIL

Lab Code: ------ Case No.: 111898 SAS No.: ------ SDG No.: -------

Matrix: (soil/water) TCLP Lab Sample ID: 111898-1RE

Sample wt/vol: 0.5 (g/ml) mL Lab File ID: >V9020

Level: (low/med) LOW Date Received: 5/07/91

% Moisture: not dec. ----- Date Analyzed: 05/14/91

Column: (pack/cap) PACK Dilution Factor: 10.0

CAS NO.	COMPOUND	CONCENTRATION UNITS: (ug/L or ug/Kg) ug/L	Q
75-01-4	Vinyl Chloride	100	U
75-35-4	1,1-Dichloroethene	50	U
67-66-3	Chloroform	50	U
107-06-2	1,2-Dichloroethane	50	U
78-93-3	2-Butanone	100	U
56-23-5	Carbon Tetrachloride	50	U
79-01-6	Trichloroethene	50	U
71-43-2	Benzene	50	U
127-18-4	Tetrachloroethene	50	U
108-90-7	Chlorobenzene	50	U

1B

SEMIVOLATILE ORGANICS ANALYSIS DATA SHEET

EPA SAMPLE NO.

LO-TANK/001

Lab Name: ARDL, INC. Contract: LENZ OIL

Lab Code: ------ Case No.: 111898 SAS No.: ------ SDG No.: -------

Matrix: (soil/water) TCLP Lab Sample ID: 111898-1

Sample wt/vol: 1000.0 (g/ml) mL Lab File ID: >D5449

Level: (low/med) LOW Date Received: 05/07/90

% Moisture: not dec. ----- dec. ----- Date Extracted: 05/10/90

Extraction: (Sepf/Cont/Sonc) SEPF Date Analyzed: 05/31/91

GPC Cleanup: (Y/N) N pH: --- Dilution Factor: 1.0

CAS NO.	COMPOUND	CONCENTRATION UNITS: (ug/L or ug/Kg) ug/L	Q
110-86-1	Pyridine	10	U
106-46-7	1,4-Dichlorobenzene	10	U
95-48-7	2-Methylphenol (o-Cresol)	10	U
108-39-4	3-Methylphenol (m-Cresol)	10	U
106-44-5	4-Methylphenol (p-Cresol)	10	U
67-72-1	Hexachloroethane	10	U
98-95-3	Nitrobenzene	10	U
87-68-3	Hexachlorobutadiene	10	U
88-06-2	2,4,6-Trichlorophenol	10	U
95-95-4	2,4,5-Trichlorophenol	50	U
121-14-2	2,4-Dinitrotoluene	10	U
118-74-1	Hexachlorobenzene	10	U
87-86-5	Pentachlorophenol	50	U

1D
PESTICIDE ORGANIC ANALYSIS

Customer Sample No.

LO-TANK/001

Lab Name: ARDL, Inc. Contract: LENZ OIL
Lab Code: --- Case No.: 111898 SAS No.: --- SDG No.: ---

Matrix (SOIL/WATER) : TCLP
Sample wt/vol : 1000 (g/mL) mL
Level (LOW/MED) : LOW
% Moisture (not dec): --- dec. -
Extraction (SEPF/CONT/SONC): SEPF
GPC Cleanup (Y/N): N pH: 7.0

Lab Sample ID : 111898-1
Lab File ID : ---
Date Received : 05/07/91
Date Extracted : 05/10/91
Date Analyzed : 05/17/91
Dilution Factor: 1.0

CAS No.	Compound	Concentration Units: ug/L (ug/L or ug/Kg)	Q
319-84-6	alpha-BHC	0.05	U
319-85-7	beta-BHC	0.05	U
319-86-8	delta-BHC	0.05	U
58-89-9	gamma-BHC(Lindane)	0.05	U
76-44-8	Heptachlor	0.05	U
309-00-2	Aldrin	0.05	U
1024-57-3	Heptachlor epoxide	0.05	U
959-98-8	Endosulfan I	0.05	U
60-57-1	Dieldrin	0.10	U
72-55-9	4,4'-DDE	0.10	U
72-20-8	Endrin	0.10	U
33213-65-9	Endosulfan II	0.10	U
72-54-8	4,4'-DDD	0.10	U
1013-07-8	Endosulfan sulfate	0.10	U
50-29-3	4,4'-DDT	0.10	U
72-43-5	Methoxychlor	0.50	U
53494-70-5	Endrin ketone	0.10	U
5103-71-9	alpha-Chlordane	0.50	U
5103-74-2	gamma-Chlordane	0.50	U
8001-35-2	Toxaphene	1.0	U
12674-11-2	Aroclor 1016	0.50	U
11104-28-2	Aroclor 1221	0.50	U
11141-16-5	Aroclor 1232	0.50	U
53469-21-9	Aroclor 1242	0.50	U
12672-29-6	Aroclor 1248	0.50	U
11097-69-1	Aroclor 1254	1.0	U
11096-82-5	Aroclor 1260	1.0	U

HERBICIDE ORGANIC ANALYSIS

Customer Sample No.

LO-TANK/001

Lab Name: ARDL, Inc. Contract: LENZ OIL
Lab Code: _____ Case No.: 111898 SAS No.: ____ SDG No.: ____

Matrix (SOIL/WATER)	: TCLP	Lab Sample ID	: 111898-1
Sample wt/vol	: 1000 (g/mL) mL	Lab File ID	:
Level (LOW/MED)	: LOW	Date Received	: 05/07/91
% Moisture(not dec)	: --- dec. -	Date Extracted	: 05/09/91
Extraction(SEPF/CONT/SONC)	: SEPF	Date Analyzed	: 05/11/91
GPC Cleanup (Y/N)	: N pH: 7.0	Dilution Factor	: 1.0

CAS No.	Compound	Concentration Units: ug/L (ug/L or ug/Kg)	Q
94-75-7	2,4 D	12	U
93-72-1	2,4,5 TP (Silvex)	1.7	U

FORM IA

INORGANIC ANALYSIS DATA SHEET
METALS

Lab Name ARDL, Inc. IEPA Sample No. LO-TANK/001

Matrix (soil/water) WATER-TCLP Lab Sample ID: 111898-1

Level (low/med): _____ Date Received: 5-7-91

% Solids: 0.0

Concentration units (ug/L or mg/kg dry weight) UG/L

CAS No.	Analyte	Concentration	C	M	Q
7429-90-5	Aluminum			P	
7440-36-0	Antimony				
7440-38-2	Arsenic	4.1	U	BH	
7440-39-3	Barium	[86]		P	
7440-41-7	Beryllium			P	
7440-43-9	Cadmium	6.6	U	P	
7440-70-2	Calcium			P	
7440-47-3	Chromium	11	U	P	
7440-48-4	Cobalt			P	
7440-50-8	Copper			P	
7439-89-6	Iron			P	
7439-92-1	Lead	[2.3]		F	
7439-95-4	Magnesium			P	
7439-96-5	Manganese			P	
7439-97-6	Mercury	0.18	U	CV	
7440-02-0	Nickel			P	
7440-09-7	Potassium			P	
7782-49-2	Selenium	4.5	U	BH	
7440-22-4	Silver	15	U	P	
7440-23-5	Sodium			P	
7440-28-0	Thallium			F	
7440-62-2	Vanadium			P	
7440-66-6	Zinc			P	

Color Before: COLORLESS Clarity Before: CLEAR Texture: _____

Color After: COLORLESS Clarity After: CLEAR Artifacts: _____

1A
VOLATILE ORGANICS ANALYSIS DATA SHEET

EPA SAMPLE NO.

LO-TANK/002

Lab Name: ARDL, INC. Contract: LENZ OIL

Lab Code: ------ Case No.: 111898 SAS No.: ------ SDG No.: ------

Matrix: (soil/water) WATER Lab Sample ID: 111898-2

Sample wt/vol: 5.0 (g/mL) mL Lab File ID: >V9042

Level: (low/med) LOW Date Received: 5/07/91

% Moisture: not dec. --- Date Analyzed: 5/14/91

Column: (pack/cap) PACK Dilution Factor: 1.00000

CAS NO.	COMPOUND	CONCENTRATION UNITS: (ug/L or ug/Kg) ug/L	Q
74-87-3	Chloromethane	10.	U
74-83-9	Bromomethane	10.	U
75-01-4	Vinyl Chloride	10.	U
75-00-3	Chloroethane	10.	U
75-09-2	Methylene Chloride	3.	JB
67-64-1	Acetone	10.	U
75-15-0	Carbon Disulfide	5.	U
75-35-4	1,1-Dichloroethene	5.	U
75-34-3	1,1-Dichloroethane	5.	U
540-59-0	1,2-Dichloroethene (total)	5.	U
67-66-3	Chloroform	5.	U
107-06-2	1,2-Dichloroethane	5.	U
78-93-3	2-Butanone	10.	U
71-55-6	1,1,1-Trichloroethane	5.	U
56-23-5	Carbon Tetrachloride	5.	U
108-05-4	Vinyl Acetate	10.	U
75-27-4	Bromodichloromethane	5.	U
78-87-5	1,2-Dichloropropane	5.	U
10061-01-5	cis-1,3-Dichloropropene	5.	U
79-01-6	Trichloroethene	5.	U
124-48-1	Dibromochloromethane	5.	U
79-00-5	1,1,2-Trichloroethane	5.	U
71-43-2	Benzene	5.	U
10061-02-6	trans-1,3-Dichloropropene	5.	U
75-25-2	Bromoform	5.	U
108-10-1	4-Methyl-2-Pentanone	10.	U
591-78-6	2-Hexanone	10.	U
127-18-4	Tetrachloroethene	5.	U
79-34-5	1,1,2,2-Tetrachloroethane	5.	U
108-88-3	Toluene	5.	U
108-90-7	Chlorobenzene	5.	U
100-41-4	Ethylbenzene	5.	U
100-42-5	Styrene	5.	U
108-38-3	m-Xylene	5.	U
106-42-3	o & p-Xylene	5.	U

1E
VOLATILE ORGANICS ANALYSIS DATA SHEET
TENTATIVELY IDENTIFIED COMPOUNDS

EPA SAMPLE NO.

LO-TANK/002RE

Lab Name: ARDL, INC. Contract: LENZ OIL

Lab Code: ------ Case No.: 111898 SAS No.: ------ SDG No.: -------

Matrix: (soil/water) WATER Lab Sample ID: 111898-2RE

Sample wt/vol: 5.0 (g/mL) mL Lab File ID: >V9042

Level: (low/med) LOW Date Received: 5/07/91

% Moisture: not dec. ----- Date Analyzed: 5/14/91

Column: PACK Dilution Factor: 1.00000

Number TICs found: 1

CONCENTRATION UNITS:
(ug/L or ug/Kg) ug/L

	CAS NUMBER	COMPOUND NAME	RT	EST. CONC.	Q
1.		Unknown	13.40	38.	
2.					
3.					
4.					
5.					
6.					
7.					
8.					
9.					
10.					
11.					
12.					
13.					
14.					
15.					
16.					
17.					
18.					
19.					
20.					
21.					
22.					
23.					
24.					
25.					
26.					
27.					
28.					
29.					
30.					

1B

SEMIVOLATILE ORGANICS ANALYSIS DATA SHEET

EPA SAMPLE NO.

LO-TANK/002

Lab Name: ARDL, INC. Contract: LENZ OIL

Lab Code: ------ Case No.: 111898 SAS No.: ----- SDG No.: -----

Matrix: (soil/water) WATER Lab Sample ID: 111898-2

Sample wt/vol: 1000.0 (g/mL) mL Lab File ID: >D5404

Level: (low/med) LOW Date Received: 5/07/91

% Moisture: not dec. --- dec. --- Date Extracted: 5/10/91

Extraction: (Sepf/Cont/Sonc) SEPF Date Analyzed: 5/26/91

GPC Cleanup: (Y/N) N pH: 7.2 Dilution Factor: 1.00000

CAS NO.	COMPOUND	CONCENTRATION UNITS: (ug/L or ug/Kg) ug/L	Q
108-95-2	Phenol	10.	U
111-44-4	bis(-2-Chloroethyl)Ether	10.	U
95-57-8	2-Chlorophenol	10.	U
541-73-1	1,3-Dichlorobenzene	10.	U
106-46-7	1,4-Dichlorobenzene	10.	U
100-51-6	Benzyl alcohol	10.	U
95-50-1	1,2-Dichlorobenzene	10.	U
95-48-7	2-Methylphenol	10.	U
39638-32-9	bis(2-chloroisopropyl)ether	10.	U
106-44-5	4-Methylphenol	10.	U
621-64-7	N-Nitroso-Di-n-propylamine	10.	U
67-72-1	Hexachloroethane	10.	U
98-95-3	Nitrobenzene	10.	U
78-59-1	Isophorone	10.	U
88-75-5	2-Nitrophenol	10.	U
105-67-9	2,4-Dimethylphenol	10.	U
65-85-0	Benzoic acid	50.	U
111-91-1	bis(-2-Chloroethoxy)Methane	10.	U
120-83-2	2,4-Dichlorophenol	10.	U
120-82-1	1,2,4-Trichlorobenzene	10.	U
91-20-3	Naphthalene	10.	U
106-47-8	4-Chloroaniline	10.	U
87-68-3	Hexachlorobutadiene	10.	U
59-50-7	4-Chloro-3-methylphenol	10.	U
91-57-6	2-Methylnaphthalene	7.	J
77-47-4	Hexachlorocyclopentadiene	10.	U
88-06-2	2,4,6-Trichlorophenol	10.	U
95-95-4	2,4,5-Trichlorophenol	50.	U
91-58-7	2-Chloronaphthalene	10.	U
88-74-4	2-Nitroaniline	50.	U
131-11-3	Dimethyl Phthalate	10.	U
208-96-8	Acenaphthylene	10.	U
606-20-2	2,6-Dinitrotoluene	10.	U

1C

SEMIVOLATILE ORGANICS ANALYSIS DATA SHEET

EPA SAMPLE NO.

LO-TANK/002

Lab Name: ARDL, INC. Contract: LENZ OIL

Lab Code: ------ Case No.: 111898 SAS No.: ----- SDG No.: -----

Matrix: (soil/water) WATER Lab Sample ID: 111898-2

Sample wt/vol: 1000.0 (g/mL) mL Lab File ID: >D5404

Level: (low/med) LOW Date Received: 5/07/91

% Moisture: not dec. --- dec. --- Date Extracted: 5/10/91

Extraction: (Sepf/Cont/Sonc) SEPF Date Analyzed: 5/26/91

GPC Cleanup: (Y/N) N pH: 7.2 Dilution Factor: 1.00000

CAS NO.	COMPOUND	CONCENTRATION UNITS: (ug/L or ug/Kg) ug/L	Q
99-09-2	3-Nitroaniline	50.	U
83-32-9	Acenaphthene	10.	U
51-28-5	2,4-Dinitrophenol	50.	U
100-02-7	4-Nitrophenol	50.	U
132-64-9	Dibenzofuran	10.	U
121-14-2	2,4-Dinitrotoluene	10.	U
84-66-2	Diethylphthalate	10.	U
7005-72-3	4-Chlorophenyl-phenylether	10.	U
86-73-7	Fluorene	10.	U
100-01-6	4-Nitroaniline	50.	U
534-52-1	4,6-Dinitro-2-methylphenol	50.	U
86-30-6	N-Nitrosodiphenylamine (1)	10.	U
101-55-3	4-Bromophenyl-phenylether	10.	U
118-74-1	Hexachlorobenzene	10.	U
87-86-5	Pentachlorophenol	50.	U
85-01-8	Phenanthrene	10.	U
120-12-7	Anthracene	10.	U
84-74-2	Di-n-butylphthalate	10.	U
206-44-0	Fluoranthene	10.	U
129-00-0	Pyrene	10.	U
85-68-7	Butylbenzylphthalate	10.	U
91-94-1	3,3'-Dichlorobenzidine	20.	U
56-55-3	Benzo(a)anthracene	10.	U
218-01-9	Chrysene	10.	U
117-81-7	bis(2-Ethylhexyl)phthalate	5.	JB
117-84-0	Di-n-Octyl_Phthalate	10.	U
205-99-2	Benzo(b)fluoranthene	10.	U
207-08-9	Benzo(k)fluoranthene	10.	U
50-32-8	Benzo(a)pyrene	10.	U
193-39-5	Indeno(1,2,3-cd)pyrene	10.	U
53-70-3	Dibenzo(a,h)Anthracene	10.	U
191-24-2	Benzo(g,h,i)perylene	10.	U

(1) - Cannot be separated from Diphenylamine

1F

SEMIVOLATILE ORGANICS ANALYSIS DATA SHEET
TENTATIVELY IDENTIFIED COMPOUNDS

EPA SAMPLE NO.

LO-TANK/002

ab Name: ARDL, INC. Contract: LENZ OIL

ab Code: ------- Case No.: 111898 SAS No.: ------- SDG No.: -------

atrix: (soil/water) WATER Lab Sample ID: 111898-2

ample wt/vol: 1000.0 (g/mL) mL Lab File ID: >D5404

evel: (low/med) LOW Date Received: 5/07/91

Moisture: not dec. --- dec. --- Date Extracted: 5/10/91

xtraction: (Sepf/Cont/Sonc) SEPF Date Analyzed: 5/26/91

CP Cleanup: (Y/N) N pH: 7.2 Dilution Factor: 1.00000

Number TICs found: 20

CONCENTRATION UNITS:
(ug/L or ug/Kg) ug/L

	CAS NUMBER	COMPOUND NAME	RT	EST. CONC.	Q
1.		Unknown	4.04	13.	
2.		Unknown	7.45	7.	
3.		Unknown	7.98	73.	
4.		Unknown	8.64	26.	
5.	526738	Benzene, 1,2,3-trimethyl-	11.44	7.	
6.		Unknown	11.62	28.	
7.		Unknown	11.75	5.	
8.	112276	Triethylene glycol	14.96	39.	
9.		Unknown	16.10	5.	
10.		Naphthalene, dimethyl-	17.76	14.	
11.		Naphthalene, dimethyl-	17.99	18.	
12.		Naphthalene, dimethyl-	18.03	9.	
13.		Naphthalene, dimethyl-	18.27	5.	
14.		Unknown	19.01	6.	
15.		Naphthalene, trimethyl-	19.49	5.	
16.		Naphthalene, trimethyl-	19.93	5.	
17.		Unknown	20.38	4.	
18.		Unknown	21.47	6.	
19.		Unknown	22.42	5.	
20.		Unknown adipate	28.45	840.	
21.					
22.					
23.					
24.					
25.					
6.					
27.					
28.					
29.					
30.					

1D
PESTICIDE ORGANIC ANALYSIS

Customer Sample No.

LO-TANK/002

Lab Name: ARDL, Inc. Contract: LENZ OIL
Lab Code: --- Case No.: 111898 SAS No.: --- SDG No.: ---

Matrix (SOIL/WATER) : WATER Lab Sample ID : 111898-2
Sample wt/vol : 1000 (g/mL) mL Lab File ID : ---
Level (LOW/MED) : LOW Date Received : 05/07/91
% Moisture (not dec): --- dec. - Date Extracted : 05/10/91
Extraction (SEPF/CONT/SONC): SEPF Date Analyzed : 05/17/91
GPC Cleanup (Y/N): N pH: 7.2 Dilution Factor: 1.0

CAS No.	Compound	Concentration Units: ug/L (ug/L or ug/Kg)	Q
319-84-6	alpha-BHC	0.05	U
319-85-7	beta-BHC	0.05	U
319-86-8	delta-BHC	0.05	U
58-89-9	gamma-BHC(Lindane)	0.05	U
76-44-8	Heptachlor	0.05	U
309-00-2	Aldrin	0.05	U
1024-57-3	Heptachlor epoxide	0.05	U
959-98-8	Endosulfan I	0.05	U
60-57-1	Dieldrin	0.10	U
72-55-9	4,4'-DDE	0.10	U
72-20-8	Endrin	0.10	U
33213-65-9	Endosulfan II	0.10	U
72-54-8	4,4'-DDD	0.10	U
1013-07-8	Endosulfan sulfate	0.10	U
50-29-3	4,4'-DDT	0.10	U
72-43-5	Methoxychlor	0.50	U
53494-70-5	Endrin ketone	0.10	U
5103-71-9	alpha-Chlordane	0.50	U
5103-74-2	gamma-Chlordane	0.50	U
8001-35-2	Toxaphene	1.0	U
12674-11-2	Aroclor 1016	0.50	U
11104-28-2	Aroclor 1221	0.50	U
11141-16-5	Aroclor 1232	0.50	U
53469-21-9	Aroclor 1242	0.50	U
12672-29-6	Aroclor 1248	0.50	U
11097-69-1	Aroclor 1254	1.0	U
11096-82-5	Aroclor 1260	1.0	U

FORM IA

INORGANIC ANALYSIS DATA SHEET
METALS

Lab Name ARDL, Inc. IEPA Sample No. LO-TANK/002

Matrix (soil/water) WATER Lab Sample ID: 111898-2

Level (low/med): Date Received: 5-7-91

% Solids: 0.0

Concentration units (ug/L or mg/kg dry weight) UG/L

CAS No.	Analyte	Concentration	C	M	Q
7429-90-5	Aluminum	200	U	P	
7440-36-0	Antimony	60	U		
7440-38-2	Arsenic	4.5	U	BH	
7440-39-3	Barium	[100]		P	
7440-41-7	Beryllium	5.0	U	P	
7440-43-9	Cadmium	5.0	U	P	
7440-70-2	Calcium	150000		P	
7440-47-3	Chromium	10	U	P	
7440-48-4	Cobalt	50	U	P	
7440-50-8	Copper	25	U	P	
7439-89-6	Iron	910		P	N
7439-92-1	Lead	[2.9]		F	W N
7439-95-4	Magnesium	77000		P	
7439-96-5	Manganese	15	U	P	
7439-97-6	Mercury	0.20	U	CV	
7440-02-0	Nickel	40	U	P	
7440-09-7	Potassium	8300		P	
7782-49-2	Selenium	4.5	U	BH	
7440-22-4	Silver	10	U	P	
7440-23-5	Sodium	190000		P	
7440-28-0	Thallium	5.0	U	F	W
7440-62-2	Vanadium	50	U	P	
7440-66-6	Zinc	33		P	
	Cyanide	10	U	C	

Color Before: COLORLESS Clarity Before: CLEAR Texture:

Color After: COLORLESS Clarity After: CLEAR Artifacts:

APPENDIX I

HYDRAULIC CONDUCTIVITY TESTING RESULTS

APPENDIX I

HYDRAULIC CONDUCTIVITY TESTING RESULTS

Hydraulic conductivity values were determined for the aquifer materials beneath the Lenz Oil site by conducting rising and falling head hydraulic conductivity tests, as described in Section 2.12.3 of this report. A conventional rising head slug test was performed in all of the wells screened at and within 4 feet of the water table (i.e., MW-1S, MW-2S, MW-3S, MW-4S, MW-5S, MW-6S, MW-7S, G101M, G101D, G101L, and G102L). In addition, pressure testing was conducted in each monitoring well with a well screen submerged at least 4 feet below the water level (i.e., MW-1D, MW-2D, MW-3D, MW-4D, MW-5D, MW-6D, MW-7S, MW-7D, G102D, G104D, and G106DR). G104L was not tested because it could not be pressurized, and the presence of free product in G106L prevented testing of that well. Monitoring wells MW-3S, MW-5D, and MW-6D were retested to examine the precision of calculated permeability values.

The horizontal hydraulic conductivity values calculated from this testing are summarized in Table I-1. In addition, the following supporting documentation is included in this appendix: (1) spreadsheets showing the raw test data, the test parameters, and the analytical procedure, and (2) graphs indicating the recovery rate of each well. The method of calculation and assumptions used to determine the hydraulic conductivity values are summarized in the following paragraphs.

The Bouwer and Rice (1976) method was used to analyze the hydraulic conductivity test data because of its applicability to both fully and partially penetrating wells. The main assumptions of this method are: (1) a steady radial flow based on the Thiem equation (i.e., storage effects are negligible); (2) a homogeneous and isotropic zone of influence; and (3) a clean well screen (i.e., not obstructed with silt, clay, or grout).

The wells screened in the unconsolidated deposits satisfy these assumptions reasonably well. However, some heterogeneity is present in the screened interval of the wells that intersect interbedded sand, silt, and clay. The computed hydraulic conductivity values for these heterogeneous screened intervals are, therefore, a weighted average of each of the contributing water bearing units. In other words, the hydraulic conductivity values are an average for the aquifer materials in the screened interval and not the values of any single sand, silt, or clay bed.

The calculated hydraulic conductivity values for the wells screened in the dolomite bedrock only partially satisfy the assumptions of the Bouwer and Rice (1976) method. Some of these wells are screened in highly fractured zones, that can be considered an equivalent porous medium. Others are screened in zones with few or single fractures that contradict the assumption of flow through a porous medium. Because the extent to which a fractured zone can be considered an equivalent porous medium is difficult to infer, the calculated hydraulic conductivity values for the Silurian dolomite are relatively inaccurate and should not be compared with the more accurate values for the unconsolidated deposits. However, these tests are still useful in assessing the relative differences in hydraulic conductivity for each of the screened intervals in the dolomite.

The procedure for analyzing the slug test and pressure test data is summarized in the hydraulic conductivity test spreadsheets. The raw data consist of rising head test data vs. time. The net decrease in induced head vs. time is obtained by subtracting the final head value at the end of each test from each rising head test value. Data points for determining the line of best fit are subjectively chosen. Therefore, to standardize this subjective choice of data points, Environmental Resources Management-North Central, Inc. considered the first data point in each series of test data that showed a steady decrease in induced head as the beginning of the test (Pandit and Miner, 1986). The last data point for the least squares linear fit was generally selected at the point when 80 percent of the initial induced head had dissipated. This standardization minimizes the subjectivity of the analysis procedure. The close agreement of test values and retest values indicates good precision in the testing procedure and consistency in the analysis.

Because most of the monitoring wells were similarly constructed, the radius of the developed zone was assumed to be 0.25 of a foot, which was based on the monitoring well construction diagrams. Slightly different values for the radius of the developed zone were used for monitoring wells G101M, MW-1S, MW-1D, and MW-3S because of differences in well construction. Since the water table intersects the screened intervals of monitoring wells MW-1S, MW-2S, MW-4S, MW-5S, and MW-6S, the radius of the developed zone for these wells was calculated to be 0.15 of a foot, assuming a gravel pack porosity of 30 percent. The effective length of inflow was calculated as the sum of the thicknesses of all of the contributing water bearing units in the screened zone. The saturated thickness and the effective length of inflow of each well were determined from the soil boring logs (Appendix F).

As shown in Table I-1, the horizontal hydraulic conductivity values for the unconsolidated deposits range from 178 to 4,102.5 gal/day/ft^2, with a geometric mean of 774 gal/day/ft^2. For the monitoring wells screened in the fractured dolomite, the horizontal hydraulic conductivity values range from 12.4 to 819.3 gal/day/ft^2, with a geometric mean of 92.9 gal/day/ft^2. The geometric mean of all of the horizontal hydraulic conductivity values is 152.12 gal/day/ft^2. The formula used to calculate the geometric mean is:

$$\bar{x} = e^P$$

Where:

$\bar{x}$ = Geometric mean

$P = \dfrac{\log X_1 + \log X_2 + \log X_n}{n}$

X = Hydraulic conductivity value

n = Number of values

The lower horizontal hydraulic conductivity values of the dolomite may be a result of the inability of slug and pressure testing to influence a wide enough zone of interconnected fractures. Single-hole packer testing at Argonne National Laboratory in 10-foot vertical intervals by Nicholas and Shapiro (1986) yielded horizontal hydraulic conductivity values for the joint sets in the range 1,292 to 6,462 gal/day/ft^2. Based on

the interpretation of pump test data generated by Nicholas and Healy (1988) at Argonne National Laboratory, horizontal hydraulic conductivity values range from 250 to 400 gal/day/ft^2 in the Silurian dolomite, assuming a saturated thickness of 175 feet. These tests suggest that the horizontal hydraulic conductivity values determined for the fractured dolomite by slug and air pressure testing are possibly lower than the actual horizontal hydraulic conductivities of the fractured bedrock. The calculated horizontal hydraulic conductivity value for monitoring well G102D is unreliable because of the slow decay of head, which violates the assumption of an instantaneous change in head, at the beginning of a test.

The close agreement of the horizontal hydraulic conductivity test and retest values indicates good precision in the hydraulic conductivity calculations. This close agreement also demonstrates that the testing procedure is reliable and reproducible and that the subjective choice of data points in the linear fit had a limited effect on the calculated values. Although the calculated radius of influence used in the Bouwer and Rice (1976) method depends only on the well geometry, in reality, its value also depends on drawdown. Therefore, the calculated radius of influence values shown on the attached spreadsheets are only approximate.

A comparison of the horizontal hydraulic conductivity values calculated from the slug and pressure testing at monitoring well MW-7S shows that the tests yielded similar values. This good precision indicates that the values from the slug and pressure tests are comparable. The accuracy of the hydraulic conductivity values provided by the slug and pressure testing probably varies by one order of magnitude as a result of measurement errors, heterogeneities, and other deviations from the mathematical model.

TABLE I-1

HYDRAULIC CONDUCTIVITY TEST SUMMARY
LENZ OIL SITE
LEMONT, ILLINOIS
(Page 1 of 2)

Well	Aquifer Material	Test Method	Hydraulic Conductivity	
			gallons/day/ft^2	cm/sec
G101L	Unconsolidated deposits	Slug	370.1	1.75×10^{-2}
MW-1S	Unconsolidated deposits	Slug	4,102.5	1.94×10^{-1}
MW-2S	Unconsolidated deposits	Slug	1,645.9	7.76×10^{-2}
MW-4S	Unconsolidated deposits	Slug	1,664.3	7.85×10^{-2}
MW-5S	Unconsolidated deposits	Slug	178	8.40×10^{-3}
MW-7S	Unconsolidated deposits	Slug	314.8	1.48×10^{-2}
MW-7S	Unconsolidated deposits	Pressure	298.8	1.41×10^{-2}
MW-7S	Unconsolidated deposits	Pressure (retest)	261.2	1.23×10^{-2}
G101M	Fractured dolomite	Slug	213.6	1.01×10^{-2}
G102L	Fractured dolomite	Slug	16.9	7.97×10^{-4}
MW-3S	Fractured dolomite	Slug	135.8	6.41×10^{-3}
MW-3S	Fractured dolomite	Slug (retest)	126.8	5.98×10^{-3}
MW-6S	Fractured dolomite	Slug	819.3	3.86×10^{-2}
G101D	Fractured dolomite	Slug	169.3	7.99×10^{-3}
G102D(1)	Fractured dolomite	Pressure	12.4	5.85×10^{-4}
G104D	Fractured dolomite	Pressure	13.2	6.23×10^{-4}
G106DR	Fractured dolomite	Pressure	31.9	1.50×10^{-3}
MW-1D	Fractured dolomite	Pressure	51.4	2.42×10^{-3}
MW-2D	Fractured dolomite	Pressure	111.7	5.27×10^{-3}
MW-3D	Fractured dolomite	Pressure	117	5.52×10^{-3}
MW-4D	Fractured dolomite	Pressure	115.6	5.45×10^{-3}

TABLE I-1

HYDRAULIC CONDUCTIVITY TEST SUMMARY
LENZ OIL SITE
LEMONT, ILLINOIS
(Page 2 of 2)

Well	Aquifer Material	Test Method	Hydraulic Conductivity	
			gallons/day/ft^2	cm/sec
MW-5D	Fractured dolomite	Pressure	151.4	7.14×10^{-3}
MW-5D	Fractured dolomite	Pressure (retest)	154.4	7.28×10^{-3}
MW-6D	Fractured dolomite	Pressure	164.2	7.75×10^{-3}
MW-6D	Fractured dolomite	Pressure (retest)	161.2	7.60×10^{-3}
MW-7D	Fractured dolomite	Pressure	66.7	3.15×10^{-3}

Note:

(1) These test data may not be reliable and were not included in the geometric mean calculations because the well experienced a sudden change in water level during the test.

Key:

Slug = Conventional rising head slug test.
Pressure = Rising head pressure test.

APPENDIX J

GEOTECHNICAL TESTING RESULTS

APPENDIX J

GEOTECHNICAL SAMPLE RESULTS

Soil samples were collected from the screened intervals of monitoring wells MW-1S, MW-2S, MW-4S, and MW-5S for submittal to ATEC and Associates, Inc. in Indianapolis, Indiana, for grain size, porosity, and total organic carbon (TOC) testing. A duplicate sample was obtained from the same split spoon as the investigative sample from MW-4S; however, the duplicate sample was collected from the silty-clay facies, and the investigative sample was taken from the silty-gravel facies. Therefore, the duplicate sample has been treated as an additional investigative sample rather than a means of comparison with the investigative sample from MW-4S.

The results of the geotechnical tests for porosity and TOC are summarized on Table J-1, and the complete laboratory report is included in this appendix. In general, the results of the grain size analyses agree with the field descriptions of the sample intervals. The grain size data for samples MW01S and MW04SDUP, which were collected from the silty-clay facies, show that these samples consisted of clayey silt with traces of sand and gravel. The results from samples MW02S, MW04S, and MW05S which were obtained from the silty-gravel facies show that these samples were comprised of very poorly sorted, sandy gravel with some silt and clay. These results are consistent with the definitions of the silty-clay and silty-gravel facies.

As shown on Table J-1, the porosity of the unconsolidated aquifer material samples ranges from 19.1 to 57.0 percent, and the geometric mean of the porosity results is 36.8 percent. The geometric mean was calculated by using the following equation:

$$\bar{x} = e^{p}$$

where:

$\bar{x}$ = Geometric mean

$$p = \frac{\log X_1 + \log X_2 + \log X_n}{n}$$

X = Porosity value

n = Number of porosity values

The TOC content of the samples ranges from 1,608 to 15,000 mg/Kg, and the arithmetic mean of the TOC data is 12,121 mg/Kg (i.e., 1.2 percent). The arithmetic mean was calculated using the following equation:

$$\bar{x} = \frac{\Sigma X}{n}$$

where:

$\bar{x}$ = Arithmetic mean

X = TOC value

n = Number of TOC values

The dry density (i.e., bulk density) of the samples ranges from 68.7 to 139 lbs/ft^3, and the arithmatic mean of the dry weight data is 99.075 lbs/ft^3. For the purpose of calculating the travel times of the compounds in the ground water, the bulk density was converted from lbs/ft^3 to grams/cm^3 using the following equation:

$$\bar{\rho} = \bar{\rho}_{lbs/ft3} \times \frac{0.454Kg}{1\ lb} \times \frac{1\ ft^3}{28{,}317cm^3} \times \frac{1{,}000\ gm}{1\ Kg}$$

Where:

$\bar{\rho}$ = average bulk density in gm/cm^3

$\bar{\rho}_{lbs/ft3}$ = average bulk density in lbs/ft^3

x = multiply

TABLE J-1

GEOTECHNICAL ANALYTICAL RESULTS
LENZ OIL SITE
LEMONT, ILLINOIS

Sample Number	Sample Interval (feet)	Porosity (percent)	TOC (mg/Kg)	Dry Density (lb/ft^3)
MW01S	6 - 10	31.4	15,000	116.1
MW02S	8 - 12	NA	1,608	NA
MW04S	6 - 10	57.0	14,000	68.7
MW04SDUP	6 - 10	53.7	15,000	72.5
MW05S	11 - 15	19.1	15,000	139

Key:

TOC = Total organic carbon.
NA = Not analyzed.

ATEC Associates, Inc.
5150 East 65th Street
Indianapolis, Indiana 46220-4871
[317] 849-4990, FAX # [317] 849-4278

RECEIVED
JUN 17 1991
ERM-NORTH CENTRAL, INC.

June 12, 1991

ERM North Central
102 Wilmot, Suite 300
Deerfield, IL 60015

Attention: Mr. Dave Edwards

Re: Lenz Oil
ATEC Project No. 21-02463

Gentlemen:

Enclosed are the laboratory results of the tests of the materials shown below.

Number	Test	Material
5	Grain-size Analysis	Soil Samples
4	Porosity (Moisture Content, Density, & Specific Gravity)	Soil Samples
4	TOC	Soil Samples

We appreciate the opportunity to be of service to you on this project. If you have any questions, please feel free to contact our office.

Very truly yours,
ATEC Associates, Inc.

Gordon L. Pickett
Laboratory Manager

James T. Sherer, P.E.
Assistant Vice President

copies: (2) Client

GRAIN SIZE DISTRIBUTION TEST REPORT

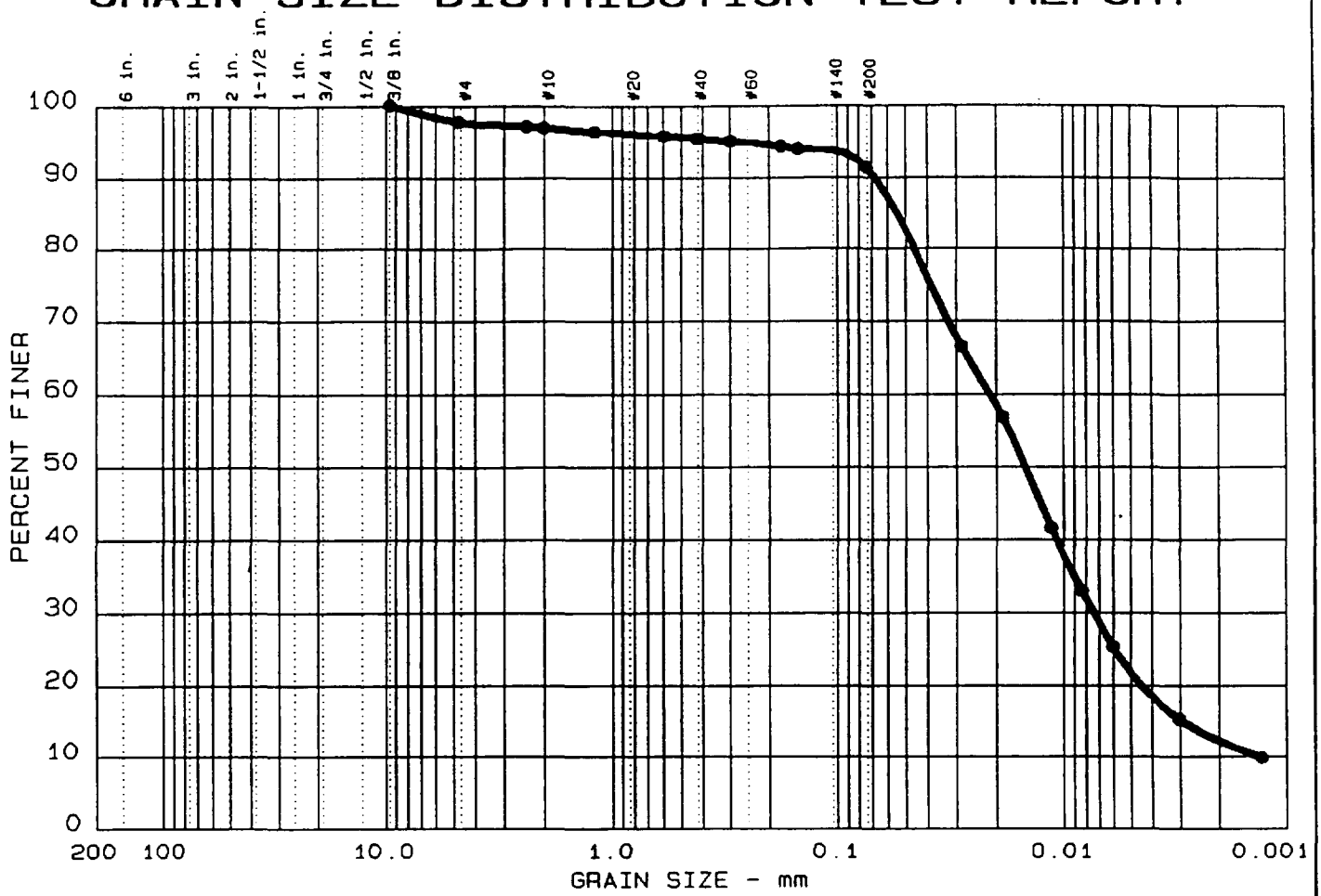

	%+75mm	% GRAVEL	% SAND	% SILT	% CLAY
●	0.0	2.3	6.4	69.6	21.7

	LL	PI	D_{85}	D_{60}	D_{50}	D_{30}	D_{15}	D_{10}	C_c	C_u
●					0.01	0.007	0.0029	0.0013	1.97	16.1

MATERIAL DESCRIPTION	USCS	AASHTO
●		

Project No.: 21-02463
Project: Lenz Oil / ERM Project No. 0252JI
● Location: LO MW 01S (3-11-91)

Date: 6-12-91

Remarks:
Moisture Content: 16.4%
Dry Density (pcf): 116.1
Porosity: 0.314

GRAIN SIZE DISTRIBUTION TEST REPORT

ATEC Associates, Inc.

Figure No.

GRAIN SIZE DISTRIBUTION TEST DATA

Test No.: 14

Date: 6-12-91
Project No.: 21-02463
Project: Lenz Oil / ERM Project No. 0252JI

Sample Data

Location of Sample: LO MW 01S (3-11-91)
Sample Description:
USCS Class: Liquid limit:
AASHTO Class: Plasticity index:

Notes

Remarks: Moisture Content: 16.4% Dry Density (pcf): 116.1
Porosity: 0.314
Fig. No.:

Mechanical Analysis Data

Initial
Dry sample and tare= 243.82
Tare = 2.17
Dry sample weight = 241.65
Sample split on number 10 sieve
Split sample data:
Sample and tare = 173.28 Tare = 123.4 Sample weight = 49.88
Cumulative weight retained tare= 123.4
Tare for cumulative weight retained= 2.17

Sieve	Cumul. Wt. retained	Percent finer
0.375 inches	2.17	100.0
# 4	7.76	97.7
# 8	9.21	97.1
# 10	9.63	96.9
# 16	123.70	96.3
# 30	124.03	95.7
# 40	124.21	95.3
# 50	124.39	95.0
# 80	124.76	94.3
# 100	124.96	93.9
# 200	126.29	91.3

Hydrometer Analysis Data

Separation sieve is number 10
Percent -# 10 based on complete sample= 96.9
Weight of hydrometer sample: 50.03
Hygroscopic moisture correction:
Moist weight & tare = 35.00

Dry weight & tare = 34.92
Tare = 11.31
Hygroscopic moisture= 0.3 %
Calculated biased weight= 51.45
le of composite correction values:
Temp, deg C: 20.0 27.0
Comp. corr: - 6.5 - 4.5
Meniscus correction only= 0
Specific gravity of solids= 2.71
Specific gravity correction factor= 0.987
Hydrometer type: 152H Effective depth L= 16.294964 - 0.164 x Rm

Elapsed time, min	Temp, deg C	Actual reading	Corrected reading	K	Rm	Eff. depth	Diameter mm	Percent finer
2.0	24.0	40.0	34.6	0.0128	40.0	9.7	0.0282	66.4
5.0	24.0	35.0	29.6	0.0128	35.0	10.6	0.0186	56.9
15.0	24.0	27.0	21.6	0.0128	27.0	11.9	0.0114	41.5
30.0	24.0	22.5	17.1	0.0128	22.5	12.6	0.0083	32.9
60.0	24.0	18.5	13.1	0.0128	18.5	13.3	0.0060	25.2
250.0	25.0	13.0	7.9	0.0126	13.0	14.2	0.0030	15.2
1440.0	24.0	10.5	5.1	0.0128	10.5	14.6	0.0013	9.9

Fractional Components

% + 3 in. = 0.0 % GRAVEL = 2.3 % SAND = 6.4
% SILT = 69.6 % CLAY = 21.7

D85= 0.05 D60= 0.021 D50= 0.015
D30= 0.0074 D15= 0.00294 D10= 0.00131
C = 1.9679 Cu = 16.0694

GRAIN SIZE DISTRIBUTION TEST REPORT

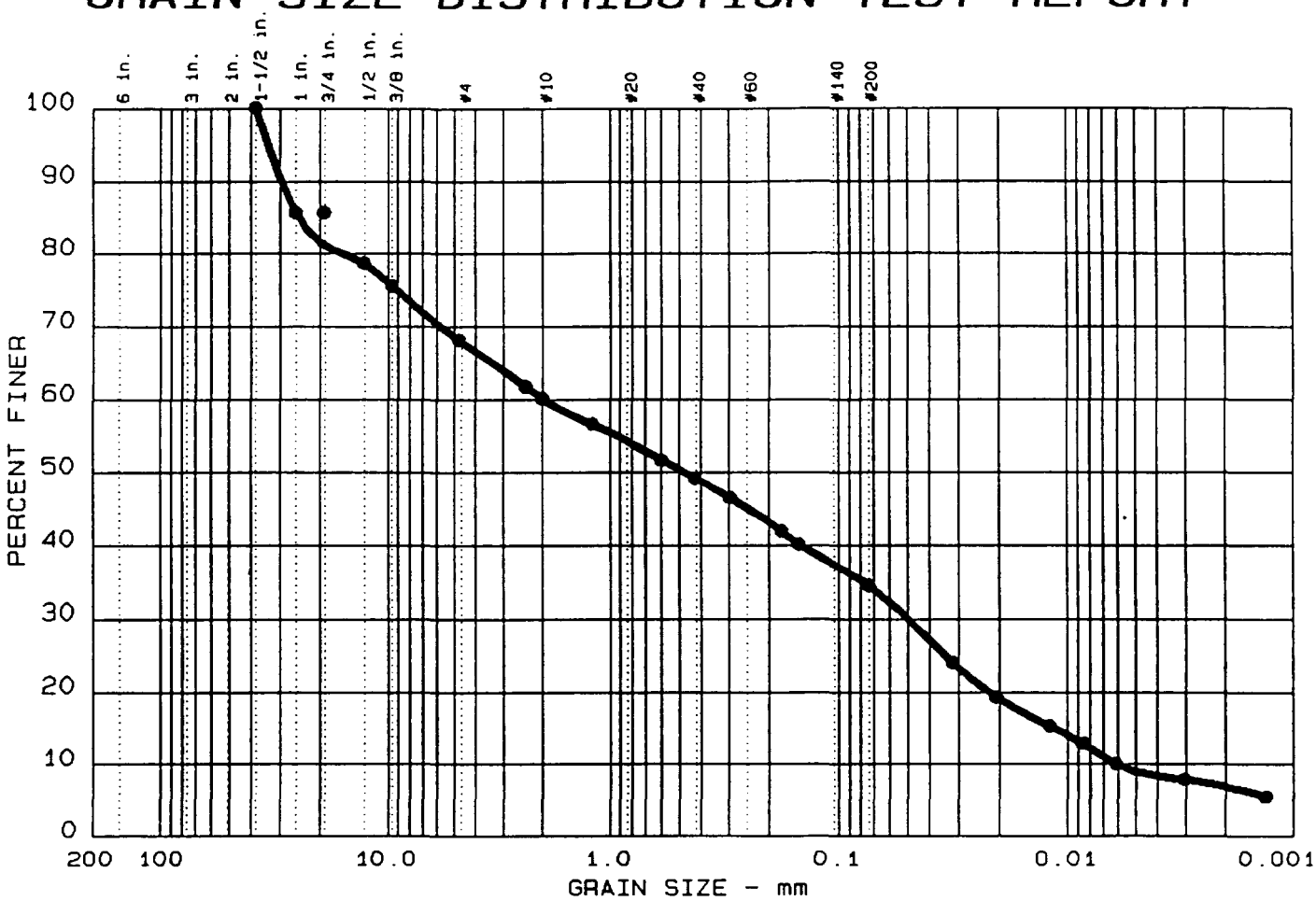

	%+75mm	% GRAVEL	% SAND	% SILT	% CLAY
●	0.0	31.9	33.6	25.6	8.9

	LL	PI	D_{85}	D_{60}	D_{50}	D_{30}	D_{15}	D_{10}	C_c	C_u
●			24.77	1.97	0.47	0.049	0.0116	0.0061	0.20	323.6

MATERIAL DESCRIPTION	USCS	AASHTO
●		

Project No.: 21-02463
Project: Lenz Oil / ERM Project No. 0252JI
◆ Location: LO MW 02S

Date: 6-12-91

Remarks:
Moisture Content: 10.4%
This sample was not suitable for density, sp. grav, & porosity.

GRAIN SIZE DISTRIBUTION TEST REPORT

ATEC Associates, Inc.

Figure No.

GRAIN SIZE DISTRIBUTION TEST DATA

Test No.: 11

Date: 6-12-91
Project No.: 21-02463
Project: Lenz Oil / ERM Project No. 0252JI

Sample Data

Location of Sample: LO MW 02S
Sample Description:
USCS Class: Liquid limit:
AASHTO Class: Plasticity index:

Notes

Remarks: Moisture Content: 10.4% This sample was not suitable for density, sp. grav, & porosity.
Fig. No.:

Mechanical Analysis Data

	Initial
Dry sample and tare=	687.60
Tare =	106.70
Dry sample weight =	580.90

Sample split on number 10 sieve
Split sample data:
Sample and tare = 157.53 Tare = 107.63 Sample weight = 49.9
Cumulative weight retained tare= 107.63
Tare for cumulative weight retained= 106.7

Sieve	Cumul. Wt. retained	Percent finer
1.5 inches	106.70	100.0
1 inches	190.40	85.6
0.75 inches	190.40	85.6
0.5 inches	230.80	78.6
0.375 inches	248.70	75.6
# 4	292.00	68.1
# 8	328.80	61.8
# 10	338.60	60.1
# 16	110.54	56.6
# 30	114.67	51.6
# 40	116.72	49.1
# 50	118.92	46.5
# 80	122.77	41.9
# 100	124.23	40.1
# 200	128.87	34.5

Hydrometer Analysis Data

Separation sieve is number 10
cent -# 10 based on complete sample= 60.1
Weight of hydrometer sample: 50
Hygroscopic moisture correction:
Moist weight & tare = 34.89
Dry weight & tare = 34.84
Tare = 11.80
Hygroscopic moisture= 0.2 %
Calculated biased weight= 83.04
Table of composite correction values:
Temp, deg C: 20.0 27.0
Comp. corr: - 6.5 - 4.5
Meniscus correction only= 0
Specific gravity of solids= 2.7
Specific gravity correction factor= 0.989
Hydrometer type: 152H Effective depth L= 16.294964 - 0.164 x Rm

Elapsed time, min	Temp, deg C	Actual reading	Corrected reading	K	Rm	Eff. depth	Diameter mm	Percent finer
2.0	24.0	25.5	20.1	0.0128	25.5	12.1	0.0316	24.0
5.0	24.0	21.5	16.1	0.0128	21.5	12.8	0.0205	19.2
15.0	24.5	18.0	12.8	0.0127	18.0	13.3	0.0120	15.2
30.0	24.5	16.0	10.8	0.0127	16.0	13.7	0.0086	12.8
60.0	25.0	13.5	8.4	0.0127	13.5	14.1	0.0061	10.0
250.0	25.5	11.5	6.6	0.0126	11.5	14.4	0.0030	7.8
1440.0	22.0	10.5	4.6	0.0131	10.5	14.6	0.0013	5.4

Fractional Components

% + 3 in. = 0.0 % GRAVEL = 31.9 % SAND = 33.6
% SILT = 25.6 % CLAY = 8.9

D85= 24.77 D60= 1.968 D50= 0.467
D30= 0.0494 D15= 0.01159 D10= 0.00608
Cc = 0.2042 Cu = 323.5937

GRAIN SIZE DISTRIBUTION TEST REPORT

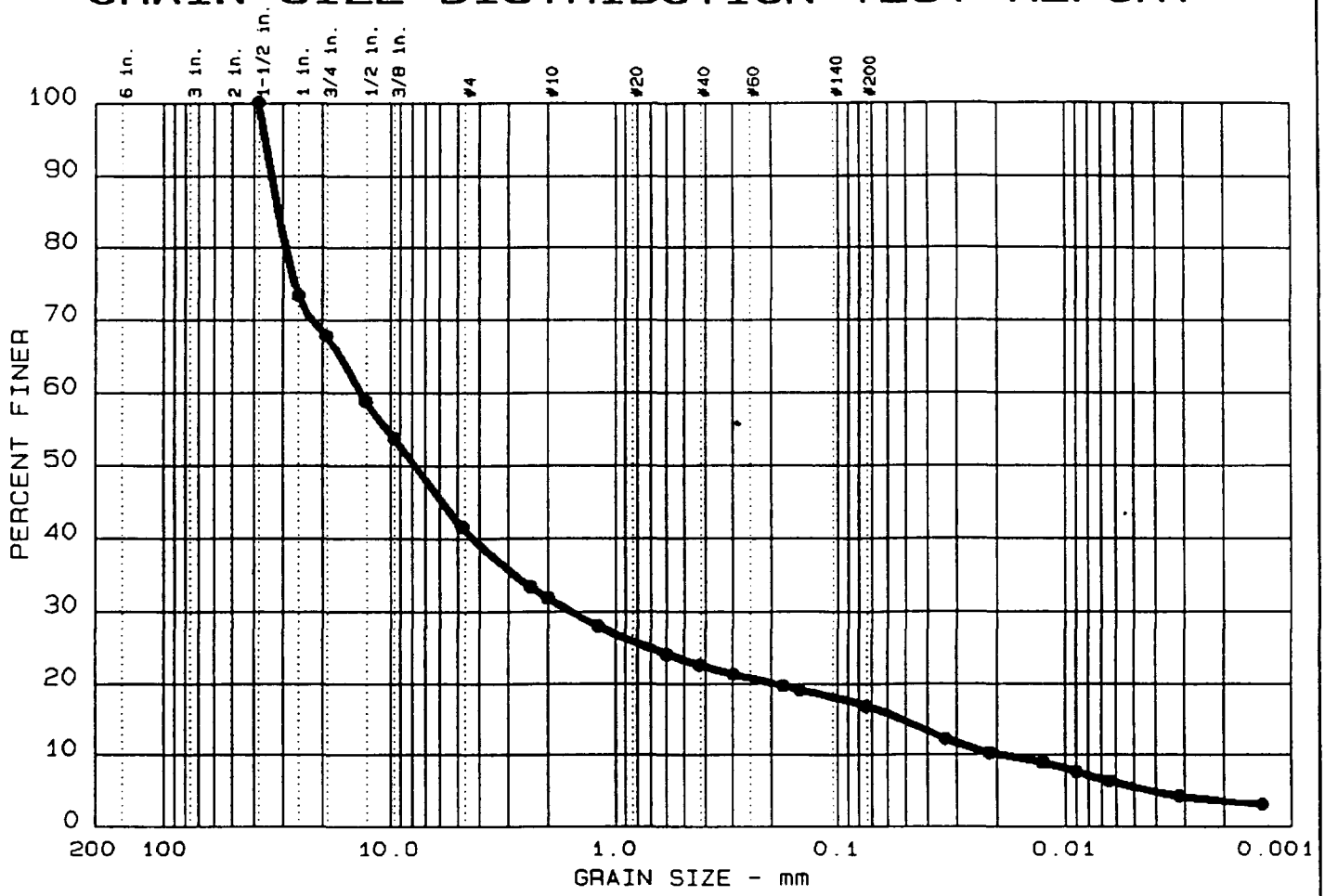

	%+75mm	% GRAVEL	% SAND	% SILT	% CLAY
●	0.0	58.5	24.8	11.3	5.4

	LL	PI	D_{85}	D_{60}	D_{50}	D_{30}	D_{15}	D_{10}	C_c	C_u
●			31.26	13.34	7.67	1.585	0.0519	0.0191	9.89	699.8

MATERIAL DESCRIPTION	USCS	AASHTO
●		

Project No.: 21-02463
Project: Lenz Oil / ERM Project No. 0252JI
● Location: LO MW 04S

Date: 6-12-91

Remarks:
Moisture Content: 51.1%
Dry Density (pcf): 68.7
Porosity: 0.570

GRAIN SIZE DISTRIBUTION TEST REPORT

ATEC Associates, Inc.

Figure No.

GRAIN SIZE DISTRIBUTION TEST DATA

Test No.: 13

Date: 6-12-91
Project No.: 21-02463
Project: Lenz Oil / ERM Project No. 0252JI

Sample Data

Location of Sample: LO MW 04S
Sample Description:
USCS Class: Liquid limit:
AASHTO Class: Plasticity index:

Notes

Remarks: Moisture Content: 51.1% Dry Density (pcf): 68.7
Porosity: 0.570
Fig. No.:

Mechanical Analysis Data

Initial
Dry sample and tare= 714.90
Tare = 110.40
Dry sample weight = 604.50
Sample split on number 10 sieve
Split sample data:
Sample and tare = 172.57 Tare = 122.97 Sample weight = 49.6
Cumulative weight retained tare= 122.97
Tare for cumulative weight retained= 110.4

Sieve	Cumul. Wt. retained	Percent finer
1.5 inches	110.40	100.0
1 inches	271.30	73.4
0.75 inches	305.30	67.8
0.5 inches	359.80	58.7
0.375 inches	390.60	53.6
# 4	463.80	41.5
# 8	513.60	33.3
# 10	523.00	31.7
# 16	129.02	27.9
# 30	135.10	24.0
# 40	137.39	22.5
# 50	139.46	21.2
# 80	141.97	19.6
# 100	142.88	19.0
# 200	146.36	16.8

Hydrometer Analysis Data

Separation sieve is number 10
Percent -# 10 based on complete sample= 31.7
Weight of hydrometer sample: 50
Hygroscopic moisture correction:
  Moist weight & tare = 29.53
  Dry weight & tare = 29.38
  Tare = 11.49
  Hygroscopic moisture= 0.8 %
Calculated biased weight= 156.19
Table of composite correction values:
  Temp, deg C: 20.0 27.0
  Comp. corr: - 6.5 - 4.5
Meniscus correction only= 0
Specific gravity of solids= 2.57
Specific gravity correction factor= 1.019
Hydrometer type: 152H Effective depth L= 16.294964 - 0.164 x Rm

Elapsed time, min	Temp, deg C	Actual reading	Corrected reading	K	Rm	Eff. depth	Diameter mm	Percent finer
2.0	24.0	24.0	18.6	0.0133	24.0	12.4	0.0332	12.2
5.0	24.0	21.0	15.6	0.0133	21.0	12.9	0.0214	10.2
15.0	24.0	19.0	13.6	0.0133	19.0	13.2	0.0125	8.9
30.0	24.0	17.0	11.6	0.0133	17.0	13.5	0.0090	7.6
60.0	24.0	15.0	9.6	0.0133	15.0	13.8	0.0064	6.3
250.0	25.0	11.5	6.4	0.0132	11.5	14.4	0.0032	4.2
1440.0	24.0	10.0	4.6	0.0133	10.0	14.7	0.0013	3.0

Fractional Components

% + 3 in. = 0.0 % GRAVEL = 58.5 % SAND = 24.8
% SILT = 11.3 % CLAY = 5.4

D85= 31.26 D60= 13.335 D50= 7.674
D30= 1.5849 D15= 0.05188 D10= 0.01905
Cc = 9.8855 Cu = 699.8420

GRAIN SIZE DISTRIBUTION TEST REPORT

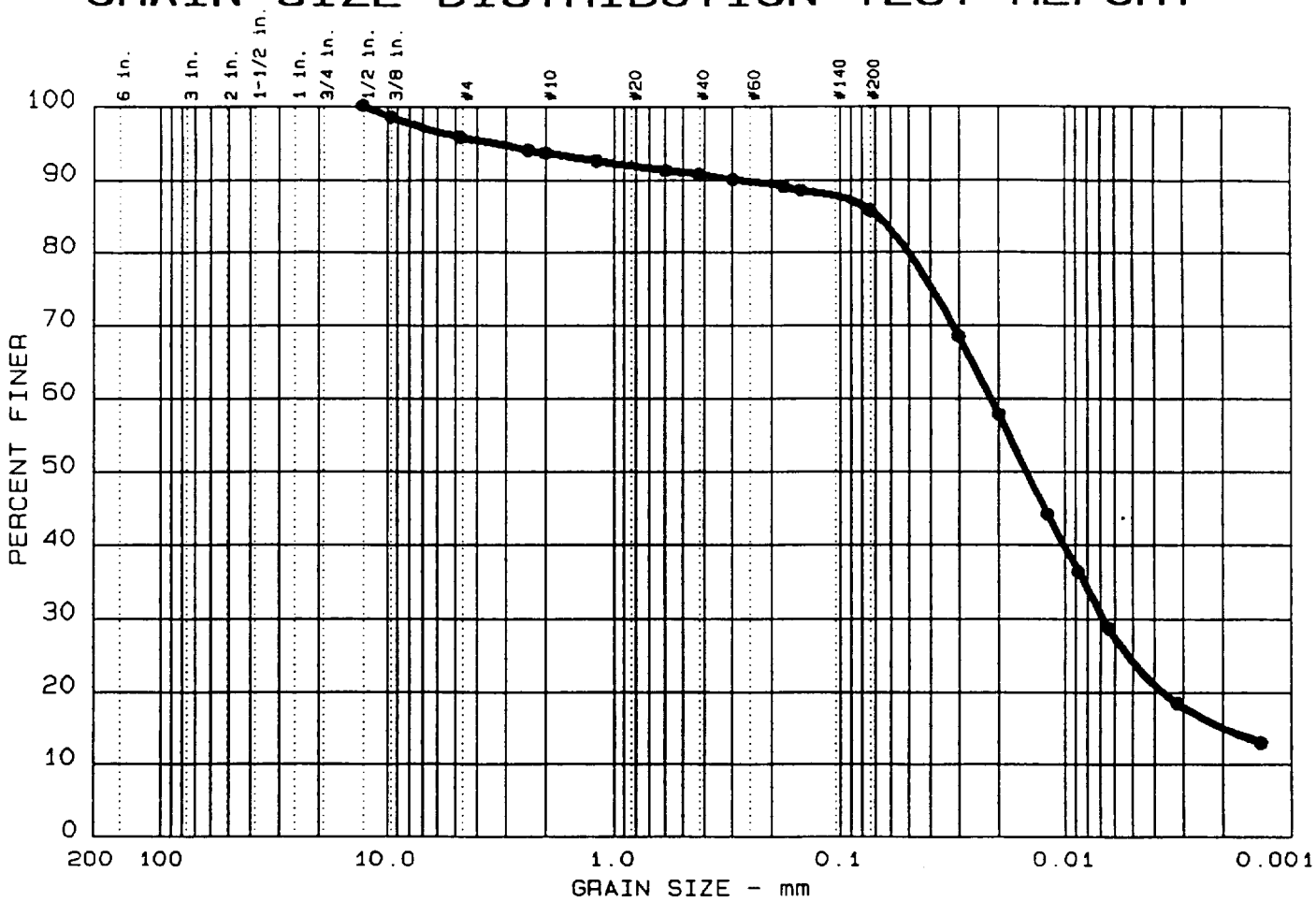

	%+75mm	% GRAVEL	% SAND	% SILT	% CLAY
●	0.0	4.2	10.0	61.8	24.0

	LL	PI	D_{85}	D_{60}	D_{50}	D_{30}	D_{15}	D_{10}	C_c	C_u
●					0.01	0.007	0.0020			

	MATERIAL DESCRIPTION	USCS	AASHTO
●			

Project No.: 21-02463
Project: Lenz Oil / ERM Project No. 0252JI
● Location: LO MW 04S-D

Date: 6-12-91

Remarks:
Moisture Content: 42.5%
Dry Density (pcf): 72.5
Porosity: 0.537

GRAIN SIZE DISTRIBUTION TEST REPORT
ATEC Associates, Inc.

Figure No.

GRAIN SIZE DISTRIBUTION TEST DATA

Test No.: 12

Date: 6-12-91
Project No.: 21-02463
Project: Lenz Oil / ERM Project No. 0252JI

Sample Data

Location of Sample: LO MW 04S-D
Sample Description:
USCS Class: Liquid limit:
AASHTO Class: Plasticity index:

Notes

Remarks: Moisture Content: 42.5% Dry Density (pcf): 72.5
Porosity: 0.537
Fig. No.:

Mechanical Analysis Data

Initial
Dry sample and tare= 238.97
Tare = 2.07
Dry sample weight = 236.90
Sample split on number 10 sieve
Split sample data:
Sample and tare = 172.7 Tare = 123.02 Sample weight = 49.68
Cumulative weight retained tare= 123.02
Tare for cumulative weight retained= 2.07

Sieve	Cumul. Wt. retained	Percent finer
0.5 inches	2.07	100.0
0.375 inches	5.80	98.4
# 4	12.10	95.8
# 8	16.38	94.0
# 10	17.37	93.5
# 16	123.55	92.5
# 30	124.25	91.2
# 40	124.53	90.7
# 50	124.89	90.0
# 80	125.46	88.9
# 100	125.72	88.5
# 200	127.14	85.8

Hydrometer Analysis Data

Separation sieve is number 10
cent -# 10 based on complete sample= 93.5
ght of hydrometer sample: 50.03
Hygroscopic moisture correction:
Moist weight & tare = 31.24
Dry weight & tare = 31.11
Tare = 11.64
Hygroscopic moisture= 0.7 %
Calculated biased weight= 53.13
Table of composite correction values:
Temp, deg C: 20.0 27.0
Comp. corr: - 6.5 - 4.5
Meniscus correction only= 0
Specific gravity of solids= 2.51
Specific gravity correction factor= 1.035
Hydrometer type: 152H Effective depth L= 16.294964 - 0.164 x Rm

Elapsed time, min	Temp, deg C	Actual reading	Corrected reading	K	Rm	Eff. depth	Diameter mm	Percent finer
2.0	24.0	40.5	35.1	0.0136	40.5	9.7	0.0299	68.5
5.0	24.0	35.0	29.6	0.0136	35.0	10.6	0.0198	57.7
15.0	24.0	28.0	22.6	0.0136	28.0	11.7	0.0120	44.1
30.0	24.0	24.0	18.6	0.0136	24.0	12.4	0.0087	36.3
60.0	24.0	20.0	14.6	0.0136	20.0	13.0	0.0063	28.5
250.0	25.0	14.5	9.4	0.0134	14.5	13.9	0.0032	18.4
1440.0	24.0	12.0	6.6	0.0136	12.0	14.3	0.0014	12.9

Fractional Components

% + 3 in. = 0.0 % GRAVEL = 4.2 % SAND = 10.0
% SILT = 61.8 % CLAY = 24.0

D85= 0.07 D60= 0.021 D50= 0.015
D30= 0.0068 D15= 0.00199

GRAIN SIZE DISTRIBUTION TEST REPORT

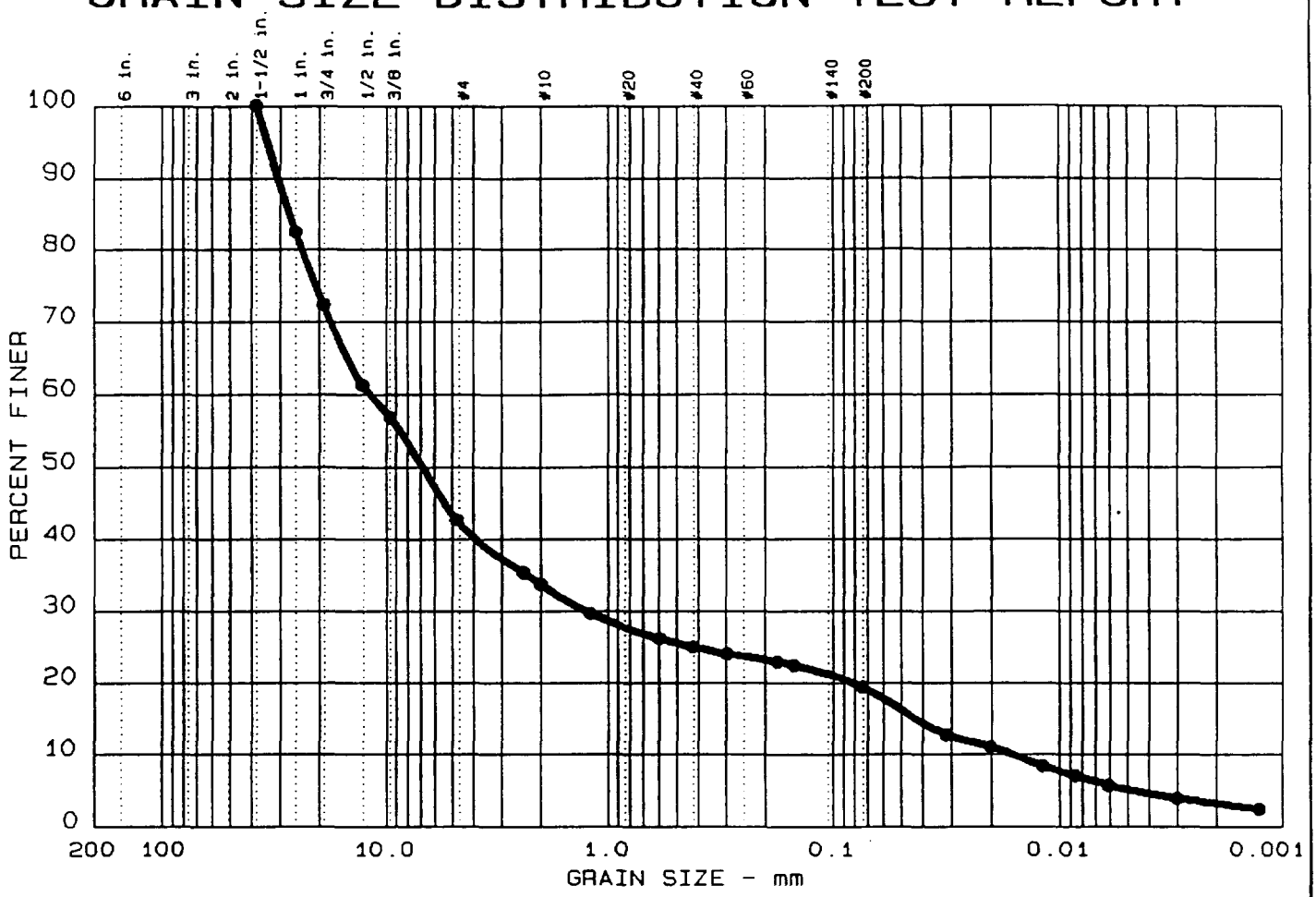

	%+75mm	% GRAVEL	% SAND	% SILT	% CLAY
●	0.0	57.4	23.3	14.2	5.1

	LL	PI	D_{85}	D_{60}	D_{50}	D_{30}	D_{15}	D_{10}	C_c	C_u
●			27.10	11.69	6.73	1.253	0.0435	0.0158	8.51	741.3

MATERIAL DESCRIPTION	USCS	AASHTO
●		

Project No.: 21-02463
Project: Lenz Oil / ERM Project No. 0252JI
● Location: LO MW 05S (3-5-91)

Date: 6-12-91

Remarks:
Moisture Content: 8.4%
Dry Density (pcf): 139.0
Porosity: 0.191

GRAIN SIZE DISTRIBUTION TEST REPORT

ATEC Associates, Inc.

Figure No.

GRAIN SIZE DISTRIBUTION TEST DATA Test No.: 15

Date: 6-12-91
Project No.: 21-02463
Project: Lenz Oil / ERM Project No. 0252JI

Sample Data

Location of Sample: LO MW 05S (3-5-91)
Sample Description:
USCS Class: Liquid limit:
AASHTO Class: Plasticity index:

Notes

Remarks: Moisture Content: 8.4% Dry Density (pcf): 139.0
Porosity: 0.191
Fig. No.:

Mechanical Analysis Data

Initial
Dry sample and tare= 808.30
Tare = 105.50
Dry sample weight = 702.80
Sample split on number 10 sieve
Split sample data:
Sample and tare = 157.47 Tare = 107.84 Sample weight = 49.63
Cumulative weight retained tare= 107.84
Tare for cumulative weight retained= 105.5

Sieve		Cumul. Wt. retained	Percent finer
1.5	inches	105.50	100.0
1	inches	229.20	82.4
0.75	inches	299.80	72.4
0.5	inches	377.90	61.2
0.375	inches	408.90	56.8
# 4		508.70	42.6
# 8		560.40	35.3
# 10		571.90	33.6
# 16		113.81	29.6
# 30		119.07	26.0
# 40		120.75	24.9
# 50		122.15	23.9
# 80		123.81	22.8
# 100		124.61	22.3
# 200		128.97	19.3

Hydrometer Analysis Data

Separation sieve is number 10
Percent -# 10 based on complete sample= 33.6
Weight of hydrometer sample: 50.03
Hygroscopic moisture correction:
Moist weight & tare = 35.37
Dry weight & tare = 35.18
Tare = 11.75
Hygroscopic moisture= 0.8 %
Calculated biased weight= 147.54
Table of composite correction values:
Temp, deg C: 20.0 27.0
Comp. corr: - 6.5 - 4.5
Meniscus correction only= 0
Specific gravity of solids= 2.76
Specific gravity correction factor= 0.976
Hydrometer type: 152H Effective depth L= 16.294964 - 0.164 x Rm

Elapsed time, min	Temp, deg C	Actual reading	Corrected reading	K	Rm	Eff. depth	Diameter mm	Percent finer
2.0	24.0	24.5	19.1	0.0126	24.5	12.3	0.0312	12.7
5.0	24.0	22.0	16.6	0.0126	22.0	12.7	0.0201	11.0
15.0	24.0	18.0	12.6	0.0126	18.0	13.3	0.0119	8.4
30.0	24.0	16.0	10.6	0.0126	16.0	13.7	0.0085	7.0
60.0	24.0	14.0	8.6	0.0126	14.0	14.0	0.0061	5.7
250.0	25.0	11.0	5.9	0.0125	11.0	14.5	0.0030	3.9
1440.0	24.0	9.0	3.6	0.0126	9.0	14.8	0.0013	2.4

Fractional Components

% + 3 in. = 0.0 % GRAVEL = 57.4 % SAND = 23.3
% SILT = 14.2 % CLAY = 5.1

D85= 27.10 D60= 11.695 D50= 6.730
D30= 1.2531 D15= 0.04345 D10= 0.01578
Cc = 8.5114 Cu = 741.3102

REPORT OF TEST RESULTS

ATEC Project Number 21-02463

Date: April 8, 1991

Client: ERM North Central
102 Wilmot
Suite 300
Deerfield, IL 60015

Sample Identification: Total Organic Carbon Analysis
SW 846 Method 9060

Sample Matrix: Soil
Date Received: March 14, 1991
Date Analyzed: March 21, 1991
Analyst: KAW
Verified By: DSS
ATEC Lab Number: 9103184

Sample I.D.	TOC	Detection Limit
LOMW01S	15,000 ppm	100 ppm

Respectfully submitted,
ATEC Associates, Inc.

Environmental/Analytical Testing Division

Date: May 28, 1991

Client: ERM North Central
102 Wilmot Road, Suite 300
Deerfield, IL 60015

Client Project Number: 21-02463
Sample Matrix: Soil
Date Sample Received: April 26, 1991
Date Sample Analyzed: April 26, 1991
Analytical Equipment: Dohrmann DC-80

TOTAL ORGANIC CARBON
ANALYTICAL RESULTS

ATEC Lab No. 9104283

Sample I.D.	Concentration (mg/L or mg/kg)	Detection Limit (mg/L or mg/kg)
MW02S	1608	100

Analytical Method: SW 846 Method 9060

Analyst: K. Kline
Verified: R. Gehlbach
Date Verified: May 24, 1991

Respectfully submitted,

Environmental/Analytical Testing Division

REPORT OF TEST RESULTS

ATEC Project Number 21-02463

Date: April 11, 1991

Client: ERM North Central
102 Wilmot Road, Suite 300
Deerfield, IL 60015

Sample Identification: Lenz Oil
Total Organic Carbon Analysis
SW 846 Method 9060

Sample Matrix: Soil
Date Received: March 19, 1991
Date Analyzed: April 9, 1991
Analyst: LLS
Verified By: DSS
ATEC Lab Number: 9103228

==========

Sample I.D.	TOC	Detection Limit
LOMW04S	14,000 ppm	100 ppm
LOMW04S-D	15,000 ppm	100 ppm

Respectfully submitted,
ATEC Associates, Inc.

Environmental/Analytical Testing Division

REPORT OF TEST RESULTS

ATEC Project Number 21-02463

Date: April 1, 1991

Client: ERM-North Central
102 Wilmont Road
Suite 300
Deerfield, IL 60015

Sample Identification: Total Organic Carbon Analysis
SW 846 Method 9060

Sample Matrix: Soil
Date Received: March 11, 1991
Date Analyzed: March 21, 1991
Analyst: KAW
Verified By: DSS
ATEC Lab Number: 9103138

Sample I.D.	TOC	Detection Limit
LOMW05S	21,000 ppm	100 ppm

Respectfully submitted,
ATEC Associates, Inc.

Environmental/Analytical Testing Division

#14

PARTICLE SIZE

Date: 4/15/91 Project No.: 31-02463 (Graduate No.: 85)

Project: Lenz Oil / ERM Project No. 0252 JI

Location of Sample: LO MW 015 (3-11-91)

Sample Description:

USCS: AASHTO: LL: PI:

Remarks:
1(client): Moisture Content (%): 16.4 2: Dry Density (pcf): 116.1

3:sample no. Porosity: 0.314 4:

Fig. 13 Specification? Y / (N) Mechanical Analysis? (Y) / N Hydrometer Analysis? (Y) / N
(-200 Only? Y / (N)) (Hydrometer No. 90-6725)

	Initial	After Wash		Split Sieve
Dry Sample & Tare:	243.82		Dry Sample & Tare:	173.28
5.1 Tare (+10):	2.17		63 Tare (-10):	123.40

(Use Cummulative Basis for Calculations!)

Sieve	Cummul. Wt. Retained	% Finer
1 1/2 (1.5)	–	
1	–	
3/4 (.75)	–	
1/2 (.5)	–	
3/8 (.375)	– 2.17	
#4	7.76	
#8	9.21	
#10	9.63	
#16	123.70	
#30	124.03	
#40	124.21	
#50	124.39	
#80	124.76	
#100	124.96	
#200	126.29	

Hydrometer Sample Wt.: 50.03

Moist Wt. & Tare:	35.00
Dry Wt. & Tare:	34.92
172 Tare Wt.:	11.31
Hygroscopic Moisture %:	.3

Correction @ 20: -6 Meniscus = 0
Specific Gravity: 2.71 (Hydrometer = 152H)

(Time)	Time min.	Temp C	Actual Reading	Diam. (mm)	% Finer
9:22	0	24	0		
9:24	2	24	40		
9:27	5	24	35		
9:37	15	24	27		
9:52	30	24	22.5		
10:22	60	24	18.5		
[illegible]	250	25	13		
[illegible]	1440	24	10.5		

Print test summary? (Y) / N

411

PARTICLE SIZE

Date: 5/2/91 Project No.: 21-02463 (Graduate No.: 1)

Project: Long Oil / ERM Project No. 0252 II

Location of Sample: LO MW 025

Sample Description:

USCS: AASHTO: LL: PI:

Remarks:
1(client): Moisture Content (%): 10.4 2: Dry Density (pcf): not suitable

3:sample no. Porosity: Not Suitable 4:

Fig. Specification? Y / (N) (-200 Only? Y / (N)) Mechanical Analysis? (Y) / N Hydrometer Analysis? (Y) / N (Hydrometer No. 90-67295

	Initial	After Wash
Dry Sample & Tare:	687.6	
155 Tare (+10):	106.7	

(Use Cummulative Basis for Calculations!)

Split Sieve

Dry Sample & Tare: 157.53

171 Tare (-10): 107.63

Sieve	Cummul. Wt. Retained	% Finer
1/2 (1.5)	106.7	
1	190.4	
3/4 (.75)	—	
1/2 (.5)	230.8	
3/8 (.375)	248.7	
#4	292.0	
#8	328.8	
#10	338.6	
#16	110.54	
#30	114.67	
#40	116.72	
#50	118.92	
#80	122.77	
#100	124.23	
#200	128.87	

Hydrometer Sample Wt.: 50.00

Moist Wt. & Tare:	34.89
Dry Wt. & Tare:	34.84
193 Tare Wt.:	11.80
Hygroscopic Moisture %:	.2

Correction @ 20: -6.0 Meniscus = 0

Specific Gravity: 2.7 (Hydrometer = 152H)

(Time)	Time min.	Temp C	Actual Reading	Diam. (mm)	% Finer
1.42	0	24	0		
9.44	2	24	25.5		
9.47	5	24	21.5		
9.57	15	24.5	18.0		
10.12	30	24.5	16.0		
[illegible]	60	25	13.5		
[illegible]	250	25.5	11.5		
[illegible]	1440	22	10.5		

Print test summary? Y / N

#13

PARTICLE SIZE

Date: 4/15/91 Project No.: 21- 02463 (Graduate No.: 30)

Project: Lenz Oil / ERM Project No. 0252 II

Location of Sample: LO MW 045 (3-15-91)

Sample Description:

USCS: AASHTO: LL: PI:

Remarks:

1(client): Moisture Content (%): 51.1 2: Dry Density (pcf): 68.7

3:sample no. Porosity: 0.570 4:

Fig. 12 Specification? Y / (N) Mechanical Analysis? (Y) / N Hydrometer Analysis? (Y) / N

(-200 Only? Y / (N)) (Hydrometer No. 70-6725)

	Initial	After Wash		Split Sieve
Dry Sample & Tare:	714.9		Dry Sample & Tare:	172.57
13 Tare (+10):	110.4		18 Tare (-10):	122.97

(Use Cummulative Basis for Calculations!)

Sieve	Cummul. Wt. Retained	% Finer
1 1/2 (1.5)	110.4	
1	271.3	
3/4 (.75)	305.3	
1/2 (.5)	359.8	
3/8 (.375)	390.6	
#4	463.8	
#8	513.6	
#10	[illegible]	
#16	129.02	
#30	135.10	
#40	137.39	
#50	139.46	
#80	141.97	
#100	142.88	
#200	146.36	

Hydrometer Sample Wt.: 50.00

Moist Wt. & Tare:	29.53
Dry Wt. & Tare:	29.38
142 Tare Wt.:	11.49
Hygroscopic Moisture %:	.8

Correction @ 20: -6 Meniscus = 0

Specific Gravity: 2.57 (Hydrometer = 152H)

(Time)	Time min.	Temp C	Actual Reading	Diam. (mm)	% Finer
9:26	0	24	0		
9:28	2	24	24		
9:31	5	24	21		
9:41	15	24	19		
9:56	30	24	17		
10:26	60	24	15		
[illegible]	250	25	11.5		
[illegible]	1440	24	10		

Print test summary? (Y) / N

Air Dry - 10

Air Dry 2.10

#12

PARTICLE SIZE

Date: 4/15/91 Project No.: 21-02463 (Graduate No.: 1)

Project: Lenz Oil / ERM LO MW 045-D

Location of Sample: LO MW 045-D (3-15-91)

Sample Description:

USCS: AASHTO: LL: PI:

Remarks:
1(client): Moisture Content (%): 42.52: Dry Density (pcf): 72.5

3: sample no. Porosity: 0.537 4:

Fig. 17 Specification? Y / (N) (-200 Only? Y / (N)) Mechanical Analysis? (Y) / N Hydrometer Analysis? (Y) / N (Hydrometer No. 90-6725)

Air Dry -10

	Initial	After Wash
Dry Sample & Tare:	238.97	
SD Tare (+10):	2.07	

(Use Cummulative Basis for Calculations!)

Split Sieve

Dry Sample & Tare: 172.70

57 Tare (-10): 123.02

Air Dry +10

Sieve	Cummul. Wt. Retained	% Finer
1 1/2 (1.5)	—	
1	—	
3/4 (.75)	—	
1/2 (.5)	— 2.07	
3/8 (.375)	5.80	
#4	12.10	
#8	16.38	
#10	17.37	
#16	123.55	
#30	124.25	
#40	124.53	
#50	124.89	
#80	125.46	
#100	125.72	
#200	127.14	

Hydrometer Sample Wt.: 50.03

Moist Wt. & Tare: 31.24

Dry Wt. & Tare: 31.11

218 Tare Wt.: 11.64

Hygroscopic Moisture %: .7

Correction @ 20: -6 Meniscus = 0

Specific Gravity: 2.51 (Hydrometer = 152H)

(Time)	Time min.	Temp C	Actual Reading	Diam. (mm)	% Finer
9:24	0	24	0		
9:26	2	24	40.5		
9:29	5	24	35		
9:39	15	24	28		
9:54	30	24	24		
10:24	60	24	20		
1:20	250	25	14.5		
4:24	1440	24	12		

Print test summary? (Y) / N

#15

PARTICLE SIZE

Date: 4/15/91 Project No.: 21-02463 (Graduate No.: 40)

Project: Lone Oil / FFM Project No. 0252JI ~~[illegible]~~

Location of Sample: LO MW 055 (3-5-91)

Sample Description:

USCS: AASHTO: LL: PI:

Remarks:

1(client): Moisture Content(%): 8.4 2: Dry Density(pcf): 139.0

3:sample no. Porosity : 0.191 4:

Fig. 11 Specification? Y / (N) Mechanical Analysis? (Y) / N Hydrometer Analysis? (Y) / N

(-200 Only? Y / (N)) (Hydrometer No. 90-6725)

	Initial	After Wash		Split Sieve
Dry Sample & Tare:	808.3		Dry Sample & Tare:	157.47
136 Tare (+10):	105.50		143 Tare (-10):	107.84

(Use Cummulative Basis for Calculations!)

Sieve	Cummul. Wt. Retained	% Finer
1 1/2 (1.5)	705.50	
1	229.2	
3/4 (.75)	299.8	
1/2 (.5)	377.9	
3/8 (.375)	408.9	
#4	508.7	
#8	560.4	
#10	571.9	
#16	113.81	
#30	119.07	
#40	120.75	
#50	122.15	
#80	123.81	
#100	124.61	
#200	128.97	

Hydrometer Sample Wt.: 50.03

Moist Wt. & Tare:	35.37
Dry Wt. & Tare:	35.18
306 Tare Wt.:	11.75
Hygroscopic Moisture %:	.8

Correction @ 20:- 6 Meniscus = 0

Specific Gravity: 2.76 (Hydrometer = 152H)

(Time)	Time min.	Temp C	Actual Reading	Diam. (mm)	% Finer
9:20	0	24	0		
9:22	2	24	24.5		
9:25	5	24	22		
9:35	15	24	18		
9:50	30	24	16		
10:20	60	24	14		
[illegible]	250	25	11		
[illegible]	1440	24	9		

Print test summary? (Y) / N

ATEC Associates, Inc.

LABORATORY THINWALL TUBE LOG

Client: ERM North Central
ATEC Project No.: 21-02463
Project: Lemg Oil
Client Job No.:
Location:
Date: 5-6-91
Boring No.: Sample No.: Depth: ft. Recovery: in.
Ground Surface Elevation: MW015 Datum: Logged By:

Scale, inches	Soil Description	Laboratory Tests / Remarks
0		length of tube 6.00"
		inside diam of tube 1.38"
		wt of tube & soil 566.7
6		wt of empty tube = 248.26
12		
18		
24		
30		

WATER CONTENT

Can No.	107
Weight - Wet (Gm.)	77.41
Weight - Dry (Gm.)	69.24
Weight Water (Gm.)	
Weight Can (Gm.)	19.46
Weight Solids (Gm.)	
Moisture (%)	16.4

UNIT WEIGHT

Diameter - Av. (in.)	1.38
Area - Av. (Sq. cm.)	
Height (in.)	6.00
Volume (cu. cm.)	147.06
Weight - Wet (Gm.)	318.44
Weight - Dry (Gm.)	272.57
Density - Dry (Lbs./cu. ft.)	116.1

porosity
0.314

ATEC Associates, Inc.

LABORATORY THINWALL TUBE LOG

Client: ERM North Central
ATEC Project No.: 21-02463
Project: Lenz Oil
Client Job No.:
Location:
Date: 4-30-91
Boring No.: MW025 Sample No.: Depth: ft. Recovery: in.
Ground Surface Elevation: Datum: Logged By:

Scale, inches	Soil Description	Laboratory Tests / Remarks
0	Brownsand + gravel.	unsuitable for density and specific gravity tests
6		
12		
18		
24		
30		

WATER CONTENT

Can No.	602
Weight - Wet (Gm.)	49.78
Weight - Dry (Gm.)	47.06
Weight Water (Gm.)	
Weight Can (Gm.)	20.84
Weight Solids (Gm.)	
Moisture (%)	10.4

UNIT WEIGHT

Diameter - Av. (in.)	
Area - Av. (Sq. cm.)	
Height (in.)	
Volume (cu. cm.)	
Weight - Wet (Gm.)	
Weight - Dry (Gm.)	
Density - Dry (Lbs./cu. ft.)	

ATEC Associates, Inc.

LABORATORY THINWALL TUBE LOG

Client: ERM North Central
ATEC Project No.: 21-02463
Project: Lenz Oil
Client Job No.:
Location:
Date: 5-6-91

Boring No.: Sample No.: Depth: ft. Recovery: in.
Ground Surface Elevation: MW-04,5 Datum: Logged By:

Scale, inches	Soil Description	Laboratory Tests / Remarks
0		length of tube = 5.98"
		inside diam of tube 1.38"
		wt of tube + soil 491.6 gm
		wt empty tube = 247.80
6		
12		
18		
24		
30		

WATER CONTENT

Can No.	602
Weight - Wet (Gm.)	63.41
Weight - Dry (Gm.)	49.04
Weight Water (Gm.)	
Weight Can (Gm.)	20.90
Weight Solids (Gm.)	
Moisture (%)	51.1

UNIT WEIGHT

Diameter - Av. (in.)	1.38
Area - Av. (Sq. cm.)	
Height (in.)	5.98
Volume (cu. cm.)	146.57
Weight - Wet (Gm.)	243.80
Weight - Dry (Gm.)	161.35
Density - Dry (Lbs./cu. ft.)	68.7

Porosity 0.570

ATEC Associates, Inc.

LABORATORY THINWALL TUBE LOG

Client: ERM North Central
Project: Lenz Oil
Location:
Boring No.: Sample No.: Depth: ft. Recovery: in.
Ground Surface Elevation: MW-045-D Datum: Logged By: TR

ATEC Project No.: 21-02463
Client Job No.:
Date: 5-6-91

Scale, inches	Soil Description	Laboratory Tests / Remarks
0		length of tube 5.98"
		inside diam of tube 1.38
		wt tube + soil = 494.3 gm
6		wt empty tube = 251.72
12		
18		
24		porosity 0.537
30		

WATER CONTENT

Can No.	529
Weight - Wet (Gm.)	74.49
Weight - Dry (Gm.)	59.75
Weight Water (Gm.)	
Weight Can (Gm.)	25.08
Weight Solids (Gm.)	
Moisture (%)	42.5

UNIT WEIGHT

Diameter - Av. (in.)	1.38
Area - Av. (Sq. cm.)	
Height (in.)	5.98
Volume (cu. cm.)	146.57
Weight - Wet (Gm.)	242.58
Weight - Dry (Gm.)	170.23
Density - Dry (Lbs./cu. ft.)	72.5

ATEC Associates, Inc.

LABORATORY THINWALL TUBE LOG

Client: ERM North Central
ATEC Project No.: 21-02463
Project: Lenz Oil
Client Job No.:
Location:
Date: 5-6-91
Boring No.: Sample No.: Depth: ft. Recovery: in.
Ground Surface Elevation: MW 055 Datum: Logged By:

Scale, inches	Soil Description	Laboratory Tests / Remarks
0		length of tube 6.00 inside diam of tube 1.38 wt of tube + soil 601.6 wt of empty tube 246.66
6		
12		
18		
24		
30		

porosity 0.191

WATER CONTENT

Can No.	528
Weight - Wet (Gm.)	121.36
Weight - Dry (Gm.)	113.90
Weight Water (Gm.)	
Weight Can (Gm.)	25.15
Weight Solids (Gm.)	
Moisture (%)	9.4

UNIT WEIGHT

Diameter - Av. (in.)	1.38
Area - Av. (Sq. cm.)	
Height (in.)	6.00
Volume (cu. cm.)	147.06
Weight - Wet (Gm.)	354.94
Weight - Dry (Gm.)	327.44
Density - Dry (Lbs./cu. ft.)	139.0

SPECIFIC GRAVITY
SOIL

PROJECT Lenz Oil NO. 21-02463

CLIENT ERM N.C. TECHNICIAN T+T

SAMPLE

TEST (ASTM NO. & TITLE)

DATE 5-6-91

Sample no.	MW015
Pycnometer no.	151
Pycnometer wt.	178.53
Pycn+wter wt.	676.9
Pycn+water+ sample wt.	709.8
Water temp. (C)	23
Tare no.	140
Tare wt.	107.11
Dry sample+tare wt.	159.27
Dry sample wt.	52.16
Correction factor K	0.9993 B36 = 2.703

SPECFIC GRAVITY (20 deg.) 2.7061044

SPECIFIC GRAVITY
SOIL

PROJECT Lenz Oil NO. 21-02462

CLIENT ERM NC. TECHNICIAN

SAMPLE

TEST (ASTM NO. & TITLE)

DATE 5-6-91

Sample no.	MW045
Pycnometer no.	151
Pycnometer wt.	178.53
Pycn+wter wt.	676.9
Pycn+water+ sample wt.	701.3
Water temp. (C)	23
Tare no.	150
Tare wt.	107.59
Dry sample+tare wt.	147.56
Dry sample wt.	39.97
Correction factor K	.9993 / 656.567

SPECFIC GRAVITY (20 deg.) 2.5152031

SPECIFIC GRAVITY
SOIL

PROJECT Lenz 016 NO. 21-02463

CLIENT EBM N.C. TECHNICIAN TFT

SAMPLE

TEST (ASTM NO. & TITLE)

DATE 5-6-91

Sample no.	MW 045-D
Pycnometer no.	151
Pycnometer wt.	178.53
Pycn+wter wt.	676.9
Pycn+water+ sample wt.	701.0
Water temp. (C)	23
Tare no.	144
Tare wt.	108.94
Dry sample+tare wt.	148.95
Dry sample wt.	40.01
Correction factor K	.9993 / 8S6:2.5 E

SPECFIC GRAVITY (20 deg.) 2.5132395

SPECIFIC GRAVITY
SOIL

PROJECT Lenz oil NO. 21-02463

CLIENT ERM N. C. TECHNICIAN TT

SAMPLE

TEST (ASTM NO. & TITLE)

DATE 5-6-91

Sample no.	MW055
Pycnometer no.	151
Pycnometer wt.	178.53
Pycn+wter wt.	676.9
Pycn+water+ sample wt.	699.0
Water temp. (C)	23
Tare no.	153
Tare wt.	106.14
Dry sample+tare wt.	140.80
Dry sample wt.	34.66
Correction factor K	.9993
	856: 2.750

SPECFIC GRAVITY (20 deg.) 2.759066

ERM-North Central, inc.

Sample Chain of Custody

W.O.No.: 0252JI

Project Name: LENZ OIL RI/FS

Sampler: DIRK KAISER

ERM Sample Number	Date	Time	COMP	GRAB	Station Location	Number of Containers	6" BRASS TOTAL POROSITY (TP)	1 QT. PARTICLE SIZE (PS)	4 OZ T.O.C.				Remarks / MATRIX
LO-MW05 S.	03/05/91	09:30		X	MONITORING WELL #5 SHALLOW	1	✓						SOIL
LO MW05 S	03/05/91	09:30		X	MONITORING WELL #5 SHALLOW	1		✓					SOIL
LO-MW05 S	03/05/91	09:30		X	MONITORING WELL #5 SHALLOW	1			✓				SOIL
													SAMPLES ICED TO 4°C
													SAMPLES SHIPPED VIA
													FED EX AIRBILL #8194625396
													TO ATEC, INDIANAPOLIS

Sample Relinquished by:	Date	Time	Sample Received by:	Date	Time	Reason for Transfer
[signature]	3/5/91	1300	[signature]	3-6-91		

COPIES: W Yellow cop... accompany sample shipment to laboratory. Yellow copy retained by laboratory. ' opy to be ... ed to ERM for files. Pink copy retained by sampler. Gold copy extra copy a ... pd

ERM-North Central, inc.

Sample Chain of Custody

W.O.No.: 0252JI

Project Name: Lenz Oil

Sampler: Dirk Kaiser

ERM Sample Number	Date	Time	COMP	GRAB	Station Location	Number of Containers	1 qt Plastic	6 oz Glass Jar	4 oz Tapper Jar				Remarks
													Matrix
MN055-5	3/11/91	0915		X	Monitoring Well 01 Summer	3	1	1	1				Soil
													All samples iced to 4°C
													Shipped to ATEC, Indianapolis
													Airbill # 8194625353

Sample Relinquished by:	Date	Time	Sample Received by:	Date	Time	Reason for Transfer
[signature]	3/11/91	11:20	Gordon C Pickett	3-12-91		

COPIES: W Yellow cop accompany sample shipment to laboratory. Yellow copy retained by laboratory. copy to be ed to ERM for files. Pink copy retained by sampler. Gold copy extra copy ed

21-02463

ERM-North Central, inc.

Sample Chain of Custody

W.O.No.: 0252JI

Project Name: LONZ OIL

Sampler: [signature]

ERM Sample Number	Date	Time	COMP	GRAB	Station Location	Number of Containers	4 oz TOC	1 QT Platinum Silica	6" Brass Tubing				Remarks
LO-MW Ø4S	3/15/91	1200		X	LO-MWØ4S	3	1	1	1				SOIL
LO-MW Ø4S-D	3/15/91	1200		X	LO-MWØ4S-D	3	1	1	1				
													ALL SAMPLES ICED TO
													4°C. SHIPPED VIA FED
													EX TO ATEC, INDIANAPOLIS
													AIRBILL #: 8194625375

Sample Relinquished by:	Date	Time	Sample Received by:	Date	Time	Reason for Transfer
[signature]	3/15/91	15:00	[signature]	3-19-91		

COPIES: W. Yellow copies ompany sample shipment to laboratory. Yellow copy retained by laboratory. opy to be ret to ERM for files. Pink copy retained by sampler. Gold copy extra copy a ed

ERM-North Central, inc.

Sample Chain of Custody

W.O.No.: 0252JI

Project Name: LENZ OIL

Sampler: DIRK KAISER

ERM Sample Number	Date	Time	COMP	GRAB	Station Location	Number of Containers	1 qt. Partial Size	6" Brass Tube	Total Porosity	4 oz. T.O.C.				Matrix	Remarks
MW02S	4/25/91	1245		X	Monitoring Well MW02S										SOIL
															- SAMPLES ICED TO 4°C
															- SHIPPED FED EX TO ATEL
															AIRBILL # 8194625342
															- SHIPMENT COMPLETE
															THIS IS THE LAST SAMPLE
															SEND RESULTS UPON COMPLETI

Sample Relinquished by:	Date	Time	Sample Received by:	Date	Time	Reason for Transfer
[signature]	4/25/91	1615	[signature]	4-26-91	11:00	

COPIES: W)ellow copi. .ccompany sample shipment to laboratory. Yellow copy retained by laboratory. ')opy to be r. ed to ERM for files. Pink copy retained by sampler. Gold copy extra copy as)d

FEDERAL EXPRESS

QUESTIONS? CALL 800-238-5355 TOLL FREE.

AIRBILL
PACKAGE
TRACKING NUMBER 8194625386

205M 8194625386

Date 03/05/91

RECIPIENT'S COPY

1 From (Your Name) Please Print: Dirk Kaiser
Your Phone Number (Very Important): (708) 940-7200
Company: E R M NORTH CENTRAL
Department/Floor No.
Street Address: 102 WILMOT RD STE 300
City: DEERFIELD State: IL ZIP Required: 6 0 0 1 5

2 To (Recipient's Name) Please Print: Gordon Pickett
Recipient's Phone Number (Very Important): (317) 849-4910
Company: ATEC
Department/Floor No.
Exact Street Address (We Cannot Deliver to P.O. Boxes or P.O. Zip + Codes.): 5150 E. 65 ST
City: INDIANAPOLIS State: IN ZIP Required: 46220

YOUR INTERNAL BILLING REFERENCE INFORMATION (First 24 characters will appear on invoice.): LONZ OIL - 0252JI

H IF HOLD FOR PICK-UP, Print FEDEX Address Here
Street Address
City State ZIP Required

3 PAYMENT: 1 ☒ Bill Sender 2 ☐ Bill Recipient's FedEx Acct. No 3 ☐ Bill 3rd Party FedEx Acct. No 4 ☐ Bill Credit Card 5 ☐ Cash/Check

4 SERVICES (Check only one box)

Priority Overnight Service (Delivery by next business morning!)
11 ☒ YOUR PACKAGING
16 ☐ FEDEX LETTER *
12 ☐ FEDEX PAK *
13 ☐ FEDEX BOX
14 ☐ FEDEX TUBE

Standard Overnight Service (Delivery by next business afternoon!)
51 ☐
56 ☐ FEDEX LETTER *
52 ☐ FEDEX PAK *
53 ☐ FEDEX BOX
54 ☐ FEDEX TUBE

Economy Distribution Service (formerly Standard Air) (Delivery by second business day!)
30 ☐ ECONOMY DIST SVC

Heavyweight Service (for Extra Large or any package over 150 lbs.)
70 ☐ HEAVYWEIGHT **
80 ☐ DEFERRED HEAVYWEIGHT **

Delivery commitment may be later in some areas.
*Declared Value Limit $100
**Call for delivery schedule

DELIVERY AND SPECIAL HANDLING (Check services required)
1 ☐ HOLD FOR PICK-UP (Fill in Box H)
2 ☒ DELIVER WEEKDAY
3 ☐ DELIVER SATURDAY (Extra charge) (Not available to all locations)
4 ☐ DANGEROUS GOODS (Extra charge)
5 ☐
6 ☐ DRY ICE ____ Lbs.
7 ☐ OTHER SPECIAL SERVICE
8 ☐
9 ☐ SATURDAY PICK-UP (Extra charge)
10 ☐
11 ☐
12 ☐ HOLIDAY DELIVERY (If offered) (Extra charge)

PACKAGES	WEIGHT (In Pounds Only)	YOUR DECLARED VALUE
1	12	
Total 1	Total 12	Total

DIM SHIPMENT (Chargeable Weight) ☐ ____ lbs.

Received At: 1 ☐ Regular Stop 2 ☐ On-Call Stop 3 ☐ Drop Box 4 ☐ B.S.C. 5 ☐ Station

FedEx Emp. No

Emp. No Date
☐ Cash Received
☐ Return Shipment
☐ Third Party ☐ Chg. To Del ☐ Chg. To Hold
Street Address
City State Zip
Received By: X
Date/Time Received FedEx Employee Number

5 Release Signature
Date/Time

Federal Express Use
Base Charges
Declared Value Charge
Other 1
Other 2
Total Charges

REVISION DATE 4/90
PART #119500 FXEM 7/90
FORMAT #027

027

© 1990 F.E.C. PRINTED IN U.S.A.

FEDERAL EXPRESS

QUESTIONS? CALL 800-238-5355 TOLL FREE.

AIRBILL
PACKAGE
TRACKING NUMBER 8194625353

205M 8194625353

Date 3/11/91

RECIPIENT'S COPY

1 From (Your Name) Please Print: Dirk Kaiser
Your Phone Number (Very Important): (708) 940-7200
Company: E R M NORTH CENTRAL
Department/Floor No.
Street Address: 102 WILMOT RD STE 300
City: DEERFIELD State: IL ZIP Required: 6 0 0 1 5

2 To (Recipient's Name) Please Print: Gordon Pickett
Recipient's Phone Number (Very Important): (317) 849-4910
Company: ATEC
Department/Floor No.
Exact Street Address (We Cannot Deliver to P.O. Boxes or P.O. Zip + Codes.): 5150 E. 65TH STREET
City: INDIANAPOLIS State: IN ZIP Required: 46220

YOUR INTERNAL BILLING REFERENCE INFORMATION (First 24 characters will appear on invoice.): LONZ OIL - 0252JI

H IF HOLD FOR PICK-UP, Print FEDEX Address Here
Street Address
City State ZIP Required

3 PAYMENT: 1 ☒ Bill Sender 2 ☐ Bill Recipient's FedEx Acct. No 3 ☐ Bill 3rd Party FedEx Acct. No 4 ☐ Bill Credit Card 5 ☐ Cash/Check

4 SERVICES (Check only one box)

Priority Overnight Service (Delivery by next business morning!)
11 ☒ YOUR PACKAGING
16 ☐ FEDEX LETTER *
12 ☐ FEDEX PAK *
13 ☐ FEDEX BOX
14 ☐ FEDEX TUBE

Standard Overnight Service (Delivery by next business afternoon!)
51 ☐
56 ☐ FEDEX LETTER *
52 ☐ FEDEX PAK *
53 ☐ FEDEX BOX
54 ☐ FEDEX TUBE

Economy Distribution Service (formerly Standard Air) (Delivery by second business day!)

Heavyweight Service (for Extra Large or any package over 150 lbs.)
70 ☐ HEAVYWEIGHT **

DELIVERY AND SPECIAL HANDLING (Check services required)
1 ☐ HOLD FOR PICK-UP (Fill in Box H)
2 ☒ DELIVER WEEKDAY
3 ☐ DELIVER SATURDAY (Extra charge) (Not available to all locations)
4 ☐ DANGEROUS GOODS (Extra charge)
5 ☐
6 ☐ DRY ICE ____ Lbs.
7 ☐ OTHER SPECIAL SERVICE
8 ☐
9 ☐ SATURDAY PICK-UP (Extra charge)
10 ☐

PACKAGES	WEIGHT (In Pounds Only)	YOUR DECLARED VALUE
1		
Total 1	Total 13	Total

DIM SHIPMENT (Chargeable Weight) ☐ ____ lbs.

Received At: 1 ☐ Regular Stop 3 ☐ Drop Box 4 ☒ B.S.C.

Emp. No Date
☐ Cash Received
☐ Return Shipment
☐ Third Party ☐ Chg. To Del ☐ Chg. To Hold
Street Address
City State Zip
Received By: X
Date/Time Received FedEx Employee Number

5 Release Signature

Federal Express Use
Base Charges
Declared Value Charge
Other 1
Other 2
Total Charges

REVISION DATE 4/90
PART #119500 FXEM 7/90
FORMAT #027

027

FEDERAL EXPRESS

QUESTIONS? CALL 800-238-5355 TOLL FREE.

AIRBILL
PACKAGE
TRACKING NUMBER 8194625375

205M 8194625375

Date 3/18/91

RECIPIENT'S COPY

1 From (Your Name) Please Print: DIRK KNIGHT
Your Phone Number (Very Important): (708) 940-7700
Company: E & M NORTH CENTRAL
Department/Floor No.:
Street Address: 102 WILMOT RD STE 300
City: DEERFIELD State: IL ZIP Required: 6 0 0 1 5

2 To (Recipient's Name) Please Print: GORDON PICKETT
Recipient's Phone Number (Very Important): 317 849-4770
Company: ATEC
Department/Floor No.:
Exact Street Address (We Cannot Deliver to P.O. Boxes or P.O. Zip + Codes.): 5150 E. 65TH STREET
City: INDIANAPOLIS State: IN ZIP Required: 46220

YOUR INTERNAL BILLING REFERENCE INFORMATION (First 24 characters will appear on invoice.): LONZ OIL - 0252JI

H IF HOLD FOR PICK-UP, Print FEDEX Address Here
Street Address:
City: State: ZIP Required:

3 PAYMENT 1 [X] Bill Sender 2 [ ] Bill Recipient's FedEx Acct. No. 3 [ ] Bill 3rd Party FedEx Acct. No. 4 [ ] Bill Credit Card 5 [ ] Cash/Check

4 SERVICES (Check only one box)

Priority Overnight Service (Delivery by next business morning†) / Standard Overnight Service (Delivery by next business afternoon†)
11 [X] YOUR PACKAGING — 51 [ ]
16 [ ] FEDEX LETTER * — 56 [ ] FEDEX LETTER *
12 [ ] FEDEX PAK * — 52 [ ] FEDEX PAK *
13 [ ] FEDEX BOX — 53 [ ] FEDEX BOX
14 [ ] FEDEX TUBE — 54 [ ] FEDEX TUBE

Economy Distribution Service (formerly Standard Air) (Delivery by second business day†) / Heavyweight Service (for Extra Large or any package over 150 lbs.)
90 [ ] ECONOMY DIST. SVC. — 70 [ ] HEAVYWEIGHT **
80 [ ] DEFERRED HEAVYWEIGHT **

†Delivery commitment may be later in some areas. *Declared Value Limit $100. **Call for delivery schedule

DELIVERY AND SPECIAL HANDLING (Check services required)
1 [ ] HOLD FOR PICK-UP (Fill in Box H)
2 [X] DELIVER WEEKDAY
3 [ ] DELIVER SATURDAY (Extra charge) (Not available to all locations)
4 [ ] DANGEROUS GOODS (Extra charge)
5 [ ]
6 [ ] DRY ICE _____ Lbs.
7 [ ] OTHER SPECIAL SERVICE
8 [ ]
9 [ ] SATURDAY PICK-UP (Extra charge)
10 [ ]
11 [ ]
12 [ ] HOLIDAY DELIVERY (If offered) (Extra charge)

PACKAGES	WEIGHT (in Pounds Only)	YOUR DECLARED VALUE
1	15	
Total	Total 15	Total

DIM SHIPMENT (Chargeable Weight) [ ] _____ lbs.

Received At: 1 [ ] Regular Stop 3 [ ] Drop Box 4 [ ] B.S.C. 2 [ ] On-Call Stop 5 [ ] Station

5 Release Signature:

FedEx Emp. No.: Date/Time:

Emp. No.: Date:
[ ] Cash Received
[ ] Return Shipment
[ ] Third Party [ ] Chg. To Del. [ ] Chg. To Hold
Street Address:
City: State: Zip:
Received By: X
Date/Time Received: FedEx Employee Number:

Federal Express Use: Base Charges; Declared Value Charge; Other 1; Other 2; Total Charges

REVISION DATE 4/90 PART #119500 FXEM 7/90 FORMAT #027

027

© 1990 F.E.C. PRINTED IN U.S.A.

FEDERAL EXPRESS

QUESTIONS? CALL 800-238-5355 TOLL FREE.

AIRBILL
PACKAGE
TRACKING NUMBER 8194625342

205M 8194625342

Date 4/25/91

RECIPIENT'S COPY

1 From (Your Name) Please Print: DIRK KNIGHT
Your Phone Number (Very Important): (708) 940-7700
Company: E & M NORTH CENTRAL
Department/Floor No.:
Street Address: 102 WILMOT RD STE 300
City: DEERFIELD State: IL ZIP Required: 6 0 0 1 5

2 To (Recipient's Name) Please Print: GORDON PICKETT
Recipient's Phone Number (Very Important): 317 849-4770
Company: ATEC
Department/Floor No.:
Exact Street Address (We Cannot Deliver to P.O. Boxes or P.O. Zip + Codes.): 5150 E. 65TH STREET
City: INDIANAPOLIS State: IN ZIP Required: 46220

YOUR INTERNAL BILLING REFERENCE INFORMATION (First 24 characters will appear on invoice.): LONZ OIL - 0252JI

H IF HOLD FOR PICK-UP, Print FEDEX Address Here
Street Address:
City: State: ZIP Required:

3 PAYMENT 1 [X] Bill Sender 2 [ ] Bill Recipient's FedEx Acct. No. 3 [ ] Bill 3rd Party FedEx Acct. No. 4 [ ] Bill Credit Card 5 [ ] Cash/Check

4 SERVICES (Check only one box)

Priority Overnight Service (Delivery by next business morning†) / Standard Overnight Service (Delivery by next business afternoon†)
11 [X] YOUR PACKAGING — 51 [ ]
[ ] FEDEX LETTER * — 56 [ ] FEDEX LETTER *
12 [ ] FEDEX PAK * — 52 [ ] FEDEX PAK *
13 [ ] FEDEX BOX — 53 [ ] FEDEX BOX
14 [ ] FEDEX TUBE — 54 [ ] FEDEX TUBE

Economy Distribution Service (formerly Standard Air) (Delivery by second business day†) / Heavyweight Service (for Extra Large or any package over 150 lbs.)
[ ] ECONOMY — 70 [ ] HEAVYWEIGHT **

DELIVERY AND SPECIAL HANDLING (Check services required)
1 [ ] HOLD FOR PICK-UP (Fill in Box H)
2 [X] DELIVER WEEKDAY
3 [ ] DELIVER SATURDAY (Extra charge) (Not available to all locations)
4 [ ] DANGEROUS GOODS (Extra charge)
5 [ ]
6 [ ] DRY ICE _____ Lbs.
7 [ ] OTHER SPECIAL SERVICE
8 [ ]
9 [ ] SATURDAY PICK-UP (Extra charge)
10 [ ]

PACKAGES	WEIGHT (in Pounds Only)	YOUR DECLARED VALUE
1	17	
Total	Total	Total

DIM SHIPMENT (Chargeable Weight) [ ] _____ lbs.

Received At: 1 [ ] Regular Stop 3 [ ] Drop Box 4 [ ] B.S.C.

5 Release Signature

Emp. No.: Date:
[ ] Cash Received
[ ] Return Shipment
[ ] Third Party [ ] Chg. To Del. [ ] Chg. To Hold
Street Address:
City: State: Zip:
Received By: X
Date/Time Received: FedEx Employee Number:

Federal Express Use: Base Charges; Declared Value Charge; Other 1; Other 2; Total Charges

REVISION DATE 4/90 PART #119500 FXEM 7/90 FORMAT #027

027

APPENDIX K

GROUND WATER AND NAPL SAMPLING FORMS

PHASE I GROUND WATER SAMPLING FORMS

FIGURE 2-4

LENZ OIL SITE REMEDIAL INVESTIGATION
PROJECT NO: 9292

GROUND WATER SAMPLING
FIELD DATA FORM

SAMPLE I.D.: LO-1MW07S-GW DATE: 7 May 1991 TIME: 13:15

SAMPLERS:	AFFILIATION:	OBSERVERS:	AFFILIATION:
RLL	ERM		
BBM	ERM		

WELL NUMBER: MW07S TOTAL DEPTH: 32.5 (ft) I.D.: 2 (in)

MATERIAL: Stain. Steel SCREENED INTERVAL: ____-____ (ft)

WATER LEVEL TO TOP OF CASING (ft)

PRE-PURGE: 15.72 POST-PURGE: _____ SAMPLING: _____

THICKNESS OF WATER COLUMN: 16.78 (ft) CASING VOLUME: 2.7 (gal) 3 Vol. = 8.1 Gal.

PURGING METHOD: Teflon Bailer SAMPLING METHOD: Teflon Bailer

STABILIZATION TEST

Time	pH	Conductance (umhos/sq cm)	Temperature (deg F)	Cumulative Volume (gal)
13:00	7.18	1730	13.5°C	0 Gal.
13:05	7.10	1750	12.2°C	2.7 Gal.
13:10	7.05	1780	12.0°C	5.4 Gal.
13:15	7.06	1780	12.0°C	8.1 Gal.

FIGURE 2-4

LENZ OIL SITE REMEDIAL INVESTIGATION
PROJECT NO: 9292

GROUND WATER SAMPLING
FIELD DATA FORM
(Continued)

SAMPLE CONTAINER	VOLUME	PRESERVATIVE/PREP.
(2) VOA, Clear, Glass	40 ML	No
(3) SVOA, Amber, Glass	1 Liter	No
(2) Pest./PCBs, Amber, Glass	1 Liter	No
(2) Metals, Plastic	1 Liter	HNO_3
(1) CN, Clear Glass	1 Liter	NaOH

METALS SAMPLE FILTERED IN FIELD? YES ✓ NO ____

OBSERVATIONS:

Cloudy pale gray.

FIGURE 2-4

LENZ OIL SITE REMEDIAL INVESTIGATION
PROJECT NO: 9292

GROUND WATER SAMPLING
FIELD DATA FORM

LO-1MW07D-FB

SAMPLE I.D.: LO-1MW07D-GW DATE: 7 May 1991 TIME: 12:20

SAMPLERS:	AFFILIATION:	OBSERVERS:	AFFILIATION:
RLL	ERM	H.W.H	EBASCO
BBH	ERM		

WELL NUMBER: 4W7D TOTAL DEPTH: 54.5 (ft) I.D.: 2 (in)

MATERIAL: Stain Steel SCREENED INTERVAL: ___-___ (ft)

WATER LEVEL TO TOP OF CASING (ft)

PRE-PURGE: 15.05 POST-PURGE: _____ SAMPLING: _____

THICKNESS OF WATER COLUMN: 39.45 (ft) CASING VOLUME: 6.3 (gal)

PURGING METHOD: Teflon Bailer SAMPLING METHOD: Teflon Bailer

STABILIZATION TEST

Time	pH	Conductance (umhos/sq cm)	Temperature (deg F)	Cumulative Volume (gal)
11:55	8.14	600	13°C	0 Gal.
12:00	7.45	725	12.5°C	6 Gal.
12:10	7.13	775	12.2°C	12 Gal
12:15	7.04	780	12.2°C	18 Gal.

FIGURE 2-4

LENZ OIL SITE REMEDIAL INVESTIGATION
PROJECT NO: 9292

GROUND WATER SAMPLING
FIELD DATA FORM
(Continued)

SAMPLE CONTAINER	VOLUME	PRESERVATIVE/PREP.
(2) VOA, clear glass	40 ml	No
(3) SVOA, Amber glass	1 Liter	No
(2) Pest, PCB, Amber glass	1 Liter	No
(2) Metals, Plastic	1 Liter	HNO_3
(1) C.N, Glass, clear	1 Liter	NaOH

METALS SAMPLE FILTERED IN FIELD? YES ✓ NO ____

OBSERVATIONS: Cloudy, yel. gry. after 3 Gal.

FIGURE 2-4

LENZ OIL SITE REMEDIAL INVESTIGATION
PROJECT NO: ~~9292~~ 0252

GROUND WATER SAMPLING
FIELD DATA FORM

SAMPLE I.D.: LO-1G01M-GW DATE: 5-6-91 TIME: 1120

SAMPLERS:	AFFILIATION:	OBSERVERS:	AFFILIATION:
JBT	ERM-NC	KM	Ebasco
BBM	ERM-NC		

WELL NUMBER: G-101M TOTAL DEPTH: 23.65 (ft) I.D.: 2 (in)

MATERIAL: Steel SCREENED INTERVAL: ____-____ (ft)

WATER LEVEL TO TOP OF CASING (ft)

PRE-PURGE: 4/24 15.31 ~~POST~~-PURGE: 5/6 15.93 SAMPLING: _____

THICKNESS OF WATER COLUMN: _____(ft) CASING VOLUME: 1.4 (gal)

PURGING METHOD: _____ SAMPLING METHOD: Teflon bailer

STABILIZATION TEST

Time	pH	Conductance (umhos/sq cm)	Temperature (deg F) Soil	Temperature (deg F) Water	Cumulative Volume (gal)
1116	7.57	432	8.5	8.6	0 (initial)
1116	7.51	429	8.7	8.7	1.5
1116	7.46	438	8.8	[illegible]	3.0
[illegible]	[illegible]	416	8.9	9.0	4.5
1120	7.34	468	8.9	8.9	6.0

FIGURE 2-4

LENZ OIL SITE REMEDIAL INVESTIGATION
PROJECT NO: 9292

GROUND WATER SAMPLING
FIELD DATA FORM
(Continued)

SAMPLE CONTAINER	VOLUME	PRESERVATIVE/PREP.

METALS SAMPLE FILTERED IN FIELD? YES _____ NO ✓

OBSERVATIONS: [illegible]

FIGURE 2-4

LENZ OIL SITE REMEDIAL INVESTIGATION
PROJECT NO: ~~9292~~ 02525

GROUND WATER SAMPLING
FIELD DATA FORM

SAMPLE I.D.: LO-1G101L-SW DATE: 5-6-91 TIME: [illegible]

SAMPLERS:	AFFILIATION:	OBSERVERS:	AFFILIATION:
JB	EKH-NC	KM	Ebasco
BBM	ERM-NC		

WELL NUMBER: G-101L TOTAL DEPTH: 34.35 (ft) I.D.: 2 (in)

MATERIAL: Steel SCREENED INTERVAL: ___-___ (ft)

WATER LEVEL TO TOP OF CASING (ft)

4/24 PRE-PURGE: 14.56 ~~POST~~ PRE-PURGE: 15.08 5/6 SAMPLING: ___

THICKNESS OF WATER COLUMN: ___(ft) CASING VOLUME: 3.2 (gal)

PURGING METHOD: ___ SAMPLING METHOD: Teflon Bailer

STABILIZATION TEST

Time	pH	Conductance (umhos/sq cm)	Temperature (deg ~~F~~ C)		Cumulative Volume (gal)
0950	8.12	496	8.7	7.9	0 (initial)
0952	7.65	550	9.3	9.4	3.5
1003	7.34	590	9.5	9.6	7.0
[illegible]	[illegible]	[illegible]	9.9	9.5	[illegible]
1013	7.14	606	9.9	[illegible]	14.0
1017	7.23	650	10.0	[illegible]	17.5

FIGURE 2-4

LENZ OIL SITE REMEDIAL INVESTIGATION
PROJECT NO: 9292

GROUND WATER SAMPLING
FIELD DATA FORM
(Continued)

	SAMPLE CONTAINER	VOLUME	PRESERVATIVE/PREP.
[illegible]	VOC vials - 2	40 mL	none
	Semivolatiles - 3	1L amber	none
[illegible]	Pesticides/PCBs - 2	1L amber	none
	Metals Dissolved	1/2 pint poly	HNO_3 (in [illegible]) → [illegible]
	Cyanide	1L [illegible]	NaOH [illegible]
1105	Total Metals	500 mL sample [illegible]	None

METALS SAMPLE FILTERED IN FIELD? YES _____ NO ✓

OBSERVATIONS: Low turbidity, light [illegible]

FIGURE 2-4

LENZ OIL SITE REMEDIAL INVESTIGATION
PROJECT NO: 9292

GROUND WATER SAMPLING
FIELD DATA FORM

HN_3 = 0 ppm

SAMPLE I.D.: LO-IG10ID-GW DATE: 5-6-91 TIME: 1240

SAMPLERS:	AFFILIATION:	OBSERVERS:	AFFILIATION:
JTR	FRAMTEC	~~KH~~	~~[illegible]~~
VAH	FRAMTEC		

WELL NUMBER: G-10ID TOTAL DEPTH: 41.02 (ft) I.D.: 2 (in)

MATERIAL: Steel SCREENED INTERVAL: ___-___ (ft)

WATER LEVEL TO TOP OF CASING (ft)

4/29/91 PRE-PURGE: 14.44 5/6 PRE- ~~POST~~-PURGE: 15.02 SAMPLING: ___

THICKNESS OF WATER COLUMN: ___ (ft) CASING VOLUME: 4.3 (gal)

PURGING METHOD: ___ SAMPLING METHOD: ___

STABILIZATION TEST

Time	pH	Conductance (umhos/sq cm)	Temperature (deg F)		Cumulative Volume (gal)
			°C	°F	
1208	7.87	620	9.4	9.2	0 (initial)
1215	7.53	[illegible]	[illegible]	9.8	4.5
1225	7.21	686	10.5	10.2	9.0
1235	7.08	[illegible]	10.6	10.4	13.5
1238	7.13	990	10.4	10.2	17.0

FIGURE 2-4

LENZ OIL SITE REMEDIAL INVESTIGATION
PROJECT NO: 9292

GROUND WATER SAMPLING
FIELD DATA FORM
(Continued)

SAMPLE CONTAINER	VOLUME	PRESERVATIVE/PREP.

METALS SAMPLE FILTERED IN FIELD? YES ____ NO ✓

OBSERVATIONS: Mostly clear – very [illegible]

FIGURE 2-4

LENZ OIL SITE REMEDIAL INVESTIGATION
PROJECT NO: 9292

GROUND WATER SAMPLING
FIELD DATA FORM

SAMPLE I.D.: LO-IG102L-GW DATE: 5/6/91 TIME: 12:15 PM

SAMPLERS:	AFFILIATION:	OBSERVERS:	AFFILIATION:
RLL	ERM-N.C.		
VAH/	ERM-N C		
BBM	ERM-NC		

WELL NUMBER: G102L TOTAL DEPTH: 6.35 (ft) I.D.: 2 (in)

MATERIAL: Stain Steel SCREENED INTERVAL: ___-___ (ft)

WATER LEVEL TO TOP OF CASING (ft)

PRE-PURGE: 7.77 POST-PURGE: ___ SAMPLING: ___

THICKNESS OF WATER COLUMN: 8.58 (ft) CASING VOLUME: 1.4 (gal)

PURGING METHOD: Teflon Bailer SAMPLING METHOD: Teflon Bailer

STABILIZATION TEST

Time	pH	Conductance (umhos/sq cm)	Temperature (deg F)	Cumulative Volume (gal)
12:00	6.70	1050	11°C	0
12:05	6.78	1100	9.8°C	1.5
12:08	6.95	1100	9.0°C	3.0
12:10	6.95	1100	9.0°C	4.5

FIGURE 2-4

LENZ OIL SITE REMEDIAL INVESTIGATION
PROJECT NO: 9292

GROUND WATER SAMPLING
FIELD DATA FORM
(Continued)

SAMPLE CONTAINER	VOLUME	PRESERVATIVE/PREP.
(2) Glass VOA	40 ML	No
(3) Amber Glass ~~Phenols~~ SVOA	1 L.	No
(1) Clear Glass CN	1 L.	No
(2) Plastic Metals	1 L.	~~NO~~ HNO_3
(2) Pest./PCB Amber Glass	1 L.	NO

METALS SAMPLE FILTERED IN FIELD? YES ✓ NO ____

OBSERVATIONS:

Rusty

FIGURE 2-4

LENZ OIL SITE REMEDIAL INVESTIGATION
PROJECT NO: 9292

GROUND WATER SAMPLING
FIELD DATA FORM

SAMPLE I.D.: LO-1G102D-G1 DATE: 6 May 1991 TIME: 12:55

SAMPLERS:	AFFILIATION:	OBSERVERS:	AFFILIATION:
BLL	ERM	K. Hc.	Ebasco
VAH	ERM		
3BM	ERM		

WELL NUMBER: G-102-D TOTAL DEPTH: 21.17 (ft) I.D.: 2 (in)

MATERIAL: Stain. Steel SCREENED INTERVAL: ___-___ (ft)

WATER LEVEL TO TOP OF CASING (ft)

PRE-PURGE: 8.73 POST-PURGE: _____ SAMPLING: _____

THICKNESS OF WATER COLUMN: 12.5 (ft) CASING VOLUME: 2.0 (gal)

PURGING METHOD: Teflon Bailer SAMPLING METHOD: Teflon Bailer

STABILIZATION TEST

Time	pH	Conductance (umhos/sq cm)	Temperature (deg F)	Cumulative Volume (gal)
12:35	7.30	1150	10°C	0
12:40	7.26	1190	9.2°C	2 Gal.
12:45	7.16	1150	9.0°C	4 Gal.
12:50	7.29	1150	9.0°C	5 Gal.

FIGURE 2-4

LENZ OIL SITE REMEDIAL INVESTIGATION
PROJECT NO: 9292

GROUND WATER SAMPLING
FIELD DATA FORM
(Continued)

SAMPLE CONTAINER	VOLUME	PRESERVATIVE/PREP.
(2) VOA Glass	40 ML	No
(3) Amber Glass SVOA	1 Liter	No
(2) Pest./PCB Amb. Glass	1 Liter	No
(1) CN, Clear Glass	1 Liter	NaOH pH 12+
(2) Plastic Metals	1 Liter	HNO_3

METALS SAMPLE FILTERED IN FIELD? YES ✓ NO ____

OBSERVATIONS: Bailed dry in 4 Gal., W.C. recovery to obtain sample

FIGURE 2-4

LENZ OIL SITE REMEDIAL INVESTIGATION
PROJECT NO: 9292

GROUND WATER SAMPLING
FIELD DATA FORM

SAMPLE I.D.: LO-1G1C4L-GW DATE: 5/7/91 TIME: Started 12:00 Finished 14:15

SAMPLERS:	AFFILIATION:	OBSERVERS:	AFFILIATION:
JRT	ERM-NC		
YAH	ERM-NC		

WELL NUMBER: G1C4L TOTAL DEPTH: 12.52 (ft) I.D.: 2 (in)

MATERIAL: STEEL SCREENED INTERVAL: ___-___ (ft)

WATER LEVEL TO TOP OF CASING (ft)

PRE-PURGE: 3.12 (4/21) ~~POST~~-PURGE: 3.45 (5/7 PRE-) SAMPLING: ___

THICKNESS OF WATER COLUMN: ___(ft) CASING VOLUME: 1.2 (gal)

PURGING METHOD: ___ SAMPLING METHOD: Teflon bailer

STABILIZATION TEST

Time	pH	Conductance (umhos/sq cm)	Temperature (deg ~~F~~) °C		Cumulative Volume (gal)
			SPC METER	pH METER	
11:09	6.96	3300	13.0	11.8	0
11:12	6.96	1320	13.1	11.3	1.5
11:17	7.11	1300	11.9	11.0	3.0 BAILED DRY

FIGURE 2-4

LENZ OIL SITE REMEDIAL INVESTIGATION
PROJECT NO: 9292

GROUND WATER SAMPLING
FIELD DATA FORM
(Continued)

All organics 12 noon – 12:30
All inorganics 14:15

SAMPLE CONTAINER	VOLUME	PRESERVATIVE/PREP.

METALS SAMPLE FILTERED IN FIELD? YES ____ NO ✓ IN TRAILER.

OBSERVATIONS: DISTINCT BROWN. SILTY. Slight odor on water.

FIGURE 2-4

LENZ OIL SITE REMEDIAL INVESTIGATION
PROJECT NO: 9292

GROUND WATER SAMPLING
FIELD DATA FORM

SAMPLE I.D.: LO-G104D-GW DATE: 5/7/91 TIME: 11:45

SAMPLERS:	AFFILIATION:	OBSERVERS:	AFFILIATION:
JR	ERM-NC		
YAH	ERM-NC		

WELL NUMBER: G104D TOTAL DEPTH: 16.40 (ft) I.D.: 2 (in)

MATERIAL: Steel SCREENED INTERVAL: ___-___ (ft)

WATER LEVEL TO TOP OF CASING (ft)

PRE-PURGE: 6.23 (4/24) ~~POST~~-PURGE: 6.92 (5/7 pre) SAMPLING: ___

THICKNESS OF WATER COLUMN: ___(ft) CASING VOLUME: 1.7 (gal)

PURGING METHOD: ___ SAMPLING METHOD: Teflon bailer

STABILIZATION TEST

Time	pH	Conductance (umhos/sq cm)	Temperature (deg F) SPC METER	Temperature (deg F) pH METER	Cumulative Volume (gal)
11:21	8.97	1020	12.0	10.6	0
11:24	9.52	980	10.8	10.1	2.0
11:27	8.39	1100	10.0	9.8	4.0
11:31	7.73	1190	10.0	10.1	6.0
11:35	7.54	1190	10.0	9.8	8.0
11:39	7.41	1220	10.8	9.7	9.0
11:42	7.41	1220	10.0	9.7	10.0

FIGURE 2-4

LENZ OIL SITE REMEDIAL INVESTIGATION
PROJECT NO: 9292

GROUND WATER SAMPLING
FIELD DATA FORM
(Continued)

SAMPLE CONTAINER	VOLUME	PRESERVATIVE/PREP.

METALS SAMPLE FILTERED IN FIELD? YES ____ NO ✓ IN TRAILER

OBSERVATIONS: INITIAL RUSTY/RUSTY BROWN, SILTY — GREY/T. BROWN, SILTY/ [illegible]

FIGURE 2-4

LENZ OIL SITE REMEDIAL INVESTIGATION
PROJECT NO: 9292

GROUND WATER SAMPLING
FIELD DATA FORM

SAMPLE I.D.: 10-161065-SW DATE: 5-7-91 TIME: _____
~~10-161065-SW-D~~ Wear Level C

SAMPLERS:	AFFILIATION:	OBSERVERS:	AFFILIATION:
JRT	FRM-NC	HW	Ebasco
VAN	FRM-C		

WELL NUMBER: 61065 TOTAL DEPTH: 15.02 (ft) I.D.: 2 (in)

MATERIAL: Steel SCREENED INTERVAL: ___-_____ (ft)

WATER LEVEL TO TOP OF CASING (ft)

4/24 PRE-PURGE: 10.00 5/7 ~~POST~~ PRE-PURGE: ~11.4 SAMPLING: _____

THICKNESS OF WATER COLUMN: _____(ft) CASING VOLUME: 0.8 (gal)

PURGING METHOD: _____ SAMPLING METHOD: Teflon bail

STABILIZATION TEST

Time	pH	Conductance (umhos/sq cm)	Temperature (deg F)	Cumulative Volume (gal)

FIGURE 2-4

LENZ OIL SITE REMEDIAL INVESTIGATION
PROJECT NO: 9292

GROUND WATER SAMPLING
FIELD DATA FORM
(Continued)

SAMPLE CONTAINER	VOLUME	PRESERVATIVE/PREP.

METALS SAMPLE FILTERED IN FIELD? YES _____ NO ____

OBSERVATIONS: _____

_____

_____

FIGURE 2-4

LENZ OIL SITE REMEDIAL INVESTIGATION
PROJECT NO: 9292

GROUND WATER SAMPLING
FIELD DATA FORM

SAMPLE I.D.: G106S-WO DATE: 5/6/91 TIME: 9:50

SAMPLERS:	AFFILIATION:	OBSERVERS:	AFFILIATION:
[illegible]	ERM	[illegible]	ERGASCO
Vic Hamm	↓		

WELL NUMBER: G106S TOTAL DEPTH: _____(ft) I.D.: 2" (in)

MATERIAL: #36 STAINLESS STEEL SCREENED INTERVAL: ____-_____ (ft)

WATER LEVEL TO TOP OF CASING (ft)

PRE-PURGE: DRY 1/2 over on 5/8/91 POST-PURGE: _____ SAMPLING: _____

THICKNESS OF WATER COLUMN: _____(ft) CASING VOLUME: _____(gal)

PURGING METHOD: BAILING SAMPLING METHOD: _____

STABILIZATION TEST

NONE

Time	pH	Conductance (umhos/sq cm)	Temperature (deg F)	Cumulative Volume (gal)

FIGURE 2-4

LENZ OIL SITE REMEDIAL INVESTIGATION
PROJECT NO: 9292

GROUND WATER SAMPLING
FIELD DATA FORM
(Continued)

SAMPLE CONTAINER	VOLUME	PRESERVATIVE/PREP.
(2) 40ml VOA		
(1) 1l A/B/N, PEST/PCB		
(1) 1l METALS, CN-		

METALS SAMPLE FILTERED IN FIELD? YES ____ NO ✓

OBSERVATIONS: SHIPPED UNPRESERVED AS HIGH CONC. SAMPLE. SAMPLE IS OF WASTE OIL

FIGURE 2-4

LENZ OIL SITE REMEDIAL INVESTIGATION
PROJECT NO: 9292

GROUND WATER SAMPLING
FIELD DATA FORM

HNu = 0 Vppm
Pit [illegible] drum [illegible]
from drum pit - sec. fact odors

LO-1G106 GR-MS/MSD

SAMPLE I.D.: LO-1G106DR-GW DATE: 5-7-91 TIME: 1015

~~LO-1G106DR-MS/MSD~~

SAMPLERS:	AFFILIATION:	OBSERVERS:	AFFILIATION:
JBT	ERM-NC	HL	Ebasco
VAH	ERM-NC		

WELL NUMBER: G106DR TOTAL DEPTH: 47.45 (ft) I.D.: 2 (in)

MATERIAL: Steel SCREENED INTERVAL: ____-____ (ft)

WATER LEVEL TO TOP OF CASING (ft)

PRE-PURGE: 9.71 (4/24) POST-PURGE: 10.28 (5/7) SAMPLING: _____

THICKNESS OF WATER COLUMN: _____ (ft) CASING VOLUME: 6.2 (gal)

PURGING METHOD: _____ SAMPLING METHOD: Dedicated Teflon bailer

STABILIZATION TEST

Time	pH	Conductance (umhos/sq cm)	Temperature (deg ~~F~~) °C Spc Meter	Temperature (deg ~~F~~) °C PH Meter	Cumulative Volume (gal)
0945	7.41	1390	11.1	10.5	0 (initial)
0955	7.30	1380	10.9	10.5	6.5
1002	7.20	1380	10.9	10.8	13.0
1012	7.16	1350	11.0	11.1	19.5

FIGURE 2-4

LENZ OIL SITE REMEDIAL INVESTIGATION
PROJECT NO: 9292

GROUND WATER SAMPLING
FIELD DATA FORM
(Continued)

SAMPLE CONTAINER	VOLUME	PRESERVATIVE/PREP.
VOCs – Clear Glass	40 mL – 2	None
Semi-Volatiles – Amber	1L – 2	None
Pest/PCBs – Amber	1L – 2	None
Cyanide – Plastic	1/2 gal	Filtered/[illegible]
Total Metals – WE Brown	1L	HCl (HNO3), [illegible]
[illegible] – Clear	1L	NaOH [illegible]

METALS SAMPLE FILTERED IN FIELD? YES _____ NO ✓ IN TRAILER

OBSERVATIONS: Low silt, slightly brown

Filter all

FIGURE 2-4

LENZ OIL SITE REMEDIAL INVESTIGATION
PROJECT NO: 9292

GROUND WATER SAMPLING
FIELD DATA FORM

LO-1MW025-MS/MSD

SAMPLE I.D.: LO-1MW025-GW1 DATE: 8 May 1991 TIME: 10:45

SAMPLERS:	AFFILIATION:	OBSERVERS:	AFFILIATION:
RLL	ERM	K. MG	FBASCO
BBM	ERM		

WELL NUMBER: MW25 TOTAL DEPTH: 18.0 (ft) I.D.: 2 (in)

MATERIAL: Stain. Steel SCREENED INTERVAL: ___-___ (ft)

WATER LEVEL TO TOP OF CASING (ft)

PRE-PURGE: 7.80 POST-PURGE: _____ SAMPLING: 3V = 4.8 Gal.

THICKNESS OF WATER COLUMN: 10.20 (ft) CASING VOLUME: 1.6 (gal)

PURGING METHOD: Teflon Bailer SAMPLING METHOD: Teflon Bailer

STABILIZATION TEST

Time	pH	Conductance (umhos/sq cm)	Temperature (deg F)	Cumulative Volume (gal)
10:20	7.47	1075	12.2°C	0 Gal
10:25	7.27	900	11.0°C	2 Gal
10:30	7.22	950	11.0°C	4 Gal
10:33	7.13	1150	11.0°C	6 Gal
10:35	7.13	1125	11.0°C	8 Gal.

FIGURE 2-4

LENZ OIL SITE REMEDIAL INVESTIGATION
PROJECT NO: 9292

GROUND WATER SAMPLING
FIELD DATA FORM
(Continued)

SAMPLE CONTAINER	VOLUME	PRESERVATIVE/PREP.
(4) VOA Glass, Clear	40 ML	NO
(6) SVOA Amber, Glass	1 Liter	NO
(2) Pest./PCB	1 Liter	NO
(2) Metals plastic	1 Liter	HNO_3
(1) CN, Glass, clear	1 Liter	NaOH.

METALS SAMPLE FILTERED IN FIELD? YES ✓ NO ____

OBSERVATIONS: Muddy, Yel.-Brown., Silty
Split w/EPA

FIGURE 2-4

LENZ OIL SITE REMEDIAL INVESTIGATION
PROJECT NO: 9292

GROUND WATER SAMPLING
FIELD DATA FORM

SAMPLE I.D.: LO-1MW02D-GW DATE: 7 May 1991 TIME: 14:30

SAMPLERS:	AFFILIATION:	OBSERVERS:	AFFILIATION:
BBH	ERM		
BBH	ERM		

WELL NUMBER: MW-02D TOTAL DEPTH: 43.5 (ft) I.D.: 2 (in)

MATERIAL: Stain. Steel SCREENED INTERVAL: ____-____ (ft)

WATER LEVEL TO TOP OF CASING (ft)

PRE-PURGE: 9.13 POST-PURGE: _____ SAMPLING: _____

THICKNESS OF WATER COLUMN: 34.37 (ft) CASING VOLUME: 5.5 (gal)

PURGING METHOD: Teflon Bailer SAMPLING METHOD: Teflon Bailer

STABILIZATION TEST

Time	pH	Conductance (umhos/sq cm)	Temperature (deg F)	Cumulative Volume (gal)
14:10	7.42	750	13.5°C	0 Gal.
14:15	7.13	750	13.0°C	5.5 Gal.
14:20	7.13	750	13.0°C	11.0 Gal
14:25	7.05	750	12.5°C	16.5 Gal

FIGURE 2-4

LENZ OIL SITE REMEDIAL INVESTIGATION
PROJECT NO: 9292

GROUND WATER SAMPLING
FIELD DATA FORM
(Continued)

SAMPLE CONTAINER	VOLUME	PRESERVATIVE/PREP.

METALS SAMPLE FILTERED IN FIELD? YES _____ NO ____

OBSERVATIONS: _____

_____

_____

FIGURE 2-4

LENZ OIL SITE REMEDIAL INVESTIGATION
PROJECT NO: 9292

GROUND WATER SAMPLING
FIELD DATA FORM

HNu = Ø Uppm

LO-GW1-FB-1500

SAMPLE I.D.: LO-1MW1S-GW-1540 DATE: 5/6/91 TIME: 1540

SAMPLERS:	AFFILIATION:	OBSERVERS:	AFFILIATION:
JBT	ERM-NC		
VAH	ERM-NC		

WELL NUMBER: MW 1S TOTAL DEPTH: 18.30 (ft) I.D.: 2 (in)

MATERIAL: Steel SCREENED INTERVAL: ___-___ (ft)

WATER LEVEL TO TOP OF CASING (ft)

4/24 PRE-PURGE: 6.21 ~~POST~~ 5/6 pre PURGE: 6.78 SAMPLING: ___

THICKNESS OF WATER COLUMN: ___ (ft) CASING VOLUME: 2.0 (gal)

PURGING METHOD: ___ SAMPLING METHOD: ___

STABILIZATION TEST

Time	pH	Conductance. (umhos/sq cm)	Temperature (deg F) Spc	Temperature (deg F) pH meter	Cumulative Volume (gal)
1527	7.04	1780	10.2	10.1	0
1531	7.10	1450	10.0	10.0	2
1534	7.05	1400	10.0	10.0	4
1537	7.02	1370	9.9	9.8	6

FIGURE 2-4

LENZ OIL SITE REMEDIAL INVESTIGATION
PROJECT NO: 9292

GROUND WATER SAMPLING
FIELD DATA FORM
(Continued)

SAMPLE CONTAINER	VOLUME	PRESERVATIVE/PREP.

METALS SAMPLE FILTERED IN FIELD? YES ____ NO ✓

OBSERVATIONS: very silty, turbid, lt. grey color

FIGURE 2-4

LENZ OIL SITE REMEDIAL INVESTIGATION
PROJECT NO: 9292

GROUND WATER SAMPLING
FIELD DATA FORM

HNu 0 ppm

SAMPLE I.D.: LO-1MW1D-GW DATE: 5-6-91 TIME: 1650

SAMPLERS:	AFFILIATION:	OBSERVERS:	AFFILIATION:
JBT	ERM-NC		
VAH	ERM-NC		

WELL NUMBER: MW 1D TOTAL DEPTH: 48.14 (ft) I.D.: 2 (in)

MATERIAL: _____ SCREENED INTERVAL: ____-____ (ft)

WATER LEVEL TO TOP OF CASING (ft)

4/24 PRE-PURGE: 6.28 5/6/91 POST-PURGE: 7.84 SAMPLING: _____

THICKNESS OF WATER COLUMN: _____(ft) CASING VOLUME: 6.8 (gal)

PURGING METHOD: _____ SAMPLING METHOD: _____

STABILIZATION TEST

Time	pH	Conductance. (umhos/sq cm)	Temperature (deg F) SpC	Temperature (deg F) pH	Cumulative Volume (gal)
1613	10.84	580	10.0	10.0	0
1622	7.81	930	10.6	10.6	7
1630	7.50	980	10.9	10.8	14
1642	7.06	990	11.0	10.9	21
1646	7.10	990	11.1	11.1	25

FIGURE 2-4

LENZ OIL SITE REMEDIAL INVESTIGATION
PROJECT NO: 9292

GROUND WATER SAMPLING
FIELD DATA FORM
(Continued)

SAMPLE CONTAINER	VOLUME	PRESERVATIVE/PREP.

METALS SAMPLE FILTERED IN FIELD? YES _____ NO ____

OBSERVATIONS: _____

_____

_____

FIGURE 2-4

LENZ OIL SITE REMEDIAL INVESTIGATION
PROJECT NO: 9292

GROUND WATER SAMPLING
FIELD DATA FORM

SAMPLE I.D.: LO-1GW1-FB LO-1MW03S-GW DATE: 6 May 91 TIME: 16:45

SAMPLERS:	AFFILIATION:	OBSERVERS:	AFFILIATION:
RJL	ERM	K HC	EBASCO
BRM	ERM		

WELL NUMBER: MW03S TOTAL DEPTH: 21.15 (ft) I.D.: 2" (in)

MATERIAL: Stain. Steel SCREENED INTERVAL: ___-___ (ft)

WATER LEVEL TO TOP OF CASING (ft)

PRE-PURGE: 5:13 POST-PURGE: ___ SAMPLING: ___

THICKNESS OF WATER COLUMN: 16.02 (ft) CASING VOLUME: 2.52 (gal) 7.5

PURGING METHOD: Teflon Bailer SAMPLING METHOD: Teflon Bailer

STABILIZATION TEST

Time	pH	Conductance (umhos/sq cm)	Temperature (deg F)	Cumulative Volume (gal)
16:25	7.66	510	9°	0
16:30	7.53	450	9°	2½ Gal.
16:35	7.34	575	9°	5 Gal.
16:40	7.48	575	9°	7½ Gal.
16:45	7.42	600	9°	10 Gal.

FIGURE 2-4

LENZ OIL SITE REMEDIAL INVESTIGATION
PROJECT NO: 9292

GROUND WATER SAMPLING
FIELD DATA FORM
(Continued)

SAMPLE CONTAINER	VOLUME	PRESERVATIVE/PREP.
(4) VOA, glass, clear	40 ml	No
(6) SVOA, Amber, glass	1 Liter	No
(4) Pest/PCB, Amber, glass	1 Liter	No
(4) Metals, plastic	1 Liter	HNO_3 ph -2
(2) CN, glass, clear	1 Liter	NaOH ph 12+

METALS SAMPLE FILTERED IN FIELD? YES ✓ NO ___

OBSERVATIONS: Hw = 0.0 ppm

FIGURE 2-4

LENZ OIL SITE REMEDIAL INVESTIGATION
PROJECT NO: 9292

GROUND WATER SAMPLING
FIELD DATA FORM

SAMPLE I.D.: 60-1MW03D-GW DATE: 6 Aug 91 TIME: 15:50

SAMPLERS:	AFFILIATION:	OBSERVERS:	AFFILIATION:
RLL	ERM	KHE	Elxsco
BBM	ERM		

WELL NUMBER: MW03D TOTAL DEPTH: 47.13 (ft) I.D.: 2 (in)

MATERIAL: Stain. Steel SCREENED INTERVAL: ___-___ (ft)

WATER LEVEL TO TOP OF CASING (ft)

PRE-PURGE: 4.78 POST-PURGE: _____ SAMPLING: _____

THICKNESS OF WATER COLUMN: 42.35 (ft) CASING VOLUME: 6.8 (gal) x 3 = 20

PURGING METHOD: Teflon Bailer SAMPLING METHOD: Teflon Bailer

STABILIZATION TEST

Time	pH	Conductance (umhos/sq cm)	Temperature (deg F)	Cumulative Volume (gal)
15:25	7.30	1000	9.5°C	0
15:30	7.14	900	10.0°C	7 Gal.
15:35	7.19	900	10.0°C	14 Gal.
15:40	7.10	1110	10.0°C	21 Gal.

FIGURE 2-4

LENZ OIL SITE REMEDIAL INVESTIGATION
PROJECT NO: 9292

GROUND WATER SAMPLING
FIELD DATA FORM
(Continued)

SAMPLE CONTAINER	VOLUME	PRESERVATIVE/PREP.
(2) VOAs, Glass	40 mL	No
(3) SVOAs, Amber Glass	1 Liter	No
(1) CN, Glass Clear	1 Liter	~~HNO3~~ NaOH ph 12+
(2) Pest/PCBs, Amber Glass	1 Liter	HNO_3
(2) Metals, Plastic	2 Liter	

METALS SAMPLE FILTERED IN FIELD? YES ✓ NO ____

OBSERVATIONS: Hmu = 0.2 ppm

FIGURE 2-4

LENZ OIL SITE REMEDIAL INVESTIGATION
PROJECT NO: 9292

GROUND WATER SAMPLING
FIELD DATA FORM

LO-1MW04S-FD
LO-1GW03-FB

SAMPLE I.D.: LO-1MW04S-GW DATE: 8 May 1991 TIME: 08:15 (GW-03-FB) 09:05 (MW04S) (FD)

SAMPLERS:	AFFILIATION:	OBSERVERS:	AFFILIATION:
RLL	ERM	H.W.G.	EBASCO
BBM	ERM	K. McE.	EBASCO

WELL NUMBER: MW04S TOTAL DEPTH: 18.6 (ft) I.D.: 2 (in)

MATERIAL: Stain. Steel SCREENED INTERVAL: ___-___ (ft)

WATER LEVEL TO TOP OF CASING (ft)

PRE-PURGE: 7.86 POST-PURGE: _____ SAMPLING: _____

THICKNESS OF WATER COLUMN: 10.74 (ft) CASING VOLUME: 1.7 (gal) Vol. x 3 = 5.1 Gal.

PURGING METHOD: Teflon Bailer SAMPLING METHOD: Teflon Bailer

STABILIZATION TEST

Time	pH	Conductance (umhos/sq cm)	Temperature (deg F)	Cumulative Volume (gal)
08:45	7.0	1800	12.0°C	0 Gal.
08:50	7.2	1925	11.0°C	1.75
08:55	7.45	2100	11.0°C	4.0
09:00	7.50	2125	11.0°C	6.0

FIGURE 2-4

LENZ OIL SITE REMEDIAL INVESTIGATION
PROJECT NO: 9292

GROUND WATER SAMPLING
FIELD DATA FORM
(Continued)

SAMPLE CONTAINER	VOLUME	PRESERVATIVE/PREP.
(6) VOA Glass Clear	40 ML	NO
(5) SVOA, Amber Glass	1 Liter	NO
(4) Pest./PCB Amber Glass	1 Liter	NO
(2) Metals, plastic	1 Liter	HNO_3
(3) CN, Glass Clear	1 Liter	NaOH

METALS SAMPLE FILTERED IN FIELD? YES ✓ NO ___

OBSERVATIONS: 0 Gal. - Blk. to Dk. Gry., Slight Fuel Oil Smell
Fuel Oil smell stronger, water darker
the more bailed

Split FB w/EPA
Split MW04S & F.D. w/EPA

FIGURE 2-4

LENZ OIL SITE REMEDIAL INVESTIGATION
PROJECT NO: 9292

GROUND WATER SAMPLING
FIELD DATA FORM

SAMPLE I.D.: LO-IMW04D-GW DATE: 7 May 1991 TIME: 15:30

SAMPLERS:	AFFILIATION:	OBSERVERS:	AFFILIATION:
RHL	ERH		
BBH	ERH		

WELL NUMBER: MW04D TOTAL DEPTH: 45.7 (ft) I.D.: _____ (in)

MATERIAL: Stain. Steel SCREENED INTERVAL: ____-____ (ft)

WATER LEVEL TO TOP OF CASING (ft)

PRE-PURGE: 9.65 POST-PURGE: _____ SAMPLING: _____

3 Vol. = 17.4 Gal.

THICKNESS OF WATER COLUMN: 36.05 (ft) CASING VOLUME: 5.8 (gal)

PURGING METHOD: Teflon Bailer SAMPLING METHOD: Teflon Bailer

STABILIZATION TEST

Time	pH	Conductance (umhos/sq cm)	Temperature (deg F)	Cumulative Volume (gal)
15:15	7.29	800	14°C	0 Gal.
15:20	7.13	1050	14°C	6 Gal.
15:25	7.14	1050	14°C	12 Gal.
15:30	7.07	1000	13.5°C	18 Gal.

FIGURE 2-4

LENZ OIL SITE REMEDIAL INVESTIGATION
PROJECT NO: 9292

GROUND WATER SAMPLING
FIELD DATA FORM
(Continued)

SAMPLE CONTAINER	VOLUME	PRESERVATIVE/PREP.
(2) VOA Glass, Clear	40 ML	No
(3) SVCA Glass, Amber	1 Liter	No
(2) Pest./PCB Glass Amber	1 Liter	No
(2) Metals, plastic	1 Liter	HNO_3
(1) CN, Glass clear	1 Liter	NaOH

METALS SAMPLE FILTERED IN FIELD? YES ✓ NO ____

OBSERVATIONS: _____

FIGURE 2-4

LENZ OIL SITE REMEDIAL INVESTIGATION
PROJECT NO: 9292

GROUND WATER SAMPLING
FIELD DATA FORM

LO-1MW055-FD

SAMPLE I.D.: LO-1MW055-GW1 DATE: 7 May 1991 TIME: 09:30

SAMPLERS:	AFFILIATION:	OBSERVERS:	AFFILIATION:
RLL	ERM	H.W.H.	EBASCO
BBM	ERM		

WELL NUMBER: MW055 TOTAL DEPTH: 21.2 (ft) I.D.: 2 (in)

MATERIAL: Stain. Steel SCREENED INTERVAL: ___-___ (ft)

WATER LEVEL TO TOP OF CASING (ft)

PRE-PURGE: +9 Ft. POST-PURGE: _____ SAMPLING: _____

THICKNESS OF WATER COLUMN: 12.2 (ft) CASING VOLUME: 2 (gal)

PURGING METHOD: Teflon Bailer SAMPLING METHOD: Teflon Bailer

STABILIZATION TEST

Time	pH	Conductance (umhos/sq cm)	Temperature (deg F)	Cumulative Volume (gal)
09:05	6.68	890	12.2°C	0*
09:10	6.81	1000	11.0°C RLL	2 Gal.*
09:15	6.95	1150	11.0°C	4 Gal.*
09:20	6.99	1120	10.8°C	6 Gal.*

FIGURE 2-4

LENZ OIL SITE REMEDIAL INVESTIGATION
PROJECT NO: 9292

GROUND WATER SAMPLING
FIELD DATA FORM
(Continued)

SAMPLE CONTAINER	VOLUME	PRESERVATIVE/PREP.
(4) 40 ml clear glass VOA		
(2) SVOA, amber glass	40 ml / 1 liter	No / No
(4) Pest. / PCB, amber glass	1 liter	
(4) Plastic metals	1 liter	HNO_3
(2) CN, clear glass	1 liter	NaOH

METALS SAMPLE FILTERED IN FIELD? YES ✓ NO ___

OBSERVATIONS: SWL - ±9 Ft., layer of oil on water surface, cannot get accurate Top

* 0 Gal. - Strong fuel oil smell, free product on water surface, water is murky
* 2 Gal. - As above, not as bad
* 4 Gal. - As above
* 6 Gal. - As above

FIGURE 2-4

LENZ OIL SITE REMEDIAL INVESTIGATION
PROJECT NO: 9292

GROUND WATER SAMPLING
FIELD DATA FORM

SAMPLE I.D.: LO-1MW05D-GW DATE: 7 May 1991 TIME: 11:00

SAMPLERS:	AFFILIATION:	OBSERVERS:	AFFILIATION:
BW	ERM	HWG	EBASCO
BBM	ERM		

WELL NUMBER: MW05D TOTAL DEPTH: 46.5 (ft) I.D.: 2 (in)

MATERIAL: Stain. Steel SCREENED INTERVAL: ___-___ (ft)

WATER LEVEL TO TOP OF CASING (ft)

PRE-PURGE: 10.75 POST-PURGE: _____ SAMPLING: _____

THICKNESS OF WATER COLUMN: 35.75 (ft) CASING VOLUME: 5.75 (gal)

PURGING METHOD: Teflon Bailer SAMPLING METHOD: Teflon Bailer

STABILIZATION TEST

Time	pH	Conductance (umhos/sq cm)	Temperature (deg F)	Cumulative Volume (gal)
10:30	7.39	500	12.5°C	0 Gal.
10:35	7.00	1500	12.0°C	6 Gal.
10:40	6.99	1300	12.0°C	12 Gal.
10:45	6.93	1200	12.0°C	18 Gal.

FIGURE 2-4

LENZ OIL SITE REMEDIAL INVESTIGATION
PROJECT NO: 9292

GROUND WATER SAMPLING
FIELD DATA FORM
(Continued)

SAMPLE CONTAINER	VOLUME	PRESERVATIVE/PREP.
(2) VOA, Glass, clear	40 ML	NO
(3) SVOA, Glass Amber	1 Liter	No
(2) Pest./PCB Glass Amber	1 Liter	No
(2) Metals, plastic	1 Liter	HNO_3
(1) CN, Glass, clear	1 Liter	NaOH

METALS SAMPLE FILTERED IN FIELD? YES ✓ NO ____

OBSERVATIONS: Clear 0-7 Gal., murky pale-gray. after

FIGURE 2-4

LENZ OIL SITE REMEDIAL INVESTIGATION
PROJECT NO: 9292

GROUND WATER SAMPLING
FIELD DATA FORM

SAMPLE I.D.: LO-IMW06S-SW + split MS/MSD for Fbas... DATE: 5/8/01 TIME: 1100

SAMPLERS:	AFFILIATION:	OBSERVERS:	AFFILIATION:
JB	FCM-NC		
VAN	FCM-NC		

WELL NUMBER: MW06S TOTAL DEPTH: 16.52 (ft) I.D.: 2 (in)

MATERIAL: Steel SCREENED INTERVAL: ___-___ (ft)

WATER LEVEL TO TOP OF CASING (ft)

PRE-PURGE: 9.71 (4/24/01) ~~POST~~-PURGE: 1.48 (5/8/01) SAMPLING: ___

THICKNESS OF WATER COLUMN: ___ (ft) CASING VOLUME: 2.6 (gal)

PURGING METHOD: ___ SAMPLING METHOD: ___

STABILIZATION TEST

Time	pH	Conductance (umhos/sq cm)	Temperature (deg ~~F~~) °C Sec	pH	Cumulative Volume (gal)
0935	7.82	550	12.5	11.7	0 (initial)
0938	7.64	440	11.9	11.4	2.5
0942	7.52	447	11.5	11.1	5.0
0944	7.32	[illegible]	11.2	10.9	7.5
0946	7.41	439	11.1	10.8	10.0

FIGURE 2-4

LENZ OIL SITE REMEDIAL INVESTIGATION
PROJECT NO: 9292

GROUND WATER SAMPLING
FIELD DATA FORM
(Continued)

SAMPLE CONTAINER	VOLUME	PRESERVATIVE/PREP.

METALS SAMPLE FILTERED IN FIELD? YES _____ NO _____

OBSERVATIONS: Moderately [illegible] brown [illegible] [illegible]

FIGURE 2-4

LENZ OIL SITE REMEDIAL INVESTIGATION
PROJECT NO: ~~9393~~ 0252

HNu = 0 ppm

GROUND WATER SAMPLING
FIELD DATA FORM

SAMPLE I.D.: LO-IMW060-GW DATE: 5/8/91 TIME: 0820

SAMPLERS:	AFFILIATION:	OBSERVERS:	AFFILIATION:
JBT	ERM-NC		
VAH	ERM-NC		

WELL NUMBER: MW6D TOTAL DEPTH: 116.26 (ft) I.D.: 2 (in)

MATERIAL: Steel SCREENED INTERVAL: ___-___ (ft)

WATER LEVEL TO TOP OF CASING (ft)

PRE-PURGE: 4/24/91 3.10 POST-PURGE: PRE-5/8 4.01 SAMPLING: ___

THICKNESS OF WATER COLUMN: ___(ft) CASING VOLUME: 7.0 (gal)

PURGING METHOD: ___ SAMPLING METHOD: Teflon bailer

STABILIZATION TEST

Time	pH	Conductance (umhos/sq cm)	Temperature (deg F) SpC	Temperature (deg F) pH	Cumulative Volume (gal)
0820	6.55	1000	10.2	9.8	0 (initial)
0830	6.83	1180	10.7	10.5	7
0838	6.93	1180	11.0	10.8	14
0842	7.00	1180	11.1	10.9	21

FIGURE 2-4

LENZ OIL SITE REMEDIAL INVESTIGATION
PROJECT NO: 9292

GROUND WATER SAMPLING
FIELD DATA FORM
(Continued)

(typical [illegible] 305 [illegible] 60 [illegible]

SAMPLE CONTAINER	VOLUME	PRESERVATIVE/PREP.

METALS SAMPLE FILTERED IN FIELD? YES _____ NO ____

OBSERVATIONS: [illegible] silty [illegible]

PHASE II GROUND WATER SAMPLING FORMS

FIGURE 2-4

LENZ OIL SITE REMEDIAL INVESTIGATION
PROJECT NO: 9292

GROUND WATER SAMPLING
FIELD DATA FORM

SAMPLE I.D.: LO-2015-FB / LO-2015-GW DATE: 2/17/92 TIME: 8:45 / 9:40

SAMPLERS:	AFFILIATION:	OBSERVERS:	AFFILIATION:
DAK	ERM-NC	KJF	PRC
BBM	ERM-NC		

WELL NUMBER: MW015 TOTAL DEPTH: 21.2 (ft) I.D.: 2 (in)

MATERIAL: SS SCREENED INTERVAL: ___-___ (ft)

WATER LEVEL TO TOP OF CASING (ft)

PRE-PURGE: 8.99 POST-PURGE: ___ SAMPLING: ___

THICKNESS OF WATER COLUMN: 12.21 (ft) CASING VOLUME: 2.1 x 3 = 6.3 (gal)

PURGING METHOD: BAILER SAMPLING METHOD: BAILER

STABILIZATION TEST

Time	pH	Conductance (umhos/sq cm)	Temperature (deg F)	Cumulative Volume (gal)
9:20	5.97	1400	8°C	0
9:25	6.74	1500	9°C	2
9:30	6.99	1500	9°C	4
9:35	7.07	1500	9	6
9:40	7.09	1500	9	7

FIGURE 2-4

LENZ OIL SITE REMEDIAL INVESTIGATION
PROJECT NO: 9292

GROUND WATER SAMPLING
FIELD DATA FORM

SAMPLE I.D.: LO-201D-GW DATE: 2/17/92 TIME: 1050

SAMPLERS:	AFFILIATION:	OBSERVERS:	AFFILIATION:
DAK	ERM-NC	KJF	PRC
BBM	ERM-NC		

WELL NUMBER: MW-01D TOTAL DEPTH: 48.15 (ft) I.D.: 2.0 (in)

MATERIAL: SS SCREENED INTERVAL: ___-___ (ft)

WATER LEVEL TO TOP OF CASING (ft)

PRE-PURGE: 10.23 SOFT BOTTOM POST-PURGE: _____ SAMPLING: _____

THICKNESS OF WATER COLUMN: 37.93 (ft) CASING VOLUME: 6.25 x 18.75 (gal)

PURGING METHOD: BAILER SAMPLING METHOD: BAILER

STABILIZATION TEST

Time	pH	Conductance (umhos/sq cm)	Temperature (deg ~~F~~ C	Cumulative Volume (gal)
1005	7.65	1010	10.8°C	-0-
1030	7.42	830	10.0°C	6.25
1040	7.39	850	10.5	12.5
1050	7.41	850	10.5	19.0

FIGURE 2-4

LENZ OIL SITE REMEDIAL INVESTIGATION
PROJECT NO: 9292

GROUND WATER SAMPLING
FIELD DATA FORM

SAMPLE I.D.: MW25 DATE: 2/17/92 TIME: 1500

SAMPLERS:	AFFILIATION:	OBSERVERS:	AFFILIATION:
DK	ERM	KJF	PRC
BM	ERM		

WELL NUMBER: MW25 TOTAL DEPTH: 15.0 SOFT BOTTOM (ft) I.D.: 2 (in)

MATERIAL: _____ SCREENED INTERVAL: ____-____ (ft)

WATER LEVEL TO TOP OF CASING (ft)

PRE-PURGE: 9.55 POST-PURGE: _____ SAMPLING: _____

THICKNESS OF WATER COLUMN: 5.45 (ft) CASING VOLUME: 1x3=3 (gal)

PURGING METHOD: BAILER SAMPLING METHOD: BAILER

STABILIZATION TEST

Time	pH	Conductance (umhos/sq cm)	Temperature (deg F)	Cumulative Volume (gal)
2:45	7.75	1380	9.1	-0-
2:46	7.60	1250	9.0	1
2:48	7.47	1250	9.0	2
2:50	7.48	1250	9.0	3

FIGURE 2-4

LENZ OIL SITE REMEDIAL INVESTIGATION
PROJECT NO: 9292

GROUND WATER SAMPLING
FIELD DATA FORM

SAMPLE I.D.: LO-202D-GW DATE: 7/17/92 TIME: 1545

SAMPLERS:	AFFILIATION:	OBSERVERS:	AFFILIATION:
BBM	ERM-NC	KJD	DRC
DAK	ERM-NC		

WELL NUMBER: MW-04D TOTAL DEPTH: 46.0 (ft) I.D.: 2.0 (in)

MATERIAL: SS SCREENED INTERVAL: ___-___ (ft)

WATER LEVEL TO TOP OF CASING (ft)

PRE-PURGE: 10.99 POST-PURGE: _____ SAMPLING: _____

THICKNESS OF WATER COLUMN: 35.01 (ft) CASING VOLUME: 6x3=18 (gal)

PURGING METHOD: BAILER SAMPLING METHOD: BAILER

STABILIZATION TEST

Time	pH	Conductance (umhos/sq cm)	Temperature (deg F)	Cumulative Volume (gal)
1505	8.01	900	11.5°C	-0-
1520	7.62	1050	12.5	6
1540	7.28	1050	13	12
1545	7.28	1100	13	15
1550	7.25	1100	13	18

MW-035

FIGURE 2-4

LENZ OIL SITE REMEDIAL INVESTIGATION
PROJECT NO: 9292

GROUND WATER SAMPLING
FIELD DATA FORM

LO-2035-FB 7:30
LO-2035-FD 8:45

SAMPLE I.D.: LO-2035-GW DATE: 2/19/92 TIME: 8:45

SAMPLERS:	AFFILIATION:	OBSERVERS:	AFFILIATION:
DK	ERM	KJF	EBASCO
BBW	ERM		

WELL NUMBER: MW035 TOTAL DEPTH: 21.75 (ft) I.D.: 2" (in)

MATERIAL: SS SCREENED INTERVAL: ___-___ (ft)

WATER LEVEL TO TOP OF CASING (ft)

PRE-PURGE: 6.69 POST-PURGE: _____ SAMPLING: _____

THICKNESS OF WATER COLUMN: 15' (ft) CASING VOLUME: 2.5 (gal)

PURGING METHOD: BAILING SAMPLING METHOD: BAILING

STABILIZATION TEST

Time	pH	Conductance (umhos/sq cm)	Temperature (deg F)	Cumulative Volume (gal)
8:10	8.50	400	8°	0
8:20	8.09	400	7.5	2.5
8:30	7.87	500	8.0	5.0
8:40	7.88	500	8.1	8.0

MW-03D

FIGURE 2-4

LENZ OIL SITE REMEDIAL INVESTIGATION
PROJECT NO: 9292

GROUND WATER SAMPLING
FIELD DATA FORM

SAMPLE I.D.: LO-203-D DATE: 2-19-92 TIME: 0900

SAMPLERS:	AFFILIATION:	OBSERVERS:	AFFILIATION:
DK	ERM	KJF	EBASCO
BBM	ERM		

WELL NUMBER: MW03D TOTAL DEPTH: 47.6 (ft) I.D.: 2" (in)

MATERIAL: SS SCREENED INTERVAL: ___-___ (ft)

WATER LEVEL TO TOP OF CASING (ft)

PRE-PURGE: 6.44 POST-PURGE: ___ SAMPLING: ___

THICKNESS OF WATER COLUMN: 42' (ft) CASING VOLUME: 7 (gal)

PURGING METHOD: Bailer SAMPLING METHOD: Bailer

STABILIZATION TEST

Time	pH	Conductance (umhos/sq cm)	Temperature (deg F)	Cumulative Volume (gal)
8:15	7.94	850	8.0	0
8:20	7.71	900	9.5	7
8:30	7.65	900	9.0	14
8:40	7.48	900	9.1	22

FIGURE 2-4

LENZ OIL SITE REMEDIAL INVESTIGATION
PROJECT NO: 9292

GROUND WATER SAMPLING
FIELD DATA FORM

SAMPLE I.D.: LO-2045-GW DATE: 2/17/92 TIME: 11:30

SAMPLERS:	AFFILIATION:	OBSERVERS:	AFFILIATION:
BBM	ERM-NC	KJF	ERASCO
DAK	ERM-NC		

WELL NUMBER: MW-045 TOTAL DEPTH: 21.70 (ft) I.D.: 2 (in)

MATERIAL: SS SCREENED INTERVAL: ___-___ (ft)

WATER LEVEL TO TOP OF CASING (ft)

PRE-PURGE: 9.71 POST-PURGE: _____ SAMPLING: _____

THICKNESS OF WATER COLUMN: 11.99 (ft) CASING VOLUME: 2x3=6 (gal)

PURGING METHOD: BAILER SAMPLING METHOD: BAILER

STABILIZATION TEST

Time	pH	Conductance (umhos/sq cm)	Temperature (deg ~~F~~ C)	Cumulative Volume (gal)
1120	6.77	3850	10.9 °C	-0-
1122	7.11	3400	10.0	2
1124	7.26	3510	10	4
1127	7.27	3500	10	6

FIGURE 2-4

LENZ OIL SITE REMEDIAL INVESTIGATION
PROJECT NO: 9292

GROUND WATER SAMPLING
FIELD DATA FORM

SAMPLE I.D.: LO-204D-GW DATE: 2/17/92 TIME: 2:35

SAMPLERS:	AFFILIATION:	OBSERVERS:	AFFILIATION:
BBM	ERM-NC	RJF	EBASCO
DAK	ERM-NC		

WELL NUMBER: MW-04D TOTAL DEPTH: ~~48.3~~ Soil Boring (ft) I.D.: 2.0 (in)

MATERIAL: SS SCREENED INTERVAL: ___-___ (ft)

WATER LEVEL TO TOP OF CASING (ft) 48.3 11.34

PRE-PURGE: 11.34 POST-PURGE: ~~37~~ SAMPLING: ___

THICKNESS OF WATER COLUMN: ___(ft) CASING VOLUME: 19 ~~[illegible]~~(gal)

PURGING METHOD: BAILER SAMPLING METHOD: BAILER

STABILIZATION TEST

Time	pH	Conductance (umhos/sq cm)	Temperature (deg F)	Cumulative Volume (gal)
2:10	8.85	1300	11°C	-0-
2:20	8.27	1600	12°C	6
2:25	7.60	1300	12°C	12
2:30	7.44	1300	12°C	15
2:35	7.40	1300	12°	~~[illegible]~~ 19

MW05S
NAPL & GW

FIGURE 2-4

LENZ OIL SITE REMEDIAL INVESTIGATION
PROJECT NO: 9292

10.29 o.c
11.60

GROUND WATER SAMPLING
FIELD DATA FORM

SAMPLE I.D.: LO-2055-GW (LO-2055-) DATE: 2-13-92 TIME: 13:45

SAMPLERS:	AFFILIATION:	OBSERVERS:	AFFILIATION:
DK	OTM	KJF	EBASCO
BMA	OTM		

WELL NUMBER: MW05S TOTAL DEPTH: _____(ft) I.D.: 2" (in)

MATERIAL: SS SCREENED INTERVAL: ____-_____ (ft)

WATER LEVEL TO TOP OF CASING (ft)

PRE-PURGE: 10.29 o.c 11.60 POST-PURGE: _____ SAMPLING: _____

THICKNESS OF WATER COLUMN: 23' (ft) CASING VOLUME: 4.5 (gal)

PURGING METHOD: Bailer SAMPLING METHOD: Bailer

STABILIZATION TEST

Time	pH	Conductance (umhos/sq cm)	Temperature (deg F)	Cumulative Volume (gal)
1:30	7.93	700	9	0
1:32	7.87	800	8	1.5
1:33	7.87	900	8	3
1:35	7.80	900	8	4.5

FIGURE 2-4

LENZ OIL SITE REMEDIAL INVESTIGATION
PROJECT NO: 9292

GROUND WATER SAMPLING
FIELD DATA FORM

SAMPLE I.D.: LO-~~MW~~ 205D-GW DATE: Feb 17, 1992 TIME: 1500

SAMPLERS:	AFFILIATION:	OBSERVERS:	AFFILIATION:
R.L. Little	ERM-NC	Kathy Foszcz	PRC
V.A. Hammer	ERM-NC		

WELL NUMBER: MW05D TOTAL DEPTH: 48.8 (ft) I.D.: 2 (in)

MATERIAL: PVC SCREENED INTERVAL: ___-___ (ft)

WATER LEVEL TO TOP OF CASING (ft)

PRE-PURGE: 12.51 POST-PURGE: ___ SAMPLING: ___

THICKNESS OF WATER COLUMN: 36.29 (ft) CASING VOLUME: 6.0 (gal)

PURGING METHOD: Bailing SAMPLING METHOD: Bailing

STABILIZATION TEST

Time	pH	Conductance (umhos/sq cm)	Temperature (deg F)	Cumulative Volume (gal)
14:55	~~6.84~~ Error	2200	9.8	0
15:05	~~5.09~~ Error	1550	10.6	6
15:15	~~7.08~~	1100	10.8	12
15:20	7.09	1400	10.6	18
15:25	7.08	1400	10.7	20

FIGURE 2-4

LENZ OIL SITE REMEDIAL INVESTIGATION
PROJECT NO: 9292

GROUND WATER SAMPLING
FIELD DATA FORM

SAMPLE I.D.: LO-2065-GW DATE: 2-18-92 TIME: 14:25

SAMPLERS:	AFFILIATION:	OBSERVERS:	AFFILIATION:
VAH	ERM	KJF	OBASCO
RLL	ERM		

WELL NUMBER: MW065 TOTAL DEPTH: 15.90 (ft) I.D.: 2" (in)

MATERIAL: SS SCREENED INTERVAL: ___-___ (ft)

WATER LEVEL TO TOP OF CASING (ft)

PRE-PURGE: 2.68 POST-PURGE: ___ SAMPLING: ___

THICKNESS OF WATER COLUMN: 13.22 (ft) CASING VOLUME: 2.25 (gal)

PURGING METHOD: BAILING SAMPLING METHOD: BAILING

STABILIZATION TEST

Time	pH	Conductance (umhos/sq cm)	Temperature (deg F)	Cumulative Volume (gal)
	8.10	325	6.5	0
	7.94	375	5.5	2.25
	7.90	375	5.7	4.5
	7.76	400	6.4	6.75
	7.82	375	5.5	8.0

FIGURE 2-4

LENZ OIL SITE REMEDIAL INVESTIGATION
PROJECT NO: 9292

GROUND WATER SAMPLING
FIELD DATA FORM

SAMPLE I.D.: LO-206D-GW DATE: Feb. 13, 1992 TIME: 14:20

SAMPLERS:	AFFILIATION:	OBSERVERS:	AFFILIATION:
B. Heinen	ERM North Central	Keith Foszez	PRC
D. Kaisor	ERM North Central		

WELL NUMBER: MW06D TOTAL DEPTH: 46.0 (ft) I.D.: 2" (in)

MATERIAL: S.S. SCREENED INTERVAL: ___-___ (ft)

WATER LEVEL TO TOP OF CASING (ft)

PRE-PURGE: 5.05 POST-PURGE: _____ SAMPLING: _____

THICKNESS OF WATER COLUMN: 40.5 (ft) CASING VOLUME: 7 (gal)

PURGING METHOD: Bailing SAMPLING METHOD: Bailing

STABILIZATION TEST

Time	pH	Conductance (umhos/sq cm)	Temperature (deg F)	Cumulative Volume (gal)
14:05	8.29	475	6.6°C	0
14:10	7.72	700	8.8°C	7
14:15	7.47	1100	9.8°C	14
14:20	7.43	1100	9.6°C	21

FIGURE 2-4

LENZ OIL SITE REMEDIAL INVESTIGATION
PROJECT NO: 9292

GROUND WATER SAMPLING
FIELD DATA FORM

SAMPLE I.D.: MW07S DATE: 2/19/92 TIME: 10:00

SAMPLERS:	AFFILIATION:	OBSERVERS:	AFFILIATION:
R.L. LaPlie	ERM-NC	KF	EBASCO
V.A. Hammer	ERM-NC		

WELL NUMBER: MW07S TOTAL DEPTH: 34.5 (ft) I.D.: 2 (in)

MATERIAL: Stainless Steel SCREENED INTERVAL: ___-___ (ft)

WATER LEVEL TO TOP OF CASING (ft)

PRE-PURGE: 17.24 POST-PURGE: _____ SAMPLING: _____

THICKNESS OF WATER COLUMN: 17.26 (ft) CASING VOLUME: 3 (gal)

PURGING METHOD: Bailer SAMPLING METHOD: Bailer

STABILIZATION TEST

Time	pH	Conductance (umhos/sq cm)	Temperature (deg F)	Cumulative Volume (gal)
10:15	7.60	2600	10.9°C	0
10:20	7.42	2700	11.1°C	3
10:25	7.31	2550	11.0°C	6
10:30	7.20	2850	11.5°C	9
10:35	7.17	2800	11.3°C	10

FIGURE 2-4

LENZ OIL SITE REMEDIAL INVESTIGATION
PROJECT NO: 9292

GROUND WATER SAMPLING
FIELD DATA FORM

SAMPLE I.D.: LO-207D-GW DATE: 2/18/92 TIME: 11:30

SAMPLERS:	AFFILIATION:	OBSERVERS:	AFFILIATION:
R. L. Little	ERM-NC	KJF	EBASCO
V. A. Hammer	ERM-NC		

WELL NUMBER: MW07D TOTAL DEPTH: 57.0 (ft) I.D.: 2 (in)

MATERIAL: Stain. Steel SCREENED INTERVAL: ___-___ (ft)

WATER LEVEL TO TOP OF CASING (ft)

PRE-PURGE: 16.82 POST-PURGE: _____ SAMPLING: _____

THICKNESS OF WATER COLUMN: 40.18 (ft) CASING VOLUME: 7 (gal)

PURGING METHOD: Bailing SAMPLING METHOD: Bailing

STABILIZATION TEST

Time	pH	Conductance (umhos/sq cm)	Temperature (deg F)	Cumulative Volume (gal)
10:55	7.26	950	10.9°C	0
11:05	7.16	950	11.0°C	7
11:15	7.12	1050	11.1°C	14
11:25	7.12	975	11.1°C	21

FIGURE 2-4

LENZ OIL SITE REMEDIAL INVESTIGATION
PROJECT NO: 9292

GROUND WATER SAMPLING
FIELD DATA FORM

MPLE I.D.: LO-2085-GW DATE: 2/18/92 TIME: 830

MPLERS:	AFFILIATION:	OBSERVERS:	AFFILIATION:
JAK	ERM-NC	KJF	EBASCO
BRM	ERM-NC		

ELL NUMBER: MW-08S TOTAL DEPTH: 24.20 (ft) (EST BOTTOM) I.D.: _____ (in)

ATERIAL: SS SCREENED INTERVAL: ____-____ (ft)

WATER LEVEL TO TOP OF CASING (ft)

RE-PURGE: 8.74 POST-PURGE: _____ SAMPLING: _____

HICKNESS OF WATER COLUMN: 15.54 (ft) CASING VOLUME: 2.5x3=7.5 (gal)

URGING METHOD: BAILER SAMPLING METHOD: BAILER

STABILIZATION TEST

Time	pH	Conductance (umhos/sq cm)	Temperature (deg F)	Cumulative Volume (gal)
810	7.17	1350	9.2	-0-
812	7.25	1320	8.0	2.5
815	7.30	1320	8.1	5.0
820	7.29	1310	8.1	7.5

FIGURE 2-4

LENZ OIL SITE REMEDIAL INVESTIGATION
PROJECT NO: 9292

GROUND WATER SAMPLING
FIELD DATA FORM

SAMPLE I.D.: LC-R101L-GW DATE: 2/18/92 TIME: 9:20

SAMPLERS:	AFFILIATION:	OBSERVERS:	AFFILIATION:
BBM	ERM-NC	KJF	EBASCO
DAK	ERM-NC		

WELL NUMBER: ~~MW~~ G101L TOTAL DEPTH: ~~39.40~~ 30.4 (ft) I.D.: 2" (in)

MATERIAL: SS SCREENED INTERVAL: ____-____ (ft)

WATER LEVEL TO TOP OF CASING (ft)

PRE-PURGE: 17.22 POST-PURGE: _____ SAMPLING: _____

THICKNESS OF WATER COLUMN: 17.18 (ft) CASING VOLUME: ~~20~~ 3x3=9 (gal)

PURGING METHOD: BAILER SAMPLING METHOD: BAILER

STABILIZATION TEST

Time	pH	Conductance (umhos/sq cm)	Temperature (deg F)	Cumulative Volume (gal)
9:05	8.49	500	10	0
9:15	7.58	650	11	3
9:18	7.58	650	11	6
9:20	7.58	700	11	9

FIGURE 2-4

LENZ OIL SITE REMEDIAL INVESTIGATION
PROJECT NO: 9292

GROUND WATER SAMPLING
FIELD DATA FORM

SAMPLE I.D.: LO-G101M-GW DATE: 2-18-92 TIME: 1000

SAMPLERS:	AFFILIATION:	OBSERVERS:	AFFILIATION:
DAK	ERM-NC	KJF	EBASCO
BBM	ERM-NC		

WELL NUMBER: G101M TOTAL DEPTH: 23.75 (ft) 50FT I.D.: 2.0 (in)

MATERIAL: SS SCREENED INTERVAL: ___-___ (ft)

WATER LEVEL TO TOP OF CASING (ft)

PRE-PURGE: 17.96 POST-PURGE: _____ SAMPLING: _____

THICKNESS OF WATER COLUMN: 5.79 (ft) CASING VOLUME: 1 x3= 3 (gal)

PURGING METHOD: BAILING SAMPLING METHOD: BAILING

STABILIZATION TEST

Time	pH	Conductance (umhos/sq cm)	Temperature (deg F)	Cumulative Volume (gal)
9:30	7.91	500	9	-0-
9:33	7.69	750	11	1
9:45	7.63	600	10	2
9:50	7.57	650	11	3

FIGURE 2-4

LENZ OIL SITE REMEDIAL INVESTIGATION
PROJECT NO: 9292

GROUND WATER SAMPLING
FIELD DATA FORM

SAMPLE I.D.: LO-2101D-GW DATE: 2-18-92 TIME: 9:50

SAMPLERS:	AFFILIATION:	OBSERVERS:	AFFILIATION:
DAK	ERM-NC	KJF	EBASCO
BBM	ERM-NC		

WELL NUMBER: 9101D TOTAL DEPTH: 41.10 30FT (ft) I.D.: 2.0 (in)

MATERIAL: SS SCREENED INTERVAL: ___-___ (ft)

WATER LEVEL TO TOP OF CASING (ft)

PRE-PURGE: 17.16 POST-PURGE: ___ SAMPLING: ___

THICKNESS OF WATER COLUMN: 23.96 (ft) CASING VOLUME: 4 x 3 = 12 (gal)

PURGING METHOD: BAILER SAMPLING METHOD: BAILER

STABILIZATION TEST

Time	pH	Conductance (umhos/sq cm)	Temperature (deg F)	Cumulative Volume (gal)
9:30	8.04	600	11	0
9:34	7.56	750	11	4
9:45	7.57	600	11	8
9:50	7.49	650	11	12

G102L

FIGURE 2-4

LENZ OIL SITE REMEDIAL INVESTIGATION
PROJECT NO: 9292

GROUND WATER SAMPLING
FIELD DATA FORM

SAMPLE I.D.: CO-2102L-GW DATE: 2-18-92 TIME: 11:30

SAMPLERS:	AFFILIATION:	OBSERVERS:	AFFILIATION:
DK	ERM	KJD	PRC
BWM	ERM		

WELL NUMBER: G102L TOTAL DEPTH: 16.75 (ft) HARD BOTTOM I.D.: _____ (in)

MATERIAL: SS SCREENED INTERVAL: ____-____ (ft)

WATER LEVEL TO TOP OF CASING (ft)

PRE-PURGE: 9.60 POST-PURGE: _____ SAMPLING: _____

THICKNESS OF WATER COLUMN: 24 (ft) CASING VOLUME: 4 (gal)

PURGING METHOD: Bailer SAMPLING METHOD: Bailer

STABILIZATION TEST

Time	pH	Conductance (umhos/sq cm)	Temperature (deg F)	Cumulative Volume (gal)
11:15	8.09	800	9	0
11:18	7.80	1000	9	1.5
11:20	7.59	1000	9	3
11:21	7.58	1000	9.5	4.5

FIGURE 2-4

LENZ OIL SITE REMEDIAL INVESTIGATION
PROJECT NO: 9292

GROUND WATER SAMPLING
FIELD DATA FORM

SAMPLE I.D.: LO-2102D-GW DATE: 2-18-92 TIME: 13:15

SAMPLERS:	AFFILIATION:	OBSERVERS:	AFFILIATION:
R.L. Little	ERM	KJF	ENASCO
V.A. Hammer	ERM		

WELL NUMBER: G102D TOTAL DEPTH: 19.95 (ft) I.D.: 2" (in)

MATERIAL: SS SCREENED INTERVAL: ___-___ (ft)

WATER LEVEL TO TOP OF CASING (ft)

PRE-PURGE: 10.52 POST-PURGE: _____ SAMPLING: _____

THICKNESS OF WATER COLUMN: 9.4 (ft) CASING VOLUME: 1½ (gal)

PURGING METHOD: Teflon Bailer SAMPLING METHOD: Bailer

STABILIZATION TEST

Time	pH	Conductance (umhos/sq cm)	Temperature (deg F)	Cumulative Volume (gal)
13:25	8.20	975	9.2°C	0
13:30	7.80	975	9.2°C	1½
13:35	7.64	875	9.4°C	3
13:40	7.56	975	9.7°C	4.5