SDMS US EPA REGION V -1

SOME IMAGES WITHIN THIS DOCUMENT MAY BE ILLEGIBLE DUE TO BAD SOURCE DOCUMENTS.

Description of Current Conditions

W.G. Krummrich Plant

Sauget, Illinois

Volume 3

DRAFT

September 1, 2000

Submitted To:

US Environmental Protection Agency
Chicago, Illinois

Submitted By:

Solutia Inc
Sauget, Illinois

Volume 3 Appendices

Appendix 24 1993 Geraghty & Miller Report

Appendix 25 1997 Roux Report (Volumes I and II)

Appendix 24

1993 Geraghty & Miller Report

EVALUATION OF GROUND-WATER QUALITY CONDITIONS AT W.G. KRUMMRICH PLANT MONSANTO COMPANY SAUGET, ILLINOIS

May 1993

Prepared for

Monsanto Company
500 Monsanto Avenue
Sauget, Illinois 62201

Prepared by

Geraghty & Miller, Inc.
125 East Bethpage Road
Plainview, New York 11803
(516) 249-7600

CONTENTS

		Page
1.0	INTRODUCTION	1-1
2.0	DESIGN AND IMPLEMENTATION OF THE GROUND-WATER MONITORING PROGRAM	2-1
3.0	MODIFICATIONS TO THE GROUND-WATER SAMPLING PROGRAM	3-1
4.0	CURRENT GROUND-WATER QUALITY	4-1
4.1	WATER-TABLE (SHALLOW) ZONE	4-1
4.1.1	Volatile Organic Compounds	4-1
4.1.2	Acid Compounds	4-2
4.1.3	Base/Neutral Compounds	4-3
4.2	INTERMEDIATE ZONE	4-4
4.2.1	Volatile Organic Compounds	4-4
4.2.2	Acid Compounds	4-5
4.2.3	Base/Neutral Compounds	4-6
4.3	DEEP ZONE	4-7
4.3.1	Volatile Organic Compounds	4-7
4.3.2	Acid Compounds	4-8
4.3.3	Base/Neutral Compounds	4-8
5.0	GROUND-WATER QUALITY TRENDS	5-1
5.1	WATER-TABLE (SHALLOW) ZONE	5-1
5.2	INTERMEDIATE ZONE	5-3
5.3	DEEP ZONE	5-4
6.0	COMPARISON OF 1984/1985 AND 1992 WATER QUALITY DATA	6-1
6.1	WATER-TABLE (SHALLOW) ZONE	6-1
6.2	INTERMEDIATE ZONE	6-2
6.3	DEEP ZONE	6-3
7.0	SUMMARY OF FINDINGS	7-1
8.0	REFERENCES	8-1

TABLES

1. Annual Ground-Water Monitoring Program, November 1992, Monsanto Company, W.G. Krummrich Plant, Sauget, Illinois.

2. Supplemental List of Nonpriority Pollutant Compounds, November 1992, Monsanto Company, W.G. Krummrich Plant, Sauget, Illinois.

FIGURES

1. Monitoring Well Locations, Monsanto Company, Sauget, Illinois.

2. Monitoring Well Locations at Lot H (Site R), Monsanto Company, Sauget, Illinois.

3. Concentrations of Organic Compounds in the Water-Table (Shallow) Zone, November 1992, Monsanto Company, Sauget, Illinois.

4. Concentrations of Organic Compounds in the Intermediate Zone, November 1992, Monsanto Company, Sauget, Illinois.

5. Concentrations of Organic Compounds in the Deep Zone, November 1992, Monsanto Company, Sauget, Illinois.

6. Concentrations of Benzene in the Water-Table (Shallow) Zone, 1984 vs. 1992, Monsanto Company, Sauget, Illinois.

7. Concentrations of Chlorobenzene in the Water-Table (Shallow) Zone, 1984 vs. 1992, Monsanto Company, Sauget, Illinois.

8. Concentrations of Benzene in the Intermediate Zone, 1985 vs. 1992, Monsanto Company, Sauget, Illinois.

9. Concentrations of Chlorobenzene in the Intermediate Zone, 1985 vs. 1992, Monsanto Company, Sauget, Illinois.

10. Concentrations of Benzene in the Deep Zone, 1985 vs. 1992, Monsanto Company, Sauget, Illinois.

11. Concentrations of Chlorobenzene in the Deep Zone, 1985 vs. 1992, Monsanto Company, Sauget, Illinois.

APPENDICES

A. Ground-Water Monitoring Program, Proposed in 1986.

B. Hydrogeology.

C. Geologic Logs and Construction Details.

D. Ground-Water Quality Data.

E. Ground-Water Quality Trends.

EVALUATION OF GROUND-WATER QUALITY CONDITIONS AT W.G. KRUMMRICH PLANT MONSANTO COMPANY SAUGET, ILLINOIS

May 1, 1993

Geraghty & Miller, Inc. is submitting this report to Monsanto Company for work performed at the W.G. Krummrich Plant, Sauget, Illinois. The report was prepared in conformance with Geraghty & Miller's strict quality assurance/quality control procedures to ensure that the report meets industry standards in terms of the methods used and the information presented. If you have any questions or comments concerning this report, please contact one of the individuals listed below.

Respectfully submitted,

GERAGHTY & MILLER, INC.

Dennis Colton
Project Director

Nicholas Valkenburg
Vice President

DC/NV:ml

EVALUATION OF GROUND-WATER QUALITY CONDITIONS AT W.G. KRUMMRICH PLANT, MONSANTO COMPANY SAUGET, ILLINOIS

1.0 INTRODUCTION

In January 1993, Geraghty & Miller, Inc. was requested by Monsanto Company (Monsanto) to prepare an evaluation of the W.G. Krummrich Plant ground-water quality data that have been collected since the plant monitoring program began in September 1986. This report has been prepared for submission to the Illinois Environmental Protection Agency (IEPA) as part of Monsanto's RCRA Part B permit application.

In November 1983, Geraghty & Miller began a hydrogeologic assessment of ground-water conditions at the W. G. Krummrich plant with the installation of 12 shallow wells to obtain an initial understanding of ground-water quality. Since that initial investigation, 31 additional wells have been installed on Monsanto property and sampled for USEPA priority pollutant compounds plus additional site-specific compounds. The first 12 wells located were in the production area; however, the expanded monitoring well network includes other areas of the plant: Lot F (west of the production area) and Lot H (Site R landfill). The production area and Lot F are shown on Figure 1 and Lot H is shown on Figure 2. Lot H has not been included in the evaluation presented in this report because it is being investigated as part of another study, as agreed with the IEPA. The plant-wide investigation of ground-water quality was completed in September 1986, and a report was submitted to the IEPA by Monsanto (Geraghty & Miller, Inc. 1986a).

Geraghty & Miller proposed a semiannual ground-water monitoring program to Monsanto in the 1986 report (Geraghty & Miller, Inc. 1986a). The proposed monitoring program was summarized in Table 19 of the 1986 Geraghty & Miller report; that table is provided as Appendix A of this report. The overall purpose of the monitoring program was to characterize plant-wide ground-water quality and to monitor changes in quality over time.

Since September 1986, only a few additional wells have been installed at the plant. In October 1987, three additional wells (GM-55C, GM-56C, and GM-57C) were installed at Lot H in the deepest of the three hydrogeologic zones described in Geraghty & Miller's 1986 report. These three zones were identified as the shallow (or water-table) zone, the intermediate zone, and the deep zone. A description of each zone is provided in the hydrogeology summary presented in Appendix B of this report. In September/October 1987, four wells were installed downgradient of the Route 3 drum site to monitor water-quality changes. Two shallow wells (Wells GM-58A and GM-59A) were installed downgradient of the Route 3 drum site at the western boundary of the Monsanto property to monitor ground-water quality in the shallow zone. In addition, a shallow zone well (GM-54A) and an intermediate zone well (GM-54B) were installed further downgradient on Village of Sauget property to monitor ground-water quality in these zones at a greater distance from the Route 3 drum site. The geologic logs and well construction details for these seven wells are provided in Appendix C of this report.

2.0 DESIGN AND IMPLEMENTATION OF THE GROUND-WATER MONITORING PROGRAM

In September 1986, Geraghty & Miller designed a semiannual ground-water monitoring program for Monsanto to determine whether water quality was changing (Appendix A). This program was described in Geraghty & Miller's 1986 report which assessed the ground-water conditions at the W.G. Krummrich plant. Monsanto authorized the program to proceed in December 1986. The monitoring program included 18 wells in the production area and Lot F and 11 wells at Lot H. The parameters selected for the program varied from well to well as only those constituents previously detected (based on two sampling rounds) were included (see Appendix A). Since neither pesticides, PCBs, nor metals were a concern in ground water at the site, the monitoring program did not include these constituents.

3.0 MODIFICATIONS TO THE GROUND-WATER SAMPLING PROGRAM

The frequency and number of wells sampled semiannually were revised in May 1989 after five sampling rounds of data had been evaluated. The program was initially scheduled to be reviewed in 1991 after 5 years (or ten rounds) of data had been collected. However, since ground-water quality data were available from five sampling rounds and ground water moves very slowly (7.3 ft/yr) in the water-table zone, semiannual sampling was deemed to be unnecessary and the sampling for the shallow monitoring wells was rescheduled to be on an annual basis, with the exception of the upgradient shallow well GM-12A. The monitoring wells in the intermediate zone and deep zone in Lot F (GM-4B, GM-4C, GM-17B, and GM-17C) and the upgradient wells (GM-12B and GM-12C) were sampled semiannually through 1991. Side gradient wells in the intermediate and deep zones (GM-9B, GM-9C, GM-10B, and GM-10C) were also selected for annual sampling in May 1989. The voluntary monitoring program is currently being conducted on an annual basis and is ongoing.

Of the four monitoring wells located downgradient of the Route 3 drum site, two shallow monitoring wells (GM-58A and GM-59A) are on Monsanto property and a well cluster consisting of one shallow well and one intermediate well (GM-54A and GM-54B, respectively) is located on Village of Sauget property. These wells were initially sampled in November 1987. After two rounds of data had been obtained from the shallow well (GM-54A) on village property, this well was deleted from the program because the results indicated that ground water had not been compacted. The remaining three wells were sampled semiannually during 1987 and 1988 and then annually from 1987 to the present. The three-well monitoring cluster located at the downgradient boundary of the Route 3 drum site was deleted from the program after the May 1991 sampling round. Sampling shallow well GM-31A was not necessary because drum-site-related compounds were known from prior sampling of this shallow well, and wells GM-58A and GM-59A were farther downgradient and still being monitored. Since drum-site-related compounds were not being detected in the deeper wells (GM-31B and GM-31C) and a downward gradient was not present, these two wells were also deleted from the program.

Other wells such as wells GM-5, GM-6A, and GM-6B, were sampled occasionally to provide information at specific locations; these wells were sampled in November 1992. Also in 1992, 12 wells were analyzed for Appendix IX compounds rather than the usual analytes, which consist of priority pollutant compounds plus site-related compounds. These 12 wells included an upgradient three-well cluster (GM-12A, GM-12B, and GM-12C) and nine wells in Lot F (GM-4A, GM-4B, GM-4C, GM-5, GM-6A, GM-6B, GM-17A, GM-17B, and GM-17C). The purpose of selecting wells upgradient and downgradient of the main plant area was to determine if any Appendix IX compounds were present in ground water either migrating onto the property or leaving the main plant area.

4.0 CURRENT GROUND-WATER QUALITY

In November 1992, as part of the annual monitoring program, ground-water samples were collected from 23 wells in the plant area, on Lot F, and in several locations on Village of Sauget property. The wells sampled and the list of analytical parameters are provided in Tables 1 and 2. Data from the 14 wells sampled at Lot H will not be evaluated in this report because this site is being investigated separately. The results from the November 1992 sampling round were added to the site ground-water database, which is provided in Appendix D. As described in Section 3.0, 12 wells were selected for analysis of Appendix IX compounds, rather than the priority pollutant list, to determine if other compounds besides the priority pollutant and site-related compounds are present in the ground water. Based on the analytical results from the upgradient well cluster (GM-12A, 12B, and 12C), and the nine downgradient wells in Lot F, no additional compounds were found.

4.1 WATER-TABLE (SHALLOW) ZONE

Ground-water quality data for the water-table (shallow) zone are provided in Appendix D. In wells where duplicate samples were collected, the mean data are presented on Figures 3, 4, and 5. An evaluation of volatile organic compounds (VOCs), acid extractable organic compounds, and base/neutral extractable organic compounds that are present in the water-table zone is provided below.

4.1.1 Volatile Organic Compounds

VOCs, specifically benzene and chlorobenzene, are the compounds in ground water at the site detected most frequently and in the highest concentrations. The analytical results for the monitoring program are provided in Appendix D (Table 1) and total VOCs for each well sampled in November 1992 are presented on Figure 3.

The direction of ground-water flow in the water-table zone is from east to west, which is consistent with historical ground-water flow (Geraghty & Miller, Inc. 1986a). Therefore,

ground-water flow maps have not been prepared for this report. VOCs in the water-table zone are present in upgradient well GM-12A at 1,039 micrograms per liter (ug/L) (average of duplicate analyses), well GM-9A (2,873 ug/L), and well GM-17A (904,400 ug/L). VOCs were not detected in two wells in the northern portion of the site (GM-4A and GM-10A) and VOCs were also not detected in downgradient well GM-5. The absence of VOCs in well GM-5 is important because this well is downgradient of the portion of the water-table aquifer that contains the highest VOC concentrations. The VOCs consist primarily of benzene and chlorobenzene, and these two compounds are found in many areas of the facility.

Well GM-31A is located at the downgradient boundary of the Route 3 drum site and was last sampled in November 1990. VOCs were reported to be present at 16 ug/L (average of duplicate sample results). Therefore, VOCs are not present in high concentrations in the source area. VOCs were not detected in downgradient well GM-59A, and 14 ug/L of chlorobenzene were detected in well GM-58A. Chlorobenzene is not a compound that is related to the drum site. Site-related compounds include phenols, nitrochlorobenzenes (NCB), dinitrochlorobenzenes (DNCB), and nitrobiphenyls (Geraghty & Miller, Inc. 1986b). Well GM-54A is located downgradient of the drum site on Village of Sauget property and was last sampled in May 1988 when methylene chloride was the only VOC detected at 34 ug/L. This analytical result may have been a laboratory artifact.

Based on the results presented above, it does not appear that VOCs are migrating off-site via the water-table zone.

4.1.2 Acid Compounds

Acid compounds are generally not found in high concentrations at this site (Appendix D, Table 2). In upgradient well GM-12A, 162 ug/L of 2-chlorophenol (average of duplicate analyses) was detected in November 1992 (Figure 3). Due to the absence of these compounds in wells GM-9A and GM-10A prior to 1986, this group of compounds was not

included in the monitoring program for these two locations. Acid compounds were found in downgradient well GM-6A (2-chlorophenol at 19 ug/L) and in well GM-17A (2-chlorophenol at 26 ug/L and phenol at 13 ug/L); however, acid compounds were not detected in either GM-4A or GM-5.

In the vicinity of the Route 3 drum site, acid compounds were not detected in wells GM-58A or GM-59A in 1992, nor were they detected in well GM-54A, which was last sampled in May 1988. These compounds were detected at 358 ug/L in well GM-31A (average of duplicate results) in November 1990, which was the last time the well was sampled.

Based on the results presented above, it does not appear that these compounds are migrating off-site via the water-table zone.

4.1.3 Base/Neutral Compounds

Base/neutral compounds (1,2-dichlorobenzene and aniline) were found at 2,254 ug/L (average duplicate analyses) in upgradient well GM-12A in November 1992 (Figure 3). The monitoring program's results are provided in Appendix D (Table 3). Due to the absence of these compounds in wells GM-9A and GM-10A prior to 1986, this group of compounds was not included in the monitoring program for these two locations. Base/neutral compounds (1,2-dichlorobenzene and 1,4-dichlorobenzene) were found in downgradient wells GM-6A and GM-17A; however, base/neutral compounds were not detected in either downgradient well GM-4A or downgradient well GM-5.

In the vicinity of the Route 3 drum site, base/neutral compounds were detected at 3,377 ug/L in well GM-31A (average of duplicate analyses), which was last sampled in November 1990. Base/neutral compounds were not found in well GM-59A, but 40 ug/L of 2-nitrochlorobenzene was detected in well GM-58A. Since this compound is related to the

Route 3 drum site, it has likely migrated from that location. Well GM-54A was last sampled in May 1988 and base/neutral compounds were not detected.

Based on the results presented above, the only area of the site where base/neutral compounds may be migrating off-site is downgradient of the Route 3 drum site.

4.2 INTERMEDIATE ZONE

Ground-water quality data for the intermediate zone are provided in Appendix D. Where duplicate samples were collected, mean data are presented on the figures. An evaluation of the VOCs, acid compounds and base/neutral compounds that are present in the intermediate zone is provided below.

4.2.1 Volatile Organic Compounds

VOCs, specifically benzene and chlorobenzene, are the compounds most frequently detected in the intermediate zone and in the highest concentrations. The monitoring program's results are provided in Appendix D (Table 1) and total VOCs for each intermediate well sampled in November 1992 are presented on Figure 4. VOCs are present in this zone in upgradient well GM-12B at 781 ug/L (average of duplicate analyses), as well as in all other intermediate zone wells. Based on the results shown on Figure 4, it appears that the area of impacted ground water terminates near the western boundary of Lot F due to 34 ug/L of VOCs (primarily chlorobenzene in well GM-18B) and 20 ug/L of VOCs (chlorobenzene only) in off-site well GM-20B. Since well GM-20B is in the vicinity of the Village of Sauget primary treatment plant, it is not clear whether an off-site source has impacted ground water in the vicinity of well GM-20B.

In the vicinity of the Route 3 drum site, VOCs were detected in well GM-31B at 133 ug/L (primarily benzene and chlorobenzene) which was last sampled in May 1991. VOCs were also detected in off-site well GM-54 B at 120 ug/L which represented only benzene and

chlorobenzene. Since VOCs represented only about 0.01 percent of the total organic concentration in shallow well GM-31A (Figure 3), it is likely that the VOCs detected in intermediate zone wells GM-31B and GM-54B are representative of relatively ubiquitous levels of VOCs (especially benzene and chlorobenzene) in the intermediate zone and they are probably not from the Route 3 drum site, which is capped. In addition, historical water-level data for the GM-31 and GM-54 well clusters indicate that neither a downward nor an upward head gradient exists in this area of the site. Without a downward driving force, there is no mechanism to move chemicals downward and into the intermediate zone.

The intermediate and deep hydrogeologic zones have been affected in the past by large withdrawals of ground water by local industrial supply wells. Ground-water flow maps that depicted past flow conditions have been provided in Geraghty & Miller's 1986 report, which demonstrated cones of influence around industrial locations in the Sauget area (Geraghty & Miller, Inc. 1986a). Pumping large quantities of water from the deep zone most likely drew the chemicals from the shallow depths into the intermediate and deep zones. The presence of constituents in these zones may be the result of past pumping practices. A more detailed description of historical flow conditions can be found in the 1986 report (Geraghty & Miller, Inc. 1986a).

Based on this information, the terminus of the VOC plume appears to be in the vicinity of the western boundary of Lot F.

4.2.2 Acid Compounds

The monitoring program's results are presented in Appendix D (Table 2) and concentrations for total acid compounds for each intermediate well sampled in November 1992 are presented on Figure 4. Acids compounds were not detected in upgradient well GM-12B in November 1992 nor in downgradient well GM-20B. Relatively low levels of acid compounds were reported in downgradient wells along Route 3. Acid concentrations were detected in well GM-4B at 62 ug/L (2-chlorophenol), in well GM-6B at 17 ug/L (2-

chlorophenol and 2,4-dichlorophenol), and in well GM-17B at 13 ug/L (2-chlorophenol). The only other acid compound detected at the site was phenol in well GM-18B at 2 ug/L.

At the Route 3 drum site, acid compounds were not detected in either well GM-31B (last sampled in February 1985) or in well GM-54B.

Based on the data presented above, it does not appear that acid compounds are a concern in the intermediate zone.

4.2.3 Base/Neutral Compounds

The monitoring program's results are presented in Appendix D (Table 3) and concentrations for total base/neutral compounds for each intermediate well sampled in November 1992 are presented on Figure 4. Base/neutral compounds were not detected in upgradient well GM-12B in November 1992, nor in downgradient well GM-20B. Along Route 3, concentrations ranged from 242 to 2,553 ug/L for total base/neutral compounds. These concentrations consisted predominantly of chloroanilines and dichlorobenzenes. At downgradient well GM-18B, 31 ug/L of total base/neutrals were reported; however, 28 ug/L of this total was bis(2-ethylhexyl) phthalate, which is often a laboratory artifact.

At the Route 3 drum site, base neutral compounds were detected in GM-31B (last sampled in November 1985) at 45 ug/L which only consisted of bis(2-ethylhexyl)phthalate. In well GM-54B, base/neutral compounds were detected at 229 ug/L in November 1992 and this result consisted only of chloroaniline compounds. These compounds were not on the parameter list for the November 1985 sample collected from GM-31B, therefore, it is not clear whether a relationship exists. The chloroaniline compounds are present in other areas in the intermediate zone and these compounds are not related to the Route 3 drum site. The presence of the chloroaniline compounds at this location may be due to another source because a downward head gradient does not exist in this area of the site.

Based on the results presented above, the only area of the site where site-related base/neutral compounds may be migrating off-site is at the Route 3 drum site.

4.3 DEEP ZONE

Ground-water quality data for the deep zone are provided in Appendix D. Where duplicate samples were collected, mean data were presented on the figures. An evaluation of the VOCs, acid compounds, and base/neutral compounds that are present in the deep zone is provided below.

4.3.1 Volatile Organic Compounds

VOCs, specifically benzene and chlorobenzene, are the compounds detected most frequently and in the highest concentrations in the deep zone. The analytical results of the monitoring program are provided in Appendix D (Table 1) and total VOCs for each deep well sampled in November 1992 are presented on Figure 5. VOCs are present in this zone in upgradient well GM-12C at 13 ug/L (chlorobenzene), as well as in all other deep zone wells. The results shown for wells GM-9C, GM-10C, and GM-31C consist only of benzene and chlorobenzene and are all much lower in concentration than in the intermediate zone. However, the results for wells GM-4C and GM-17C are considerably higher, especially at GM-4C. The higher results in the deeper zone are not consistent with ground-water flow because a downward gradient does not exist between the intermediate and deep zones. However, as discussed earlier in this report, past ground-water withdrawals may be responsible for drawing these chemicals down into the deeper zone.

In the vicinity of the Route 3 drum site, VOCs were detected in well GM-31C at 57 ug/L (chlorobenzene only) which was last sampled in May 1991. Since this well is screened from 97 to 117 feet below grade, it is unlikely that the chlorobenzene is related to the drum site especially since a downward gradient is not present. In addition, chlorobenzene is not

one of the compounds related to the drum site, and it appears to be relatively ubiquitous throughout the area.

Based on the results shown on Figure 5, it cannot be determined whether VOCs are migrating off-site through the deep zone.

4.3.2 Acid Compounds

The monitoring program's results are provided in Appendix D (Table 2) and the concentrations for total acid compounds for each deep well sampled in November 1992 are presented on Figure 5. Acid compounds (predominantly 2-chlorophenol) were detected at 6 ug/L in upgradient well GM-12C and at slightly higher concentrations along Route 3. Acid concentrations were reported in well GM-4C at 24 ug/L (2-chlorophenol) and in well GM-17C at 52 ug/L (2-chlorophenol and 2,4-dichlorophenol). These results are similar to the results presented for the intermediate zone wells.

At the Route 3 drum site, acid compounds were reported at 6 ug/L (2-chlorophenol) in well GM-31C which was last sampled in November 1985 (duplicate analyses).

Based on the data presented above, it does not appear that acid compounds are a concern in the deep zone.

4.3.3 Base/Neutral Compounds

The monitoring program's results are presented in Appendix D (Table 3) and concentrations for total base/neutral compounds for each deep well sampled in November 1992 are presented on Figure 5. Chloroanilines and dichlorobenzenes are the major base/neutral compounds found in the deep zone. Base/neutral compounds were found in upgradient well GM-12C at 36 ug/L (1,2-dichlorobenzene) and in higher concentrations in downgradient wells along Route 3. Total base/neutral compounds (predominantly

dichlorobenzenes and chloroanilines) were found in wells GM-4C and GM-17C at concentrations of 3,704 ug/L and 880 ug/L, respectively. These results differ considerably from the intermediate zone wells as the concentrations in well GM-4C are much higher than the intermediate zone data, and the results for GM-17C are much lower than the intermediate zone concentrations. These differences may be the result of past pumping in the deep zone.

At the Route 3 drum site, bis(2-ethylhexyl) phthalate was detected in one of the duplicate samples collected at well GM-31C at 84 ug/L but not in the other. Since averaged results were plotted on all the chemical distribution maps, a result of 42 ug/L was plotted for this location. Since this compound is often reported as a laboratory artifact, the chemical may not be present in ground water at this location.

Based on the information presented above, it is not clear whether base/neutral compounds are migrating off-site through the deep zone.

5.0 GROUND-WATER QUALITY TRENDS

Since December 1986, ground water at the site has been monitored to determine whether its quality has been changing over time. Upgradient, side gradient, and downgradient wells have been sampled regularly, and the analytical results are discussed in this section of the report. With the exception of the Route 3 drum site, benzene and chlorobenzene have been selected as indicator compounds because these compounds comprise the largest percentage of the total organic concentrations in each of the wells monitored. At the Route 3 drum site, phenolic compounds, nitrochlorobenzenes, dinitrochlorobenzenes, and nitrobiphenyls, have been determined to be characteristic of this area based on water quality.

Contour maps of chemical constituents are a useful tool for depicting present site conditions and for identifying short-term changes because maps drawn for different data acquisition time periods can be compared. However, as it is not always easy to identify and understand long-term trends by comparing maps, indicators of water quality (such as benzene and chlorobenzene) have been compiled into graphs showing concentration versus time. These graphs are for the wells currently being monitored and are provided on Figures E-1 through E-20 in Appendix E. The wells have been divided into the three hydrogeologic zones: water-table (shallow) zone, intermediate zone, and deep zone. The trends discussed below are based on visual inspection of the historical data that are included in Appendix D.

5.1 WATER-TABLE (SHALLOW ZONE)

Well GM-12A is at the upgradient boundary of the site in the water-table zone, and benzene and chlorobenzene are the primary constituents in ground water at this location. Based on the results shown on Figure E-1 (Appendix E), it appears that the concentrations for both compounds have been higher in recent years and the concentrations have fluctuated considerably over time.

Well GM-9A is located at the plant's southern boundary and is hydraulically side gradient to the ground-water flow direction. Similar to upgradient well GM-12A, benzene and chlorobenzene concentrations have fluctuated considerably in the last four sampling rounds, as compared to the first few years of data when these compounds were barely detected at all (Figure E-2). Another side gradient well (GM-10A) is located near the site's northern boundary. In November 1990, 5,030 ug/L of benzene was reported in this well, but neither benzene nor chlorobenzene has ever been detected on any other occasion during the entire monitoring program (Figure E-3). Based on these data, this result is considered to be an outlier.

Downgradient wells GM-4A and GM-17A are located on the west side of Route 3. Similar to the data discussed above, relatively low concentrations of benzene and chlorobenzene (5 to 21 ug/L) were detected in well GM-4A in 1989 and 1990 but neither compound was detected prior to or after those sampling rounds (see Figure E-4 in Appendix E). Elevated concentrations of benzene and chlorobenzene have been detected in downgradient well GM-17A (see Figure E-5 in Appendix E) since monitoring began, and there has been little improvement in water quality in this well over time.

At the Route 3 drum site, phenolic compounds have been compared to nitrochlorobenzenes, dinitrochlorobenzenes, and nitrophenyls. In well GM-31A, which is located at the downgradient boundary of the drum site, concentrations have been elevated throughout the monitoring period (see Figure E-6 in Appendix E). With the exception of the high concentrations of phenol in November 1988, a number of compounds appear to have been reported in higher concentrations after 1985, at which time the drum site was excavated to determine if the buried drums were still intact. After the site was capped in 1986, the concentrations of some of the compounds decreased.

Downgradient of the Route 3 drum site, wells GM-58A and GM-59A have been monitored since their installation in 1987. Although the total concentration of site-related compounds has been detected as high as 150 ug/L in well GM-58A (see Figure E-7 in

Appendix E), the range of concentrations has been very low in comparison to well GM-31A, given the fact that GM-58A is less than 150 feet from GM-31A. At well GM-59A, site-related compounds were detected only once (November 1988) at a total concentration of 53 ug/L (see Figure E-8 in Appendix E). Site-related compounds have not been detected in well GM-59A either before or after November 1988.

5.2 INTERMEDIATE ZONE

Well GM-12B is at the upgradient boundary of the site in the intermediate zone, and total xylenes and benzene are the primary constituents in ground water at this location. Xylenes have not been found in downgradient well locations, but based on the sporadic detection of these compounds at the upgradient location, they appear to be migrating onto the site from the east. Based on the results shown on Figure E-9 (Appendix E), the concentrations for both compounds appear to have fluctuated considerably over time.

Well GM-9B is located at the southern boundary of the plant and is hydraulically side gradient to the ground-water flow direction. Benzene and chlorobenzene are the primary constituents in ground water at this location (see Figure E-10 in Appendix E). Benzene concentrations have been low through 1989 (from not detected to 11.9 ug/L); however, concentrations were higher during the last three sampling rounds (717 to 3,960 ug/L). The reason for this increase is unclear. Chlorobenzene concentrations have remained relatively constant during the monitoring period. Another side gradient well (GM-10B) is located near the northern boundary of the site. Benzene detections have been sporadic over time and at relatively low concentrations (see Figure E-11 in Appendix E). Chlorobenzene detections have also been sporadic over time; however, the data for the last two sampling rounds have been higher than for any other result for this well. The reason for the recent increase in chlorobenzene concentrations is not clear.

Downgradient wells GM-4B and GM-17B are located on the west side of Route 3. Benzene and chlorobenzene are the primary constituents in ground water at these locations.

In well GM-4B, benzene has been detected sporadically and at relatively low concentrations (see Figure E-12 in Appendix E). Chlorobenzene has been detected more frequently; however, its concentrations have also fluctuated considerably over time. In well GM-17B, benzene was initially detected at high levels (50,000 to 70,000 ug/L); however, since May 1988, benzene has only been detected in 2 of 8 analyses at concentrations of 220 and 249 ug/L (see Figure E-13 in Appendix E). Chlorobenzene concentrations have fluctuated over time but are usually reported in the parts per million range.

At the Route 3 drum site, the primary constituents in the intermediate zone are not the acid and base/neutral compounds identified for the water-table zone. Benzene and chlorobenzene are the primary constituents, and they are probably not related to the Route 3 drum site because (1) the intermediate zone well (GM-31B) is screened from 65.5 to 85.5 feet below land surface, (2) there is no downward vertical head gradient, (3) the acid and base/neutral compounds are not present, and (4) benzene and chlorobenzene concentrations are relatively ubiquitous across the site. Benzene and chlorobenzene results are provided for well GM-31B on Figure E-14 (Appendix E). Benzene detections have been sporadic and at low concentrations (not detected to 16.6 ug/L). The chlorobenzene data represent an average of duplicate results for most of the sampling rounds. Chlorobenzene detections have also been sporadic, and the highest concentration of 193.5 ug/L is an average of 387 ug/L and a non-detect duplicate result. Therefore, this data set is questionable.

5.3 DEEP ZONE

Well GM-12C is at the upgradient boundary of the site in the deep zone, and few constituents have been detected in this well. Benzene was detected at 32.7 ug/L in May 1990, and chlorobenzene was detected at 13.2 ug/L in November 1992 (see Figure E-15 in Appendix E). Neither compound has been detected at any other time since the monitoring program began in December 1986.

Well GM-9C is located at the southern boundary of the plant and is hydraulically side gradient to the ground-water flow direction. Benzene and chlorobenzene are the primary constituents at this location (see Figure E-16 in Appendix E). Concentrations have fluctuated considerably over time, but results have been generally higher for each compound in recent years. Another side gradient well (GM-10C) is located near the northern boundary of the site. Benzene has not been detected since the monitoring program began in December 1986 (see Figure E-17 in Appendix E). Chlorobenzene results have been very consistent over time at relatively low levels, with the exception of the November 1989 and November 1990 sampling rounds, when chlorobenzene was reported at 752 and 451 ug/L, respectively.

Downgradient wells GM-4C and GM-17C are located on the west side of Route 3. Chlorobenzene is the primary constituent in ground water at these locations, with benzene being detected only sporadically. In well GM-4C, benzene has been detected on 3 of 10 occasions at concentrations ranging from 190 to 693 ug/L (see Figure E-18 in Appendix E). Chlorobenzene concentrations have been generally increasing over time. The reason for this apparent trend is unclear. In well GM-17C, benzene has been detected on 4 of 10 occasions at concentrations ranging from 22.5 to 390 ug/L (see Figure E-19 in Appendix E). Chlorobenzene concentrations were high initially (6,000 to 21,000 ug/L), dropped to levels below 1 part per million, then increased in recent years to 6,000 to 7,000 ug/L. This fluctuation in chlorobenzene concentrations cannot be explained at this time.

At the Route 3 drum site, the primary constituents in the deep zone are not the semivolatile compounds found in the water-table zone, but are benzene and chlorobenzene, as was found in the intermediate zone. Benzene was detected on 5 of 10 occasions at concentrations ranging from 15.4 to 144 ug/L (see Figure E-20 in Appendix E). Chlorobenzene fluctuated considerably and was detected on 7 of the 10 occasions at concentrations ranging from 52.7 to 1,120 ug/L. The highest concentrations were detected in November 1988 and May 1989, and the chlorobenzene concentrations dropped to 56.6 ug/L in November 1992. As discussed above, Geraghty & Miller does not believe that the

benzene and chlorobenzene concentrations detected in ground water have migrated into the intermediate and deep zones from the Route 3 drum site, which is located above the water table in the shallow zone.

6.0 COMPARISON OF 1984/1985 AND 1992 WATER QUALITY DATA

To determine if the plumes of impacted ground water within the water-table, intermediate and deep zones have stabilized, ground-water quality data from 1984/1985 were compared to data from 1992. Data for the 1984/1985 sampling rounds are included in Appendix E of Geraghty & Miller's 1986 Plant-wide assessment report (1986a). Because benzene and chlorobenzene concentrations are the constituents detected most frequently and in the highest concentrations, data for these two compounds from 1984/1985 and 1992 were compared within each zone. By examining both compounds, the effects of insitu degradation can be evaluated because benzene is highly biodegradable whereas chlorobenzene is not. Duplicate results were averaged, and the comparison for each zone is provided below.

6.1 WATER-TABLE (SHALLOW) ZONE

Since most of the water-table monitoring wells were installed in 1983 and 1984, and many wells were first sampled in 1984, benzene and chlorobenzene data from 1984 were compared to 1992 concentrations to determine whether the plume identified in 1984 has stabilized.

Benzene concentrations for 1984 and 1992 have been plotted on Figure 6. Since the monitoring wells at the Route 3 drum site were installed after 1984, the data for these wells are representative of the year each well was first installed. The benzene concentrations from the two data sets are very similar for most wells, and a 100 ug/L contour line was plotted for both data sets. The red contour line represents 1992 data and the blue contour line represents 1984 data. The similar positions of the 100 ug/L contour lines for 1984 and 1992 suggests that the benzene plume has stabilized on-site.

Chlorobenzene concentrations for 1984 and 1992 have been plotted on Figure 7. The data for the Route 3 drum site represent the year each well was installed. The chlorobenzene results for 1984 and 1992 and the positions of the 100 ug/L contour lines suggest that the chlorobenzene plume has stabilized on-site.

6.2 INTERMEDIATE ZONE

Since most of the intermediate zone monitoring wells were installed by 1985, the initial benzene and chlorobenzene data from 1985 were compared to 1992 concentrations to determine whether the plume identified in 1985 has stabilized.

Benzene concentrations for 1985 and 1992 have been plotted on Figure 8. Since well GM-54B (Route 3 drum site) was installed in 1987, the results from 1987 were plotted for this well. A 100 ug/L contour line was plotted for both data sets to identify the area where the greatest impacts to ground water have occurred. A comparison of the benzene concentrations indicates a general improvement of water quality between 1985 and 1992. Specifically, a decrease in concentrations to non-detectable levels at four downgradient wells (GM-6B, GM-17B, GM-18B, and GM-20B), and at side gradient well GM-10B. The similar positions of the 100 ug/L contour lines for 1985 and 1992 suggest that the benzene plume has stabilized on-site.

Chlorobenzene concentrations for 1985 and 1992 have been plotted on Figure 9. As discussed above, 1985 data were not available for well GM-54B because this well was installed in 1987; therefore, 1987 data were plotted. A comparison of the chlorobenzene concentrations indicates a general improvement of water quality between 1985 and 1992. Specifically, a decrease in concentrations at five downgradient wells (GM-4B, GM-6B, GM-18B, GM-20B, and GM-31B) and at side gradient well GM-9B. The similar positions of the 100 ug/L contour lines for 1985 and 1992 suggest that the chlorobenzene plume has stabilized on-site. However, an additional well is necessary in the vicinity of the northwest corner of Lot F to determine if VOCs have migrated west of Lot F in this area of the site.

6.3 DEEP ZONE

Since all of the deep zone monitoring wells were installed by 1985, the benzene and chlorobenzene data from 1985 were compared to 1992 concentrations to determine whether the plume identified in 1985 has stabilized. Data from 1991 was plotted for well GM-31C since this well was last sampled during that year.

Benzene concentrations for 1985 and 1992 have been plotted on Figure 10. A comparison of the benzene concentrations indicates a general improvement of water quality between 1985 and 1992. Specifically, a decrease in concentrations in downgradient wells GM-17C and GM-31C, and the continued absence of benzene in downgradient well GM-4B and sidegradient well GM-10B.

Chlorobenzene concentrations for 1985 and 1992 have been plotted on Figure 11. A comparison of the chlorobenzene results indicates that concentrations in downgradient wells GM-4C and GM-17C have increased between 1985 and 1992. However, concentrations have decreased at wells GM-10C and GM-31C.

Without additional downgradient monitoring wells in the deep zone, it is difficult to determine whether the benzene or chlorobenzene plumes have stabilized on-site.

7.0 SUMMARY OF FINDINGS

An evaluation of the ground-water quality data that has been developed during the ground-water monitoring program at the Monsanto plant is provided below.

1. In the water-table zone, ground water has been impacted by VOCs, and to a lesser extent by acid and base/neutral compounds (semivolatile compounds). Based on the results of the ground-water monitoring program, the plume of ground water has stabilized on-site. Although ground water has been impacted to varying degrees downgradient of the plant area and at the Route 3 drum site, the constituents in ground water have not migrated very far in this zone.

2. In the intermediate zone, ground water has been impacted by VOCs and base/neutral compounds, and to a much lesser extent, acid compounds. The results of the ground-water monitoring program indicate that the plume has stabilized, and the extent of the plume of impacted ground water appears to terminate near the western boundary of Lot F. In the vicinity of the Route 3 drum site, low levels of constituents have been detected in downgradient monitoring wells; however, the drum site was probably not the source.

3. In the deep zone, ground water has been impacted by VOCs and base/neutral compounds, and to a much lesser extent, acid compounds. Based on the results of the ground-water monitoring program, Geraghty & Miller cannot determine whether the plume of impacted ground water has migrated off-site.

4. Based on the 1992 analytical results for the ground-water sampling of 12 wells for Appendix IX parameters, no compounds were found that had not been detected during past sampling events.

8.0 REFERENCES

Geraghty & Miller, Inc. 1986a. Plant-Wide Assessment of Ground-Water Conditions at the W.G. Krummrich Plant, Monsanto Company, Sauget, Illinois, Volumes I, II, and III, September 1986.

Geraghty & Miller, Inc. 1986b. Proposed Cap for the Route 3 Drum Site at the Monsanto W.G. Krummrich Plant in Sauget, Illinois, September 1986.

Table 1. Annual Ground-Water Monitoring Program, November 1992, Monsanto Company, W.G. Krummrich Plant, Sauget, Illinois.

Well Number	Well Depth (feet below land surface)	USEPA Priority Pollutants: Volatile Organic Compounds	USEPA Priority Pollutants: Acid Extractable Organic Compounds	USEPA Priority Pollutants: Base/Neutral Extractable Organic Compounds	Nonpriority Pollutants: Volatile Organic Compounds	Nonpriority Pollutants: Acid Extractable Organic Compounds	Nonpriority Pollutants: Base/Neutral Extractable Organic Compounds
Plant Area							
GM-4A	28	IX	IX	IX			
GM-4B	87	IX	IX	IX			
GM-4C	104	IX	IX	IX			
GM-5	36	IX	IX	IX			
GM-6A	34	IX	IX	IX			
GM-6B	88	IX	IX	IX			
GM-9A	28	X					
GM-9B	75	X					
GM-9C	108	X					
GM-10A	28	X					
GM-10B	78	X					
GM-10C	111	X					
GM-12A (1)	33.5	IX	IX	IX			
GM-12B	89	IX	IX	IX			
GM-12C	114.5	IX	IX	IX			
GM-17A	38	IX	IX	IX			
GM-17B	78	IX	IX	IX			
GM-17C	107	IX	IX	IX			
GM-18B	92	X	X	X			
GM-20B	90	X	X	X			
GM-54B	86.5	X	X	X			X (2)
GM-58A	39.5	X	X	X			X (2)
GM-59A	39	X	X	X			X (2)
Landfill Area							
GM-27B	82	X		X			X (3)
GM-27C	105	X	X	X		X	X (3)

X Compounds selected for analysis.
IX Appendix IX compounds.
(1) Replicate sample.
(2) This sample requires an analysis of 2-nitrobiphenyl and 4-nitrobiphenyl in addition to the other nonpriority pollutant base/neutral compounds (see Table 2).
(3) This sample requires an analysis of the nonpriority pollutant base/neutral compounds with the exception of 2-nitrobiphenyl and 4-nitrobiphenyl (see Table 2).

Table 1. Annual Ground-Water Monitoring Program, November 1992, Monsanto Company, W.G. Krummrich Plant, Sauget, Illinois.

Well Number	Well Depth (feet below land surface)	USEPA Priority Pollutants: Volatile Organic Compounds	USEPA Priority Pollutants: Acid Extractable Organic Compounds	USEPA Priority Pollutants: Base/Neutral Extractable Organic Compounds	Nonpriority Pollutants: Volatile Organic Compounds	Nonpriority Pollutants: Acid Extractable Organic Compounds	Nonpriority Pollutants: Base/Neutral Extractable Organic Compounds
Landfill Area (Cont.)							
GM-28B	93	X	X	X		X	X (3)
GM-28C	107	X	X	X		X	X (3)
P-2	47	X		X			X (3)
P-6	30.5	X		X			X (3)
P-7	33	X	X	X		X	X (3)
P-8	53.5	X	X	X		X	X (3)
P-13	53.5	X		X			X (3)
P-14	32.5	X		X			X (3)
GM-106	165.7	X	X	X			X (3)
GM-55C	131	X	X	X	X	X	X (3)
GM-56C	111	X	X	X	X	X	X (3)
GM-57C (1)	116	X	X	X	X	X	X (3)
GM-62A	51	X					
GM-62B (1)	91	X					
GM-62C	132	X					
Blanks							
Field Blank (3 Samples)		X	X	X			
Trip Blank (6 Samples)		X					

X Compounds selected for analysis.
IX Appendix IX compounds.
(1) Replicate sample.
(2) This sample requires an analysis of 2-nitrobiphenyl and 4-nitrobiphenyl in addition to the other nonpriority pollutant base/neutral componds (see Table 2).
(3) This sample requires an analysis of the nonpriority pollutant base/neutral compounds with the exception of 2-nitrobiphenyl and 4-nitrobiphenyl (see Table 2).

Table 2. Supplemental List of Nonpriority Pollutant Compounds, November 1992, Monsanto Company, W. G. Krummrich Plant, Sauget, Illinois.

Volatile Organic Compounds

Methyl-iso-butyl ketone

Methyl-isoamyl ketone

m-Xylene

o-Xylene/p-Xylene

Acid Extractable Organic Compounds

4-Chlorophenol

Base/Neutral Extractable Organic Compounds

Aniline

2-Chloroaniline

3-Chloroaniline

4-Chloroaniline

2-Nitroaniline

4-Nitroaniline

2-Nitrochlorobenzene

4-Nitrochlorobenzene

2,4- and 3,4-Dinitrochlorobenzene

4-Nitrodiphenylamine

2-Nitrobiphenyl (only Wells GM-54B, GM-58A, and GM-59A)

4-Nitrobiphenyl (only Wells GM-54B, GM-58A, and GM-59A)

A:MONSANTO.TBL

SDMS US EPA REGION V

COLOR - RESOLUTION - 3

IMAGERY INSERT FORM

Multiple pages of this document include color or resolution variations and may be illegible in SDMS due to bad source documents. Unless otherwise noted, these pages are available in monochrome. (The source document page(s) are more legible than the images.) The original document is available for viewing at the Superfund Records Center.

SITE NAME	**SAUGET AREA 2**
DOC ID #	**157323**
DOCUMENT VARIATION	**_X_ COLOR OR _X_ RESOLUTION**
PRP	**RMD - SAUGET AREA 2**
PHASE	**A/R, SID**
OPERABLE UNITS	
PHASE **(AR DOCUMENTS ONLY)**	___ Remedial ___ Removal ___ Deletion Docket ____ ____ Original ____ Update #___ Volume __of __

COMMENT(S)

MAPS, FIGURES 1 THRU 11 (FIGURES 6 THRU 11 LEGENDS' CONTAIN COLOR).

DWG DATE: 3/24/93 | PRJCT NO.: NY02303 | FILE: 1624 | DRAWING: MONWELL | CHECKED: D. COLTON | APPROVED: D. COLTON | DRAFTER: G.S.

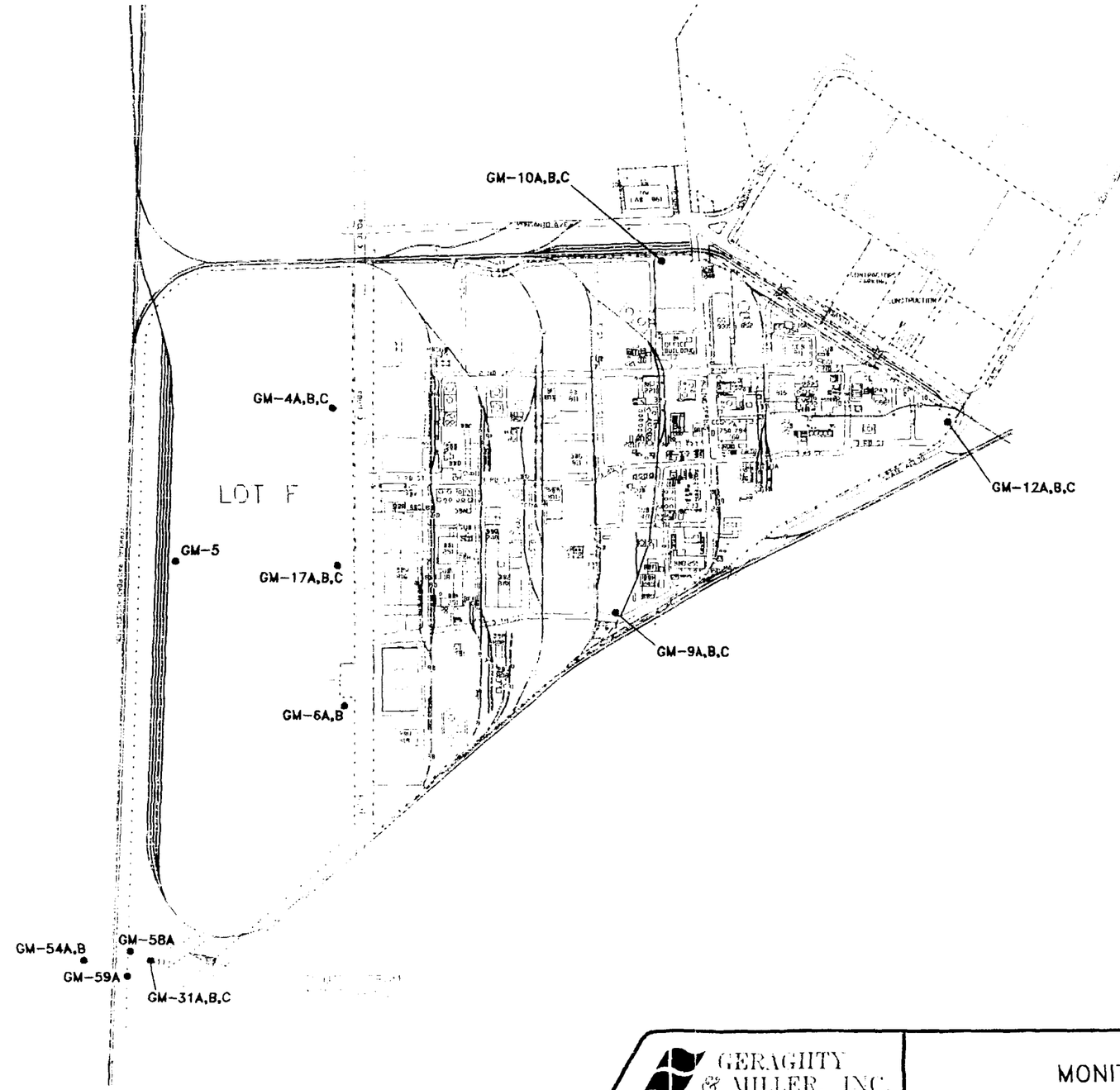

EXPLANATION

GM-5 MONITORING WELL LOCATION AND DESIGNATION

GERAGHTY & MILLER, INC.
Environmental Services

MONITORING WELL LOCATIONS

MONSANTO COMPANY
SAUGET, ILLINOIS

FIGURE
1

DWG DATE: 3-24-93	PRJCT NO.: NY02303	FILE NO.: 1642	DRAWING: LOTH-SR	CHECKED: D.C.	APPROVED: D.C.	DRAFTER: G.S.

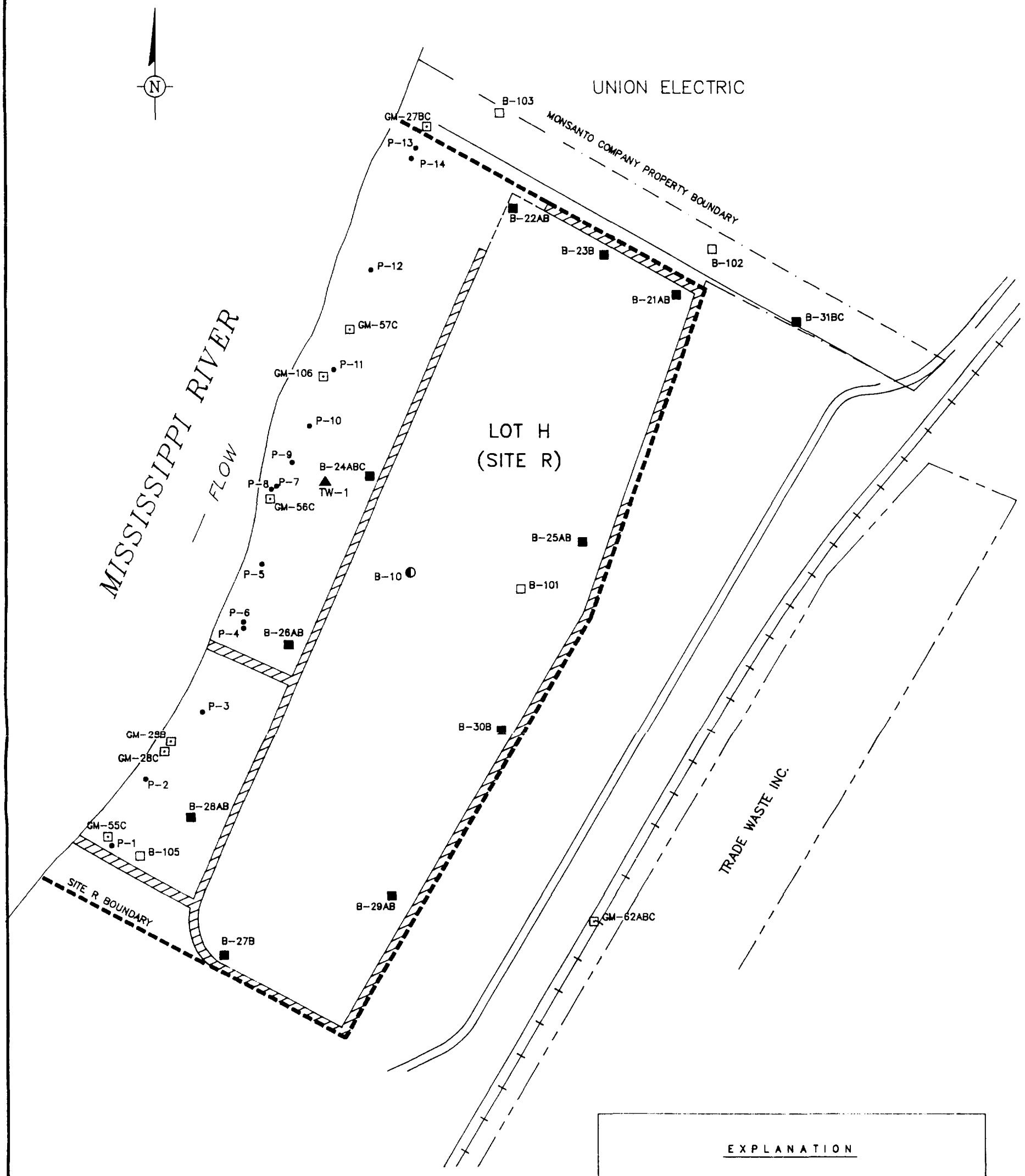

GERAGHTY & MILLER, INC.
Environmental Services

MONITORING WELL LOCATIONS AT LOT H (SITE R)

MONSANTO COMPANY
SAUGET, ILLINOIS

FIGURE
2

DRAWING: WTSZ1192 | CHECKED: D. COLTON | APPROVED: D. COLTON | DRAFTER: V.C./G.S.

FILE: 1624 | PRJCT NO.: NY02303 | DWG DATE: 3/24/93

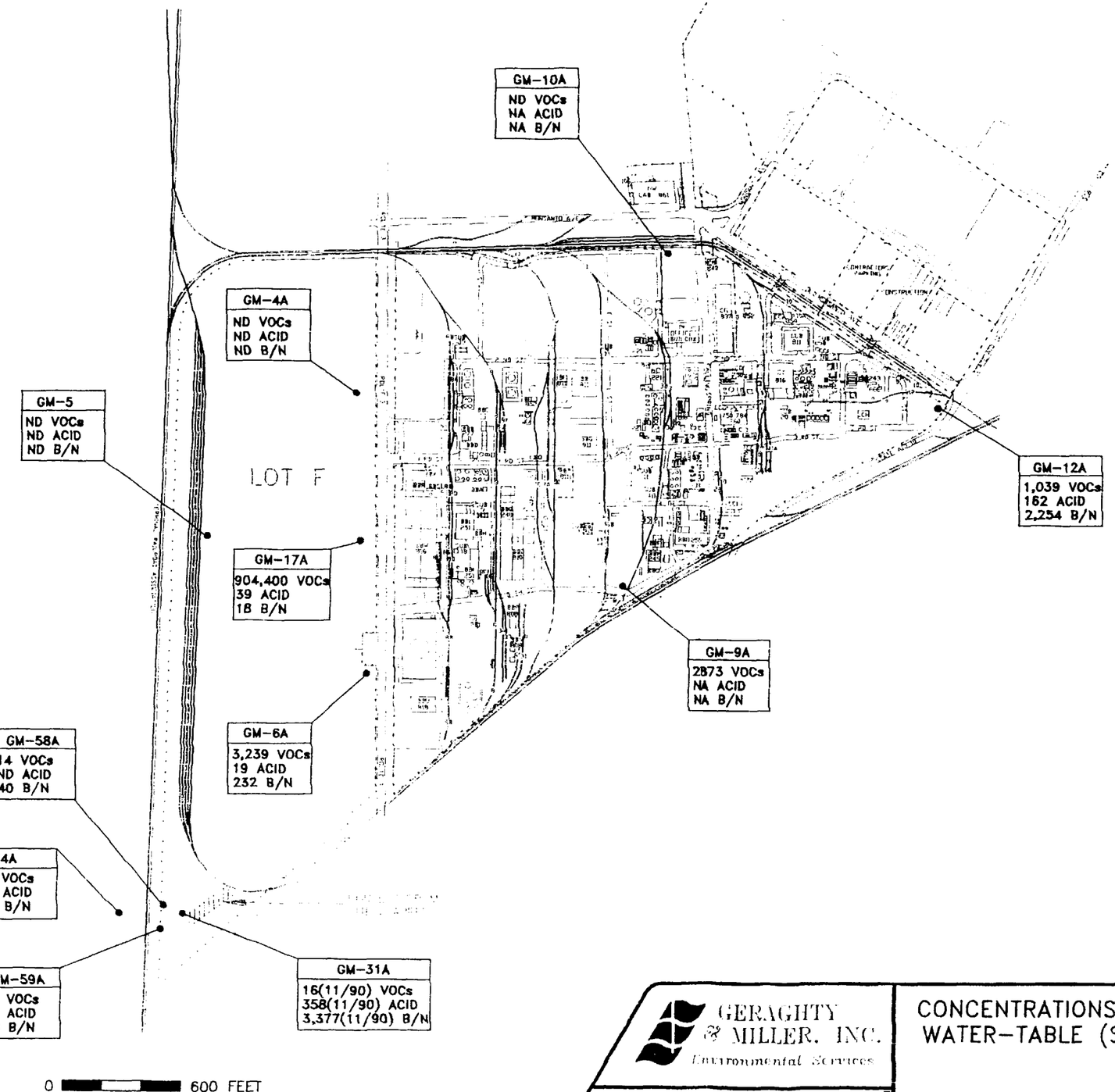

N

EXPLANATION

GM-12A ●	MONITORING WELL LOCATION AND DESIGNATION
1,039 VOCs	TOTAL VOLATILE ORGANIC COMPOUNDS (ug/L)
162 ACID	TOTAL ACID COMPOUNDS (ug/L)
2,254 B/N	TOTAL BASE/NEUTRAL COMPOUNDS (ug/L)
NA	NOT ANALYZED
ND	NOT DETECTED

GERAGHTY & MILLER, INC.
Environmental Services

CONCENTRATIONS OF ORGANIC COMPOUNDS IN THE WATER-TABLE (SHALLOW) ZONE, NOVEMBER 1992

MONSANTO COMPANY
SAUGET, ILLINOIS

FIGURE
3

DRAWING: IZ-1192 | CHECKED: D. COLTON | APPROVED: D. COLTON | DRAFTER: V.C./G.S.

PRJCT NO.: NY02303 | FILE: 1624

DWG DATE: 3/24/93

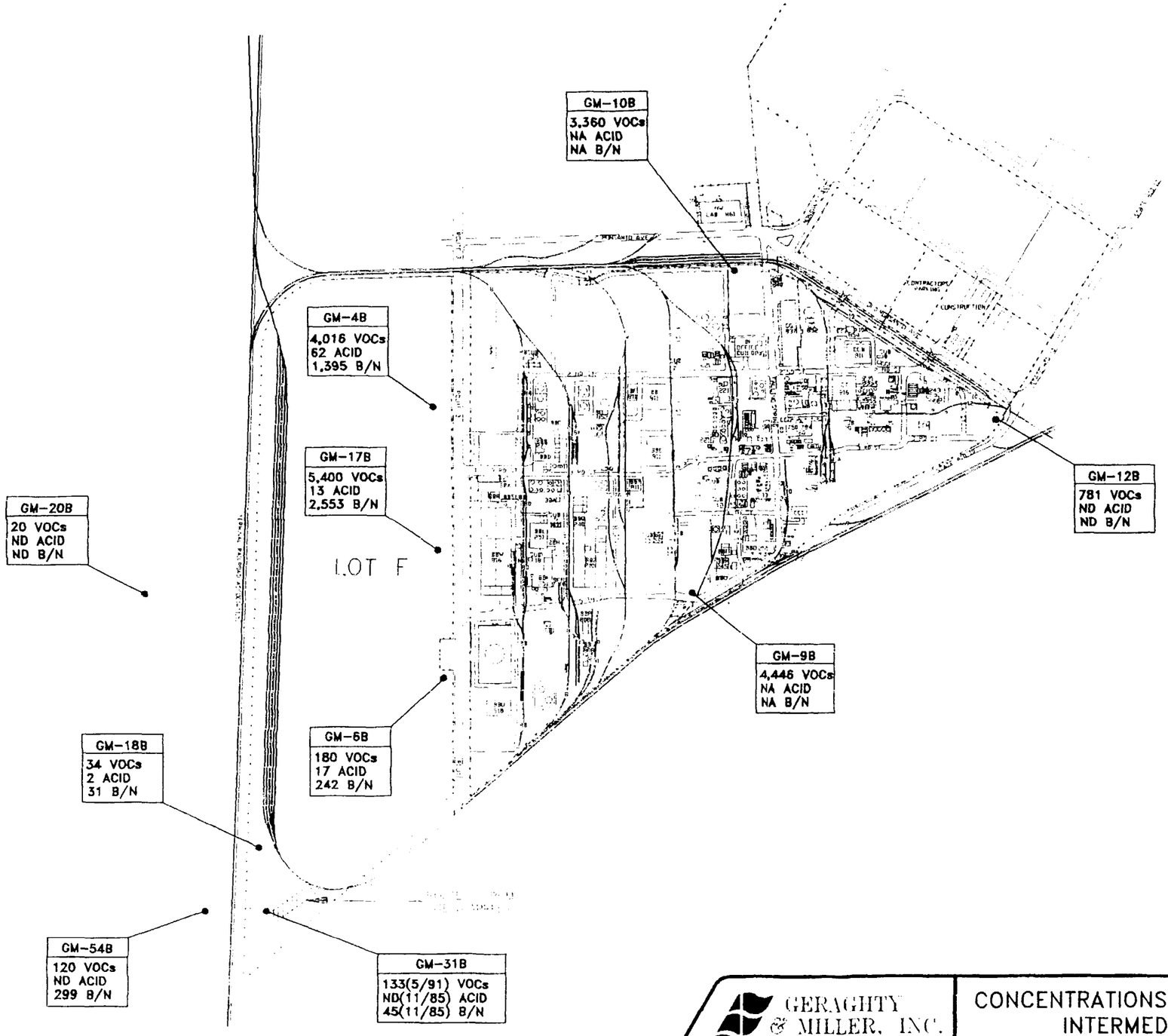

EXPLANATION	
GM-4B •	MONITORING WELL LOCATION AND DESIGNATION
4,016 VOCs	TOTAL VOLATILE ORGANIC COMPOUNDS (ug/L)
62 ACID	TOTAL ACID COMPOUNDS (ug/L)
1,395 B/N	TOTAL BASE/NEUTRAL COMPOUNDS (ug/L)
NA	NOT ANALYZED
ND	NOT DETECTED

GERAGHTY & MILLER, INC.
Environmental Services

CONCENTRATIONS OF ORGANIC COMPOUNDS IN THE INTERMEDIATE ZONE, NOVEMBER 1992

MONSANTO COMPANY
SAUGET, ILLINOIS

FIGURE
4

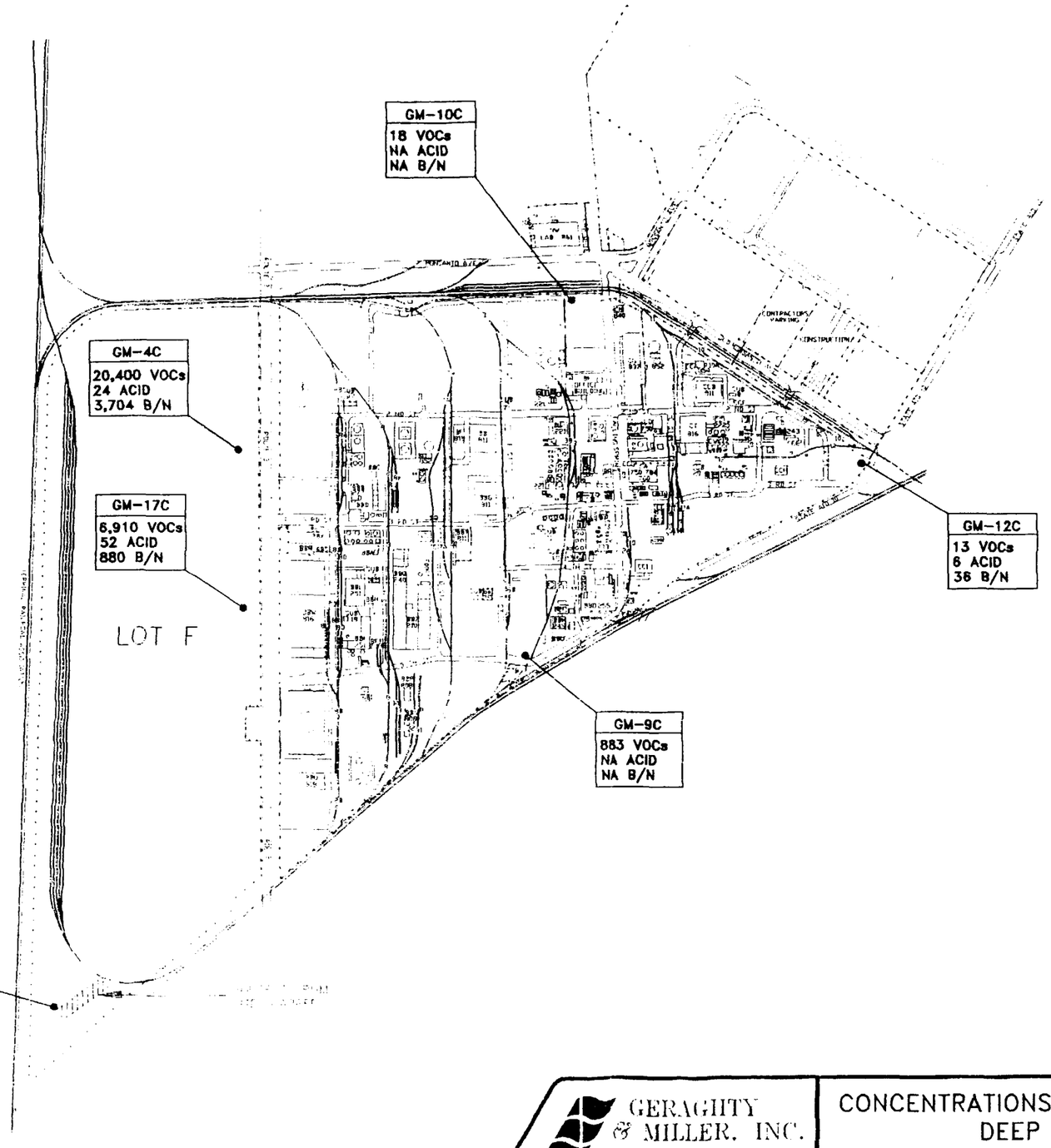

EXPLANATION	
GM-17C ●	MONITORING WELL LOCATION AND DESIGNATION
6,910 VOCs	TOTAL VOLATILE ORGANIC COMPOUNDS (ug/L)
52 ACID	TOTAL ACID COMPOUNDS (ug/L)
880 B/N	TOTAL BASE/NEUTRAL COMPOUNDS (ug/L)
NA	NOT ANALYZED
ND	NOT DETECTED

GERAGHTY & MILLER, INC.
Environmental Services

CONCENTRATIONS OF ORGANIC COMPOUNDS IN THE DEEP ZONE, NOVEMBER 1992

MONSANTO COMPANY
SAUGET, ILLINOIS

FIGURE
5

DWG DATE: 3/24/93 | PRJCT NO.: NY02303 | FILE: 1624 | DRAWING: JZ-1192 | CHECKED: D. COLTON | APPROVED: D. COLTON | DRAFTER: V.C./G.S.

DRAWNG: MDN-3 | CHECKED: D. COLTON | APPROVED: D. COLTON | DRAFTER: D. LORENZ

FILE: MDN-3 | PRJCT NO.: NY02303 | DWG DATE: 3-31-93

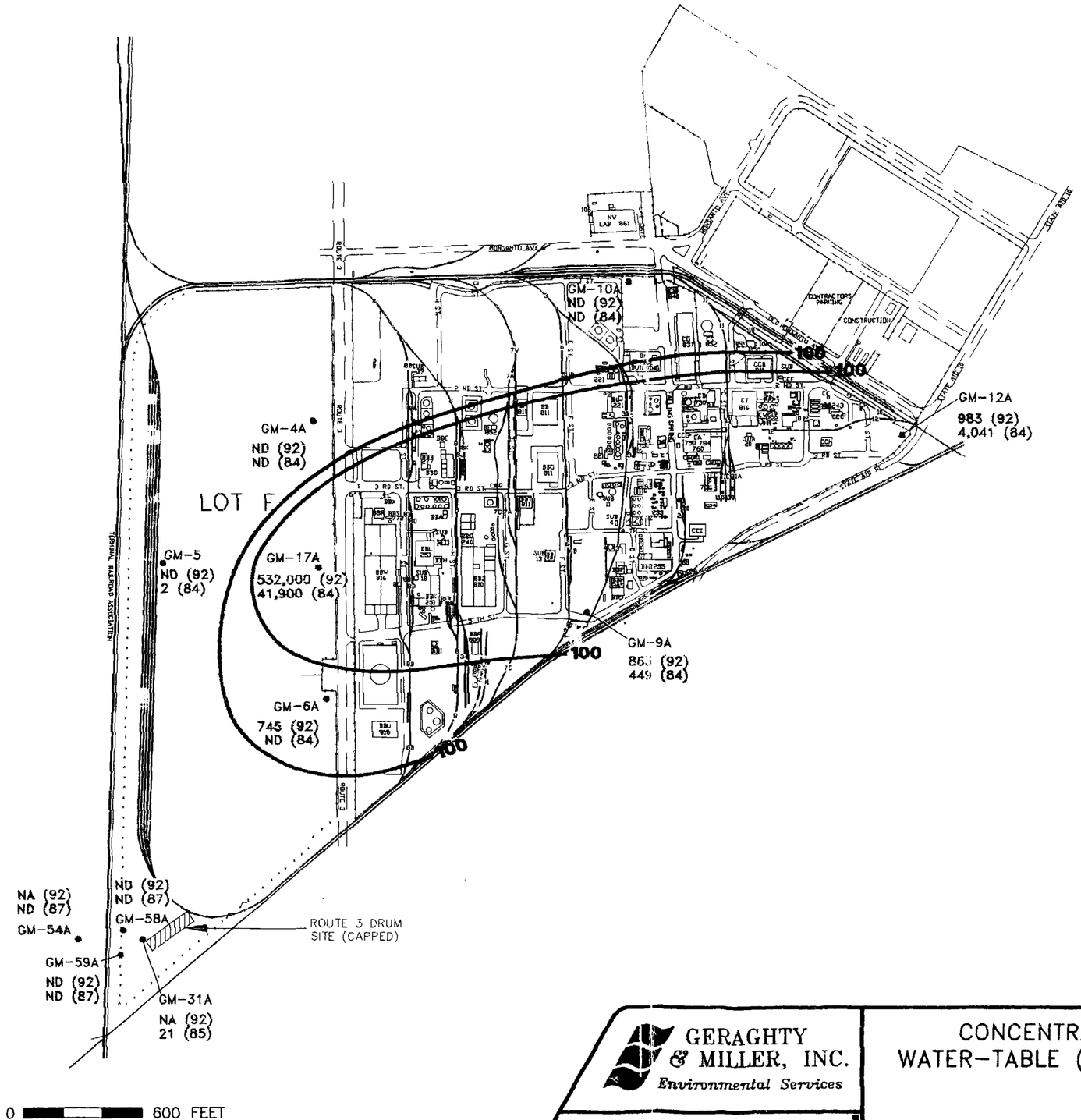

EXPLANATION

GM-12A • MONITORING WELL LOCATION AND DESIGNATION

983 (92) — CONCENTRATION OF BENZENE (ug/L); YEAR OF SAMPLING

100 — LINE OF EQUAL CHEMICAL CONCENTRATION (ug/L)

NA NOT ANALYZED

ND NOT DETECTED

GERAGHTY & MILLER, INC.
Environmental Services

CONCENTRATIONS OF BENZENE IN THE WATER-TABLE (SHALLOW) ZONE, 1984 vs. 1992

MONSANTO COMPANY
SAUGET, ILLINOIS

FIGURE
6

DWG DATE: 3-31-93 | PRJCT NO.: NY02303 | FILE: MDN-4 | DRAWING: MDN-4 | CHECKED: D. COLTON | APPROVED: D. COLTON | DRAFTER: D. LORENZ

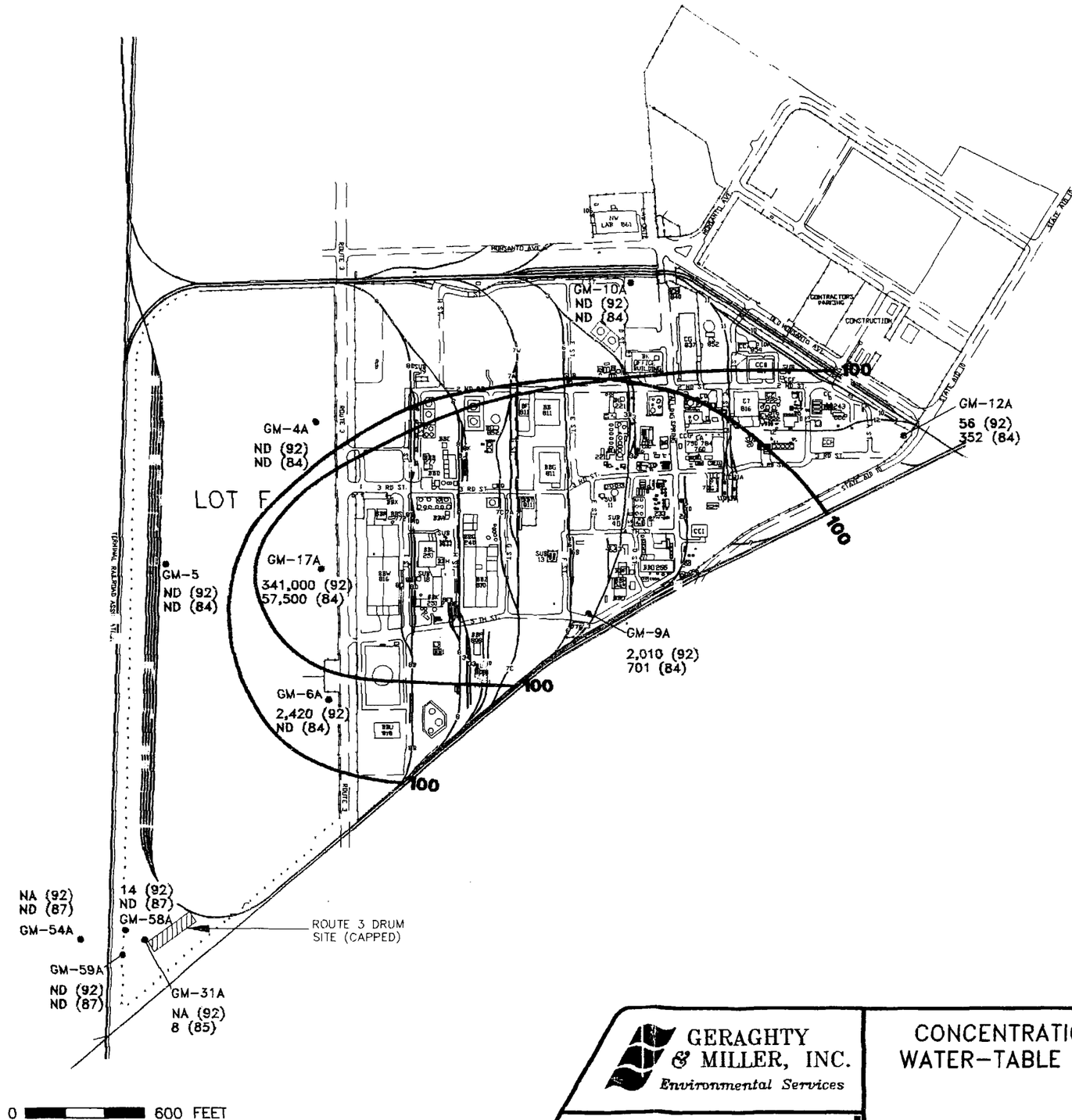

EXPLANATION

GM-12A • MONITORING WELL LOCATION AND DESIGNATION

56 (92) CONCENTRATION OF CHLOROBENZENE (ug/L); YEAR OF SAMPLING

100 LINE OF EQUAL CHEMICAL CONCENTRATION (ug/L)

NA NOT ANALYZED

ND NOT DETECTED

GERAGHTY & MILLER, INC.
Environmental Services

CONCENTRATIONS OF CHLOROBENZENE IN THE WATER-TABLE (SHALLOW) ZONE, 1984 vs. 1992

MONSANTO COMPANY
SAUGET, ILLINOIS

FIGURE
7

DRAWING: MON-5 | CHECKED: D. COLTON | APPROVED: D. COLTON | DRAFTER: D. LORENZ

FILE: MON-5 | PROJCT NO.: NY02303 | DWG DATE: 3-31-93

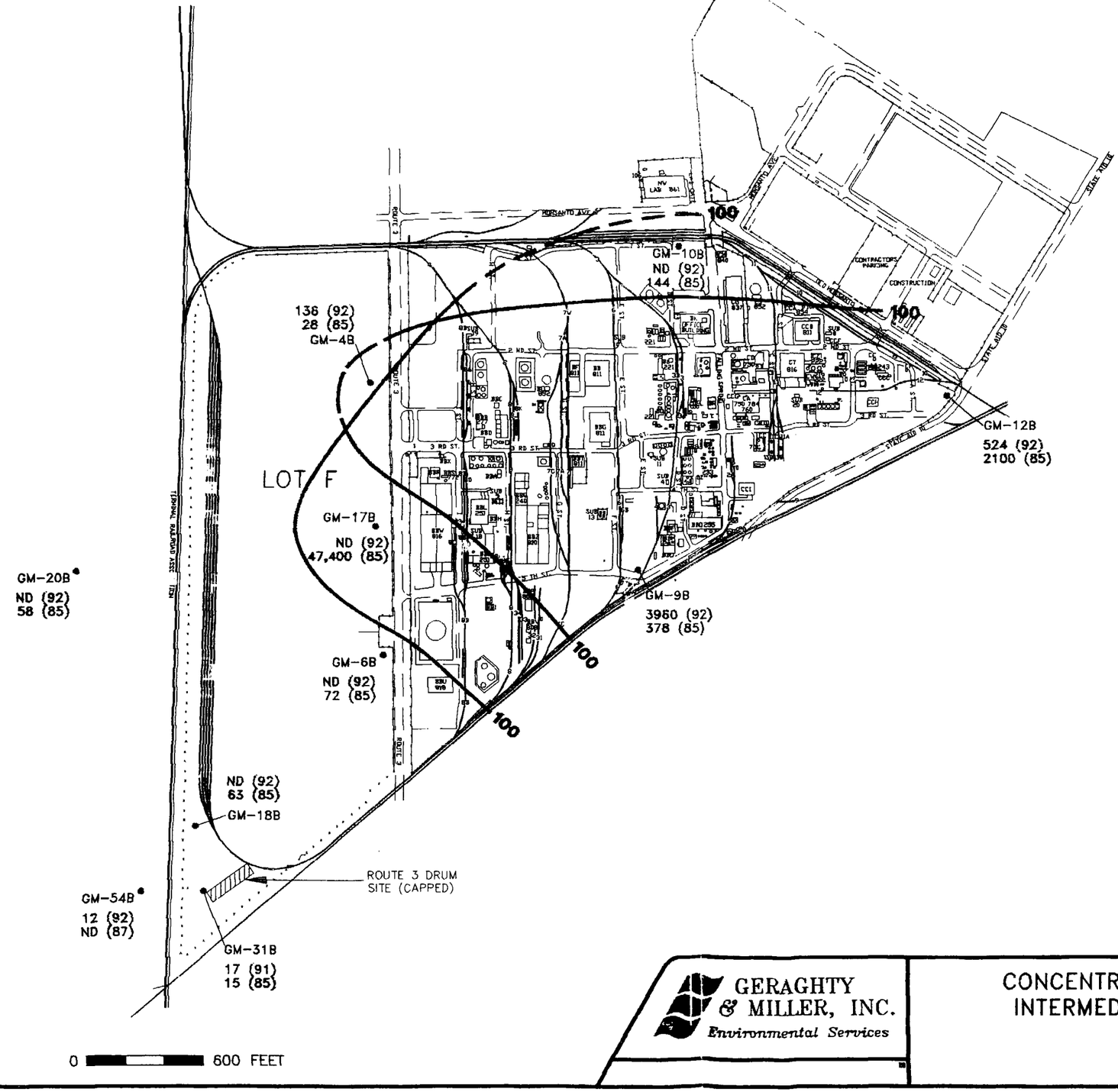

EXPLANATION

GM-12B • MONITORING WELL LOCATION AND DESIGNATION

524 (92) CONCENTRATION OF BENZENE (ug/L)

YEAR OF SAMPLING

100 LINE OF EQUAL CHEMICAL CONCENTRATION (ug/L)

ND NOT DETECTED

GERAGHTY & MILLER, INC.
Environmental Services

CONCENTRATIONS OF BENZENE IN THE INTERMEDIATE ZONE, 1985 vs. 1992

MONSANTO COMPANY
SAUGET, ILLINOIS

FIGURE
8

DRAWING: MON-6 | CHECKED: D. COLTON | APPROVED: D. COLTON | DRAFTER: D. LORENZ

FILE: MON-6 | PRJCT NO.: NY02303 | DWG DATE: 3-31-93

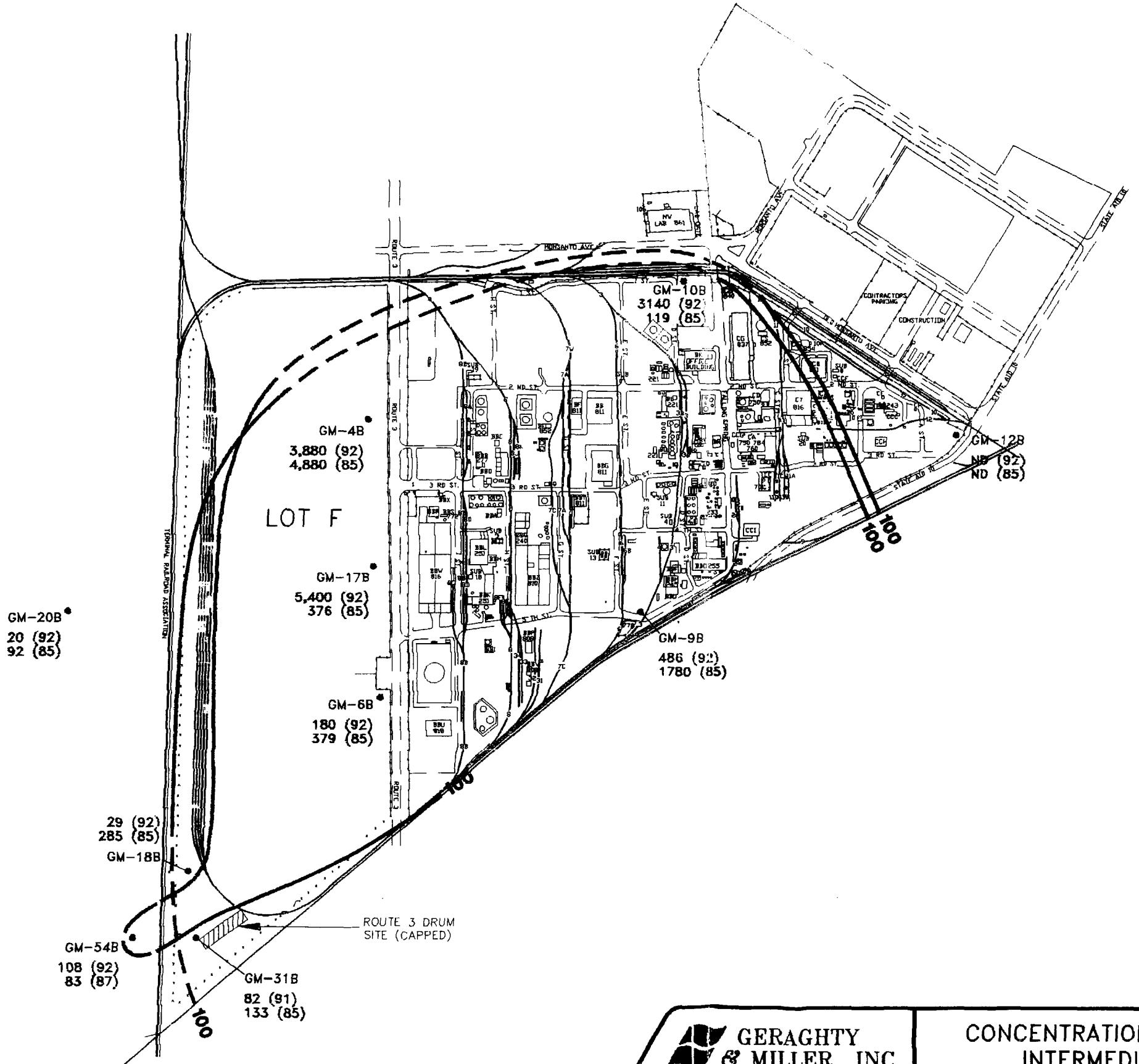

EXPLANATION

GM-20B • MONITORING WELL LOCATION AND DESIGNATION

20 (92) CONCENTRATION OF CHLOROBENZENE (ug/L); YEAR OF SAMPLING

—— 100 LINE OF EQUAL CHEMICAL CONCENTRATION (ug/L)

ND NOT DETECTED

GERAGHTY & MILLER, INC.
Environmental Services

CONCENTRATIONS OF CHLOROBENZENE IN THE INTERMEDIATE ZONE, 1985 vs. 1992

MONSANTO COMPANY
SAUGET, ILLINOIS

FIGURE
9

DRAWING: MDN-7 | CHECKED: D. COLTON | APPROVED: D. COLTON | DRAFTER: D. LORENZ

FILE: MDN-7 | PROJCT NO.: NY02303 | DWG DATE: 3-31-93

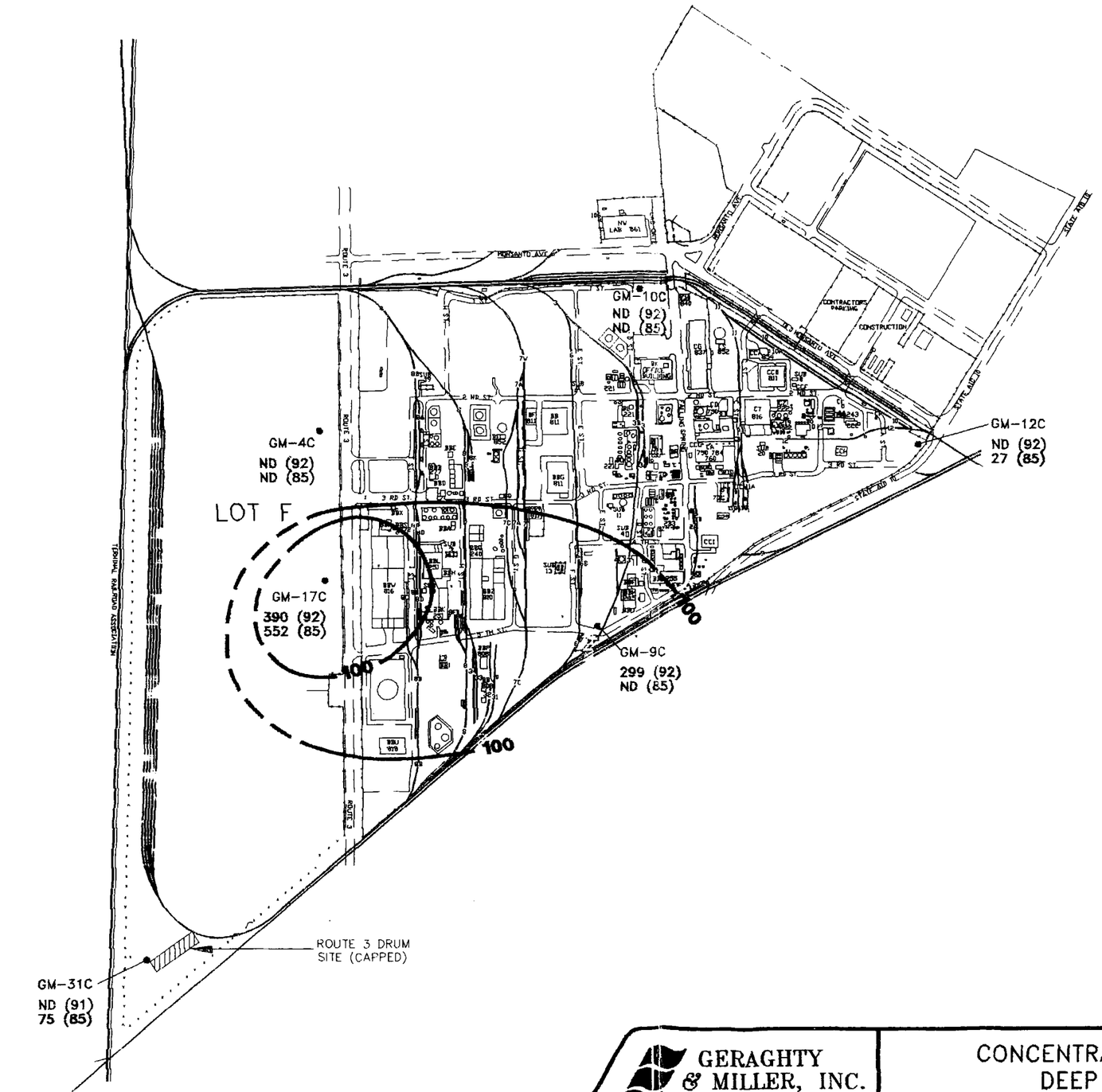

EXPLANATION

GM-17C • MONITORING WELL LOCATION AND DESIGNATION

390 (92) CONCENTRATION OF BENZENE (ug/L); YEAR OF SAMPLING

100 LINE OF EQUAL CHEMICAL CONCENTRATION (ug/L)

ND NOT DETECTED

GERAGHTY & MILLER, INC.
Environmental Services

CONCENTRATIONS OF BENZENE IN THE DEEP ZONE, 1985 vs. 1992

MONSANTO COMPANY
SAUGET, ILLINOIS

FIGURE
10

DRAWING: MON-8 | CHECKED: D. COLTON | APPROVED: D. COLTON | DRAFTER: D. LORENZ

FILE: MON-8 | PRJCT NO.: NY02303 | DWG DATE: 3-31-93

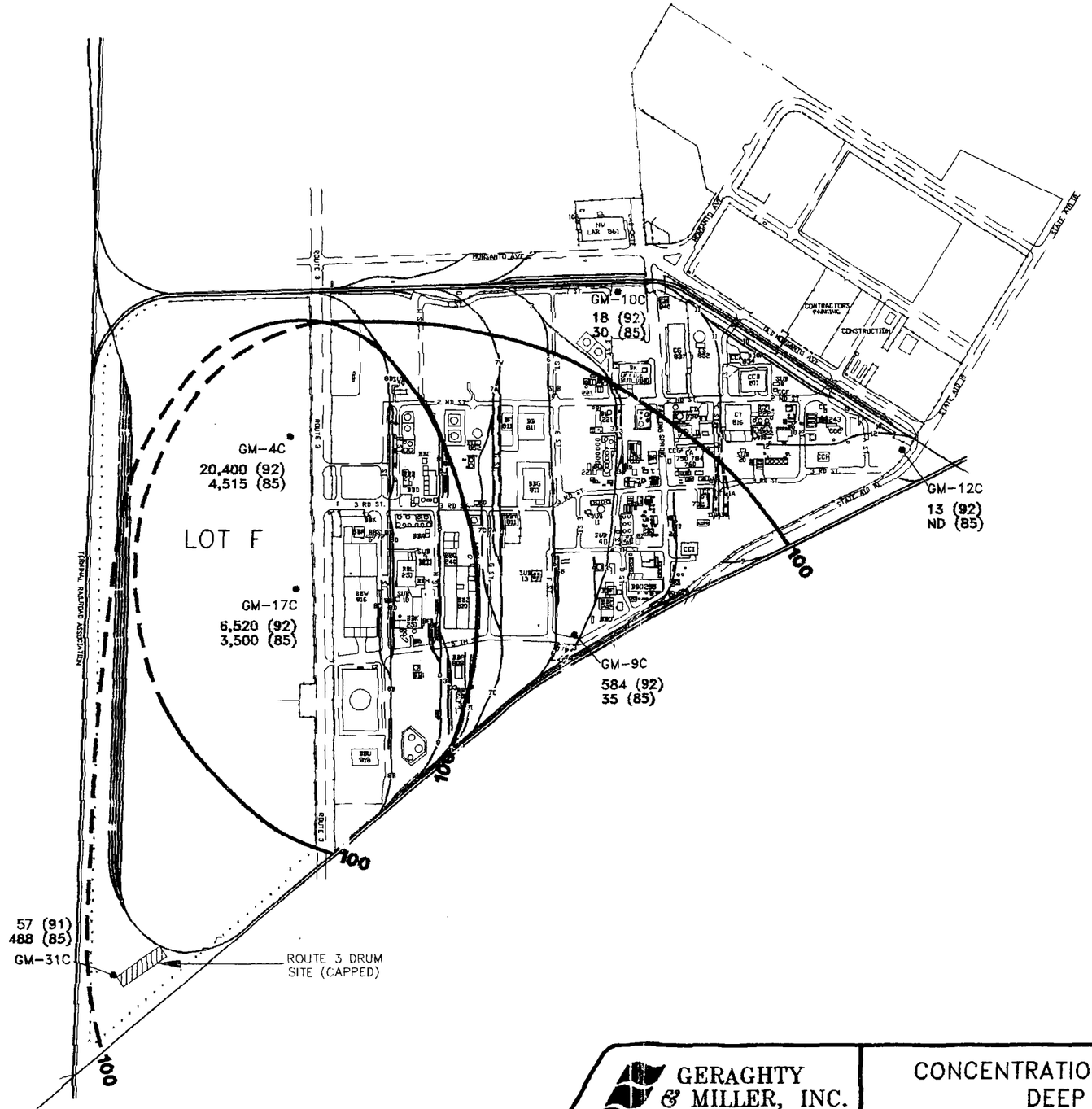

EXPLANATION

GM-12C • MONITORING WELL LOCATION AND DESIGNATION

13 (92) CONCENTRATION OF CHLOROBENZENE (ug/L); YEAR OF SAMPLING

100 LINE OF EQUAL CHEMICAL CONCENTRATION (ug/L)

ND NOT DETECTED

GERAGHTY & MILLER, INC.
Environmental Services

CONCENTRATIONS OF CHLOROBENZENE IN THE DEEP ZONE, 1985 vs. 1992

MONSANTO COMPANY
SAUGET, ILLINOIS

FIGURE
11

APPENDIX A

SEMIANNUAL MONITORING PROGRAM PROPOSED IN 1986

Table 19. Semiannual Ground-Water Monitoring Program Proposed in 1986, Monsanto Company, W.G. Krummrich Plant, Sauget, Illinois.

Well Number	Well Depth (feet below land surface)	USEPA Priority Pollutants: Volatile Organic Compounds	USEPA Priority Pollutants: Acid Extractable Organic Compounds	USEPA Priority Pollutants: Base/Neutral Extractable Organic Compounds	Non-Priority Pollutants: Volatile Organic Compounds	Non-Priority Pollutants: Acid Extractable Organic Compounds	Non-Priority Pollutants: Base/Neutral Extractable Organic Compounds
Plant Area							
GM-4A	28	X	X			X	
GM-4B	87	X	X			X	
GM-4C	104	X	X			X	
GM-9A	28	X					
GM-9B	75	X					
GM-9C	108	X					
GM-10A	28	X					
GM-10B	78	X					
GM-10C	111	X					
GM-12A	33.5	X			X		
GM-12B	89	X			X		
GM-12C	114.5	X			X		
GM-17A	38	X	X				
GM-17B	78	X	X	X			
GM-17C	107	X	X	X			
GM-31A	40	X	X	X	X		X
GM-31B	94	X					
GM-31C	126.5	X					
Landfill Area							
GM-27B	82	X					
GM-27C	105	X				X	
GM-28B	93	X				X	X
GM-28C	107	X				X	X
P-2	47	X					
P-6	30.5	X					
P-7	33	X	X	X		X	X
P-8	53.5	X				X	
P-13	53.5	X					
P-14	32.5	X					
GM-106	165.7	X	X	X			X

APPENDIX B

HYDROGEOLOGY

The W.G. Krummrich Plant is situated on the flood plain of the Mississippi River, south of East St. Louis, at Sauget, Illinois. The flood plain is locally named the American Bottoms, and contains unconsolidated valley fill deposits composed of recent alluvium (Cahokia Alluvium), which overlies glacial material (Henry Formation). Published information indicates that these unconsolidated deposits are underlain by bedrock of Mississippian age, which consists of limestone and dolomite with lesser amounts of sandstone and shale.

The Cahokia Alluvium (recent deposits) consists of unconsolidated, poorly sorted, fine-grained materials with some local sand and clay lenses. The material is about 40 feet thick and becomes coarser with depth. These recent alluvium deposits unconformably overlie the Henry Formation, which is Wisconsinan glacial outwash in the form of valley-train deposits. The Henry Formation is about 95 feet thick at the Mississippi River and becomes thinner with increasing distance from the river. These valley-train materials are generally medium-to-coarse sand and gravel and also increase in grain size with depth. In some areas, till and/or boulder zones were encountered 10 to 15 feet above the bedrock.

During the various drilling programs conducted on-site, the alluvium was determined to consist of fine gray and brown silty sand up to 40 feet below land surface. The geologic data show that the unconsolidated deposits range from 140 feet thick near the river to about 110 feet in the eastern part of the Monsanto property. The geologic logs for the drilling programs conducted by Geraghty & Miller and a geologic cross section are provided in Appendix B of the 1986 report (Geraghty & Miller, Inc. 1986a).

A review of well logs and boring logs for several drilling programs conducted at Lot H (Site R) by D'Appolonia Waste Management Services, Inc. (now IT Corporation) and Law Engineering indicates that directly beneath the fill are discontinuous lenses of silty/sandy

clays interbedded with silty sands from 20 to 50 feet below grade. This semi-confining unit overlies coarser, more permeable sand and gravel.

During the drilling programs conducted by Geraghty & Miller across the entire site, the contact or boundary between the Cahokia Alluvium and the Henry Formation could not be distinguished; however, this is not necessary for evaluating the hydrogeology of the area. Aquifer properties such as transmissivity are more important than geological distinctions. To simplify the flow system, the unconsolidated deposits were divided into three zones according to relative transmissivities: a water-table (shallow) zone, intermediate zone, and a deep zone.

The water-table zone consists of the Cahokia Alluvium (recent deposits), which is an unconsolidated, fine-grained silty sand. This zone is considered to be 30 feet thick, starting at the water table and continuing down to the medium sand deposits of the Henry Formation.

The intermediate zone is much coarser than the overlying water-table zone. This zone contains medium-grained sand representing the upper portion of the Henry Formation, a Wisconsinan glacial outwash in the form of valley-train deposits. Valley train deposits are long narrow bodies of outwash, deposited by meltwater streams far beyond the terminal moraine and confined within the walls of a valley. The Henry Formation is characterized by medium-to-coarse sand that becomes coarser with depth. The thickness of the zone is about 45 feet.

Below the intermediate zone is the deep zone, which is marked by coarse deposits of the lower portion of the Henry Formation. In some areas, till and/or boulder zones were encountered 10 to 15 feet above the bedrock. The zone is estimated to be about 40 feet thick.

SAMPLE/CORE LOG

BORING/WELL: GM-54A PROJECT NO: NO308SG3 PAGE: 1

SITE LOCATION: Monsanto Company Sauget, Illinois DRILLING STARTED: 10/6/87 DRILLING COMPLETED: 10/6/87

TOTAL DEPTH DRILLED: 39 ft HOLE DIAMETER: 8 in. TYPE OF SAMPLE/ CORING DEVICE: Split Spoon Core Barrel

LENGTH & DIAMETER OF CORING DEVICE: 2' x 2" SAMPLING INTERVAL: 5 ft

LAND-SURFACE ELEVATION: { } SURVEYED { } ESTIMATED DATUM:

DRILLING FLUID USED: None DRILLING METHOD: Auger (4-1/4" I.D.)

DRILLING CONTRACTOR: John Mathes & Assoc. DRILLER: Kent HELPER: Quentin

PREPARED BY: B. Blum HAMMER WEIGHT: 140 lb HAMMER DROP: 30 in.

SAMPLE NO	SAMPLE DEPTH		CORE RECVRY	BLOW COUNTS	SAMPLE/CORE DESCRIPTION
	FROM	TO			
	5	7	1.5	2-2-	Silt, brown, dry.
				1-2	
	10	12	1.5	2-4-	Silt, brown (10.0'-10.5') grading into a fine sand
				3-4	light brown with 20-25 percent silt. Dry.
	15	17	2.0	1-3-	Sand, fine, gray-brown (15'-16') silt, brown
				6-6	(16'-16.3') grading into a fine sand with 20-25
					percent silt (16.3'-17'), wet.
					Note: "A-rods" show wet line at ~12'.
	20	22	2.0	6-9-	Sand, fine, gray-brown with 10-15 percent silt
				15-26	grading into a fine sand, brown with 20-25 perc
					silt (21'-22'), wet. Wood cuttings are coming
					up from auger flytes.
*	25	27	0.5	2-2-	Sand, medium to coarse, brown with assorted colors
				3-3	wet.
	30	32	2.0	1-2-	Same as above.
				2-6	
	35	37	2.0	3-4	Sand, medium, light brown to gray.
				6-8	
*					Second attempt: first core barrel at this depth was
					empty - however, blow counts are from first
					attempted sample.

GERAGHTY & MILLER, INC.
Environmental Services

WELL CONSTRUCTION LOG
(UNCONSOLIDATED)

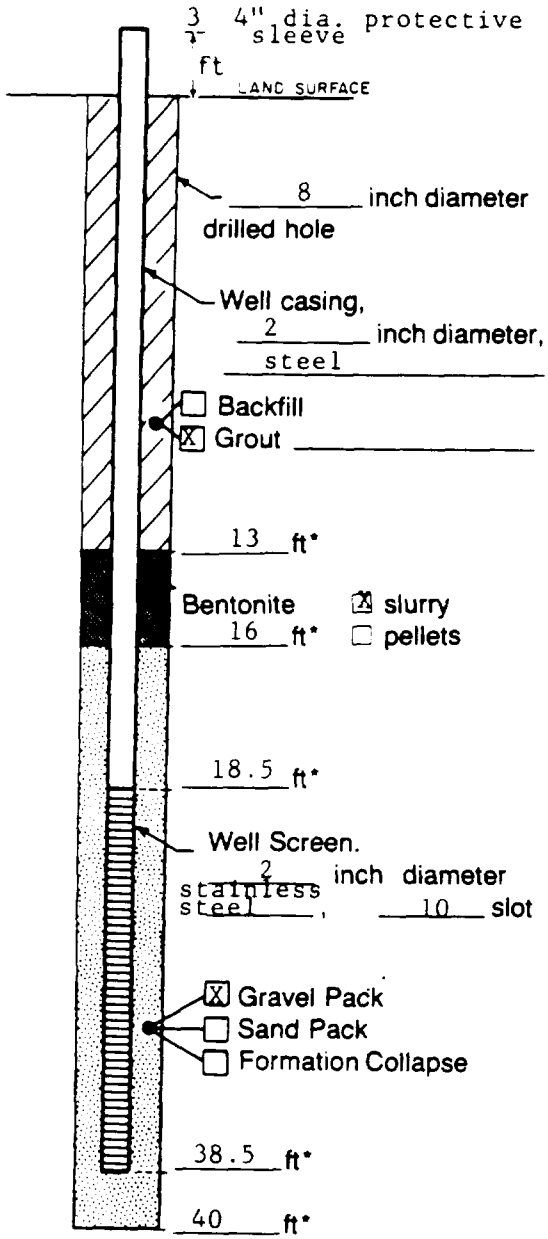

Measuring Point is
Top of Well Casing
Unless Otherwise Noted.

*Depth Below Land Surface

Project Monsanto/N03U8SG3 Well GM-54A
Town/City Sauget
County St. Clair State Illinois
Permit No. _____
Land-Surface Elevation
and Datum _____ feet ☐ Surveyed
_____ ☐ Estimated
Installation Date(s) 10-6-87
Drilling Method hollow stem auger
Drilling Contractor _____
Drilling Fluid none

Development Technique(s) and Date(s)

10-13-87

Fluid Loss During Drilling 50 gallo
Water Removed During Development 100 gallo
Static Depth to Water 15 feet below M.
Pumping Depth to Water _____ feet below M.
Pumping Duration _____ hours
Yield 1-2 gpm Date _____
Specific Capacity _____ gpm/ft
Well Purpose Ground water monitoring in the "shallow" zone

Remarks

Prepared by Brian A. Blum

SAMPLE/CORE LOG

BORING/WELL: GM-54B PROJECT NO: NO308SG3 PAGE: 1

SITE LOCATION: Monsanto Company Sauget, Illinois DRILLING STARTED: 9/28/87 DRILLING COMPLETED: 9/29/87

TOTAL DEPTH DRILLED: 93 ft HOLE DIAMETER: 8 in. TYPE OF SAMPLE/ CORING DEVICE: Flume or Split Spoon Core Barrel

LENGTH & DIAMETER OF CORING DEVICE: 2' x 2" SAMPLING INTERVAL: 10 ft

LAND-SURFACE ELEVATION: { } SURVEYED { } ESTIMATED DATUM:

DRILLING FLUID USED: Bentonite & Water DRILLING METHOD: Hydraulic (mud) Rotary

DRILLING CONTRACTOR: John Mathes & Assoc. DRILLER: Chris Hebel HELPER: Dave Ellis

PREPARED BY: B. Blum HAMMER WEIGHT: 140 lb HAMMER DROP: 30 in.

SAMPLE NO	SAMPLE DEPTH		CORE RECVRY	BLOW COUNTS	SAMPLE/CORE DESCRIPTION
	FROM	TO			
9/28	0	10		Flume	No sample collected.
	10	20		Flume	Silt, and sand, fine; brown.
	20	30		Flume	
	30	40		Flume	
	Sample	collec	ted		
	40	50		Flume	Sand, fine to medium (75%) brown; silt (25%)
					coarsening downwards to sand, medium to coarse.
9/29	50	60		Flume	Sand, fine to coarse (85%) silt (15%) brown; with a
					lot of lignite.
	60	70		Flume	At 65' wood chips were coming out of flume. Material
					is same as above with wood.
	70	80		Flume	At 72' hit some kind of obstruction (wood) through it
					at 75'. Material is same as above.
	80	90			Same as above.
	87	89	2	Split	Sand, medium to coarse, gray; well sorted. Only 6"
				Spoon	of recovery was virgin formation. The other 18"
					was backwash.
	90	93		Flume	Same as above.

GERAGHTY & MILLER, INC.
Environmental Services

WELL CONSTRUCTION LOG
(UNCONSOLIDATED)

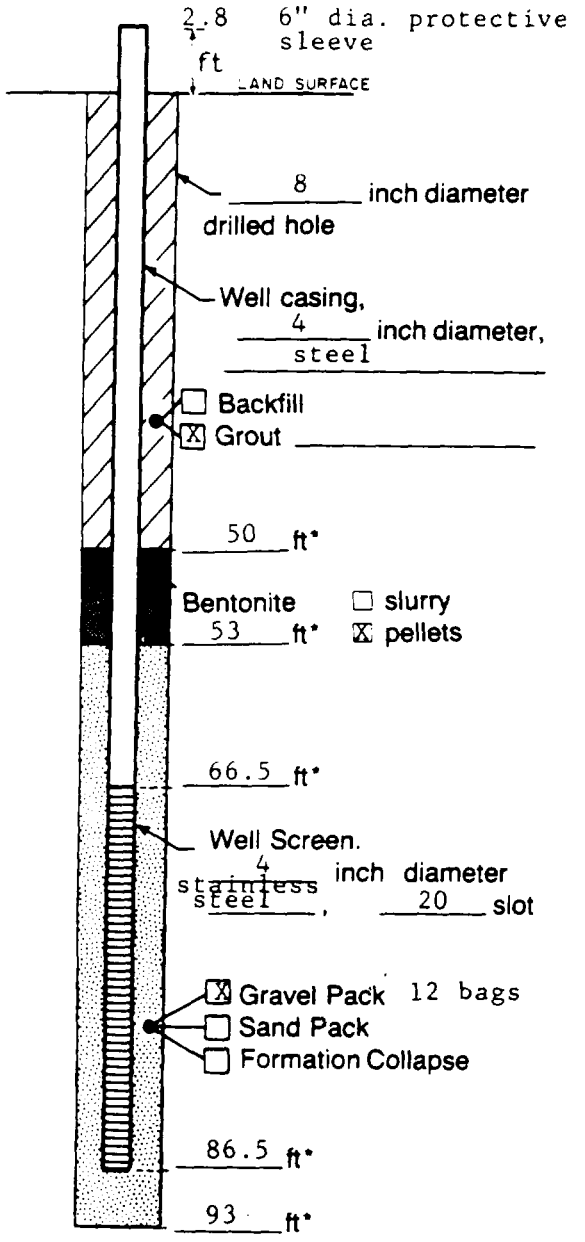

Measuring Point is
Top of Well Casing
Unless Otherwise Noted.

*Depth Below Land Surface

Project Monsanto/ N0308SG3 Well GM-54B

Town/City Sauget

County St. Clair State Illinois

Permit No. _____

Land-Surface Elevation

and Datum _____ feet ☐ Surveyed

_____ ☐ Estimated

Installation Date(s) 9-29-87/9-30-87

Drilling Method hydraulic (mud) rotary

Drilling Contractor John Mathes and Associates, Inc.

Drilling Fluid Polymer free bentonite and hydrant water

Development Technique(s) and Date(s)

surging with compressed air

10-13-87

Fluid Loss During Drilling 500 gallo

Water Removed During Development 1,000 gallo

Static Depth to Water 15 feet below M.

Pumping Depth to Water _____ feet below M.

Pumping Duration _____ hours

Yield >10 gpm Date _____

Specific Capacity _____ gpm/ft

Well Purpose Ground water monitoring in the "intermediate" zone.

Remarks Relatively high yielding well

Prepared by Brian A. Blum

SAMPLE/CORE LOG

BORING/WELL: GM-58A PROJECT NO: NO308SG3 PAGE: 1

SITE LOCATION: Monsanto Company, Sauget, Illinois DRILLING STARTED: 10/7/87 DRILLING COMPLETED: 10/7/87

TOTAL DEPTH DRILLED: 39 ft HOLE DIAMETER: 8 in. TYPE OF SAMPLE/ CORING DEVICE: Split Spoon, Core Barrel

LENGTH & DIAMETER OF CORING DEVICE: 2' x 2" SAMPLING INTERVAL: 5 ft

LAND-SURFACE ELEVATION: { } SURVEYED { } ESTIMATED DATUM:

DRILLING FLUID USED: None DRILLING METHOD: Hollow Stem Auger

DRILLING CONTRACTOR: John Mathes & Assoc. DRILLER: Kent HELPER: Quentin

PREPARED BY: B. Blum HAMMER WEIGHT: 140 lb HAMMER DROP: 30 in.

SAMPLE NO	SAMPLE DEPTH		CORE RECVRY	BLOW COUNTS	SAMPLE/CORE DESCRIPTION
	FROM	TO			
	5	7	2.0	2-3-	Silt, light brown, dry.
				3-4	
	10	12	2.0	4-9-	Sand, fine, light brown with 20-25 percent silt.
				17-26	
	15	17	2.0	4-4-	Same as above.
				5-6	
	20	22	2.0	5-6-	Same as above, wet.
				9-12	
	25	27	2.0	2-6-	Same as above with 10-15 percent silt.
				11-14	
	30	32	2.0	3-5-	Sand, fine, brown with 50 percent silt.
				7-9	
	35	37	2.0	3-6-	Sand, fine to medium with 5 percent silt.
				9-12	

GERAGHTY & MILLER, INC.
Environmental Services

WELL CONSTRUCTION LOG
(UNCONSOLIDATED)

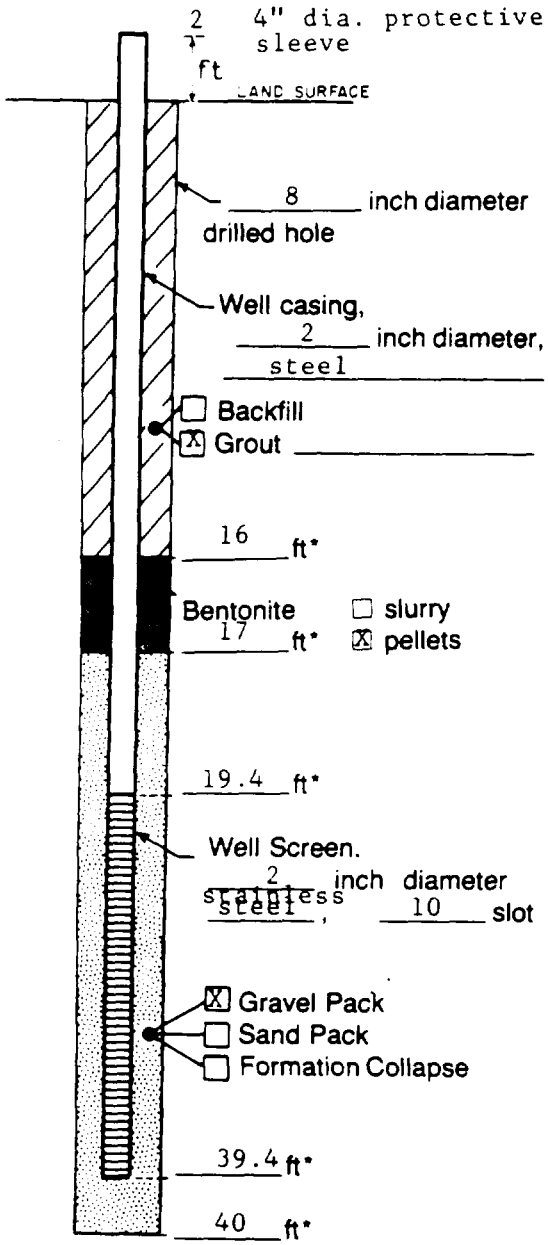

Measuring Point is
Top of Well Casing
Unless Otherwise Noted.

*Depth Below Land Surface

Project Monsanto/N0308SG3 Well MW-58A

Town/City Sauget

County St. Clair State Illinois

Permit No. _____

Land-Surface Elevation

and Datum _____ feet ☐ Surveyed

_____ ☐ Estimated

Installation Date(s) 10-7-87

Drilling Method _____

Drilling Contractor _____

Drilling Fluid _____

Development Technique(s) and Date(s)

10-15-87

Fluid Loss During Drilling _____ gallo

Water Removed During Development _____ gallo

Static Depth to Water 20 feet below M.

Pumping Depth to Water _____ feet below M.

Pumping Duration _____ hours

Yield 1-2 gpm Date _____

Specific Capacity _____ gpm/ft

Well Purpose _____

Remarks Ground water monitoring in the "shallow" zon

Prepared by Brian A. Blum

SAMPLE/CORE LOG

BORING/WELL: GM-59A PROJECT NO: NO308SG3 PAGE: 1

SITE LOCATION: Monsanto Company, Sauget, Illinois DRILLING STARTED: 10/8/87 DRILLING COMPLETED: 10/8/87

TOTAL DEPTH DRILLED: 39 ft HOLE DIAMETER: 8 in. TYPE OF SAMPLE/ CORING DEVICE: Split Spoon Core Barrel

LENGTH & DIAMETER OF CORING DEVICE: 2' x 2" SAMPLING INTERVAL: 5 ft

LAND-SURFACE ELEVATION: { } SURVEYED { } ESTIMATED DATUM:

DRILLING FLUID USED: None DRILLING METHOD: Hollow Stem Auger

DRILLING CONTRACTOR: John Mathes & Assoc. DRILLER: Kent HELPER: Quentin

PREPARED BY: B. Blum HAMMER WEIGHT: 140 lb HAMMER DROP: 30 in.

SAMPLE NO	SAMPLE DEPTH FROM	SAMPLE DEPTH TO	CORE RECVRY	BLOW COUNTS	SAMPLE/CORE DESCRIPTION
	5	7	2	3-6-	Sand, very fine, tan; with lenses of silt, dry.
				9-14	
	10	12	2	4-8-	Silt, brown, dry.
				12-13	
	15	17	2	5-6-	Sand, very fine, tan; with lenses of silt.
				7-8	
	20	22	2	0-1-	Sand, fine, brown; with 10-15 percent silt, moist.
				2-4	
	25	27	2	1-2-	Sand, fine, brown; well sorted with a lens of silt.
				8-11	
	30	32	2	2-3-	Same as above.
				12-15	
	35	37	2	2-3-	Sand, fine, brown; with 10 to 15 percent silt.
				9-13	

GERAGHTY & MILLER, INC.
Environmental Services

WELL CONSTRUCTION LOG
(UNCONSOLIDATED)

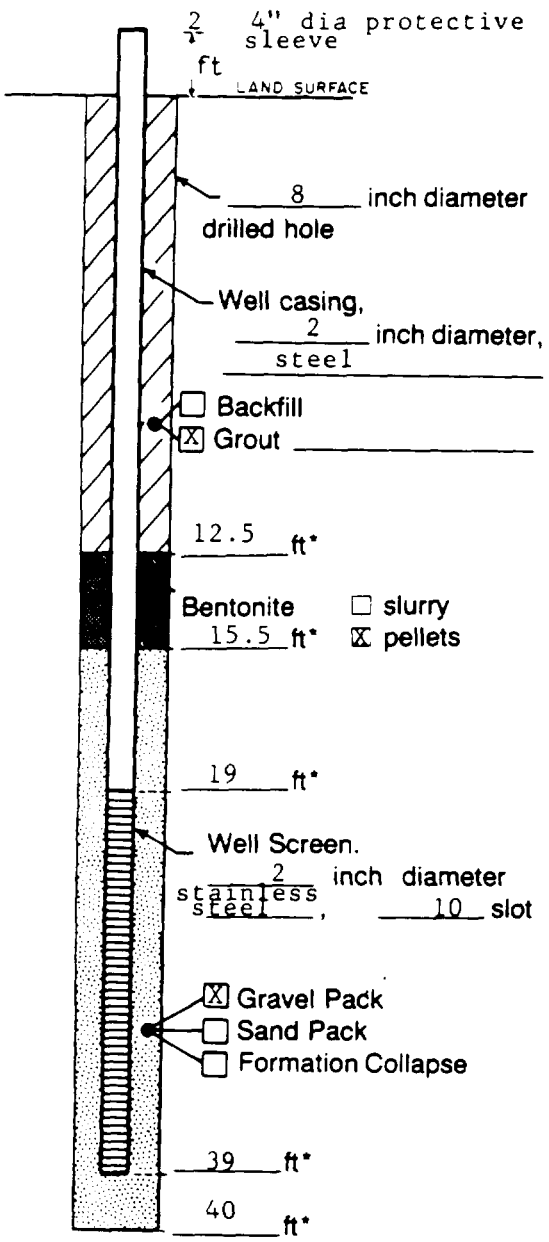

Measuring Point is
Top of Well Casing
Unless Otherwise Noted.

*Depth Below Land Surface

Project Monsanto/.N0308SG3 Well GM-59A

Town/City Sauget

County St. Clair State Illinois

Permit No. _____

Land-Surface Elevation

and Datum _____ feet ☐ Surveyed

_____ ☐ Estimated

Installation Date(s) 10-8-87

Drilling Method hollow stem auget

Drilling Contractor _____

Drilling Fluid _____

Development Technique(s) and Date(s)

10-15-87

Fluid Loss During Drilling _____ gallo

Water Removed During Development _____ gallo

Static Depth to Water 20 feet below M

Pumping Depth to Water _____ feet below M

Pumping Duration _____ hours

Yield 1-2 gpm Date _____

Specific Capacity _____ gpm/ft

Well Purpose Ground water monitoring in the "shallow" zone.

Remarks _____

Prepared by Brian A. Blum

SAMPLE/CORE LOG

BORING/WELL: GM-55C PROJECT NO: NO896WG1 PAGE: 1 of 2

SITE LOCATION: Kirkland & Ellis Sauget, Illinois DRILLING STARTED: 9/30/87 DRILLING COMPLETED: 10/1/87

TOTAL DEPTH DRILLED: 131 ft HOLE DIAMETER: 8 in. TYPE OF SAMPLE/ CORING DEVICE: Flume or Split Spoon Core Barrel

LENGTH & DIAMETER OF CORING DEVICE: 2' x 2" SAMPLING INTERVAL: 10 ft

LAND-SURFACE ELEVATION: { } SURVEYED { } ESTIMATED DATUM:

DRILLING FLUID USED: Bentonite & Water DRILLING METHOD: Hydraulic (mud) Rotary

DRILLING CONTRACTOR: John Mathes & Assoc. DRILLER: Chris Hebel HELPER: Dave Ellis

PREPARED BY: B. Blum HAMMER WEIGHT: 140 lb HAMMER DROP: 30 in.

SAMPLE NO	SAMPLE DEPTH		CORE RECVRY	BLOW COUNTS	SAMPLE/CORE DESCRIPTION
	FROM	TO			
9/30	0	10		Flume	No sample - Silt and clay gray-black. Too fine to
					to fall out of suspension of mud.
	10	20		Flume	Silt and clay, gray-black.
	20	30		Flume	Same as above with some wood. Driller describes
					formation drilling like "smooth clay."
	30	40		Flume	Same as above.
	40	50		Flume	Same as above grading into sand, fine. Rods
					started bouncing at about 49'.
	50	60		Flume	Same as above (fine sand). The sand is not falling
					out of suspension due to thick drilling fluid.
	60	70		Flume	Same as above - start to notice lignite.
10/1	70	80		Flume	Same as above - coarsening with depth. Higher
					percentages of medium to coarse sand.
	80	90		Flume	At 83' driller thought he hit some wood or boulder.
					Material is the same as above. No wood seen in
					pit. Broken rock chips.
	90	100		Flume	Sand, medium to coarse with gravel.
	97	97	0.75	29-42	Sand, medium, gray with gravel.
				50/1"	
	100	110		Flume	Same as above - at 100' to 101' and 107' the rods
					were bouncing due to cobbles. Pieces of broken
					rock seen in flume sample. At 107' rods were
					bouncing and drilling was more difficult.

SAMPLE/CORE LOG (Cont.d)

BORING/WELL: GM-55C PREPARED BY: B. Blum PAGE: 2 of 2

SAMPLE NO	SAMPLE DEPTH		CORE RECVRY	BLOW COUNTS	SAMPLE/CORE DESCRIPTION
	FROM	TO			
10/1	100	110		Flume	Flume sample has a lot of angular material, coa
(cont)					sand and gravel size. In addition, pods of sil
					are present. Most likely till.
	110	118		Flume	Same as above. Rods were jumping from 105' to 106
	118	119.5	1.5	76-90-	Sand, medium to coarse with gravel in a matrix of
				100	fine sand, silt, gray; most likely till.
	120	131		Flume	Same as above. Refusal.

GERAGHTY & MILLER, INC.

WELL CONSTRUCTION LOG

(UNCONSOLIDATED)

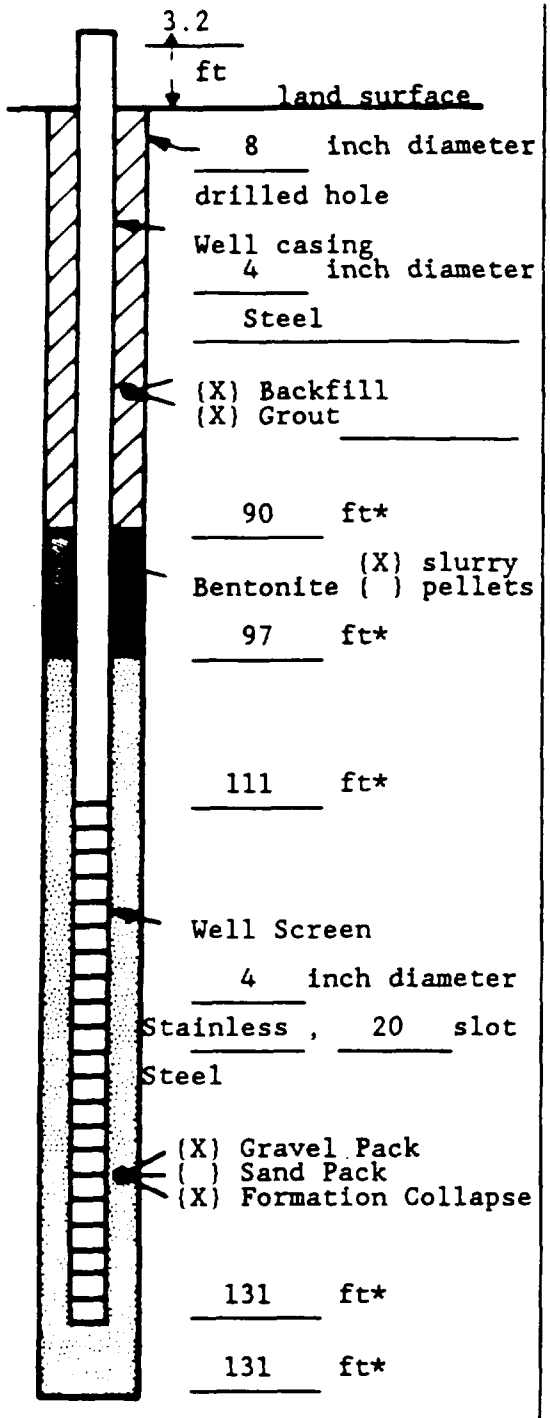

Measuring Point is Top of Well Casing Unless Otherwise Noted.

* Depth Below Land Surface

Project NY0896WG01 Kirkland & Ellis Well GM-55C

Town/City Sauget

County St. Clair State Illinois

Permit No.

Land-Surface Elevation and Datum 422.88 feet (X) Surveyed ( ) Estimated

Installation Date(s) 10/1, 10/2, 10/5/87

Drilling Method Mud Rotary

Drilling Contractor John Mathes & Associates, Inc.

Drilling Fluid Bentonite

Development Technique(s) and Date(s)
Surged with compressed air on 10/8, 10/9/87

Fluid Loss During Drilling gallon

Water Removed During Development gallon

Static Depth to Water 36 feet below M.P

Pumping Depth to Water feet below M.P

Pumping Duration hours

Yield -10 gpm Date

Specific Capacity gpm/f

Well Purpose Ground-water monitoring well

Fracture Zones

Remarks

Prepared by B. Blum

SAMPLE/CORE LOG

BORING/WELL: GM-56C PROJECT NO: NO896WG1 PAGE: 1

SITE LOCATION: Kirkland & Ellis Sauget, Illinois DRILLING STARTED: 10/5/87 DRILLING COMPLETED: 10/6/87

TOTAL DEPTH DRILLED: 121 FT HOLE DIAMETER: 8 in. TYPE OF SAMPLE/ CORING DEVICE: Flume or Split Spoon Core Barrel

LENGTH & DIAMETER OF CORING DEVICE: 2' x 2" SAMPLING INTERVAL: 10 ft

LAND-SURFACE ELEVATION: { } SURVEYED { } ESTIMATED DATUM:

DRILLING FLUID USED: Bentonite & Water DRILLING METHOD: Hydraulic (mud) Rotary

DRILLING CONTRACTOR: John Mathes & Assoc. DRILLER: Chris Hebel HELPER: Dave Ellis

PREPARED BY: B. Blum HAMMER WEIGHT: 140 lb HAMMER DROP: 30 in.

SAMPLE NO	SAMPLE DEPTH		CORE RECVRY	BLOW COUNTS	SAMPLE/CORE DESCRIPTION
	FROM	TO			
10/5	0	10		Flume	Clay and silt - gray grading into sand, fine, light
					brown.
	10	20		Flume	Clay and silt, with sand, fine, gray and brown.
	20	30		Flume	Same as above. Trace sand is coarsening slightly.
	30	40		Flume	Same as above.
	40	50		Flume	Same as above to 45'. Sand 45-50'.
	50	60		Flume	Sand, medium, gray-brown; some coarse sand and
					gravel.
	60	70		Flume	Same as above with some pebbles too.
	70	80		Flume	Same as above. At 80' drilling through cobbles or
					boulders.
	80	90		Flume	Same as above. Hit cobbles at 83'.
	90	100		Flume	Same as above.
10/6	100	107		Flume	Same as above.
	108	109	1.0	Split	Clay, gray with sand, medium to coarse. (Coarse
				Spoon	material may be backwash).
				19-50-	
				100/4"	
	110	121			Sand, medium to coarse, with broken rock chips
					(from boulders or cobbles). Most likely till.
					Refusal.

GERAGHTY & MILLER, INC.

WELL CONSTRUCTION LOG

(UNCONSOLIDATED)

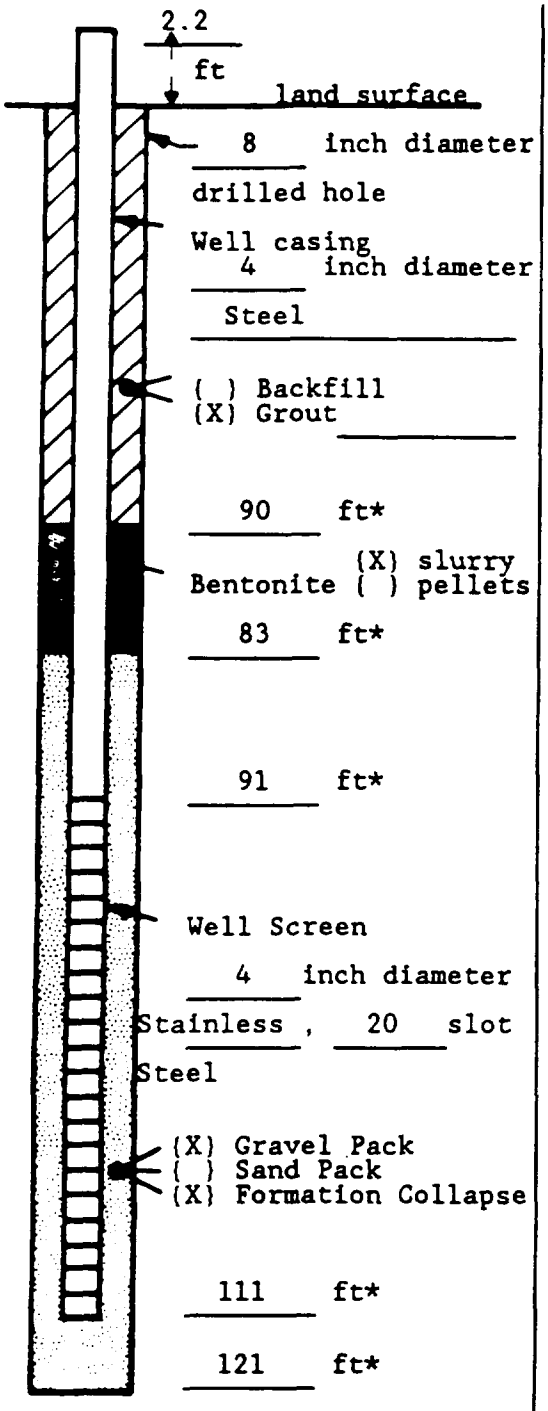

Measuring Point is Top of Well Casing Unless Otherwise Noted.

* Depth Below Land Surface

Project NY0896WG01 Kirkland & Ellis Well GM-56C

Town/City Sauget

County St. Clair State Illinois

Permit No.

Land-Surface Elevation and Datum 422.16 feet (X) Surveyed ( ) Estimated

Installation Date(s) 10/6, 10/7/87

Drilling Method Mud Rotary

Drilling Contractor John Mathes & Associates, Inc.

Drilling Fluid Bentonite

Development Technique(s) and Date(s)
Surged with compressed air on 10/13, 10/14/87

Fluid Loss During Drilling gallon

Water Removed During Development gallon

Static Depth to Water 36 feet below M.P

Pumping Depth to Water feet below M.P

Pumping Duration hours

Yield ~10 gpm Date

Specific Capacity gpm/f

Well Purpose Ground-water monitoring well

Fracture Zones

Remarks

Prepared by B. Blum

SAMPLE/CORE LOG

BORING/WELL: GM-57C PROJECT NO: NO896WG1 PAGE: 1

SITE LOCATION: Kirkland & Ellis Sauget, Illinois DRILLING STARTED: 10/7/87 DRILLING COMPLETED: 10/9/87

TOTAL DEPTH DRILLED: 116 FT HOLE DIAMETER: 8 in. TYPE OF SAMPLE/ CORING DEVICE: Flume or Split Spoon Core Barrel

LENGTH & DIAMETER OF CORING DEVICE: 2' x 2" SAMPLING INTERVAL: 10 ft

LAND-SURFACE ELEVATION: { } SURVEYED { } ESTIMATED DATUM:

DRILLING FLUID USED: Bentonite & Water DRILLING METHOD: Hydraulic (mud) Rotary

DRILLING CONTRACTOR: John Mathes & Assoc. DRILLER: Chris Hebel HELPER: Dave Ellis

PREPARED BY: B. Blum HAMMER WEIGHT: 140 lb HAMMER DROP: 30 in.

SAMPLE NO	SAMPLE DEPTH		CORE RECVRY	BLOW COUNTS	SAMPLE/CORE DESCRIPTION
	FROM	TO			
10/7	0	10		Flume	Large stone and fill consisting of brick, cinder, a various sorted gravels and sand.
	10	20		Flume	Same as above.
	20	30		Flume	Same as above from 20-23 feet grading into a sand, fine with silt.
	30	40		Flume	Same as above.
10/8	40	50		Flume	Same as above.
	50	60		Flume	Sand, fine and medium with silt and some gravel.
	60	70		Flume	Same as above.
	70	80		Flume	Hit wood obstruction at 72'. Material is sand, fin to medium with gravel.
10/9	80	90		Flume	Hit cobbles and boulders at 83'-86'.
	90	97		Flume	Same as above.
	97	99	0.75	24-13-14-25	Sand, fine to coarse, gray (30%), gravel (30%), pebbles and broken rock chips (20%), silt and clay (20%).
	100	110			Hit Boulders at 101'-102', 107'-108'. Same as above
	110	116			In boulders. Same as above. Drills like till.
					Refusal.

GERAGHTY & MILLER, INC.

WELL CONSTRUCTION LOG

(UNCONSOLIDATED)

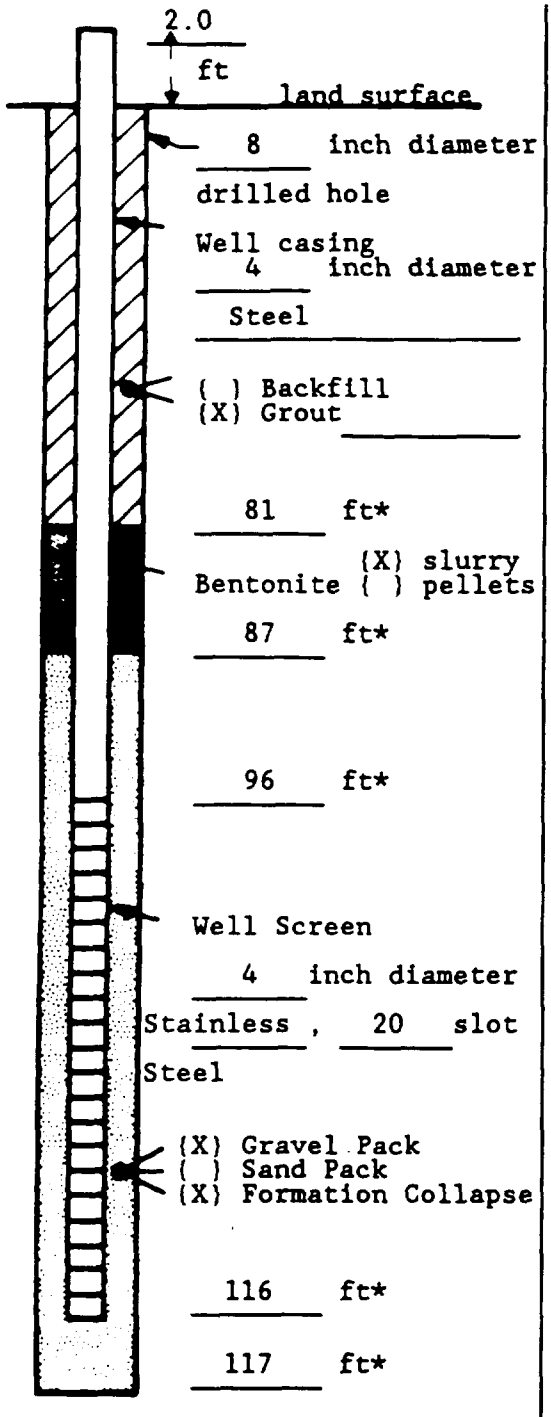

Measuring Point is Top of Well Casing Unless Otherwise Noted.

* Depth Below Land Surface

Project NY0896WG01 Kirkland & Ellis Well GM-57C

Town/City Sauget

County St. Clair State Illinois

Permit No.

Land-Surface Elevation and Datum 424.02 feet (X) Surveyed ( ) Estimated

Installation Date(s) 10/9/87

Drilling Method Mud Rotary

Drilling Contractor John Mathes & Associates, Inc.

Drilling Fluid Bentonite

Development Technique(s) and Date(s)
Surged with compressed air on 10/13/87

Fluid Loss During Drilling gallon

Water Removed During Development gallon

Static Depth to Water 38 feet below M.P

Pumping Depth to Water feet below M.P

Pumping Duration hours

Yield ~10 gpm Date

Specific Capacity gpm/f

Well Purpose Ground-water monitoring well

Fracture Zones

Remarks

Prepared by B. Blum

SUMMARY OF GROUND-WATER QUALITY DATA MONSANTO COMPANY SAUGET, ILLINOIS

February 1993

Geraghty & Miller, Inc.
Ground-Water Consultants
125 East Bethpage Road
Plainview, New York 11803
(516) 249-7600

APPENDICES

A. Table 1 - Summary of Volatile Organic Compounds.

B. Table 2 - Summary of Acid Extractable Organic Compounds.

C. Table 3 - Summary of Base/Neutral Extractable Organic Compounds.

Table 1. Summary of Volatile Organic Compounds, in Ground Water, Krummrich Plant, Sauget, Illinois.

Well Number:	GM-4A	GM-4A	GM-4A	GM-4A	GM-4A	GM-4A	GM-4A	GM-4A	GM-4A	GM-4B
Date:	12/86	5/87	11/87	5/88	11/88	11/89	11/90	11/91	11/92	12/86
Laboratory:	ETC	ETC	ETC	ETC	ETC	ETC	ETC	ETC	ETC	ETC
USEPA Priority Pollutant Volatile Organic Compounds concentrations are in ug/L										
Acrolein	<100	<100	<100	<100	<100	<100	<100	<100	<20	<100
Acrylonitrile	<100	<100	<100	<100	<100	<100	<100	<100	<10	<100
Benzene	<4.4	<4.4	<4.4	<4.4	<4.4	**4.84**	<4.4	<4.4	<4.4	<4.4
Bis (chloromethyl) ether	<10	<10	<10	<10	<10	<10	<10	<10	NA	<10
Bromoform	<4.7	<4.7	<4.7	<4.7	<4.7	<4.7	<4.7	<4.7	<4.7	<4.7
Carbon tetrachloride	<2.8	<2.8	<2.8	<2.8	<2.8	<2.8	<2.8	<2.8	<2.8	<2.8
Chlorobenzene	<6	<6.0	<6.0	<6.0	<6.0	**20.7**	**9.44**	<6.0	<6.0	<6
Chlorodibromomethane	<3.1	<3.1	<3.1	<3.1	<3.1	<3.1	<3.1	<3.1	<3.1	<3.1
Chloroethane	<10	<10	<10	<10	<10	<10	<10	<10	<10	<10
2-Chloroethylvinyl ether	<10	<10	<10	<10	<10	<10	<10	<10	NA	<10
Chloroform	<1.6	<1.6	<1.6	**1.9**	<1.6	<1.6	<1.6	<1.6	<1.6	<1.6
Dichlorobromomethane	<2.2	<2.2	<2.2	<2.2	<2.2	<2.2	<2.2	<2.2	<2.2	<2.2
Dichlorodifluoromethane	<10	<10	<10	<10	<10	<10	<10	<10	<10	<10
1,1-Dichloroethane	<4.7	<4.7	<4.7	<4.7	<4.7	<4.7	<4.7	<4.7	<4.7	<4.7
1,2-Dichloroethane	<2.8	<2.8	<2.8	<2.8	<2.8	<2.8	<2.8	<2.8	<2.8	<2.8
1,1-Dichloroethylene	<2.8	<2.8	<2.8	<2.8	<2.8	<2.8	<2.8	<2.8	<2.8	<2.8
1,2-Dichloropropane	<6	<6	<6.0	<6.0	<6.0	<6.0	<6.0	<6.0	<6.0	<6
cis-1,3-Dichloropropylene	<5	<5	<5.0	<5.0	<5.0	<5.0	<5.0	<5.0	<5.0	<5
Ethylbenzene	<7.2	<7.2	<7.2	<7.2	<7.2	<7.2	<7.2	<7.2	<7.2	<7.2
Methyl bromide	<10	<10	<10	<10	<10	<10	<10	<10	<10	<10
Methyl chloride	<10	<10	<10	<10	<10	<10	<10	<10	<10	<10
Methylene chloride	<2.8	**41.5**	**3.23**	**13.3**	**13.6**	**3.71**	<2.8	<2.8	<2.8	<2.8
1,1,2,2-Tetrachloroethane	<6.9	<6.9	<6.9	<6.9	<6.9	<6.9	<6.9	<6.9	<6.9	<6.9
Tetrachloroethylene	<4.1	<4.1	<4.1	<4.1	<4.1	<4.1	<4.1	<4.1	<4.1	<4.1
Toluene	<6	<6	<6.0	<6.0	<6.0	<6.0	<6.0	<6.0	<6.0	<6
1,2-trans-Dichloroethylene	<1.6	<1.6	<1.6	<1.6	<1.6	<1.6	<1.6	<1.6	<1.6	<1.6
1,1,1-Trichloroethane	<3.8	<3.8	<3.8	<3.8	<3.8	<3.8	<3.8	<3.8	<3.8	<3.8
1,1,2-Trichloroethane	<5	<5	<5.0	<5.0	<5.0	<5.0	<5.0	<5.0	<5.0	<5
Trichloroethylene	<1.9	<1.9	<1.9	<1.9	<1.9	<1.9	<1.9	<1.9	<1.9	<1.9
Trichlorofluoromethane	<10	<10	<10	<10	<10	<10	<10	<10	<10	<10
Vinyl chloride	<10	<10	<10	<10	<10	<10	<10	<10	<10	<10
trans-1,3-Dichloropropylene	<10	<10	<10	<10	<10	<10	<10	<10	<10	<10
Sub Total 1	0	42	3	15	14	29	9	0	0	0
Miscellaneous Volatile Organic Compounds										
Acetone	NA	NA	NA	NA	NA	NA	NA	NA	<10	NA
Methyl ethyl ketone	NA	NA	NA	NA	NA	NA	NA	NA	<10	NA
Carbon disulfide	NA	NA	NA	NA	NA	NA	NA	NA	<10	NA
2-Hexanone	NA	NA	NA	NA	NA	NA	NA	NA	<10	NA
Styrene	NA	NA	NA	NA	NA	NA	NA	NA	<10	NA
Methyl-iso-butyl ketone	NA	NA	NA	NA	NA	NA	NA	NA	<10	NA
Methyl isoamyl ketone	NA	NA	NA	NA	NA	NA	NA	NA	NA	NA
m-Xylene	NA	NA	NA	NA	NA	NA	NA	NA	<10	NA
o-Xylene/p-Xylene	NA	NA	NA	NA	NA	NA	NA	NA	<10	NA
Sub Total 2	0	0	0	0	0	0	0	0	0	0
Total VOCs Analyzed	0	42	3	15	14	29	9	0	0	0

See last page for footnotes.

Table 1. Summary of Volatile Organic Compounds, in Ground Water, Krummrich Plant, Sauget, Illinois.

Well Number:	GM-4B	GM-4B	GM-4B	GM-4B	GM-4B	GM-4B	GM-4B	GM-4B	GM-4B	4E
Date:	5/87	11/87	5/88	11/88	5/89	11/89	5/90	11/90	5/91	11/9
Laboratory:	ETC	ETC	ETC	ETC	ETC	ETC	ETC	ETC	ETC	ETC
USEPA Priority Pollutant Volatile Organic Compounds concentrations are in ug/L										
Acrolein	<5,000	<500	<100	<100	<1,000	<10,000	<25,000	<20,000	<5,000	<25,00
Acrylonitrile	<5,000	<500	<100	<100	<1,000	<10,000	<25,000	<20,000	<5,000	<25,00
Benzene	<220	**31.9**	<4.4	**13.2**	**127**	<440	<1,100	<880	<220	<1,10
Bis (chloromethyl) ether	<500	<50	<10	<10	<100	<1,000	<2,500	<2,000	<500	<2,50
Bromoform	<240	<24	<4.7	<4.7	<47	<470	<1,200	<940	<240	<1,20
Carbon tetrachloride	<140	<14	<2.8	<2.8	<28	<280	<700	<560	<140	<70
Chlorobenzene	**3,050**	**1,990**	<6.0	<6.0	**3,510**	**8,120**	**11,800**	**14,600**	**8,990**	**10,700**
Chlorodibromomethane	<160	<16	<3.1	<3.1	<31	<310	<780	<620	<160	<78
Chloroethane	<500	<50	<10	<10	<100	<1,000	<2,500	<2,000	<500	<2,50
2-Chloroethylvinyl ether	<500	<50	<10	<10	<100	<1,000	<2,500	<2,000	<500	<2,50
Chloroform	<80	<8.0	**2.0**	<1.6	<16	<160	<400	<320	<80	<40
Dichlorobromomethane	<110	<11	<2.2	<2.2	<22	<220	<550	<440	<110	<55
Dichlorodifluoromethane	<500	<50	<10	<10	<100	<1,000	<2,500	<2,000	<500	<2,50
1,1-Dichloroethane	<240	<24	<4.7	<4.7	<47	<470	<1,200	<940	<240	<1,20
1,2-Dichloroethane	<140	<14	<2.8	<2.8	<28	<280	<700	<560	<140	<70
1,1-Dichloroethylene	<140	<14	<2.8	<2.8	<28	<280	<700	<560	<140	<70
1,2-Dichloropropane	<300	<30	<6.0	<6.0	<60	<600	<1,500	<1,200	<300	<1,50
cis-1,3-Dichloropropylene	<250	<25	<5.0	<5.0	<50	<500	<1,300	<1,000	<250	<1,30
Ethylbenzene	<360	<36	<7.2	<7.2	<72	<720	<1,800	<1,400	<360	<1,80
Methyl bromide	<500	<50	<10	<10	<100	<1,000	<2,500	<2,000	<500	<2,50
Methyl chloride	<500	<50	<10	<10	<100	<1,000	<2,500	<2,000	<500	<2,50
Methylene chloride	**208**	<14	**64.9**	<2.8	<28	<280	**2,180**	<560	<140	<70
1,1,2,2-Tetrachloroethane	<350	<35	<6.9	<6.9	<69	<690	<1,700	<1,400	<350	<1 70
Tetrachloroethylene	<210	<21	<4.1	<4.1	<41	<410	<1,000	<820	<210	0
Toluene	<300	<30	<6.0	<6.0	<60	<600	<1,500	<1,200	<300	0
1,2-trans-Dichloroethylene	<80	<8.0	<1.6	<1.6	<16	<160	<400	<320	<80	<40
1,1,1-Trichloroethane	<190	<19	<3.8	<3.8	<38	<380	<950	<760	<190	<950
1,1,2-Trichloroethane	<250	<25	<5.0	<5.0	<50	<500	<1,300	<1,000	<250	<1,30
Trichloroethylene	<95	<9.5	<1.9	<1.9	<19	<190	<480	<380	<95	<480
Trichlorofluoromethane	<500	<50	<10	<10	<100	<1,000	<2,500	<2,000	<500	<2,50
Vinyl chloride	<500	<50	<10	<10	<100	<1,000	<2,500	<2,000	<500	<2,50
trans-1,3-Dichloropropylene	<500	<50	<10	<10	<100	<1,000	<2,500	<2,000	<500	<2,50
Sub Total 1	3,258	2,022	67	13	3,637	8,120	13,980	14,600	8,990	10,700
Miscellaneous Volatile Organic Compounds										
Acetone	NA	NA	NA	NA	NA	NA	NA	NA	NA	NA
Methyl ethyl ketone	NA	NA	NA	NA	NA	NA	NA	NA	NA	NA
Carbon disulfide	NA	NA	NA	NA	NA	NA	NA	NA	NA	NA
2-Hexanone	NA	NA	NA	NA	NA	NA	NA	NA	NA	NA
Styrene	NA	NA	NA	NA	NA	NA	NA	NA	NA	NA
Methyl-iso-butyl ketone	NA	NA	NA	NA	NA	NA	NA	NA	NA	NA
Methyl isoamyl ketone	NA	NA	NA	NA	NA	NA	NA	NA	NA	NA
m-Xylene	NA	NA	NA	NA	NA	NA	NA	NA	NA	NA
o-Xylene/p-Xylene	NA	NA	NA	NA	NA	NA	NA	NA	NA	NA
Sub Total 2	0	0	0	0	0	0	0	0	0	0
Total VOCs Analyzed	3,258	2,022	67	13	3,637	8,120	13,980	14,600	8,990	10,700

See last page for footnotes.

Table 1. Summary of Volatile Organic Compounds, in Ground Water, Krummrich Plant, Sauget, Illinois.

Well Number:	GM-4B	GM-4C	GM-4C	GM-4C	GM-4C	GM-4C	GM-4C	GM-4C	GM-4C	GM-4C
Date:	11/92	12/86	5/87	11/87	5/88	11/88	5/89	11/89	5/90	11/90
Laboratory:	ETC	ETC	ETC	ETC	ETC	ETC	ETC	ETC	ETC	ETC
USEPA Priority Pollutant Volatile Organic Compounds concentrations are in ug/L										
Acrolein	<200	<100	<5,000	<1,000	<100	<100	<1,000	<10,000	<25,000	<10,000
Acrylonitrile	<100	<100	<5,000	<1,000	<100	<100	<1,000	<10,000	<25,000	<10,000
Benzene	**136**	<4.4	<220	<44	<4.4	<4.4	**290**	**693**	<1,100	<440
Bis (chloromethyl) ether	NA	<10	<500	<100	<10	<10	<100	<1,000	<2,500	<1,000
Bromoform	<120	<4.7	<240	<47	<4.7	<4.7	<47	<470	<1,200	<470
Carbon tetrachloride	<70	<2.8	<140	<28	<2.8	<2.8	<28	<280	<700	<280
Chlorobenzene	**3,880**	<6	**1,770**	**2,490**	<6.0	**71.6**	**5,440**	**14,700**	**16,700**	**10,700**
Chlorodibromomethane	<78	<3.1	<160	<31	<3.1	<3.1	<31	<310	<780	<310
Chloroethane	<250	<10	<500	<100	<10	<10	<100	<1,000	<2,500	<1,000
2-Chloroethylvinyl ether	NA	<10	<500	<100	<10	<10	<100	<1,000	<2,500	<1,000
Chloroform	<40	<1.6	<80	**46**	<1.6	<1.6	<16	<160	<400	<160
Dichlorobromomethane	<55	<2.2	<110	<22	<2.2	<2.2	<22	<220	<550	<220
Dichlorodifluoromethane	<250	<10	<500	<100	<10	<10	<100	<1,000	<2,500	<1,000
1,1-Dichloroethane	<120	<4.7	<240	<47	<4.7	<4.7	<47	<470	<1,200	<470
1,2-Dichloroethane	<70	<2.8	<140	<28	<2.8	<2.8	<28	<280	<700	<280
1,1-Dichloroethylene	<70	<2.8	<140	<28	<2.8	<2.8	<28	<280	<700	<280
1,2-Dichloropropane	<150	<6	<300	<60	<6.0	<6.0	<60	<600	<1,500	<600
cis-1,3-Dichloropropylene	<130	<5	<250	<50	<5.0	<5.0	<50	<500	<1,300	<500
Ethylbenzene	<180	<7.2	<360	<72	<7.2	<7.2	<72	<720	<1,800	<720
Methyl bromide	<250	<10	<500	<100	<10	<10	<100	<1,000	<2,500	<1,000
Methyl chloride	<250	<10	<500	<100	<10	<10	<100	<1,000	<2,500	<1,000
Methylene chloride	<70	<2.8	**203**	<28	**38.4**	<2.8	**60.5**	**455**	**1,250**	<280
1,1,2,2-Tetrachloroethane	<170	<6.9	<350	<69	<6.9	<6.9	<69	<690	<1,700	<690
Tetrachloroethylene	<100	<4.1	<210	<41	<4.1	<4.1	<41	<410	<1,000	<410
Toluene	<150	<6	<300	<60	<6	<6	<60	<600	<1,500	<600
1,2-trans-Dichloroethylene	<40	<1.6	<80	<16	<1.6	<1.6	<16	<160	<400	<160
1,1,1-Trichloroethane	<95	<3.8	<190	<38	<3.8	<3.8	<38	<380	<950	<380
1,1,2-Trichloroethane	<130	<5	<250	<50	<5	<5	<50	<500	<1,300	<500
Trichloroethylene	<48	<1.9	<95	<19	<1.9	<1.9	<19	<190	<480	<190
Trichlorofluoromethane	<250	<10	<500	<100	<10	<10	<100	<1,000	<2,500	<1,000
Vinyl chloride	<250	<10	<500	<100	<10	<10	<100	<1,000	<2,500	<1,000
trans-1,3-Dichloropropylene	<250	<10	<500	<100	<10	<10	<100	<1,000	<2,500	<1,000
Sub Total 1	4,016	0	1,973	2,536	38	72	5,791	15,848	17,950	10,700
Miscellaneous Volatile Organic Compounds										
Acetone	<250	NA	NA	NA	NA	NA	NA	NA	NA	NA
Methyl ethyl ketone	<250	NA	NA	NA	NA	NA	NA	NA	NA	NA
Carbon disulfide	<250	NA	NA	NA	NA	NA	NA	NA	NA	NA
2-Hexanone	<250	NA	NA	NA	NA	NA	NA	NA	NA	NA
Styrene	<250	NA	NA	NA	NA	NA	NA	NA	NA	NA
Methyl-iso-butyl ketone	<10	NA	NA	NA	NA	NA	NA	NA	NA	NA
Methyl isoamyl ketone	NA	NA	NA	NA	NA	NA	NA	NA	NA	NA
m-Xylene	<250	NA	NA	NA	NA	NA	NA	NA	NA	NA
o-Xylene/p-Xylene	<250	NA	NA	NA	NA	NA	NA	NA	NA	NA
Sub Total 2	0	0	0	0	0	0	0	0	0	0
Total VOCs Analyzed	4,016	0	1,973	2,536	38	72	5,791	15,848	17,950	10,700

See last page for footnotes.

Table 1. Summary of Volatile Organic Compounds, in Ground Water, Krummrich Plant, Sauget, Illinois.

Well Number:	GM-4C	GM-4C	GM-4C	GM-5	GM-6A	GM-6B	GM-9A	GM-9A	GM-9A	GM-
Date:	5/91	11/91	11/92	11/92	11/92	11/92	12/86	5/87	11/87	5/8
Laboratory:	ETC	ETC	ETC	ETC	ETC	ETC	ETC	ETC	ETC	ETC
USEPA Priority Pollutant Volatile Organic Compounds concentrations are in ug/L										
Acrolein	<5,000	<5,000	<2,000	<20	<50	<20	<1,000	<100	<100	<100
Acrylonitrile	<5,000	<5,000	<1,000	<10	<25	<10	<1,000	<100	<100	<100
Benzene	<220	**337**	<1,100	<4.4	**745**	<4.4	**74.4**	**8.6**	<4.4	<4.4
Bis (chloromethyl) ether	<500	<500	NA	NA	NA	NA	<100	<10	<10	<10
Bromoform	<240	<240	<1,200	<4.7	<24	<4.7	<47	<4.7	<4.7	<4.7
Carbon tetrachloride	<140	<140	<700	<2.8	<14	<2.8	<28	<2.8	<2.8	<2.8
Chlorobenzene	**10,800**	**14,100**	**20400**	<6.0	**2420**	**180**	<60	**138**	<6.0	<6.0
Chlorodibromomethane	<160	<160	<780	<3.1	<16	<3.1	<31	<3.1	<3.1	<3.1
Chloroethane	<500	<500	<2,500	<10	<50	<10	<100	<10	<10	<10
2-Chloroethylvinyl ether	<500	<500	NA	NA	NA	NA	<100	<10	<10	<10
Chloroform	<80	<80	<400	<1.6	<8.0	<1.6	<16	<1.6	<1.6	<1.6
Dichlorobromomethane	<110	<110	<550	<2.2	<11	<2.2	<22	<2.2	<2.2	<2.2
Dichlorodifluoromethane	<500	<500	<2,500	<10	<50	<10	<100	<10	<10	<10
1,1-Dichloroethane	<240	<240	<1,200	<4.7	<24	<4.7	<47	**6.2**	<4.7	<4.7
1,2-Dichloroethane	<140	<140	<700	<2.8	<14	<2.8	<28	<2.8	<2.8	<2.8
1,1-Dichloroethylene	<140	<140	<700	<2.8	<14	<2.8	<28	**7.1**	<2.8	<2.8
1,2-Dichloropropane	<300	<300	<1,500	<6.0	<30	<6.0	<60	<6	<6.0	<6.0
cis-1,3-Dichloropropylene	<250	<250	<1,300	<5.0	<25	<5.0	<50	<5	<5.0	<5.0
Ethylbenzene	<360	<360	<1,800	<7.2	<36	<7.2	<72	<7.2	<7.2	<7.2
Methyl bromide	<500	<500	<2,500	<10	<50	<10	<100	<10	<10	<10
Methyl chloride	<500	<500	<2,500	<10	<50	<10	<100	<10	<10	<10
Methylene chloride	**159**	**142**	<700	<2.8	<14	<2.8	<28	<2.8	**11.6**	**7.4**
1,1,2,2-Tetrachloroethane	<350	<350	<1,700	<6.9	<35	<6.9	<69	<6.9	<6.9	<6.9
Tetrachloroethylene	<210	<210	<1,000	<4.1	<21	<4.1	<41	<4.1	<4.1	1
Toluene	<300	<300	<1,500	<6.0	<30	<6.0	<60	<6	<6.0	0
1,2-trans-Dichloroethylene	<80	<80	<400	<1.6	<8.0	<1.6	<16	<1.6	<1.6	<1.6
1,1,1-Trichloroethane	<190	<190	<950	<3.8	**74.2**	<3.8	<38	**112**	<3.8	<3.8
1,1,2-Trichloroethane	<250	<250	<1,300	<5.0	<25	<5.0	<50	<5	<5.0	<5.0
Trichloroethylene	<95	<95	<480	<1.9	<9.5	<1.9	<19	<1.9	<1.9	<1.9
Trichlorofluoromethane	<500	<500	<2,500	<10	<50	<10	<100	<10	<10	<10
Vinyl chloride	<500	<500	<2,500	<10	<50	<10	<100	<10	<10	<10
trans-1,3-Dichloropropylene	<500	<500	<2,500	<10	<50	<10	<100	<10	<10	<10
Sub Total 1	10,959	14,579	20,400	0	3,239	180	74	272	12	7
Miscellaneous Volatile Organic Compounds										
Acetone	NA	NA	<2,500	<10	<50	<10	NA	NA	NA	NA
Methyl ethyl ketone	NA	NA	<2,500	<10	<50	<10	NA	NA	NA	NA
Carbon disulfide	NA	NA	<2,500	<10	<50	<10	NA	NA	NA	NA
2-Hexanone	NA	NA	<2,500	<10	<50	<10	NA	NA	NA	NA
Styrene	NA	NA	<2,500	<10	<50	<10	NA	NA	NA	NA
Methyl-iso-butyl ketone	NA	NA	<2,500	<10	<50	<10	NA	NA	NA	NA
Methyl isoamyl ketone	NA	NA	NA	NA	NA	NA	NA	NA	NA	NA
m-Xylene	NA	NA	<2,500	<10	<50	<10	NA	NA	NA	NA
o-Xylene/p-Xylene	NA	NA	<2,500	<10	<50	<10	NA	NA	NA	NA
Sub Total 2	0	0	0	0	0	0	0	0	0	0
Total VOCs Analyzed	10,959	14,579	20,400	0	3,239	180	74	272	12	7

See last page for footnotes.

Table 1. Summary of Volatile Organic Compounds, in Ground Water, Krummrich Plant, Sauget, Illinois.

Well Number:	GM-9A	GM-9A	GM-9A	GM-9A	GM-9A	GM-9B	GM-9B	GM-9B	GM-9B	GM-9B
Date:	11/88	11/89	11/90	11/91	11/92	12/86	5/87	11/87	5/88	11/88
Laboratory:	ETC	ETC	ETC	ETC	ETC	ETC	ETC	ETC	ETC	ETC
USEPA Priority Pollutant Volatile Organic Compounds concentrations are in ug/L										
Acrolein	<100	<100	<2,000	<250	<2,500	<100	<100	<100	<500	<100
Acrylonitrile	<100	<100	<2,000	<250	<2,500	<100	<100	<100	<500	<100
Benzene	<4.4	<4.4	**1,290**	**69.0**	**863**	<4.4	**10.8**	**11.9**	<22	**7.66**
Bis (chloromethyl) ether	<10	<10	<200	<25	<250	<10	<10	<10	<50	<10
Bromoform	<4.7	<4.7	<94	<12	<120	<4.7	<4.7	<4.7	<24	<4.7
Carbon tetrachloride	<2.8	<2.8	<56	<7.0	<70	<2.8	<2.8	<2.8	<14	<2.8
Chlorobenzene	<6.0	<6.0	**2,090**	**443**	**2,010**	<6	**96.6**	**130.0**	**248**	**187**
Chlorodibromomethane	<3.1	<3.1	<62	<7.8	<78	<3.1	<3.1	<3.1	<16	<3.1
Chloroethane	<10	<10	<200	<25	<250	<10	<10	<10	<50	<10
2-Chloroethylvinyl ether	<10	<10	<200	<25	<250	<10	<10	<10	<50	<10
Chloroform	<1.6	<1.6	<32	<4.0	<40	<1.6	<1.6	<1.6	<8.0	<1.6
Dichlorobromomethane	<2.2	<2.2	<44	<5.5	<55	<2.2	<2.2	<2.2	<11	<2.2
Dichlorodifluoromethane	<10	<10	<200	<25	<250	<10	<10	<10	<50	<10
1,1-Dichloroethane	<4.7	<4.7	<94	<12	<120	<4.7	**34.6**	**31.1**	<24	<4.7
1,2-Dichloroethane	<2.8	<2.8	<56	<7.0	<70	<2.8	<2.8	<2.8	<14	<2.8
1,1-Dichloroethylene	<2.8	<2.8	<56	<7.0	<70	<2.8	**13.5**	**5.94**	<14	<2.8
1,2-Dichloropropane	<6.0	<6.0	<120	<15	<150	<6	<6	<6.0	<30	<6
cis-1,3-Dichloropropylene	<5.0	<5.0	<100	<13	<130	<5	<5	<5.0	<25	<5
Ethylbenzene	<7.2	<7.2	<140	<18	<180	<7.2	<7.2	<7.2	<36	<7.2
Methyl bromide	<10	<10	<200	<25	<250	<10	<10	<10	<50	<10
Methyl chloride	<10	<10	<200	<25	<250	<10	<10	<10	<50	<10
Methylene chloride	**5.46**	<2.8	<56	<7.0	<70	<2.8	<2.8	<2.8	**39.3**	**7.84**
1,1,2,2-Tetrachloroethane	<6.9	<6.9	<140	<17	<170	<6.9	<6.9	<6.9	<35	<6.9
Tetrachloroethylene	<4.1	<4.1	<82	<10	<100	<4.1	<4.1	<4.1	<21	<4.1
Toluene	<6.0	<6.0	<120	<15	<150	<6	<6	<6.0	<30	<6
1,2-trans-Dichloroethylene	<1.6	<1.6	<32	<4.0	<40	<1.6	**146**	**110**	**22.6**	<1.6
1,1,1-Trichloroethane	**5.92**	**4.46**	<76	<9.5	<95	<3.8	**8.4**	<3.8	<19	<3.8
1,1,2-Trichloroethane	<5.0	<5.0	<100	<13	<130	<5	<5	<5.0	<25	<5
Trichloroethylene	<1.9	<1.9	<38	<4.8	<48	<1.9	<1.9	<1.9	<9.5	<1.9
Trichlorofluoromethane	<10	<10	<200	<25	<250	<10	<10	<10	<50	<10
Vinyl chloride	<10	<10	<200	<25	<250	<10	**22.8**	**13.9**	<50	**73.8**
trans-1,3-Dichloropropylene	<10	<10	<200	<25	<250	<10	<10	<10	<50	<10
Sub Total 1	11	4	3,380	512	2,873	0	333	303	310	276
Miscellaneous Volatile Organic Compounds										
Acetone	NA	NA	NA	NA	NA	NA	NA	NA	NA	NA
Methyl ethyl ketone	NA	NA	NA	NA	NA	NA	NA	NA	NA	NA
Carbon disulfide	NA	NA	NA	NA	NA	NA	NA	NA	NA	NA
2-Hexanone	NA	NA	NA	NA	NA	NA	NA	NA	NA	NA
Styrene	NA	NA	NA	NA	NA	NA	NA	NA	NA	NA
Methyl-iso-butyl ketone	NA	NA	NA	NA	NA	NA	NA	NA	NA	NA
Methyl isoamyl ketone	NA	NA	NA	NA	NA	NA	NA	NA	NA	NA
m-Xylene	NA	NA	NA	NA	NA	NA	NA	NA	NA	NA
o-Xylene/p-Xylene	NA	NA	NA	NA	NA	NA	NA	NA	NA	NA
Sub Total 2	0	0	0	0	0	0	0	0	0	0
Total VOCs Analyzed	11	4	3,380	512	2,873	0	333	303	310	276

See last page for footnotes.

Table 1. Summary of Volatile Organic Compounds, in Ground Water, Krummrich Plant, Sauget, Illinois.

Well Number:	GM-9B	GM-9B	GM-9B	GM-9B	GM-9C	GM-9C	GM-9C	GM-9C	GM-9C	9C
Date:	11/89	11/90	11/91	11/92	12/86	5/87	11/87	5/88	11/88	11/89
Laboratory:	ETC	ETC	ETC	ETC	ETC	ETC	ETC	ETC	ETC	ETC
USEPA Priority Pollutant Volatile Organic Compounds concentrations are in ug/L										
Acrolein	<100	<2,000	<500	<2,500	<100	<100	<100	<100	<100	<100
Acrylonitrile	<100	<2,000	<500	<2,500	<100	<100	<100	<100	<100	<100
Benzene	**5.60**	**1,680**	**717**	**3,960**	<4.4	**30.9**	**11.9**	<4.4	**22.5**	**5.43**
Bis (chloromethyl) ether	<10	<200	<50	<250	<10	<10	<10	<10	<10	<10
Bromoform	<4.7	<94	<24	<120	<4.7	<4.7	<4.7	<4.7	<4.7	<4.7
Carbon tetrachloride	<2.8	<56	<14	<70	<2.8	<2.8	<2.8	<2.8	<2.8	<2.8
Chlorobenzene	**124**	**289**	**621**	**486**	**17.9**	**636.0**	**214.0**	<6.0	**139**	**56.9**
Chlorodibromomethane	<3.1	<62	<16	<78	<3.1	<3.1	<3.1	<3.1	<3.1	<3.1
Chloroethane	<10	<200	<50	<250	<10	<10	<10	<10	<10	<10
2-Chloroethylvinyl ether	<10	<200	<50	<250	<10	<10	<10	<10	<10	<10
Chloroform	<1.6	<32	<8.0	<40	<1.6	<1.6	<1.6	<1.6	<1.6	<1.6
Dichlorobromomethane	<2.2	<44	<11	<55	<2.2	<2.2	<2.2	<2.2	<2.2	<2.2
Dichlorodifluoromethane	<10	<200	<50	<250	<10	<10	<10	<10	<10	<10
1,1-Dichloroethane	<4.7	<94	<24	<120	<4.7	<4.7	<4.7	<4.7	<4.7	<4.7
1,2-Dichloroethane	<2.8	<56	<14	<70	<2.8	<2.8	<2.8	<2.8	<2.8	<2.8
1,1-Dichloroethylene	<2.8	<56	<14	<70	<2.8	<2.8	<2.8	<2.8	<2.8	<2.8
1,2-Dichloropropane	<6.0	<120	<30	<150	<6	<6	<6.0	<6.0	<6	<6.0
cis-1,3-Dichloropropylene	<5.0	<100	<25	<130	<5	<5	<5.0	<5.0	<5	<5.0
Ethylbenzene	<7.2	<140	<36	<180	<7.2	**10.7**	<7.2	<7.2	<7.2	<7.2
Methyl bromide	<10	<200	<50	<250	<10	<10	<10	<10	<10	<10
Methyl chloride	<10	<200	<50	<250	<10	<10	<10	<10	<10	<10
Methylene chloride	<2.8	<56	**15.7**	<70	<2.8	<2.8	**9.40**	**34.5**	**8.14**	<2.8
1,1,2,2-Tetrachloroethane	<6.9	<140	<35	<170	<6.9	<6.9	<6.9	<6.9	<6.9	<6.9
Tetrachloroethylene	<4.1	<82	<21	<100	<4.1	<4.1	<4.1	<4.1	<4.1	1
Toluene	<6.0	<120	<30	<150	<6	<6	**10.8**	<6.0	<6	.0
1,2-trans-Dichloroethylene	<1.6	<32	<8.0	<40	<1.6	<1.6	<1.6	<1.6	<1.6	<1.6
1,1,1-Trichloroethane	<3.8	<76	<19	<95	<3.8	<3.8	<3.8	<3.8	<3.8	<3.8
1,1,2-Trichloroethane	<5.0	<100	<25	<130	<5	<5	<5.0	<5.0	<5	<5.0
Trichloroethylene	<1.9	<38	<9.5	<48	<1.9	<1.9	<1.9	<1.9	<1.9	<1.9
Trichlorofluoromethane	<10	<200	<50	<250	<10	<10	<10	<10	<10	<10
Vinyl chloride	<10	<200	<50	<250	<10	<10	<10	<10	<10	<10
trans-1,3-Dichloropropylene	<10	<200	<50	<250	<10	<10	<10	<10	<10	<10
Sub Total 1	130	1,969	1,354	4,446	18	678	246	35	170	62
Miscellaneous Volatile Organic Compounds										
Acetone	NA	NA	NA	NA	NA	NA	NA	NA	NA	NA
Methyl ethyl ketone	NA	NA	NA	NA	NA	NA	NA	NA	NA	NA
Carbon disulfide	NA	NA	NA	NA	NA	NA	NA	NA	NA	NA
2-Hexanone	NA	NA	NA	NA	NA	NA	NA	NA	NA	NA
Styrene	NA	NA	NA	NA	NA	NA	NA	NA	NA	NA
Methyl-iso-butyl ketone	NA	NA	NA	NA	NA	NA	NA	NA	NA	NA
Methyl isoamyl ketone	NA	NA	NA	NA	NA	NA	NA	NA	NA	NA
m-Xylene	NA	NA	NA	NA	NA	NA	NA	NA	NA	NA
o-Xylene/p-Xylene	NA	NA	NA	NA	NA	NA	NA	NA	NA	NA
Sub Total 2	0	0	0	0	0	0	0	0	0	0
Total VOCs Analyzed	130	1,969	1,354	4,446	18	678	246	35	170	62

See last page for footnotes.

Table 1. Summary of Volatile Organic Compounds, in Ground Water, Krummrich Plant, Sauget, Illinois.

Well Number:	GM-9C	GM-9C	GM-9C	GM-10A	GM-10A	GM-10A	GM-10A	GM-10A	GM-10A	GM-10A
Date:	11/90	11/91	11/92	12/86	5/87	11/87	5/88	11/88	11/89	11/90
Laboratory:	ETC	ETC	ETC	ETC	ETC	ETC	ETC	ETC	ETC	ETC
USEPA Priority Pollutant Volatile Organic Compounds concentrations are in ug/L										
Acrolein	<2,000	<1,000	<500	<100	<100	<100	<100	<100	<100	<5,000
Acrylonitrile	<2,000	<1,000	<500	<100	<100	<100	<100	<100	<100	<5,000
Benzene	**1,730**	**313**	**299**	<4.4	<4.4	<4.4	<4.4	<4.4	<4.4	**5,030**
Bis (chloromethyl) ether	<200	<100	<50	<10	<10	<10	<10	<10	<10	<500
Bromoform	<94	<47	<24	<4.7	<4.7	<4.7	<4.7	<4.7	<4.7	<240
Carbon tetrachloride	<56	<28	<14	<2.8	<2.8	<2.8	<2.8	<2.8	<2.8	<140
Chlorobenzene	**307**	**1,060**	**584**	<6	<6	<6.0	<6.0	<6.0	<6.0	<300
Chlorodibromomethane	<62	<31	<16	<3.1	<3.1	<3.1	<3.1	<3.1	<3.1	<160
Chloroethane	<200	<100	<50	<10	<10	<10	<10	<10	<10	<500
2-Chloroethylvinyl ether	<200	<100	<50	<10	<10	<10	<10	<10	<10	<500
Chloroform	<32	<16	<8.0	<1.6	<1.6	<1.6	<1.6	<1.6	<1.6	<80
Dichlorobromomethane	<44	<22	<11	<2.2	<2.2	<2.2	<2.2	<2.2	<2.2	<110
Dichlorodifluoromethane	<200	<100	<50	<10	<10	<10	<10	<10	<10	<500
1,1-Dichloroethane	<94	<47	<24	<4.7	<4.7	<4.7	<4.7	<4.7	<4.7	<240
1,2-Dichloroethane	<56	<28	<14	<2.8	<2.8	<2.8	<2.8	<2.8	<2.8	<140
1,1-Dichloroethylene	<56	<28	<14	<2.8	<2.8	<2.8	<2.8	<2.8	<2.8	<140
1,2-Dichloropropane	<120	<60	<30	<6	<6	<6.0	<6.0	<6.0	<6.0	<300
cis-1,3-Dichloropropylene	<100	<50	<25	<5	<5	<5.0	<5.0	<5.0	<5.0	<250
Ethylbenzene	<140	<72	<36	<7.2	<7.2	<7.2	<7.2	<7.2	<7.2	<360
Methyl bromide	<200	<100	<50	<10	<10	<10	<10	<10	<10	<500
Methyl chloride	<200	<100	<50	<10	<10	<10	<10	<10	<10	<500
Methylene chloride	<56	<28	<14	<2.8	<2.8	<2.8	**37.2**	**7.09**	<2.8	<140
1,1,2,2-Tetrachloroethane	<140	<69	<35	<6.9	<6.9	<6.9	<6.9	<6.9	<6.9	<350
Tetrachloroethylene	<82	<41	<21	<4.1	<4.1	<4.1	<4.1	<4.1	<4.1	<210
Toluene	<120	<60	<30	<6	<6	<6.0	<6.0	<6.0	<6.0	<300
1,2-trans-Dichloroethylene	<32	,16	<8.0	<1.6	<1.6	<1.6	<1.6	<1.6	<1.6	<80
1,1,1-Trichloroethane	<76	<38	<19	<3.8	<3.8	<3.8	<3.8	<3.8	<3.8	<190
1,1,2-Trichloroethane	<100	<50	<25	<5	<5	<5.0	<5.0	<5.0	<5.0	<250
Trichloroethylene	<38	<19	<9.5	<1.9	<1.9	<1.9	<1.9	<1.9	<1.9	<95
Trichlorofluoromethane	<200	<100	<50	<10	<10	<10	<10	<10	<10	<500
Vinyl chloride	<200	<100	<50	<10	<10	<10	<10	<10	<10	<500
trans-1,3-Dichloropropylene	<200	<100	<50	<10	<10	<10	<10	<10	<10	<500
Sub Total 1	2,037	1,373	883	0	0	0	37	7	0	5,030
Miscellaneous Volatile Organic Compounds										
Acetone	NA	NA	NA	NA	NA	NA	NA	NA	NA	NA
Methyl ethyl ketone	NA	NA	NA	NA	NA	NA	NA	NA	NA	NA
Carbon disulfide	NA	NA	NA	NA	NA	NA	NA	NA	NA	NA
2-Hexanone	NA	NA	NA	NA	NA	NA	NA	NA	NA	NA
Styrene	NA	NA	NA	NA	NA	NA	NA	NA	NA	NA
Methyl-iso-butyl ketone	NA	NA	NA	NA	NA	NA	NA	NA	NA	NA
Methyl isoamyl ketone	NA	NA	NA	NA	NA	NA	NA	NA	NA	NA
m-Xylene	NA	NA	NA	NA	NA	NA	NA	NA	NA	NA
o-Xylene/p-Xylene	NA	NA	NA	NA	NA	NA	NA	NA	NA	NA
Sub Total 2	0	0	0	0	0	0	0	0	0	0
Total VOCs Analyzed	2,037	1,373	883	0	0	0	37	7	0	5,030

See last page for footnotes.

Table 1. Summary of Volatile Organic Compounds, in Ground Water, Krummrich Plant, Sauget, Illinois.

Well Number:	GM-10A	GM-10B	GM-10B	GM-10B	GM-10B	GM-10B	GM-10B	GM-10B	GM-10B	DE
Date:	11/92	12/86	5/87	11/87	5/88	11/88	11/89	11/90	11/91	11 92
Laboratory:	ETC	ETC	ETC	ETC	ETC	ETC	ETC	ETC	ETC	ETC
USEPA Priority Pollutant Volatile Organic Compounds concentrations are in ug/L										
Acrolein	<100	<1,000	<100	<100	<100	<100	<1,000	<100	<1,000	<5,000
Acrylonitrile	<100	<1,000	<100	<100	<100	<100	<1,000	<100	<1,000	<5,000
Benzene	<4.4	<44	<4.4	**13.1**	<4.4	<4.4	<44	**10.2**	**63.0**	<220
Bis (chloromethyl) ether	<10	<100	<10	<10	<10	<10	<100	<10	<100	<500
Bromoform	<4.7	<47	<4.7	<4.7	<4.7	<4.7	<47	<4.7	<47	<240
Carbon tetrachloride	<2.8	<28	<2.8	<2.8	<2.8	<2.8	<28	<2.8	<28	<140
Chlorobenzene	<6.0	**299**	<6	**616**	<6.0	<6.0	**502**	**7.46**	**1,250**	**3,140**
Chlorodibromomethane	<3.1	<31	<3.1	<3.1	<3.1	<3.1	<31	<3.1	<31	<160
Chloroethane	<10	<100	<10	<10	<10	<10	<100	<10	<100	<500
2-Chloroethylvinyl ether	<10	<100	<10	<10	<10	<10	<100	<10	<100	<500
Chloroform	<1.6	<16	<1.6	<1.6	**1.7**	<1.6	<16	<1.6	<16	<80
Dichlorobromomethane	<2.2	<22	<2.2	<2.2	<2.2	<2.2	<22	<2.2	<22	<110
Dichlorodifluoromethane	<10	<100	<10	<10	<10	<10	<100	<10	<100	<500
1,1-Dichloroethane	<4.7	<47	<4.7	<4.7	<4.7	<4.7	<47	<4.7	<47	<240
1,2-Dichloroethane	<2.8	<28	<2.8	<2.8	<2.8	<2.8	<28	<2.8	<28	<140
1,1-Dichloroethylene	<2.8	<28	<2.8	<2.8	<2.8	<2.8	<28	<2.8	<28	<140
1,2-Dichloropropane	<6.0	<60	<6	<6.0	<6.0	<6.0	<60	<6.0	<60	<300
cis-1,3-Dichloropropylene	<5.0	<50	<5	<5.0	<5.0	<5.0	<50	<5.0	<50	<250
Ethylbenzene	<7.2	<72	<7.2	<7.2	<7.2	<7.2	<72	<7.2	<72	<360
Methyl bromide	<10	<100	<10	<10	<10	<10	<100	<10	<100	<500
Methyl chloride	<10	<100	<10	<10	<10	<10	<100	<10	<100	<500
Methylene chloride	<2.8	<28	**5**	<2.8	**35.1**	**7.45**	<28	<2.8	<28	<140
1,1,2,2-Tetrachloroethane	<6.9	<69	<6.9	<6.9	<6.9	<6.9	<69	<6.9	<69	<350
Tetrachloroethylene	<4.1	<41	<4.1	<4.1	<4.1	<4.1	<41	<4.1	<41	0
Toluene	<6.0	<60	<6	<6.0	<6.0	<6.0	<60	<6.0	<60	0
1,2-trans-Dichloroethylene	<1.6	<16	<1.6	<1.6	<1.6	<1.6	<16	<1.6	<16	<80
1,1,1-Trichloroethane	<3.8	<38	<3.8	<3.8	<3.8	<3.8	<38	<3.8	<38	<190
1,1,2-Trichloroethane	<5.0	<50	<5	<5.0	<5.0	<5.0	<50	<5.0	<50	<250
Trichloroethylene	<1.9	<19	<1.9	<1.9	<1.9	<1.9	<19	<1.9	<19	<95
Trichlorofluoromethane	<10	<100	<10	<10	<10	<10	<100	<10	<100	<500
Vinyl chloride	<10	<100	<10	<10	<10	<10	<100	<10	<100	<500
trans-1,3-Dichloropropylene	<10	<100	<10	<10	<10	<10	<100	<10	<100	<500
Sub Total 1	0	299	5	629	37	7	502	18	1,313	3,140
Miscellaneous Volatile Organic Compounds										
Acetone	NA	NA	NA	NA	NA	NA	NA	NA	NA	NA
Methyl ethyl ketone	NA	NA	NA	NA	NA	NA	NA	NA	NA	NA
Carbon disulfide	NA	NA	NA	NA	NA	NA	NA	NA	NA	NA
2-Hexanone	NA	NA	NA	NA	NA	NA	NA	NA	NA	NA
Styrene	NA	NA	NA	NA	NA	NA	NA	NA	NA	NA
Methyl-iso-butyl ketone	NA	NA	NA	NA	NA	NA	NA	NA	NA	NA
Methyl isoamyl ketone	NA	NA	NA	NA	NA	NA	NA	NA	NA	NA
m-Xylene	NA	NA	NA	NA	NA	NA	NA	NA	NA	NA
o-Xylene/p-Xylene	NA	NA	NA	NA	NA	NA	NA	NA	NA	NA
Sub Total 2	0	0	0	0	0	0	0	0	0	0
Total VOCs Analyzed	0	299	5	629	37	7	502	18	1,313	3,140

See last page for footnotes.

Table 1. Summary of Volatile Organic Compounds, in Ground Water, Krummrich Plant, Sauget, Illinois.

Well Number:	GM-10C	GM-10C	GM-10C	GM-10C	GM-10C	GM-10C	GM-10C	GM-10C	GM-10C	GM-12A
Date:	12/86	5/87	11/87	5/88	11/88	11/89	11/90	11/91	11/92	12/86
Laboratory:	ETC	ETC	ETC	ETC	ETC	ETC	ETC	ETC	ETC	ETC
USEPA Priority Pollutant Volatile Organic Compounds concentrations are in ug/L										
Acrolein	<100	<100	<100	<100	<100	<100	<500	<100	<100	<1,000
Acrylonitrile	<100	<100	<100	<100	<100	<100	<500	<100	<100	<1,000
Benzene	<4.4	<4.4	<4.4	<4.4	<4.4	<4.4	<22	<4.4	<4.4	**957**
Bis (chloromethyl) ether	<10	<10	<10	<10	<10	<10	<50	<10	<10	<100
Bromoform	<4.7	<4.7	<4.7	<4.7	<4.7	<4.7	<24	<4.7	<4.7	<47
Carbon tetrachloride	<2.8	<2.8	<2.8	<2.8	<2.8	<2.8	<14	<2.8	<2.8	<28
Chlorobenzene	**23.4**	**38.9**	**42.8**	**38.4**	**42.7**	**752.0**	**421**	**83.2**	**18.2**	**560**
Chlorodibromomethane	<3.1	<3.1	<3.1	<3.1	<3.1	<3.1	<16	<3.1	<3.1	<31
Chloroethane	<10	<10	<10	<10	<10	<10	<50	<10	<10	<100
2-Chloroethylvinyl ether	<10	<10	<10	<10	<10	<10	<50	<10	<10	<100
Chloroform	<1.6	<1.6	<1.6	**1.8**	<1.6	<1.6	<8.0	<1.6	<1.6	<16
Dichlorobromomethane	<2.2	<2.2	<2.2	<2.2	<2.2	<2.2	<11	<2.2	<2.2	<22
Dichlorodifluoromethane	<10	<10	<10	<10	<10	<10	<50	<10	<10	<100
1,1-Dichloroethane	<4.7	<4.7	<4.7	<4.7	<4.7	<4.7	<24	<4.7	<4.7	<47
1,2-Dichloroethane	<2.8	<2.8	<2.8	<2.8	<2.8	<2.8	<14	<2.8	<2.8	<28
1,1-Dichloroethylene	<2.8	<2.8	<2.8	<2.8	<2.8	<2.8	<14	<2.8	<2.8	<28
1,2-Dichloropropane	<6	<6	<6.0	<6.0	<6.0	<6.0	<30	<6.0	<6.0	<60
cis-1,3-Dichloropropylene	<5	<5	<5.0	<5.0	<5.0	<5.0	<25	<5.0	<5.0	<50
Ethylbenzene	<7.2	<7.2	<7.2	<7.2	<7.2	<7.2	<36	<7.2	<7.2	<72
Methyl bromide	<10	<10	<10	<10	<10	<10	<50	<10	<10	<100
Methyl chloride	<10	<10	<10	<10	<10	<10	<50	<10	<10	<100
Methylene chloride	**14.4**	**17.4**	**6.64**	**8.0**	<2.8	<2.8	<14	<2.8	<2.8	**66**
1,1,2,2-Tetrachloroethane	<6.9	<6.9	<6.9	<6.9	<6.9	<6.9	<35	<6.9	<6.9	<69
Tetrachloroethylene	<4.1	<4.1	<4.1	<4.1	<4.1	<4.1	<21	<4.1	<4.1	<41
Toluene	<6	<6	**48.7**	<6.0	<6.0	<6.0	<30	**6.72**	<6.0	<60
1,2-trans-Dichloroethylene	<1.6	<1.6	<1.6	<1.6	<1.6	<1.6	<8.0	<1.6	<1.6	<16
1,1,1-Trichloroethane	<3.8	<3.8	<3.8	<3.8	<3.8	<3.8	<19	<3.8	<3.8	<38
1,1,2-Trichloroethane	<5	<5	<5.0	<5.0	<5.0	<5.0	<25	<5.0	<5.0	<50
Trichloroethylene	<1.9	<1.9	<1.9	<1.9	<1.9	<1.9	<9.5	<1.9	<1.9	<19
Trichlorofluoromethane	<10	<10	<10	<10	<10	<10	<50	<10	<10	<100
Vinyl chloride	<10	<10	<10	<10	<10	<10	<50	<10	<10	<100
trans-1,3-Dichloropropylene	<10	<10	<10	<10	<10	<10	<50	<10	<10	<100
Sub Total 1	38	56	98	48	43	752	421	90	18	1,583
Miscellaneous Volatile Organic Compounds										
Acetone	NA	NA	NA	NA	NA	NA	NA	NA	NA	NA
Methyl ethyl ketone	NA	NA	NA	NA	NA	NA	NA	NA	NA	NA
Carbon disulfide	NA	NA	NA	NA	NA	NA	NA	NA	NA	NA
2-Hexanone	NA	NA	NA	NA	NA	NA	NA	NA	NA	NA
Styrene	NA	NA	NA	NA	NA	NA	NA	NA	NA	NA
Methyl-iso-butyl ketone	NA	NA	NA	NA	NA	NA	NA	NA	NA	<100
Methyl isoamyl ketone	NA	NA	NA	NA	NA	NA	NA	NA	NA	<100
m-Xylene	NA	NA	NA	NA	NA	NA	NA	NA	NA	<100
o-Xylene/p-Xylene	NA	NA	NA	NA	NA	NA	NA	NA	NA	<100
Sub Total 2	0	0	0	0	0	0	0	0	0	0
Total VOCs Analyzed	38	56	98	48	43	752	421	90	18	1,583

See last page for footnotes.

Table 1. Summary of Volatile Organic Compounds, in Ground Water, Krummrich Plant, Sauget, Illinois.

Well Number:	GM-12A	GM-12A	GM-12A	GM-12A	GM-12A	GM-12A	GM-12A	GM-12A	GM-12A	GM-12A
Date:	12/86*	5/87	5/87*	11/87	11/87*	5/88	5/88*	11/88	11/88 *	11/88
Laboratory:	ETC	ETC	ETC	ETC	ETC	ETC	ETC	ETC	ETC	SL
USEPA Priority Pollutant Volatile Organic Compounds concentrations are in ug/L										
Acrolein	<1,000	<1,000	<1,000	<500	<500	<1,000	<1,000	<1,000	<1,000	<500
Acrylonitrile	<1,000	<1,000	<1,000	<500	<500	<1,000	<1,000	<1,000	<1,000	<500
Benzene	**632**	**428**	**545**	**817**	**597**	**587**	**583**	**674**	**613**	**410**
Bis (chloromethyl) ether	<100	<100	<100	<50	<50	<100	<100	<100	<100	<100
Bromoform	<47	<47	<47	<24	<24	<47	<47	<47	<47	<50
Carbon tetrachloride	<28	<28	<28	<14	<14	<28	<28	<28	<28	<50
Chlorobenzene	**377**	**261**	**334**	**283**	**243**	**276**	**251**	**179**	**162**	**130**
Chlorodibromomethane	<31	<31	<31	<16	<16	<31	<31	<31	<31	<50
Chloroethane	<100	<100	<100	<50	<50	<100	<100	<100	<100	<100
2-Chloroethylvinyl ether	<100	<100	<100	<50	<50	<100	<100	<100	<100	<50
Chloroform	<16	<16	<16	<8.0	<8.0	<16	<16	<16	<16	<50
Dichlorobromomethane	<22	<22	<22	<11	<11	<22	<22	<22	<22	<50
Dichlorodifluoromethane	<100	<100	<100	<50	<50	<100	<100	<100	<100	<100
1,1-Dichloroethane	<47	<47	<47	<24	<24	<47	<47	<47	<47	<50
1,2-Dichloroethane	<28	<28	<28	<14	<14	<28	<28	<28	<28	<50
1,1-Dichloroethylene	<28	<28	<28	<14	<14	<28	<28	<28	<28	<50
1,2-Dichloropropane	<60	<60	<60	<30	<30	<60	<60	<60	<60	<50
cis-1,3-Dichloropropylene	<50	<50	<50	<36	<25	<50	<50	<50	<50	<50
Ethylbenzene	<72	<72	<72	<50	<36	<72	<72	<72	<72	<50
Methyl bromide	<100	<100	<100	<50	<50	<100	<100	<100	<100	<100
Methyl chloride	<100	<100	<100	<50	<50	<100	<100	<100	<100	<100
Methylene chloride	**80**	**67.4**	**64**	<14	**18.8**	**120**	**101**	**49.3**	**263**	<50
1,1,2,2-Tetrachloroethane	<69	<69	<69	<35	<35	<69	<69	<69	<69	<50
Tetrachloroethylene	<41	<41	<41	<21	<21	<41	<41	<41	<41	[illegible]
Toluene	<60	<60	<60	<30	<30	<60	<60	<60	<60	[illegible]
1,2-trans-Dichloroethylene	<16	<16	<16	<8.0	<8.0	<16	<16	<16	<16	<50
1,1,1-Trichloroethane	<38	<38	<38	<19	<19	<38	<38	<38	<38	<50
1,1,2-Trichloroethane	<50	<50	<50	<25	<25	<50	<50	<50	<50	<50
Trichloroethylene	<19	<19	<19	<9.5	<9.5	<19	<19	<19	<19	<50
Trichlorofluoromethane	<100	<100	<100	<50	<50	<100	<100	<100	<100	<50
Vinyl chloride	<100	<100	<100	<50	<50	<100	<100	<100	<100	<100
trans-1,3-Dichloropropylene	<100	<100	<100	<50	<50	<100	<100	<100	<100	<50
Sub Total 1	1,089	756	943	1,100	859	983	935	902	1,038	540
Miscellaneous Volatile Organic Compounds										
Acetone	NA	NA	NA	NA	NA	NA	NA	NA	NA	NA
Methyl ethyl ketone	NA	NA	NA	NA	NA	NA	NA	NA	NA	NA
Carbon disulfide	NA	NA	NA	NA	NA	NA	NA	NA	NA	NA
2-Hexanone	NA	NA	NA	NA	NA	NA	NA	NA	NA	NA
Styrene	NA	NA	NA	NA	NA	NA	NA	NA	NA	NA
Methyl-iso-butyl ketone	<100	<100	<100	<50	<50	<100	<100	<100	<100	<500
Methyl isoamyl ketone	<100	<100	<100	<50	<50	<100	<100	<100	<100	<100
m-Xylene	<100	<100	<100	<50	<50	<100	<100	<100	<100	<50
o-Xylene/p-Xylene	<100	<100	<100	<50	<50	<100	<100	<100	<100	<50
Sub Total 2	0	0	0	0	0	0	0	0	0	0
Total VOCs Analyzed	1,089	756	943	1,100	859	983	935	902	1,038	540

See last page for footnotes.

Table 1. Summary of Volatile Organic Compounds, in Ground Water, Krummrich Plant, Sauget, Illinois.

Well Number:	GM-12A	GM-12A	GM-12A	GM-12A	GM-12A	GM-12A	GM-12A	GM-12A	GM-12A	GM-12A
Date:	5/89	5/89 *	11/89	11/89*	5/90	5/90*	11/90	11/90*	5/91	5/91*
Laboratory:	ETC	ETC	ETC	ETC	ETC	ETC	ETC	ETC	ETC	ETC
USEPA Priority Pollutant Volatile Organic Compounds concentrations are in ug/L										
Acrolein	<1,000	<1,000	<2,000	<2,000	<5,000	<5,000	<5,000	<5,000	<1,000	<1,000
Acrylonitrile	<1,000	<1,000	<2,000	<2,000	<5,000	<5,000	<5,000	<5,000	<1,000	<1,000
Benzene	**752**	**678**	**559**	**676**	**2,850**	**2,520**	<220	**3,650**	**1,280**	**1,100**
Bis (chloromethyl) ether	<100	<100	<200	<200	<500	<500	<500	<500	<100	<100
Bromoform	<47	<47	<94	<94	<240	<240	<240	<240	<47	<47
Carbon tetrachloride	<28	<28	<56	<56	<140	<140	<140	<140	<28	<28
Chlorobenzene	**96.5**	**93.0**	<120	<120	**432**	**425**	**2,750**	**1,180**	**183**	**169**
Chlorodibromomethane	<31	<31	<62	<62	<160	<160	<160	<160	<31	<31
Chloroethane	<100	<100	<200	<200	<500	<500	<500	<500	<100	<100
2-Chloroethylvinyl ether	<100	<100	<200	<200	<500	<500	<500	<500	<100	<100
Chloroform	<16	<16	<32	<32	<80	<80	<80	<80	<16	<16
Dichlorobromomethane	<22	<22	<44	<44	<110	<110	<110	<110	<22	<22
Dichlorodifluoromethane	<100	<100	<200	<200	<500	<500	<500	<500	<100	<100
1,1-Dichloroethane	<47	<47	<94	<94	<240	<240	<240	<240	<47	<47
1,2-Dichloroethane	<28	<28	<56	<56	<140	<140	<140	<140	<28	<28
1,1-Dichloroethylene	<28	<28	<56	<56	<140	<140	<140	<140	<28	<28
1,2-Dichloropropane	<60	<60	<120	<120	<300	<300	<300	<300	<60	<60
cis-1,3-Dichloropropylene	<50	<50	<100	<100	<250	<250	<250	<250	<50	<50
Ethylbenzene	<72	<72	<140	<140	<360	<360	<360	<360	<72	<72
Methyl bromide	<100	<100	<200	<200	<500	<500	<500	<500	<100	<100
Methyl chloride	<100	<100	<200	<200	<500	<500	<500	<500	<100	<100
Methylene chloride	**40.9**	**39.0**	**126**	**147.0**	<140	**432**	<140	<140	**32.0**	**39.4**
1,1,2,2-Tetrachloroethane	<69	<69	<140	<140	<350	<350	<350	<350	<69	<69
Tetrachloroethylene	<41	<41	<82	<82	<210	<210	<210	<210	<41	<41
Toluene	<60	<60	<120	<120	<300	<300	<300	<300	<60	<60
1,2-trans-Dichloroethylene	<16	<16	<32	<32	<80	<80	<80	<80	<16	<16
1,1,1-Trichloroethane	<38	<38	<76	<76	<190	<190	<190	<190	<38	<38
1,1,2-Trichloroethane	<50	<50	<100	<100	<250	<250	<250	<250	<50	<50
Trichloroethylene	<19	<19	**43.5**	<38	<95	<95	<95	<95	<19	<19
Trichlorofluoromethane	<100	<100	<200	<200	<500	<500	<500	<500	<100	<100
Vinyl chloride	<100	<100	<200	<200	<500	<500	<500	<500	<100	<100
trans-1,3-Dichloropropylene	<100	<100	<200	<200	<500	<500	<500	<500	<100	<100
Sub Total 1	889	810	729	823	3,282	3,377	2,750	4,830	1,495	1,308
Miscellaneous Volatile Organic Compounds										
Acetone	NA	NA	NA	NA	NA	NA	NA	NA	NA	NA
Methyl ethyl ketone	NA	NA	NA	NA	NA	NA	NA	NA	NA	NA
Carbon disulfide	NA	NA	NA	NA	NA	NA	NA	NA	NA	NA
2-Hexanone	NA	NA	NA	NA	NA	NA	NA	NA	NA	NA
Styrene	NA	NA	NA	NA	NA	NA	NA	NA	NA	NA
Methyl-iso-butyl ketone	<100	<100	<200	<200	<500	<500	<500	<500	<100	<100
Methyl isoamyl ketone	<100	<100	<200	<200	<500	<500	<500	<500	NA	NA
m-Xylene	<100	<100	<200	<200	<500	<500	<500	<500	<100	<100
o-Xylene/p-Xylene	<100	<100	<200	<200	<500	<500	<500	<500	<100	<100
Sub Total 2	0	0	0	0	0	0	0	0	0	0
Total VOCs Analyzed	889	810	729	823	3,282	3,377	2,750	4,830	1,495	1,308

See last page for footnotes.

Table 1. Summary of Volatile Organic Compounds, in Ground Water, Krummrich Plant, Sauget, Illinois.

Well Number:	GM-12A	GM-12A	GM-12A	GM-12A	GM-12B	GM-12B	GM-12B	GM-12B	GM-12B	GM-12B
Date:	11/91	11/91*	11/92	11/92*	12/86	5/87	11/87	5/88	11/88	5/89
Laboratory:	ETC	ETC	ETC	ETC	ETC	ETC	ETC	ETC	ETC	ETC
USEPA Priority Pollutant Volatile Organic Compounds concentrations are in ug/L										
Acrolein	<100	<1,000	<100	<100	<100	<100	<500	<1,000	<1,000	<5,000
Acrylonitrile	<100	<1,000	<50	<50	<100	<100	<500	<1,000	<1,000	<5,000
Benzene	**1,530**	**1,580**	**15.7**	**1,950**	**469**	**11.3**	**1,780**	**398**	**1,990**	**1,920**
Bis (chloromethyl) ether	<100	<100	NA	NA	<10	<10	<50	<100	<100	<500
Bromoform	<47	<47	<4.7	<47	<4.7	<4.7	<24	<47	<47	<240
Carbon tetrachloride	<28	<28	<2.8	<28	<2.8	<2.8	<14	<28	<28	<140
Chlorobenzene	**186**	**183**	<6.0	**112**	<6	<6	<30	<60	<60	<300
Chlorodibromomethane	<31	<31	<3.1	<31	<3.1	<3.1	<16	<31	<31	<160
Chloroethane	<100	<100	<10	<100	<10	<10	<50	<100	<100	<500
2-Chloroethylvinyl ether	<100	<100	NA	NA	<10	<10	<50	<100	<100	<500
Chloroform	<16	<16	<1.6	<16	<1.6	<1.6	<8.0	<16	<16	<80
Dichlorobromomethane	<22	<22	<2.2	<22	<2.2	<2.2	<11	<22	<22	<110
Dichlorodifluoromethane	<100	<100	<10	<100	<10	<10	<50	<100	<100	<500
1,1-Dichloroethane	<47	<47	<4.7	<47	<4.7	<4.7	<24	<47	<47	<240
1,2-Dichloroethane	<28	<28	<2.8	<28	<2.8	<2.8	<14	<28	<28	<140
1,1-Dichloroethylene	<28	<28	<2.8	<28	<2.8	<2.8	<14	<28	<28	<140
1,2-Dichloropropane	<60	<60	<6.0	<60	<6	<6	<30	<60	<60	<300
cis-1,3-Dichloropropylene	<50	<50	<5.0	<50	<5	<5	<25	<50	<50	<250
Ethylbenzene	<72	<72	<7.2	<72	<7.2	<7.2	<36	<72	<72	<360
Methyl bromide	<100	<100	<10	<100	<10	<10	<50	<100	<100	<500
Methyl chloride	<100	<100	<10	<100	<10	<10	<50	<100	<100	<500
Methylene chloride	<28	<28	<2.8	<28	<2.8	**16.1**	<14	<28	**223**	**232**
1,1,2,2-Tetrachloroethane	<69	<69	<6.9	<69	<6.9	<6.9	<35	<69	<69	<350
Tetrachloroethylene	<41	<41	<4.1	<41	<4.1	<4.1	<21	<41	<41	<210
Toluene	<60	<60	<6.0	<60	**17.2**	<6.0	**35.4**	<60	<60	<300
1,2-trans-Dichloroethylene	<16	<16	<1.6	<16	<1.6	<1.6	<8.0	<16	**16.1**	<80
1,1,1-Trichloroethane	<38	<38	<3.8	<38	<3.8	<3.8	<19	<38	<38	<190
1,1,2-Trichloroethane	<50	<50	<5.0	<50	<5	<5	<25	<50	<50	<250
Trichloroethylene	<19	<19	<1.9	<19	<1.9	<1.9	<9.5	<19	<19	<95
Trichlorofluoromethane	<100	<100	<10	<100	<10	<10	<50	<100	<100	<500
Vinyl chloride	<100	<100	<10	<100	<10	<10	<50	<100	<100	<500
trans-1,3-Dichloropropylene	<100	<100	<10	<100	<10	<10	<50	<100	<100	<500
Sub Total 1	1,716	1,763	16	2,062	486	27	1,815	398	2,229	2,152
Miscellaneous Volatile Organic Compounds										
Acetone	NA	NA	<10	<100	NA	NA	NA	NA	NA	NA
Methyl ethyl ketone	NA	NA	<10	<100	NA	NA	NA	NA	NA	NA
Carbon disulfide	NA	NA	<10	<100	NA	NA	NA	NA	NA	NA
2-Hexanone	NA	NA	NA	<100	NA	NA	NA	NA	NA	NA
Styrene	NA	NA	<10	<100	NA	NA	NA	NA	NA	NA
Methyl-iso-butyl ketone	<100	<100	NA	<100	<10	<10	<50	<100	<100	<500
Methyl isoamyl ketone	<100	<100	NA	NA	<10	<10	<50	<100	<100	<500
m-Xylene	<100	<100	NA	<100	<10	<10	<50	**1,110**	**143**	<500
o-Xylene/p-Xylene	<100	<100	NA	<100	**20.9**	**20.9**	**54.7**	**832**	**141**	<500
Sub Total 2	0	0	0	0	21	21	55	1,942	284	0
Total VOCs Analyzed	1,716	1,763	16	2,062	507	48	1,870	2,340	2,513	2,152

See last page for footnotes.

Table 1. Summary of Volatile Organic Compounds, in Ground Water, Krummrich Plant, Sauget, Illinois.

Well Number:	GM-12B	GM-12B	GM-12B	GM-12B	GM-12B	GM-12B	GM-12C	GM-12C	GM-12C	GM-12C
Date:	11/89	5/90	11/90	5/91	11/91	11/92	12/86	5/87	11/87	5/88
Laboratory:	ETC	ETC	ETC	ETC	ETC	ETC	ETC	ETC	ETC	ETC
USEPA Priority Pollutant Volatile Organic Compounds concentrations are in ug/L										
Acrolein	<5,000	<1,000	<100	<2,500	<1,000	<50	<100	<100	<100	<100
Acrylonitrile	<5,000	<1,000	<100	<2,500	<1,000	<25	<100	<100	<100	<100
Benzene	**2,810**	**634**	<4.4	**2,400**	**2,100**	**524**	<4.4	<4.4	<4.4	<4.4
Bis (chloromethyl) ether	<500	<100	<10	<250	<100	NA	<10	<10	<10	<10
Bromoform	<240	<47	<4.7	<120	<47	<24	<4.7	<4.7	<4.7	<4.7
Carbon tetrachloride	<140	<28	<2.8	<70	<28	<14	<2.8	<2.8	<2.8	<2.8
Chlorobenzene	<300	<60	<6.0	<150	<60	<30	<6	<6	<6.0	<6.0
Chlorodibromomethane	<160	<31	<3.1	<78	<31	<16	<3.1	<3.1	<3.1	<3.1
Chloroethane	<500	<100	<10	<250	<100	<50	<10	<10	<10	<10
2-Chloroethylvinyl ether	<500	<100	<10	<250	<100	NA	<10	<10	<10	<10
Chloroform	<80	<16	<1.6	<40	<16	<8.0	<1.6	<1.6	<1.6	<1.6
Dichlorobromomethane	<110	<22	<2.2	<55	<22	<11	<2.2	<2.2	<2.2	<2.2
Dichlorodifluoromethane	<500	<100	<10	<250	<100	<50	<10	<10	<10	<10
1,1-Dichloroethane	<240	<47	<4.7	<120	<47	<24	<4.7	<4.7	<4.7	<4.7
1,2-Dichloroethane	<140	<28	<2.8	<70	<28	<14	<2.8	<2.8	<2.8	<2.8
1,1-Dichloroethylene	<140	<28	<2.8	<70	<28	<14	<2.8	<2.8	<2.8	<2.8
1,2-Dichloropropane	<300	<60	<6.0	<150	<60	<30	<6	<6	<6.0	<6.0
cis-1,3-Dichloropropylene	<250	<50	<5.0	<130	<50	<25	<5	<5	<5.0	<5.0
Ethylbenzene	<360	<72	<7.2	<180	<72	<36	<7.2	<7.2	<7.2	<7.2
Methyl bromide	<500	<100	<10	<250	<100	<50	<10	<10	<10	<10
Methyl chloride	<500	<100	<10	<250	<100	<50	<10	<10	<10	<10
Methylene chloride	<140	**33.8**	<2.8	<70	<28	<14	**4.6**	**13.6**	<2.8	**17.4**
1,1,2,2-Tetrachloroethane	<350	<69	<6.9	<170	<69	<35	<6.9	<6.9	<6.9	<6.9
Tetrachloroethylene	<210	<41	<4.1	<100	<41	<21	<4.1	<4.1	<4.1	<4.1
Toluene	<300	<60	<6.0	<150	<60	<30	<6	<6	<6.0	<6.0
1,2-trans-Dichloroethylene	<80	<16	<1.6	<40	<16	<8.0	<1.6	<1.6	<1.6	<1.6
1,1,1-Trichloroethane	<190	<38	<3.8	<95	<38	<19	<3.8	<3.8	<3.8	<3.8
1,1,2-Trichloroethane	<250	<50	<5.0	<130	<50	<25	<5	<5	<5.0	<5.0
Trichloroethylene	<95	<19	<1.9	<48	<19	<9.5	<1.9	<1.9	<1.9	<1.9
Trichlorofluoromethane	<500	<100	<10	<250	<100	<50	<10	<10	**10.6**	<10
Vinyl chloride	<500	<100	<10	<250	<100	<50	<10	<10	<10	<10
trans-1,3-Dichloropropylene	<500	<100	<10	<250	<100	<50	<10	<10	<10	<10
Sub Total 1	2,810	668	0	2,400	2,100	524	5	14	11	17
Miscellaneous Volatile Organic Compounds										
Acetone	NA	NA	NA	NA	NA	**257**	NA	NA	NA	NA
Methyl ethyl ketone	NA	NA	NA	NA	NA	<50	NA	NA	NA	NA
Carbon disulfide	NA	NA	NA	NA	NA	<50	NA	NA	NA	NA
2-Hexanone	NA	NA	NA	NA	NA	<50	NA	NA	NA	NA
Styrene	NA	NA	NA	NA	NA	<50	NA	NA	NA	NA
Methyl-iso-butyl ketone	<500	<100	<10	<250	<100	<50	<10	<10	<10	<10
Methyl isoamyl ketone	<500	<100	<10	NA	<100	NA	<10	<10	<10	<10
m-Xylene	<500	<100	<10	<250	<100	<50	<10	<10	<10	<10
o-Xylene/p-Xylene	<500	<100	<10	<250	<100	<50	<10	<10	<10	<10
Sub Total 2	0	0	0	0	0	257	0	0	0	0
Total VOCs Analyzed	2,810	668	0	2,400	2,100	781	5	14	11	17

See last page for footnotes.

Table 1. Summary of Volatile Organic Compounds, in Ground Water, Krummrich Plant, Sauget, Illinois.

Well Number:	GM-12C	GM-12C	GM-12C	GM-12C	GM-12C	GM-12C	GM-12C	GM-12C	GM-17A	A
Date:	11/88	5/89	11/89	5/90	11/90	5/91	11/91	11/92	12/86	5/87
Laboratory:	ETC	ETC	ETC	ETC	ETC	ETC	ETC	ETC	ETC	ETC
USEPA Priority Pollutant Volatile Organic Compounds concentrations are in ug/L										
Acrolein	<100	<100	<100	<100	<5,000	<100	<100	<20	<100,000	<100,000
Acrylonitrile	<100	<100	<100	<100	<5,000	<100	<100	<10	<100,000	<100,000
Benzene	<4.4	<4.4	<4.4	**32.7**	<220	<4.4	<4.4	<4.4	**482,000**	**517,000**
Bis (chloromethyl) ether	<10	<10	<10	<10	<500	<10	<10	NA	<10,000	<10,000
Bromoform	<4.7	<4.7	<4.7	<4.7	<240	<4.7	<4.7	<4.7	<4,700	<4,700
Carbon tetrachloride	<2.8	<2.8	<2.8	<2.8	<140	<2.8	<2.8	<2.8	<2,800	<2,800
Chlorobenzene	<6.0	<6.0	<6.0	<6.0	**3,960**	<6.0	<6.0	**13.2**	**153,000**	**221,000**
Chlorodibromomethane	<3.1	<3.1	<3.1	<3.1	<160	<3.1	<3.1	<3.1	<3,100	<3,100
Chloroethane	<10	<10	<10	<10	<500	<10	<10	<10	<10,000	<10,000
2-Chloroethylvinyl ether	<10	<10	<10	<10	<500	<10	<10	NA	<10,000	<10,000
Chloroform	<1.6	<1.6	<1.6	<1.6	<80	<1.6	<1.6	<1.6	<1,600	<1,600
Dichlorobromomethane	<2.2	<2.2	<2.2	<2.2	<110	<2.2	<2.2	<2.2	<2,200	<2,200
Dichlorodifluoromethane	<10	<10	<10	<10	<500	<10	<10	<10	<10,000	<10,000
1,1-Dichloroethane	<4.7	<4.7	<4.7	<4.7	<240	<4.7	<4.7	<4.7	<4,700	<4,700
1,2-Dichloroethane	<2.8	<2.8	<2.8	<2.8	<140	<2.8	<2.8	<2.8	<2,800	<2,800
1,1-Dichloroethylene	<2.8	<2.8	<2.8	<2.8	<140	<2.8	<2.8	<2.8	<2,800	<2,800
1,2-Dichloropropane	<6.0	<6.0	<6.0	<6.0	<300	<6.0	<6.0	<6.0	<6,000	<6,000
cis-1,3-Dichloropropylene	<5.0	<5.0	<5.0	<5.0	<250	<5.0	<5.0	<5.0	<5,000	<5,000
Ethylbenzene	<7.2	<7.2	<7.2	<7.2	<360	<7.2	<7.2	<7.2	<7,200	<7,200
Methyl bromide	<10	<10	<10	<10	<500	<10	<10	<10	<10,000	<10,000
Methyl chloride	<10	<10	<10	<10	<500	<10	<10	<10	<10,000	<10,000
Methylene chloride	**3.29**	<2.8	<2.8	**3.33**	<140	<2.8	<2.8	<2.8	<2,800	**17,200**
1,1,2,2-Tetrachloroethane	<6.9	<6.9	<6.9	<6.9	<350	<6.9	<6.9	<6.9	<6,900	<6,900
Tetrachloroethylene	<4.1	<4.1	<4.1	<4.1	<210	<4.1	<4.1	<4.1	<4,100	0
Toluene	<6.0	<6.0	<6.0	<6.0	<300	<6.0	<6.0	<6.0	<6,000	0
1,2-trans-Dichloroethylene	<1.6	<1.6	<1.6	<1.6	<80	<1.6	<1.6	<1.6	<1,600	<1,600
1,1,1-Trichloroethane	<3.8	<3.8	<3.8	<3.8	<190	<3.8	<3.8	<3.8	<3,800	<3,800
1,1,2-Trichloroethane	<5.0	<5.0	<5.0	<5.0	<250	<5.0	<5.0	<5.0	<5,000	<5,000
Trichloroethylene	<1.9	<1.9	<1.9	<1.9	<95	<1.9	<1.9	<1.9	<1,900	<1,900
Trichlorofluoromethane	<10	<10	<10	<10	<500	<10	<10	<10	<10,000	<10,000
Vinyl chloride	<10	<10	<10	<10	<500	<10	<10	<10	<10,000	<10,000
trans-1,3-Dichloropropylene	<10	<10	<10	<10	<500	<10	<10	<10	<10,000	<10,000
Sub Total 1	3	0	0	36	3,960	0	0	13	635,000	755,200
Miscellaneous Volatile Organic Compounds										
Acetone	NA	NA	NA	NA	NA	NA	NA	<10	NA	NA
Methyl ethyl ketone	NA	NA	NA	NA	NA	NA	NA	<10	NA	NA
Carbon disulfide	NA	NA	NA	NA	NA	NA	NA	<10	NA	NA
2-Hexanone	NA	NA	NA	NA	NA	NA	NA	<10	NA	NA
Styrene	NA	NA	NA	NA	NA	NA	NA	<10	NA	NA
Methyl-iso-butyl ketone	<10	<10	<10	<10	<500	<10	<10	<10	NA	NA
Methyl isoamyl ketone	<10	<10	<10	<10	<500	NA	<10	NA	NA	NA
m-Xylene	<10	<10	<10	<10	<500	<10	<10	<10	NA	NA
o-Xylene/p-Xylene	<10	<10	<10	<10	<500	<10	<10	<10	NA	NA
Sub Total 2	0	0	0	0	0	0	0	0	0	0
Total VOCs Analyzed	3	0	0	36	3,960	0	0	13	635,000	755,200

See last page for footnotes.

Table 1. Summary of Volatile Organic Compounds, in Ground Water, Krummrich Plant, Sauget, Illinois.

Well Number:	GM-17A	GM-17A	GM-17A	GM-17A	GM-17A	GM-17A	GM-17A	GM-17B	GM-17B	GM-17B
Date:	11/87	5/88	11/88	11/89	11/90	11/91	11/92	12/86	5/87	11/87
Laboratory:	ETC	ETC	ETC	ETC	ETC	ETC	ETC	ETC	ETC	ETC
USEPA Priority Pollutant Volatile Organic Compounds concentrations are in ug/L										
Acrolein	<10,000	<500,000	<100,000	<10,000,000	<500,000	<500,000	<20,000	<2,000	<100,000	<10,000
Acrylonitrile	<10,000	<500,000	<100,000	<10,000,000	<500,000	<500,000	<10,000	<2,000	<100,000	<10,000
Benzene	**664,000**	**537,000**	**700,000**	**286,000**	**551,000**	**127,000**	**532,000**	**52,900**	**70,600**	**69,300**
Bis (chloromethyl) ether	<1,000	<50,000	<10,000	<1,000,000	<50,000	<50,000	NA	<200	<10,000	<1,000
Bromoform	<470	<24,000	<4,700	<470,000	<24,000	<24,000	<24,000	<94	<4,700	<470
Carbon tetrachloride	<280	<14,000	<2,800	<280,000	<14,000	<14,000	<14,000	<56	<2,800	<280
Chlorobenzene	**234,000**	**233,000**	**155,000**	**129,000**	**267,000**	**42,000**	**341,000**	**9,260**	**13,500**	**8,530**
Chlorodibromomethane	<310	<16,000	<3,100	<3,100,000	<16,000	<16,000	<16,000	<62	<3,100	<310
Chloroethane	<1,000	<50,000	<10,000	<1,000,000	<50,000	<50,000	<50,000	<200	<10,000	<1,000
2-Chloroethylvinyl ether	<1,000	<50,000	<10,000	<1,000,000	<50,000	<50,000	NA	<200	<10,000	<1,000
Chloroform	<160	<8,000	<1,600	<160,000	<8,000	<8,000	<8,000	<32	<1,600	<160
Dichlorobromomethane	<220	<11,000	<2,200	<220,000	<11,000	<11,000	<11,000	<44	<2,200	<220
Dichlorodifluoromethane	<1,000	<50,000	<10,000	<1,000,000	<50,000	<50,000	<50,000	<200	<10,000	<1,000
1,1-Dichloroethane	<470	<24,000	<4,700	<470,000	<24,000	<24,000	<24,000	<94	<4,700	<470
1,2-Dichloroethane	<280	<14,000	<2,800	<280,000	<14,000	<14,000	<14,000	<56	<2,800	<280
1,1-Dichloroethylene	<280	<14,000	<2,800	<280,000	<14,000	<14,000	<14,000	<56	<2,800	<280
1,2-Dichloropropane	<600	<30,000	<6,000	<600,000	<30,000	<30,000	<30,000	<120	<6,000	<600
cis-1,3-Dichloropropylene	<1,000	<25,000	<5,000	<500,000	<25,000	<25,000	<25,000	<120	<5,000	<1,000
Ethylbenzene	<720	<36,000	<7,200	<720,000	<36,000	<36,000	<36,000	<140	<7,200	<720
Methyl bromide	<1,000	<50,000	<10,000	<1,000,000	<50,000	<50,000	<50,000	<200	<10,000	<1,000
Methyl chloride	<1,000	<50,000	<10,000	<1,000,000	<50,000	<50,000	<50,000	<200	<10,000	<1,000
Methylene chloride	**890**	<14,000	**9,460**	<28,000	<14,000	<14,000	**31,400**	<56	**16,700**	**1,220**
1,1,2,2-Tetrachloroethane	<690	<35,000	<6,900	<690,000	<35,000	<35,000	<35,000	<140	<6,900	<690
Tetrachloroethylene	<410	<21,000	<4,100	<410,000	<21,000	<21,000	<21,000	<82	<4,100	<410
Toluene	<600	<30,000	<6,000	<600,000	<30,000	<30,000	<30,000	<120	<6,000	<600
1,2-trans-Dichloroethylene	<160	<8,000	<1,600	<160,000	<8,000	<8,000	<8,000	<32	<1,600	<160
1,1,1-Trichloroethane	<380	<19,000	<3,800	<380,000	<19,000	<19,000	<19,000	<76	<3,800	<380
1,1,2-Trichloroethane	<500	<25,000	<5,000	<500,000	<25,000	<25,000	<25,000	<100	<5,000	<500
Trichloroethylene	<190	<9,500	<1,900	<190,000	<9,500	<9,500	<9,500	<38	<1,900	<190
Trichlorofluoromethane	<1,000	<50,000	<10,000	<1,000,000	<50,000	**76,700**	<50,000	<200	<10,000	<1,000
Vinyl chloride	<1,000	<50,000	<10,000	<1,000,000	<50,000	<50,000	<50,000	<200	<10,000	<1,000
trans-1,3-Dichloropropylene	<500	<50,000	<10,000	<1,000,000	<50,000	<50,000	<50,000	<200	<10,000	<500
Sub Total 1	888,890	770,000	864,460	415,000	818,000	245,700	904,400	62,160	99,800	79,050
Miscellaneous Volatile Organic Compounds										
Acetone	NA	NA	NA	NA	NA	NA	<50,000	NA	NA	NA
Methyl ethyl ketone	NA	NA	NA	NA	NA	NA	<50,000	NA	NA	NA
Carbon disulfide	NA	NA	NA	NA	NA	NA	<50,000	NA	NA	NA
2-Hexanone	NA	NA	NA	NA	NA	NA	<50,000	NA	NA	NA
Styrene	NA	NA	NA	NA	NA	NA	<50,000	NA	NA	NA
Methyl-iso-butyl ketone	NA	NA	NA	NA	NA	NA	<50,000	NA	NA	NA
Methyl isoamyl ketone	NA	NA	NA	NA	NA	NA	NA	NA	NA	NA
m-Xylene	NA	NA	NA	NA	NA	NA	<50,000	NA	NA	NA
o-Xylene/p-Xylene	NA	NA	NA	NA	NA	NA	<50,000	NA	NA	NA
Sub Total 2	0	0	0	0	0	0	0	0	0	0
Total VOCs Analyzed	888,890	770,000	864,460	415,000	818,000	245,700	904,400	62,160	99,800	79,050

See last page for footnotes.

Table 1. Summary of Volatile Organic Compounds, in Ground Water, Krummrich Plant, Sauget, Illinois.

Well Number:	GM-17B	GM-17B	GM-17B	GM-17B	GM-17B	GM-17B	GM-17B	GM-17B	GM-17B	C
Date:	5/88	11/88	5/89	11/89	5/90	11/90	5/91	11/91	11/92	12/8
Laboratory:	ETC	ETC	ETC	ETC	ETC	ETC	ETC	ETC	ETC	ETC
USEPA Priority Pollutant Volatile Organic Compounds concentrations are in ug/L										
Acrolein	<10,000	<1,000	<1,000	<10,000	<500	<10,000	<5,000	<10,000	<200	<10,000
Acrylonitrile	<10,000	<1,000	<1,000	<10,000	<500	<10,000	<5,000	<10,000	<100	<10,000
Benzene	**9,610**	<44	**220**	<440	<22	<440	**249**	<440	<110	<440
Bis (chloromethyl) ether	<1,000	<100	<100	<1,000	<50	<1,000	<500	<1,000	NA	<1,000
Bromoform	<470	<47	<47	<470	<24	<470	<240	<470	<120	<470
Carbon tetrachloride	<280	<28	<28	<280	<14	<280	<140	<280	<70	<280
Chlorobenzene	**2,210**	**622**	**6,390**	**10,100**	**120**	**8,670**	**7,030**	**10,700**	**5,400**	**6,290**
Chlorodibromomethane	<310	<31	<31	<310	<16	<310	<160	<310	<78	<310
Chloroethane	<1,000	<100	<100	<1,000	<50	<1,000	<500	<1,000	<250	<1,000
2-Chloroethylvinyl ether	<1,000	<100	<100	<1,000	<50	<1,000	<500	<1,000	NA	<1,000
Chloroform	<160	<16	<16	<160	<8.0	<160	<80	<160	<40	<160
Dichlorobromomethane	<220	<22	<22	<220	<11	<220	<110	<220	<55	<220
Dichlorodifluoromethane	<1,000	<100	<100	<1,000	<50	<1,000	<500	<1,000	<250	<1,000
1,1-Dichloroethane	<470	<47	<47	<470	<24	<470	<240	<470	<120	<470
1,2-Dichloroethane	<280	<28	<28	<280	<14	<280	<140	<280	<70	<280
1,1-Dichloroethylene	<280	<28	<28	<280	<14	<280	<140	<280	<70	<280
1,2-Dichloropropane	<600	<60	<60	<600	<30	<600	<300	<600	<150	<600
cis-1,3-Dichloropropylene	<500	<50	<50	<500	<25	<500	<250	<500	<130	<500
Ethylbenzene	<720	<72	<72	<750	<36	<720	<360	<720	<180	<720
Methyl bromide	<1,000	<100	<100	<1,000	<50	<1,000	<500	<1,000	<250	<1,000
Methyl chloride	<1,000	<100	<100	<1,000	<50	<1,000	<500	<1,000	<250	<1,000
Methylene chloride	<280	**662**	**37.9**	**364**	**19.7**	<280	**152**	<280	<70	**1,030**
1,1,2,2-Tetrachloroethane	<690	<69	<69	<690	<35	<690	<350	<690	<170	<690
Tetrachloroethylene	<410	<41	<41	<410	<21	<410	<210	<410	<100	0
Toluene	<600	<60	<60	<600	<30	<600	<300	<600	<150	0
1,2-trans-Dichloroethylene	<160	<16	<16	<160	<8.0	<160	<80	<160	<40	<160
1,1,1-Trichloroethane	<380	<38	<38	<380	<19	<380	<190	<380	<95	<380
1,1,2-Trichloroethane	<500	<50	<50	<500	<25	<500	<250	<500	<130	<500
Trichloroethylene	<190	<19	<19	<190	<9.5	<190	<95	<190	<48	<190
Trichlorofluoromethane	<1,000	<100	<100	<1,000	<50	<1,000	<500	<1,000	<250	<1,000
Vinyl chloride	<1,000	<100	<100	<1,000	<50	<1,000	<500	<1,000	<250	<1,000
trans-1,3-Dichloropropylene	<1,000	<100	<100	<1,000	<50	<1,000	<500	<1,000	<250	<1,000
Sub Total 1	11,820	1,284	6,648	10,464	140	8,670	7,431	10,700	5,400	7,320
Miscellaneous Volatile Organic Compounds										
Acetone	NA	NA	NA	NA	NA	NA	NA	NA	<250	NA
Methyl ethyl ketone	NA	NA	NA	NA	NA	NA	NA	NA	<250	NA
Carbon disulfide	NA	NA	NA	NA	NA	NA	NA	NA	<250	NA
2-Hexanone	NA	NA	NA	NA	NA	NA	NA	NA	<250	NA
Styrene	NA	NA	NA	NA	NA	NA	NA	NA	<250	NA
Methyl-iso-butyl ketone	NA	NA	NA	NA	NA	NA	NA	NA	<250	NA
Methyl isoamyl ketone	NA	NA	NA	NA	NA	NA	NA	NA	NA	NA
m-Xylene	NA	NA	NA	NA	NA	NA	NA	NA	<250	NA
o-Xylene/p-Xylene	NA	NA	NA	NA	NA	NA	NA	NA	<250	NA
Sub Total 2	0	0	0	0	0	0	0	0	0	0
Total VOCs Analyzed	11,820	1,284	6,648	10,464	140	8,670	7,431	10,700	5,400	7,320

See last page for footnotes.

Table 1. Summary of Volatile Organic Compounds, in Ground Water, Krummrich Plant, Sauget, Illinois.

Well Number:	GM-17C	GM-17C	GM-17C	GM-17C	GM-17C	GM-17C	GM-17C	GM-17C	GM-17C	GM-17C
Date:	5/87	11/87	5/88	11/88	5/89	11/89	5/90	11/90	5/91	11/91
Laboratory:	ETC	ETC	ETC	ETC	ETC	ETC	ETC	ETC	ETC	ETC
USEPA Priority Pollutant Volatile Organic Compounds concentrations are in ug/L										
Acrolein	<5,000	<10,000	<10,000	<10,000	<100	<2,000	<1,000	<5,000	<2,000	<10,000
Acrylonitrile	<5,000	<10,000	<10,000	<10,000	<100	<2,000	<1,000	<5,000	<2,000	<10,000
Benzene	<220	<440	<440	<440	**22.5**	<88	**92.8**	<220	**133**	<440
Bis (chloromethyl) ether	<500	<1,000	<1,000	<1,000	<10	<200	<100	<500	<200	<1,000
Bromoform	<240	<470	<470	<470	<4.7	<94	<47	<240	<94	<470
Carbon tetrachloride	<140	<280	<280	<280	<2.8	<56	<28	<140	<56	<280
Chlorobenzene	**20,200**	**21,400**	**3,110**	**3,480**	**701**	**1,430**	**923**	**3,330**	**1,740**	**7,690**
Chlorodibromomethane	<160	<310	<310	<310	<3.1	<62	<31	<160	<62	<310
Chloroethane	<500	<1,000	<1,000	<1,000	<10	<200	<100	<500	<200	<1,000
2-Chloroethylvinyl ether	<500	<1,000	<1,000	<1,000	<10	<200	<100	<500	<200	<1,000
Chloroform	<80	<160	<160	<160	<1.6	<32	<16	<80	<32	<160
Dichlorobromomethane	<110	<220	<220	<220	<2.2	<44	<22	<110	<44	<220
Dichlorodifluoromethane	<500	<1,000	<1,000	<1,000	<10	<200	<100	<500	<200	<1,000
1,1-Dichloroethane	<240	<470	<470	<470	<4.7	<94	<47	<240	<94	<470
1,2-Dichloroethane	<140	<280	<280	<280	<2.8	<56	<28	<140	<56	<280
1,1-Dichloroethylene	<140	<280	<280	<280	<2.8	<56	<28	<140	<56	<280
1,2-Dichloropropane	<300	<600	<600	<600	<6.0	<120	<60	<300	<120	<600
cis-1,3-Dichloropropylene	<250	<500	<500	<500	<5.0	<100	<50	<250	<100	<500
Ethylbenzene	<360	<720	<720	<720	<7.2	<140	<72	<360	<140	<720
Methyl bromide	<500	<1,000	<1,000	<1,000	<10	<200	<100	<500	<200	<1,000
Methyl chloride	<500	<1,000	<1,000	<1,000	<10	<200	<100	<500	<200	<1,000
Methylene chloride	**361**	<280	<280	**422**	**4.75**	<56	<28	<140	<56	<280
1,1,2,2-Tetrachloroethane	<350	<690	<690	<690	<6.9	<140	<69	<350	<140	<690
Tetrachloroethylene	<210	<410	<410	<410	<4.1	<82	<41	<210	<82	<410
Toluene	<300	<600	<600	<600	<6.0	<120	<60	<300	<120	<600
1,2-trans-Dichloroethylene	<80	<160	<160	<160	<1.6	<32	<16	<80	<32	<160
1,1,1-Trichloroethane	<190	<380	<380	<380	<3.8	<76	<38	<190	<76	<380
1,1,2-Trichloroethane	<250	<500	<500	<500	<5.0	<100	<50	<250	<100	<500
Trichloroethylene	<95	<190	<190	<190	<1.9	<38	<19	<95	<38	<190
Trichlorofluoromethane	<500	<1,000	<1,000	<1,000	<10	<200	<100	<500	<200	<1,000
Vinyl chloride	<500	<1,000	<1,000	<1,000	<10	<200	<100	<500	<200	<1,000
trans-1,3-Dichloropropylene	<500	<1,000	<1,000	<1,000	<10	<200	<100	<500	<200	<1,000
Sub Total 1	20,561	21,400	3,110	3,902	728	1,430	1,016	3,330	1,873	7,690
Miscellaneous Volatile Organic Compounds										
Acetone	NA	NA	NA	NA	NA	NA	NA	NA	NA	NA
Methyl ethyl ketone	NA	NA	NA	NA	NA	NA	NA	NA	NA	NA
Carbon disulfide	NA	NA	NA	NA	NA	NA	NA	NA	NA	NA
2-Hexanone	NA	NA	NA	NA	NA	NA	NA	NA	NA	NA
Styrene	NA	NA	NA	NA	NA	NA	NA	NA	NA	NA
Methyl-iso-butyl ketone	NA	NA	NA	NA	NA	NA	NA	NA	NA	NA
Methyl isoamyl ketone	NA	NA	NA	NA	NA	NA	NA	NA	NA	NA
m-Xylene	NA	NA	NA	NA	NA	NA	NA	NA	NA	NA
o-Xylene/p-Xylene	NA	NA	NA	NA	NA	NA	NA	NA	NA	NA
Sub Total 2	0	0	0	0	0	0	0	0	0	0
Total VOCs Analyzed	20,561	21,400	3,110	3,902	728	1,430	1,016	3,330	1,873	7,690

See last page for footnotes.

Table 1. Summary of Volatile Organic Compounds, in Ground Water, Krummrich Plant, Sauget, Illinois.

Well Number:	GM-17C	GM-18B	GM-27B	GM-27B	GM-27B	GM-27B	GM-27B	GM-27B	GM-27B	GM-27B
Date:	11/92	11/92	12/86	5/87	11/87	5/88	11/89	11/90	11/91	11/92
Laboratory:	ETC	ETC	ETC	ETC	ETC	ETC	ETC	ETC	ETC	ETC
USEPA Priority Pollutant Volatile Organic Compounds concentrations are in ug/L										
Acrolein	<200	<100	<100	<100	<50,000	<10,000	<5,000	<10,000	<10,000	<10,000
Acrylonitrile	<100	<100	<100	<100	<50,000	<10,000	<5,000	<10,000	<10,000	<10,000
Benzene	**390**	<4.4	**237**	**156**	**9,980**	**670**	**2,460**	**1,170**	**1,070**	**1,010**
Bis (chloromethyl) ether	NA	<10	<10	<10	<5,000	<1,000	<500	<1,000	<1,000	<1,000
Bromoform	<240	<4.7	<4.7	<4.7	<2,400	<470	<240	<470	<470	<470
Carbon tetrachloride	<140	<2.8	<2.8	<2.8	<1,400	<280	<140	<280	<280	<280
Chlorobenzene	**6,520**	**29.2**	**383**	**193**	**60,200**	**2,940**	**10,500**	**10,100**	**8,760**	**10,800**
Chlorodibromomethane	<160	<3.1	<3.1	<3.1	<1,600	<310	<160	<310	<310	<310
Chloroethane	<500	<10	<10	<10	<5,000	<1,000	<500	<1,000	<1,000	<1,000
2-Chloroethylvinyl ether	NA	<10	<10	<10	<5,000	<1,000	<500	<1,000	<1,000	<1,000
Chloroform	<80	<1.6	<1.6	<1.6	<800	<160	<80	<160	<160	<160
Dichlorobromomethane	<110	<2.2	<2.2	<2.2	<1,100	<220	<110	<220	<220	<220
Dichlorodifluoromethane	<500	<10	<10	<10	<5,000	<1,000	<500	<1,000	<1,000	<1,000
1,1-Dichloroethane	<240	<4.7	<4.7	<4.7	<2,400	<470	<240	<470	<470	<470
1,2-Dichloroethane	<140	<2.8	<2.8	<2.8	<1,400	<280	<140	<280	<280	<280
1,1-Dichloroethylene	<140	<2.8	<2.8	<2.8	<1,400	<280	<140	<280	<280	<280
1,2-Dichloropropane	<300	<6.0	<6	<6	<3,000	<600	<300	<600	<600	<600
cis-1,3-Dichloropropylene	<250	<5.0	<5	<5	<2,500	<500	<250	<500	<500	<500
Ethylbenzene	<360	<7.2	<7.2	<7.2	<3,600	<720	<360	<720	<720	<720
Methyl bromide	<500	<10	<10	<10	<5,000	<1,000	<500	<1,000	<1,000	<1,000
Methyl chloride	<500	<10	<10	<10	<5,000	<1,000	<500	<1,000	<1,000	<1,000
Methylene chloride	<140	**5.19**	**9.6**	<2.8	<1,400	<280	**227**	<280	<280	<280
1,1,2,2-Tetrachloroethane	<350	<6.9	<6.9	<6.9	<3,500	<690	<350	<690	<690	<690
Tetrachloroethylene	<210	<4.1	<4.1	<4.1	<2,100	<410	<210	<410	<410	)
Toluene	<300	<6.0	**6**	<6	<3,000	<600	**1,400**	**1,120**	**857**	**9**
1,2-trans-Dichloroethylene	<80	<1.6	<1.6	<1.6	<800	<160	<80	<160	<160	<160
1,1,1-Trichloroethane	<190	<3.8	<3.8	<3.8	<1,900	<380	<190	<380	<380	<380
1,1,2-Trichloroethane	<250	<5.0	<5	<5	<2,500	<500	<250	<500	<500	<500
Trichloroethylene	<95	<1.9	<1.9	<1.9	<950	<190	<95	<190	<190	<190
Trichlorofluoromethane	<500	<10	<10	<10	<5,000	<1,000	<500	<1,000	<1,000	<1,000
Vinyl chloride	<500	<10	<10	<10	<5,000	<1,000	<500	<1,000	<1,000	<1,000
trans-1,3-Dichloropropylene	<500	<10	<10	<10	<5,000	<1,000	<500	<1,000	<1,000	<1,000
Sub Total 1	6,910	34	636	349	70,180	3,610	14,587	12,390	10,687	12,619
Miscellaneous Volatile Organic Compounds										
Acetone	<500	NA	NA	NA	NA	NA	NA	NA	NA	NA
Methyl ethyl ketone	<500	NA	NA	NA	NA	NA	NA	NA	NA	NA
Carbon disulfide	<500	NA	NA	NA	NA	NA	NA	NA	NA	NA
2-Hexanone	<500	NA	NA	NA	NA	NA	NA	NA	NA	NA
Styrene	<500	NA	NA	NA	NA	NA	NA	NA	NA	NA
Methyl-iso-butyl ketone	<500	NA	NA	NA	<5,000	NA	NA	NA	NA	NA
Methyl isoamyl ketone	NA	NA	NA	NA	<5,000	NA	NA	NA	NA	NA
m-Xylene	<500	NA	NA	NA	<5,000	NA	NA	NA	NA	NA
o-Xylene/p-Xylene	<500	NA	NA	NA	<5,000	NA	NA	NA	NA	NA
Sub Total 2	0	0	0	0	0	0	0	0	0	0
Total VOCs Analyzed	6,910	34	636	349	70,180	3,610	14,587	12,390	10,687	12,619

See last page for footnotes.

Table 1. Summary of Volatile Organic Compounds, in Ground Water, Krummrich Plant, Sauget, Illinois.

Well Number:	GM-27C	GM-27C	GM-27C	GM-27C	GM-27C	GM-27C	GM-27C	GM-27C	GM-27C	GM-28B
Date:	12/86	5/87	11/87	5/88	11/88	11/89	11/90	11/91	11/92	12/86
Laboratory:	ETC	ETC	ETC	ETC	ETC	ETC	ETC	ETC	ETC	ETC
USEPA Priority Pollutant Volatile Organic Compounds concentrations are in ug/L										
Acrolein	<100	<100	<1,000	<5,000	<1,000	<5,000	<500	<1,000	<1,000	<2,000
Acrylonitrile	<100	<100	<1,000	<5,000	<1,000	<5,000	<500	<1,000	<1,000	<2,000
Benzene	**159**	**122**	**433**	**346**	**529**	**331**	**414**	**323**	**263**	**289**
Bis (chloromethyl) ether	<10	<10	<100	<500	<100	<500	<50	<100	<100	<200
Bromoform	<4.7	<4.7	<47	<240	<47	<240	<24	<47	<47	<94
Carbon tetrachloride	<2.8	<2.8	<28	<140	<28	<140	<14	<28	<28	<56
Chlorobenzene	**385**	**318**	**1,300**	**710**	**2,030**	**1,840**	**2,440**	**1,850**	**1,510**	**3,310**
Chlorodibromomethane	<3.1	<3.1	<31	<160	<31	<160	<16	<31	<31	<62
Chloroethane	<10	<10	<100	<500	<100	<500	<50	<100	<100	<200
2-Chloroethylvinyl ether	<10	<10	<100	<500	<100	<500	<50	<100	<100	<200
Chloroform	<1.6	<1.6	<16	<80	<16	<80	<8.0	<16	<16	<32
Dichlorobromomethane	<2.2	<2.2	<22	<110	<22	<110	<11	<22	<22	<44
Dichlorodifluoromethane	<10	<10	<100	<500	<100	<500	<50	<100	<100	<200
1,1-Dichloroethane	<4.7	<4.7	<47	<240	<47	<240	<24	<47	<47	<94
1,2-Dichloroethane	<2.8	<2.8	<28	<140	<28	<140	<14	<28	<28	<56
1,1-Dichloroethylene	<2.8	<2.8	<28	<140	<28	<140	<14	<28	<28	<56
1,2-Dichloropropane	<6	<6	<60	<300	<60	<300	<30	<60	<60	<120
cis-1,3-Dichloropropylene	<5	<5	<50	<250	<50	<250	<25	<50	<50	<100
Ethylbenzene	<7.2	<7.2	<72	<360	<72	<360	<36	<72	<72	<140
Methyl bromide	<10	<10	<100	<500	<100	<500	<50	<100	<100	<200
Methyl chloride	<10	<10	<100	<500	<100	<500	<50	<100	<100	<200
Methylene chloride	<2.8	<2.8	<28	<140	**203**	**693**	<14	<28	<28	<56
1,1,2,2-Tetrachloroethane	<6.9	<6.9	<69	<350	<69	<350	<35	<69	<69	<140
Tetrachloroethylene	<4.1	<4.1	<41	<210	<41	<210	<21	<41	<41	<82
Toluene	<6	<6	<60	<300	**232**	<300	**90.6**	<60	<60	<120
1,2-trans-Dichloroethylene	<1.6	<1.6	<16	<80	<16	<80	<8.0	<16	<16	<32
1,1,1-Trichloroethane	<3.8	<3.8	<38	<190	<38	<190	<19	<38	<38	<76
1,1,2-Trichloroethane	<5	<5	<50	<250	<50	<250	<25	<50	<50	<100
Trichloroethylene	<1.9	<1.9	<19	<95	<19	<95	<9.5	<19	<19	<38
Trichlorofluoromethane	<10	<10	<100	<500	<100	<500	<50	<100	<100	<200
Vinyl chloride	<10	<10	<100	<500	<100	<500	<50	<100	<100	<200
trans-1,3-Dichloropropylene	<10	<10	<100	<500	<100	<500	<50	<100	<100	<200
Sub Total 1	544	440	1,733	1,056	2,994	2,864	2,945	2,173	1,773	3,599
Miscellaneous Volatile Organic Compounds										
Acetone	NA	NA	NA	NA	NA	NA	NA	NA	NA	NA
Methyl ethyl ketone	NA	NA	NA	NA	NA	NA	NA	NA	NA	NA
Carbon disulfide	NA	NA	NA	NA	NA	NA	NA	NA	NA	NA
2-Hexanone	NA	NA	NA	NA	NA	NA	NA	NA	NA	NA
Styrene	NA	NA	NA	NA	NA	NA	NA	NA	NA	NA
Methyl-iso-butyl ketone	NA	NA	<100	NA	NA	NA	NA	NA	NA	NA
Methyl isoamyl ketone	NA	NA	<100	NA	NA	NA	NA	NA	NA	NA
m-Xylene	NA	NA	<100	NA	NA	NA	NA	NA	NA	NA
o-Xylene/p-Xylene	NA	NA	<100	NA	NA	NA	NA	NA	NA	NA
Sub Total 2	0	0	0	0	0	0	0	0	0	0
Total VOCs Analyzed	544	440	1,733	1,056	2,994	2,864	2,945	2,173	1,773	3,599

See last page for footnotes.

Table 1. Summary of Volatile Organic Compounds, in Ground Water, Krummrich Plant, Sauget, Illinois.

Well Number:	GM-28B	GM-28B	GM-28B	GM-28B	GM-28B	GM-28B	GM-28B	GM-28C	GM-28C	8C
Date:	5/87	11/87	5/88	3/89	11/89	11/90	11/91	12/86	5/87	11/87
Laboratory:	ETC	ETC	ETC	ETC	ETC	ETC	ETC	ETC	ETC	ETC
USEPA Priority Pollutant Volatile Organic Compounds concentrations are in ug/L										
Acrolein	<5,000	<1,000	<10,000	<1,000	<5,000	<5,000	<2,500	<100	<5,000	<1,000
Acrylonitrile	<5,000	<1,000	<10,000	<1,000	<5,000	<5,000	<2,500	<100	<5,000	<1,000
Benzene	<220	**485**	<440	**85.5**	<220	<220	<110	**582**	<220	**297**
Bis (chloromethyl) ether	<500	<100	<1,000	<100	<500	<500	<250	<10	<500	<100
Bromoform	<240	<47	<470	<47	<240	<240	<120	<4.7	<240	<47
Carbon tetrachloride	<140	<28	<280	<28	<140	<140	<70	<2.8	<140	<28
Chlorobenzene	**447**	**4,060**	**2,200**	**2,760**	**2,560**	**3,560**	**2,410**	**4,530**	**621**	**4,910**
Chlorodibromomethane	<160	<31	<310	<31	<160	<160	<78	<3.1	<160	<31
Chloroethane	<500	<100	<1,000	<100	<500	<500	<250	<10	<500	<100
2-Chloroethylvinyl ether	<500	<100	<1,000	<100	<500	<500	<250	<10	<500	<100
Chloroform	<80	<16	<160	<16	<80	<80	<40	<1.6	<80	<16
Dichlorobromomethane	<110	<22	<220	<22	<110	<110	<55	<2.2	<110	<22
Dichlorodifluoromethane	<500	<100	<1,000	<100	<500	<500	<250	<10	<500	<100
1,1-Dichloroethane	<240	<47	<470	<47	<240	<240	<120	<4.7	<240	<47
1,2-Dichloroethane	<140	<28	<280	<28	<140	<140	<70	<2.8	<140	<28
1,1-Dichloroethylene	<140	<28	<280	<28	<140	<140	<70	<2.8	<140	<28
1,2-Dichloropropane	<300	<60	<600	<60	<300	<300	<150	<6	<300	<60
cis-1,3-Dichloropropylene	<250	<50	<500	<50	<250	<250	<130	<5	<250	<50
Ethylbenzene	<360	<72	<720	<100	<360	<360	<180	<7.2	<360	<72
Methyl bromide	<500	<100	<1,000	<100	<500	<500	<250	<10	<500	<100
Methyl chloride	<500	<100	<1,000	**79.2**	<500	<500	<250	<10	<500	<100
Methylene chloride	**360**	**1,350**	<280	<69	**706**	<140	<70	<2.8	**264**	**1,790**
1,1,2,2-Tetrachloroethane	<350	<69	<690	<41	<350	<350	<170	<6.9	<350	<69
Tetrachloroethylene	<210	<41	<410	**216**	<210	<210	<100	<4.1	<210	41
Toluene	<300	**321**	<600	<16	<300	**533**	<150	<6	<300	**45**
1,2-trans-Dichloroethylene	<80	<16	<160	<38	<80	<80	<40	<1.6	<80	<16
1,1,1-Trichloroethane	<190	<38	<380	<50	<190	<190	<95	<3.8	<190	<38
1,1,2-Trichloroethane	<250	<50	<500	<19	<250	<250	<130	<5	<250	<50
Trichloroethylene	<95	<19	<190	<100	<95	<95	<48	<1.9	<95	<19
Trichlorofluoromethane	<500	<100	<1,000	<100	<500	<500	<250	<10	<500	<100
Vinyl chloride	<500	<100	<1,000	<100	<500	<500	<250	<10	<500	<100
trans-1,3-Dichloropropylene	<500	<100	<1,000	<72	<500	<500	<250	<10	<500	<100
Sub Total 1	807	6,216	2,200	3,140	3,266	4,093	2,410	5,112	875	7,112
Miscellaneous Volatile Organic Compounds										
Acetone	NA	NA	NA	NA	NA	NA	NA	NA	NA	NA
Methyl ethyl ketone	NA	NA	NA	NA	NA	NA	NA	NA	NA	NA
Carbon disulfide	NA	NA	NA	NA	NA	NA	NA	NA	NA	NA
2-Hexanone	NA	NA	NA	NA	NA	NA	NA	NA	NA	NA
Styrene	NA	NA	NA	NA	NA	NA	NA	NA	NA	NA
Methyl-iso-butyl ketone	NA	**1,250**	NA	<100	NA	NA	NA	NA	NA	**236**
Methyl isoamyl ketone	NA	<100	NA	<100	NA	NA	NA	NA	NA	<100
m-Xylene	NA	**149**	NA	<100	NA	NA	NA	NA	NA	<100
o-Xylene/p-Xylene	NA	**116**	NA	<100	NA	NA	NA	NA	NA	<100
Sub Total 2	0	1,515	0	0	0	0	0	0	0	236
Total VOCs Analyzed	807	7,731	2,200	3,140	3,266	4,093	2,410	5,112	875	7,348

See last page for footnotes.

Table 1. Summary of Volatile Organic Compounds, in Ground Water, Krummrich Plant, Sauget, Illinois.

Well Number:	GM-28C	GM-28C	GM-28C	GM-28C	GM-28C	GM-28C	GM-28C	GM-28C	GM-31A	GM-31A
Date:	5/88	11/88	3/89	3/89*	11/89	11/90	11/91	11/92	12/86	12/86*
Laboratory:	ETC	ETC	ETC	ETC	ETC	ETC	ETC	ETC	ETC	ETC
USEPA Priority Pollutant Volatile Organic Compounds concentrations are in ug/L										
Acrolein	<10,000	<5,000	<5,000	<5,000	<5,000	<5,000	<2,500	<2,000	<100	<100
Acrylonitrile	<10,000	<5,000	<5,000	<5,000	<5,000	<5,000	<2,500	<2,000	<100	<100
Benzene	<440	<220	<220	<220	<220	<220	<110	<88	**15.5**	**15.2**
Bis (chloromethyl) ether	<1,000	<500	<500	<500	<500	<500	<250	<200	<10	<10
Bromoform	<470	<240	<240	<240	<240	<240	<120	<94	<4.7	<4.7
Carbon tetrachloride	<280	<140	<140	<140	<140	<140	<70	<56	<2.8	<2.8
Chlorobenzene	**4,700**	**2,920**	**2,510**	**3,220**	**2,840**	**3,580**	**2,800**	**1,480**	**6.5**	7.1
Chlorodibromomethane	<310	<160	<160	<160	<160	<160	<78	<62	<3.1	<3.1
Chloroethane	<1,000	<500	<500	<500	<500	<500	<250	<200	<10	<10
2-Chloroethylvinyl ether	<1,000	<500	<500	<500	<500	<500	<250	<200	<10	<10
Chloroform	<160	<80	<80	<80	<80	<80	<40	<32	<1.6	<1.6
Dichlorobromomethane	<220	<110	<110	<110	<110	<110	<55	<44	<2.2	<2.2
Dichlorodifluoromethane	<1,000	<500	<500	<500	<500	<500	<250	<200	<10	<10
1,1-Dichloroethane	<470	<240	<240	<240	<240	<240	<120	<94	<4.7	<4.7
1,2-Dichloroethane	<280	<140	<140	<140	<140	<140	<70	<56	<2.8	<2.8
1,1-Dichloroethylene	<280	<140	<140	<140	<140	<140	<70	<56	<2.8	<2.8
1,2-Dichloropropane	<600	<300	<300	<300	<300	<300	<150	<120	<6	<6
cis-1,3-Dichloropropylene	<500	<250	<250	<250	<250	<250	<130	<100	<5	<5
Ethylbenzene	<720	<360	<500	<500	<360	<360	<180	<140	<7.2	<7.2
Methyl bromide	<1,000	<500	<500	<500	<500	<500	<250	<200	<10	<10
Methyl chloride	<1,000	<500	<140	<140	<500	<500	<250	<200	<10	<10
Methylene chloride	<280	**283**	<350	<350	**488**	<140	<70	<56	**4.4**	**12.7**
1,1,2,2-Tetrachloroethane	<690	<350	<210	<210	<350	<350	<170	<140	<6.9	<6.9
Tetrachloroethylene	<410	<210	<300	<300	<210	<210	<100	<82	<4.1	<4.1
Toluene	<600	<300	<80	<80	<300	**431**	<150	<120	<6	<6
1,2-trans-Dichloroethylene	<160	<80	<190	<190	<80	<80	<40	<32	<1.6	<1.6
1,1,1-Trichloroethane	<380	<190	<250	<250	<190	<190	<95	<76	<3.8	<3.8
1,1,2-Trichloroethane	<500	<250	<95	<95	<250	<250	<130	<100	<5	<5
Trichloroethylene	<190	<95	<500	<500	<95	<95	<48	<38	<1.9	<1.9
Trichlorofluoromethane	<1,000	<500	<500	<500	<500	<500	<250	<200	<10	<10
Vinyl chloride	<1,000	<500	<500	<500	<500	<500	<250	<200	<10	<10
trans-1,3-Dichloropropylene	<1,000	<500	<360	<360	<500	<500	<250	<200	<10	<10
Sub Total 1	4,700	3,203	2,510	3,220	3,328	4,011	2,800	1,480	26	35
Miscellaneous Volatile Organic Compounds										
Acetone	NA	NA	NA	NA	NA	NA	NA	NA	NA	NA
Methyl ethyl ketone	NA	NA	NA	NA	NA	NA	NA	NA	NA	NA
Carbon disulfide	NA	NA	NA	NA	NA	NA	NA	NA	NA	NA
2-Hexanone	NA	NA	NA	NA	NA	NA	NA	NA	NA	NA
Styrene	NA	NA	NA	NA	NA	NA	NA	NA	NA	NA
Methyl-iso-butyl ketone	NA	NA	<500	<500	NA	NA	NA	NA	<10	<10
Methyl isoamyl ketone	NA	NA	<500	<500	NA	NA	NA	NA	<10	<10
m-Xylene	NA	NA	<500	<500	NA	NA	NA	NA	<10	<10
o-Xylene/p-Xylene	NA	NA	<500	<500	NA	NA	NA	NA	<10	<10
Sub Total 2	0	0	0	0	0	0	0	0	0	0
Total VOCs Analyzed	4,700	3,203	2,510	3,220	3,328	4,011	2,800	1,480	26	35

See last page for footnotes.

Table 1. Summary of Volatile Organic Compounds, in Ground Water, Krummrich Plant, Sauget, Illinois.

Well Number:	GM-31A	GM-31A	GM-31A	GM-31A	GM-31A	GM-31A	GM-31A	GM-31A	GM-31A	A
Date:	5/87	5/87*	11/87	11/87*	5/88	5/88*	11/88	11/88*	11/88	11/88*
Laboratory:	ETC	ETC	ETC	ETC	ETC	ETC	ETC	ETC	SL	SL
USEPA Priority Pollutant Volatile Organic Compounds concentrations are in ug/L										
Acrolein	<100	<100	<500	<100	<100	<100	<500	<500	<500	<500
Acrylonitrile	<100	<100	<500	<100	<100	<100	<500	<500	<500	<500
Benzene	**13**	**13.2**	**1,220**	**973**	**45.8**	**46.1**	**30.1**	**25.1**	**70**	**84**
Bis (chloromethyl) ether	<10	<10	<50	<10	<10	<10	<50	<50	<100	<100
Bromoform	<4.7	<4.7	<24	<4.7	<4.7	<4.7	<24	<24	<50	<50
Carbon tetrachloride	<2.8	<2.8	<14	<2.8	<2.8	<2.8	<14	<14	<50	<50
Chlorobenzene	**18.1**	**18.4**	<30	**26.0**	<6.0	<6.0	<30	<30	<50	<50
Chlorodibromomethane	<3.1	<3.1	<16	<3.1	<3.1	<3.1	<16	<16	<50	<50
Chloroethane	<10	<10	<50	<10	<10	<10	<50	<50	<100	<100
2-Chloroethylvinyl ether	<10	<10	<50	<10	<10	<10	<50	<50	<50	<50
Chloroform	<1.6	<1.6	<8.0	<1.6	<1.6	<1.6	<8.0	<8.0	<50	<50
Dichlorobromomethane	<2.2	<2.2	<11	<2.2	<2.2	<2.2	<11	<11	<50	<50
Dichlorodifluoromethane	<10	<10	<50	<10	<10	<10	<50	<50	<100	<100
1,1-Dichloroethane	<4.7	<4.7	<24	<4.7	<4.7	<4.7	<24	<24	<50	<50
1,2-Dichloroethane	<2.8	<2.8	<14	<2.8	<2.8	<2.8	<14	<14	<50	<50
1,1-Dichloroethylene	<2.8	<2.8	<14	<2.8	<2.8	<2.8	<14	<14	<50	<50
1,2-Dichloropropane	<6	<6	<30	<6.0	<6.0	<6.0	<30	<30	<50	<50
cis-1,3-Dichloropropylene	<5	<5	<25	<5.0	<5.0	<5.0	<25	<25	<50	<50
Ethylbenzene	<7.2	<7.2	<36	<7.2	<7.2	<7.2	<36	<36	<50	<50
Methyl bromide	<10	<10	<50	<10	<10	<10	<50	<50	<100	<100
Methyl chloride	<10	<10	<50	<10	<10	<10	<50	<50	<100	<100
Methylene chloride	**9.3**	**14.6**	**33.8**	**4.71**	**9.8**	**7.6**	**29.9**	**52.8**	<50	<50
1,1,2,2-Tetrachloroethane	<6.9	<6.9	<35	<6.9	<6.9	<6.9	<35	<35	<50	<50
Tetrachloroethylene	<4.1	<4.1	<21	<4.1	<4.1	<4.1	<21	<21	<50	<0
Toluene	<6	<6	<30	<6.0	<6.0	<6.0	<30	<30	<50	<0
1,2-trans-Dichloroethylene	<1.6	<1.6	<8.0	<1.6	<1.6	<1.6	<8.0	<8.0	<50	<50
1,1,1-Trichloroethane	<3.8	<3.8	<19	<3.8	<3.8	<3.8	<19	<19	<50	<50
1,1,2-Trichloroethane	<5	<5	<25	<5.0	<5.0	<5.0	<25	<25	<50	<50
Trichloroethylene	<1.9	<1.9	<9.5	<1.9	<1.9	<1.9	<9.5	<9.5	<50	<50
Trichlorofluoromethane	<10	<10	<50	<10	<10	<10	<50	<50	<50	<50
Vinyl chloride	<10	<10	<50	<10	<10	<10	<50	<50	<100	<100
trans-1,3-Dichloropropylene	<10	<10	<50	<10	<10	<10	<50	<50	<50	<50
Sub Total 1	40	46	1,254	1,004	56	54	60	78	70	84
Miscellaneous Volatile Organic Compounds										
Acetone	NA	NA	NA	NA	NA	NA	NA	NA	NA	NA
Methyl ethyl ketone	NA	NA	NA	NA	NA	NA	NA	NA	NA	NA
Carbon disulfide	NA	NA	NA	NA	NA	NA	NA	NA	NA	NA
2-Hexanone	NA	NA	NA	NA	NA	NA	NA	NA	NA	NA
Styrene	NA	NA	NA	NA	NA	NA	NA	NA	NA	NA
Methyl-iso-butyl ketone	<10	<10	<50	<10	<10	<10	<50	<50	<500	<500
Methyl isoamyl ketone	<10	<10	<50	<10	<10	<10	<50	<50	<100	<100
m-Xylene	<10	<10	<50	<10	<10	<10	<50	<50	<50	<50
o-Xylene/p-Xylene	<10	<10	<50	<10	<10	<10	<50	<50	<50	<50
Sub Total 2	0	0	0	0	0	0	0	0	0	0
Total VOCs Analyzed	40	46	1,254	1,004	56	54	60	78	70	84

See last page for footnotes.

Table 1. Summary of Volatile Organic Compounds, in Ground Water, Krummrich Plant, Sauget, Illinois.

Well Number:	GM-31A	GM-31A	GM-31A	GM-31A	GM-31B	GM-31B	GM-31B	GM-31B	GM-31B	GM-31B
Date:	11/89	11/89*	11/90	11/90*	12/86	12/86*	5/87	5/87*	11/87	11/87*
Laboratory:	ETC	ETC	ETC	ETC	ETC	ETC	ETC	ETC	ETC	ETC
USEPA Priority Pollutant Volatile Organic Compounds concentrations are in ug/L										
Acrolein	<100	<100	<100	<100	<100	<100	<100	<100	<100	<100
Acrylonitrile	<100	<100	<100	<100	<100	<100	<100	<100	<100	<100
Benzene	**15.6**	**17.0**	**10.4**	<4.4	<4.4	<4.4	<4.4	<4.4	<4.4	<4.4
Bis (chloromethyl) ether	<10	<10	<10	<10	<10	<10	<10	<10	<10	<10
Bromoform	<4.7	<4.7	<4.7	<4.7	<4.7	<4.7	<4.7	<4.7	<4.7	<4.7
Carbon tetrachloride	<2.8	<2.8	<2.8	<2.8	<2.8	<2.8	<2.8	<2.8	<2.8	<2.8
Chlorobenzene	**12.1**	**12.1**	**12.8**	**8.48**	<6	<6	**7.1**	**10.3**	<6.0	**8.7**
Chlorodibromomethane	<3.1	<3.1	<3.1	<3.1	<3.1	<3.1	<3.1	<3.1	<3.1	<3.1
Chloroethane	<10	<10	<10	<10	<10	<10	<10	<10	<10	<10
2-Chloroethylvinyl ether	<10	<10	<10	<10	<10	<10	<10	<10	<10	<10
Chloroform	<1.6	<1.6	<1.6	<1.6	<1.6	<1.6	<1.6	<1.6	<1.6	<1.6
Dichlorobromomethane	<2.2	<2.2	<2.2	<2.2	<2.2	<2.2	<2.2	<2.2	<2.2	<2.2
Dichlorodifluoromethane	<10	<10	<10	<10	<10	<10	<10	<10	<10	<10
1,1-Dichloroethane	<4.7	<4.7	<4.7	<4.7	<4.7	<4.7	<4.7	<4.7	<4.7	<4.7
1,2-Dichloroethane	<2.8	<2.8	<2.8	<2.8	<2.8	<2.8	<2.8	<2.8	<2.8	<2.8
1,1-Dichloroethylene	<2.8	<2.8	<2.8	<2.8	<2.8	<2.8	<2.8	<2.8	<2.8	<2.8
1,2-Dichloropropane	<6.0	<6.0	<6.0	<6.0	<6	<6	<6	<6	<6.0	<6.0
cis-1,3-Dichloropropylene	<5.0	<5.0	<5.0	<5.0	<5	<5	<5	<5	<5.0	<5.0
Ethylbenzene	<7.2	<7.2	<7.2	<7.2	<7.2	<7.2	<7.2	<7.2	<7.2	<7.2
Methyl bromide	<10	<10	<10	<10	<10	<10	<10	<10	<10	<10
Methyl chloride	<10	<10	<10	<10	<10	<10	<10	<10	<10	<10
Methylene chloride	<2.8	<2.8	<2.8	<2.8	**4.4**	**14.6**	**15**	**44.5**	**13.4**	**14.3**
1,1,2,2-Tetrachloroethane	<6.9	<6.9	<6.9	<6.9	<6.9	<6.9	<6.9	<6.9	<6.9	<6.9
Tetrachloroethylene	<4.1	<4.1	<4.1	<4.1	<4.1	<4.1	<4.1	<4.1	<4.1	<4.1
Toluene	<6.0	<6.0	<6.0	<6.0	<6	<6	<6	<6	<6.0	<6.0
1,2-trans-Dichloroethylene	<1.6	<1.6	<1.6	<1.6	<1.6	<1.6	<1.6	<1.6	<1.6	<1.6
1,1,1-Trichloroethane	<3.8	<3.8	<3.8	<3.8	<3.8	<3.8	<3.8	<3.8	<3.8	<3.8
1,1,2-Trichloroethane	<5.0	<5.0	<5.0	<5.0	<5	<5	<5	<5	<5.0	<5.0
Trichloroethylene	<1.9	<1.9	<1.9	<1.9	<1.9	<1.9	<1.9	<1.9	<1.9	<1.9
Trichlorofluoromethane	<10	<10	<10	<10	<10	<10	<10	<10	<10	<10
Vinyl chloride	<10	<10	<10	<10	<10	<10	<10	<10	**15.4**	**20.5**
trans-1,3-Dichloropropylene	<10	<10	<10	<10	<10	<10	<10	<10	<10	<10
Sub Total 1	28	29	23	8	4	15	22	55	29	43
Miscellaneous Volatile Organic Compounds										
Acetone	NA	NA	NA	NA	NA	NA	NA	NA	NA	NA
Methyl ethyl ketone	NA	NA	NA	NA	NA	NA	NA	NA	NA	NA
Carbon disulfide	NA	NA	NA	NA	NA	NA	NA	NA	NA	NA
2-Hexanone	NA	NA	NA	NA	NA	NA	NA	NA	NA	NA
Styrene	NA	NA	NA	NA	NA	NA	NA	NA	NA	NA
Methyl-iso-butyl ketone	<10	<10	<10	<10	NA	NA	NA	NA	NA	NA
Methyl isoamyl ketone	<10	<10	<10	<10	NA	NA	NA	NA	NA	NA
m-Xylene	<10	<10	<10	<10	NA	NA	NA	NA	NA	NA
o-Xylene/p-Xylene	<10	<10	<10	<10	NA	NA	NA	NA	NA	NA
Sub Total 2	0	0	0	0	0	0	0	0	0	0
Total VOCs Analyzed	28	29	23	8.48	4	15	22	55	29	43

See last page for footnotes.

Table 1. Summary of Volatile Organic Compounds, in Ground Water, Krummrich Plant, Sauget, Illinois.

Well Number:	GM-31B	GM-31B	GM-31B	GM-31B	GM-31B	GM-31B	GM-31B	GM-31B	GM-31B	GM-31B
Date:	5/88	5/88*	11/88	11/88*	5/89	11/89	11/89*	5/90	11/90	11/90*
Laboratory:	ETC	ETC	ETC	ETC	ETC	ETC	ETC	ETC	ETC	ETC
USEPA Priority Pollutant Volatile Organic Compounds concentrations are in ug/L										
Acrolein	<100	<100	<100	<100	<100	<200	<100	<100	<100	<100
Acrylonitrile	<100	<100	<100	<100	<100	<200	<100	<100	<100	<100
Benzene	<4.4	<4.4	**14.2**	**9.83**	<4.4	**32.8**	<4.4	**5.53**	<4.4	<4.4
Bis (chloromethyl) ether	<10	<10	<10	<10	<10	<20	<10	<10	<10	<10
Bromoform	<4.7	<4.7	<4.7	<4.7	<4.7	<9.4	<4.7	<4.7	<4.7	<4.7
Carbon tetrachloride	<2.8	<2.8	<2.8	<2.8	<2.8	<5.6	<2.8	<2.8	<2.8	<2.8
Chlorobenzene	<6.0	<6.0	<6.0	<6.0	**8.26**	**387**	<6.0	**16.7**	<6.0	<6.0
Chlorodibromomethane	<3.1	<3.1	<3.1	<3.1	<3.1	<6.2	<3.1	<3.1	<3.1	<3.1
Chloroethane	<10	<10	<10	<10	<10	<20	<10	<10	<10	<10
2-Chloroethylvinyl ether	<10	<10	<10	<10	<10	<20	<10	<10	<10	<10
Chloroform	<1.6	<1.6	<1.6	<1.6	<1.6	<3.2	<1.6	<1.6	<1.6	<1.6
Dichlorobromomethane	<2.2	<2.2	<2.2	<2.2	<2.2	<4.4	<2.2	<2.2	<2.2	<2.2
Dichlorodifluoromethane	<10	<10	<10	<10	<10	<20	<10	<10	<10	<10
1,1-Dichloroethane	<4.7	<4.7	<4.7	<4.7	<4.7	<9.4	<4.7	<4.7	<4.7	<4.7
1,2-Dichloroethane	<2.8	<2.8	<2.8	<2.8	<2.8	<5.6	<2.8	<2.8	<2.8	<2.8
1,1-Dichloroethylene	<2.8	<2.8	<2.8	<2.8	<2.8	<5.6	<2.8	<2.8	<2.8	<2.8
1,2-Dichloropropane	<6.0	<6.0	<6.0	<6.0	<6.0	<12	<6.0	<6.0	<6.0	<6.0
cis-1,3-Dichloropropylene	<5.0	<5.0	<5.0	<5.0	<5.0	<10	<5.0	<5.0	<5.0	<5.0
Ethylbenzene	<7.2	<7.2	<7.2	<7.2	<7.2	<14	<7.2	<7.2	<7.2	<7.2
Methyl bromide	<10	<10	<10	<10	<10	<20	<10	<10	<10	<10
Methyl chloride	<10	<10	<10	<10	<10	<20	<10	<10	<10	<10
Methylene chloride	**6.3**	**6.1**	**13.2**	**4.6**	<2.8	**9.62**	<2.8	**4.59**	<2.8	<2.8
1,1,2,2-Tetrachloroethane	<6.9	<6.9	<6.9	<6.9	<6.9	<14	<6.9	<6.9	<6.9	<6.9
Tetrachloroethylene	<4.1	<4.1	<4.1	<4.1	<4.1	<8.2	<4.1	<4.1	<4.1	1
Toluene	<6.0	<6.0	<6.0	**8.75**	<6.0	<12	<6.0	<6.0	**17.6**	**6**
1,2-trans-Dichloroethylene	<1.6	<1.6	<1.6	<1.6	<1.6	<3.2	**2.70**	**2.00**	**3.53**	<1.6
1,1,1-Trichloroethane	<3.8	<3.8	<3.8	<3.8	<3.8	<7.6	<3.8	<3.8	<3.8	<3.8
1,1,2-Trichloroethane	<5.0	<5.0	<5.0	<5.0	<5.0	<10	<5.0	<5.0	<5.0	<5.0
Trichloroethylene	<1.9	<1.9	<1.9	<1.9	<1.9	<3.8	<1.9	<1.9	<1.9	<1.9
Trichlorofluoromethane	<10	<10	<10	<10	<10	<20	<10	<10	<10	<10
Vinyl chloride	**24.3**	**24.2**	<10	<10	**30.1**	<20	<10	**14.4**	**19.4**	**12.7**
trans-1,3-Dichloropropylene	<10	<10	<10	<10	<10	<20	<10	<10	<10	<10
Sub Total 1	31	30	27	23	38	429	3	43	41	24
Miscellaneous Volatile Organic Compounds										
Acetone	NA	NA	NA	NA	NA	NA	NA	NA	NA	NA
Methyl ethyl ketone	NA	NA	NA	NA	NA	NA	NA	NA	NA	NA
Carbon disulfide	NA	NA	NA	NA	NA	NA	NA	NA	NA	NA
2-Hexanone	NA	NA	NA	NA	NA	NA	NA	NA	NA	NA
Styrene	NA	NA	NA	NA	NA	NA	NA	NA	NA	NA
Methyl-iso-butyl ketone	NA	NA	NA	NA	NA	NA	NA	NA	NA	NA
Methyl isoamyl ketone	NA	NA	NA	NA	NA	NA	NA	NA	NA	NA
m-Xylene	NA	NA	NA	NA	NA	NA	NA	NA	NA	NA
o-Xylene/p-Xylene	NA	NA	NA	NA	NA	NA	NA	NA	NA	NA
Sub Total 2	0	0	0	0	0	0	0	0	0	0
Total VOCs Analyzed	31	30	27	23	38	429	3	43	41	24

See last page for footnotes.

Table 1. Summary of Volatile Organic Compounds, in Ground Water, Krummrich Plant, Sauget, Illinois.

Well Number:	GM-31B	GM-31C	GM-31C	GM-31C	GM-31C	GM-31C	GM-31C	GM-31C	GM-31C	GM-31C
Date:	5/91	12/86	5/87	11/87	5/88	11/88	5/89	11/89	5/90	11/90
Laboratory:	ETC	ETC	ETC	ETC	ETC	ETC	ETC	ETC	ETC	ETC
USEPA Priority Pollutant Volatile Organic Compounds concentrations are in ug/L										
Acrolein	<100	<100	<100	<100	<100	<2,000	<100	<100	<500	<100
Acrylonitrile	<100	<100	<100	<100	<100	<2,000	<100	<100	<500	<100
Benzene	**16.6**	<4.4	<4.4	**15.4**	<4.4	**144**	**94.1**	<4.4	**34.2**	**21.7**
Bis (chloromethyl) ether	<10	<10	<10	<10	<10	<200	<10	<10	<50	<10
Bromoform	<4.7	<4.7	<4.7	<4.7	<4.7	<94	<4.7	<4.7	<24	<4.7
Carbon tetrachloride	<2.8	<2.8	<2.8	<2.8	<2.8	<56	<2.8	<2.8	<14	<2.8
Chlorobenzene	**82.1**	**52.7**	<6	**174**	<6.0	**1,070**	**1,120**	<6.0	**364**	**233**
Chlorodibromomethane	<3.1	<3.1	<3.1	<3.1	<3.1	<62	<3.1	<3.1	<16	<3.1
Chloroethane	<10	<10	<10	<10	<10	<200	<10	<10	<50	<10
2-Chloroethylvinyl ether	<10	<10	<10	<10	<10	<200	<10	<10	<50	<10
Chloroform	<1.6	<1.6	<1.6	<1.6	<1.6	<32	<1.6	<1.6	<8.0	<1.6
Dichlorobromomethane	<2.2	<2.2	<2.2	<2.2	<2.2	<44	<2.2	<2.2	<11	<2.2
Dichlorodifluoromethane	<10	<10	<10	<10	<10	<200	<10	<10	<50	<10
1,1-Dichloroethane	<4.7	<4.7	<4.7	<4.7	<4.7	<94	<4.7	<4.7	<24	<4.7
1,2-Dichloroethane	<2.8	<2.8	<2.8	<2.8	<2.8	<56	<2.8	<2.8	<14	<2.8
1,1-Dichloroethylene	<2.8	<2.8	<2.8	<2.8	<2.8	<56	<2.8	<2.8	<14	<2.8
1,2-Dichloropropane	<6.0	<6	<6	<6.0	<6.0	<120	<6.0	<6.0	<30	<6.0
cis-1,3-Dichloropropylene	<5.0	<5	<5	<5.0	<5.0	<100	<5.0	<5.0	<25	<5.0
Ethylbenzene	<7.2	<7.2	<7.2	<7.2	<7.2	<140	<7.2	<7.2	<36	<7.2
Methyl bromide	<10	<10	<10	<10	<10	<200	<10	<10	<50	<10
Methyl chloride	<10	<10	<10	<10	<10	<200	<10	<10	<50	<10
Methylene chloride	<2.8	**16.6**	**20.7**	<2.8	**7.1**	**122**	<2.8	**3.94**	**20.1**	<2.8
1,1,2,2-Tetrachloroethane	<6.9	<6.9	<6.9	<6.9	<6.9	<140	<6.9	<6.9	<35	<6.9
Tetrachloroethylene	<4.1	<4.1	<4.1	<4.1	<4.1	<82	<4.1	<4.1	<21	<4.1
Toluene	<6.0	<6	<6	<6.0	<6.0	<120	<6.0	<6.0	<30	**99.7**
1,2-trans-Dichloroethylene	**4.21**	<1.6	**2.6**	<1.6	<1.6	<32	<1.6	<1.6	<8.0	<1.6
1,1,1-Trichloroethane	<3.8	<3.8	<3.8	<3.8	<3.8	<76	<3.8	<3.8	<19	<3.8
1,1,2-Trichloroethane	<5.0	<5	<5	<5.0	<5.0	<100	<5.0	<5.0	<25	<5.0
Trichloroethylene	<1.9	<1.9	<1.9	<1.9	<1.9	<38	<1.9	<1.9	<9.5	<1.9
Trichlorofluoromethane	<10	<10	<10	<10	<10	<200	<10	<10	<50	<10
Vinyl chloride	**30.2**	<10	<10	**11.2**	<10	<200	<10	**21.0**	<50	<10
trans-1,3-Dichloropropylene	<10	<10	<10	<10	<10	<200	<10	<10	<50	<10
Sub Total 1	133	69	23	201	7	1,336	1,214	25	408	354
Miscellaneous Volatile Organic Compounds										
Acetone	NA	NA	NA	NA	NA	NA	NA	NA	NA	NA
Methyl ethyl ketone	NA	NA	NA	NA	NA	NA	NA	NA	NA	NA
Carbon disulfide	NA	NA	NA	NA	NA	NA	NA	NA	NA	NA
2-Hexanone	NA	NA	NA	NA	NA	NA	NA	NA	NA	NA
Styrene	NA	NA	NA	NA	NA	NA	NA	NA	NA	NA
Methyl-iso-butyl ketone	NA	NA	NA	NA	NA	NA	NA	NA	NA	NA
Methyl isoamyl ketone	NA	NA	NA	NA	NA	NA	NA	NA	NA	NA
m-Xylene	NA	NA	NA	NA	NA	NA	NA	NA	NA	NA
o-Xylene/p-Xylene	NA	NA	NA	NA	NA	NA	NA	NA	NA	NA
Sub Total 2	0	0	0	0	0	0	0	0	0	0
Total VOCs Analyzed	133	69	23	201	7	1,336	1,214	25	408	354

See last page for footnotes.

Table 1. Summary of Volatile Organic Compounds, in Ground Water, Krummrich Plant, Sauget, Illinois.

Well Number:	GM-31C	GM-54A	GM-54A	GM-54B	GM-54B	GM-54B	GM-54B	GM-54B	GM-54B	E
Date:	5/91	11/87	5/88	11/87	5/88	11/88	4/89	10/89	11/90	11/91
Laboratory:	ETC	ETC	ETC	ETC	ETC	ETC	ETC	ETC	ETC	ETC
USEPA Priority Pollutant Volatile Organic Compounds concentrations are in ug/L										
Acrolein	<100	<100	<100	<100	<100	<100	<100	<1,000	<100	<100
Acrylonitrile	<100	<100	<100	<100	<100	<100	<100	<1,000	<100	<100
Benzene	<4.4	<4.4	<4.4	<4.4	**28.3**	<4.4	**59.2**	<44	**6.50**	<4.4
Bis (chloromethyl) ether	<10	<10	<10	<10	<10	<10	<10	<100	<10	<10
Bromoform	<4.7	<4.7	<4.7	<4.7	<4.7	<4.7	<4.7	<47	<4.7	<4.7
Carbon tetrachloride	<2.8	<2.8	<2.8	<2.8	<2.8	<2.8	<2.8	<28	<2.8	<2.8
Chlorobenzene	**56.6**	<6.0	<6.0	**83.0**	**181.0**	**123**	**466**	**435**	**177**	**69.0**
Chlorodibromomethane	<3.1	<3.1	<3.1	<3.1	<3.1	<3.1	<3.1	<31	<3.1	<3.1
Chloroethane	<10	<10	<10	<10	<10	<10	<10	<100	<10	<10
2-Chloroethylvinyl ether	<10	<10	<10	<10	<10	<10	<10	<100	<10	<10
Chloroform	<1.6	<1.6	<1.6	<1.6	<1.6	<1.6	<1.6	<16	<1.6	<1.6
Dichlorobromomethane	<2.2	<2.2	<2.2	<2.2	<2.2	<2.2	<2.2	<22	<2.2	<2.2
Dichlorodifluoromethane	<10	<10	<10	<10	<10	<10	<10	<100	<10	<10
1,1-Dichloroethane	<4.7	<4.7	<4.7	<4.7	<4.7	<4.7	<4.7	<47	<4.7	<4.7
1,2-Dichloroethane	<2.8	<2.8	<2.8	<2.8	<2.8	<2.8	<2.8	<28	<2.8	<2.8
1,1-Dichloroethylene	<2.8	<2.8	<2.8	<2.8	<2.8	<2.8	<2.8	<28	<2.8	<2.8
1,2-Dichloropropane	<6.0	<6.0	<6.0	<6.0	<6.0	<6.0	<6.0	<60	<6.0	<6.0
cis-1,3-Dichloropropylene	<5.0	<5.0	<5.0	<5.0	<5.0	<5.0	<5.0	<50	<5.0	<5.0
Ethylbenzene	<7.2	<7.2	<7.2	<7.2	<7.2	<7.2	<7.2	<72	<7.2	<7.2
Methyl bromide	<10	<10	<10	<10	<10	<10	<10	<100	<10	<10
Methyl chloride	<10	<10	<10	<10	<10	<10	<10	<100	<10	<10
Methylene chloride	<2.8	**9.37**	**34**	**13.5**	**44.4**	**71.1**	**3.32**	**35.9**	<2.8	<2.8
1,1,2,2-Tetrachloroethane	<6.9	<6.9	<6.9	<6.9	<6.9	<6.9	<6.9	<69	<6.9	<6.9
Tetrachloroethylene	<4.1	<4.1	<4.1	**4.12**	<4.1	<4.1	<4.1	<41	<4.1	1
Toluene	<6.0	<6.0	<6.0	<6.0	<6.0	<6.0	<6.0	<60	**10.6**	J
1,2-trans-Dichloroethylene	<1.6	<1.6	<1.6	<1.6	<1.6	<1.6	<1.6	<16	<1.6	<1.6
1,1,1-Trichloroethane	<3.8	<3.8	<3.8	<3.8	<3.8	<3.8	<3.8	<38	<3.8	<3.8
1,1,2-Trichloroethane	<5.0	<5.0	<5.0	<5.0	<5.0	<5.0	<5.0	<50	<5.0	<5.0
Trichloroethylene	<1.9	<1.9	<1.9	<1.9	<1.9	<1.9	<1.9	<19	<1.9	<1.9
Trichlorofluoromethane	<10	<10	<10	<10	<10	<10	<10	<100	<10	<10
Vinyl chloride	<10	<10	<10	<10	<10	<10	<10	<100	<10	<10
trans-1,3-Dichloropropylene	<10	<10	<10	<10	<10	<10	<10	<100	<10	<10
Sub Total 1	57	9	34	101	254	194	529	471	194	69
Miscellaneous Volatile Organic Compounds										
Acetone	NA	NA	NA	NA	NA	NA	NA	NA	NA	NA
Methyl ethyl ketone	NA	NA	NA	NA	NA	NA	NA	NA	NA	NA
Carbon disulfide	NA	NA	NA	NA	NA	NA	NA	NA	NA	NA
2-Hexanone	NA	NA	NA	NA	NA	NA	NA	NA	NA	NA
Styrene	NA	NA	NA	NA	NA	NA	NA	NA	NA	NA
Methyl-iso-butyl ketone	NA	<10	<10	<10	<10	NA	NA	NA	NA	NA
Methyl isoamyl ketone	NA	<10	<10	<10	<10	NA	NA	NA	NA	NA
m-Xylene	NA	<10	<10	<10	<10	NA	NA	NA	NA	NA
o-Xylene/p-Xylene	NA	<10	<10	<10	<10	NA	NA	NA	NA	NA
Sub Total 2	0	0	0	0	0	0	0	0	0	0
Total VOCs Analyzed	57	9	34	101	254	194	529	471	194	69

See last page for footnotes.

Table 1. Summary of Volatile Organic Compounds, in Ground Water, Krummrich Plant, Sauget, Illinois.

Well Number:	GM-54B	GM-55C	GM-55C	GM-55C	GM-55C	GM-55C	GM-55C	GM-55C	GM-55C	GM-56C
Date:	11/92	11/87	5/88	11/88	11/89	11/90	11/91	11/92	11/92*	11/87
Laboratory:	ETC	ETC	ETC	ETC	ETC	ETC	ETC	ETC	ETC	ETC
USEPA Priority Pollutant Volatile Organic Compounds concentrations are in ug/L										
Acrolein	<100	<1,000	<10,000	<5,000	<5,000	<5,000	<2,500	<2,500	<2,500	<1,000
Acrylonitrile	<100	<1,000	<10,000	<5,000	<5,000	<5,000	<2,500	<2,500	<2,500	<1,000
Benzene	**12.2**	**163**	<440	<220	<220	<220	<110	<110	<110	**510**
Bis (chloromethyl) ether	<10	<100	<1,000	<500	<500	<500	<250	<250	<250	<100
Bromoform	<4.7	<47	<470	<240	<240	<240	<120	<120	<120	<47
Carbon tetrachloride	<2.8	<28	<280	<140	<140	<140	<70	<70	<70	<28
Chlorobenzene	**108**	**4,030**	**3,360**	**2,700**	**3,220**	**2,580**	**2,990**	**1,410**	**1,590**	**3,980**
Chlorodibromomethane	<3.1	<31	<310	<160	<160	<160	<78	<78	<78	<31
Chloroethane	<10	<100	<1,000	<500	<500	<500	<250	<250	<250	<100
2-Chloroethylvinyl ether	<10	<100	<1,000	<500	<500	<500	<250	<250	<250	<100
Chloroform	<1.6	<16	<160	<80	<80	<80	<40	<40	<40	<16
Dichlorobromomethane	<2.2	<22	<220	<110	<110	<110	<55	<55	<55	<22
Dichlorodifluoromethane	<10	<100	<1,000	<500	<500	<500	<250	<250	<250	<100
1,1-Dichloroethane	<4.7	<47	<470	<240	<240	<240	<120	<120	<120	<47
1,2-Dichloroethane	<2.8	<28	<280	<140	<140	<140	<70	<70	<70	<28
1,1-Dichloroethylene	<2.8	<28	<280	<140	<140	<140	<70	<70	<70	<28
1,2-Dichloropropane	<6.0	<60	<600	<300	<300	<300	<150	<150	<150	<60
cis-1,3-Dichloropropylene	<5.0	<50	<500	<250	<250	<250	<130	<130	<130	<50
Ethylbenzene	<7.2	<72	<720	<360	<360	<360	<180	<180	<180	**150**
Methyl bromide	<10	<100	<1,000	<500	<500	<500	<250	<250	<250	<100
Methyl chloride	<10	<100	<1,000	<500	<500	<500	<250	<250	<250	<100
Methylene chloride	<2.8	**48.9**	**415**	**255**	**140**	<140	<70	<70	<70	<28
1,1,2,2-Tetrachloroethane	<6.9	<69	<690	<350	<350	<350	<170	<170	<170	<69
Tetrachloroethylene	<4.1	<41	<410	<210	<210	<210	<100	<100	<100	**80.9**
Toluene	<6.0	<60	<600	<300	<300	<300	<150	<150	<150	**1,810**
1,2-trans-Dichloroethylene	<1.6	<16	<160	<80	<80	<80	<40	<40	<40	<16
1,1,1-Trichloroethane	<3.8	<38	<380	<190	<190	<190	<95	<95	<95	<38
1,1,2-Trichloroethane	<5.0	<50	<500	<250	<250	<250	<130	<130	<130	<50
Trichloroethylene	<1.9	<19	<190	<95	<95	<95	<48	<48	<48	**192**
Trichlorofluoromethane	<10	<100	<1,000	<500	<500	<500	<250	<250	<250	<100
Vinyl chloride	<10	<100	<1,000	<500	<500	<500	<250	<250	<250	<100
trans-1,3-Dichloropropylene	<10	<100	<1,000	<500	<500	<500	<250	<250	<250	<100
Sub Total 1	120	4,242	3,775	2,955	3,360	2,580	2,990	1,410	1,590	6,723
Miscellaneous Volatile Organic Compounds										
Acetone	NA	NA	NA	NA	NA	NA	NA	NA	NA	NA
Methyl ethyl ketone	NA	NA	NA	NA	NA	NA	NA	NA	NA	NA
Carbon disulfide	NA	NA	NA	NA	NA	NA	NA	NA	NA	NA
2-Hexanone	NA	NA	NA	NA	NA	NA	NA	NA	NA	NA
Styrene	NA	NA	NA	NA	NA	NA	NA	NA	NA	NA
Methyl-iso-butyl ketone	NA	<100	<1,000	<500	<500	<500	<250	<250	<250	**287**
Methyl isoamyl ketone	NA	<100	<1,000	<500	<500	<500	<250	<250	<250	<100
m-Xylene	NA	<100	<1,000	<500	<500	<500	<250	<250	<250	**846**
o-Xylene/p-Xylene	NA	<100	<1,000	<500	<500	<500	<250	<250	<250	**450**
Sub Total 2	0	0	0	0	0	0	0	0	0	1,583
Total VOCs Analyzed	120	4,242	3,775	2,955	3,360	2,580	2,990	1,410	1,590	8,306

See last page for footnotes.

Table 1. Summary of Volatile Organic Compounds, in Ground Water, Krummrich Plant, Sauget, Illinois.

Well Number:	GM-56C	GM-56C	GM-56C	GM-56C	GM-56C	GM-56C	GM-57C	GM-57C	GM-57C	G
Date:	5/88	11/88	11/88	11/89	11/90	11/91	11/87	11/87*	5/88	~~5/88~~*
Laboratory:	ETC	ETC	SL	ETC	ETC	ETC	ETC	ETC	ETC	ETC
USEPA Priority Pollutant Volatile Organic Compounds concentrations are in ug/L										
Acrolein	<1,000	<5,000	<1,000	<1,000	<5,000	<1,000	<1,000	<5,000	<10,000	<10,000
Acrylonitrile	<1,000	<5,000	<1,000	<1,000	<5,000	<1,000	<1,000	<5,000	<10,000	<10,000
Benzene	**153**	<220	**250**	**108**	<220	<44	**605**	**459**	<440	<440
Bis (chloromethyl) ether	<100	<500	<100	<100	<500	<100	<100	<500	<1,000	<1,000
Bromoform	<47	<240	<50	<47	<240	<47	<47	<240	<470	<470
Carbon tetrachloride	<28	<140	<50	<28	<140	<28	<28	<140	<280	<280
Chlorobenzene	**1,000**	**2,400**	**4,200**	**3,100**	**4,620**	**1,280**	**5,050**	**3,740**	**3,020**	**3,020**
Chlorodibromomethane	<31	<160	<50	<31	<160	<31	<31	<160	<310	<310
Chloroethane	<100	<500	<100	<100	<500	<100	<100	<500	<1,000	<1,000
2-Chloroethylvinyl ether	<100	<500	<50	<100	<500	<100	<100	<500	<1,000	<1,000
Chloroform	<16	<80	<50	<16	<80	<16	<16	<80	<160	<160
Dichlorobromomethane	<22	<110	<50	<22	<110	<22	<22	<110	<220	<220
Dichlorodifluoromethane	<100	<500	<100	<100	<500	<100	<100	<500	<1,000	<1,000
1,1-Dichloroethane	<47	<240	<50	<47	<240	<47	<47	<240	<470	<470
1,2-Dichloroethane	<28	<140	<50	<28	<140	<28	**1,910**	**1,690**	<280	<280
1,1-Dichloroethylene	<28	<140	<50	<28	<140	<28	<28	<140	<280	<280
1,2-Dichloropropane	<60	<300	<50	<60	<300	<60	<60	<300	<600	<600
cis-1,3-Dichloropropylene	<50	<250	<50	<50	<250	<50	<50	<250	<500	<500
Ethylbenzene	<72	<360	**140**	**105**	<360	<72	**160**	<500	<720	<720
Methyl bromide	<100	<500	<100	<100	<500	<100	<100	<500	<1,000	<1,000
Methyl chloride	<100	<500	<100	<100	<500	<100	<100	<500	<1,000	<1,000
Methylene chloride	<28	**240**	<50	<28	<140	<28	**94.0**	**231**	**417**	<280
1,1,2,2-Tetrachloroethane	<69	<350	<50	<69	<350	<69	<69	<350	<690	<690
Tetrachloroethylene	<41	<210	**67**	**64.7**	<210	<41	**102**	<210	<410	
Toluene	**232**	**698**	**1,200**	**700**	**1,360**	<60	**1,210**	**775**	<600	
1,2-trans-Dichloroethylene	<16	<80	<50	<16	<80	<16	<16	<80	<160	~~<160~~
1,1,1-Trichloroethane	<38	<190	<50	<38	<190	<38	<38	<190	<380	<380
1,1,2-Trichloroethane	<50	<250	<50	<50	<250	<50	<50	<250	<500	<500
Trichloroethylene	<19	<95	<50	**30.6**	<95	<19	**88.4**	<95	<190	<190
Trichlorofluoromethane	<100	<500	<50	<100	<500	<100	<100	<500	<1,000	<1,000
Vinyl chloride	<100	<500	<100	<100	<500	<100	<100	<500	<1,000	<1,000
trans-1,3-Dichloropropylene	<100	<500	<50	<100	<500	<100	<100	<500	<1,000	<1,000
Sub Total 1	1,385	3,338	5,857	4,108	5,980	1,280	9,219	6,895	3,437	3,020
Miscellaneous Volatile Organic Compounds										
Acetone	NA	NA	NA	NA	NA	NA	NA	NA	NA	NA
Methyl ethyl ketone	NA	NA	NA	NA	NA	NA	NA	NA	NA	NA
Carbon disulfide	NA	NA	NA	NA	NA	NA	NA	NA	NA	NA
2-Hexanone	NA	NA	NA	NA	NA	NA	NA	NA	NA	NA
Styrene	NA	NA	NA	NA	NA	NA	NA	NA	NA	NA
Methyl-iso-butyl ketone	<100	<500	<500	<100	<500	<100	**841**	**687**	<1,000	<1,000
Methyl isoamyl ketone	<100	<500	<100	<100	<500	<100	<100	<500	<1,000	<1,000
m-Xylene	<100	<500	**260**	**458**	**813**	**229**	**901**	**533**	<1,000	<1,000
o-Xylene/p-Xylene	NA	<500	**130**	**293**	<500	**116**	**465**	<500	<1,000	<1,000
Sub Total 2	0	0	390	751	813	345	2,207	1,220	0	0
Total VOCs Analyzed	1,385	3,338	6,247	4,859	6,793	1,625	11,426	8,115	3,437	3,020

See last page for footnotes.

Table 1. Summary of Volatile Organic Compounds, in Ground Water, Krummrich Plant, Sauget, Illinois.

Well Number:	GM-57C	GM-57C	GM-57C	GM-57C	GM-57C	GM-57C	GM-57C	GM-57C	GM-57C	GM-58A
Date:	11/88	11/88	3/89	11/89	11/89*	11/90	11/90*	11/91	11/91*	11/87
Laboratory:	ETC	SL	ETC	ETC	ETC	ETC	ETC	ETC	ETC	ETC
USEPA Priority Pollutant Volatile Organic Compounds concentrations are in ug/L										
Acrolein	<5,000	<1,000	<10,000	<10,000	<5,000	<5,000	<5,000	<2,500	<2,500	<100
Acrylonitrile	<5,000	<1,000	<10,000	<10,000	<5,000	<5,000	<5,000	<2,500	<2,500	<100
Benzene	**566**	**620**	<440	<440	<220	**613**	**607**	**220**	**225**	<4.4
Bis (chloromethyl) ether	<500	<100	<1,000	<1,000	<500	<500	<500	<250	<250	<10
Bromoform	<240	<50	<470	<470	<240	<240	<240	<120	<120	<4.7
Carbon tetrachloride	<140	<50	<280	<280	<140	<140	<140	<70	<70	<2.8
Chlorobenzene	**4,510**	**5,200**	**7,380**	**2,320**	**2,330**	**5,850**	**5,650**	**4,900**	**4,570**	<6.0
Chlorodibromomethane	<160	<50	<310	<310	<160	<160	<160	<78	<78	<3.1
Chloroethane	<500	<100	<1,000	<1,000	<500	<500	<500	<250	<250	<10
2-Chloroethylvinyl ether	<500	<50	<1,000	<1,000	<500	<500	<500	<250	<250	<10
Chloroform	<80	<50	<160	<160	<80	<80	<80	<40	<40	<1.6
Dichlorobromomethane	<110	<50	<220	<220	<110	<110	<110	<55	<55	<2.2
Dichlorodifluoromethane	<500	<100	<1,000	<1,000	<500	<500	<500	<250	<250	<10
1,1-Dichloroethane	<240	<50	<470	<470	<240	<240	<240	<120	<120	<4.7
1,2-Dichloroethane	**1,260**	<50	**555**	<280	**286**	**811**	**787**	**112**	<70	<2.8
1,1-Dichloroethylene	<140	<50	<280	<280	<140	<140	<140	<70	<70	<2.8
1,2-Dichloropropane	<300	<50	<600	<600	<300	<300	<300	<150	<150	<6.0
cis-1,3-Dichloropropylene	<250	<50	<500	<500	<250	<250	<250	<130	<130	<5.0
Ethylbenzene	<500	**190**	<1,000	<720	<360	<360	<360	**279**	**280**	<7.2
Methyl bromide	<500	<100	<1,000	<1,000	<500	<500	<500	<250	<250	<10
Methyl chloride	<500	<100	**466**	<1,000	<500	<500	<500	<250	<250	<10
Methylene chloride	**284**	**58**	<690	<280	<140	<140	<140	<70	<70	**12.1**
1,1,2,2-Tetrachloroethane	<350	<50	<410	<690	<350	<350	<350	<170	<170	<6.9
Tetrachloroethylene	<210	**95**	**1220**	<410	<210	<210	<210	<100	**107**	<4.1
Toluene	**817**	**890**	<160	<600	**328**	**1,150**	**2,070**	**742**	**800**	<6.0
1,2-trans-Dichloroethylene	<80	<50	<380	<160	<80	<80	<80	<40	<95	<1.6
1,1,1-Trichloroethane	<190	<50	<500	<380	<190	<190	<190	<95	<130	<3.8
1,1,2-Trichloroethane	<250	<50	<190	<500	<250	<250	<250	<130	<48	<5.0
Trichloroethylene	<95	<50	<1,000	<190	<95	<95	<95	<48	<250	<1.9
Trichlorofluoromethane	<500	<50	<1,000	<1,000	<500	<500	<500	<250	<250	<10
Vinyl chloride	<500	<100	<1,000	<1,000	<500	<500	<500	<250	<250	<10
trans-1,3-Dichloropropylene	<360	<50	**720**	<1,000	<500	<500	<500	<250	<250	<10
Sub Total 1	7,437	6,953	9,621	2,320	2,944	8,424	9,114	6,253	5,982	12
Miscellaneous Volatile Organic Compounds										
Acetone	NA	NA	NA	NA	NA	NA	NA	NA	NA	NA
Methyl ethyl ketone	NA	NA	NA	NA	NA	NA	NA	NA	NA	NA
Carbon disulfide	NA	NA	NA	NA	NA	NA	NA	NA	NA	NA
2-Hexanone	NA	NA	NA	NA	NA	NA	NA	NA	NA	NA
Styrene	NA	NA	NA	NA	NA	NA	NA	NA	NA	NA
Methyl-iso-butyl ketone	**521**	<500	<1,000	<1,000	<500	<500	<500	<250	<250	<10
Methyl isoamyl ketone	<500	<100	<1,000	<1,000	<500	<500	<500	<250	<250	<10
m-Xylene	<500	**240**	<1,000	<1,000	<500	<500	<500	**962**	**953**	<10
o-Xylene/p-Xylene	<500	**120**	<1,000	<1,000	<500	<500	<500	**538**	**539**	<10
Sub Total 2	521	360	0	0	0	0	0	1,500	1,492	0
Total VOCs Analyzed	7,958	7,313	9,621	2,320	2,944	8,424	9,114	7,753	7,474	12

See last page for footnotes.

Table 1. Summary of Volatile Organic Compounds, in Ground Water, Krummrich Plant, Sauget, Illinois.

Well Number:	GM-58A	GM-58A	GM-58A	GM-58A	GM-58A	GM-58A	GM-59A	GM-59A	GM-59A	G
Date:	5/88	11/88	11/89	11/90	11/91	11/92	11/87	5/88	11/88	11/89
Laboratory:	ETC	ETC	ETC	ETC	ETC	ETC	ETC	ETC	ETC	ETC
USEPA Priority Pollutant Volatile Organic Compounds concentrations are in ug/L										
Acrolein	<100	<100	<100	<100	<100	<100	<100	<100	<100	<100
Acrylonitrile	<100	<100	<100	<100	<100	<100	<100	<100	<100	<100
Benzene	<4.4	<4.4	<4.4	**9.55**	<4.4	<4.4	<4.4	<4.4	<4.4	<4.4
Bis (chloromethyl) ether	<10	<10	<10	<10	<10	<10	<10	<10	<10	<10
Bromoform	<4.7	<4.7	<4.7	<4.7	<4.7	<4.7	<4.7	<4.7	<4.7	<4.7
Carbon tetrachloride	<2.8	<2.8	<2.8	<2.8	<2.8	<2.8	<2.8	<2.8	<2.8	<2.8
Chlorobenzene	<6.0	<6.0	<6.0	**17.4**	**9.17**	**14.1**	<6.0	<6.0	<6.0	<6.0
Chlorodibromomethane	<3.1	<3.1	<3.1	<3.1	<3.1	<3.1	<3.1	<3.1	<3.1	<3.1
Chloroethane	<10	<10	<10	<10	<10	<10	<10	<10	<10	<10
2-Chloroethylvinyl ether	<10	<10	<10	<10	<10	<10	<10	<10	<10	<10
Chloroform	<1.6	<1.6	<1.6	<1.6	<1.6	<1.6	<1.6	<1.6	<1.6	<1.6
Dichlorobromomethane	<2.2	<2.2	<2.2	<2.2	<2.2	<2.2	<2.2	<2.2	<2.2	<2.2
Dichlorodifluoromethane	<10	<10	<10	<10	<10	<10	<10	<10	<10	<10
1,1-Dichloroethane	<4.7	<4.7	<4.7	<4.7	<4.7	<4.7	<4.7	<4.7	<4.7	<4.7
1,2-Dichloroethane	<2.8	<2.8	<2.8	<2.8	<2.8	<2.8	<2.8	<2.8	<2.8	<2.8
1,1-Dichloroethylene	<2.8	<2.8	<2.8	<2.8	<2.8	<2.8	<2.8	<2.8	<2.8	<2.8
1,2-Dichloropropane	<6.0	<6.0	<6.0	<6.0	<6.0	<6.0	<6.0	<6.0	<6.0	<6.0
cis-1,3-Dichloropropylene	<5.0	<5.0	<5.0	<5.0	<5.0	<5.0	<5.0	<5.0	<5.0	<5.0
Ethylbenzene	<7.2	<7.2	<7.2	<7.2	<7.2	<7.2	<7.2	<7.2	<7.2	<7.2
Methyl bromide	<10	<10	<10	<10	<10	<10	<10	<10	<10	<10
Methyl chloride	<10	<10	<10	<10	<10	<10	<10	<10	<10	<10
Methylene chloride	**9.7**	**51.2**	**3.05**	<2.8	<2.8	<2.8	**6.88**	<2.8	**54.9**	**3.31**
1,1,2,2-Tetrachloroethane	<6.9	<6.9	<6.9	<6.9	<6.9	<6.9	<6.9	<6.9	<6.9	<6.9
Tetrachloroethylene	<4.1	<4.1	<4.1	<4.1	<4.1	<4.1	<4.1	<4.1	<4.1	
Toluene	<6.0	<6.0	<6.0	<6.0	<6.0	<6.0	<6.0	<6.0	<6.0	
1,2-trans-Dichloroethylene	<1.6	<1.6	<1.6	<1.6	<1.6	<1.6	<1.6	<1.6	<1.6	<1.6
1,1,1-Trichloroethane	<3.8	<3.8	<3.8	<3.8	<3.8	<3.8	<3.8	<3.8	<3.8	<3.8
1,1,2-Trichloroethane	<5.0	<5.0	<5.0	<5.0	<5.0	<5.0	<5.0	<5.0	<5.0	<5.0
Trichloroethylene	<1.9	<1.9	<1.9	<1.9	<1.9	<1.9	<1.9	<1.9	<1.9	<1.9
Trichlorofluoromethane	<10	<10	<10	<10	<10	<10	<10	<10	<10	<10
Vinyl chloride	<10	<10	<10	<10	<10	<10	<10	<10	<10	<10
trans-1,3-Dichloropropylene	<10	<10	<10	<10	<10	<10	<10	<10	<10	<10
Sub Total 1	10	51	3	27	9	14	7	0	55	3
Miscellaneous Volatile Organic Compounds										
Acetone	NA	NA	NA	NA	NA	NA	NA	NA	NA	NA
Methyl ethyl ketone	NA	NA	NA	NA	NA	NA	NA	NA	NA	NA
Carbon disulfide	NA	NA	NA	NA	NA	NA	NA	NA	NA	NA
2-Hexanone	NA	NA	NA	NA	NA	NA	NA	NA	NA	NA
Styrene	NA	NA	NA	NA	NA	NA	NA	NA	NA	NA
Methyl-iso-butyl ketone	<10	NA	NA	NA	NA	NA	<10	<10	NA	NA
Methyl isoamyl ketone	<10	NA	NA	NA	NA	NA	<10	<10	NA	NA
m-Xylene	<10	NA	NA	NA	NA	NA	<10	<10	NA	NA
o-Xylene/p-Xylene	<10	NA	NA	NA	NA	NA	<10	<10	NA	NA
Sub Total 2	0	0	0	0	0	0	0	0	0	0
Total VOCs Analyzed	10	51	3	27	9	14	7	0	55	3

See last page for footnotes.

Table 1. Summary of Volatile Organic Compounds, in Ground Water, Krummrich Plant, Sauget, Illinois.

Well Number:	GM-59A	GM-59A	GM-59A	B-25A	B-26A	B-28A	GM-106	GM-106	GM-106	GM-106
Date:	11/90	11/91	11/92	3/87	3/87	3/87	12/86	5/87	11/87	5/88
Laboratory:	ETC	ETC	ETC	ETC	ETC	ETC	ETC	ETC	ETC	ETC
USEPA Priority Pollutant Volatile Organic Compounds concentrations are in ug/L										
Acrolein	<100	<100	<100	<1,000	<100	<1,000	<100	<100	<1,000	<1,000
Acrylonitrile	<100	<100	<100	<1,000	<100	<1,000	<100	<100	<1,000	<1,000
Benzene	<4.4	<4.4	<4.4	**92**	**42.3**	<44	<4.4	**8.1**	**44.6**	<44
Bis (chloromethyl) ether	<10	<10	<10	<100	<10	<100	<10	<10	<100	<100
Bromoform	<4.7	<4.7	<4.7	<47	<4.7	<47	<4.7	<4.7	<47	<47
Carbon tetrachloride	<2.8	<2.8	<2.8	<28	<2.8	<28	<2.8	<2.8	<28	<28
Chlorobenzene	<6.0	<6.0	<6.0	**8,210**	**158**	**929**	**63.7**	**119.0**	**970**	**584**
Chlorodibromomethane	<3.1	<3.1	<3.1	<31	<3.1	<31	<3.1	<3.1	<31	<31
Chloroethane	<10	<10	<10	**200**	<10	<100	<10	<10	<100	<100
2-Chloroethylvinyl ether	<10	<10	<10	<100	<10	<100	<10	<10	<100	<100
Chloroform	<1.6	<1.6	<1.6	**70.7**	<1.6	<16	<1.6	<1.6	<16	<16
Dichlorobromomethane	<2.2	<2.2	<2.2	<22	<2.2	<22	<2.2	<2.2	<22	<22
Dichlorodifluoromethane	<10	<10	<10	<100	<10	<100	<10	<10	<100	<100
1,1-Dichloroethane	<4.7	<4.7	<4.7	<47	**8.86**	<47	<4.7	<4.7	<47	<47
1,2-Dichloroethane	<2.8	<2.8	<2.8	**16,500**	<2.8	<28	<2.8	<2.8	<28	<28
1,1-Dichloroethylene	<2.8	<2.8	<2.8	<28	<2.8	<28	<2.8	<2.8	<28	<28
1,2-Dichloropropane	<6.0	<6.0	<6.0	<60	<6.0	<60	<6.0	<6.0	<60	<60
cis-1,3-Dichloropropylene	<5.0	<5.0	<5.0	<50	<5.0	<50	<5.0	<5.0	<60	<60
Ethylbenzene	<7.2	<7.2	<7.2	<72	<7.2	<72	<7.2	**7.3**	<72	<72
Methyl bromide	<10	<10	<10	<100	<10	<100	<10	<10	<100	<100
Methyl chloride	<10	<10	<10	<100	<10	<100	<10	<10	<100	<100
Methylene chloride	<2.8	<2.8	<2.8	<28	<2.8	<28	**9.4**	**7.2**	**38.8**	<28
1,1,2,2-Tetrachloroethane	<6.9	<6.9	<6.9	<69	<6.9	<69	<6.9	<6.9	<69	<69
Tetrachloroethylene	<4.1	<4.1	<4.1	<41	<4.1	<41	<4.1	<4.1	<41	<41
Toluene	<6.0	<6.0	<6.0	**465**	<6.0	<60	**27.7**	**37.1**	**307**	**177**
1,2-trans-Dichloroethylene	<1.6	<1.6	<1.6	<16	**4.64**	<16	<1.6	<1.6	<16	<16
1,1,1-Trichloroethane	<3.8	<3.8	<3.8	<38	<3.8	<38	<3.8	<3.8	<38	<38
1,1,2-Trichloroethane	<5.0	<5.0	<5.0	<50	<5.0	<50	<5.0	<5.0	<50	<50
Trichloroethylene	<1.9	<1.9	<1.9	<19	<1.9	<19	<1.9	<1.9	<19	<19
Trichlorofluoromethane	<10	<10	<10	<100	<10	<100	<10	<10	<100	<100
Vinyl chloride	<10	<10	<10	<100	<10	<100	<10	<10	<100	<100
trans-1,3-Dichloropropylene	<10	<10	<10	<100	<10	<100	<10	<10	<100	<100
Sub Total 1	0	0	0	25,538	214	929	101	179	1,360	761
Miscellaneous Volatile Organic Compounds										
Acetone	NA	NA	NA	**19,400**	<10	<100	NA	NA	NA	NA
Methyl ethyl ketone	NA	NA	NA	<100	<10	<100	NA	NA	NA	NA
Carbon disulfide	NA	NA	NA	<100	<10	<100	NA	NA	NA	NA
2-Hexanone	NA	NA	NA	<100	<10	<100	NA	NA	NA	NA
Styrene	NA	NA	NA	<100	<10	<100	NA	NA	NA	NA
Methyl-iso-butyl ketone	NA	NA	NA	**206**	<10	<100	NA	NA	NA	NA
Methyl isoamyl ketone	NA	NA	NA	NA	NA	NA	NA	NA	NA	NA
m-Xylene	NA	NA	NA	<100	<10	<100	NA	NA	NA	NA
o-Xylene/p-Xylene	NA	NA	NA	<100	<10	<100	NA	NA	NA	NA
Sub Total 2	0	0	0	19,606	0	0	0	0	0	0
Total VOCs Analyzed	0	0	0	45,144	214	929	101	179	1,360	761

See last page for footnotes.

Table 1. Summary of Volatile Organic Compounds, in Ground Water, Krummrich Plant, Sauget, Illinois.

Well Number:	GM-106	GM-106	GM-106	GM-106	GM-106	P-1	P-1	P-2	P-2	[illegible]
Date:	11/88	11/89	11/90	11/91	11/92	3/87	11/87	12/86	5/87	11/87
Laboratory:	ETC	ETC	ETC	ETC	ETC	ETC	ETC	ETC	ETC	ETC
USEPA Priority Pollutant Volatile Organic Compounds concentrations are in ug/L										
Acrolein	<2,500	<5,000	<500	<1,000	<10,000	<100	<1,000	<100	<100	<1,000
Acrylonitrile	<2,500	<5,000	<500	<1,000	<10,000	<100	<1,000	<100	<100	<1,000
Benzene	<110	<220	**55.0**	**61.8**	<440	<4.4	**102**	**56.1**	**50.8**	**140**
Bis (chloromethyl) ether	<250	<500	<50	<100	<1,000	<10	<100	<10	<10	<100
Bromoform	<120	<240	<24	<47	<470	<4.7	<47	<4.7	<4.7	<47
Carbon tetrachloride	<70	<140	<14	<28	<280	<2.8	<28	<2.8	<2.8	<28
Chlorobenzene	**1,760**	**1,940**	**1,270**	**1,420**	**2,110**	**454**	**1,110**	**618**	**497**	**1,040**
Chlorodibromomethane	<78	<160	<16	<31	<310	<3.1	<31	<3.1	<3.1	<31
Chloroethane	<250	<500	<50	<100	<1,000	<10	<100	<10	<10	<100
2-Chloroethylvinyl ether	<250	<500	<50	<100	<1,000	<10	<100	<10	<10	<100
Chloroform	<40	<80	<8.0	<16	<160	<1.6	<16	<1.6	<1.6	<16
Dichlorobromomethane	<55	<110	<11	<22	<220	<2.2	<22	<2.2	<2.2	<22
Dichlorodifluoromethane	<250	<500	<50	<100	<1,000	<10	<100	<10	<10	<100
1,1-Dichloroethane	<120	<240	<24	<47	<470	<4.7	<47	<4.7	<4.7	<47
1,2-Dichloroethane	<70	<140	<14	<28	<280	<2.8	<28	<2.8	<2.8	<28
1,1-Dichloroethylene	<70	<140	<14	<28	<280	<2.8	**35.1**	<2.8	<2.8	<28
1,2-Dichloropropane	<150	<300	<30	<60	<600	<6.0	<60	<6.0	<6.0	<60
cis-1,3-Dichloropropylene	<130	<250	<25	<50	<500	<5.0	<50	<5.0	<5.0	<50
Ethylbenzene	<180	<360	**79.2**	**85.2**	<720	<7.2	<72	<7.2	<7.2	<72
Methyl bromide	<250	<500	<50	<100	<1,000	<10	<100	<10	<10	<100
Methyl chloride	<250	<500	<50	<100	<1,000	<10	<100	<10	<10	<100
Methylene chloride	**760**	**228**	<14	<28	<280	<2.8	**95.0**	**13.6**	<2.8	<28
1,1,2,2-Tetrachloroethane	<170	<350	<35	<69	<690	<6.9	<69	<6.9	<6.9	<69
Tetrachloroethylene	<100	<210	**43.6**	**49.3**	<410	<4.1	<41	<4.1	<4.1	
Toluene	**488**	**571**	**407**	**429**	**764**	<6.0	<60	<6.0	<6.0	J
1,2-trans-Dichloroethylene	<40	<80	<8.0	<16	<160	<1.6	**29.2**	<1.6	<1.6	<16
1,1,1-Trichloroethane	<95	<190	<19	<38	<380	<3.8	<38	<3.8	<3.8	<38
1,1,2-Trichloroethane	<130	<250	<25	<50	<500	<5.0	<50	<5.0	<5.0	<50
Trichloroethylene	<48	<95	**22.2**	<19	<190	<1.9	<19	<1.9	<1.9	<19
Trichlorofluoromethane	<250	<500	<50	<100	<1,000	<10	<100	<10	<10	<100
Vinyl chloride	<250	<500	<50	<100	<1,000	<10	<100	<10	<10	<100
trans-1,3-Dichloropropylene	<250	<500	<50	<100	<1,000	<10	<100	<10	<10	<100
Sub Total 1	2,998	2,739	1,877	2,045	2,874	454	1,371	688	548	1,180
Miscellaneous Volatile Organic Compounds										
Acetone	NA	NA	NA	NA	NA	**30.4**	NA	NA	NA	NA
Methyl ethyl ketone	NA	NA	NA	NA	NA	<10	NA	NA	NA	NA
Carbon disulfide	NA	NA	NA	NA	NA	<10	NA	NA	NA	NA
2-Hexanone	NA	NA	NA	NA	NA	<10	NA	NA	NA	NA
Styrene	NA	NA	NA	NA	NA	<10	NA	NA	NA	NA
Methyl-iso-butyl ketone	NA	NA	NA	NA	NA	<10	<100	NA	NA	<100
Methyl isoamyl ketone	NA	NA	NA	NA	NA	NA	<100	NA	NA	<100
m-Xylene	NA	NA	NA	NA	NA	<10	<100	NA	NA	<100
o-Xylene/p-Xylene	NA	NA	NA	NA	NA	<10	<100	NA	NA	<100
Sub Total 2	0	0	0	0	0	30	0	0	0	0
Total VOCs Analyzed	2,998	2,739	1,877	2,045	2,874	484	1,371	688	548	1,180

See last page for footnotes.

Table 1. Summary of Volatile Organic Compounds, in Ground Water, Krummrich Plant, Sauget, Illinois.

Well Number:	P-2	P-2	P-2	P-2	P-2	P-2	P-3	P-6	P-6	P-6
Date:	5/88	11/88	11/89	11/90	11/91	11/92	11/87	12/86	5/87	11/87
Laboratory:	ETC	ETC	ETC	ETC	ETC	ETC	ETC	ETC	ETC	ETC
USEPA Priority Pollutant Volatile Organic Compounds concentrations are in ug/L										
Acrolein	<2,000	<2,000	<5,000	<5,000	<2,500	<5,000	<1,000	<100	<100	<100
Acrylonitrile	<2,000	<2,000	<5,000	<5,000	<2,500	<5,000	<1,000	<100	<100	<100
Benzene	**88.3**	**571**	**272**	**241**	**514**	**245**	**2,220**	**79.2**	<4.4	<4.4
Bis (chloromethyl) ether	<200	<200	<500	<500	<250	<500	<100	<10	<10	<10
Bromoform	<94	<94	<240	<240	<120	<240	<47	<4.7	<4.7	<4.7
Carbon tetrachloride	<56	<56	<140	<140	<70	<140	<28	<2.8	<2.8	<2.8
Chlorobenzene	**606**	**1,510**	**1,810**	**2,950**	**3,670**	**3,480**	**346**	**366**	**33.1**	**7.48**
Chlorodibromomethane	<62	<62	<160	<160	<78	<160	<31	<3.1	<3.1	<3.1
Chloroethane	<200	<200	<500	<500	<250	<500	<100	<10	<10	<10
2-Chloroethylvinyl ether	<200	<200	<500	<500	<250	<500	<100	<10	<10	<10
Chloroform	<32	<32	<80	<80	<40	<80	<16	<1.6	<1.6	<1.6
Dichlorobromomethane	<44	<44	<110	<110	<55	<110	<22	<2.2	<2.2	<2.2
Dichlorodifluoromethane	<200	<200	<500	<500	<250	<500	<100	<10	<10	<10
1,1-Dichloroethane	<94	<94	<240	<240	<120	<240	<47	<4.7	<4.7	<4.7
1,2-Dichloroethane	<56	<56	<140	<140	<70	<140	<28	<2.8	<2.8	<2.8
1,1-Dichloroethylene	<56	<56	<140	<140	<70	<140	<28	<2.8	<2.8	<2.8
1,2-Dichloropropane	<120	<120	<300	<300	<150	<300	<60	<6.0	<6.0	<6.0
cis-1,3-Dichloropropylene	<100	<100	<250	<250	<130	<250	<50	<5.0	<5.0	<5.0
Ethylbenzene	<140	<140	<360	<360	<180	<360	<72	<7.2	<7.2	<7.2
Methyl bromide	<200	<200	<500	<500	<250	<500	<100	<10	<10	<10
Methyl chloride	<200	<200	<500	<500	<250	<500	<100	<10	<10	<10
Methylene chloride	<56	**664**	<140	<140	<70	<140	<28	**33.9**	<2.8	**3.87**
1,1,2,2-Tetrachloroethane	<140	<140	<350	<350	<170	<350	<69	<6.9	<6.9	<6.9
Tetrachloroethylene	<82	<82	<210	<210	<100	<210	<41	<4.1	<4.1	<4.1
Toluene	<120	**198**	<300	**306**	**717**	<300	<60	<6.0	<6.0	<6.0
1,2-trans-Dichloroethylene	<32	**609**	<80	<80	<40	<80	<16	<1.6	<1.6	<1.6
1,1,1-Trichloroethane	<76	**146**	<190	<190	<95	<190	<38	<3.8	<3.8	<3.8
1,1,2-Trichloroethane	<100	<100	<250	<250	<130	<250	<50	<5.0	<5.0	<5.0
Trichloroethylene	<38	**249**	<95	<95	<48	<95	<19	<1.9	<1.9	<1.9
Trichlorofluoromethane	<200	<200	<500	<500	<250	<500	<100	<10	<10	<10
Vinyl chloride	<200	**1,290**	<500	<500	<250	<500	<100	<10	<10	<10
trans-1,3-Dichloropropylene	<200	<200	<500	<500	<250	<500	<100	<10	<10	<10
Sub Total 1	693	5,237	2,082	3,497	4,901	3,725	2,566	479	33	11
Miscellaneous Volatile Organic Compounds										
Acetone	NA	NA	NA	NA	NA	NA	NA	NA	NA	NA
Methyl ethyl ketone	NA	NA	NA	NA	NA	NA	NA	NA	NA	NA
Carbon disulfide	NA	NA	NA	NA	NA	NA	NA	NA	NA	NA
2-Hexanone	NA	NA	NA	NA	NA	NA	NA	NA	NA	NA
Styrene	NA	NA	NA	NA	NA	NA	NA	NA	NA	NA
Methyl-iso-butyl ketone	NA	NA	NA	NA	NA	NA	**400**	NA	NA	<10
Methyl isoamyl ketone	NA	NA	NA	NA	NA	NA	<100	NA	NA	<10
m-Xylene	NA	NA	NA	NA	NA	NA	<100	NA	NA	<10
o-Xylene/p-Xylene	NA	NA	NA	NA	NA	NA	<100	NA	NA	<10
Sub Total 2	0	0	0	0	0	0	400	0	0	0
Total VOCs Analyzed	693	5,237	2,082	3,497	4,901	3,725	2,966	479	33	11

See last page for footnotes.

Table 1. Summary of Volatile Organic Compounds, in Ground Water, Krummrich Plant, Sauget, Illinois.

Well Number:	P-6	P-6	P-6	P-6	P-6	P-6	P-7	P-7	P-7	
Date:	5/88	11/88	11/89	11/90	11/91	11/92	12/86	3/87	5/87	11/87
Laboratory:	ETC	ETC	ETC	ETC	ETC	ETC	ETC	ETC	ETC	ETC
USEPA Priority Pollutant Volatile Organic Compounds concentrations are in ug/L										
Acrolein	<100	<1,000	<5,000	<500	<100	<100	<10,000	<10,000	<50,000	<1,000
Acrylonitrile	<100	<1,000	<5,000	<500	<100	<100	<10,000	<10,000	<50,000	<1,000
Benzene	<4.4	**419**	**434**	**230**	**117**	**173**	**523**	**1,420**	**11,300**	**1,830**
Bis (chloromethyl) ether	<10	<100	<500	<50	<10	<10	<1,000	<1,000	<5,000	<100
Bromoform	<4.7	<47	<240	<24	<4.7	<4.7	<470	<470	<2,400	**62.3**
Carbon tetrachloride	<2.8	<28	<140	<14	<2.8	<2.8	<280	<280	<1,400	<28
Chlorobenzene	<6.0	**837**	**1,000**	**998**	**292**	**352**	**1,470**	**4,310**	**25,200**	**3,290**
Chlorodibromomethane	<3.1	<31	<160	<16	<3.1	<3.1	<310	<310	<1600	<31
Chloroethane	<10	<100	<500	<50	<10	<10	<1,000	<1,000	<5,000	<100
2-Chloroethylvinyl ether	<10	<100	<500	<50	<10	<10	<1,000	<1,000	<5,000	<100
Chloroform	<1.6	**28.8**	<80	<8.0	<1.6	<1.6	<160	<160	<800	<16
Dichlorobromomethane	<2.2	<22	<110	<11	<2.2	<2.2	<220	<220	<1,100	<22
Dichlorodifluoromethane	<10	<100	<500	<50	<10	<10	<1,000	<1,000	<500	<100
1,1-Dichloroethane	<4.7	**154**	<240	<24	<4.7	<4.7	<470	<470	<2,400	<47
1,2-Dichloroethane	<2.8	<28	<140	<14	<2.8	<2.8	<280	<280	<1,400	<28
1,1-Dichloroethylene	<2.8	<28	<140	<14	<2.8	<2.8	<280	<280	<1,400	<28
1,2-Dichloropropane	<6.0	<60	<300	<30	<6.0	<6.0	<600	<600	<3,000	<60
cis-1,3-Dichloropropylene	<5.0	<50	<250	<25	<5.0	<5.0	<500	<500	<2,500	<50
Ethylbenzene	<7.2	<72	<360	<36	<7.2	<7.2	<720	<720	<3,600	<72
Methyl bromide	<10	<100	<500	<50	<10	<10	<1,000	<1,000	<5,000	<100
Methyl chloride	<10	<100	<500	<50	<10	<10	<1,000	<1,000	<5,000	<100
Methylene chloride	<2.8	**581.0**	**170**	<14	<2.8	<2.8	**1,230**	<280	**18,200**	<28
1,1,2,2-Tetrachloroethane	<6.9	<69	<350	<35	<6.9	<6.9	<690	<690	<3,500	**117**
Tetrachloroethylene	<4.1	<41	<210	<21	<4.1	<4.1	<410	<410	<2100	
Toluene	<6.0	**189**	<300	<30	<6.0	<6.0	<600	<600	<3,000	
1,2-trans-Dichloroethylene	<1.6	**585**	<80	<8.0	<1.6	<1.6	<160	<160	<800	~~<16~~
1,1,1-Trichloroethane	<3.8	**104**	<190	<19	<3.8	<3.8	<380	<380	<1,900	<38
1,1,2-Trichloroethane	<5.0	<50	<250	<25	<5.0	<5.0	<500	<500	<2,500	<50
Trichloroethylene	<1.9	**207**	<95	<9.5	<1.9	<1.9	<190	<190	<950	<19
Trichlorofluoromethane	<10	<100	<500	<50	<10	<10	<1,000	<1,000	<5,000	<100
Vinyl chloride	<10	**1,580**	<500	<50	<10	<10	<1,000	<1,000	<5,000	<100
trans-1,3-Dichloropropylene	<10	<100	<500	<50	<10	<10	<1,000	<1,000	<5,000	<100
Sub Total 1	0	4,685	1,604	1,228	409	525	3,223	5,730	54,700	5,550
Miscellaneous Volatile Organic Compounds										
Acetone	NA	NA	NA	NA	NA	NA	NA	**3,120**	NA	NA
Methyl ethyl ketone	NA	NA	NA	NA	NA	NA	NA	<1,000	NA	NA
Carbon disulfide	NA	NA	NA	NA	NA	NA	NA	<1,000	NA	NA
2-Hexanone	NA	NA	NA	NA	NA	NA	NA	<1,000	NA	NA
Styrene	NA	NA	NA	NA	NA	NA	NA	<1,000	NA	NA
Methyl-iso-butyl ketone	NA	NA	NA	NA	NA	NA	NA	<1,000	NA	**172**
Methyl isoamyl ketone	NA	NA	NA	NA	NA	NA	NA	NA	NA	<100
m-Xylene	NA	NA	NA	NA	NA	NA	NA	<1,000	NA	<100
o-Xylene/p-Xylene	NA	NA	NA	NA	NA	NA	NA	<1,000	NA	<100
Sub Total 2	0	0	0	0	0	0	0	3,120	0	172
Total VOCs Analyzed	0	4,685	1,604	1,228	409	525	3,223	8,850	54,700	5,722

See last page for footnotes.

Table 1. Summary of Volatile Organic Compounds, in Ground Water, Krummrich Plant, Sauget, Illinois.

Well Number:	P-7	P-7	P-7	P-7	P-7	P-8	P-8	P-8	P-8	P-8
Date:	5/88	11/88	11/90	11/91	11/92	12/86	5/87	11/87	5/88	11/88
Laboratory:	ETC	ETC	ETC	ETC	ETC	ETC	ETC	ETC	ETC	ETC
USEPA Priority Pollutant Volatile Organic Compounds concentrations are in ug/L										
Acrolein	<2,000	<10,000	<5,000	<2,500	<5,000	<1,000	<1,000	<1,000	<1,000	<2,000
Acrylonitrile	<2,000	<10,000	<5,000	<2,500	<5,000	<1,000	<1,000	<1,000	<1,000	<2,000
Benzene	**861**	**5,650**	**1,790**	**1,460**	**1,650**	**194**	**424**	**1,390**	**1,720**	**1,980**
Bis (chloromethyl) ether	<200	<1,000	<500	<250	<500	<100	<100	<100	<100	<200
Bromoform	<94	<470	<240	<120	<240	<47	<47	<47	<47	<94
Carbon tetrachloride	<56	<280	<140	<70	<140	<28	<28	<28	<28	<56
Chlorobenzene	**1,560**	**9,000**	**4,860**	**4,250**	**3,550**	**909**	**2,180**	**4,910**	**3,180**	**3,810**
Chlorodibromomethane	<62	<310	<160	<78	<160	<31	<31	<31	<31	<62
Chloroethane	<200	<1,000	<500	<250	<500	<100	<100	<100	<100	<200
2-Chloroethylvinyl ether	<200	<1,000	<500	<250	<500	<100	<100	<100	<100	<200
Chloroform	<32	**462**	<80	<40	<80	<16	<16	<16	<16	**121**
Dichlorobromomethane	<44	<220	<110	<55	<110	<22	<22	<22	<22	<44
Dichlorodifluoromethane	<200	<1,000	<500	<250	<500	<100	<100	<100	<100	<200
1,1-Dichloroethane	<94	**2,880**	<240	<120	<240	<47	<47	<47	<47	<94
1,2-Dichloroethane	<56	<280	<140	<70	<140	<28	<28	**73.9**	<28	**303**
1,1-Dichloroethylene	<56	**373**	<140	<70	<140	<28	<28	<28	<28	<56
1,2-Dichloropropane	<120	<600	<300	<150	<300	<60	<60	<60	<60	<120
cis-1,3-Dichloropropylene	<100	<500	<250	<130	<250	<50	<50	<50	<50	<100
Ethylbenzene	<140	<720	<360	<180	<360	<72	<72	**79.1**	<72	<140
Methyl bromide	<200	<1,000	<500	<250	<500	<100	<100	<100	<100	<200
Methyl chloride	<200	<1,000	<500	<250	<500	<100	<100	<100	<100	<200
Methylene chloride	<56	**10,200**	<140	<70	<140	<28	<28	**217**	**558**	**495**
1,1,2,2-Tetrachloroethane	<140	<690	<350	<170	<350	<69	<69	<69	<69	<140
Tetrachloroethylene	,82	<410	<210	<100	<210	<41	<41	<41	<41	<82
Toluene	<120	**3,620**	**613**	**408**	<300	<60	<60	**590**	**538**	**603**
1,2-trans-Dichloroethylene	<32	**11,300**	<80	<40	<80	<16	<16	<16	<16	<32
1,1,1-Trichloroethane	<76	**2,720**	<190	<95	<190	<38	<38	<38	<38	<76
1,1,2-Trichloroethane	<100	<500	<250	<130	<250	<50	<50	<50	<50	<100
Trichloroethylene	<38	**4,610**	<95	<48	<95	<19	<19	<19	**24.3**	<38
Trichlorofluoromethane	<200	<1,000	<500	<250	<500	<100	<100	<100	<100	<200
Vinyl chloride	<200	**24,500**	<500	<250	<500	<100	<100	<100	<100	<200
trans-1,3-Dichloropropylene	<200	<1,000	<500	<250	<500	<100	<100	<100	<100	<200
Sub Total 1	2,421	75,315	7,263	6,118	5,200	1,103	2,604	7,260	6,020	7,312
Miscellaneous Volatile Organic Compounds										
Acetone	NA	NA	NA	NA	NA	NA	NA	NA	NA	NA
Methyl ethyl ketone	NA	NA	NA	NA	NA	NA	NA	NA	NA	NA
Carbon disulfide	NA	NA	NA	NA	NA	NA	NA	NA	NA	NA
2-Hexanone	NA	NA	NA	NA	NA	NA	NA	NA	NA	NA
Styrene	NA	NA	NA	NA	NA	NA	NA	NA	NA	NA
Methyl-iso-butyl ketone	NA	NA	NA	NA	NA	NA	NA	**2,860**	NA	NA
Methyl isoamyl ketone	NA	NA	NA	NA	NA	NA	NA	<100	NA	NA
m-Xylene	NA	NA	NA	NA	NA	NA	NA	**173**	NA	NA
o-Xylene/p-Xylene	NA	NA	NA	NA	NA	NA	NA	**144**	NA	NA
Sub Total 2	0	0	0	0	0	0	0	3,177	0	0
Total VOCs Analyzed	2,421	75,315	7,263	6,118	5,200	1,103	2,604	10,437	6,020	7,312

See last page for footnotes.

Table 1. Summary of Volatile Organic Compounds, in Ground Water, Krummrich Plant, Sauget, Illinois.

Well Number:	P-8	P-8	P-8	P-8	P-8	P-10	P-11	P-11	P-12	3
Date:	3/89	11/89	11/90	11/91	11/92	11/87	3/87	11/87	11/87	12/86
Laboratory:	ETC	ETC	ETC	ETC	ETC	ETC	ETC	ETC	ETC	ETC
USEPA Priority Pollutant Volatile Organic Compounds concentrations are in ug/L										
Acrolein	<10,000	<5,000	<5,000	<2,500	<5,000	<1,000	<100	<1,000	<50,000	<1,000
Acrylonitrile	<10,000	<5,000	<5,000	<2,500	<5,000	<1,000	<100	<1,000	<50,000	<1,000
Benzene	**1,680**	**3,340**	**1,990**	**2,380**	**2,160**	**1,080**	**120**	**337**	**7,330**	**45.8**
Bis (chloromethyl) ether	<1,000	<500	<500	<250	<500	<100	<10	<100	<5,000	<100
Bromoform	<470	<240	<240	<120	<240	<47	<4.7	<47	<2,400	<47
Carbon tetrachloride	<280	<140	<140	<70	<140	<28	<2.8	<28	<1,400	<28
Chlorobenzene	**3,660**	**4,340**	**5,280**	**4,450**	**3,540**	**5,210**	**483**	**1,660**	**37,400**	**225**
Chlorodibromomethane	<310	<160	<160	<78	<160	<31	<3.1	<31	<1600	<31
Chloroethane	<1,000	<500	<500	<250	<500	<100	<10	<100	<5,000	<100
2-Chloroethylvinyl ether	<1,000	<500	<500	<250	<500	<100	<10	<100	<5,000	<100
Chloroform	<160	<80	<80	<40	<80	<16	<1.6	<16	<800	<16
Dichlorobromomethane	<220	<110	<110	<55	<110	<22	<2.2	<22	<1,100	<22
Dichlorodifluoromethane	<1,000	<500	<500	<250	<500	<100	<10	<100	<5,000	<100
1,1-Dichloroethane	<470	<240	<240	<120	<240	<47	<4.7	<47	<2,400	<47
1,2-Dichloroethane	<280	<140	**409**	**2,200**	**1,860**	**49.6**	<2.8	<28	<1,400	<28
1,1-Dichloroethylene	<280	<140	<140	<70	<140	<28	<2.8	<28	<1,400	<28
1,2-Dichloropropane	<600	<300	<300	<150	<300	<60	<6.0	<60	<3,000	<60
cis-1,3-Dichloropropylene	<500	<250	<250	<130	<250	<50	<5.0	<50	<2,500	<50
Ethylbenzene	<1,000	<360	<360	<180	<360	**137**	<7.2	<72	<5,000	<72
Methyl bromide	<1,000	<500	<500	<250	<500	<100	<10	<100	<5,000	<100
Methyl chloride	**466**	<500	<500	<250	<500	<100	<10	<100	<5,000	<100
Methylene chloride	<690	**1,080**	**516**	**279**	<140	**663**	<2.8	**2,260**	<1,400	**114**
1,1,2,2-Tetrachloroethane	<410	<350	<350	<170	<350	<69	<6.9	<69	<3,500	<69
Tetrachloroethylene	<600	<210	<210	<100	<210	<41	<4.1	<41	<2100	'
Toluene	<160	**512**	**1,300**	**637**	**387**	**103**	<6.0	<60	<3,000	J
1,2-trans-Dichloroethylene	<380	<80	<80	<40	<80	**25.4**	<1.6	<16	<800	<16
1,1,1-Trichloroethane	<500	<190	<190	<95	<190	<38	<3.8	<38	<1,900	<38
1,1,2-Trichloroethane	<190	<250	<250	<130	<250	<50	<5.0	<50	<2,500	<50
Trichloroethylene	<1,000	<95	<95	<48	<95	<19	<1.9	<19	<950	<19
Trichlorofluoromethane	<1,000	<500	<500	<250	<500	<100	<10	<100	<5,000	<100
Vinyl chloride	<1,000	<500	<500	<250	<500	<100	<10	<100	<5,000	<100
trans-1,3-Dichloropropylene	<720	<500	<500	<250	<500	<100	<10	<100	<3,600	<100
Sub Total 1	5,806	9,272	9,495	9,946	7,947	7,258	603	4,257	44,730	385
Miscellaneous Volatile Organic Compounds										
Acetone	NA	NA	NA	NA	NA	NA	**22.9**	NA	NA	NA
Methyl ethyl ketone	NA	NA	NA	NA	NA	NA	<10	NA	NA	NA
Carbon disulfide	NA	NA	NA	NA	NA	NA	<10	NA	NA	NA
2-Hexanone	NA	NA	NA	NA	NA	NA	<10	NA	NA	NA
Styrene	NA	NA	NA	NA	NA	NA	<10	NA	NA	NA
Methyl-iso-butyl ketone	**1,920**	NA	NA	NA	NA	<100	<10	<100	<5,000	NA
Methyl isoamyl ketone	<1,000	NA	NA	NA	NA	<100	NA	<100	<5,000	NA
m-Xylene	<1,000	NA	NA	NA	NA	<100	<10	<100	<5,000	NA
o-Xylene/p-Xylene	<1,000	NA	NA	NA	NA	**137**	<10	<100	<5,000	NA
Sub Total 2	1,920	0	0	0	0	137	23	0	0	0
Total VOCs Analyzed	7,726	9,272	9,495	9,946	7,947	7,395	626	4,257	44,730	385

See last page for footnotes.

Table 1. Summary of Volatile Organic Compounds, in Ground Water, Krummrich Plant, Sauget, Illinois.

Well Number:	P-13	P-13	P-13	P-13	P-13	P-13	P-13	P-13	P-14	P-14
Date:	5/87	11/87	5/88	11/88	11/89	11/90	11/91	11/92	12/86	5/87
Laboratory:	ETC	ETC	ETC	ETC	ETC	ETC	ETC	ETC	ETC	ETC
USEPA Priority Pollutant Volatile Organic Compounds concentrations are in ug/L										
Acrolein	<100	<100	<1,000	<1,000	<5,000	<5,000	<2,500	<10,000	<100	<10,0000
Acrylonitrile	<100	<100	<1,000	<1,000	<5,000	<5,000	<2,500	<10,000	<100	<10,0000
Benzene	**89.7**	**365**	**684**	**1,040**	**3,410**	**2,200**	**2,970**	**2,340**	<4.4	<4400
Bis (chloromethyl) ether	<10	<100	<100	<100	<500	<500	<250	<1,000	<10	<10,000
Bromoform	<4.7	<47	<47	<47	<240	<240	<120	<470	<4.7	<4700
Carbon tetrachloride	<2.8	<28	<28	<28	<140	<140	<70	<280	<2.8	<2800
Chlorobenzene	**305**	**881**	**1,050**	**1,500**	**5,530**	**4,560**	**6,400**	**5,430**	<6.0	**158,000**
Chlorodibromomethane	<3.1	<31	<31	<31	<160	<160	<78	<310	<3.1	<3100
Chloroethane	<10	<100	<100	<100	<500	<500	<250	<1,000	<10	<10,000
2-Chloroethylvinyl ether	<10	<100	<100	<100	<500	<500	<250	<1,000	<10	<10,000
Chloroform	<1.6	<16	<16	<16	<80	<80	<40	<160	<1.6	<1600
Dichlorobromomethane	<2.2	<22	<22	<22	<110	<110	<55	<220	<2.2	<2200
Dichlorodifluoromethane	<10	<100	<100	<100	<500	<500	<250	<1,000	<10	<10,000
1,1-Dichloroethane	<4.7	<47	<47	<47	<240	<240	<120	<470	<4.7	<4700
1,2-Dichloroethane	<2.8	<28	<28	<28	<140	<140	<70	<280	<2.8	<2800
1,1-Dichloroethylene	<2.8	<28	<28	<28	<140	<140	<70	<280	<2.8	<2800
1,2-Dichloropropane	<6.0	<60	<60	<60	<300	<300	<150	<600	<6.0	<6000
cis-1,3-Dichloropropylene	<5.0	<50	<50	<50	<250	<250	<130	<500	<5.0	<5,000
Ethylbenzene	<7.2	<72	<72	<72	<360	<360	<180	<720	<7.2	<7200
Methyl bromide	<10	<100	<100	<100	<500	<500	<250	<1,000	<10	<10,000
Methyl chloride	<10	<100	<100	<100	<500	<500	<250	<1,000	<10	<10,000
Methylene chloride	<2.8	<28	<28	**136**	**398**	<140	<70	<280	**468**	**22,400**
1,1,2,2-Tetrachloroethane	<6.9	<69	<69	<69	<350	<350	<170	<690	<6.9	<6900
Tetrachloroethylene	<4.1	<41	<41	<41	<210	<210	<100	<410	<4.1	<4100
Toluene	<6.0	<60	<60	<60	**928**	<300	**448**	<600	<6.0	<6000
1,2-trans-Dichloroethylene	<1.6	<16	<16	<16	<80	<80	<40	<160	<1.6	<1600
1,1,1-Trichloroethane	<3.8	<38	<38	<38	<190	<190	<95	<380	<3.8	<3800
1,1,2-Trichloroethane	<5.0	<50	<50	<50	<250	<250	<130	<500	<5.0	<5,000
Trichloroethylene	<1.9	<19	<19	<19	<95	<95	<48	<190	<1.9	<1,900
Trichlorofluoromethane	<10	<100	<100	<100	<500	<500	<250	<1,000	<10	<10,000
Vinyl chloride	<10	<100	<100	<100	<500	<500	<250	<1,000	<10	<10,000
trans-1,3-Dichloropropylene	<10	<100	<100	<100	<500	<500	<250	<1,000	<10	<10,000
Sub Total 1	395	1,246	1,734	2,676	10,266	6,760	9,818	7,770	468	180,400
Miscellaneous Volatile Organic Compounds										
Acetone	NA	NA	NA	NA	NA	NA	NA	NA	NA	NA
Methyl ethyl ketone	NA	NA	NA	NA	NA	NA	NA	NA	NA	NA
Carbon disulfide	NA	NA	NA	NA	NA	NA	NA	NA	NA	NA
2-Hexanone	NA	NA	NA	NA	NA	NA	NA	NA	NA	NA
Styrene	NA	NA	NA	NA	NA	NA	NA	NA	NA	NA
Methyl-iso-butyl ketone	NA	<100	NA	NA	NA	NA	NA	NA	NA	NA
Methyl isoamyl ketone	NA	<100	NA	NA	NA	NA	NA	NA	NA	NA
m-Xylene	NA	<100	NA	NA	NA	NA	NA	NA	NA	NA
o-Xylene/p-Xylene	NA	<100	NA	NA	NA	NA	NA	NA	NA	NA
Sub Total 2	0	0	0	0	0	0	0	0	0	0
Total VOCs Analyzed	395	1,246	1,734	2,676	10,266	6,760	9,818	7,770	468	180,400

See last page for footnotes.

Table 1. Summary of Volatile Organic Compounds, in Ground Water, Krummrich Plant, Sauget, Illinois.

Well Number:	P-14	P-14	P-14	P-14	P-14	P-14	P-14	Field Blank	Field Blank	[illegible]
Date:	11/87	5/88	11/88	11/89	11/90	11/91	11/92	12/86	3/87	[illegible]
Laboratory:	ETC	ETC	ETC	ETC	ETC	ETC	ETC	ETC	ETC	ETC
USEPA Priority Pollutant Volatile Organic Compounds concentrations are in ug/L										
Acrolein	<100	<10,0000	<50,000	<5,000	<10,0000	<50,000	<20,0000	<100	<100	<100
Acrylonitrile	<100	<10,0000	<50,000	<5,000	<10,0000	<50,000	<20,0000	<100	<100	<100
Benzene	<4.4	<4,400	<2,200	<220	<4,400	**2,200**	<8,800	<4.4	<4.4	<4.4
Bis (chloromethyl) ether	<10	<10,000	<5,000	<500	<10,000	<5,000	<20,000	<10	<10	<10
Bromoform	<4.7	<4,700	<2,400	<240	<4,700	<2,400	<9,400	<4.7	<4.7	<4.7
Carbon tetrachloride	<2.8	<2,800	<1,400	<140	<2,800	<1,400	<5,600	<2.8	<2.8	<2.8
Chlorobenzene	<6.0	**37,200**	**12,100**	**17,600**	**40,900**	**59,400**	**64,700**	<6.0	<6.0	<6.0
Chlorodibromomethane	<3.1	<3,100	<1,600	<160	<3,100	<1,600	<6,200	<3.1	<3.1	<3.1
Chloroethane	<10	<10,000	<5,000	<500	<10,000	<5,000	<20,000	<10	<10	<10
2-Chloroethylvinyl ether	<10	<10,000	<5,000	<500	<10,000	<5,000	<20,000	<10	<10	<10
Chloroform	<1.6	<1,600	<800	<80	<1,600	<800	<3,200	<1.6	<1.6	<1.6
Dichlorobromomethane	<2.2	<2,200	<1,100	<110	<2,200	<1,100	<4,400	<2.2	<2.2	<2.2
Dichlorodifluoromethane	<10	<10,000	<5,000	<500	<10,000	<5,000	<20,000	<10	<10	<10
1,1-Dichloroethane	<4.7	<4,700	<2,400	<240	<4,700	<2,400	<9,400	<4.7	<4.7	<4.7
1,2-Dichloroethane	<2.8	<2,800	<1,400	<140	<2,800	<1,400	<5,600	<2.8	<2.8	<2.8
1,1-Dichloroethylene	<2.8	<2,800	<1,400	<140	<2,800	<1,400	<5,600	<2.8	<2.8	<2.8
1,2-Dichloropropane	<6.0	<6,000	<3,000	<300	<6,000	<3,000	<12,000	<6.0	<6.0	<6.0
cis-1,3-Dichloropropylene	<5.0	<5,000	<2,500	<250	<5,000	<2,500	<10,000	<5.0	<5.0	<5.0
Ethylbenzene	<7.2	<7,200	<5,000	<360	<7,200	<5,000	<14,000	<7.2	<7.2	<7.2
Methyl bromide	<10	<10,000	<5,000	<500	<10,000	<5,000	<20,000	<10	<10	<10
Methyl chloride	<10	<10,000	<5,000	<500	<10,000	<5,000	<20,000	<10	<10	<10
Methylene chloride	**26.5**	<2,800	<1,400	**280**	<2,800	<1,400	<5600	**8.4**	<2.8	<2.8
1,1,2,2-Tetrachloroethane	<6.9	<6,900	<3,500	<350	<6,900	<3,500	<14,000	<6.9	<6.9	<6.9
Tetrachloroethylene	<4.1	<4,100	<2,100	<210	<4,100	<2,100	<8,200	<4.1	<4.1	
Toluene	<6.0	<6,000	<3,000	<300	<6,000	<3,000	<12,000	<6.0	<6.0	
1,2-trans-Dichloroethylene	<1.6	<1,600	<800	<80	<1,600	<800	<3,200	<1.6	<1.6	<1.6
1,1,1-Trichloroethane	<3.8	<3,800	<1,900	<190	<3,800	<1,900	<7,600	<3.8	<3.8	<3.8
1,1,2-Trichloroethane	<5.0	<5,000	<2,500	<250	<5,000	<2,500	<10,000	<5.0	<5.0	<5.0
Trichloroethylene	<1.9	<1,900	<950	<95	<1,900	<950	<3800	<1.9	<1.9	<1.9
Trichlorofluoromethane	<10	<10,000	<5,000	<500	<10,000	<5,000	<20,000	<10	<10	<10
Vinyl chloride	<10	<10,000	<5,000	<500	<10,000	<5,000	<20,000	<10	<10	<10
trans-1,3-Dichloropropylene	<10	<10,000	<3,600	<500	<10,000	<5,000	<20,000	<10	<10	<10
Sub Total 1	27	37,200	12,100	17,780	40,900	61,600	64,700	8	0	0
Miscellaneous Volatile Organic Compounds										
Acetone	NA	NA	NA	NA	NA	NA	NA	NA	<10	NA
Methyl ethyl ketone	NA	NA	NA	NA	NA	NA	NA	NA	<10	NA
Carbon disulfide	NA	NA	NA	NA	NA	NA	NA	NA	<10	NA
2-Hexanone	NA	NA	NA	NA	NA	NA	NA	NA	<10	NA
Styrene	NA	NA	NA	NA	NA	NA	NA	NA	<10	NA
Methyl-iso-butyl ketone	<10	NA	NA	NA	NA	NA	NA	NA	<10	NA
Methyl isoamyl ketone	<10	NA	NA	NA	NA	NA	NA	NA	NA	NA
m-Xylene	<10	NA	NA	NA	NA	NA	NA	NA	<10	NA
o-Xylene/p-Xylene	<10	NA	NA	NA	NA	NA	NA	NA	<10	NA
Sub Total 2	0	0	0	0	0	0	0	0	0	0
Total VOCs Analyzed	27	37,200	12,100	17,780	40,900	61,600	64,700	8	0	0

See last page for footnotes.

Table 1. Summary of Volatile Organic Compounds, in Ground Water, Krummrich Plant, Sauget, Illinois.

Well Number:	Field Blank	Field Blank	Field Blank	Field Blank	Field Blank	Field Blank	Field Blank	Field Blank	Field Blank	Field Blank
Date:	11/87	5/88	11/88	11/88	3/89	5/89	11/89	5/90	11/90	5/91
Laboratory:	ETC	ETC	ETC	ETC	ETC	ETC	ETC	ETC	ETC	ETC
USEPA Priority Pollutant Volatile Organic Compounds concentrations are in ug/L										
Acrolein	<100	<100	<100	<50	<100	<100	<100	<100	<100	<100
Acrylonitrile	<100	<100	<100	<50	<100	<100	<100	<100	<100	<100
Benzene	<4.4	<4.4	<4.4	<5	<4.4	<4.4	<4.4	<4.4	<4.4	<4.4
Bis (chloromethyl) ether	<10	<10	<10	<10	<10	<10	<10	<10	<10	<10
Bromoform	<4.7	<4.7	<4.7	<5	<4.7	<4.7	<4.7	<4.7	<4.7	<4.7
Carbon tetrachloride	<2.8	<2.8	<2.8	<5	<2.8	<2.8	<2.8	<2.8	<2.8	<2.8
Chlorobenzene	<6.0	<6.0	<6.0	<5	<6.0	<6.0	<6.0	<6.0	<6.0	<6.0
Chlorodibromomethane	**3.90**	<3.1	<3.1	<5	<3.1	<3.1	<3.1	<3.1	<3.1	<3.1
Chloroethane	<10	<10	<10	<10	<10	<10	<10	<10	<10	<10
2-Chloroethylvinyl ether	<10	<10	<10	<5	<10	<10	<10	<10	<10	<10
Chloroform	**39.7**	<1.6	<1.6	<5	<1.6	<1.6	<1.6	<1.6	<1.6	<1.6
Dichlorobromomethane	**16.5**	<2.2	<2.2	<5	<2.2	<2.2	<2.2	<2.2	<2.2	**3.76**
Dichlorodifluoromethane	<10	<10	**23.1**	<10	<10	<10	<10	<10	<10	<10
1,1-Dichloroethane	<4.7	<4.7	<4.7	<5	<4.7	<4.7	<4.7	<4.7	<4.7	<4.7
1,2-Dichloroethane	<2.8	<2.8	<2.8	<5	<2.8	<2.8	<2.8	<2.8	<2.8	<2.8
1,1-Dichloroethylene	<2.8	<2.8	<2.8	<5	<2.8	<2.8	<2.8	<2.8	<2.8	<2.8
1,2-Dichloropropane	<6.0	<6.0	<6.0	<5	<6.0	<6.0	<6.0	<6.0	<6.0	<6.0
cis-1,3-Dichloropropylene	<5.0	<5.0	<5.0	<5	<5.0	<5.0	<5.0	<5.0	<5.0	<5.0
Ethylbenzene	<7.2	<7.2	<7.2	<5	<10	<7.2	<7.2	<7.2	<7.2	<7.2
Methyl bromide	<10	<10	<10	<10	<10	<10	<10	<10	<10	<10
Methyl chloride	<10	<10	<10	<10	<2.8	<10	<10	<10	<10	<10
Methylene chloride	**9.67**	**10.2**	**29.2**	<5	<6.9	**4.20**	<2.8	**9.01**	<2.8	<2.8
1,1,2,2-Tetrachloroethane	<6.9	<6.9	<6.9	<5	<4.1	<6.9	<6.9	<6.9	<6.9	<6.9
Tetrachloroethylene	<4.1	<4.1	<4.1	<5	<6.0	<4.1	<4.1	<4.1	<4.1	<4.1
Toluene	<6.0	<6.0	<6.0	<5	<1.6	<6.0	<6.0	<6.0	<6.0	<6.0
1,2-trans-Dichloroethylene	<1.6	<1.6	<1.6	<5	<3.8	<1.6	<1.6	<1.6	<1.6	<1.6
1,1,1-Trichloroethane	<3.8	<3.8	<3.8	<5	<5.0	<3.8	<3.8	<3.8	<3.8	<3.8
1,1,2-Trichloroethane	<5.0	<5.0	<5.0	<5	<1.9	<5.0	<5.0	<5.0	<5.0	<5.0
Trichloroethylene	<1.9	<1.9	<1.9	<5	<10	<1.9	<1.9	<1.9	<1.9	<1.9
Trichlorofluoromethane	<10	<10	<10	<5	<10	<10	<10	<10	<10	<10
Vinyl chloride	<10	<10	<10	<10	<10	<10	<10	<10	<10	<10
trans-1,3-Dichloropropylene	<10	<10	<10	<5	<7.2	<10	<10	<10	<10	<10
Sub Total 1	70	10	52	0	0	4	0	9	0	4
Miscellaneous Volatile Organic Compounds										
Acetone	NA	NA	NA	NA	NA	NA	NA	NA	NA	NA
Methyl ethyl ketone	NA	NA	NA	NA	NA	NA	NA	NA	NA	NA
Carbon disulfide	NA	NA	NA	NA	NA	NA	NA	NA	NA	NA
2-Hexanone	NA	NA	NA	NA	NA	NA	NA	NA	NA	NA
Styrene	NA	NA	NA	NA	NA	NA	NA	NA	NA	NA
Methyl-iso-butyl ketone	NA	NA	NA	<500	NA	NA	NA	NA	<10	NA
Methyl isoamyl ketone	NA	NA	NA	<100	NA	NA	NA	NA	<10	NA
m-Xylene	NA	NA	NA	<50	NA	NA	NA	NA	<10	NA
o-Xylene/p-Xylene	NA	NA	NA	<50	NA	NA	NA	NA	<10	NA
Sub Total 2	0	0	0	0	0	0	0	0	0	0
Total VOCs Analyzed	70	10	52	0	0	4	0	9	0	4

See last page for footnotes.

Table 1. Summary of Volatile Organic Compounds, in Ground Water, Krummrich Plant, Sauget, Illinois.

Well Number:	Field Blank	Field Blank	Field Blank	Trip Blank	Trip Blank	Trip Blank	Trip Blank	Trip Blank	Trip Blank	[illegible]
Date:	11/91	11/9/92	11/12/92	12/86	3/87	5/87	11/87	5/88	11/88	[illegible]/88
Laboratory:	ETC	ETC	ETC	ETC	ETC	ETC	ETC	ETC	ETC	ETC
USEPA Priority Pollutant Volatile Organic Compounds concentrations are in ug/L										
Acrolein	<100	<100	<100	<100	<100	<100	<100	<100	<100	<50
Acrylonitrile	<100	<100	<100	<100	<100	<100	<100	<100	<100	<50
Benzene	<4.4	<4.4	<4.4	<4.4	<4.4	<4.4	<4.4	<4.4	<4.4	<5
Bis (chloromethyl) ether	<10	<10	<10	<10	<10	<10	<10	<10	<10	<5
Bromoform	<4.7	<4.7	<4.7	<4.7	<4.7	<4.7	<4.7	<4.7	<4.7	<5
Carbon tetrachloride	<2.8	<2.8	<2.8	<2.8	<2.8	<2.8	<2.8	<2.8	<2.8	<5
Chlorobenzene	<6.0	<6.0	<6.0	<6.0	<6.0	<6.0	<6.0	<6.0	<6.0	<5
Chlorodibromomethane	<3.1	<3.1	<3.1	<3.1	<3.1	<3.1	<3.1	<3.1	<3.1	<5
Chloroethane	<10	<10	<10	<10	<10	<10	<10	<10	<10	<10
2-Chloroethylvinyl ether	<10	<10	<10	<10	<10	<10	<10	<10	<10	<10
Chloroform	<1.6	<1.6	<1.6	<1.6	<1.6	<1.6	<1.6	<1.6	<1.6	<5
Dichlorobromomethane	<2.2	<2.2	<2.2	<2.2	<2.2	<2.2	<2.2	<2.2	<2.2	<5
Dichlorodifluoromethane	<10	<10	<10	<10	<10	<10	<10	<10	**26**	<10
1,1-Dichloroethane	<4.7	<4.7	<4.7	<4.7	<4.7	<4.7	<4.7	<4.7	<4.7	<5
1,2-Dichloroethane	<2.8	<2.8	<2.8	<2.8	<2.8	<2.8	<2.8	<2.8	<2.8	<5
1,1-Dichloroethylene	<2.8	<2.8	<2.8	<2.8	<2.8	<2.8	<2.8	<2.8	<2.8	<5
1,2-Dichloropropane	<6.0	<6.0	<6.0	<6.0	<6.0	<6.0	<6.0	<6.0	<6.0	<5
cis-1,3-Dichloropropylene	<5.0	<5.0	<5.0	<5.0	<5.0	<5.0	<5.0	<5.0	<5.0	<5
Ethylbenzene	<7.2	<7.2	<7.2	<7.2	<7.2	<7.2	<7.2	<7.2	<7.2	<5
Methyl bromide	<10	<10	<10	<10	<10	<10	<10	<10	<10	<10
Methyl chloride	<10	<10	<10	<10	<10	<10	<10	<10	<10	<10
Methylene chloride	<2.8	**3.7**	<2.8	**4.2**	<2.8	<2.8	<2.8	<2.8	**6.50**	<5
1,1,2,2-Tetrachloroethane	<6.9	<6.9	<6.9	<6.9	<6.9	<6.9	<6.9	<6.9	<6.9	<5
Tetrachloroethylene	<4.1	<4.1	<4.1	<4.1	<4.1	<4.1	<4.1	<4.1	<4.1	5
Toluene	<6.0	<6.0	<6.0	<6.0	<6.0	<6.0	<6.0	<6.0	<6.0	3
1,2-trans-Dichloroethylene	<1.6	<1.6	<1.6	<1.6	<1.6	<1.6	<1.6	<1.6	<1.6	<5
1,1,1-Trichloroethane	<3.8	<3.8	<3.8	<3.8	<3.8	<3.8	<3.8	<3.8	<3.8	<5
1,1,2-Trichloroethane	<5.0	<5.0	<5.0	<5.0	<5.0	<5.0	<5.0	<5.0	<5.0	<5
Trichloroethylene	<1.9	<1.9	<1.9	<1.9	<1.9	<1.9	<1.9	<1.9	<1.9	<5
Trichlorofluoromethane	<10	<10	<10	<10	<10	<10	<10	<10	<10	<5
Vinyl chloride	<10	<10	<10	<10	<10	<10	<10	<10	<10	<10
trans-1,3-Dichloropropylene	<10	<10	<10	<10	<10	<10	<10	<10	<10	<5
Sub Total 1	0	4	0	4	0	0	0	0	33	0
Miscellaneous Volatile Organic Compounds										
Acetone	NA	NA	NA	NA	**40.1**	NA	NA	NA	NA	NA
Methyl ethyl ketone	NA	NA	NA	NA	<10	NA	NA	NA	NA	NA
Carbon disulfide	NA	NA	NA	NA	<10	NA	NA	NA	NA	NA
2-Hexanone	NA	NA	NA	NA	<10	NA	NA	NA	NA	NA
Styrene	NA	NA	NA	NA	<10	NA	NA	NA	NA	NA
Methyl-iso-butyl ketone	NA	NA	NA	NA	<10	NA	NA	NA	NA	NA
Methyl isoamyl ketone	NA	NA	NA	NA	NA	NA	NA	NA	NA	NA
m-Xylene	NA	NA	NA	NA	<10	NA	NA	NA	NA	NA
o-Xylene/p-Xylene	NA	NA	NA	NA	<10	NA	NA	NA	NA	NA
Sub Total 2	0	0	0	0	40	0	0	0	0	0
Total VOCs Analyzed	0	4	0	4	40	0	0	0	33	0

See last page for footnotes.

Table 1. Summary of Volatile Organic Compounds, in Ground Water, Krummrich Plant, Sauget, Illinois.

Well Number:	Trip Blank	Trip Blank	Trip Blank	Trip Blank	Trip Blank	Trip Blank	Trip Blank	Trip Blank	Trip Blank	Trip Blank
Date:	5/89	11/89	5/90	11/90	5/91	11/91	11/4/92	11/4/92	11/5/92	11/5/92
Laboratory:	ETC	ETC	ETC	ETC	ETC	ETC	ETC	ETC	ETC	ETC
USEPA Priority Pollutant Volatile Organic Compounds concentrations are in ug/L										
Acrolein	<100	<100	<100	<100	<100	<100	<100	<100	<100	<100
Acrylonitrile	<100	<100	<100	<100	<100	<100	<100	<100	<100	<100
Benzene	<4.4	<4.4	<4.4	<4.4	<4.4	<4.4	<4.4	<4.4	<4.4	<4.4
Bis (chloromethyl) ether	<10	<10	<10	<10	<10	<10	<10	<10	<10	<10
Bromoform	<4.7	<4.7	<4.7	<4.7	<4.7	<4.7	<4.7	<4.7	<4.7	<4.7
Carbon tetrachloride	<2.8	<2.8	<2.8	<2.8	<2.8	<2.8	<2.8	<2.8	<2.8	<2.8
Chlorobenzene	<6.0	<6.0	<6.0	<6.0	<6.0	<6.0	<6.0	<6.0	<6.0	<6.0
Chlorodibromomethane	<3.1	<3.1	<3.1	<3.1	<3.1	<3.1	<3.1	<3.1	<3.1	<3.1
Chloroethane	<10	<10	<10	<10	<10	<10	<10	<10	<10	<10
2-Chloroethylvinyl ether	<10	<10	<10	<10	<10	<10	<10	<10	<10	<10
Chloroform	<1.6	<1.6	<1.6	<1.6	<1.6	<1.6	<1.6	<1.6	<1.6	<1.6
Dichlorobromomethane	<2.2	<2.2	<2.2	<2.2	<2.2	<2.2	<2.2	<2.2	<2.2	<2.2
Dichlorodifluoromethane	<10	<10	<10	<10	<10	<10	<10	<10	<10	<10
1,1-Dichloroethane	<4.7	<4.7	<4.7	<4.7	<4.7	<4.7	<4.7	<4.7	<4.7	<4.7
1,2-Dichloroethane	<2.8	<2.8	<2.8	<2.8	<2.8	<2.8	<2.8	<2.8	<2.8	<2.8
1,1-Dichloroethylene	<2.8	<2.8	<2.8	<2.8	<2.8	<2.8	<2.8	<2.8	<2.8	<2.8
1,2-Dichloropropane	<6.0	<6.0	<6.0	<6.0	<6.0	<6.0	<6.0	<6.0	<6.0	<6.0
cis-1,3-Dichloropropylene	<5.0	<5.0	<5.0	<5.0	<5.0	<5.0	<5.0	<5.0	<5.0	<5.0
Ethylbenzene	<10	<7.2	<7.2	<7.2	<7.2	<7.2	<7.2	<7.2	<7.2	<7.2
Methyl bromide	<10	<10	<10	<10	<10	<10	<10	<10	<10	<10
Methyl chloride	<2.8	<10	<10	<10	<10	<10	<10	<10	<10	<10
Methylene chloride	<6.9	**8.76**	**7.75**	<2.8	**15.8**	<2.8	<2.8	<2.8	**2.88**	<2.8
1,1,2,2-Tetrachloroethane	<4.1	<6.9	<6.9	<6.9	<6.9	<6.9	<6.9	<6.9	<6.9	<6.9
Tetrachloroethylene	<6.0	<4.1	<4.1	<4.1	<4.1	<4.1	<4.1	<4.1	<4.1	<4.1
Toluene	<1.6	<6.0	<6.0	<6.0	<6.0	<6.0	<6.0	<6.0	<6.0	<6.0
1,2-trans-Dichloroethylene	<3.8	<1.6	<1.6	<1.6	<1.6	<1.6	<1.6	<1.6	<1.6	<1.6
1,1,1-Trichloroethane	<5.0	<3.8	<3.8	<3.8	<3.8	<3.8	<3.8	<3.8	<3.8	<3.8
1,1,2-Trichloroethane	<1.9	<5.0	<5.0	<5.0	<5.0	<5.0	<5.0	<5.0	<5.0	<5.0
Trichloroethylene	<10	<1.9	<1.9	<1.9	<1.9	<1.9	<1.9	<1.9	<1.9	<1.9
Trichlorofluoromethane	<10	<10	<10	<10	<10	**30.1**	<10	<10	<10	<10
Vinyl chloride	<10	<10	<10	<10	<10	<10	<10	<10	<10	<10
trans-1,3-Dichloropropylene	<7.2	<10	<10	<10	<10	<10	<10	<10	<10	<10
Sub Total 1	0	9	8	0	16	30	0	0	3	0
Miscellaneous Volatile Organic Compounds										
Acetone	NA	NA	NA	NA	NA	NA	NA	NA	NA	NA
Methyl ethyl ketone	NA	NA	NA	NA	NA	NA	NA	NA	NA	NA
Carbon disulfide	NA	NA	NA	NA	NA	NA	NA	NA	NA	NA
2-Hexanone	NA	NA	NA	NA	NA	NA	NA	NA	NA	NA
Styrene	NA	NA	NA	NA	NA	NA	NA	NA	NA	NA
Methyl-iso-butyl ketone	NA	NA	NA	NA	NA	NA	NA	NA	NA	NA
Methyl isoamyl ketone	NA	NA	NA	NA	NA	NA	NA	NA	NA	NA
m-Xylene	NA	NA	NA	NA	NA	NA	NA	NA	NA	NA
o-Xylene/p-Xylene	NA	NA	NA	NA	NA	NA	NA	NA	NA	NA
Sub Total 2	0	0	0	0	0	0	0	0	0	0
Total VOCs Analyzed	0	9	8	0	16	30	0	0	3	0

See last page for footnotes.

Table 1. Summary of Volatile Organic Compounds, in Ground Water, Krummrich Plant, Sauget, Illinois.

Well Number:	Trip Blank	Trip Blank	Trip Blank
Date:	11/9/92	11/11/92	11/12/92
Laboratory:	ETC	ETC	ETC
USEPA Priority Pollutant Volatile Organic Compounds concentrations are in ug/L			
Acrolein	<100	<100	<100
Acrylonitrile	<100	<100	<100
Benzene	<4.4	<4.4	<4.4
Bis (chloromethyl) ether	<10	<10	<10
Bromoform	<4.7	<4.7	<4.7
Carbon tetrachloride	<2.8	<2.8	<2.8
Chlorobenzene	<6.0	<6.0	<6.0
Chlorodibromomethane	<3.1	<3.1	<3.1
Chloroethane	<10	<10	<10
2-Chloroethylvinyl ether	<10	<10	<10
Chloroform	<1.6	<1.6	<1.6
Dichlorobromomethane	<2.2	<2.2	<2.2
Dichlorodifluoromethane	<10	<10	<10
1,1-Dichloroethane	<4.7	<4.7	<4.7
1,2-Dichloroethane	<2.8	<2.8	<2.8
1,1-Dichloroethylene	<2.8	<2.8	<2.8
1,2-Dichloropropane	<6.0	<6.0	<6.0
cis-1,3-Dichloropropylene	<5.0	<5.0	<5.0
Ethylbenzene	<7.2	<7.2	<7.2
Methyl bromide	<10	<10	<10
Methyl chloride	<10	<10	<10
Methylene chloride	<2.8	<2.8	<2.8
1,1,2,2-Tetrachloroethane	<6.9	<6.9	<6.9
Tetrachloroethylene	<4.1	<4.1	<4.1
Toluene	<6.0	<6.0	<6.0
1,2-trans-Dichloroethylene	<1.6	<1.6	<1.6
1,1,1-Trichloroethane	<3.8	<3.8	<3.8
1,1,2-Trichloroethane	<5.0	<5.0	<5.0
Trichloroethylene	<1.9	<1.9	<1.9
Trichlorofluoromethane	<10	<10	<10
Vinyl chloride	<10	<10	<10
trans-1,3-Dichloropropylene	<10	<10	<10
Sub Total 1	0	0	0
Miscellaneous Volatile Organic Compounds			
Acetone	NA	NA	NA
Methyl ethyl ketone	NA	NA	NA
Carbon disulfide	NA	NA	NA
2-Hexanone	NA	NA	NA
Styrene	NA	NA	NA
Methyl-iso-butyl ketone	NA	NA	NA
Methyl isoamyl ketone	NA	NA	NA
m-Xylene	NA	NA	NA
o-Xylene/p-Xylene	NA	NA	NA
Sub Total 2	0	0	0
Total VOCs Analyzed	0	0	0

NA Not analyzed.
* Replicate sample.
ETC Environmental Testing and Certification, Edison, New Jersey.
SL Savannah Laboratories and Environmental Testing, Savannah, Georgia.

Table 2. Summary of Acid Extractable Compounds in Ground Water, Krummrich Plant, Sauget, Illinois.

Well Number:	GM-4A	GM-4A	GM-4A	GM-4A	GM-4A	GM-4A	GM-4A	GM-4A	GM-4A	GM-4E
Date:	12/86	5/87	11/87	5/88	11/88	11/89	11/90	11/91	11/92	12/8E
Laboratory:	ETC	ETC	ETC	ETC	ETC	ETC	ETC	ETC	ETC	ETC
USEPA Priority Pollutant Acid Extractable Organic Compounds concentrations are in ug/L										
2-Chlorophenol	NA	NA	<3.4	<3.5	<3.8	<3.6	<3.3	<3.3	<3.3	NA
2,4-Dichlorophenol	NA	NA	<2.8	<2.9	<3.1	<2.9	<2.7	<2.7	<2.7	NA
2,4-Dimethylphenol	NA	NA	<2.8	<2.9	<3.1	<2.9	<2.7	<2.7	<2.7	NA
4,6-Dinitro-o-cresol	NA	NA	<24	<26	<28	<26	<24	<24	<24	NA
2,4-Dinitrophenol	NA	NA	<43	<45	<48	<46	<42	<42	<42	NA
2-Nitrophenol	NA	NA	<3.7	<3.8	<4.1	<3.9	<3.6	<3.6	<3.6	NA
4-Nitrophenol	NA	NA	<2.4	<2.6	<2.8	<2.6	<2.4	<2.4	<2.4	NA
p-Chloro-m-cresol	NA	NA	<3.1	<3.2	<3.4	<3.3	<3.0	<3.0	<3.0	NA
Pentachlorophenol	NA	NA	<3.7	<3.8	<4.1	<3.9	<3.6	<3.6	<3.6	NA
Phenol	NA	NA	<1.5	<1.6	<1.7	<1.6	<1.5	<1.5	<1.5	NA
2,4,6-Trichlorophenol	NA	NA	<2.8	<2.9	<3.1	<2.9	<2.7	<2.7	<2.7	NA
Sub Total 1	0	0	0	0	0	0	0	0	0	0
Miscellaneous Acid Extractable Organic Compounds										
4-Chlorophenol	<10	<10	<10	<11	<11	<11	<10	<10	NA	<11
2-Methylphenol	NA	NA	NA	NA	NA	NA	NA	NA	<10	NA
4-Methylphenol	NA	NA	NA	NA	NA	NA	NA	NA	<10	NA
Benzoic acid	NA	NA	NA	NA	NA	NA	NA	NA	NA	NA
2,4,5-Trichlorophenol	NA	NA	NA	NA	NA	NA	NA	NA	<10	NA
Sub Total 2	0	0	0	0	0	0	0	0	0	0
Total Acid Compounds Analyzed	0	0	0	0	0	0	0	0	0	0

NA Not analyzed.
* Replicate sample.
ETC Environmental Testing and Certification, Edison, New Jersey.
SL Savannah Laboratories and Environmental Testing, Savannah, Georgia.

Table 2. Summary of Acid Extractable Compounds in Ground Water, Krummrich Plant, Sauget, Illinois.

Well Number:	GM-4B	GM-4B	GM-4B	GM-4B	GM-4B	GM-4B	GM-4B	GM-4B	GM-4B	3
Date:	5/87	11/87	5/88	11/88	5/89	11/89	5/90	11/90	5/91	91
Laboratory:	ETC	ETC	ETC	ETC	ETC	ETC	ETC	ETC	ETC	ETC
USEPA Priority Pollutant Acid Extractable Organic Compounds concentrations are in ug/L										
2-Chlorophenol	NA	**17.4**	**46.6**	**42.3**	**81.3**	**71.5**	**77.6**	<17	**62.7**	**26.3**
2,4-Dichlorophenol	NA	**7.1**	**28.6**	**6.91**	**9.01**	**3.79**	<14	<14	**3.36**	**3.68**
2,4-Dimethylphenol	NA	<2.9	<2.7	<3.1	<2.8	<2.8	<14	<14	<2.7	<2.7
4,6-Dinitro-o-cresol	NA	<26	<24	<28	<24	<24	<120	<120	<24	<24
2,4-Dinitrophenol	NA	<45	<42	<48	<43	<43	<220	<210	<42	<42
2-Nitrophenol	NA	<3.9	<3.6	<4.1	<3.7	<3.7	<19	<18	<3.6	<3.6
4-Nitrophenol	NA	<2.6	<2.4	<2.8	<2.4	<2.4	<12	<12	<2.4	<2.4
p-Chloro-m-cresol	NA	<3.2	<3.0	<3.4	<3.1	<3.1	<15	<15	<3.0	<3.0
Pentachlorophenol	NA	<3.9	<3.6	<4.1	<3.7	<3.7	<19	<18	<3.6	<3.6
Phenol	NA	<1.6	<1.5	<1.7	<1.5	<1.5	<7.7	<7.6	<1.5	<1.5
2,4,6-Trichlorophenol	NA	<2.9	<2.7	<3.1	<2.8	<2.8	<14	<14	<2.7	<2.7
Sub Total 1	0	25	75	49	90	75	78	0	66	30
Miscellaneous Acid Extractable Organic Compounds										
4-Chlorophenol	**72.6**	**57.8**	**20.1**	**19**	<10	<10	<52	<51	<10	?
2-Methylphenol	NA	NA	NA	NA	NA	NA	NA	NA	NA	
4-Methylphenol	NA	NA	NA	NA	NA	NA	NA	NA	NA	NA
Benzoic acid	NA	NA	NA	NA	NA	NA	NA	NA	NA	NA
2,4,5-Trichlorophenol	NA	NA	NA	NA	NA	NA	NA	NA	NA	NA
Sub Total 2	73	58	20	19	0	0	0	0	0	0
Total Acid Compounds Analyzed	73	82	95	68	90	75	78	0	66	30

NA Not analyzed.
* Replicate sample.
ETC Environmental Testing and Certification, Edison, New Jersey.
SL Savannah Laboratories and Environmental Testing, Savannah, Georgia.

Table 2. Summary of Acid Extractable Compounds in Ground Water, Krummrich Plant, Sauget, Illinois.

Well Number:	GM-4B	GM-4C	GM-4C	GM-4C	GM-4C	GM-4C	GM-4C	GM-4C	GM-4C	GM-4C
Date:	11/92	12/86	5/87	11/87	5/88	11/88	5/89	11/89	5/90	11/90
Laboratory:	ETC	ETC	ETC	ETC	ETC	ETC	ETC	ETC	ETC	ETC
USEPA Priority Pollutant Acid Extractable Organic Compounds concentrations are in ug/L										
2-Chlorophenol	**61.5**	NA	NA	**51.4**	**14.8**	<34	**27.6**	<35	**32.5**	<17
2,4-Dichlorophenol	<2.7	NA	NA	**21**	**22.5**	<28	<2.8	<29	<15	<14
2,4-Dimethylphenol	<2.7	NA	NA	<2.8	<2.9	<28	<2.8	<29	<15	<14
4,6-Dinitro-o-cresol	<24	NA	NA	<25	<26	<240	<25	<260	<130	<120
2,4-Dinitrophenol	<42	NA	NA	<43	<45	<430	<44	<450	<230	<210
2-Nitrophenol	<3.6	NA	NA	<3.7	<3.8	<37	<3.8	<39	<19	<18
4-Nitrophenol	<2.4	NA	NA	<2.5	<2.6	<24	<2.8	<26	<13	<12
p-Chloro-m-cresol	<3.0	NA	NA	<3.1	<3.2	<31	<3.2	<32	<16	<15
Pentachlorophenol	<3.6	NA	NA	<3.7	<3.8	<37	<3.8	<39	<19	<18
Phenol	<1.5	NA	NA	<1.5	**2.3**	<15	**1.6**	<16	<8.1	<7.6
2,4,6-Trichlorophenol	<2.7	NA	NA	<2.8	<2.9	<28	<2.8	<29	<15	<14
Sub Total 1	62	0	0	72	40	0	29	0	33	0
Miscellaneous Acid Extractable Organic Compounds										
4-Chlorophenol	NA	**27.4**	**35.9**	**113**	<11	<100	<11	<110	<54	<51
2-Methylphenol	<10	NA	NA	NA	NA	NA	NA	NA	NA	NA
4-Methylphenol	<10	NA	NA	NA	NA	NA	NA	NA	NA	NA
Benzoic acid	NA	NA	NA	NA	NA	NA	NA	NA	NA	NA
2,4,5-Trichlorophenol	<10	NA	NA	NA	NA	NA	NA	NA	NA	NA
Sub Total 2	0	27	36	113	0	0	0	0	0	0
Total Acid Compounds Analyzed	62	27	36	185	40	0	29	0	33	0

NA Not analyzed.
* Replicate sample.
ETC Environmental Testing and Certification, Edison, New Jersey.
SL Savannah Laboratories and Environmental Testing, Savannah, Georgia.

Table 2. Summary of Acid Extractable Compounds in Ground Water, Krummrich Plant, Sauget, Illinois.

Well Number:	GM-4C	GM-4C	GM-4C	GM-5	GM-6A	GM-6B	GM-17A	GM-17A	GM-17A	7A
Date:	5/91	11/91	11/92	11/92	11/92	11/92	12/86	5/87	11/87	5/88
Laboratory:	ETC	ETC	ETC	ETC	ETC	ETC	ETC	ETC	ETC	ETC
USEPA Priority Pollutant Acid Extractable Organic Compounds concentrations are in ug/L										
2-Chlorophenol	**43.0**	**17.7**	**23.6**	<3.3	**18.6**	**9**	**51.6**	**67.7**	**38.3**	**98.4**
2,4-Dichlorophenol	<2.7	<2.7	<2.7	<2.7	<2.7	**8.17**	<2.9	<2.9	<2.8	<3.0
2,4-Dimethylphenol	<2.7	<2.7	<2.7	<2.7	<2.7	<2.7	<2.9	<2.9	<2.8	<3.0
4,6-Dinitro-o-cresol	<24	<24	<24	<24	<24	<24	<25	<26	<25	<27
2,4-Dinitrophenol	<42	<42	<42	<42	<42	<42	<44	<45	<44	<47
2-Nitrophenol	<3.6	<3.6	<3.6	<3.6	<3.6	<3.6	<3.8	<3.9	<3.8	<4.0
4-Nitrophenol	<2.4	<2.4	<2.4	<2.4	<2.4	<2.4	<2.5	<2.6	<2.5	<2.7
p-Chloro-m-cresol	<3.0	<3.0	<3.0	<3.0	<3.0	<3.0	<3.2	<3.2	<3.1	<3.3
Pentachlorophenol	<3.6	<3.6	<3.6	<3.6	<3.6	<3.6	<3.8	<3.9	<3.8	<4.0
Phenol	<1.5	<1.5	<1.5	<1.5	<1.5	<1.5	<1.6	**73**	**62.8**	**110**
2,4,6-Trichlorophenol	<2.7	<2.7	<2.7	<2.7	<2.7	<2.7	<2.9	<2.9	<2.8	<3.0
Sub Total 1	43	18	24	0	19	17	52	141	101	208
Miscellaneous Acid Extractable Organic Compounds										
4-Chlorophenol	<10	<10	NA	NA	NA	NA	NA	NA	**33**	NA
2-Methylphenol	NA	NA	<10	<10	<10	<10	NA	NA	NA	NA
4-Methylphenol	NA	NA	<10	<10	<10	<10	NA	NA	NA	NA
Benzoic acid	NA	NA	NA	NA	NA	NA	NA	NA	NA	NA
2,4,5-Trichlorophenol	NA	NA	<10	<10	<10	<10	NA	NA	NA	NA
Sub Total 2	0	0	0	0	0	0	0	0	33	0
Total Acid Compounds Analyzed	43	18	24	0	19	17	52	141	134	208

NA Not analyzed.
* Replicate sample.
ETC Environmental Testing and Certification, Edison, New Jersey.
SL Savannah Laboratories and Environmental Testing, Savannah, Georgia.

Table 2. Summary of Acid Extractable Compounds in Ground Water, Krummrich Plant, Sauget, Illinois.

Well Number:	GM-17A	GM-17A	GM-17A	GM-17A	GM-17A	GM-17B	GM-17B	GM-17B	GM-17B	GM-17B
Date:	11/88	11/89	11/90	11/91	11/92	12/86	5/87	11/87	5/88	11/88
Laboratory:	ETC	ETC	ETC	ETC	ETC	ETC	ETC	ETC	ETC	ETC
USEPA Priority Pollutant Acid Extractable Organic Compounds concentrations are in ug/L										
2-Chlorophenol	**68.6**	**59.1**	**54.3**	**3.35**	**25.9**	**21.5**	**91.6**	**23.4**	**46.9**	**36.8**
2,4-Dichlorophenol	<2.8	<2.8	<2.7	<2.8	<2.7	<2.9	<3.1	<2.8	<2.8	<3.2
2,4-Dimethylphenol	<2.8	<2.8	<2.7	<2.8	<2.7	<2.9	<3.1	<2.8	<2.8	<3.2
4,6-Dinitro-o-cresol	<25	<25	<24	<24	<24	<26	<28	<25	<24	<29
2,4-Dinitrophenol	<44	<44	<42	<43	<42	<46	<49	<43	<43	<50
2-Nitrophenol	<3.8	<3.8	<3.6	<3.7	<3.6	<3.9	<4.2	<3.7	<3.7	<4.3
4-Nitrophenol	<2.5	<2.5	<2.4	<2.4	<2.4	<2.6	<2.8	<2.5	<2.4	<2.9
p-Chloro-m-cresol	<3.1	<3.1	<3.0	<3.1	<3.0	<3.3	<3.5	<3.1	<3.1	<3.6
Pentachlorophenol	<3.8	<3.8	<3.6	<3.7	<3.6	<3.9	<4.2	<3.7	<3.7	<4.3
Phenol	**106**	**183**	**25.0**	**2.9**	**12.8**	**372**	**546**	**235**	**330**	<1.8
2,4,6-Trichlorophenol	<2.8	<2.8	<2.7	<2.8	<2.7	<2.9	<3.1	<2.8	<2.8	<3.2
Sub Total 1	175	242	79	6	39	394	638	258	377	37
Miscellaneous Acid Extractable Organic Compounds										
4-Chlorophenol	NA	NA	NA	NA	NA	NA	NA	**14.7**	NA	NA
2-Methylphenol	NA	NA	NA	NA	<10	NA	NA	NA	NA	NA
4-Methylphenol	NA	NA	NA	NA	<10	NA	NA	NA	NA	NA
Benzoic acid	NA	NA	NA	NA	NA	NA	NA	NA	NA	NA
2,4,5-Trichlorophenol	NA	NA	NA	NA	<10	NA	NA	NA	NA	NA
Sub Total 2	0	0	0	0	0	0	0	15	0	0
Total Acid Compounds Analyzed	175	242	79	6	39	394	638	273	377	37

NA Not analyzed.
* Replicate sample.
ETC Environmental Testing and Certification, Edison, New Jersey.
SL Savannah Laboratories and Environmental Testing, Savannah, Georgia.

Table 2. Summary of Acid Extractable Compounds in Ground Water, Krummrich Plant, Sauget, Illinois.

Well Number:	GM-17B	GM-17B	GM-17B	GM-17B	GM-17B	GM-17B	GM-17B	GM-17C	GM-17C	C
Date:	5/89	11/89	5/90	11/90	5/91	11/91	11/92	12/86	5/87	11 8
Laboratory:	ETC	ETC	ETC	ETC	ETC	ETC	ETC	ETC	ETC	ETC
USEPA Priority Pollutant Acid Extractable Organic Compounds concentrations are in ug/L										
2-Chlorophenol	**24.6**	**15.5**	**20.7**	**18.1**	**21.3**	**25.7**	**13.2**	**30.8**	**34**	**19.4**
2,4-Dichlorophenol	<2.9	<2.8	<2.8	<2.7	<2.7	<2.7	<2.7	**10**	**4.7**	**3.44**
2,4-Dimethylphenol	<2.9	<2.8	<2.8	<2.7	<2.7	<2.7	<2.7	<3.3	<2.7	<2.8
4,6-Dinitro-o-cresol	<26	<25	<25	<24	<24	<24	<24	<29	<24	<25
2,4-Dinitrophenol	<45	<44	<44	<42	<42	<42	<42	<51	<42	<44
2-Nitrophenol	<3.9	<3.8	<3.8	<3.6	<3.6	<3.6	<3.6	<4.3	<3.6	<3.8
4-Nitrophenol	<2.6	<2.5	<2.5	<2.4	<2.4	<2.4	<2.4	<2.9	<2.4	<2.5
p-Chloro-m-cresol	<3.2	<3.2	<3.2	<3.0	<3.0	<3.0	<3.0	<3.6	<3	<3.1
Pentachlorophenol	<3.9	<3.8	<3.8	<3.6	<3.6	<3.6	<3.6	<4.3	<3.6	<3.8
Phenol	<1.6	**2.06**	<1.6	<1.5	<1.5	**3.16**	<1.5	<1.8	<1.5	**4.07**
2,4,6-Trichlorophenol	<2.9	<2.8	<2.8	<2.7	<2.7	<2.7	<2.7	<3.3	<2.7	<2.8
Sub Total 1	25	18	21	18	21	29	13	41	39	27
Miscellaneous Acid Extractable Organic Compounds										
4-Chlorophenol	NA	NA	NA	NA	NA	NA	NA	NA	NA	S
2-Methylphenol	NA	NA	NA	NA	NA	NA	<10	NA	NA	A
4-Methylphenol	NA	NA	NA	NA	NA	NA	<10	NA	NA	NA
Benzoic acid	NA	NA	NA	NA	NA	NA	NA	NA	NA	NA
2,4,5-Trichlorophenol	NA	NA	NA	NA	NA	NA	<10	NA	NA	NA
Sub Total 2	0	0	0	0	0	0	0	0	0	27
Total Acid Compounds Analyzed	25	18	21	18	21	29	13	41	39	54

NA Not analyzed.
• Replicate sample.
ETC Environmental Testing and Certification, Edison, New Jersey.
SL Savannah Laboratories and Environmental Testing, Savannah, Georgia.

Table 2. Summary of Acid Extractable Compounds in Ground Water, Krummrich Plant, Sauget, Illinois.

Well Number:	GM-17C	GM-17C	GM-17C	GM-17C	GM-17C	GM-17C	GM-17C	GM-17C	GM-17C	GM-18
Date:	5/88	11/88	5/89	11/89	5/90	11/90	5/91	11/91	11/92	11/9.
Laboratory:	ETC	ETC	ETC	ETC	ETC	ETC	ETC	ETC	ETC	ETC
USEPA Priority Pollutant Acid Extractable Organic Compounds concentrations are in ug/L										
2-Chlorophenol	**34.9**	<34	**26.1**	**6.23**	<18	**15.5**	**25.3**	**15.7**	**42.8**	<3.3
2,4-Dichlorophenol	**12.1**	<28	**17.7**	**10.3**	<15	**6.47**	**2.82**	**7.93**	**9.02**	<2.7
2,4-Dimethylphenol	<2.8	<28	<2.8	<2.8	<15	<2.7	<2.8	<2.7	<2.7	<2.7
4,6-Dinitro-o-cresol	<25	<240	<25	<25	<130	<24	<24	<24	<24	<24
2,4-Dinitrophenol	<44	<430	<44	<44	<230	<42	<43	<42	<42	<42
2-Nitrophenol	<3.8	<37	<3.8	<3.8	<20	<3.6	<3.7	<3.6	<3.6	<3.6
4-Nitrophenol	<2.5	<24	<2.5	<2.5	<13	<2.4	<2.4	<2.4	<2.4	<2.4
p-Chloro-m-cresol	<3.1	<31	<3.2	<3.1	<16	<3.0	<3.1	<3.0	<3.0	<3.0
Pentachlorophenol	<3.8	<37	<3.8	<3.8	<20	<3.6	<3.7	<3.6	<3.6	<3.6
Phenol	<1.6	<15	<1.6	<1.6	<8.2	<1.5	<1.5	**3.26**	<1.5	**1.72**
2,4,6-Trichlorophenol	<2.8	<28	<2.8	<2.8	<15	<2.7	<2.8	<2.7	<2.7	<2.7
Sub Total 1	47	0	44	17	0	22	28	27	52	2
Miscellaneous Acid Extractable Organic Compounds										
4-Chlorophenol	NA	<100	NA	NA	NA	NA	NA	NA	NA	NA
2-Methylphenol	NA	NA	NA	NA	NA	NA	NA	NA	<10	NA
4-Methylphenol	NA	NA	NA	NA	NA	NA	NA	NA	<10	NA
Benzoic acid	NA	NA	NA	NA	NA	NA	NA	NA	NA	NA
2,4,5-Trichlorophenol	NA	NA	NA	NA	NA	NA	NA	NA	<10	NA
Sub Total 2	0	0	0	0	0	0	0	0	0	0
Total Acid Compounds Analyzed	47	0	44	17	0	22	28	27	52	2

NA Not analyzed.
* Replicate sample.
ETC Environmental Testing and Certification, Edison, New Jersey.
SL Savannah Laboratories and Environmental Testing, Savannah, Georgia.

Table 2. Summary of Acid Extractable Compounds in Ground Water, Krummrich Plant, Sauget, Illinois.

Well Number:	GM-27B	GM-27B	GM-27B	GM-27C	GM-27C	GM-27C	GM-27C	GM-27C	GM-27C	[illegible]
Date:	11/87	11/91	11/92	12/86	5/87	11/87	5/88	11/88	11/89	11 9[illegible]
Laboratory:	ETC	ETC	ETC	ETC	ETC	ETC	ETC	ETC	ETC	ETC
USEPA Priority Pollutant Acid Extractable Organic Compounds concentrations are in ug/L										
2-Chlorophenol	<3.8	<330	<3.3	NA	NA	**6.34**	**4.7**	<3.4	**12.7**	<3.3
2,4-Dichlorophenol	<3.1	<270	<2.7	NA	NA	<3.1	<3.1	<2.8	<3.1	<2.7
2,4-Dimethylphenol	**7.44**	<270	<2.7	NA	NA	**8.44**	**18.6**	**59.9**	**18.3**	<2.7
4,6-Dinitro-o-cresol	<27	<2400	<24	NA	NA	<27	<27	<24	<28	<24
2,4-Dinitrophenol	<48	<4200	<42	NA	NA	<48	<48	<43	<48	<42
2-Nitrophenol	<4.1	<360	<3.6	NA	NA	<4.1	<4.1	<3.7	<4.1	<3.6
4-Nitrophenol	<2.7	<240	<2.4	NA	NA	<2.7	<2.7	<2.4	<2.8	<2.4
p-Chloro-m-cresol	<3.4	<300	<3.0	NA	NA	<3.4	<3.4	<3.1	<3.4	<3.0
Pentachlorophenol	<4.1	<360	<3.6	NA	NA	<4.1	<4.1	<3.7	<4.1	<3.6
Phenol	<1.7	**1910**	<1.5	NA	NA	<1.7	**2.7**	**113**	<1.7	<1.5
2,4,6-Trichlorophenol	<3.1	<270	<2.7	NA	NA	<3.1	<3.1	<2.8	<3.1	<2.7
Sub Total 1	7	1,910	0	0	0	15	26	173	31	0
Miscellaneous Acid Extractable Organic Compounds										
4-Chlorophenol	NA	NA	NA	<11	<10	**25**	**24.9**	**387**	<11	0
2-Methylphenol	NA	NA	NA	NA	NA	NA	NA	NA	NA	NA
4-Methylphenol	NA	NA	NA	NA	NA	NA	NA	NA	NA	NA
Benzoic acid	NA	NA	NA	NA	NA	NA	NA	NA	NA	NA
2,4,5-Trichlorophenol	NA	NA	NA	NA	NA	NA	NA	NA	NA	NA
Sub Total 2	0	0	0	0	0	25	25	387	0	0
Total Acid Compounds Analyzed	7	1,910	0	0	0	40	51	560	31	0

NA Not analyzed.
* Replicate sample.
ETC Environmental Testing and Certification, Edison, New Jersey.
SL Savannah Laboratories and Environmental Testing, Savannah, Georgia.

Table 2. Summary of Acid Extractable Compounds in Ground Water, Krummrich Plant, Sauget, Illinois.

Well Number:	GM-27C	GM-27C	GM-28B	GM-28B	GM-28B	GM-28B	GM-28B	GM-28B	GM-28B	GM-28E
Date:	11/91	11/92	12/86	5/87	11/87	5/88	3/89	11/89	11/90	11/9*
Laboratory:	ETC	ETC	ETC	ETC	ETC	ETC	ETC	ETC	ETC	ETC
USEPA Priority Pollutant Acid Extractable Organic Compounds concentrations are in ug/L										
2-Chlorophenol	<33	**8.03**	NA	NA	**5,570**	**5,610**	**1,140**	**5,510**	**111**	**206**
2,4-Dichlorophenol	<27	<2.8	NA	NA	**18,600**	**34,700**	**5,070**	**1,930**	**2,700**	**804**
2,4-Dimethylphenol	<27	<2.8	NA	NA	**1,220**	**2,040**	**311**	**531**	**24.8**	<55
4,6-Dinitro-o-cresol	<240	<24	NA	NA	<1200	<300	<250	<260	<24	<490
2,4-Dinitrophenol	<420	<43	NA	NA	<2100	<520	<430	<460	<42	<850
2-Nitrophenol	<36	<3.7	NA	NA	<180	<44	<37	<40	<3.6	<73
4-Nitrophenol	<24	<2.4	NA	NA	<120	<30	<25	<26	<2.4	<49
p-Chloro-m-cresol	<30	<3.1	NA	NA	<150	<37	<31	<33	<3.0	<61
Pentachlorophenol	<36	<3.7	NA	NA	<180	**1,270**	**296**	<40	**43.7**	<73
Phenol	<15	<1.5	NA	NA	**21,300**	**29,500**	**3,390**	**7,840**	**352**	**442**
2,4,6-Trichlorophenol	<27	<2.8	NA	NA	**5,950**	**13,800**	<28	**501**	**457**	**225**
Sub Total 1	0	8	0	0	52,640	86,920	10,207	16,312	3,689	1,677
Miscellaneous Acid Extractable Organic Compounds										
4-Chlorophenol	<100	<10	**684**	<56	**8,070**	**11,900**	**6,580**	<110	<10	**1,380**
2-Methylphenol	NA	NA	NA	NA	NA	NA	NA	NA	NA	NA
4-Methylphenol	NA	NA	NA	NA	NA	NA	NA	NA	NA	NA
Benzoic acid	NA	NA	NA	NA	NA	NA	NA	NA	NA	NA
2,4,5-Trichlorophenol	NA	NA	NA	NA	NA	NA	NA	NA	NA	NA
Sub Total 2	0	0	684	0	8,070	11,900	6,580	0	0	1,380
Total Acid Compounds Analyzed	0	8	684	0	60,710	98,820	16,787	16,312	3,689	3,057

NA Not analyzed.
* Replicate sample.
ETC Environmental Testing and Certification, Edison, New Jersey.
SL Savannah Laboratories and Environmental Testing, Savannah, Georgia.

Table 2. Summary of Acid Extractable Compounds in Ground Water, Krummrich Plant, Sauget, Illinois.

Well Number:	GM-28C	GM-28C	GM-28C	GM-28C	GM-28C	GM-28C	GM-28C	GM-28C	GM-28C	S
Date:	12/86	5/87	11/87	5/88	11/88	3/89	3/89*	11/89	11/90	11/9
Laboratory:	ETC	ETC	ETC	ETC	ETC	ETC	ETC	ETC	ETC	ET
USEPA Priority Pollutant Acid Extractable Organic Compounds concentrations are in ug/L										
2-Chlorophenol	NA	NA	**868**	**1,120**	<3.8	<3,400	<330	**205**	<3,300	**14**
2,4-Dichlorophenol	NA	NA	**4,430**	**8,440**	**4,630**	<2,800	**3,630**	**461**	<2,700	**49**
2,4-Dimethylphenol	NA	NA	**253**	**192**	**42.7**	<2,800	<270	**39.0**	<2,700	<5
4,6-Dinitro-o-cresol	NA	NA	<270	<34	<27	<24,000	<2,400	<28	<24,000	<49
2,4-Dinitrophenol	NA	NA	<470	<59	<48	<43,000	<4,200	<49	<42,000	<86
2-Nitrophenol	NA	NA	<40	<5.1	<4.1	<3,700	<360	<4.2	<3,600	<7
4-Nitrophenol	NA	NA	<27	<3.4	<2.7	<2,400	<240	<2.8	<2,400	<4
p-Chloro-m-cresol	NA	NA	<33	<4.2	<3.4	<3,100	<300	<3.5	<3,000	<61
Pentachlorophenol	NA	NA	**113**	**116**	**57**	<3,700	<360	<4.2	<3,600	<73
Phenol	NA	NA	**1,260**	**2,910**	<1.7	<1,500	**263**	**119**	<1,500	**229**
2,4,6-Trichlorophenol	NA	NA	**1,660**	**1,570**	<3.1	<2,800	**415**	**383**	<2,700	**78.4**
Sub Total 1	0	0	8,584	14,348	4,730	0	4,308	1,207	0	953
Miscellaneous Acid Extractable Organic Compounds										
4-Chlorophenol	**439**	<64	**2,250**	**2,610**	**691**	<10,000	<1,000	<12	<10,000	00
2-Methylphenol	NA	NA	NA	NA	NA	NA	NA	NA	NA	NA
4-Methylphenol	NA	NA	NA	NA	NA	NA	NA	NA	NA	NA
Benzoic acid	NA	NA	NA	NA	NA	NA	NA	NA	NA	NA
2,4,5-Trichlorophenol	NA	NA	NA	NA	NA	NA	NA	NA	NA	NA
Sub Total 2	439	0	2,250	2,610	691	0	0	0	0	0
Total Acid Compounds Analyzed	439	0	10,834	16,958	5,421	0	4,308	1,207	0	953

NA Not analyzed.
* Replicate sample.
ETC Environmental Testing and Certification, Edison, New Jersey.
SL Savannah Laboratories and Environmental Testing, Savannah, Georgia.

Table 2. Summary of Acid Extractable Compounds in Ground Water, Krummrich Plant, Sauget, Illinois.

Well Number:	GM-28C	GM-31A	GM-31A	GM-31A	GM-31A	GM-31A	GM-31A	GM-31A	GM-31A	GM-31A
Date:	11/92	12/86	12/86*	5/87	5/87*	11/87	11/87*	5/88	5/88*	11/88
Laboratory:	ETC	ETC	ETC	ETC	ETC	ETC	ETC	ETC	ETC	ETC
USEPA Priority Pollutant Acid Extractable Organic Compounds concentrations are in ug/L										
2-Chlorophenol	<170	<3.5	<3.8	<78	<37	<34	**4.54**	<33	<35	<180
2,4-Dichlorophenol	<140	**11.2**	**10.6**	<64	<30	<28	**24.6**	<27	<28	<140
2,4-Dimethylphenol	<140	<2.9	<3.1	<64	<30	<28	<2.8	<27	<28	<140
4,6-Dinitro-o-cresol	<1,200	<25	<27	<560	<270	<250	<25	<240	<250	<1,300
2,4-Dinitrophenol	<2,100	**26,200**	**20,600**	**12,400**	**7,630**	**2,040**	**2,520**	**447**	**299**	<2,200
2-Nitrophenol	<180	**12**	**11.8**	<85	<40	<38	**13.7**	**251**	**193**	<190
4-Nitrophenol	<120	<2.5	<2.7	**158**	**72.9**	**136**	**159**	<24	<25	<130
p-Chloro-m-cresol	<150	<3.2	<3.4	<71	<33	<31	<3.1	<30	<31	<160
Pentachlorophenol	<180	<3.8	<4.1	<85	<40	<38	<3.8	<36	<38	<190
Phenol	<76	**6.6**	**5.1**	<35	**25.6**	<16	**9.87**	**50,400**	**119,000**	**339,000**
2,4,6-Trichlorophenol	<140	**1,740**	**1,560**	**2,310**	**2,200**	**955**	**1,010**	**591**	**690**	**538**
Sub Total 1	0	27,970	22,188	14,868	9,929	3,131	3,742	51,689	120,082	339,538
Miscellaneous Acid Extractable Organic Compounds										
4-Chlorophenol	<10	NA	NA	NA	NA	<100	NA	NA	NA	NA
2-Methylphenol	NA	NA	NA	NA	NA	NA	NA	NA	NA	NA
4-Methylphenol	NA	NA	NA	NA	NA	NA	NA	NA	NA	NA
Benzoic acid	NA	NA	NA	NA	NA	NA	NA	NA	NA	NA
2,4,5-Trichlorophenol	NA	NA	NA	NA	NA	NA	NA	NA	NA	NA
Sub Total 2	0	0	0	0	0	0	0	0	0	0
Total Acid Compounds Analyzed	0	27,970	22,188	14,868	9,929	3,131	3,742	51,689	120,082	339,538

NA Not analyzed.
* Replicate sample.
ETC Environmental Testing and Certification, Edison, New Jersey.
SL Savannah Laboratories and Environmental Testing, Savannah, Georgia.

Table 2. Summary of Acid Extractable Compounds in Ground Water, Krummrich Plant, Sauget, Illinois.

Well Number:	GM-31A	GM-31A	GM-31A	GM-31A	GM-31A	GM-31A	GM-31A	GM-54A	GM-54A	4E
Date:	11/88*	11/88	11/88*	11/89	11/89*	11/90	11/90*	11/87	5/88	11/8
Laboratory:	ETC	SL	SL	ETC	ETC	ETC	ETC	ETC	ETC	ETC
USEPA Priority Pollutant Acid Extractable Organic Compounds concentrations are in ug/L										
2-Chlorophenol	<340	<100	<100	<3.4	<3.4	<33	<35	<3.5	<3.6	3.99
2,4-Dichlorophenol	<280	<100	<100	**44.0**	**40.1**	<27	<29	<2.8	<2.9	3.96
2,4-Dimethylphenol	<280	<100	<100	<2.8	<2.8	<27	<29	<2.8	<2.9	<2.9
4,6-Dinitro-o-cresol	<2,500	<500	<500	<24	<25	<240	<260	<25	<26	<26
2,4-Dinitrophenol	<4,300	<500	<500	**282**	**244**	<420	<450	<44	<46	<45
2-Nitrophenol	<370	**140**	**140**	**59.2**	**45.7**	<36	<39	<3.8	<3.9	<3.9
4-Nitrophenol	<250	<500	<500	**171**	**132**	<24	<26	<3.5	<2.6	<2.6
p-Chloro-m-cresol	<310	<100	<100	<3.1	<3.1	<30	<32	<3.2	<3.3	<3.2
Pentachlorophenol	<370	<100	<100	**20.5**	**23.5**	<36	<39	<3.8	<3.9	<3.9
Phenol	**586,000**	**340,000**	**270,000**	**1,020**	**934**	<15	<19	<1.6	<1.6	<1.6
2,4,6-Trichlorophenol	<280	<100	<100	**878**	**924**	**353**	**363**	<2.8	<2.9	<2.9
Sub Total 1	586,000	340,140	270,140	2,475	2,343	353	363	0	0	8
Miscellaneous Acid Extractable Organic Compounds										
4-Chlorophenol	NA	NA	NA	**878**	**924**	NA	NA	<11	<11	11
2-Methylphenol	NA	NA	NA	NA	NA	NA	NA	NA	NA	NA
4-Methylphenol	NA	NA	NA	NA	NA	NA	NA	NA	NA	NA
Benzoic acid	NA	NA	NA	NA	NA	NA	NA	NA	NA	NA
2,4,5-Trichlorophenol	NA	NA	NA	NA	NA	NA	NA	NA	NA	NA
Sub Total 2	0	0	0	878	924	0	0	0	0	0
Total Acid Compounds Analyzed	586,000	340,140	270,140	3,353	3,267	353	363	0	0	8

NA Not analyzed.
* Replicate sample.
ETC Environmental Testing and Certification, Edison, New Jersey.
SL Savannah Laboratories and Environmental Testing, Savannah, Georgia.

Table 2. Summary of Acid Extractable Compounds in Ground Water, Krummrich Plant, Sauget, Illinois.

Well Number:	GM-54B	GM-54B	GM-54B	GM-54B	GM-54B	GM-54B	GM-54B	GM-55C	GM-55C	GM-55C
Date:	5/88	11/88	5/89	11/89	11/90	11/91	11/92	11/87	5/88	11/88
Laboratory:	ETC	ETC	ETC	ETC	ETC	ETC	ETC	ETC	ETC	ETC
USEPA Priority Pollutant Acid Extractable Organic Compounds concentrations are in ug/L										
2-Chlorophenol	<3.6	<3.7	**5.46**	**7.24**	**3.5**	<3.3	<3.3	**10.9**	**31**	<370
2,4-Dichlorophenol	<3.0	<3.0	<3.1	<2.8	<2.7	<2.7	<2.7	<2.8	**196**	<300
2,4-Dimethylphenol	<3.0	<3.0	<3.1	<2.8	<2.7	<2.7	<2.7	<2.8	**4.3**	<300
4,6-Dinitro-o-cresol	<26	<27	**28**	<24	<24	<24	<24	<25	<28	<2,700
2,4-Dinitrophenol	<46	<47	**48**	<43	<42	<42	<42	<44	<49	<4,700
2-Nitrophenol	<4.0	<4.0	**4.1**	<3.7	<3.6	<3.6	<3.6	<3.8	<4.2	<400
4-Nitrophenol	<2.6	<2.7	**2.8**	<2.4	<2.4	<2.4	<2.4	<2.5	<2.8	<270
p-Chloro-m-cresol	<3.3	<3.3	**3.4**	<3.1	<3.0	<3.0	<3.0	<3.1	<3.5	<340
Pentachlorophenol	<4.0	<4.0	**4.1**	<3.7	<3.6	<3.6	<3.6	<3.8	<4.2	<400
Phenol	<1.6	<1.7	**1.74**	**5.28**	<1.5	<1.5	<1.5	<1.6	**24.6**	<170
2,4,6-Trichlorophenol	<3.0	<3.0	**3.1**	<2.8	<2.7	<2.7	<2.7	<2.8	**22**	<300
Sub Total 1	0	0	101	13	4	0	0	11	278	0
Miscellaneous Acid Extractable Organic Compounds										
4-Chlorophenol	<11	NA	NA	NA	NA	NA	NA	<10	**254**	<1100
2-Methylphenol	NA	NA	NA	NA	NA	NA	NA	NA	NA	NA
4-Methylphenol	NA	NA	NA	NA	NA	NA	NA	NA	NA	NA
Benzoic acid	NA	NA	NA	NA	NA	NA	NA	NA	NA	NA
2,4,5-Trichlorophenol	NA	NA	NA	NA	NA	NA	NA	NA	NA	NA
Sub Total 2	0	0	0	0	0	0	0	0	254	0
Total Acid Compounds Analyzed	0	0	101	13	4	0	0	11	532	0

NA Not analyzed.
* Replicate sample.
ETC Environmental Testing and Certification, Edison, New Jersey.
SL Savannah Laboratories and Environmental Testing, Savannah, Georgia.

Table 2. Summary of Acid Extractable Compounds in Ground Water, Krummrich Plant, Sauget, Illinois.

Well Number:	GM-55C	GM-55C	GM-55C	GM-55C	GM-55C	GM-56C	GM-56C	GM-56C	GM-56C	5C
Date:	11/89	11/90	11/91	11/92	11/92*	11/87	5/88	11/88	11/88	11/8
Laboratory:	ETC	ETC	ETC	ETC	ETC	ETC	ETC	ETC	ETC	ETC
USEPA Priority Pollutant Acid Extractable Organic Compounds concentrations are in ug/L										
2-Chlorophenol	<400	<33	<340	<330	<330	**2,020**	**4,680**	**239**	**240**	**584**
2,4-Dichlorophenol	**417**	<27	**281**	<270	<270	**6,010**	**5,190**	**3,010**	**3,100**	**1,410**
2,4-Dimethylphenol	<330	**58.5**	<280	<270	<270	**348**	**563**	<160	<100	<3.1
4,6-Dinitro-o-cresol	<2,900	<240	<2,500	<2,400	<2,400	<1,200	<29	<1,500	<500	<27
2,4-Dinitrophenol	<5,100	<420	<4,300	<4,200	<4,200	<2,100	<51	<2,600	<500	<48
2-Nitrophenol	<430	<36	<370	<360	<360	<180	<4.4	<220	<100	<4.1
4-Nitrophenol	<290	<24	<250	<240	<240	<120	<2.9	<150	<500	<2.7
p-Chloro-m-cresol	<360	<30	<310	<300	<300	<150	<3.7	<180	<100	<3.4
Pentachlorophenol	<430	<36	<370	<360	<360	<180	**18**	<220	<100	<4.1
Phenol	<180	<15	<150	<150	<150	**2,340**	**5,100**	**1,880**	**210**	<1.7
2,4,6-Trichlorophenol	<330	**62.5**	<280	<270	<270	**2,020**	**1,830**	**1,420**	**1,300**	**880**
Sub Total 1	417	121	281	0	0	12,738	17,381	6,549	4,850	2,874
Miscellaneous Acid Extractable Organic Compounds										
4-Chlorophenol	<1200	<100	<1,000	<1,000	<1,000	**9,200**	**14,100**	<610	<100	1
2-Methylphenol	NA	NA	NA	NA	NA	NA	NA	NA	NA	NA
4-Methylphenol	NA	NA	NA	NA	NA	NA	NA	NA	NA	NA
Benzoic acid	NA	NA	NA	NA	NA	NA	NA	NA	NA	NA
2,4,5-Trichlorophenol	NA	NA	NA	NA	NA	NA	NA	NA	NA	NA
Sub Total 2	0	0	0	0	0	9,200	14,100	0	0	0
Total Acid Compounds Analyzed	417	121	281	0	0	21,938	31,481	6,549	4,850	2,874

NA Not analyzed.
* Replicate sample.
ETC Environmental Testing and Certification, Edison, New Jersey.
SL Savannah Laboratories and Environmental Testing, Savannah, Georgia.

Table 2. Summary of Acid Extractable Compounds in Ground Water, Krummrich Plant, Sauget, Illinois.

Well Number:	GM-56C	GM-56C	GM-57C	GM-57C	GM-57C	GM-57C	GM-57C	GM-57C	GM-57C	GM-57C
Date:	11/90	11/91	11/87	11/87*	5/88	5/88*	11/88	11/88	3/89	11/89
Laboratory:	ETC	ETC	ETC	ETC	ETC	ETC	ETC	ETC	ETC	ETC
USEPA Priority Pollutant Acid Extractable Organic Compounds concentrations are in ug/L										
2-Chlorophenol	<340	2,650	5,690	5,460	4,680	8,440	5,110	8,500	1,280	4,390
2,4-Dichlorophenol	1,910	1,380	4,530	4,560	5,990	9,470	6,310	7,800	4,260	8,750
2,4-Dimethylphenol	<280	<27	196	<160	180	209	<300	<100	<28	192
4,6-Dinitro-o-cresol	<2,500	<240	<1,300	<1,400	<240	<25	<2,700	<500	<250	<290
2,4-Dinitrophenol	<4,300	<420	<2,300	<2,400	<420	<43	<4,700	<500	<444	<500
2-Nitrophenol	<370	<36	<200	<210	<36	<3.7	<400	<100	<38	<43
4-Nitrophenol	<250	<24	<130	<140	<24	<2.5	<270	<500	<25	<29
p-Chloro-m-cresol	<310	<30	<160	<170	<30	<3.1	<330	<100	<32	<36
Pentachlorophenol	<370	<36	<200	<210	<36	24	<400	<100	<38	<43
Phenol	233	9,150	28,700	33,000	14,400	28,000	13,700	13,000	3,100	7,650
2,4,6-Trichlorophenol	1,050	<27	992	922	1,250	1,580	1,120	1,300	523	1,490
Sub Total 1	3,193	13,180	40,108	43,942	26,500	47,723	26,240	30,600	9,163	22,472
Miscellaneous Acid Extractable Organic Compounds										
4-Chlorophenol	<1,000	9,440	11,300	11,700	7,530	12,300	13,700	18,000	4,310	5,360
2-Methylphenol	NA	NA	NA	NA	NA	NA	NA	NA	NA	NA
4-Methylphenol	NA	NA	NA	NA	NA	NA	NA	NA	NA	NA
Benzoic acid	NA	NA	NA	NA	NA	NA	NA	NA	NA	NA
2,4,5-Trichlorophenol	NA	NA	NA	NA	NA	NA	NA	NA	NA	NA
Sub Total 2	0	9,440	11,300	11,700	7,530	12,300	13,700	18,000	4,310	5,360
Total Acid Compounds Analyzed	3,193	22,620	51,408	55,642	34,030	60,023	39,940	48,600	13,473	27,832

NA Not analyzed.
* Replicate sample.
ETC Environmental Testing and Certification, Edison, New Jersey.
SL Savannah Laboratories and Environmental Testing, Savannah, Georgia.

Table 2. Summary of Acid Extractable Compounds in Ground Water, Krummrich Plant, Sauget, Illinois.

Well Number:	GM-57C	GM-57C	GM-57C	GM-57C	GM-57C	GM-58A	GM-58A	GM-58A	GM-58A	GM-58A
Date:	11/89*	11/90	11/90*	11/91	11/91*	11/87	5/88	11/88	11/89	11/90
Laboratory:	ETC	ETC	ETC	ETC	ETC	ETC	ETC	ETC	ETC	ETC
USEPA Priority Pollutant Acid Extractable Organic Compounds concentrations are in ug/L										
2-Chlorophenol	**5,330**	**4,270**	**3,480**	**879**	**878**	<3.4	<3.8	<3.4	<3.4	<3.3
2,4-Dichlorophenol	**9,710**	**11,900**	**12,800**	**3,660**	**4,120**	<2.8	<3.1	<2.8	<2.8	<2.7
2,4-Dimethylphenol	**200**	**200**	**222**	<140	<140	<2.8	<3.1	<2.8	<2.8	<2.7
4,6-Dinitro-o-cresol	<250	<1,200	<250	<1,200	<1,200	<24	<27	<25	<25	<24
2,4-Dinitrophenol	<440	<2,100	<430	<2,100	<2,100	<43	<48	<43	<44	<42
2-Nitrophenol	<38	<180	<37	<180	<180	<3.7	<4.1	<3.7	<3.7	<3.6
4-Nitrophenol	<25	<120	<25	<120	<120	<2.4	<2.7	<2.5	<2.5	<2.4
p-Chloro-m-cresol	<32	<150	<31	<150	<150	<3.1	<3.4	<3.1	<3.1	<3.0
Pentachlorophenol	<38	<180	**80.8**	<180	<180	<3.7	<4.1	<3.7	<3.7	<3.6
Phenol	**10,300**	**4,490**	**4,460**	**961**	**963**	**4.08**	<1.7	<1.5	<1.6	<1.5
2,4,6-Trichlorophenol	**1,260**	**3,030**	**2,680**	**1,040**	**1,220**	**5.29**	**3.6**	<2.8	**9.13**	**9.98**
Sub Total 1	26,800	23,890	23,723	6,540	7,181	9	4	0	9	10
Miscellaneous Acid Extractable Organic Compounds										
4-Chlorophenol	**3,630**	**5,110**	**6,710**	**2,360**	**2,690**	<10	<11	NA	NA	A
2-Methylphenol	NA	NA	NA	NA	NA	NA	NA	NA	NA	NA
4-Methylphenol	NA	NA	NA	NA	NA	NA	NA	NA	NA	NA
Benzoic acid	NA	NA	NA	NA	NA	NA	NA	NA	NA	NA
2,4,5-Trichlorophenol	NA	NA	NA	NA	NA	NA	NA	NA	NA	NA
Sub Total 2	3,630	5,110	6,710	2,360	2,690	0	0	0	0	0
Total Acid Compounds Analyzed	30,430	29,000	30,433	8,900	9,871	9	4	0	9	10

NA Not analyzed.
* Replicate sample.
ETC Environmental Testing and Certification, Edison, New Jersey.
SL Savannah Laboratories and Environmental Testing, Savannah, Georgia.

Table 2. Summary of Acid Extractable Compounds in Ground Water, Krummrich Plant, Sauget, Illinois.

Well Number:	GM-58A	GM-58A	GM-58A	GM-59A	GM-59A	GM-59A	GM-59A	GM-59A	GM-59A	GM-59A
Date:	11/91	11/91	11/92	11/87	5/88	11/88	11/89	11/90	11/91	11/92
Laboratory:	ETC	ETC	ETC	ETC	ETC	ETC	ETC	ETC	ETC	ETC
USEPA Priority Pollutant Acid Extractable Organic Compounds concentrations are in ug/L										
2-Chlorophenol	<3.9	<3.9	<3.3	<3.4	<3.3	<3.7	<3.5	<3.4	<3.3	<3.3
2,4-Dichlorophenol	<3.2	<3.2	<2.7	<2.8	<2.7	<3.0	<2.8	<2.8	<2.2	<2.7
2,4-Dimethylphenol	<3.2	<3.2	<2.7	<2.8	<2.7	<3.0	<2.8	<2.8	<2.7	<2.7
4,6-Dinitro-o-cresol	<28	<28	<24	<24	<24	<27	<25	<25	<24	<24
2,4-Dinitrophenol	<49	<49	<42	<43	<42	<47	<44	<43	<42	<42
2-Nitrophenol	<4.2	<4.2	<3.6	<3.7	<3.6	<4.0	<3.8	<3.7	<3.6	<3.6
4-Nitrophenol	<2.8	<2.8	<2.4	<2.4	<2.4	<2.7	<2.5	<2.5	<2.4	<2.4
p-Chloro-m-cresol	<3.5	<3.5	<3.0	<3.1	<3.0	<3.3	<3.2	<3.1	<3.0	<3.0
Pentachlorophenol	<4.2	<4.2	<3.6	<3.7	<3.6	<4.0	<3.8	<3.7	<3.6	<3.6
Phenol	<1.8	<1.8	<1.5	<1.5	<1.5	<1.7	<1.6	<1.5	<1.5	<1.5
2,4,6-Trichlorophenol	<3.2	<3.2	<2.7	<2.8	<2.7	<3.0	<2.8	<2.8	<2.7	<2.7
Sub Total 1	0	0	0	0	0	0	0	0	0	0
Miscellaneous Acid Extractable Organic Compounds										
4-Chlorophenol	NA	NA	NA	<10	<10	NA	NA	NA	NA	NA
2-Methylphenol	NA	NA	NA	NA	NA	NA	NA	NA	NA	NA
4-Methylphenol	NA	NA	NA	NA	NA	NA	NA	NA	NA	NA
Benzoic acid	NA	NA	NA	NA	NA	NA	NA	NA	NA	NA
2,4,5-Trichlorophenol	NA	NA	NA	NA	NA	NA	NA	NA	NA	NA
Sub Total 2	0	0	0	0	0	0	0	0	0	0
Total Acid Compounds Analyzed	0	0	0	0	0	0	0	0	0	0

NA Not analyzed.
* Replicate sample.
ETC Environmental Testing and Certification, Edison, New Jersey.
SL Savannah Laboratories and Environmental Testing, Savannah, Georgia.

Table 2. Summary of Acid Extractable Compounds in Ground Water, Krummrich Plant, Sauget, Illinois.

Well Number:	B-25A	B-26A	B-28A	GM-106	GM-106	GM-106	GM-106	GM-106	GM-106	Dr
Date:	3/87	3/87	3/87	12/86	5/87	11/87	5/88	11/88	11/89	11 9(
Laboratory:	ETC	ETC	ETC	ETC	ETC	ETC	ETC	ETC	ETC	ETC
USEPA Priority Pollutant Acid Extractable Organic Compounds concentrations are in ug/L										
2-Chlorophenol	**116,000**	**10.3**	**10.5**	**26.5**	**58.7**	**174**	**261**	**266**	<380	**242**
2,4-Dichlorophenol	**182,000**	<2.7	<2.7	**38.5**	**58.7**	**552**	**1,260**	**884**	**1,290**	**542**
2,4-Dimethylphenol	**1,620**	<2.7	<2.7	<2.9	**4.4**	**14.9**	**19.1**	<27	<310	**21.3**
4,6-Dinitro-o-cresol	<13,000	<24	<24	<26	<24	<24	<25	<240	<2800	<24
2,4-Dinitrophenol	<24,000	<42	<42	<45	<42	<42	<43	<420	<4800	<42
2-Nitrophenol	<2,000	<3.6	<3.6	<3.8	<3.6	<3.6	<3.7	<36	<410	<3.6
4-Nitrophenol	<1,300	<2.4	<2.4	<2.6	<2.4	<2.4	<2.5	<24	<280	<2.4
p-Chloro-m-cresol	<1,700	<3	,3	<3.2	<3	<3.0	<3.1	<30	<340	<3.0
Pentachlorophenol	<2,000	<3.6	<3.6	<3.8	<3.6	**10.9**	**9.6**	<36	<410	**17.9**
Phenol	**403,000**	**5.4**	<1.5	**12.9**	**1.8**	**71.3**	**184**	**104**	**224**	**117**
2,4,6-Trichlorophenol	**26,900**	<2.7	<2.7	**52.1**	**82.2**	**667**	**1,070**	**1,100**	**1,000**	**976**
Sub Total 1	728,520	16	11	130	206	1,490	2,804	2,354	2,514	1,916
Miscellaneous Acid Extractable Organic Compounds										
4-Chlorophenol	NA	NA	NA	NA	NA	**183**	NA	NA	<1,100	A
2-Methylphenol	<5,600	<10	<10	NA	NA	NA	NA	NA	NA	NA
4-Methylphenol	**47,000**	<10	<10	NA	NA	NA	NA	NA	NA	NA
Benzoic acid	**50,800**	<10	<10	NA	NA	NA	NA	NA	NA	NA
2,4,5-Trichlorophenol	<5,600	<10	<10	NA	NA	NA	NA	NA	NA	NA
Sub Total 2	97,800	0	0	0	0	183	0	0	0	0
Total Acid Compounds Analyzed	826,320	16	11	130	206	1,673	2,804	2,354	2,514	1,916

NA Not analyzed.
* Replicate sample.
ETC Environmental Testing and Certification, Edison, New Jersey.
SL Savannah Laboratories and Environmental Testing, Savannah, Georgia.

Table 2. Summary of Acid Extractable Compounds in Ground Water, Krummrich Plant, Sauget, Illinois.

Well Number:	GM-106	GM-106	P-1	P-1	P-2	P-3	P-6	P-6	P-7	P-
Date:	11/91	11/92	3/87	11/87	11/87	11/87	11/87	11/91	12/86	5/8
Laboratory:	ETC	ETC	ETC	ETC	ETC	ETC	ETC	ETC	ETC	ET.
USEPA Priority Pollutant Acid Extractable Organic Compounds concentrations are in ug/L										
2-Chlorophenol	**307**	**292**	**5.6**	**11.3**	**8.82**	<3.3	<3.3	<3.3	**776**	**866**
2,4-Dichlorophenol	**1,440**	**1,770**	<3.0	<2.7	<2.8	<2.7	<2.7	<2.7	**2,540**	**2,120**
2,4-Dimethylphenol	<54	<140	<3.0	<2.7	<2.8	<2.7	<2.7	<2.7	<2.7	<2.7
4,6-Dinitro-o-cresol	<480	<1,300	<27	<24	<25	<24	<24	<24	<24	<24
2,4-Dinitrophenol	<840	<2,200	<47	<42	<43	<42	<42	<42	<42	<42
2-Nitrophenol	<72	<190	<4.0	<3.6	<3.7	<3.6	<3.6	<3.6	<3.6	<3.6
4-Nitrophenol	<48	<130	<2.7	,2.4	<2.5	<2.4	<2.4	<2.4	**68.6**	<2.4
p-Chloro-m-cresol	<60	<160	<3.3	<3.0	<3.1	<3.0	<3.0	<3.0	<3.0	<3.0
Pentachlorophenol	<72	<190	<4.0	<3.6	<3.7	<3.6	<3.6	<3.6	<3.6	<3.6
Phenol	**331**	**242**	<1.7	<1.5	**70.4**	**22.8**	<1.5	<1.5	**9,410**	**8,930**
2,4,6-Trichlorophenol	**1,420**	**1,960**	<3.0	<2.7	<2.8	<2.7	<2.7	<2.7	**599**	**602**
Sub Total 1	3,498	4,264	6	11	79	23	0	0	13,394	12,518
Miscellaneous Acid Extractable Organic Compounds										
4-Chlorophenol	NA	NA	NA	**12.7**	<10	<10	<10	NA	**2,600**	**4,820**
2-Methylphenol	NA	NA	<11	NA	NA	NA	NA	NA	NA	NA
4-Methylphenol	NA	NA	<11	NA	NA	NA	NA	NA	NA	NA
Benzoic acid	NA	NA	<11	NA	NA	NA	NA	NA	NA	NA
2,4,5-Trichlorophenol	NA	NA	<11	NA	NA	NA	NA	NA	NA	NA
Sub Total 2	0	0	0	13	0	0	0	0	2,600	4,820
Total Acid Compounds Analyzed	3,498	4,264	6	24	79	23	0	0	15,994	17,338

NA Not analyzed.
* Replicate sample.
ETC Environmental Testing and Certification, Edison, New Jersey.
SL Savannah Laboratories and Environmental Testing, Savannah, Georgia.

Table 2. Summary of Acid Extractable Compounds in Ground Water, Krummrich Plant, Sauget, Illinois.

Well Number:	P-7	P-7	P-7	P-7	P-7	P-7	P-7	P-7	P-7	[illegible]
Date:	3/87	11/87	5/88	11/88	3/89	11/89	11/90	11/91	11/92	12 8
Laboratory:	ETC	ETC	ETC	ETC	ETC	ETC	ETC	ETC	ETC	ETC
USEPA Priority Pollutant Acid Extractable Organic Compounds concentrations are in ug/L										
2-Chlorophenol	**1,660**	**331**	**1,590**	**982**	**580**	**2,550**	**1,080**	**402**	<830	NA
2,4-Dichlorophenol	<30	**748**	**7,960**	**5,490**	**1,910**	**7,090**	**4,530**	**2,000**	**876**	NA
2,4-Dimethylphenol	<30	<2.8	<3.1	<28	<28	<32	<54	<2.8	<680	NA
4,6-Dinitro-o-cresol	<260	<24	<27	<250	<250	<280	<480	<25	<6,100	NA
2,4-Dinitrophenol	<460	<43	<48	<430	<430	<490	<840	<43	<11,000	NA
2-Nitrophenol	<40	<3.7	<4.1	<37	<37	<42	<72	<3.7	<910	NA
4-Nitrophenol	**130**	**18.2**	**79.5**	<25	<25	<28	<48	**57.5**	<610	NA
p-Chloro-m-cresol	<33	<3.1	<3.4	<31	<31	<35	<60	<3.1	<760	NA
Pentachlorophenol	<40	<3.7	<4.1	<37	<37	<42	<72	<3.7	<910	NA
Phenol	**11,400**	**3,090**	**19,000**	**7,410**	**6,750**	**21,500**	**5,930**	**4,550**	**2,400**	NA
2,4,6-Trichlorophenol	**2,170**	**336**	**2,820**	**3,180**	**509**	**3,810**	**1,720**	**741**	<680	NA
Sub Total 1	15,360	4,523	31,450	31,450	9,749	34,950	13,260	7,751	3,276	0
Miscellaneous Acid Extractable Organic Compounds										
4-Chlorophenol	NA	**4,650**	**5,660**	**2,130**	**2,650**	<120	<200	<10	<2,500	1
2-Methylphenol	<110	NA	NA	NA	NA	NA	NA	NA	NA	NA
4-Methylphenol	<110	NA	NA	NA	NA	NA	NA	NA	NA	NA
Benzoic acid	**1,720**	NA	NA	NA	NA	NA	NA	NA	NA	NA
2,4,5-Trichlorophenol	<110	NA	NA	NA	NA	NA	NA	NA	NA	NA
Sub Total 2	1,720	4,650	5,660	2,130	2,650	0	0	0	0	0
Total Acid Compounds Analyzed	17,080	9,173	37,110	33,580	12,399	34,950	13,260	7,751	3,276	0

NA Not analyzed.
* Replicate sample.
ETC Environmental Testing and Certification, Edison, New Jersey.
SL Savannah Laboratories and Environmental Testing, Savannah, Georgia.

Table 2. Summary of Acid Extractable Compounds in Ground Water, Krummrich Plant, Sauget, Illinois.

Well Number:	P-8	P-8	P-8	P-8	P-8	P-8	P-8	P-8	P-8	P-10
Date:	5/87	11/87	5/88	11/88	3/89	11/89	11/90	11/91	11/92	11/87
Laboratory:	ETC	ETC	ETC	ETC	ETC	ETC	ETC	ETC	ETC	ETC
USEPA Priority Pollutant Acid Extractable Organic Compounds concentrations are in ug/L										
2-Chlorophenol	NA	1,330	5,290	8,100	6,450	10,700	3,590	5,050	8,310	22.4
2,4-Dichlorophenol	NA	413	3,880	4,450	3,680	9,780	4,140	5,230	7,760	<2.7
2,4-Dimethylphenol	NA	<54	410	318	<1,400	<1,500	185	111	312	9.64
4,6-Dinitro-o-cresol	NA	<480	<2,600	<2,400	<12,000	<14,000	<240	<480	<1,200	<24
2,4-Dinitrophenol	NA	<840	<4,500	<4,300	<21,000	<24,000	<430	<850	<2,100	<42
2-Nitrophenol	NA	<72	<380	<370	<1800	<2,000	<37	<73	<180	<3.6
4-Nitrophenol	NA	<48	<260	<240	<1200	<1,400	<24	<48	<120	<2.4
p-Chloro-m-cresol	NA	<60	<320	<310	<1500	<1,700	<31	<61	<150	<3.0
Pentachlorophenol	NA	<72	<380	<370	<1800	<2,000	<37	<73	<180	<3.6
Phenol	NA	10,400	38,700	6,080	8,490	29,200	10,800	9,320	37,400	69.3
2,4,6-Trichlorophenol	NA	112	446	370	<1400	<1500	452	414	770	<2.7
Sub Total 1	0	12,255	48,726	19,318	18,620	49,680	19,167	20,125	54,552	101
Miscellaneous Acid Extractable Organic Compounds										
4-Chlorophenol	<11	3,820	13,400	9,600	<5,100	19,400	6,200	28,600	<5,100	2,330
2-Methylphenol	NA	NA	NA	NA	<5,100	NA	NA	NA	NA	NA
4-Methylphenol	NA	NA	NA	NA	<5,100	NA	NA	NA	NA	NA
Benzoic acid	NA	NA	NA	NA	<5,100	NA	NA	NA	NA	NA
2,4,5-Trichlorophenol	NA	NA	NA	NA	NA	NA	NA	NA	NA	NA
Sub Total 2	0	3,820	13,400	9,600	0	19,400	6,200	28,600	0	2,330
Total Acid Compounds Analyzed	0	16,075	62,126	28,918	18,620	69,080	25,367	48,725	54,552	2,431

NA Not analyzed.
* Replicate sample.
ETC Environmental Testing and Certification, Edison, New Jersey.
SL Savannah Laboratories and Environmental Testing, Savannah, Georgia.

Table 2. Summary of Acid Extractable Compounds in Ground Water, Krummrich Plant, Sauget, Illinois.

Well Number:	P-11	P-11	P-12	P-13	P-14	Field Blank	Field Blank	Field Blank	Field Blank	e
Date:	3/87	11/87	11/87	11/87	11/87	3/87	11/90	11/91	11/9/92	11/12/9
Laboratory:	ETC	ETC	ETC	ETC	ETC	ETC	ETC	ETC	ETC	ETC
USEPA Priority Pollutant Acid Extractable Organic Compounds concentrations are in ug/L										
2-Chlorophenol	<3.6	<3.4	**45.7**	**3.80**	**26.6**	<3.5	<3.3	<3.4	<3.3	<3.3
2,4-Dichlorophenol	<3.0	<2.8	<2.7	<2.7	<3.0	<2.9	<2.7	<2.8	<2.7	<2.7
2,4-Dimethylphenol	<3.0	<2.8	**32.7**	<2.7	<3.0	<2.9	<2.7	<2.8	<2.7	<2.7
4,6-Dinitro-o-cresol	<26	<25	<24	<24	<26	<26	<24	<24	<24	<24
2,4-Dinitrophenol	<46	<43	<42	<42	<46	<45	<42	<43	<42	<42
2-Nitrophenol	<4.0	<3.7	<3.6	<3.6	<4.0	<3.8	<3.6	<3.7	<3.6	<3.6
4-Nitrophenol	<2.6	<2.5	<2.4	<2.4	<2.6	<2.6	<2.4	<2.4	<2.4	<2.4
p-Chloro-m-cresol	<3.3	<3.1	<3.0	<3.0	<3.3	**4.1**	<3.0	<3.1	<3.0	<3.0
Pentachlorophenol	<4.0	<3.7	<3.6	<3.6	<4.0	<3.8	<3.6	<3.7	<3.6	<3.6
Phenol	**5.1**	<1.5	**2,680**	<1.5	<1.6	<1.6	<1.5	<1.5	<1.5	<1.5
2,4,6-Trichlorophenol	<3	<2.8	<2.7	<2.7	<3.0	<2.9	<2.7	<2.8	<2.7	<2.7
Sub Total 1	5	0	2,758	4	27	4	0	0	0	0
Miscellaneous Acid Extractable Organic Compounds										
4-Chlorophenol	NA	<10	**3,380**	<10	**12.9**	NA	<10	NA	NA	A
2-Methylphenol	<11	NA	NA	NA	NA	<11	NA	NA	NA	NA
4-Methylphenol	<11	NA	NA	NA	NA	<11	NA	NA	NA	NA
Benzoic acid	<11	NA	NA	NA	NA	<11	NA	NA	NA	NA
2,4,5-Trichlorophenol	<11	NA	NA	NA	NA	<11	NA	NA	NA	NA
Sub Total 2	0	0	3,380	0	13	0	0	0	0	0
Total Acid Compounds Analyzed	5	0	6,138	4	40	4	0	0	0	0

NA Not analyzed.
* Replicate sample.
ETC Environmental Testing and Certification, Edison, New Jersey.
SL Savannah Laboratories and Environmental Testing, Savannah, Georgia.

Table 3. Summary of Base/Neutral Compounds in Ground Water, Krummrich Plant, Sauget, Illinois.

Well Number:	GM-4A	GM-4B	GM-4C	GM-5	GM-6A	GM-6B	GM-12A	GM-12A	GM-12B
Date:	11/92	11/92	11/92	11/92	11/92	11/92	11/92	11/92*	11/92
Laboratory:	ETC	ETC	ETC	ETC	ETC	ETC	ETC	ETC	ETC
USEPA Priority Pollutant Base/Neutral Extractable Organic Compounds concentrations are in ug/L									
Acenaphthene	<1.9	<1.9	<1.9	<1.9	<1.9	<1.9	<1.9	<2.1	<1.9
Acenapthylene	<3.5	<3.5	<3.5	<3.5	<3.5	<3.5	<3.5	<3.9	<3.5
Anthracene	<1.9	<1.9	<1.9	<1.9	<1.9	<1.9	<1.9	<2.1	<1.9
Benzidine	NA	NA	NA	NA	NA	NA	NA	NA	NA
Benzo (a) anthracene	<7.8	<7.8	<7.8	<7.8	<7.8	<7.8	<7.8	<8.7	<7.8
Benzo (a) pyrene	<2.5	<2.5	<2.5	<2.5	<2.5	<2.5	<2.5	<2.8	<2.5
Benzo (b) fluoroanthene	<4.8	<4.8	<4.8	<4.8	<4.8	<4.8	<4.8	<5.3	<4.8
Benzo (ghi) perylene	<4.1	<4.1	<4.1	<4.1	<4.1	<4.1	<4.1	<4.6	<4.1
Benzo (k) fluoranthene	<2.5	<2.5	<2.5	<2.5	<2.5	<2.5	<2.5	<2.8	<2.5
Bis (2-chloroethoxy) methane	<5.3	<5.3	<5.3	<5.3	<5.3	<5.3	<5.3	<5.9	<5.3
Bis (2-chloroethyl) ether	<5.7	<5.7	<5.7	<5.7	<5.7	<5.7	<5.7	<6.3	<5.7
Bis (2-chloroisopropyl) ether	<5.7	<5.7	<5.7	<5.7	<5.7	<5.7	<5.7	<6.3	<5.7
Bis (2-ethylhexyl) phthalate	<10	<10	<10	<10	<10	**14.7**	<10	<11	<10
4-Bromophenyl phenyl ether	<1.9	<1.9	<1.9	<1.9	<1.9	<1.9	<1.9	<2.1	<1.9
Butyl benzyl phthalate	<10	<10	<10	<10	<10	<10	<10	<11	<10
2-Chloronaphthalene	<1.9	<1.9	<1.9	<1.9	<1.9	<1.9	<1.9	<2.1	<1.9
4-Chlorophenyl phenyl ether	<4.2	<4.2	<4.2	<4.2	<4.2	<4.2	<4.2	<4.7	<4.2
Chrysene	<2.5	<2.5	<2.5	<2.5	<2.5	<2.5	<2.5	<2.8	<2.5
Dibenzo (a,h) anthracene	<2.5	<2.5	<2.5	<2.5	<2.5	<2.5	<2.5	<2.8	<2.5
1,2-Dichlorobenzene	<1.9	**6.13**	<1.9	<1.9	**25.7**	**8.24**	**142**	**264**	<1.9
1,3-Dichlorobenzene	<1.9	**18.7**	**14.6**	<1.9	<1.9	**4.3**	<1.9	<2.1	<1.9
1,4-Dichlorobenzene	<4.4	**135**	**15.5**	<4.4	**17.9**	**117**	<4.4	<4.9	<4.4
3,3-Dichlorobenzidine	<16.5	<16.5	<16.5	<16.5	<16.5	<16.5	<16.5	<18.3	<16.5
Diethyl phthalate	<10	<10	<10	<10	<10	<10	<10	<11	<10
Dimethyl phthalate	<5.0	<5.0	<5.0	<5.0	<5.0	<5.0	<5.0	<5.6	<5.0
Di-n-butyl phthalate	<10	<10	<10	<10	<10	<10	<10	<11	<10
2,4-Dinitrotoluene	<5.7	<5.7	<5.7	<5.7	<5.7	<5.7	<5.7	<6.3	<5.7
2,6-Dinitrotoluene	<1.9	<1.9	<1.9	<1.9	<1.9	<1.9	<1.9	<2.1	<1.9
Di-n-octyl phthalate	<10	<10	<10	<10	<10	<10	<10	<11	<10
1,2-Diphenylhydrazine	NA	NA	NA	NA	NA	NA	NA	NA	NA
Fluoranthene	<2.2	<2.2	<2.2	<2.2	<2.2	<2.2	<2.2	<2.4	<2.2
Fluorene	<1.9	<1.9	<1.9	<1.9	<1.9	<1.9	<1.9	<2.1	<1.9
Hexachlorobenzene	<1.9	<1.9	<1.9	<1.9	<1.9	<1.9	<1.9	<2.1	<1.9
Hexachlorobutadiene	<.90	<.90	<.90	<.90	<.90	<.90	<.90	<1.0	<.90
Hexachlorocyclopentadiene	<10	<10	<10	<10	<10	<10	<10	<11	<10
Hexachloroethane	<1.6	<1.6	<1.6	<1.6	<1.6	<1.6	<1.6	<1.8	<1.6
Indeno (1,2,3-c,d) pyrene	<3.7	<3.7	<3.7	<3.7	<3.7	<3.7	<3.7	<4.1	<3.7
Isophorone	<2.2	<2.2	<2.2	<2.2	<2.2	<2.2	<2.2	<2.4	<2.2
Naphthalene	<1.6	<1.6	<1.6	<1.6	<1.6	<1.6	<1.6	**1.9**	<1.6
Nitrobenzene	<1.9	<1.9	<1.9	<1.9	<1.9	<1.9	<1.9	<2.1	<1.9
n-Nitrosodimethylamine	<10	<10	<10	<10	<10	<10	<10	<11	<10
n-Nitrosodi-n-propylamine	<10	<10	<10	<10	<10	<10	<10	<11	<10
n-Nitrosodiphenylamine	<1.9	**6.26**	**7.13**	<1.9	<1.9	**17.4**	<1.9	<2.1	<1.9
Phenanthrene	<5.4	<5.4	<5.4	<5.4	<5.4	<5.4	<5.4	<6.0	<5.4
Pyrene	<1.9	<1.9	<1.9	<1.9	<1.9	<1.9	<1.9	<2.1	<1.9
1,2,4-Trichlorobenzene	<1.9	<1.9	<1.9	<1.9	<1.9	<1.9	<1.9	<2.1	<1.9
Sub Total 1	0	165	37	0	44	162	142	266	0

See last page for footnotes.

Table 3. Summary of Base/Neutral Compounds in Ground Water, Krummrich Plant, Sauget, Illinois.

Well Number:	GM-4A	GM-4B	GM-4C	GM-5	GM-6A	GM-6B	GM-12A	GM-12A	G
Date:	11/92	11/92	11/92	11/92	11/92	11/92	11/92	11/92*	11/92
Laboratory:	ETC	ETC	ETC	ETC	ETC	ETC	ETC	ETC	ETC
Miscellaneous Base/Neutral Extractable Organic Compounds concentrations are in ug/L									
2,4-and 3,4-Dinitrochlorobenzene	NA	NA	NA	NA	NA	NA	NA	NA	NA
2-Nitroaniline	<10	<10	<10	<10	<10	<10	<10	<11	<10
4-Nitroaniline	<10	<10	<10	<10	<10	<10	<10	<11	<10
2-Nitrochlorobenzene	<10	<10	<10	<10	<10	<10	NA	NA	NA
3-Nitrochlorobenzene	NA	NA	NA	NA	NA	NA	NA	NA	NA
4-Nitrochlorobenzene	<10	**611**	<10	<10	<10	<10	NA	NA	NA
4-Nitrodiphenylamine	NA	NA	NA	NA	NA	NA	NA	NA	NA
Triphenyl phosphate	NA	NA	NA	NA	NA	NA	NA	NA	NA
2,3,7,8-Tetrachloro-dibenzo-p-dioxin	NA	NA	NA	NA	NA	NA	NA	NA	NA
2-Nitrobiphenyl	NA	NA	NA	NA	NA	NA	NA	NA	NA
4-Nitrobiphenyl	NA	NA	NA	NA	NA	NA	NA	NA	NA
Benzyl alcohol	<10	<10	<10	<10	<10	<10	<10	<11	<10
Aniline	<10	<10	<10	<10	<10	<10	**1280**	**2820**	<10
4-Chloroaniline	<10	**196**	**3,650**	<10	<10	**36.6**	<10	<11	<10
2-Methylnaphtalene	<10	<10	<10	<10	<10	<10	<10	<11	<10
N-nitroaniline	NA	NA	NA	NA	NA	NA	NA	NA	NA
Dibenzofuran	<10	<10	<10	<10	<10	<10	<10	<11	<10
3-Chloroaniline	<10	**588**	<10	<10	<10	<10	NA	NA	NA
2-Chloroaniline	<10	**611**	**16.9**	<10	**188**	**43.9**	NA	NA	NA
Sub Total 2	0	2,006	3,667	0	188	81	1,280	2,820	0
Total Base/Neutral Compounds	0	2,171	3,704	0	232	242	1,422	3,086	0

See last page for footnotes.

Table 3. Summary of Base/Neutral Compounds in Ground Water, Krummrich Plant, Sauget, Illinois.

Well Number:	GM-12C	GM-17A	GM-17B	GM-17B	GM-17B	GM-17B	GM-17B	GM-17B	GM-17B
Date:	11/92	11/92	12/86	5/87	11/87	5/88	11/88	5/89	11/89
Laboratory:	ETC	ETC	ETC	ETC	ETC	ETC	ETC	ETC	ETC
USEPA Priority Pollutant Base/Neutral Extractable Organic Compounds concentrations are in ug/L									
Acenaphthene	<1.9	<1.9	<2.1	<2.2	<2.0	<1.9	<2.3	<2.0	<2.0
Acenapthylene	<3.5	<3.5	<3.8	<4.1	<3.6	<3.6	<4.2	<3.8	<3.7
Anthracene	<1.9	<1.9	<2.1	<2.2	<2.0	<1.9	<2.3	<2.0	<2.0
Benzidine	NA	NA	<48	<51	<45	<45	<52	<47	<46
Benzo (a) anthracene	<7.8	<7.8	<8.5	<9.1	<8.0	<8.0	<9.3	<8.4	<8.2
Benzo (a) pyrene	<2.5	<2.5	<2.7	<2.9	<2.6	<2.6	<3.0	<2.7	<2.6
Benzo (b) fluoroanthene	<4.8	<4.8	<11	<12	<10	<4.9	<5.7	<5.2	<5.1
Benzo (ghi) perylene	<4.1	<4.1	<4.5	<4.8	<4.2	<4.2	<4.9	<4.4	<4.3
Benzo (k) fluoranthene	<2.5	<2.5	<3.8	<4.1	<3.6	<2.6	<3.0	<2.7	<2.6
Bis (2-chloroethoxy) methane	<5.3	<5.3	<5.8	<6.2	<5.5	<5.4	<6.3	<5.7	<5.6
Bis (2-chloroethyl) ether	<5.7	<5.7	<6.2	<6.6	<5.9	<5.8	<6.8	<6.1	<6.0
Bis (2-chloroisopropyl) ether	<5.7	<5.7	<6.2	<6.6	<5.9	<5.8	<6.8	<6.1	<6.0
Bis (2-ethylhexyl) phthalate	<10	<10	<11	<12	<10	<10	**48.9**	<11	**51.5**
4-Bromophenyl phenyl ether	<1.9	<1.9	<2.1	<2.2	<2.0	<1.9	<2.3	<2.0	<2.0
Butyl benzyl phthalate	<10	<10	<11	<12	<10	<10	<12	<11	<11
2-Chloronaphthalene	<1.9	<1.9	<2.1	<2.2	<2.0	<1.9	<2.3	<2.0	<2.0
4-Chlorophenyl phenyl ether	<4.2	<4.2	<4.6	<4.9	<4.3	<4.3	<5.0	<4.5	<4.4
Chrysene	<2.5	<2.5	<2.7	<2.9	<2.6	<2.6	<3.0	<2.7	<2.6
Dibenzo (a,h) anthracene	<2.5	<2.5	<11	<12	<10	<10	<12	<11	<11
1,2-Dichlorobenzene	**36.3**	**2.24**	**2.6**	<2.2	<2.0	<1.9	<2.3	**9.48**	**10.8**
1,3-Dichlorobenzene	<1.9	<1.9	<2.1	<2.2	<2.0	<1.9	**54.9**	<2.0	<2.0
1,4-Dichlorobenzene	<4.4	**15.8**	**50.8**	**32.6**	**26.5**	**12.4**	**5.44**	**74.5**	**80.5**
3,3-Dichlorobenzidine	<16.5	<16.5	<18	<19	<17	<17	<20	<18	<17
Diethyl phthalate	<10	<10	<11	<12	<10	<10	<12	<11	<11
Dimethyl phthalate	<5.0	<5.0	<11	<12	<10	<10	<12	<11	<11
Di-n-butyl phthalate	<10	<10	<11	**17.3**	<10	<10	<12	<11	<11
2,4-Dinitrotoluene	<5.7	<5.7	<6.2	<6.6	<5.9	<5.8	<6.8	<6.1	<6.0
2,6-Dinitrotoluene	<1.9	<1.9	<2.1	<2.2	<2.0	<1.9	<2.3	<2.0	<2.0
Di-n-octyl phthalate	<10	<10	<11	<12	<10	<10	<12	<11	<11
1,2-Diphenylhydrazine	NA	NA	<11	<12	<10	<10	<12	<11	<11
Fluoranthene	<2.2	<2.2	<2.4	<2.6	<2.3	<2.2	<2.6	<2.4	<2.3
Fluorene	<1.9	<1.9	<2.1	<2.2	<2.0	<1.9	<2.3	<2.0	<2.0
Hexachlorobenzene	<1.9	<1.9	<2.1	<2.2	<2.0	<2.0	<2.3	<2.0	<2.0
Hexachlorobutadiene	<.90	<.90	<1	<1	<.93	<0.9	<1.1	<.97	<.95
Hexachlorocyclopentadiene	<10	<10	<11	<12	<10	<10	<12	<11	<11
Hexachloroethane	<1.6	<1.6	<1.7	<1.9	<1.6	<1.6	<1.9	<1.7	<1.7
Indeno (1,2,3-c,d) pyrene	<3.7	<3.7	<5.1	<5.5	<4.8	<4.8	<5.6	<5.1	<4.9
Isophorone	<2.2	<2.2	<2.4	<2.6	<2.3	<2.2	<2.6	<2.4	<2.3
Naphthalene	<1.6	<1.6	<1.7	<1.9	<1.6	<1.6	<1.9	<1.7	<1.7
Nitrobenzene	<1.9	<1.9	<2.1	<2.2	<2.0	<1.9	<2.3	<2.0	<2.0
n-Nitrosodimethylamine	<10	<10	<11	<12	<10	<10	<12	<11	<11
n-Nitrosodi-n-propylamine	<10	<10	<11	<12	<10	<10	<12	<11	<11
n-Nitrosodiphenylamine	<1.9	<1.9	<2.1	<2.2	<2.0	<1.9	<2.3	<2.0	<2.0
Phenanthrene	<5.4	<5.4	<5.9	<6.3	<5.6	<5.5	<6.4	<5.8	<5.7
Pyrene	<1.9	<1.9	<2.1	<2.2	<2.0	<1.9	<2.3	<2.0	<2.0
1,2,4-Trichlorobenzene	<1.9	<1.9	<2.1	<2.2	<2.0	<1.9	<2.3	<2.0	<2.0
Sub Total 1	36	18	53	50	27	12	109	84	143

See last page for footnotes.

Table 3. Summary of Base/Neutral Compounds in Ground Water, Krummrich Plant, Sauget, Illinois.

Well Number:	GM-12C	GM-17A	GM-17B	GM-17B	GM-17B	GM-17B	GM-17B	GM-17B	G
Date:	11/92	11/92	12/86	5/87	11/87	5/88	11/88	5/89	[illegible]
Laboratory:	ETC	ETC	ETC	ETC	ETC	ETC	ETC	ETC	ETC
Miscellaneous Base/Neutral Extractable Organic Compounds concentrations are in ug/L									
2,4-and 3,4-Dinitrochlorobenzene	NA	NA	NA	NA	NA	NA	NA	NA	NA
2-Nitroaniline	<10	<10	NA	NA	NA	NA	NA	NA	NA
4-Nitroaniline	<10	<10	NA	NA	NA	NA	NA	NA	NA
2-Nitrochlorobenzene	NA	<10	NA	NA	NA	NA	NA	NA	NA
3-Nitrochlorobenzene	NA	NA	NA	NA	NA	NA	NA	NA	NA
4-Nitrochlorobenzene	NA	<10	NA	NA	NA	NA	NA	NA	NA
4-Nitrodiphenylamine	NA	NA	NA	NA	NA	NA	NA	NA	NA
Triphenyl phosphate	NA	NA	NA	NA	NA	NA	NA	NA	NA
2,3,7,8-Tetrachloro-dibenzo-p-dioxin	NA	NA	NA	NA	NA	NA	NA	NA	NA
2-Nitrobiphenyl	NA	NA	NA	NA	NA	NA	NA	NA	NA
4-Nitrobiphenyl	NA	NA	NA	NA	NA	NA	NA	NA	NA
Benzyl alcohol	<10	<10	NA	NA	NA	NA	NA	NA	NA
Aniline	<10	<10	NA	NA	NA	NA	NA	NA	NA
4-Chloroaniline	<10	<10	NA	NA	NA	NA	NA	NA	NA
2-Methylnaphtalene	<10	<10	NA	NA	NA	NA	NA	NA	NA
N-nitroaniline	NA	NA	NA	NA	NA	NA	NA	NA	NA
Dibenzofuran	<10	<10	NA	NA	NA	NA	NA	NA	NA
3-Chloroaniline	NA	<10	NA	NA	NA	NA	NA	NA	NA
2-Chloroaniline	NA	<10	NA	NA	NA	NA	NA	NA	NA
Sub Total 2	0	0	0	0	0	0	0	0	0
Total Base/Neutral Compounds	36	18	53	50	27	12	109	84	143

See last page for footnotes.

Table 3. Summary of Base/Neutral Compounds in Ground Water, Krummrich Plant, Sauget, Illinois.

Well Number:	GM-17B	GM-17B	GM-17B	GM-17B	GM-17B	GM-17C	GM-17C	GM-17C	GM-17C
Date:	5/90	11/90	5/91	11/91	11/92	12/86	5/87	11/87	5/88
Laboratory:	ETC	ETC	ETC	ETC	ETC	ETC	ETC	ETC	ETC
USEPA Priority Pollutant Base/Neutral Extractable Organic Compounds concentrations are in ug/L									
Acenaphthene	<2.0	<1.9	<1.9	<1.9	<1.9	<1.9	<190	<40	<2.0
Acenapthylene	<3.7	<3.5	<3.5	<3.5	<3.5	<3.5	<350	<73	<3.6
Anthracene	<2.0	<1.9	<1.9	<1.9	<1.9	<1.9	<190	<40	<2.0
Benzidine	<46	<44	<44	<44	NA	<44	<4400	<920	<46
Benzo (a) anthracene	<8.2	<7.8	<7.8	<7.9	<7.8	<7.8	<790	<160	<8.1
Benzo (a) pyrene	<2.6	<2.5	<2.5	<2.5	<2.5	<2.5	<250	<52	<2.6
Benzo (b) fluoroanthene	<5.1	<4.8	<4.8	<4.8	<4.8	<10	<1,000	<210	<5.0
Benzo (ghi) perylene	<4.3	<4.1	<4.1	<4.1	<4.1	<4.1	<410	<85	<4.3
Benzo (k) fluoranthene	<2.6	<2.5	<2.5	<2.5	<2.5	<3.5	<350	<73	<2.6
Bis (2-chloroethoxy) methane	<5.6	<5.3	<5.3	<5.4	<5.3	<5.3	<540	<110	<5.5
Bis (2-chloroethyl) ether	<6.0	<5.7	<5.7	<5.8	<5.7	<5.7	<580	<120	<5.9
Bis (2-chloroisopropyl) ether	<6.0	<5.7	<5.7	<5.8	<5.7	<5.7	<580	<120	<5.9
Bis (2-ethylhexyl) phthalate	<11	**12.6**	**18.7**	<10	<10	<10	<1,000	<210	**22.5**
4-Bromophenyl phenyl ether	<2.0	<1.9	<1.9	<1.9	<1.9	<1.9	<190	<40	<2.0
Butyl benzyl phthalate	<11	<10	<10	<10	<10	<10	<1,000	<210	<10
2-Chloronaphthalene	<2.0	<1.9	<1.9	<1.9	<1.9	<1.9	<190	<40	<2.0
4-Chlorophenyl phenyl ether	<4.4	<4.2	<4.2	<4.2	<4.2	<4.2	<420	<87	<4.4
Chrysene	<2.6	<2.5	<2.5	<2.5	<2.5	<2.5	<250	<52	<2.6
Dibenzo (a,h) anthracene	<11	<2.5	<2.5	<2.5	<2.5	<10	<1,000	<210	<10
1,2-Dichlorobenzene	**28.8**	**14.7**	**19.0**	<1.9	**16.6**	**102**	<190	**83.4**	**69.4**
1,3-Dichlorobenzene	**12.3**	**2.68**	**3.00**	<1.9	<1.9	**56.7**	<190	**44.1**	**39.8**
1,4-Dichlorobenzene	**275**	**142**	**153**	<4.4	**109**	**653**	**2,120**	**1,370**	**1,070**
3,3-Dichlorobenzidine	<17	<16.5	<16.5	<16.7	<16.5	<17	<1700	<340	<17
Diethyl phthalate	<11	<10	<10	<10	<10	<10	<1,000	<210	<10
Dimethyl phthalate	<11	<10	<10	<10	<5.0	<10	<1,000	<210	<10
Di-n-butyl phthalate	<11	<10	<10	<10	<10	<10	<1,000	<210	<10
2,4-Dinitrotoluene	<6.0	<5.7	<5.7	<5.8	<5.7	<5.7	<580	<120	<5.9
2,6-Dinitrotoluene	<2.0	<1.9	<1.9	<1.9	<1.9	<1.9	<190	<40	<2.0
Di-n-octyl phthalate	<11	<10	<10	<10	<10	<10	<1,000	<210	<10
1,2-Diphenylhydrazine	<11	<10	<10	<10	NA	<10	<1,000	<210	<10
Fluoranthene	<2.3	<2.2	<2.2	<2.2	<2.2	<2.2	<220	<46	<2.3
Fluorene	<2.0	<1.9	<1.9	<1.9	<1.9	<1.9	<190	<40	<2.0
Hexachlorobenzene	<2.0	<1.9	<1.9	<1.9	<1.9	<1.9	<190	<40	<2.0
Hexachlorobutadiene	<.95	<90	<0.9	<.91	<.90	<0.9	<91	<19	<0.9
Hexachlorocyclopentadiene	<11	<10	<10	<10	<10	<10	<1,000	<210	<10
Hexachloroethane	<1.7	<1.6	<1.6	<1.6	<1.6	<1.6	<160	<33	<1.7
Indeno (1,2,3-c,d) pyrene	<4.9	<3.7	<3.7	<3.7	<3.7	<4.7	<470	<98	<4.9
Isophorone	<2.3	<2.2	<2.2	<2.2	<2.2	<2.2	<220	<46	<2.3
Naphthalene	<1.7	<1.6	<1.6	<1.6	<1.6	<1.6	<160	<33	<1.7
Nitrobenzene	<2.0	<1.9	<1.9	<1.9	<1.9	<1.9	<190	<40	<2.0
n-Nitrosodimethylamine	<11	<10	<10	<10	<10	<10	<1,000	<210	<10
n-Nitrosodi-n-propylamine	<11	<10	<10	<10	<10	<10	<1,000	<210	<10
n-Nitrosodiphenylamine	<2.0	<1.9	<1.9	<1.9	<1.9	<1.9	<190	<40	<2.0
Phenanthrene	<5.7	<5.4	<5.4	<5.5	<5.4	<5.4	<550	<110	<5.6
Pyrene	<2.0	<1.9	<1.9	<1.9	<1.9	<1.9	<190	<40	<2.0
1,2,4-Trichlorobenzene	<2.0	<1.9	<1.9	<1.9	<1.9	<1.9	<190	<40	<2.0
Sub Total 1	316	172	194	0	125	812	2,120	1,498	1,202

See last page for footnotes.

Table 3. Summary of Base/Neutral Compounds in Ground Water, Krummrich Plant, Sauget, Illinois.

Well Number:	GM-17B	GM-17B	GM-17B	GM-17B	GM-17B	GM-17C	GM-17C	GM-17C	GM
Date:	5/90	11/90	5/91	11/91	11/92	12/86	5/87	11/87	
Laboratory:	ETC	ETC	ETC	ETC	ETC	ETC	ETC	ETC	ETC
Miscellaneous Base/Neutral Extractable Organic Compounds concentrations are in ug/L									
2,4-and 3,4-Dinitrochlorobenzene	NA	NA	NA	NA	NA	NA	NA	NA	NA
2-Nitroaniline	NA	NA	NA	NA	<10	NA	NA	NA	NA
4-Nitroaniline	NA	NA	NA	NA	<10	NA	NA	NA	NA
2-Nitrochlorobenzene	NA	NA	NA	NA	<10	NA	NA	NA	NA
3-Nitrochlorobenzene	NA	NA	NA	NA	NA	NA	NA	NA	NA
4-Nitrochlorobenzene	NA	NA	NA	NA	<10	NA	NA	NA	NA
4-Nitrodiphenylamine	NA	NA	NA	NA	NA	NA	NA	NA	NA
Triphenyl phosphate	NA	NA	NA	NA	NA	NA	NA	NA	NA
2,3,7,8-Tetrachloro-dibenzo-p-dioxin	NA	NA	NA	NA	NA	NA	NA	NA	NA
2-Nitrobiphenyl	NA	NA	NA	NA	NA	NA	NA	NA	NA
4-Nitrobiphenyl	NA	NA	NA	NA	NA	NA	NA	NA	NA
Benzyl alcohol	NA	NA	NA	NA	<10	NA	NA	NA	NA
Aniline	NA	NA	NA	NA	<10	NA	NA	NA	NA
4-Chloroaniline	NA	NA	NA	NA	**1740**	NA	NA	NA	NA
2-Methylnaphtalene	NA	NA	NA	NA	<10	NA	NA	NA	NA
N-nitroaniline	NA	NA	NA	NA	NA	NA	NA	NA	NA
Dibenzofuran	NA	NA	NA	NA	<10	NA	NA	NA	NA
3-Chloroaniline	NA	NA	NA	NA	<10	NA	NA	NA	NA
2-Chloroaniline	NA	NA	NA	NA	**688**	NA	NA	NA	NA
Sub Total 2	0	0	0	0	2,428	0	0	0	0
Total Base/Neutral Compounds	316	172	194	0	2,553	812	2,120	1,498	1,202

See last page for footnotes.

Table 3. Summary of Base/Neutral Compounds in Ground Water, Krummrich Plant, Sauget, Illinois.

Well Number:	GM-17C	GM-17C	GM-17C	GM-17C	GM-17C	GM-17C	GM-17C	GM-17C	GM-18B
Date:	11/88	5/89	11/89	5/90	11/90	5/91	11/91	11/92	11/92
Laboratory:	ETC	ETC	ETC	ETC	ETC	ETC	ETC	ETC	ETC
USEPA Priority Pollutant Base/Neutral Extractable Organic Compounds concentrations are in ug/L									
Acenaphthene	<19	<2.0	<2.0	<10	<1.9	<1.9	<1.9	<1.9	<1.9
Acenapthylene	<36	<3.7	<3.6	<19	<3.5	<3.6	<3.5	<3.5	<3.5
Anthracene	<19	<2.0	<2.0	<10	<1.9	<1.9	<1.9	<1.9	<1.9
Benzidine	<450	<46	<46	<240	<44	<45	<44	NA	<44
Benzo (a) anthracene	<80	<8.2	<8.1	<42	<7.8	<8.0	<7.9	<7.8	<7.9
Benzo (a) pyrene	<26	<2.6	<2.6	<14	<2.5	<2.6	<2.5	<2.5	<2.5
Benzo (b) fluoroanthene	<49	<5.1	<5.0	<26	<4.8	<4.9	<4.8	<4.8	<4.8
Benzo (ghi) perylene	<42	<4.3	<4.3	<22	<4.1	<4.2	<4.1	<4.1	<4.1
Benzo (k) fluoranthene	<26	<2.6	<2.6	<14	<2.5	<2.6	<2.5	<2.5	<2.5
Bis (2-chloroethoxy) methane	<54	<5.6	<5.5	<29	<5.3	<5.4	<5.4	<5.3	<5.4
Bis (2-chloroethyl) ether	<58	<6.0	<5.9	<31	<5.7	<5.8	<5.8	<5.7	<5.8
Bis (2-chloroisopropyl) ether	<58	<6.0	<5.9	<31	<5.7	<5.8	<5.8	<5.7	<5.8
Bis (2-ethylhexyl) phthalate	**144**	**11**	**59.6**	<54	**17.2**	<10	<10	<10	**27.7**
4-Bromophenyl phenyl ether	<19	<2.0	<2.0	<10	<1.9	<1.9	<1.9	<1.9	<1.9
Butyl benzyl phthalate	<100	<11	<10	<54	<10	<10	<10	<10	<10
2-Chloronaphthalene	<19	<2.0	<2.0	<10	<1.9	<1.9	<1.9	<1.9	<1.9
4-Chlorophenyl phenyl ether	<43	<4.4	<4.4	<23	<4.2	<4.3	<4.2	<4.2	<4.2
Chrysene	<26	<2.6	<2.6	<14	<2.5	<2.6	<2.5	<2.5	<2.5
Dibenzo (a,h) anthracene	<100	<11	<10	<54	<2.5	<2.6	<2.5	<2.5	<2.5
1,2-Dichlorobenzene	**94.2**	**61.0**	**40.1**	**43.0**	**40.3**	**30.9**	<1.9	**13.1**	**2.99**
1,3-Dichlorobenzene	**42.1**	**36.9**	**31.3**	**35.1**	**50.2**	**41.3**	<1.9	**43.4**	<1.9
1,4-Dichlorobenzene	**1,190**	**304**	**475**	**833**	**953**	**544**	<4.4	**305**	<4.4
3,3-Dichlorobenzidine	<170	<17	<17	<90	<16.5	<16.8	<16.7	<16.5	<16.7
Diethyl phthalate	<100	<11	<10	<54	<10	<10	<10	<10	<10
Dimethyl phthalate	<100	<11	<10	<54	<10	<10	<10	<5.0	<5.1
Di-n-butyl phthalate	<100	<11	<10	<54	<10	<10	<10	<10	<10
2,4-Dinitrotoluene	<58	<6.0	<5.9	<31	<5.7	<5.8	<5.8	<5.7	<5.8
2,6-Dinitrotoluene	<19	<2.0	<2.0	<10	<1.9	<1.9	<1.9	<1.9	<1.9
Di-n-octyl phthalate	<100	<11	<10	<54	<10	<10	<10	<10	<10
1,2-Diphenylhydrazine	<100	<11	<10	<54	<10	<10	<10	NA	<10
Fluoranthene	<22	<2.3	<2.3	<12	<2.2	<2.2	<2.2	<2.2	<2.2
Fluorene	<19	<2.0	<2.0	<10	<1.9	<1.9	<1.9	<1.9	<1.9
Hexachlorobenzene	<19	<2.0	<2.0	<10	<1.9	<1.9	<1.9	<1.9	<1.9
Hexachlorobutadiene	**9.2**	<9.5	<.94	<4.9	<90	<0.92	<.91	<.90	<.91
Hexachlorocyclopentadiene	<100	<11	<10	<54	<10	<10	<10	<10	<10
Hexachloroethane	<16	<1.7	<1.7	<8.7	<1.6	<1.6	<1.6	<1.6	<1.6
Indeno (1,2,3-c,d) pyrene	<48	<4.9	<4.9	<26	<3.7	<3.8	<3.7	<3.7	<3.7
Isophorone	<22	<2.3	<2.3	<12	<2.2	<2.2	<2.2	<2.2	<2.2
Naphthalene	<16	<1.7	<1.7	<8.7	**3.55**	<1.6	<1.6	<1.6	<1.6
Nitrobenzene	<19	<2.0	<2.0	<10	<1.9	<1.9	<1.9	<1.9	<1.9
n-Nitrosodimethylamine	<100	<11	<10	<54	<10	<10	<10	<10	<10
n-Nitrosodi-n-propylamine	<100	<11	<10	<54	<10	<10	<10	<10	<10
n-Nitrosodiphenylamine	<19	**16.3**	<2.0	<10	**2.24**	<1.9	<1.9	**5.85**	<1.9
Phenanthrene	<55	<5.7	<5.6	<29	<5.4	<5.5	<5.5	<5.4	<5.5
Pyrene	<19	<2.0	<2.0	<10	<1.9	<1.9	<1.9	<1.9	<1.9
1,2,4-Trichlorobenzene	<19	<2.0	<2.0	<10	<1.9	<1.9	<1.9	<1.9	<1.9
Sub Total 1	1,480	429	606	911	1,066	616	0	367	31

See last page for footnotes.

Table 3. Summary of Base/Neutral Compounds in Ground Water, Krummrich Plant, Sauget, Illinois.

Well Number:	GM-17C	GM-17C	GM-17C	GM-17C	GM-17C	GM-17C	GM-17C	GM-17C	GI
Date:	11/88	5/89	11/89	5/90	11/90	5/91	11/91	11/92	1
Laboratory:	ETC	ETC	ETC	ETC	ETC	ETC	ETC	ETC	ETC
Miscellaneous Base/Neutral Extractable Organic Compounds concentrations are in ug/L									
2,4-and 3,4-Dinitrochlorobenzene	NA	NA	NA	NA	NA	NA	NA	NA	NA
2-Nitroaniline	NA	NA	NA	NA	NA	NA	NA	<10	NA
4-Nitroaniline	NA	NA	NA	NA	NA	NA	NA	<10	NA
2-Nitrochlorobenzene	NA	NA	NA	NA	NA	NA	NA	<10	NA
3-Nitrochlorobenzene	NA	NA	NA	NA	NA	NA	NA	NA	NA
4-Nitrochlorobenzene	NA	NA	NA	NA	NA	NA	NA	<10	NA
4-Nitrodiphenylamine	NA	NA	NA	NA	NA	NA	NA	NA	NA
Triphenyl phosphate	NA	NA	NA	NA	NA	NA	NA	NA	NA
2,3,7,8-Tetrachloro-dibenzo-p-dioxin	NA	NA	NA	NA	NA	NA	NA	NA	NA
2-Nitrobiphenyl	NA	NA	NA	NA	NA	NA	NA	NA	NA
4-Nitrobiphenyl	NA	NA	NA	NA	NA	NA	NA	NA	NA
Benzyl alcohol	NA	NA	NA	NA	NA	NA	NA	<10	NA
Aniline	NA	NA	NA	NA	NA	NA	NA	<10	NA
4-Chloroaniline	NA	NA	NA	NA	NA	NA	NA	**186**	NA
2-Methylnaphtalene	NA	NA	NA	NA	NA	NA	NA	<10	NA
N-nitroaniline	NA	NA	NA	NA	NA	NA	NA	NA	NA
Dibenzofuran	NA	NA	NA	NA	NA	NA	NA	<10	NA
3-Chloroaniline	NA	NA	NA	NA	NA	NA	NA	<10	NA
2-Chloroaniline	NA	NA	NA	NA	NA	NA	NA	**327**	NA
Sub Total 2	0	0	0	0	0	0	0	513	0
Total Base/Neutral Compounds	1,480	429	606	911	1,066	616	0	880	31

See last page for footnotes.

Table 3. Summary of Base/Neutral Compounds in Ground Water, Krummrich Plant, Sauget, Illinois.

Well Number:	GM-27B	GM-27B	GM-27B	GM-27B	GM-27B	GM-27C	GM-27C	GM-27C	GM-27C
Date:	11/87	11/89	11/90	11/91	11/92	11/87	11/89	11/90	11/91
Laboratory:	ETC	ETC	ETC	ETC	ETC	ETC	ETC	ETC	ETC
USEPA Priority Pollutant Base/Neutral Extractable Organic Compounds concentrations are in ug/L									
Acenaphthene	<2.2	<210	<100	<190	<1.9	<2.2	<2.2	<1.9	<19
Acenapthylene	<4.0	<390	<190	<350	<3.5	<4.0	<4.0	<3.5	<35
Anthracene	<2.2	<210	<100	<190	<1.9	<2.2	<2.2	<1.9	<19
Benzidine	<50	<4900	<2,300	<4400	<44	<50	<51	<44	<440
Benzo (a) anthracene	<8.9	<870	<410	<780	<7.9	<8.9	<9.0	<7.9	<78
Benzo (a) pyrene	<2.8	<280	<130	<250	<2.5	**6.33**	<2.9	<2.5	<25
Benzo (b) fluoroanthene	<11	<530	<260	<480	<4.8	<11	<5.5	<4.8	<48
Benzo (ghi) perylene	<4.7	<460	<220	<410	<4.1	<4.7	<4.7	<4.1	<41
Benzo (k) fluoranthene	<4.0	<280	<130	<250	<2.5	**9.51**	<2.9	<2.5	<25
Bis (2-chloroethoxy) methane	<6.0	<590	<280	<530	<5.4	<6.0	<6.1	<5.4	<53
Bis (2-chloroethyl) ether	<6.5	<630	<300	<570	<5.8	<6.5	<6.6	<5.8	<57
Bis (2-chloroisopropyl) ether	<6.5	<630	<300	<570	<5.8	<6.5	<6.6	<5.8	<57
Bis (2-ethylhexyl) phthalate	<11	<1,100	<530	<1,000	<10	<11	<11	**27.0**	<100
4-Bromophenyl phenyl ether	<2.2	<210	<100	<190	<1.9	<2.2	<2.2	<1.9	<19
Butyl benzyl phthalate	<11	<1,100	<530	<1,000	<10	<11	<11	<10	<100
2-Chloronaphthalene	<2.2	<210	<100	<190	<1.9	<2.2	<2.2	<1.9	<19
4-Chlorophenyl phenyl ether	<4.8	<470	<220	<420	<4.2	<4.8	<4.8	<4.2	<42
Chrysene	**3.77**	<280	<130	<250	<2.5	**8.73**	<2.9	<2.5	<25
Dibenzo (a,h) anthracene	<11	<1,100	<130	<250	<2.5	<11	<11	<2.5	<25
1,2-Dichlorobenzene	<2.2	<210	<100	<190	**26.6**	**400**	**22.6**	**6.21**	**25.5**
1,3-Dichlorobenzene	<2.2	<210	<100	<190	**18**	<2.2	**3.36**	**2.78**	<19
1,4-Dichlorobenzene	**397**	**617**	**812**	**888**	**764**	**65.1**	**94.5**	**122**	**159**
3,3-Dichlorobenzidine	<19.3	<1800	<878	<1650	<16.7	<19.3	<19	<16.7	<165
Diethyl phthalate	<11	<1,100	<530	<1,000	<10	<11	<11	<10	<100
Dimethyl phthalate	<11	<1,100	<530	<1,000	<5.1	<11	<11	<10	<100
Di-n-butyl phthalate	<11	<1,100	<530	<1,000	<10	<11	<11	**34.1**	<100
2,4-Dinitrotoluene	<6.5	<630	<300	<570	<5.8	<6.5	<6.6	<5.8	<57
2,6-Dinitrotoluene	<2.2	<210	<100	<190	<1.9	<2.2	<2.2	<1.9	<19
Di-n-octyl phthalate	<11	<1,100	<530	<1,000	<10	<11	<11	<10	<100
1,2-Diphenylhydrazine	<11	<1,100	<530	<1,000	<10	<11	<11	<10	<100
Fluoranthene	**6.58**	<240	<120	<220	<2.2	**15.7**	<2.5	<2.2	<22
Fluorene	<2.2	<210	<100	<190	<1.9	<2.2	<2.2	<1.9	<19
Hexachlorobenzene	<2.2	<210	<100	<190	<1.9	<2.2	<2.2	<1.9	<19
Hexachlorobutadiene	<1.0	<100	<48	<90	<.91	<1.0	<1.0	<91	<9.0
Hexachlorocyclopentadiene	<11	<1,100	<530	<1,000	<10	<11	<11	<10	<100
Hexachloroethane	<1.8	<180	<85	<160	<1.6	<1.8	<1.8	<1.6	<16
Indeno (1,2,3-c,d) pyrene	<5.3	<520	<200	<370	<3.7	<5.3	<5.4	<3.7	<37
Isophorone	<2.5	<240	<120	<220	<2.2	<2.5	<2.5	<2.2	<22
Naphthalene	**23.9**	<180	<85	<160	**8.82**	**4.55**	**3.92**	**5.79**	<16
Nitrobenzene	<2.2	<210	<100	<190	<1.9	<2.2	<2.2	<1.9	<19
n-Nitrosodimethylamine	<11	<1,100	<530	<1,000	<10	<11	<11	<10	<100
n-Nitrosodi-n-propylamine	<11	<1,100	<530	<1,000	<10	<11	<11	<10	<100
n-Nitrosodiphenylamine	**2.84**	<210	<100	<190	**4.31**	<2.2	<2.2	<1.9	<19
Phenanthrene	<6.1	<600	<290	<540	<5.5	<6.1	<6.2	<5.5	<54
Pyrene	**5.59**	<210	<100	<190	<1.9	**13.9**	<2.2	,1.9	<19
1,2,4-Trichlorobenzene	<2.2	<210	<100	<190	<1.9	<2.2	<2.2	<1.9	<19
Sub Total 1	440	617	812	888	822	524	124	198	185

See last page for footnotes.

Table 3. Summary of Base/Neutral Compounds in Ground Water, Krummrich Plant, Sauget, Illinois.

Well Number:	GM-27B	GM-27B	GM-27B	GM-27B	GM-27B	GM-27C	GM-27C	GM-27C	G
Date:	11/87	11/89	11/90	11/91	11/92	11/87	11/89	11/90	
Laboratory:	ETC	ETC	ETC	ETC	ETC	ETC	ETC	ETC	ETC
Miscellaneous Base/Neutral Extractable Organic Compounds concentrations are in ug/L									
2,4-and 3,4-Dinitrochlorobenzene	<11	<1,100	<530	<1,000	<10	<11	<11	<10	<100
2-Nitroaniline	<11	<1,100	<530	<1,000	<10	<11	<11	<10	<100
4-Nitroaniline	<11	<1,100	<530	<1,000	<10	<11	<11	**126**	<100
2-Nitrochlorobenzene	<11	<1,100	<530	<1,000	<10	<11	**79.8**	<10	<100
3-Nitrochlorobenzene	NA	NA	NA	<1,000	NA	NA	NA	NA	<100
4-Nitrochlorobenzene	<11	<1,100	<530	<1,000	<10	<11	**20.1**	<10	<100
4-Nitrodiphenylamine	<11	<1,100	<530	<1,000	<10	<11	<11	<10	<100
Triphenyl phosphate	<11	<1,100	<530	<1,000	NA	<11	<11	<10	<100
2,3,7,8-Tetrachloro-dibenzo-p-dioxin	NA	NA	NA	<1,000	NA	NA	NA	NA	NA
2-Nitrobiphenyl	NA	<1,100	NA	<1,000	NA	NA	<11	NA	NA
4-Nitrobiphenyl	NA	<1,100	NA	<1,000	<10	NA	<11	NA	NA
Benzyl alcohol	NA	NA	NA	<1,000	NA	NA	NA	NA	NA
Aniline	NA	**444,000**	**302,000**	**159,000**	**6,410**	NA	**869**	**48,000**	**27,600**
4-Chloroaniline	NA	NA	NA	**31,600**	<10	NA	NA	NA	**12,500**
2-Methylnaphtalene	NA	NA	NA	<1,000	<10	NA	NA	NA	NA
N-nitroaniline	NA	NA	NA	<1,000	NA	NA	NA	NA	NA
Dibenzofuran	NA	NA	NA	<1,000	NA	NA	NA	NA	NA
3-Chloroaniline	NA	NA	NA	**34,400**	<10	NA	NA	NA	**10,800**
2-Chloroaniline	NA	NA	NA	**24,800**	**3,220**	NA	NA	NA	**6,590**
Sub Total 2	0	444,000	302,000	249,800	9,630	0	969	48,126	57,490
Total Base/Neutral Compounds	440	444,617	302,812	250,688	10,452	524	1,093	48,324	57,675

See last page for footnotes.

Table 3. Summary of Base/Neutral Compounds in Ground Water, Krummrich Plant, Sauget, Illinois.

Well Number:	GM-27C	GM-28B	GM-28B	GM-28B	GM-28B	GM-28B	GM-28B	GM-28B	GM-28B
Date:	11/92	12/86	5/87	11/87	5/88	3/89	11/89	11/90	11/91
Laboratory:	ETC	ETC	ETC	ETC	ETC	ETC	ETC	ETC	ETC
USEPA Priority Pollutant Base/Neutral Extractable Organic Compounds concentrations are in ug/L									
Acenaphthene	<1.9	NA	NA	<190	<120	<20	<21	<1.9	<39
Acenapthylene	<3.6	NA	NA	<350	<220	<36	<38	<3.5	<71
Anthracene	<1.9	NA	NA	<190	<120	<20	<21	<1.9	<39
Benzidine	<45	NA	NA	<4400	<2,700	<450	<480	<44	<890
Benzo (a) anthracene	<8.0	NA	NA	<790	<480	<80	<86	<7.8	<160
Benzo (a) pyrene	<2.6	NA	NA	<250	<150	<26	<27	<2.5	<51
Benzo (b) fluoroanthene	<4.9	NA	NA	<1,000	<300	<49	<53	<4.8	<97
Benzo (ghi) perylene	<4.2	NA	NA	<410	<250	<42	<45	<4.1	<83
Benzo (k) fluoranthene	<2.6	NA	NA	<350	<150	<26	<27	<2.5	<51
Bis (2-chloroethoxy) methane	<5.4	NA	NA	<540	<330	<55	<58	<5.3	<110
Bis (2-chloroethyl) ether	<5.8	NA	NA	<580	<350	<59	<63	<5.7	<120
Bis (2-chloroisopropyl) ether	<5.8	NA	NA	<580	<350	<59	<63	<5.7	<120
Bis (2-ethylhexyl) phthalate	<10	NA	NA	<1,000	<620	<100	<110	**115**	<200
4-Bromophenyl phenyl ether	<1.9	NA	NA	<190	<120	<20	<21	<1.9	<39
Butyl benzyl phthalate	<10	NA	NA	<1,000	<620	<100	<110	<10	<200
2-Chloronaphthalene	<1.9	NA	NA	<190	<120	<20	<21	<1.9	<39
4-Chlorophenyl phenyl ether	<4.3	NA	NA	<420	<260	<43	<46	<4.2	<85
Chrysene	<2.6	NA	NA	<250	<150	<26	<27	<2.5	<51
Dibenzo (a,h) anthracene	<2.6	NA	NA	<1,000	<620	<100	<110	<2.5	<51
1,2-Dichlorobenzene	**9.3**	NA	NA	**3,830**	**4,560**	**3,380**	**6,770**	**2,430**	**4,160**
1,3-Dichlorobenzene	**3.73**	NA	NA	<190	<120	<20	<21	**11.4**	<39
1,4-Dichlorobenzene	**119**	NA	NA	<440	**338**	**200**	**378**	**129**	**188**
3,3-Dichlorobenzidine	<16.8	NA	NA	<1700	<1,000	<170	<180	<16.5	<335
Diethyl phthalate	<10	NA	NA	<1,000	<620	<100	<110	<10	<200
Dimethyl phthalate	<5.1	NA	NA	<1,000	<620	<100	<110	<10	<200
Di-n-butyl phthalate	<10	NA	NA	<1,000	<620	<100	<110	<10	<200
2,4-Dinitrotoluene	<5.8	NA	NA	<580	<350	<59	<63	<5.7	<120
2,6-Dinitrotoluene	<1.9	NA	NA	<190	<120	<20	<21	<1.9	<39
Di-n-octyl phthalate	<10	NA	NA	<1,000	<620	<100	<110	<10	<200
1,2-Diphenylhydrazine	<10	NA	NA	<1,000	<620	<100	<110	<10	<200
Fluoranthene	<2.2	NA	NA	<220	<140	<23	<24	<2.2	<45
Fluorene	<1.9	NA	NA	<190	<120	<20	<21	<1.9	<39
Hexachlorobenzene	<1.9	NA	NA	<190	<120	<20	<21	<1.9	<39
Hexachlorobutadiene	<.92	NA	NA	<91	<56	<9.3	<9.9	<90	<18
Hexachlorocyclopentadiene	<10	NA	NA	<1,000	<620	<100	<110	<10	<200
Hexachloroethane	<1.6	NA	NA	<160	<99	<16	<18	<1.6	<32
Indeno (1,2,3-c,d) pyrene	<3.8	NA	NA	<470	<290	<48	<52	<3.7	<75
Isophorone	<2.2	NA	NA	<220	<140	<23	<24	<2.2	<45
Naphthalene	**2.77**	NA	NA	<160	<99	<16	<18	<1.6	<32
Nitrobenzene	<1.9	NA	NA	**1,190**	**919**	<20	<21	**154**	<39
n-Nitrosodimethylamine	<10	NA	NA	<1,000	<620	<100	<110	<10	<200
n-Nitrosodi-n-propylamine	<10	NA	NA	<1,000	<620	<100	<110	<10	<200
n-Nitrosodiphenylamine	<1.9	NA	NA	<190	<120	<20	<21	<1.9	<39
Phenanthrene	<5.5	NA	NA	<550	<330	<56	<59	<5.4	<110
Pyrene	<1.9	NA	NA	<190	<120	<20	<21	<1.9	<39
1,2,4-Trichlorobenzene	<1.9	NA	NA	<190	<120	<20	<21	**172**	**62.9**
Sub Total 1	135	0	0	5,020	5,817	3,580	7,148	3,011	4,411

See last page for footnotes.

Table 3. Summary of Base/Neutral Compounds in Ground Water, Krummrich Plant, Sauget, Illinois.

Well Number:	GM-27C	GM-28B	GM-28B	GM-28B	GM-28B	GM-28B	GM-28B	GM-28B	G
Date:	11/92	12/86	5/87	11/87	5/88	3/89	11/89	11/90	[illegible]1
Laboratory:	ETC	ETC	ETC	ETC	ETC	ETC	ETC	ETC	ETC
Miscellaneous Base/Neutral Extractable Organic Compounds concentrations are in ug/L									
2,4-and 3,4-Dinitrochlorobenzene	<10	<11	<1,100	<1,000	<620	<100	<110	<10	<200
2-Nitroaniline	<10	<11	<1,100	<1,000	<620	<100	<110	<10	<200
4-Nitroaniline	<10	<11	<1,100	<1,000	<620	<100	<110	<10	<200
2-Nitrochlorobenzene	<10	<11	<1,100	**13,100**	**17,900**	**8,660**	**222**	**22,700**	**2,120**
3-Nitrochlorobenzene	NA	NA	NA	NA	NA	NA	NA	NA	**918**
4-Nitrochlorobenzene	<10	<11	<1,100	**28,800**	**43,800**	**34,700**	**470**	**63,000**	**2,030**
4-Nitrodiphenylamine	<10	<11	<1,100	<1,000	<620	<100	<110	<10	<200
Triphenyl phosphate	NA	<11	<1,100	<1,000	<620	<100	<110	<10	<200
2,3,7,8-Tetrachloro-dibenzo-p-dioxin	NA	NA	NA	NA	NA	NA	NA	NA	NA
2-Nitrobiphenyl	NA	NA	NA	NA	<620	NA	<110	NA	NA
4-Nitrobiphenyl	<10	NA	NA	NA	<620	NA	<110	NA	NA
Benzyl alcohol	NA	NA	NA	NA	NA	NA	NA	NA	NA
Aniline	**14,500**	NA	NA	NA	NA	NA	**6,780**	**2,630**	**1,020**
4-Chloroaniline	**9,110**	NA	NA	NA	NA	NA	NA	NA	**53,100**
2-Methylnaphtalene	NA	NA	NA	NA	NA	NA	NA	NA	NA
N-nitroaniline	NA	NA	NA	NA	NA	NA	NA	NA	NA
Dibenzofuran	NA	NA	NA	NA	NA	NA	NA	NA	NA
3-Chloroaniline	<10	NA	NA	NA	NA	NA	NA	NA	**46,000**
2-Chloroaniline	**4,460**	NA	NA	NA	NA	NA	NA	NA	**36,200**
Sub Total 2	28,070	0	0	41,900	61,700	43,360	7,472	88,330	141,388
Total Base/Neutral Compounds	28,205	0	0	46,920	67,517	46,940	14,620	91,341	145,799

See last page for footnotes.

Table 3. Summary of Base/Neutral Compounds in Ground Water, Krummrich Plant, Sauget, Illinois.

Well Number:	GM-28C	GM-28C	GM-28C	GM-28C	GM-28C	GM-28C	GM-28C	GM-28C	GM-28C
Date:	12/86	5/87	11/87	5/88	11/88	3/89	3/89 *	11/89	11/90
Laboratory:	ETC	ETC	ETC	ETC	ETC	ETC	ETC	ETC	ETC
USEPA Priority Pollutant Base/Neutral Extractable Organic Compounds concentrations are in ug/L									
Acenaphthene	NA	NA	<1.9	<130	<2.2	<1,900	<190	<2.2	<1,900
Acenapthylene	NA	NA	<3.5	<250	<4.0	<3,600	<350	<4.1	<3,500
Anthracene	NA	NA	<1.9	<130	<2.2	<1,900	<190	<2.2	<1,900
Benzidine	NA	NA	<44	<3,100	<50	<45,000	<4400	<51	<44,000
Benzo (a) anthracene	NA	NA	<7.8	<550	<8.9	<8,000	<780	<9.1	<7,800
Benzo (a) pyrene	NA	NA	<2.5	<180	<2.8	<2,600	<250	<2.9	<2,500
Benzo (b) fluoroanthene	NA	NA	<10	<340	<5.5	<4,900	<480	<5.6	<4,800
Benzo (ghi) perylene	NA	NA	<4.1	<290	<4.7	<4,200	<410	<4.8	<4,100
Benzo (k) fluoranthene	NA	NA	<3.5	<180	<2.8	<2,600	<250	<2.9	<2,500
Bis (2-chloroethoxy) methane	NA	NA	<5.3	<370	<6.0	<5,400	<530	<6.2	<5,300
Bis (2-chloroethyl) ether	NA	NA	<5.7	<400	<6.5	<5,800	<570	<6.6	<5,700
Bis (2-chloroisopropyl) ether	NA	NA	<5.7	<400	<6.5	<5,800	<570	<6.6	<5,700
Bis (2-ethylhexyl) phthalate	NA	NA	<10	<700	**32.7**	<10,000	<1,000	**23.9**	<10,000
4-Bromophenyl phenyl ether	NA	NA	<1.9	<130	<2.2	<1,900	<190	<2.2	<1,900
Butyl benzyl phthalate	NA	NA	<10	<700	<11	<10,000	<1,000	<12	<10,000
2-Chloronaphthalene	NA	NA	<1.9	<130	<2.2	<1,900	<190	<2.2	<1,900
4-Chlorophenyl phenyl ether	NA	NA	<4.2	<300	<4.8	<4,300	<430	<4.9	<4,200
Chrysene	NA	NA	<2.5	<180	<2.8	<2,600	<250	<2.9	<2,500
Dibenzo (a,h) anthracene	NA	NA	<10	<700	<11	<10,000	<1,000	<12	<2,500
1,2-Dichlorobenzene	NA	NA	**3,040**	**3,370**	**5,810**	**5,470**	**5,640**	**3,880**	**9,810**
1,3-Dichlorobenzene	NA	NA	<1.9	<130	**11.1**	<1,900	<190	**17.4**	<1,900
1,4-Dichlorobenzene	NA	NA	**193**	<310	**199**	<4,500	<440	**167**	<4,400
3,3-Dichlorobenzidine	NA	NA	**47.0**	<1,200	<19	<17,000	<1700	<19	<16,500
Diethyl phthalate	NA	NA	<10	<700	<11	<10,000	<1,000	<12	<10,000
Dimethyl phthalate	NA	NA	<10	<700	<11	<10,000	<1,000	<12	<10,000
Di-n-butyl phthalate	NA	NA	<10	<700	<11	<10,000	<1,000	<12	<10,000
2,4-Dinitrotoluene	NA	NA	<5.7	<400	<6.5	<5,800	<570	<6.6	<5,700
2,6-Dinitrotoluene	NA	NA	<1.9	<130	<2.2	<1,900	<190	<2.2	<1,900
Di-n-octyl phthalate	NA	NA	<10	<700	<11	<10,000	<1,000	<12	<10,000
1,2-Diphenylhydrazine	NA	NA	<10	<700	<11	<10,000	<1,000	<12	<10,000
Fluoranthene	NA	NA	<2.2	<150	<2.5	<2,200	<220	<2.6	<2,200
Fluorene	NA	NA	<1.9	<130	<2.2	<1,900	<190	<2.2	<1,900
Hexachlorobenzene	NA	NA	<1.9	<130	<2.2	<1,900	<190	<2.2	<1,900
Hexachlorobutadiene	NA	NA	<.90	<63	<1.0	<920	<90	<1.0	<900
Hexachlorocyclopentadiene	NA	NA	<10	<700	<11	**10,000**	<1,000	<12	<10,000
Hexachloroethane	NA	NA	<1.6	<110	<1.8	<2,600	<160	<1.9	<1,600
Indeno (1,2,3-c,d) pyrene	NA	NA	<4.7	<330	<5.3	<4,800	<470	<5.5	<3,700
Isophorone	NA	NA	<2.2	<150	<2.5	<2,200	<220	<2.6	<2,200
Naphthalene	NA	NA	<1.6	<110	<1.8	<1,600	<160	**2.91**	<1,600
Nitrobenzene	NA	NA	<1.9	<130	**9.81**	<1,900	**210**	<2.2	<1,900
n-Nitrosodimethylamine	NA	NA	<10	<700	<11	<10,000	<1,000	<12	<10,000
n-Nitrosodi-n-propylamine	NA	NA	<10	<700	<11	<10,000	<1,000	<12	<10,000
n-Nitrosodiphenylamine	NA	NA	<1.9	<130	<2.2	<1,900	<190	<2.2	,1,900
Phenanthrene	NA	NA	<5.4	<380	<6.1	<5,500	<540	<6.3	<5,400
Pyrene	NA	NA	<1.9	<130	<2.2	<1,900	<190	<2.2	<1,900
1,2,4-Trichlorobenzene	NA	NA	<1.9	<130	**138**	<1,900	<190	**57.1**	<1,900
Sub Total 1	0	0	3,280	3,370	6,201	15,470	5,850	4,148	9,810

See last page for footnotes.

Table 3. Summary of Base/Neutral Compounds in Ground Water, Krummrich Plant, Sauget, Illinois.

Well Number:	GM-28C	GM-28C	GM-28C	GM-28C	GM-28C	GM-28C	GM-28C	GM-28C	GI
Date:	12/86	5/87	11/87	5/88	11/88	3/89	3/89 *	11/89	[illegible]
Laboratory:	ETC	ETC	ETC	ETC	ETC	ETC	ETC	ETC	ETC
Miscellaneous Base/Neutral Extractable Organic Compounds concentrations are in ug/L									
2,4-and 3,4-Dinitrochlorobenzene	<11	<1300	<10	<700	<11	<1,0000	<1,000	<12	<10,000
2-Nitroaniline	<11	<1300	<10	<700	**21.9**	<1,0000	<1,000	<12	<10,000
4-Nitroaniline	<11	<1300	<10	<700	<11	<1,0000	<1,000	<12	<10,000
2-Nitrochlorobenzene	<11	<1300	**17,400**	**15,400**	**23,700**	**20,500**	**26,300**	**238**	**70,100**
3-Nitrochlorobenzene	NA	NA	NA	NA	NA	NA	NA	NA	NA
4-Nitrochlorobenzene	<11	<1300	**36,000**	**30,600**	**45,300**	**27,600**	**55,800**	**591**	**79,500**
4-Nitrodiphenylamine	<11	<1300	**56.3**	<700	**107**	<1,0000	<1,000	<12	<10,000
Triphenyl phosphate	<11	<1300	<10	<700	<11	<1,0000	<1,000	<12	<10,000
2,3,7,8-Tetrachloro-dibenzo-p-dioxin	NA	NA	NA	NA	NA	NA	NA	NA	NA
2-Nitrobiphenyl	NA	NA	NA	<700	NA	NA	NA	<12	NA
4-Nitrobiphenyl	NA	NA	NA	<700	NA	NA	NA	<12	NA
Benzyl alcohol	NA	NA	NA	NA	NA	NA	NA	NA	NA
Aniline	NA	NA	NA	NA	NA	NA	NA	**8,920**	<10,000
4-Chloroaniline	NA	NA	NA	NA	NA	NA	NA	NA	NA
2-Methylnaphtalene	NA	NA	NA	NA	NA	NA	NA	NA	NA
N-nitroaniline	NA	NA	NA	NA	NA	NA	NA	NA	NA
Dibenzofuran	NA	NA	NA	NA	NA	NA	NA	NA	NA
3-Chloroaniline	NA	NA	NA	NA	NA	NA	NA	NA	NA
2-Chloroaniline	NA	NA	NA	NA	NA	NA	NA	NA	NA
Sub Total 2	0	0	53,456	46,000	69,129	48,100	82,100	9,749	149,600
Total Base/Neutral Compounds	0	0	56,736	49,370	75,330	63,570	87,950	13,897	159,410

See last page for footnotes.

Table 3. Summary of Base/Neutral Compounds in Ground Water, Krummrich Plant, Sauget, Illinois.

Well Number:	GM-28C	GM-28C	GM-31A	GM-31A	GM-31A	GM-31A	GM-31A	GM-31A	GM-31A
Date:	11/91	11/92	12/86	12/86*	5/87	5/87*	11/87	11/87*	5.88
Laboratory:	ETC	ETC	ETC	ETC	ETC	ETC	ETC	ETC	ETC
USEPA Priority Pollutant Base/Neutral Extractable Organic Compounds concentrations are in ug/L									
Acenaphthene	<39	<96	<2.0	<2.2	<220	<210	<2	<2.0	<1.9
Acenapthylene	<71	<180	<3.7	<4.0	<410	<390	<3.6	<3.6	<3.5
Anthracene	<39	<96	<2.0	<2.2	<220	<210	<2	<2.0	<1.9
Benzidine	<900	<2200	<47	<50	<5200	<4900	<46	<46	<44
Benzo (a) anthracene	<160	<390	<8.3	<8.9	<920	<870	<8.1	<8.1	<7.8
Benzo (a) pyrene	<51	<130	1	<2.9	<290	<280	<2.6	<2.6	<2.5
Benzo (b) fluoroanthene	<98	<240	<11	<11	<1200	<1,100	<10	<10	<4.8
Benzo (ghi) perylene	<84	<210	<4.3	<4.7	<480	<460	<4.3	<4.3	<4.1
Benzo (k) fluoranthene	<51	<130	<3.7	<4.0	<410	<390	<3.6	<3.6	<2.5
Bis (2-chloroethoxy) methane	<110	<270	<5.6	<6.1	<620	<590	<5.5	<5.5	<5.3
Bis (2-chloroethyl) ether	<120	<290	<6.0	<6.5	<670	<630	<5.9	<5.9	<5.7
Bis (2-chloroisopropyl) ether	<120	<290	<6.0	<6.5	<670	<630	<5.9	<5.9	<5.7
Bis (2-ethylhexyl) phthalate	<200	<510	<11	<11	<1200	<1,100	<10	<10	<10
4-Bromophenyl phenyl ether	<39	<96	<2	<2.2	<220	<210	<2	<2.0	<1.9
Butyl benzyl phthalate	<200	<510	<11	<11	<1200	<1,100	<10	<10	<10
2-Chloronaphthalene	<39	<96	<2	<2.2	<220	<210	<2	<2.0	<1.9
4-Chlorophenyl phenyl ether	<86	<210	<4.4	<4.8	<490	<470	<4.4	<4.4	<4.2
Chrysene	<51	<130	<2.6	<2.9	<290	<280	<2.6	<2.6	<2.5
Dibenzo (a,h) anthracene	<51	<130	<11	<11	<1200	<1,100	<10	<10	<10
1,2-Dichlorobenzene	**3,330**	**1040**	**6.6**	**5.5**	<220	<210	**22.2**	**19.8**	**24.3**
1,3-Dichlorobenzene	<39	<96	<2	<2.2	<220	<210	<2	<2.0	<1.9
1,4-Dichlorobenzene	**138**	<220	**7.4**	**6**	<520	<490	**11.9**	**11.7**	**12.2**
3,3-Dichlorobenzidine	<337	<833	<17	<19	<1,900	<1800	<17	<17	<17
Diethyl phthalate	<200	<510	<11	<11	<1200	<1,100	<10	<10	<10
Dimethyl phthalate	<200	<250	<11	<11	<1200	<1,100	<10	<10	<10
Di-n-butyl phthalate	<200	<510	<11	<11	<1200	<1,100	<10	<10	<10
2,4-Dinitrotoluene	<120	<290	<6.0	<6.5	<670	<630	<5.9	<5.9	<5.7
2,6-Dinitrotoluene	<39	<96	<2.0	<2.2	<220	<210	<2	<2.0	<1.9
Di-n-octyl phthalate	<200	<510	<11	<11	<1200	<1,100	<10	<10	<10
1,2-Diphenylhydrazine	<200	<510	<11	<11	<1200	<1,100	<10	<10	<10
Fluoranthene	<45	<110	<2.3	<2.5	<260	<240	<2.3	<2.3	<2.2
Fluorene	<39	<96	<2.0	<2.2	<220	<210	<2	<2.0	<1.9
Hexachlorobenzene	<39	<96	<2.0	<2.2	<220	<210	<2	<2.0	<1.9
Hexachlorobutadiene	<18	<45	<1.0	<1.0	<110	<100	<.94	<.94	<0.9
Hexachlorocyclopentadiene	<200	<510	<11	<11	<1200	<1,100	<10	<10	<10
Hexachloroethane	<33	<81	<1.7	<1.8	<190	<180	<1.7	<1.7	<1.6
Indeno (1,2,3-c,d) pyrene	<76	<190	<5	<5.4	<550	<520	<4.9	<4.9	<4.7
Isophorone	<45	<110	<2.3	<2.5	<260	<240	<2.3	<2.3	<2.2
Naphthalene	<33	<81	<1.7	<1.8	<190	<180	<1.7	<1.7	<1.6
Nitrobenzene	<39	<96	**32.4**	**23.5**	<220	<210	**309**	**307**	**84.9**
n-Nitrosodimethylamine	<200	<510	<11	<11	<1200	<1,100	<10	<10	<10
n-Nitrosodi-n-propylamine	<200	<510	<11	<11	<1200	<1,100	<10	<10	<10
n-Nitrosodiphenylamine	<39	<96	<2.0	<2.2	<220	<210	<2	<2.0	<1.9
Phenanthrene	<110	<270	<5.7	<6.2	<640	<600	<5.6	<5.6	<5.4
Pyrene	<39	<96	<2.0	<2.2	<220	<210	<2	<2.0	<1.9
1,2,4-Trichlorobenzene	**43.3**	<96	<2.0	<2.2	<220	<210	<2	<2.0	<1.9
Sub Total 1	3,511	1,040	47	35	0	0	343	339	121

See last page for footnotes.

Table 3. Summary of Base/Neutral Compounds in Ground Water, Krummrich Plant, Sauget, Illinois.

Well Number:	GM-28C	GM-28C	GM-31A	GM-31A	GM-31A	GM-31A	GM-31A	GM-31A	G
Date:	11/91	11/92	12/86	12/86*	5/87	5/87*	11/87	11/87*	5/88
Laboratory:	ETC	ETC	ETC	ETC	ETC	ETC	ETC	ETC	ETC
Miscellaneous Base/Neutral Extractable Organic Compounds concentrations are in ug/L									
2,4-and 3,4-Dinitrochlorobenzene	<200	<510	**48,400**	**43,500**	**9,780**	**16,300**	**19,800**	**22,900**	**1,170**
2-Nitroaniline	<200	<510	<11	<11	<1,200	<1,100	**21.3**	**20.8**	**15.9**
4-Nitroaniline	<200	<510	<11	<11	<1,200	<1,100	<10	<10	<10
2-Nitrochlorobenzene	**1,740**	<510	**1,820**	**1,900**	**2,600**	**2,890**	**4,190**	**4,460**	**2,400**
3-Nitrochlorobenzene	**730**	NA	NA	NA	NA	NA	NA	NA	NA
4-Nitrochlorobenzene	**1,420**	<510	**4,910**	**4,450**	**4,770**	**5,700**	**8,330**	**9,130**	**2,480**
4-Nitrodiphenylamine	<200	<510	<11	<11	<1,200	<1,100	<10	<10	<10
Triphenyl phosphate	<200	NA	<11	<11	<1,200	<1,100	<10	<10	<10
2,3,7,8-Tetrachloro-dibenzo-p-dioxin	NA	NA	NA	NA	NA	NA	NA	NA	NA
2-Nitrobiphenyl	NA	NA	<11	<11	<1,200	<1,100	<10	<10	<10
4-Nitrobiphenyl	NA	<510	<11	<11	<1,200	<1,100	<10	<10	<10
Benzyl alcohol	NA	NA	NA	NA	NA	NA	NA	NA	NA
Aniline	**3,930**	**1,530**	NA	NA	NA	NA	NA	NA	NA
4-Chloroaniline	**61,900**	**5,390**	NA	NA	NA	NA	NA	NA	NA
2-Methylnaphtalene	NA	NA	NA	NA	NA	NA	NA	NA	NA
N-nitroaniline	NA	NA	NA	NA	NA	NA	NA	NA	NA
Dibenzofuran	NA	NA	NA	NA	NA	NA	NA	NA	NA
3-Chloroaniline	**52,400**	**18,000**	NA	NA	NA	NA	NA	NA	NA
2-Chloroaniline	**59,100**	**12,000**	NA	NA	NA	NA	NA	NA	NA
Sub Total 2	171,220	36,920	55,130	49,850	17,150	24,890	32,341	36,511	6,066
Total Base/Neutral Compounds	174,731	37,960	55,177	49,885	17,150	24,890	32,684	36,849	6,187

See last page for footnotes.

Table 3. Summary of Base/Neutral Compounds in Ground Water, Krummrich Plant, Sauget, Illinois.

Well Number:	GM-31A	GM-31A	GM-31A	GM-31A	GM-31A	GM-31A	GM-31A	GM-31A	GM-31A
Date:	5/88*	11/88	11/88 *	11/88	11/88 *	11/89	11/89 *	11/90	11/90*
Laboratory:	ETC	ETC	ETC	SL	SL	ETC	ETC	ETC	ETC
USEPA Priority Pollutant Base/Neutral Extractable Organic Compounds concentrations are in ug/L									
Acenaphthene	<2.0	<100	<200	<100	<100	<1.9	<2.0	<19	<20
Acenapthylene	<3.7	<190	<360	<100	<100	<3.6	<3.6	<35	<38
Anthracene	<2.0	<100	<200	<100	<100	<1.9	<2.0	<19	<20
Benzidine	<46	<2,300	<4,500	<800	<800	<45	<45	<440	<470
Benzo (a) anthracene	<8.2	<410	<800	<100	<100	<8.0	<8.0	<78	<84
Benzo (a) pyrene	<2.6	<130	<260	<100	<100	<2.6	<2.6	<25	<27
Benzo (b) fluoroanthene	<5.0	<260	<490	<100	<100	<4.9	<4.9	<48	<52
Benzo (ghi) perylene	<4.3	<220	<420	<100	<100	<4.2	<4.2	<41	<44
Benzo (k) fluoranthene	<2.6	<130	<260	<100	<100	<2.6	<2.6	<25	<27
Bis (2-chloroethoxy) methane	<5.5	<280	<550	<100	<100	<5.4	<5.5	<53	<57
Bis (2-chloroethyl) ether	<6.0	<300	<590	<100	<100	<5.8	<5.9	<57	<61
Bis (2-chloroisopropyl) ether	<6.0	<300	<590	<100	<100	<5.8	<5.9	<57	<61
Bis (2-ethylhexyl) phthalate	<10	<530	<1,000	<100	<100	<10	<10	<100	<110
4-Bromophenyl phenyl ether	<2.0	<100	<200	<100	<100	<1.9	<2.0	<19	<20
Butyl benzyl phthalate	<10	<530	<1,000	<100	<100	<10	<10	<100	<110
2-Chloronaphthalene	<2.0	<100	<200	<100	<100	<1.9	<2.0	<19	<20
4-Chlorophenyl phenyl ether	<4.4	<220	<430	<100	<100	<4.3	<4.3	<42	<45
Chrysene	<2.6	<130	<260	<100	<100	<2.6	<2.6	<25	<27
Dibenzo (a,h) anthracene	<10	<530	<1,000	<100	<100	<10	<10	<25	<27
1,2-Dichlorobenzene	**23.3**	**243**	<200	<100	<100	**42.8**	**37.6**	**41.1**	**40.5**
1,3-Dichlorobenzene	<2.0	<100	<200	<100	<100	<1.9	<2.0	<19	<20
1,4-Dichlorobenzene	**11.8**	<230	<450	<100	<100	**15.7**	**15.0**	<44	<47
3,3-Dichlorobenzidine	<17	<880	<1,700	<200	<200	<17	<17	<165	<177
Diethyl phthalate	<10	<530	<1,000	<100	<100	<10	<10	<100	<110
Dimethyl phthalate	<10	<530	<1,000	<100	<100	<10	<10	<100	<110
Di-n-butyl phthalate	<10	<530	<1,000	<100	<100	<10	<10	<100	<110
2,4-Dinitrotoluene	<6.0	<300	<590	<100	<100	<5.8	<5.9	<57	<61
2,6-Dinitrotoluene	<2.0	<100	<200	<100	<100	<1.9	<2.0	<19	<20
Di-n-octyl phthalate	<10	<530	<1,000	<100	<100	<10	<10	<100	<110
1,2-Diphenylhydrazine	<10	<530	<1,000	<100	<100	<10	<10	<100	<110
Fluoranthene	<2.3	<120	<230	<100	<100	<2.2	<2.3	<22	<24
Fluorene	<2.0	<100	<200	<100	<100	<1.9	<2.0	<19	<20
Hexachlorobenzene	<2.0	<100	<200	<100	<100	<1.9	<2.0	<19	<20
Hexachlorobutadiene	<0.9	<48	<93	<100	<100	<.92	<.93	<9.0	<9.7
Hexachlorocyclopentadiene	<10	<530	<1,000	<100	<100	<10	<10	<100	<110
Hexachloroethane	<1.7	<85	<160	<100	<100	<1.6	<1.6	<16	<17
Indeno (1,2,3-c,d) pyrene	<4.9	<250	<480	<100	<100	<4.8	<4.8	<37	<40
Isophorone	<2.3	<120	<230	<100	<100	<2.2	<2.3	<22	<24
Naphthalene	<1.7	<85	<160	<100	<100	<1.6	<1.6	<16	<17
Nitrobenzene	**75.9**	**217**	<200	**290**	**250**	**129**	**114**	**90.9**	**64.5**
n-Nitrosodimethylamine	<10	<530	<1,000	<100	<100	<10	<10	<100	<110
n-Nitrosodi-n-propylamine	<10	<530	<1,000	<100	<100	<10	<10	<100	<110
n-Nitrosodiphenylamine	<2.0	<100	<200	<100	<100	<1.9	<2.0	<19	<20
Phenanthrene	<5.7	<290	<560	<100	<100	<5.5	<5.6	<54	<58
Pyrene	<2.0	<100	<200	<100	<100	<1.9	<2.0	<19	<20
1,2,4-Trichlorobenzene	<2.0	<100	<200	<100	<100	<1.9	<2.0	<19	<20
Sub Total 1	111	460	0	290	250	188	167	132	105

See last page for footnotes.

Table 3. Summary of Base/Neutral Compounds in Ground Water, Krummrich Plant, Sauget, Illinois.

Well Number:	GM-31A	GM-31A	GM-31A	GM-31A	GM-31A	GM-31A	GM-31A	GM-31A	G
Date:	5/88*	11/88	11/88 *	11/88	11/88 *	11/89	11/89 *	11/90	11/90*
Laboratory:	ETC	ETC	ETC	SL	SL	ETC	ETC	ETC	ETC
Miscellaneous Base/Neutral Extractable Organic Compounds concentrations are in ug/L									
2,4-and 3,4-Dinitrochlorobenzene	**1,250**	**2,700**	**2,690**	**1,500**	**2,700**	**157**	**278**	**1,480**	**1,470**
2-Nitroaniline	**16.3**	<530	<1,000	<500	<500	**13.8**	**13.1**	<100	<110
4-Nitroaniline	<10	<530	<1,000	<500	<500	<10	<10	<100	<110
2-Nitrochlorobenzene	**723**	**696**	<1,000	**590**	**630**	**200**	**175**	**410**	**381**
3-Nitrochlorobenzene	NA	NA	NA	NA	NA	NA	NA	NA	NA
4-Nitrochlorobenzene	**2,330**	**3,200**	**6,610**	**3,700**	**3,000**	**798**	**754**	**1170**	**1060**
4-Nitrodiphenylamine	<10	<530	<1,000	<200	<200	<10	<10	<100	<110
Triphenyl phosphate	<10	<530	<1,000	<100	<100	<10	<10	<100	<110
2,3,7,8-Tetrachloro-dibenzo-p-dioxin	NA	NA	NA	NA	NA	NA	NA	NA	NA
2-Nitrobiphenyl	<10	<530	<1,000	**280**	**230**	**274**	**291**	**293**	**252**
4-Nitrobiphenyl	<10	<530	<1,000	<100	<100	<10	<10	<100	<110
Benzyl alcohol	NA	NA	NA	NA	NA	NA	NA	NA	NA
Aniline	NA	NA	NA	NA	NA	NA	NA	<100	<110
4-Chloroaniline	NA	NA	NA	NA	NA	NA	NA	NA	NA
2-Methylnaphtalene	NA	NA	NA	NA	NA	NA	NA	NA	NA
N-nitroaniline	NA	NA	NA	NA	NA	NA	NA	NA	NA
Dibenzofuran	NA	NA	NA	NA	NA	NA	NA	NA	NA
3-Chloroaniline	NA	NA	NA	NA	NA	NA	NA	NA	NA
2-Chloroaniline	NA	NA	NA	NA	NA	NA	NA	NA	NA
Sub Total 2	4,319	6,496	8,200	6,070	6,460	1,443	1,511	3,353	3,163
Total Base/Neutral Compounds	4,430	6,956	8,200	6,360	6,710	1,630	1,678	3,485	3,268

See last page for footnotes.

Table 3. Summary of Base/Neutral Compounds in Ground Water, Krummrich Plant, Sauget, Illinois.

Well Number:	GM-54A	GM-54A	GM-54B	GM-54B	GM-54B	GM-54B	GM-54B	GM-54B	GM-54B
Date:	11/87	5/88	11/87	5/88	11/88	5/89	11/89	11/90	11/91
Laboratory:	ETC	ETC	ETC	ETC	ETC	ETC	ETC	ETC	ETC
USEPA Priority Pollutant Base/Neutral Extractable Organic Compounds concentrations are in ug/L									
Acenaphthene	<2.0	<2.1	<2.1	<2.0	<2.1	<2.2	<1.9	<1.9	<1.9
Acenapthylene	<3.7	<3.8	<3.8	<3.7	<3.9	<4.0	<3.6	<3.5	<3.5
Anthracene	<2.0	<2.1	<2.1	<2.0	<2.1	<2.2	<1.9	<1.9	<1.9
Benzidine	<46	<48	<48	<47	<49	<51	<45	<44	<44
Benzo (a) anthracene	<8.2	<8.5	<8.5	<8.3	<8.7	<9.0	<8.0	<7.8	<7.9
Benzo (a) pyrene	<2.6	<2.7	<2.7	<2.7	<2.8	<2.9	<2.6	<2.5	<2.5
Benzo (b) fluoroanthene	<11	<5.2	<11	<5.1	<5.3	<5.5	<4.9	<4.8	<4.8
Benzo (ghi) perylene	<4.3	<4.5	<4.5	<4.4	<4.6	<4.7	<4.2	<4.1	<4.1
Benzo (k) fluoranthene	<3.7	<2.7	<3.8	<2.7	<2.8	<2.9	<2.6	<2.5	<2.5
Bis (2-chloroethoxy) methane	<5.6	<5.8	<5.8	<5.6	<5.9	<6.1	<5.4	<5.3	<5.4
Bis (2-chloroethyl) ether	<6.0	<6.2	<6.2	<6.1	<6.3	<6.6	<5.8	<5.7	<5.8
Bis (2-chloroisopropyl) ether	<6.0	<6.2	<6.2	<6.1	<6.3	<6.6	<5.8	<5.7	<5.8
Bis (2-ethylhexyl) phthalate	<11	<11	**18.4**	<11	<11	<11	**33.1**	**11.4**	<10
4-Bromophenyl phenyl ether	<2.0	<2.1	<2.1	<2.0	<2.1	<2.2	<1.9	<1.9	<1.9
Butyl benzyl phthalate	<11	<11	<11	<11	<11	<11	<10	<10	<10
2-Chloronaphthalene	<2.0	<2.1	<2.1	<2.0	<2.1	<2.2	<1.9	<1.9	<1.9
4-Chlorophenyl phenyl ether	<4.4	<4.6	<4.6	<4.5	<4.7	<4.8	<4.3	<4.2	<4.2
Chrysene	<2.6	<2.7	<2.7	<2.7	<2.8	<2.9	<2.6	<2.5	<2.5
Dibenzo (a,h) anthracene	<11	<11	<11	<11	<11	<11	<10	<2.5	<2.5
1,2-Dichlorobenzene	<2.0	<2.1	<2.1	<2.0	<2.1	<2.2	<1.9	<1.9	<1.9
1,3-Dichlorobenzene	<2.0	<2.1	<2.1	<2.0	<2.1	<2.2	<1.9	<1.9	<1.9
1,4-Dichlorobenzene	<4.6	<4.8	<4.8	<4.7	<4.9	<5.1	<4.5	<4.4	<4.4
3,3-Dichlorobenzidine	<17	<18	<18	<18	<18	<19	<17	<16.5	<16.7
Diethyl phthalate	<11	<11	<11	<11	<11	<11	<10	<10	<10
Dimethyl phthalate	<11	<11	<11	<11	<11	<11	<10	<10	<10
Di-n-butyl phthalate	<11	<11	<11	<11	<11	<11	<10	<10	<10
2,4-Dinitrotoluene	<6.0	<6.2	<6.2	<6.1	<6.3	<6.6	<5.8	<5.7	<5.8
2,6-Dinitrotoluene	<2.0	<2.1	<2.1	<2.0	<2.1	<2.2	<1.9	<1.9	<1.9
Di-n-octyl phthalate	<11	<11	**50.4**	<11	<11	<11	<10	<10	<10
1,2-Diphenylhydrazine	<11	<11	<11	<11	<11	<11	<10	<10	<10
Fluoranthene	<2.3	<2.4	<2.4	<2.3	<2.4	<2.5	<2.2	<2.2	<2.2
Fluorene	<2.0	<2.1	<2.1	<2.0	<2.1	<2.2	<1.9	<1.9	<1.9
Hexachlorobenzene	<2.0	<2.1	<2.1	<2.0	<2.1	<2.2	<1.9	<1.9	<1.9
Hexachlorobutadiene	<.95	<1.0	<.98	<1.0	<1.0	<1.0	<.92	<90	<.91
Hexachlorocyclopentadiene	<11	<11	<11	<11	<11	<11	<10	<10	<10
Hexachloroethane	<1.7	<1.7	<1.7	<1.7	<1.8	<1.8	<1.6	<1.6	<1.6
Indeno (1,2,3-c,d) pyrene	<4.9	<5.1	<5.1	<5.0	<5.2	<5.4	<4.8	<3.7	<3.7
Isophorone	<2.3	<2.4	<2.4	<2.3	<2.4	<2.5	<2.2	<2.2	<2.2
Naphthalene	<1.7	<1.7	<1.7	<1.7	<1.8	<1.8	<1.6	<1.6	<1.6
Nitrobenzene	<2.0	<2.1	<2.1	<2.0	<2.1	<2.2	<1.9	<1.9	<1.9
n-Nitrosodimethylamine	<11	<11	<11	<11	<11	<11	<10	<10	<10
n-Nitrosodi-n-propylamine	<11	<11	<11	<11	<11	<11	<10	<10	<10
n-Nitrosodiphenylamine	<2.0	<2.1	<2.1	<2.0	<2.1	<2.2	<1.9	<1.9	<1.9
Phenanthrene	<5.7	<5.9	<5.9	<5.7	<6.0	<6.2	<5.5	<5.4	<5.5
Pyrene	<2.0	<2.1	<2.1	<2.0	<2.1	<2.2	<1.9	<1.9	<1.9
1,2,4-Trichlorobenzene	<2.0	<2.1	<2.1	<2.0	<2.1	<2.2	<1.9	<1.9	<1.9
Sub Total 1	0	0	69	0	0	0	33	11	0

See last page for footnotes.

Table 3. Summary of Base/Neutral Compounds in Ground Water, Krummrich Plant, Sauget, Illinois.

Well Number:	GM-54A	GM-54A	GM-54B	GM-54B	GM-54B	GM-54B	GM-54B	GM-54B	G'
Date:	11/87	5/88	11/87	5/88	11/88	5/89	11/89	11/90	
Laboratory:	ETC	ETC	ETC	ETC	ETC	ETC	ETC	ETC	ETC
Miscellaneous Base/Neutral Extractable Organic Compounds concentrations are in ug/L									
2,4-and 3,4-Dinitrochlorobenzene	<11	<11	<11	<11	<11	<11	<10	<10	<10
2-Nitroaniline	<11	<11	<11	<11	<11	<11	<10	<10	<10
4-Nitroaniline	<11	<11	<11	<11	<11	<11	NA	<10	<10
2-Nitrochlorobenzene	<11	<11	**24.7**	<11	<11	<10	<10	<10	<10
3-Nitrochlorobenzene	NA	NA	NA	NA	NA	NA	NA	NA	NA
4-Nitrochlorobenzene	<11	<11	<11	<11	<11	<10	NA	<10	<10
4-Nitrodiphenylamine	<11	<11	<11	<11	<11	<11	<10	<10	<10
Triphenyl phosphate	NA	NA	NA	NA	NA	NA	<10	<10	<10
2,3,7,8-Tetrachloro-dibenzo-p-dioxin	NA	NA	NA	NA	NA	NA	NA	NA	NA
2-Nitrobiphenyl	<11	<11	<11	<11	<11	<11	<10	<10	<10
4-Nitrobiphenyl	<11	<11	<11	<11	<11	<11	<10	<10	<10
Benzyl alcohol	NA	NA	NA	NA	NA	NA	NA	NA	NA
Aniline	NA	NA	NA	NA	NA	NA	NA	<10	<10
4-Chloroaniline	NA	NA	NA	NA	NA	NA	NA	NA	NA
2-Methylnaphtalene	NA	NA	NA	NA	NA	NA	NA	NA	NA
N-nitroaniline	NA	NA	NA	NA	NA	NA	NA	NA	NA
Dibenzofuran	NA	NA	NA	NA	NA	NA	NA	NA	NA
3-Chloroaniline	NA	NA	NA	NA	NA	NA	NA	NA	NA
2-Chloroaniline	NA	NA	NA	NA	NA	NA	NA	NA	NA
Sub Total 2	0	0	25	0	0	0	0	0	0
Total Base/Neutral Compounds	0	0	94	0	0	0	33	11	0

See last page for footnotes.

Table 3. Summary of Base/Neutral Compounds in Ground Water, Krummrich Plant, Sauget, Illinois.

Well Number:	GM-54B	GM-55C	GM-55C	GM-55C	GM-55C	GM-55C	GM-55C	GM-55C	GM-55C
Date:	11/92	11/87	5/88	11/88	11/89	11/90	11/91	11/92	11/92*
Laboratory:	ETC	ETC	ETC	ETC	ETC	ETC	ETC	ETC	ETC
USEPA Priority Pollutant Base/Neutral Extractable Organic Compounds concentrations are in ug/L									
Acenaphthene	<1.9	<2.0	<45	<210	<230	<19	<200	<190	<190
Acenapthylene	<3.5	<3.6	<82	<390	<420	<35	<360	<350	<350
Anthracene	<1.9	<2.0	<45	<210	<230	<19	<200	<190	<190
Benzidine	<44	<46	<1,000	<4,900	<5300	<440	<4500	<4400	<4400
Benzo (a) anthracene	<7.9	<8.1	<180	<880	<940	<78	<800	<790	<780
Benzo (a) pyrene	<2.5	<2.6	<59	<280	<300	<25	<260	<250	<250
Benzo (b) fluoroanthene	<4.8	<10	<110	<540	<580	<48	<490	<480	<480
Benzo (ghi) perylene	<4.1	<4.3	<96	<460	<490	<41	<420	<410	<410
Benzo (k) fluoranthene	<2.5	<3.6	<59	<280	<300	<25	<260	<250	<250
Bis (2-chloroethoxy) methane	<5.4	<5.5	<120	<600	<640	<53	<550	<540	<530
Bis (2-chloroethyl) ether	<5.8	**5.9**	<130	<640	<690	<57	<590	<580	<570
Bis (2-chloroisopropyl) ether	<5.8	**5.9**	<130	<640	<690	<57	<590	<580	<570
Bis (2-ethylhexyl) phthalate	<10	<10	<240	<1,100	<1200	<100	<1,000	<1,000	<1,000
4-Bromophenyl phenyl ether	<1.9	<2.0	<45	<210	<230	<19	<200	<190	<190
Butyl benzyl phthalate	<10	<10	<240	<1,100	<1200	<100	<1,000	<1,000	<1,000
2-Chloronaphthalene	<1.9	<2.0	<45	<210	<230	<19	<200	<190	<190
4-Chlorophenyl phenyl ether	<4.2	<4.4	<99	<470	<510	<42	<430	<420	<420
Chrysene	<2.5	<2.6	<59	<280	<300	<25	<260	<250	<250
Dibenzo (a,h) anthracene	<2.5	<10	<240	<1,100	<1200	<25	<260	<250	<250
1,2-Dichlorobenzene	<1.9	**6.00**	**693**	**4,030**	**4,760**	**2,390**	**8,730**	**7910**	**8110**
1,3-Dichlorobenzene	<1.9	<2.0	<45	<210	<230	<19	<200	<190	<190
1,4-Dichlorobenzene	<4.4	**38.7**	**311**	<490	<530	<44	<450	<440	<440
3,3-Dichlorobenzidine	<16.7	<17	<390	<1,900	<2000	<165	<1700	<1670	<1650
Diethyl phthalate	<10	<10	<240	<1,100	<1200	<100	<1,000	<1,000	<1,000
Dimethyl phthalate	<5.1	<10	<240	<1,100	<1200	<100	<1,000	<510	<500
Di-n-butyl phthalate	<10	<10	<240	<1,100	<1200	<100	<1,000	<1,000	<1,000
2,4-Dinitrotoluene	<5.8	<5.9	<130	<640	<690	<57	<590	<580	<570
2,6-Dinitrotoluene	<1.9	<2.0	<45	<210	<230	<19	<200	<190	<190
Di-n-octyl phthalate	<10	<10	<240	<1,100	<1200	<100	<1,000	<1,000	<1,000
1,2-Diphenylhydrazine	<10	<10	<240	<1,100	<1200	<100	<1,000	<1,000	<1,000
Fluoranthene	<2.2	**4.21**	<52	<250	<270	<22	<230	<220	<220
Fluorene	<1.9	<2.0	<45	<210	<230	<19	<200	<190	<190
Hexachlorobenzene	<1.9	<2.0	<45	<210	<230	<19	<200	<190	<190
Hexachlorobutadiene	<.91	<.94	<21	<100	<110	<9.0	<93	<91	<90
Hexachlorocyclopentadiene	<10	<10	<240	<1,100	<1200	<100	<1,000	<1,000	<1,000
Hexachloroethane	<1.6	<1.7	<38	<180	<190	<16	<160	<160	<160
Indeno (1,2,3-c,d) pyrene	<3.7	<4.9	<110	<530	<570	<37	<380	<370	<370
Isophorone	<2.2	<2.3	<52	<250	<270	<22	<230	<220	<220
Naphthalene	<1.6	<1.7	<38	<180	<190	<16	<160	<160	<160
Nitrobenzene	<1.9	<2.0	<45	<210	<230	,19	<200	<190	<190
n-Nitrosodimethylamine	<10	<10	<240	<1,100	<1200	<100	<1,000	<1,000	<1,000
n-Nitrosodi-n-propylamine	<10	<10	<240	<1,100	<1200	<100	<1,000	<1,000	<1,000
n-Nitrosodiphenylamine	<1.9	<2.0	<45	<210	<230	<19	<200	<190	<190
Phenanthrene	<5.5	<5.6	<130	<610	<650	<54	<560	<550	<540
Pyrene	<1.9	**3.14**	<45	<210	<230	<19	<200	<190	<190
1,2,4-Trichlorobenzene	<1.9	<2.0	<45	<210	<230	<19	<200	<190	<190
Sub Total 1	0	64	1,004	4,030	4,760	2,390	8,730	7,910	8,110

See last page for footnotes.

Table 3. Summary of Base/Neutral Compounds in Ground Water, Krummrich Plant, Sauget, Illinois.

Well Number:	GM-54B	GM-55C	GM-55C	GM-55C	GM-55C	GM-55C	GM-55C	GM-55C	GI
Date:	11/92	11/87	5/88	11/88	11/89	11/90	11/91	11/92	1
Laboratory:	ETC	ETC	ETC	ETC	ETC	ETC	ETC	ETC	ETC
Miscellaneous Base/Neutral Extractable Organic Compounds concentrations are in ug/L									
2,4-and 3,4-Dinitrochlorobenzene	NA	<10	<240	<1,100	<1200	<100	<1,000	<1,000	<1,000
2-Nitroaniline	NA	<10	<240	<1,100	<1200	<100	<1,000	<1,000	<1,000
4-Nitroaniline	NA	<10	<240	<1,100	<1200	<100	<1,000	<1,000	<1,000
2-Nitrochlorobenzene	<10	<10	**2,980**	**41,700**	**38,800**	<100	**42,300**	**116,000**	**99,000**
3-Nitrochlorobenzene	NA	NA	NA	NA	NA	NA	**30,900**	NA	NA
4-Nitrochlorobenzene	<10	**14.6**	**1,140**	**74,600**	**66,700**	<100	**34,800**	**115,000**	**99,200**
4-Nitrodiphenylamine	<10	<10	<240	<1,100	<1200	<100	<1,000	<1,000	<1,000
Triphenyl phosphate	NA	<10	<240	<1,100	<1200	<100	<1,000	NA	NA
2,3,7,8-Tetrachloro-dibenzo-p-dioxin	NA	NA	NA	NA	NA	NA	NA	NA	NA
2-Nitrobiphenyl	<10	NA	<240	NA	<1200	NA	NA	NA	NA
4-Nitrobiphenyl	<10	NA	<240	NA	<1200	NA	NA	<1,000	<1,000
Benzyl alcohol	NA	NA	NA	NA	NA	NA	NA	NA	NA
Aniline	NA	NA	NA	NA	**1,220**	**24,800**	<1,000	<1,000	<1,000
4-Chloroaniline	**157**	NA	NA	NA	NA	NA	**17,200**	**24,300**	**23,900**
2-Methylnaphtalene	NA	NA	NA	NA	NA	NA	NA	NA	NA
N-nitroaniline	NA	NA	NA	NA	NA	NA	NA	NA	NA
Dibenzofuran	NA	NA	NA	NA	NA	NA	NA	NA	NA
3-Chloroaniline	**125**	NA	NA	NA	NA	NA	**9,170**	**12,900**	**12,100**
2-Chloroaniline	**17.3**	NA	NA	NA	NA	NA	**35,300**	**58,100**	**44,700**
Sub Total 2	299	15	4,120	116,300	106,720	24,800	169,670	326,300	278,900
Total Base/Neutral Compounds	299	78	5,124	120,330	111,480	27,190	178,400	334,210	287,010

See last page for footnotes.

Table 3. Summary of Base/Neutral Compounds in Ground Water, Krummrich Plant, Sauget, Illinois.

Well Number:	GM-56C	GM-56C	GM-56C	GM-56C	GM-56C	GM-56C	GM-56C	GM-57C	GM-57C
Date:	11/87	5/88	11/88	11/88	11/89	11/90	11/91	11/87	11/87*
Laboratory:	ETC	ETC	ETC	SL	SL	ETC	ETC	ETC	ETC
USEPA Priority Pollutant Base/Neutral Extractable Organic Compounds concentrations are in ug/L									
Acenaphthene	<190	<120	<120	<100	<2.2	<200	<19	<210	<220
Acenapthylene	<360	<210	<210	<100	<4.0	<360	<35	<380	<400
Anthracene	<190	<120	<120	<100	<2.2	<200	<19	<210	<220
Benzidine	<4500	<2700	<2700	<800	<50	<4500	<440	<4800	<5100
Benzo (a) anthracene	<800	<480	<480	<100	<8.9	<800	<79	<860	<900
Benzo (a) pyrene	<260	<150	<150	<100	<2.8	<260	<25	<270	<290
Benzo (b) fluoroanthene	<1,000	<290	<290	<100	<5.5	<490	<48	<1,100	<1,100
Benzo (ghi) perylene	<420	<250	<250	<100	<4.7	<420	<41	<450	<470
Benzo (k) fluoranthene	<360	<150	<150	<100	<2.8	<260	<25	<380	<400
Bis (2-chloroethoxy) methane	<540	<320	<320	<100	<6.0	<550	<54	<580	<610
Bis (2-chloroethyl) ether	<580	<350	<350	<100	<6.5	<590	<58	<630	<660
Bis (2-chloroisopropyl) ether	<580	<350	<350	<100	<6.5	<590	<58	<630	<660
Bis (2-ethylhexyl) phthalate	<1,000	<610	<610	<100	<11	<1,000	<100	<1,100	<1,100
4-Bromophenyl phenyl ether	<190	<120	<120	<100	<2.2	<200	<19	<210	<220
Butyl benzyl phthalate	<1,000	<610	<610	<100	<11	<1,000	<100	<1,100	<1,100
2-Chloronaphthalene	<190	<120	<120	<100	<2.2	<200	<19	<210	<220
4-Chlorophenyl phenyl ether	<430	<260	<260	<100	<4.8	<430	<42	<460	<480
Chrysene	<260	<150	<150	<100	<2.8	<260	<25	<270	<290
Dibenzo (a,h) anthracene	<1,000	<610	<610	<100	<11	<260	<25	<1,100	<1,100
1,2-Dichlorobenzene	**1,570**	**880**	**1,260**	**1,000**	**693**	**1,100**	**204**	**638**	**575**
1,3-Dichlorobenzene	<190	<120	<120	<100	**13.1**	<200	<19	<210	<220
1,4-Dichlorobenzene	<450	<270	<270	**120**	**96.8**	<450	<44	<480	<510
3,3-Dichlorobenzidine	<1700	<1040	<1,000	<200	<19	<1700	<167	<1800	<1,900
Diethyl phthalate	<1,000	<610	<610	<100	<11	<1,000	<100	<1,100	<1,100
Dimethyl phthalate	<1,000	<610	<610	<100	<11	<1,000	<100	<1,100	<1,100
Di-n-butyl phthalate	<1,000	<610	<610	<100	<11	<1,000	<100	<1,100	<1,100
2,4-Dinitrotoluene	<580	<350	<350	<100	<6.5	<590	<58	<630	<660
2,6-Dinitrotoluene	<190	<120	<120	<100	<2.2	<200	<19	<210	<220
Di-n-octyl phthalate	<1,000	<610	<610	<100	<11	<1,000	<100	<1,100	<1,100
1,2-Diphenylhydrazine	<1,000	<610	<610	<100	<11	<1,000	<100	<1,100	<1,100
Fluoranthene	<220	<130	<130	<100	<2.5	<230	<22	<240	<250
Fluorene	<190	<120	<120	<100	<2.2	<200	<19	<210	<220
Hexachlorobenzene	<190	<120	<120	<100	<2.2	<200	<19	<210	<220
Hexachlorobutadiene	<92	<55	<55	<100	<1.0	<93	<9.1	<99	<100
Hexachlorocyclopentadiene	<1,000	<610	<610	<100	<11	<1,000	<100	<1,100	<1,100
Hexachloroethane	<160	<98	<98	<100	<1.8	<160	<16	<180	<180
Indeno (1,2,3-c,d) pyrene	<480	<290	<290	<100	<5.3	<380	<37	<520	<540
Isophorone	<220	<130	<130	<100	<2.5	<230	<22	<240	<250
Naphthalene	<160	<98	<98	<100	**40.9**	<160	**19.7**	<180	<180
Nitrobenzene	<190	<120	**223**	**220**	**135**	**306**	<19	**430**	**449**
n-Nitrosodimethylamine	<1,000	<610	<610	<100	<11	<1,000	<100	<1,100	<1,100
n-Nitrosodi-n-propylamine	<1,000	<610	<610	<100	<11	<1,000	<100	<1,100	<1,100
n-Nitrosodiphenylamine	<190	<120	<120	<100	<2.2	<200	<19	<210	<220
Phenanthrene	<550	<330	<330	<100	<6.1	<560	<55	<590	<620
Pyrene	<190	<120	<120	<100	<2.2	<200	<19	<210	<220
1,2,4-Trichlorobenzene	<190	<120	<120	<100	**39.8**	<200	<19	<210	<220
Sub Total 1	1,570	880	1,483	1,340	1,019	1,406	224	1,068	1,024

See last page for footnotes.

Table 3. Summary of Base/Neutral Compounds in Ground Water, Krummrich Plant, Sauget, Illinois.

Well Number:	GM-56C	GM-56C	GM-56C	GM-56C	GM-56C	GM-56C	GM-56C	GM-57C	GI
Date:	11/87	5/88	11/88	11/88	11/89	11/90	11/91	11/87	
Laboratory:	ETC	ETC	ETC	SL	SL	ETC	ETC	ETC	ETC
Miscellaneous Base/Neutral Extractable Organic Compounds concentrations are in ug/L									
2,4-and 3,4-Dinitrochlorobenzene	<1,000	<610	<610	<100	<11	<1,000	<100	<1,100	<1,100
2-Nitroaniline	<1,000	<610	<610	<500	<11	<1,000	<100	<1,100	<1,100
4-Nitroaniline	<1,000	<610	<610	<500	<11	<1,000	<100	<1,100	<1,100
2-Nitrochlorobenzene	**84,900**	**26,300**	**70,700**	**130,000**	**68,800**	**136,000**	**564**	**82,100**	**85,600**
3-Nitrochlorobenzene	NA	NA	NA	NA	NA	NA	**2,030**	NA	NA
4-Nitrochlorobenzene	**24,800**	**7,360**	**17,500**	**30,000**	**17,000**	**33,500**	<100	**21,400**	**21,700**
4-Nitrodiphenylamine	<1,000	<610	<610	<200	<11	<1,000	<100	<1,100	<1,100
Triphenyl phosphate	<1,000	<610	<610	<100	<11	<1,000	<100	<1,100	<1,100
2,3,7,8-Tetrachloro-dibenzo-p-dioxin	NA	NA	NA	NA	NA	NA	NA	NA	NA
2-Nitrobiphenyl	NA	<610	NA	NA	<11	NA	NA	<1,100	<1,100
4-Nitrobiphenyl	NA	<610	NA	NA	<11	NA	NA	<1,100	<1,100
Benzyl alcohol	NA	NA	NA	NA	NA	NA	NA	NA	NA
Aniline	NA	NA	NA	NA	**34,300**	**23,100**	**20,600**	NA	NA
4-Chloroaniline	NA	NA	NA	NA	NA	NA	**56,900**	NA	NA
2-Methylnaphtalene	NA	NA	NA	NA	NA	NA	NA	NA	NA
N-nitroaniline	NA	NA	NA	NA	NA	NA	NA	NA	NA
Dibenzofuran	NA	NA	NA	NA	NA	NA	NA	NA	NA
3-Chloroaniline	NA	NA	NA	NA	NA	NA	**25,200**	NA	NA
2-Chloroaniline	NA	NA	NA	NA	NA	NA	**183,000**	NA	NA
Sub Total 2	109,700	33,660	88,200	160,000	120,100	192,600	288,294	103,500	107,300
Total Base/Neutral Compounds	111,270	34,540	89,683	161,340	121,119	194,006	288,518	104,568	108,324

See last page for footnotes.

Table 3. Summary of Base/Neutral Compounds in Ground Water, Krummrich Plant, Sauget, Illinois.

Well Number:	GM-57C	GM-57C	GM-57C	GM-57C	GM-57C	GM-57C	GM-57C	GM-57C	GM-57C
Date:	5/88	5/88*	11/88	11/88	3/89	11/89	11/89 *	11/90	11/90*
Laboratory:	ETC	ETC	ETC	SL	ETC	ETC	ETC	ETC	ETC
USEPA Priority Pollutant Base/Neutral Extractable Organic Compounds concentrations are in ug/L									
Acenaphthene	<96	<98	<210	<100	<20	<23	<20	<96	<20
Acenapthylene	<180	<180	<390	<100	<37	<42	<37	<180	<36
Anthracene	<96	<98	<210	<100	<20	<23	<20	<96	<20
Benzidine	<2,200	<2,300	<4,900	<800	<460	<520	<460	<2,200	<450
Benzo (a) anthracene	<390	<400	<870	<100	<82	<93	<82	<390	<80
Benzo (a) pyrene	<130	<130	<280	<100	<26	<30	<26	<130	<26
Benzo (b) fluoroanthene	<240	<250	<530	<100	<51	<57	<51	<240	<49
Benzo (ghi) perylene	<210	<210	<460	<100	<43	<49	<43	<210	<42
Benzo (k) fluoranthene	<130	<130	<280	<100	<26	<30	<26	<130	<26
Bis (2-chloroethoxy) methane	<270	<270	<590	<100	<56	<63	<56	<270	<55
Bis (2-chloroethyl) ether	<290	<290	<630	<100	<60	<68	<60	<290	<59
Bis (2-chloroisopropyl) ether	<290	<290	<630	<100	<60	<68	<60	<290	<59
Bis (2-ethylhexyl) phthalate	<510	<520	<1,100	<100	<110	<120	<110	<510	<100
4-Bromophenyl phenyl ether	<96	<98	<210	<100	<20	<23	<20	<96	<20
Butyl benzyl phthalate	<510	<520	<1,100	<100	<110	<120	<110	<510	<100
2-Chloronaphthalene	<96	<98	<210	<100	<20	<23	<20	<96	<20
4-Chlorophenyl phenyl ether	<210	<220	<470	<100	<44	<50	<44	<210	<43
Chrysene	<130	<130	<280	<100	<26	<30	<26	<130	<26
Dibenzo (a,h) anthracene	<510	<520	<1,100	<100	<110	<120	<110	<130	<26
1,2-Dichlorobenzene	**837**	**922**	**650**	**540**	**598**	**562**	**591**	**555**	**599**
1,3-Dichlorobenzene	<96	<98	<210	<100	<20	<23	<20	<96	<20
1,4-Dichlorobenzene	**387**	**395**	<490	**320**	**298**	**413**	**449**	**456**	**447**
3,3-Dichlorobenzidine	<830	<850	<1,800	<200	<170	<200	<170	<833	<170
Diethyl phthalate	<510	<520	<1,100	<100	<110	<120	<110	<510	<100
Dimethyl phthalate	<510	<520	<1,100	<100	<110	<120	<110	<510	<100
Di-n-butyl phthalate	<510	<520	<1,100	<100	<110	<120	<110	<510	<100
2,4-Dinitrotoluene	<290	<290	<630	<100	<60	<68	<60	<290	<59
2,6-Dinitrotoluene	<96	<98	<210	<100	<20	<23	<20	<96	<20
Di-n-octyl phthalate	<510	<520	<1,100	<100	<110	<120	<110	<510	<100
1,2-Diphenylhydrazine	<510	<520	<1,100	<100	<110	<120	<110	<510	<100
Fluoranthene	<110	<110	<240	<100	<23	<26	<23	<110	<23
Fluorene	<96	<98	<210	<100	<20	<23	<20	<96	<20
Hexachlorobenzene	<96	<98	<210	<100	<20	<23	<20	<96	<20
Hexachlorobutadiene	<45	<46	<100	<100	<9.5	<11	<9.5	<45	<9.3
Hexachlorocyclopentadiene	<510	<520	<1,100	<100	<110	<120	<110	<510	<100
Hexachloroethane	<81	<82	<180	<100	<17	<19	<17	<81	<16
Indeno (1,2,3-c,d) pyrene	<240	<240	<520	<100	<49	<56	<49	<190	<38
Isophorone	<110	<110	<240	<100	<23	<26	<23	<110	<23
Naphthalene	<81	<82	<180	<100	<17	**35.5**	**34.9**	<81	**22.2**
Nitrobenzene	<96	<98	**321**	**260**	<20	**579**	**219**	**674**	**1010**
n-Nitrosodimethylamine	<510	<520	<1,100	<100	<110	<120	<110	<510	<100
n-Nitrosodi-n-propylamine	<510	<520	<1,100	<100	<110	<120	<110	<510	<100
n-Nitrosodiphenylamine	<96	<98	<210	<100	<20	<23	<20	<96	<20
Phenanthrene	<270	<280	<600	<100	<57	<64	<57	<270	<56
Pyrene	<96	<98	<210	<100	<20	<23	<20	<96	<20
1,2,4-Trichlorobenzene	<96	<98	<210	<100	<20	**98.8**	**95.7**	<96	**59.0**
Sub Total 1	1,224	1,317	971	1,120	896	1,688	1,390	1,685	2,137

See last page for footnotes.

Table 3. Summary of Base/Neutral Compounds in Ground Water, Krummrich Plant, Sauget, Illinois.

Well Number:	GM-57C	GM-57C	GM-57C	GM-57C	GM-57C	GM-57C	GM-57C	GM-57C	GM
Date:	5/88	5/88*	11/88	11/88	3/89	11/89	11/89 *	11/90	1
Laboratory:	ETC	ETC	ETC	SL	ETC	ETC	ETC	ETC	ETC
Miscellaneous Base/Neutral Extractable Organic Compounds concentrations are in ug/L									
2,4-and 3,4-Dinitrochlorobenzene	<510	<520	<1,100	<100	<110	<120	<110	<510	<100
2-Nitroaniline	<510	<520	<1,100	<500	<110	<120	<110	<510	<100
4-Nitroaniline	<510	<520	<1,100	<500	<110	<120	<110	<510	<100
2-Nitrochlorobenzene	**124,000**	**142,000**	**219,000**	**100,000**	**112,000**	**109,000**	**123,000**	**116,000**	**169,000**
3-Nitrochlorobenzene	NA	NA	NA	NA	NA	NA	NA	NA	NA
4-Nitrochlorobenzene	**25,800**	**30,600**	**40,500**	**31,000**	**33,900**	**21,400**	**21,200**	**26,300**	**33,000**
4-Nitrodiphenylamine	<510	<520	<1,100	<200	<110	<120	<110	<510	<100
Triphenyl phosphate	<510	<520	<1,100	<100	<110	<120	<110	<510	<100
2,3,7,8-Tetrachloro-dibenzo-p-dioxin	NA	NA	NA	NA	NA	NA	NA	NA	NA
2-Nitrobiphenyl	<510	<520	NA	NA	NA	<120	NA	NA	NA
4-Nitrobiphenyl	<510	<520	NA	NA	NA	<120	NA	NA	NA
Benzyl alcohol	NA	NA	NA	NA	NA	NA	NA	NA	NA
Aniline	NA	NA	NA	NA	NA	**38,800**	**44,800**	**35,200**	**41,300**
4-Chloroaniline	NA	NA	NA	NA	NA	NA	NA	NA	NA
2-Methylnaphtalene	NA	NA	NA	NA	NA	NA	NA	NA	NA
N-nitroaniline	NA	NA	NA	NA	NA	NA	NA	NA	NA
Dibenzofuran	NA	NA	NA	NA	NA	NA	NA	NA	NA
3-Chloroaniline	NA	NA	NA	NA	NA	NA	NA	NA	NA
2-Chloroaniline	NA	NA	NA	NA	NA	NA	NA	NA	NA
Sub Total 2	149,800	172,600	259,500	131,000	145,900	169,200	189,000	177,500	243,300
Total Base/Neutral Compounds	151,024	173,917	260,471	132,120	146,796	170,888	190,390	179,185	245,437

See last page for footnotes.

Table 3. Summary of Base/Neutral Compounds in Ground Water, Krummrich Plant, Sauget, Illinois.

Well Number:	GM-57C	GM-57C	GM-58A	GM-58A	GM-58A	GM-58A	GM-58A	GM-58A	GM-58A
Date:	11/91	11/91*	11/87	5/88	11/88	11/89	11/90	11/91	11/92
Laboratory:	ETC	ETC	ETC	ETC	ETC	ETC	ETC	ETC	ETC
USEPA Priority Pollutant Base/Neutral Extractable Organic Compounds concentrations are in ug/L									
Acenaphthene	<95	<95	<1.9	<2.2	<2.0	<2.0	<1.9	<2.2	<1.9
Acenapthylene	<180	<180	<3.6	<4.0	<3.6	<3.6	<3.5	<4.1	<3.5
Anthracene	<95	<95	<1.9	<2.2	<2.0	<2.0	<1.9	<2.2	<1.9
Benzidine	<2200	<2200	<45	<50	<45	<46	<44	<52	<44
Benzo (a) anthracene	<390	<390	<8.0	<8.9	<8.0	<8.1	<7.8	<9.2	<7.9
Benzo (a) pyrene	<130	<130	<2.6	<2.8	<2.6	<2.6	<2.5	<2.9	<2.5
Benzo (b) fluoroanthene	<240	<240	<10	<5.5	<4.9	<5.0	<4.8	<5.6	<4.8
Benzo (ghi) perylene	<210	<210	<4.2	<4.7	<4.2	<4.3	<4.1	<4.8	<4.1
Benzo (k) fluoranthene	<130	<130	<3.6	<2.8	<2.6	<2.6	<2.5	<2.9	<2.5
Bis (2-chloroethoxy) methane	<270	<270	<5.4	<6.0	<5.5	<5.5	<5.3	<6.2	<5.4
Bis (2-chloroethyl) ether	<290	<290	<5.8	<6.5	<5.9	<5.9	<5.7	<6.7	<5.8
Bis (2-chloroisopropyl) ether	<290	<290	<5.8	<6.5	<5.9	<5.9	<5.7	<6.7	<5.8
Bis (2-ethylhexyl) phthalate	<500	<500	<10	<11	<10	<10	<10	<12	<10
4-Bromophenyl phenyl ether	<95	<95	<1.9	<2.2	<2.0	<2.0	<1.9	<2.2	<1.9
Butyl benzyl phthalate	<500	<500	<10	<11	<10	<10	<10	<12	<10
2-Chloronaphthalene	<95	<95	<1.9	<2.2	<2.0	<2.0	<1.9	<2.2	<1.9
4-Chlorophenyl phenyl ether	<210	<210	<4.3	<4.8	<4.3	<4.4	<4.2	<4.9	<4.2
Chrysene	<130	<130	<2.6	<2.8	<2.6	<2.6	<2.5	<2.9	<2.5
Dibenzo (a,h) anthracene	<130	<130	<10	<11	<10	<10	<2.5	<2.9	<2.5
1,2-Dichlorobenzene	**674**	**709**	<1.9	<2.2	<2.0	<2.0	<1.9	<2.2	<1.9
1,3-Dichlorobenzene	<95	<95	<1.9	<2.2	<2.0	<2.0	<1.9	<2.2	<1.9
1,4-Dichlorobenzene	**312**	**346**	<4.5	<5.0	<4.5	<4.6	<4.4	<5.2	<4.4
3,3-Dichlorobenzidine	<825	<825	<17	<19	<17	<17	<16.5	<19.4	<16.7
Diethyl phthalate	<500	<500	<10	<11	<10	<10	<10	<12	<10
Dimethyl phthalate	<500	<500	<10	<11	<10	<10	<10	<12	<5.1
Di-n-butyl phthalate	<500	<500	<10	<11	<10	<10	<10	<12	<10
2,4-Dinitrotoluene	<290	<290	<5.8	<6.5	<5.9	<5.9	<5.7	<6.7	<5.8
2,6-Dinitrotoluene	<95	<95	<1.9	<2.2	<2.0	<2.0	<1.9	<2.2	<1.9
Di-n-octyl phthalate	<500	<500	<10	<11	**12.6**	<10	<10	<12	<10
1,2-Diphenylhydrazine	<500	<500	<10	<11	<10	<10	<10	<12	<10
Fluoranthene	<110	<110	<2.2	<2.5	<2.3	<2.3	<2.2	<2.6	<2.2
Fluorene	<95	<95	<1.9	<2.2	<2.0	<2.0	<1.9	<2.2	<1.9
Hexachlorobenzene	<95	<95	<1.9	<2.2	<2.0	<2.0	<1.9	<2.2	<1.9
Hexachlorobutadiene	<45	<45	<.92	<1.0	<0.93	<.94	<90	<1.1	<.91
Hexachlorocyclopentadiene	<500	<500	<10	<11	<10	<10	<10	<12	<10
Hexachloroethane	<80	<80	<1.6	<1.8	<1.6	<1.7	<1.6	<1.9	<1.6
Indeno (1,2,3-c,d) pyrene	<190	<190	<4.8	<5.3	<4.8	<4.9	<3.7	<4.4	<3.7
Isophorone	<110	<110	<2.2	<2.5	<2.3	<2.3	<2.2	<2.6	<2.2
Naphthalene	<80	<80	<1.6	<1.8	<1.6	<1.7	<1.6	<1.9	<1.6
Nitrobenzene	<95	<95	<1.9	<2.2	<2.0	**3.30**	**4.15**	<2.2	<1.9
n-Nitrosodimethylamine	<500	<500	<10	<11	<10	<10	<10	<12	<10
n-Nitrosodi-n-propylamine	<500	<500	<10	<11	<10	<10	<10	<12	<10
n-Nitrosodiphenylamine	<95	<95	<1.9	<2.2	<2.0	<2.0	<1.9	<2.2	<1.9
Phenanthrene	<270	<270	<5.5	<6.1	**5.6**	<5.6	<5.4	<6.4	<5.5
Pyrene	<95	<95	<1.9	<2.2	<2.0	<2.0	<1.9	<2.2	<1.9
1,2,4-Trichlorobenzene	<95	**99.5**	<1.9	<2.2	<2.0	<2.0	<1.9	<2.2	<1.9
Sub Total 1	986	1,155	0	0	18	3	4	0	0

See last page for footnotes.

Table 3. Summary of Base/Neutral Compounds in Ground Water, Krummrich Plant, Sauget, Illinois.

Well Number:	GM-57C	GM-57C	GM-58A	GM-58A	GM-58A	GM-58A	GM-58A	GM-58A	G
Date:	11/91	11/91*	11/87	5/88	11/88	11/89	11/90	11/91	11/92
Laboratory:	ETC	ETC	ETC	ETC	ETC	ETC	ETC	ETC	ETC
Miscellaneous Base/Neutral Extractable Organic Compounds concentrations are in ug/L									
2,4-and 3,4-Dinitrochlorobenzene	<500	<500	**31.0**	<11	**16.6**	**19.8**	**15.2**	**21.5**	<10
2-Nitroaniline	<500	<500	<10	<11	<10	<10	<10	<12	<10
4-Nitroaniline	<500	<500	<10	<11	<10	<10	<10	<12	<10
2-Nitrochlorobenzene	<500	<500	<10	**14.1**	**12.9**	**13.8**	**67.6**	<12	**40.3**
3-Nitrochlorobenzene	<500	<500	NA	NA	NA	NA	NA	NA	NA
4-Nitrochlorobenzene	<500	<500	**19.4**	**31.1**	**28.7**	**87.2**	**52.8**	<12	<10
4-Nitrodiphenylamine	<500	<500	<10	<11	<10	<10	<10	<12	NA
Triphenyl phosphate	<500	<500	<10	<11	<10	<10	<10	<12	<10
2,3,7,8-Tetrachloro-dibenzo-p-dioxin	NA	NA	NA	NA	NA	NA	NA	NA	NA
2-Nitrobiphenyl	NA	NA	<10	<11	<10	<10	<10	<12	<10
4-Nitrobiphenyl	NA	NA	<10	<11	<10	<10	<10	<12	<10
Benzyl alcohol	NA	NA	NA	NA	NA	NA	NA	NA	NA
Aniline	**31,100**	**34,500**	NA	NA	NA	NA	<10	<12	<10
4-Chloroaniline	**26,200**	**44,300**	NA	NA	NA	NA	NA	NA	<10
2-Methylnaphtalene	NA	NA	NA	NA	NA	NA	NA	NA	NA
N-nitroaniline	NA	NA	NA	NA	NA	NA	NA	NA	NA
Dibenzofuran	NA	NA	NA	NA	NA	NA	NA	NA	<10
3-Chloroaniline	**41,800**	**25,500**	NA	NA	NA	NA	NA	NA	<10
2-Chloroaniline	**195,000**	<500	NA	NA	NA	NA	NA	NA	NA
Sub Total 2	294,100	104,300	50	45	58	121	136	22	40
Total Base/Neutral Compounds	295,086	105,455	50	45	76	124	140	22	40

See last page for footnotes.

Table 3. Summary of Base/Neutral Compounds in Ground Water, Krummrich Plant, Sauget, Illinois.

Well Number:	GM-59A	GM-59A	GM-59A	GM-59A	GM-59A	GM-59A	GM-59A	B-25A	B-26A
Date:	11/87	5/88	11/88	11/89	11/90	11/91	11/92	3/87	3/87
Laboratory:	ETC	ETC	ETC	ETC	ETC	ETC	ETC	ETC	ETC
USEPA Priority Pollutant Base/Neutral Extractable Organic Compounds concentrations are in ug/L									
Acenaphthene	<1.9	<1.9	<2.1	<2.0	<2.0	<1.9	<1.9	<210	<2.1
Acenapthylene	<3.6	<3.5	<3.9	<3.7	<3.6	<3.5	<3.5	<390	<3.9
Anthracene	<1.9	<1.9	<2.1	<2.0	<2.0	<1.9	<1.9	<210	<2.1
Benzidine	<45	<44	<49	<46	<45	<44	<44	<4,900	<49
Benzo (a) anthracene	<8.0	<7.8	<8.7	<8.2	<8.0	<7.9	<7.9	<880	<8.7
Benzo (a) pyrene	<2.6	<2.5	<2.8	<2.6	<2.6	<2.5	<2.5	<280	<2.8
Benzo (b) fluoroanthene	<10	<4.8	<5.3	<5.1	<4.9	<4.8	<4.8	<1,100	<11
Benzo (ghi) perylene	<4.2	<4.1	<4.6	<4.3	<4.2	<4.1	<4.1	<460	<4.6
Benzo (k) fluoranthene	<3.6	<2.5	<2.8	<2.6	<2.6	<2.5	<2.5	<390	<3.9
Bis (2-chloroethoxy) methane	<5.4	<5.3	<5.9	<5.6	<5.5	<5.4	<5.4	<600	<5.9
Bis (2-chloroethyl) ether	<5.8	<5.7	<6.3	<6.0	<5.9	<5.8	<5.8	<640	<6.3
Bis (2-chloroisopropyl) ether	<5.8	<5.7	<6.3	<6.0	<5.9	<5.8	<5.8	<640	<6.3
Bis (2-ethylhexyl) phthalate	<10	<10	<11	<11	<10	<10	<10	<1,100	**13.1**
4-Bromophenyl phenyl ether	<1.9	<1.9	<2.1	<2.0	<2.0	<1.9	<1.9	<210	<2.1
Butyl benzyl phthalate	<10	<10	<11	<11	<10	<10	<10	<1,100	<11
2-Chloronaphthalene	<1.9	<1.9	<2.1	<2.0	<2.0	<1.9	<1.9	<210	<2.1
4-Chlorophenyl phenyl ether	<4.3	<4.2	<4.7	<4.4	<4.3	<4.2	<4.2	<470	<4.7
Chrysene	<2.6	<2.5	<2.8	<2.6	<2.6	<2.5	<2.5	<280	<2.8
Dibenzo (a,h) anthracene	<10	<10	<11	<11	<2.6	<2.5	<2.5	<1,100	<11
1,2-Dichlorobenzene	<1.9	<1.9	<2.1	<2.0	<2.0	<1.9	<1.9	**8,800**	**2.76**
1,3-Dichlorobenzene	<1.9	<1.9	<2.1	<2.0	<2.0	<1.9	<1.9	<210	<2.1
1,4-Dichlorobenzene	<4.5	<4.4	<4.9	<4.6	<4.5	<4.4	<4.4	<490	<4.9
3,3-Dichlorobenzidine	<17	<17	<18	<17	<17.0	<16.7	<16.7	<1,900	<18
Diethyl phthalate	<10	<10	<11	<11	<10	<10	<10	<1,100	<11
Dimethyl phthalate	<10	<10	<11	<11	<10	<10	<5.1	<1,100	<11
Di-n-butyl phthalate	<10	<10	<11	<11	<10	<10	<10	<1,100	<11
2,4-Dinitrotoluene	<5.8	<5.7	<6.3	<6.0	<5.9	<5.8	<5.8	<640	<6.3
2,6-Dinitrotoluene	<1.9	<1.9	<2.1	<2.0	<2.0	<1.9	<1.9	<210	<2.1
Di-n-octyl phthalate	<10	<10	<11	<11	<10	<10	<10	<1,100	<11
1,2-Diphenylhydrazine	<10	<10	<11	<11	<10	<10	<10	<1,100	<11
Fluoranthene	<2.2	<2.2	<2.4	<2.3	<2.3	<2.2	<2.2	<250	<2.4
Fluorene	<1.9	<1.9	<2.1	<2.0	<2.0	<1.9	<1.9	<210	<2.1
Hexachlorobenzene	<1.9	<1.9	<2.1	<2.0	<2.0	<1.9	<1.9	<210	<2.1
Hexachlorobutadiene	<.92	<0.9	<1.0	<.95	<93	<.91	<.91	<100	<1.0
Hexachlorocyclopentadiene	<10	<10	<11	<11	<10	<10	<10	<1,100	<11
Hexachloroethane	<1.6	<1.6	<1.8	<1.7	<1.6	<1.6	<1.6	<180	<1.8
Indeno (1,2,3-c,d) pyrene	<4.8	<4.7	<5.2	<4.9	<3.8	<3.7	<3.7	<530	<5.2
Isophorone	<2.2	<2.2	<2.4	<2.3	<2.3	<2.2	<2.2	<250	<2.4
Naphthalene	<1.6	<1.6	<1.8	<1.7	<1.6	<1.6	<1.6	**872**	<1.8
Nitrobenzene	<1.9	<1.9	<2.1	<2.0	<2.0	<1.9	<1.9	**12,900**	**15.8**
n-Nitrosodimethylamine	<10	<10	<11	<11	<10	<10	<10	<1,100	<11
n-Nitrosodi-n-propylamine	<10	<10	<11	<11	<10	<10	<10	<1,100	<11
n-Nitrosodiphenylamine	<1.9	<1.9	<2.1	<2.0	<2.0	<1.9	<1.9	<210	<2.1
Phenanthrene	<5.5	<5.4	<6.0	<5.7	<5.6	<5.5	<5.5	<610	<6.0
Pyrene	<1.9	<1.9	<2.1	<2.0	<2.0	<1.9	<1.9	<210	<2.1
1,2,4-Trichlorobenzene	<1.9	<1.9	<2.1	<2.0	<2.0	<1.9	<1.9	**2,170**	<2.1
Sub Total 1	0	0	0	0	0	0	0	24,742	32

See last page for footnotes.

Table 3. Summary of Base/Neutral Compounds in Ground Water, Krummrich Plant, Sauget, Illinois.

Well Number:	GM-59A	GM-59A	GM-59A	GM-59A	GM-59A	GM-59A	GM-59A	B-25A	
Date:	11/87	5/88	11/88	11/89	11/90	11/91	11/92	3/87	
Laboratory:	ETC	ETC	ETC	ETC	ETC	ETC	ETC	ETC	ETC
Miscellaneous Base/Neutral Extractable Organic Compounds concentrations are in ug/L									
2,4-and 3,4-Dinitrochlorobenzene	<10	<10	**13.5**	<11	<10	<10	<10	NA	NA
2-Nitroaniline	<10	<10	<11	<11	<10	<10	<10	**1,160**	<11
4-Nitroaniline	<10	<10	<11	<11	<10	<10	<10	<1,100	<11
2-Nitrochlorobenzene	<10	<10	**12**	<11	<10	<10	<10	NA	NA
3-Nitrochlorobenzene	NA	NA	NA	NA	NA	NA	NA	NA	NA
4-Nitrochlorobenzene	<10	<10	**27.2**	<11	<10	<10	<10	NA	NA
4-Nitrodiphenylamine	<10	<10	<11	<11	<10	<10	<10	NA	NA
Triphenyl phosphate	<10	<10	<11	<11	<10	<10	NA	NA	NA
2,3,7,8-Tetrachloro-dibenzo-p-dioxin	NA	NA	NA	NA	NA	NA	NA	NA	NA
2-Nitrobiphenyl	<10	<10	<11	<11	<10	<10	<10	NA	NA
4-Nitrobiphenyl	<10	<10	<11	<11	<10	<10	<10	NA	NA
Benzyl alcohol	NA	NA	NA	NA	<10	NA	NA	**1,830**	<11
Aniline	NA	NA	NA	NA	NA	<10	NA	<1,000	**20**
4-Chloroaniline	NA	NA	NA	NA	NA	NA	<10	**5,380**	**710**
2-Methylnaphtalene	NA	NA	NA	NA	NA	NA	NA	<1,000	<11
N-nitroaniline	NA	NA	NA	NA	NA	NA	NA	<1,000	<11
Dibenzofuran	NA	NA	NA	NA	NA	NA	NA	<1,000	<11
3-Chloroaniline	NA	NA	NA	NA	NA	NA	<10	NA	NA
2-Chloroaniline	NA	NA	NA	NA	NA	NA	<10	NA	NA
Sub Total 2	0	0	53	0	0	0	0	8,370	730
Total Base/Neutral Compounds	0	0	53	0	0	0	0	33,112	762

See last page for footnotes.

Table 3. Summary of Base/Neutral Compounds in Ground Water, Krummrich Plant, Sauget, Illinois.

Well Number:	B-28A	GM-106	GM-106	GM-106	GM-106	GM-106	GM-106	GM-106	GM-106
Date:	3/87	12/86	5/87	11/87	5/88	11/88	11/89	11/90	11/91
Laboratory:	ETC	ETC	ETC	ETC	ETC	ETC	ETC	ETC	ETC
USEPA Priority Pollutant Base/Neutral Extractable Organic Compounds concentrations are in ug/L									
Acenaphthene	<2.0	<2.0	<1.9	<1.9	<39	<19	<220	<1.9	<38
Acenapthylene	<3.8	<3.7	<3.5	<3.5	<72	<35	<400	<3.5	<70
Anthracene	<2.0	<2.0	<1.9	<1.9	<39	<19	<220	<1.9	<38
Benzidine	<47	<47	<44	<44	<910	<440	<5100	<44	<880
Benzo (a) anthracene	<8.4	<8.3	<7.9	<7.8	<160	<79	<900	<7.8	<160
Benzo (a) pyrene	<2.7	<2.7	<2.5	<2.5	<52	<25	<290	<2.5	<50
Benzo (b) fluoroanthene	<11	<11	<10	<10	<99	<48	<550	<4.8	<96
Benzo (ghi) perylene	<4.4	<4.4	<4.1	<4.1	<85	<41	<470	<4.1	<82
Benzo (k) fluoranthene	<3.8	<3.7	<3.5	<3.5	<52	<25	<290	<2.5	<50
Bis (2-chloroethoxy) methane	<5.7	<5.6	<5.4	<5.3	<110	<54	<610	<5.3	<110
Bis (2-chloroethyl) ether	<6.1	<6.1	<5.8	<5.7	<120	<58	<660	<5.7	<110
Bis (2-chloroisopropyl) ether	<6.1	<6.1	<5.8	<5.7	<120	<58	<660	<5.7	<110
Bis (2-ethylhexyl) phthalate	<11	<11	<10	<10	<210	<100	<1,100	<10	<200
4-Bromophenyl phenyl ether	<2.0	<2	<1.9	<1.9	<39	<19	<220	<1.9	<38
Butyl benzyl phthalate	<11	<11	<10	<10	<210	<100	<1,100	<10	<200
2-Chloronaphthalene	<2.0	<2	<1.9	<1.9	<39	<19	<220	<1.9	<38
4-Chlorophenyl phenyl ether	<4.5	<4.5	<4.2	<4.2	<87	<42	<480	<4.2	<84
Chrysene	<2.7	<2.7	<2.5	<2.5	<52	<25	<290	<2.5	<50
Dibenzo (a,h) anthracene	<11	<11	<10	<10	<210	<100	<1,100	<2.5	<50
1,2-Dichlorobenzene	<2.0	**2.7**	**6.4**	**56.6**	**85.8**	**126**	<220	**120**	**184**
1,3-Dichlorobenzene	<2.0	<2	<1.9	<1.9	<39	<19	<220	**4.23**	<38
1,4-Dichlorobenzene	<4.7	<4.7	<4.4	**10.4**	<91	<44	<510	**26.8**	<88
3,3-Dichlorobenzidine	<18.3	<18	<17	<17.0	<340	<170	<1,900	<16.5	<330
Diethyl phthalate	<11	<11	<10	<10	<210	<100	<1,100	<10	<200
Dimethyl phthalate	<11	<11	<10	<10	<210	<100	<1,100	<10	<200
Di-n-butyl phthalate	<11	<11	<10	<10	<210	<100	<1,100	<10	<200
2,4-Dinitrotoluene	<6.1	<6.1	<5.8	<5.7	<120	<58	<660	<5.7	<110
2,6-Dinitrotoluene	<2.0	<2.0	<1.9	<1.9	<39	<19	<220	<1.9	<38
Di-n-octyl phthalate	<11	<11	<10	<10	<210	<100	<1,100	<10	<200
1,2-Diphenylhydrazine	<11	<11	<10	<10	<210	<100	<1,100	<10	<200
Fluoranthene	<2.4	<2.3	<2.2	<2.2	<45	<22	<250	<2.2	<44
Fluorene	<2.0	<2.0	<1.9	<1.9	<39	<19	<220	<1.9	<38
Hexachlorobenzene	<2.0	<2.0	<1.9	<1.9	<39	<19	<220	<1.9	<38
Hexachlorobutadiene	<.97	<1.0	<0.9	<0.90	<19	<9.1	<100	<90	<18
Hexachlorocyclopentadiene	<11	<11	<10	<10	<210	<100	<1,100	<10	<200
Hexachloroethane	<1.7	<1.7	<1.6	<1.6	<33	<16	<180	<1.6	<32
Indeno (1,2,3-c,d) pyrene	<5.1	<5.0	<4.7	<4.7	<97	<47	<540	<3.7	<74
Isophorone	<2.4	<2.3	<2.2	<2.2	<45	<22	<250	<2.2	<44
Naphthalene	<1.7	<1.7	**2.7**	**6.35**	<33	**16.8**	<180	**11.5**	<32
Nitrobenzene	<2.0	<2.0	<1.9	**19.8**	<39	**50.9**	<220	**132**	<38
n-Nitrosodimethylamine	<11	<11	<10	<10	<210	<100	<1,100	<10	<200
n-Nitrosodi-n-propylamine	<11	<11	<10	<10	<210	<100	<1,100	<10	<200
n-Nitrosodiphenylamine	<2.0	<2.0	<1.9	<1.9	<39	<19	<220	<1.9	<38
Phenanthrene	<5.8	<5.7	<5.5	<5.4	<110	<55	<620	<5.4	<110
Pyrene	<2.0	<2.0	<1.9	<1.9	<39	<19	<220	<1.9	<38
1,2,4-Trichlorobenzene	<2.0	<2.0	<1.9	<1.9	<39	<19	<220	**4.75**	<38
Sub Total 1	0	3	9	93	86	194	0	299	184

See last page for footnotes.

Table 3. Summary of Base/Neutral Compounds in Ground Water, Krummrich Plant, Sauget, Illinois.

Well Number:	B-28A	GM-106	GM-106	GM-106	GM-106	GM-106	GM-106	GM-106	C
Date:	3/87	12/86	5/87	11/87	5/88	11/88	11/89	11/90	1
Laboratory:	ETC	ETC	ETC	ETC	ETC	ETC	ETC	ETC	ETC
Miscellaneous Base/Neutral Extractable Organic Compounds concentrations are in ug/L									
2,4-and 3,4-Dinitrochlorobenzene	NA	<11	<10	<10	<210	<100	<1,100	<10	<200
2-Nitroaniline	<11	<11	<10	<10	<210	<100	<1,100	<10	<200
4-Nitroaniline	<11	<11	<10	<10	<210	<100	<1,100	<10	<200
2-Nitrochlorobenzene	NA	**1,450**	**2,670**	**59,900**	**5,050**	**99,000**	**5,410**	**66,800**	<200
3-Nitrochlorobenzene	NA	NA	NA	NA	NA	NA	NA	NA	<200
4-Nitrochlorobenzene	NA	**172**	**452**	**9,950**	**795**	**14,300**	<1,100	**15300**	<200
4-Nitrodiphenylamine	NA	<11	<10	<10	<210	<100	<1,100	<10	<200
Triphenyl phosphate	NA	<11	<10	<10	<210	<100	<1,100	<10	<200
2,3,7,8-Tetrachloro-dibenzo-p-dioxin	NA	NA	NA	NA	NA	NA	NA	NA	NA
2-Nitrobiphenyl	NA	NA	NA	NA	<210	NA	<1,100	NA	NA
4-Nitrobiphenyl	NA	NA	NA	NA	<210	NA	<1,100	NA	NA
Benzyl alcohol	<11	NA	NA	NA	NA	NA	NA	NA	NA
Aniline	<11	NA	NA	NA	NA	NA	**3,420**	**2,250**	**3,290**
4-Chloroaniline	<11	NA	NA	NA	NA	NA	NA	NA	**19,900**
2-Methylnaphtalene	<11	NA	NA	NA	NA	NA	NA	NA	NA
N-nitroaniline	<11	NA	NA	NA	NA	NA	NA	NA	NA
Dibenzofuran	<11	NA	NA	NA	NA	NA	NA	NA	NA
3-Chloroaniline	NA	NA	NA	NA	NA	NA	NA	NA	**7,820**
2-Chloroaniline	NA	NA	NA	NA	NA	NA	NA	NA	**10,900**
Sub Total 2	0	1,622	3,122	69,850	5,845	113,300	8,830	84,350	41,910
Total Base/Neutral Compounds	0	1,625	3,131	69,943	5,931	113,494	8,830	84,649	42,094

See last page for footnotes.

Table 3. Summary of Base/Neutral Compounds in Ground Water, Krummrich Plant, Sauget, Illinois.

Well Number:	GM-106	P-1	P-1	P-2	P-2	P-2	P-2	P-2	P-3
Date:	11/92	3/87	11/87	11/87	11/89	11/90	11/91	11/92	11/87
Laboratory:	ETC	ETC	ETC	ETC	ETC	ETC	ETC	ETC	ETC
USEPA Priority Pollutant Base/Neutral Extractable Organic Compounds concentrations are in ug/L									
Acenaphthene	<99	<2.1	<1.9	<2.0	<21	<21	<19	<480	<1.9
Acenapthylene	<180	<3.9	<3.5	<3.6	<39	<38	<35	<880	<3.5
Anthracene	<99	<2.1	<1.9	<2.0	<21	<21	<19	<480	<1.9
Benzidine	<2300	<49	<44	<45	<490	<480	<440	<1,1000	<44
Benzo (a) anthracene	<410	<8.7	<7.8	<8.0	<87	<85	<78	<2000	<7.8
Benzo (a) pyrene	<130	<2.8	<2.5	<2.6	<28	<27	<25	<630	<2.5
Benzo (b) fluoroanthene	<250	<11	<10	<10	<53	<52	<48	<1200	<10
Benzo (ghi) perylene	<210	<4.6	<4.1	<4.2	<46	<45	<41	<1,000	<4.1
Benzo (k) fluoranthene	<130	<3.9	<3.5	<3.6	<28	<27	<25	<630	<3.5
Bis (2-chloroethoxy) methane	<280	<5.9	<5.3	<5.5	<59	<58	<53	<1300	<5.3
Bis (2-chloroethyl) ether	<300	<6.3	<5.7	<5.9	<63	<62	<57	<1,400	<5.7
Bis (2-chloroisopropyl) ether	<300	<6.3	<5.7	<5.9	<63	<62	<57	<1,400	<5.7
Bis (2-ethylhexyl) phthalate	<520	<11	<10	<10	<110	<110	<100	<2,500	<10
4-Bromophenyl phenyl ether	<99	<2.1	<1.9	<2.0	<21	<21	<19	<480	<1.9
Butyl benzyl phthalate	<520	<11	<10	<10	<110	<110	<100	<2,500	<10
2-Chloronaphthalene	<99	<2.1	<1.9	<2.0	<21	<21	<19	<480	<1.9
4-Chlorophenyl phenyl ether	<220	<4.7	<4.2	<4.3	<47	<46	<42	<1,100	<4.2
Chrysene	<130	<2.8	<2.5	<2.6	<28	<27	<25	<630	<2.5
Dibenzo (a,h) anthracene	<130	<11	<10	<10	<110	<27	<25	<630	<10
1,2-Dichlorobenzene	**241**	<2.1	**2.54**	**4.59**	**769**	**5,770**	**1,890**	**3350**	<1.9
1,3-Dichlorobenzene	<99	<2.1	**2.11**	<2.0	<21	<21	<19	<480	<1.9
1,4-Dichlorobenzene	<230	**10.2**	**18.2**	**25.4**	**64.8**	<48	**75.0**	<1,100	<4.4
3,3-Dichlorobenzidine	<859	<18	<17	<17	<180	<179	<165	<4130	<17
Diethyl phthalate	<520	<11	<10	<10	<110	<110	<100	<2,500	<10
Dimethyl phthalate	<260	<11	<10	<10	<110	<110	<100	<1300	<10
Di-n-butyl phthalate	<520	<11	<10	<10	<110	<110	<100	<2,500	<10
2,4-Dinitrotoluene	<300	<6.3	<5.7	<5.9	<63	<62	<57	<1,400	<5.7
2,6-Dinitrotoluene	<99	<2.1	<1.9	<2.0	<21	<21	<19	<480	<1.9
Di-n-octyl phthalate	<520	<11	<10	<10	<110	<110	<100	<2,500	<10
1,2-Diphenylhydrazine	<520	<11	<10	<10	<110	<110	<100	<2,500	<10
Fluoranthene	<110	<2.4	<2.2	<2.3	<24	<24	<22	<550	<2.2
Fluorene	<99	<2.1	<1.9	<2.0	<21	<21	<19	<480	<1.9
Hexachlorobenzene	<99	<2.1	<1.9	<2.0	<21	<21	<19	<480	<1.9
Hexachlorobutadiene	<47	<1.0	<0.90	<.93	<10	<9.8	<9.0	<230	<0.90
Hexachlorocyclopentadiene	<520	<11	<10	<10	<110	<110	<100	<2,500	<10
Hexachloroethane	<83	<1.8	<1.6	<1.6	<18	<17	<16	<400	<1.6
Indeno (1,2,3-c,d) pyrene	<190	<5.2	<4.7	<4.8	<52	<40	<37	<930	<4.7
Isophorone	<110	<2.4	<2.2	<2.3	<24	<24	<22	<550	<2.2
Naphthalene	<83	<1.8	<1.6	<1.6	<18	<17	<16	<400	<1.6
Nitrobenzene	**282**	<2.1	<1.9	<2.0	<21	**46.3**	<19	<480	<1.9
n-Nitrosodimethylamine	<520	<11	<10	<10	<110	<110	<100	<2,500	<10
n-Nitrosodi-n-propylamine	<520	<11	<10	<10	<110	<110	<100	<2,500	<10
n-Nitrosodiphenylamine	<99	<2.1	<1.9	<2.0	<21	<21	<19	<480	<1.9
Phenanthrene	<280	<6.0	<5.4	<5.6	<60	<59	<54	<1,400	<5.4
Pyrene	<99	<2.1	<1.9	<2.0	<21	<21	<19	<480	<1.9
1,2,4-Trichlorobenzene	<99	<2.1	<1.9	<2.0	<21	**44.9**	<19	<480	<1.9
Sub Total 1	523	10	23	30	834	5,861	1,965	3,350	0

See last page for footnotes.

Table 3. Summary of Base/Neutral Compounds in Ground Water, Krummrich Plant, Sauget, Illinois.

Well Number:	GM-106	P-1	P-1	P-2	P-2	P-2	P-2	P-2	
Date:	11/92	3/87	11/87	11/87	11/89	11/90	11/91	11/92	[illegible]
Laboratory:	ETC	ETC	ETC	ETC	ETC	ETC	ETC	ETC	ETC
Miscellaneous Base/Neutral Extractable Organic Compounds concentrations are in ug/L									
2,4-and 3,4-Dinitrochlorobenzene	<520	NA	<10	<10	<110	<110	<100	<2,500	<10
2-Nitroaniline	<520	<11	<10	<10	<110	<110	<100	<100	<10
4-Nitroaniline	<520	<11	<10	<10	<110	<110	<100	<2,500	<10
2-Nitrochlorobenzene	**20938**	NA	<10	<10	<110	**52,600**	**179**	<2,500	<10
3-Nitrochlorobenzene	NA	NA	NA	NA	NA	NA	**865**	NA	NA
4-Nitrochlorobenzene	**5365**	NA	<10	<10	<110	**98,000**	<100	<2,500	<10
4-Nitrodiphenylamine	<520	NA	<10	<10	<110	<110	<100	<2,500	<10
Triphenyl phosphate	NA	NA	<10	<10	<110	<110	<100	NA	<10
2,3,7,8-Tetrachloro-dibenzo-p-dioxin	NA	NA	NA	NA	NA	NA	NA	NA	NA
2-Nitrobiphenyl	NA	NA	NA	NA	<110	NA	NA	NA	NA
4-Nitrobiphenyl	NA	NA	NA	NA	<110	NA	NA	NA	NA
Benzyl alcohol	NA	<11	NA	NA	NA	NA	NA	NA	NA
Aniline	**8780**	<11	NA	NA	**35,000**	**2,400**	**19,400**	**15,800**	NA
4-Chloroaniline	**18,600**	<11	NA	NA	NA	NA	**50,400**	**90,800**	NA
2-Methylnaphtalene	NA	<11	NA	NA	NA	NA	NA	NA	NA
N-nitroaniline	NA	<11	NA	NA	NA	NA	NA	NA	NA
Dibenzofuran	NA	<11	NA	NA	NA	NA	NA	NA	NA
3-Chloroaniline	<520	NA	NA	NA	NA	NA	**57,200**	<2,500	NA
2-Chloroaniline	**78,229**	NA	NA	NA	NA	NA	**72,000**	**92,100**	NA
Sub Total 2	131,912	0	0	0	35,000	153,000	200,044	198,700	0
Total Base/Neutral Compounds	132,435	10	23	30	35,834	158,861	202,009	202,050	0

See last page for footnotes.

Table 3. Summary of Base/Neutral Compounds in Ground Water, Krummrich Plant, Sauget, Illinois.

Well Number:	P-6	P-6	P-6	P-6	P-6	P-7	P-7	P-7	P-7
Date:	11/87	11/89	11/90	11/91	11/92	12/86	3/87	5/87	11/87
Laboratory:	ETC	ETC	ETC	ETC	ETC	ETC	ETC	ETC	ETC
USEPA Priority Pollutant Base/Neutral Extractable Organic Compounds concentrations are in ug/L									
Acenaphthene	<1.9	<2.0	<1.9	<1.9	<1.9	<1.9	<2.1	<38	<1.9
Acenapthylene	<3.5	<3.6	<3.5	<3.5	<3.5	<3.5	<3.8	<70	<3.6
Anthracene	<1.9	<2.0	<1.9	<1.9	<1.9	<1.9	<2.1	<38	<1.9
Benzidine	<44	<46	<44	<44	<44	<44	<48	<880	<45
Benzo (a) anthracene	<7.8	<8.1	<7.8	<7.9	<7.8	<7.8	<8.6	<160	<8.0
Benzo (a) pyrene	<2.5	<2.6	<2.5	<2.5	<2.5	<2.5	<2.7	<50	<2.6
Benzo (b) fluoroanthene	<10	<5.0	<4.8	<4.8	<4.8	<4.8	<11	<200	<10
Benzo (ghi) perylene	<4.1	<4.3	<4.1	<4.1	<4.1	<4.1	<4.5	<82	<4.2
Benzo (k) fluoranthene	<3.5	<2.6	<2.5	<2.5	<2.5	<2.5	<3.8	<70	<3.6
Bis (2-chloroethoxy) methane	<5.3	<5.5	<5.3	,5.4	<5.3	<5.3	<5.8	<110	<5.4
Bis (2-chloroethyl) ether	<5.7	<5.9	<5.7	<5.8	<5.7	<5.7	<6.3	<110	<5.8
Bis (2-chloroisopropyl) ether	<5.7	<5.9	<5.7	<5.8	<5.7	<5.7	<6.3	<110	<5.8
Bis (2-ethylhexyl) phthalate	<10	<10	<10	<10	<10	<2.5	<11	<200	<10
4-Bromophenyl phenyl ether	<1.9	<2.0	<1.9	<1.9	<1.9	<1.9	<2.1	<38	<1.9
Butyl benzyl phthalate	<10	<10	<10	<10	<10	<2.5	<11	<200	<10
2-Chloronaphthalene	<1.9	<2.0	<1.9	<1.9	<1.9	<1.9	**940**	<38	<1.9
4-Chlorophenyl phenyl ether	<4.2	<4.4	<4.2	<4.2	<4.2	<4.2	<4.6	<84	<4.3
Chrysene	<2.5	<2.6	<2.5	<2.5	<2.5	<2.5	<2.7	<50	<2.6
Dibenzo (a,h) anthracene	<10	<10	<2.5	<2.5	<2.5	<2.5	<11	<200	<10
1,2-Dichlorobenzene	**2.82**	**44.6**	**33.3**	**11.0**	**9.8**	**88.1**	**346**	**190**	**106**
1,3-Dichlorobenzene	<1.9	<2.0	<1.9	<1.9	<1.9	**2**	**7.00**	<38	**2.29**
1,4-Dichlorobenzene	<4.4	**53.4**	**49.9**	**16.7**	**14.1**	**154**	**585**	**321**	**148**
3,3-Dichlorobenzidine	<17	<17	<16.5	<16.7	<16.5	<16.5	<18.7	<330	<17
Diethyl phthalate	<10	<10	<10	<10	<10	<1.9	<11	<200	<10
Dimethyl phthalate	<10	<10	<10	<10	<5.0	<1.6	<11	<200	<10
Di-n-butyl phthalate	<10	<10	<10	<10	<10	<2.5	<11	<200	<10
2,4-Dinitrotoluene	<5.7	<5.9	<5.7	<5.8	<5.7	<5.7	<6.3	<110	<5.8
2,6-Dinitrotoluene	<1.9	<2.0	<1.9	<1.9	<1.9	<1.9	<2.1	<38	<1.9
Di-n-octyl phthalate	<10	<10	<10	<10	<10	<2.5	<11	<200	<10
1,2-Diphenylhydrazine	<10	<10	<10	<10	<10	<10	<11	<200	<10
Fluoranthene	<2.2	<2.3	<2.2	<2.2	<2.2	<2.2	<2.4	<44	<2.2
Fluorene	<1.9	<2.0	<1.9	<1.9	<1.9	<1.9	<2.1	<38	<1.9
Hexachlorobenzene	<1.9	<2.0	<1.9	<1.9	<1.9	<1.9	<2.1	<38	<1.9
Hexachlorobutadiene	<0.90	<.94	<90	<.91	<.90	<0.9	<.99	<18	<.92
Hexachlorocyclopentadiene	<10	<10	<10	<10	<10	<10	<11	<200	<10
Hexachloroethane	<1.6	<1.7	<1.6	<1.6	<1.6	<1.6	<1.8	<32	<1.6
Indeno (1,2,3-c,d) pyrene	<4.7	<4.9	<3.7	<3.7	<3.7	<3.7	<5.2	<94	<4.8
Isophorone	<2.2	<2.3	<2.2	<2.2	<2.2	<2.2	<2.4	<44	<2.2
Naphthalene	<1.6	<1.7	<1.6	<1.6	<1.6	<1.6	**7.95**	<32	<1.6
Nitrobenzene	<1.9	<2.0	<1.9	<1.9	<1.9	**357**	**113**	**286**	<1.9
n-Nitrosodimethylamine	<10	<10	<10	<10	<10	<10	<11	<200	<10
n-Nitrosodi-n-propylamine	<10	<10	<10	<10	<10	<10	<11	<200	<10
n-Nitrosodiphenylamine	<1.9	<2.0	<1.9	<1.9	<1.9	<1.9	<2.1	<38	<1.9
Phenanthrene	<5.4	<5.6	<5.4	<5.5	<5.4	<5.4	<5.9	<110	<5.5
Pyrene	<1.9	<2.0	<1.9	<1.9	<1.9	<1.9	<2.1	<38	<1.9
1,2,4-Trichlorobenzene	<1.9	<2.0	<1.9	<1.9	<1.9	**4.8**	**33.4**	<38	<1.9
Sub Total 1	3	98	83	28	24	606	2,032	797	256

See last page for footnotes.

Table 3. Summary of Base/Neutral Compounds in Ground Water, Krummrich Plant, Sauget, Illinois.

Well Number:	P-6	P-6	P-6	P-6	P-6	P-7	P-7	P-7	
Date:	11/87	11/89	11/90	11/91	11/92	12/86	3/87	5/87	
Laboratory:	ETC	ETC	ETC	ETC	ETC	ETC	ETC	ETC	ETC
Miscellaneous Base/Neutral Extractable Organic Compounds concentrations are in ug/L									
2,4-and 3,4-Dinitrochlorobenzene	<10	<10	<10	<10	<10	<10	NA	<200	<10
2-Nitroaniline	<10	<10	<10	<10	<10	<10	<11	<200	<10
4-Nitroaniline	<10	<10	<10	<10	<10	**52**	**62.2**	<200	**11.3**
2-Nitrochlorobenzene	<10	<10	<10	<10	<10	**27,000**	NA	**40,800**	**22,400**
3-Nitrochlorobenzene	NA	NA	NA	<10	NA	NA	NA	NA	NA
4-Nitrochlorobenzene	<10	<10	<10	<10	<10	**8,590**	NA	**11,900**	**5,230**
4-Nitrodiphenylamine	<10	<10	<10	<10	<10	**202**	NA	<200	**160**
Triphenyl phosphate	<10	<10	<10	<10	NA	<10	NA	<200	<10
2,3,7,8-Tetrachloro-dibenzo-p-dioxin	NA	NA	NA	NA	NA	NA	NA	NA	NA
2-Nitrobiphenyl	NA	<10	NA	NA	NA	NA	NA	NA	NA
4-Nitrobiphenyl	NA	<10	NA	NA	NA	NA	NA	NA	NA
Benzyl alcohol	NA	NA	NA	NA	NA	NA	**171**	NA	NA
Aniline	NA	**10,200**	**95.6**	<10	<10	NA	**6,360**	NA	NA
4-Chloroaniline	NA	NA	NA	**1,670**	**56**	NA	**16,000**	NA	NA
2-Methylnaphtalene	NA	NA	NA	NA	NA	NA	<11	NA	NA
N-nitroaniline	NA	NA	NA	NA	NA	NA	<11	NA	NA
Dibenzofuran	NA	NA	NA	NA	NA	NA	<11	NA	NA
3-Chloroaniline	NA	NA	NA	<10	<10	NA	NA	NA	NA
2-Chloroaniline	NA	NA	NA	**3,880**	**688**	NA	NA	NA	NA
Sub Total 2	0	10,200	96	5,450	744	35,844	21,593	52,700	27,801
Total Base/Neutral Compounds	3	10,298	179	5,478	768	36,450	23,626	53,497	28,058

See last page for footnotes.

Table 3. Summary of Base/Neutral Compounds in Ground Water, Krummrich Plant, Sauget, Illinois.

Well Number:	P-7	P-7	P-7	P-7	P-7	P-7	P-7	P-8	P-8
Date:	5/88	11/88	3/89	11/89	11/90	11/91	11/92	11/87	3/89
Laboratory:	ETC	ETC	ETC	ETC	ETC	ETC	ETC	ETC	ETC
USEPA Priority Pollutant Base/Neutral Extractable Organic Compounds concentrations are in ug/L									
Acenaphthene	<220	<20	<20	<22	<38	<2.0	<480	<190	<970
Acenapthylene	<400	<36	<36	<41	<70	<3.6	<880	<350	<1800
Anthracene	<220	<20	<20	<22	<38	<2.0	<480	<190	<970
Benzidine	<5,000	<450	<450	<520	<880	<45	<1,1000	<4400	<22000
Benzo (a) anthracene	<890	<80	<80	<92	<160	<8.0	<2000	<790	<4000
Benzo (a) pyrene	<290	<26	<26	<29	<50	<2.6	<630	<250	<1300
Benzo (b) fluoroanthene	<550	<49	<49	<56	<96	<4.9	<1200	<1,000	<2,400
Benzo (ghi) perylene	<470	<42	<42	<48	<82	<4.2	<1,000	<410	<2100
Benzo (k) fluoranthene	<290	<26	<26	<29	<50	<2.6	<630	<350	<1300
Bis (2-chloroethoxy) methane	<610	<55	<55	<62	<110	<5.5	<1300	<530	<2700
Bis (2-chloroethyl) ether	<650	<59	<59	<67	<110	<5.9	<1,400	<570	<2900
Bis (2-chloroisopropyl) ether	<650	<59	<59	<67	<110	<5.9	<1,400	<580	<2900
Bis (2-ethylhexyl) phthalate	<1,100	**188**	<100	<120	<200	<10	<2,500	<1,000	<5100
4-Bromophenyl phenyl ether	<220	<20	<20	<22	<38	<2.0	<480	<190	<970
Butyl benzyl phthalate	<1,100	<100	<100	<120	<200	<10	<2,500	<1,000	<5100
2-Chloronaphthalene	<220	<20	<20	<22	<38	<2.0	<480	<190	<970
4-Chlorophenyl phenyl ether	<480	<43	<43	<49	<84	<4.3	<1,100	<420	<2100
Chrysene	<290	<26	<26	<29	<50	<2.6	<630	<250	<1300
Dibenzo (a,h) anthracene	<1,100	<100	<100	<120	<50	<2.6	<630	<1,000	<5100
1,2-Dichlorobenzene	**424**	**949**	**250**	**781**	**603**	**396**	<480	<190	<970
1,3-Dichlorobenzene	<220	<20	<20	<22	<38	**8.68**	<480	<190	<970
1,4-Dichlorobenzene	**797**	**1,680**	**441**	**1,350**	**996**	**572**	<1,100	<440	<2200
3,3-Dichlorobenzidine	<1,900	<175	<170	<190	<330	<17.0	<4170	<1700	<8400
Diethyl phthalate	<1,100	<100	<100	<120	<200	<10	<2,500	<1,000	<5100
Dimethyl phthalate	<1,100	<100	<100	<120	<200	<10	<1300	<1,000	<5100
Di-n-butyl phthalate	<1,100	<100	<100	<120	<200	<10	<2,500	<1,000	<5100
2,4-Dinitrotoluene	<650	<59	<59	<67	<110	<5.9	<1,400	<570	<2900
2,6-Dinitrotoluene	<220	<20	<20	<22	<38	<2.0	<480	<190	<970
Di-n-octyl phthalate	<1,100	<100	<100	<120	<200	<10	<2,500	<1,000	<5100
1,2-Diphenylhydrazine	<1,100	<100	<100	<120	<200	<10	<2,500	<1,000	<5100
Fluoranthene	<250	<23	<23	<26	<44	<2.3	<560	<220	<1,100
Fluorene	<220	<20	<20	<22	<38	<2.0	<480	<190	<970
Hexachlorobenzene	<220	<20	<20	<22	<38	<2.0	<480	<190	<970
Hexachlorobutadiene	<100	<9.3	<9.3	<11	<18	<.93	<230	<90	<460
Hexachlorocyclopentadiene	<1,100	<100	<100	<120	<200	<10	<2,500	<1,000	<5100
Hexachloroethane	<180	<16	<16	<19	<32	<1.6	<400	<160	<820
Indeno (1,2,3-c,d) pyrene	<540	<48	<48	<55	<74	<3.8	<930	<470	<2,400
Isophorone	<250	<23	<23	<26	<44	<2.3	<560	<220	<1,100
Naphthalene	<180	<16	<16	<19	<32	**7.73**	<400	<160	<820
Nitrobenzene	**6,770**	**516**	**473**	**1,760**	**1,040**	**169**	<480	<190	**2,220**
n-Nitrosodimethylamine	<1,100	<100	<100	<120	<200	<10	<2,500	<1,000	<5100
n-Nitrosodi-n-propylamine	<1,100	<100	<100	<120	<200	<10	<2,500	<1,000	<5100
n-Nitrosodiphenylamine	<220	<20	<20	<22	<38	<2.0	<480	<190	<970
Phenanthrene	<620	<56	<56	<64	<110	<5.6	<1,400	<540	<2800
Pyrene	<220	<20	<20	<22	<38	<2.0	<480	<190	<970
1,2,4-Trichlorobenzene	<220	**117**	<20	**46.6**	**39.2**	**37.7**	<480	<190	<970
Sub Total 1	7,991	3,350	1,164	3,938	2,678	1,191	0	0	2,220

See last page for footnotes.

Table 3. Summary of Base/Neutral Compounds in Ground Water, Krummrich Plant, Sauget, Illinois.

Well Number:	P-7	P-7	P-7	P-7	P-7	P-7	P-7	P-8	
Date:	5/88	11/88	3/89	11/89	11/90	11/91	11/92	11/87	~~3/89~~
Laboratory:	ETC	ETC	ETC	ETC	ETC	ETC	ETC	ETC	ETC
Miscellaneous Base/Neutral Extractable Organic Compounds concentrations are in ug/L									
2,4-and 3,4-Dinitrochlorobenzene	<1,100	NA	<100	<120	<200	<10	<2,500	<1,000	<5100
2-Nitroaniline	<1,100	NA	<100	<120	<200	<10	<2,500	<1,000	<5100
4-Nitroaniline	<1,100	NA	<100	<120	<200	<10	<2,500	<1,000	<5100
2-Nitrochlorobenzene	**64,900**	NA	**62,600**	**357,000**	**196,000**	**29,700**	**8110**	**55,100**	**57,100**
3-Nitrochlorobenzene	NA	NA	NA	NA	NA	**114,000**	NA	NA	NA
4-Nitrochlorobenzene	**29,100**	NA	**19,400**	**90,600**	**48,100**	**4,900**	<2,500	**32,400**	**14,200**
4-Nitrodiphenylamine	<1,100	NA	<100	**627**	<200	<10	<2,500	<1,000	<5100
Triphenyl phosphate	<1,100	NA	NA	<120	<200	<10	NA	<1,000	<5100
2,3,7,8-Tetrachloro-dibenzo-p-dioxin	NA	NA	NA	NA	NA	NA	NA	NA	NA
2-Nitrobiphenyl	<1,100	NA	NA	<120	NA	NA	NA	NA	NA
4-Nitrobiphenyl	<1,100	NA	NA	<120	NA	NA	NA	NA	NA
Benzyl alcohol	NA	NA	NA	NA	NA	NA	NA	NA	<5100
Aniline	NA	NA	NA	**22,300**	**7,230**	**3,100**	**3190**	NA	**155,000**
4-Chloroaniline	NA	NA	NA	NA	NA	**12,500**	**23,600**	NA	**49,100**
2-Methylnaphtalene	NA	NA	NA	NA	NA	NA	NA	NA	NA
N-nitroaniline	NA	NA	NA	NA	NA	NA	NA	NA	NA
Dibenzofuran	NA	NA	NA	NA	NA	NA	NA	NA	NA
3-Chloroaniline	NA	NA	NA	NA	NA	**3,110**	<2,500	NA	NA
2-Chloroaniline	NA	NA	NA	NA	NA	**58,900**	**86,600**	NA	NA
Sub Total 2	94,000	0	82,000	470,527	251,330	226,210	121,500	87,500	275,400
Total Base/Neutral Compounds	101,991	3,350	83,164	474,465	254,008	227,401	121,500	87,500	277,620

See last page for footnotes.

Table 3. Summary of Base/Neutral Compounds in Ground Water, Krummrich Plant, Sauget, Illinois.

Well Number:	P-8	P-8	P-8	P-8	P-10	P-11	P-11	P-12	P-13
Date:	11/89	11/90	11/91	11/92	11/87	3/87	11/87	11/87	11/87
Laboratory:	ETC	ETC	ETC	ETC	ETC	ETC	ETC	ETC	ETC
USEPA Priority Pollutant Base/Neutral Extractable Organic Compounds concentrations are in ug/L									
Acenaphthene	<1,100	<19	<38	<97	<190	<2.1	<2.0	<1.9	<1.9
Acenapthylene	<2000	<36	<71	<180	<350	<3.8	<3.6	<3.5	<3.5
Anthracene	<1,100	<19	<38	<97	<190	<2.1	<2.0	<1.9	<1.9
Benzidine	<2,5000	<450	<890	<2200	<4400	<48	<45	<44	<44
Benzo (a) anthracene	<4400	<80	<160	<400	<790	<8.6	<8.0	<7.8	<7.8
Benzo (a) pyrene	<1,400	<26	<51	<130	<250	<2.7	<2.6	<2.5	<2.5
Benzo (b) fluoroanthene	<2700	<49	<97	<240	<1,000	<11	<10	<10	<10
Benzo (ghi) perylene	<2300	<42	<83	<210	<410	<4.5	<4.2	<4.1	<4.1
Benzo (k) fluoranthene	<1,400	<26	<51	<130	<350	<3.8	<3.6	<3.5	<3.5
Bis (2-chloroethoxy) methane	<3,000	<54	<110	<270	<540	<5.8	<5.5	<5.3	<5.3
Bis (2-chloroethyl) ether	<3200	<58	<120	<290	<580	<6.3	<5.9	<5.7	<5.7
Bis (2-chloroisopropyl) ether	<3200	<58	<120	<290	<580	<6.3	<5.9	<5.7	<5.7
Bis (2-ethylhexyl) phthalate	<5700	<100	<200	<510	<1,000	<11	<10	<10	<10
4-Bromophenyl phenyl ether	<1,100	<19	<38	<97	<190	<2.1	<2.0	<1.9	<1.9
Butyl benzyl phthalate	<5700	<100	<200	<510	<1,000	<11	<10	<10	<10
2-Chloronaphthalene	<1,100	<19	<38	<97	<190	<2.1	<2.0	<1.9	<1.9
4-Chlorophenyl phenyl ether	<2,400	<43	<85	<210	<420	<4.6	<4.3	<4.2	<4.2
Chrysene	<1,400	<26	<51	<130	<250	<2.7	<2.6	<2.5	<2.5
Dibenzo (a,h) anthracene	<5700	<26	<51	<130	<1,000	<11	<10	<10	<10
1,2-Dichlorobenzene	<1,100	**153**	**172**	**155**	<190	**5.4**	**6.00**	**1,790**	<1.9
1,3-Dichlorobenzene	<1,100	<19	<38	<97	<190	<2.1	<2.0	<1.9	<1.9
1,4-Dichlorobenzene	<2,500	**265**	**230**	**304**	**449**	**82.3**	**111**	**252**	**22.5**
3,3-Dichlorobenzidine	<9400	<168	<333	<842	<1700	<18.7	<17	<17	<17
Diethyl phthalate	<5700	<100	<200	<510	<1,000	<11	<10	<10	<10
Dimethyl phthalate	<5700	<100	<200	<260	<1,000	<11	<10	<10	<10
Di-n-butyl phthalate	<5700	<100	<200	<510	<1,000	<11	<10	<10	<10
2,4-Dinitrotoluene	<3200	<58	<120	<290	<580	<6.3	<5.9	<5.7	<5.7
2,6-Dinitrotoluene	<1,100	<19	<38	<97	<190	<2.1	<2.0	<1.9	<1.9
Di-n-octyl phthalate	<5700	<100	<200	<510	<1,000	<11	<10	<10	<10
1,2-Diphenylhydrazine	<5700	<100	<200	<510	<1,000	<11	<10	<10	<10
Fluoranthene	<1200	<22	<44	<110	<220	<2.4	<2.3	<2.2	<2.2
Fluorene	<1,100	<19	<38	<97	<190	<2.1	<2.0	<1.9	<1.9
Hexachlorobenzene	<1,100	<19	<38	<97	<190	<2.1	<2.0	<1.9	<1.9
Hexachlorobutadiene	<510	<9.2	<18	<46	<91	<.99	<.93	<0.90	<0.90
Hexachlorocyclopentadiene	<5700	<100	<200	<510	<1,000	<11	<10	<10	<10
Hexachloroethane	<910	<16	<32	<82	<160	<1.8	<1.6	<1.6	<1.6
Indeno (1,2,3-c,d) pyrene	<2700	<38	<75	<190	<470	<5.2	<4.8	<4.7	<4.7
Isophorone	<1200	<22	<44	<110	<220	<2.4	<2.3	<2.2	<2.2
Naphthalene	<910	<16	<32	<82	<160	<1.8	<1.6	<1.6	<1.6
Nitrobenzene	**4,270**	**2,470**	**1,940**	**3600**	<190	<2.1	<2.0	<1.9	<1.9
n-Nitrosodimethylamine	<5700	<100	<200	<510	<1,000	<11	<10	<10	<10
n-Nitrosodi-n-propylamine	<5700	<100	<200	<510	<1,000	<11	<10	<10	<10
n-Nitrosodiphenylamine	<1,100	<19	<38	<97	<190	<2.1	<2.0	<1.9	**9.00**
Phenanthrene	<3100	<55	<110	<280	<550	<5.9	<5.6	<5.4	<5.4
Pyrene	<1,100	<19	<38	<97	<190	<2.1	<2.0	<1.9	<1.9
1,2,4-Trichlorobenzene	<1,100	<19	<38	<97	<190	<2.1	<2.0	<1.9	<1.9
Sub Total 1	4,270	2,888	2,342	4,059	449	88	117	2,042	32

See last page for footnotes.

Table 3. Summary of Base/Neutral Compounds in Ground Water, Krummrich Plant, Sauget, Illinois.

Well Number:	P-8	P-8	P-8	P-8	P-10	P-11	P-11	P-12	
Date:	11/89	11/90	11/91	11/92	11/87	3/87	11/87	11/87	
Laboratory:	ETC	ETC	ETC	ETC	ETC	ETC	ETC	ETC	ETC
Miscellaneous Base/Neutral Extractable Organic Compounds concentrations are in ug/L									
2,4-and 3,4-Dinitrochlorobenzene	<5700	<100	<200	<510	<1,000	NA	<10	<10	<10
2-Nitroaniline	<5700	<100	<200	<510	<1,000	<11	<10	<10	<10
4-Nitroaniline	<5700	<100	<200	<510	<1,000	<11	<10	<10	<10
2-Nitrochlorobenzene	**463,000**	**180,000**	**171,000**	**105,000**	<1,000	NA	<10	<10	<10
3-Nitrochlorobenzene	NA	NA	**461,000**	NA	NA	NA	NA	NA	NA
4-Nitrochlorobenzene	**185,000**	**88,500**	**21,500**	**14,500**	<1,000	NA	<10	<10	<10
4-Nitrodiphenylamine	<5700	<100	<200	<510	<1,000	NA	<10	<10	<10
Triphenyl phosphate	<5700	<100	<200	NA	<1,000	NA	<10	<10	<10
2,3,7,8-Tetrachloro-dibenzo-p-dioxin	NA	NA	NA	NA	NA	NA	NA	NA	NA
2-Nitrobiphenyl	<5700	NA	NA	NA	NA	NA	NA	NA	NA
4-Nitrobiphenyl	<5700	NA	NA	NA	NA	<11	NA	NA	NA
Benzyl alcohol	NA	NA	NA	NA	NA	<11	NA	NA	NA
Aniline	**522,000**	**160,000**	**163,000**	**62,700**	NA	<11	NA	NA	NA
4-Chloroaniline	NA	NA	**105,000**	**87,300**	NA	**4,020**	NA	NA	NA
2-Methylnaphtalene	NA	NA	NA	NA	NA	<11	NA	NA	NA
N-nitroaniline	NA	NA	NA	NA	NA	<11	NA	NA	NA
Dibenzofuran	NA	NA	NA	NA	NA	<11	NA	NA	NA
3-Chloroaniline	NA	NA	**22,500**	<510	NA	NA	NA	NA	NA
2-Chloroaniline	NA	NA	**329,000**	**191,000**	NA	NA	NA	NA	NA
Sub Total 2	1,170,000	428,500	1,273,000	460,500	0	4,020	0	0	0
Total Base/Neutral Compounds	1,174,270	431,388	1,275,342	464,559	449	4,108	117	2,042	32

See last page for footnotes.

Table 3. Summary of Base/Neutral Compounds in Ground Water, Krummrich Plant, Sauget, Illinois.

Well Number:	P-13	P-13	P-13	P-13	P-14	P-14	P-14	P-14	P-14
Date:	11/89	11/90	11/91	11/92	11/87	11/89	11/90	11/91	11/92
Laboratory:	ETC	ETC	ETC	ETC	ETC	ETC	ETC	ETC	ETC
USEPA Priority Pollutant Base/Neutral Extractable Organic Compounds concentrations are in ug/L									
Acenaphthene	<200	<2.0	<390	<20	<1.9	<2.0	<2.0	<1.9	<1.9
Acenapthylene	<370	<3.8	<710	<36	<3.5	<3.6	<3.8	<3.6	<3.5
Anthracene	<200	<2.0	<390	<20	<1.9	<2.0	<2.0	<1.9	<1.9
Benzidine	<4600	<47	<9000	<450	<44	<45	<47	<45	<44
Benzo (a) anthracene	<820	<8.4	<1600	<80	<7.8	<8.0	<8.4	<8.0	<7.8
Benzo (a) pyrene	<260	<2.7	<510	<26	<2.5	<2.6	<2.7	<2.6	<2.5
Benzo (b) fluoroanthene	<510	<5.2	<980	<49	<10	<4.9	<5.2	<4.9	<4.8
Benzo (ghi) perylene	<430	<4.4	<840	<42	<4.1	<4.2	<4.4	<4.2	<4.1
Benzo (k) fluoranthene	<260	<2.7	<510	<26	<3.5	<2.6	<2.7	<2.6	<2.5
Bis (2-chloroethoxy) methane	<560	<5.7	<1,100	<55	<5.3	<5.5	<5.7	<5.4	<5.3
Bis (2-chloroethyl) ether	<600	<6.1	<1200	<59	<5.7	<5.9	<6.1	<5.8	<5.7
Bis (2-chloroisopropyl) ether	<600	<6.1	<2000	<59	<5.7	<5.9	<6.1	<5.8	<5.7
Bis (2-ethylhexyl) phthalate	<1,100	<11	<390	<100	<10	<10	<11	<10	<10
4-Bromophenyl phenyl ether	<200	<2.0	<2000	<20	<1.9	<2.0	<2.0	<1.9	<1.9
Butyl benzyl phthalate	<1,100	<11	<390	<100	<10	<10	<11	<10	<10
2-Chloronaphthalene	<200	<2.0	<860	<20	<1.9	<2.0	<2.0	<1.9	<1.9
4-Chlorophenyl phenyl ether	<440	<4.5	<510	<43	<4.2	<4.3	<4.5	<4.3	<4.2
Chrysene	<260	<2.7	<510	<26	<2.5	<2.6	<2.7	<2.6	<2.5
Dibenzo (a,h) anthracene	<1,100	<2.7	<390	<26	<10	<10	<2.7	<2.6	<2.5
1,2-Dichlorobenzene	<200	**6.51**	<390	**31.1**	**22.0**	**20.7**	**29.4**	**18.2**	**14.2**
1,3-Dichlorobenzene	<200	<2.0	<900	<20	<1.9	<2.0	<2.0	<1.9	<1.9
1,4-Dichlorobenzene	<460	**104**	<3370	**398**	**35.7**	**35.5**	**47.3**	**28.7**	**25.2**
3,3-Dichlorobenzidine	<1700	<17.7	<2000	<170	<17	<17	<17.7	<16.8	<16.5
Diethyl phthalate	<1,100	<11	<2000	<100	<10	<10	<11	<10	<10
Dimethyl phthalate	<1,100	<11	<2000	<52	<10	<10	<11	<10	<5.0
Di-n-butyl phthalate	<1,100	<11	<1200	<100	<10	<10	<11	<10	<10
2,4-Dinitrotoluene	<600	<6.1	<390	<59	<5.7	<5.9	<6.1	<5.8	<5.7
2,6-Dinitrotoluene	<200	<2.0	<2000	<20	<1.9	<2.0	<2.0	<1.9	<1.9
Di-n-octyl phthalate	<1,100	<11	<2000	<100	<10	<10	<11	<10	<10
1,2-Diphenylhydrazine	<1,100	<11	<450	<100	<10	<10	<11	<10	<10
Fluoranthene	<230	<2.4	<390	<23	<2.2	<2.3	<2.4	<2.2	<2.2
Fluorene	<200	<2.0	<390	<20	<1.9	<2.0	<2.0	<1.9	<1.9
Hexachlorobenzene	<200	<2.0	<180	<20	<1.9	<2.0	<2.0	<1.9	<1.9
Hexachlorobutadiene	<95	<97	<2000	<9.3	<0.90	<.93	<97	<.92	<.90
Hexachlorocyclopentadiene	<1,100	<11	<330	<100	<10	<10	<11	<10	<10
Hexachloroethane	<170	<1.7	<760	<16	<1.6	<1.6	<1.7	<1.6	<1.6
Indeno (1,2,3-c,d) pyrene	<490	<4.0	<450	<38	<4.7	<4.8	<4.0	<3.8	<3.7
Isophorone	<230	<2.4	<330	<23	<2.2	<2.3	<2.4	<2.2	<2.2
Naphthalene	<170	**7.94**	<390	**38.6**	<1.6	<1.6	<1.7	<1.6	<1.6
Nitrobenzene	<200	<2.0	<2000	<20	<1.9	<2.0	<2.0	<1.9	<1.9
n-Nitrosodimethylamine	<1,100	<11	<2000	<100	<10	<10	<11	<10	<10
n-Nitrosodi-n-propylamine	<1,100	<11	<390	<100	<10	<10	<11	<10	<10
n-Nitrosodiphenylamine	<200	<2.0	<1,100	<20	<1.9	<2.0	<2.0	<1.9	<1.9
Phenanthrene	<570	<5.8	<390	<56	<5.4	<5.6	<5.8	<5.5	<5.4
Pyrene	<200	<2.0	<390	<20	<1.9	<2.0	<2.0	<1.9	<1.9
1,2,4-Trichlorobenzene	<200	<2.0	<2000	<20	<1.9	<2.0	<2.0	<1.9	<1.9
Sub Total 1	0	118	0	468	58	56	77	47	39

See last page for footnotes.

Table 3. Summary of Base/Neutral Compounds in Ground Water, Krummrich Plant, Sauget, Illinois.

Well Number:	P-13	P-13	P-13	P-13	P-14	P-14	P-14	P-14	
Date:	11/89	11/90	11/91	11/92	11/87	11/89	11/90	11/91	[illegible]/92
Laboratory:	ETC	ETC	ETC	ETC	ETC	ETC	ETC	ETC	ETC
Miscellaneous Base/Neutral Extractable Organic Compounds concentrations are in ug/L									
2,4-and 3,4-Dinitrochlorobenzene	<1,100	<11	<2000	<100	<10	<10	<11	<10	<10
2-Nitroaniline	<1,100	<11	<2000	<100	<10	<10	<11	<10	<10
4-Nitroaniline	<1,100	<11	<2000	<100	<10	<10	<11	<10	<10
2-Nitrochlorobenzene	<1,100	<11	<2000	<100	<10	<10	<11	<10	<10
3-Nitrochlorobenzene	NA	NA	<2000	NA	NA	NA	NA	<10	NA
4-Nitrochlorobenzene	<1,100	<11	<2000	<100	<10	<10	<11	<10	<10
4-Nitrodiphenylamine	<1,100	<11	<2000	<100	<10	<10	<11	<10	<10
Triphenyl phosphate	<1,100	<11	<2000	NA	<10	<10	<11	<10	NA
2,3,7,8-Tetrachloro-dibenzo-p-dioxin	NA	NA	NA	NA	NA	NA	NA	NA	NA
2-Nitrobiphenyl	<1,100	NA	NA	NA	NA	<10	NA	NA	NA
4-Nitrobiphenyl	<1,100	NA	NA	NA	NA	<10	NA	NA	NA
Benzyl alcohol	NA	NA	NA	NA	NA	NA	NA	NA	<10
Aniline	**685,000**	**71,600**	**288,000**	**527000**	NA	**11.2**	<11	<10	<10
4-Chloroaniline	NA	NA	**9,970**	**30,700**	NA	NA	NA	<10	**55.6**
2-Methylnaphtalene	NA	NA	NA	NA	NA	NA	NA	NA	NA
N-nitroaniline	NA	NA	NA	NA	NA	NA	NA	NA	NA
Dibenzofuran	NA	NA	NA	NA	NA	NA	NA	NA	NA
3-Chloroaniline	NA	NA	**13,500**	**13000**	NA	NA	NA	<10	<10
2-Chloroaniline	NA	NA	**12,400**	**29000**	NA	NA	NA	**103**	**105**
Sub Total 2	685,000	71,600	323,870	599,700	0	11	0	103	161
Total Base/Neutral Compounds	685,000	71,718	323,870	600,168	58	67	77	150	200

NA Not analyzed.
* Replicate sample.
ETC Environmental Testing and Certification, Edison, New Jersey.
SL Savannah Laboratories and Environmental Testing, Savannah, Georgia.

Table 3. Summary of Base/Neutral Compounds in Ground Water, Krummrich Plant, Sauget, Illinois.

Well Number:	Field Blank	Field Blank	Field Blank	Field Blank	Field Blank	Trip Blank
Date:	3/87	11/90	11/91	11/9/92	11/12/92	3/87
Laboratory:	ETC	ETC	ETC	ETC	ETC	ETC
USEPA Priority Pollutant Base/Neutral Extractable Organic Compounds concentrations are in ug/L						
Acenaphthene	<2.0	<1.9	<1.9	<1.9	<1.9	<2.1
Acenapthylene	<3.7	<3.5	<3.6	<3.5	<3.5	<3.9
Anthracene	<2.0	<1.9	<1.9	<1.9	<1.9	<2.1
Benzidine	<47	<44	<45	<44	<44	<49
Benzo (a) anthracene	<8.3	<7.8	<8.0	<7.9	<7.9	<8.7
Benzo (a) pyrene	<2.7	<2.5	<2.6	<2.5	<2.5	<2.8
Benzo (b) fluoroanthene	<11	<4.8	<4.9	<4.8	<4.8	<11
Benzo (ghi) perylene	<4.4	<4.1	<4.2	<4.1	<4.1	<4.6
Benzo (k) fluoranthene	<3.7	<2.5	<2.6	<2.5	<2.5	<3.9
Bis (2-chloroethoxy) methane	<5.6	<5.3	<5.4	<5.4	<5.4	<5.9
Bis (2-chloroethyl) ether	<6.1	<5.7	<5.8	<5.8	<5.8	<6.3
Bis (2-chloroisopropyl) ether	<6.1	<5.7	<5.8	<5.8	<5.8	<6.3
Bis (2-ethylhexyl) phthalate	<11	<10	<10	<10	<10	<11
4-Bromophenyl phenyl ether	<2.0	<1.9	<1.9	<1.9	<1.9	<2.1
Butyl benzyl phthalate	<11	<10	<10	<10	<10	<11
2-Chloronaphthalene	<2.0	<1.9	<1.9	<1.9	<1.9	<2.1
4-Chlorophenyl phenyl ether	<4.5	<4.2	<4.3	<4.2	<4.2	<4.7
Chrysene	<2.7	<2.5	<2.6	<2.5	<2.5	<2.8
Dibenzo (a,h) anthracene	<11	<2.5	<2.6	<2.5	<2.5	<11
1,2-Dichlorobenzene	<2.0	<1.9	<1.9	<1.9	<1.9	<2.1
1,3-Dichlorobenzene	<2.0	<1.9	<1.9	<1.9	<1.9	<2.1
1,4-Dichlorobenzene	<4.7	<4.4	<4.5	<4.4	<4.4	<4.9
3,3-Dichlorobenzidine	<18	<16.5	<16.8	<16.7	<16.7	<18
Diethyl phthalate	<11	<10	<10	<10	<10	<11
Dimethyl phthalate	<11	<10	<10	<5.1	<5.1	<11
Di-n-butyl phthalate	<11	<10	<10	<10	<10	<11
2,4-Dinitrotoluene	<6.1	<5.7	<5.8	<5.8	<5.8	<6.3
2,6-Dinitrotoluene	<2.0	<1.9	<1.9	<1.9	<1.9	<2.1
Di-n-octyl phthalate	<11	<10	<10	<10	<10	<11
1,2-Diphenylhydrazine	<11	<10	<10	<10	<10	<11
Fluoranthene	<2.3	<2.2	<2.2	<2.2	<2.2	<2.4
Fluorene	<2.0	<1.9	<1.9	<1.9	<1.9	<2.1
Hexachlorobenzene	<2.0	<1.9	<1.9	<1.9	<1.9	<2.1
Hexachlorobutadiene	<.96	<90	<.92	<.91	<.91	<1.0
Hexachlorocyclopentadiene	<11	<10	<10	<10	<10	<11
Hexachloroethane	<1.7	<1.6	<1.6	<1.6	<1.6	<1.8
Indeno (1,2,3-c,d) pyrene	<5.0	<3.7	<3.8	<3.7	<3.7	<5.2
Isophorone	<2.3	<2.2	<2.2	<2.2	<2.2	<2.4
Naphthalene	<1.7	<1.6	<1.6	<1.6	<1.6	<1.8
Nitrobenzene	<2.0	<1.9	<1.9	<1.9	<1.9	<2.1
n-Nitrosodimethylamine	<11	<10	<10	<10	<10	<11
n-Nitrosodi-n-propylamine	<11	<10	<10	<10	<10	<11
n-Nitrosodiphenylamine	<2.0	<1.9	<1.9	<1.9	<1.9	<2.1
Phenanthrene	<5.7	<5.4	<5.5	<5.5	<5.5	<6.0
Pyrene	<2.0	<1.9	<1.9	<1.9	<1.9	<2.1
1,2,4-Trichlorobenzene	<2.0	<1.9	<1.9	<1.9	<1.9	<2.1
Sub Total 1	0	0	0	0	0	0

See last page for footnotes.

Table 3. Summary of Base/Neutral Compounds in Ground Water, Krummrich Plant, Sauget, Illinois.

Well Number:	Field Blank	Field Blank	Field Blank	Field Blank	Field Blank	Trip Blank
Date:	3/87	11/90	11/91	11/9/92	11/12/92	3/87
Laboratory:	ETC	ETC	ETC	ETC	ETC	ETC
Miscellaneous Base/Neutral Extractable Organic Compounds concentrations are in ug/L						
2,4-and 3,4-Dinitrochlorobenzene	NA	<10	NA	NA	NA	NA
2-Nitroaniline	<11	<10	NA	NA	NA	<11
4-Nitroaniline	<11	<10	NA	NA	NA	<11
2-Nitrochlorobenzene	NA	<10	NA	NA	NA	NA
3-Nitrochlorobenzene	NA	NA	NA	NA	NA	NA
4-Nitrochlorobenzene	NA	<10	NA	NA	NA	NA
4-Nitrodiphenylamine	NA	<10	NA	NA	NA	NA
Triphenyl phosphate	NA	<10	NA	NA	NA	NA
2,3,7,8-Tetrachloro-dibenzo-p-dioxin	NA	<10	NA	NA	NA	NA
2-Nitrobiphenyl	NA	NA	NA	NA	NA	NA
4-Nitrobiphenyl	<11	<10	NA	NA	NA	<11
Benzyl alcohol	<11	<10	NA	NA	NA	<11
Aniline	<11	NA	NA	NA	NA	<11
4-Chloroaniline	<11	<10	NA	NA	NA	<11
2-Methylnaphtalene	<11	NA	NA	NA	NA	<11
N-nitroaniline	<11	NA	NA	NA	NA	<11
Dibenzofuran	<11	NA	NA	NA	NA	<11
3-Chloroaniline	NA	NA	NA	NA	NA	NA
2-Chloroaniline	NA	NA	NA	NA	NA	NA
Sub Total 2	0	0	0	0	0	0
Total Base/Neutral Compounds	0	0	0	0	0	0

NA Not analyzed.
* Replicate sample.
ETC Environmental Testing and Certification, Edison, New Jersey.
SL Savannah Laboratories and Environmental Testing, Savannah, Georgia.

APPENDIX E

WATER-TABLE (SHALLOW) ZONE WELLS

INTERMEDIATE ZONE WELLS

DEEP ZONE WELLS

WATER-TABLE (SHALLOW) ZONE WELLS

Figure E-1. Well GM-12A - Concentrations of Benzene and Chlorobenzene vs. Time.

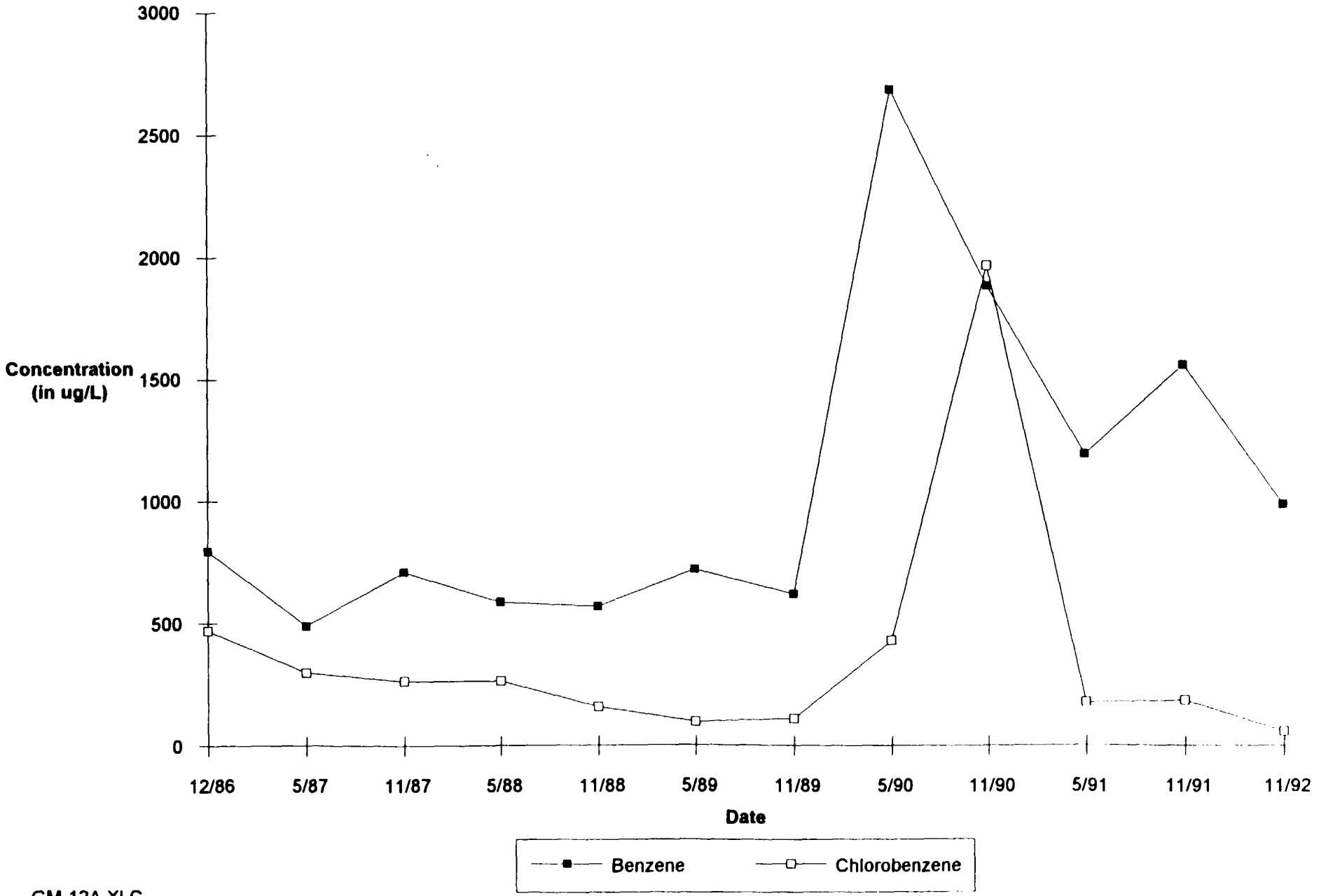

GM-12A.XLC

Figure E-2. Well GM-9A - Concentrations of Benzene and Chlorobenzene vs. Time.

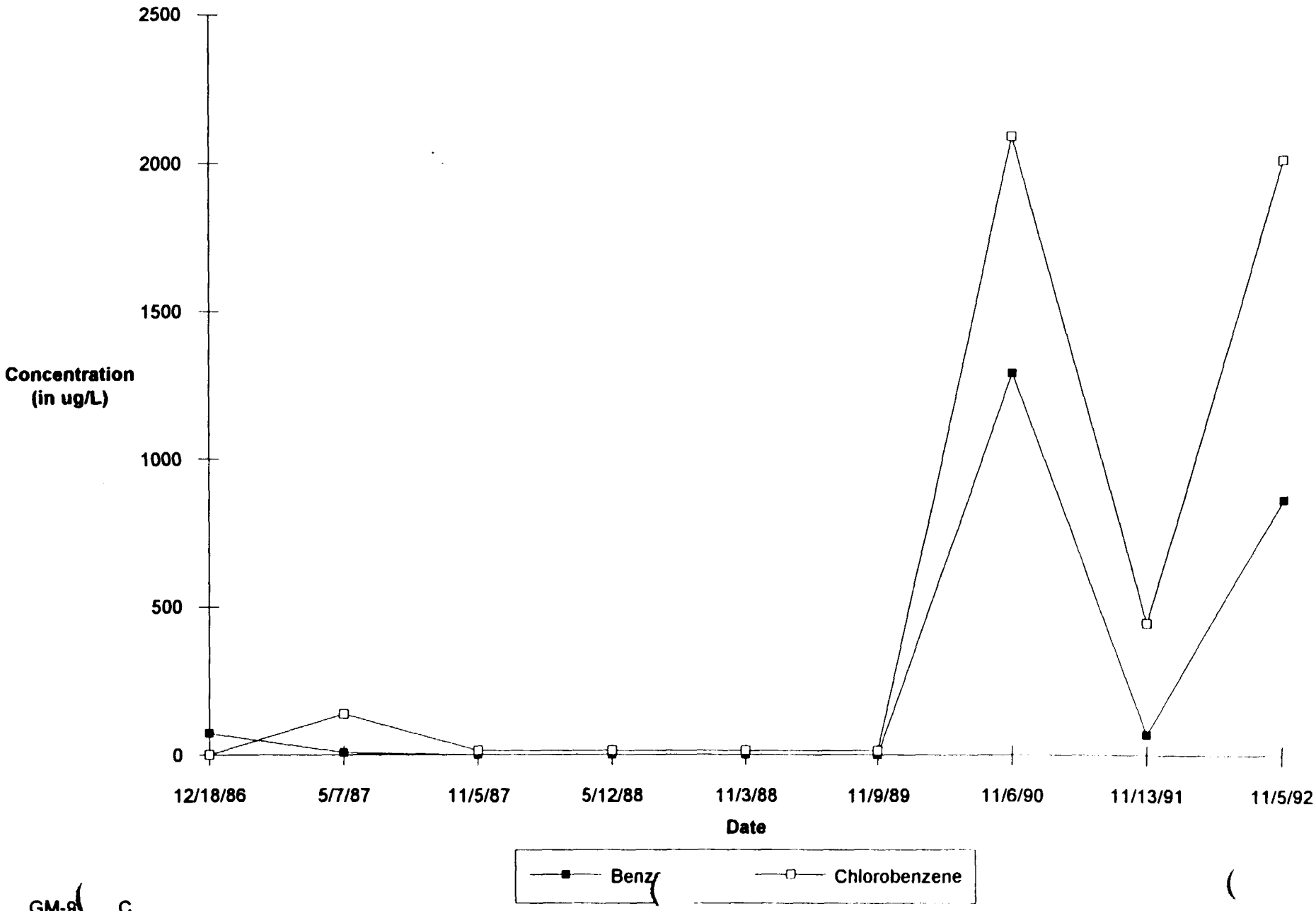

GM-9 C

Figure E-3. Well GM-10A - Concentrations of Benzene and Chlorobenzene vs. Time.

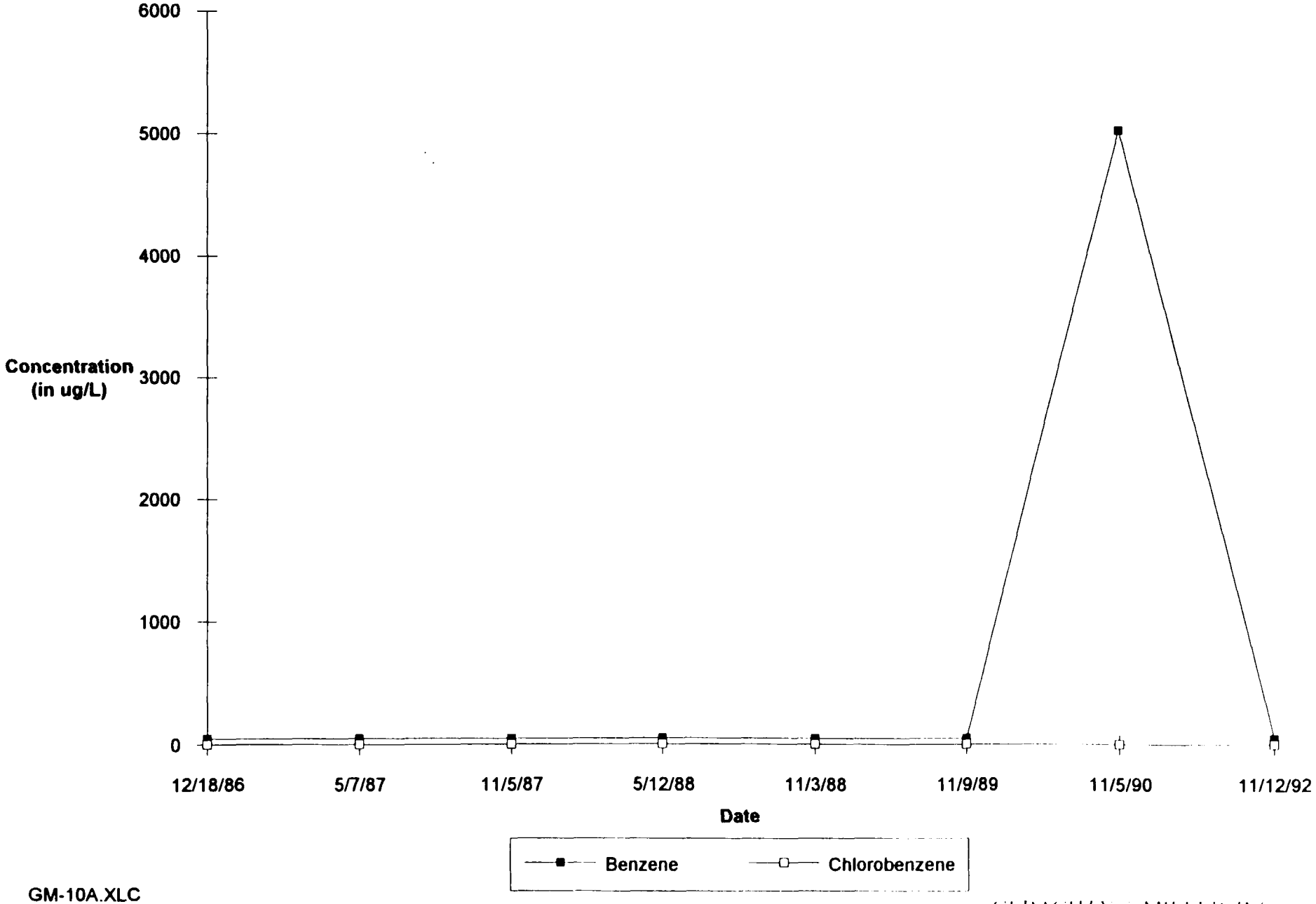

GM-10A.XLC

Figure E-4. Well GM-4A - Concentrations of Benzene and Chlorobenzene vs. Time.

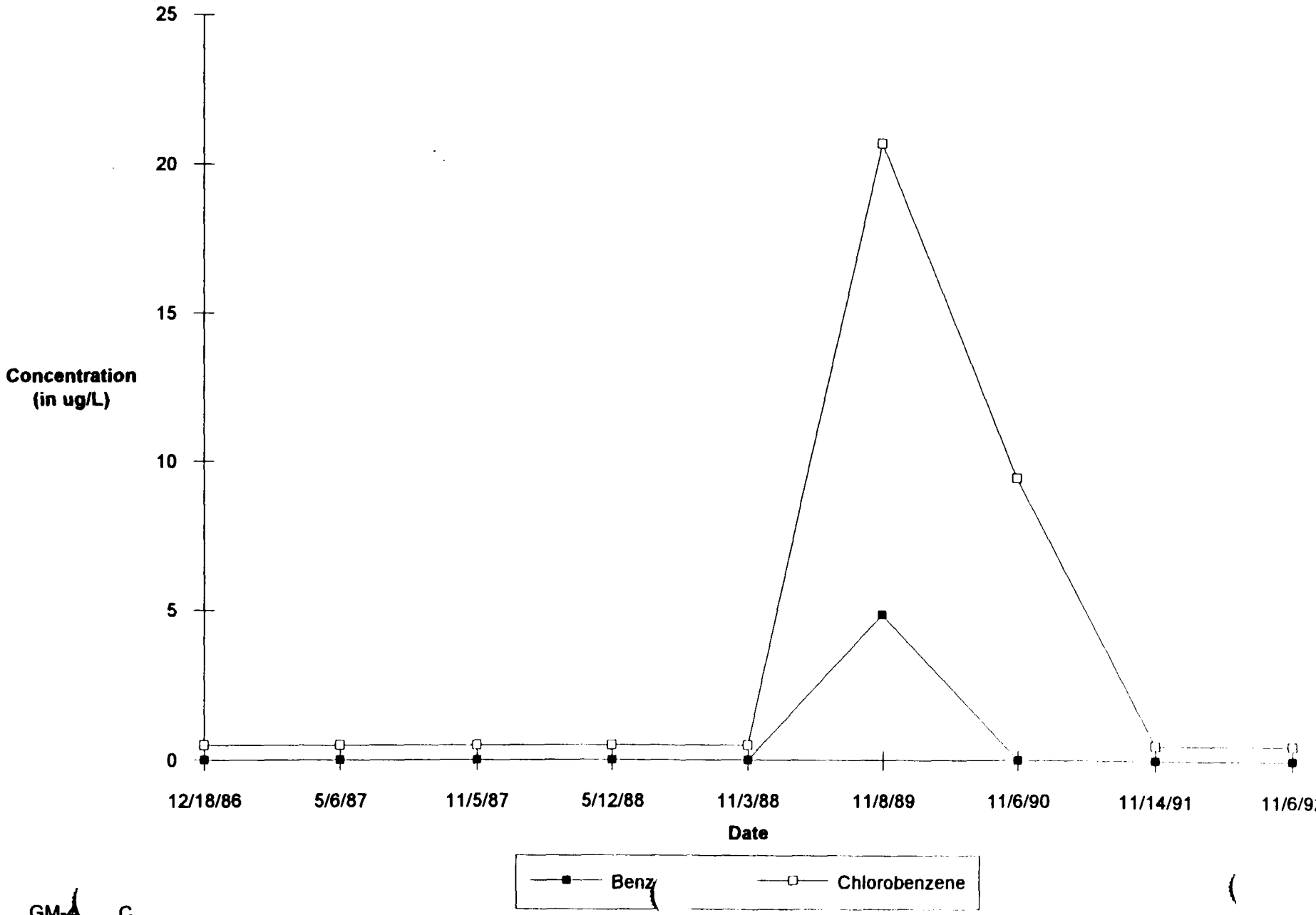

GM-4 _C

Figure E-5. Well GM-17A - Concentrations of Benzene and Chlorobenzene vs. Time.

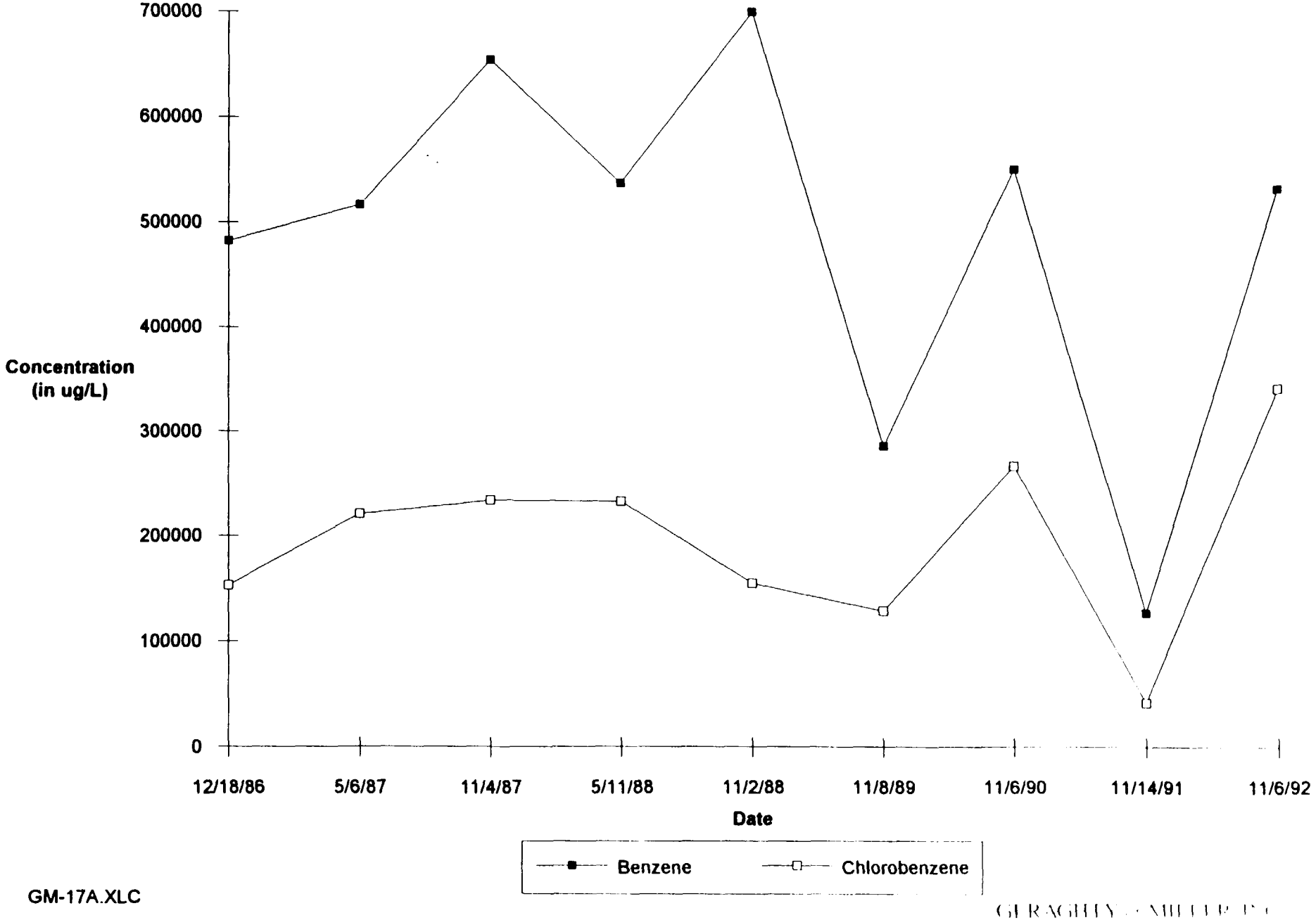

GM-17A.XLC

Figure E-6. Well GM-31A - Concentrations of Phenolic Compounds and 2-NCB/4-NCB/2,4-DNCB/3,4-DNCB/2-Nitrobiphenyl/4-Nitrobiphenyl vs. Time.

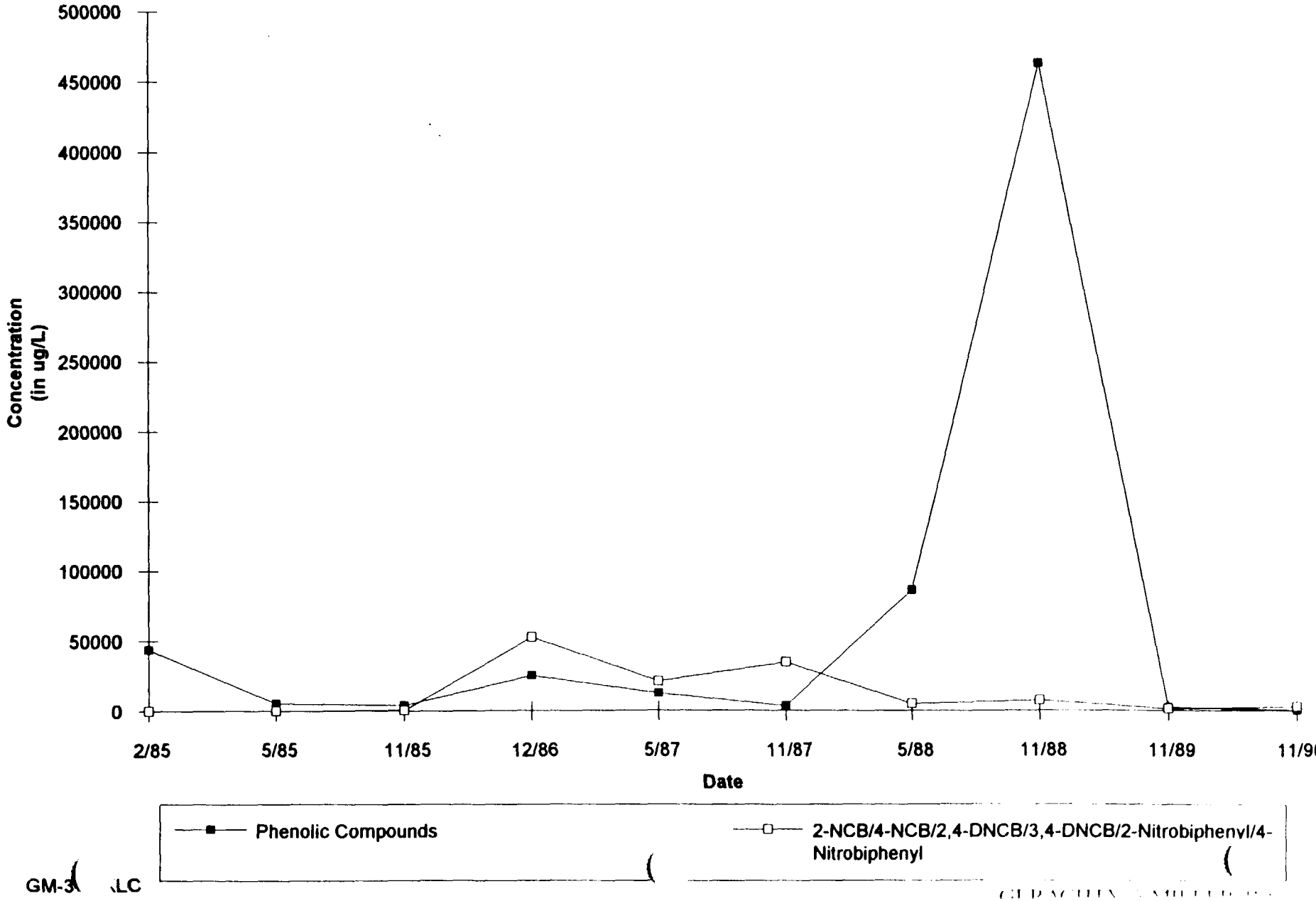

Figure E-7. Well GM-58A - Concentrations of Phenolic Compounds and 2-NCB/4-NCB/2,4-DNCB/3,4-DNCB/2-Nitrobiphenyl/4-Nitrobiphenyl vs. Time.

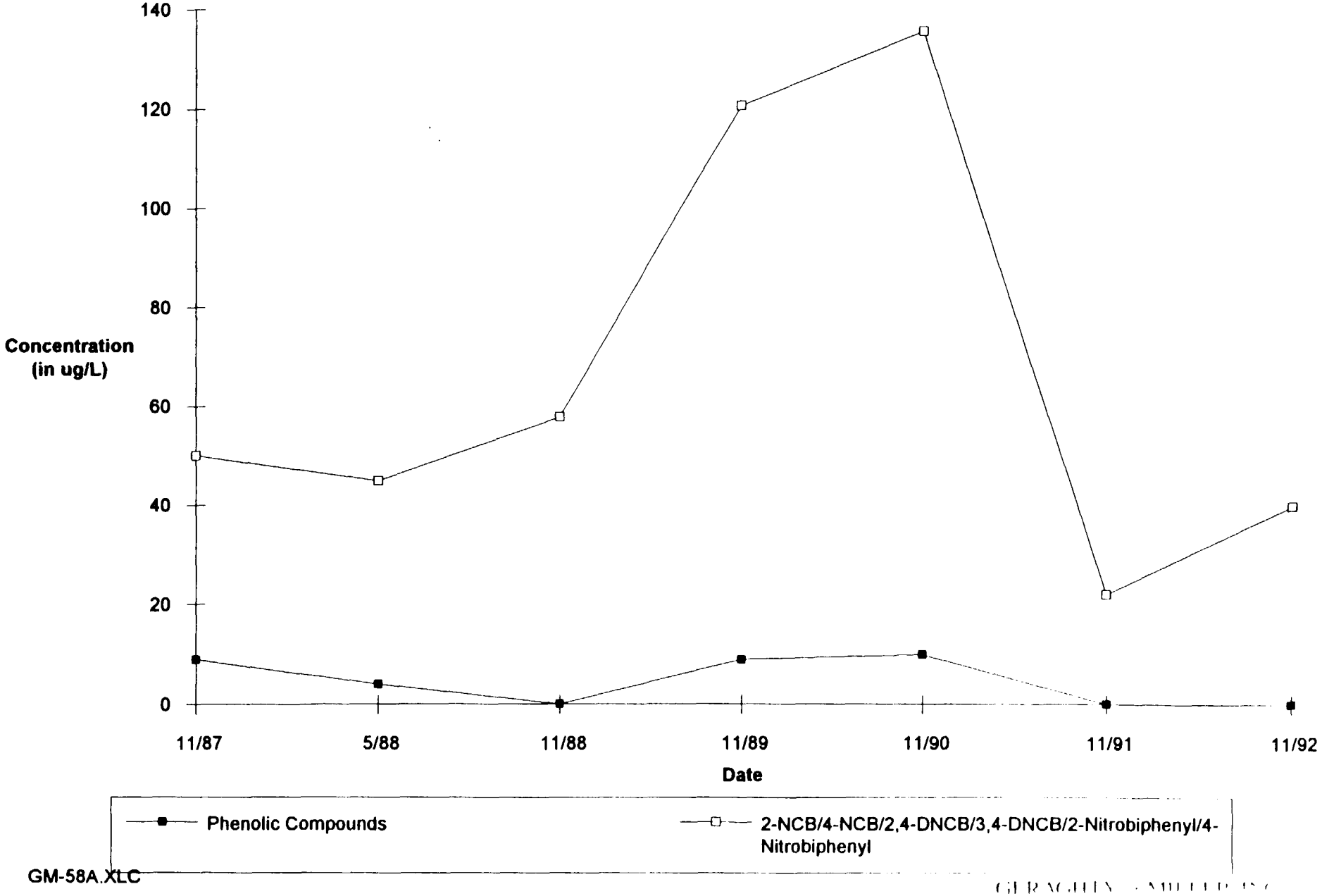

Figure E-8. Well-59A - Concentrations of Phenolic Compounds and 2-NCB/4-NCB/2,4-DNCB/3,4-DNCB/2-Nitrobiphenyl/4-Nitrobiphenyl vs. Time.

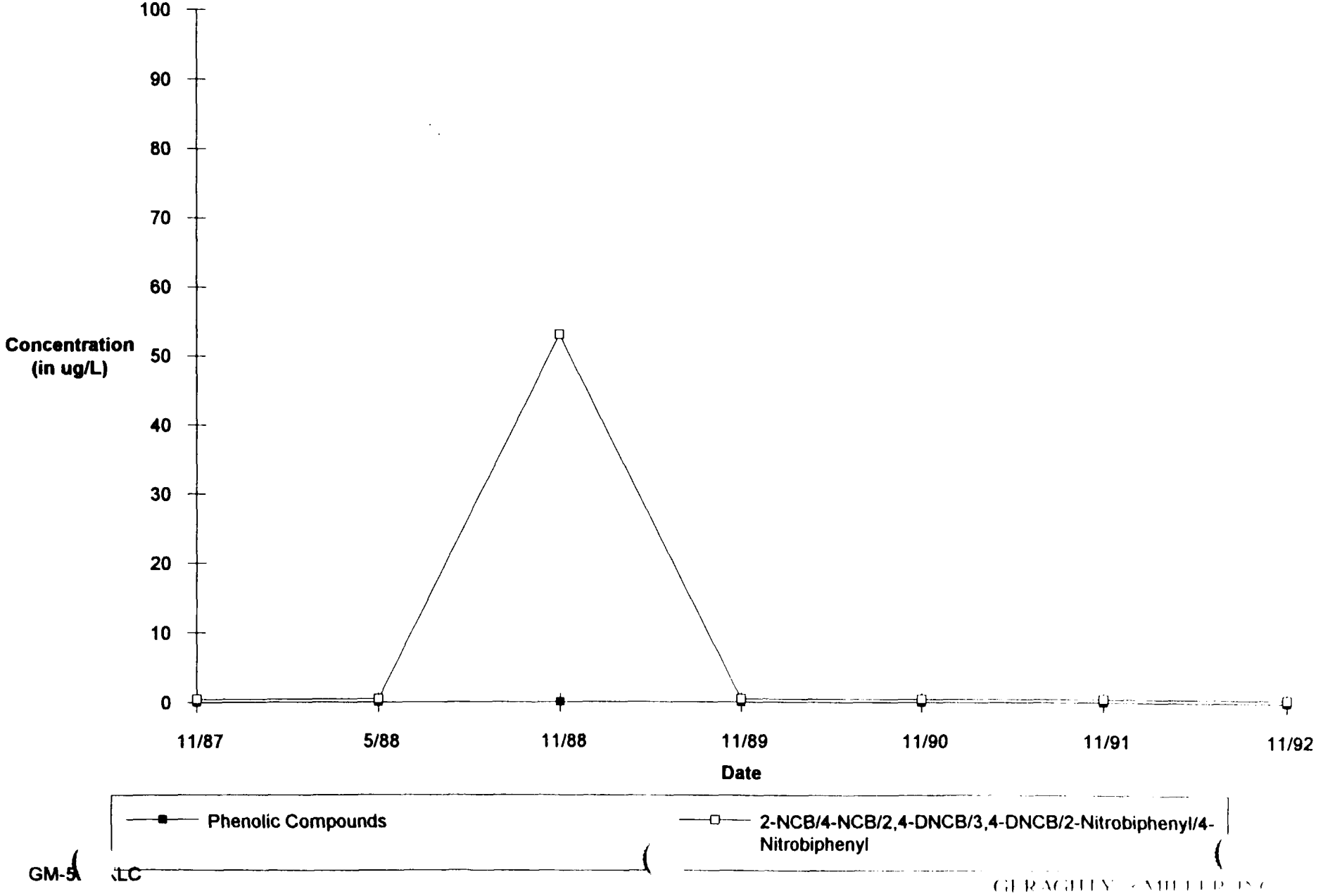

INTERMEDIATE ZONE WELLS

Figure E-9. Well GM-12B - Concentrations of Total Xylenes and Benzene vs. Time.

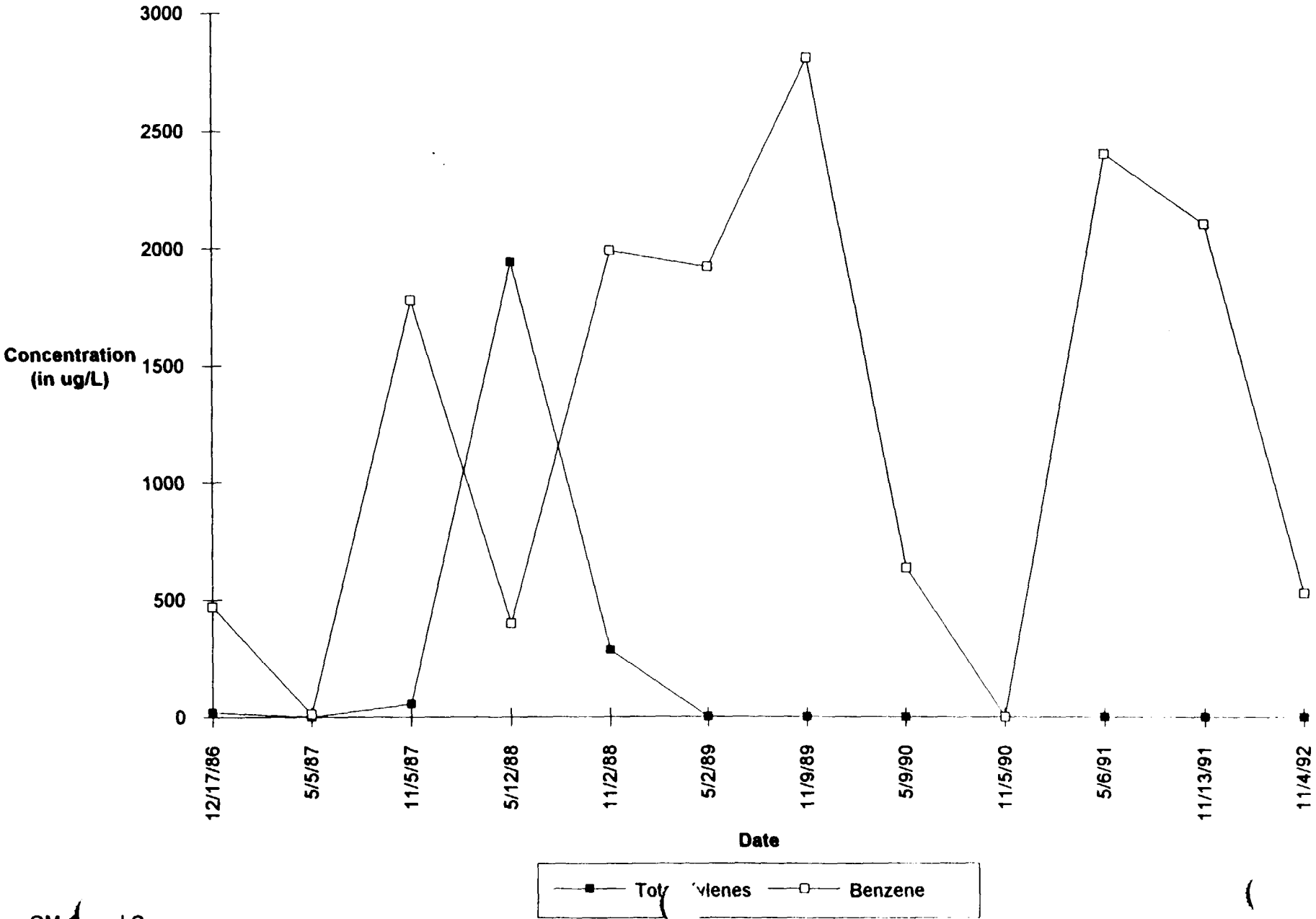

Figure E-10. Well GM-9B - Concentrations of Benzene and Chlorobenzene vs. Time.

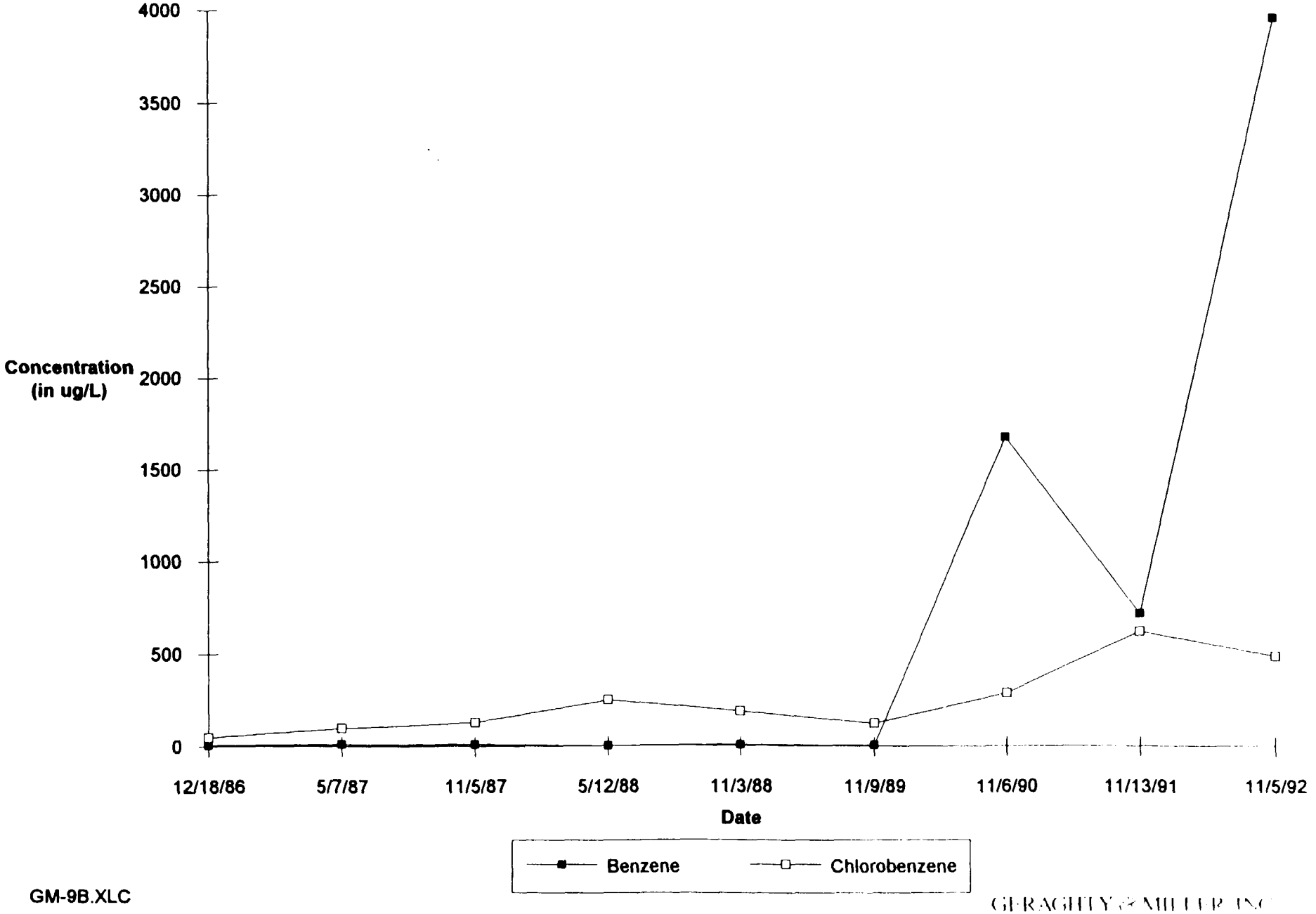

GM-9B.XLC

Figure E-11. Well GM-10B - Concentrations of Benzene and Chlorobenzene vs. Time.

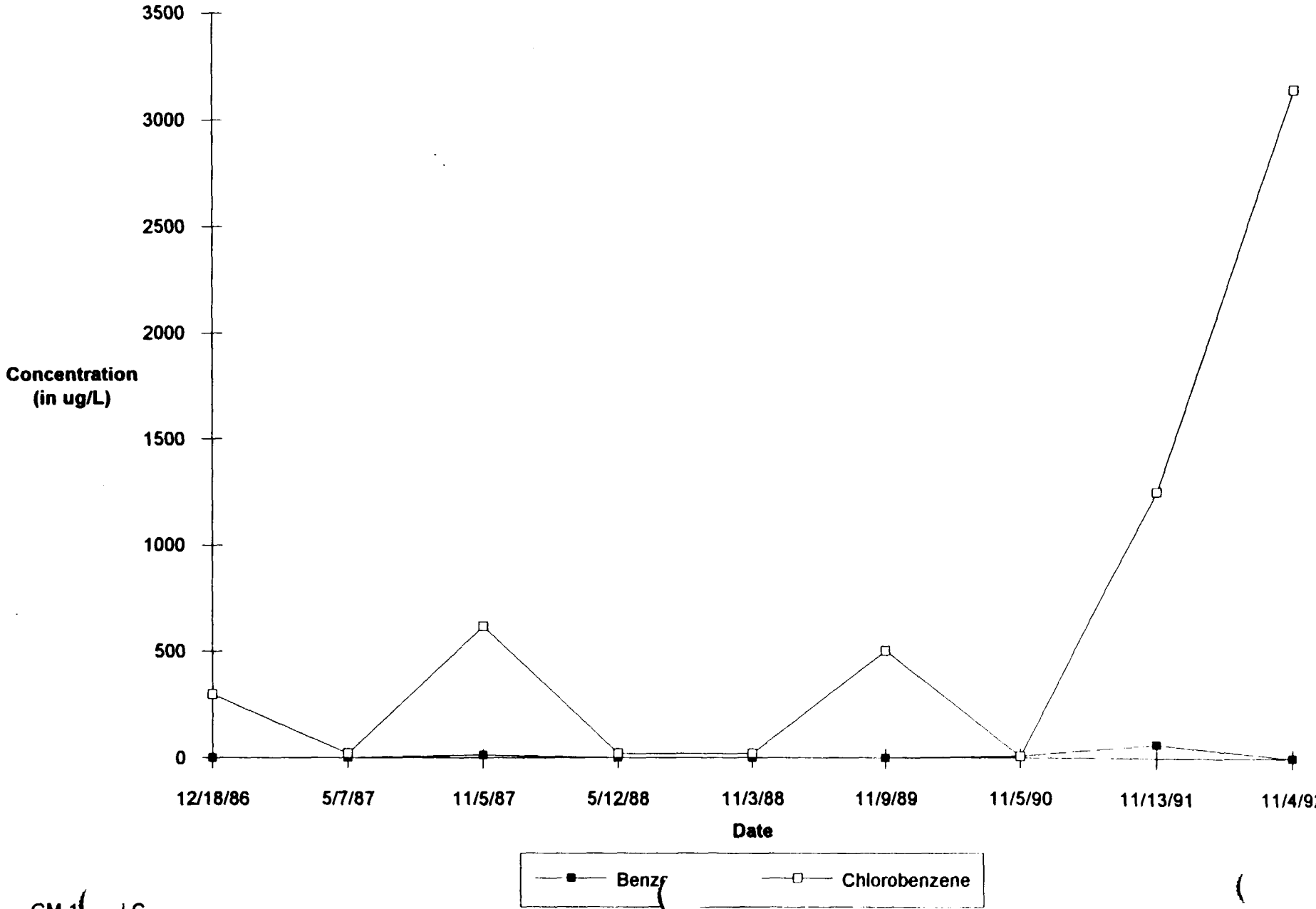

GM-1(LC

GERAGHTY & MILLER INC

Figure E-12. Well GM-4B - Concentrations of Benzene and Chlorobenzene vs. Time.

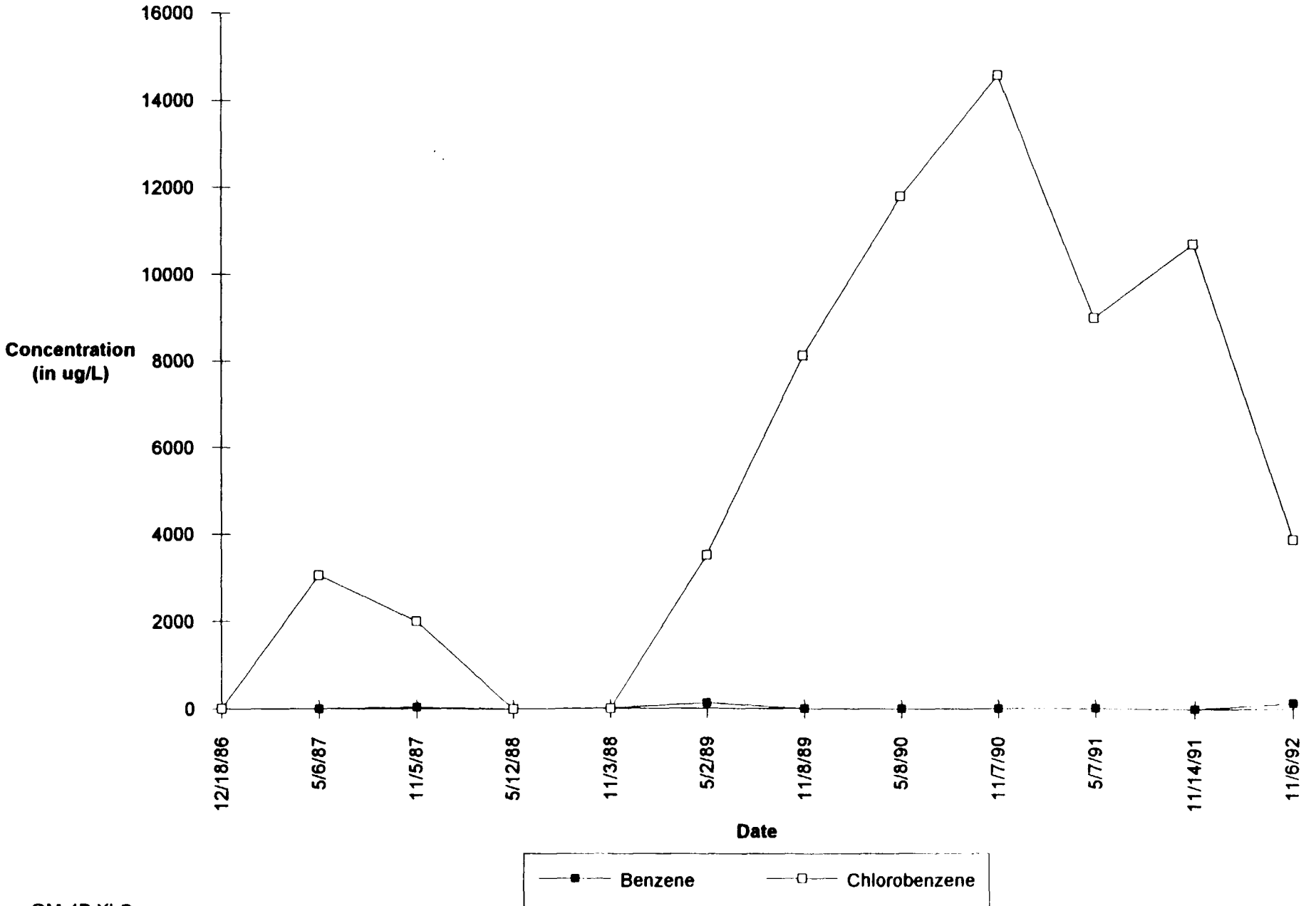

GM-4B.XLC

Figure E-13. Well GM-17B - Concentrations of Benzene and Chlorobenzene vs. Time.

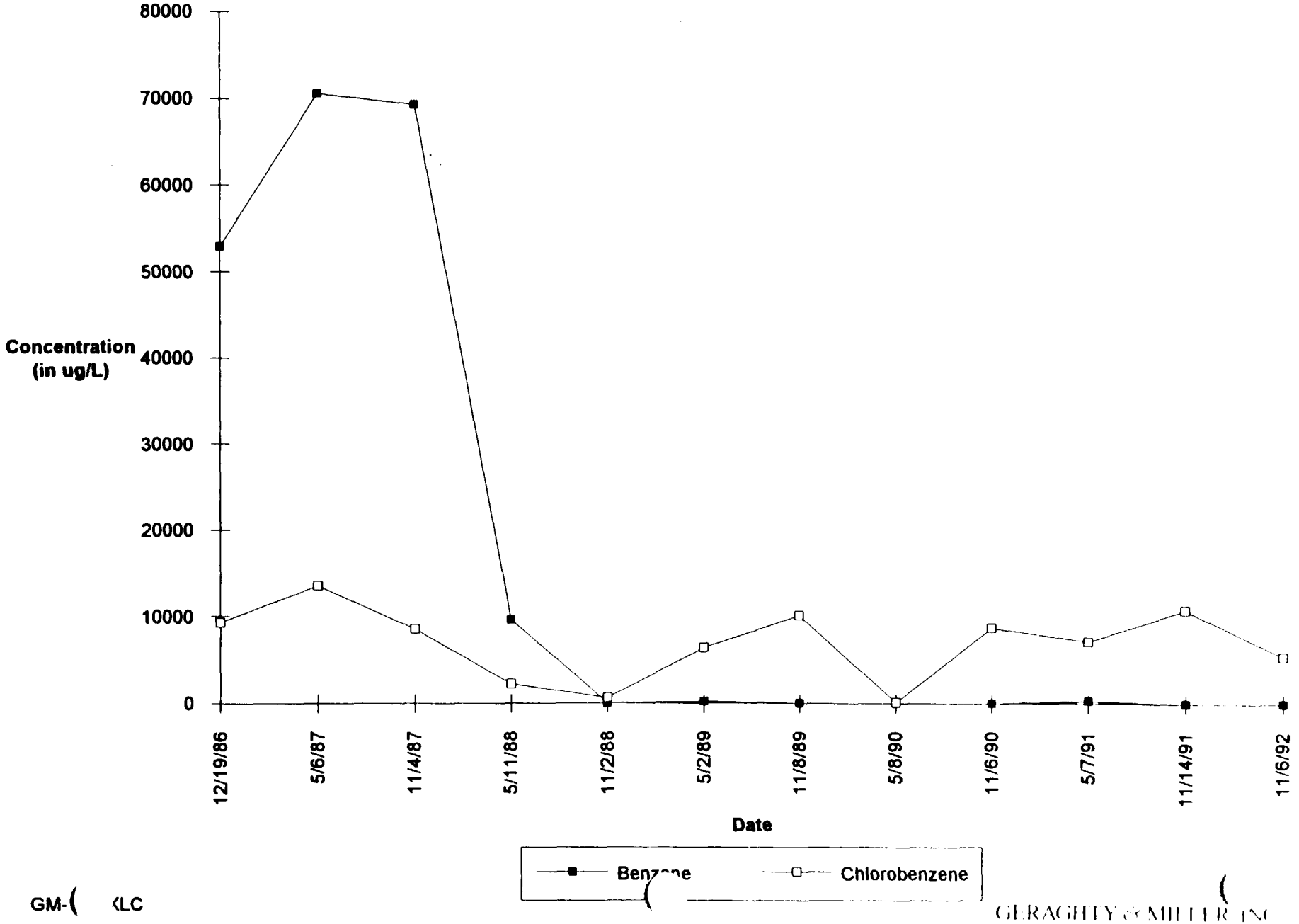

GM-((LC

GERAGHTY & MILLER INC

Figure E-14. Well GM-31B - Concentrations of Benzene and Chlorobenzene vs. Time.

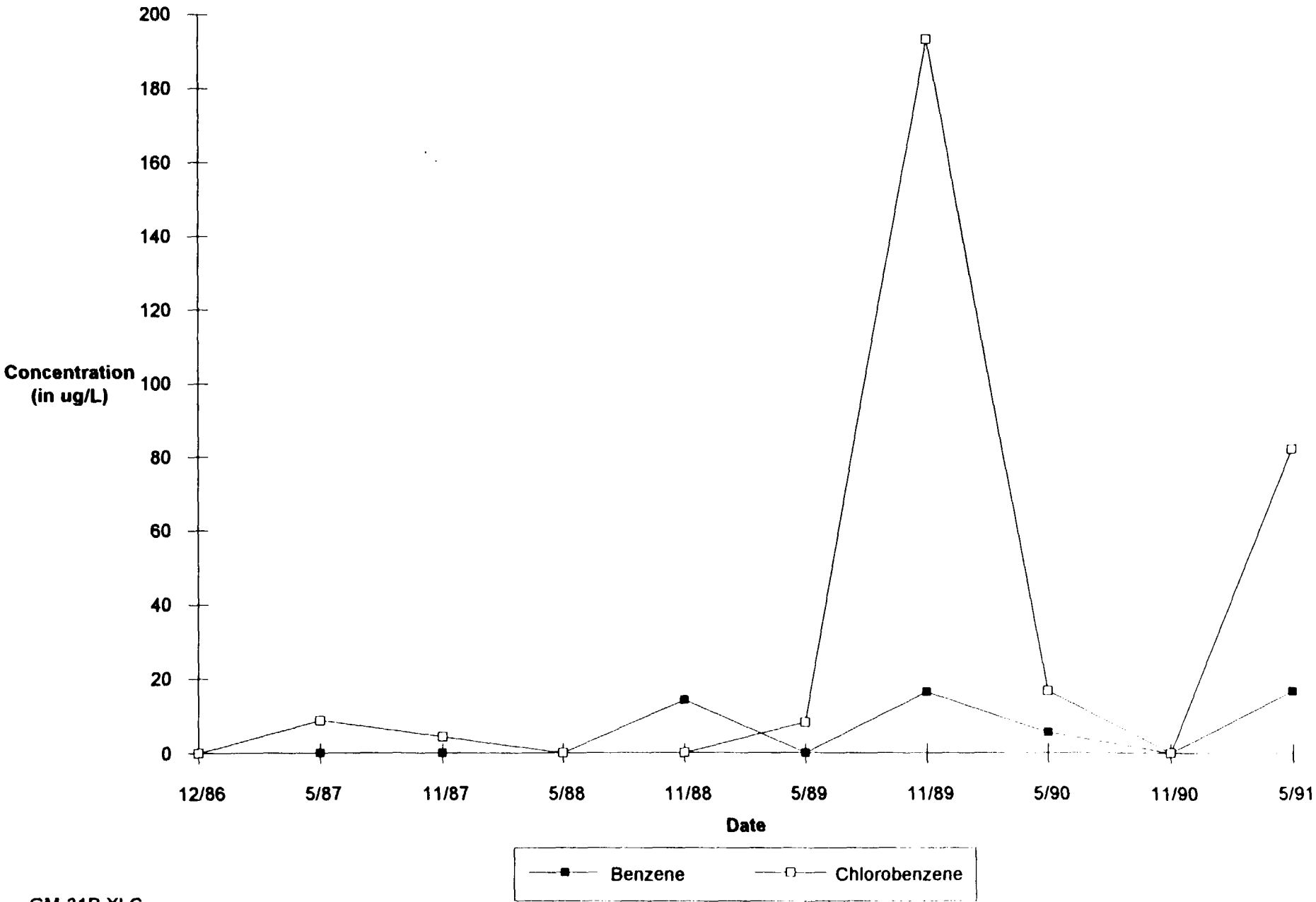

GM-31B.XLC

GERAGHTY & MILLER INC

DEEP ZONE WELLS

Figure E-15. Well GM-12C - Concentrations of Benzene and Chlorobenzene vs. Time.

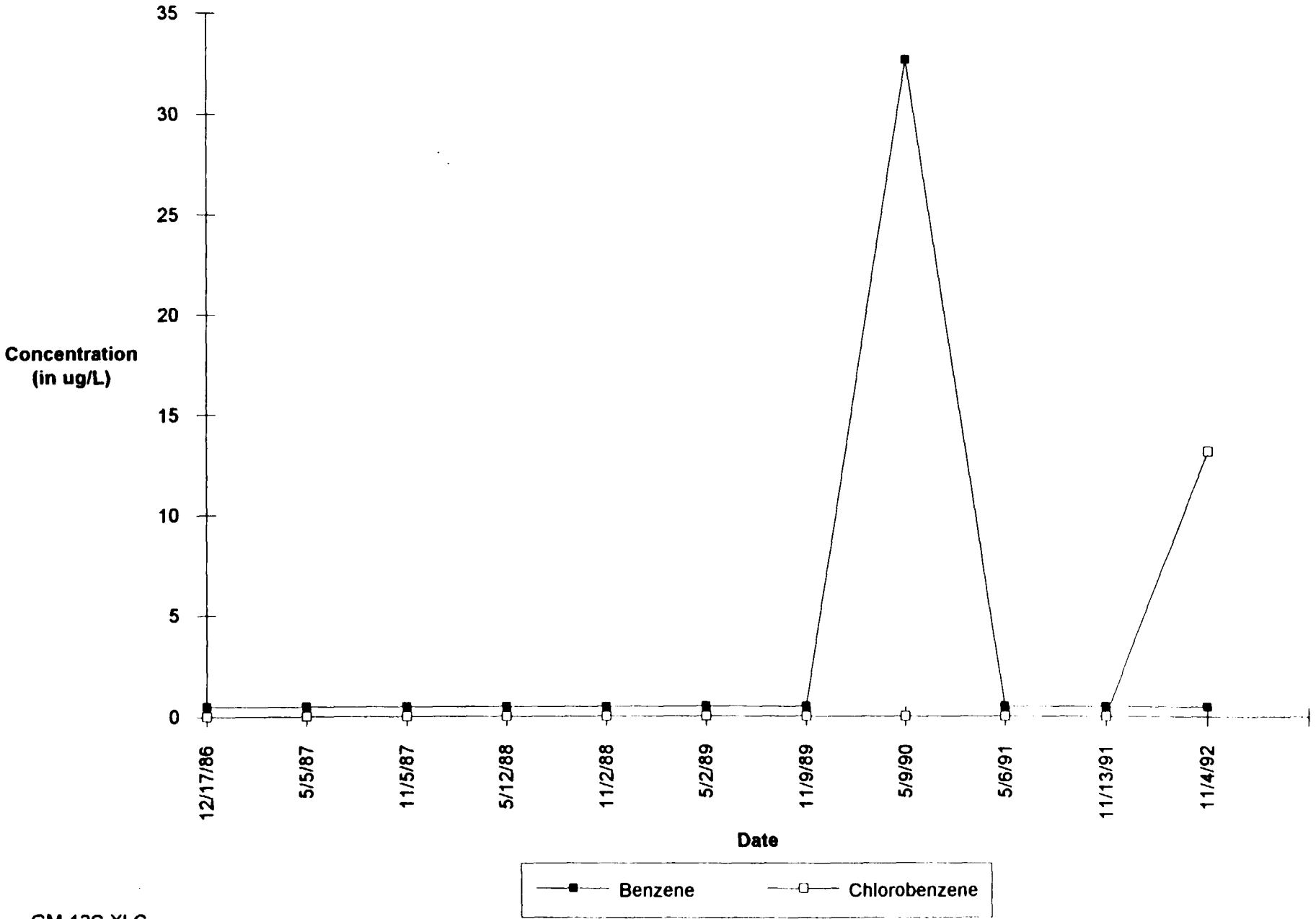

GM-12C.XLC

Figure E-16. Well GM-9C - Concentrations of Benzene and Chlorobenzene vs. Time.

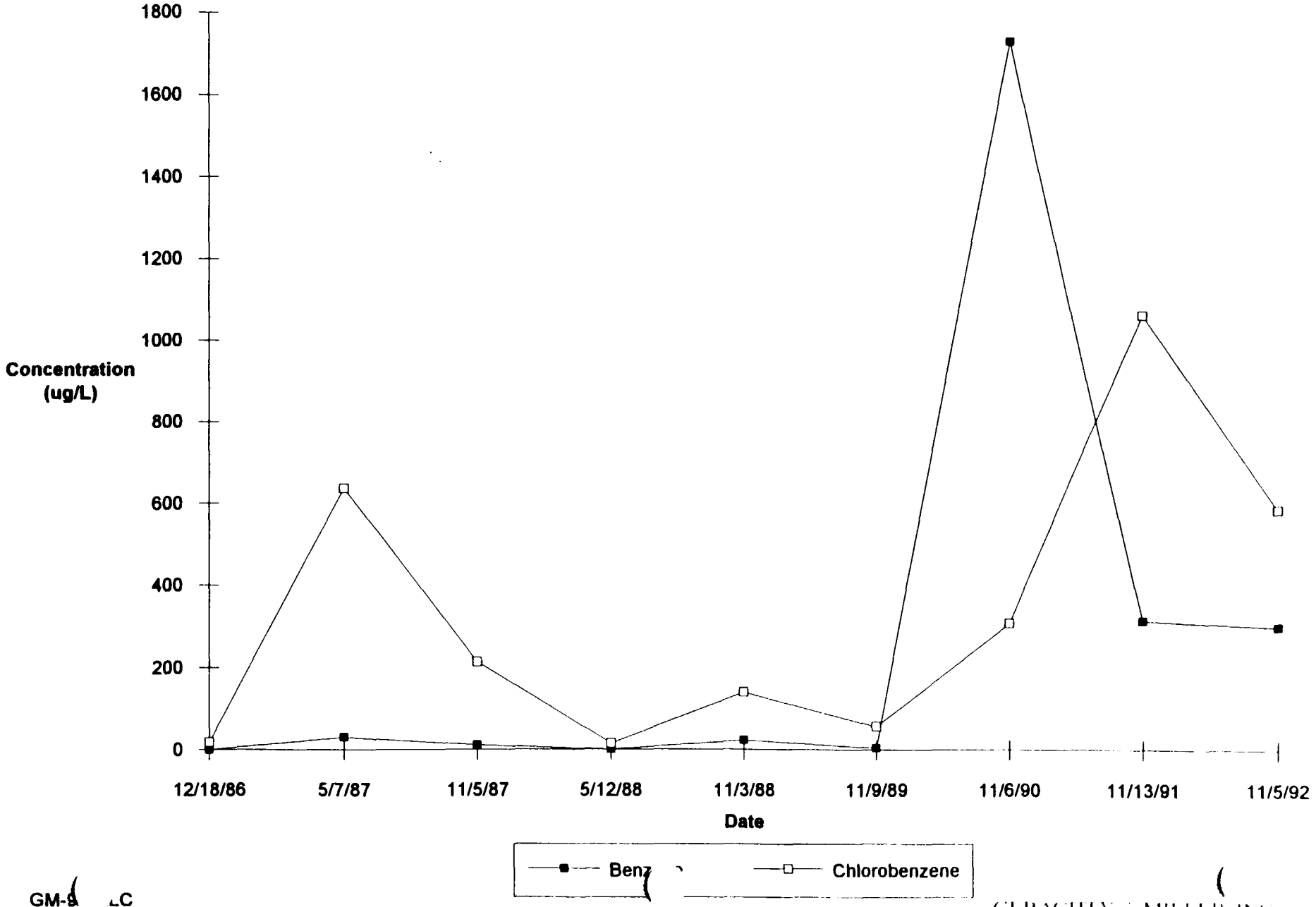

Figure E-17. Well GM-10C - Concentrations of Benzene and Chlorobenzene vs. Time.

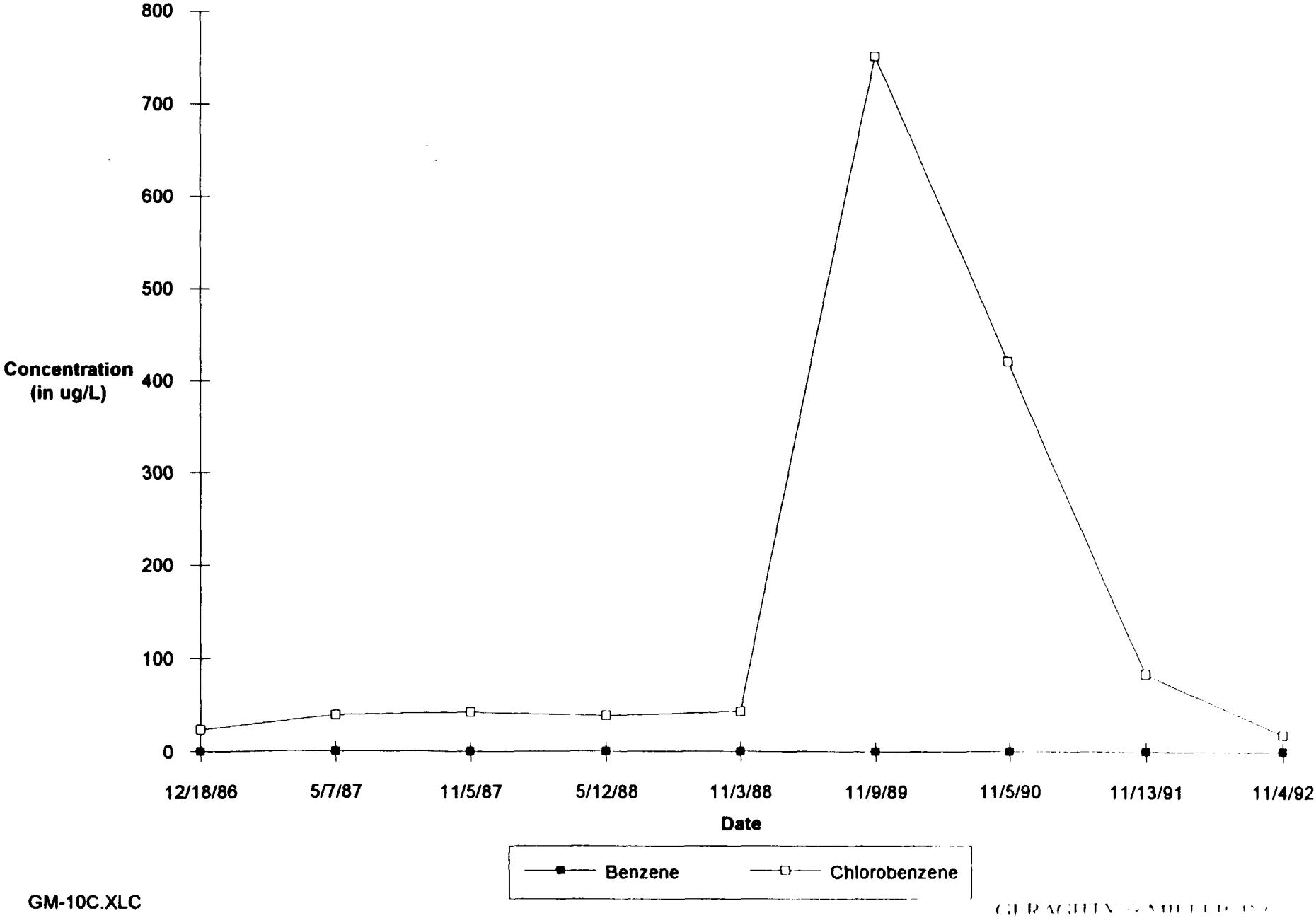

GM-10C.XLC

Figure E-18. Well GM-4C - Concentrations of Benzene and Chlorobenzene vs. Time.

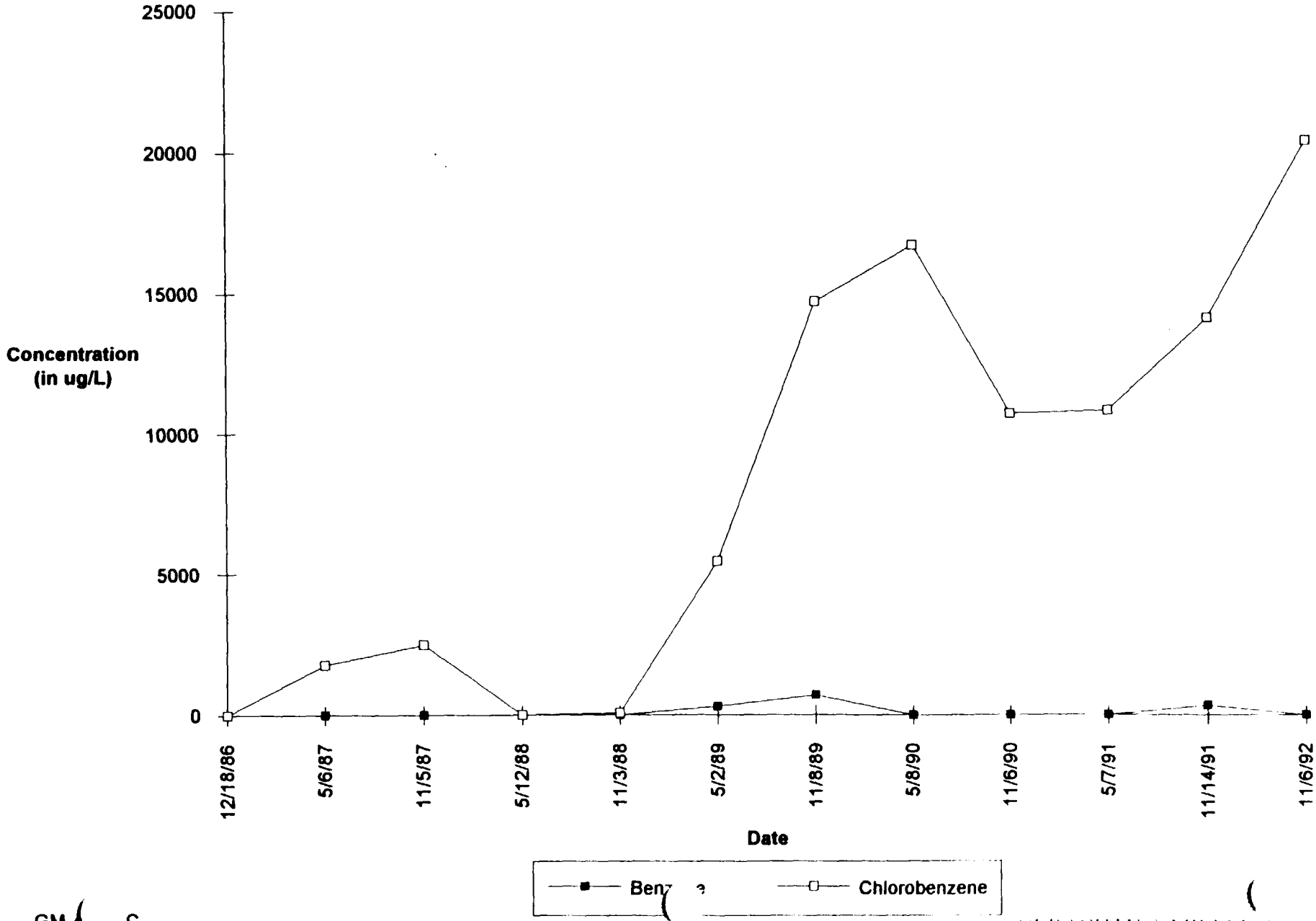

GM-4C

GERAGHTY & MILLER, INC.

Figure E-19. Well GM-17C - Concentrations of Benzene and Chlorobenzene vs. Time.

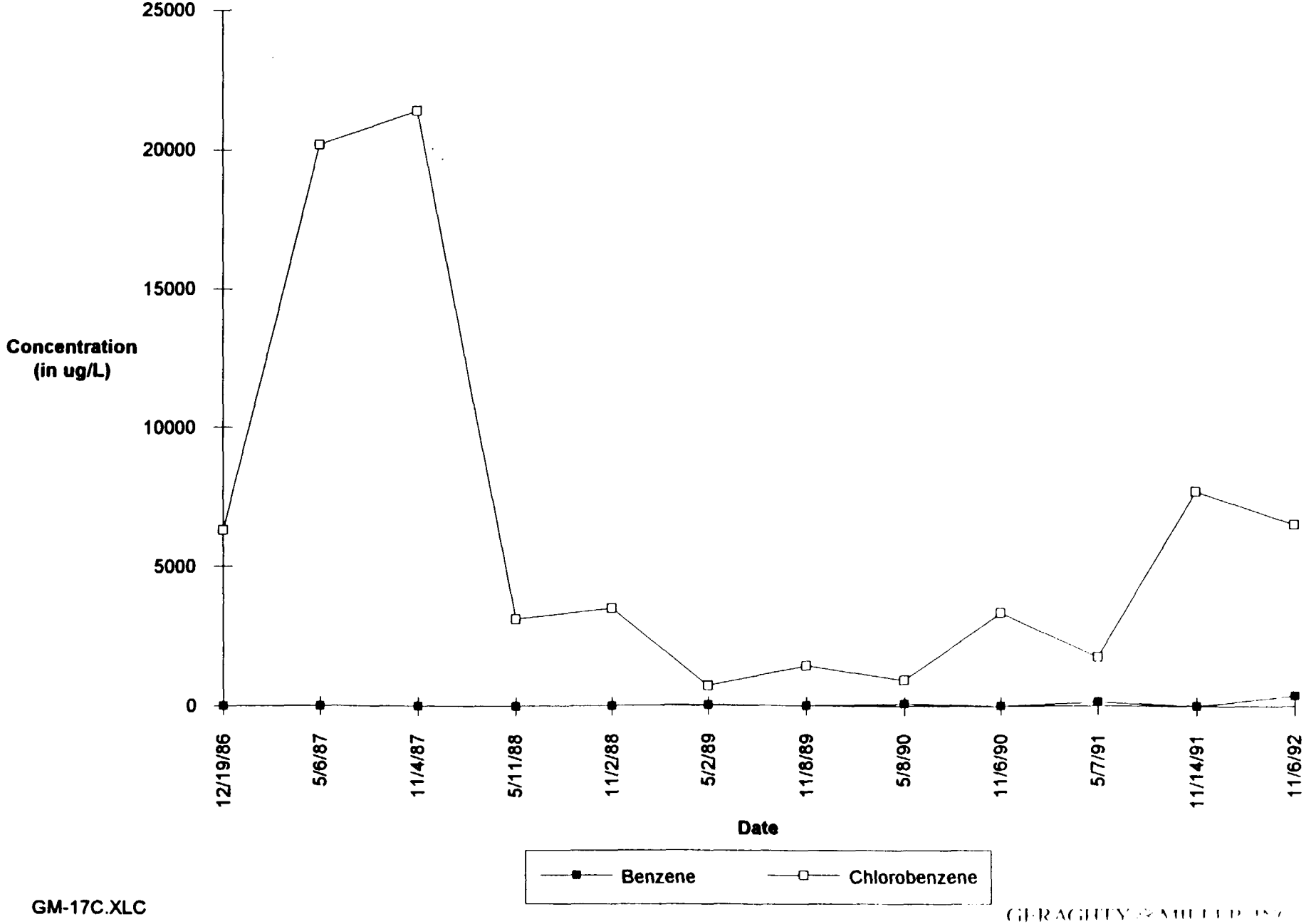

GM-17C.XLC

Figure E-20. Well GM-31C - Concentrations of Benzene and Chlorobenzene vs. Time.

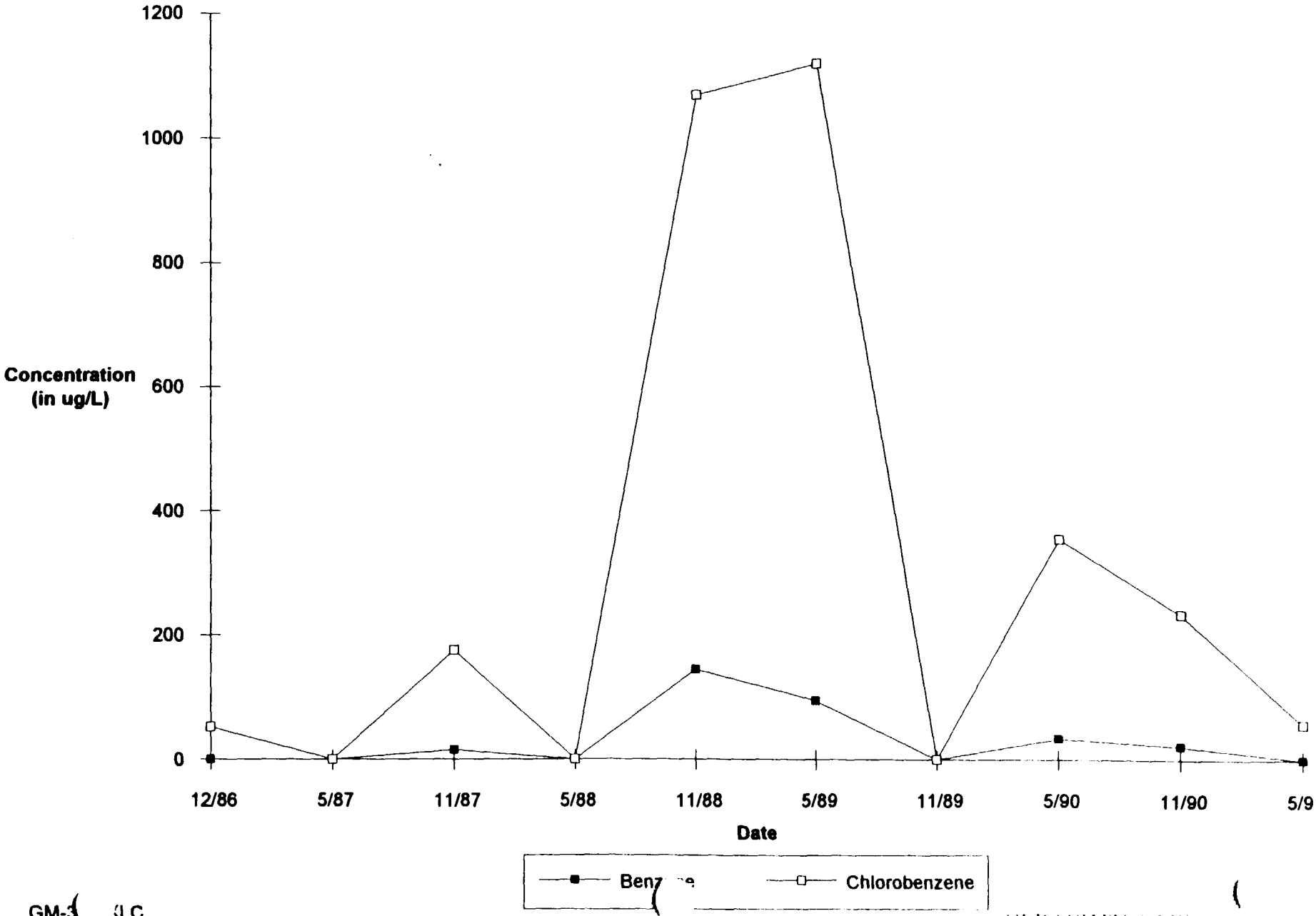

GM-3((LC

GERAGHTY & MILLER INC

Appendix 25

1997 Roux Report

Volumes I and II

SUMMARY OF GROUND-WATER QUALITY CONDITIONS

W.G. Krummrich Plant
Solutia, Inc., Sauget, Illinois

Volume I of II

December 9, 1997

Prepared for:

Solutia, Inc.
W.G. Krummrich Plant
Sauget, Illinois

Prepared by:

ROUX ASSOCIATES, INC.
1377 Motor Parkway
Islandia, New York 11788

W/MO06639Y.103/CV

ROUX

VOLUME I
CONTENTS

1.0 INTRODUCTION 1

2.0 HYDROGEOLOGY 3

3.0 GROUND-WATER MOVEMENT 5
- 3.1 Historical Ground-Water Flow Patterns 5
- 3.2 Recent Ground-Water Flow Patterns 6
  - 3.2.1 August 1984 8
  - 3.2.2 November 1985 9

4.0 AQUIFER TESTS 10
- 4.1 Water-Table Zone 10
- 4.2 Intermediate Zone 11
- 4.3 Deep Zone 11

5.0 GROUND-WATER VELOCITY 13
- 5.1 Water-Table Zone 13
- 5.2 Intermediate Zone 13
- 5.3 Deep Zone 14

6.0 GROUND-WATER QUALITY 15
- 6.1 Summary for 1983 to 1986 15
- 6.2 Conclusions 18
  - 6.2.1 Off-Site Impacts 18
  - 6.2.2 Sources of Contamination 19
- 6.3 Recommendations 20
  - 6.3.1 Remedial Action 20
  - 6.3.2 Ground-Water Monitoring 22

7.0 DESIGN AND IMPLEMENTATION OF THE GROUND-WATER MONITORING PROGRAM 24

8.0 MODIFICATIONS TO THE GROUND-WATER SAMPLING PROGRAM 25

9.0 GROUND-WATER QUALITY IN 1992 27
- 9.1 Water-Table (Shallow) Zone 27
  - 9.1.1 Volatile Organic Compounds 27
  - 9.1.2 Acid Compounds 28
  - 9.1.3 Base Neutral Compounds 29
- 9.2 Intermediate Zone 30
  - 9.2.1 Volatile Organic Compounds 30
  - 9.2.2 Acid Compounds 31
  - 9.2.3 Base Neutral Compounds 32

CONTENTS (Continued)

9.3 Deep Zone 32
9.3.1 Volatile Organic Compounds 33
9.3.2 Acid Compounds 33
9.3.3 Base Neutral Compounds 34

10.0 GROUND-WATER QUALITY TRENDS 36
10.1 Water-Table (Shallow) Zone 36
10.2 Intermediate Zone 38
10.3 Deep Zone 39

11.0 COMPARISON OF 1984/1985 AND 1992 WATER QUALITY DATA 41
11.1 Water-Table (Shallow) Zone 41
11.2 Intermediate Zone 42
11.3 Deep Zone 42

12.0 GROUND-WATER QUALITY IN 1994 44
12.1 Water-Table (Shallow) Zone 44
12.1.1 Volatile Organic Compounds 44
12.1.2 Acid Compounds 45
12.1.3 Base Neutral Compounds 45
12.2 Intermediate Zone 45
12.2.1 Volatile Organic Compounds 46
12.2.2 Acid Compounds 47
12.2.3 Base Neutral Compounds 47
12.3 Deep Zone 48
12.3.1 Volatile Organic Compounds 48
12.3.2 Acid Compounds 49
12.3.3 Base Neutral Compounds 49

13.0 SUMMARY OF FINDINGS 50

14.0 RECOMMENDATIONS 51

15.0 REFERENCES 52

FIGURE

1. Proposed Monitoring Wells

APPENDICES

A. Figures From 1986 Plant-Wide Assessment on Ground-Water Quality Conditions
B. Figures From 1993 Evaluation of Ground-Water Conditions

VOLUME II
APPENDICES (Continued)

C. Geologic Logs and Well Construction Details
D. Tables From 1986 Plant-Wide Assessment on Ground-Water Conditions
E. Water Quality Data (1983-1986)
F. Tables From 1993 Evaluation of Ground-Water Conditions
G. Water Quality Data (1986-1994)
H. Graphs of Water Quality Data
I. 1994 Sampling Program

1.0 INTRODUCTION

In September 1977, Roux Associates, Inc. (Roux Associates) was requested by Solutia, Inc. (Solutia) to compile existing hydrogeologic information and water quality data from previous reports and various ground-water sampling rounds. Most of the information was obtained from two reports that were previously submitted to the Illinois Environmental Protection Agency (IEPA) and are listed below.

- Plant-Wide Assessment of Ground-Water Conditions at the W.G. Krummrich Plant, Monsanto Company, Sauget, Illinois, vol. I, II and III, Geraghty & Miller, Inc., September 1986.

- Evaluation of Ground-Water Quality Conditions at W.G. Krummrich Plant, Monsanto Company, Sauget, Illinois, Geraghty & Miller, Inc., May 1993.

In November 1983, Geraghty & Miller initiated a hydrogeologic assessment of ground-water conditions at the W.G. Krummrich Plant with the installation of 12 shallow wells to obtain an initial understanding of ground-water quality (see Figure 2 from the 1986 report located in Appendix A of this report). Since that initial investigation, additional shallow and deeper wells have been installed at the Site and sampled for USEPA priority pollutant compounds plus additional site-specific compounds (1984 through 1991) and then for Appendix IX compounds (1992 and 1994). The first 12 wells located were in the production area; however, the expanded monitoring well network included other areas of the plant: Lot F (west of the production areas), Village of Sauget property (west of Lot F), and Lot H (Site R landfill). The production area/Lot F and Lot H are shown in Figures 1 and 2, respectively, from the 1993 report (see Appendix B). Lot H has not been included in the evaluation presented in this report because it is being investigated as part of another study, as agreed with the IEPA. The Village of Sauget property is also not included in this evaluation because monitoring wells on Village property were installed to specifically monitor potential sources of ground-water impacts that are located on Village property.

Geraghty & Miller proposed a semiannual ground-water monitoring program to Monsanto in the 1986 report based on its hydrogeologic investigation (Geraghty & Miller, Inc., 1986a). The monitoring program that was proposed in the 1986 Geraghty & Miller report is described in this report. The overall purpose of the monitoring program was to characterize plant-wide ground-water quality and to monitor changes in water quality over time.

Since September 1986, only a few additional wells have been installed at the plant. In September/October 1987, four wells were installed downgradient of the Route 3 drum site (southwest corner of Lot F) to monitor water quality in that area. Two shallow wells (Wells GM-58A and GM-59A) were installed downgradient of the Route 3 drum site at the western boundary of Lot F to monitor ground-water quality in the shallow zone. In addition, a shallow zone well (GM-54A) and an intermediate zone well (GM-54B) were installed further downgradient on Village of Sauget property to monitor ground-water quality in these zones at a greater distance from the Route 3 drum site. The geologic logs, well construction details, and water quality data for these four additional wells are provided in the appendices of this report.

In January 1993, Geraghty & Miller was requested by Monsanto Company to prepare an evaluation of the plant-wide ground-water quality data that have been collected since the semiannual monitoring program was initiated in 1986. These data were evaluated in the report prepared by Geraghty & Miller in 1993 and are incorporated into this document.

Some of the figures are not of good quality because they are reproductions of maps from the older reports. Maps of better quality may be available from either Solutia or IEPA provided that copies of those reports can be located.

2.0 HYDROGEOLOGY

The W.G. Krummrich Plant is situated on the flood plain of the Mississippi River, south of East St. Louis, at Sauget, Illinois. The flood plain is locally named the American Bottoms, and contains unconsolidated valley fill deposits composed of recent alluvium (Cahokia Alluvium), which overlies glacial material (Henry Formation). Published information indicates that these unconsolidated deposits are underlain by bedrock of Mississippian age, which consists of limestone and dolomite with lesser amounts of sandstone and shale.

The Cahokia Alluvium (recent deposits) consists of unconsolidated, poorly sorted, fine-grained materials with some local sand and clay lenses. The material is about 40 feet thick and becomes coarser with depth. These recent alluvium deposits unconformably overlie the Henry Formation is about 95 feet thick at the Mississippi River and becomes thinner with increasing distance from the river. These valley-train materials are generally medium-to-coarse sand and gravel and also increase in grain size with depth. In some areas, till and/or boulder zones were encountered 10 to 15 feet above the bedrock.

During the various drilling programs conducted onsite, the alluvium was determined to consist of fine gray and brown silty sand up to 40 feet below land surface. A cross section of the study area is provided for the line of section shown in Figure 2, and presented in Figure 3 (Appendix A). The geologic data show that the unconsolidated deposits range from 140 feet thick near the river to about 110 feet in the eastern part of the Monsanto property. The geologic logs for the drilling programs conducted by Geraghty & Miller are provided in Appendix C.

During the drilling programs conducted by Geraghty & Miller across the entire site, the contact or boundary between the Cahokia Alluvium and the Henry Formation could not be distinguished; however, this is not necessary for evaluating the hydrogeology of the area. Aquifer properties such as transmissivity are more important than geological distinctions. To simplify the flow system, the unconsolidated deposits were divided into three zones according to relative transmissivities: a water-table (shallow) zone, intermediate zone, and a deep zone.

The water-table zone consists of the Cahokia Alluvium (recent deposits), which is an unconsolidated, fine-grained silty sand. This zone is considered to be 30 feet thick, starting at the water table and continuing down to the medium sand deposits of the Henry Formation.

The intermediate zone is much coarser than the overlying water-table zone. This zone contains medium-grained sand representing the upper portion of the Henry Formation, a Wisconsinian glacial outwash in the form of valley-train deposits. Valley-train deposits are long narrow bodies of outwash, deposited by meltwater streams far beyond the terminal moraine and confined within the walls of a valley. The Henry Formation is characterized by medium-to-coarse sand that becomes coarser with depth. The thickness of the zone is estimated to be about 40 feet.

Below the intermediate zone is the deep zone, which is marked by coarse deposits of the lower portion of the Henry Formation. In some areas, till and/or boulder zones were encountered 10 to 15 feet above the bedrock. The zone is estimated to be about 40 feet thick.

3.0 GROUND-WATER MOVEMENT

Historical ground-water movement, as well as more recent ground-water flow conditions (1984 and 1985) are discussed below.

3.1 Historical Ground-Water Flow Patterns

Ground water in the Henry Formation occurs under leaky artesian and water-table conditions. Recharge in this area occurs from 1) precipitation; 2) induced infiltration of surface water from the Mississippi River and small streams as a result of ground-water pumping; and 3) underflow from the east. Recharge by induced infiltration occurs where pumping large quantities of ground water has lowered the water table below the water level in the Mississippi River and nearby streams.

In the past, large supplies of ground water were withdrawn from permeable sand and gravel of the valley fill (Henry Formation) in the East St. Louis-Sauget-Cahokia area. The coarsest deposits (and most favorable for pumping large volumes of ground water) are located near bedrock. Most, if not all, of the wells are screened in these deposits (Ritchey, et al., 1984).

Ground-water pumpage in the Monsanto area was largely from industrial wells. Figure 4 (Appendix A) illustrates the estimated pumpage in the East St. Louis-Sauget-Cahokia area from 1890 to 1980. Pumpage increased up to 1962 as demands required greater withdrawals. As a result of increased ground-water conservation at one industry (1962-1965), the closing of two major ground-water using industries (1970-1971), and the conversion to the use of the Mississippi River as a source of water (1972-1977), ground-water withdrawals decreased from 35.5 million gallons per day (mgd) in 1962 to 0.5 mgd in 1980 (Ritchey, et. al, 1984). A regional deterioration in water quality was probably the primary reason for changing from ground water to surface water.

The changes in ground-water withdrawals from 1961 to 1980, and the resultant effect on the potentiometric surface in the Henry Formation, are illustrated in Figures 5 to 7 (Appendix A). Figure 5 (based on 1961 data) clearly depicts locations of pumping centers and their associated cones of depression. Monsanto's supply wells (in the plant area) appear to be at the center of the

largest cone of depression, and they drew ground water from all directions. Therefore, ground-water flow was toward the Monsanto property from adjacent properties, which include AMAX, Cerro and Mid-West Rubber. A smaller and deeper cone of depression, due to the pumping of Monsanto's Ranney Well No. 3, is evident about one mile west of the main pumping center, adjacent to the Mississippi River.

Ground-water levels in June 1973 (Figure 6, Appendix A) were at record high elevations, due primarily to a prolonged period of high river stage and extensive flooding in 1973. It is also important to note that ground water beneath the W.G. Krummrich Landfill was being drawn away from the Mississippi River toward the plant process area production wells. In addition, ground water on adjacent properties was still traveling toward the Monsanto wells.

In November 1980 (Figure 7, Appendix A), ground-water flow was toward the Mississippi River for the first time since the pre-pumping period. The re-establishment of natural flow conditions in the early 1980s represents a major ground-water flow reversal which resulted from the cessation of large ground-water withdrawals.

3.2 Recent Ground-Water Flow Patterns

In order to assess ground-water flow patterns in 1986, Geraghty & Miller, Inc. inventoried existing wells within an approximate 2-mile radius from the Monsanto property. These wells are shown in Figure 1 (Appendix A) and available well construction details are provided in Table 1 (Appendix D). Any supply well that could potentially influence ground-water flow patterns on the site was mapped. Well information was obtained from files of the Illinois Geological Survey, the Illinois State Water Survey and the U.S. Geological Survey. Figure 4 (Appendix A) shows the dramatic decrease in ground-water use from 1962 to 1980 for the East St. Louis-Sauget-Cahokia area. At the present time, ground water is not used for potable supplies. The small ground-water withdrawals are limited to industrial use.

The 1984 ground-water flow patterns have been illustrated for the three hydrogeologic zones. The configuration of the water table and the potentiometric surface for the intermediate and deep zones have been drawn for August 1984 and November 1985 to illustrate what effect rising and falling levels in the Mississippi River have on ground-water flow patterns during periods of high and low river stage.

Water-level measurements were made in all available wells between August 24 and 27, 1984 and again on November 21 and 22, 1985 (Tables 2 and 3 in Appendix D). The construction details for these wells are provided in Tables 4, 5, and 6 (Appendix D). Figures 8 through 10 depict water-level elevations in August 1984 and Figures 11 through 14 illustrate the configuration of the water-table and potentiometric surfaces in November 1985 (Appendix A).

3.2.1 August 1984

The configuration of the water table in August 1984 (Figure 8, Appendix A) demonstrates that ground-water flow in the uppermost saturated unit (water-table zone) is toward the Mississippi River. At that time, the Mississippi River stage was 5 to 7 feet above the U.S. Corps of Engineers datum at the Market Street station in St. Louis.

A ground-water mound exists beneath a portion of the plant area. The mound appears to be caused by a combination of hydrogeologic factors, and leaks in a water line, sewer line, and roof drains, all of which were subsequently repaired. The eastern part of the property has a surficial layer of silt and/or clay. The lower permeability of these deposits, compared to the surrounding area, probably causes the ground-water head to build up. The leaky water line increased the head, which declined after the line was repaired.

Dewatering for a sewer project north of the landfill (adjacent to the river) is evident in Figure 8 (Appendix A). The water-table depression located near the northeast corner of the landfill is the result of several dewatering wells in the intermediate zone. The 10-foot head difference between the water table and intermediate zones is the result of pumping.

The potentiometric surface of the intermediate zone (about 40 to 80 feet below land surface) in August 1984 is depicted on Figure 9 (Appendix A). Ground-water flow in this portion of the unconsolidated deposits is toward the Mississippi River. Flow is being diverted in the area north of the landfill due to dewatering activities.

The potentiometric surface of the deep zone (80 to approximately 120 feet below land surface) in August 1984 is illustrated in Figure 10 (Appendix A). The elevation of the water levels and the ground-water flow patterns are similar to those of the intermediate zone.

3.2.2 November 1985

In contrast to low river stage (5 to 7 feet) in August 1984, the Mississippi River was 32 to 33 feet above the U.S. Army Corps of Engineers datum in November 1985. The effect of high river stage on the ground-water system is clearly demonstrated in Figures 11 through 14 (Appendix A).

The configuration of the water table in November 1985 (Figure 11, Appendix A) shows that the high river stage has caused a reversal in ground-water flow when compared to August 1984. Ground-water movement is away from the Mississippi River in response to a gradient which extends eastward to a ground-water divide located 3,500 feet from the river. Gradient reversal generally does not last longer than two weeks during flood conditions, therefore, constituents in ground water cannot travel very far before the gradient reverses itself again. A ground-water mound still exists under a portion of the plant area. Dewatering operations near the river were temporarily suspended due to the river level at the time of the water-level measurements.

The potentiometric surface of the intermediate zone for November 1985 is shown in Figure 12 (Appendix A). Ground-water flow in this zone is also easterly away from the river, for a distance of approximately 4,500 feet. A cone of depression is evident in the plant area, as a result of a dewatering project.

The potentiometric surface of the deep zone for November 1985 is shown in Figure 13 (Appendix A). The elevation of the water levels and the direction of ground-water flow are similar to those of the intermediate zone.

4.0 AQUIFER TESTS

4.1 Water-Table Zone

In November 1983, slug tests were conducted by Geraghty & Miller, Inc. in Wells GM-1, GM-2, and GM-3. The purpose of these tests was to determine aquifer transmissivity, hydraulic conductivity (permeability) and the storage coefficient in the uppermost saturated unit.

A weight of a known volume was lowered below the water level in each well, displacing the water column upward. Measurements of the water-level decline were made with an electric probe at 15-second intervals. The test began as soon as the weight was lowered below the water level in the well, and the test ended when the water level in the well had declined to the original pre-test static level. Water-level measurements and elapsed times are given in Table 7 (Appendix D).

The method used to analyze the slug test data was developed by Cooper, Bredehoeft, and Papadopulos (Lohman, 1972). The technique is applicable to wells screened across the entire thickness of a confined aquifer of rather low transmissivity. If the tested well is screened across part of the aquifer, the transmissivity values only apply to that part of the aquifer in which the well is screened or open.

Table 8 (Appendix D) summarizes data for Wells GM-1, GM-2, and GM-3. The calculated hydraulic conductivities of the water-table zone ranged from 1.9 to 23 gallons per day per square foot (gpd/ft^2) and averaged 9.5 gpd/ft^2. The calculated transmissivity values ranged from 28.5 to 344.3 gpd/ft and averaged 141.5 gpd/ft. These values may be somewhat higher than the actual transmissivities because of the effect of the gravel pack around portions of the well screens.

4.2 Intermediate Zone

Schicht (1965) provided aquifer test data for six sites in Madison and St. Clair Counties (Table 10, Appendix D). Three of these tests were performed on wells which most likely tap the intermediate zone (Olin Mathieson Chemical Corporation, City of Wood River, and the Southwestern Campus of Illinois University, Edwardsville). Mean transmissivity and permeability values were determined to be 120,200 gpd/ft and 1,620 gpd/ft^2, respectively. The storage coefficients were representative of water-table conditions, as they ranged from 0.020 to 0.155.

John Mathes & Associates, Inc. conducted an aquifer test in September 1983 in the intermediate zone on Monsanto property. The purpose of the test was to determine well size, well spacing and discharge rates that would be required to complete the new main south trunk sewer in the plant area.

The aquifer test was carried out in an existing 18-inch diameter well, 65 feet deep, located adjacent to the ACL Building (near Well DW-5) in the plant area. The well was pumped for 48 hours at a rate which varied during the early portion of the test, but stabilized at 715 gpm during the last 24 hours of the testing period. Nine observation wells were monitored during the test.

Geraghty & Miller, Inc. evaluated the aquifer test data and determined the following aquifer characteristics of the intermediate zone: Transmissivity = 165,000 gpd/ft, hydraulic conductivity = 3,300 gpd/ft^2, and storage coefficient = 0.04.

4.3 Deep Zone

Table 10 (Appendix D) also provides hydrogeological characteristics of the deep zone, specifically, transmissivity, permeability, and storage coefficient values, for sites at Shell Oil Company, Mobil Oil Company and Monsanto. The aquifer test performed in 1952 on a Monsanto test well was located near Ranney Well No. 3. The saturated thickness of the aquifer, at the time of the aquifer tests, varied from 73 feet on Mobil's property to about 100 feet at Shell Oil Company, about three miles to the northeast. Mean transmissivity and permeability values were

calculated to be 211,000 gpd/ft and 2,600 gpd/ft^2, respectively. The coefficient of storage represents water-table conditions for the Mobil site (0.100) and at Monsanto (0.082); however, a value of 0.002, indicative of artesian conditions occurs at the shell Oil Company site.

5.0 GROUND-WATER VELOCITY

5.1 Water-Table Zone

Ground-water velocity in the water-table zone was determined using the following form of Darcy's Law

$$V = \frac{KI}{xn}$$

where:

V = velocity, in feet per day

K = hydraulic conductivity of the deposits in the direction of flow, in gallons per day per square foot

I = hydraulic gradient, in feet per foot

n = effective porosity, which is dimensionless (Walton, 1984)

x = 7.48 gallons per cubic feet

To compute the velocity value, the following data were used: the average hydraulic conductivity value obtained during Geraghty & Miller, Inc.'s aquifer testing of the shallow zone (9.5 gpd/ft^2); the hydraulic gradient (0.0025) which was measured in an area on the August 1984 water-table map (Figure 8, Appendix A) unaffected by either mounding or pumping conditions; and an assumed effective porosity of 15 percent which was estimated from the range (10-30) given for fine sand by Walton (1984). Because the water table zone consists of silty sand, a value at the low end of the range was chosen. The calculated velocity is 0.02 feet per day (7.3 feet per year) for the upper 15 feet of the saturated zone.

5.2 Intermediate Zone

Ground-water velocity in the intermediate zone of the Henry Formation was also calculated using Darcy's Law. The hydraulic conductivity (3,300 gpd/ft^2) was obtained by dividing the transmissivity of this zone (obtained from the John Mathes & Associates, Inc. aquifer test - 165,000 gpd/ft) by its saturated thickness (50 feet). This method should provide a minimum permeability as the pumping well is screened over only a portion of the aquifer. The data from

Table 10 (Appendix D) were not used because all three tests were conducted in Madison County. The hydraulic gradient (0.0020) was determined from the August 1984 water-level map in areas unaffected by dewatering operations (Figure 9, Appendix A). The effective porosity was assumed to be 20 percent (Walton, 1984). Therefore, the calculated ground-water velocity is 4.4 feet per day (1,606 feet per year).

5.3 Deep Zone

Ground-water velocity in the deep zone was determined to be 6.4 feet per day (2,350 feet per year). The hydraulic conductivity (4,200 gpd/ft^2) was determined by dividing the transmissivity value obtained during the 1952 aquifer test (Table 10, Appendix D) by the saturated thickness of 50 feet (90 to 140 feet below land surface). This value is higher than the permeability listed in Table 10 of Appendix D (2,800 gpd/ft^2) because Schicht (1965) used 75 feet as the saturated thickness, rather than 50 feet. The hydraulic gradient (0.0023) was determined from the August 1984 water-level map in areas unaffected by dewatering operations (Figure 10, Appendix A). The effective porosity was assumed to be 20 percent (Walton, 1984).

6.0 GROUND-WATER QUALITY

A summary of ground-water quality conditions for 1983 through 1986 and for 1986 through 1994 is presented below.

6.1 Summary for 1983 to 1986

Ground-water sampling programs have been conducted at the Monsanto facility since November 1983 (Tables E-1 through E-5 in Appendix E). The overall objective of the monitoring programs was to characterize plant-wide ground-water quality. A minimum of two samples were collected from wells in critical areas. However, some wells have been sampled only once while others, such as GM-12A, were sampled frequently for quality assurance/quality control purposes.

Between November 1983 and May 1984, three rounds of samples were collected from the first 12 wells installed by Geraghty & Miller, Inc. The fourth sampling round was conducted in June 1984, when ten wells in the landfill area were sampled. Each ground-water sample collected during the four sampling rounds was analyzed for USEPA priority pollutant compounds, with the exception of February 1984. Only total organic carbon (TOC), total organic halogens (TOX), total phenols and chloride were scheduled for this round. In addition to the priority pollutant analyses, TOC and TOX were determined in November 1983 and May 1984, and chloride was analyzed in the May 1984 program. Temperature, pH, and specific conductance (field parameters) were measured in the field during each round. Envirodyne Engineers (St. Louis, Missouri) provided the laboratory services for each of these sampling programs.

In August 1984, a plant-wide sampling program was initiated by Geraghty & Miller, Inc. after additional wells were installed between June and August, 1984. The analytical program included a library search for non-priority pollutant compounds in addition to the USEPA Priority Pollutants. Miscellaneous constituents, such as TOC, chloride, and total dissolved solids (TDS), were also included in the program, as well as the three routine field parameters. In addition, three wells were selected for dioxin analysis (GM-16A, GM-27B, and GM-28B). Envirodyne Engineers, Inc. also provided the laboratory services for this sampling program.

The analytical data for many samples collected during the August 1984 sampling round may be invalid because samples were held beyond the method holding times prior to analysis. Where there were questions regarding the integrity of the analytical data, wells were resampled in November 1985. The questionable data are reported but are footnoted in the data tables.

Based on the results of the September 1984 library search and Monsanto's knowledge of past chemical usage in the plant, a list of non-priority pollutant compounds was developed for addition to the priority pollutant list. These compounds could theoretically be present in the ground water and were analyzed for in sampling rounds after September 1984. The chemicals are listed below.

Volatile Organic Compounds

- Methyl-iso-butyl ketone
- Methyl-isoamyl ketone
- m-Xylene
- o-Xylene
- p-Xylene

Acid Extractable Organic Compounds

- 4-Chlorophenol

Base/Neutral Extractable Organic Compounds

- 2-Nitroaniline
- 4-nitroaniline
- 2-Nitrochlorobenzene
- 4-Nitrochlorobenzene
- 2,4-Dinitrochlorobenzene
- 3,4-Dinitrochlorobenzene
- 4-Nitrodiphenylamine
- Triphenyl phosphate
- 2-Nitrobiphenyl (Wells GM-8 and GM-31ABC only)
- 4-Nitrobiphenyl (Wells GM-8 and GM-31ABC only)

Five sampling rounds were conducted between November 1984 and February 1986 for the USEPA priority pollutant compounds on the site-specific list of non-priority pollutants. Environmental Testing and Certification (ETC) in Edison, New Jersey provided the laboratory services for each of these programs and their results are presented in Tables E-1 through E-5 (Appendix E).

The chemical data is extensive and would prove cumbersome to those not familiar with it. In order to present these data in a manner that will easily demonstrate where chemical constituents have and have not been detected, mean concentrations of total priority pollutants and identified non-priority pollutants have been calculated for each well. The organic fractions of the chemical analysis (i.e., volatile, base/neutral, acid and pesticide/PCB compounds) were averaged individually and the mean value for each organic fraction was added together (Table 11, Appendix D). The results of the data reduction are presented for each of the three hydrogeologic zones, and are shown in Figures 23 through 25 (Appendix A).

Laboratory results that are reported with a less than symbol (<) indicate the chemical constituent was not detected above its detection limit (the value to the right of the symbol) at the time the analysis was performed. These results were assigned to a value of zero for computations of means or averages. The detection limits for the same compounds vary between Envirodyne and ETC, as well as between sampling events analyzed by the same laboratory. This is due to different analytical equipment, the volume of sample analyzed and different levels of interferences.

The results of the USEPA priority pollutant metals analysis for each sampling round are provided in Table E-5 in Appendix E. Most results are below the method detection limits, and few analyses are above USEPA drinking water standards for the metals that were detected. Therefore, these data are presented only in tabular form.

Throughout the course of the ground-water sampling programs conducted at the W.G. Krummrich Plant, 10 to 15 percent of the total number of samples were submitted as blind replicates, and trip and field blanks were also collected for QA/QC purposes. The blanks were analyzed for volatile organic compounds only. Replicates from Well GM-12A were collected during each sampling round, except September 1984, to provide a continuing check on laboratory performance.

With the exceptions of the September and November 1984 field blanks, trip blanks collected in May and September 1984 and five laboratory blanks collected in September 1984 (11 out of a total of 34), total volatile organic compound concentrations were less than 50 micrograms per liter (μg/L) in the blanks (see Table E-1). Benzene, chlorobenzene, and methylene chloride were compounds present in the highest concentrations in the blanks, with methylene chloride constituting more than 50 percent of the total in most cases. Because these compounds were found in all three types of blanks which are made up from distilled/deionized water provided by the laboratory and these compounds are used for many purposes in the laboratory (especially methylene chloride which is a solvent and extractant), the presence of contaminants in the blanks is regarded as a laboratory artifact. A detailed evaluation of the quality of the laboratory data is provided in the 1986 hydrogeologic study prepared by Geraghty & Miller.

6.2 Conclusions

The following conclusions were prepared by Geraghty & Miller in 1986 with respect to the W.G. Krummrich Plant.

6.2.1 Off-Site Impacts

Despite the fact that plant operations have affected ground-water quality, the off-site impact is minimal. The prevailing ground-water flow direction in all three hydrogeologic zones is westward toward the Mississippi River which is the ultimate point of discharge. Once in the Mississippi River, the concentrations of the constituents are diluted below detectable limits.

Geraghty & Miller, Inc.'s 1986 inventory of off-site wells and analysis of the water-table and potentiometric surface maps indicate that there are no off-site potable supply wells in the area. The only wells presently being pumped in the vicinity of the Monsanto property are being used for industrial or dewatering purposes and not for drinking water supplies. Water-level maps show that flow is toward the river and no cones of depression, which would be manifested by a circular pattern of equi-potential lines, can be seen within Monsanto's property boundaries. In all likelihood, constituents that may have originated from sources on the Monsanto property never migrated offsite in any direction other than to the west. Prior to 1973, constituents were probably captured in the cones of depression created by the on-site pumping. Between 1973 and 1980, the flow direction shifted toward the west and all ground water now migrates toward the Mississippi, with the exception of short time periods during flood conditions.

6.2.2 Sources of Contamination

It is most likely impossible to attribute the presence of specific compounds (or concentrations) in ground water to individual sources within the plant because of the potentially diverse number of points of origin. Leaky sewers, former leaky underground storage tanks, old spills and other discharges to the ground are all potential sources of ground-water contaminants. Changes in ground-water flow direction as a result of changes in pumpage over the years, temporary reversals of gradient at high river stage, and the dewatering operations conducted in the 1980s for the sewer system have mixed plumes from the various sources.

It is possible that some compounds are originating on adjacent properties and could contribute to the overall problem. The occurrence of benzene, toluene and xylene in wells of cluster GM-12, for instance, may indicate contamination which originates from the east.

The origin of organic compounds in the small zone in the southwest corner of the property is attributed to the former Route 3 drum site. Organic compounds are present in Well GM-31A which is downgradient of the drum area. Well GM-8 is upgradient and shows a low volatile organic compound concentration of 44 µg/L. Organic compound concentrations are below 100 µg/L in the intermediate zone.

The ground-water impact of the Route 3 drum area appears to be limited because the shallow zone is the only zone that has been affected. Organic compounds in the shallow zone have probably not traveled westward (downgradient) more than about 300 feet, even if the conservative movement (at the same rate as the average ground-water flow velocity), it is assumed. The estimate of the migration distance is based on the fact that the former drum site has been in existence approximately 40 years (as of 1986) and that ground water in the shallow zone moves at about 7 feet per year.

The intermediate zone in the vicinity of the Route 3 drum area does not appear to have been affected and this is consistent with the head data for well cluster GM-31. These data indicate that there is a very small downward hydraulic gradient which could drive constituents in the shallow zone into the deeper zones.

6.3 Recommendations

The following recommendations were prepared by Geraghty & Miller in 1986 with respect to the W.G. Krummrich Plant.

6.3.1 Remedial Action

Remedial action with respect to ground-water contamination itself appears to be unnecessary. Creating a hydraulic barrier to prevent the off-site ground-water migration of contaminants, for instance, is unjustifiable because there is no public health or environmental impact offsite. The potential for exposure to contaminated ground water should lessen with time because the use of the aquifer in the Sauget area will continue to decline in favor of river water use.

Another important reason for not recommending a ground-water cleanup program is that the reduction of concentrations of organic compounds to low levels is impractical. The area affected by organic compounds is quite large and ground-water contamination, therefore, must be

regarded on a regional scale. Cleanup would require pumpage of large quantities of water from the intermediate and perhaps the deep zones. The permeability of the shallow zone is so low that a tubular well pumping system is not feasible.

Given the large volumes of ground water to be recovered, it would be necessary to essentially operate the pumping system for an indefinite period of time. For instance, the volume of contaminated water in the zones where organic compound concentrations are above 100 µg/L beneath the plant and in the central area of the property is estimated at 8×10^8 gallons, assuming the effective porosities for each zone given in Section 5.0. In order to reduce the contaminant concentrations to 20 to 30 percent of their original concentrations, the aquifer pore volume would probably have to be exchanged about 150 times (Gillham, 1982). This represents a total volume of approximately 1.2×10^{11} gallons. A recovery system pumping at 1,000 gallons per minute would require approximately 200 years to accomplish this task. Establishing such a pumping system would be neither feasible nor cost effective.

Because the shallow zone cannot be pumped with wells, a passive system, such as a collector trench, would be required. The most likely position for a trench is immediately west of Route 3. Even if the collector system could double the hydraulic gradient, which is unlikely, and, in turn, reduce the constituent travel time by half, organic compounds which are now in the central plant area would take approximately 100 years to arrive at the collector system.

In order to alleviate ground-water contamination in the most cost-effective manner, Monsanto should continue with its policy of eliminating potential sources. The projects that have already been completed, are now underway, and those anticipated in the near future (as of 1986) should significantly reduce the contaminant loading to the ground-water system.

Projects that have been completed to date at a total cost of about $2 million consist of the following.

- Powerhouse Sewer Main: The powerhouse sewer main was repaired and replaced in 1985.

- Building BK Projects: Sewer, roof drain, and process water leak repairs to underground piping were completed in the vicinity of the BK office building. These were indicated by a ground-water mound in the BK building area during ground-water mapping. The projects were completed in 1985.

- Riverbank Erosion Control: Project work for erosion control of the riverbank property, which is adjacent to Monsanto's landfill, commenced in 1983. The project was completed in early 1986 after approximately 90,000 tons of rock and sand was placed on the 2,300 linear footage of the riverbank.

- South Lot Drum Site: Thirty drums of chemical waste, which were exhumed during a recent construction project, were removed from the ground in July 1986.

A major project to repair the sewer system in the community is underway and is expected to be completed in about three years. Two thousand linear feet of sewer piping is being replaced on the Monsanto property and the project is estimated to be completed in 1987 at a cost of $7 million. The sewer system in the Village of Sauget is being repaired and upgraded, and upon completion in 1989, will have cost about $21 million. Replacement and repair of the sewer should result in an improvement in ground-water quality because the old system is suspected of being a major source of contaminant loading to the ground water.

Geraghty & Miller, Inc., in a recent report, has recommended a clay cap for the Route 3 drum site. This report describes a boring program that was undertaken at the Route 3 drum site, characterizes the geology and reviews the remedial alternatives that were considered for the Site. The report also contains the data upon which the recommendation for the cap is based.

6.3.2 Ground-Water Monitoring

Geraghty & Miller, Inc. has formulated a ground-water monitoring program for the Monsanto Company property to determine whether water quality is changing significantly over time. In order to maximize the reliability of the data, Geraghty & Miller, Inc. believes it is necessary to include only those wells that have documented well construction details. In addition, the wells selected for this program should be limited to those near property boundaries, wells downgradient

of the landfill, and in the vicinity of the Route 3 drum site which is located between well cluster GM-31 and Well GM-8. The monitoring wells that have been selected for this program are included in Table 19 (Appendix D) and shown in Figure 23 (Appendix A).

At present there is insufficient data to determine concentration trends. Geraghty & Miller, Inc.'s experience indicates that at least 10 to 12 samples over 3 to 5 years are needed to obtain a trend significant at the 95 percent confidence level. Monsanto should establish a program to obtain the required data. Semi-annual samples should be sufficient because, in 1989, after five years of monitoring, 11 sets of data will be available for a trend analysis.

The list of chemical parameters that should be evaluated for each well will vary because the distribution of specific groups of compounds (e.g., volatile organic compounds) varies from one area of the plant property to another. For example, for each well in the plant process area where VOCs have been detected, the occurrence of USEPA extractable organic compounds is usually less common, and pesticides/PCBs are rarely found. Therefore, for the purpose of monitoring ground-water quality over time, it is not necessary to analyze for some fractions of USEPA priority pollutants and nonpriority pollutant organic constituents.

7.0 DESIGN AND IMPLEMENTATION OF THE GROUND-WATER MONITORING PROGRAM

In September 1986, Geraghty & Miller designed a semiannual ground-water monitoring program for Monsanto to determine whether water quality was changing (Table 19, Appendix D). This program was described in Geraghty & Miller's 1986 report which assessed the ground-water conditions at the W.G. Krummrich plant. Monsanto authorized the program to proceed in December 1986. The monitoring program included 18 wells in the production area and Lot F and 11 wells at Lot H. The parameters selected for the program varied from well to well as only those constituents previously detected (based on two sampling rounds) were included. Since neither pesticides, PCBs, nor metals were a concern in ground water at the Site, the monitoring program did not include these constituents.

8.0 MODIFICATIONS TO THE GROUND-WATER SAMPLING PROGRAM

The frequency and number of wells sampled semiannually were revised by Geraghty & Miller in May 1989 after five sampling rounds of data had been evaluated. The program was initially scheduled to be reviewed in 1991 after five years (or ten rounds) of data had been collected. However, since ground-water quality data were available from five sampling rounds and ground water moves very slowly (7.3 ft/yr) in the water-table zone, semiannual sampling was deemed to be unnecessary and the sampling for the shallow monitoring wells was rescheduled to be on an annual basis, with the exception of the upgradient shallow well GM-12A. The monitoring wells in the intermediate zone and deep zone in Lot F (GM-4B, GM-4C, GM-17B, and GM-17C) and the upgradient wells (GM-12B and GM-12C) were sampled semiannually through 1991. Side gradient wells in the intermediate and deep zones (GM-9B, GM-9C, GM-10B, and GM-10C) were also selected for annual sampling in May 1989. The voluntary monitoring program is currently being conducted on an annual basis and is ongoing.

Of the four monitoring wells located downgradient of the Route 3 drum site, two shallow monitoring wells (GM-58A and GM-59A) are on Monsanto property and a well cluster consisting of one shallow and one intermediate well (GM-54A and GM-54B, respectively) is located on Village of Sauget property. These wells were initially sampled in November 1987. After two rounds of data had been obtained from the shallow well (GM-54A) on village property, this well was deleted from the program because the results indicated that ground water had not been impacted. The remaining three wells were sampled semiannually during 1987 and 1988 and then annually from 1987 to 1994. The three-well monitoring cluster located at the downgradient boundary of the Route 3 drum site was deleted from the program after the May 1991 sampling round. Sampling shallow well GM-31A was not necessary because drum-site-related compounds were known from prior sampling of this shallow well, and wells GM-58A and GM-59A were farther downgradient and still being monitored . Since drum-site-related compounds were not being detected in the deeper wells (GM-31B and GM-31C) and a downward gradient was not present, these two wells were also deleted from the program.

Other wells such as wells GM-5, GM-6A, and GM-B were sampled occasionally to provide information at specific locations; these wells were sampled in November 1992. Also in 1992, 12

wells were analyzed for Appendix IX compounds rather than the usual analytes, which consist of priority pollutant compounds plus site-related compounds. These 12 wells included an upgradient three-well cluster (GM-12A, GM-12B, and GM-12C) and nine wells in Lot F (GM-4A, GM-4B, GM-4C, GM-5, GM-6A, GM-6B, GM-17A, GM-17B, and GM-17C). The purpose of selecting wells upgradient and downgradient of the main plant area was to determine if any Appendix IX compounds were present in ground water either migrating onto the property or leaving the main plant area.

9.0 GROUND-WATER QUALITY IN 1992

In November 1992, as part of the annual monitoring program, ground-water samples were collected from 23 wells in the plant area, on Lot F, and in several locations on Village of Sauget property. The wells sampled and the list of analytical parameters are provided in Tables 1 and 2 (Appendix F). Data from the 14 wells sampled at Lot H will not be evaluated in this report because that site is being investigated separately by IEPA. The results from the November 1992 sampling round were added to the site ground-water database, which is provided Appendix G. As described in Section 8.0, 12 wells were selected for analysis of Appendix IX compounds, rather than the priority pollutant list, to determine if other compounds besides the priority pollutant and site-related compounds are present in the ground water. Based on the analytical results from the upgradient well cluster (GM-12A, GM-12B, and GM-12C) and the nine downgradient wells in Lot F, no additional compounds were found.

9.1 Water-Table (Shallow) Zone

Ground-water quality data for the water-table (shallow) zone are provided in Appendix G. In wells where duplicate samples were collected, the mean data are presented in Figures 3, 4, and 5 (Appendix B). An evaluation of VOCs, acid extractable organic compounds, and base neutral extractable organic compounds that are present in the water-table zone in 1992 is provided below.

9.1.1 Volatile Organic Compounds

VOCs, specifically benzene and chlorobenzene, are the compounds in ground water at the Site detected most frequently and in the highest concentrations. The analytical results for the monitoring program are provided in Appendix G (Table 1) and total VOCs for each well sampled in November 1992 are presented in Figure 3 (Appendix B).

The direction of ground-water flow in the water-table zone is from east to west, which is consistent with historical ground-water flow (Geraghty & Miller, Inc. 1986a). Therefore, ground-water flow maps were not prepared for the Geraghty & Miller, Inc. 1993 report. VOCs in the water-table zone are present in upgradient well GM-12A at 1,039 µg/L (average of duplicate analyses), well GM-9A (2,873 µg/L), and well GM-17A (904,400 µg/L). VOCs were not

detected in two wells in the northern portion of the Site (GM-4A and GM-10A) and VOCs were also not detected in downgradient well GM-5. The absence of VOCs in well GM-5 is important because this well is downgradient of the portion of the water-table aquifer that contains the highest VOC concentrations. The VOCs consist primarily of benzene and chlorobenzene, and these two compounds are found in many areas of the facility.

Well GM-31A is located at the downgradient boundary of the Route 3 drum site and was last sampled in November 1990. VOCs were reported to be present at 16 µg/L (average of duplicate sample results). Therefore, VOCs are not present in high concentrations in the source area. VOCs were not detected in downgradient well GM-59A, and 14 µg/L of chlorobenzene were detected in well GM-58A. Chlorobenzene is not a compound that is related to the drum site. Site-related compounds include phenols, nitrochlorobenzenes (NCB), dinitrochlorobenzenes (DNCB), and nitrobiphenyls (Geraghty & Miller, Inc., 1986b). Well GM-54A is located downgradient of the drum site on Village of Sauget property and was last sampled in May 1988 when methylene chloride was the only VOC detected at 34 µg/L. This analytical result may have been a laboratory artifact.

Based on the results presented above, it does not appear that VOCs are migrating offsite via the water-table zone.

9.1.2 Acid Compounds

Acid compounds are generally not found in high concentrations at this Site (Appendix G, Table 2). In upgradient well GM-12A, 162 µg/L of 2-chlorophenol (average of duplicate analyses) was detected in November 1992 (Figure 3). Due to the absence of these compounds in wells GM-9A and GM-10A prior to 1986, this group of compounds was not included in the monitoring program for these two locations. Acid compounds were found in downgradient well GM-6A (2-chlorophenol at 19 µg/L) and in well GM-17A (2-chlorophenol at 26 µg/L and phenol at 13 µg/L); however, acid compounds were not detected in either GM-4A or GM-5.

In the vicinity of the Route 3 drum site, acid compounds were not detected in wells GM-58A or GM-59A in 1992, nor were they detected in well GM-54A, which was last sampled in May 1988. These compounds were detected at 358µg/L in well GM-31A (average of duplicate results) in November 1990, which was the last time the well was sampled.

Based on the results presented above, it does not appear that these compounds are migrating offsite via the water-table zone.

9.1.3 Base Neutral Compounds

Base neutral compounds (1,2-dichlorobenzene and aniline) were found at 2,254 µg/L (average duplicate analyses) in upgradient well GM-12A in November 1992 (Figure 3, Appendix B). The monitoring program's results are provided in Appendix G (Table 3). Due to the absence of these compounds in wells GM-9A and GM-10A prior to 1986, this group of compounds was not included in the monitoring program for these two locations. Base neutral compounds (1,2-dichlorobenzene and 1,4-dichlorobenzene) were found in downgradient wells GM-6A and GM-17A; however, base neutral compounds were not detected in either downgradient well GM-4A or downgradient well GM-5.

In the vicinity of the Route 3 drum site, base neutral compounds were detected at 3,377 µg/L in well GM-31A (average of duplicate analyses), which was last sampled in November 1990. Base neutral compounds were not found in well GM-59A, but 40 µg/L of 2-nitrochlorobenzene was detected in well GM-58A. Since this compound is related to the Route 3 drum site, it has likely migrated from that location. Well GM-54A was last sampled in May 1988 and base neutral compounds were not detected.

Based on the results presented above, the only area of the site where base neutral compounds may be migrating offsite is downgradient of the Route 3 drum site.

9.2 Intermediate Zone

Ground-water quality data for the intermediate zone are provided in Appendix G. Where duplicate samples were collected, mean data are presented in the figures. An evaluation of the VOCs, acid compounds and base neutral compounds are present in the intermediate zone in 1992 is provided below.

9.2.1 Volatile Organic Compounds

VOCs, specifically benzene and chlorobenzene, are the compounds most frequently detected in the intermediate zone and in the highest concentrations. The monitoring program's results are provided in Appendix G (Table 1) and total VOCs for each intermediate well sampled in November 1992 are presented in Figure 4 (Appendix B). VOCs are present in this zone in upgradient well GM-12B at 781 µg/L (average of duplicate analyses), as well as in all other intermediate zone wells. Based on the results shown in Figure 4 (Appendix B), it appears that the area of impacted ground water terminates near the western boundary of Lot F due to 34 µg/L of VOCs (primarily chlorobenzene in well GM-18B) and 20 µg/L of VOCs (chlorobenzene only) in off-site well GM-20B. Since well GM-20B is in the vicinity of the Village of Sauget primary treatment plant, it is not clear whether an off-site source has impacted ground water in the vicinity of well GM-20B.

In the vicinity of the Route 3 drum site, VOCs were detected in well GM-31B at 133 µg/L (primarily benzene and chlorobenzene) which was last sampled in May 1991. VOCs were also detected in off-site well GM-54B at 120 µg/L which represented only benzene and chlorobenzene. Since VOCs represented only about 0.01 percent of the total organic concentration in shallow well GM-31A (Figure 3, Appendix B), it is likely that the VOCs detected in intermediate zone wells GM-31B and GM-54B are representative of relatively ubiquitous levels of VOCs (especially benzene and chlorobenzene) in the intermediate zone and they are probably not from the Route 3 drum site, which is covered with a RCRA cap. In addition, historical water-level data for the GM-31 and GM-54 well clusters indicate that neither a downward nor an upward head gradient exists in this area of the site. Without a downward driving force, there is no mechanism to move chemicals downward and into the intermediate zone.

The intermediate and deep hydrogeologic zones have been affected in the past by large withdrawals of ground water by local industrial supply wells. Ground-water flow maps that depicted past flow conditions have been provided by Geraghty & Miller's 1986 report, which demonstrated cones of influence around industrial locations in the Sauget area (Geraghty & Miller, Inc., 1986a). Pumping large quantities of water from the deep zone most likely drew the chemicals from the shallow depths into the intermediate and deep zones. The presence of constituents in these zones may be the result of past pumping practices. A more detailed description of historical flow conditions can be found in the 1986 report (Geraghty & Miller, Inc., 1986a).

Based on this information, the terminus of the VOC plume appears to be in the vicinity of the western boundary of Lot F.

9.2.2 Acid Compounds

The monitoring program's results are presented in Appendix G (Table 2) and concentrations for total acid compounds for each intermediate well sampled in November 1992 are presented in Figure 4 (Appendix B). Acid compounds were not detected in upgradient well GM-12B in November 1992 nor in downgradient well GM-20B. Relatively low levels of acid compounds were reported in downgradient wells along Route 3. Acid concentrations were detected in well GM-4B at 62 µg/L (2-chlorophenol), in well GM-6B at 17 µg/L (2-chlorophenol and 2,4-dichlorophenol), and in well GM-17B at 13 µg/L (2-chlorophenol). The only other acid compound detected at the site was phenol in GM-18B at 2 µg/L.

At the Route 3 drum site, acid compounds were not detected in either well GM-31B (last sampled in February 1985) or in well GM-54B.

Based on the data presented above, it does not appear that acid compounds are a concern in the intermediate zone.

9.2.3 Base Neutral Compounds

The monitoring program's results are presented in Appendix G (Table 3) and concentrations for total base neutral compounds for each intermediate well sampled in November 1992 are presented in Figure 4 (Appendix B). Base neutral compounds were not detected in upgradient well GM-12B in November 1992, nor in downgradient well GM-20B. Along Route 3, concentrations ranged from 242 to 2,553 µg/L for total base neutral compounds. These concentrations consisted predominantly of chloroanilines and dichlorobenzenes. At downgradient well GM-18B, 31 µg/L of total base neutrals were reported; however, 28 µg/L of this total was bis(2-ethylhexyl)phthalate, which is often a laboratory artifact.

At the Route 3 drum site, base neutral compounds were detected in GM-31B (last sampled in November 1985) at 45 µg/L which only consisted of bis(2-ethylhexyl)phthalate, a potential laboratory artifact. In well GM-54B, base neutral compounds were detected at 229 µg/L in November 1992 and this result consisted only of chloroaniline compounds. These compounds were not on the parameter list for the November 1985 sample collected from GM-31B, therefore, it is not clear whether a relationship exists. The chloroaniline compounds are present in other areas in the intermediate zone and these compounds are not related to the Route 3 drum site. The presence of the chloroaniline compounds at this location may be due to another source because a downward head gradient does not exist in this area of the site.

Based on the results presented above, the only area of the site where site-related base neutral compounds may be migrating offsite is at the Route 3 drum site.

9.3 Deep Zone

Ground-water quality data for the deep zone are provided in Appendix G. Where duplicate samples were collected, mean data were presented in the figures. An evaluation of the VOCs, acid compounds, and base neutral compounds that are present in the deep zone in 1992 is provided below.

9.3.1 Volatile Organic Compounds

VOCs, specifically benzene and chlorobenzene, are the compounds detected most frequently and in the highest concentrations in the deep zone. The analytical results of the monitoring program are provided in Appendix G (Table 1) and total VOCs for each deep well sampled in November 1992 are presented in Figure 5 (Appendix B). VOCs are present in this zone in upgradient well GM-12C at 13 µg/L (chlorobenzene), as well as in all other deep zone wells. The results shown for wells GM-9C, GM-10C, and GM-31C consist only of benzene and chlorobenzene and are all much lower in concentration than in the intermediate zone. However, the results for wells GM-4C and GM-17C are considerably higher, especially at GM-4C. The higher results in the deeper zone are not consistent with ground-water flow because a downward gradient does not exist between the intermediate and deep zones. However, as discussed earlier in this report, past ground-water withdrawals may be responsible for drawing these chemicals down into the deep zone.

In the vicinity of the Route 3 drum site, VOCs were detected in well GM-31C at 57 µg/L (chlorobenzene only) which was last sampled in May 1991. Since this well is screened from 97 to 117 feet below grade, it is unlikely that the chlorobenzene is related to the drum site especially since a downward gradient is not present. In addition, chlorobenzene is not one of the compounds related to the drum site, and it appears to be relatively ubiquitous throughout the area.

Based on the results shown in Figure 5 (Appendix B), it cannot be determined whether VOCs are migrating offsite through the deep zone.

9.3.2 Acid Compounds

The monitoring program's results are provided in Appendix G (Table 2) and the concentrations for total acid compounds for each deep well sampled in November 1992 are presented in Figure 5 (Appendix B). Acid compounds (predominantly 2-chlorophenol) were detected at 6 µg/L in upgradient well GM-12C and at slightly higher concentrations along Route 3. Acid

concentrations were reported in well GM-4C at 24 µg/L (2-chlorophenol) and in well GM-17C at 52 µg/L (2-chlorophenol and 2,4-dichlorophenol). These results are similar to the results presented for the intermediate zone wells.

At route 3 drum site, acid compounds were reported at 6 µg/L (2-chlorophenol) in well GM-31C which was last sampled in November 1985 (duplicate analyses).

Based on the data presented above, it does not appear that acid compounds are a concern in a deep zone.

9.3.3 Base Neutral Compounds

The monitoring program's results are presented in Appendix G (Table 3) and concentrations for total base neutral compounds for each deep well sampled in November 1992 are presented in Figure 5 (Appendix B). Chloroanilines and dichlorobenzenes are the major base neutral compounds found in the deep zone. Base neutral compounds were found in upgradient well GM-12C at 36 µg/L (1,2-dichlorobenzene) and in higher concentrations in downgradient wells along Route 3. Total base neutral compounds (predominantly dichlorobenzenes and chloroanilines) were found in wells GM-4C and GM-17C at concentrations of 3,704 µg/L and 880 µg/L, respectively. These results differ considerably from the intermediate zone wells as the concentrations in well GM-4C are much higher than the intermediate zone data, and the results for GM-17C are much lower than the intermediate zone concentrations. These differences may be the result of past pumping in the deep zone.

At the Route 3 drum site, bis(2-ethylhexyl)phthalate was detected in one of the duplicate samples collected at well GM-31C at 84 µg/L but not in the other. Since averaged results were plotted on all the chemical distribution maps, a result of 42 µg/L was plotted for this location. Since this compound is often reported as a laboratory artifact, the chemical may not be present in ground water at this location.

Based on information presented above, it is not clear whether base neutral compounds are migrating offsite through the deep zone.

10.0 GROUND-WATER QUALITY TRENDS

Since December 1986, ground water at the site has been monitored to determine whether its quality has been changing over time. Upgradient, side gradient, and downgradient wells have been sampled regularly, and the analytical results are discussed in this section of the report. With the exception of the Route 3 drum site, benzene and chlorobenzene have been selected as indicator compounds because these compounds comprise the largest percentage of the total organic concentrations in each of the wells monitored. At the Route 3 drum site, phenolic compounds, nitrochlorobenzenes, dinitorchlorobenzenes, and nitrobiphenyls, have been determined to be characteristic of this area based on water quality.

Contour maps of chemical constituents are a useful tool for depicting present site conditions and for identifying short-term changes because maps drawn for different data acquisition time periods can be compared. However, as it is not always easy to identify and understand long-term trends by comparing maps, indicators of water quality (such as benzene and chlorobenzene) have been compiled into graphs showing concentration versus time. These graphs are for the key wells currently being monitored or monitored in the past and are provided in Figures E-1 through E-20 in Appendix H. The graphs are from the 1993 Geraghty & Miller report and include data through 1992. The wells have been divided into the three hydrogeologic zones: Water-table (shallow) zone, intermediate zone, and deep zone. The trends discussed below are based on visual inspection of the historical data that are included in Appendix G.

10.1 Water-Table (Shallow) Zone

Well GM-12A is at the upgradient boundary of the site in the water-table zone, and benzene and chlorobenzene are the primary constituents in ground water at this location. Based on the results shown in Figure E-1 (Appendix H), it appears that the concentrations for both compounds have been higher in recent years and the concentrations have fluctuated considerably over time.

Well GM-9A is located at the plant's southern boundary and is hydraulically side gradient to the ground-water flow direction. Similar to upgradient well GM-12A, benzene and chlorobenzene concentrations have fluctuated considerably in the last four sampling rounds, as compared to the first few years of data when these compounds were barely detected at all (Figure E-2 in

Appendix H). Another side gradient well (GM-10A) is located near the site's northern boundary. In November 1990, 5,030 µg/L of benzene was reported in this well, but neither benzene nor chlorobenzene has ever been detected on any other occasion during the entire monitoring program (Figure E-3 in Appendix H). Based on these data, this result is considered to be an outlier.

Downgradient wells GM-4A and GM-17A are located on the west side of Route 3. Similar to the data discussed above, relatively low concentrations of benzene and chlorobenzene (5 to 21 µg/L) were detected in well GM-4A in 1989 and 1990 but neither compound was detected prior to or after those sampling rounds (see Figure E-4 in Appendix H). Elevated concentrations of benzene and chlorobenzene have been detected in downgradient well GM-17A (see Figure E-5 in Appendix H) since monitoring began, and there has been little improvement in water quality in this well over time.

At the Route 3 drum site, phenolic compounds have been compared to nitrochlorobenzenes, dinotrochlorobenzenes, and nitrophenyls. In well GM-31A, which is located at the downgradient boundary of the drum site, concentrations have been elevated throughout the monitoring period (see Figure E-5 in Appendix H). With the exception of the high concentrations of phenol in November 1988, a number of compounds appear to have been reported in higher concentrations after 1985, at which time the drum site was excavated to determine if the buried drums were still intact. After the site was capped with a RCRA cap in 1986, the concentrations of some of the compounds decreased.

Downgradient of the Route 3 drum site, wells GM-58A and GM-59A have been monitored since their installation in 1987. Although the total concentration of site-related compounds has been detected as high as 150 µg/L in well GM-58A (see Figure E-7 in Appendix H), the range of concentrations has been very low in comparison to well GM-31A, given the fact that GM-58A is less than 150 feet from GM-31A. At well GM-59A, site-related compounds were detected only

once (November 1988) at a total concentration of 53 µg/L (see Figure E-8 in Appendix H). Site-related compounds have not been detected in well GM-59A either before or after November 1988.

10.2 Intermediate Zone

Well GM-12B is at the upgradient boundary of the site in the intermediate zone, and total xylenes and benzene are the primary constituents in ground water at this location. Xylenes have not been found in downgradient well locations, but based on the sporadic detection of these compounds at the upgradient location, they appear to be migrating onto the site from the east. Based on the results shown in Figure E-9 (Appendix H), the concentrations for both compounds appear to have fluctuated considerably over time.

Well GM-9B is located at the southern boundary of the plant and is hydraulically side gradient to the ground-water flow direction. Benzene and chlorobenzene are the primary constituents in ground water at this location (see Figure E-10 in Appendix H). Benzene concentrations have been low through 1989 (from not detected to 11.9 µg/L); however, concentrations were higher during the last three sampling rounds (717 to 3,960 µg/L). The reason for this increase is unclear. Chlorobenzene concentrations have remained relatively constant during the monitoring period. Another side gradient well (GM-10B) is located near the northern boundary of the site. Benzene detections have been sporadic over time and at relatively low concentrations (see Figure E-11 in Appendix H). Chlorobenzene detections have also been sporadic over time; however, the data for the last two sampling rounds have been higher than for any other result for this well. The reason for the recent increase in chlorobenzene concentrations is not clear.

Downgradient wells GM-4B and GM-17B are located on the west side of Route 3. Benzene and chlorobenzene are the primary constituents in ground water at these locations.

In well GM-4B, benzene has been detected sporadically and at relatively low concentrations (see Figure E-12 in Appendix H). Chlorobenzene has been detected more frequently; however, its concentrations have also fluctuated considerably over time. In well GM-17B, benzene was

initially detected at high levels (50,000 to 70,000 µg/L); however, since May 1988, benzene has only been detected in 2 of 8 analyses at concentrations of 220 and 249 µg/L (see Figure E-13 in Appendix H). Chlorobenzene concentrations have fluctuated over time but are usually reported in the parts per million range.

At the Route 3 drum site, the primary constituents in the intermediate zone are not the acid and base neutral compounds identified for the water-table zone. Benzene and chlorobenzene are the primary constituents, and they are probably not related to the Route 3 drum site because (1) the intermediate zone well (GM-31B) is screened from 65.5 to 85.5 feet below land surface; (2) there is no downward vertical head gradient; (3) the acid and base neutral compounds are not present; and (4) benzene and chlorobenzene concentrations are relatively ubiquitous across the site. Benzene and chlorobenzene results are provided for well GM-31B on Figure E-14 (Appendix H). Benzene detections have been sporadic and at low concentrations (not detected to 16.6 µg/L). The chlorobenzene data represent an average of duplicate results for most of the sampling rounds. Chlorobenzene detections have also been sporadic, and the highest concentration of 193.5 µg/L is an average of 387 µg/L and a non-detect duplicate result. Therefore, the data set is questionable.

10.3 Deep Zone

Well GM-12C is at the upgradient boundary of the site in the deep zone, and few constituents have been detected in this well. Benzene was detected at 32.7 µg/L in May 1990, and chlorobenzene was detected at 13.2 µg/L in November 1992 (see Figure E-15 in Appendix H). Neither compound has been detected at any other time since the monitoring program began in December 1986.

Well GM-9C is located at the southern boundary of the plant and is hydraulically side gradient to the ground-water flow direction. Benzene and chlorobenzene are the primary constituents at this location (see Figure E-16 in Appendix H). Concentrations have fluctuated considerably over time, but results have been generally higher for each compound in recent years. Another side gradient well (GM-10C) is located near the northern boundary of the site. Benzene has not been detected since the monitoring program began in December 1986 (see Figure E-17 in

Appendix H). Chlorobenzene results have been very consistent over time at relatively low levels, with the exception of the November 1989 and November 1990 sampling rounds, when chlorobenzene was reported at 752 and 451 µg/L, respectively.

Downgradient wells GM-4C and GM-17C are located on the west side of Route 3. Chlorobenzene is the primary constituent in ground water at these locations, with benzene being detected only sporadically. In well GM-4C, benzene has been detected on 3 of 10 occasions at concentrations ranging from 190 to 693 µg/L (see Figure E-18 in Appendix H). Chlorobenzene concentrations have been generally increasing over time. The reason for this apparent trend is unclear. In well GM-17C, benzene has been detected on 4 of 10 occasions at concentrations ranging from 22.5 to 390 µg/L (see Figure E-19 in Appendix H). Chlorobenzene concentrations were high initially (6,000 to 21,000 µg/L), dropped to levels below 1 part per million, then increased in recent years to 6,000 to 7,000 µg/L. This fluctuation in chlorobenzene concentrations cannot be explained at this time.

At the Route 3 drum site, the primary constituents in the deep zone are not the semivolatile compounds found in the water-table zone, but are benzene and chlorobenzene, as was found in the intermediate zone. Benzene was detected on 5 of 10 occasions at concentrations ranging from 15.4 to 144 µg/L (see Figure E-20 in Appendix H). Chlorobenzene fluctuated considerably and was detected on 7 of the 10 occasions at concentrations ranging from 52.7 to 1,120 µg/L. The highest concentrations were detected in November 1988 and May 1989, and the chlorobenzene concentrations dropped to 56.6 µg/L in November 1992. As discussed above, we do not believe that the benzene and chlorobenzene concentrations detected in ground water have migrated into the intermediate and deep zones from the Route 3 drum site, which is located above the water table in the shallow zone.

11.0 COMPARISON OF 1984/1985 AND 1992 WATER QUALITY DATA

To determine if the plumes of impacted ground water within the water-table, intermediate and deep zones have stabilized, ground-water quality data from 1984/1985 were compared to data from 1992 by Geraghty & Miller in 1993. Because benzene and chlorobenzene concentrations are the constituents detected most frequently and in the highest concentrations, data for these two compounds from 1984/1985 and 1992 were compared within each zone. By examining both compounds, the effects of in-situ degradation can be evaluated because benzene is highly biodegradable whereas chlorobenzene is not. Duplicate results were averaged, and the comparison of water quality data for each zone, as provided by Geraghty & Miller in 1993, is provided below.

11.1 Water-Table (Shallow) Zone

Since most of the water-table monitoring wells were installed in 1983 and 1984, and many wells were first sampled in 1984, benzene and chlorobenzene data from 1984 were compared to 1992 concentrations to determine whether the plume identified in 1984 has stabilized.

Benzene concentrations for 1984 and 1992 have been plotted in Figure 6 (Appendix B). Since the monitoring wells at the Route 3 drum site were installed after 1984, the data for these wells are representative of the year each well was first installed. The benzene concentrations from the two data sets are very similarly for most wells, and a 100 µg/L contour line was plotted for both data sets. The red contour line represents 1992 data and the blue contour line represents 1984 data. The similar positions of the 100 µg/L contour lines for 1984 and 1992 suggests that the benzene plume has stabilized onsite.

Chlorobenzene concentrations for 1984 and 1992 have been plotted in Figure 7 (Appendix B). The data for the Route 3 drum site represent the year each well was installed. The chlorobenzene results for 1984 and 1992 and the positions of the 100 µg/L contour lines suggest that the chlorobenzene plume has stabilized onsite.

11.2 Intermediate Zone

Since most of the intermediate zone monitoring wells were installed by 1985, the initial benzene and chlorobenzene data from 1985 were compared to 1992 concentrations to determine whether the plume identified in 1985 has stabilized.

Benzene concentrations for 1985 and 1992 have been plotted in Figure 8 (Appendix B). Since well GM-54B (Route 3 drum site) was installed in 1987, the results from 1987 were plotted for this well. A 100 µg/L contour line was plotted for both data sets to identify the area where the greatest impacts to ground water have occurred. A comparison of the benzene concentrations indicates a general improvement of water quality between 1985 and 1992. Specifically, a decrease in concentrations to non-detectable levels at four downgradient wells (GM-6B, GM-17B, GM-18B, and GM-20B), and at side gradient well GM-10B. The similar positions of the 100 µg/L contour lines for 1985 and 1992 suggest that the benzene plume has stabilized onsite.

Chlorobenzene concentrations for 1985 and 1992 have been plotted in Figure 9 (Appendix B). As discussed above, 1985 data were not available for well GM-54B because this well was installed in 1987; therefore, 1987 data were plotted. A comparison of the chlorobenzene concentrations indicates a general improvement of water quality between 1985 and 1992. Specifically, a decrease in concentrations at five downgradient wells (GM-4B, GM-6B, GM-18B, GM-20B, and GM-31B) and at side gradient well GM-9B. The similar positions of the 100 µg/L contour lines for 1985 and 1992 suggest that the chlorobenzene plume has stabilized onsite. However, an additional well is necessary in the vicinity of the northwest corner of Lot F to determine if VOCs have migrated west of Lot F in this area of the site.

11.3 Deep Zone

Since all of the deep zone monitoring wells were installed by 1985, the benzene and chlorobenzene data from 1985 were compared to 1992 concentrations to determine whether the plume identified in 1985 has stabilized. Data from 1991 was plotted for well GM-31C since this well was last sampled during that year.

Benzene concentrations for 1985 and 1992 have been plotted in Figure 10 (Appendix B). A comparison of the benzene concentrations indicates a general improvement of water quality between 1985 and 1992. Specifically, a decrease in concentrations in downgradient wells GM-17C and GM-31C, and the continued absence of benzene in downgradient well GM-4B and side gradient well GM-10B.

Chlorobenzene concentrations for 1985 and 1992 have been plotted in Figure 11 (Appendix B). A comparison of the chlorobenzene results indicates that concentrations in downgradient wells GM-4C and GM-17C have increased between 1985 and 1992. However, concentrations have decreased at wells GM-10C and GM-31C.

Without additional downgradient monitoring wells in the deep zone, it is difficult to determine whether the benzene or chlorobenzene plumes have stabilized onsite.

12.0 GROUND-WATER QUALITY IN 1994

In September 1994, as part of the plant's ground-water monitoring program, ground-water samples were collected from 20 wells in the plant area, Lot F, and Village of Sauget property. The wells sampled and the list of analytical parameters are provided in Table 1 (Appendix I). The results from the September 1994 sampling round were added to the site ground-water database, which is provided in Appendix G. Based on the existing ground-water quality data, all samples were analyzed for Appendix IX VOCs and selected wells were also analyzed for Appendix IX semivolatile organic compounds (acid extractable and base neutral extractable compounds). In addition, 10 site-specific semivolatile organic compounds were added to the Appendix IX list of parameters, as shown in Table 1 (Appendix I).

12.1 Water-Table (Shallow) Zone

Ground-water quality data for the water-table (shallow) zone are provided in Appendix G. An evaluation of VOCs, acid extractable and base neutral extractable organic compounds that are present in the water-table zone in 1994 is provided below.

12.1.1 Volatile Organic Compounds

Similar to past sampling events, benzene and chlorobenzene are the primary constituents of concern and are present in upgradient well GM-12A at 3,200 µg/L, well GM-9A (2,210 µg/L), and well GM-17A (690,000 µg/L). VOCs were not detected in well GM-10A (northern portion of the site), nor in downgradient wells GM-4A and GM-5. The absence of any VOCs (specifically benzene and chlorobenzene) in well GM-5 is significant because this well is downgradient of the portion of the water-table aquifer that contains the highest concentrations of benzene and chlorobenzene.

Well GM-58A is located downgradient of the Route 3 drum site and VOCs were not detected in 1994. In addition, well GM-54A is located downgradient of well GM-58A and it too was absent of VOCs in 1994.

Based on the results presented above, it does not appear that VOCs are migrating offsite via the water-table zone.

12.1.2 Acid Compounds

Acid extractable compounds were monitored in well GM-5 (downgradient of the plant area) and wells GM-54A and GM-58A which are downgradient of the Route 3 drum site. No acid extractable compounds were detected in 1994. This is particularly important for the Route 3 drum site since phenolic compounds used to be key constituents in this area of the site.

Based on the results presented above, it does not appear that these compounds are migrating offsite via the water-table zone.

12.1.3 Base Neutral Compounds

Base neutral compounds were monitored in well GM-5 (downgradient of the plant area), and wells GM-54A and GM-58A (downgradient of the Route 3 drum site) in 1994. No base neutral compounds were detected in well GM-5. In well GM-58A (about 150 feet downgradient of the Route 3 drum site), 29 µg/L of 2- and 4-nitrochlorobenzene were detected. In well GM-54A (about 200 feet downgradient of well GM-58A) no base neutral compounds were found.

Based on the results presented above, it does not appear that these compounds are migrating offsite via the water-table zone.

12.2 Intermediate Zone

Ground-water quality data for the intermediate zone are provided in Appendix G. An evaluation of VOCs, acid extractable and base neutral extractable compounds that are present in the intermediate zone in 1994 is provided below.

12.2.1 Volatile Organic Compounds

VOCs, specifically benzene and chlorobenzene, are the compounds most frequently detected in the intermediate zone and in the highest concentrations. The monitoring program's results are provided in Appendix G (Table 1). VOCs (benzene only) were detected in upgradient well GM-12B at 9,400 µg/L. VOCs (benzene and chlorobenzene only) were detected in well GM-9B (3,840 µg/L) along the plant's southern boundary, and in well GM-10B (chlorobenzene only) at 2,300 µg/L at the plant's northern boundary. VOCs (benzene and chlorobenzene only) were detected in downgradient wells GM-4B and GM-17B at concentrations of 44,900 µg/L (average of duplicate results) and 1,200 µg/L, respectively. Farther downgradient, near the plant's downgradient property boundary, concentrations were significantly reduced in well GM-20B. In this well, chlorobenzene was detected at 450 µg/L and 1,1-dichloroethane was detected at 41 µg/L. In November 1992, only chlorobenzene was detected at 20 µg/L.

Based on the results of these data, it appears that the area of impacted ground water terminates near the western boundary of Lot F. Since well GM-20B is located on the property of the Village of Sauget primary treatment plant, it is not clear whether an off-site source has impacted ground water in this area.

Well GM-54B is located about 350 feet downgradient of the Route 3 drum site. Although 340 µg/L of chlorobenzene was detected in this well in 1994, chlorobenzene is not a compound that can be related to the drum site based on shallow water quality data. It is likely that the detection of chlorobenzene is the result of the relatively ubiquitous presence of this compound in the intermediate zone and not from the Route 3 drum site which is covered with a RCRA cap. In addition, historical water-level data for well clusters in this area indicate that a downward head gradient is not present in this area of the site. Without a downward driving force, there is no mechanism for chemicals to migrate downward into the intermediate zone.

Based on the data presented above, the terminus of the VOC plume appears to be near the western boundary of Lot F.

12.2.2 Acid Compounds

In 1994, acid extractable compounds were monitored in wells GM-4B, GM-17B, and GM-20B which are downgradient of the plant area and in well GM-54B which is downgradient of the Route 3 drum site. Acid extractable compounds were not detected in well GM-17B; however, 84 µg/L of phenol was detected in well GM-4B near Route 3. Monitoring well GM-20B is located farther downgradient and no acid compounds were detected.

Well GM-54B is located downgradient of the Route 3 drum site and no acid compounds were detected.

Based on the data presented above, it does not appear that acid compounds are migrating offsite via the intermediate zone.

12.2.3 Base Neutral Compounds

In 1994, base neutral compounds were monitored in wells GM-4B, GM-17B, and GM-20B which are downgradient of the plant area and in well GM-54B which is downgradient of the Route 3 drum site.

Several base neutral compounds were detected in wells GM-4B and GM-17B located along Route 3. In well GM-4B bis(2-ethylhexyl)phthalate was detected in a sample and its duplicate at concentrations of 150 and 240 µg/L; however, these results are suspect because this compound is often a laboratory artifact and it was not detected during past sampling events. No other base neutral compounds were detected in the initial sample collected from GM-4B; however, several compounds were detected in the duplicate sample collected which include: aniline (110J µg/L), 2- and 3-chloroaniline (59 µg/L), and 4-chloroaniline (130 µg/L). Several base neutral compounds were also detected in well GM-17B which include: 1,4-dichlorobenzene (170 µg/L), 2,4- and 2,4-dinitrochlorobenzene (10 µg/L), 2- and 3 chloroaniline (1,400 µg/L), and 4-chloroaniline (370 µg/L). Further downgradient, at well GM-20B, fewer constituents at lower concentrations were detected and were reported as follows: 1,4-dichlorobenzene (83 µg/L) and

2-chloroaniline (140 µg/L). As stated earlier, well GM-20 is located in the vicinity of the Village of Sauget's primary treatment plant and Village operations may have impacted the water quality in this well.

Well GM-54B is located downgradient of the Route 3 drum site and only bis(2-ethylhexyl) phthalate was detected (50 µg/L). As discussed earlier, this compound is often a laboratory artifact.

Based on the results presented above, site-related base neutral compounds may be migrating offsite through the area upgradient (east) of well GM-20B.

12.3 Deep Zone

Ground-water quality for the deep zone is provided in Appendix G. An evaluation of the VOCs, acid compounds and base neutral compounds that are present in the deep zone in 1994 is provided below.

12.3.1 Volatile Organic Compounds

VOCs, specifically benzene and chlorobenzene, are the compounds most frequently detected in the deep zone and in the highest concentrations. Chlorobenzene was detected at 15 µg/L in upgradient well GM-12C, no other VOCs were detected. VOCs (benzene and chlorobenzene only) were detected in well GM-9C (350 µg/L) along the plant's southern boundary, and in well GM-10C (chlorobenzene only) at 120 µg/L at the plant's northern boundary. These concentrations are significantly lower than those found in the intermediate zone. In downgradient monitoring wells GM-4C, benzene was detected at 32,000 µg/L and chlorobenzene was not detected. Chlorobenzene usually ranges from 10,000 to 20,000 µg/L with little or no benzene being reported. It appears that the results were reversed; however, the laboratory is confident that the data are correct. In well GM-17C benzene and chlorobenzene were detected at concentrations of 4,200 and 27,000 µg/L, respectively. The higher results in GM-4C and GM-17C are not consistent with ground-water flow because a downward gradient does not exist

between the intermediate and deep zones. However, as discussed earlier in this report, past ground-water withdrawals may be responsible for drawing these compounds down into the deep zone.

Based on the results presented above, benzene and chlorobenzene may be migrating offsite through the deep zone.

12.3.2 Acid Compounds

In 1994, acid extractable compounds were monitored in wells GM-4C and GM-17C which are both downgradient of the plant area; no acid compounds were detected.

Based on the results presented above, acid compounds are not migrating offsite via the deep zone.

12.3.3 Base Neutral Compounds

In 1994, base neutral compounds were monitored in wells GM-4C and GM-17C which are both downgradient of the plant area; and several base neutral compounds were detected. In well GM-4C, 53 µg/L of bis(2-ethylhexyl)phthalate was reported; however, its presence may be a laboratory artifact. In addition, several other compounds were detected which include: aniline (70 µg/L), 1,4-dichlorobenzene (26 µg/L), 2- and 3-chloroaniline (50 µg/L), and 4-chloroaniline (64 µg/L). A similar suite of compounds was detected in well GM-17C at the following concentrations: 1,4-dichlorobenzene (520 µg/L), 2- and 3-chloroaniline (380 µg/L), and 4-chloroaniline (170 µg/L). The levels of constituents in the deep zone at these two locations are generally less than their respective concentrations in the intermediate zone.

Based on the information presented above, it is not clear whether base neutral compounds are migrating offsite via the deep zone.

13.0 SUMMARY OF FINDINGS

An evaluation of the ground-water quality data that has been developed during the plant's ground-water monitoring program is provided below.

1. In the water-table zone, ground water has been impacted by VOCs (specifically benzene and chlorobenzene), and to a lesser extent by acid and base neutral p 18Xbase neutral c (semivolatile compounds). Based on the results of the ground-water monitoring program, the plume of impacted ground water has stabilized onsite. Although ground water has been impacted to varying degrees downgradient of the plant area and at the Route 3 drum site, the constituents in ground water have not migrated very far in this zone.

2. In the intermediate zone, ground water has been impacted by VOCs (benzene and chlorobenzene) and base neutral compounds, and to a much lesser extent, acid compounds. The results of the ground-water monitoring program indicate that the plume has stabilized, and the extent of the plume of impacted ground water appears to terminate near the western boundary of Lot F. In the vicinity of the Route 3 drum site, low levels of constituents have been detected in downgradient monitoring wells; however, the drum site was probably not the source.

3. In the deep zone, ground water has been impacted by VOCs (benzene and chlorobenzene) and base neutral compounds, and to a much lesser extent, acid compounds. Based on the results of the ground-water monitoring program, additional data along the plant's perimeter is needed to determine whether the plume of impacted ground water has migrated offsite.

4. Based on the 1992 and 1994 analytical results that targeted Appendix IX parameters (as compared to past analyses of priority pollutant compounds), no additional compounds were found that had not been detected during past sampling events.

14.0 RECOMMENDATIONS

Based on Roux Associates' analysis of the ground-water quality data collected at the plant since 1984, we recommend that several additional wells be installed to complete the monitoring well network. Our recommendations are provided below.

1. Due to the uncertainty as to whether VOCs (specifically, benzene and chlorobenzene) and several base neutral compounds are migrating offsite via the intermediate zone, we recommend the monitoring well network be expanded (see Figure 1). The expanded network would include an additional intermediate well west of GM-4B near the western boundary of Lot F, and a second well west of well GM-6B, also near the western boundary of Lot F. At the present time, we believe the location of well GM-20B on Village of Sauget property is satisfactorily located to monitor ground water migrating westward from the center of the plant.

2. Due to the uncertainty as to whether VOCs (specifically, benzene and chlorobenzene) and several base neutral compounds are migrating offsite via the deep zone, we recommend the monitoring well network to be expanded (see Figure 1). The expanded network would include three new wells as follows: a deep well west of GM-4C near the western boundary of Lot F, a deep well west of GM-17C near the western boundary of Lot F, and a deep well west of GM-6C near the western boundary of Lot F. Based on these three additional wells, it should be clear as to whether any constituents are migrating offsite.

3. We propose that the intermediate and deep wells be constructed of similar materials as in the past (stainless steel screens and either black steel or PVC riser). In addition, each new intermediate and deep well should be installed at similar depths (or elevations) of existing wells with regard to the respective zone for which the wells will be monitoring.

15.0 REFERENCES

Geraghty & Miller, Inc. 1986a. Plant-Wide Assessment on Ground-Water Conditions at the W.G. Krummrich Plant, Monsanto Company, Sauget, Illinois, Volumes I, II, and III, September 1986.

Geraghty & Miller, Inc. 1986b. Proposed Cap for the Route 3 Drum Site at the Monsanto W.G. Krummrich Plant in Sauget, Illinois, September 1986.

Geraghty & Miller, Inc. 1993. Evaluation of Ground-Water Quality Conditions at W.G. Krummrich Plant, Monsanto Company, Sauget, Illinois, May 1993.

Gillham, R.W. 1982. Applicability of Solute Transport Model to Problems of Aquifer Rehabilitation. Proceedings of the Second National Symposium on Aquifer Restoration and Ground-Water Monitoring. May 26-28. National Water Well Association, Worthington, Ohio.

Lohman, S.W. 1972. Ground-Water Hydraulics, U.S. Geological Survey, Professional Paper 708, 70 p.

Richey, J.D., Schicht, R.J and Weiss, L.S. 1984. Ground-Water Level Analysis by Computer Modeling - American Bottoms Groundwater Study, Illinois State Water Survey, 93 p.

Schicht, R.J. 1965. Ground-Water Development in East St. Louis Area, Illinois, Illinois State Water Survey, Report of Investigation 51, 70 p.

USEPA. 1984. EPA Method Study 29, Method 624-Purgeables.

Walton, W.C. 1984. Practical Aspects of Groundwater Modeling, National Water Well Association, 566 p.

APPENDIX A

Figures From 1986 Plant-Wide
Assessment on Ground-Water Quality Conditions

SDMS US EPA REGION V
FORMAT- OVERSIZED - 5
IMAGERY INSERT FORM

The item(s) listed below are not available in SDMS. In order to view original document or document pages, contact the Superfund Records Center.

SITE NAME	SAUGET AREA 2		
DOC ID #	157323		
DESCRIPTION OF ITEM(S)	MAPS		
REASON WHY UNSCANNABLE	_X_OVERSIZED	OR	___ FORMAT
DATE OF ITEM(S)	N. D.; August, 1984; November, 1985		
NO. OF ITEM	12		
PHASE	A/R, SID		
PRP	RMD - SAUGET AREA 2		
PHASE (AR DOCUMENTS ONLY)	___ Remedial ___ Removal ___ Deletion Docket ___ AR ___ Original ___ Update # ___ Volume ___ of ___		

COMMENT(S)
Oversized Maps Figures 1 thru 3; Figures 13, 9, 12, 10, 11, 14, 23, 24, 25 (in sequence as per original document).

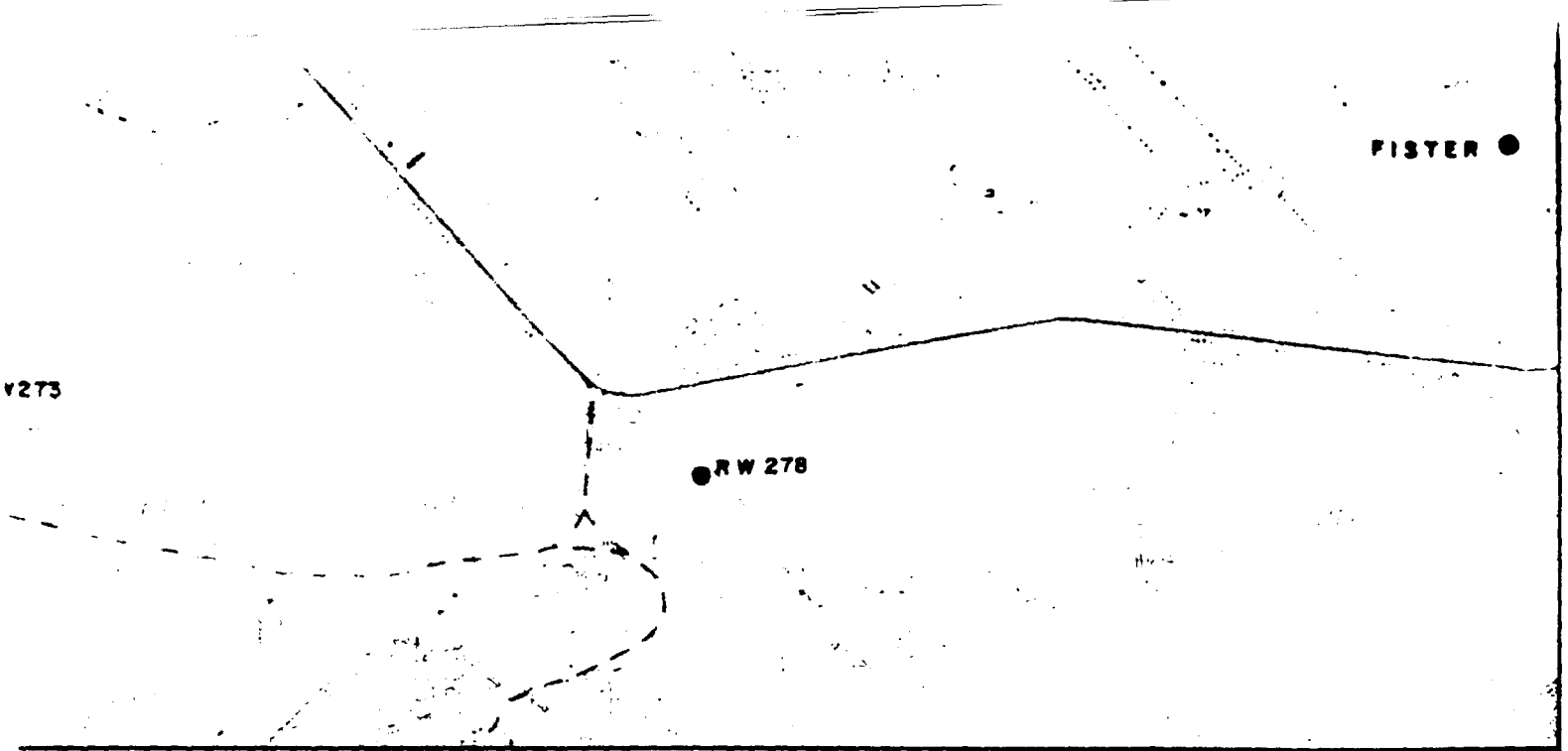

1 MILE

00 FEET

AREA WELLS INVENTORIED PRIOR TO THE STUDY

MONSANTO COMPANY

SAUGET, ILLINOIS

FIGURE 1

944-

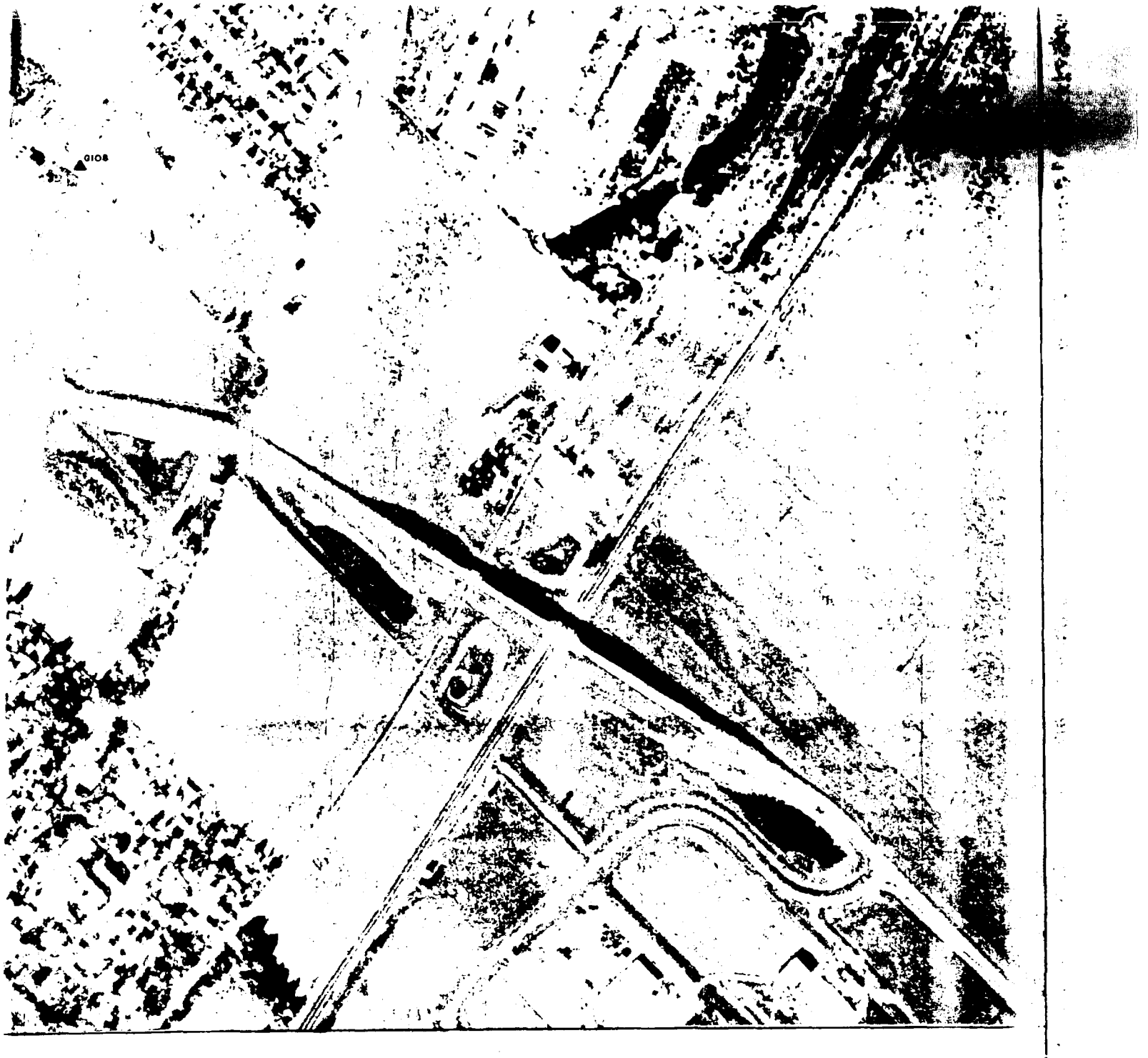

LOCATION MAP AND LINE OF
GEOLOGIC CROSS-SECTION

MONSANTO COMPANY
Sauget, Illinois

FIGURE 2

GERAGHTY & MILLER, INC.
Ground-Water Consultants

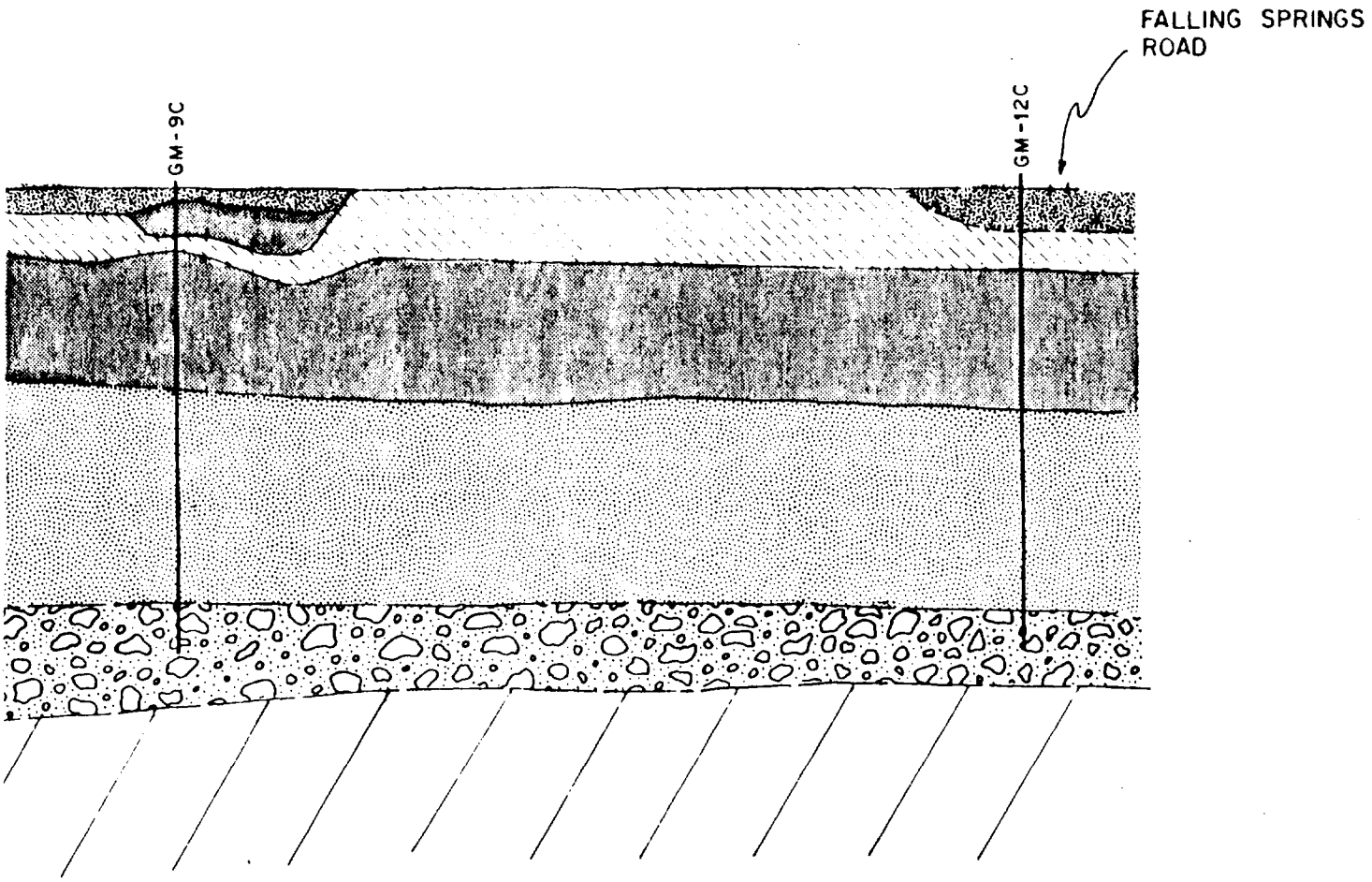

GENERALIZED GEOLOGIC CROSS-SECTION (A-A')

MONSANTO COMPANY
Sauget, Illinois

FIGURE 3

GERAGHTY & MILLER, INC.
Ground-Water Consultants

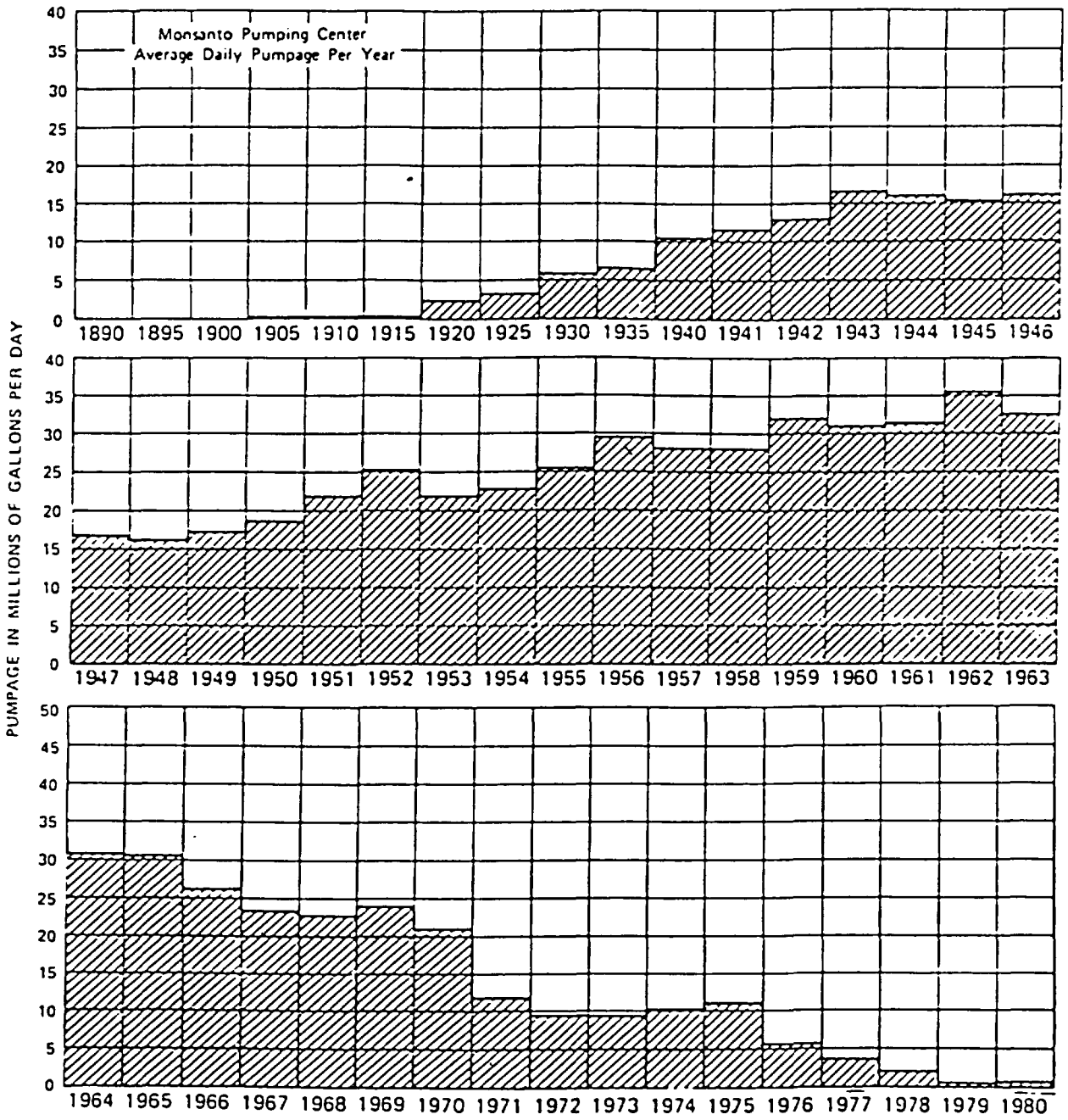

ESTIMATED PUMPAGE IN THE EAST ST. LOUIS-SAUGET-CAHOKIA AREA, 1890-1980
MONSANTO COMPANY, SAUGET, ILLINOIS

SOURCE: RITCHEY, 1984

FIGURE 4

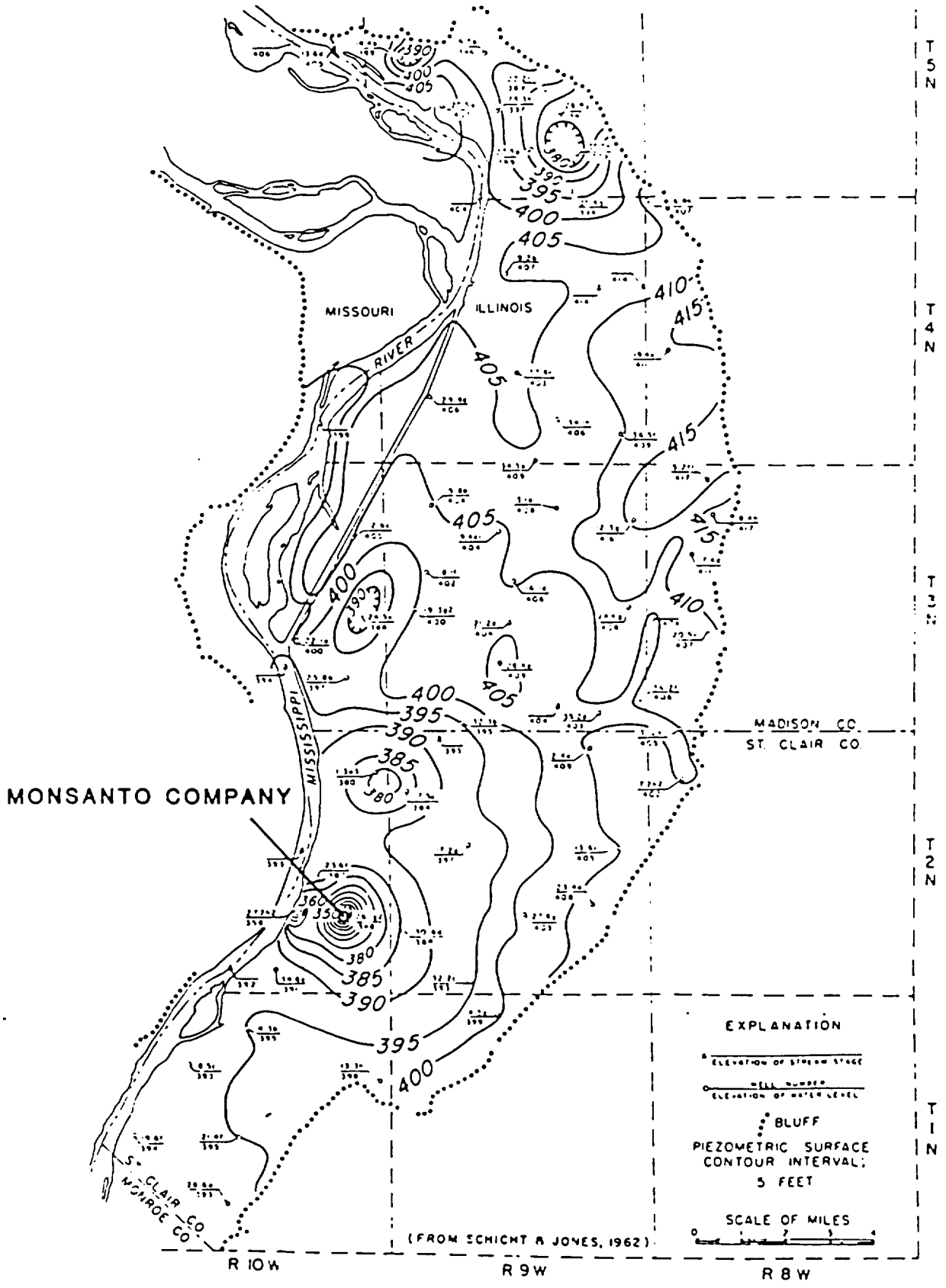

APPROXIMATE ELEVATION OF THE POTENTIOMETRIC SURFACE, NOVEMBER 1961
MONSANTO COMPANY, SAUGET, ILLINOIS

SOURCE RITCHEY, 1984

FIGURE 5

GERAGHTY & MILLER, INC.
Ground-Water Consultants

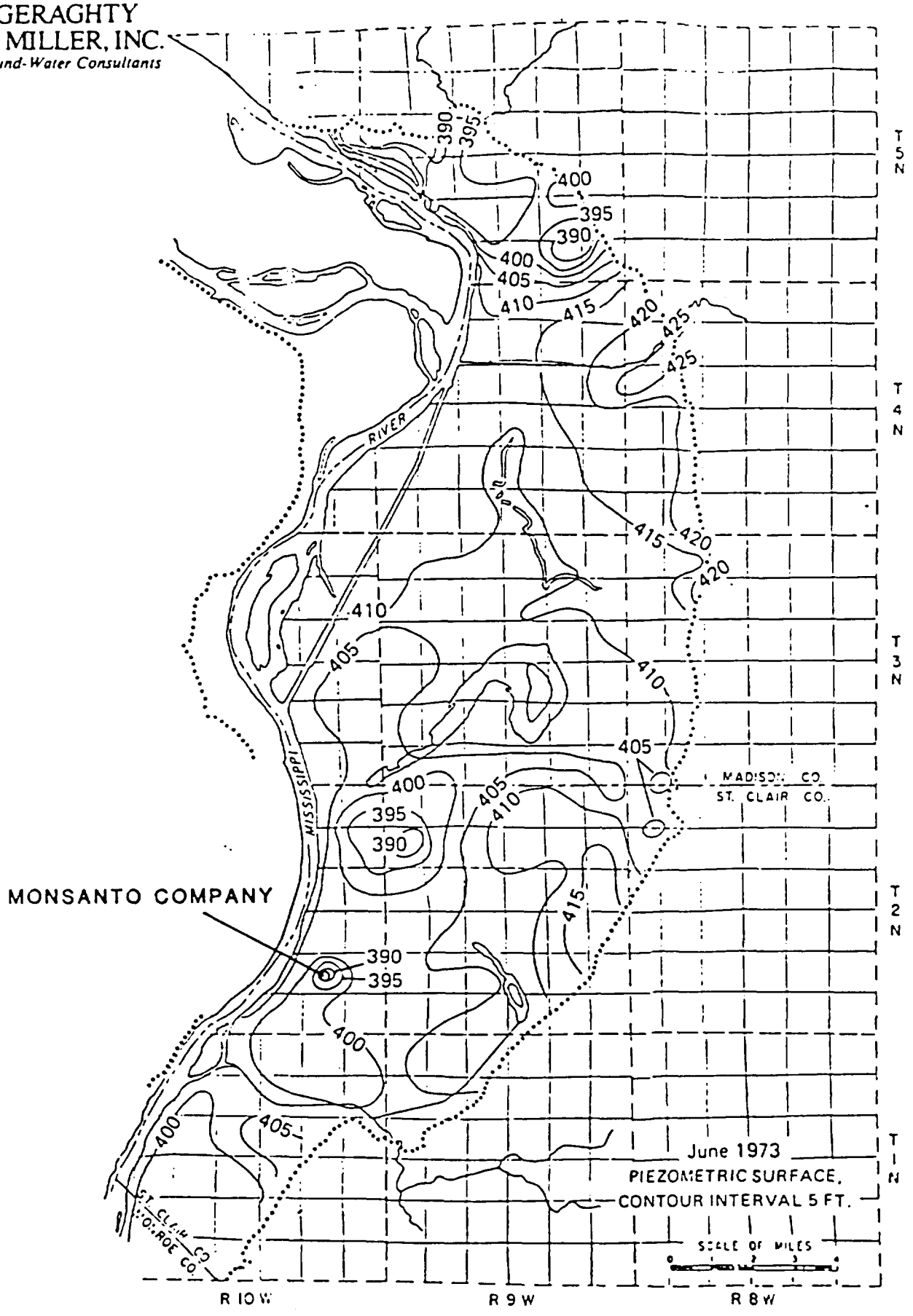

APPROXIMATE ELEVATION OF THE POTENTIOMETRIC SURFACE, JUNE 1973
MONSANTO COMPANY, SAUGET, ILLINOIS

SOURCE: RITCHEY, 1984

FIGURE 6

GERAGHTY & MILLER, INC.
Ground-Water Consultants

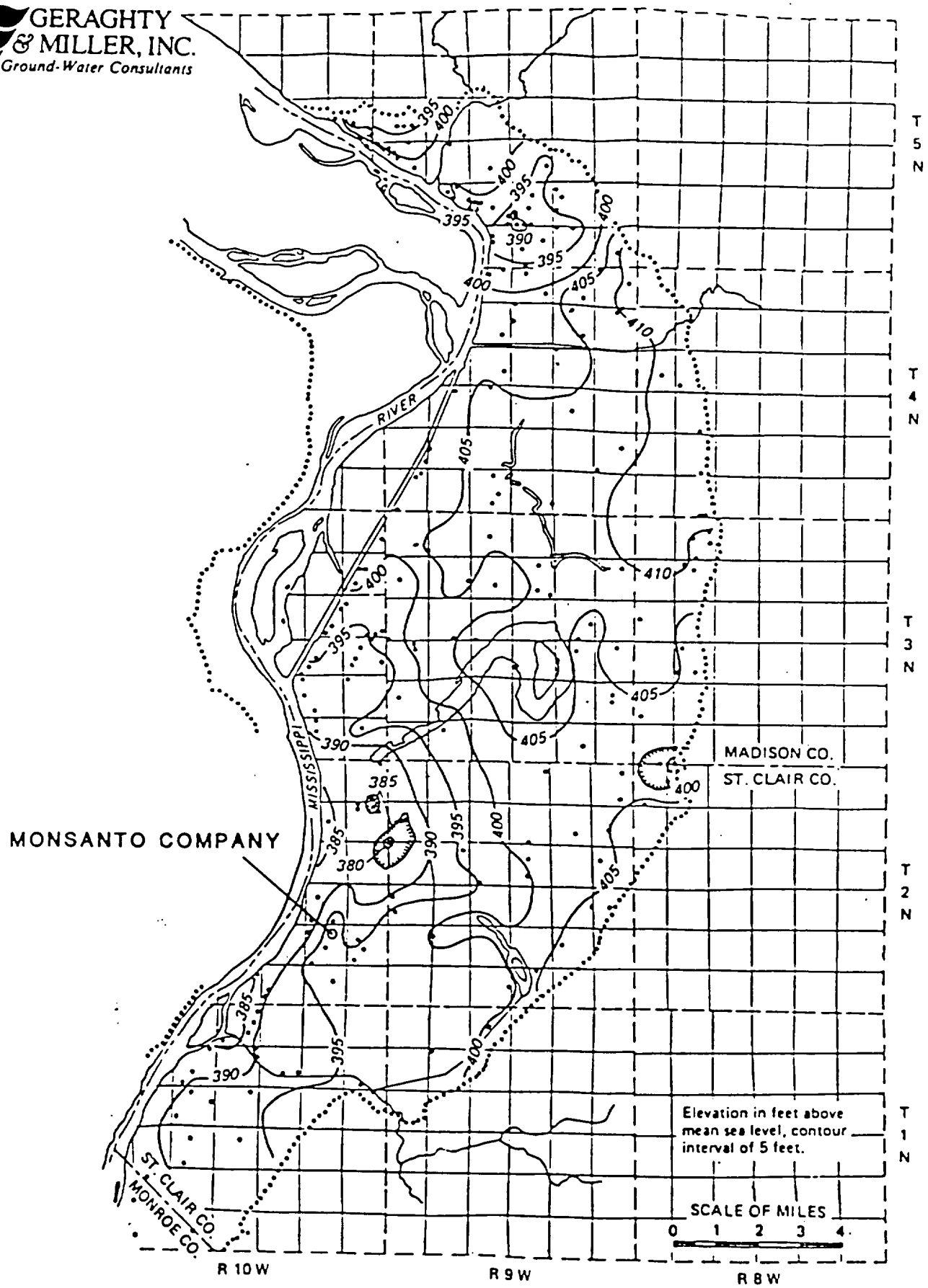

APPROXIMATE ELEVATION OF THE POTENTIOMETRIC SURFACE, NOVEMBER 1980
MONSANTO COMPANY, SAUGET, ILLINOIS

SOURCE: RITCHEY, 1984

FIGURE 7

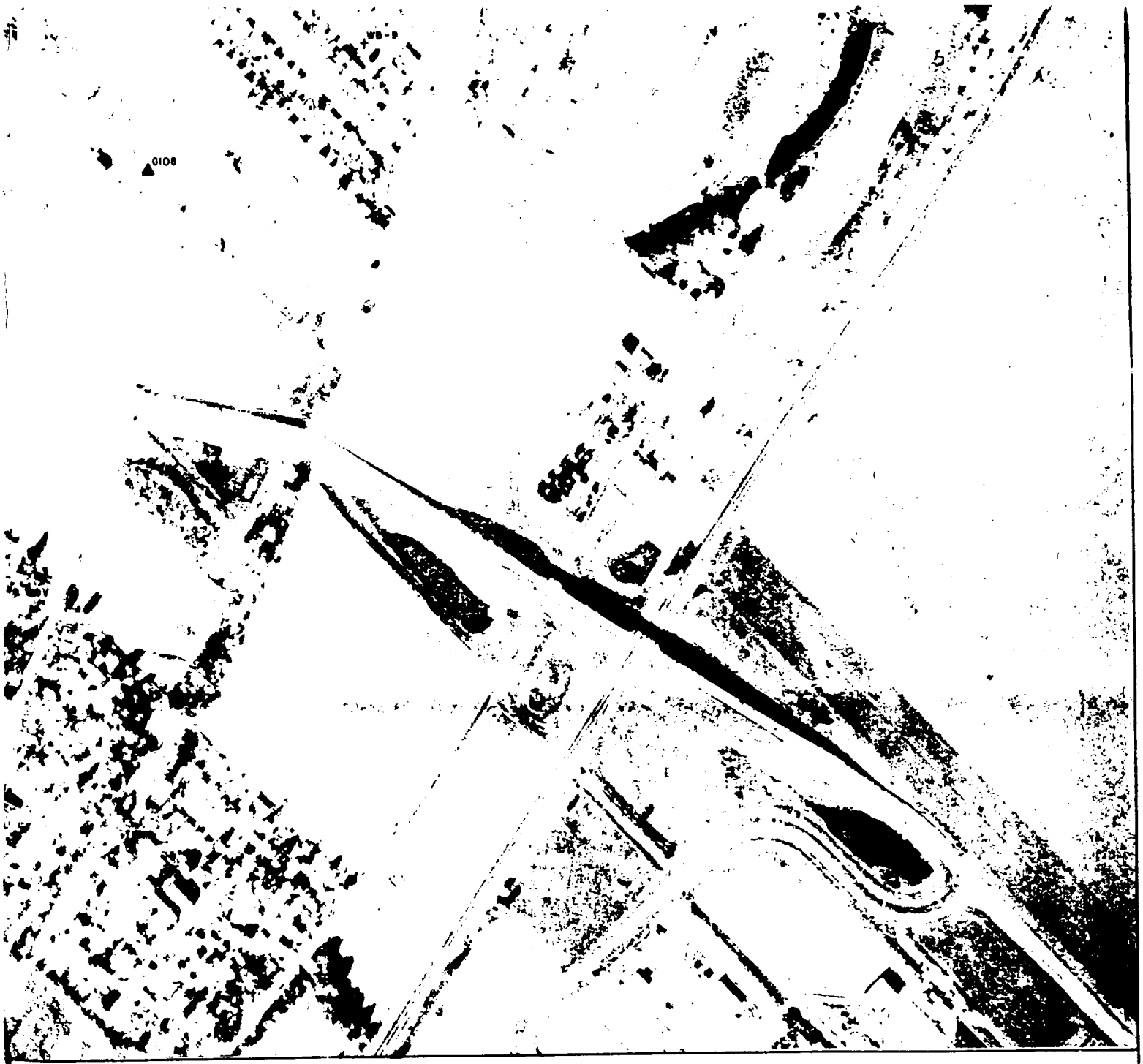

POTENTIOMETRIC SURFACE OF THE DEEP ZONE

NOVEMBER 1985

MONSANTO COMPANY
Sauget, Illinois

FIGURE 13

POTENTIOMETRIC SURFACE OF THE INTERMEDIATE ZONE AUGUST 1984

MONSANTO COMPANY
Sauget, Illinois

FIGURE 9

POTENTIOMETRIC SURFACE OF THE INTERMEDIATE ZONE NOVEMBER 1985

MONSANTO COMPANY
Sauget, Illinois

FIGURE 12

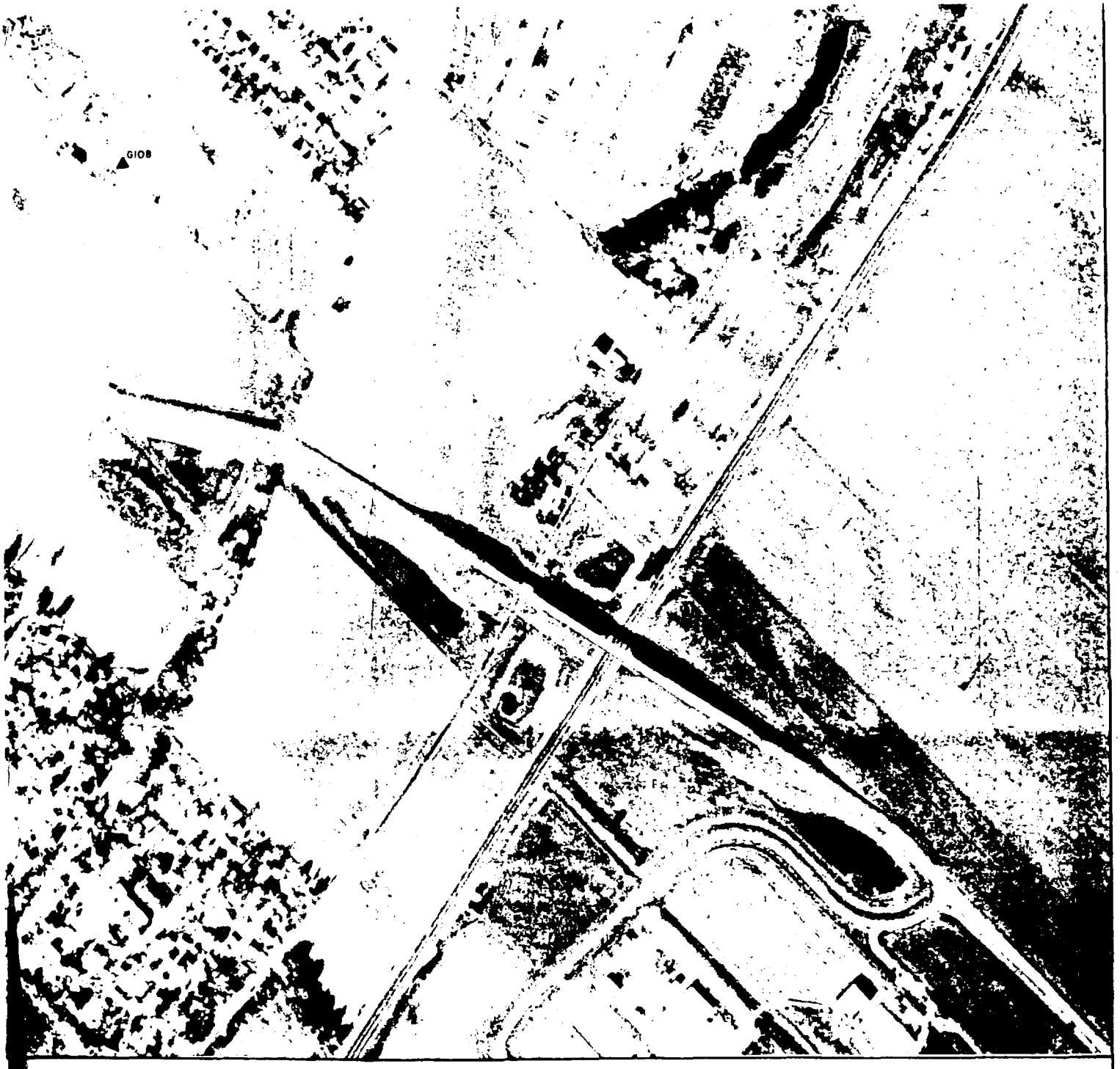

POTENTIOMETRIC SURFACE OF THE DEEP ZONE AUGUST 1984

MONSANTO COMPANY
Sauget, Illinois

FIGURE 10

CONFIGURATION OF THE WATER TABLE

NOVEMBER 1985

MONSANTO COMPANY
Sauget, Illinois

FIGURE 11

POTENTIOMETRIC SURFACE OF THE ROCK AQUIFER NOVEMBER 1985

MONSANTO COMPANY
Sauget, Illinois

FIGURE 14

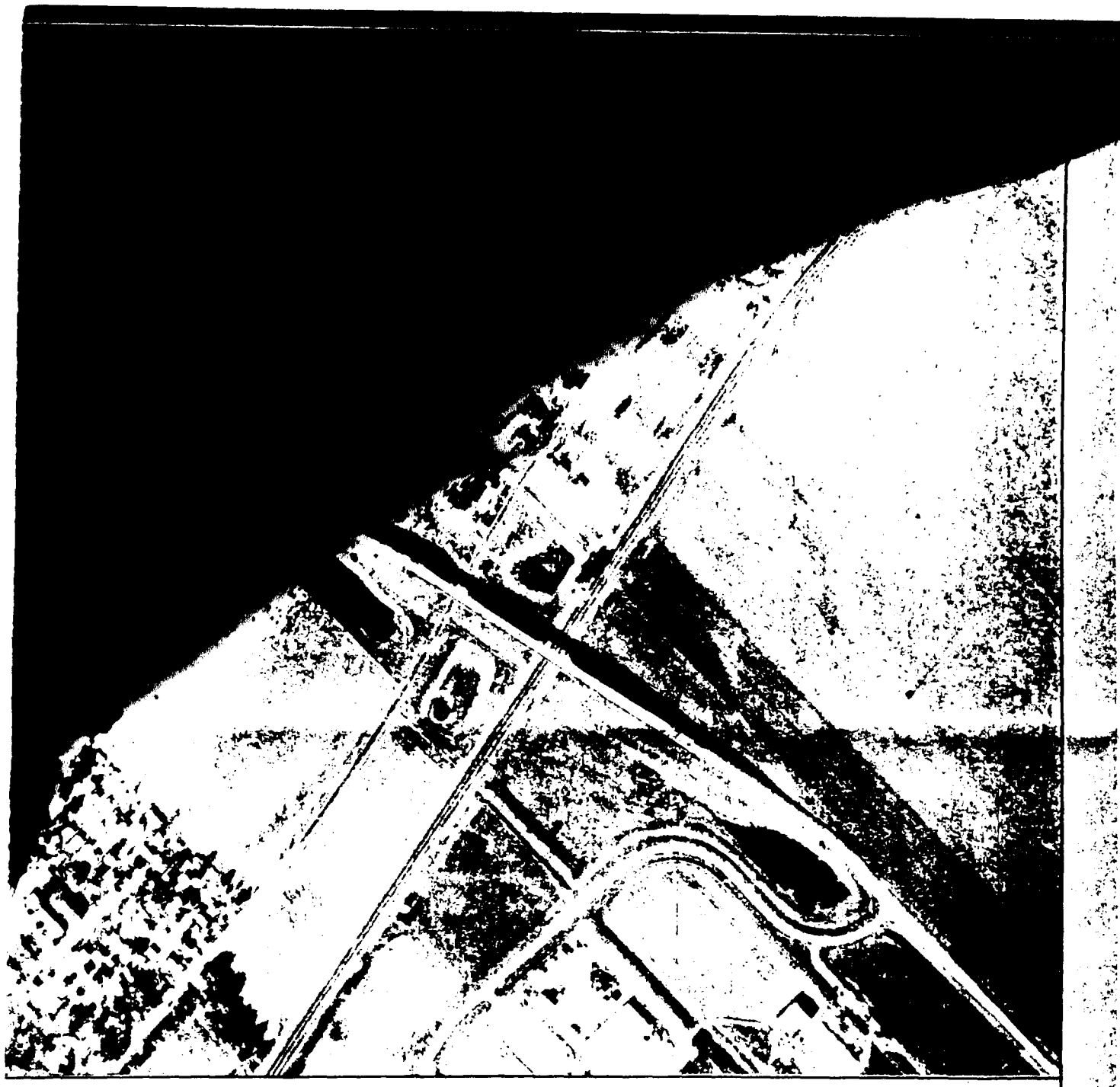

MEAN CONCENTRATIONS OF PRIORITY POLLUTANT AND NON-PRIORITY POLLUTANT ORGANIC COMPOUNDS IN THE WATER TABLE ZONE

MONSANTO COMPANY
Sauget, Illinois

FIGURE 23

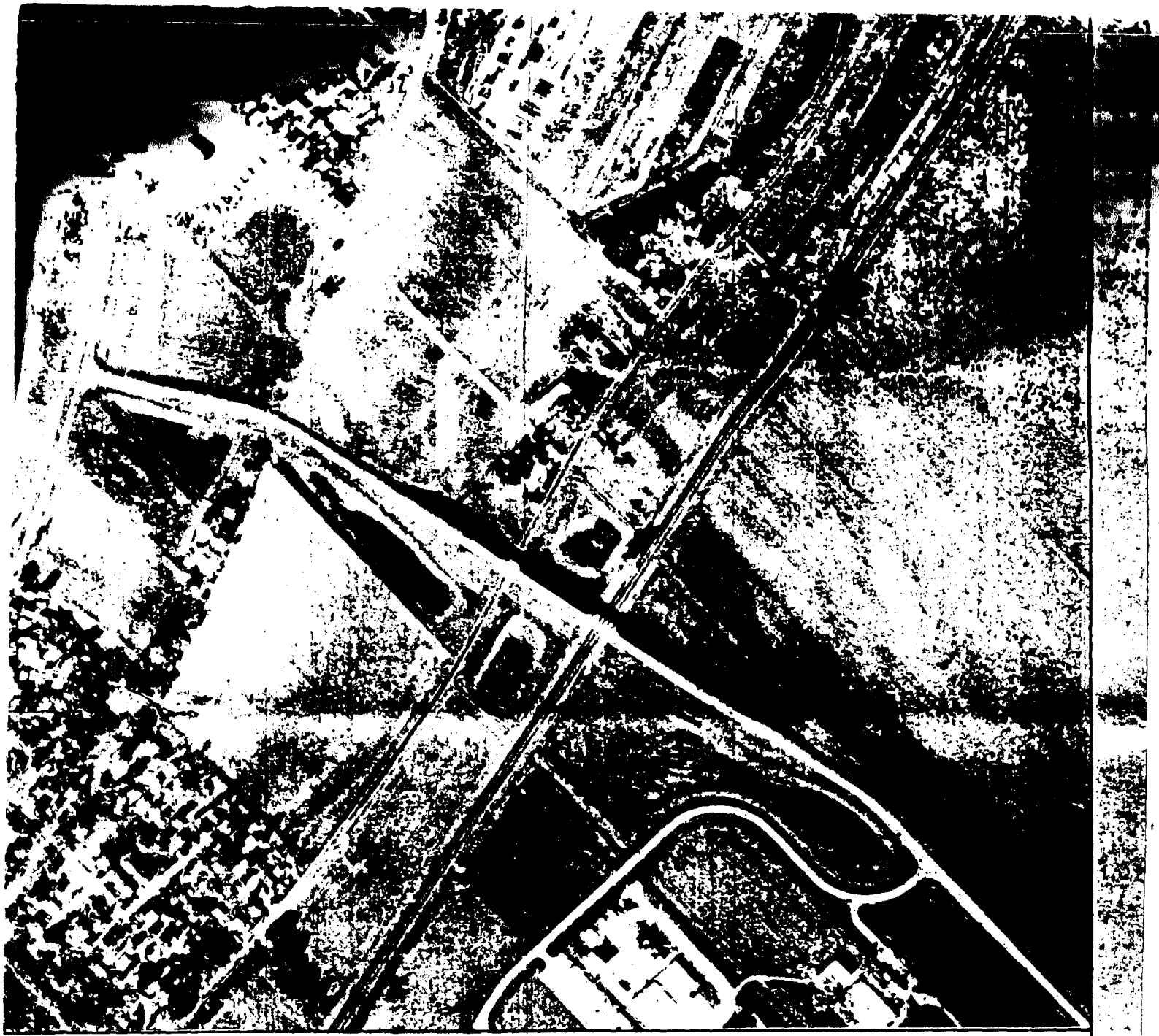

MEAN CONCENTRATIONS OF PRIORITY POLLUTANT AND NON-PRIORITY POLLUTANT ORGANIC COMPOUNDS IN THE INTERMEDIATE ZONE

MONSANTO COMPANY
Sauget, Illinois

FIGURE 24

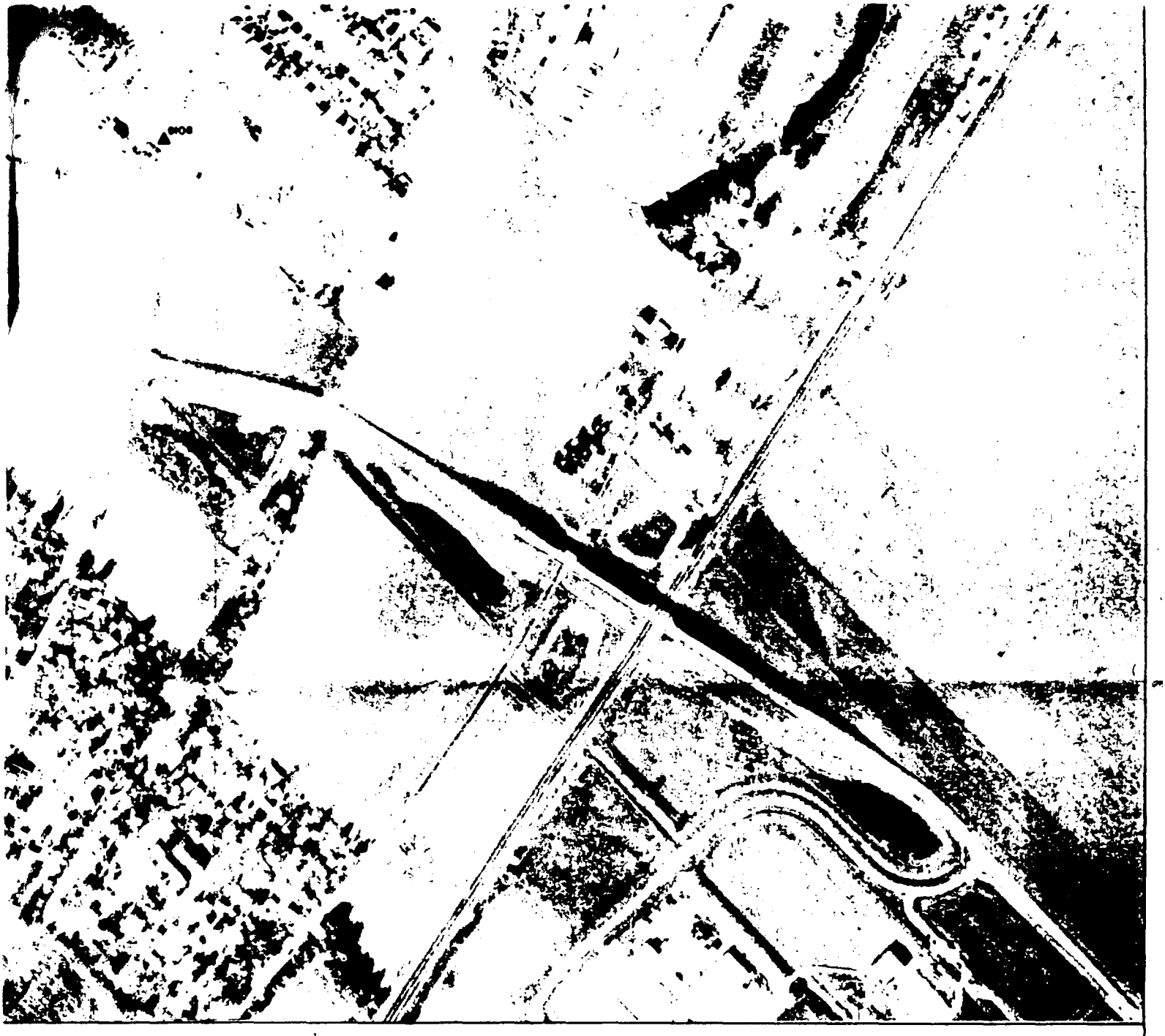

MEAN CONCENTRATIONS OF PRIORITY POLLUTANT AND NON-PRIORITY POLLUTANT ORGANIC COMPOUNDS IN THE DEEP ZONE

MONSANTO COMPANY
Sauget, Illinois

FIGURE 25

APPENDIX B

Figures From 1993 Evaluation of
Ground-Water Conditions

DRAWING: MONVELL | CHECKED: D. COLTON | APPROVED: D. COLTON | DRAFTER: G.S.

PROJCT NO.: NY02303 | FILE: 1624

DWG DATE: 3/24/93

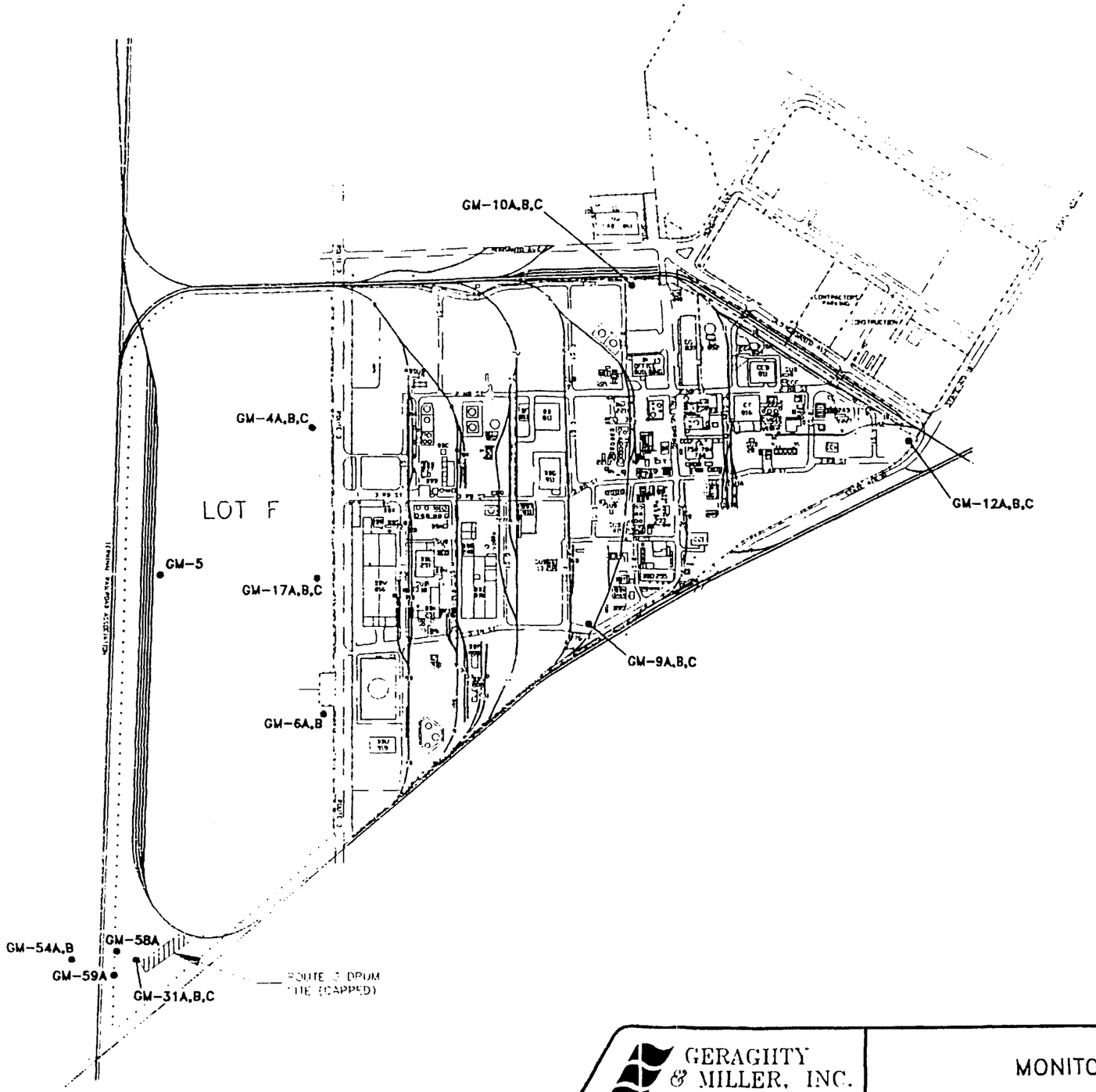

EXPLANATION

GM-5 MONITORING WELL LOCATION AND DESIGNATION

GERAGHITY & MILLER, INC.
Environmental Services

MONITORING WELL LOCATIONS

MONSANTO COMPANY
SAUGET, ILLINOIS

FIGURE
1

DWG DATE: 3-24-93	PRJCT NO.: NY02303	FILE NO.: 1642	DRAWING: LOTH-SR	CHECKED: D.C.	APPROVED: D.C.	DRAFTER: G.S.

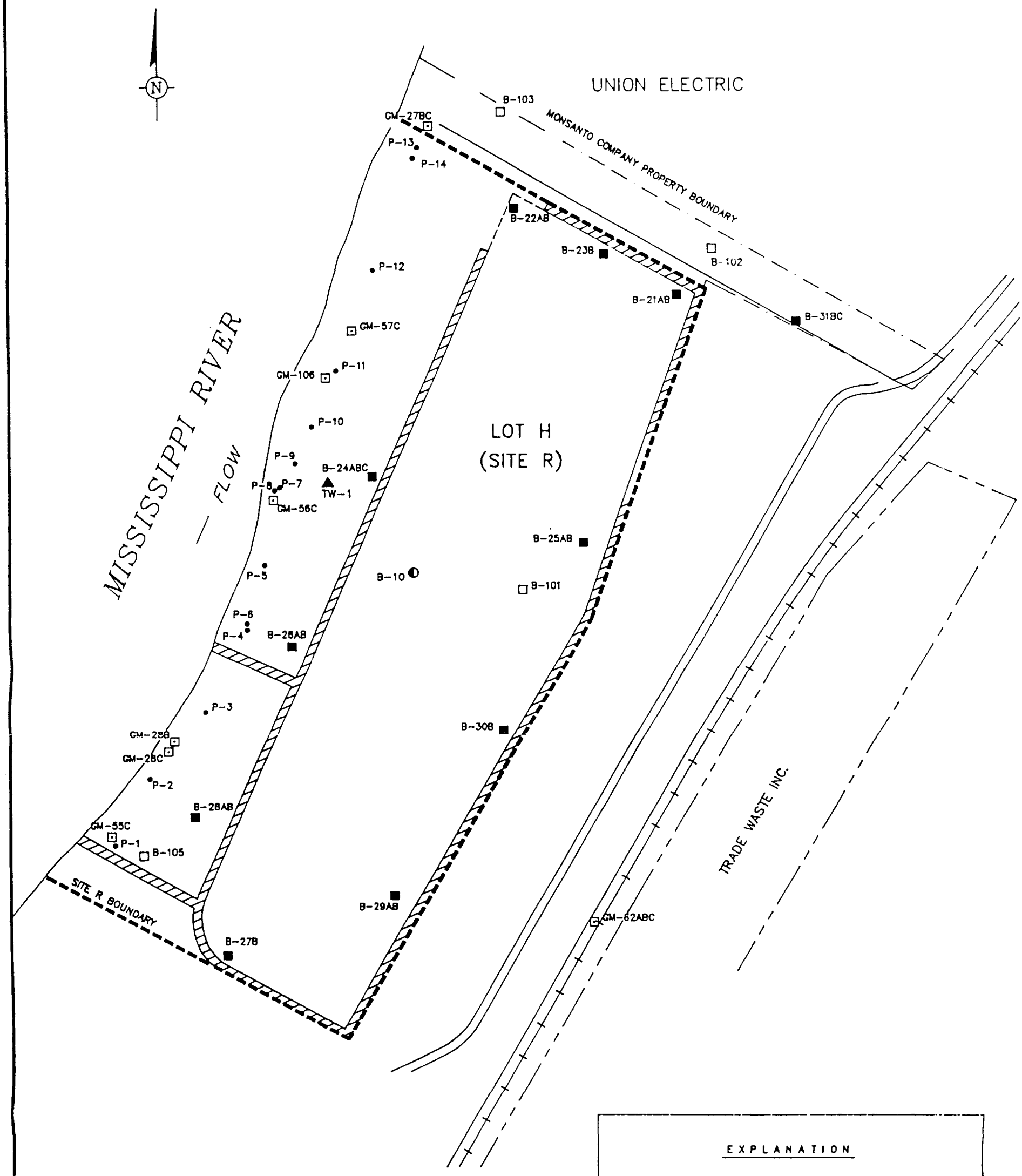

GERAGHTY & MILLER, INC.
Environmental Services

MONITORING WELL LOCATIONS AT LOT H (SITE R)

MONSANTO COMPANY
SAUGET, ILLINOIS

FIGURE
2

DWG DATE: 3/24/93 | PRJCT NO.: NY02303 | FILE: 1624 | DRAWING: WTSZ1192 | CHECKED: D. COLTON | APPROVED: D. COLTON | DRAFTER: V.C./G.S.

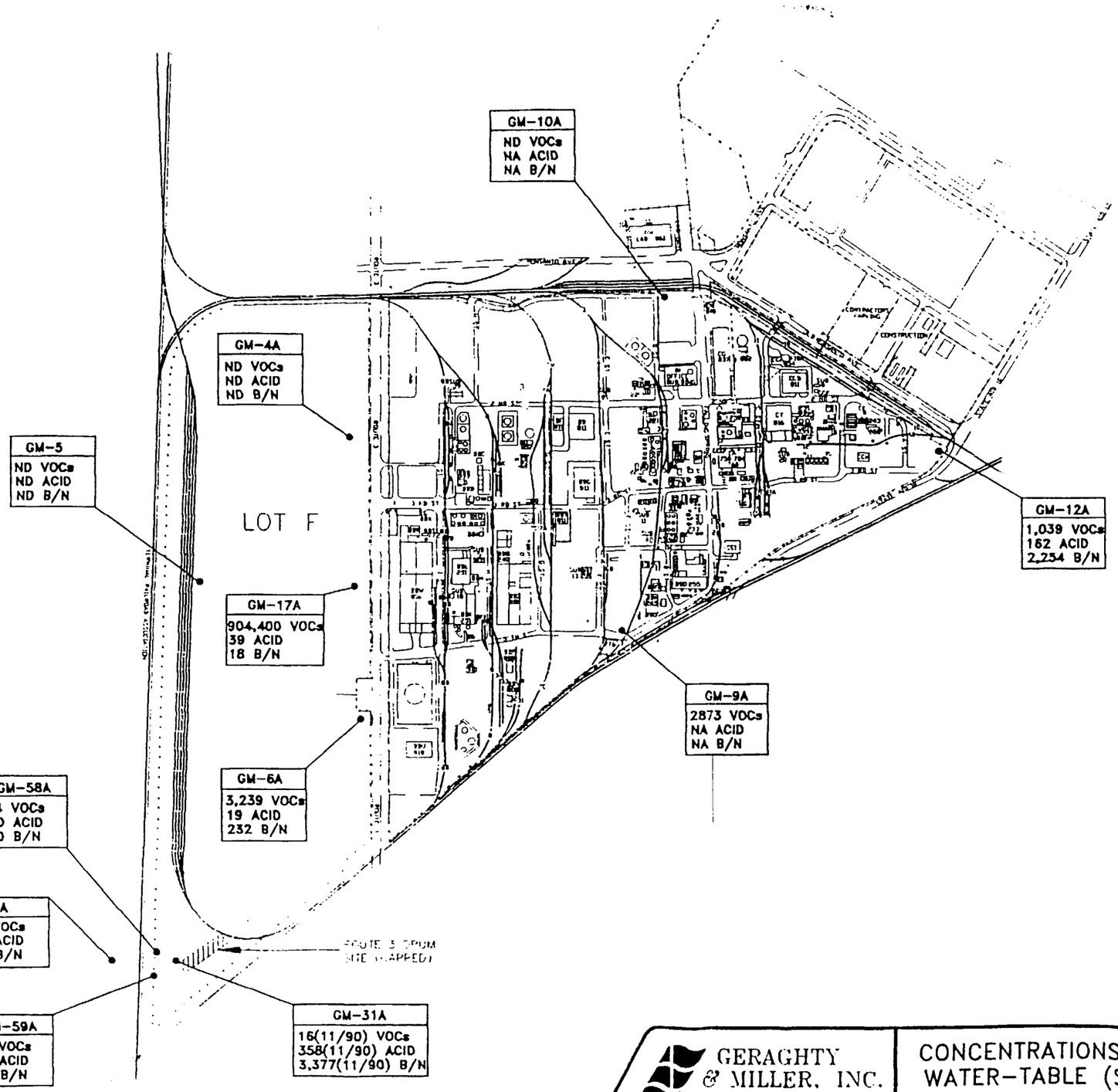

EXPLANATION	
GM-12A •	MONITORING WELL LOCATION AND DESIGNATION
1,039 VOCs	TOTAL VOLATILE ORGANIC COMPOUNDS (ug/L)
162 ACID	TOTAL ACID COMPOUNDS (ug/L)
2,254 B/N	TOTAL BASE/NEUTRAL COMPOUNDS (ug/L)
NA	NOT ANALYZED
ND	NOT DETECTED

GERAGHTY & MILLER, INC.
Environmental Services

CONCENTRATIONS OF ORGANIC COMPOUNDS IN THE WATER-TABLE (SHALLOW) ZONE, NOVEMBER 1992

MONSANTO COMPANY
SAUGET, ILLINOIS

FIGURE
3

DWG DATE: 3/24/93 | PROJCT NO.: NY02303 | FILE: 1624 | DRAWING: IZ-1192 | CHECKED: D. COLTON | APPROVED: D. COLTON | DRAFTER: V.C./G.S.

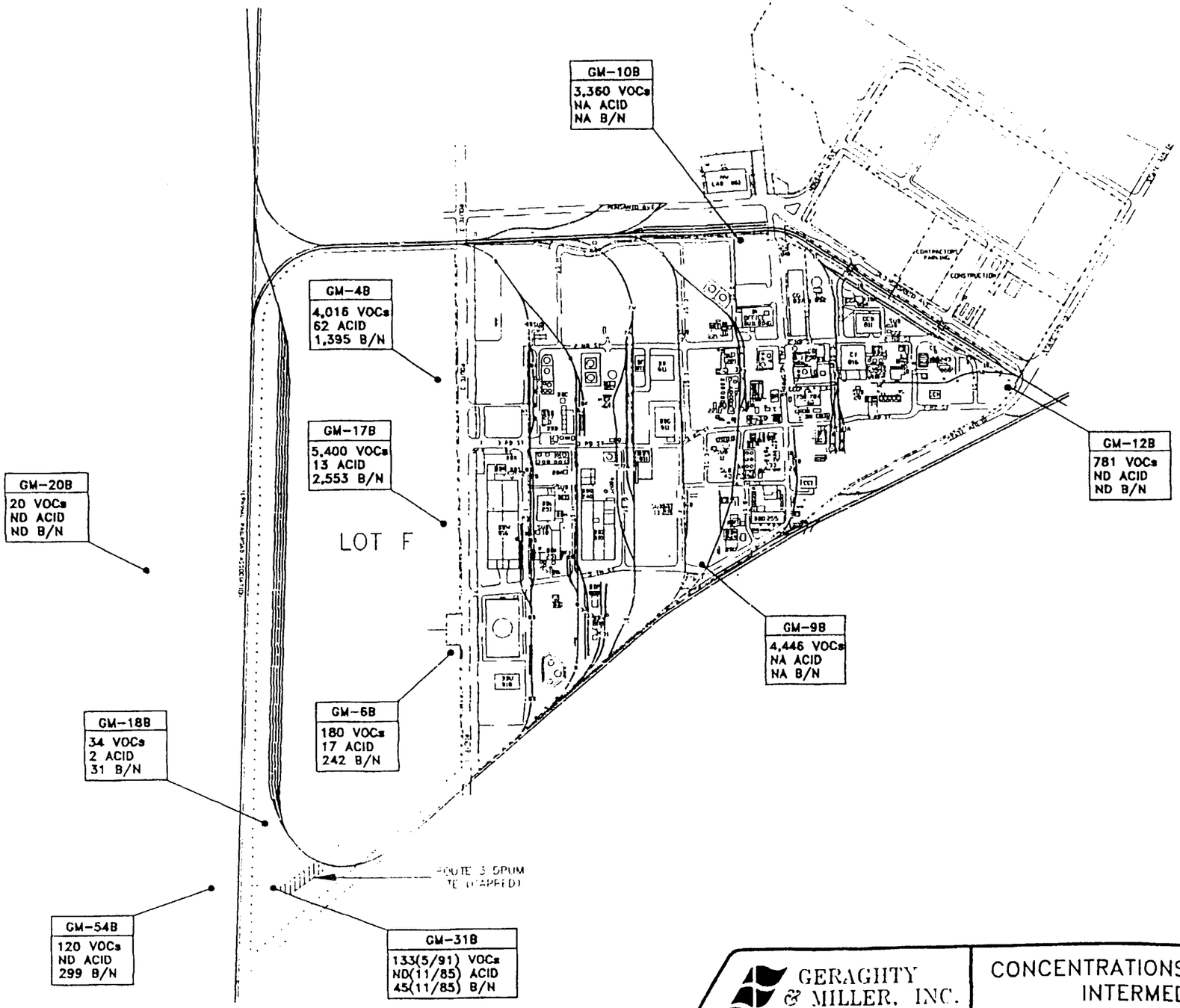

EXPLANATION	
GM-4B ●	MONITORING WELL LOCATION AND DESIGNATION
4,016 VOCs	TOTAL VOLATILE ORGANIC COMPOUNDS (ug/L)
62 ACID	TOTAL ACID COMPOUNDS (ug/L)
1,395 B/N	TOTAL BASE/NEUTRAL COMPOUNDS (ug/L)
NA	NOT ANALYZED
ND	NOT DETECTED

GERAGHTY & MILLER, INC.
Environmental Services

CONCENTRATIONS OF ORGANIC COMPOUNDS IN THE INTERMEDIATE ZONE, NOVEMBER 1992

MONSANTO COMPANY
SAUGET, ILLINOIS

FIGURE
4

DRAWING: DZ-1192 | CHECKED: D. COLTON | APPROVED: D. COLTON | DRAFTER: V.C./G.S.

DWG DATE: 3/24/93 | PROJCT NO.: NY02303 | FILE: 1624

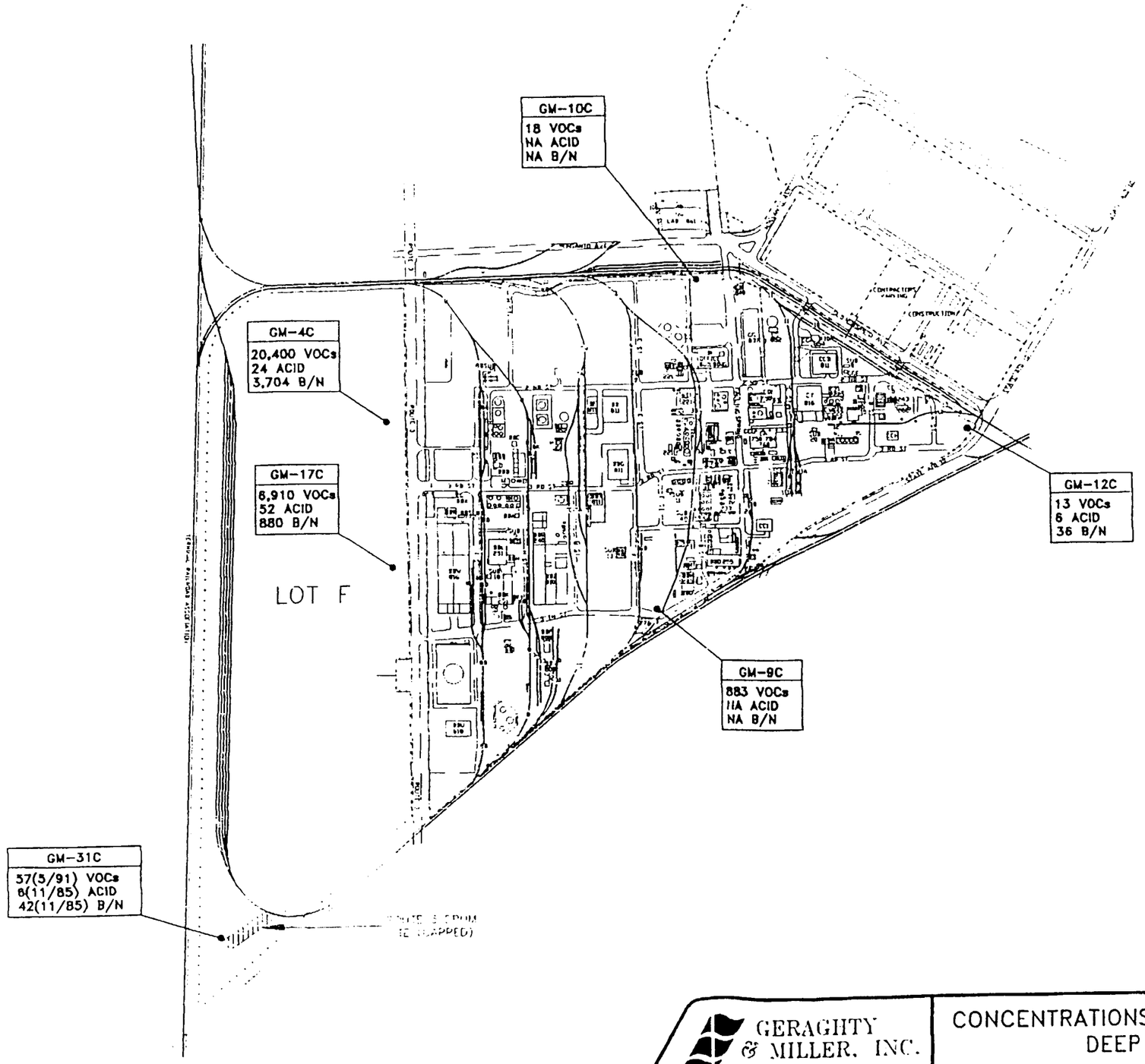

N

EXPLANATION

GM-17C ●	MONITORING WELL LOCATION AND DESIGNATION
6,910 VOCs	TOTAL VOLATILE ORGANIC COMPOUNDS (ug/L)
52 ACID	TOTAL ACID COMPOUNDS (ug/L)
880 B/N	TOTAL BASE/NEUTRAL COMPOUNDS (ug/L)
NA	NOT ANALYZED
ND	NOT DETECTED

GERAGHTY & MILLER, INC.
Environmental Services

CONCENTRATIONS OF ORGANIC COMPOUNDS IN THE DEEP ZONE, NOVEMBER 1992

MONSANTO COMPANY
SAUGET, ILLINOIS

FIGURE
5

DRAWING: MON-3 | CHECKED: D. COLTON | APPROVED: D. COLTON | DRAFTER: D. LORENZ

DWG DATE: 3-31-93 | PROJCT NO.: NY02303 | FILE: MON-3

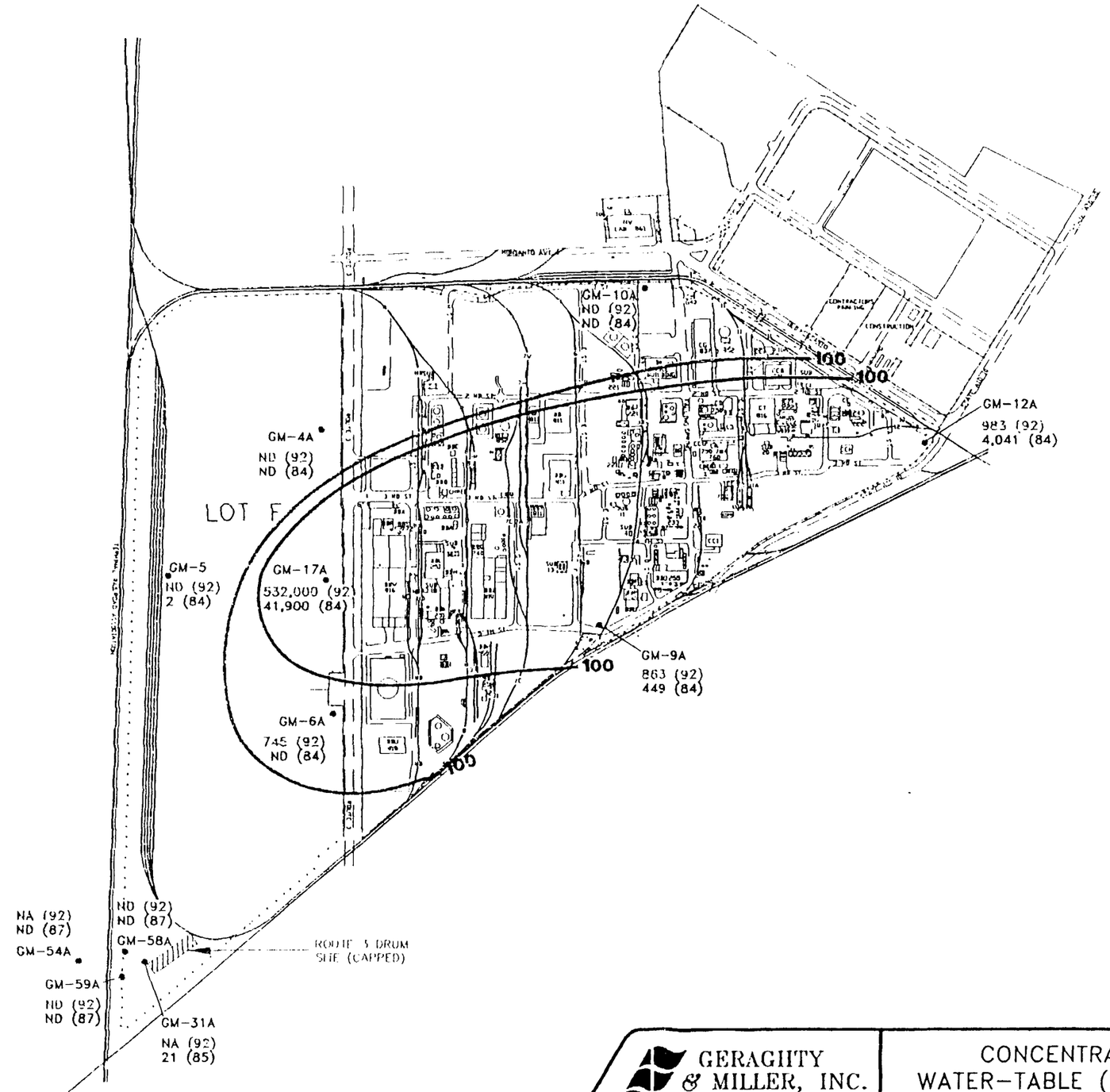

N

EXPLANATION

GM-12A • MONITORING WELL LOCATION AND DESIGNATION

983 (92) — CONCENTRATION OF BENZENE (ug/L); YEAR OF SAMPLING

100 — LINE OF EQUAL CHEMICAL CONCENTRATION (ug/L)

NA NOT ANALYZED

ND NOT DETECTED

GERAGHTY & MILLER, INC.
Environmental Services

CONCENTRATIONS OF BENZENE IN THE WATER-TABLE (SHALLOW) ZONE, 1984 vs. 1992

MONSANTO COMPANY
SAUGET, ILLINOIS

FIGURE
6

DWG DATE: 3-31-93 | PROJ NO.: NYG2303 | FILE: MON-4 | DRAWING: MON-4 | CHECKED: D. COLTON | APPROVED: D. COLTON | DRAFTER: D. LORENZ

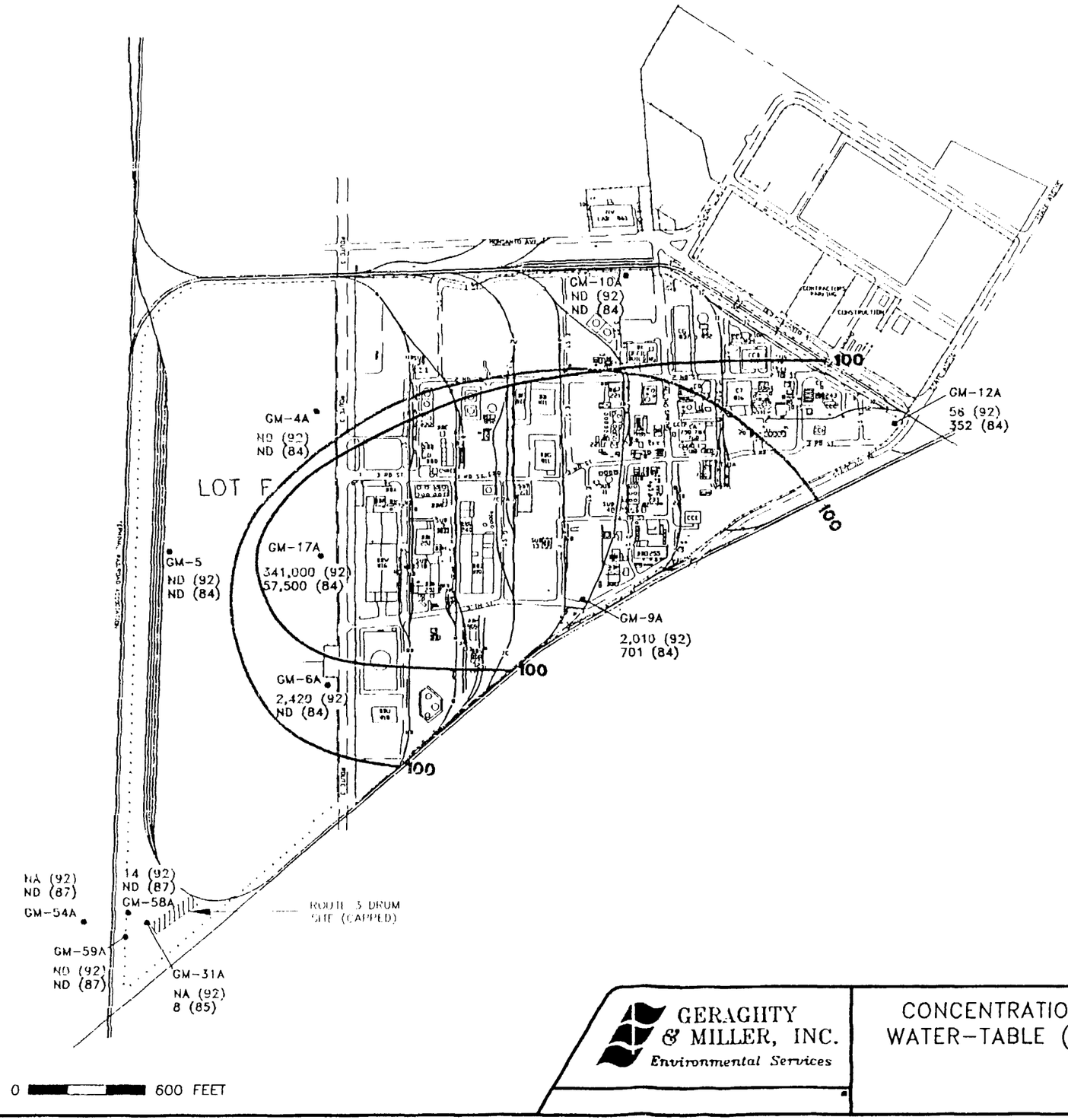

EXPLANATION

GM-12A • MONITORING WELL LOCATION AND DESIGNATION

56 (92) — CONCENTRATION OF CHLOROBENZENE (ug/L); YEAR OF SAMPLING

100 — LINE OF EQUAL CHEMICAL CONCENTRATION (ug/L)

NA NOT ANALYZED

ND NOT DETECTED

GERAGHTY & MILLER, INC.
Environmental Services

CONCENTRATIONS OF CHLOROBENZENE IN THE WATER-TABLE (SHALLOW) ZONE, 1984 vs. 1992

MONSANTO COMPANY
SAUGET, ILLINOIS

FIGURE
7

DWG DATE: 3-31-93 | PROJECT NO.: NY02353 | FILE: MON-5 | DRAWING: MON-5 | CHECKED: D. COLTON | APPROVED: D. COLTON | DRAFTER: D. LORENZ

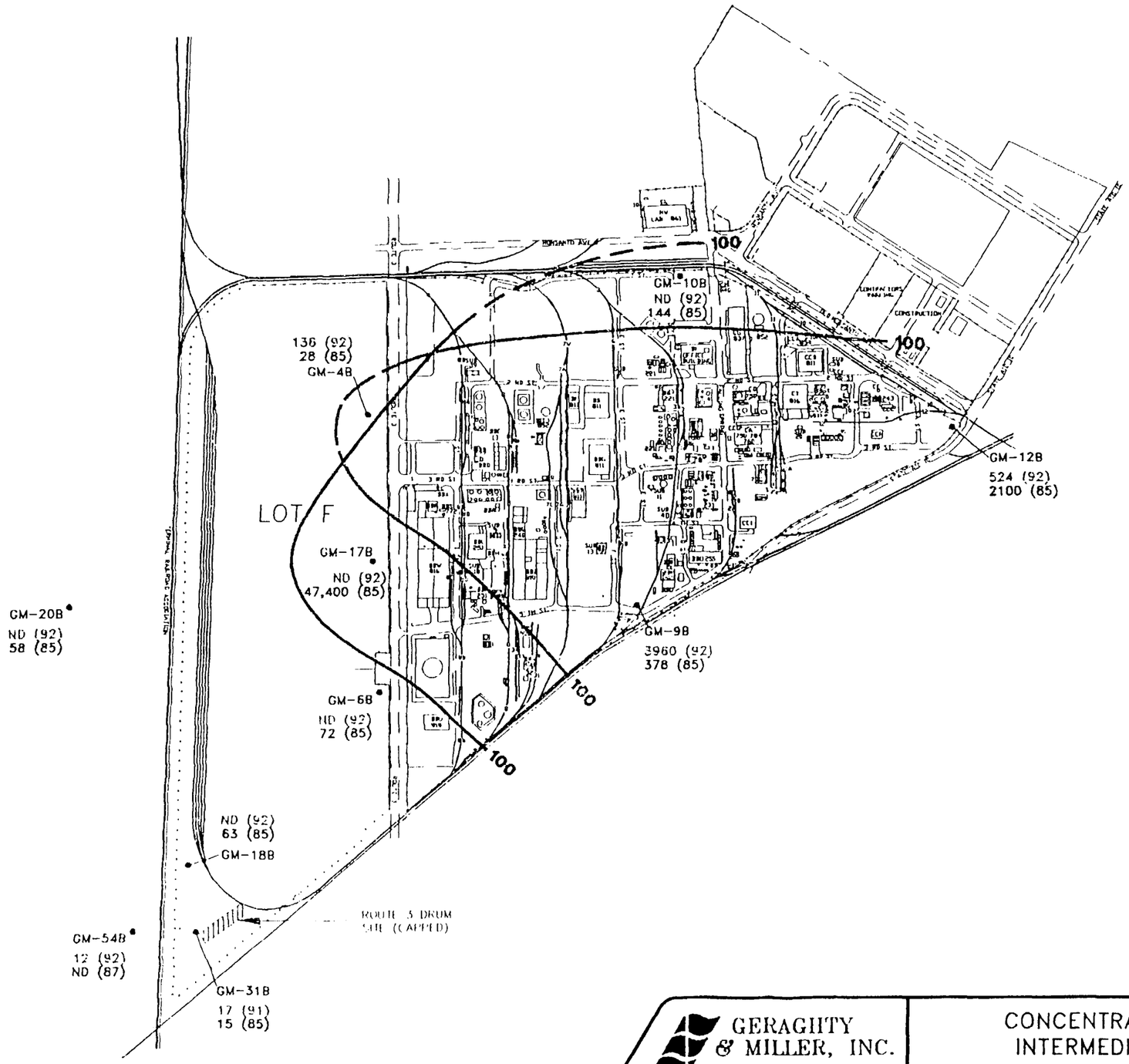

EXPLANATION

GM-12B • MONITORING WELL LOCATION AND DESIGNATION

524 (92) — CONCENTRATION OF BENZENE (ug/L); YEAR OF SAMPLING

100 — LINE OF EQUAL CHEMICAL CONCENTRATION (ug/L)

ND — NOT DETECTED

GERAGHTY & MILLER, INC.
Environmental Services

CONCENTRATIONS OF BENZENE IN THE INTERMEDIATE ZONE, 1985 vs. 1992

MONSANTO COMPANY
SAUGET, ILLINOIS

FIGURE
8

DWG DATE: 3-31-93 | PROJECT NO.: NY02303 | FILE: MON-6 | DRAWING: MON-6 | CHECKED: D. COLTON | APPROVED: D. COLTON | DRAFTER: D. LORENZ

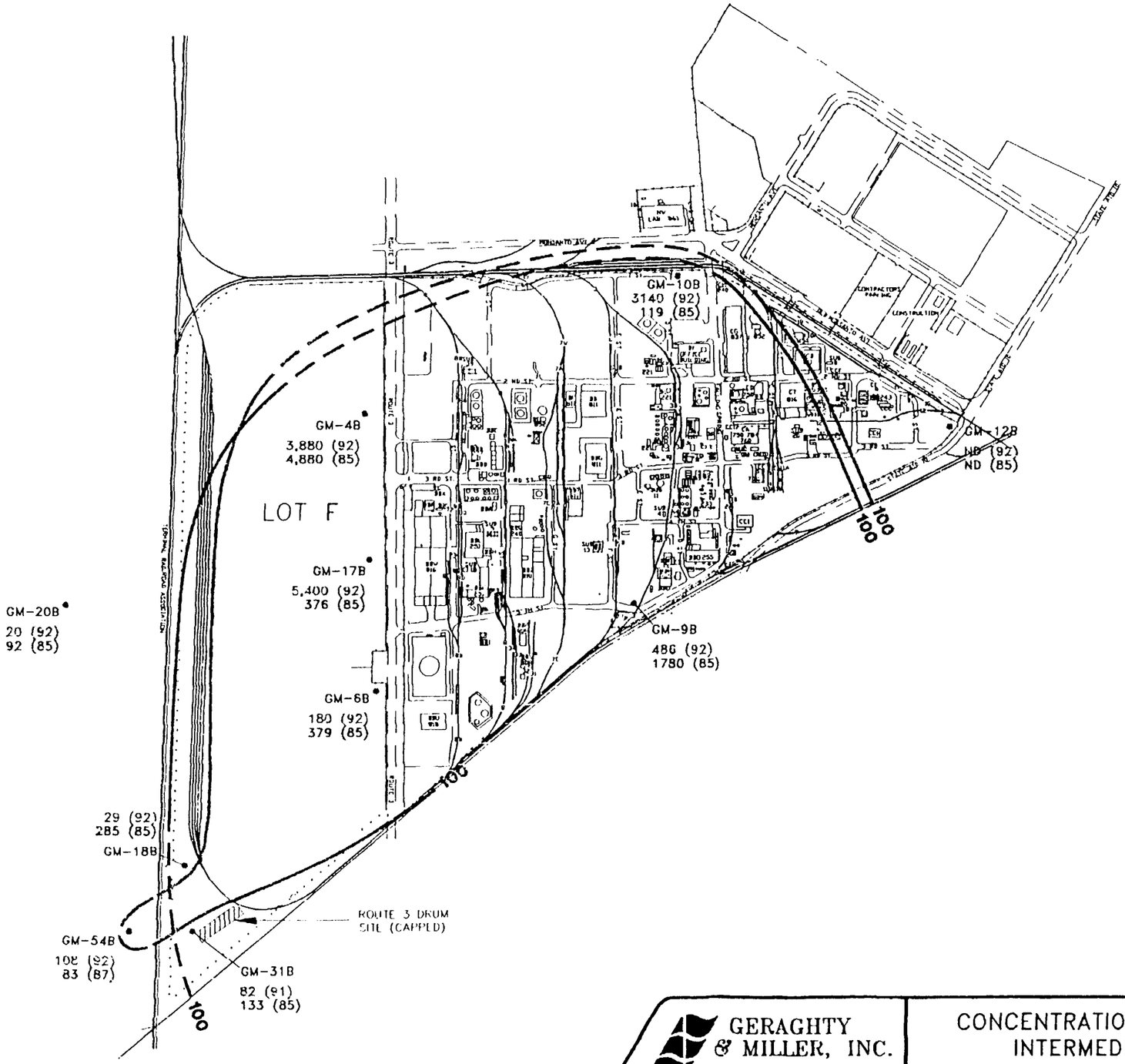

EXPLANATION

GM-20B • MONITORING WELL LOCATION AND DESIGNATION

20 (92) — CONCENTRATION OF CHLOROBENZENE (ug/L); YEAR OF SAMPLING

100 — LINE OF EQUAL CHEMICAL CONCENTRATION (ug/L)

ND NOT DETECTED

GERAGHTY & MILLER, INC.
Environmental Services

CONCENTRATIONS OF CHLOROBENZENE IN THE INTERMEDIATE ZONE, 1985 vs. 1992

MONSANTO COMPANY
SAUGET, ILLINOIS

FIGURE
9

DWG DATE: 3-31-93 | PROJ NO.: NYC2303 | FILE: MON-7 | DRAWNG: MON-7 | CHECKED: D. COLTON | APPROVED: D. COLTON | DRAFTER: D. LORENZ

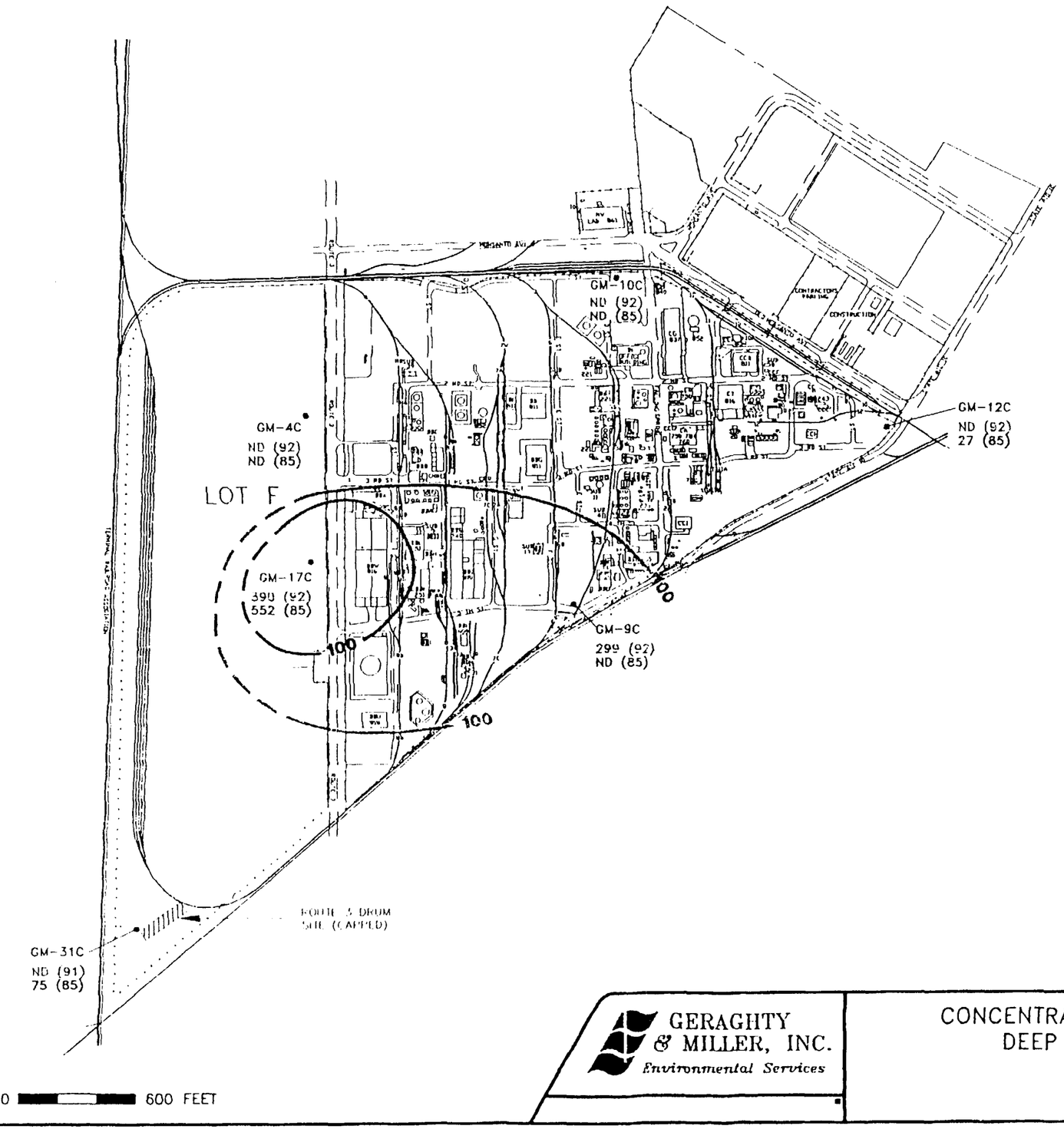

EXPLANATION

GM-17C • MONITORING WELL LOCATION AND DESIGNATION

390 (92) CONCENTRATION OF BENZENE (ug/L)

YEAR OF SAMPLING

100 LINE OF EQUAL CHEMICAL CONCENTRATION (ug/L)

ND NOT DETECTED

GERAGHTY & MILLER, INC.
Environmental Services

CONCENTRATIONS OF BENZENE IN THE DEEP ZONE, 1985 vs. 1992

MONSANTO COMPANY
SAUGET, ILLINOIS

FIGURE
10

DRAWING: MCN-8 | CHECKED: D. COLTON | APPROVED: D. COLTON | DRAFTER: D. LORENZ

DWG DATE: 3-31-93 | PROJECT NO.: NY02303 | FILE: MCN-8

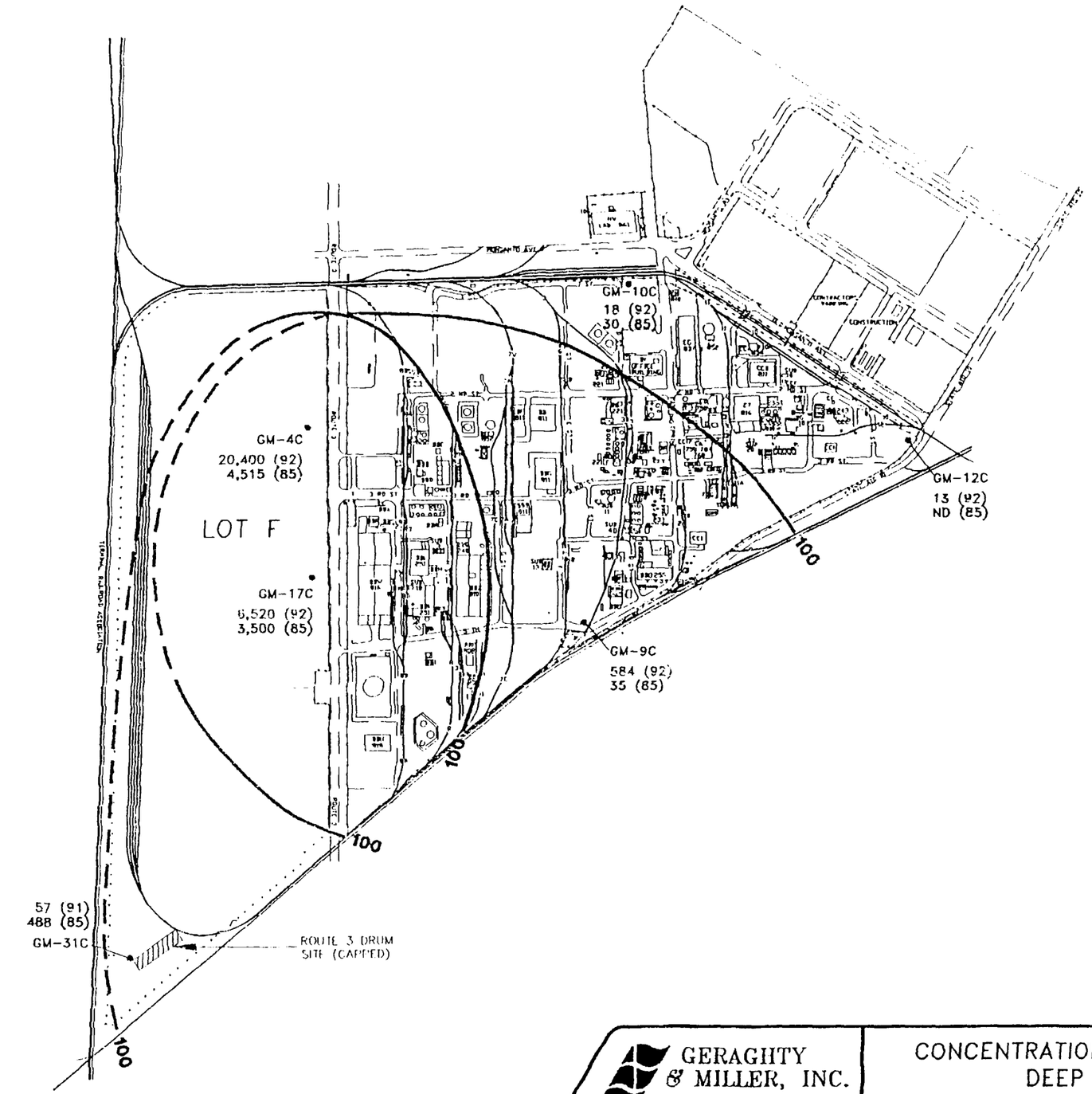

N

EXPLANATION

GM-12C • MONITORING WELL LOCATION AND DESIGNATION

13 (92) CONCENTRATION OF CHLOROBENZENE (ug/L)

YEAR OF SAMPLING

100 LINE OF EQUAL CHEMICAL CONCENTRATION (ug/L)

ND NOT DETECTED

GERAGHTY & MILLER, INC.
Environmental Services

CONCENTRATIONS OF CHLOROBENZENE IN THE DEEP ZONE, 1985 vs. 1992

MONSANTO COMPANY
SAUGET, ILLINOIS

FIGURE
11

SUMMARY OF GROUND-WATER QUALITY CONDITIONS

W.G. Krummrich Plant
Solutia, Inc., Sauget, Illinois

Volume II of II

December 9, 1997

Prepared for:

Solutia, Inc.
W.G. Krummrich Plant
Sauget, Illinois

Prepared by:

ROUX ASSOCIATES, INC.
1377 Motor Parkway
Islandia, New York 11788

ROUX

VOLUME I
CONTENTS

1.0 INTRODUCTION 1

2.0 HYDROGEOLOGY 3

3.0 GROUND-WATER MOVEMENT 5
- 3.1 Historical Ground-Water Flow Patterns 5
- 3.2 Recent Ground-Water Flow Patterns 6
  - 3.2.1 August 1984 8
  - 3.2.2 November 1985 9

4.0 AQUIFER TESTS 10
- 4.1 Water-Table Zone 10
- 4.2 Intermediate Zone 11
- 4.3 Deep Zone 11

5.0 GROUND-WATER VELOCITY 13
- 5.1 Water-Table Zone 13
- 5.2 Intermediate Zone 13
- 5.3 Deep Zone 14

6.0 GROUND-WATER QUALITY 15
- 6.1 Summary for 1983 to 1986 15
- 6.2 Conclusions 18
  - 6.2.1 Off-Site Impacts 18
  - 6.2.2 Sources of Contamination 19
- 6.3 Recommendations 20
  - 6.3.1 Remedial Action 20
  - 6.3.2 Ground-Water Monitoring 22

7.0 DESIGN AND IMPLEMENTATION OF THE GROUND-WATER MONITORING PROGRAM 24

8.0 MODIFICATIONS TO THE GROUND-WATER SAMPLING PROGRAM 25

9.0 GROUND-WATER QUALITY IN 1992 27
- 9.1 Water-Table (Shallow) Zone 27
  - 9.1.1 Volatile Organic Compounds 27
  - 9.1.2 Acid Compounds 28
  - 9.1.3 Base Neutral Compounds 29
- 9.2 Intermediate Zone 30
  - 9.2.1 Volatile Organic Compounds 30
  - 9.2.2 Acid Compounds 31
  - 9.2.3 Base Neutral Compounds 32

CONTENTS (Continued)

9.3 Deep Zone 32
9.3.1 Volatile Organic Compounds 33
9.3.2 Acid Compounds 33
9.3.3 Base Neutral Compounds 34

10.0 GROUND-WATER QUALITY TRENDS 36
10.1 Water-Table (Shallow) Zone 36
10.2 Intermediate Zone 38
10.3 Deep Zone 39

11.0 COMPARISON OF 1984/1985 AND 1992 WATER QUALITY DATA 41
11.1 Water-Table (Shallow) Zone 41
11.2 Intermediate Zone 42
11.3 Deep Zone 42

12.0 GROUND-WATER QUALITY IN 1994 44
12.1 Water-Table (Shallow) Zone 44
12.1.1 Volatile Organic Compounds 44
12.1.2 Acid Compounds 45
12.1.3 Base Neutral Compounds 45
12.2 Intermediate Zone 45
12.2.1 Volatile Organic Compounds 46
12.2.2 Acid Compounds 47
12.2.3 Base Neutral Compounds 47
12.3 Deep Zone 48
12.3.1 Volatile Organic Compounds 48
12.3.2 Acid Compounds 49
12.3.3 Base Neutral Compounds 49

13.0 SUMMARY OF FINDINGS 50

14.0 RECOMMENDATIONS 51

15.0 REFERENCES 52

FIGURE

1. Proposed Monitoring Wells

APPENDICES

A. Figures From 1986 Plant-Wide Assessment on Ground-Water Quality Conditions
B. Figures From 1993 Evaluation of Ground-Water Conditions

VOLUME II
APPENDICES (Continued)

C. Geologic Logs and Well Construction Details
D. Tables From 1986 Plant-Wide Assessment on Ground-Water Conditions
E. Water Quality Data (1983-1986)
F. Tables From 1993 Evaluation of Ground-Water Conditions
G. Water Quality Data (1986-1994)
H. Graphs of Water Quality Data
I. 1994 Sampling Program

APPENDIX C

Geologic Logs and Well Construction Details

GEOLOGIC LOGS FOR MONITORING WELLS

INSTALLED UNDER THE DIRECTION OF GERAGHTY & MILLER, INC.

MONSANTO COMPANY, W.G. KRUMMRICH PLANT, SAUGET, ILLINOIS

Description	Depth (feet)
Well GM-1	
Silt, clayey, brown	0 - 3.5
Sand, very fine, silty, tan	3.5- 6
Silt, clayey, gray and brown	6 - 12
Sand, very fine, very silty, gray	12 - 22
Sand, fine, silty, gray	22 - 32
Sand, fine to medium, gray; trace of coarse sand	32 - 36
Well GM-2	
Gravel (fill)	0 - 2
Sand, very fine to fine, silty, gray and yellowish-brown	2 - 7
Clay, silty, gray	7 - 12
Sand, very fine to fine, tan	12 - 18
Silt, sandy, gray	18 - 20
Sand, very fine to fine, silty, gray	20 - 21
Sand, very fine to fine, brown; some silt	21 - 35
Sand, fine to medium, gray	35 - 44
Well GM-3	
Sand, very fine to fine, brown; some silt	0 - 2
Sand, very fine to fine, tan	2 - 10
Silt, sandy, brown	10 - 12
Sand, very fine to fine, very silty, brown	12 - 15
Sand, very fine to fine, tan; trace silt	15 - 22
Sand, fine to medium, brown and gray	22 - 32
Sand, fine to medium, brown; some coarse sand and fine gravel	32 - 36
Wells GM-4ABC	
Clay, dark brown	0 - 3
Sand, very fine, very silty, tan	3 - 7
Sand, fine, tan	7 - 17
Sand, fine, brown; some silt	17 - 22
Sand, fine to medium, brown; trace coarse sand	22 - 70
Sand, fine to coarse, gray; with gravel	70 - 68
Well GM-5	
Sand, very fine to fine, brown; some silt	0 - 2
Sand, very fine to fine, tan	2 - 27
Sand, very fine to fine, tan; some medium sand	27 - 36

Description	Depth (feet)
Well GM-6AB	
Sand, very fine, silty, dark gray	0 - 3
Sand, very fine, silty, tan	3 - 8
Clay, gray; some silt	8 - 13
Sand, very fine, tan	13 - 21
Sand, very fine, tan; some silt	21 - 27
Sand, fine, silty; trace of medium and coarse sand	27 - 32
Sand, fine to medium, gray; trace of coarse sand	32 - 70
Sand, fine to coarse, gray; with fine to medium gravel	70 - 88
Well GM-7	
Silt, sandy, brown	0 - 1
Sand, very fine, brown; some silt	1 - 4
Silt, gray	4 - 5
Sand, very fine, gray; some silt	5 - 12
Sand, very fine, tan	12 - 22
Sand, very fine, brown; some silt	22 - 27
Sand, very fine to fine, brown; some medium sand	27 - 36
Well GM-8	
Sand, very fine, silty, brown	0 - 2
Sand, very fine, tan	2 - 14
Silt, gray and brown	14 - 14.5
Sand, very fine, tan	14.5- 22
Sand, very fine, brownish-gray; some silt	22 - 27
Sand, very fine to fine, gray; some silt and medium sand	27 - 36
Wells GM-9ABC	
Gravel (fill)	0 - 2
Cinders, black (fill)	2 - 3
Sand, very fine to fine, silty, brown	3 - 12
Clay, silty, gray	12 - 14
Sand, very fine to fine, silty, brown	14 - 22
Sand, very fine to fine, silty, gray	22 - 50
Sand, fine to medium, gray; trace of gravel	50 - 80
Sand, fine to coarse, gray; with fine to medium gravel	80 -108

Description	Depth (feet)
Wells GM-10ABC	
Topsoil	0 - 1
Silt, sandy, brown	1 - 6
Sand, very fine to fine, very silty, brown	6 - 40
Sand, fine to medium, gray; little gravel	40 - 72
Gravel, fine to medium; with fine to coarse sand	72 - 80
Sand, fine to coarse, brown; little gravel	80 - 84
Gravel, fine to medium; with fine to coarse sand	84 -104
Gravel, fine to medium with fine to coarse sand; some cobbles	104 -111
Well GM-11	
Silt, sandy, brown	0 - 2
Gravel, coarse (fill)	2 - 3
Silt, clayey, gray; trace gravel	3 - 9.5
Sand, silty, fine, tan	9.5- 17
Sand, very silt, very fine, gray	17 - 26
Wells GM-12ABC	
Cinders and gravel, black (fill)	0 - 8.5
Clay, gray	8.5- 17
Silt, clayey, gray	17 - 18.5
Sand, very fine to fine, very silty, gray	18.5- 22
Sand, very fine to fine, gray; some silt	22 - 35.5
Sand, fine, gray; some silt	35.5- 50
Sand, fine to medium; brownish-gray	50 - 70
Sand, fine to coarse, brownish-gray; with fine to medium gravel	70 - 114.5
Well GM-13	
Gravel (fill)	0 - 2
Sand, very fine to fine, silty, brown	2 - 11
Silt, clayey, gray	11 - 13
Sand, very fine to fine, silty, brown	13 - 21
Sand, fine, silty, gray	21 - 38
Well GM-14	
Gravel (fill)	0 - 2
Silt, clayey, brown; some sand	2 - 5
Sand, very fine to fine, silty, brown	5 - 29
Sand, fine, silty, gray	29 - 38
Well GM-15	
Gravel (fill)	0 - 2
Silt, clayey, gray and brown; some sand	2 - 9
Sand, very fine to fine, silty, gray	9 - 38

Description	Depth (feet)
Wells GM-16AB	
Silt, sandy, brown	1 - 6
Sand, very fine to fine, very silty, brown	6 - 29
Sand, fine, gray; some silt	29 - 40
Sand, fine, gray	40 - 50
Sand, fine to medium, gray; some gravel	50 - 70
Sand, fine to coarse, gray; with gravel	70 - 90
Wells GM-17ABC	
Sand, very fine, silty, brown	0 - 4
Clay, gray; some silt and fine sand	4 - 11
Sand, very fine, tan; some silt	11 - 23
Sand, very fine, brown; trace of medium sand and silt	23 - 50
Sand, fine to medium, gray; some fine gravel	50 - 70
Sand, fine to coarse, gray; with fine to medium gravel	70 -107
Wells GM-18AB	
Silt, clayey, brown; trace of fine sand and gravel	0 - 6
Sand, fine, grayish-brown; some silt	6 - 38
Sand, fine, grayish-brown	38 - 50
Sand, fine to medium, grayish-brown; some fine gravel and coal fragments	50 - 80
Sand, fine to coarse, gray; with fine to medium gravel	80 - 92
Wells GM-25AB	
Sand, very fine, silty, brown	0 - 14
Sand, fine, brown; some silt	14 - 33
Sand, fine, gray	33 - 50
Sand, fine to medium, gray; some silt and coarse sand	50 - 70
Sand, fine to coarse, gray; some fine to medium gravel	70 - 88
Wells GM-27BC	
Sand, fine, silty, brown and black	0 - 13
Silt, sandy, gray; some fine sand	13 - 22
Sand, fine, gray; some silt	22 - 33
Clay, silty, gray; some fine sand	33 - 36
Sand, fine, silty, gray	36 - 48
Sand, fine to medium, gray; little silt	48 - 75
Sand, fine to coarse, gray; some fine to medium gravel	75 -105

Description	Depth (feet)
Wells GM-28BC	
Sand, fine, gray; some silt	0 - 18
Clay, silty, gray	18 - 20
Sand, fine, gray; some silt	20 - 29
Clay, silty, gray	29 - 32
Silt, gray; trace of fine gravel, with intermittent sand seams	32 - 58
Sand, fine to coarse, gray; some fine gravel	58 - 95
Well GM-29	
Gravel (fill)	0 - 2
Sand, fine, silty, gray	2 - 3
Silt, clayey, gray; with green stains	3 - 4
Clay, silty, gray	4 - 5.5
Sand, fine, silty, gray; some clay	5.5- 8
Silt, sandy, black	8 - 10
Silt, sandy, gray	10 - 21
Sand, fine, gray; some silt	21 - 25
Well GM-30	
Gravel, with cinders, some red brick (fill)	0 - 6
Clay, silty, grayish-green	6 - 10
Silt, clayey, gray; trace of fine sand	10 - 15
Sand, very fine to fine, gray; some silt	15 - 20
Wells GM-31ABC	
Sand, very fine, silty, brown	0 - 10.5
Sand, fine, brown	10.5- 12
Sand, very fine, silty, brown	12 - 17
Sand, fine to medium brown	17 - 23
Sand, medium, brown	23 - 40
Sand, coarse, little gravel, brown	40 - 41.5
Sand, fine to medium, brown	41.5- 70
Sand, fine to coarse, brown	70 - 80
Sand, fine to coarse, brown; some fine gravel	80 -126.5
Well GM-32	
Gravel, cinders, brown and gray (fill)	0 - 2
Sand, fine, silty, brown	2 - 7
Sand, fine to medium, brown	7 - 25

GERAGHTY & MILLER, INC.
Ground-Water Consultants

WELL CONSTRUCTION LOG

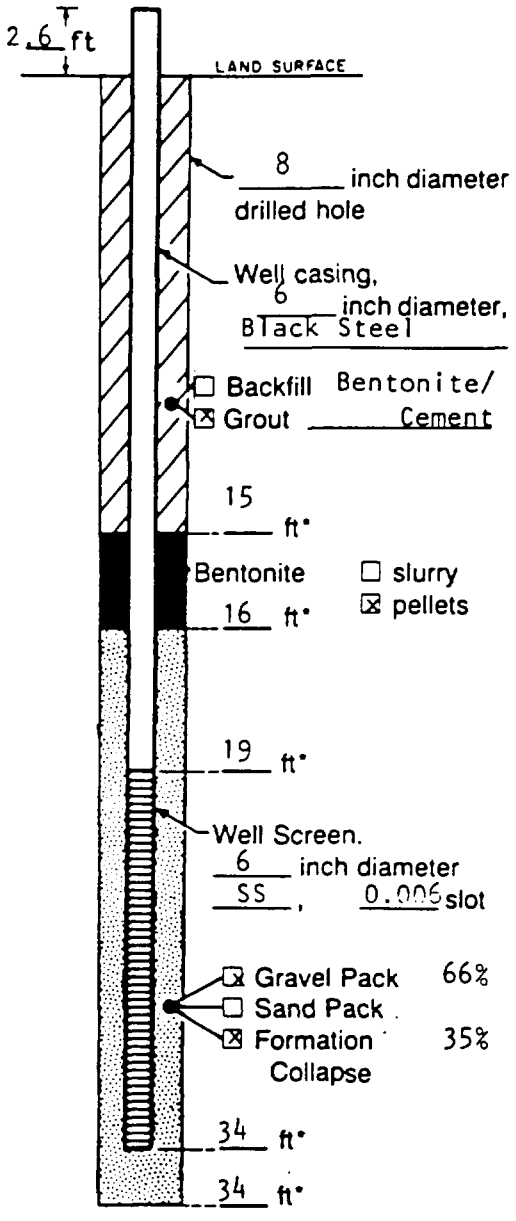

Measuring Point is Top of Well Casing Unless Otherwise Noted.

*Depth Below Land Surface

Project Monsanto Company Well GM-1

Town/City Sauget

County St. Clair State IL

Permit No. _____

Land-Surface Elevation

and Datum _____ feet ☒ surveyed

Measuring Point 413.65 Ft (MSL) ☐ estimated

Installation Dates(s) 11/1/83

Drilling Method Mud Rotary

Drilling Contractor John Mathes & Assoc.

Drilling Fluid _____

Development Techniques(s) and Date(s)

Pumped with bladder pump; surged with compressed air.

Fluid Loss During Drilling _____ gallons

Water Removed During Development 480 gallons

Static Depth to Water _____ feet below M.P.

Pumping Depth to Water _____ feet below M.P.

Pumping Duration 4 hours

Yield 2 gpm Date _____

Specific Capacity _____ gpm/ft

Well Purpose Ground-water monitoring well

Remarks _____

Prepared by D. Colton

GERAGHTY & MILLER, INC.
Ground-Water Consultants

WELL CONSTRUCTION LOG

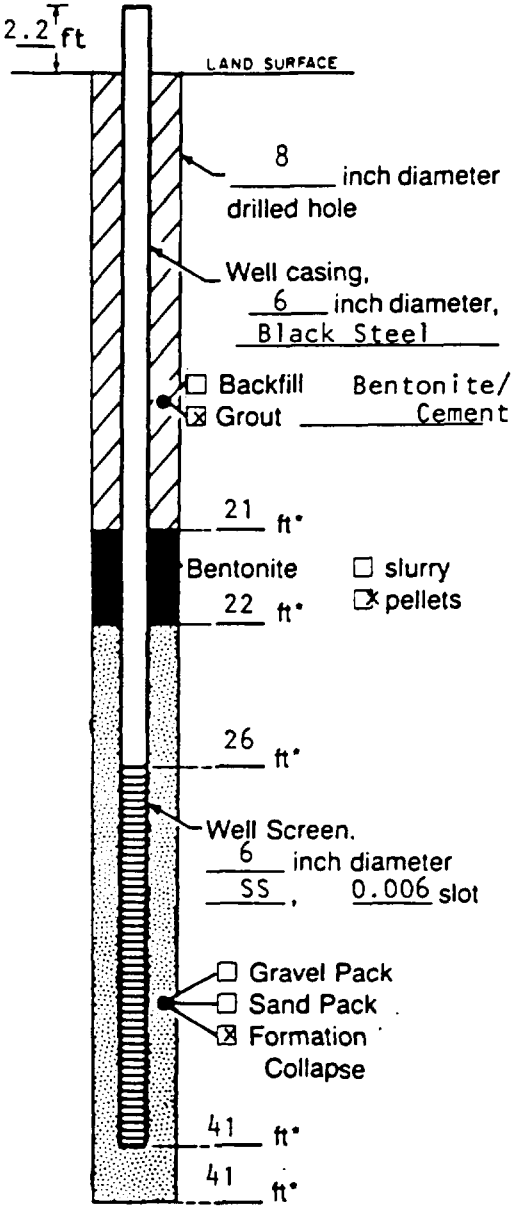

Measuring Point is Top of Well Casing Unless Otherwise Noted.

*Depth Below Land Surface

Project Monsanto Company Well GM-2

Town/City Sauget

County St. Clair State IL

Permit No. _____

Land-Surface Elevation

and Datum _____ feet ☒ surveyed

Measuring Point 417.37 Ft (MSL) ☐ estimated

Installation Dates(s) 11/8/83

Drilling Method Mud Rotary

Drilling Contractor John Mathes & Assoc.

Drilling Fluid Bentonite

Development Techniques(s) and Date(s)
Surged with compressed air.

Fluid Loss During Drilling _____ gallons

Water Removed During Development 480 gallons

Static Depth to Water _____ feet below M.P.

Pumping Depth to Water _____ feet below M.P.

Pumping Duration 4 hours

Yield 2 gpm Date _____

Specific Capacity _____ gpm/ft

Well Purpose Ground-water monitoring well

Remarks _____

Prepared by D. Colton

GERAGHTY & MILLER, INC.
Ground-Water Consultants

WELL CONSTRUCTION LOG

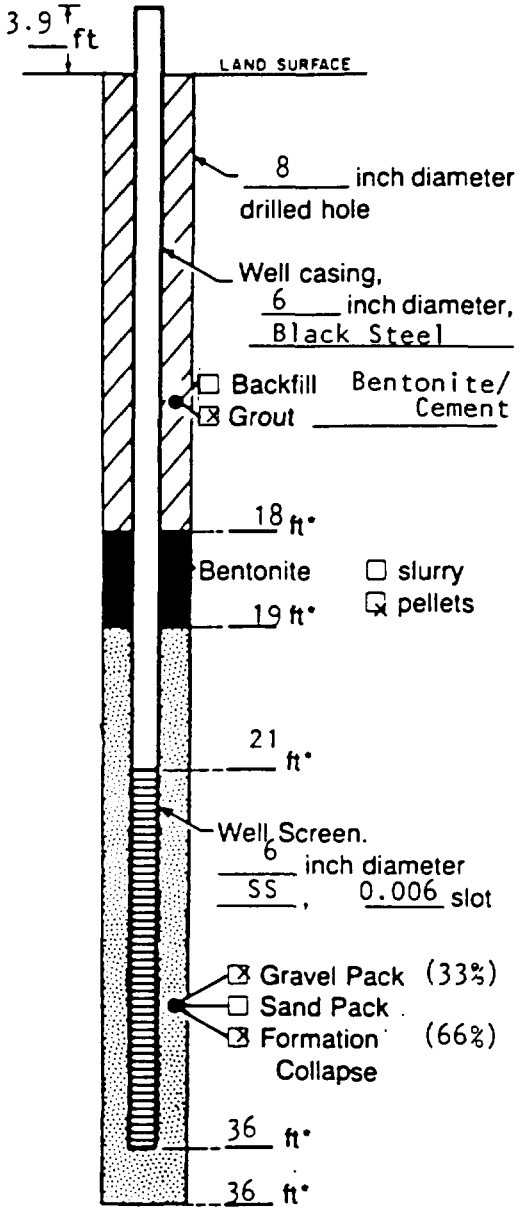

Measuring Point is Top of Well Casing Unless Otherwise Noted.

*Depth Below Land Surface

Project Monsanto Company Well GM-3

Town/City Sauget

County St. Clair State IL

Permit No. _____

Land-Surface Elevation

and Datum _____ feet ☒ surveyed

Monitoring Point 416.31 Ft (MSL) ☐ estimated

Installation Dates(s) 11/7/83

Drilling Method Mud Rotary

Drilling Contractor John Mathes & Assoc.

Drilling Fluid Bentonite

Development Techniques(s) and Date(s)
Surged with compressed air.

Fluid Loss During Drilling _____ gallons

Water Removed During Development 480 gallons

Static Depth to Water _____ feet below M.P.

Pumping Depth to Water _____ feet below M.P.

Pumping Duration 4 hours

Yield 2 gpm Date _____

Specific Capacity _____ gpm/ft

Well Purpose Ground-water monitoring well

Remarks

Prepared by D. Colton

GERAGHTY & MILLER, INC.
Ground-Water Consultants

WELL CONSTRUCTION LOG

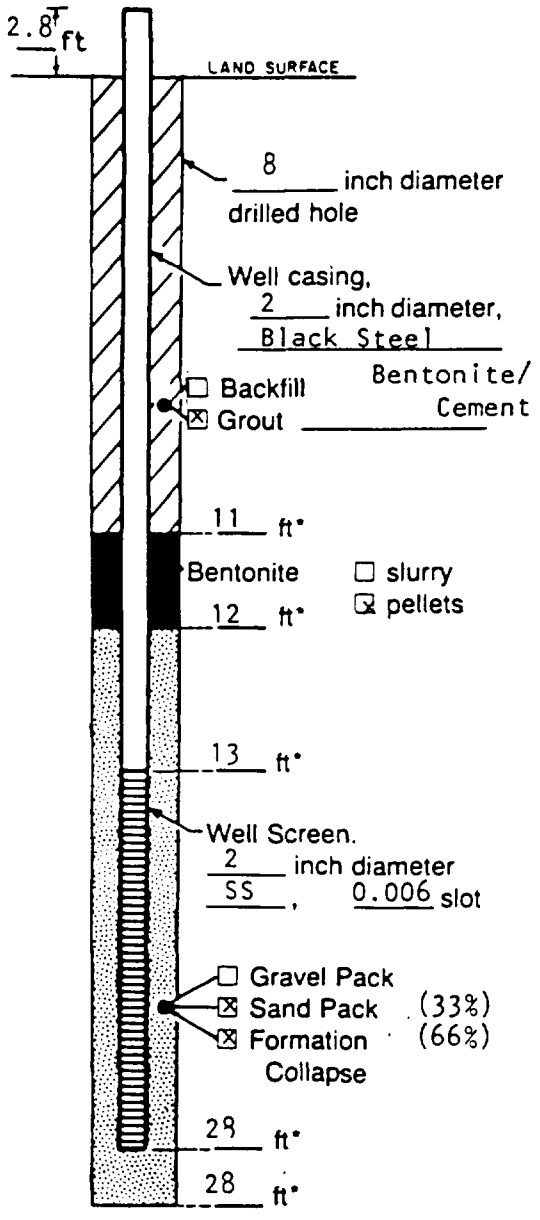

Measuring Point is Top of Well Casing Unless Otherwise Noted.

*Depth Below Land Surface

Project Monsanto Company Well GM-4A

Town/City Sauget

County St. Clair State Illinois

Permit No. _____

Land-Surface Elevation

and Datum _____ feet ☒ surveyed

Measuring Point 406.43 Ft (MSL) ☐ estimated

Installation Dates(s) 11/2/83

Drilling Method Hollow Stem Auger

Drilling Contractor John Mathes & Assoc.

Drilling Fluid Water

Development Techniques(s) and Date(s)

Surged with compressed air; pumped with bladder pump.

Fluid Loss During Drilling 150 gallons

Water Removed During Development 240 gallons

Static Depth to Water _____ feet below M.P.

Pumping Depth to Water _____ feet below M.P.

Pumping Duration 4 hours

Yield 1 gpm Date _____

Specific Capacity _____ gpm/ft

Well Purpose Ground-water monitoring well

Remarks

Prepared by D. Colton

GERAGHTY & MILLER, INC.
Ground-Water Consultants

WELL CONSTRUCTION LOG

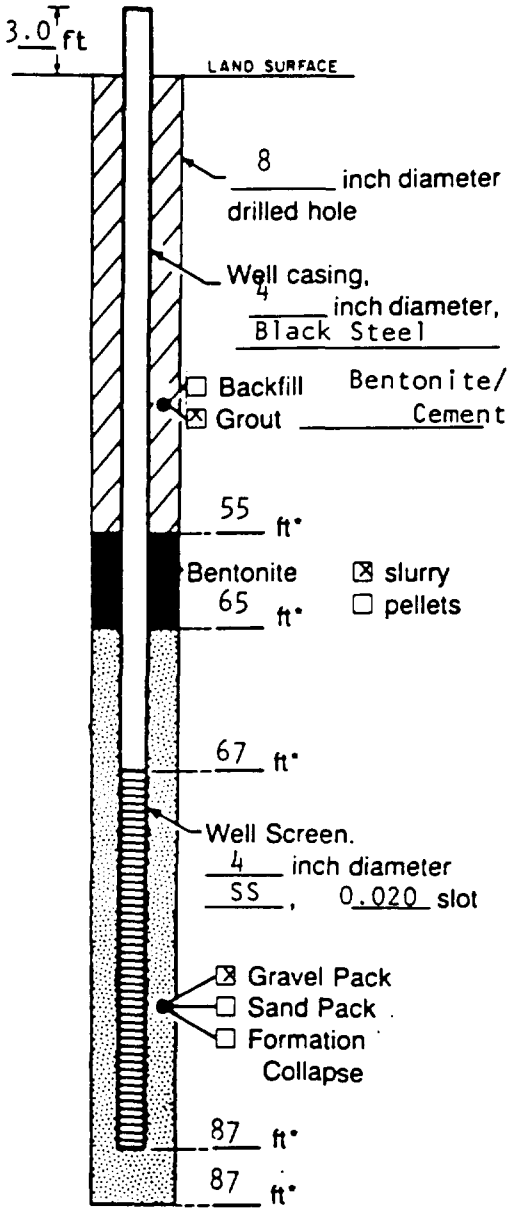

Measuring Point is Top of Well Casing Unless Otherwise Noted.

*Depth Below Land Surface

Project Monsanto Company Well GM-4B

Town/City Sauget

County St. Clair State IL

Permit No. _____

Land-Surface Elevation

and Datum _____ feet ☒ surveyed

Measuring Point 406.70 Ft (MSL) ☐ estimated

Installation Dates(s) 7/17/84

Drilling Method Mud Rotary

Drilling Contractor John Mathes & Assoc.

Drilling Fluid Bentonite

Development Techniques(s) and Date(s)

Surged with compressed air.

Fluid Loss During Drilling _____ gallons

Water Removed During Development 1200 gallons

Static Depth to Water _____ feet below M.P.

Pumping Depth to Water _____ feet below M.P.

Pumping Duration 2 hours

Yield 10 gpm Date _____

Specific Capacity _____ gpm/ft

Well Purpose Ground-water monitoring well

Remarks

Prepared by D. Colton

GERAGHTY & MILLER, INC.
Ground-Water Consultants

WELL CONSTRUCTION LOG

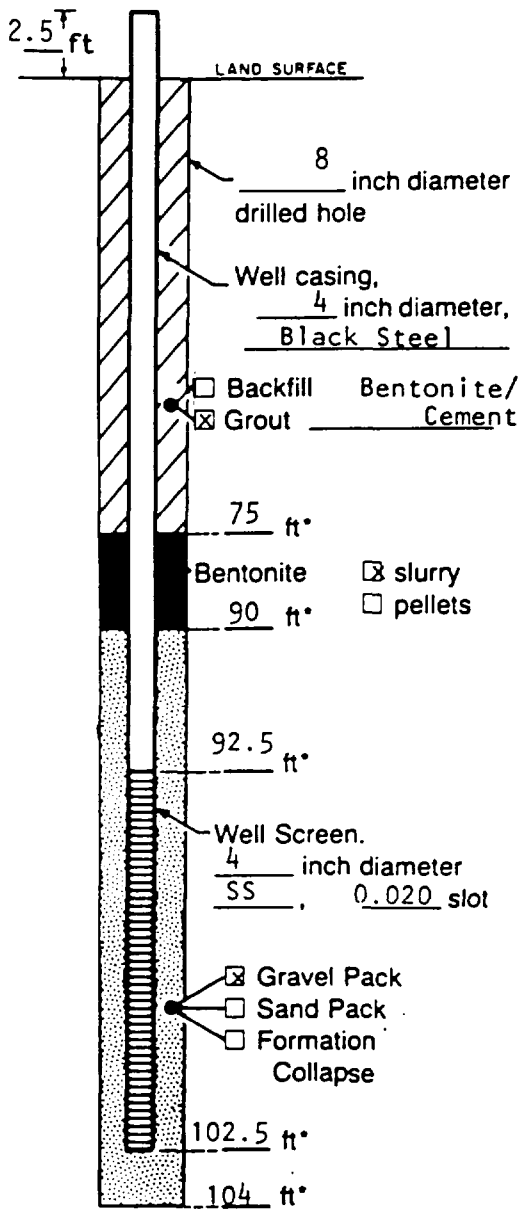

Measuring Point is Top of Well Casing Unless Otherwise Noted.

*Depth Below Land Surface

Project Monsanto Company Well GM-4C

Town/City Sauget

County St. Clair State Il

Permit No. _____

Land-Surface Elevation

and Datum _____ feet ☒ surveyed

Measuring Point 406.51 Ft (MSL) ☐ estimated

Installation Dates(s) 1/11/84

Drilling Method Mud Rotary

Drilling Contractor John Mathes & Assoc.

Drilling Fluid Bentonite

Development Techniques(s) and Date(s)

Surged with compressed air.

Fluid Loss During Drilling _____ gallons

Water Removed During Development 1200 gallons

Static Depth to Water _____ feet below M.P.

Pumping Depth to Water _____ feet below M.P.

Pumping Duration 2 hours

Yield 10 gpm Date _____

Specific Capacity _____ gpm/ft

Well Purpose Ground-water monitoring well

Remarks

Prepared by D. Colton

GERAGHTY & MILLER, INC.
Ground-Water Consultants

WELL CONSTRUCTION LOG

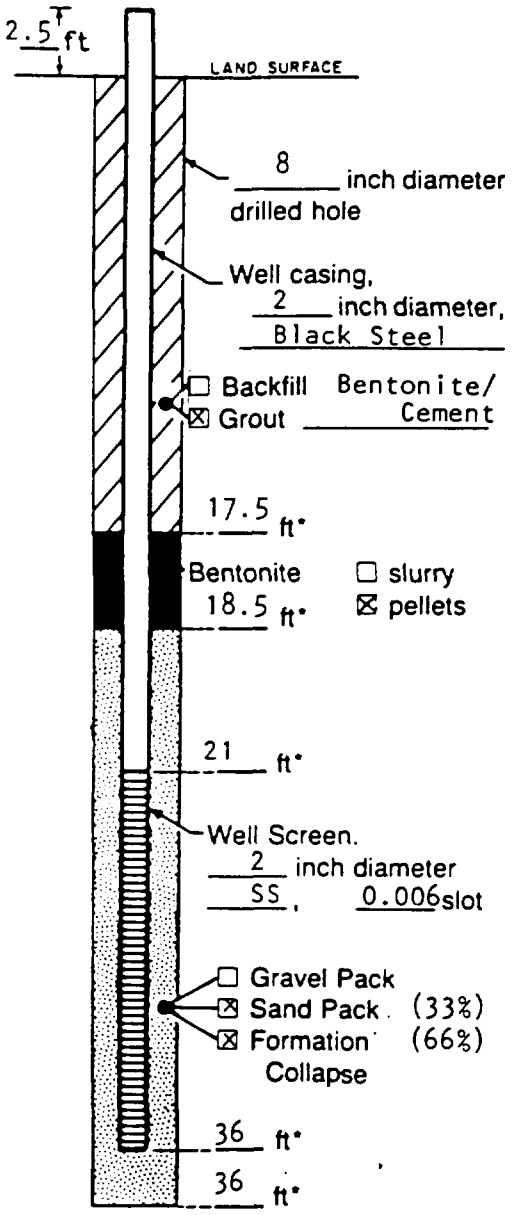

Measuring Point is Top of Well Casing Unless Otherwise Noted.

*Depth Below Land Surface

Project Monsanto Company Well GM-5

Town/City Sauget

County St. Clair State IL

Permit No. _____

Land-Surface Elevation

and Datum _____ feet ☒ surveyed

Measuring Point 414.94 Ft (MSL) ☐ estimated

Installation Dates(s) 11/3/83

Drilling Method Hollow Stem Auger

Drilling Contractor John Mathes & Assoc.

Drilling Fluid Water

Development Techniques(s) and Date(s)
Pumped with bladder pump; surged with compressed air

Fluid Loss During Drilling 200 gallons

Water Removed During Development 240 gallons

Static Depth to Water _____ feet below M.P.

Pumping Depth to Water _____ feet below M.P.

Pumping Duration 4 hours

Yield 1 gpm Date _____

Specific Capacity _____ gpm/ft

Well Purpose Ground-Water Monitoring well

Remarks

Prepared by D. Colton

GERAGHTY & MILLER, INC.
Ground-Water Consultants

WELL CONSTRUCTION LOG

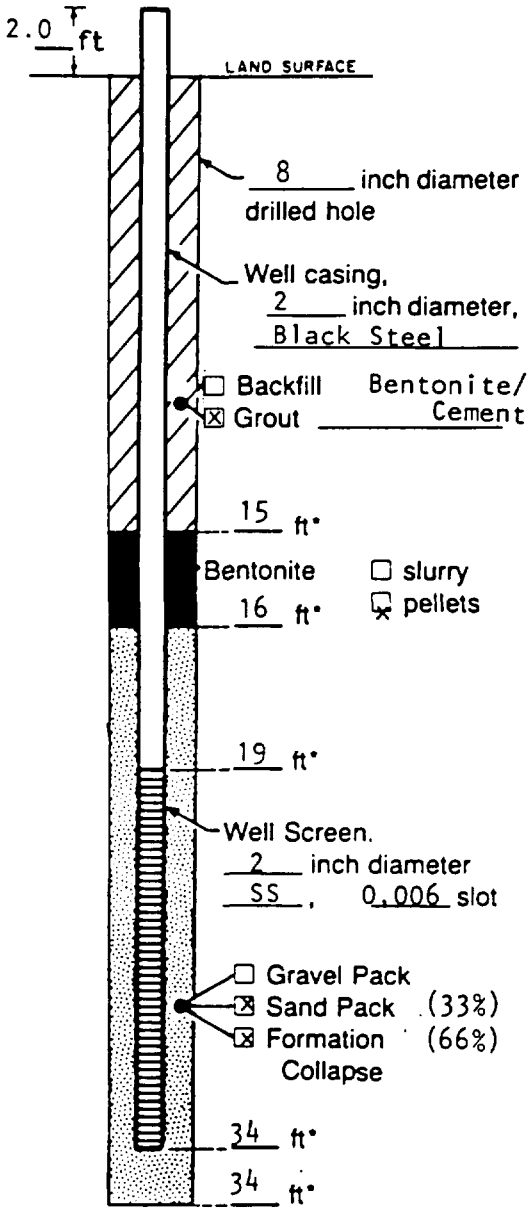

Measuring Point is Top of Well Casing Unless Otherwise Noted.

*Depth Below Land Surface

Project Monsanto Company Well GM-6A

Town/City Sauget

County St. Clair State IL

Permit No. _____

Land-Surface Elevation

and Datum _____ feet ☒ surveyed

Measuring Point 414.59 Ft (MSL) ☐ estimated

Installation Dates(s) 11/2/83

Drilling Method Hollow Stem Auger

Drilling Contractor John Mathes & Assoc.

Drilling Fluid Water

Development Techniques(s) and Date(s)
Pumped with bladder pump; surged with compressed air.

Fluid Loss During Drilling 200 gallons

Water Removed During Development 240 gallons

Static Depth to Water _____ feet below M.P.

Pumping Depth to Water _____ feet below M.P.

Pumping Duration 4 hours

Yield 1 gpm Date _____

Specific Capacity _____ gpm/ft

Well Purpose Ground-water monitoring well

Remarks

Prepared by D. Colton

GERAGHTY & MILLER, INC.
Ground-Water Consultants

WELL CONSTRUCTION LOG

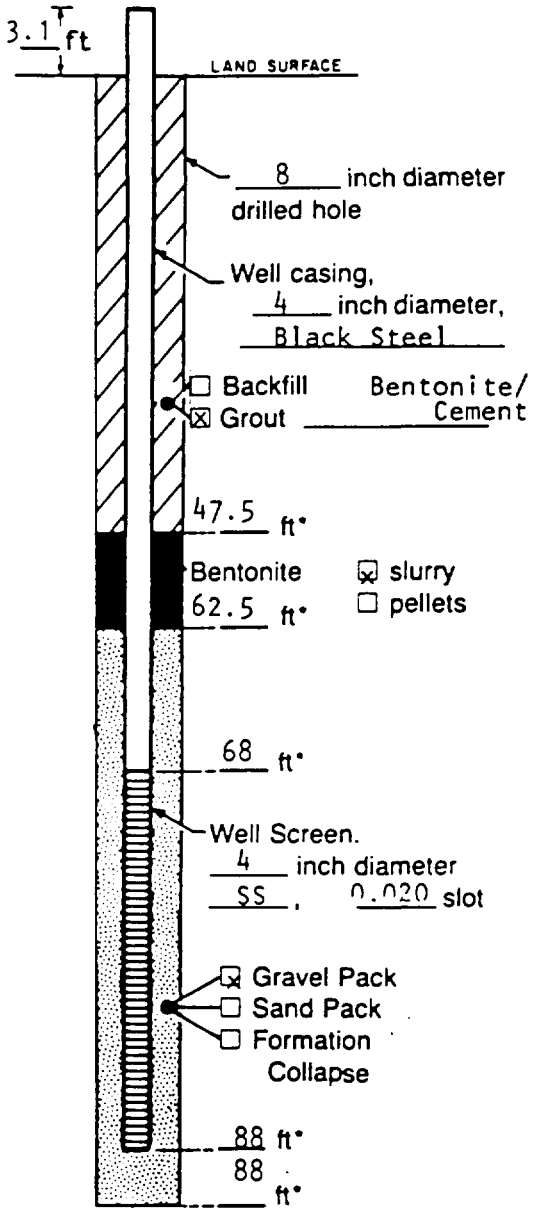

Measuring Point is Top of Well Casing Unless Otherwise Noted.

*Depth Below Land Surface

Project Monsanto Company Well GM-6B

Town/City Sauget

County St. Clair State IL

Permit No.

Land-Surface Elevation

and Datum feet ☒ surveyed

Measuring Point 416.04 Ft (MSL) ☐ estimated

Installation Dates(s) 7/26/84

Drilling Method Mud Rotary

Drilling Contractor John Mathes & Assoc.

Drilling Fluid Bentonite

Development Techniques(s) and Date(s)
Surged with compressed air.

Fluid Loss During Drilling gallons

Water Removed During Development 1200 gallons

Static Depth to Water feet below M.P.

Pumping Depth to Water feet below M.P.

Pumping Duration 2 hours

Yield 10 gpm Date

Specific Capacity gpm/ft

Well Purpose Ground-water monitoring well

Remarks

Prepared by D. Colton

GERAGHTY & MILLER, INC.
Ground-Water Consultants

WELL CONSTRUCTION LOG

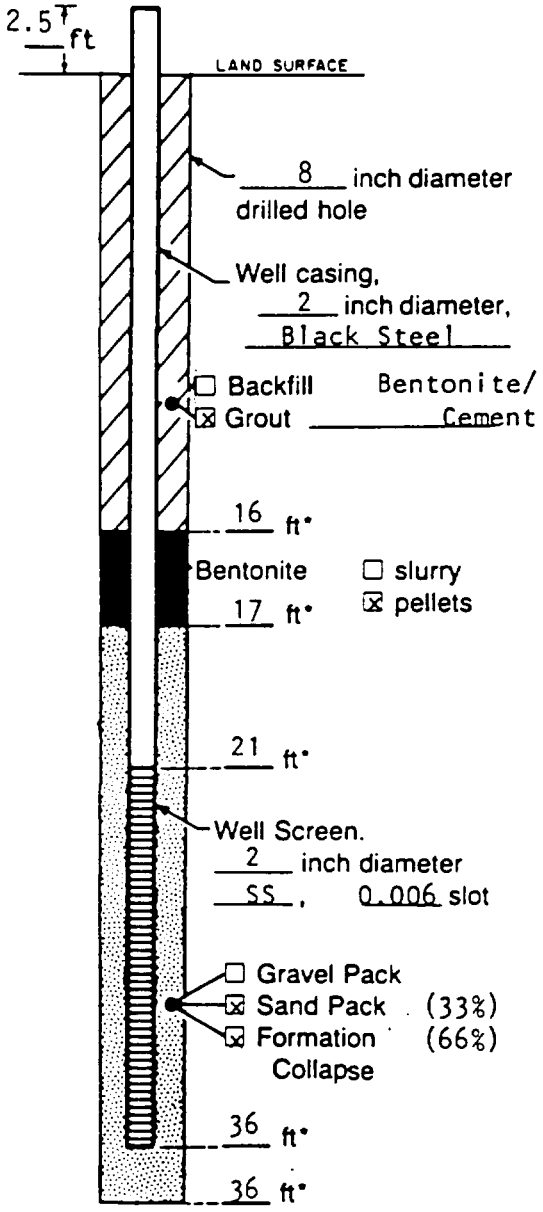

Measuring Point is Top of Well Casing Unless Otherwise Noted.

*Depth Below Land Surface

Project Monsanto Company Well GM-7

Town/City Sauget

County St. Clair State IL

Permit No. _____

Land-Surface Elevation

and Datum _____ feet ☒ surveyed

Measuring Point 414.95 Ft (MSL) ☐ estimated

Installation Dates(s) 11/3/83

Drilling Method Hollow Stem Auger

Drilling Contractor John Mathes & Assoc.

Drilling Fluid Water

Development Techniques(s) and Date(s)

Pumped with bladder pump; surged with compressed air.

Fluid Loss During Drilling _____ gallons

Water Removed During Development 200 gallons

Static Depth to Water 240 feet below M.P.

Pumping Depth to Water _____ feet below M.P.

Pumping Duration 4 hours

Yield 1 gpm Date _____

Specific Capacity _____ gpm/ft

Well Purpose Ground-water monitoring well

Remarks

Prepared by D. Colton

GERAGHTY & MILLER, INC.
Ground-Water Consultants

WELL CONSTRUCTION LOG

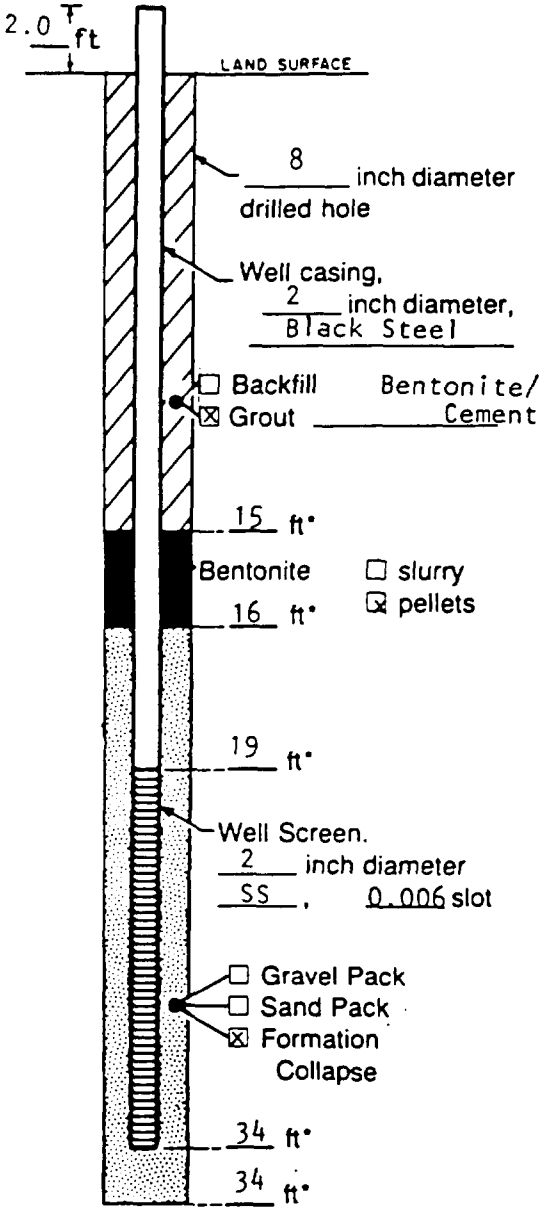

Measuring Point is Top of Well Casing Unless Otherwise Noted.

*Depth Below Land Surface

Project Monsanto Company Well GM-8
Town/City Sauget
County St. Clair State IL
Permit No. _____
Land-Surface Elevation
and Datum _____ feet ☒ surveyed
Measuring Point 418.49 Ft (MSL) ☐ estimated
Installation Dates(s) 11/2/83
Drilling Method Hollow Stem Auger
Drilling Contractor John Mathes & Assoc.
Drilling Fluid Water

Development Techniques(s) and Date(s)
Pumped with bladder pump; surged with compressed air.

Fluid Loss During Drilling 250 gallons
Water Removed During Development 270 gallons
Static Depth to Water _____ feet below M.P.
Pumping Depth to Water _____ feet below M.P.
Pumping Duration 4.5 hours
Yield 1 gpm Date _____
Specific Capacity _____ gpm/ft
Well Purpose Ground-water monitoring well

Remarks

Prepared by D. Colton

GERAGHTY & MILLER, INC.
Ground-Water Consultants

WELL CONSTRUCTION LOG

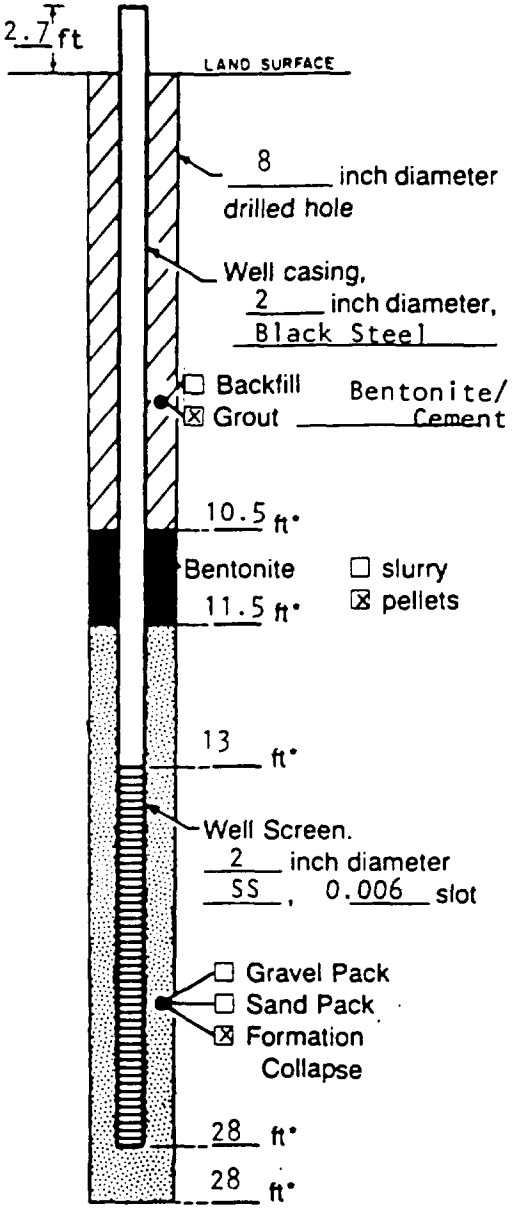

Measuring Point is Top of Well Casing Unless Otherwise Noted.

*Depth Below Land Surface

Project Monsanto Company Well GM-9A

Town/City Sauget

County St. Clair State IL

Permit No. _____

Land-Surface Elevation

and Datum _____ feet ☒ surveyed

Measuring Point 414.47 Ft (MSL) ☐ estimated

Installation Dates(s) 11/10/83

Drilling Method Hollow Stem Auger

Drilling Contractor John Mathes & Assoc.

Drilling Fluid Water

Development Techniques(s) and Date(s)

Pumped with bladder pump; surged with compressed air.

Fluid Loss During Drilling 200 gallons

Water Removed During Development 240 gallons

Static Depth to Water _____ feet below M.P.

Pumping Depth to Water _____ feet below M.P.

Pumping Duration 4 hours

Yield 1 gpm Date _____

Specific Capacity _____ gpm/ft

Well Purpose Ground-water monitoring well

Remarks

Prepared by D. Colton

GERAGHTY & MILLER, INC.
Ground-Water Consultants

WELL CONSTRUCTION LOG

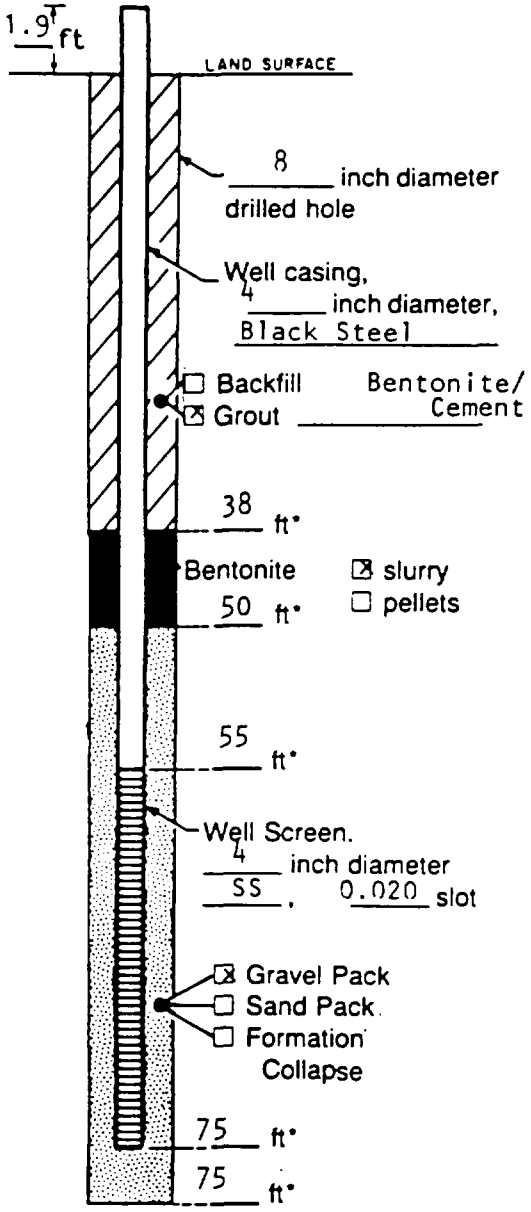

Measuring Point is Top of Well Casing Unless Otherwise Noted.

*Depth Below Land Surface

Project Monsanto Company Well GM-9B

Town/City Sauget

County St. Clair State IL

Permit No. _____

Land-Surface Elevation and Datum _____ feet ☒ surveyed

Measuring Point 412.36 Ft (MSL) ☐ estimated

Installation Dates(s) 8/17/84

Drilling Method Mud Rotary

Drilling Contractor John Mathes & Assoc.

Drilling Fluid Bentonite

Development Techniques(s) and Date(s)
Surged with compressed air.

Fluid Loss During Drilling _____ gallons

Water Removed During Development 1200 gallons

Static Depth to Water _____ feet below M.P.

Pumping Depth to Water _____ feet below M.P.

Pumping Duration 2 hours

Yield 10 gpm Date _____

Specific Capacity _____ gpm/ft

Well Purpose Ground-water monitoring well

Remarks

Prepared by D. Colton

GERAGHTY & MILLER, INC.
Ground-Water Consultants

WELL CONSTRUCTION LOG

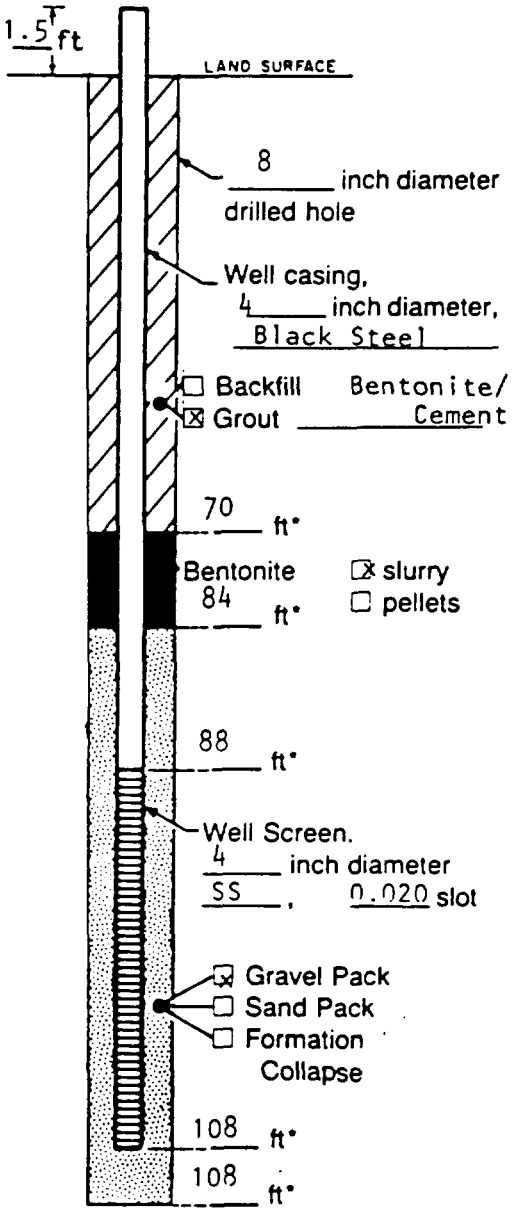

Measuring Point is Top of Well Casing Unless Otherwise Noted.

*Depth Below Land Surface

Project Monsanto Company Well GM-9C

Town/City Sauget

County St. Clair State IL

Permit No. _____

Land-Surface Elevation

and Datum _____ feet ☒ surveyed

Measuring Point 416.97 Ft (MSL) ☐ estimated

Installation Dates(s) 8/15/84

Drilling Method Mud Rotary

Drilling Contractor John Mathes & Assoc.

Drilling Fluid Bentonite

Development Techniques(s) and Date(s)

Surged with compressed air.

Fluid Loss During Drilling _____ gallons

Water Removed During Development 1200 gallons

Static Depth to Water _____ feet below M.P.

Pumping Depth to Water _____ feet below M.P.

Pumping Duration 2 hours

Yield 10 gpm Date _____

Specific Capacity _____ gpm/ft

Well Purpose Ground-water monitoring well

Remarks

Prepared by D. Colton

GERAGHTY & MILLER, INC.
Ground-Water Consultants

WELL CONSTRUCTION LOG

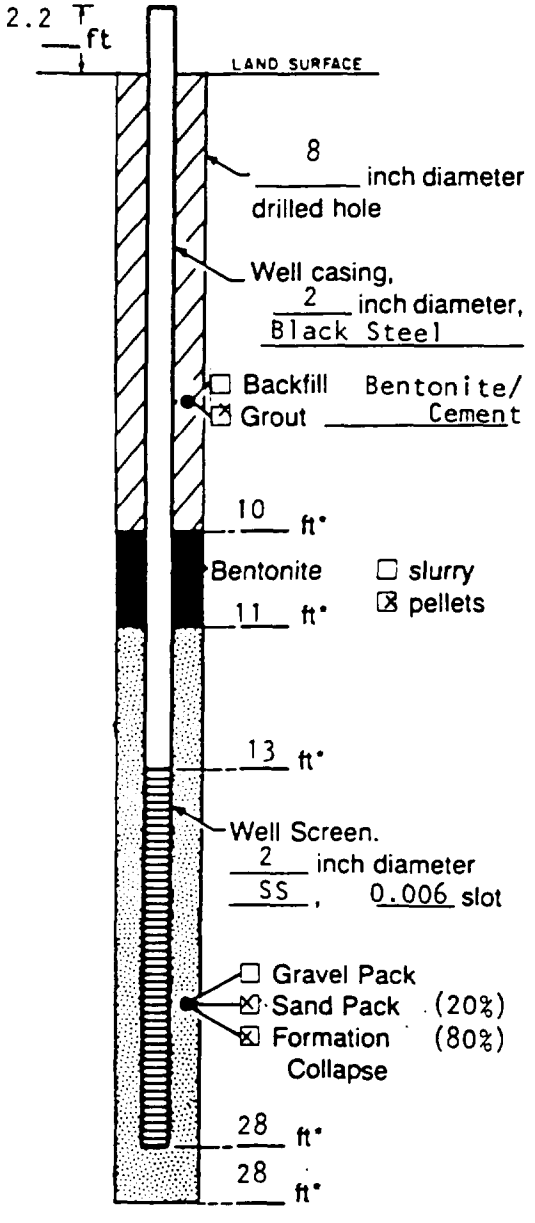

Measuring Point is Top of Well Casing Unless Otherwise Noted.

*Depth Below Land Surface

Project Monsanto Company Well GM-10A
Town/City Sauget
County St. Clair State IL
Permit No. _____
Land-Surface Elevation
and Datum _____ feet ☒ surveyed
Measuring Point 412.97 Ft (MSL) ☐ estimated
Installation Dates(s) 11/9/83
Drilling Method Hollow Stem Auger
Drilling Contractor John Mathes & Assoc.
Drilling Fluid Water

Development Techniques(s) and Date(s)
Pumped with bladder pump; surged with compressed air.

Fluid Loss During Drilling 200 gallons
Water Removed During Development 240 gallons
Static Depth to Water _____ feet below M.P.
Pumping Depth to Water _____ feet below M.P.
Pumping Duration 4 hours
Yield 1 gpm Date _____
Specific Capacity _____ gpm/ft
Well Purpose Ground-water monitoring well

Remarks

Prepared by D. Colton

GERAGHTY & MILLER, INC.
Ground-Water Consultants

WELL CONSTRUCTION LOG

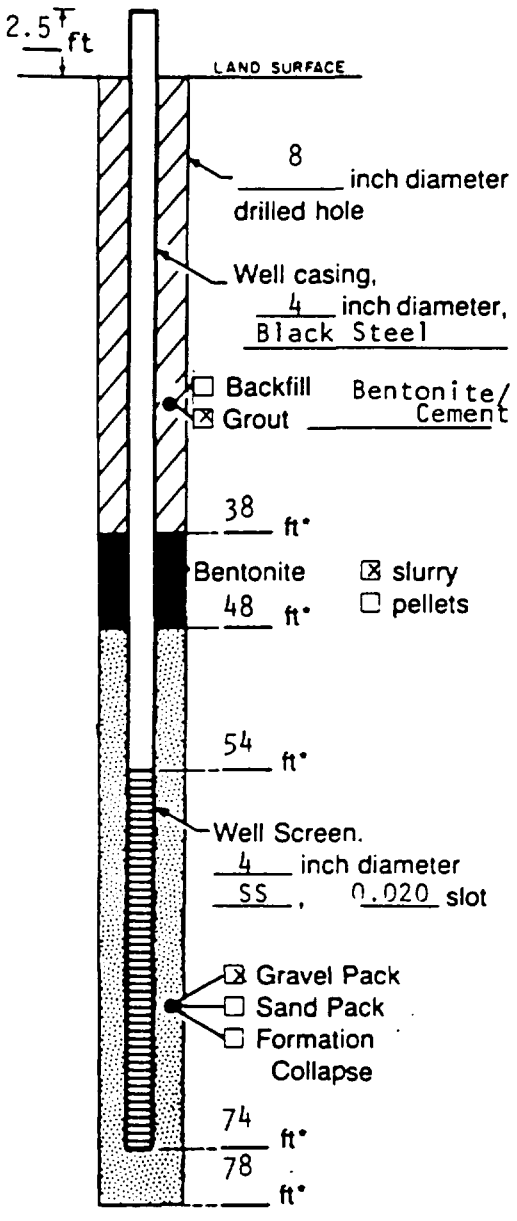

Measuring Point is Top of Well Casing Unless Otherwise Noted.

*Depth Below Land Surface

Project Monsanto Company Well GM-10B

Town/City Sauget

County St. Clair State IL

Permit No. _____

Land-Surface Elevation

and Datum _____ feet ☒ surveyed

Measuring Point 413.90 Ft (MSL) ☐ estimated

Installation Dates(s) 1/22/85

Drilling Method Mud Rotary

Drilling Contractor John Mathes & Assoc.

Drilling Fluid Bentonite

Development Techniques(s) and Date(s)
Surged with compressed air.

Fluid Loss During Drilling _____ gallons

Water Removed During Development 1200 gallons

Static Depth to Water _____ feet below M.P.

Pumping Depth to Water _____ feet below M.P.

Pumping Duration 2 hours

Yield 10 gpm Date _____

Specific Capacity _____ gpm/ft

Well Purpose Ground-water monitoring well

Remarks

Prepared by D. Colton

GERAGHTY & MILLER, INC.
Ground-Water Consultants

WELL CONSTRUCTION LOG

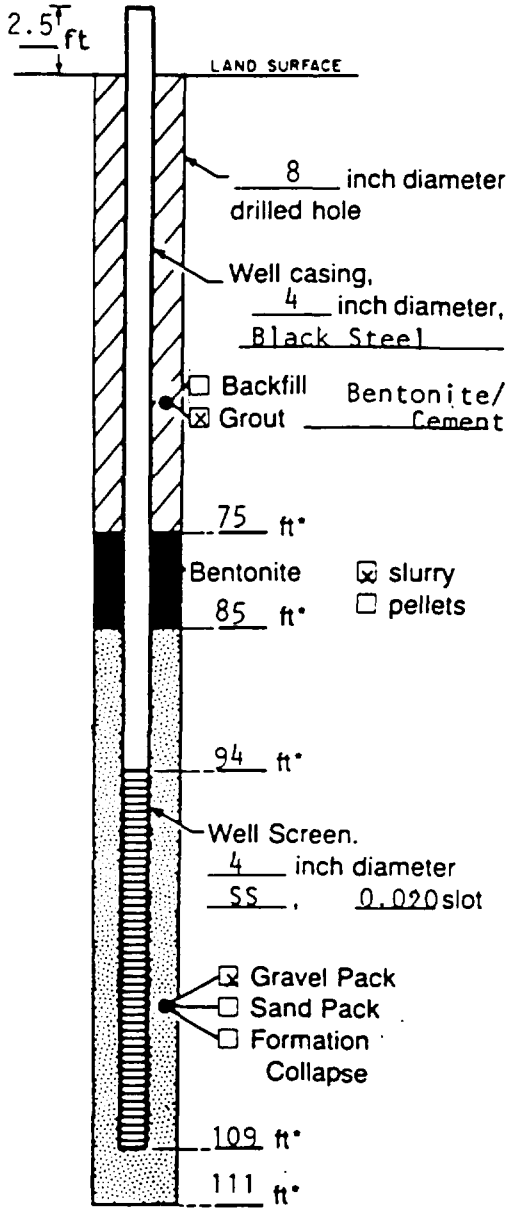

Measuring Point is Top of Well Casing Unless Otherwise Noted.

*Depth Below Land Surface

Project Monsanto Company Well GM-10C

Town/City Sauget

County St. Clair State IL

Permit No. _____

Land-Surface Elevation

and Datum _____ feet ☒ surveyed

Measuring Point 413.78 Ft (MSL) ☐ estimated

Installation Dates(s) 1/18/85

Drilling Method Mud Rotary

Drilling Contractor John Mathes & Assoc.

Drilling Fluid Bentonite

Development Techniques(s) and Date(s)

Surged with compressed air.

Fluid Loss During Drilling _____ gallons

Water Removed During Development 1200 gallons

Static Depth to Water _____ feet below M.P.

Pumping Depth to Water _____ feet below M.P.

Pumping Duration 2 hours

Yield 10 gpm Date _____

Specific Capacity _____ gpm/ft

Well Purpose Ground-water monitoring well

Remarks

Prepared by D. Colton

GERAGHTY & MILLER, INC.
Ground-Water Consultants

WELL CONSTRUCTION LOG

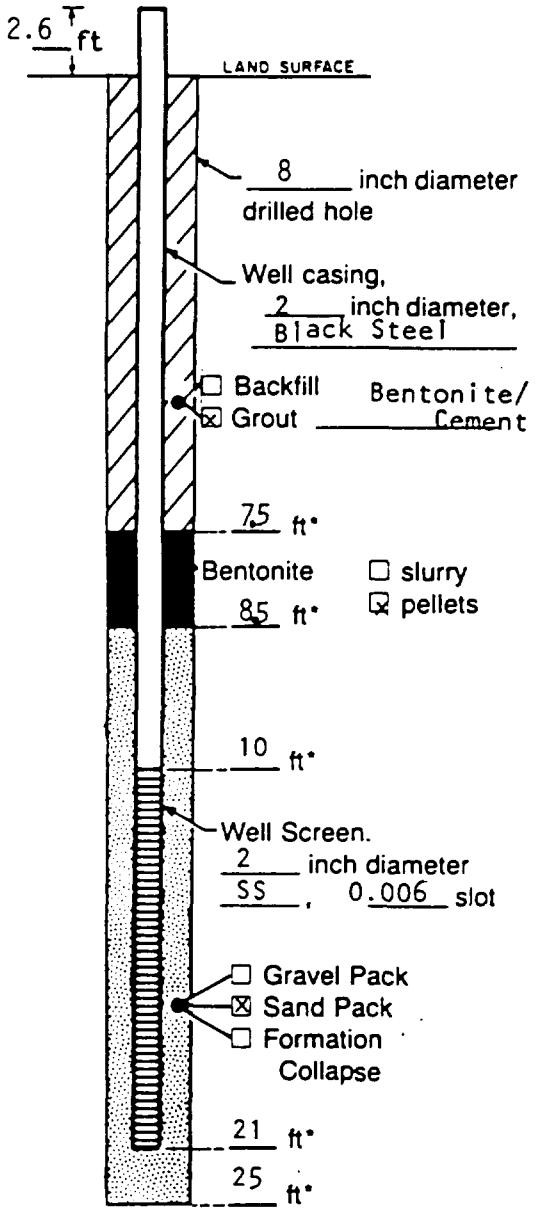

Measuring Point is Top of Well Casing Unless Otherwise Noted.

*Depth Below Land Surface

Project Monsanto Company Well GM-11

Town/City Sauget

County St. Clair State IL

Permit No. _____

Land-Surface Elevation

and Datum _____ feet ☒ surveyed

Measuring Point 412.95 Ft (MSL) ☐ estimated

Installation Dates(s) 10/31/83

Drilling Method Hollow Stem Auger

Drilling Contractor John Mathes & Assoc.

Drilling Fluid Water

Development Techniques(s) and Date(s)
Pumped with bladder pump; surged with compressed air.

Fluid Loss During Drilling 200 gallons

Water Removed During Development 240 gallons

Static Depth to Water _____ feet below M.P.

Pumping Depth to Water _____ feet below M.P.

Pumping Duration 4 hours

Yield 1 gpm Date _____

Specific Capacity _____ gpm/ft

Well Purpose Ground-water monitoring well

Remarks

Prepared by D. Colton

GERAGHTY & MILLER, INC.
Ground-Water Consultants

WELL CONSTRUCTION LOG

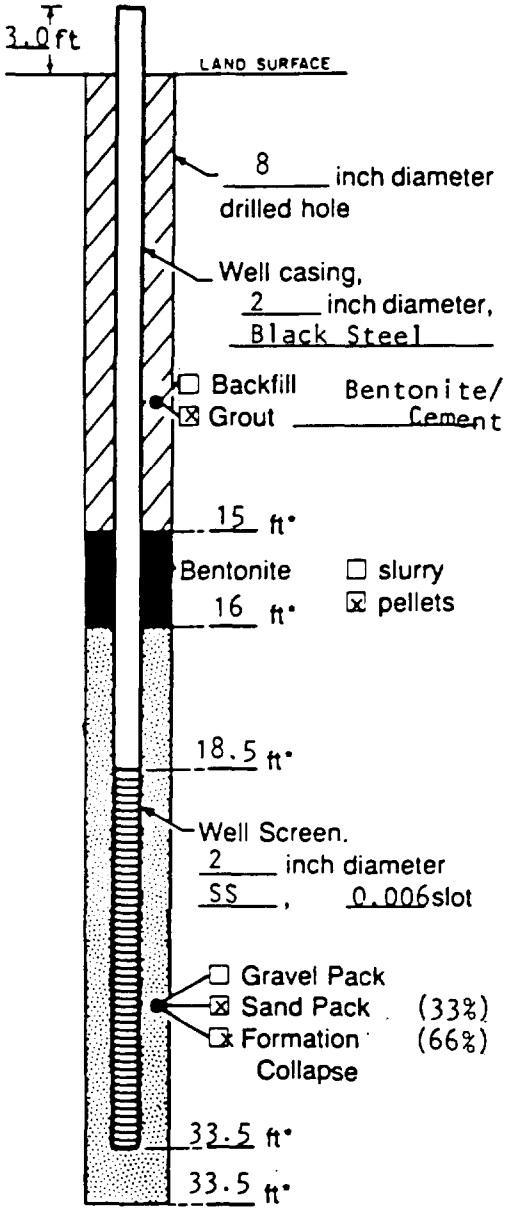

Measuring Point is Top of Well Casing Unless Otherwise Noted.

•Depth Below Land Surface

Project Monsanto Company Well GM-12A
Town/City Sauget
County St. Clair State IL
Permit No. _____
Land-Surface Elevation
and Datum _____ feet ☒ surveyed
Measuring Point 416.47 Ft (MSL) ☐ estimated
Installation Dates(s) 11/9/83
Drilling Method Hollow Stem Auger
Drilling Contractor John Mathes & Assoc.
Drilling Fluid Water

Development Techniques(s) and Date(s)
Pumped with bladder pump; surged with compressed air.

Fluid Loss During Drilling 200 gallons
Water Removed During Development 240 gallons
Static Depth to Water _____ feet below M.P.
Pumping Depth to Water _____ feet below M.P.
Pumping Duration 4 hours
Yield 1 gpm Date _____
Specific Capacity _____ gpm/ft
Well Purpose Ground-water monitoring well

Remarks

Prepared by D. Colton

GERAGHTY & MILLER, INC.
Ground-Water Consultants

WELL CONSTRUCTION LOG

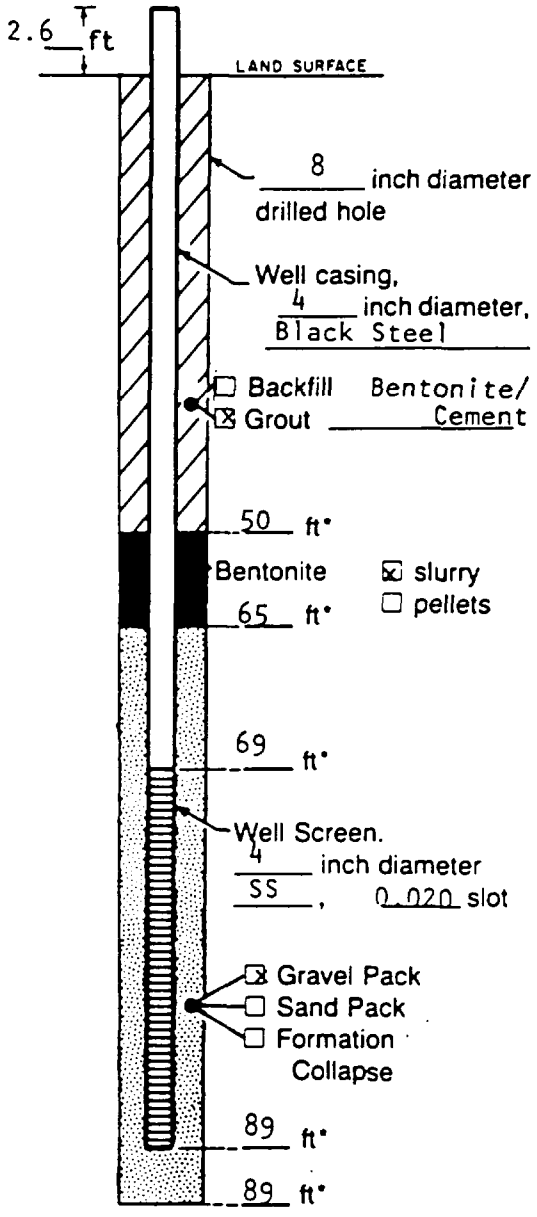

Measuring Point is Top of Well Casing Unless Otherwise Noted.

*Depth Below Land Surface

Project Monsanto Company Well GM-12B

Town/City Sauget

County St. Clair State IL

Permit No. _____

Land-Surface Elevation

and Datum _____ feet ☒ surveyed

Measuring Point 416.80 Ft (MSL) ☐ estimated

Installation Dates(s) 8/13/84

Drilling Method Mud Rotary

Drilling Contractor John Mathes & Assoc.

Drilling Fluid Bentonite

Development Techniques(s) and Date(s)

Surged with compressed air.

Fluid Loss During Drilling _____ gallons

Water Removed During Development 1200 gallons

Static Depth to Water _____ feet below M.P.

Pumping Depth to Water _____ feet below M.P.

Pumping Duration 2 hours

Yield 10 gpm Date _____

Specific Capacity _____ gpm/ft

Well Purpose Ground-water monitoring well

Remarks

Prepared by D. Colton

GERAGHTY & MILLER, INC.
Ground-Water Consultants

WELL CONSTRUCTION LOG

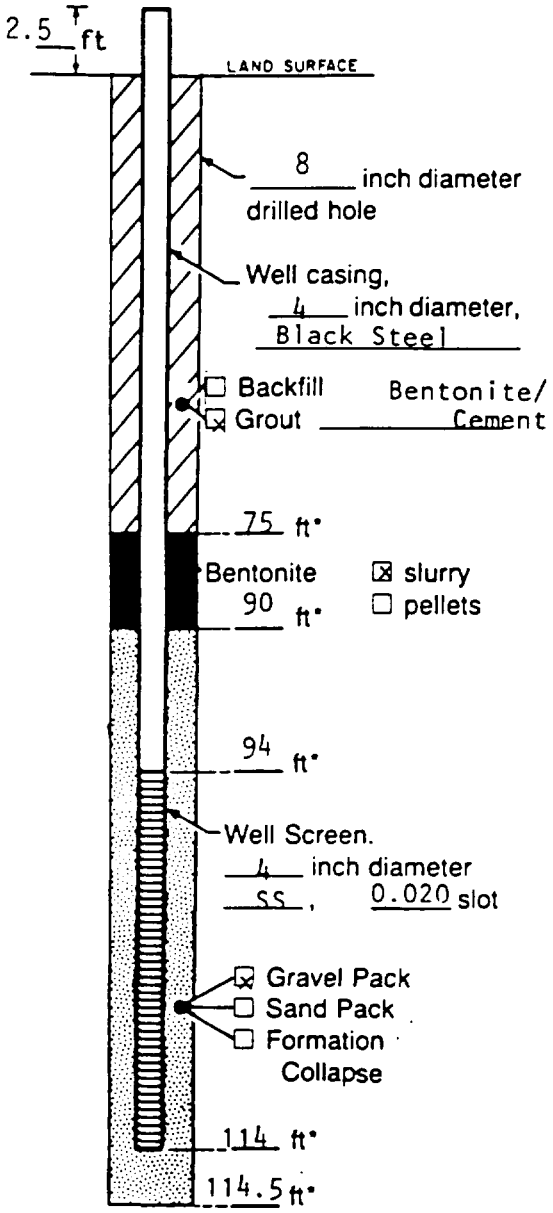

Measuring Point is Top of Well Casing Unless Otherwise Noted.

*Depth Below Land Surface

Project Monsanto Company Sauget Well GM-12C

Town/City

County St. Clair State IL

Permit No.

Land-Surface Elevation and Datum feet ☒ surveyed

Measuring Point 416.79 Ft (MSL) ☐ estimated

Installation Dates(s) 1/17/85

Drilling Method Mud Rotary

Drilling Contractor John Mathes & Assoc.

Drilling Fluid Bentonite

Development Techniques(s) and Date(s)
Surged with compressed air.

Fluid Loss During Drilling gallons

Water Removed During Development 1200 gallons

Static Depth to Water feet below M.P.

Pumping Depth to Water feet below M.P.

Pumping Duration 2 hours

Yield 10 gpm Date

Specific Capacity gpm/ft

Well Purpose Ground-water monitoring well

Remarks

Prepared by D. Colton

GERAGHTY & MILLER, INC.
Ground-Water Consultants

WELL CONSTRUCTION LOG

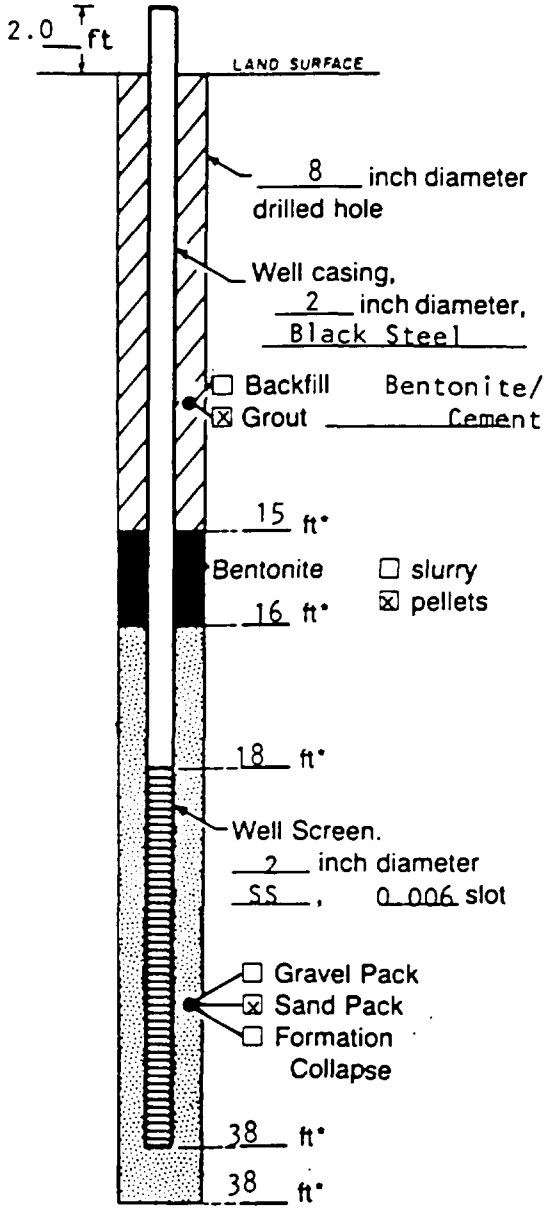

Measuring Point is Top of Well Casing Unless Otherwise Noted.

*Depth Below Land Surface

Project Monsanto Company Well GM-13

Town/City Sauget

County St. Clair State IL

Permit No. _____

Land-Surface Elevation

and Datum _____ feet ☒ surveyed

Measuring Point 415.47 Ft (MSL) ☐ estimated

Installation Dates(s) 8/15/84

Drilling Method Hollow Stem Auger

Drilling Contractor John Mathes & Assoc.

Drilling Fluid Water

Development Techniques(s) and Date(s)
Surged with compressed air.

Fluid Loss During Drilling 200 gallons

Water Removed During Development 210 gallons

Static Depth to Water _____ feet below M.P.

Pumping Depth to Water _____ feet below M.P.

Pumping Duration 3 hours

Yield 1.5 gpm Date _____

Specific Capacity _____ gpm/ft

Well Purpose Ground-water monitoring well

Remarks

Prepared by D. Colton

GERAGHTY & MILLER, INC.
Ground-Water Consultants

WELL CONSTRUCTION LOG

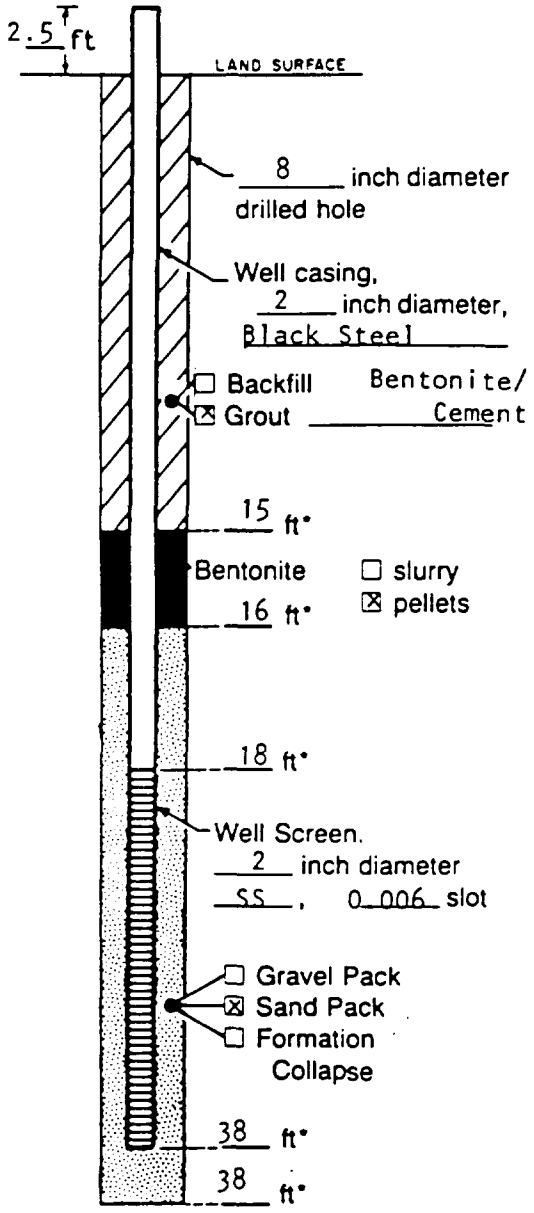

Measuring Point is Top of Well Casing Unless Otherwise Noted.

*Depth Below Land Surface

Project Monsanto Company Well GM-14

Town/City Sauget

County St. Clair State IL

Permit No. _____

Land-Surface Elevation

and Datum _____ feet ☒ surveyed

Measuring Point 411.26 Ft (MSL) ☐ estimated

Installation Dates(s) 8/16/84

Drilling Method Hollow Stem Auger

Drilling Contractor John Mathes & Assoc.

Drilling Fluid Water

Development Techniques(s) and Date(s)
Surged with compressed air.

Fluid Loss During Drilling 200 gallons

Water Removed During Development 210 gallons

Static Depth to Water _____ feet below M.P.

Pumping Depth to Water _____ feet below M.P.

Pumping Duration 3 hours

Yield 1.5 gpm Date _____

Specific Capacity _____ gpm/ft

Well Purpose Ground-water monitoring well

Remarks

Prepared by D. Colton

GERAGHTY & MILLER, INC.
Ground-Water Consultants

WELL CONSTRUCTION LOG

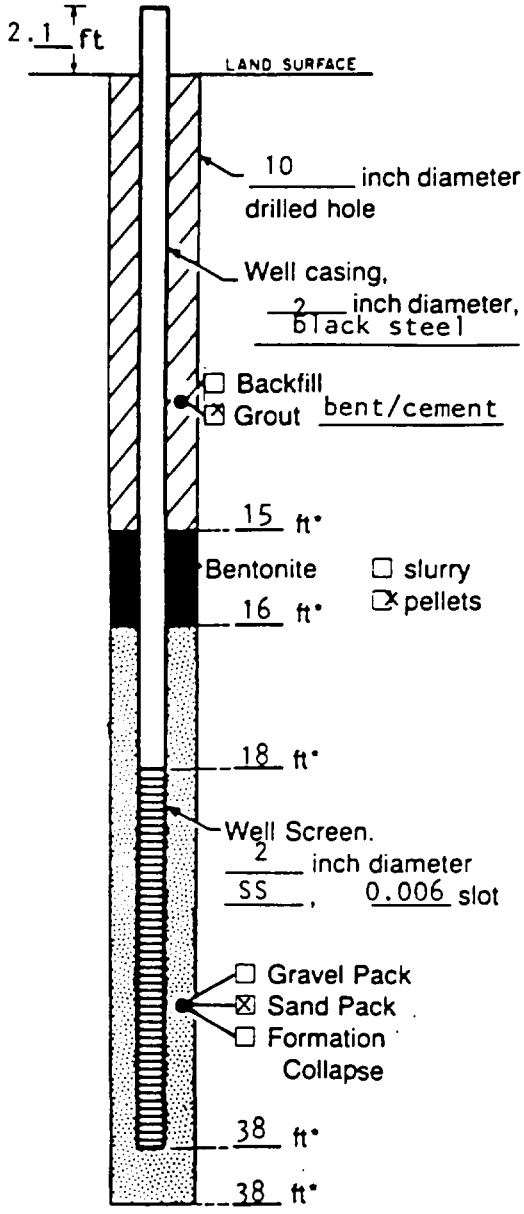

Measuring Point is Top of Well Casing Unless Otherwise Noted.

*Depth Below Land Surface

Project Monsanto Company Well GM-16A

Town/City Sauget

County St. Clair State IL

Permit No. _____

Land-Surface Elevation

and Datum _____ feet ☒ surveyed

Measuring point 412.03 ft (msl) ☐ estimated

Installation Dates(s) 8/14/86

Drilling Method hollow stem augers

Drilling Contractor John Mathes & Associates, Inc.

Drilling Fluid water

Development Techniques(s) and Date(s)

surged with compressed air

Fluid Loss During Drilling 300 gallons

Water Removed During Development 360 gallons

Static Depth to Water _____ feet below M.P.

Pumping Depth to Water _____ feet below M.P.

Pumping Duration 3 hours

Yield 2 gpm Date _____

Specific Capacity _____ gpm/ft

Well Purpose ground-water monitoring well

Remarks

Prepared by D. Colton

GERAGHTY & MILLER, INC.
Ground-Water Consultants

WELL CONSTRUCTION LOG

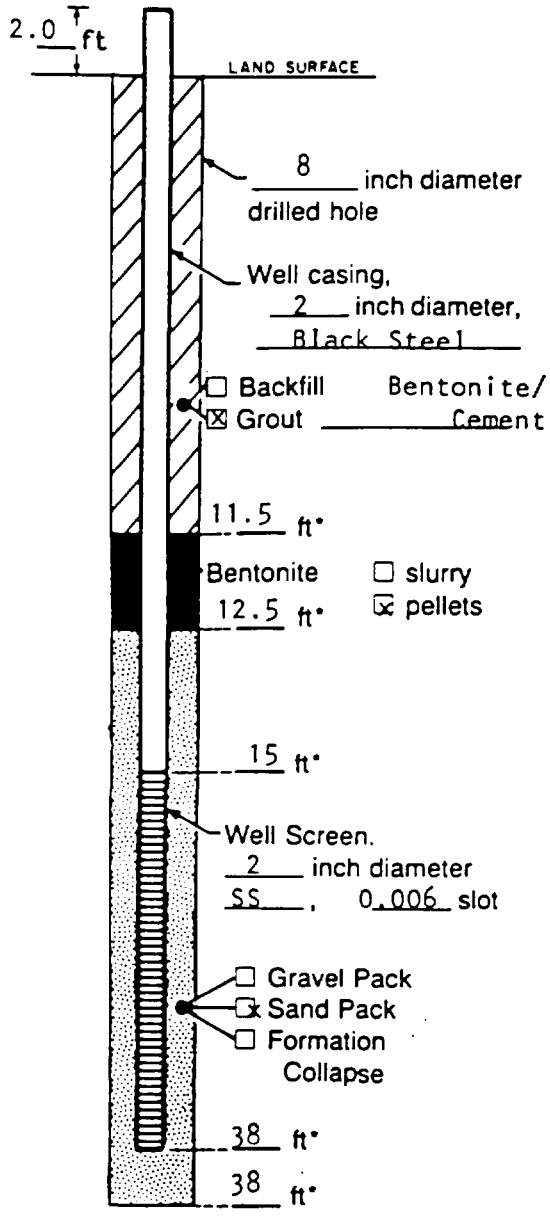

Measuring Point is Top of Well Casing Unless Otherwise Noted.

*Depth Below Land Surface

Project Monsanto Company Well GM-15

Town/City Sauget

County St. Clair State IL

Permit No. _____

Land-Surface Elevation

and Datum _____ feet ☒ surveyed

measuring point 413.71 ft (msl) ☐ estimated

Installation Dates(s) 8/17/84

Drilling Method hollow stem auger

Drilling Contractor John Mathes & Associates, Inc.

Drilling Fluid water

Development Techniques(s) and Date(s)

surged with compressed air

Fluid Loss During Drilling 200 gallons

Water Removed During Development 210 gallons

Static Depth to Water _____ feet below M.P.

Pumping Depth to Water _____ feet below M.P.

Pumping Duration 3 hours

Yield 1.5 gpm Date _____

Specific Capacity _____ gpm/ft

Well Purpose ground-water monitoring well

Remarks

Prepared by D. Colton

GERAGHTY & MILLER, INC.
Ground-Water Consultants

WELL CONSTRUCTION LOG

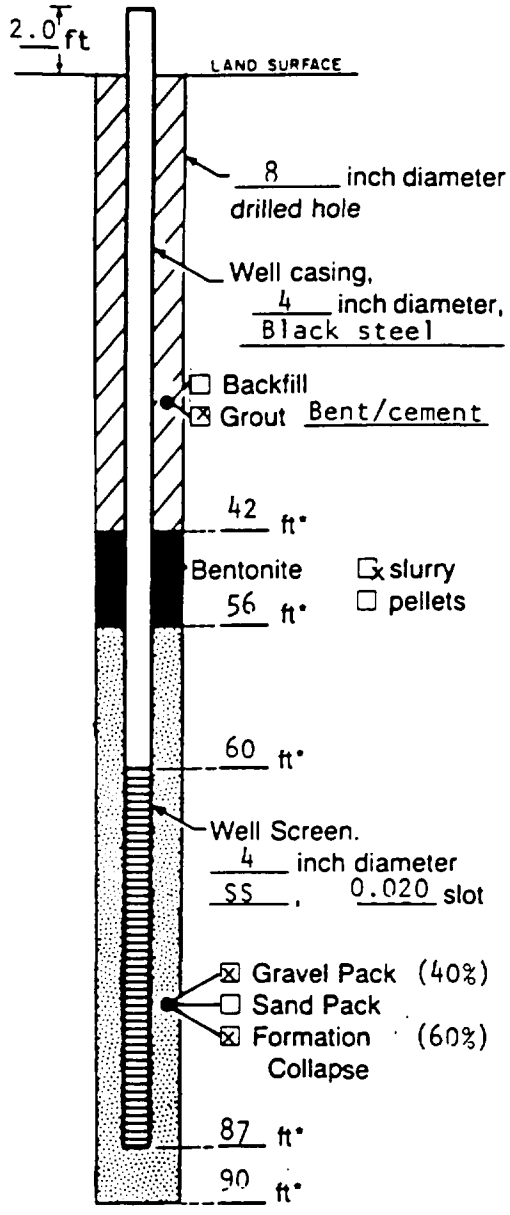

Measuring Point is Top of Well Casing Unless Otherwise Noted.

*Depth Below Land Surface

Project Monsanto Company Well GM-16B

Town/City Sauget

County St. Clair State IL

Permit No. _____

Land-Surface Elevation

and Datum _____ feet ☒ surveyed

measuring point 412.40 ft (msl) ☐ estimated

Installation Dates(s) 8/9/84

Drilling Method mud rotary

Drilling Contractor John Mathes & Associates, Inc.

Drilling Fluid bentonite

Development Techniques(s) and Date(s)

surged with compressed air

Fluid Loss During Drilling 1200 gallons

Water Removed During Development _____ gallons

Static Depth to Water _____ feet below M.P.

Pumping Depth to Water _____ feet below M.P.

Pumping Duration 2 hours

Yield 10 gpm Date _____

Specific Capacity _____ gpm/ft

Well Purpose ground-water monitoring well

Remarks

Prepared by D. Colton

GERAGHTY & MILLER, INC.
Ground-Water Consultants

WELL CONSTRUCTION LOG

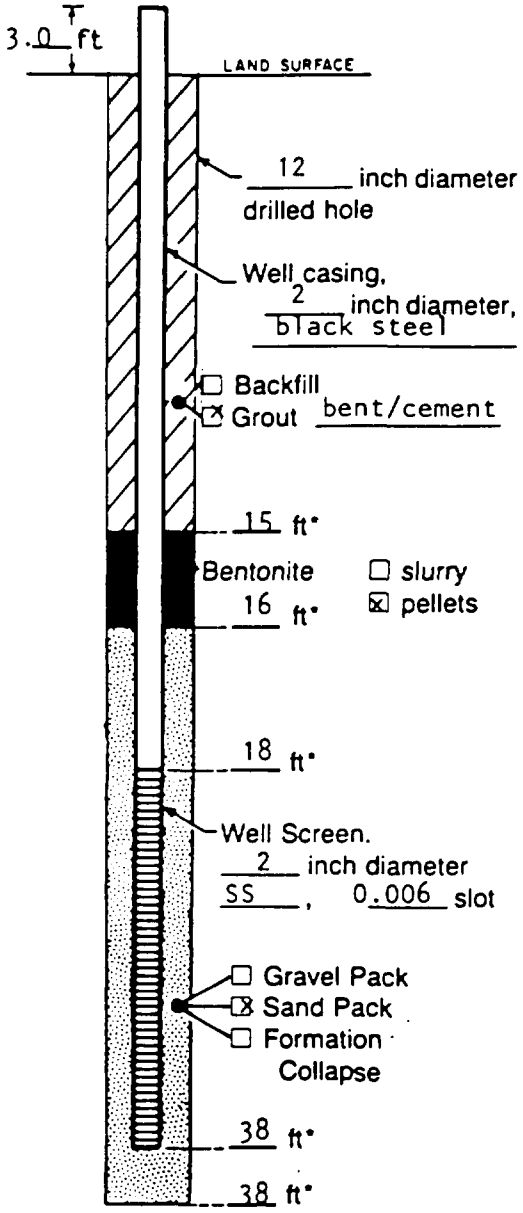

Measuring Point is Top of Well Casing Unless Otherwise Noted.

*Depth Below Land Surface

Project Monsanto Company Well GM-17A

Town/City Sauget

County St. Clair State IL

Permit No. _____

Land-Surface Elevation

and Datum _____ feet ☒ surveyed

measuring point 412.57 ft (msl) ☐ estimated

Installation Dates(s) 7-6-84

Drilling Method hollow stem auger

Drilling Contractor John Mathes & Associates, Inc.

Drilling Fluid water

Development Techniques(s) and Date(s)

surged with compressed air

Fluid Loss During Drilling 300 gallons

Water Removed During Development 360 gallons

Static Depth to Water _____ feet below M.P.

Pumping Depth to Water _____ feet below M.P.

Pumping Duration 3 hours

Yield 2 gpm Date _____

Specific Capacity _____ gpm/ft

Well Purpose ground-water monitoring wells

Remarks

Prepared by D. Colton

GERAGHTY & MILLER, INC.
Ground-Water Consultants

WELL CONSTRUCTION LOG

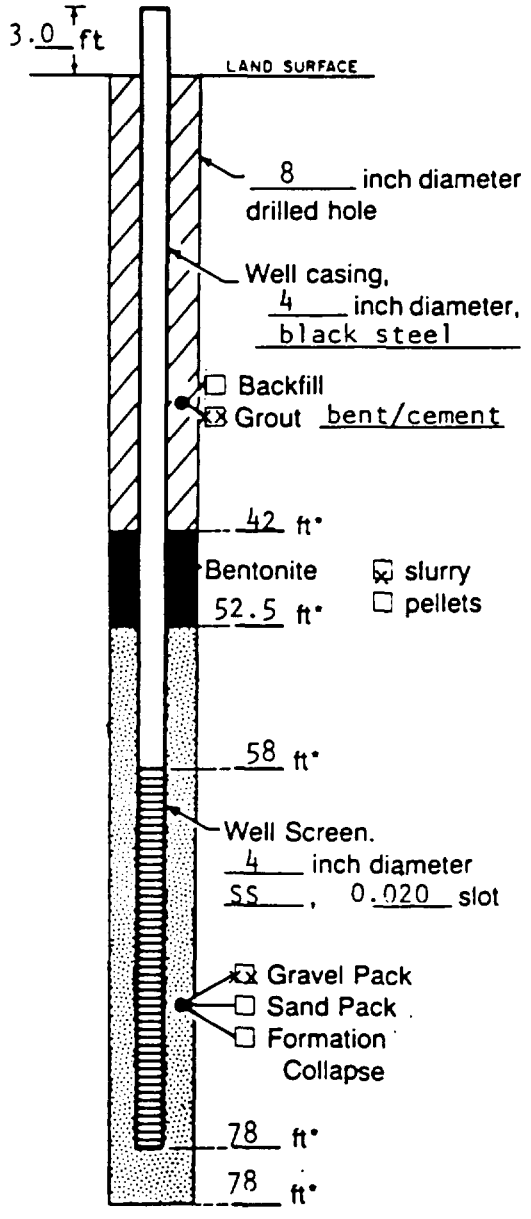

Measuring Point is Top of Well Casing Unless Otherwise Noted.

*Depth Below Land Surface

Project Monsanto Company Well GM-17B

Town/City Sauget

County St. Clair State IL

Permit No. _____

Land-Surface Elevation

and Datum _____ feet ☒ surveyed

measuring point 412.93 ft (msl) ☐ estimated

Installation Dates(s) 7/25/84

Drilling Method mud rotary

Drilling Contractor John Mathes & Associates, Inc.

Drilling Fluid bentonite

Development Techniques(s) and Date(s)

surged with compressed air

Fluid Loss During Drilling _____ gallons

Water Removed During Development 1200 gallons

Static Depth to Water _____ feet below M.P.

Pumping Depth to Water _____ feet below M.P.

Pumping Duration 2 hours

Yield 10 gpm Date _____

Specific Capacity _____ gpm/ft

Well Purpose ground-water monitoring well

Remarks _____

Prepared by D. Colton

GERAGHTY & MILLER, INC.
Ground-Water Consultants

WELL CONSTRUCTION LOG

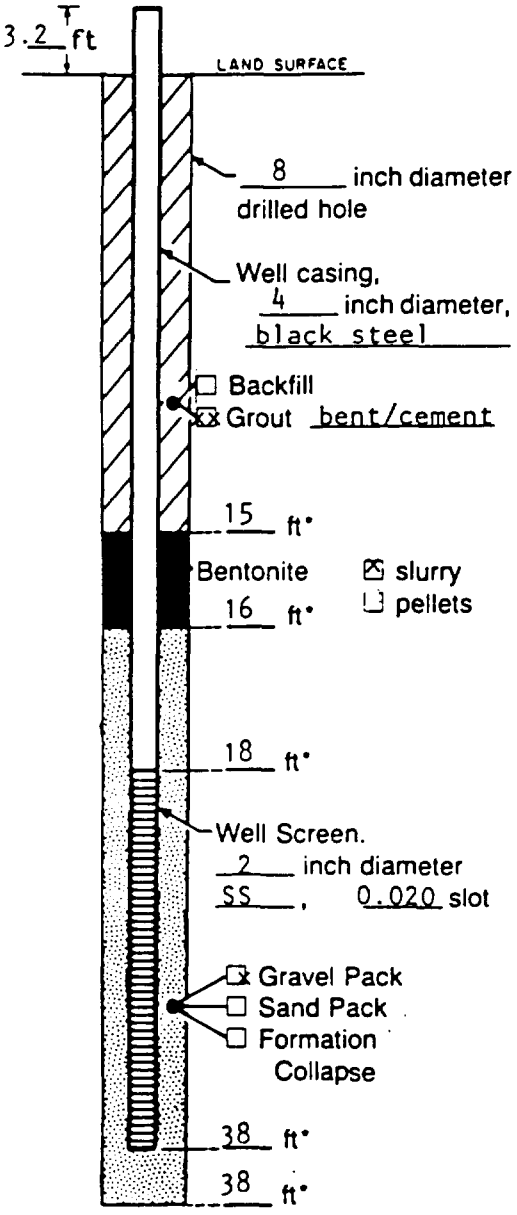

Measuring Point is Top of Well Casing Unless Otherwise Noted.

*Depth Below Land Surface

Project Monsanto Company Well GM-17C

Town/City Sauget

County St. Clair State Illinois

Permit No. _____

Land-Surface Elevation

and Datum _____ feet ☒ surveyed

measuring point 412.42 ft (msl) ☐ estimated

Installation Dates(s) 7/24/84

Drilling Method mud rotary

Drilling Contractor John Mathes & Associates, Inc.

Drilling Fluid Bentonite

Development Techniques(s) and Date(s)

surged with compressed air

Fluid Loss During Drilling _____ gallons

Water Removed During Development 1200 gallons

Static Depth to Water _____ feet below M.P.

Pumping Depth to Water _____ feet below M.P.

Pumping Duration 2 hours

Yield 10 gpm Date _____

Specific Capacity _____ gpm/ft

Well Purpose ground-water monitoring well

Remarks

Prepared by D. Colton

GERAGHTY & MILLER, INC.
Ground-Water Consultants

WELL CONSTRUCTION LOG

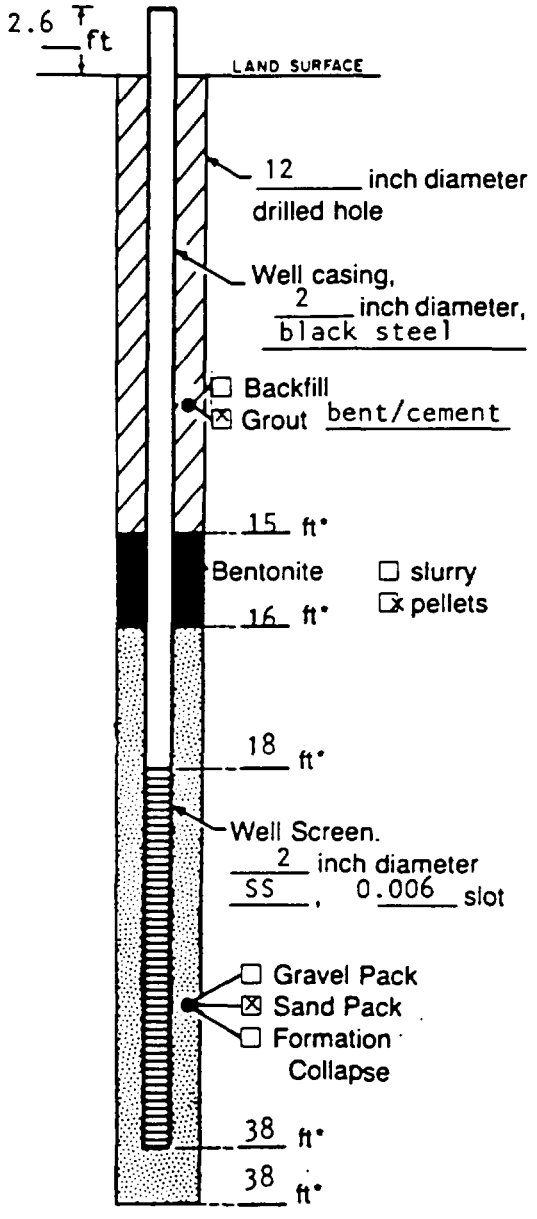

Measuring Point is Top of Well Casing Unless Otherwise Noted.

*Depth Below Land Surface

Project Monsanto Company Well GM-18A

Town/City Saguet

County St. Clair State IL

Permit No. _____

Land-Surface Elevation

and Datum _____ feet ☒ surveyed

measuring point 414.23 ft (msl) ☐ estimated

Installation Dates(s) 7/5/84

Drilling Method hollow stem auger

Drilling Contractor John Mathes & Associates Inc.

Drilling Fluid water

Development Techniques(s) and Date(s)

surged with compressed air

Fluid Loss During Drilling 300 gallons

Water Removed During Development 360 gallons

Static Depth to Water _____ feet below M.P.

Pumping Depth to Water _____ feet below M.P.

Pumping Duration 3 hours

Yield 2 gpm Date _____

Specific Capacity _____ gpm/ft

Well Purpose ground-water monitoring wells

Remarks

Prepared by D. Colton

GERAGHTY & MILLER, INC.
Ground-Water Consultants

WELL CONSTRUCTION LOG

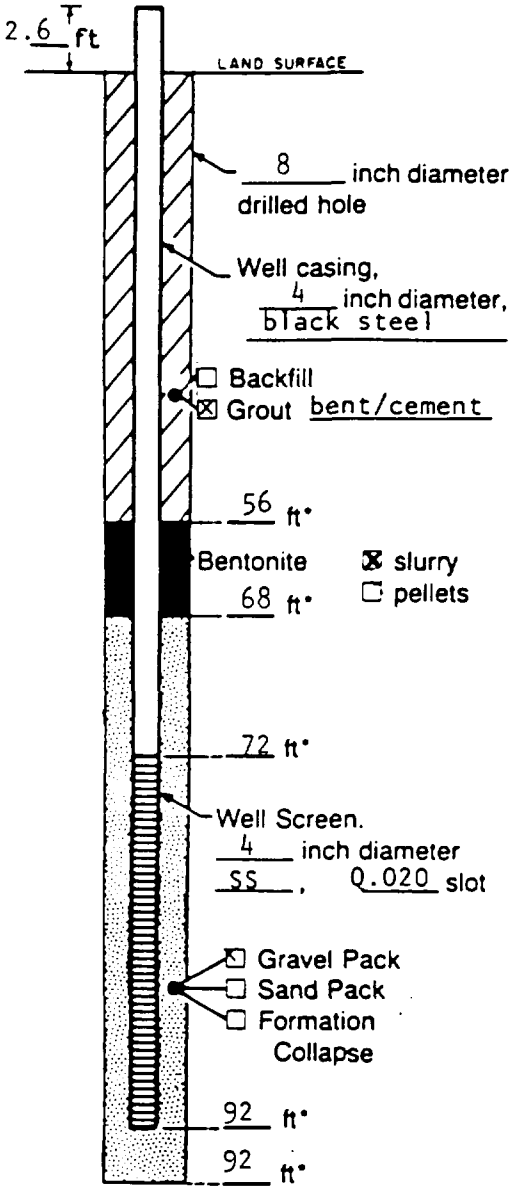

Measuring Point is Top of Well Casing Unless Otherwise Noted.

*Depth Below Land Surface

Project Monsanto Company Well GM-18B

Town/City Sauget

County St. Clair State IL

Permit No. _____

Land-Surface Elevation

and Datum _____ feet ☒ surveyed

measuring point 414.02 ft (msl) ☐ estimated

Installation Dates(s) 7/12/84

Drilling Method mud rotary

Drilling Contractor John Mathes & Associates, Inc.

Drilling Fluid bentonite

Development Techniques(s) and Date(s)

surged with compressed air

Fluid Loss During Drilling _____ gallons

Water Removed During Development 1200 gallons

Static Depth to Water _____ feet below M.P.

Pumping Depth to Water _____ feet below M.P.

Pumping Duration 2 hours

Yield 10 gpm Date _____

Specific Capacity _____ gpm/ft

Well Purpose ground-water monitoring well

Remarks

Prepared by D. Colton

GERAGHTY & MILLER, INC.
Ground-Water Consultants

WELL CONSTRUCTION LOG

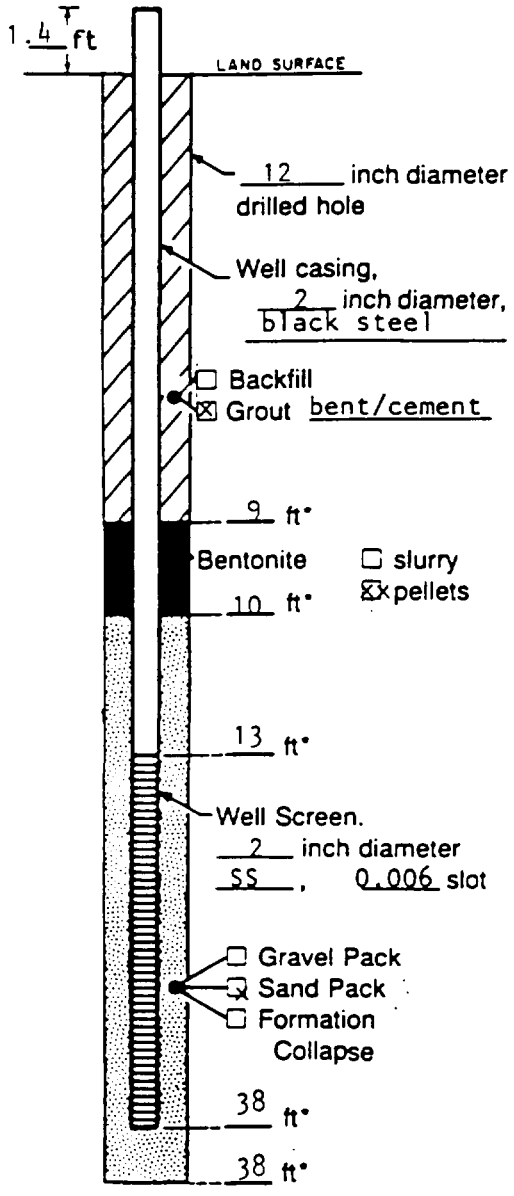

Measuring Point is Top of Well Casing Unless Otherwise Noted.

*Depth Below Land Surface

Project Monsanto Company Well GM-25A

Town/City Sauget

County St. Clair State IL

Permit No. _____

Land-Surface Elevation

and Datum _____ feet ☒ surveyed

measuring point 414.20 ft (msl) ☐ estimated

Installation Dates(s) 8/14/84

Drilling Method hollow stem auger

Drilling Contractor John Mathes & Associates, Inc.

Drilling Fluid water

Development Techniques(s) and Date(s)

surged with compressed air

Fluid Loss During Drilling 300 gallons

Water Removed During Development 360 gallons

Static Depth to Water _____ feet below M.P.

Pumping Depth to Water _____ feet below M.P.

Pumping Duration 3 hours

Yield 2 gpm Date _____

Specific Capacity _____ gpm/ft

Well Purpose ground-water monitoring well

Remarks

Prepared by D. Colton

GERAGHTY & MILLER, INC.
Ground-Water Consultants

WELL CONSTRUCTION LOG

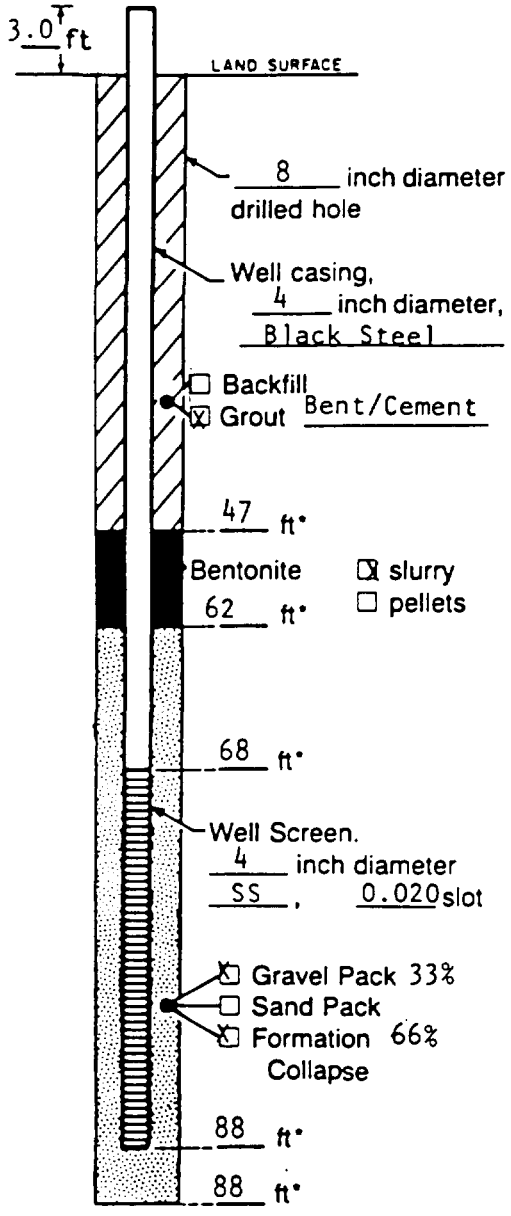

Measuring Point is Top of Well Casing Unless Otherwise Noted.

*Depth Below Land Surface

Project Monsanto Company Well GM-25B

Town/City Sauget

County St. Clair State Ill

Permit No. _____

Land-Surface Elevation

and Datum _____ feet ☒ surveyed

Measuring Point 415.46 ft (MSL) ☐ estimated

Installation Dates(s) 7/27/84

Drilling Method Mud Rotary

Drilling Contractor John Mathes & Assoc., Inc.

Drilling Fluid Bentonite

Development Techniques(s) and Date(s)

Surged with Compressed Air

Fluid Loss During Drilling _____ gallons

Water Removed During Development 1200 gallons

Static Depth to Water _____ feet below M.P.

Pumping Depth to Water _____ feet below M.P.

Pumping Duration 2 hours

Yield 10 gpm Date _____

Specific Capacity _____ gpm/ft

Well Purpose Ground-water Monitoring Well

Remarks

Prepared by D. Colton

GERAGHTY & MILLER, INC.
Ground-Water Consultants

WELL CONSTRUCTION LOG

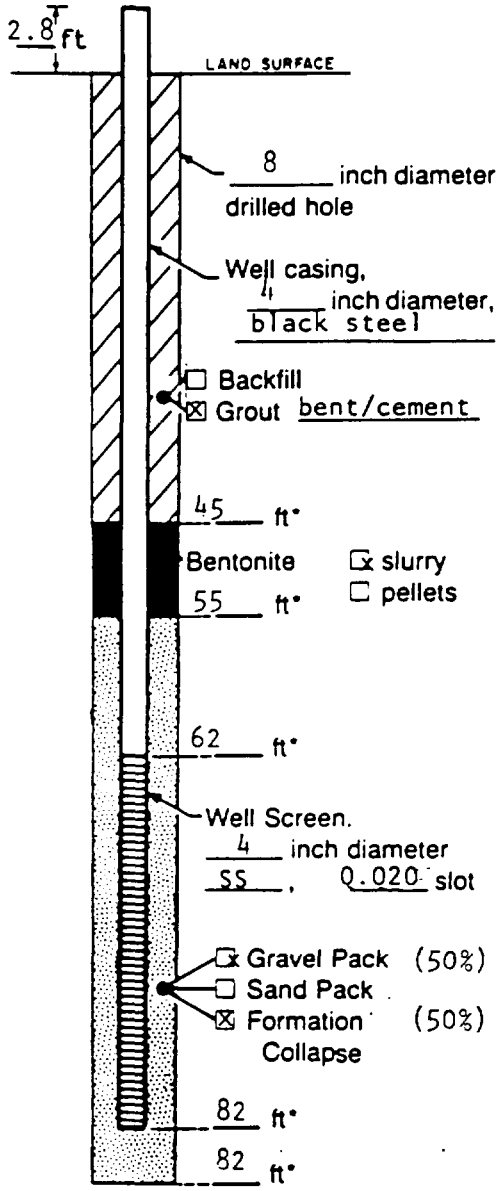

Measuring Point is Top of Well Casing Unless Otherwise Noted.

*Depth Below Land Surface

Project Monsanto Company Well GM-27B

Town/City Sauget

County St. Clair State IL

Permit No. _____

Land-Surface Elevation

and Datum _____ feet ☒ surveyed

Measuring Point 426.04 Ft (MSL) ☐ estimated

Installation Dates(s) 8/6/84

Drilling Method Mud Rotary

Drilling Contractor John Mathes & Associates, Inc.

Drilling Fluid Bentonite

Development Techniques(s) and Date(s)

surged with compressed air

Fluid Loss During Drilling _____ gallons

Water Removed During Development 1200 gallons

Static Depth to Water _____ feet below M.P.

Pumping Depth to Water _____ feet below M.P.

Pumping Duration 2 hours

Yield 10 gpm Date _____

Specific Capacity _____ gpm/ft

Well Purpose ground-water monitoring well

Remarks

Prepared by D. Colton

GERAGHTY & MILLER, INC.
Ground-Water Consultants

WELL CONSTRUCTION LOG

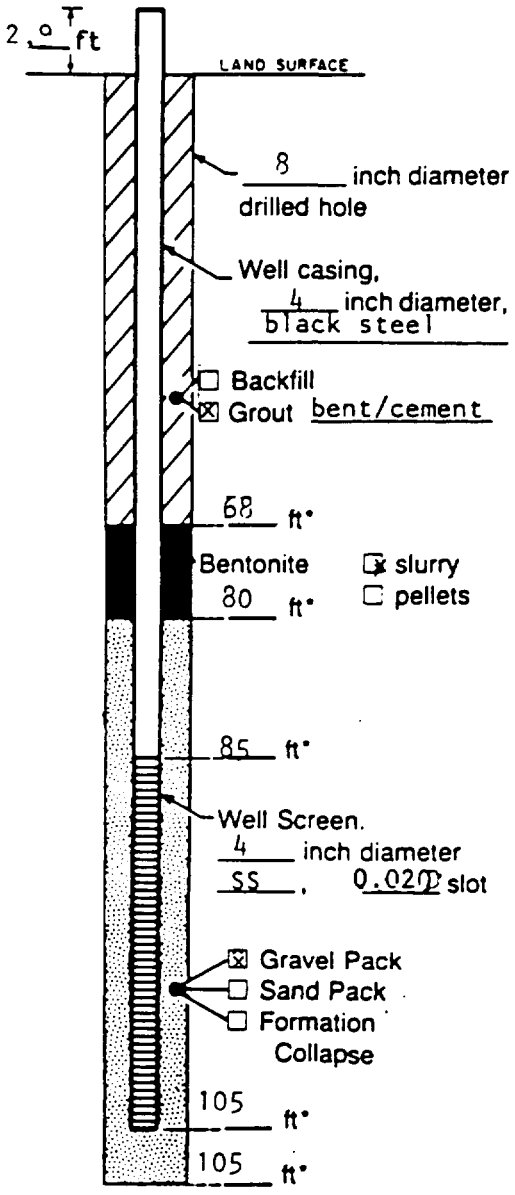

Measuring Point is Top of Well Casing Unless Otherwise Noted.

*Depth Below Land Surface

Project Monsanto Company Well GM-27C

Town/City Sauget

County St. Clair State IL

Permit No.

Land-Surface Elevation

and Datum _____ feet ☒ surveyed

Measuring Point 426.76 Ft (MSL) ☐ estimated

Installation Dates(s) 8/3/84

Drilling Method Mud Rotary

Drilling Contractor John Mathes & Associates, Inc.

Drilling Fluid Bentonite

Development Techniques(s) and Date(s)

surged with compressed air

Fluid Loss During Drilling _____ gallons

Water Removed During Development 1200 gallons

Static Depth to Water _____ feet below M.P.

Pumping Depth to Water _____ feet below M.P.

Pumping Duration 2 hours

Yield 10 gpm Date _____

Specific Capacity _____ gpm/ft

Well Purpose ground-water monitoring well

Remarks

Prepared by D. Colton

GERAGHTY & MILLER, INC.
Ground-Water Consultants

WELL CONSTRUCTION LOG

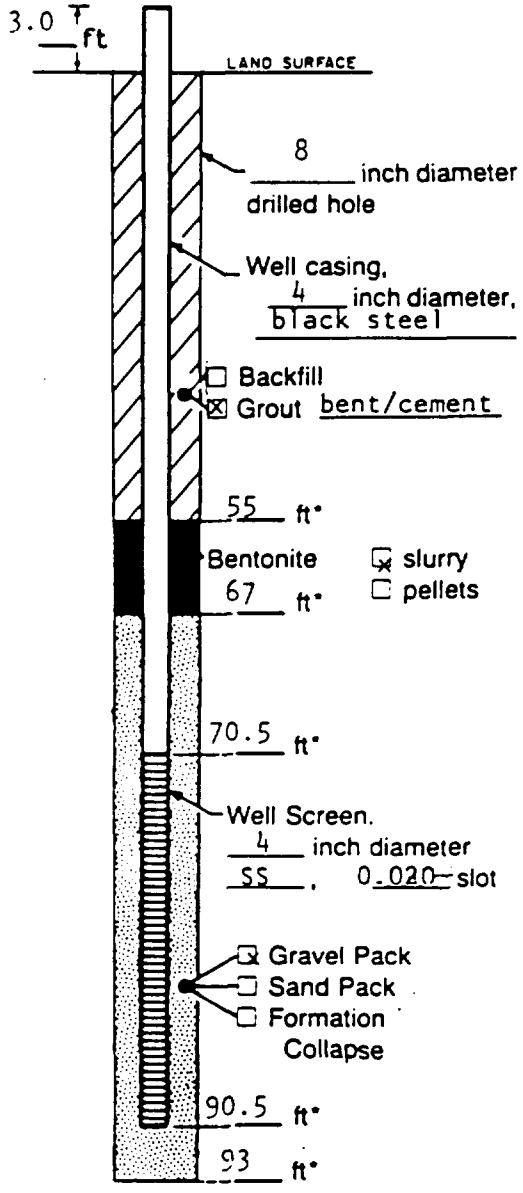

Measuring Point is Top of Well Casing Unless Otherwise Noted.

*Depth Below Land Surface

Project Monsanto Company Well GM-28B

Town/City Sauget

County St. Clair State IL

Permit No. _____

Land-Surface Elevation

and Datum _____ feet ☒ surveyed

Measuring Point 423.88 Ft (MSL) ☐ estimated

Installation Dates(s) 7/3/84

Drilling Method Mud Rotary

Drilling Contractor John Mathes & Associates, Inc.

Drilling Fluid Bentonite

Development Techniques(s) and Date(s)
surged with compressed air

Fluid Loss During Drilling _____ gallons

Water Removed During Development 1200 gallons

Static Depth to Water _____ feet below M.P.

Pumping Depth to Water _____ feet below M.P.

Pumping Duration 2 hours

Yield 10 gpm Date _____

Specific Capacity _____ gpm/ft

Well Purpose ground-water monitoring well

Remarks

Prepared by D. Colton

GERAGHTY & MILLER, INC.
Ground-Water Consultants

WELL CONSTRUCTION LOG

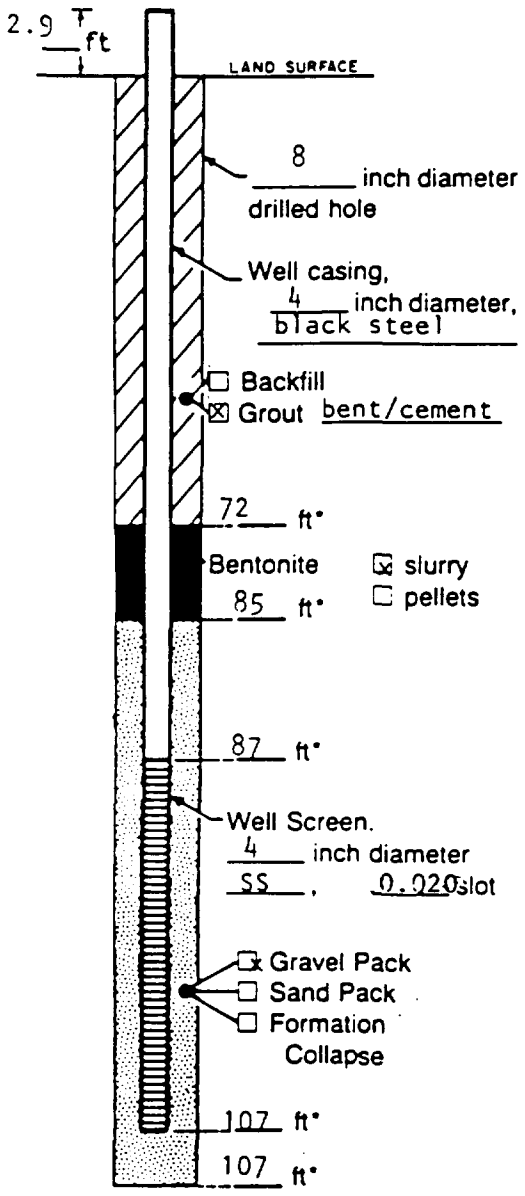

Measuring Point is Top of Well Casing Unless Otherwise Noted.

*Depth Below Land Surface

Project Monsanto Company Well GM-28C

Town/City Sauget

County St. Clair State IL

Permit No. _____

Land-Surface Elevation

and Datum _____ feet ☒ surveyed

Measuring Point 412.78 Ft (MSL) ☐ estimated

Installation Dates(s) 7/5/84

Drilling Method Mud Rotary

Drilling Contractor John Mathes & Associates, Inc.

Drilling Fluid Bentonite

Development Techniques(s) and Date(s)
surged with compressed air

Fluid Loss During Drilling _____ gallons

Water Removed During Development 1200 gallons

Static Depth to Water _____ feet below M.P.

Pumping Depth to Water _____ feet below M.P.

Pumping Duration 2 hours

Yield 10 gpm Date _____

Specific Capacity _____ gpm/ft

Well Purpose ground-water monitoring well

Remarks

Prepared by D. Colton

GERAGHTY & MILLER, INC.
Ground-Water Consultants

WELL CONSTRUCTION LOG

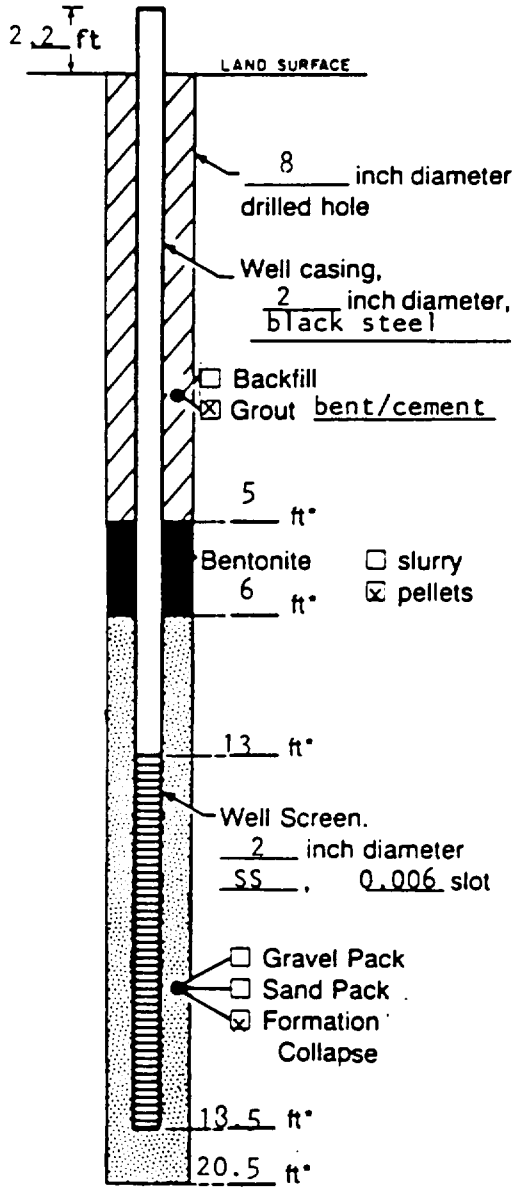

Measuring Point is Top of Well Casing Unless Otherwise Noted.

*Depth Below Land Surface

Project Monsanto Company Well GM-29

Town/City Sauget

County St. Clair State IL

Permit No. _____

Land-Surface Elevation

and Datum _____ feet ☒ surveyed

Measuring Point 411.06 Ft (MSL) ☐ estimated

Installation Dates(s) 8/24/84

Drilling Method Hollow Stem Auger

Drilling Contractor John Mathes & Associates, Inc.

Drilling Fluid Water

Development Techniques(s) and Date(s)

surged with compressed air

Fluid Loss During Drilling 150 gallons

Water Removed During Development 150 gallons

Static Depth to Water _____ feet below M.P.

Pumping Depth to Water _____ feet below M.P.

Pumping Duration 2.5 hours

Yield 1 gpm Date _____

Specific Capacity _____ gpm/ft

Well Purpose ground-water monitoring well

Remarks

Prepared by D. Colton

GERAGHTY & MILLER, INC.
Ground-Water Consultants

WELL CONSTRUCTION LOG

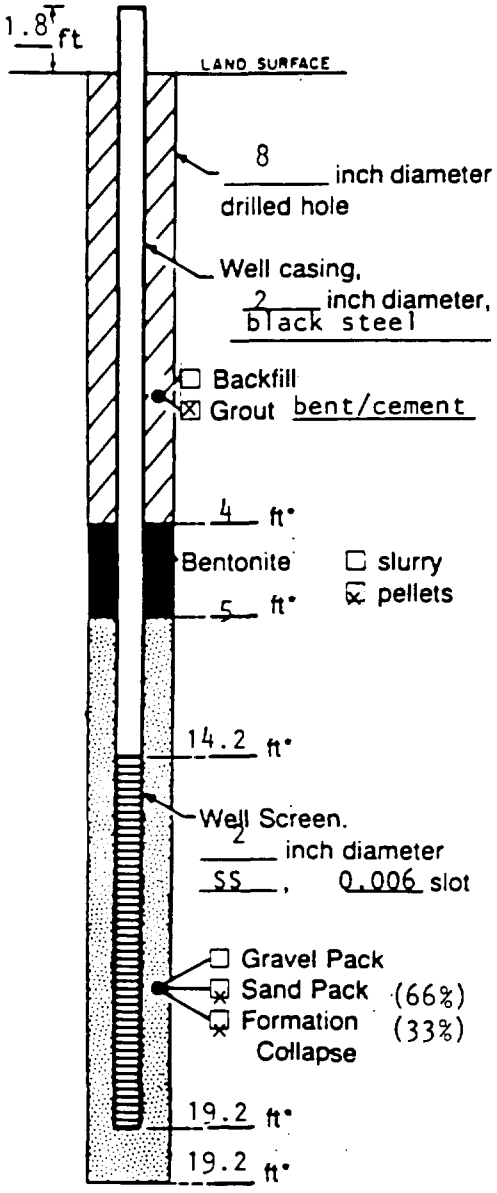

Measuring Point is Top of Well Casing Unless Otherwise Noted.

*Depth Below Land Surface

Project Monsanto Company Well GM-30

Town/City Sauget

County St. Clair State IL

Permit No. _____

Land-Surface Elevation

and Datum _____ feet ☒ surveyed

Measuring Point 416.09 Ft (MSL) ☐ estimated

Installation Dates(s) 8/30/84

Drilling Method Hollow Stem Auger

Drilling Contractor John Mathes & Associates, Inc.

Drilling Fluid Water

Development Techniques(s) and Date(s)

surged with compressed air

Fluid Loss During Drilling 150 gallons

Water Removed During Development 150 gallons

Static Depth to Water _____ feet below M.P.

Pumping Depth to Water _____ feet below M.P.

Pumping Duration 2.5 hours

Yield 1 gpm Date _____

Specific Capacity _____ gpm/ft

Well Purpose ground-water monitoring well

Remarks

Prepared by D. Colton

GERAGHTY & MILLER, INC.
Ground-Water Consultants

WELL CONSTRUCTION LOG

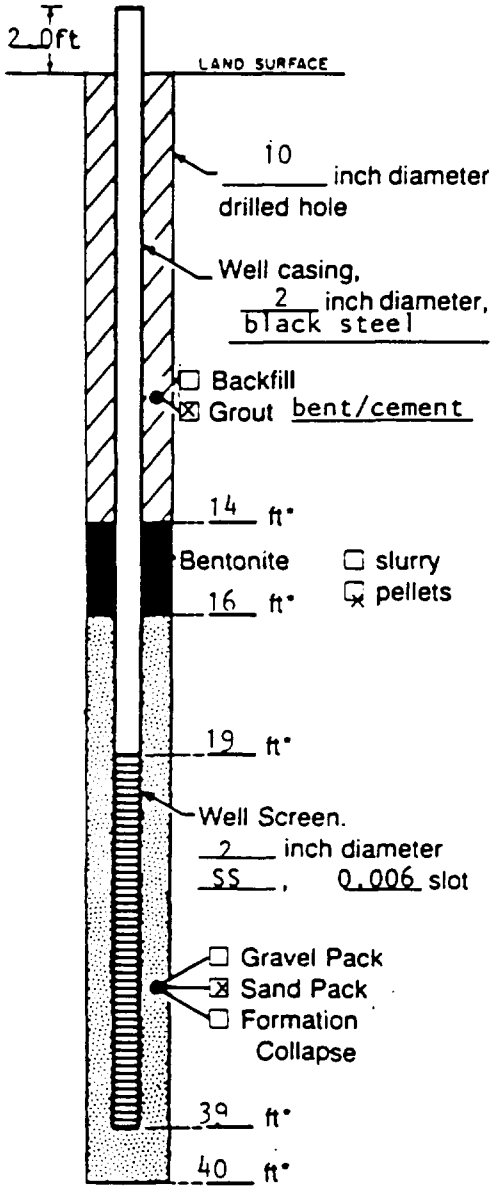

Measuring Point is Top of Well Casing Unless Otherwise Noted.

*Depth Below Land Surface

Project Monsanto Company Well GM-31A

Town/City Sauget

County St. Clair State IL

Permit No. _____

Land-Surface Elevation

and Datum _____ feet ☒ surveyed

Measuring Point 418.63 ☐ estimated

Installation Dates(s) 11/26/84

Drilling Method Hollow stem augers

Drilling Contractor John Mathes & Associates, Inc.

Drilling Fluid Water

Development Techniques(s) and Date(s)

surged with compressed air

Fluid Loss During Drilling 120 gallons

Water Removed During Development 120 gallons

Static Depth to Water _____ feet below M.P.

Pumping Depth to Water _____ feet below M.P.

Pumping Duration 2 hours

Yield 1 gpm Date _____

Specific Capacity _____ gpm/ft

Well Purpose ground-water monitoring well

Remarks

Prepared by D. Colton

GERAGHTY & MILLER, INC.
Ground-Water Consultants

WELL CONSTRUCTION LOG

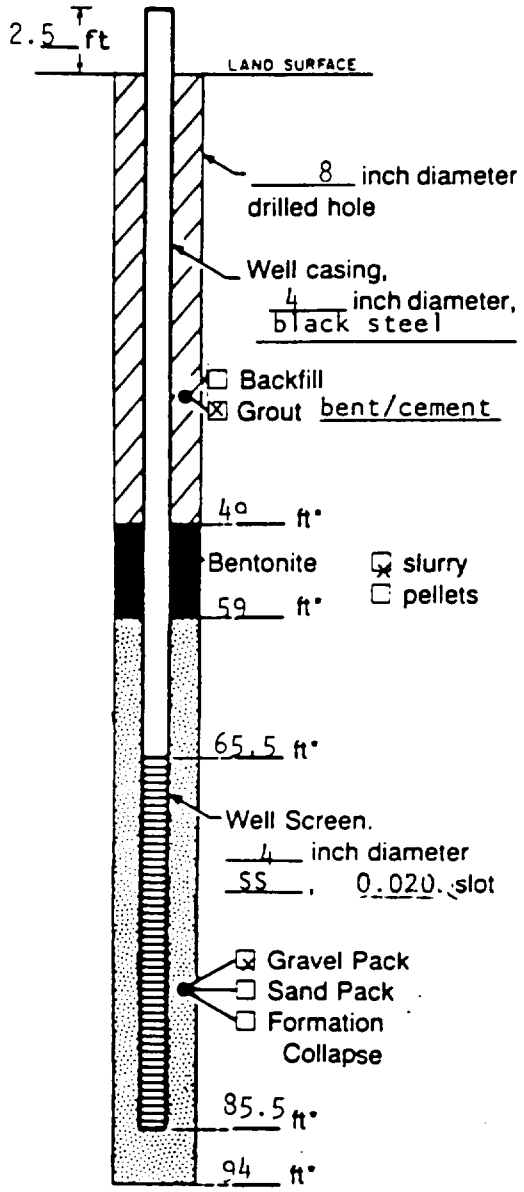

Measuring Point is Top of Well Casing Unless Otherwise Noted.

*Depth Below Land Surface

Project Monsanto Company Well GM-31B

Town/City Sauget

County St. Clair State IL

Permit No. _____

Land-Surface Elevation

and Datum _____ feet ☒ surveyed

Measuring Point 418.92 Ft (MSL) ☐ estimated

Installation Dates(s) 1/9/85

Drilling Method Mud Rotary

Drilling Contractor John Mathes & Associates, Inc.

Drilling Fluid Bentonite

Development Techniques(s) and Date(s)

surged with compressed air

Fluid Loss During Drilling _____ gallons

Water Removed During Development 1200 gallons

Static Depth to Water _____ feet below M.P.

Pumping Depth to Water _____ feet below M.P.

Pumping Duration 2 hours

Yield 10 gpm Date _____

Specific Capacity _____ gpm/ft

Well Purpose ground-water monitoring well

Remarks

Prepared by D. Colton

GERAGHTY & MILLER, INC.
Ground-Water Consultants

WELL CONSTRUCTION LOG

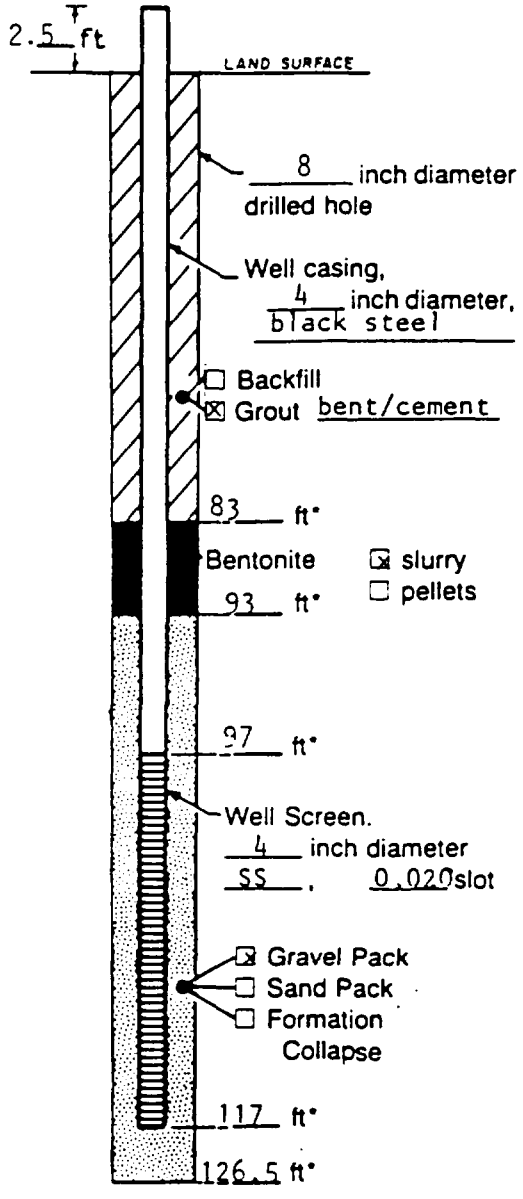

Measuring Point is Top of Well Casing Unless Otherwise Noted.

*Depth Below Land Surface

Project Monsanto Company Well GM-31C

Town/City Sauget

County St. Clair State IL

Permit No. _____

Land-Surface Elevation

and Datum _____ feet ☒ surveyed

Measuring Point 419.29 Ft (MSL) ☐ estimated

Installation Dates(s) 1/8/85

Drilling Method Mud Rotary

Drilling Contractor John Mathes & Associates, Inc.

Drilling Fluid Bentonite

Development Techniques(s) and Date(s)

surged with compressed air

Fluid Loss During Drilling _____ gallons

Water Removed During Development 1200 gallons

Static Depth to Water _____ feet below M.P.

Pumping Depth to Water _____ feet below M.P.

Pumping Duration 2 hours

Yield 10 gpm Date _____

Specific Capacity _____ gpm/ft

Well Purpose ground-water monitoring well

Remarks

Prepared by D. Colton

SAMPLE/CORE LOG

BORING/WELL: GM-54A PROJECT NO: NO308SG3 PAGE: 1

SITE LOCATION: Monsanto Company, Sauget, Illinois DRILLING STARTED: 10/6/87 DRILLING COMPLETED: 10/6/87

TOTAL DEPTH DRILLED: 39 ft HOLE DIAMETER: 8 in. TYPE OF SAMPLE/ CORING DEVICE: Split Spoon, Core Barrel

LENGTH & DIAMETER OF CORING DEVICE: 2' x 2" SAMPLING INTERVAL: 5 ft

LAND-SURFACE ELEVATION: { } SURVEYED { } ESTIMATED DATUM:

DRILLING FLUID USED: None DRILLING METHOD: Auger (4-1/4" I.D.)

DRILLING CONTRACTOR: John Mathes & Assoc. DRILLER: Kent HELPER: Quentin

PREPARED BY: B. Blum HAMMER WEIGHT: 140 lb HAMMER DROP: 30 in.

SAMPLE NO	SAMPLE DEPTH FROM	SAMPLE DEPTH TO	CORE RECVRY	BLOW COUNTS	SAMPLE/CORE DESCRIPTION
	5	7	1.5	2-2-	Silt, brown, dry.
				1-2	
	10	12	1.5	2-4-	Silt, brown (10.0'-10.5') grading into a fine sand,
				3-4	light brown with 20-25 percent silt. Dry.
	15	17	2.0	1-3-	Sand, fine, gray-brown (15'-16') silt, brown
				6-6	(16'-16.3') grading into a fine sand with 20-25
					percent silt (16.3'-17'), wet.
					Note: "A-rods" show wet line at ~12'.
	20	22	2.0	6-9-	Sand, fine, gray-brown with 10-15 percent silt
				15-26	grading into a fine sand, brown with 20-25 percer
					silt (21'-22'), wet. Wood cuttings are coming
					up from auger flytes.
*	25	27	0.5	2-2-	Sand, medium to coarse, brown with assorted colors,
				3-3	wet.
	30	32	2.0	1-2-	Same as above.
				2-6	
	35	37	2.0	3-4	Sand, medium, light brown to gray.
				6-8	
*					Second attempt: first core barrel at this depth was
					empty - however, blow counts are from first
					attempted sample.

GERAGHTY & MILLER, INC.
Environmental Services

WELL CONSTRUCTION LOG
(UNCONSOLIDATED)

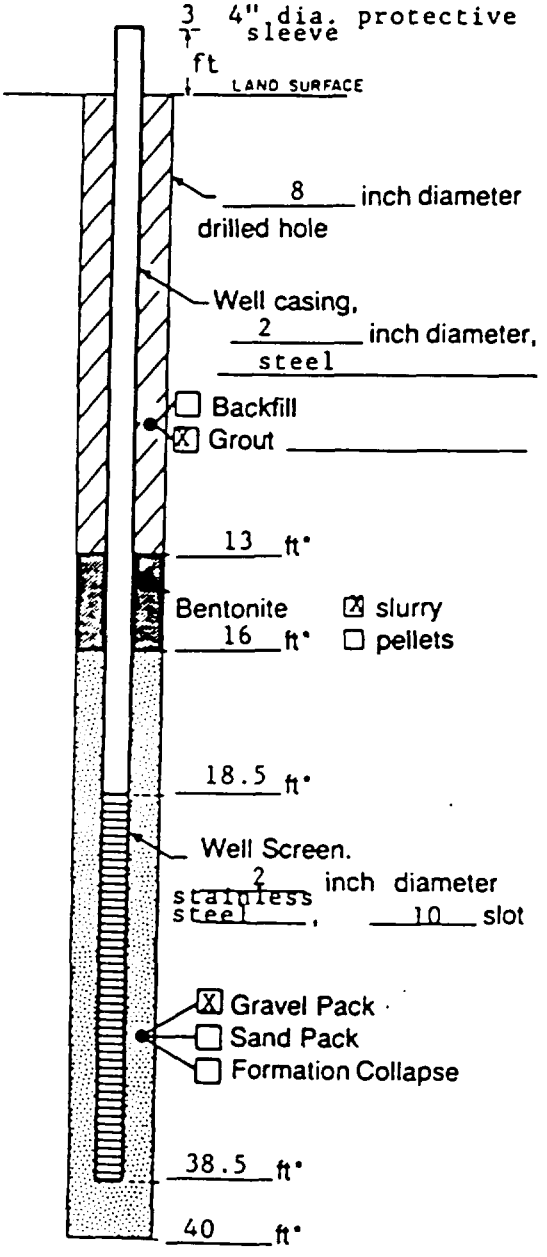

Measuring Point is
Top of Well Casing
Unless Otherwise Noted.

*Depth Below Land Surface

Project Monsanto/MO3U8SG3 Well GM-54A

Town/City Sauget

County St. Clair State Illinois

Permit No. _____

Land-Surface Elevation

and Datum _____ feet ☐ Surveyed

_____ ☐ Estimated

Installation Date(s) 10-6-87

Drilling Method hollow stem auger

Drilling Contractor _____

Drilling Fluid none

Development Technique(s) and Date(s)

10-13-87

Fluid Loss During Drilling 50 gallons

Water Removed During Development 100 gallons

Static Depth to Water 15 feet below M.P.

Pumping Depth to Water _____ feet below M.P.

Pumping Duration _____ hours

Yield 1-2 gpm Date _____

Specific Capacity _____ gpm/ft

Well Purpose Ground water monitoring in the "shallow" zone

Remarks

Prepared by Brian A. Blum

SAMPLE/CORE LOG

BORING/WELL: GM-54B PROJECT NO: NO308SG3 PAGE: 1

SITE LOCATION: Monsanto Company Sauget, Illinois DRILLING STARTED: 9/28/87 DRILLING COMPLETED: 9/29/87

TOTAL DEPTH DRILLED: 93 ft HOLE DIAMETER: 8 in. TYPE OF SAMPLE/ CORING DEVICE: Flume or Split Spoon Core Barrel

LENGTH & DIAMETER OF CORING DEVICE: 2' x 2" SAMPLING INTERVAL: 10 ft

LAND-SURFACE ELEVATION: { } SURVEYED { } ESTIMATED DATUM:

DRILLING FLUID USED: Bentonite & Water DRILLING METHOD: Hydraulic (mud) Rotary

DRILLING CONTRACTOR: John Mathes & Assoc. DRILLER: Chris Hebel HELPER: Dave Ellis

PREPARED BY: B. Blum HAMMER WEIGHT: 140 lb HAMMER DROP: 30 in.

SAMPLE NO	SAMPLE DEPTH		CORE RECVRY	BLOW COUNTS	SAMPLE/CORE DESCRIPTION
	FROM	TO			
9/28	0	10		Flume	No sample collected.
	10	20		Flume	Silt, and sand, fine; brown.
	20	30		Flume	
	30	40		Flume	
	Sample	collec	ted		
	40	50		Flume	Sand, fine to medium (75%) brown; silt (25%)
					coarsening downwards to sand, medium to coarse.
9/29	50	60		Flume	Sand, fine to coarse (85%) silt (15%) brown; with a
					lot of lignite.
	60	70		Flume	At 65' wood chips were coming out of flume. Material
					is same as above with wood.
	70	80		Flume	At 72' hit some kind of obstruction (wood) through it
					at 75'. Material is same as above.
	80	90			Same as above.
	87	89	2	Split	Sand, medium to coarse, gray; well sorted. Only 6"
				Spoon	of recovery was virgin formation. The other 18"
					was backwash.
	90	93		Flume	Same as above.

GERAGHTY & MILLER, INC.
Environmental Services

WELL CONSTRUCTION LOG
(UNCONSOLIDATED)

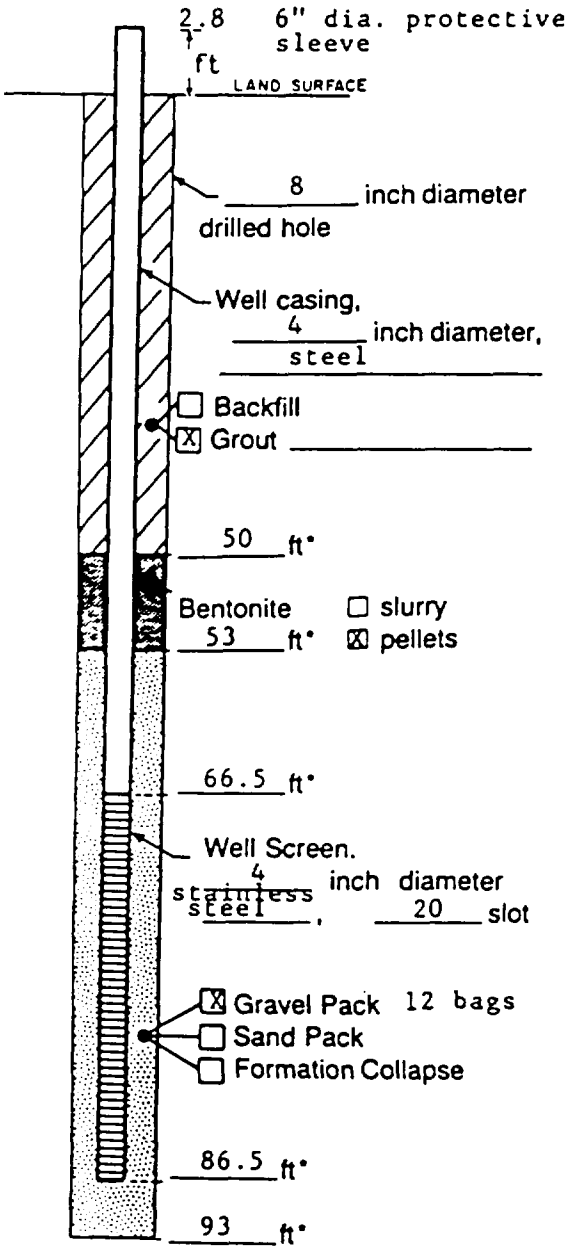

Measuring Point is
Top of Well Casing
Unless Otherwise Noted.

*Depth Below Land Surface

Project Monsanto/ N0308SG3 Well GM-54B

Town/City Sauget

County St. Clair State Illinois

Permit No. _____

Land-Surface Elevation

and Datum _____ feet ☐ Surveyed

_____ ☐ Estimated

Installation Date(s) 9-29-87/9-30-87

Drilling Method hydraulic (mud) rotary

Drilling Contractor John Mathes and Associates, Inc

Drilling Fluid Polymer free bentonite and hydrant water

Development Technique(s) and Date(s)

surging with compressed air

10-13-87

Fluid Loss During Drilling 500 gall

Water Removed During Development 1,000 gall

Static Depth to Water 15 feet below M

Pumping Depth to Water _____ feet below M

Pumping Duration _____ hours

Yield >10 gpm Date _____

Specific Capacity _____ gpm/ft

Well Purpose Ground water monitoring in the "intermediate" zone.

Remarks Relatively high yielding well

Prepared by Brian A. Blum

SAMPLE/CORE LOG

BORING/WELL: GM-58A PROJECT NO: NO308SG3 PAGE: 1

SITE LOCATION: Monsanto Company, Sauget, Illinois DRILLING STARTED: 10/7/87 DRILLING COMPLETED: 10/7/87

TOTAL DEPTH DRILLED: 39 ft HOLE DIAMETER: 8 in. TYPE OF SAMPLE/ CORING DEVICE: Split Spoon, Core Barrel

LENGTH & DIAMETER OF CORING DEVICE: 2' x 2" SAMPLING INTERVAL: 5 ft

LAND-SURFACE ELEVATION: ( ) SURVEYED ( ) ESTIMATED DATUM:

DRILLING FLUID USED: None DRILLING METHOD: Hollow Stem Auger

DRILLING CONTRACTOR: John Mathes & Assoc. DRILLER: Kent HELPER: Quentin

PREPARED BY: B. Blum HAMMER WEIGHT: 140 lb HAMMER DROP: 30 in.

SAMPLE NO	SAMPLE DEPTH FROM	SAMPLE DEPTH TO	CORE RECVRY	BLOW COUNTS	SAMPLE/CORE DESCRIPTION
	5	7	2.0	2-3-	Silt, light brown, dry.
				3-4	
	10	12	2.0	4-9-	Sand, fine, light brown with 20-25 percent silt.
				17-26	
	15	17	2.0	4-4-	Same as above.
				5-6	
	20	22	2.0	5-6-	Same as above, wet.
				9-12	
	25	27	2.0	2-6-	Same as above with 10-15 percent silt.
				11-14	
	30	32	2.0	3-5-	Sand, fine, brown with 50 percent silt.
				7-9	
	35	37	2.0	3-6-	Sand, fine to medium with 5 percent silt.
				9-12	

GERAGHTY & MILLER, INC.
Environmental Services

WELL CONSTRUCTION LOG
(UNCONSOLIDATED)

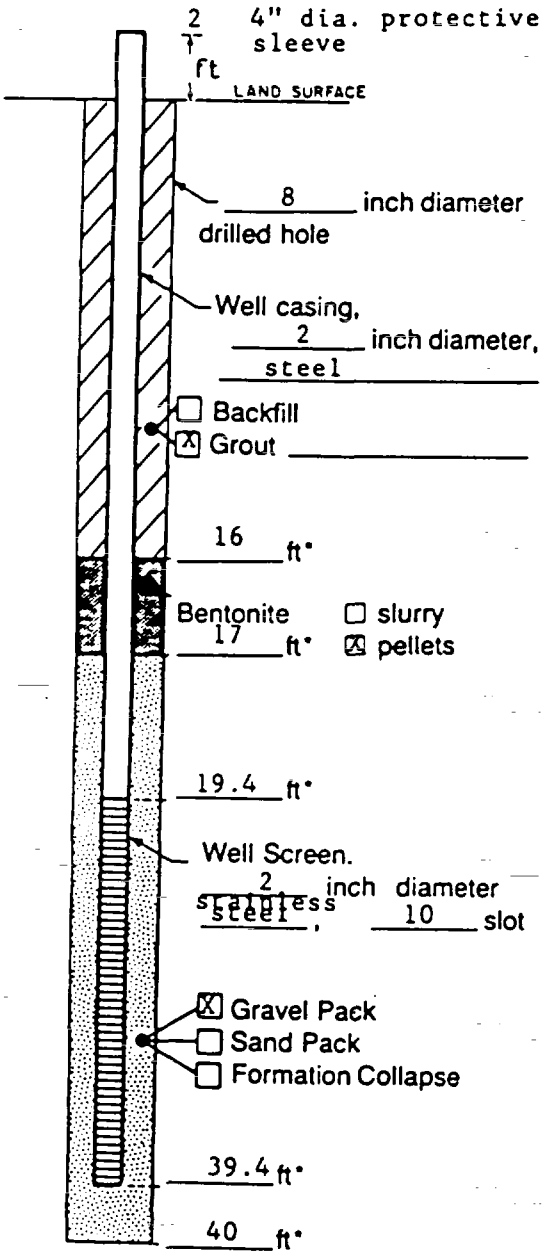

Measuring Point is
Top of Well Casing
Unless Otherwise Noted.

*Depth Below Land Surface

Project Monsanto/N0308SG3 Well MW-58A

Town/City Sauget

County St. Clair State Illinois

Permit No. _____

Land-Surface Elevation

and Datum _____ feet ☐ Surveyed

_____ ☐ Estimated

Installation Date(s) 10-7-87

Drilling Method _____

Drilling Contractor _____

Drilling Fluid _____

Development Technique(s) and Date(s)

10-15-87

Fluid Loss During Drilling _____ gallc

Water Removed During Development _____ gallc

Static Depth to Water 20 feet below M

Pumping Depth to Water _____ feet below M

Pumping Duration _____ hours

Yield 1-2 gpm Date _____

Specific Capacity _____ gpm/ft

Well Purpose _____

Remarks Ground water monitoring in the "shallow" zor

Prepared by Brian A. Blum

SAMPLE/CORE LOG

BORING/WELL: GM-59A PROJECT NO: NO308SG3 PAGE: 1

SITE LOCATION: Monsanto Company Sauget, Illinois DRILLING STARTED: 10/8/87 DRILLING COMPLETED: 10/8/87

TOTAL DEPTH DRILLED: 39 ft HOLE DIAMETER: 8 in. TYPE OF SAMPLE/ CORING DEVICE: Split Spoon Core Barrel

LENGTH & DIAMETER OF CORING DEVICE: 2' x 2" SAMPLING INTERVAL: 5 ft

LAND-SURFACE ELEVATION: { } SURVEYED { } ESTIMATED DATUM:

DRILLING FLUID USED: None DRILLING METHOD: Hollow Stem Auger

DRILLING CONTRACTOR: John Mathes & Assoc. DRILLER: Kent HELPER: Quentin

PREPARED BY: B. Blum HAMMER WEIGHT: 140 lb HAMMER DROP: 30 in.

SAMPLE NO	SAMPLE DEPTH		CORE RECVRY	BLOW COUNTS	SAMPLE/CORE DESCRIPTION
	FROM	TO			
	5	7	2	3-6-	Sand, very fine, tan; with lenses of silt, dry.
				9-14	
	10	12	2	4-8-	Silt, brown, dry.
				12-13	
	15	17	2	5-6-	Sand, very fine, tan; with lenses of silt.
				7-8	
	20	22	2	0-1-	Sand, fine, brown; with 10-15 percent silt, moist.
				2-4	
	25	27	2	1-2-	Sand, fine, brown; well sorted with a lens of silt
				8-11	
	30	32	2	2-3-	Same as above.
				12-15	
	35	37	2	2-3-	Sand, fine, brown; with 10 to 15 percent silt.
				9-13	

GERAGHTY & MILLER, INC.
Environmental Services

WELL CONSTRUCTION LOG
(UNCONSOLIDATED)

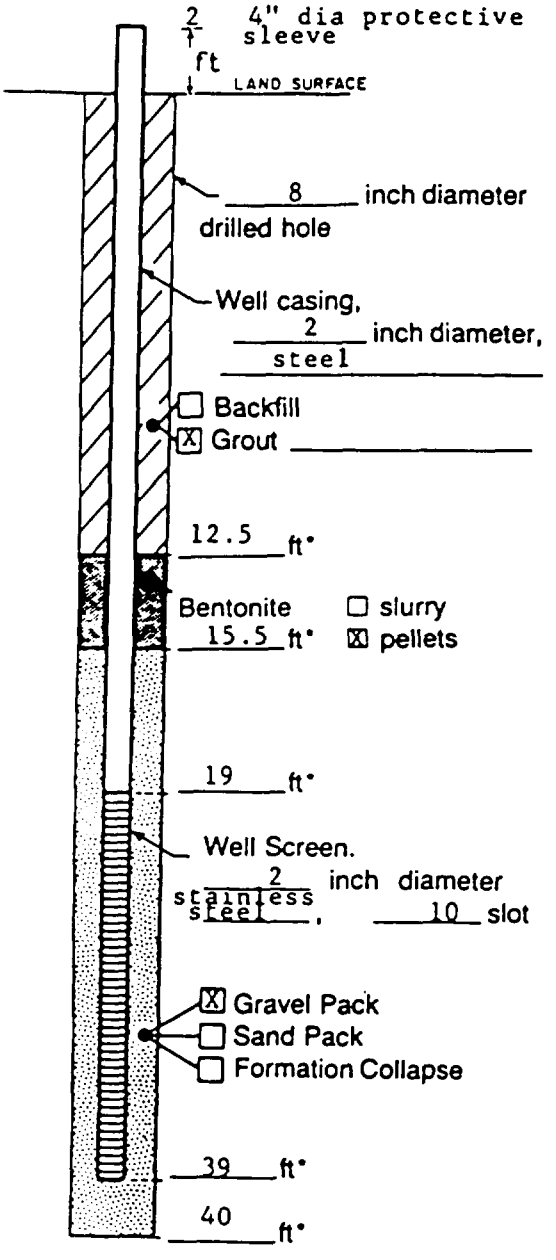

Measuring Point is
Top of Well Casing
Unless Otherwise Noted.

*Depth Below Land Surface

Project Monsanto/.N0308SG3 Well GM-59A

Town/City Sauget

County St. Clair State Illinois

Permit No. _____

Land-Surface Elevation

and Datum _____ feet ☐ Surveyed

_____ ☐ Estimated

Installation Date(s) 10-8-87

Drilling Method hollow stem auget

Drilling Contractor _____

Drilling Fluid _____

Development Technique(s) and Date(s)

10-15-87

Fluid Loss During Drilling _____ gall

Water Removed During Development _____ gall

Static Depth to Water 20 feet below M

Pumping Depth to Water _____ feet below M

Pumping Duration _____ hours

Yield 1-2 gpm Date _____

Specific Capacity _____ gpm/ft

Well Purpose Ground water monitoring in the "shallow" zone.

Remarks _____

Prepared by Brian A. Blum

Southprint 89-0978

APPENDIX D

Tables From 1986 Plant-Wide
Assessment on Ground-Water Conditions

Table 1. Well Inventory of Off-Site Wells Located in the East St. Louis - Sauget - Cahokia Area, Illinois.

Well No.	Well Location	Date Completed	Depth (feet below land surface)	Well Diameter (inches)	Screen Setting (feet below land surface)	Status/Remarks
	Owner: Illinois Environmental Protection Agency					
G101	2N-10W-26	10- 8-80	28.5	2	8.5- 28.5	IEPA Monitoring Well/Dead Creek Study
G102	do	10- 8-80	32.8	2	7.5- 32.8	do
G103	do	10- 9-80	32.8	2	6.2- 32.8	do
G104	do	10- 9-80	34.0	2	9.0- 34.9	do
G105	do	10-10-80	34.5	2	9.5- 34.5	do
G106	do	10-15-80	40.0	2	5.0- 40.0	do
G107	do	10-16-80	33.8	2	3.8- 33.8	do
G108	do	10-20-80	34.2	2	4.2- 34.2	do
G109	do	10-21-80	35.0	2	8.0- 35.0	do
G110	do	10-22-80	30.0	2	5.0- 30.0	do
G111	do	10-23-80	34.0	2	12.0- 34.0	do
G112	do	10-29-80	35.1	2	13.1- 35.1	do
	Owner: Private Wells					
G501	2N-10W-256	-[a]	-	-	-	Private Well/IEPA Creek Study
G502	do	-	-	-	-	do
G503	do	-	-	-	-	do
G504	do	-	-	-	-	do
	Owner: Amax Corporation[b]					
5	2N-10W-23.3a	-	104	-	-	Supply Well

a) Data not available

b) Several monitoring wells exist on Amax's property but data is not available according to IEPA.

Table 1. (Cont'd.)

Well No.	Well Location	Date Completed	Depth (feet below land surface)	Well Diameter (inches)	Screen Setting (feet below land surface)	Status/Remarks
	Owner: Cerro Corporation					
4	2N-10W-26	-	100-110	-	-	Supply Well
5	do	-	100-110	-	-	do
6	do	-	97	-	-	do
	Owner: Certainteed Products Co.					
1	2N-9W-19.8f	-	122	-	-	do
2	do	-	110	-	-	do
3	do	-	106	-	-	do
	Owner: Chemtech					
-	2N-9W-29.8f	-	-	-	-	do
	Owner: Fox Terminal					
-	2N-10W-33.1f	-	105	-	-	do
	Owner: Illinois State Water Survey					
-	2N-10W-35	-	-	-	-	-
R-2	2N-10W-26.8g	-	-	-	-	-
No. 20	2N-10W-25.5d	-	-	-	-	-
	Owner: Lefton					
-	2N-10W-25.7b	-	-	-	-	Supply well

Table 1. (Cont'd.)

Well No.	Well Location	Date Completed	Depth (feet below land surface)	Well Diameter (inches)	Screen Setting (feet below land surface)	Status/Remarks
	Owner: Midwest Rubber Co.[c) d)]					
2	2N-10W-26	-	114	-	-	Supply Well
6	do	-	110	-	-	do
7	do	-	109	-	-	do
8	do	-	112	-	-	do
10	do	-	115	-	-	do
11	do	-	115	-	-	do
	Owner: Mississippi Avenue Warehouse					
-	2N-10W-23	-	-	-	-	do
	Owner: Mobil-Sacony					
-	2N-10W-25.6E	-	-	-	-	do
	Owner: Obear-Nester Glass Company					
-	2N-9W-19.7d	-	-	-	-	do
-	do	-	-	-	-	do
	Owner: Phillips Petroleum					
-	2N-10W-34	-	-	-	-	do

c) Several monitoring wells exist on Midwest Rubber's property but data is not available according to IEPA.

d) Only four wells are shown on Figure 1 because the exact locations of the other 2 are unknown.

Table 1. (Cont'd.)

Well No.	Well Location	Date Completed	Depth (feet below land surface)	Well Diameter (inches)	Screen Setting (feet below land surface)	Status/Remarks
	Owner: U.S. Corps of Engineers					
RW-111	2N-10W-23	-	-	-	-	Mississippi River Levee Relief Wells
RW-118	2N-10W-23.6f	-	-	-	-	do
RW-126	2N-10W-23	-	-	-	-	do
RW-136	do	-	-	-	-	do
RW-137	2N-10W-34.5h	-	-	-	-	do
RW-159	2N-10W-34	-	90	-	-	do
RW-169	do	-	78	-	-	do
RW-180	2N-10W-34.8b	-	82	-	-	do
RW-196	2N-10W-4.1g	-	-	-	-	do
	Owner: St. Louis Grain Co.					
-	2N-9W-30	-	-	-	-	Supply Well
	Owner: Sterling Steel Casting Company					
-	2N-10W-26	-	120	-	-	do
	Owner: Clayton Chemical Company					
1	2N-10W-24	-	72	-	-	Supply Well
2	do	-	60.5	-	-	do
3	do	-	43.5	-	-	do
4	do	-	75	-	-	do

Table 2. Static Water Levels for Monitoring Wells Measured During August 24-27, 1984, Monsanto Company, W.G. Krummrich Plant, Sauget, Illinois.

Well No.	Well Depth (feet below land surface)	Elevation of the Measuring Point (feet above mean sea level)	Depth to Water (feet below measuring point)	Elevation of Water Level (feet above mean sea level)
Geraghty & Miller, Inc. Monitoring Wells				
GM-1	34	413.65	12.93	400.72
GM-2	41	417.37	19.32	398.05
GM-3	36	411.31	15.15	396.16
GM-4A	28	406.43	9.15	397.28
GM-4B	87	406.70	10.10	396.60
GM-5	36	414.94	18.72	396.22
GM-6A	34	414.59	16.96	397.63
GM-6B	88	416.04	19.40	396.64
GM-7	36	414.95	18.05	396.90
GM-8	34	418.49	21.12	397.37
GM-9A	28	414.47	13.26	401.21
GM-9B	75	412.36	12.67	399.69
GM-9C	108	411.97	12.76	399.21
GM-10A	28	412.97	11.86	401.11
GM-11	25	412.95	12.80	400.15
GM-12A	33.5	416.47	15.99	400.48
GM-12B	89	416.80	16.09	400.71
GM-13	38	415.47	15.25	400.22
GM-14	38	411.26	9.50	401.76
GM-15	38	413.71	13.53	400.18
GM-16A	38	412.03	12.83	399.20
GM-16B	90	412.40	13.22	399.18
GM-17A	38	412.57	14.07	398.50
GM-17B	78	412.93	14.77	398.16
GM-17C	107	412.42	14.61	397.81
GM-18A	38	414.23	17.22	397.01
GM-18B	92	414.02	17.16	396.86

Table 2. (Continued)

Well No.	Well Depth (feet below land surface)	Elevation of the Measuring Point (feet above mean sea level)	Depth to Water (feet below measuring point)	Elevation of Water Level (feet above mean sea level)
Geraghty & Miller, Inc. Monitoring Wells (Cont'd)				
GM-25A	38	414.20	19.30	394.90
GM-25B	88	415.46	21.62	393.84
GM-27B	82	426.04	37.24	388.80
GM-27C	105	426.76	38.86	387.90
GM-28B	93	423.88	34.10	389.78
GM-28C	107	423.78	34.21	389.57
GM-29	20.5	411.06	- a)	-
GM-30	21.2	416.09	- a)	-
Landfill Monitoring Wells				
B-21A	28	428.53	27.74	400.79
B-21B	49.5	428.37	39.84	388.53
B-22A	35	428.16	26.72	401.44
B-22B	55	428.16	39.90	388.26
B-23B	49.5	428.17	39.50	388.67
B-24A	27.5	422.49	20.58	401.91
B-24B	50	422.28	32.81	389.47
B-24C	69	422.52	33.16	389.36
B-25A	35.2	428.47	26.88	401.59
B-25B	49.5	427.35	36.52	390.83
B-26A	33.2	423.71	24.59	399.12
B-26B	49.8	423.62	33.69	389.93
B-27B	42	425.83	34.19	391.64
B-28A	32.5	423.04	21.50	401.54
B-28B	49.5	423.08	32.49	390.59
B-29A	33.2	429.03	28.56	400.47
B-29B	49.5	429.06	36.86	392.20
B-30B	49	430.52	38.90	391.62
B-31B	34.5	421.68	33.76	387.92
B-31C	67.3	421.88	34.87	387.01
B-101	169.2	427.09	38.44	388.65
B-102	162	423.84	34.45	389.39
B-103	165.8	427.33	- b)	-
B-105	154	420.93	- b)	-

Table 2. (Continued)

Well No.	Well Depth (feet below land surface)	Elevation of the Measuring Point (feet above mean sea level)	Depth to Water (feet below measuring point)	Elevation of Water Level (feet above mean sea level)
Landfill Monitoring Wells (Cont'd)				
P-1	47	423.11	32.96	390.15
P-2	47	423.15	33.21	389.94
P-3	47	423.43	33.56	389.87
P-4	47.5	421.82	31.99	389.83
P-5	54.5	422.12	32.75	389.37
P-6	30.5	421.78	24.54	397.24
P-7	33	421.82	22.31	399.51
P-8	53.5	421.79	32.65	389.14
P-9	50	423.14	34.13	389.01
P-10	54	423.43	34.13	389.30
P-11	51	422.30	33.76	388.54
P-12	50.5	423.75	35.18	388.57
P-13	53.5	424.32	36.51	387.81
P-14	32.5	424.36	23.72	400.64
Dewatering Wells in the Plant Area				
DW-1	65	410.04	11.91	398.13
DW-2	65	409.12	10.89	398.23
DW-3	65	408.85	10.41	398.44
DW-4	65	408.44	10.59	397.85
DW-5	65	-	-[c]	-
DW-6	65	-	-[c]	-
DW-7	65	-	-[c]	-
DW-8	65	-	-[c]	-
DW-9	65	-	-[c]	-
DW-10	65	409.40	9.91	399.49
DW-11	65	-	-[c]	-
DW-12	65	-	-[c]	-
DW-13	65	-	-[c]	-
DW-14	65	-	-[c]	-
DW-15	65	-	-[c]	-
DW-16	65	-	-[c]	-
BK-1	66	408.36	4.11	404.25
BK-2	25	409.67	8.46	401.21

Table 2. (Continued)

Well No.	Well Depth (feet below land surface)	Elevation of the Measuring Point (feet above mean sea level)	Depth to Water (feet below measuring point)	Elevation of Water Level (feet above mean sea level)
Monitoring Wells in the Plant Area for Dewatering Projects				
M-2	40	410.38	12.00	398.38
M-4	29	409.18	9.85	399.33
M-7	29	410.67	9.60	401.07
BK-3	66	415.24	15.23	400.01
DW-34	25	414.67	16.15	398.52
Dewatering Wells for the Treatment Plant Sewer Construction				
DW-17	80	422.99	-[d]	-
DW-18	80	-	-[d]	-
DW-19	80	426.88	-[d]	-
DW-23	80	422.80	35.05	387.75
DW-23A	80	419.68	30.41	389.27
DW-24	80	427.30	37.85	389.45
DW-25	80	415.79	27.19	388.60
Monitoring Wells for the Treatment Plant Dewatering Projects				
DW-27	30	429.68	31.49	398.19
DW-28	30	427.86	31.58	396.28
DW-29	68	424.89	37.17	387.72
DW-30	31	422.77	34.49	388.28
DW-31	25	423.71	-[e]	-
DW-32	66	432.57	43.47	389.10
DW-33	30	416.23	20.78	395.45
U.S. Corps of Engineers Monitoring Wells				
P-56	35	430.98	38.30	392.68
P-58	35	414.47	-[e]	-
P-59	35	414.51	-[b]	-
P-65	32	426.50	-[e]	-
P-68	35	432.58	-[e]	-

Table 2. (Continued)

Well No.	Well Depth (feet below land surface)	Elevation of the Measuring Point (feet above mean sea level)	Depth to Water (feet below measuring point)	Elevation of Water Level (feet above mean sea level)
Offsite Wells (East of Town Hall)				
WB-6	30	406.49	5.65	400.84
WB-7	80	406.85	6.05	400.80
WB-8	30	409.52	-[b]	-
WB-9	80	407.43	6.74	400.69

a) Well was installed after water-level measurements were made.
b) Not measured.
c) Inaccessible.
d) Well was pumping, water-level could not be determined.
e) Dry.

Table 3. Static Water Levels for Monitoring Wells Measured During November 21-22, 1985, Monsanto Company, W.G. Krummrich Plant, Sauget, Illinois.

Well No.	Well Depth (feet below land surface)	Elevation of the Measuring Point (feet above mean sea level)	Depth to Water (feet below measuring point)	Elevation of Water Level (feet above mean sea level)
Geraghty & Miller, Inc. Monitoring Wells				
GM-1	34	413.65	15.98	397.62
GM-2	41	417.37	23.12	394.25
GM-3	36	411.31	16.35	394.96
GM-4A	28	406.43	11.98	394.45
GM-4B	87	406.70	12.00	394.70
GM-4C	104	406.51	11.78	394.73
GM-5	36	414.94	20.82	394.12
GM-6A	34	414.59	20.20	394.39
GM-6B	88	416.04	21.65	394.39
GM-7	36	414.95	19.87	395.08
GM-8	34	418.49	22.95	395.54
GM-9A	28	414.47	18.80	395.57
GM-9B	75	412.36	27.04	390.32
GM-9C	108	411.97	20.03	391.94
GM-10A	28	412.97	14.85	398.12
GM-10B	78	413.90	18.11	395.79
GM-10C	111	413.78	18.11	395.67
GM-11	25	412.95	15.95	397.00
GM-12A	33.5	416.47	20.12	396.35
GM-12B	89	416.80	20.09	396.71
GM-12C	114.5	416.79	20.01	396.78
GM-13	38	415.47	21.70[a]	393.77
GM-14	38	411.26	-	-
GM-15	38	413.71	17.18	396.53
GM-16A	38	412.03	15.38	396.65
GM-16B	90	412.40	15.73	396.67
GM-17A	38	412.57	17.60	394.97
GM-17B	78	412.93	18.01	394.92
GM-17C	107	412.42	17.26	395.16

Table 3. (Continued)

Well No.	Well Depth (feet below land surface)	Elevation of the Measuring Point (feet above mean sea level)	Depth to Water (feet below measuring point)	Elevation of Water Level (feet above mean sea level)
Geraghty & Miller, Inc. Monitoring Wells (Cont'd.)				
GM-18A	38	414.23	18.77	395.46
GM-18B	92	414.02	18.48	395.54
GM-25A	38	414.20	14.35	399.85
GM-25B	88	415.46	15.46	400.00
GM-27B	82	426.04	18.68	407.36
GM-27C	105	426.76	20.13	406.63
GM-28B	93	423.88	18.60	405.28
GM-28C	107	423.78	18.80	404.98
GM-29	20.5	411.06	12.88	398.18
GM-30	21.2	416.09	18.85	397.24
GM-31A	40	418.63	22.99	395.64
GM-31B	94	418.92	23.32	395.60
1-31C	126.5	419.29	23.46	395.83
GM-32	25	409.49	-[a]	-
GM-33	25	410.88	-[a]	-
GM-34	25	410.82	-[a]	-
GM-35	25	410.88	-[a]	-
GM-36	25	409.53	-[a]	-
GM-37	25	409.67	-[a]	-
GM-38	25	412.51	17.41[a]	395.10
GM-39	8	415.59	-[a]	-
GM-40	8	415.75	-[a]	-
GM-41	8	414.75	-[a]	-
GM-42	8	414.48	-[a]	-
GM-43	8	414.38	-[a]	-
GM-44	8	414.44	-[a]	-
GM-45	18	410.10	2.69	407.41
GM-46	25	411.60	11.26[a]	400.34
GM-47	10	412.34	-[a]	-
GM-48	12	411.00	4.04	406.96
GM-49	13	408.43	1.90	406.53
GM-106	165.7	424.82	20.29	404.53

Table 3. (Continued)

Well No.	Well Depth (feet below land surface)	Elevation of the Measuring Point (feet above mean sea level)	Depth to Water (feet below measuring point)	Elevation of Water Level (feet above mean sea level)
Landfill Monitoring Wells				
B-21A	28	428.53	29.42	399.11
B-21B	49.5	428.37	29.97	398.40
B-22A	35	428.16	23.38	404.78
B-22B	55	428.16	23.35	404.81
B-23B	49.5	428.17	25.19	402.98
B-24A	27.5	422.49	17.38	405.11
B-24B	50	422.28	17.32	404.96
B-24C	69	422.52	17.39	405.13
B-25A	35.2	428.47	31.13	397.34
B-25B	49.5	427.35	26.67	400.68
B-26A	33.2	423.71	20.25	403.46
B-26B	49.8	423.62	18.48	405.14
B-27B	42	425.83	22.93	402.90
B-28A	32.5	423.04	21.47	401.57
B-28B	49.5	423.08	18.38	404.70
B-29A	33.2	429.03	29.97	399.06
B-29B	49.5	429.06	27.61	401.45
B-30B	49	430.52	29.17	401.35
B-31B	34.5	421.68	22.32	399.36
B-31C	67.3	421.88	22.43	399.45
B-101	169.2	427.09	29.14	397.95
B-102	162	423.84	22.47	401.37
B-103	165.8	427.33	24.82	402.51
B-105	154	420.93	19.02	401.91
P-1	47	423.11	17.40	405.71
P-2	47	423.15	17.27	405.88
P-3	47	423.43	17.57	405.86
P-4	47.5	421.82	16.01	405.81
P-5	54.5	422.12	15.81	406.31
P-6	30.5	421.78	12.79	408.99
P-7	33	421.82	13.79	408.03
P-8	53.5	421.79	15.15	406.64
P-9	50	423.14	16.38	406.76
P-10	54	423.43	16.55	406.88

Table 3. (Continued)

Well No.	Well Depth (feet below land surface)	Elevation of the Measuring Point (feet above mean sea level)	Depth to Water (feet below measuring point)	Elevation of Water Level (feet above mean sea level)
Landfill Monitoring Wells (Cont'd.)				
P-11	51	422.30	15.14	407.16
P-12	50.5	423.75	16.08	407.67
P-13	53.5	424.32	16.62	407.70
P-14	32.5	424.36	13.50	410.86
Dewatering Wells in the Plant Area				
DW-1	65	410.04	16.45	393.59
DW-2	65	409.12	-[b]	-
DW-3	65	408.85	-[b]	-
DW-4	65	408.44	-[b]	-
DW-5	65	-	-[b]	-
DW-6	65	-	-[b]	-
DW-7	65	-	18.87	-
W-8	65	-	-[c]	-
DW-9	65	-	-[c]	-
DW-10	65	409.40	-[c]	-
DW-11	65	-	-[c]	-
DW-12	65	-	-[b]	-
DW-13	65	-	-[b]	-
DW-14	65	-	-[b]	-
DW-15	65	-	-[b]	-
DW-16	65	-	-[b]	-
BK-1	25	408.36	5.30	403.06
BK-2	25	409.67	12.75	396.92
Monitoring Wells in the Plant Area for Dewatering Projects				
BK-3	66	415.24	19.43	395.81
DW-34	25	414.67	19.45	395.22

Table 3. (Continued)

Well No.	Well Depth (feet below land surface)	Elevation of the Measuring Point (feet above mean sea level)	Depth to Water (feet below measuring point)	Elevation of Water Level (feet above mean sea level)
Dewatering Wells for the Treatment Plant Sewer Construction				
DW-1-85	80	414.40	-[b]	-
DW-17	80	422.99	15.18	407.81
DW-18	80	426.10	19.46	406.64
DW-19	80	426.88	21.91	404.97
Monitoring Wells for the Treatment Plant Dewatering Projects				
DW-27	30	429.68	23.24	406.44
DW-28	30	427.86	-[a]	-
DW-29	68	424.89	23.51	401.38
DW-30	31	422.77	23.77	399.00
DW-31	25	423.71	24.82	398.89
DW-32	66	432.57	-[a]	-
DW-33	30	416.23	-[a]	-
DW-1S-85	65	413.76	20.48	393.28
U.S. Corps of Engineers Monitoring Wells				
P-56	35	430.98	-[a]	-
P-58	35	414.47	-[a]	-
P-59	35	414.51	-[a]	-
P-65	32	426.50	26.82	399.68
P-68	35	432.58	33.35	399.23
Offsite Wells (East of Town Hall)				
WB-6	30	406.49	9.28	397.21
WB-7	80	406.85	9.89	396.96
WB-8	30	409.52	-[a]	-
WB-9	80	407.43	-[a]	-

a) Not measured
b) Inaccessible
c) Well was pumping, water level could not be determined.

Table 4. Summary of Construction Details for Monitoring Wells Installed Under the Direction of Geraghty & Miller, Inc., Monsanto Company, W.G. Krummrich Plant, Sauget, Illinois.

Well No.	Date Completed	Well Diameter (inches)	Depth (feet below land surface)	Screen Setting (feet below land surface)	Interval Gravel Packed (feet below land surface)[1]	Interval Sealed With Bentonite (feet below land surface)	Interval Sealed with Grout (feet below land surface)[2]	Height of Measuring Point (feet above land surface)[3]	Elevation of Measuring Point (feet above mean sea level)[4]
GM-1	11- 1-83	6	34	19 - 34	16 - 28	15 - 16	2 - 15	2.6 (2.3)[5]	413.65
GM-2	11- 8-83	6	41	26 - 41	None	21 - 22	2 - 21	2.2 (2.0)[5]	417.37
GM-3	11- 7-83	6	36	21 - 36	19 - 24	18 - 19	2 - 18	3.9 (3.7)[5]	411.31
GM-4A	11- 2-83	2	28	13 - 28	12 - 14	11 - 12	2 - 11	2.8	406.43
GM-4B	7-17-84	4	87	67 - 87	65 - 87	55 - 65	2 - 65	3.0	406.70
GM-4C	1-11-84	4	104	92.5-102.5	90 -102.5	75 - 90	2 - 75	2.5	406.51
GM-5	11- 3-83	2	36	21 - 36	18.5- 24	17.5- 18.5	2 - 17.5	2.5	414.94
GM-6A	11- 2-83	2	34	19 - 34	16 - 22	15 - 16	2 - 15	2.0	414.59
GM-6B	7-26-84	4	88	68 - 88	62.5- 88	47.5-62.5	6 - 47.5	3.1	416.04
GM-7	11- 3-83	2	36	21 - 36	17 - 23	16 - 17	2 - 16	2.5	414.95
GM-8	11- 2-83	2	34	19 - 34	None	15 - 16	2 - 15	2.0	418.49
GM-9A	11-10-83	2	28	13 - 28	11.5- 15.5	10.5- 11.5	2 - 10.5	2.7	414.47
GM-9B	8-17-84	4	75	55 - 75	50 - 75	38 - 50	2 - 38	1.9	412.36
GM-9C	8-15-84	4	108	88 -108	84 -108	70 - 84	2 - 70	1.5	411.97
GM-10A	11- 9-83	2	28	13 - 28	11 - 12.5	10 - 11	2 - 10	2.2	412.97
GM-10B	1-22-85	4	78	54 - 74	48 - 74	38 - 48	2 - 38	2.5	413.90
GM-10C	1-18-85	4	111	94 -109	85 -109	75 - 85	2 - 75	2.5	413.78

Table 4. (Cont'd.)

Well No.	Date Completed	Well Diameter (inches)	Depth (feet below land surface)	Screen Setting (feet below land surface)	Interval Gravel Packed (feet below land surface)[1]	Interval Sealed With Bentonite (feet below land surface)	Interval Sealed with Grout (feet below land surface)[2]	Height of Measuring Point (feet above land surface)[3]	Elevation of Measuring Point (feet above mean sea level)[4]
GM-11	10-31-83	2	25	10 - 25	8.5- 21	7.5- 8.5	2 - 7.5	2.6	412.95
GM-12A	11- 9-83	2	33.5	18.5- 33.5	16 - 23	15 - 16	2 - 15	3.0	416.47
GM-12B	8-13-84	4	89	69 - 89	65 - 89	50 - 65	2 - 50	2.6	416.80
GM-12C	1-17-85	4	114.5	94 -114.5	90 -114	75 - 90	2 - 75	2.5	416.79
GM-13	8-15-84	2	38	18 - 38	16 - 38	15 - 16	2 - 15	2.0	415.47
GM-14	8-16-84	2	38	18 - 38	16 - 38	15 - 16	2 - 15	2.5	411.26
GM-15	8-17-84	2	38	15 - 38	12.5- 38	11.5- 12.5	2 - 11.5	2.0	413.71
GM-16A	8-14-84	2	38	18 - 38	16 - 38	15 - 16	2 - 15	2.1	412.03
GM-16B	8- 9-84	4	90	60 - 87	56 - 68	42 - 46	2 - 42	2.0	412.40
GM-17A	7- 6-84	2	38	18 - 38	16 - 38	15 - 16	2 - 15	3.0	412.57
GM-17B	7-25-84	4	78	58 - 78	52.5- 78	42 - 52.5	2 - 42	3.0	412.93
GM-17C	7-24-84	4	107	87 -107	80 -107	70 - 80	2 - 70	3.2	412.42
GM-18A	7- 5-84	2	38	18 - 38	16 - 38	15 - 16	2 - 15	2.6	414.23
GM-18B	7-12-84	2	92	72 - 92	68 - 92	56 - 68	2 - 56	2.8	414.02
GM-25A	8-14-84	2	38	13 - 38	10 - 38	9 - 10	2 - 9	1.4	414.20
GM-25B	7-27-84	4	88	68 - 88	62 - 88	47 - 62	2 - 47	3.0	415.46
GM-27B	8- 6-84	4	82	62 - 82	55 - 72	45 - 55	2 - 45	2.8	426.04 (425.61)[5]
GM-27C	8- 3-84	4	105	85 -105	80 -115	68 - 80	2 - 80	2.9	426.76 (426.39)[5]

Table 4. (Cont'd.)

Well No.	Date Completed	Well Diameter (inches)	Depth (feet below land surface)	Screen Setting (feet below land surface)	Interval Gravel Packed (feet below land surface)[1]	Interval Sealed With Bentonite (feet below land surface)	Interval Sealed with Grout (feet below land surface)[2]	Height of Measuring Point (feet above land surface)[3]	Elevation of Measuring Point (feet above mean sea level)[4]
GM-28B	7- 3-84	4	93	70.5- 90.5	67 - 93	55 - 67	2 - 55	3.0	423.88
GM-28C	7- 5-84	4	107	87 -107	85 -107	72 - 85	2 - 72	2.9	423.78
GM-29	8-24-84	2	20.5	13 - 18.5	6 - 18	5 - 6	2 - 5	2.2	411.06
GM-30	8-30-84	2	21.2	14.2- 19.2	5 - 16	4 - 5	2 - 4	1.8	416.09
GM-31A	11-26-84	2	40	19 - 39	16 - 39	14 - 16	2 - 14	2.0	416.63
GM-31B	1- 9-85	4	94	65.5- 85.5	59 - 85.5	49 - 59	2 - 49	2.5	418.92
GM-31C	1- 8-85	4	126.5	97 -117	93 -117	83 - 93	2 - 83	2.5	419.29
GM-32	11-27-84	2	25	9 - 24	7 - 24	5 - 7	2 - 5	0.8	409.49
GM-33	11-28-84	2	25	5 - 25	4 - 25	3 - 4	2 - 3	2.0	410.66
GM-34	11-29-84	2	25	5 - 25	3.5- 25	2.5- 3.5	2 - 2.5	2.1	410.82
GM-35	11-29-84	2	25	5 - 25	4 - 25	3 - 4	2 - 3	2.0	410.88
GM-36	11-30-84	2	25	5 - 25	4 - 25	3 - 4	2 - 3	1.4	409.53
GM-37	11-30-84	2	25	4.3- 24.3	3 - 24.3	2.5- 3	2 - 2.5	2.3	409.67
GM-38	12- 3-84	2	25	4.5- 24.5	3 - 24.5	2.5- 3	2 - 2.5	2.0	412.51
GM-39	12- 4-84	2	8	3 - 8	2 - 8	1.5- 2	1 - 1.5	1.9	415.59
GM-40	12- 4-84	2	8	3 - 8	2 - 8	1.5- 2	1 - 1.5	2.0	415.75
GM-41	12- 4-84	2	8	3 - 8	2 - 8	1.5- 2	1 - 1.5	1.2	414.75
GM-42	12- 5-84	2	8	3 - 8	2 - 8	1.5- 2	1 - 1.5	1.5	414.48
GM-43	12- 5-84	2	8	2 - 7	1.6- 7	1.2- 1.6	0.5- 1.2	1.7	414.38
GM-44	12- 5-84	2	8	2 - 7	1.5- 7	1.1- 1.5	0.5- 1.1	1.6	414.44
GM-45	12- 6-84	2	18	1.5-11.5	1 - 11.5	0.5- 1	0 - 0.5	1.3	410.10

Table 4. (Cont'd.)

Well No.	Date Completed	Well Diameter (inches)	Depth (feet below land surface)	Screen Setting (feet below land surface)	Interval Gravel Packed (feet below land surface)[1]	Interval Sealed With Bentonite (feet below land surface)	Interval Sealed with Grout (feet below land surface)[2]	Height of Measuring Point (feet above land surface)[3]	Elevation of Measuring Point (feet above mean sea level)[4]
GM-46	12- 7-84	2	25	5 - 25	4 - 25	3 - 4	2 - 2.3	2.6	411.60
GM-47	12-10-84	2	10	5 - 10	4 - 10	3 - 4	1.5- 3	-0.45	412.34
GM-48	12-10-84	2	12	2 - 12	1.9- 12	1.5- 9	0.5- 1.5	1.4	411.00
GM-49	12-10-84	2	13	3 - 13	2.5- 13	2 - 2.5	0.5- 2	-0.4	408.43[8]
GM-106	6-27-85	8	165.7	None[7]	None	None	0 -133.5	1.2	424.82[8]

1) Gravel pack is absent in some wells and partially covers the screened interval in others due to a collapse of the natural formation around the well prior to setting the gravel pack.

2) The grout was mixed with 90 percent cement and 10 percent bentonite and each well has a cement seal at the surface.

3) The measuring point on each well is the top of the well casing and not the protective outer casing. For each well that has a water-level recorder, the measuring point is the top of the water-level recorder shelter base, except on Well B-106.

4) The elevations were determined to the top of the steel well casings for each well and to the top of the recorder shelter base for the wells installed with water-level recorders. The conversions to the W.G. Krummrich datum is 413.50 feet (NGVD) equals 101.00 feet (W.G. Krummrich datum).

5) Height of the 6-inch casing above land surface.

6) Elevation of the top of the coupling.

7) Rock was encountered at 126 feet below land surface and an open hole exists from 133.5 to 165.7 feet below land surface. The 8-inch casing was grouted 7.5 feet into the rock inside a 12-inch casing which is set at the rock surface.

8) Elevation of the top of the well casing and not the recorder shelter base.

Table 5. Summary of Construction Details for Monitoring Wells Installed Under the Direction of D'Appolonia Waste Management Services, Inc. Monsanto Company, W.G. Krummrich Plant, Sauget, Illinois

Well No.	Date Completed	Well Diameter (inches)	Depth (feet below land surface)	Screen Setting (feet below land surface)[1]	Interval Gravel Packed (feet below land surface)[2]	Interval Sealed With Bentonite (feet below land surface)	Interval Sealed with Grout (feet below land surface)[3]	Height of Measuring Point (feet above land surface)[4]	Elevation of Measuring Point (feet above mean sea level)[5]
B-21A	3-14-82	4	28	20.8- 25.8	None	13 - 19	0 - 13	2.0	428.53
B-21B	3-13-82	4	49.5	37.3- 47.3	None	28.5- 34.5	0 - 28.5	1.8	428.37
B-22A	3-15-82	4	35	27.8- 32.8	26 - 34	20 - 26	0 - 20	1.9	428.16
B-22B	3-13-82	4	55	42.8- 52.8	None	35 - 41	0 - 35	2.1	428.16
B-23B	3-16-82	4	49.5	42.3- 47.3	40.5- 48	34.5- 40.5	0 - 34.5	2.1	428.17
B-24A	3-20-82	4	27.5	20.3- 25.3	None	12 - 18	0 - 12	2.0	422.49
B-24B	3-19-82	4	50	37.8- 47.8	None	30.5- 36.5	0 - 30.5	1.9	422.28
B-24C	3-18-82	4	69	56.8- 66.8	None	31-37/52-55	0 - 31	1.7	422.52
B-25A	3-31-82	4	35.2	28 - 33	25.9- 34.1	19 - 25.9	0 - 19	1.8	428.47
B-25B	3-17-82	4	49.5	37.3- 47.3	None	30 - 36	0 - 30	2.0	427.35
B-26A	3-23-82	4	33.2	26 - 31	24 - 29	17 - 24	0 - 17	1.9	423.71
B-26B	3-22-82	4	49.8	37.6- 47.6	36 - 49.8	28 - 36	0 - 28	2.0	423.62
B-27B	3-24-82	4	42	29.8- 39.8	28 - 36	20 - 28	0 - 20	1.8	425.83
B-28A	3-26-82	4	32.5	25.3- 30.3	23.1- 31	16 - 23.1	0 - 16	1.6	423.04
B-28B	3-26-82	4	49.5	37.3- 47.3	34.8- 37	28 - 34.8	0 - 28	1.8	423.08

Table 5. (Cont'd.)

Well No.	Date Completed	Well Diameter (inches)	Depth (feet below land surface)	Screen Setting (feet below land surface)[1]	Interval Gravel Packed (feet below land surface)[2]	Interval Sealed With Bentonite (feet below land surface)	Interval Sealed with Grout (feet below land surface)[3]	Height of Measuring Point (feet above land surface)[4]	Elevation of Measuring Point (feet above mean sea level)[5]
B-29A	4- 1-82	4	33.2	26 - 31	23.4- 32	17 - 23.4	0 - 17	1.9	429.03
B-29B	3-27-82	4	49.5	37.3- 47.3	None	28 - 35	0 - 28	1.7	429.06
B-30B	3-29-82	4	49	36.8- 46.8	33.7- 38.6	27 - 33.7	0 - 27	2.2	430.52
B-31B	4- 2-82	4	34.5	27.3- 32.3	None	18.5- 24.7	0 - 18.5	1.5	421.68
B-31C	4- 6-82	4	67.3	60.1- 65.1	None	30 - 54	0 - 30	2.2	421.88
B-101	12- 9-83	0.75	169.2[6]	167.7-169.2	154 -169.2	153 -154	0 -153	2.4	427.09
B-102	12- 5-83	0.75	162.0[7]	159.5-162.0	147 -162	146 -147	0 -146	2.1	423.84
B-103	11-17-83	0.75	165.8[8]	163.0-165.5	149 -165.8	145.5-149	0 -145.5	0.7	427.33
B-105	11- 2-83	0.75	154.0[9]	151.5-154.0	134 -154	133 -134	0 -133	0.2	420.93

1) Each well has a 2.2-foot sump (well casing) below the screen setting.

2) Coarse sand was added to each annulus whenever the formation did not collapse around the well screen.

3) The grout consisted of a mixture of bentonite and cement.

4) The measuring point on each well is the top of the steel well casing and not the protective outer casing.

5) The elevations were determined to the top of the steel well casings.

6) The top of rock was encountered at 148.5 feet below land surface.

7) The top of rock was encountered at 142.5 feet below land surface.

8) The top of rock was encountered at 144.5 feet below land surface.

9) The top of rock was encountered at 131.0 feet below land surface.

Table 6. Summary of Construction Details for Monitoring Wells Installed Under the Direction of Law Engineering Testing Company, Monsanto Company, W.G. Krummrich Plant, Sauget, Illinois

Well No.	Date Completed	Well Diameter (inches)	Depth (feet below land surface)	Screen Setting (feet below land surface)[1]	Interval Gravel Packed (feet below land surface)[2]	Interval Sealed With Bentonite (feet below land surface)[3]	Interval Sealed with Grout (feet below land surface)[4]	Height of Measuring Point (feet above land surface)[5]	Elevation of Measuring Point (feet above mean sea level)[6]
P- 1	1-20-82	2	47	40 - 45	-	-	0 - 40	1.8	405.71
P- 2	1-26-82	2	47	40 - 45	-	-	0 - 40	1.5	405.88
P- 3	2-18-82	2	47	40 - 45	-	-	0 - 40	1.4	405.86
P- 4	3- 4-82	2	47.5	40.5- 45.5	-	-	0 - 40.5	1.7	405.81
P- 5	3 -5-82	2	54.5	47.5- 52.5	-	-	0 - 47.5	2.5	406.31
P- 6	3- 9-82	2	30.5	23.5- 28.5	-	-	0 - 23.5	1.7	408.99
P- 7	3- 8-82	2	33	26 - 31	-	-	0 - 26	1.6	408.63
P- 8	3- 2-82	2	53.5	46.5- 51.5	-	-	0 - 46.5	1.7	406.64
P- 9	3- 1-82	2	50	43 - 48	-	-	0 - 43	2.1	406.76
P-10	2-23-82	2	54	47 - 52	-	-	0 - 47	1.9	406.68
P-11	3- 6-82	2	51	44 - 49	-	-	0 - 44	1.8	407.16
P-12	2-22-82	2	50.5	43.5- 48.5	-	-	0 - 43.5	2.1	407.67
P-13	2-21-82	2	53.5	46.5- 51.5	-	-	0 - 46.5	1.8	407.70
P-14	3- 7-82	2	32.5	25.5- 30.5	-	-	0 - 25.5	2.0	410.86

1) Each well has a 2-foot sump (well casing) below the screen setting.

2) Silica sand was added to each annulus whenever the formation did not collapse around the well screen. Specific details for each well were not included in Law Engineering's well construction details.

3) Ten gallons of a thick bentonite slurry was set above the silica sand/natural formation in each well prior to sealing the wells with grout.

4) The grout was mixed with 90 percent cement and 10 percent bentonite.

5) The measuring point on each well is the top of the steel well casing and not the protective outer casing.

6) The elevations were determined to the top of the steel well casings.

ble 7. Water-Level Measurements for Determining Aquifer Characteristics Based on Slug Tests Performed on Wells GM-1, GM-2 and GM-3, Monsanto Company, W.G. Krummrich Plant, Sauget, Illinois.

	Well GM-1			Well GM-2			Well GM-3		
Time (sec)	Depth to Water*	H[a]	H/H_o[b]	Depth to Water*	H	H/H_o	Depth to Water*	H	H/H_o
static	27.32	-	-	35.62	-	-	31.26	-	-
0	25.30[c]	2.02	1.00	33.60[c]	2.02	1.00	29.24[c]	2.02	1.00
15	25.83	1.49	0.74	33.91	1.71	0.85	29.62	1.64	0.82
30	26.03	1.29	0.64	33.99	1.63	0.81	29.72	1.54	0.76
45	26.18	1.14	0.56	34.05	1.57	0.78	29.78	1.48	0.73
60	26.29	1.03	0.51	34.09	1.53	0.76	29.84	1.42	0.70
75	26.38	0.94	0.47	34.13	1.49	0.74	29.89	1.37	0.68
90	26.46	0.86	0.43	34.16	1.46	0.72	29.94	1.32	0.65
105	26.53	0.79	0.39	34.19	1.43	0.71	29.98	1.28	0.63
120	26.60	0.72	0.36	34.22	1.40	0.69	30.02	1.24	0.61
135	26.66	0.66	0.33	34.25	1.37	0.68	30.06	1.20	0.59
150	26.72	0.60	0.30	34.28	1.34	0.66	30.10	1.16	0.57
165	26.77	0.55	0.27	34.31	1.31	0.65	30.13	1.13	0.56
30	26.82	0.50	0.25	34.34	1.28	0.63	30.17	1.09	0.54
195	26.86	0.46	0.23	34.37	1.25	0.62	30.21	1.05	0.52
210	26.89	0.43	0.21	34.39	1.23	0.61	30.24	1.02	0.50
225	26.91	0.41	0.20	34.41	1.21	0.60	30.27	0.99	0.49
240	26.93	0.39	0.19	34.43	1.19	0.59	30.30	0.96	0.48
255	-	-	-	34.45	1.17	0.58	30.32	0.94	0.47
270	-	-	-	34.47	1.15	0.57	30.35	0.91	0.45
285	-	-	-	34.49	1.13	0.56	30.38	0.88	0.44
300	-	-	-	34.50	1.12	0.55	30.40	0.86	0.43
315	-	-	-	34.51	1.11	0.55	30.43	0.83	0.41
330	-	-	-	-	-	-	30.46	0.80	0.40
345	-	-	-	-	-	-	30.48	0.78	0.39
360	-	-	-	-	-	-	30.50	0.76	0.38
375	-	-	-	-	-	-	30.52	0.74	0.37
390	-	-	-	-	-	-	30.54	0.72	0.36

Note:

* Feet below top of well casing.

a) H - head inside the well at time t after injection of the slug (steel weight) above the initial head.

b) H_o - head inside the well above the initial head at instant of injection of the slug (steel weight).

c) The increase of head at the instant of lowering the slug (steel weight) into the water table is equal to 2.02 feet.

Table 8. Summary of Slug Test Results for Selected Water-Table Zone Wells, Monsanto Company, W.G. Krummrich Plant, Sauget, Illinois.

Well	Transmissivity (gallons per day per foot)	Hydraulic Conductivity (gallons per day per square foot)	Storage Coefficient (dimensionless)	Portion of Screen that is Gravel-Packed (percent)
GM-1	344.3	23.0	0.01	60
GM-2	28.5	1.9	0.1	0
GM-3	51.8	3.5	0.1	20
Average	141.5	9.5	0.07	--

Table 10. Aquifer Characteristics Based on Aquifer Tests in Madison and St. Clair Counties, Illinois[a)]

Owner	Location of Test Site	Test Date	Well Depth (feet)	Well Diameter (inches)	Well Screen Interval (feet below land surface)	Duration of Test (days)	Pumping Rate (gpm)	Transmissivity Coefficient (gpd/ft)	Saturated Thickness (feet)	Permeability Coefficient (gpd/sq ft)	Storage Coefficient
Olin Mathieson Chemical Corp.	Madison County T5N, R9W sec 19	May 29-June 1, 1956	88	12	78-88	3	760	95,600	90	1,060	0.135
City of Wood River	Madison County 7SN, R9W sec 28	November 20-21, 1962	84	10	64-84	1	491	134,000	60	2,240	0.155
Southwestern Campus of IU, Edwardsville	Madison County T4N, R8W sec 20	December 13-17, 1960	95	10	75-95	4	308	131,000	84	1,560	0.020
Shell Oil Company	Madison County T5N, R9W sec 33	March 3-6, 1952	100	12	?	3	510	210,000	100	2,100	0.002
Mobil Oil Company	St. Clair County T2N, R10W sec 25	October 25-26, 1961	114	16	79-114	1	630	212,000	73	2,900	0.100
Monsanto Chemical Corporaton	St. Clair County T2N, R10W sec 27	August 4-8, 1952	99	12	89-99	4	1,100	210,000	75	2,800	0.082

a) Schicht (1965)

Table 11. Summary of Water-Quality Analyses for USEPA Priority Pollutant and Non-Priority Pollutant Organic Compounds, Monsanto Company, W.G. Krummrich Plant, Sauget, Illinois (concentrations are in ug/L).

Mean Values

Well No.	Volatile Organic Compounds	Acid Extractable Organic Compounds	Base/Neutral Extractable Organic Compounds	Pesticides/PCBs	Total Mean Concentration
Geraghty & Miller, Inc. Monitoring Wells					
M-1	32*	ND[1)]	3	ND	35
GM-2	64*	ND	10	ND	74
GM-3	39*	ND	3	ND	42
GM-4A	25*	ND	4	ND	29
GM-4B	9,300	62	900	ND	10,300
M-4C	6,950	102	813	ND	7,860
GM-5	60*	ND	2	ND	62
M-6A	177	ND	3	ND	180
M-6B	2,220	2	124	ND	2,350
M-7	37*	ND	5	ND	42
8	44	ND	4	ND	48
GM-9A	1,400*	106	82	ND	1,590
M-9B	1,248	3	41	0.006	1,292
M-9C	160	8	63	0.002	231
M-10A	40*	ND	5	ND	45
M-10B	1,060	128	770	ND	1,960
GM-10C	68	ND	27	ND	95
M-11	38*	ND	4	ND	42
GM-12A	2,410	104	357	ND	2,880
M-12B	2,000	21	64	5	2,090
M-12C	220	180	84	ND	484
GM-13	88,000	1,400	4,760	53	94,000
M-14	155,000	NA[2)]	NA	ND	155,000
M-15	153	1	244	5	403

1) Not Detected.
2) Not Analyzed.

Table 11. (cont'd.)

Well No.	Volatile Organic Compounds	Acid Extractable Organic Compounds	Base/Neutral Extractable Organic Compounds	Pesticides/PCBs	Total Mean Concentration
Geraghty & Miller, Inc. Monitoring Wells					
GM-16A	6	ND	3	ND	9
GM-16B	23	2	12	19	56
GM-17A[3)]	105,400	256	4	0.112	105,700
GM-17B	57,000	220	64	0.5	57,000
GM-17C	13,900	88	1,340	0.1	15,400
GM-18A	25	ND	3	0.122	28
GM-18B	270	3	4	0.149	277
GM-25A	12	ND	23	0.004	35
GM-25B	2	1	21	0.48	24
GM-27B	481	129	28	18	656
GM-27C	1,660	150	130	18	1,950
GM-28B	5,720	2,893	824	175	9,610
GM-28C	5,400	1,695	1,810	0.262	8,900
GM-29	6	12	14	0.129	32
GM-30	333	ND	105	ND	438
GM-31A	184	18,800	318	ND	19,300
GM-31B	52	0	15	ND	67
GM-31C	591	60	32	ND	683
GM-106	120	300	354	ND	774
Landfill Monitoring Wells					
B-24A	16,110	600,000	479,340	ND	1,100,000
B-25A	30,000	130 000	172,480	ND	330 000
B-25B	14,200	112,400	25,270	ND	151,900
B-27B	52,600	NA	NA	ND	52,600
B-28A	1,510	ND	ND	ND	1,510

3) September 1984 volatile organic analysis was omitted because the laboratory could not determine the quantitative values for benzene and chlorobenzene.

Table 11. (cont'd.)

Well No.	Volatile Organic Compounds	Acid Extractable Organic Compounds	Base/Neutral Extractable Organic Compounds	Pesticides/PCBs	Total Mean Concentration
Landfill Monitoring Wells (cont'd.)					
B-29A	2,200	1,389,000	1,550	ND	1,393,000
B-29B	22,000	329,000	7,900	ND	359,000
B-30B	7,150	NA	NA	ND	7,150
B-31B	ND	ND	53	ND	53
B-31C	224	2	41	0.015	267
B-101	16,000	52,800	94,300	ND	163,100
B-102	26	ND	4	ND	30
P-1	4	4	17	ND	25
P-2	849	182	16	ND	1,047
P-6	190	3	ND	ND	190
P-7	7,080	97,300	191,000	ND	295,000
P-8	1,970	126	107	ND	2,200
10	2,000	ND	8	0.562	2,000
P-11	991	ND	106	1	1,098
P-12	1,340	ND	144	34	1,520
P-13	33,000	3	144	ND	33,000
P-14	20,000	53	33	ND	20,000
Dewatering Wells in the Plant Area					
DW-1	112,400	225	531	ND	113,200
DW-4	14,120	1,940	441	0.534	16,470
DW-7	670	300	1,120	ND	2,100
DW-10	18,780	42	1,007	0.136	19,830
Monitoring Wells in the Plant Area for Dewatering Projects					
BK-3	3,670	13	300	0.016	4,000
DW-34	201,000	81	4	ND	201,000
Dewatering Wells for the Treatment Plant Sewer Construction					
DW-1-85	6,530	34	429	ND	6,960
DW-18	600	0.3	55	0.005	660
DW-23	6	ND	189	0.066	195
-24	6	ND	2	ND	8

Table 11. (cont'd.)

..ell No.	Volatile Organic Compounds	Acid Extractable Organic Compounds	Base/Neutral Extractable Organic Compounds	Pesticides/PCBs	Total Mean Concentration
Monitoring Wells for the Treatment Plant Dewatering Projects					
ᴰW-29	662	26	2	0.013	690
W-30	172	4	47	ND	223
DW-33	9	4	4	0.02	17
Offsite Wells					
WB-6	178	21	750	ND	950
'B-7	80	ND	4	0.129	80

· Priority Pollutants only

Table 19. Semi-Annual Ground-Water Monitoring Program, Monsanto Company, W.G. Krumerich Plant, Sauget, Illinois.

Well No.	Well Depth (feet below land surface)	USEPA Priority Pollutants			Non-Priority Pollutants		
		Volatile Organic Compounds	Acid Extractable Organic Compounds	Base/Neutral Extractable Organic Compounds	Volatile Organic Compounds	Acid Extractable Organic Compounds	Base/Neutral Extractable Organic Compounds
Plant Area							
GM-4A	28	X				X	
GM-4B	87	X				X	
GM-4C	104	X				X	
GM-9A	28	X					
GM-9B	75	X					
GM-9C	108	X					
GM-10A	28	X					
GM-10B	78	X					
GM-10C	111	X					
GM-12A	33.5	X			X		
GM-12B	89	X			X		
GM-12C	114.5	X			X		
GM-17A	38	X	X				
GM-17B	78	X	X	X			
GM-17C	107	X	X	X			
GM-31A	40	X	X	X	X		X
GM-31B	94	X					
GM-31C	126.5	X					
Landfill Area							
GM-27B	82	X					
GM-27C	105	X				X	
GM-28B	93	X				X	X
GM-28C	107	X				X	X
P-2	47	X					
P-6	30.5	X					
P-7	33	X	X	X		X	X
P-8	53.5	X				X	
P-13	53.5	X					
P-14	32.5	X					
GM-106	165.7	X	X	X			X

APPENDIX E

Water Quality Data (1983-1986)

Table E-1. Summary of Volatile Organic Compounds in Ground Water, W.G. Krummrich Plant, Monsanto Company, Sauget, IL. ***

Well Number:	GM-1	GM-1	GM-2	GM-2	GM-3	GM-3	GM-3	GM-4A	GM-4A	GM-4B
Date:	11/83	5/84	11/83	5/84	11/83	5/84	5/84*	11/83	5/84	9/84
USEPA Priority Pollutant Volatile Organic Compounds concentrations are in ug/L										
acrolein	<1	<1	<1	<1	<1	<1	<1	<1	<1	NA
acrylonitrile	<1	<1	<1	<1	<1	<1	<1	<1	<1	NA
benzene	<1	<1	<1	<1	<1	<1	<1	<1	<1	176
bis (chloromethyl) ether	<1	<1	<1	<1	<1	<1	<1	<1	<1	<1.5
bromoform	<1	<1	<1	<1	<1	<1	<1	<1	<1	<3.2
carbon tetrachloride	<1	<1	<1	<1	<1	<1	<1	<1	<1	<1.5
chlorobenzene	<1	<1	<1	<1	<1	<1	<1	<1	<1	2,340
chlorodibromomethane	<1	<1	<1	<1	<1	<1	<1	<1	<1	<2.0
chloroethane	<1	<1	<1	<1	<1	<1	<1	<1	<1	<2.4
2-chloroethylvinyl ether	<1	<1	<1	<1	<1	<1	<1	<1	<1	<5.9
chloroform	2	<1	28	<1	11	<1	<1	<1	<1	23
dichlorobromomethane	<1	<1	<1	<1	<1	<1	<1	<1	<1	<1.1
dichlorodifluoromethane	<1	<1	<1	<1	<1	<1	<1	<1	<1	NA
1,1-dichloroethane	<1	<1	<1	<1	<1	<1	<1	<1	<1	<0.8
1,2-dichloroethane	<1	<1	<1	<1	<1	<1	<1	<1	<1	<1.5
1,1-dichloroethylene	<1	<1	<1	<1	<1	<1	<1	<1	<1	<1.9
1,2-dichloropropane	<1	<1	<1	<1	<1	<1	<1	<1	<1	<1.5
cis-1,3-dichloropropylene	<1	<1	<1	<1	<1	<1	<1	<1	<1	<1.5
trans-1,3-dichloropropylene	<1	<1	<1	<1	<1	<1	<1	<1	<1	<1.5
ethylbenzene	<1	<1	<1	<1	<1	<1	<1	<1	<1	8
ethyl bromide	<1	<1	<1	<1	<1	<1	<1	<1	<1	<1.5
methyl chloride	<1	<1	<1	<1	<1	<1	<1	<1	<1	<1.6
methylene chloride	18	32	12	74	12	51	53	9	38	<1.1
1,1,2,2-tetrachloroethane	<1	<1	<1	<1	<1	<1	<1	<1	<1	4
tetrachloroethylene	<1	<1	<1	<1	<1	<1	<1	<1	<1	<1.5
toluene	<1	1	<1	1	<1	1	2	<1	2	2
1,2-trans-dichloroethylene	<1	<1	<1	4	<1	<1	<1	<1	<1	2
1,1,1-trichloroethane	5	<1	<1	<1	<1	3	<1	<1	<1	<1.2
1,1,2-trichloroethane	<1	<1	<1	<1	<1	<1	<1	<1	<1	<1.6
trichloroethylene	6	<1	6	3	<1	<1	<1	<1	<1	<1.3
trichlorofluoromethane	<1	<1	<1	<1	<1	<1	<1	<1	<1	<1.2
vinyl chloride	<1	<1	<1	<1	<1	<1	<1	<1	<1	<1.2
Sub Total 1	31	33	46	82	23	55	55	9	40	2555
Miscellaneous Volatile Organic Compounds										
methyl-iso-butyl ketone	NA	NA	NA	NA	NA	NA	NA	NA	NA	<5
methyl isoamyl ketone	NA	NA	NA	NA	NA	NA	NA	NA	NA	<5
m-xylene	NA	NA	NA	NA	NA	NA	NA	NA	NA	<5
o-xylene/p-xylene	NA	NA	NA	NA	NA	NA	NA	NA	NA	<5
Sub Total 2	NA	NA	NA	NA	NA	NA	NA	NA	NA	0
Total VOC's Analyzed	31	33	46	82	23	55	55	9	40	2555

Table E-1. Summary of Volatile Organic Compounds in Ground Water, W.G. Krummrich Plant, Monsanto Company, Sauget, IL. ***

Well Number:	GM-4B	GM-4B	GM-4B	GM-4B	GM-4B	GM-4C	GM-4C	GM-5	GM-5	GM-6A
Date:	11/84	11/84*	2/85	11/85	11/85*	2/85	5/85	11/83	5/84	11/83
USEPA Priority Pollutant Volatile Organic Compounds concentrations are in ug/L										
acrolein	<5,000	<5,000	<100	<1,000	<100	<100	<1,000	<1	<1	<1
acrylonitrile	<5,000	<5,000	<100	<1,000	<100	<100	<1,000	<1	<1	<1
benzene	500	<500	142	<44	28.3	97.7	<44	<1	2	<1
bis (chloromethyl) ether	<500	<500	<10	<100	<10	<10	<100	<1	<1	<1
bromoform	<500	<500	<4.7	<47	<4.7	<4.7	<47	<1	<1	<1
carbon tetrachloride	<500	<500	<2.8	<28	<2.8	<2.8	<28	<1	<1	<1
chlorobenzene	15,900	15,900	13,600	4,360	5,400	9,210	4,515.3	<1	<1	<1
chlorodibromomethane	<500	<500	<3.1	<31	<3.1	<3.1	<31	<1	<1	<1
chloroethane	<500	<500	<10	<100	<10	<10	<100	<1	<1	<1
2-chloroethylvinyl ether	<500	<500	<10	<100	<10	<10	<100	<1	<1	<1
chloroform	<500	<500	<1.6	<16	<1.6	<1.6	<16	1	<1	3
dichlorobromomethane	<500	<500	<2.2	<22	<2.2	<2.2	<22	<1	<1	<1
dichlorodifluoromethane	<500	<500	<10	<100	<10	<10	<100	<1	<1	<1
1,1-dichloroethane	<500	<500	<4.7	<47	<4.7	<4.7	<47	<1	<1	29
1,2-dichloroethane	<500	<500	<2.8	<28	<2.8	<2.8	<28	<1	<1	<1
1,1-dichloroethylene	<500	<500	<2.8	<28	<2.8	<2.8	<28	<1	<1	<1
1,2-dichloropropane	<500	<500	<6	<60	<6	<6	<60	<1	<1	<1
cis-1,3-dichloropropylene	<500	<500	<5	<50	<5	<5	<50	<1	<1	<1
trans-1,3-dichloropropylene	<500	<500	<10	<100	<10	<10	<100	<1	<1	<1
ethylbenzene	<500	<500	<7.2	<72	<7.2	<7.2	<72	<1	<1	<1
methyl bromide	<500	<500	<10	<100	<10	<10	<100	<1	<1	<1
methyl chloride	<500	<500	<10	<100	<10	<10	<100	<1	<1	<1
methylene chloride	<500	<500	<2.8	<28	<2.8	<2.8	<28	10	102	18
1,1,2,2-tetrachloroethane	<500	<500	<6.9	<69	<6.9	<6.9	<69	<1	<1	<1
tetrachloroethylene	<500	<500	<4.1	<41	<4.1	<4.1	<41	<1	<1	<1
toluene	<500	<500	<6	<60	<6	<6	<60	2	2	1
1,2-trans-dichloroethylene	<500	<500	<3.1	<16	<1.6	<1.6	<16	<1	<1	<1
1,1,1-trichloroethane	<500	<500	<3.8	<38	<3.8	<3.8	66	<1	<1	2
1,1,2-trichloroethane	<500	<500	<5	<50	<5	<5	<50	<1	<1	<1
trichloroethylene	<500	<500	<1.9	<19	<1.9	<1.9	<19	<1	<1	2
trichlorofluoromethane	<500	<500	<10	<100	<10	<10	<100	<1	<1	<1
vinyl chloride	<500	<500	<10	<100	<10	<10	<100	<1	<1	<1
Sub Total 1	16400	15900	13742	4360	5428.3	9307.7	4581.3	13	106	55
Miscellaneous Volatile Organic Compounds										
methyl-iso-butyl ketone	<500	<500	<10	<100	<10	<10	<100	NA	NA	NA
methyl isoamyl ketone	<500	<500	<10	<100	<10	<10	<100	NA	NA	NA
m-xylene	<500	<500	<10	<100	<10	<10	<100	NA	NA	NA
o-xylene/p-xylene	<500	<500	<10	<100	<10	<10	<100	NA	NA	NA
Sub Total 2	0	0	0	0	0	0	0	NA	NA	NA
Total VOC's Analyzed	16400	15900	13742	4360	5428.3	9307.7	4581.3	13	106	55

Table E-1. Summary of Volatile Organic Compounds in Ground Water, W.G. Krummrich Plant, Monsanto Company, Sauget, Il. ***

Well Number:	GM-6A	GM-6A	GM-6B	GM-6B	GM-6B	GM-7	GM-7	GM-8	GM-9	GM-9
Date:	5/84	11/84	9/84**	11/84	11/85	11/83	5/84	11/83	5/84	11/84
USEPA Priority Pollutant Volatile Organic Compounds concentrations are in ug/L										
acrolein	<1	<100	NA	<100	<1,000	<1	<1	<1	<1	<100
acrylonitrile	<1	<100	NA	<100	<1,000	<1	<1	<1	<1	<100
benzene	1	<10	28	71	71.8	1	<1	3	.2	<10
bis (chloroethyl) ether	<1	<10	<1.5	<10	<100	<1	<1	<1	<1	<10
bromoform	<1	<10	<3.2	<10	<47	<1	<1	<1	<1	<10
carbon tetrachloride	<1	<10	<1.5	<10	<28	<1	<1	<1	<1	<10
chlorobenzene	<1	<10	2,620	326	379.0	<1	<1	<1	<1	<10
chlorodibromoethane	<1	<10	<2.0	<10	<31	<1	<1	<1	<1	<10
chloroethane	<1	<10	437	<10	<100	<1	<1	<1	<1	<10
2-chloroethylvinyl ether	<1	<10	<5.9	<10	<100	<1	<1	<1	<1	<10
chloroform	<1	<10	<0.8	<10	<16	<1	<1	8	<1	<10
dichlorobromoethane	<1	<10	<1.1	<10	<22	<1	<1	<1	<1	<10
dichlorodifluoroethane	<1	<10	NA	<10	<100	<1	<1	<1	<1	<10
1,1-dichloroethane	<1	13	224	184	75.7	<1	<1	<1	<1	<10
1,2-dichloroethane	<1	<10	<1.5	<10	<28	<1	<1	<1	<1	<10
1,1-dichloroethylene	<1	<10	24	15	<28	<1	<1	<1	<1	<10
1,2-dichloropropane	<1	<10	<1.5	<10	<60	<1	<1	<1	<1	<10
cis-1,3-dichloropropylene	<1	<10	<1.5	<10	<50	<1	<1	<1	<1	<10
trans-1,3-dichloropropylene	<1	<10	<1.5	<10	<100	<1	<1	<1	<1	<10
ethylbenzene	<1	<10	5	<10	<72	<1	<1	<1	<1	<10
methyl bromide	<1	<10	<1.5	<10	<100	<1	<1	<1	<1	<10
methyl chloride	<1	<10	<1.6	<10	<100	<1	<1	<1	<1	<10
methylene chloride	451	<10	326	<10	<28	11	53	16	161	<10
1,1,2,2-tetrachloroethane	<1	<10	<1.4	<10	<69	<1	<1	<1	<1	<10
tetrachloroethylene	<1	<10	<1.5	<10	<41	<1	<1	<1	<1	<10
toluene	2	<10	15	<10	<60	<1	2	<1	2	<10
1,2-trans-dichloroethylene	<1	<10	750	537	201	<1	<1	<1	<1	<10
1,1,1-trichloroethane	7	<10	<1.2	<10	<38	<1	6	6	4	19
1,1,2-trichloroethane	<1	<10	<1.6	<10	<50	<1	<1	<1	<1	<10
trichloroethylene	1	<10	3	<10	<19	<1	<1	<1	<1	<10
trichlorofluoromethane	<1	<10	<1.2	<10	<100	<1	<1	<1	<1	<10
vinyl chloride	<1	<10	<1.2	258	116	<1	<1	<1	<1	<10
Sub Total 1	462	13	4432	1391	843.5	12	61	33	169	19
Miscellaneous Volatile Organic Compounds										
methyl-iso-butyl ketone	NA	<10	<5	<10	<100	NA	NA	NA	NA	<100
methyl isoamyl ketone	NA	<10	<5	<10	<100	NA	NA	NA	NA	<100
m-xylene	NA	<10	<5	<10	<100	NA	NA	NA	NA	<10
o-xylene/p-xylene	NA	<10	<5	<10	<100	NA	NA	NA	NA	<10
Sub Total 2	NA	0	0	0	0	NA	NA	NA	NA	0
Total VOC's Analyzed	462	13	4432	1391	843.5	12	61	33	169	19

Table E-1. Summary of Volatile Organic Compounds in Ground Water, W.G. Krummrich Plant, Monsanto Company, Sauget, Il. ***

Well Number:	GM-8	GM-8	GM-9A	GM-9A	GM-9B	GM-9B	GM-9B	GM-9C	GM-9C	GM-9C
Date:	2/85	11/85	11/83	5/84	9/84**	5/85	11/85	9/84**	5/85	11/85
USEPA Priority Pollutant Volatile Organic Compounds concentrations are in ug/L										
acrolein	<100	<100	<1	<1	NA	<100	<1,000	NA	<100	<100
acrylonitrile	<100	<100	<1	<1	NA	<100	<1,000	NA	<100	<100
benzene	<4.4	<4.4	331	449	276	378.4	<44	35	<4.4	<4.4
bis (chloroethyl) ether	<10	<10	<1	<1	<1.5	<10	<100	<1.5	<10	<10
bromoform	<4.7	<4.7	<1	<1	<3.2	<4.7	<47	<3.2	<4.7	<4.7
carbon tetrachloride	<2.8	<2.8	<1	<1	<1.5	<2.8	<28	<1.5	<2.8	<2.8
chlorobenzene	<6	<6	1,270	701	272	1,780.5	229	216	34.7	99.6
chlorodibromomethane	<3.1	<3.1	<1	<1	<2.0	<3.1	<31	<2.0	<3.1	<3.1
chloroethane	<10	<10	<1	<1	<2.4	<10	<100	<2.4	<10	<10
2-chloroethylvinyl ether	<10	<10	<1	<1	<5.9	<10	<100	<5.9	<10	<10
chloroform	<1.6	<1.6	3	2	<0.8	<1.6	<16	1	<1.6	<1.6
dichlorobromomethane	<2.2	<2.2	<1	<1	<1.1	<2.2	<22	<1.1	<2.2	<2.2
dichlorodifluoromethane	<10	<10	<1	<1	NA	<10	<100	NA	<10	<10
1,1-dichloroethane	<4.7	<4.7	<1	<1	<0.8	<4.7	<47	<0.8	<4.7	<4.7
1,2-dichloroethane	<2.8	<2.8	<1	<1	<1.5	<2.8	<28	<1.5	<2.8	<2.8
1,1-dichloroethylene	<2.8	<2.8	<1	<1	7	<2.8	<28	1	<2.8	<2.8
1,2-dichloropropane	<6	<6	<1	<1	<1.5	<6	<60	<1.5	<6	<6
cis-1,3-dichloropropylene	<5	<5	<1	<1	<1.5	<5	<50	<1.5	<5	<5
trans-1,3-dichloropropylene	<10	<10	<1	<1	<1.5	<10	<100	<1.5	<10	<10
ethylbenzene	<7.2	<7.2	<1	3	<0.4	<7.2	<72	1	<7.2	<7.2
methyl bromide	<10	<10	<1	<1	<1.5	<10	<100	<1.5	<10	<10
methyl chloride	<10	<10	<1	<1	<1.6	<10	<100	<1.6	<10	<10
methylene chloride	<2.8	<2.8	10	22	211	<2.8	584	35	<2.8	53.8
1,1,2,2-tetrachloroethane	<6.9	<6.9	<1	<1	<1.4	<6.9	<69	<1.4	<6.9	<6.9
tetrachloroethylene	<4.1	<4.1	3	2	<1.5	<4.1	<41	<1.5	<4.1	<4.1
toluene	<6	<6	2	2	6	<6	<60	1.5	<6	<6
1,2-trans-dichloroethylene	<1.6	<1.6	<1	<1	<1.5	<1.6	<16	<1.5	<1.6	<1.6
1,1,1-trichloroethane	<3.8	<3.8	3	4	<1.2	<3.8	<38	<1.2	<3.8	<3.8
1,1,2-trichloroethane	<5	<5	<1	<1	<1.6	<5	<50	<1.6	<5	<5
trichloroethylene	<1.9	<1.9	<1	<1	<1.3	<1.9	<19	<1.3	<1.9	<1.9
trichlorofluoromethane	<10	<10	<1	<1	<1.2	<10	<100	<1.2	<10	<10
vinyl chloride	<10	<10	<1	<1	<1.2	<10	<100	<1.2	<10	<10
Sub Total 1	0	0	1622	1185	772	2158.9	813	290.5	34.7	153.4
Miscellaneous Volatile Organic Compounds										
methyl-iso-butyl ketone	<10	<10	NA	NA	<5	<10	<100	<5	<10	<10
methyl isoamyl ketone	<10	<10	NA	NA	<5	<10	<100	<5	<10	<10
m-xylene	<10	<10	NA	NA	<5	<10	<100	<5	<10	<10
o-xylene/p-xylene	<10	<10	NA	NA	<5	<10	<100	<5	<10	<10
Sub Total 2	0	0	NA	NA	0	0	0	0	0	0
Total VOC's Analyzed	0	0	1622	1185	772	2158.9	813	290.5	34.7	153.4

Table E-1. Summary of Volatile Organic Compounds in Ground Water, W.G. Krumarich Plant, Monsanto Company, Sauget, IL. ***

Well Number:	GM-10A	GM-10A	GM-10B	GM-10B	GM-10C	GM-10C	GM-11	GM-11	GM-12A	GM-12A
Date:	11/83	5/84	2/85	5/85	2/85	5/85	11/83	5/84	11/83	11/83*
USEPA Priority Pollutant Volatile Organic Compounds concentrations are in ug/L										
acrolein	<1	<1	<100	<100	<100	<100	<1	<1	<1	<1
acrylonitrile	<1	<1	<100	<100	<100	<100	<1	<1	<1	<1
benzene	2	<1	317	143.9	<4.4	<4.4	<1	<1	425	433
bis (chloromethyl) ether	<1	<1	<10	<10	<10	<10	<1	<1	<1	<1
bromoform	<1	<1	<4.7	<4.7	<4.7	<4.7	<1	<1	<1	<1
carbon tetrachloride	<1	<1	<2.8	<2.8	<2.8	<2.8	<1	<1	<1	<1
chlorobenzene	<1	<1	1,540	119	107	29.6	<1	<1	350	296
chlorodibromomethane	<1	<1	<3.1	<3.1	<3.1	<3.1	<1	<1	<1	<1
chloroethane	<1	<1	<10	<10	<10	<10	<1	<1	<1	<1
2-chloroethylvinyl ether	<1	<1	<10	<10	<10	<10	<1	<1	<1	<1
chloroform	<1	<1	<1.6	<1.6	<1.6	<1.6	5	<1	18	21
dichlorobromomethane	<1	<1	<2.2	<2.2	<2.2	<2.2	<1	<1	<1	<1
dichlorodifluoromethane	<1	<1	<10	<10	<10	<10	<1	<1	<1	<1
1,1-dichloroethane	<1	<1	<4.7	<4.7	<4.7	<4.7	<1	<1	<1	<1
1,2-dichloroethane	<1	<1	<2.8	<2.8	<2.8	<2.8	<1	<1	<1	<1
1,1-dichloroethylene	<1	<1	<2.8	<2.8	<2.8	<2.8	<1	<1	<1	<1
1,2-dichloropropane	<1	<1	<6	<6	<6	<6	<1	<1	<1	<1
cis-1,3-dichloropropylene	<1	<1	<5	<5	<5	<5	<1	<1	<1	<1
trans-1,3-dichloropropylene	<1	<1	<10	<10	<10	<10	<1	<1	<1	<1
ethylbenzene	<1	<1	<7.2	<7.2	<7.2	<7.2	<1	<1	4	4
methyl bromide	<1	<1	<10	<10	<10	<10	<1	<1	<1	<1
methyl chloride	<1	<1	<10	<10	<10	<10	<1	<1	<1	<1
methylene chloride	21	53	<2.8	<2.8	<2.8	<2.8	16	53	49	64
1,1,2,2-tetrachloroethane	<1	<1	<6.9	<6.9	<6.9	<6.9	<1	<1	<1	<1
tetrachloroethylene	<1	<1	<4.1	<4.1	<4.1	<4.1	<1	<1	<1	<1
toluene	<1	2	<6	<6	<6	<6	<1	2	4	4
1,2-trans-dichloroethylene	<1	<1	<1.6	1.9	<1.6	<1.6	<1	<1	<1	<1
1,1,1-trichloroethane	1	<1	<3.8	<3.8	<3.8	<3.8	<1	<1	8	7
1,1,2-trichloroethane	<1	<1	<5	<5	<5	<5	<1	<1	<1	<1
trichloroethylene	<1	<1	<1.9	<1.9	<1.9	<1.9	<1	<1	<1	<1
trichlorofluoromethane	<1	<1	<10	<10	<10	<10	<1	<1	<1	<1
vinyl chloride	<1	<1	<10	<10	<10	<10	<1	<1	<1	<1
Sub Total 1	24	55	1857	264.7	107	29.6	21	55	858	829
Miscellaneous Volatile Organic Compounds										
methyl-iso-butyl ketone	NA	NA	<10	<10	<10	<10	NA	NA	NA	NA
methyl isoamyl ketone	NA	NA	<10	<10	<10	<10	NA	NA	NA	NA
m-xylene	NA	NA	<10	<10	<10	<10	NA	NA	NA	NA
o-xylene/p-xylene	NA	NA	<10	<10	<10	<10	NA	NA	NA	NA
Sub Total 2	NA	NA	0	0	0	0	NA	NA	NA	NA
Total VOC's Analyzed	24	55	1857	264.7	107	29.6	21	55	858	829

Table E-1. Summary of Volatile Organic Compounds in Ground Water, W.G. Krummrich Plant, Monsanto Company, Sauget, IL. ***

Well Number:	GM-12A	GM-12A	GM-12A	GM-12A	GM-12A	GM-12A	GM-12A	GM-12A	GM-12A	GM-12A
Date:	5/84	5/84*	11/84	11/84*	2/85	2/85*	5/85	5/85*	11/85	11/85*
USEPA Priority Pollutant Volatile Organic Compounds concentrations are in ug/L										
acrolein	<1	<1	<100	<1000	<100	<100	<100	<100	<1,000	<1,000
acrylonitrile	<1	<1	<100	<1000	<100	<100	<100	<100	<1,000	<1,000
benzene	3,263	4,819	1,790	3,590	1,030	1,160	2,270.3	1,819.1	1,730	1,540
bis (chloroethyl) ether	<1	<1	<10	<100	<10	<10	<10	<10	<100	<100
bromoform	<1	<1	<10	<100	<4.7	<4.7	<4.7	<4.7	<47	<47
carbon tetrachloride	<1	<1	<10	<100	<2.8	<2.8	<2.8	<2.8	<28	<29
chlorobenzene	304	399	286	565	349.3	399.3	453.4	471.9	428	403
chlorodibromomethane	<1	<1	<10	<100	<3.1	<3.1	<3.1	<3.1	<31	<31
chloroethane	<1	<1	<10	<100	<10	<10	<10	<10	<100	<100
2-chloroethylvinyl ether	<1	<1	<10	<100	<10	<10	<10	<10	<100	<100
chloroform	<1	<1	<10	<100	<1.6	<1.6	<1.6	<1.6	<16	<16
dichlorobromomethane	<1	<1	<10	<100	<2.2	<2.2	<2.2	<2.2	<22	<22
dichlorodifluoromethane	<1	<1	<10	<100	<10	<10	<10	<10	<100	<100
1,1-dichloroethane	<1	<1	<10	<100	<4.7	<4.7	<4.7	<4.7	<47	<47
1,2-dichloroethane	<1	<1	<10	<100	<2.8	<2.8	<2.8	<2.8	<28	<28
1,1-dichloroethylene	<1	<1	<10	<100	<2.8	<2.8	<2.8	<2.8	<28	<28
1,2-dichloropropane	<1	<1	<10	<100	<6	<6	<6	<6	<60	<60
cis-1,3-dichloropropylene	<1	<1	<10	<100	<5	<5	<5	<5	<50	<50
trans-1,3-dichloropropylene	<1	<1	<10	<100	<10	<10	<10	<10	<100	<100
ethylbenzene	17	17	17	<100	20.2	22	13.9	14.6	<72	<72
methyl bromide	<1	<1	<10	<100	<10	<10	<10	<10	<100	<100
methyl chloride	<1	<1	<10	<100	<10	<10	<10	<10	<100	<100
methylene chloride	23	31	<10	<100	<2.8	<2.8	<2.8	<2.8	599	443
1,1,2,2-tetrachloroethane	<1	<1	<10	<100	<6.9	<6.9	<6.9	<6.9	<69	<69
tetrachloroethylene	<1	<1	<10	<100	<4.1	<4.1	<4.1	<4.1	<41	<41
toluene	17	22	26	<100	31.2	29	12.2	12.3	<60	<60
1,2-trans-dichloroethylene	<1	<1	<10	<100	<1.6	<1.6	<1.6	<1.6	<16	<16
1,1,1-trichloroethane	<1	<1	<10	<100	<3.8	<3.8	<3.8	<3.8	<38	<38
1,1,2-trichloroethane	<1	<1	<10	<100	<5	<5	<5	<5	<50	<50
trichloroethylene	<1	<1	<10	<100	<1.9	<1.9	<1.9	<1.9	<19	<19
trichlorofluoromethane	<1	<1	<10	<100	<10	<10	<10	<10	<100	<100
vinyl chloride	<1	<1	<10	<100	<10	<10	<10	<10	<100	<100
Sub Total 1	3624	5288	2119	4155	1430.7	1610.3	2749.8	2317.9	2757	2386
Miscellaneous Volatile Organic Compounds										
methyl-iso-butyl ketone	NA	NA	<10	<100	<10	<10	<10	<10	<100	<100
methyl isoamyl ketone	NA	NA	<10	<100	<10	<10	<10	<10	<100	<100
m-xylene	NA	NA	17	<100	17.1	18.5	11	12.6	<100	<100
o-xylene/p-xylene	NA	NA	49	<100	55.3	59.5	43	49.7	<100	<100
Sub Total 2	NA	NA	66	0	72.4	78	54	62.3	0	0
Total VOC's Analyzed	3624	5288	2185	4155	1503.1	1688.3	2803.8	2380.2	2757	2386

Table E-1. Summary of Volatile Organic Compounds in Ground Water, W.G. Krumerich Plant, Monsanto Company, Sauget, Il. +++

Well Number:	GM-12A	GM-12A	GM-12B	GM-12B	GM-12B	GM-12C	GM-12C	GM-12C	GM-12C	GM-13
Date:	2/86	2/86+	9/84++	11/84	11/85	2/85	2/85+	5/85	5/85+	9/84++
USEPA Priority Pollutant Volatile Organic Compounds concentrations are in ug/L										
acrolein	<100	<100	NA	<1,000	<1,000	<100	<100	<100	<100	NA
acrylonitrile	<100	<100	NA	<1,000	<1,000	<100	<100	<100	<100	NA
benzene	1,170	1,160	700	2,090	2,100	66.7	54.7	27.4	26	1,400
bis (chloromethyl) ether	<10	<10	<150	<100	<100	<10	<10	<10	<10	<200
bromoform	<4.7	<4.7	<320	<100	<47	<4.7	<4.7	<4.7	<4.7	<640
carbon tetrachloride	<2.8	<2.8	<150	<100	<28	<2.8	<2.8	<2.8	<2.8	<300
chlorobenzene	499	394	<60	<100	<60	<6	10.4	<6	<6	850
chlorodibromomethane	<3.1	<3.1	<200	<100	<31	<3.1	<3.1	<3.1	<3.1	<400
chloroethane	<10	<10	<240	<100	<100	<10	<10	<10	<10	<480
2-chloroethylvinyl ether	<10	<10	<590	<100	<100	<10	<10	<10	<10	<1,180
chloroform	<1.6	<1.6	<80	<100	<16	<1.6	<1.6	<1.6	<1.6	<160
dichlorobromomethane	<2.2	<2.2	<110	<100	<22	<2.2	<2.2	<2.2	<2.2	<220
dichlorodifluoromethane	<10	<10	NA	<100	<100	<10	<10	<10	<10	NA
1,1-dichloroethane	<4.7	<4.7	<80	<100	<47	<4.7	<4.7	<4.7	<4.7	<160
1,2-dichloroethane	<2.8	<2.8	<150	<100	<28	<2.8	<2.8	<2.8	<2.8	<300
1,1-dichloroethylene	<2.8	<2.8	<190	<100	<28	<2.8	<2.8	<2.8	<2.8	<380
1,2-dichloropropane	<6	<6	<150	<100	<60	<6	<6	<6	<6	<300
cis-1,3-dichloropropylene	<5	<5	<150	<100	<50	<5	<5	<5	<5	<300
trans-1,3-dichloropropylene	<10	<10	<150	<100	<100	<10	<10	<10	<10	<300
ethylbenzene	11.3	7.9	230	<100	<72	40	37.4	<7.2	<7.2	25,000
methyl bromide	<10	<10	<150	<100	<100	<10	<10	<10	<10	<300
methyl chloride	<10	<10	<160	<100	<100	<10	<10	<10	<10	<320
methylene chloride	<2.8	6.5	200	<100	410	<2.8	<2.8	<2.8	<2.8	360
1,1,2,2-tetrachloroethane	<6.9	<6.9	<140	<100	<69	<6.9	<6.9	<6.9	<6.9	<280
tetrachloroethylene	<4.1	<4.1	<150	<100	<41	<4.1	<4.1	<4.1	<4.1	<300
toluene	<6	<6	100	112	63.3	125	113	16.2	14.4	1,200
1,2-trans-dichloroethylene	<1.6	<1.6	<150	<100	<16	<1.6	<1.6	<1.6	<1.6	<300
1,1,1-trichloroethane	<3.8	<3.8	<120	<100	<38	<3.8	<3.8	<3.8	<3.8	<240
1,1,2-trichloroethane	<5	<5	<160	<100	<50	<5	<5	<5	<5	<320
trichloroethylene	<1.9	<1.9	<130	<100	<19	<1.9	<1.9	<1.9	<1.9	<260
trichlorofluoromethane	<10	<10	<120	<100	<100	<10	<10	<10	<10	<240
vinyl chloride	<10	<10	<120	<100	<100	<10	<10	<10	<10	<240
Sub Total 1	1680.3	1568.4	1230	2202	2573.3	231.7	215.5	43.6	40.4	28810
Miscellaneous Volatile Organic Compounds										
methyl-iso-butyl ketone	<10	<10	<500	<100	<100	<10	<10	<10	<10	<1,000
methyl isoamyl ketone	<10	<10	<500	<100	<100	<10	<10	<10	<10	<1,000
m-xylene	<10	<10	<500	<100	<100	75.8	70.9	19	<10	<1,000
o-xylene/p-xylene	20	16.9	<500	<100	<100	74	68.2	21.9	17.3	<1,000
Sub Total 2	20	16.9	0	0	0	149.8	139.1	40.9	17.3	0
Total VOC's Analyzed	1700.3	1585.3	1230	2202	2573.3	381.5	354.6	84.5	57.7	28810

Table E-1. Summary of Volatile Organic Compounds in Ground Water, W.G. Krummrich Plant, Monsanto Company, Sauget, IL. ***

Well Number:	GM-13	GM-13	GM-14	GM-15	GM-16A	GM-16A	GM-16A	GM-16B	GM-16B	GM-16B
Date:	11/85	2/86	9/84**	9/84**	9/84**	5/85	11/85	9/84**	5/85	11/85
USEPA Priority Pollutant Volatile Organic Compounds concentrations are in ug/L										
acrolein	<2,000	<5,000	NA	NA	NA	<100	<100	NA	<100	<100
acrylonitrile	<2,000	<5,000	NA	NA	NA	<100	<100	NA	<100	<100
benzene	1,180	925	1,400	8	<0.5	<4.4	<4.4	<0.5	<4.4	<4.4
bis (chloromethyl) ether	<200	<500	<300	<1.5	<1.5	<10	<10	<1.5	<10	<10
bromoform	<94	<240	<640	<3.2	<3.2	<4.7	<4.7	<3.2	<4.7	<4.7
carbon tetrachloride	<56	<140	<300	<1.5	<1.5	<2.8	<2.8	<1.5	4.5	<2.8
chlorobenzene	3,900	18,600	152,000	103	<0.6	<6	<6	2	<6	<6
chlorodibromomethane	<62	<160	<400	<2.0	<2.0	<3.1	<3.1	<2.0	<3.1	<3.1
chloroethane	<200	<500	<480	<2.4	<2.4	<10	<10	<2.4	<10	<10
2-chloroethylvinyl ether	<200	<500	<1,180	<5.9	<5.9	<10	<10	<5.9	<10	<10
chloroform	<32	<80	<160	<0.8	2	<1.6	<1.6	58	<1.6	<1.6
dichlorobromomethane	<44	<110	<220	<1.1	<1.1	<2.2	<2.2	<1.1	<2.2	<2.2
dichlorodifluoromethane	<200	<500	NA	NA	NA	<10	<10	NA	<10	<10
1,1-dichloroethane	<94	<240	<160	<0.8	<0.8	<4.7	<4.7	<0.8	<4.7	<4.7
1,2-dichloroethane	<56	<140	<300	<1.5	<1.5	<2.8	<2.8	<1.5	<2.8	<2.8
1,1-dichloroethylene	<56	<140	<380	<1.9	<1.9	<2.8	<2.8	<1.9	<2.8	<2.8
1,2-dichloropropane	<120	<300	<300	<1.5	<1.5	<6	<6	<1.5	<6	<6
cis-1,3-dichloropropylene	<100	<250	<300	<1.5	<1.5	<5	<5	<1.5	<5	<5
trans-1,3-dichloropropylene	<200	<500	<300	<1.5	<1.5	<10	<10	<1.5	<10	<10
ethylbenzene	20,000	19,900	480	9	<0.4	<7.2	<7.2	<0.4	<7.2	<7.2
methyl bromide	<200	<500	<300	<1.5	<1.5	<10	<10	<1.5	<10	<10
methyl chloride	<200	<500	<320	<1.6	<1.6	<10	<10	<1.6	<10	<10
methylene chloride	1,310	<140	800	24	10	5.4	<2.8	5	<2.8	<2.8
1,1,2,2-tetrachloroethane	<140	<350	<280	<1.4	<1.4	<6.9	<6.9	<1.4	<6.9	<6.9
tetrachloroethylene	<82	<210	<300	<1.5	<1.5	<4.1	<4.1	<1.5	<4.1	<4.1
toluene	1,120	845	204	9	2	<6	<6	<0.4	<6	<6
1,2-trans-dichloroethylene	<32	<80	<300	<1.5	<1.5	<1.6	<1.6	<1.5	<1.6	<1.6
1,1,1-trichloroethane	<76	<190	<240	<1.2	<1.2	<3.8	<3.8	<1.2	<3.8	<3.8
1,1,2-trichloroethane	<100	<250	<320	<1.6	<1.6	<5	<5	<1.6	<5	<5
trichloroethylene	<38	<95	<260	<1.3	<1.3	<1.9	<1.9	<1.3	<1.9	<1.9
trichlorofluoromethane	<200	<500	<240	<1.2	<1.2	<10	<10	<1.2	<10	<10
vinyl chloride	<200	<500	<240	<1.2	<1.2	<10	<10	<1.2	<10	<10
Sub Total 1	27510	39270	154884	153	14	5.4	0	65	4.5	0
Miscellaneous Volatile Organic Compounds										
methyl-iso-butyl ketone	<200	7,470	<1,000	<5	<5	<10	<10	<5	<10	<10
methyl isoamyl ketone	<200	5,130	<1,000	<5	<5	<10	<10	<5	<10	<10
m-xylene	50,900	39,100	<1,000	<5	a)	<10	<10	a)	<10	<10
o-xylene/p-xylene	35,800	30,400	<1,000	<5	a)	<10	<10	a)	<10	<10
Sub Total 2	86700	82100	0	0	0	0	0	0	0	0
Total VOC's Analyzed	114210	121370	154884	153	14	5.4	0	65	4.5	0

Table E-1. Summary of Volatile Organic Compounds in Ground Water, W.G. Krummrich Plant, Monsanto Company, Sauget, IL. ***

Well Number:	GM-17A	GM-17A	GM-17A	GM-17B	GM-17B	GM-17B	GM-17C	GM-17C	GM-17C	GM-19A
Date:	9/84**	11/84	11/85	9/84**	11/84	11/85	9/84**	11/84	11/85	9/84**
USEPA Priority Pollutant Volatile Organic Compounds concentrations are in ug/L										
acrolein	NA	<10,000	<10,000	NA	<10,000	<100	NA	<100	<1,000	NA
acrylonitrile	NA	<10,000	<10,000	NA	<10,000	<100	NA	<100	<1,000	NA
benzene	NA	41,900	51,900	26,000	69,200	47,400	4,940	1,880	552	34
bis (chloroethyl) ether	<1.5	<1,000	<1,000	<300	<1,000	<10	<300	<10	<100	<1.5
bromoform	<3.2	<1,000	<470	<640	<1,000	<4.7	<640	<10	<47	<3.2
carbon tetrachloride	<1.5	<1,000	<280	<300	<1,000	<2.8	<300	<10	<28	<1.5
chlorobenzene	NA	57,500	56,500	5,300	17,600	376	13,900	9,510	3,500	<0.6
chlorodibromomethane	<2.0	<1,000	<310	<400	<1,000	<3.1	<400	<10	<31	<2.0
chloroethane	<2.4	<1,000	<1,000	<480	<1,000	<10	<480	<10	<100	<2.5
2-chloroethylvinyl ether	<5.9	<1,000	<1,000	<1,180	<1,000	<10	<1,180	<10	<100	<5.9
chloroform	<0.8	<1,000	<160	<160	<1,000	<1.6	<160	<10	<16	2
dichlorobromomethane	<1.1	<1,000	<220	<220	<1,000	<2.2	<220	<10	<22	<1.1
dichlorodifluoromethane	NA	<1,000	<1,000	NA	<1,000	<10	NA	<10	<100	NA
1,1-dichloroethane	<0.8	<1,000	<470	170	<1,000	<4.7	<160	<10	<47	<0.8
1,2-dichloroethane	<1.5	<1,000	<280	<300	<1,000	<2.8	<300	<10	<28	<1.5
1,1-dichloroethylene	<1.9	<1,000	<280	<380	<1,000	<2.8	205	<10	<28	1
1,2-dichloropropane	<1.5	<1,000	<600	<300	<1,000	<6	<300	<10	<60	<1.5
cis-1,3-dichloropropylene	<1.5	<1,000	<500	<300	<1,000	<5	<300	<10	<50	<1.5
trans-1,3-dichloropropylene	<1.5	<1,000	<1,000	<300	<1,000	<10	<300	<10	<100	<1.5
ethylbenzene	<0.4	<1,000	<720	250	<1,000	11	<80	<10	<72	<0.4
methyl bromide	<1.5	<1,000	<1,000	120	<1,000	<10	<300	<10	<100	<1.5
methyl chloride	<1.6	<1,000	<1,000	120	<1,000	<10	<320	<10	<100	<1.6
methylene chloride	3	3,060	<280	540	3,740	<2.8	7,140	<10	<28	39
1,1,2,2-tetrachloroethane	<1.4	<1,000	<690	<280	<1,000	<6.9	<280	<10	<69	<1.4
tetrachloroethylene	<1.5	<1,000	<410	<300	<1,000	<4.1	<300	<10	<41	<1.5
toluene	6	<1,000	<600	220	<1,000	9.1	194	<10	<60	<0.4
1,2-trans-dichloroethylene	<1.5	<1,000	<160	<300	<1,000	<1.6	<300	<10	<16	<1.5
1,1,1-trichloroethane	<1.2	<1,000	<380	<240	<1,000	<3.8	<240	<10	<38	<1.2
1,1,2-trichloroethane	<1.6	<1,000	<500	<320	<1,000	<5	<320	<10	<50	<1.6
trichloroethylene	<1.3	<1,000	<190	<260	<1,000	<1.9	<260	<10	<19	<1.3
trichlorofluoromethane	<1.2	<1,000	<1,000	<240	<1,000	<10	<240	<10	<100	<1.2
vinyl chloride	<1.2	<1,000	<1,000	130	<1,000	<10	<240	<10	<100	<1.2
Sub Total 1	9	102460	108400	32850	90540	47796.1	26379	11390	4052	76
Miscellaneous Volatile Organic Compounds										
methyl-iso-butyl ketone	<5	<10,000	<1,000	<1,000	<10,000	<10	<1,000	<100	<100	<5
methyl isoamyl ketone	<5	<10,000	<1,000	<1,000	<10,000	<10	<1,000	<100	<100	<5
m-xylene	<5	<1,000	<1,000	<1,000	<1,000	<10	<1,000	<10	<100	<5
o-xylene/p-xylene	<5	<1,000	<1,000	<1,000	<1,000	<10	<1,000	<10	<100	<5
Sub Total 2	0	0	0	0	0	0	0	0	0	0
Total VOC's Analyzed	9	102460	108400	32850	90540	47796.1	26379	11390	4052	76

Table E-1. Summary of Volatile Organic Compounds in Ground Water, W.G. Krumerich Plant, Monsanto Company, Sauget, IL. ***

Well Number:	GM-18A	GM-18A	GM-18B	GM-18B	GM-18B	GM-25A	GM-25A	GM-25B**	GM-25B	GM-25B
Date:	5/85	11/85	9/84**	5/85	11/85	9/84	11/84	9/84	11/84	11/85
USEPA Priority Pollutant Volatile Organic Compounds concentrations are in ug/L										
acrolein	<100	<100	NA	<100	<100	NA	<100	NA	<100	<100
acrylonitrile	<100	<100	NA	<100	<100	NA	<100	NA	<100	<100
benzene	<4.4	<4.4	35	63.3	24.1	1	<10	<0.5	<10	<4.4
bis (chloroethyl) ether	<10	<10	<1.5	<10	<10	<1.5	<10	<1.5	<10	<10
bromoform	<4.7	<4.7	<3.2	<4.7	<4.7	<3.2	<10	<3.2	<10	<4.7
carbon tetrachloride	<2.8	<2.8	<1.5	<2.8	<2.8	<1.5	<10	<1.5	<10	<2.8
chlorobenzene	<6	<6	100	285.1	174	14	<10	<0.6	<10	<6
chlorodibromomethane	<3.1	<3.1	<2.0	<3.1	<3.1	<2.0	<10	<2.0	<10	<3.1
chloroethane	<10	<10	22	<10	<10	<2.4	<10	<2.4	<10	<10
2-chloroethylvinyl ether	<10	<10	<5.9	<10	<10	<5.9	<10	<5.9	<10	<10
chloroform	<1.6	<1.6	<0.8	<1.6	<1.6	3	<10	3	<10	<1.6
dichlorobromomethane	<2.2	<2.2	<1.1	<2.2	<2.2	<1.1	<10	<1.1	<10	<2.2
dichlorodifluoromethane	<10	<10	NA	<10	<10	NA	<10	NA	<10	<10
1,1-dichloroethane	<4.7	<4.7	<0.8	<4.7	<4.7	<0.8	<10	<0.8	<10	<4.7
1,2-dichloroethane	<2.8	<2.8	<1.5	<2.8	<2.8	<1.5	<10	<1.5	<10	<2.8
1,1-dichloroethylene	<2.8	<2.8	1	<2.8	<2.8	<1.9	<10	<1.9	<10	<2.8
1,2-dichloropropane	<6	<6	<1.5	<6	<6	<1.5	<10	<1.5	<10	<6
cis-1,3-dichloropropylene	<5	<5	<1.5	<5	<5	<1.5	<10	<1.5	<10	<5
trans-1,3-dichloropropylene	<10	<10	<1.5	<10	<10	<1.5	<10	<1.5	<10	<10
ethylbenzene	<7.2	<7.2	<0.4	<7.2	<7.2	<0.4	<10	<0.4	<10	<7.2
methyl bromide	<10	<10	<1.5	<10	<10	<1.5	<10	<1.5	<10	<10
methyl chloride	<10	<10	<1.6	<10	<10	<1.6	<10	<1.6	<10	<10
methylene chloride	<2.8	<2.8	37	<2.8	<2.8	5	<10	2	<10	<2.8
1,1,2,2-tetrachloroethane	<6.9	<6.9	<1.4	<6.9	<6.9	<1.4	<10	<1.4	<10	<6.9
tetrachloroethylene	<4.1	<4.1	<1.5	<4.1	<4.1	<1.5	<10	<1.5	<10	<4.1
toluene	<6	<6	1	<6	<6	1	<10	<0.4	<10	<6
1,2-trans-dichloroethylene	<1.6	<1.6	1	1.7	<1.6	<1.5	<10	<1.5	<10	<1.6
1,1,1-trichloroethane	<3.8	<3.8	<1.2	<3.8	<3.8	<1.2	<10	<1.2	<10	<3.8
1,1,2-trichloroethane	<5	<5	<1.6	<5	<5	<1.6	<10	<1.6	<10	<5
trichloroethylene	<1.9	<1.9	<1.3	<1.9	<1.9	<1.3	<10	<1.3	<10	<1.9
trichlorofluoromethane	<10	<10	<1.2	<10	<10	<1.2	<10	<1.2	<10	<10
vinyl chloride	<10	<10	<1.2	34.3	31.4	<1.2	<10	<1.2	<10	<10
Sub Total 1	0	0	197	384.4	229.5	24	0	5	0	0
Miscellaneous Volatile Organic Compounds										
methyl-iso-butyl ketone	<10	<10	<5	<10	<10	<5	<100	<5	<10	<10
methyl isoamyl ketone	<10	<10	<5	<10	<10	<5	<100	<5	<10	<10
m-xylene	<10	<10	<5	<10	<10	<5	<10	b)	<10	<10
o-xylene/p-xylene	<10	<10	<5	<10	<10	<5	<10	b)	<10	<10
Sub Total 2	0	0	0	0	0	0	0	0	0	0
Total VOC's Analyzed	0	0	197	384.4	229.5	24	0	5	0	0

Table E-1. Summary of Volatile Organic Compounds in Ground Water, W.G. Krummrich Plant, Monsanto Company, Sauget, Il. ***

Well Number:	GM-27B	GM-27B	GM-27B	GM-27C	GM-27C	GM-27C	GM-29B	GM-28B	GM-28B	GM-28C
Date:	9/84**	11/85	2/86	9/84**	11/85	2/86	9/84**	11/85	2/86	9/84**
USEPA Priority Pollutant Volatile Organic Compounds concentrations are in ug/L										
acrolein	NA	<100	<100	NA	<1,000	<1,000	NA	<5,000	<1,000	NA
acrylonitrile	NA	<100	<100	NA	<1,000	<1,000	NA	<5,000	<1,000	NA
benzene	36	35.6	619	160	554	765	410	934	644	1,000
bis (chloromethyl) ether	<1.5	<10	<10	<1.5	<100	<100	<1.5	<500	<100	<1.5
bromoform	<3.2	<4.7	<4.7	<3.2	<47	<47	<3.2	<240	<47	<3.2
carbon tetrachloride	<1.5	<2.8	<2.8	<1.5	<28	<28	<1.5	<140	<28	<1.5
chlorobenzene	80	143	459	275	1,220	1,950	2,804	6,120	6,130	3,800
chlorodibromomethane	<2.0	<3.1	<3.1	<2.0	<31	<31	<2.0	<160	<31	<2.0
chloroethane	<2.4	<10	<10	<2.4	<100	<100	<2.4	<500	<100	<2.4
2-chloroethylvinyl ether	<5.9	<10	<10	<5.9	<100	<100	<5.9	<500	<100	<5.9
chloroform	<0.8	<1.6	<1.6	<0.8	<16	<16	<0.8	<80	<16	<0.8
dichlorobromomethane	<1.1	<2.2	<2.2	<1.1	<22	<22	<1.1	<110	<22	<1.1
dichlorodifluoromethane	NA	<10	<10	NA	<100	<100	NA	<500	<100	NA
1,1-dichloroethane	<0.8	<4.7	<4.7	<0.8	<47	<47	<0.8	<240	<47	<0.8
1,2-dichloroethane	<1.5	<2.8	<2.8	<1.5	<28	<28	<1.5	<140	<28	<1.5
1,1-dichloroethylene	<1.9	<2.8	<2.8	1	<28	<28	1	<140	<28	2
1,2-dichloropropane	<1.5	<6	<6	<1.5	<60	<60	<1.5	<300	<60	<1.5
cis-1,3-dichloropropylene	<1.5	<5	<5	<1.5	<50	<50	<1.5	<250	<50	<1.5
trans-1,3-dichloropropylene	<1.5	<10	<10	<1.5	<100	<100	<1.5	<500	<100	<1.5
ethylbenzene	6	<7.2	<7.2	1	<72	<72	12	<360	<72	19
methyl bromide	<1.5	<10	<10	<1.5	<100	<100	<1.5	<500	<100	<1.5
methyl chloride	<1.6	<10	<10	<1.6	<100	<100	<1.6	<500	<100	<1.6
methylene chloride	40	<2.8	13	38	<28	<28	71	<140	<28	45
1,1,2,2-tetrachloroethane	<1.4	<6.9	<6.9	<1.4	<69	<69	<1.4	<350	<69	<1.4
tetrachloroethylene	<1.5	<4.1	<4.1	<1.5	<41	<41	<1.5	<210	<41	<1.5
toluene	4	<6	6	2	<60	<60	18	<300	<60	35
1,2-trans-dichloroethylene	<1.5	<1.6	<1.6	<1.5	<16	<16	<1.5	<80	<16	2
1,1,1-trichloroethane	<1.2	<3.8	<3.8	<1.2	<38	<38	<1.2	<190	<38	<1.2
1,1,2-trichloroethane	<1.6	<5	<5	<1.6	<50	<50	<1.6	<250	<50	<1.6
trichloroethylene	<1.3	<1.9	<1.9	<1.3	<19	<19	<1.3	<95	<19	<1.3
trichlorofluoromethane	<1.2	<10	<10	<1.2	<100	<100	<1.2	<500	<100	<1.2
vinyl chloride	<1.2	<10	<10	<1.2	<100	<100	<1.2	<500	<100	<1.2
Sub Total 1	166	178.6	1097	477	1774	2715	3316	7054	6774	4902
Miscellaneous Volatile Organic Compounds										
methyl-iso-butyl ketone	<5	<10	<10	<5	<100	<100	2	<500	<100	<5
methyl isoamyl ketone	<5	<10	<10	<5	<100	<100	<5	<500	<100	<5
m-xylene	b)	<10	<10	b)	<100	<100	c)	<500	<100	c)
o-xylene/p-xylene	b)	<10	<10	b)	<100	<100	c)	<500	<100	c)
Sub Total 2	0	0	0	0	0	0	2	0	0	0
Total VOC's Analyzed	166	178.6	1097	477	1774	2715	3318	7054	6774	4902

Table E-1. Summary of Volatile Organic Compounds in Ground Water, W.G. Krummrich Plant, Monsanto Company, Sauget, IL. ***

Well Number:	GM-28C	GM-28C	GM-29	GM-29	GM-30	GM-30	GM-30	GM-31A	GM-31A	GM-31A
Date:	11/85	2/86	9/84**	11/85	9/84**	11/85	2/86	2/85	5/85	11/85
USEPA Priority Pollutant Volatile Organic Compounds concentrations are in ug/L										
acrolein	<5,000	<1,000	NA	<100	NA	<100	<100	<100	<100	<100
acrylonitrile	<5,000	<1,000	NA	<100	NA	<100	<100	<100	<100	<100
benzene	516	470	<0.5	<4.4	735	<4.4	<4.4	20.9	461.8	36
bis (chloromethyl) ether	<500	<100	<1.5	<10	<1.5	<10	<10	<10	<10	<10
bromoform	<240	<47	<3.2	<4.7	<3.2	<4.7	<4.7	<4.7	<4.7	<4.7
carbon tetrachloride	<140	<28	<1.5	<2.8	<1.5	<2.8	<2.8	<2.8	<2.8	<2.8
chlorobenzene	5,130	4,890	<0.6	<6	<0.6	<6	7.14	8.4	6.4	15.1
chlorodibromomethane	<160	<31	<2.0	<3.1	<2.0	<3.1	<3.1	<3.1	<3.1	<3.1
chloroethane	<500	<100	<2.4	<10	<2.4	<10	<10	<10	<10	<10
2-chloroethylvinyl ether	<500	<100	<5.9	<10	<5.9	<10	<10	<10	<10	<10
chloroform	<80	<16	2	<1.6	12	11.2	9.24	<1.6	<1.6	<1.6
dichlorobromomethane	<110	<22	<1.1	<2.2	<1.1	<2.2	<2.2	<2.2	<2.2	<2.2
dichlorodifluoromethane	<500	<100	NA	<10	NA	<10	<10	<10	<10	<10
1,1-dichloroethane	<240	<47	<0.8	<4.7	<0.8	<4.7	<4.7	<4.7	<4.7	<4.7
1,2-dichloroethane	<140	<28	<1.5	<2.8	<1.5	<2.8	<2.8	<2.8	<2.8	<2.8
1,1-dichloroethylene	<140	<28	<1.9	<2.8	<1.9	<2.8	<2.8	<2.8	<2.8	<2.8
1,2-dichloropropane	<300	<60	<1.5	<6	<1.5	<6	<6	<6	<6	<6
cis-1,3-dichloropropylene	<250	<50	<1.5	<5	<1.5	<5	<5	<5	<5	<5
trans-1,3-dichloropropylene	<500	<100	<1.5	<10	<1.5	<10	<10	<10	<10	<10
ethylbenzene	<360	<72	<0.4	<7.2	<0.4	<7.2	<7.2	<7.2	<7.2	<7.2
methyl bromide	<500	<100	<1.5	<10	<1.5	<10	<10	<10	<10	<10
methyl chloride	<500	<100	8	<10	<1.6	<10	<10	<10	<10	<10
methylene chloride	178	<28	<1.1	<2.8	185	<2.8	<2.8	<2.8	<2.8	5.3
1,1,2,2-tetrachloroethane	<350	<69	<1.4	<6.9	<1.4	<6.9	<6.9	<6.9	<6.9	<6.9
tetrachloroethylene	<210	<41	<1.5	<4.1	<1.5	4.31	<4.1	<4.1	<4.1	<4.1
toluene	<300	<60	<0.4	<6	<0.4	<6	<6	<6	<6	<6
1,2-trans-dichloroethylene	<80	<16	<1.5	<1.6	<1.5	<1.6	<1.6	<1.6	<1.6	<1.6
1,1,1-trichloroethane	<190	<38	<1.2	<3.8	<1.2	<3.8	<3.8	<3.8	<3.8	<3.8
1,1,2-trichloroethane	<250	<50	<1.6	<5	<1.6	<5	<5	<5	<5	<5
trichloroethylene	<95	<19	2	<1.9	<1.3	3.99	<1.9	<1.9	<1.9	<1.9
trichlorofluoroethane	<500	<100	<1.2	<10	<1.2	<10	<10	<10	<10	<10
vinyl chloride	<500	<100	<1.2	<10	<1.2	<10	<10	<10	<10	<10
Sub Total 1	5824	5360	12	0	932	19.5	16.38	29.3	468.2	56.4
Miscellaneous Volatile Organic Compounds										
methyl-iso-butyl ketone	<500	<100	<5	<10	<5	18	<10	<10	<10	<10
methyl isoamyl ketone	<500	<100	<5	<10	<5	14.6	<10	<10	<10	<10
m-xylene	<500	<100	<5	<10	c)	<10	<10	<10	<10	<10
o-xylene/p-xylene	<500	<100	<5	<10	c)	<10	<10	<10	<10	<10
Sub Total 2	0	0	0	0	0	32.6	0	0	0	0
Total VOC's Analyzed	5824	5360	12	0	932	52.1	16.38	29.3	468.2	56.4

Table E-1. Summary of Volatile Organic Compounds in Ground Water, W.G. Krummrich Plant, Monsanto Company, Sauget, IL. ***

Well Number:	GM-31A	GM-31B	GM-31B	GM-31B	GM-31B	GM-31C	GM-31C	GM-31C	GM-31C	B-24A
Date:	11/85*	2/85	5/85	11/85	11/85*	2/85	5/85	11/85	11/85*	2/86
USEPA Priority Pollutant Volatile Organic Compounds concentrations are in ug/L										
acrolein	<100	<100	<100	<100	<100	<100	<100	<100	<100	<10,000
acrylonitrile	<100	<100	<100	<100	<100	<100	<100	<100	<100	<10,000
benzene	36.5	<4.4	15	<4.4	<4.4	79.4	75.2	25.9	27.1	2,360
bis (chloroethyl) ether	<10	<10	<10	<10	<10	<10	<10	<10	<10	<1,000
bromoform	<4.7	<4.7	<4.7	<4.7	<4.7	<4.7	<4.7	<4.7	<4.7	<470
carbon tetrachloride	<2.8	<2.8	<2.8	<2.8	<2.8	<2.8	<2.8	<2.8	<2.8	<280
chlorobenzene	12.5	8.2	132.6	<6	<6	437	487.6	495	511	6,180
chlorodibromomethane	<3.1	<3.1	<3.1	<3.1	<3.1	<3.1	<3.1	<3.1	<3.1	<310
chloroethane	<10	<10	<10	<10	<10	20.6	<10	<10	<10	<1,000
2-chloroethylvinyl ether	<10	<10	<10	<10	<10	<10	<10	<10	<10	<1,000
chloroform	<1.6	<1.6	<1.6	<1.6	<1.6	12.9	<1.6	<1.6	<1.6	<160
dichlorobromomethane	<2.2	<2.2	<2.2	<2.2	<2.2	<2.2	<2.2	<2.2	<2.2	<220
dichlorodifluoromethane	<10	<10	<10	<10	<10	<10	<10	<10	<10	<1,000
1,1-dichloroethane	<4.7	<4.7	<4.7	<4.7	<4.7	<4.7	<4.7	<4.7	<4.7	<470
1,2-dichloroethane	<2.8	<2.8	<2.8	<2.8	<2.8	<2.8	<2.8	<2.8	<2.8	2,100
1,1-dichloroethylene	<2.8	<2.8	<2.8	<2.8	<2.8	<2.8	<2.8	<2.8	<2.8	<280
1,2-dichloropropane	<6	<6	<6	<6	<6	<6	<6	<6	<6	<600
cis-1,3-dichloropropylene	<5	<5	<5	<5	<5	<5	<5	<5	<5	<500
trans-1,3-dichloropropylene	<10	<10	<10	<10	<10	<10	<10	<10	<10	<1,000
ethylbenzene	<7.2	<7.2	<7.2	<7.2	<7.2	<7.2	<7.2	<7.2	<7.2	<720
methyl bromide	<10	<10	<10	<10	<10	<10	<10	<10	<10	<1,000
methyl chloride	<10	<10	<10	<10	<10	<10	<10	<10	<10	<1,000
methylene chloride	<2.8	<2.8	<2.8	<2.8	<2.8	<2.8	<2.8	<2.8	<2.8	1,160
1,1,2,2-tetrachloroethane	<6.9	<6.9	<6.9	<6.9	<6.9	<6.9	<6.9	<6.9	<6.9	<690
tetrachloroethylene	<4.1	<4.1	<4.1	<4.1	<4.1	<4.1	4.2	<4.1	<4.1	<410
toluene	<6	<6	<6	<6	<6	<6	<6	<6	<6	1,140
1,2-trans-dichloroethylene	<1.6	<1.6	<1.6	<1.6	<1.6	<1.6	2.7	<1.6	<1.6	<160
1,1,1-trichloroethane	<3.8	<3.8	<3.8	<3.8	<3.8	<3.8	<3.8	<3.8	<3.8	<380
1,1,2-trichloroethane	<5	<5	<5	<5	<5	<5	<5	<5	<5	<500
trichloroethylene	<1.9	<1.9	<1.9	<1.9	<1.9	<1.9	<1.9	<1.9	<1.9	<190
trichlorofluoromethane	<10	<10	<10	<10	<10	<10	<10	<10	<10	<1,000
vinyl chloride	<10	<10	<10	<10	<10	32.2	47.2	42.6	45.2	<1,000
Sub Total 1	49	8.2	147.6	0	0	582.1	616.9	563.5	583.3	12940
Miscellaneous Volatile Organic Compounds										
methyl-iso-butyl ketone	<10	<10	<10	<10	<10	<10	<10	<10	<10	3,170
methyl isoamyl ketone	<10	<10	<10	<10	<10	<10	<10	<10	<10	<1,000
m-xylene	<10	<10	<10	<10	<10	<10	<10	<10	<10	<1,000
o-xylene/p-xylene	<10	<10	<10	<10	<10	<10	<10	<10	<10	<1,000
Sub Total 2	0	0	0	0	0	0	0	0	0	3170
Total VOC's Analyzed	49	8.2	147.6	0	0	582.1	616.9	563.5	583.3	16110

Table E-1. Summary of Volatile Organic Compounds in Ground Water, W.G. Krummrich Plant, Monsanto Company, Sauget, IL. ***

Well Number:	B-25A	B-25A	B-25B	B-25B	B-27B	B-27B	B-28A	B-29A	B-29A	B-29B
Date:	6/84	11/85	6/84	11/85	9/84**	9/84*	2/86	6/84	11/85	6/84
USEPA Priority Pollutant Volatile Organic Compounds concentrations are in ug/L										
acrolein	<1	<10,000	<1	<10,000	NA	NA	<1,000	<1	<1,000	<1
acrylonitrile	<1	<10,000	<1	<10,000	NA	NA	<1,000	<1	<1,000	<1
benzene	<1	<440	51	<440	3,420	7,058	<44	18	<44	20
bis (chloroethyl) ether	<1	<1,000	<1	<1,000	<1.5	<300	<100	<1	<100	<1
bromoform	<1	<470	<1	<470	<3.2	<640	<47	<1	<47	<1
carbon tetrachloride	<1	<280	<1	<280	<1.5	<300	<28	<1	<28	<1
chlorobenzene	8,520	18,900	9,930	13,100	4,160	5,320	1,510	1,970	1,280	769
chlorodibromomethane	<1	<310	<1	<310	<2.0	<400	<31	<1	<31	<1
chloroethane	309	<1,000	42	<1,000	<2.4	<480	<100	<1	<100	<1
2-chloroethylvinyl ether	<1	<1,000	<1	<1,000	<5.9	<1,180	<100	<1	<100	<1
chloroform	77	<160	9	<160	<0.8	<160	<16	18	28.9	39
dichlorobromomethane	<1	<220	<1	<220	<1.1	<220	<22	<1	<22	<1
dichlorodifluoromethane	<1	<1,000	<1	<1,000	NA	NA	<100	<1	<100	<1
1,1-dichloroethane	<1	<470	<1	<470	<0.8	<160	<47	<1	<47	<1
1,2-dichloroethane	10,000	18,500	1,430	3,510	<1.5	<300	<28	<1	<28	<1
1,1-dichloroethylene	<1	<280	<1	<280	<1.9	260	<28	<1	<28	<1
1,2-dichloropropane	<1	<600	<1	<600	<1.5	<300	<60	<1	<60	<1
cis-1,3-dichloropropylene	<1	<500	<1	<500	<1.5	<300	<50	<1	<50	<1
trans-1,3-dichloropropylene	<1	<1,000	<1	<1,000	<1.5	<300	<100	<1	<100	<1
ethylbenzene	11	<720	4	<720	<0.4	<80	<72	14	<72	33
methyl bromide	<1	<1,000	<1	<1,000	<1.5	<300	<100	<1	<100	<1
methyl chloride	30	<1,000	29	<1,000	<1.6	<320	<100	<1	<100	<1
methylene chloride	204	<280	<1	<280	1,740	8,100	<28	50	<28	19
1,1,2,2-tetrachloroethane	<1	<690	<1	<690	<1.4	<280	<69	<1	<69	<1
tetrachloroethylene	19	<410	15	<410	<1.5	<300	<41	<1	<41	<1
toluene	316	736	269	<600	16,200	18,500	<60	195	532	225
1,2-trans-dichloroethylene	<1	<160	2	<160	<1.5	<300	<16	<1	<16	<1
1,1,1-trichloroethane	<1	<380	<1	<380	<1.2	<240	<38	<1	<38	<1
1,1,2-trichloroethane	<1	<500	<1	<500	<1.6	<320	<50	<1	<50	<1
trichloroethylene	7	<190	4	<190	<1.3	<260	<19	2	40.2	<1
trichlorofluoromethane	<1	<1,000	<1	<1,000	<1.2	<240	<100	<1	<100	<1
vinyl chloride	4	<1,000	7	<1,000	<1.2	<240	<100	<1	<100	<1
Sub Total 1	19497	38136	11792	16610	25520	39238	1510	2267	1831.1	1105
Miscellaneous Volatile Organic Compounds										
methyl-iso-butyl ketone	NA	<1,000	NA	<1,000	<5	40,400	<100	NA	248	NA
methyl isoamyl ketone	NA	<1,000	NA	<1,000	<5	<1,000	<100	NA	<100	NA
m-xylene	NA	<1,000	NA	<1,000	<5	<1,000	<100	NA	<100	NA
o-xylene/p-xylene	NA	<1,000	NA	<1,000	<5	<1,000	<100	NA	<100	NA
Sub Total 2	NA	0	NA	0	0	40400	0	NA	248	NA
Total VOC's Analyzed	19497	38136	11792	16610	25520	79638	1510	2267	2129.1	1105

Table E-1. Summary of Volatile Organic Compounds in Ground Water, W.G. Krummrich Plant, Monsanto Company, Sauget, IL. ***

Well Number:	B-29B	B-29B	B-29B	B-29B	B-30B	B-31B	B-31B	B-31C	B-31C	B-31C
Date:	6/84*	6/84@	11/84	11/85	9/84**	11/85	2/86	9/84**	11/85	2/86
USEPA Priority Pollutant Volatile Organic Compounds concentrations are in ug/L										
acrolein	<1	<50,000	<10,000	<1,000	NA	<100	<100	NA	<100	<100
acrylonitrile	<1	<50,000	<10,000	<1,000	NA	<100	<100	NA	<100	<100
benzene	16	<5,000	<1,000	<44	176	<4.4	<4.4	<0.5	10.7	62.9
bis (chloroethyl) ether	<1	<5,000	<1,000	<100	<1.5	<10	<10	<1.5	<10	<10
bromoform	<1	<5,000	<1,000	<47	<3.2	<4.7	<4.7	<3.2	<4.7	<4.7
carbon tetrachloride	<1	<5,000	<1,000	<28	<1.5	<2.8	<2.8	<1.5	<2.8	<2.8
chlorobenzene	828	<5,000	1,500	1,710	2,350	<6	<6	<0.6	104	483
chlorodibromomethane	<1	<5,000	<1,000	<31	<2.0	<3.1	<3.1	<2.0	<3.1	<3.1
chloroethane	<1	<5,000	<1,000	<100	<2.4	<10	<10	<2.4	<10	<10
2-chloroethylvinyl ether	<1	<5,000	<1,000	<100	<5.9	<10	<10	<5.9	<10	<10
chloroform	38	<5,000	<1,000	48.7	64	<1.6	<1.6	3	<1.6	<1.6
dichlorobromomethane	<1	<5,000	<1,000	<22	<1.1	<2.2	<2.2	<1.1	<2.2	<2.2
dichlorodifluoromethane	<1	<5,000	<1,000	<100	NA	<10	<10	NA	<10	<10
1,1-dichloroethane	<1	<5,000	<1,000	<47	3	<4.7	<4.7	<0.8	<4.7	<4.7
1,2-dichloroethane	<1	<5,000	<1,000	<28	142	<2.8	<2.8	<1.5	<2.8	<2.8
1,1-dichloroethylene	<1	<5,000	<1,000	<28	<1.9	<2.8	<2.8	<1.9	<2.8	<2.8
1,2-dichloropropane	<1	<5,000	<1,000	<60	<1.5	<6	<6	<1.5	<6	<6
cis-1,3-dichloropropylene	<1	<5,000	<1,000	<50	<1.5	<5	<5	<1.5	<5	<5
trans-1,3-dichloropropylene	<1	<5,000	<1,000	<100	<1.5	<10	<10	<1.5	<10	<10
ethylbenzene	30	<5,000	<1,000	<72	359	<7.2	<7.2	<0.4	<7.2	<7.2
methyl bromide	<1	<5,000	<1,000	<100	<1.5	<10	<10	<1.5	<10	<10
methyl chloride	<1	57,000	<1,000	<100	<1.6	<10	<10	<1.6	<10	<10
methylene chloride	17	127,000	<1,000	<28	48	<2.8	<2.8	6	<2.8	<2.8
1,1,2,2-tetrachloroethane	<1	<5,000	<1,000	<69	<1.4	<6.9	<6.9	<1.4	<6.9	<6.9
tetrachloroethylene	<1	<5,000	<1,000	<41	940	<4.1	<4.1	<1.5	<4.1	<4.1
toluene	227	<5,000	<1,000	491	228	<6	<6	1	<6	<6
1,2-trans-dichloroethylene	<1	<5,000	<1,000	<16	163	<1.6	<1.6	<1.5	<1.6	<1.6
1,1,1-trichloroethane	<1	<5,000	<1,000	<38	<1.2	<3.8	<3.8	<1.2	<3.8	<3.8
1,1,2-trichloroethane	<1	<5,000	<1,000	<50	<1.6	<5	<5	<1.6	<5	<5
trichloroethylene	<1	<5,000	<1,000	<19	36	<1.9	<1.9	<1.3	<1.9	<1.9
trichlorofluoromethane	<1	<5,000	<1,000	<100	<1.2	<10	<10	<1.2	<10	<10
vinyl chloride	<1	<5,000	<1,000	<100	<1.2	<10	<10	<1.2	<10	<10
Sub Total 1	1156	184000	1500	2249.7	4509	0	0	10	114.7	545.9
Miscellaneous Volatile Organic Compounds										
methyl-iso-butyl ketone	NA	NA	<1,000	177	2,640	<10	<10	<5	<10	<10
methyl isoamyl ketone	NA	NA	<1,000	<100	<5	<10	<10	<5	<10	<10
m-xylene	NA	NA	<1,000	218	d)	<10	<10	d)	<10	<10
o-xylene/p-xylene	NA	NA	<1,000	146	d)	<10	<10	d)	<10	<10
Sub Total 2	NA	NA	0	541	2640	0	0	0	0	0
Total VOC's Analyzed	1156	184000	1500	2790.7	7149	0	0	10	114.7	545.9

Table E-1. Summary of Volatile Organic Compounds in Ground Water, W.G. Krummrich Plant, Monsanto Company, Sauget, IL. ***

Well Number:	B-101	B-102	GM-105	GM-106	GM-106	P-1	P-2	P-2	P-5	P-5
Date:	9/84**	9/84**	11/85	2/86	2/86*	9/84**	6/84	11/85	6/84	11/85
USEPA Priority Pollutant Volatile Organic Compounds concentrations are in ug/L										
acrolein	NA	NA	<100	<1,000	<1,000	NA	<1	<1,000	<1	<100
acrylonitrile	NA	NA	<100	<1,000	<1,000	NA	<1	<1,000	<1	<100
benzene	<50	23	<4.4	<44	<44	<0.5	54	106	31	24.3
bis (chloroethyl) ether	<150	<1.5	<10	<100	<100	<1.5	<1	<100	<1	<10
bromoform	<320	<3.2	<4.7	<47	<47	<3.2	<1	<47	<1	<4.7
carbon tetrachloride	<150	<1.5	<2.8	<28	<28	<1.5	<1	<28	<1	<2.8
chlorobenzene	14,400	<0.6	21.4	201	<60	<0.6	687	764	130	98.1
chlorodibromomethane	<200	<2.0	<3.1	<31	<31	<2.0	<1	<31	<1	<3.1
chloroethane	<240	<2.4	<10	<100	<100	<2.4	<1	<100	<1	<10
2-chloroethylvinyl ether	<590	<5.9	<10	<100	<100	<5.9	<1	<100	<1	<10
chloroform	<80	0.8	<1.6	<16	<16	<0.8	<1	<16	<1	<1.6
dichlorobromomethane	<110	<1.1	<2.2	<22	<22	<1.1	<1	<22	<1	<2.2
dichlorodifluoromethane	NA	NA	<10	<100	<100	NA	<1	<100	<1	<10
1,1-dichloroethane	<80	<0.8	<4.7	<47	<47	<0.8	<1	<47	<1	<4.7
1,2-dichloroethane	<150	<1.5	<2.8	<28	<28	<1.5	<1	<28	<1	<2.8
1,1-dichloroethylene	<190	<1.9	<2.8	<28	<28	<1.9	<1	<28	<1	<2.8
1,2-dichloropropane	<150	<1.5	<6	<60	<60	<1.5	<1	<60	<1	<6
cis-1,3-dichloropropylene	<150	<1.5	<5	<50	<50	<1.5	<1	<50	<1	<5
trans-1,3-dichloropropylene	<150	<1.5	<10	<100	<100	<1.5	<1	<100	<1	<10
ethylbenzene	<40	<0.4	<7.2	<72	<72	<0.4	1	<72	1	<7.2
methyl bromide	<150	<1.5	<10	<100	<100	<1.5	<1	<100	<1	<10
methyl chloride	<160	<1.6	<10	<100	<100	<1.6	<1	<100	<1	<10
methylene chloride	400	2	<2.8	<28	<28	4	81	<28	99	<2.8
1,1,2,2-tetrachloroethane	<140	<1.4	<6.9	<69	<69	<1.4	<1	<69	<1	<6.9
tetrachloroethylene	<150	<1.5	<4.1	<41	<41	<1.5	<1	<41	<1	<4.1
toluene	1,180	1	15	104	<60	<0.4	4	<60	5	<6
1,2-trans-dichloroethylene	<150	<1.5	<1.6	<16	<16	<1.5	<1	<16	<1	<1.6
1,1,1-trichloroethane	<120	<1.2	<3.8	<38	<38	<1.2	<1	<38	<1	<3.8
1,1,2-trichloroethane	<160	<1.6	<5	<50	<50	<1.6	<1	<50	<1	<5
trichloroethylene	<130	<1.3	<1.9	<19	<19	<1.3	<1	<19	<1	<1.9
trichlorofluoromethane	<120	<1.2	<10	<100	<100	<1.2	<1	<100	<1	<10
vinyl chloride	<120	<1.2	<10	<100	<100	<1.2	<1	<100	<1	<10
Sub Total 1	15980	26.8	36.4	305	0	4	827	870	266	122.4
Miscellaneous Volatile Organic Compounds										
methyl-iso-butyl ketone	<500	<5	<10	<100	<100	<5	NA	<100	NA	<10
methyl isoamyl ketone	<500	<5	<10	<100	<100	<5	NA	<100	NA	<10
m-xylene	<500	<5	<10	100	<100	<5	NA	<100	NA	<10
o-xylene/p-xylene	<500	<5	<10	<100	<100	<5	NA	<100	NA	<10
Sub Total 2	0	0	0	100	0	0	NA	0	NA	0
Total VOC's Analyzed	15980	26.8	36.4	405	0	4	827	870	266	122.4

Table E-1. Summary of Volatile Organic Compounds in Ground Water, W.G. Krummrich Plant, Monsanto Company, Sauget, IL. ***

Well Number:	P-7	P-7	P-8	P-8	P-10	P-11	P-12	P-13	P-13	P-13
Date:	6/84	11/85	6/84	11/85	9/84**	9/84**	9/84**	6/84	6/84*	6/84*
USEPA Priority Pollutant Volatile Organic Compounds concentrations are in ug/L										
acrolein	<1	<25,000	<1	<1,000	NA	NA	NA	<1	<1	<50,000
acrylonitrile	<1	<25,000	<1	<1,000	NA	NA	NA	<1	<1	<50,000
benzene	2,080	1,810	162	531	132	113	560	61	60	<5,000
bis (chloroethyl) ether	<1	<2,500	<1	<100	<1.5	<1.5	<1.5	<1	<1	<5,000
bromoform	<1	<1,200	<1	<47	<3.2	<3.2	<3.2	<1	<1	<5,000
carbon tetrachloride	<1	<700	<1	<28	<1.5	<1.5	<1.5	<1	<1	<5,000
chlorobenzene	4,040	5,110	585	2,490	2,000	842	690	81	75	<5,000
chlorodibromomethane	<1	<780	<1	<31	<2.0	<2.0	<2.0	<1	<1	<5,000
chloroethane	<1	<2,500	<1	<100	<2.4	<2.4	<2.4	<1	<1	<5,000
2-chloroethylvinyl ether	<1	<2,500	<1	<100	<5.9	<5.9	<5.9	<1	<1	<5,000
chloroform	7	<400	<1	<16	<0.8	<0.8	<0.8	<1	<1	<5,000
dichlorobromomethane	<1	<550	<1	<22	<1.1	<1.1	<1.1	<1	<1	<5,000
dichlorodifluoromethane	<1	<2,500	<1	<100	NA	NA	NA	<1	<1	<5,000
1,1-dichloroethane	<1	<1,200	<1	<47	<0.8	<0.8	<0.8	<1	<1	<5,000
1,2-dichloroethane	<1	700	<1	<28	<1.5	<1.5	<1.5	<1	<1	<5,000
1,1-dichloroethylene	<1	<700	<1	<28	2	<1.9	<1.9	<1	<1	<5,000
1,2-dichloropropane	<1	<1,500	<1	<60	<1.5	<1.5	<1.5	<1	<1	<5,000
cis-1,3-dichloropropylene	<1	<1,300	<1	<50	<1.5	<1.5	<1.5	<1	<1	<5,000
trans-1,3-dichloropropylene	<1	<2,500	<1	<100	<1.5	<1.5	<1.5	<1	<1	<5,000
ethylbenzene	12	<1,800	13	74.6	<0.4	5	32	16	<1	<5,000
methyl bromide	<1	<2,500	<1	<100	<1.5	<1.5	<1.5	<1	<1	<5,000
methyl chloride	<1	<2,500	<1	<100	<1.6	<1.6	<1.6	<1	<1	138,000
methylene chloride	68	<700	19	<28	41	21	42	33	26	37,100
1,1,2,2-tetrachloroethane	<1	<1,700	<1	<69	<1.4	<1.4	<1.4	<1	<1	<5,000
tetrachloroethylene	<1	<1,000	<1	<41	<1.5	<1.5	<1.5	<1	<1	<5,000
toluene	322	<1,500	56	<60	24	10	19	5	4	19,200
1,2-trans-dichloroethylene	<1	<400	<1	<16	<1.5	<1.5	<1.5	<1	<1	<5,000
1,1,1-trichloroethane	<1	<950	<1	<38	<1.2	<1.2	<1.2	<1	<1	<5,000
1,1,2-trichloroethane	<1	<1,300	<1	<50	<1.6	<1.6	<1.6	<1	<1	<5,000
trichloroethylene	<1	<480	<1	<19	<1.3	<1.3	<1.3	<1	<1	<5,000
trichlorofluoromethane	<1	<2,500	<1	<100	<1.2	<1.2	<1.2	<1	<1	<5,000
vinyl chloride	<1	<2,500	<1	<100	<1.2	<1.2	<1.2	<1	<1	<5,000
Sub Total 1	6529	7620	835	3095.6	2199	991	1343	196	165	194300
Miscellaneous Volatile Organic Compounds										
methyl-iso-butyl ketone	NA	<2,500	NA	<100	<5	<5	<5	NA	NA	NA
methyl isoamyl ketone	NA	<2,500	NA	<100	<5	<5	<5	NA	NA	NA
m-xylene	NA	<2,500	NA	<100	<5	<5	<5	NA	NA	NA
o-xylene/p-xylene	NA	<2,500	NA	<100	<5	<5	<5	NA	NA	NA
Sub Total 2	NA	0	NA	0	0	0	0	NA	NA	NA
Total VOC's Analyzed	6529	7620	835	3095.6	2199	991	1343	196	165	194300

Table E-1. Summary of Volatile Organic Compounds in Ground Water, W.G. Krumrich Plant, Monsanto Company, Sauget, IL. ***

Well Number:	P-13	P-14	P-14	DW-1	DW-1	DW-4	DW-7	DW-7	DW-10	DW-19
Date:	11/85	6/84	11/85	9/84**	11/85	9/84**	11/85	2/86	9/84**	9/84**
USEPA Priority Pollutant Volatile Organic Compounds concentrations are in ug/L										
acrolein	<1,000	<1	<10,000	NA	<10,000	NA	<100	<5,000	NA	NA
acrylonitrile	<1,000	<1	<10,000	NA	<10,000	NA	<100	<5,000	NA	NA
benzene	89.4	269	<440	23,400	157,000	940	6.9	<220	6,240	<0.5
bis (chloroethyl) ether	<100	<1	<1,000	<300	<1,000	<300	<10	<500	<300	<1.5
bromoform	<47	<1	<470	<640	<470	<640	<4.7	<240	<640	<3.2
carbon tetrachloride	<28	<1	<280	<300	<280	<300	<2.8	<140	<300	<1.5
chlorobenzene	265	23,480	16,000	6,600	35,700	11,040	183	1,080	9,960	<0.6
chlorodibromomethane	<31	<1	<310	<400	<310	<400	<3.1	<160	<400	<2.0
chloroethane	<100	<1	<1,000	<480	<1,000	<480	<10	<500	<480	<2.4
2-chloroethylvinyl ether	<100	<1	<1,000	<1,180	<1,000	<1,180	<10	<500	<1,180	<5.9
chloroform	<16	<1	<160	<160	<160	<160	2.3	<80	<160	<0.8
dichlorobromomethane	<22	<1	<220	<220	<220	<220	<2.2	<110	<220	<1.1
dichlorodifluoromethane	<100	<1	<1,000	NA	<1,000	NA	<10	<500	NA	NA
1,1-dichloroethane	<47	<1	<470	<160	<470	<160	<4.7	<240	<160	<0.8
1,2-dichloroethane	<28	<1	<280	<300	<280	<300	<2.8	<140	<300	<1.5
1,1-dichloroethylene	<28	<1	<280	<380	<280	<380	<2.8	<140	<380	<1.9
1,2-dichloropropane	<60	<1	<600	<300	<600	<300	<6	<300	<300	<1.5
cis-1,3-dichloropropylene	<50	<1	<500	<300	<500	<300	<5	<250	<300	<1.5
trans-1,3-dichloropropylene	<100	<1	<1,000	<300	<1,000	<300	<10	<500	<300	<1.5
ethylbenzene	<72	4	<720	<80	<720	<80	<7.2	<360	200	<0.4
methyl bromide	<100	<1	<1,000	<300	<1,000	<300	<10	<500	<300	<1.5
methyl chloride	<100	<1	<1,000	<320	<1,000	<320	<10	<500	<320	<1.6
methylene chloride	<28	53	<280	2,020	<280	2,140	5	<140	2,380	5
1,1,2,2-tetrachloroethane	<69	<1	<690	<280	<690	<280	<6.9	<350	<280	<1.4
tetrachloroethylene	<41	<1	<410	<300	<410	<300	<4.1	<210	<300	<1.5
toluene	<60	6	<600	<80	<600	<80	8.5	<300	<80	<0.4
1,2-trans-dichloroethylene	<16	<1	<160	<300	<160	<300	7.4	<80	<300	<1.5
1,1,1-trichloroethane	<38	<1	<380	<240	<380	<240	<3.8	<190	<240	<1.2
1,1,2-trichloroethane	<50	<1	<500	<320	<500	<320	<5	<250	<320	<1.6
trichloroethylene	<19	<1	<190	<260	<190	<260	<1.9	<95	<260	<1.3
trichlorofluoromethane	<100	<1	<1,000	<240	<1,000	<240	<10	<500	<240	<1.2
vinyl chloride	<100	<1	<1,000	<240	<1,000	<240	<10	<500	<240	<1.2
Sub Total 1	354.4	23812	16000	32020	192700	14120	213.1	1080	18780	5
Miscellaneous Volatile Organic Compounds										
methyl-iso-butyl ketone	<100	NA	<1,000	<1,000	<1,000	<1,000	<10	<500	<1,000	<5
methyl isoamyl ketone	<100	NA	<1,000	<1,000	<1,000	<1,000	42.4	<500	<1,000	<5
m-xylene	<100	NA	<1,000	<1,000	<1,000	<1,000	<10	<500	<1,000	<5
o-xylene/p-xylene	<100	NA	<1,000	<1,000	<1,000	<1,000	<10	<500	<1,000	<5
Sub Total 2	0	NA	0	0	0	0	42.4	0	0	0
Total VOC's Analyzed	354.4	23812	16000	32020	192700	14120	255.5	1080	18780	5

Table E-1. Summary of Volatile Organic Compounds in Ground Water, W.G. Krummrich Plant, Monsanto Company, Sauget, IL. ***

Well Number:	DW-18	DW-18	DW-23	DW-24	DW-29	DW-29	DW-30	DW-33	DW-34	DW-34
Date:	9/84*	11/85	9/84**	9/84**	9/84**	9/84*	11/85	9/84**	9/84**	11/85
USEPA Priority Pollutant Volatile Organic Compounds concentrations are in ug/L										
acrolein	NA	<100	NA	NA	NA	NA	<100	NA	NA	<100
acrylonitrile	NA	<100	NA	NA	NA	NA	<100	NA	NA	<100
benzene	<0.5	184	<0.5	<0.5	<0.5	<25	22.7	<0.5	596,000	867
bis (chloromethyl) ether	<1.5	<10	<1.5	<1.5	<1.5	<75	<10	<1.5	<1,500	<10
bromoform	<3.2	<4.7	<3.2	<3.2	<3.2	<160	<4.7	<3.2	<3,200	<4.7
carbon tetrachloride	<1.5	<2.8	<1.5	<1.5	<1.5	<75	<2.8	<1.5	<1,500	<2.8
chlorobenzene	<0.6	980	<0.6	<0.6	32	760	149	<0.6	366	18
chlorodibromomethane	<2.0	<3.1	<2.0	<2.0	<2.0	<100	<3.1	<2.0	<2,000	<3.1
chloroethane	<2.4	<10	<2.4	<2.4	<2.4	<120	<10	<2.4	<2,400	<10
2-chloroethylvinyl ether	<5.9	<10	<5.9	<5.9	<5.9	<295	<10	<5.9	<5,900	<10
chloroform	<0.8	<1.6	<0.8	<0.8	<0.8	<40	<1.6	<0.8	<800	<1.6
dichlorobromomethane	<1.1	<2.2	<1.1	<1.1	<1.1	<55	<2.2	<1.1	<1,100	<2.2
dichlorodifluoromethane	NA	<10	NA	NA	NA	NA	<10	NA	NA	<10
1,1-dichloroethane	<0.8	<4.7	<0.8	<0.8	<0.8	<40	<4.7	<0.8	<800	<4.7
1,2-dichloroethane	<1.5	<2.8	2	<1.5	3	<75	<2.8	<1.5	<1,500	<2.8
1,1-dichloroethylene	<1.9	<2.8	<1.9	<1.9	<1.9	<95	<2.8	<1.9	<1,900	<2.8
1,2-dichloropropane	<1.5	<6	<1.5	<1.5	<1.5	<75	<6	<1.5	<1,500	<6
cis-1,3-dichloropropylene	<1.5	<5	<1.5	<1.5	<1.5	<75	<5	<1.5	<1,500	<5
trans-1,3-dichloropropylene	<1.5	<10	<1.5	<1.5	<1.5	<75	<10	<1.5	<1,500	<10
ethylbenzene	<0.4	15.5	<0.4	<0.4	<0.4	<20	<7.2	<0.4	<400	<7.2
methyl bromide	<1.5	<10	<1.5	<1.5	<1.5	<75	<10	<1.5	<1,500	<10
methyl chloride	<1.6	<10	<1.6	<1.6	<1.6	<80	<10	<1.6	4,060	<10
methylene chloride	4	<2.8	3	6	3	525	<2.8	9	<1,100	<2.8
1,1,2,2-tetrachloroethane	<1.4	<6.9	<1.4	<1.4	<1.4	<70	<6.9	<1.4	<1,400	<6.9
tetrachloroethylene	<1.5	<4.1	<1.5	<1.5	<1.5	<75	<4.1	<1.5	<1,500	<4.1
toluene	2	16.4	1	<0.4	<0.4	<20	<6	<0.4	1,280	<6
1,2-trans-dichloroethylene	<1.5	4	<1.5	<1.5	<1.5	<75	<1.6	<1.5	129	<1.6
1,1,1-trichloroethane	<1.2	<3.8	<1.2	<1.2	<1.2	<60	<3.8	<1.2	<1,200	<3.8
1,1,2-trichloroethane	<1.6	<5	<1.6	<1.6	<1.6	<80	<5	<1.6	<1,600	<5
trichloroethylene	<1.3	<1.9	<1.3	<1.3	<1.3	<65	<1.9	<1.3	<1,300	<1.9
trichlorofluoromethane	<1.2	<10	<1.2	<1.2	<1.2	<60	<10	<1.2	<1,200	<10
vinyl chloride	<1.2	<10	<1.2	<1.2	<1.2	<60	<10	<1.2	<1,200	<10
Sub Total 1	6	1199.9	6	6	38	1285	171.7	9	601835	885
Miscellaneous Volatile Organic Compounds										
methyl-iso-butyl ketone	NA	<10	<5	<5	<5	NA	<10	<5	<5,000	<10
methyl isoamyl ketone	NA	<10	<5	<5	<5	NA	<10	<5	<5,000	<10
m-xylene	NA	<10	e)	<5	<5	NA	<10	<5	<5,000	<10
o-xylene/p-xylene	NA	<10	e)	<5	<5	NA	<10	<5	<5,000	<10
Sub Total 2	NA	0	0	0	0	NA	0	0	0	0
Total VOC's Analyzed	6	1199.9	6	6	38	1285	171.7	9	601835	885

Table E-1. Summary of Volatile Organic Compounds in Ground Water, W.G. Krummrich Plant, Monsanto Company, Sauget, IL. ***

Well Number:	DW-34	DW-1-85	DW-1-85	BK-3	BK-3	BK-3	MW-6	MW-6	MW-6	MW-7
Date:	2/86	11/85	2/86	9/84**	11/85	2/86	9/84**	11/85	2/86	9/84
USEPA Priority Pollutant Volatile Organic Compounds concentrations are in ug/L										
acrolein	<100	<100	<500	NA	<1,000	<10,000	NA	<100	<1,000	NA
acrylonitrile	<100	<100	<500	NA	<1,000	<10,000	NA	<100	<1,000	NA
benzene	623	1,700	472	208	3,980	<440	<0.5	31.1	<44	0.5
bis (chloroethyl) ether	<10	<10	<50	<1.5	<100	<1,000	<1.5	<10	<100	<1.5
bromoform	<4.7	<4.7	<24	<3.2	<47	<470	<3.2	<4.7	<47	<3.2
carbon tetrachloride	<2.8	<2.8	<14	<1.5	<28	<280	<1.5	<2.8	<28	<1.5
chlorobenzene	6.6	6,680	3,650	1,172	4,610	972	<0.6	<6	210	150
chlorodibromomethane	<3.1	<3.1	<16	<2.0	<31	<310	<2.0	<3.1	<31	<2.0
chloroethane	<10	<10	<50	<2.4	<100	<1,000	<2.4	<10	<100	<2.4
2-chloroethylvinyl ether	<10	<10	<50	<5.9	<100	<1,000	<5.9	<10	<100	<5.9
chloroform	<1.6	<1.6	<8	<0.8	<16	<160	<0.8	<1.6	<16	<0.8
dichlorobromomethane	<2.2	<2.2	<11	<1.1	<22	<220	<1.1	<2.2	<22	<1.1
dichlorodifluoromethane	<10	<10	<50	NA	<100	<1,000	NA	<10	<100	NA
1,1-dichloroethane	<4.7	<4.7	50.6	<0.8	<47	<470	<0.8	<4.7	<47	<0.8
1,2-dichloroethane	<2.8	<2.8	<14	<1.5	<28	<280	<1.5	<2.8	<28	<1.5
1,1-dichloroethylene	<2.8	<2.8	192	<1.9	<28	<280	<1.9	<2.8	<28	<1.9
1,2-dichloropropane	<6	<6	<30	<1.5	<60	<600	<1.5	<6	<60	<1.5
cis-1,3-dichloropropylene	<5	<5	<25	<1.5	<50	<500	<1.5	<5	<50	<1.5
trans-1,3-dichloropropylene	<10	<10	<50	<1.5	<100	<1,000	<1.5	<10	<100	<1.5
hylbenzene	<7.2	<7.2	<36	7	<72	<720	<0.4	15	<72	<0.4
ethyl bromide	<10	<10	<50	8	<100	<1,000	<1.5	<10	<100	<1.5
methyl chloride	<10	<10	<50	<1.6	<100	<1,000	<1.6	<10	<100	<1.6
methylene chloride	<2.8	8.3	<14	<1.1	55	<280	5	<2.8	29	<1.1
1,1,2,2-tetrachloroethane	<6.9	<6.9	<35	<1.4	<69	<690	<1.4	<6.9	<69	<1.4
tetrachloroethylene	<4.1	<4.1	<21	<1.5	<41	<410	<1.5	<4.1	<41	<1.5
toluene	<6	<6	<30	2	<60	<600	<0.4	<6	107	<0.4
1,2-trans-dichloroethylene	<1.6	<1.6	202	<1.5	<16	<160	<1.5	<1.6	<16	<1.5
1,1,1-trichloroethane	<3.8	<3.8	<19	<1.2	<38	<380	<1.2	<3.8	<38	<1.2
1,1,2-trichloroethane	<5	<5	<25	<1.6	<50	<500	<1.6	<5	<50	<1.6
trichloroethylene	<1.9	<1.9	<9.5	<1.3	<19	<190	<1.3	<1.9	<19	<1.3
trichlorofluoromethane	<10	<10	<50	<1.2	<100	<1,000	<1.2	<10	<100	<1.2
vinyl chloride	<10	<10	96.2	<1.2	<100	<1,000	<1.2	<10	<100	<1.2
Sub Total 1	629.6	8388.3	4662.8	1397	8645	972	5	46.1	346	150.5
Miscellaneous Volatile Organic Compounds										
methyl-iso-butyl ketone	<10	<10	<50	<5	<100	<1,000	<5	<10	<100	<5
methyl isoamyl ketone	<10	<10	<50	<5	<100	<1,000	<5	<10	<100	<5
m-xylene	<10	<10	<50	<5	<100	<1,000	<5	12.3	105	<5
o-xylene/p-xylene	<10	<10	<50	<5	<100	<1,000	<5	19.5	<100	<5
Sub Total 2	0	0	0	0	0	0	0	31.8	105	0
Total VOC's Analyzed	629.6	8388.3	4662.8	1397	8645	972	5	77.9	451	150.5

Table E-1. Summary of Volatile Organic Compounds in Ground Water, W.G. Krummrich Plant, Monsanto Company, Sauget, Il. ***

Well Number:	MB-7	Field Blank	Field Blank	Field Blank	Field Blank	Field Blank	Field Blank	Field Blank	Field Blank	Trip Blank
Date:	11/85	6/84	9/84	9/84	11/84	2/85	5/85	11/85	2/86	5/84
USEPA Priority Pollutant Volatile Organic Compounds concentrations are in ug/L										
acrolein	<100	NA	NA	NA	<100	<100	<100	<100	<100	<1
acrylonitrile	<100	NA	NA	NA	<100	<100	<100	<100	<100	<1
benzene	<4.4	<0.5	<0.5	<0.5	28	<4.4	<4.4	<4.4	<4.4	<1
bis (chloroethyl) ether	<10	<1.5	<1.5	<1.5	<10	<10	<10	<10	<10	<1
bromoform	<4.7	<3.2	<3.2	<3.2	<10	<4.7	<4.7	<4.7	<4.7	<1
carbon tetrachloride	<2.8	<1.5	<1.5	<1.5	<10	<2.8	<2.8	<2.8	<2.8	<1
chlorobenzene	<6	<0.6	53	1	24	<6	<6	<6	<6	<1
chlorodibromomethane	<3.1	<2.0	<2.0	<2.0	<10	<3.1	<3.1	<3.1	<3.1	<1
chloroethane	<10	<2.4	<2.4	<2.4	<10	<10	<10	<10	<10	<1
2-chloroethylvinyl ether	<10	<5.9	<5.9	<5.9	<10	<10	<10	<10	<10	<1
chloroform	<1.6	<0.8	<0.8	<0.8	<10	<1.6	<1.6	<1.6	<1.6	<1
dichlorobromomethane	<2.2	<1.1	<1.1	<1.1	<10	<2.2	<2.2	<2.2	<2.2	<1
dichlorodifluoromethane	<10	NA	NA	NA	<10	<10	<10	<10	<10	<1
1,1-dichloroethane	<4.7	<0.8	<0.8	<0.8	<10	<4.7	<4.7	<4.7	<4.7	<1
1,2-dichloroethane	<2.8	<1.5	<1.5	<1.5	<10	<2.8	<2.8	<2.8	<2.8	<1
1,1-dichloroethylene	<2.8	<1.9	<1.9	<1.9	<10	<2.8	<2.8	<2.8	<2.8	<1
1,2-dichloropropane	<6	<1.5	<1.5	<1.5	<10	<6	<6	<6	<6	<1
cis-1,3-dichloropropylene	<5	<1.5	<1.5	<1.5	<10	<5	<5	<5	<5	<1
trans-1,3-dichloropropylene	<10	<1.5	<1.5	<1.5	<10	<10	<10	<10	<10	<1
thylbenzene	<7.2	<0.4	1	<0.4	<10	<7.2	<7.2	<7.2	<7.2	<1
ethyl bromide	<10	<1.5	<1.5	<1.5	<10	<10	<10	<10	<10	<1
ethyl chloride	<10	<1.6	<1.6	<1.6	<10	<10	<10	<10	<10	<1
ethylene chloride	<2.8	20	39	15	<10	<2.8	3.8	<2.8	6.5	53
1,1,2,2-tetrachloroethane	<6.9	<1.4	<1.4	<1.4	<10	<6.9	<6.9	<6.9	<6.9	<1
tetrachloroethylene	<4.1	<1.5	<1.5	<1.5	<10	<4.1	<4.1	<4.1	<4.1	<1
toluene	<6	3	1	<0.4	<10	<6	<6	<6	<6	2
1,2-trans-dichloroethylene	<1.6	<1.5	<1.5	<1.5	<10	<1.6	<1.6	<1.6	<1.6	<1
1,1,1-trichloroethane	<3.8	<1.2	<1.2	<1.2	<10	<3.8	<3.8	<3.8	<3.8	<1
1,1,2-trichloroethane	<5	<1.6	<1.6	<1.6	<10	<5	<5	<5	<5	<1
trichloroethylene	<1.9	<1.3	<1.3	<1.3	<10	<1.9	<1.9	<1.9	<1.9	<1
trichlorofluoromethane	<10	<1.2	<1.2	<1.2	<10	<10	<10	<10	<10	<1
vinyl chloride	<10	<1.2	<1.2	<1.2	<10	<10	<10	<10	<10	<1
Sub Total 1	0	23	94	16	52	0	3.8	0	6.5	55
Miscellaneous Volatile Organic Compounds										
methyl-iso-butyl ketone	<10	NA	NA	NA	NA	NA	NA	NA	NA	NA
methyl isoamyl ketone	<10	NA	NA	NA	NA	NA	NA	NA	NA	NA
m-xylene	<10	NA	NA	NA	NA	NA	NA	NA	NA	NA
o-xylene/p-xylene	<10	NA	NA	NA	NA	NA	NA	NA	NA	NA
Sub Total 2	0	NA	NA	NA	NA	NA	NA	NA	NA	NA
Total VOC's Analyzed	0	23	94	16	52	0	3.8	0	6.5	55

Table E-1. Summary of Volatile Organic Compounds in Ground Water, W.G. Krummrich Plant, Monsanto Company, Sauget, IL. ***

Well Number:	Trip Blank	Trip Blank	Trip Blank	Trip Blank	Trip Blank	Trip Blank	Trip Blank	Trip Blank	Trip Blank	Lab Blank
Date:	6/84	9/84	9/84	9/84	11/84	2/85	5/85	11/85	2/86	11/83
USEPA Priority Pollutant Volatile Organic Compounds concentrations are in ug/L										
acrolein	NA	NA	NA	NA	<100	<100	<100	<100	NA	<1
acrylonitrile	NA	NA	NA	NA	<100	<100	<100	<100	NA	<1
benzene	<0.5	1	31	30	<10	<4.4	<4.4	<4.4	NA	<1
bis (chloroethyl) ether	<1.5	<1.5	<1.5	<1.5	<10	<10	<10	<10	NA	<1
bromoform	<3.2	<3.2	<3.2	<3.2	<10	<4.7	<4.7	<4.7	NA	<1
carbon tetrachloride	<1.5	<1.5	<1.5	<1.5	<10	<2.8	<2.8	<2.8	NA	<1
chlorobenzene	2	<0.6	<0.6	<0.6	<10	<6	<6	<6	NA	<1
chlorodibromoethane	<2.0	<2.0	<2.0	<2.0	<10	<3.1	<3.1	<3.1	NA	<1
chloroethane	<2.4	4	<2.4	<2.4	<10	<10	<10	<10	NA	<1
2-chloroethylvinyl ether	<5.9	<5.9	<5.9	<5.9	<10	<10	<10	<10	NA	<1
chloroform	<0.8	2	<0.8	<0.8	<10	<1.6	<1.6	<1.6	NA	<1
dichlorobromoethane	<1.1	<1.1	<1.1	<1.1	<10	<2.2	<2.2	<2.2	NA	<1
dichlorodifluoroethane	NA	NA	NA	NA	<10	<10	<10	<10	NA	<1
1,1-dichloroethane	<0.8	<0.8	<0.8	<0.8	<10	<4.7	<4.7	<4.7	NA	<1
1,2-dichloroethane	<1.5	<1.5	<1.5	<1.5	<10	<2.8	<2.8	<2.8	NA	<1
1,1-dichloroethylene	<1.9	4	2	2	<10	<2.8	<2.8	<2.8	NA	<1
1,2-dichloropropane	<1.5	<1.5	<1.5	<1.5	<10	<6	<6	<6	NA	<1
cis-1,3-dichloropropylene	<1.5	<1.5	<1.5	<1.5	<10	<5	<5	<5	NA	<1
trans-1,3-dichloropropylene	<1.5	<1.5	<1.5	<1.5	<10	<10	<10	<10	NA	<1
ethylbenzene	<0.4	<0.4	<0.4	<0.4	<10	<7.2	<7.2	<7.2	NA	<1
methyl bromide	<1.5	3	<1.5	<1.5	<10	<10	<10	<10	NA	<1
methyl chloride	<1.6	5	<1.6	<1.6	<10	<10	<10	<10	NA	<1
methylene chloride	18	130	44	32	<10	4	3.4	<2.3	NA	34
1,1,2,2-tetrachloroethane	<1.4	<1.4	<1.4	<1.4	<10	<6.9	<6.9	<6.9	NA	<1
tetrachloroethylene	<1.5	<1.5	<1.5	<1.5	<10	<4.1	<4.1	<4.1	NA	<1
toluene	3	1	1	1	<10	<6	<6	<6	NA	<1
1,2-trans-dichloroethylene	<1.5	2	<1.5	<1.5	<10	<1.6	<1.6	<1.6	NA	<1
1,1,1-trichloroethane	<1.2	<1.2	<1.2	<1.2	<10	<3.8	<3.8	<3.8	NA	<1
1,1,2-trichloroethane	<1.6	<1.6	<1.6	<1.6	<10	<5	<5	<5	NA	<1
trichloroethylene	<1.3	<1.3	<1.3	<1.3	<10	<1.9	<1.9	<1.9	NA	<1
trichlorofluoromethane	<1.2	<1.2	<1.2	<1.2	<10	<10	<10	<10	NA	<1
vinyl chloride	<1.2	6	<1.2	<1.2	<10	<10	<10	<10	NA	<1
Sub Total 1	23	158	78	65	0	4	3.4	0	NA	34
Miscellaneous Volatile Organic Compounds										
methyl-iso-butyl ketone	NA	NA	NA	NA	NA	NA	NA	NA	NA	NA
methyl isoamyl ketone	NA	NA	NA	NA	NA	NA	NA	NA	NA	NA
m-xylene	NA	NA	NA	NA	NA	NA	NA	NA	NA	NA
o-xylene/p-xylene	NA	NA	NA	NA	NA	NA	NA	NA	NA	NA
Sub Total 2	NA	NA	NA	NA	NA	NA	NA	NA	NA	NA
Total VOC's Analyzed	23	158	78	65	0	4	3.4	0	0	34

Table E-1. Summary of Volatile Organic Compounds in Ground Water, W.G. Krummrich Plant, Monsanto Company, Sauget, IL. ***

Well Number:	Lab Blank	Lab Blank	Lab Blank	Lab Blank	Lab Blank	Lab Blank	Lab Blank	Lab Blank	Lab Blank	Lab Blank
Date:	11/83	5/84	5/84	9/84	9/84	9/84	9/84	9/84	9/84	9/84
USEPA Priority Pollutant Volatile Organic Compounds concentrations are in ug/L										
acrolein	<1	<1	<1	NA	NA	NA	NA	NA	NA	NA
acrylonitrile	<1	<1	<1	NA	NA	NA	NA	NA	NA	NA
benzene	<1	.2	<1	<0.5	29	21	19	<0.5	<0.5	<0.5
bis (chloroethyl) ether	<1	<1	<1	<1.5	<1.5	<1.5	<1.5	<1.5	<1.5	<1.5
bromoform	<1	<1	<1	<3.2	<3.2	<3.2	<3.2	<3.2	<3.2	<3.2
carbon tetrachloride	<1	<1	<1	<1.5	<1.5	<1.5	<1.5	<1.5	<1.5	<1.5
chlorobenzene	<1	<1	<1	<0.6	<0.6	1	1	<0.6	<0.6	1
chlorodibromomethane	<1	<1	<1	<2.0	<2.0	<2.0	<2.0	<2.0	<2.0	<2.0
chloroethane	<1	<1	<1	<2.4	<2.4	<2.4	<2.4	<2.4	<2.4	<2.4
2-chloroethylvinyl ether	<1	<1	<1	<5.9	<5.9	<5.9	<5.9	<5.9	<5.9	<5.9
chloroform	1	<1	<1	<0.8	<0.8	<0.8	<0.8	<0.8	<0.8	<0.8
dichlorobromomethane	<1	<1	<1	<1.1	<1.1	<1.1	<1.1	<1.1	<1.1	<1.1
dichlorodifluoromethane	<1	<1	<1	NA	NA	NA	NA	NA	NA	NA
1,1-dichloroethane	<1	<1	<1	<0.8	<0.8	<0.8	<0.8	<0.8	<0.8	<0.8
1,2-dichloroethane	<1	<1	<1	<1.5	<1.5	<1.5	<1.5	<1.5	<1.5	<1.5
1,1-dichloroethylene	<1	<1	<1	<1.9	1	1	1	<1.9	<1.9	<1.9
1,2-dichloropropane	<1	<1	<1	<1.5	<1.5	<1.5	<1.5	<1.5	<1.5	<1.5
cis-1,3-dichloropropylene	<1	<1	<1	<1.5	<1.5	<1.5	<1.5	<1.5	<1.5	<1.5
trans-1,3-dichloropropylene	<1	<1	<1	<1.5	<1.5	<1.5	<1.5	<1.5	<1.5	<1.5
ethylbenzene	<1	<1	<1	<0.4	<0.4	<0.4	<0.4	<0.4	<0.4	<0.4
methyl bromide	<1	<1	<1	<1.5	<1.5	<1.5	<1.5	<1.5	<1.5	<1.5
methyl chloride	<1	<1	<1	<1.6	<1.6	<1.6	<1.6	<1.6	<1.6	<1.6
methylene chloride	26	27	14	<1.1	33	42	35	2	3	15
1,1,2,2-tetrachloroethane	<1	<1	<1	<1.4	<1.4	<1.4	<1.4	<1.4	<1.4	<1.4
tetrachloroethylene	<1	<1	<1	<1.5	<1.5	<1.5	<1.5	<1.5	<1.5	<1.5
toluene	<1	2	2	<0.4	1	1	1	<0.4	<0.4	<0.4
1,2-trans-dichloroethylene	<1	<1	<1	<1.5	<1.5	<1.5	<1.5	<1.5	<1.5	<1.5
1,1,1-trichloroethane	<1	5	<1	<1.2	<1.2	<1.2	<1.2	<1.2	<1.2	<1.2
1,1,2-trichloroethane	<1	<1	<1	<1.6	<1.6	<1.6	<1.6	<1.6	<1.6	<1.6
trichloroethylene	<1	2	1	<1.3	<1.3	<1.3	<1.3	<1.3	<1.3	<1.3
trichlorofluoromethane	<1	<1	<1	<1.2	<1.2	<1.2	<1.2	<1.2	<1.2	<1.2
vinyl chloride	<1	<1	<1	<1.2	<1.2	<1.2	<1.2	<1.2	<1.2	<1.2
Sub Total 1	27	38	17	0	64	66	57	2	3	16
Miscellaneous Volatile Organic Compounds										
methyl-iso-butyl ketone	NA	NA	NA	NA	NA	NA	NA	NA	NA	NA
methyl isoamyl ketone	NA	NA	NA	NA	NA	NA	NA	NA	NA	NA
m-xylene	NA	NA	NA	NA	NA	NA	NA	NA	NA	NA
o-xylene/p-xylene	NA	NA	NA	NA	NA	NA	NA	NA	NA	NA
Sub Total 2	NA	NA	NA	NA	NA	NA	NA	NA	NA	NA
Total VOC's Analyzed	27	38	17	0	64	66	57	2	3	16

Table E-1. Summary of Volatile Organic Compounds in Ground Water, W.G. Krumerich Plant, Monsanto Company, Sauget, IL. ***

Well Number:	Lab Blank	Lab Blank	Lab Blank	Lab Blank	Lab Blank	Lab Blank
Date:	9/84	9/84	9/84	9/84	9/84	9/84
USEPA Priority Pollutant Volatile Organic Compounds concentrations are in ug/L						
acrolein	NA	NA	NA	NA	NA	NA
acrylonitrile	NA	NA	NA	NA	NA	NA
benzene	4	3	8	<0.5	<0.5	34
bis (chloroethyl) ether	<1.5	<1.5	<1.5	<1.5	<1.5	<1.5
bromoform	<3.2	<3.2	<3.2	<3.2	<3.2	<3.2
carbon tetrachloride	<1.5	<1.5	<1.5	<1.5	<1.5	<1.5
chlorobenzene	<0.6	<0.6	<0.6	53	<0.6	<0.6
chlorodibromoethane	<2.0	<2.0	<2.0	<2.0	<2.0	<2.0
chloroethane	<2.4	<2.4	<2.4	<2.4	<2.4	<2.4
2-chloroethylvinyl ether	<5.9	<5.9	<5.9	<5.9	<5.9	<5.9
chloroform	<0.8	<0.8	<0.8	<0.8	<0.8	<0.8
dichlorobromoethane	<1.1	<1.1	<1.1	<1.1	<1.1	<1.1
dichlorodifluoromethane	NA	NA	NA	NA	NA	NA
1,1-dichloroethane	<0.8	<0.8	<0.8	<0.8	<0.8	<0.8
1,2-dichloroethane	<1.5	<1.5	<1.5	<1.5	<1.5	<1.5
1,1-dichloroethylene	<1.9	<1.9	<1.9	<1.9	<1.9	2
1,2-dichloropropane	15	<1.5	<1.5	<1.5	<1.5	<1.5
cis-1,3-dichloropropylene	<1.5	<1.5	<1.5	<1.5	<1.5	<1.5
trans-1,3-dichloropropylene	<1.5	<1.5	<1.5	<1.5	<1.5	<1.5
ethylbenzene	<0.4	<0.4	<0.4	<0.4	<0.4	<0.4
methyl bromide	<1.5	<1.5	<1.5	<1.5	<1.5	<1.5
methyl chloride	<1.6	<1.6	<1.6	<1.6	<1.6	<1.6
methylene chloride	15	<1.1	24	39	6	50
1,1,2,2-tetrachloroethane	<1.4	<1.4	<1.4	<1.4	<1.4	<1.4
tetrachloroethylene	<1.5	<1.5	<1.5	<1.5	<1.5	<1.5
toluene	1	1	1	1	<0.4	1
1,2-trans-dichloroethylene	<1.5	<1.5	<1.5	<1.5	<1.5	<1.5
1,1,1-trichloroethane	<1.2	<1.2	<1.2	<1.2	<1.2	<1.2
1,1,2-trichloroethane	<1.6	<1.6	<1.6	<1.6	<1.6	<1.6
trichloroethylene	<1.3	<1.3	1	<1.3	<1.3	<1.3
trichlorofluoromethane	<1.2	<1.2	<1.2	<1.2	<1.2	<1.2
vinyl chloride	<1.2	<1.2	<1.2	<1.2	<1.2	<1.2
Sub Total 1	35	4	34	93	6	87
Miscellaneous Volatile Organic Compounds						
methyl-iso-butyl ketone	NA	NA	NA	NA	NA	NA
methyl isoamyl ketone	NA	NA	NA	NA	NA	NA
m-xylene	NA	NA	NA	NA	NA	NA
o-xylene/p-xylene	NA	NA	NA	NA	NA	NA
Sub Total 2	NA	NA	NA	NA	NA	NA
Total VOC's Analyzed	35	4	34	93	6	87

Table E-1. Summary of Volatile Organic Compounds in Ground Water, W.G. Krummrich Plant, Monsanto Company, Sauget, IL. ***

NA - Not analyzed.

* - Replicate Analyses

** - Prior to analysis, this sample was held by Envirodyne Engineers, Inc. longer than the maximum allowable USEPA holding time.

*** - Envirodyne Engineers, Inc. (St. Louis, MO.) provided the laboratory services for the sampling rounds conducted between November, 1983 and September, 1984, with the exception of the January through May, 1984 sampling rounds conducted in the W.G. Krummrich Landfill. These wells are designated as the "B" series (i.e. B-22A) and the "P" series (i.e. P-7) and D'Appolonia (currently IT Corporation), Pittsburgh, Pa., provided the chemical results. ETC (Edison, NJ) performed the analyses for the November 1984 through February 1986 sampling programs.

- Replicate analysis was performed by ETC.

a) - Envirodyne Engineers, Inc. reported 10 ug/L and 2 ug/L for wells GM-16A and GM-16B, respectively. Their results did not differentiate between the xylene compounds.

b) - Envirodyne Engineers, Inc. reported 4 ug/L, 18 ug/L and 10 ug/L for wells GM-25B, GM-27B and GM-27C, respectively. Their results did not differentiate between the xylene compounds.

c) - Envirodyne Engineers, Inc. reported 66 ug/L, greater than 119 ug/L and 1 ug/L for wells GM-28B, GM-28C and GM-30, respectively. Their results did not differentiate between the xylene compounds.

d) - Envirodyne Engineers, Inc. reported 1,630 ug/L and 12 ug/L for wells B-30B and B-31C, respectively. Their results did not differentiate between the xylene compounds.

e) - Envirodyne Engineers, Inc. reported 9 ug/L for well GM-23. The result did not differentiate between the xylene compounds.

< - Indicates that the compound was not detected at the detection limit which is the value shown next to the symbol.

Table E-2. Summary of Acid Extractable Compounds in Ground Water, Monsanto Company, W.G. Krummrich Plant, Sauget, IL. ***

Well Number:	GM-1	GM-1	GM-2	GM-2	GM-3	GM-3	GM-3	GM-4A	GM-4A	GM-4B
Date:	11/83	5/84	11/83	5/84	11/83	5/84	5/84*	11/83	5/84	9/84
USEPA Priority Pollutant Acid Extractable Organic Compounds concentrations are in ug/L										
2-chlorophenol	<1	<1	<1	<1	<1	<1	<1	<1	<1	31
2,4-dichlorophenol	<1	<1	<1	<1	<1	<1	<1	<1	<1	<8
2,4-diaethylphenol	<1	<1	<1	<1	<1	<1	<1	<1	<1	<10
4,6-dinitro-o-cresol	<1	<1	<1	<1	<1	<1	<1	<1	<1	<38
2,4-dinitrophenol	<1	<1	<1	<1	<1	<1	<1	<1	<1	<52
2-nitrophenol	<1	<1	<1	<1	<1	<1	<1	<1	<1	<11
4-nitrophenol	<1	<1	<1	<1	<1	<1	<1	<1	<1	<35
p-chloro-m-cresol	<1	<1	<1	<1	<1	<1	<1	<1	<1	<8
pentachlorophenol	<1	<1	<1	<1	<1	<1	<1	<1	<1	7
phenol	<1	<1	<1	<1	<1	<1	<1	<1	<1	9
2,4,6-trichlorophenol	<1	<1	<1	<1	<1	<1	<1	<1	<1	<12
Sub Total 1	0	0	0	0	0	0	0	0	0	47
Miscellaneous Acid Extractable Organic Compounds										
4-chlorophenol	NA	NA	NA	NA	NA	NA	NA	NA	NA	<1)
Sub Total 2	NA	NA	NA	NA	NA	NA	NA	NA	NA	0
Total Acid Compounds Analyzed	0	0	0	0	0	0	0	0	0	47

Table E-2. Summary of Acid Extractable Compounds in Ground Water, Monsanto Company, W.S. Krusarich Plant, Sauget, Il. ***

Well Number:	GM-4B	GM-4B	GM-4B	GM-4B	GM-4B	GM-4C	GM-4C	GM-5	GM-5	GM-6A
Date:	11/84	11/84*	2/85	11/85	11/85*	2/85	5/85	11/83	5/84	11/83
USEPA Priority Pollutant Acid Extractable Organic Compounds concentrations are in ug/L										
2-chlorophenol	60	51	14.8	19.6	24	<3.3	67	<1	<1	<1
2,4-dichlorophenol	<25	<25	<2.7	<2.7	<2.7	4.7	16.7	<1	<1	<1
2,4-diaethylphenol	<25	<25	<2.7	<2.7	<2.7	<2.7	<2.7	<1	<1	<1
4,6-dinitro-o-cresol	<250	<250	<24	<24	<24	<24	<24	<1	<1	<1
2,4-dinitrophenol	<250	<250	<42	<42	<42	<42	<42	<1	<1	<1
2-nitrophenol	<25	<25	<3.6	<3.6	<3.6	<3.6	<3.6	<1	<1	<1
4-nitrophenol	<25	<25	<2.4	<2.4	<2.4	<2.4	<2.4	<1	<1	<1
p-chloro-m-cresol	<25	<25	<3	<3	<3	<3	<3	<1	<1	<1
pentachlorophenol	<25	<25	<3.6	<3.6	<3.6	<3.6	<3.6	<1	<1	<1
phenol	<25	<25	6	<1.5	<1.5	<1.5	<1.5	<1	<1	<1
2,4,6-trichlorophenol	<25	<25	<2.7	<2.7	<2.7	<2.7	<2.7	<1	<1	<1
Sub Total 1	60	51	20.8	19.6	24	4.7	83.7	0	0	0
Miscellaneous Acid Extractable Organic Compounds										
4-chlorophenol	77	40	22	<10	44.6	<3.3	115	NA	NA	NA
Sub Total 2	77	40	22	0	44.6	0	115	NA	NA	NA
Total Acid Compounds Analyzed	137	91	42.8	19.6	68.6	4.7	198.7	0	0	0

Table E-2. Summary of Acid Extractable Compounds in Ground Water, Monsanto Company, W.G. Krummrich Plant, Sauget, IL. ***

Well Number:	GM-6A	GM-6A	GM-6B	GM-6B	GM-6B	GM-7	GM-7	GM-8	GM-8	GM-8
Date:	5/84	11/84	9/84**	11/84	11/85	11/83	5/84	11/83	5/84	11/84
USEPA Priority Pollutant Acid Extractable Organic Compounds concentrations are in ug/L										
2-chlorophenol	<1	<25	<6	<25	<3.3	<1	<1	<1	<1	<25
2,4-dichlorophenol	<1	<25	<8	<25	4.6	<1	<1	<1	<1	<25
2,4-diaethylphenol	<1	<25	<10	<25	<2.7	<1	<1	<1	<1	<25
4,6-dinitro-o-cresol	<1	<250	<38	<250	<24	<1	<1	<1	<1	<250
2,4-dinitrophenol	<1	<250	<52	<250	<42	<1	<1	<1	<1	<250
2-nitrophenol	<1	<25	<11	<25	<3.6	<1	<1	<1	<1	<25
4-nitrophenol	<1	<25	<35	<25	<2.4	<1	<1	<1	<1	<25
p-chloro-m-cresol	<1	<25	<8	<25	<3	<1	<1	<1	<1	<25
pentachlorophenol	<1	<25	<34	<25	<3.6	<1	<1	<1	<1	<25
phenol	<1	<25	<4	<25	<1.5	<1	<1	<1	<1	<25
2,4,6-trichlorophenol	<1	<25	<12	<25	<2.7	<1	<1	<1	<1	<25
Sub Total 1	0	0	0	0	4.6	0	0	0	0	0
Miscellaneous Acid Extractable Organic Compounds										
[illegible]chlorophenol	NA	<25	<10	<25	<10	NA	NA	NA	NA	<25
Sub Total 2	NA	0	0	0	0	NA	NA	NA	NA	0
Total Acid Compounds Analyzed	0	0	0	0	4.6	0	0	0	0	0

Table E-2. Summary of Acid Extractable Compounds in Ground Water, Monsanto Company, W.G. Krummrich Plant, Sauget, Il. ***

Well Number:	GM-8	GM-8	GM-9A	GM-9A	GM-9B	GM-9B	GM-9B	GM-9C	GM-9C	GM-9C
Date:	2/85	11/85	11/83	5/84	9/84**	5/85	11/85	9/84**	5/85	11/85
USEPA Priority Pollutant Acid Extractable Organic Compounds Concentrations are in ug/L										
chlorophenol	<3.7	<3.4	55	58	<6	<3.3	3.7	1	<3.3	<3.6
4-dichlorophenol	<3	<2.8	21	7	<8	<2.7	<2.7	<8	<2.7	<2.9
2,4-dimethylphenol	<3	<2.8	<1	<1	<10	<2.7	<2.7	<10	<2.7	<2.9
4,6-dinitro-o-cresol	<27	<25	<1	<1	<38	<24	<24	<38	<24	<26
4-dinitrophenol	<47.2	<43	<1	<1	<52	<42	<42	<52	<42	<45
nitrophenol	<4	<3.7	<1	<1	<11	<3.6	<3.6	<11	<3.6	<3.9
4-nitrophenol	<2.2	<2.5	<1	<1	<35	<2.4	<2.4	<35	<2.4	<2.6
chloro-m-cresol	<3.4	<3.1	<1	<1	<8	<3	<3	<8	<3	<3.2
ntachlorophenol	<4	<3.7	58	12	2	<3.6	<3.6	4	<3.6	<3.9
phenol	<1.7	<1.5	<1	<1	<4	<1.5	<1.5	<4	<1.5	<1.6
2,4,6-trichlorophenol	<3	<2.8	<1	<1	<12	<2.7	<2.7	<12	<2.7	<2.9
Sub Total 1	0	0	134	77	2	0	3.7	5	0	0
Miscellaneous Acid Extractable Organic Compounds										
cresol	<3.7	<10	NA	NA	<10	<25	<25	<10	<10	11
Sub Total 2	0	0	NA	NA	0	0	0	0	0	11
Total Acid Compounds Analyzed	0	0	134	77	2	0	3.7	5	0	11

Table E-2. Sumaary of Acid Extractable Coapounds in Ground Water, Monsanto Coapany, W.G. Kruaarich Plant, Sauget, Il. ***

Well Number:	GM-10A	GM-10A	GM-10B	GM-10B	GM-10C	GM-10C	GM-11	GM-11	GM-12A	GM-12A
Date:	11/83	5/84	2/85	5/85	2/85	5/85	11/83	5/84	11/83	11/83*
USEPA Priority Pollutant Acid Extractable Organic Coapounds concentrations are in ug/L										
2-chlorophenol	<1	<1	<3.6	29.5	<3.7	<3.3	<1	<1	182	160
2,4-dichlorophenol	<1	<1	8.9	154.2	<3	<2.7	<1	<1	<1	<1
2,4-diaethylphenol	<1	<1	<2.9	<2.7	<3	<2.7	<1	<1	<1	<1
4,6-dinitro-o-cresol	<1	<1	<26	<24	<26.7	<24	<1	<1	<1	<1
2,4-dinitrophenol	<1	<1	<45.7	<42	<46.7	<42	<1	<1	<1	<1
2-nitrophenol	<1	<1	<3.9	<3.6	<4	<3.6	<1	<1	<1	<1
4-nitrophenol	<1	<1	<2.6	<2.4	<2.7	<2.4	<1	<1	<1	<1
p-chloro-a-cresol	<1	<1	<3.3	<3	<3.3	<3	<1	<1	<1	<1
pentachlorophenol	<1	<1	<3.9	<3.6	<4	<3.6	<1	<1	147	115
phenol	<1	<1	<1.6	18.9	<1.7	<1.5	<1	<1	40	38
2,4,6-trichlorophenol	<1	<1	<2.9	<2.7	<3	<2.7	<1	<1	<1	<1
Sub Total 1	0	0	8.9	202.6	0	0	0	0	369	313
Miscellaneous Acid Extractable Organic Coapounds										
4-chlorophenol	NA	NA	18.7	26	<3.7	<25	NA	NA	NA	NA
Sub Total 2	NA	NA	18.7	26	0	0	NA	NA	NA	NA
Total Acid Coapounds Analyzed	0	0	27.6	228.6	0	0	0	0	369	313

Table E-2. Summary of Acid Extractable Compounds in Ground Water, Monsanto Company, W.G. Krumarich Plant, Sauget, IL. ***

Well Number:	GM-12A	GM-12A	GM-12A	GM-12A	GM-12A	GM-12A	GM-12A	GM-12A	GM-12A	GM-12A
Date:	5/84	5/84*	8/84	11/84*	2/85	2/85*	5/85	5/85*	11/85	11/85*
USEPA Priority Pollutant Acid Extractable Organic Compounds concentrations are in ug/L										
2-chlorophenol	29	31	34	<25	30.8	30.3	19	17.3	17	20.9
2,4-dichlorophenol	<1	<1	<25	<25	<2.7	<2.7	<2.7	<2.7	<2.8	<2.8
2,4-diaethylphenol	<1	<1	<25	<25	<2.7	<2.7	<2.7	<2.7	<2.8	<2.8
4,6-dinitro-o-cresol	<1	<1	<250	<250	<24	<24	<24	<24	<25	<25
2,4-dinitrophenol	<1	<1	<250	<250	<42	<42	<42	<42	<44	<44
2-nitrophenol	<1	<1	<25	<25	<3.6	<3.6	<3.6	<3.6	<3.8	<3.8
4-nitrophenol	<1	<1	<25	<25	<2.4	<2.4	<2.4	<2.4	<2.5	<2.5
p-chloro-m-cresol	<1	<1	<25	<25	<3	<3	<3	<3	<3.2	<3.2
pentachlorophenol	<1	<1	<25	<25	<3.6	<3.6	<3.6	<3.6	<3.8	<3.8
phenol	18	15	43	27	90.4	93.6	54	46	15.9	19.9
2,4,6-trichlorophenol	<1	<1	<25	<25	<2.7	<2.7	<2.7	<2.7	<2.8	<2.8
Sub Total 1	47	46	77	27	121.2	123.9	73	63.3	32.9	40.8
Miscellaneous Acid Extractable Organic Compounds										
[illegible]-chlorophenol	NA	NA	<25	<25	6	7	<10	<10	<11	<11
Sub Total 2	NA	NA	0	0	6	7	0	0	0	0
Total Acid Compounds Analyzed	47	46	77	27	127.2	130.9	73	63.3	32.9	40.8

Table E-2. Summary of Acid Extractable Compounds in Ground Water, Monsanto Company, W.G. Krummrich Plant, Sauget, Il. ***

Well Number:	GM-12A	GM-12A	GM-12B	GM-12B	GM-12B	GM-12C	GM-12C	GM-12C	GM-12C	GM-13
Date:	2/86	2/86*	9/84**	11/84	11/85	2/85	2/85*	5/85	5/85*	9/84**
USEPA Priority Pollutant Acid Extractable Organic Compounds concentrations are in ug/L										
2-chlorophenol	42	24	2	<25	<3.5	108	114	<3.3	<3.3	<6
2,4-dichlorophenol	<2.9	<2.7	1	<25	<2.8	<2.7	<2.7	<2.7	<2.7	<8
2,4-diaethylphenol	<2.9	<2.7	<10	<25	<2.8	<2.7	<2.7	<2.7	<2.7	<10
4,6-dinitro-o-cresol	<26	<24	<38	<250	<25	<24	<24	<24	<24	<38
2,4-dinitrophenol	<45	<42	<52	<250	<44	<42	<42	<42	<42	<52
2-nitrophenol	<3.8	<3.6	<11	<25	<3.8	33.4	55	<3.6	<3.6	<11
4-nitrophenol	<2.6	<2.4	<35	<25	<2.5	33.3	372	<2.4	<2.4	<35
p-chloro-m-cresol	<3.2	<3	<8	<25	<3.2	<3	<3	<3	<3	<8
pentachlorophenol	<3.8	<3.6	4	<25	<3.8	<3.6	<3.6	<3.6	<3.6	25
phenol	28.6	16.3	7	33	17.3	-<1.5	2.9	<1.5	<1.5	230
2,4,6-trichlorophenol	<2.9	<2.7	<12	<25	<2.8	<2.7	<2.7	<2.7	<2.7	<12
Sub Total 1	70.6	40.3	14	33	17.3	174.7	543.9	0	0	255
Miscellaneous Acid Extractable Organic Compounds										
-hlorophenol	<11	<10	<10	<25	<11	<3.3	<3.3	<10	<10	<10
Sub Total 2	0	0	0	0	0	0	0	0	0	0
Total Acid Compounds Analyzed	70.6	40.3	14	33	17.3	174.7	543.9	0	0	255

Table E-2. Summary of Acid Extractable Compounds in Ground Water, Monsanto Company, W.G. Krummrich Plant, Sauget, Il. ***

Well Number:	GM-13	GM-13	GM-14	GM-15	GM-16A	GM-16A	GM-16A	GM-16B	GM-16B	GM-16B
Date:	11/85	2/86	9/84**	9/84**	9/84**	5/85	11/85	9/84**	5/85	11/85
USEPA Priority Pollutant Acid Extractable Organic Compounds concentrations are in ug/L										
2-chlorophenol	134	75.3	NA	<6	<6	<3.3	<3.5	<6	<3.3	<6.6
2,4-dichlorophenol	141	18	NA	<8	<8	<2.7	<2.8	<8	<2.7	<5.4
2,4-dimethylphenol	210	210	NA	<10	<10	<3	<2.8	<10	<2.7	<5.4
4,6-dinitro-o-cresol	<26	<25	NA	<38	<38	<24	<25	<38	<24	<48
2,4-dinitrophenol	<46	<44	NA	<52	<52	<42	<44	<52	<42	<84
2-nitrophenol	<4	<3.8	NA	<11	<11	<3.6	<3.8	<11	<3.6	<7.2
4-nitrophenol	53	<2.5	NA	<35	<35	<2.4	<2.5	<35	<2.4	<4.8
p-chloro-m-cresol	<3.3	7.1	NA	<8	<8	<3	<3.2	<8	<3	<6
pentachlorophenol	31	3.9	NA	1	<1	<3.6	<3.8	6	<3.6	<7.2
phenol	1,950	319	NA	<4	<4	<1.5	<1.6	<4	<1.5	<3
2,4,6-trichlorophenol	32.3	3.7	NA	<12	<12	<2.7	<2.8	<12	<2.7	<5.4
Sub Total 1	2551.3	637	NA	1	0	0	0	6	0	0
Miscellaneous Acid Extractable Organic Compounds										
4-chlorophenol	619	150	NA	<10	<10	<10	<11	<10	<10	<20
Sub Total 2	619	150	NA	0	0	0	0	0	0	0
Total Acid Compounds Analyzed	3170.3	787	NA	1	0	0	0	6	0	0

Table E-2. Summary of Acid Extractable Compounds in Ground Water, Monsanto Company, W.G. Krummrich Plant, Sauget, IL. ***

Well Number:	GM-17A	GM-17A	GM-17A	GM-17B	GM-17B	GM-17B	GM-17C	GM-17C	GM-17C	GM-18A
Date:	9/84	11/84	11/85	9/84**	11/84	11/85	9/84**	11/84	11/85	9/84**
USEPA Priority Pollutant Acid Extractable Organic Compounds concentrations are in ug/L										
2-chlorophenol	38	27	<3.3	<6	<25	31.6	37	86	15	<6
2,4-dichlorophenol	<8	<25	<2.7	<8	<25	<5.4	<8	<25	<2.7	<8
2,4-diaethylphenol	<10	<25	<2.7	<10	<25	<5.4	<10	<25	<2.7	<10
4,6-dinitro-o-cresol	<38	<250	<24	<38	<250	<48	<38	<250	<24	<38
2,4-dinitrophenol	<52	<250	<42	<52	<250	<84	<52	<250	<42	<52
2-nitrophenol	<11	<25	<3.6	<11	<25	<7.2	<11	<25	<3.6	<11
4-nitrophenol	184	<25	<2.4	<35	<25	<4.8	<35	<25	<2.4	<35
p-chloro-m-cresol	<8	<25	<3	<8	<25	<6	<8	<25	<3	<8
pentachlorophenol	<34	<25	<3.6	2	<25	<7.2	2	<25	<3.6	<34
phenol	472	43	3.3	131	208	234	7	38	<1.5	<4
2,4,6-trichlorophenol	<12	<25	<2.7	<12	<25	<5.4	<12	<25	<2.7	<12
Sub Total 1	694	70	3.3	133	208	265.6	46	124	15	0
Miscellaneous Acid Extractable Organic Compounds										
[illegible]chlorophenol	<10	<25	<10	<10	53	<20	<10	73	<10	<10
Sub Total 2	0	0	0	0	53	0	0	78	0	0
Total Acid Compounds Analyzed	694	70	3.3	133	261	265.6	46	202	15	0

Table E-2. Summary of Acid Extractable Compounds in Ground Water, Monsanto Company, W.G. Krummrich Plant, Sauget, Il. ***

Well Number:	GM-18A	GM-18A	GM-18B	GM-18B	GM-18B	GM-25A	GM-25A	GM-25B	GM-25B	GM-25B
Date:	5/85	11/85	9/84**	5/85	11/85	9/84	11/84	9/84	11/84	11/85
USEPA Priority Pollutant Acid Extractable Organic Compounds concentrations are in ug/L										
2-chlorophenol	<3.3	<3.4	<6	<3.3	7.44	<6	<25	<6	<25	<6.5
2,4-dichlorophenol	<2.7	<2.8	<8	<2.7	<5.4	<8	<25	<8	<25	<5.3
2,4-diaethylphenol	<2.7	<2.8	<10	<3.0	<5.4	<10	<25	<10	<25	<5.3
4,6-dinitro-o-cresol	<24	<25	<38	<24	<48	<38	<250	<38	<250	<47
2,4-dinitrophenol	<42	<44	<52	<42	<84	<52	<250	<52	<250	<82
2-nitrophenol	<3.6	<3.8	<11	<3.6	<7.2	<11	<25	<11	<25	<7.1
4-nitrophenol	<2.4	<2.5	<35	<2.4	<4.8	<35	<25	<35	<25	<4.7
p-chloro-a-cresol	<3	<3.1	<8	<3	<6	<8	<25	<8	<25	<5.9
pentachlorophenol	<3.6	<3.8	<34	<3.6	<7.2	<34	<25	<34	<25	<7.1
phenol	<1.5	<1.6	<4	<1.5	<3	<4	<25	2	<25	<2.9
2,4,6-trichlorophenol	<2.7	<2.8	<12	<2.7	<5.4	<12	<25	<12	<25	<5.3
Sub Total 1	0	0	0	0	7.44	0	0	2	0	0
Miscellaneous Acid Extractable Organic Compounds										
'-chlorophenol	<10	<10	<10	<10	<20	<10	<25	<10	<25	<20
Sub Total 2	0	0	0	0	0	0	0	0	0	0
Total Acid Compounds Analyzed	0	0	0	0	7.44	0	0	2	0	0

Table E-2. Summary of Acid Extractable Compounds in Ground Water, Monsanto Company, W.G. Krummrich Plant, Sauget, IL. ***

Well Number:	GM-27B	GM-27B	GM-27B	GM-27C	GM-27C	GM-27C	GM-28B	GM-28B	GM-28B	GM-28C
Date:	9/84**	11/85	2/86	9/84**	11/85	2/86	9/84**	11/85	2/86	9/84**
USEPA Priority Pollutant Acid Extractable Organic Compounds concentrations are in ug/L										
2-chlorophenol	12	<3.3	<3.4	<6	9.8	6.9	24	256	481	NA
2,4-dichlorophenol	115	3.3	<2.8	<8	<2.7	<2.8	<8	13.3	767	NA
2,4-dimethylphenol	<10	<2.7	<2.8	<10	<2.7	<2.8	<10	134	224	NA
4,6-dinitro-o-cresol	<38	<24	<25	<38	<24	<24	<38	<26	<25	NA
2,4-dinitrophenol	<52	<42	<43	<52	<42	<43	<52	<45	<43	NA
2-nitrophenol	<11	<3.6	<3.7	<11	<3.6	<3.7	<11	<3.9	<3.7	NA
4-nitrophenol	<35	<2.4	<2.5	<35	<2.4	<2.4	<35	<2.6	<2.5	NA
p-chloro-m-cresol	<8	<3	<3.1	<8	<3	<3.1	<8	<3.2	<3.1	NA
pentachlorophenol	170	<3.6	<3.7	<34	<3.6	<3.7	9	<3.9	33.1	NA
phenol	6	<1.5	2.2	<4	158	<1.5	<4	264	224	NA
2,4,6-trichlorophenol	77	<2.7	<2.8	<12	<2.7	<2.8	8	<2.9	310	NA
Sub Total 1	380	3.3	2.2	0	167.8	6.9	41	667.3	2039.1	NA
Miscellaneous Acid Extractable Organic Compounds										
*-chlorophenol	<10	<10	<10	<10	164	111	<10	2,490	3,440	NA
Sub Total 2	0	0	0	0	164	111	0	2,490	3,440	NA
Total Acid Compounds Analyzed	380	3.3	2.2	0	331.8	117.9	41	3157.3	5479.1	NA

Table E-2. Summary of Acid Extractable Compounds in Ground Water, Monsanto Company, W.G. Krummrich Plant, Sauget, IL. ***

Well Number:	GM-28C	GM-28C	GM-29	GM-29	GM-30	GM-30	GM-30	GM-31A	GM-31A	GM-31A
Date:	11/85	2/86	9/84**	11/85	9/84**	11/85	2/86	2/85	5/85	11/85
USEPA Priority Pollutant Acid Extractable Organic Compounds concentrations are in ug/L										
2-chlorophenol	107	237	<6	10.2	<6	<3.3	<3.6	<3.3	<3.3	<3.5
2,4-dichlorophenol	153	818	<8	<3.1	<8	<2.7	<2.9	<2.7	4.5	12.9
2,4-dimethylphenol	150	186	<10	<3.1	<10	<2.7	<2.9	<2.7	<2.7	<2.9
4,6-dinitro-o-cresol	<24	<24	<38	<28	<38	<24	<26	<24	<24	<26
2,4-dinitrophenol	<42	<42	<52	<49	<52	<42	<46	44.6	1,299.9	158
2-nitrophenol	<3.6	<3.6	<11	<4.2	<11	<3.6	<3.9	134	269.7	686
4-nitrophenol	<2.4	<2.4	<35	<2.8	<35	<2.4	<2.6	<2.4	201.3	175
p-chloro-m-cresol	<3	<3	<8	<3.5	<8	<3	<3.3	<3	<3	<3.2
pentachlorophenol	<3.6	26.4	<34	<4.2	<34	<3.6	<3.9	<3.6	<3.6	<3.8
phenol	16.6	67.9	<4	<1.7	<4	<1.5	<1.6	43,600	3,530	2,980
2,4,6-trichlorophenol	14.6	149	<12	<3.1	<12	<2.7	<2.9	23.7	51.9	136
Sub Total 1	441.2	1484.3	0	10.2	0	0	0	43802.3	5357.3	4147.9
Miscellaneous Acid Extractable Organic Compounds										
4-chlorophenol	1,240	1,920	<10	12.8	<10	<10	<11	80.2	<25	10.6
Sub Total 2	1,240	1,920	0	12.8	0	0	0	80.2	0	10.6
Total Acid Compounds Analyzed	1681.2	3404.3	0	23	0	0	0	43882.5	5357.3	4158.5

Table E-2. Summary of Acid Extractable Compounds in Ground Water, Monsanto Company, W.G. Krummrich Plant, Sauget, IL. ***

Well Number:	GM-31A	GM-31B	GM-31B	GM-31B	GM-31B	GM-31C	GM-31C	GM-31C	GM-31C	B-24A
Date:	11/85*	2/85	5/85	11/85	11/85*	2/85	5/85	11/85	11/85*	2/86
USEPA Priority Pollutant Acid Extractable Organic Compounds concentrations are in ug/L										
2-chlorophenol	<3.5	<3.3	<3.3	<3.3	<3.3	<3.7	<3.3	6.8	5.6	202,000
2,4-dichlorophenol	13.2	<2.7	<2.7	<2.7	<2.7	<3	<2.7	<2.7	<2.7	62,400
2,4-diaethylphenol	<2.8	<2.7	<2.7	<2.7	<2.7	<3	<2.7	<2.7	<2.7	<1,100
4,6-dinitro-o-cresol	<25	<24	<24	<24	<24	<26.7	<24	<24	<24	<10,000
2,4-dinitrophenol	396	<42	<42	<42	<42	<46.7	<42	<42	<42	<18,000
2-nitrophenol	729	<3.6	<3.6	<3.6	<3.6	<4	<3.6	<3.6	<3.6	<1,500
4-nitrophenol	186	<2.4	<2.4	<2.4	<2.4	<2.7	<2.4	<2.4	<2.4	<1,000
p-chloro-m-cresol	<3.2	<3	<3	<3	<3	<3.3	<3	<3	<3	<1,300
pentachlorophenol	<3.8	<3.6	<3.6	<3.6	<3.6	<4	<3.6	<3.6	<3.6	<1,500
phenol	8,410	<1.5	<1.5	<1.5	<1.5	<1.7	153.4	<1.5	<1.5	280,000
2,4,6-trichlorophenol	184	<2.7	<2.7	<2.7	<2.7	<3	<2.7	<2.7	<2.7	21,900
Sub Total 1	9918.2	0	0	0	0	0	153.4	6.8	5.6	566300
Miscellaneous Acid Extractable Organic Compounds										
-chlorophenol	<10.5	<3.3	<25	<10	<10	<3.7	19	<10	<10	37,200
Sub Total 2	0	0	0	0	0	0	19	0	0	37,200
Total Acid Compounds Analyzed	9918.2	0	0	0	0	0	172.4	6.8	5.6	603500

Table E-2. Summary of Acid Extractable Compounds in Ground Water, Monsanto Company, W.G. Krummrich Plant, Sauget, IL. ***

Well Number:	B-25A	B-25A	B-25B	B-25B	B-27B	B-27B	B-29A	B-29A	B-29A	B-29B
Date:	6/84	11/85	6/84	11/85	9/84**	9/84*	2/86	6/84	11/85	6/84
USEPA Priority Pollutant Acid Extractable Organic Compounds concentrations are in ug/L										
2-chlorophenol	14,900	89,200	10,200	23,300	NA	NA	<3.5	176,000	718,000	103,000
2,4-dichlorophenol	13,300	1,520,000	34,800	52,100	NA	NA	<2.9	12,900	44,700	33,800
2,4-diaethylphenol	<200	<26	<200	48.6	NA	NA	<2.9	7,740	44,500	38,300
4,6-dinitro-o-cresol	<760	<240	<760	<240	NA	NA	<26	<760	<2,400	<7,600
2,4-dinitrophenol	<1,040	<410	<1,040	<420	NA	NA	<45	<1,040	<4,200	<10,400
2-nitrophenol	<220	<35	<220	<36	NA	NA	<3.8	<220	<360	<2,200
4-nitrophenol	<700	167	497	2,320	NA	NA	<2.6	<700	<240	7,590
p-chloro-m-cresol	<160	<29	<160	<30	NA	NA	<3.2	<160	<300	<1,600
pentachlorophenol	<680	546	<680	<36	NA	NA	<3.8	9,280	10,600	1,700
phenol	34,900	965,000	39,400	32,700	NA	NA	<1.6	657,000	771,000	609,000
2,4,6-trichlorophenol	5,160	13,900	<240	6,870	NA	NA	<2.9	11,300	15,300	31,200
Sub Total 1	68260	2588813	84897	117338.6	NA	NA	0	874220	1604100	824590
Miscellaneous Acid Extractable Organic Compounds										
4-chlorophenol	NA	42,500	NA	22,600	NA	NA	<11	NA	299,000	NA
Sub Total 2	NA	42,500	NA	22,600	NA	NA	0	NA	299,000	NA
Total Acid Compounds Analyzed	68260	2631313	84897	139938.6	NA	NA	0	874220	1903100	824590

Table E-2. Summary of Acid Extractable Compounds in Ground Water, Monsanto Company, W.G. Krummrich Plant, Sauget, IL. ***

Well Number:	B-29B	B-29B	B-29B	B-29B	B-30B	B-31B	B-31B	B-31C	B-31C	B-31C
Date:	6/84*	6/84@	11/84	11/85	9/84**	11/85	2/86	9/84**	9/84+	11/85
USEPA Priority Pollutant Acid Extractable Organic Compounds concentrations are in ug/L										
2-chlorophenol	116,000	27,400	953	70,900	NA	<3.3	<3.3	<6	<6	<3.4
2,4-dichlorophenol	97,400	68,100	<250	37,500	NA	<2.7	<2.7	<8	<8	<2.8
2,4-diaethylphenol	13,500	18,700	<250	21,200	NA	<2.7	<2.7	<10	<10	<2.8
4,6-dinitro-o-cresol	<760	<25,000	<2500	<480	NA	<24	<24	<38	<38	<24
2,4-dinitrophenol	<1,040	<25,000	<2500	<840	NA	<42	<42	<52	<52	<43
2-nitrophenol	<220	<2,500	<250	<72	NA	<3.6	<3.6	<11	<11	<3.7
4-nitrophenol	<700	3,690	<250	1,860	NA	<2.4	<2.4	<35	<35	<2.4
p-chloro-m-cresol	<160	<2,500	<250	<60	NA	<3	<3	<8	<8	<3.1
pentachlorophenol	<680	3,690	<250	3,090	NA	<3.6	<3.6	<34	<34	<3.7
phenol	1,070,000	19,800	5,010	133,000	NA	<1.5	<1.5	<4	<4	<1.5
2,4,6-trichlorophenol	16,000	16,000	<250	11,800	NA	<2.7	<2.7	<12	<12	<2.8
Sub Total 1	1312900	157380	5963	279350	NA	0	0	0	0	0
Miscellaneous Acid Extractable Organic Compounds										
chlorophenol	NA	NA	<250	49,900	NA	<10	<10	<10	<10	<10
Sub Total 2	NA	NA	0	49,900	NA	0	0	0	0	0
Total Acid Compounds Analyzed	1312900	157380	5963	329250	NA	0	0	0	0	0

Table E-2. Summary of Acid Extractable Compounds in Ground Water, Monsanto Company, W.G. Krummrich Plant, Sauget, IL. ***

Well Number:	B-31C	B-101	B-102	GM-106	GM-106	GM-106	P-1	P-2	P-2	P-6
Date:	2/86	9/84**	9/84**	11/85	2/86	2/86*	9/84**	6/84	11/85	6/84
USEPA Priority Pollutant Acid Extractable Organic Compounds concentrations are in ug/L										
2-chlorophenol	6.2	5,630	<6	15.7	52.1	40.9	<6	16	8.5	<1
2,4-dichlorophenol	<2.8	31,200	<8	22	133	128	2	40	<2.7	<1
2,4-diaethylphenol	<2.8	<10	<10	<2.7	4.8	4.5	<10	<1	<2.7	<1
4,6-dinitro-o-cresol	<25	<38	<38	<24	<25	<24	<38	<1	<24	<1
2,4-dinitrophenol	<44	<52	<52	<42	<43	<43	<52	<1	<42	<1
2-nitrophenol	<3.9	<11	<11	<3.6	<3.7	<3.7	<11	<1	<3.6	<1
4-nitrophenol	<2.5	<35	<35	<2.4	<2.5	3	<35	<1	<2.4	<1
p-chloro-m-cresol	<3.2	<8	<8	<3	<3.1	<3.1	<8	<1	<3	<1
pentachlorophenol	<3.8	1,360	<34	<3.6	<3.7	<3.7	1	1	<3.6	<1
phenol	<1.6	<4	<4	35.9	65.2	53.5	<4	291	<1.5	6
2,4,6-trichlorophenol	<2.8	14,600	<12	52.9	207	181	1	7	<2.7	<1
Sub Total 1	6.2	52790	0	126.5	462.1	410.9	4	355	8.5	6
Miscellaneous Acid Extractable Organic Compounds										
chlorophenol	<11	<10	<10	<10	37.1	36.3	<10	NA	<10	NA
Sub Total 2	0	0	0	0	37.1	36.3	0	NA	0	NA
Total Acid Compounds Analyzed	6.2	52790	0	126.5	499.2	447.2	4	355	8.5	6

Table E-2. Summary of Acid Extractable Compounds in Ground Water, Monsanto Company, W.G. Krummrich Plant, Sauget, IL. ***

Well Number:	P-6	P-7	P-7	P-8	P-8	P-10	P-11	P-12	P-13	P-13
Date:	11/85	6/84	11/85	6/84	11/85	9/84**	9/84**	9/84**	6/84	6/94*
USEPA Priority Pollutant Acid Extractable Organic Compounds concentrations are in ug/L										
2-chlorophenol	<3.7	10,200	2,660	1	27.2	<6	<6	<6	<1	<1
2,4-dichlorophenol	<3.1	8,180	7,790	<1	<2.7	<8	<8	<8	<1	<1
2,4-dimethylphenol	<3.1	1,930	<5.5	1	32.1	<10	<10	<10	<1	<1
4,6-dinitro-o-cresol	<27	<760	<48	<1	<24	<38	<38	<38	<1	<1
2,4-dinitrophenol	<47	<1,040	<85	<1	<42	<52	<52	<52	<1	<1
2-nitrophenol	<4.1	<220	<7.3	<1	<3.6	<11	<11	<11	<1	<1
4-nitrophenol	<2.7	<700	133	<1	<2.4	<35	<35	<35	<1	<1
p-chloro-m-cresol	<3.4	<160	<6.1	<1	<3	<8	<8	<8	<1	<1
pentachlorophenol	<4.1	<680	<7.3	<1	<3.6	<34	<34	<34	<1	<1
phenol	<1.7	123,000	22,300	9	<1.5	<4	<4	<4	<1	4
2,4,6-trichlorophenol	<3.1	1,920	3,430	<1	<2.7	<12	<12	<12	<1	<1
Sub Total 1	0	145230	36313	11	59.3	0	0	0	0	4
Miscellaneous Acid Extractable Organic Compounds										
4-chlorophenol	<11	NA	13,100	NA	182	<10	<10	<10	NA	NA
Sub Total 2	0	NA	13,100	NA	182	0	0	0	NA	NA
Total Acid Compounds Analyzed	0	145230	49413	11	241.3	0	0	0	0	4

Table E-2. Summary of Acid Extractable Compounds in Ground Water, Monsanto Company, W.G. Krumrich Plant, Sauget, Il. ***

Well Number:	P-13	P-13	P-14	P-14	DW-1	DW-1	DW-4	DW-7	Dw-7	DW-10
Date:	6/84#	11/85	6/84	11/85	9/84##	11/85	9/84##	11/85	2/86	9/84##
USEPA Priority Pollutant Acid Extractable Organic Compounds concentrations are in ug/L										
2-chlorophenol	<25	<3.3	<1	74.5	<6	22.1	42	19.3	36.4	<6
2,4-dichlorophenol	<25	<2.7	<1	<2.8	<8	<5.2	24	23.6	12.6	<8
2,4-diaethylphenol	<25	<2.7	<1	<2.8	<10	<5.2	<10	<5.4	<2.8	<10
4,6-dinitro-o-cresol	<250	<24	<1	<25	<38	<46	<38	<48	<24	<38
2,4-dinitrophenol	<250	<42	<1	<43	<52	<81	<52	<84	<43	<52
2-nitrophenol	<25	<3.6	<1	<3.7	<11	<6.9	<11	<7.2	<3.7	<11
4-nitrophenol	<25	<2.4	<1	<2.5	<35	<4.6	<35	<4.8	<2.4	<35
p-chloro-m-cresol	<25	<3	<1	<3.1	<8	<5.8	<8	<6.0	<3.1	<8
pentachlorophenol	<25	<3.6	<1	<3.7	<34	<6.9	1,340	30.5	<3.7	39
phenol	<25	4.3	1	<1.5	29	210	<4	<3	25.9	<4
2,4,6-trichlorophenol	<25	<2.7	<1	<2.8	<12	<5.2	529	44.8	117	3
Sub Total 1	0	4.3	1	74.5	29	232.1	1935	168.2	191.9	42
Miscellaneous Acid Extractable Organic Compounds										
4-chlorophenol	NA	<10	NA	29.4	<10	189	<10	58.6	200	<10
Sub Total 2	NA	0	NA	29.4	0	189	0	58.6	200	0
Total Acid Compounds Analyzed	0	4.3	1	103.9	29	421.1	1935	226.8	391.9	42

Table E-2. Summary of Acid Extractable Compounds in Ground Water, Monsanto Company, W.G. Krumrich Plant, Sauget, IL. ***

Well Number:	DW-18	DW-18	DW-18	DW-23	DW-24	DW-24	DW-29	DW-29	DW-30	DW-33
Date:	9/84**	9/84*	11/85	9/84**	9/84**	9/84*	9/84**	9/84*	11/85	9/84**
USEPA Priority Pollutant Acid Extractable Organic Compounds concentrations are in ug/L										
2-chlorophenol	<6	NA	<3.5	<6	<6	<6	<6	NA	4.2	<6
2,4-dichlorophenol	<8	NA	<2.8	<8	<8	<8	52	NA	<2.8	<8
2,4-dimethylphenol	<10	NA	<2.8	<10	<10	<10	<10	NA	<2.8	<10
4,6-dinitro-o-cresol	<38	NA	<25	<38	<38	<38	<38	NA	<25	<38
2,4-dinitrophenol	<52	NA	<44	<52	<52	<52	<52	NA	<43	<52
2-nitrophenol	<11	NA	<3.8	<11	<11	<11	<11	NA	<3.7	<11
4-nitrophenol	<35	NA	<2.5	<35	<35	<35	<35	NA	<2.5	<35
p-chloro-m-cresol	<8	NA	<3.2	<8	<8	<8	<8	NA	<3.1	<8
pentachlorophenol	<34	NA	<3.8	<34	<34	<34	<34	NA	<3.7	4
phenol	1	NA	<1.6	<4	<4	<4	<4	NA	<1.5	<4
2,4,6-trichlorophenol	<12	NA	<2.8	<12	<12	<12	<12	NA	<2.8	<12
Sub Total 1	1	NA	0	0	0	0	52	NA	4.2	4
Miscellaneous Acid Extractable Organic Compounds										
4-chlorophenol	<10	NA	<11	<10	<10	<10	<10	NA	<10	<10
Sub Total 2	0	NA	0	0	0	0	0	NA	0	0
Total Acid Compounds Analyzed	1	NA	0	0	0	0	52	NA	4.2	4

Table E-2. Summary of Acid Extractable Compounds in Ground Water, Monsanto Company, W.G. Krummrich Plant, Sauget, IL. ***

Well Number:	DW-34	DW-34	DW-34	DW-1-85	DW-1-85	BK-3	BK-3	BK-3	W8-6	W8-6
Date:	9/84**	11/85	2/86	11/85	2/86	9/84**	11/85	2/86	9/84**	11/85
USEPA Priority Pollutant Acid Extractable Organic Compounds concentrations are in ug/L										
2-chlorophenol	<6	<6.6	<3.5	36.2	15.2	<6	<3.3	13.2	<6	<3.3
2,4-dichlorophenol	<8	<5.4	<2.9	<5.4	<2.9	6	<2.7	<2.8	<8	<2.7
2,4-diaethylphenol	<10	<5.4	<2.9	<5.4	<2.9	<10	<2.7	<2.8	<10	3.7
4,6-dinitro-o-cresol	<38	<48	<26	<48	<26	<38	<24	<24	<38	<24
2,4-dinitrophenol	<52	<84	<45	<84	<45	<52	<42	<43	<52	<42
2-nitrophenol	<11	<7.2	<3.9	<7.2	<3.8	<11	<3.6	<3.7	<11	<3.6
4-nitrophenol	<35	<4.8	<2.6	<4.8	<2.6	<35	<2.4	<2.4	<35	<2.4
p-chloro-m-cresol	<8	<6.0	<3.2	<6.0	<3.2	<8	<3	<3.1	<8	<3
pentachlorophenol	<34	<7.2	<3.9	<7.9	<3.8	<34	<3.6	<3.7	<34	<3.6
phenol	158	15.6	70.2	16.9	<1.6	<4	<1.5	6	<4	<1.5
2,4,6-trichlorophenol	<12	<5.4	<2.9	<5.4	<2.9	<12	<2.7	<2.8	<12	<2.7
Sub Total 1	158	15.6	70.2	53.1	15.2	6	0	19.2	0	3.7
Miscellaneous Acid Extractable Organic Compounds										
4-chlorophenol	<10	<20	<11	<20	<11	<10	<10	13.4	<10	<10
Sub Total 2	0	0	0	0	0	0	0	13.4	0	0
Total Acid Compounds Analyzed	158	15.6	70.2	53.1	15.2	6	0	32.6	0	3.7

Table E-2. Summary of Acid Extractable Compounds in Ground Water, Monsanto Company, W.G. Krummrich Plant, Sauget, IL. ***

Well Number:	MB-6	MB-7	MB-7	Field Blank	Trip Blank	Trip Blank	Trip Blank	Lab Blank	Lab Blank	Lab Blank
Date:	2/86	9/84	11/85	6/84	5/84	6/84	9/84	11/83	11/83	9/84
USEPA Priority Pollutant Acid Extractable Organic Compounds concentrations are in ug/L										
2-chlorophenol	<3.4	<6	<3.8	<6	<1	<6	<6	<1	<1	<6
2,4-dichlorophenol	<2.8	<8	<2.8	<8	<1	<8	<8	<1	<1	<8
2,4-dimethylphenol	59.5	<10	<2.8	<10	<1	<10	<10	<1	<1	<10
4,6-dinitro-o-cresol	<25	<38	<24	<38	<1	<38	<38	<1	<1	<38
2,4-dinitrophenol	<43	<52	<43	<52	<1	<52	<52	<1	<1	<52
2-nitrophenol	<3.7	<11	<3.7	<11	<1	<11	<11	<1	<1	<11
4-nitrophenol	<2.5	<35	<2.4	<35	<1	<35	<35	<1	<1	<35
p-chloro-a-cresol	<3.1	<8	<3.1	<8	<1	<8	<8	<1	<1	<8
pentachlorophenol	<3.7	<34	<3.7	<34	<1	<34	<34	<1	<1	9
phenol	<1.5	<4	<1.5	<4	<1	<4	<4	<1	<1	<4
2,4,6-trichlorophenol	<2.8	<12	<2.8	<12	<1	<12	<12	<1	<1	<12
Sub Total 1	59.5	0	0	0	0	0	0	0	0	9
Miscellaneous Acid Extractable Organic Compounds										
chlorophenol	<10	<10	<10	NA	NA	NA	NA	NA	NA	NA
Sub Total 2	0	0	0	NA	NA	NA	NA	NA	NA	NA
Total Acid Compounds Analyzed	59.5	0	0	0	0	0	0	0	0	9

Table E-2. Summary of Acid Extractable Compounds in Ground Water, Monsanto Company, W.G. Krumarich Plant, Sauget, IL. ***

Well Number:	Lab Blank	Lab Blank	Lab Blank
Date:	9/84	9/84	9/84
USEPA Priority Pollutant Acid Extractable Organic Compounds concentrations are in ug/L			
2-chlorophenol	<6	<6	<6
2,4-dichlorophenol	<8	<8	<8
2,4-diaethylphenol	<10	<10	<10
4,6-dinitro-o-cresol	<38	<38	<38
2,4-dinitrophenol	<52	<52	<52
2-nitrophenol	<11	<11	<11
4-nitrophenol	<35	<35	<35
p-chloro-m-cresol	<8	<8	<8
pentachlorophenol	<34	<34	19
phenol	<4	<4	<4
2,4,6-trichlorophenol	<12	<12	<12
Sub Total 1	0	0	19
Miscellaneous Acid Extractable Organic Compounds			
4-chlorophenol	NA	NA	NA
Sub Total 2	NA	NA	NA
Total Acid Compounds Analyzed	0	0	19

NA - Not Analyzed.
* - Replicate Analyses
** - Prior to analysis, this sample was held by Envirodyne Engineers, Inc. longer than the maximum allowable USEPA holding time.
*** - Envirodyne Engineers, Inc. (St. Louis, MO.) provided the laboratory services for the September 1984 sampling round. ETC (Edison, New Jersey) performed the analyses for the November 1984 through February 1986 sampling programs.
< - Indicates that the compound was not detected at the detection limit which is the value shown next to the symbol.

Table E-3. Summary of Base/Neutral Extractable Compounds in Ground Water, Monsanto Company, W.G. Krummrich Plant, Sauget, IL

Well Number:	GM-1	GM-1	GM-2	GM-2	GM-3	GM-3	GM-3	GM-4A	GM-4A
Date:	11/83	5/84	11/83	5/84	11/83	5/84	5/84*	11/83	5/84
USEPA Priority Pollutant Base/Neutral Extractable Organic Compounds concentrations are in ug/L									
acenaphthene	<1	<1	<1	<1	<1	<1	<1	<1	<1
acenapthylene	<1	<1	<1	<1	<1	<1	<1	<1	<1
anthracene	<1	<1	<1	<1	<1	<1	<1	<1	<1
benzidine	<1	<1	<1	<1	<1	<1	<1	<1	<1
benzo (a) anthracene	<1	<1	<1	<1	<1	<1	<1	<1	<1
benzo (a) pyrene	<1	<1	<1	<1	<1	<1	<1	<1	<1
benzo (b) fluoroanthene	<1	<1	<1	<1	<1	<1	<1	<1	<1
benzo (ghi) perylene	<1	<1	<1	<1	<1	<1	<1	<1	<1
benzo (k) fluoranthene	<1	<1	<1	<1	<1	<1	<1	<1	<1
bis (2-chloroethoxy) methane	<1	<1	<1	<1	<1	<1	<1	<1	<1
bis (2-chloroethyl) ether	<1	<1	<1	<1	<1	<1	<1	<1	<1
bis (2-chloroisopropyl) ether	<1	<1	<1	<1	<1	<1	<1	<1	<1
bis (2-ethylhexyl) phthalate	<1	<1	13	<1	1	<1	<1	<1	2
4-bromophenyl phenyl ether	<1	<1	<1	<1	<1	<1	<1	<1	<1
butyl benzyl phthalate	<1	<1	<1	<1	<1	<1	<1	<1	<1
2-chloronaphthalene	<1	<1	<1	<1	<1	<1	<1	<1	<1
4-chlorophenyl phenyl ether	<1	<1	<1	<1	<1	<1	<1	<1	<1
chrysene	<1	<1	<1	<1	<1	<1	<1	<1	<1
dibenzo (a,h) anthracene	<1	<1	<1	<1	<1	<1	<1	<1	<1
1,2-dichlorobenzene	<1	<1	<1	<1	<1	<1	<1	<1	<1
1,3-dichlorobenzene	<1	<1	<1	<1	<1	<1	<1	<1	<1
1,4-dichlorobenzene	<1	<1	<1	<1	<1	<1	<1	<1	<1
3,3-dichlorobenzidine	<1	<1	<1	<1	<1	<1	<1	<1	<1
diethyl phthalate	<1	3	<1	2	<1	1	1	<1	1
dimethyl phthalate	<1	<1	<1	<1	<1	<1	<1	<1	<1
di-n-butyl phthalate	1	2	2	3	2	3	2	2	<1
2,4-dinitrotoluene	<1	<1	<1	<1	<1	<1	<1	<1	<1
2,6-dinitrotoluene	<1	<1	<1	<1	<1	<1	<1	<1	<1
di-n-octyl phthalate	<1	<1	<1	<1	<1	<1	<1	<1	<1
1,2-diphenylhydrazine	<1	<1	<1	<1	<1	<1	<1	<1	<1
fluoranthene	<1	<1	<1	<1	<1	<1	<1	<1	<1
fluorene	<1	<1	<1	<1	<1	<1	<1	<1	<1
hexachlorobenzene	<1	<1	<1	<1	<1	<1	<1	<1	<1
hexachlorobutadiene	<1	<1	<1	<1	<1	<1	<1	<1	<1
hexachlorocyclopentadiene	<1	<1	<1	<1	<1	<1	<1	<1	<1
hexachloroethane	<1	<1	<1	<1	<1	<1	<1	<1	<1
indeno (1,2,3-c,d) pyrene	<1	<1	<1	<1	<1	<1	<1	<1	<1
isophorone	<1	<1	<1	<1	<1	<1	<1	<1	<1
naphthalene	<1	<1	<1	<1	<1	<1	<1	<1	<1
nitrobenzene	<1	<1	<1	<1	<1	<1	<1	<1	<1
n-nitrosodimethylamine	<1	<1	<1	<1	<1	<1	<1	<1	<1
n-nitrosodi-n-propylamine	<1	<1	<1	<1	<1	<1	<1	<1	<1
n-nitrosodiphenylamine	<1	<1	<1	<1	<1	<1	<1	<1	<1
phenanthrene	<1	<1	<1	<1	<1	<1	<1	<1	<1
pyrene	<1	<1	<1	<1	<1	<1	<1	<1	<1
1,2,4-trichlorobenzene	<1	<1	<1	<1	<1	<1	<1	<1	<1
Sub Total 1	1	5	15	5	3	4	3	2	3

Table E-3. Summary of Base/Neutral Extractable Compounds in Ground Water, Monsanto Company, W.G. Krummrich Plant, Sauget, Il

Well Number:	GM-1	GM-1	GM-2	GM-2	GM-3	GM-3	GM-3	GM-4A	GM-4A
Date:	11/83	5/84	11/83	5/84	11/83	5/84	5/84*	11/83	5/84
Miscellaneous Base/Neutral Extractable Organic Compounds concentrations are in ug/L									
2-nitroaniline	NA	NA	NA	NA	NA	NA	NA	NA	NA
4-nitroaniline	NA	NA	NA	NA	NA	NA	NA	NA	NA
2-nitrochlorobenzene	NA	NA	NA	NA	NA	NA	NA	NA	NA
4-nitrochlorobenzene	NA	NA	NA	NA	NA	NA	NA	NA	NA
2,4-and 3,4-dinitrochlorobenzene	NA	NA	NA	NA	NA	NA	NA	NA	NA
4-nitrodiphenylamine	NA	NA	NA	NA	NA	NA	NA	NA	NA
triphenyl phosphate	NA	NA	NA	NA	NA	NA	NA	NA	NA
2,3,7,8-tetrachloro-dibenzo-p-dioxin	NA	NA	NA	NA	NA	NA	NA	NA	NA
2-nitrobiphenyl	NA	NA	NA	NA	NA	NA	NA	NA	NA
4-nitrobiphenyl	NA	NA	NA	NA	NA	NA	NA	NA	NA
Sub Total 2	NA	NA	NA	NA	NA	NA	NA	NA	NA
Total Base/Neutral Compounds Analyzed	1	5	15	5	3	4	3	2	3

Table E-3. Summary of Base/Neutral Extractable Compounds in Ground Water, Monsanto Company, W.G. Krummrich Plant, Sauget, Il

Well Number:	GM-4B	GM-4B	GM-4B	GM-4B	GM-4B	GM-4B	GM-4C	GM-4C	GM-5
Date:	9/84	11/84	11/84*	2/85	11/85	11/85*	2/85	5/85	11/83
USEPA Priority Pollutant Base/Neutral Extractable Organic Compounds concentrations are in ug/L									
acenaphthene	<4	<10	<10	<1.9	<1.9	<1.9	<1.9	<1.9	<1
acenapthylene	<3	<10	<10	<3.5	<3.5	<3.5	<3.5	<3.5	<1
anthracene	<4	<10	<10	<1.9	<1.9	10.6	<1.9	<1.9	<1
benzidine	<60	<10	<10	<44	<44	<44	<44	<44	<1
benzo (a) anthracene	<9	<10	<10	<7.8	<7.9	<7.8	<7.8	<7.8	<1
benzo (a) pyrene	<12	<10	<10	<2.5	<2.5	<2.5	<2.5	<2.5	<1
benzo (b) fluoroanthene	<11	<10	<10	<4.8	<4.8	<4.8	<4.8	<4.8	<1
benzo (ghi) perylene	<14	<10	<10	<4.1	<4.1	<4.1	<4.1	<4.1	<1
benzo (k) fluoranthene	<11	<10	<10	<2.5	<3.5	<3.5	<2.5	<2.5	<1
bis (2-chloroethoxy) methane	<4	<10	<10	<5.3	<5.4	<5.3	<5.3	<5.3	<1
bis (2-chloroethyl) ether	<4	<10	<10	<5.7	<5.8	<5.7	<5.7	<5.7	<1
bis (2-chloroisopropyl) ether	<3	<10	<10	<5.7	<5.8	<5.7	<10	<6	<1
bis (2-ethylhexyl) phthalate	24	<10	<10	<10	<10	10.9	<1.9	<10	<1
4-bromophenyl phenyl ether	<16	<10	<10	<1.9	<1.9	<1.9	<10	<1.9	<1
butyl benzyl phthalate	8	<10	<10	<10	<10	<10	<1.9	<10	<1
2-chloronaphthalene	<4	<10	<10	<1.9	<1.9	<1.9	<1.9	<1.9	<1
4-chlorophenyl phenyl ether	<9	<10	<10	<4.2	<4.2	<4.2	<4.2	<4.2	<1
chrysene	<9	<10	<10	<2.5	<2.5	<2.5	<2.5	<2.5	<1
benzo (a,h) anthracene	<16	<10	<10	<2.5	<10	<10	<2.5	<2.5	<1
1,2-dichlorobenzene	159	258	123	105	65.6	99.2	91.7	49	<1
1,3-dichlorobenzene	12	56	37	31.6	82.8	42.4	73.3	24	<1
1,4-dichlorobenzene	681	1220	333	963	336	463	1,030	295	<1
3,3-dichlorobenzidine	<161	<10	<10	<16.5	<17	<17	<16.5	<16.5	<1
diethyl phthalate	<4	<10	<10	<10	<10	<10	<10	<10	<1
dimethyl phthalate	<4	<10	<10	<10	<10	<10	<10	<10	<1
di-n-butyl phthalate	14	<10	<10	<10	<10	<10	<10	<10	1
2,4-dinitrotoluene	<14	<10	<10	<5.7	<5.8	<5.7	<5.7	<5.7	<1
2,6-dinitrotoluene	<16	<10	<10	<1.9	<1.9	<1.9	<1.9	<1.9	<1
di-n-octyl phthalate	<6	<10	<10	<10	<10	<10	<10	<10	<1
1,2-diphenylhydrazine	<10	<10	<10	<10	<10	<10	<10	<10	<1
fluoranthene	<5	<10	<10	<2.2	<2.2	<2.2	<2.2	<2.2	<1
fluorene	<4	<10	<10	<1.9	<1.9	<1.9	<1.9	<1.9	<1
hexachlorobenzene	<15	<10	<10	<1.9	<1.9	<1.9	<1.9	<1.9	<1
hexachlorobutadiene	<13	<10	<10	<0.9	<0.9	<0.9	<0.9	<0.9	<1
hexachlorocyclopentadiene	<12	<10	<10	<10	<10	<10	<10	<10	<1
hexachloroethane	<10	<10	<10	<1.6	<1.6	<1.6	<1.6	<1.6	<1
indeno (1,2,3-c,d) pyrene	<7	<10	<10	<3.7	<4.7	<4.7	<3.7	<3.7	<1
isophorone	<2	<10	<10	<2.2	<2.2	<2.2	<2.2	<2.2	<1
naphthalene	<2	<10	<10	<1.6	<1.6	<1.6	<1.6	<1.6	<1
nitrobenzene	<5	<10	<10	<1.9	<1.9	<1.9	<1.9	<1.9	<1
n-nitrosodimethylamine	<10	<10	<10	<10	<10	<10	<10	<10	<1
n-nitrosodi-n-propylamine	<6	<10	<10	<10	<10	<10	<10	<10	<1
n-nitrosodiphenylamine	25	<10	<10	<1.9	<1.9	<1.9	72.4	<1.9	<1
phenanthrene	<4	<10	<10	<5.4	<5.5	<5.4	<5.4	<5.4	<1
pyrene	<5	<10	<10	<1.9	<1.9	<1.9	<1.9	<1.9	<1
1,2,4-trichlorobenzene	<7	<10	<10	<1.9	<1.9	<1.9	<1.9	<1.9	<1
Sub Total 1	923	1534	493	1099.6	504.4	626.1	1267.4	359	1

Table E-3. Summary of Base/Neutral Extractable Compounds in Ground Water, Monsanto Company, W.G. Krummrich Plant, Sauget, Il

Well Number:	GM-4B	GM-4B	GM-4B	GM-4B	GM-4B	GM-4B	GM-4C	GM-4C	GM-5
Date:	9/84	11/84	11/84*	2/85	11/85	11/85*	2/85	5/85	11/83
Miscellaneous Base/Neutral Extractable Organic Compounds concentrations are in ug/L									
2-nitroaniline	<25-30	<10	<10	<10	<10	<10	<10	<10	NA
4-nitroaniline	<25-30	<10	<10	<10	<10	<10	<10	<10	NA
2-nitrochlorobenzene	<10	<10	<10	<10	<10	19.9	<10	<10	NA
4-nitrochlorobenzene	<10	<10	<10	<10	<10	23.6	<10	<10	NA
2,4-and 3,4-dinitrochlorobenzene	<10	<10	<10	<10	<10	<10	<10	<10	NA
4-nitrodiphenylamine	<10	<10	<10	<10	<10	<10	<10	<10	NA
triphenyl phosphate	<10	<10	<30	<10	<10	<10	<10	<10	NA
2,3,7,8-tetrachloro-dibenzo-p-dioxin	NA	NA	NA	NA	NA	NA	NA	NA	NA
2-nitrobiphenyl	NA	NA	NA	NA	NA	NA	NA	NA	NA
4-nitrobiphenyl	NA	NA	NA	NA	NA	NA	NA	NA	NA
Sub Total 2	0	0	0	0	0	43.5	0	0	NA
Total Base/Neutral Compounds Analyzed	923	1534	493	1099.6	504.4	669.6	1267.4	359	1

Table E-3. Suaaary of Base/Neutral Extractable Coapounds in Ground Water, Monsanto Company, W.G. Kruaarich Plant, Sauget, Il

Well Number:	GM-5	GM-6A	GM-6A	GM-6A	GM-6B	GM-6B	GM-6B	GM-7	GM-7
Date:	5/84	11/83	5/84	11/84	9/84**	11/84	11/85	11/83	5/84
USEPA Priority Pollutant Base/Neutral Extractable Organic Compounds Concentrations are in ug/L									
Acenaphthene	<1	<1	<1	<10	<4	<10	<1.9	<1	<1
Acenapthylene	<1	<1	<1	<10	<3	<10	<3.5	<1	<1
anthracene	<1	<1	<1	<10	<4	<10	<1.9	<1	<1
benzidine	<1	<1	<1	<10	<60	<10	<44	<1	<1
Benzo (a) anthracene	<1	<1	<1	<10	<9	<10	<7.8	<1	<1
Benzo (a) pyrene	<1	<1	<1	<10	<12	<10	<2.5	<1	<1
benzo (b) fluoroanthene	<1	<1	<1	<10	<11	<10	<4.8	<1	<1
Benzo (ghi) perylene	<1	<1	<1	<10	<14	<10	<4.1	<1	<1
Benzo (k) fluoranthene	<1	<1	<1	<10	<11	<10	<3.5	<1	<1
bis (2-chloroethoxy) methane	<1	<1	<1	<10	<4	<10	<5.3	<1	<1
bis (2-chloroethyl) ether	<1	<1	<1	<10	<4	<10	<5.7	<1	<1
bis (2-chloroisopropyl) ether	<1	<1	<1	<10	<3	<10	<5.7	<1	<1
bis (2-ethylhexyl) phthalate	<1	<1	5	<10	12	<10	<10	1	2
4-bromophenyl phenyl ether	<1	<1	<1	<10	<16	<10	<1.9	<1	<1
Butyl benzyl phthalate	<1	<1	<1	<10	<13	<10	<10	<1	<1
2-chloronaphthalene	<1	<1	<1	<10	<4	<10	<1.9	<1	<1
4-chlorophenyl phenyl ether	<1	<1	<1	<10	<9	<10	<4.2	<1	<1
Chrysene	<1	<1	<1	<10	<9	<10	<2.5	<1	<1
Dibenzo (a,h) anthracene	<1	<1	<1	<10	<16	<10	<10	<1	<1
1,2-dichlorobenzene	<1	<1	<1	<10	37	25	31.5	<1	<1
1,3-dichlorobenzene	<1	<1	<1	<10	<6	<10	10	<1	<1
1,4-dichlorobenzene	<1	<1	<1	<10	55	24	151	<1	<1
3,3-dichlorobenzidine	<1	<1	<1	<10	<161	<10	<17	<1	<1
diethyl phthalate	1	<1	1	<10	<4	<10	<10	<1	2
Dimethyl phthalate	<1	<1	<1	<10	<4	<10	<10	<1	<1
Di-n-butyl phthalate	1	2	2	<10	2	<10	<10	2	3
2,4-dinitrotoluene	<1	<1	<1	<10	<14	<10	<5.7	<1	<1
2,6-dinitrotoluene	<1	<1	<1	<10	<16	<10	<1.9	<1	<1
Di-n-octyl phthalate	<1	<1	<1	<10	<6	<10	<10	<1	<1
1,2-diphenylhydrazine	<1	<1	<1	<10	<10	<10	<10	<1	<1
fluoranthene	<1	<1	<1	<10	<5	<10	<2.2	<1	<1
fluorene	<1	<1	<1	<10	<4	<10	<1.9	<1	<1
Hexachlorobenzene	<1	<1	<1	<10	<15	<10	<1.9	<1	<1
hexachlorobutadiene	<1	<1	<1	<10	<13	<10	<0.9	<1	<1
Hexachlorocyclopentadiene	<1	<1	<1	<10	<12	<10	<10	<1	<1
Hexachloroethane	<1	<1	<1	<10	<10	<10	<1.6	<1	<1
indeno (1,2,3-c,d) pyrene	<1	<1	<1	<10	<7	<10	<4.7	<1	<1
isophorone	<1	<1	<1	<10	<2	<10	<2.2	<1	<1
Naphthalene	<1	<1	<1	<10	<2	<10	<1.6	<1	<1
Nitrobenzene	<1	<1	<1	<10	<5	<10	<1.9	<1	<1
n-nitrosodimethylamine	<1	<1	<1	<10	<10	<10	<10	<1	<1
N-nitrosodi-n-propylamine	<1	<1	<1	<10	<6	<10	<10	<1	<1
N-nitrosodiphenylamine	<1	<1	<1	<10	15	<10	<1.9	<1	<1
Phenanthrene	1	<1	<1	<10	<4	<10	<5.4	<1	<1
Pyrene	<1	<1	<1	<10	<5	<10	<1.9	<1	<1
1,2,4-trichlorobenzene	<1	<1	<1	<10	<7	<10	<1.9	<1	<1
Sub Total 1	3	2	8	0	121	49	202.5	3	7

Table E-3. Summary of Base/Neutral Extractable Compounds in Ground Water, Monsanto Company, W.G. Krummrich Plant, Sauget, Il

Well Number:	GM-5	GM-6A	GM-6A	GM-6A	GM-6B	GM-6B	GM-6B	GM-7	GM-7
Date:	5/84	11/83	5/84	11/84	9/84**	11/84	11/85	11/83	5/84
Miscellaneous Base/Neutral Extractable Organic Compounds concentrations are in ug/L									
2-nitroaniline	NA	NA	NA	<10	<25-30	<10	<10	NA	NA
4-nitroaniline	NA	NA	NA	<10	<25-30	<10	<10	NA	NA
2-nitrochlorobenzene	NA	NA	NA	<10	<10	<10	<10	NA	NA
4-nitrochlorobenzene	NA	NA	NA	<10	<10	<10	<10	NA	NA
2,4-and 3,4-dinitrochlorobenzene	NA	NA	NA	<10	<10	<10	<10	NA	NA
4-nitrodiphenylamine	NA	NA	NA	<10	<10	<10	<10	NA	NA
triphenyl phosphate	NA	NA	NA	<10	<10	<10	<10	NA	NA
2,3,7,8-tetrachloro-dibenzo-p-dioxin	NA	NA	NA	NA	NA	NA	NA	NA	NA
2-nitrobiphenyl	NA	NA	NA	NA	<10	NA	NA	NA	NA
4-nitrobiphenyl	NA	NA	NA	NA	<10	NA	NA	NA	NA
Sub Total 2	NA	NA	NA	0	0	0	0	NA	NA
Total Base/Neutral Compounds Analyzed	3	2	8	0	121	49	202.5	3	7

Table E-3. Summary of Base/Neutral Extractable Compounds in Ground Water, Monsanto Company, W.G. Krummrich Plant, Sauget, Il

Well Number:	GM-8	GM-8	GM-8	GM-8	GM-8	GM-9A	GM-9A	GM-9B	GM-9B
Date:	11/83	5/84	11/84	2/85	11/85	11/83	5/84	9/84***	5/85
USEPA Priority Pollutant Base/Neutral Extractable Organic Compounds concentrations are in ug/L									
acenaphthene	<1	<1	<10	<1.9	<2.0	<1	<1	<4	<1.9
acenapthylene	<1	<1	<10	<3.5	<3.7	<1	<1	<3	<3.5
anthracene	<1	<1	<10	<1.9	<2.0	<1	<1	<4	<1.9
benzidine	<1	<1	<10	<44	<46	<1	<1	<60	<44
benzo (a) anthracene	<1	<1	<10	<7.8	<8.2	<1	<1	<9	<7.8
benzo (a) pyrene	<1	<1	<10	<2.5	<2.6	<1	<1	<12	<2.5
benzo (b) fluoroanthene	<1	<1	<10	<4.8	<5.1	<1	<1	<11	<4.8
benzo (ghi) perylene	<1	<1	<10	<4.1	<4.3	<1	<1	<14	<4.1
benzo (k) fluoranthene	<1	<1	<10	<2.5	<3.7	<1	<1	<11	<2.5
bis (2-chloroethoxyl aethane	<1	<1	<10	<5.3	<5.6	<1	<1	<4	<5.3
bis (2-chloroethyl) ether	<1	<1	<10	<5.7	<6.0	<1	<1	<4	<5.7
bis (2-chloroisopropyl) ether	<1	<1	<10	<5.7	<6.0	<1	<1	<3	<6
bis (2-ethylhexyl) phthalate	1	3	<10	<10	<11	<1	3	89	<10
4-bromophenyl phenyl ether	<1	<1	<10	<1.9	<2	<1	<1	<16	<1.9
butyl benzyl phthalate	<1	<1	<10	<10	<11	<1	14	<13	<10
2-chloronaphthalene	<1	<1	<10	<1.9	<2	<1	<1	<4	<1.9
4-chlorophenyl phenyl ether	<1	<1	<10	<4.2	<4.4	<1	<1	<9	<4.2
chrysene	<1	<1	<10	<2.5	<2.6	<1	<1	<9	<2.5
benzo (a,h) anthracene	<1	<1	<10	<2.5	<11	<1	<1	<16	<2.5
,2-dichlorobenzene	<1	<1	<10	<1.9	<2	33	30	30	<1.9
1,3-dichlorobenzene	<1	<1	<10	<1.9	<2	<1	2	<6	<1.9
1,4-dichlorobenzene	<1	<1	<10	<4.4	<4.6	38	40	<5	0.5
3,3-dichlorobenzidine	<1	<1	<10	<16.5	<17	<1	<1	<161	<16.5
diethyl phthalate	<1	1	<10	<10	<11	<1	<1	<4	<10
dimethyl phthalate	<1	<1	<10	<10	<11	<1	<1	<4	<10
di-n-butyl phthalate	1	3	<10	<10	<11	1	2	4	<10
2,4-dinitrotoluene	<1	<1	<10	<5.7	<6.0	<1	<1	<14	<5.7
2,6-dinitrotoluene	<1	<1	<10	<1.9	<2.0	<1	<1	<16	<1.9
di-n-octyl phthalate	<1	<1	<10	<10	<11	<1	<1	<6	<10
1,2-diphenylhydrazine	<1	<1	<10	<10	<11	<1	<1	<10	<10
fluoranthene	<1	<1	<10	<2.2	<2.3	<1	<1	<5	<2.2
fluorene	<1	<1	<10	<1.9	<2	<1	<1	<4	<1.9
hexachlorobenzene	<1	<1	<10	<1.9	<2	<1	<1	<15	<1.9
hexachlorobutadiene	<1	<1	<10	<0.9	<1	<1	<1	<13	<0.9
hexachlorocyclopentadiene	<1	<1	<10	<10	<11	<1	<1	<12	<10
hexachloroethane	<1	<1	<10	<1.6	<1.7	<1	<1	<10	<1.6
indeno (1,2,3-c,d) pyrene	<1	<1	<10	<3.7	<4.9	<1	<1	<7	<3.7
isophorone	<1	<1	<10	<2.2	<2.3	<1	<1	<2	<2.2
naphthalene	<1	<1	<10	<1.6	<1.7	<1	<1	<2	<1.6
nitrobenzene	8	1	<10	2.2	<2	<1	<1	<5	<1.9
n-nitrosodimethylamine	<1	<1	<10	<10	<11	<1	<1	<10	<10
n-nitrosodi-n-propylamine	<1	<1	<10	<10	<11	<1	<1	<6	<10
n-nitrosodiphenylamine	<1	<1	<10	<1.9	<2	<1	<1	<82	<1.9
nhenanthrene	<1	<1	<10	<5.4	<5.7	<1	<1	<4	<5.4
ene	<1	<1	<10	<1.9	<2	<1	<1	<5	<1.9
,2,4-trichlorobenzene	<1	<1	<10	<1.9	<2	<1	<1	<7	<1.9
Sub Total 1	10	8	0	2.2	0	72	91	123	0.5

Table E-3. Summary of Base/Neutral Extractable Compounds in Ground Water, Monsanto Company, W.G. Krummrich Plant, Sauget, Il

Well Number:	GM-8	GM-8	GM-8	GM-8	GM-8	GM-9A	GM-9A	GM-9B	GM-9B
Date:	11/83	5/84	11/84	2/85	11/85	11/83	5/84	9/84**	5/85
Miscellaneous Base/Neutral Extractable Organic Compounds concentrations are in ug/L									
2-nitroaniline	NA	NA	<10	<10	<11	NA	NA	<25-30	<10
4-nitroaniline	NA	NA	<10	<10	<11	NA	NA	<25-30	<10
2-nitrochlorobenzene	NA	NA	<10	<10	<10.5	NA	NA	<10	<10
4-nitrochlorobenzene	NA	NA	<10	<10	<10.5	NA	NA	<10	<10
2,4-and 3,4-dinitrochlorobenzene	NA	NA	<10	<10	<10.5	NA	NA	<10	<10
4-nitrodiphenylamine	NA	NA	<10	<10	<10.5	NA	NA	<10	<10
triphenyl phosphate	NA	NA	<10	<10	<10.5	NA	NA	<10	<10
2,3,7,8-tetrachloro-dibenzo-p-dioxin	NA	NA	NA	NA	NA	NA	NA	NA	NA
2-nitrobiphenyl	NA	NA	<25	<25	<10.5	NA	NA	<10	NA
4-nitrobiphenyl	NA	NA	<25	<25	<10.5	NA	NA	<10	NA
Sub Total 2	NA	NA	0	0	0	NA	NA	0	0
Total Base/Neutral Compounds Analyzed	10	8	0	2.2	0	72	91	123	0.5

Table E-3. Summary of Base/Neutral Extractable Compounds in Ground Water, Monsanto Company, W.G. Krummrich Plant, Sauget, Il

Well Number:	GM-9B	GM-9C	GM-9C	GM-9C	GM-10A	GM-10A	GM-10B	GM-10B	GM-10C
Date:	11/85	9/84**	5/85	11/85	11/83	5/84	2/85	5/85	2/85
USEPA Priority Pollutant Base/Neutral Extractable Organic Compounds concentrations are in ug/L									
acenaphthene	<2.0	<4	2.2	<2.1	<1	<1	<2.1	<1.9	<1.9
acenapthylene	<3.7	<3	<3.5	<3.8	<1	<1	<3.8	<3.5	<3.5
anthracene	<2.0	<4	<1.9	<2.1	<1	<1	<2.1	<1.9	<1.9
benzidine	<46	<60	<44	<48	<1	<1	<48.4	<44	<44
benzo (a) anthracene	<8.2	<9	<7.8	<8.4	<1	<1	<8.6	<7.8	<7.8
benzo (a) pyrene	<2.6	<12	<2.5	<2.7	<1	<1	<2.8	<2.5	<2.5
benzo (b) fluoroanthene	<5.1	<11	<4.8	<5.2	<1	<1	<5.3	<4.8	<4.8
benzo (ghi) perylene	<4.3	<14	<4.1	<4.4	<1	<1	<4.5	<4.1	<4.1
benzo (k) fluoranthene	<3.7	<11	<2.5	<3.8	<1	<1	<2.8	<2.5	<2.5
bis (2-chloroethoxy) methane	<5.6	<4	<5.3	<5.7	<1	<1	<5.8	<5.3	<5.3
bis (2-chloroethyl) ether	<6.0	<4	<5.7	<6.2	<1	<1	<6.3	<5.7	<5.7
bis (2-chloroisopropyl) ether	<6.0	<3	<6.0	<6.2	<1	<1	<6.3	<6.0	<5.7
bis (2-ethylhexyl) phthalate	<11	8	<10	<11	<1	4	<11	<10	<10
4-bromophenyl phenyl ether	<2	<16	<1.9	<2.1	<1	<1	<2.1	<1.9	<1.9
butyl benzyl phthalate	<11	<13	<10	<11	1	<1	<11	<10	<10
2-chloronaphthalene	<2	<4	<1.9	<2.1	<1	<1	<2.1	<1.9	<1.9
4-chlorophenyl phenyl ether	<4.4	<9	<4.2	<4.5	<1	<1	<4.6	<4.2	<4.2
chrysene	<2.6	<9	<2.5	<2.7	<1	<1	<2.8	<2.5	<2.5
benzo (a,h) anthracene	<11	<16	<2.5	<11	<1	<1	<2.8	<2.5	<2.5
1,2-dichlorobenzene	<2	<5	5.0	4.4	<1	<1	55.7	13.5	4.9
1,3-dichlorobenzene	<2	64	2.4	<2.1	<1	<1	156	34	4
1,4-dichlorobenzene	<4.6	<5	49.9	50	<1	<1	1,080	188	22.1
3,3-dichlorobenzidine	<17	<161	<16.5	<18	<1	<1	<18.2	<16.5	<16.5
diethyl phthalate	<11	<4	<10	<11	<1	1	<11	<10	<10
dimethyl phthalate	<11	<4	<10	<11	<1	<1	<11	<10	<10
di-n-butyl phthalate	<11	3	<10	<11	1	3	<11	<10	<10
2,4-dinitrotoluene	<6.0	<14	<5.7	<6.2	<1	<1	<6.3	<5.7	<5.7
2,6-dinitrotoluene	<2.0	<16	<1.9	<2.1	<1	<1	<2.1	<1.9	<1.9
di-n-octyl phthalate	<11	<6	<10	<11	<1	<1	<11	<10	<10
1,2-diphenylhydrazine	<11	<10	<10	<11	<1	<1	<11	<10	<10
fluoranthene	<2.3	<5	<2.2	<2.4	<1	<1	<2.4	<2.2	<2.2
fluorene	<2	<4	<1.9	<2.1	<1	<1	<2.1	<1.9	<1.9
hexachlorobenzene	<2	<15	<1.9	<2.1	<1	<1	<2.1	<1.9	<1.9
hexachlorobutadiene	<0.95	<13	<0.9	<0.9	<1	<1	<1	<0.9	<0.9
hexachlorocyclopentadiene	<11	<12	<10	<11	<1	<1	<10	<10	<10
hexachloroethane	<1.7	<10	<1.6	<1.7	<1	<1	<1.8	<1.6	<1.6
indeno (1,2,3-c,d) pyrene	<4.9	<7	<3.7	<5.1	<1	<1	<4.1	<3.7	<3.7
isophorone	<2.3	<2	<2.2	<2.4	<1	<1	<2.4	<2.2	<2.2
naphthalene	<1.7	<2	<1.6	<1.7	<1	<1	<1.8	<1.6	<1.6
nitrobenzene	<2	<5	<1.9	<2	<1	<1	<2.1	<1.9	<1.9
n-nitrosodimethylamine	<11	<10	<10	<11	<1	<1	<11	<10	<10
n-nitrosodi-n-propylamine	<11	<6	<10	<11	<1	<1	<11	<10	<10
n-nitrosodiphenylamine	<2	<82	<2.0	<2.1	<1	<1	3.9	<1.9	<1.9
phenanthrene	<5.7	<4	<5.4	<5.8	<1	<1	<5.9	<5.4	<5.4
pyrene	<2	<5	<1.9	<2.1	<1	<1	<2.1	<1.9	<1.9
1,2,4-trichlorobenzene	<2	<7	<1.9	<2.1	<1	<1	<2.1	<1.9	<1.9
Sub Total 1	0	75	59.5	54.5	2	8	1295.6	235.5	31

Table E-3. Summary of Base/Neutral Extractable Compounds in Ground Water, Monsanto Company, W.G. Krummrich Plant, Sauget, Il

Well Number:	GM-9B	GM-9C	GM-9C	GM-9C	GM-10A	GM-10A	GM-10B	GM-10B	GM-10C
Date:	11/85	9/84**	5/85	11/85	11/83	5/84	2/85	5/85	2/85
Miscellaneous Base/Neutral Extractable Organic Compounds concentrations are in ug/L									
2-nitroaniline	<11	<25-30	<10	<11	NA	NA	<10	<10	<10
4-nitroaniline	<11	<25-30	<10	<11	NA	NA	<10	<10	<10
2-nitrochlorobenzene	<10.5	<10	<10	<10.8	NA	NA	<10	<10	<10
4-nitrochlorobenzene	<10.5	<10	<10	<10.8	NA	NA	<10	<10	<10
2,4-and 3,4-dinitrochlorobenzene	<10.5	<10	<10	<10.8	NA	NA	<10	<10	<10
4-nitrodiphenylaaine	<10.5	<10	<10	<10.8	NA	NA	<10	<10	<10
triphenyl phosphate	<10.5	<10	<10	<10.8	NA	NA	<10	<10	<10
2,3,7,8-tetrachloro-dibenzo-p-dioxin	NA	NA	NA	NA	NA	NA	NA	NA	NA
2-nitrobiphenyl	NA	<10	NA	NA	NA	NA	NA	NA	NA
4-nitrobiphenyl	NA	<10	NA	NA	NA	NA	NA	NA	NA
Sub Total 2	0	0	0	0	NA	NA	0	0	0
Total Base/Neutral Compounds Analyzed	0	75	59.5	54.5	2	8	1295.6	235.5	31

Table E-3. Summary of Base/Neutral Extractable Compounds in Ground Water, Monsanto Company, W.G. Krumrich Plant, Sauget, Il

Well Number:	GM-10C	GM-11	GM-11	GM-12A	GM-12A	GM-12A	GM-12A	GM-12A	GM-12A
Date:	5/85	11/83	5/84	11/83	11/83*	5/84	5/84*	11/84	11/84*
USEPA Priority Pollutant Base/Neutral Extractable Organic Compounds concentrations are in ug/L									
acenaphthene	<1.9	<1	<1	<1	<1	<1	<1	<10	<10
acenapthylene	<3.5	<1	<1	<1	<1	<1	<1	<10	<10
anthracene	<1.9	<1	<1	<1	<1	<1	<1	<10	<10
benzidine	<44	<1	<1	<1	<1	<1	<1	<10	<10
benzo (a) anthracene	<7.8	<1	<1	<1	<1	<1	<1	<10	<10
benzo (a) pyrene	<2.5	<1	<1	<1	<1	<1	<1	<10	<10
benzo (b) fluoroanthene	<4.8	<1	<1	<1	<1	<1	<1	<10	<10
benzo (ghi) perylene	<4.1	<1	<1	<1	<1	<1	<1	<10	<10
benzo (k) fluoranthene	<2.5	<1	<1	<1	<1	<1	<1	<10	<10
bis (2-chloroethoxy) methane	<5.3	<1	<1	<1	<1	<1	<1	<10	<10
bis (2-chloroethyl) ether	<5.7	<1	<1	<1	<1	<1	<1	<10	<10
bis (2-chloroisopropyl) ether	<6.0	<1	<1	<1	<1	<1	<1	<10	<10
bis (2-ethylhexyl) phthalate	<10	<1	<1	<1	<1	211	2	<10	<10
4-bromophenyl phenyl ether	<1.9	<1	<1	<1	<1	<1	<1	<10	<10
butyl benzyl phthalate	<10	<1	3	<1.	<1	<1	<1	<10	<10
2-chloronaphthalene	<1.9	<1	<1	<1	<1	<1	<1	<10	<10
4-chlorophenyl phenyl ether	<4.2	<1	<1	<1	<1	<1	<1	<10	<10
chrysene	<2.5	<1	<1	<1	<1	<1	<1	<10	<10
benzo (a,h) anthracene	<2.5	<1	<1	<1	<1	<1	<1	<10	<10
,2-dichlorobenzene	4.3	<1	<1	366	357	344	364	539	473
1,3-dichlorobenzene	3	<1	<1	<1	<1	<1	<1	<10	<10
1,4-dichlorobenzene	15.3	<1	<1	<1	<1	<1	1	<10	<10
3,3-dichlorobenzidine	<16.5	<1	<1	<1	<1	<1	<1	<10	<10
diethyl phthalate	<10	<1	1	<1	<1	2	2	<10	<10
dimethyl phthalate	<10	<1	<1	<1	<1	<1	<1	<10	<10
di-n-butyl phthalate	<10	1	2	2	1	3	3	<10	<10
2,4-dinitrotoluene	<5.7	<1	<1	<1	<1	<1	<1	<10	<10
2,6-dinitrotoluene	<1.9	<1	<1	<1	<1	<1	<1	<10	<10
di-n-octyl phthalate	<10	<1	<1	<1	<1	<1	<1	<10	<10
1,2-diphenylhydrazine	<10	<1	<1	<1	<1	<1	<1	<10	<10
fluoranthene	<2.2	<1	<1	<1	<1	<1	<1	<10	<10
fluorene	<1.9	<1	<1	<1	<1	<1	<1	<10	<10
hexachlorobenzene	<1.9	<1	<1	<1	<1	<1	<1	<10	<10
hexachlorobutadiene	<0.9	<1	<1	<1	<1	<1	<1	<10	<10
hexachlorocyclopentadiene	<10	<1	<1	<1	<1	<1	<1	<10	<10
hexachloroethane	<1.6	<1	<1	<1	<1	<1	<1	<10	<10
indeno (1,2,3-c,d) pyrene	<3.7	<1	<1	<1	<1	<1	<1	<10	<10
isophorone	<2.2	<1	<1	<1	<1	<1	<1	<10	<10
naphthalene	<1.6	<1	<1	<1	<1	4	4	<10	<10
nitrobenzene	<1.9	<1	<1	<1	<1	<1	<1	<10	<10
n-nitrosodimethylamine	<10	<1	<1	<1	<1	<1	<1	<10	<10
n-nitrosodi-n-propylamine	<10	<1	<1	<1	<1	<1	<1	<10	<10
n-nitrosodiphenylamine	<1.9	<1	<1	<1	<1	<1	<1	<10	<10
henanthrene	<5.4	<1	<1	<1	<1	<1	<1	<10	<10
ene	<1.9	<1	<1	<1	<1	<1	<1	<10	<10
,2,4-trichlorobenzene	<1.9	<1	<1	<1	<1	<1	<1	<10	<10
Sub Total 1	22.6	1	6	368	358	564	376	539	473

Table E-3. Summary of Base/Neutral Extractable Compounds in Ground Water, Monsanto Company, W.G. Krummrich Plant, Sauget, Il

Well Number:	GM-10C	GM-11	GM-11	GM-12A	GM-12A	GM-12A	GM-12A	GM-12A	GM-12A
Date:	5/85	11/83	5/84	11/83	11/83*	5/84	5/84*	11/84	11/84*
Miscellaneous Base/Neutral Extractable Organic Compounds concentrations are in ug/L									
2-nitroaniline	<10	NA	NA	NA	NA	NA	NA	<10	<10
4-nitroaniline	<10	NA	NA	NA	NA	NA	NA	<10	<10
2-nitrochlorobenzene	<10	NA	NA	NA	NA	NA	NA	<10	<10
4-nitrochlorobenzene	<10	NA	NA	NA	NA	NA	NA	<10	<10
2,4-and 3,4-dinitrochlorobenzene	<10	NA	NA	NA	NA	NA	NA	<10	<10
4-nitrodiphenylamine	<10	NA	NA	NA	NA	NA	NA	<10	<10
triphenyl phosphate	<10	NA	NA	NA	NA	NA	NA	<10	<10
2,3,7,8-tetrachloro-dibenzo-p-dioxin	NA	NA	NA	NA	NA	NA	NA	NA	NA
2-nitrobiphenyl	NA	NA	NA	NA	NA	NA	NA	NA	NA
4-nitrobiphenyl	NA	NA	NA	NA	NA	NA	NA	NA	NA
Sub Total 2	0	NA	NA	NA	NA	NA	NA	0	0
Total Base/Neutral Compounds Analyzed	22.6	1	6	368	358	564	376	539	473

Table E-3. Summary of Base/Neutral Extractable Compounds in Ground Water, Monsanto Company, W.G. Krummrich Plant, Sauget, Il

Well Number:	GM-12A	GM-12A	GM-12A	GM-12A	GM-12A	GM-12A	GM-12A	GM-12A	GM-129
Date:	2/85	2/85*	5/85	5/85*	11/85	11/85*	2/86	2/86*	9/84**
USEPA Priority Pollutant Base/Neutral Extractable Organic Compounds concentrations are in ug/L									
acenaphthene	<1.9	<1.9	<1.9	<1.9	<2.0	<2.0	<2.0	<1.9	<4
acenapthylene	<3.5	<3.5	<3.5	<3.5	<3.7	<3.7	<3.7	<3.5	<3
anthracene	<1.9	<1.9	<1.9	<1.9	<2.0	<2.0	<2.0	<1.9	<4
benzidine	<44	<44	<44	<44	<46	<46	<47	<44	<60
benzo (a) anthracene	<7.8	<7.8	<7.8	<7.8	<8.2	<8.2	<8.3	<7.9	<9
benzo (a) pyrene	<2.5	<2.5	<2.5	<2.5	<2.6	<2.6	<2.7	<2.5	<12
benzo (b) fluorcanthene	<4.8	<4.8	<4.8	<4.8	<5.1	<5.1	<5.1	<4.9	<11
benzo (ghi) perylene	<4.1	<4.1	<4.1	<4.1	<4.3	<4.3	<4.4	<4.1	<14
benzo (k) fluoranthene	<2.5	<2.5	<2.5	<2.5	<3.7	<3.7	<3.7	<3.5	<11
bis (2-chloroethoxy) methane	<5.3	<5.3	<5.3	<5.3	<5.6	<5.6	<5.6	<5.4	<4
bis (2-chloroethyl) ether	<5.7	<5.7	<5.7	<5.7	<6.0	<6.0	<6.1	<5.8	<4
bis (2-chloroisopropyl) ether	<5.7	<5.7	<5.7	<5.7	<6.0	<6.0	<6.1	<5.8	<3
bis (2-ethylhexyl) phthalate	<10	434	<10	13.8	<11	<11	<11	<10	<10
4-bromophenyl phenyl ether	<1.9	<1.9	<1.9	<1.9	<2	<2	<2	<1.9	<15
butyl benzyl phthalate	<10	<10	<10	<10	<11	<11	<11	<10	<13
2-chloronaphthalene	<1.9	<1.9	<1.9	<1.9	<2	<2	<2	<1.9	<4
4-chlorophenyl phenyl ether	<4.2	<4.2	<4.2	<4.2	<4.4	<4.4	<4.5	<4.2	<9
chrysene	<2.5	<2.5	<2.5	<2.5	<2.6	<2.6	<2.7	<2.5	<9
benzo (a,h) anthracene	<2.5	<2.5	<2.5	<2.5	<11	<11	<11	<10	<16
,2-dichlorobenzene	295	213	164.4	201	235	250	248	255	3
1,3-dichlorobenzene	<1.9	<1.9	<1.9	<1.9	<2	<2	<2	<1.9	<6
1,4-dichlorobenzene	<4.4	<4.4	<4.4	<4.4	<4.6	<4.6	<4.7	<4.4	<5
3,3-dichlorobenzidine	<16.5	<16.5	<16.5	<16.5	<17	<17	<18	<17	<161
diethyl phthalate	<10	<10	<10	<10	<11	<11	<11	<10	2
dimethyl phthalate	<10	<10	<10	<10	<11	<11	<11	<10	<4
di-n-butyl phthalate	<10	<10	<10	<10	<11	<11	<11	<10	<3
2,4-dinitrotoluene	<5.7	<5.7	<5.7	<5.7	<6.0	<6.0	<6.1	<5.8	<14
2,6-dinitrotoluene	<1.9	<1.9	<1.9	<1.9	<2.0	<2.0	<2.0	<1.9	<16
di-n-octyl phthalate	<10	<10	<10	<10	<11	<11	<11	<10	<6
1,2-diphenylhydrazine	<10	<10	<10	<10	<11	<11	<11	<10	<10
fluoranthene	<2.2	<2.2	<2.2	<2.2	<2.3	<2.3	<2.3	<2.2	<5
fluorene	<1.9	<1.9	<1.9	<1.9	<2.0	<2.0	<2.0	<1.9	<4
hexachlorobenzene	<1.9	<1.9	<1.9	<1.9	<2.0	<2.0	<2.0	<1.9	<15
hexachlorobutadiene	<0.9	<0.9	<0.9	<0.9	<0.95	<0.95	<1	<0.9	<13
hexachlorocyclopentadiene	<10	<10	<10	<10	<11	<11	<11	<10	<12
hexachloroethane	<1.6	<1.6	<1.6	<1.6	<1.7	<1.7	<1.7	<1.6	<10
indeno (1,2,3-c,d) pyrene	<3.7	<3.7	<3.7	<3.7	<4.9	<4.9	<5	<4.7	<7
isophorone	<2.2	<2.2	<2.2	<2.2	<2.3	<2.3	<2.3	<2.2	<2
naphthalene	1.8	1.9	1.8	2.3	<1.7	<1.7	<1.7	<1.6	<2
nitrobenzene	<1.9	<1.9	<1.9	<1.9	<2.0	<2.0	<2.0	<1.9	<5
n-nitrosodimethylamine	<10	<10	<10	<10	<11	<11	<11	<10	<10
n-nitrosodi-n-propylamine	<10	<10	<10	<10	<11	<11	<11	<10	<6
n-nitrosodiphenylamine	<1.9	<1.9	<1.9	<1.9	<2.0	<2.0	<2.0	<1.9	<82
henanthrene	<5.4	<5.4	<5.4	<5.4	<5.7	<5.7	<5.7	<5.5	<4
rene	<1.9	<1.9	<1.9	<1.9	<2.0	<2.0	<2.0	<1.9	<5
,2,4-trichlorobenzene	<1.9	<1.9	<1.9	<1.9	<2.0	<2.0	<2.0	<1.9	2
Sub Total I	296.8	648.9	166.2	217.1	235	250	248	255	7

Table E-3. Summary of Base/Neutral Extractable Compounds in Ground Water, Monsanto Company, W.G. Krummrich Plant, Sauget, Il

Well Number:	GM-12A	GM-12A	GM-12A	GM-12A	GM-12A	GM-12A	GM-12A	GM-12A	GM-12B
Date:	2/85	2/85*	5/85	5/85*	11/85	11/85*	2/86	2/86*	9/84**
Miscellaneous Base/Neutral Extractable Organic Compounds concentrations are in ug/L									
2-nitroaniline	<10	<10	<10	<10	<11	<11	<11	<10	<25-30
4-nitroaniline	<10	<10	<10	<10	<11	<11	<11	<10	<25-30
2-nitrochlorobenzene	<10	<10	<10	<10	<10.5	<10.5	<11	<10	<10
4-nitrochlorobenzene	<10	<10	<10	<10	<10.5	<10.5	<11	<10	<10
2,4-and 3,4-dinitrochlorobenzene	<10	<10	<10	<10	<10.5	<10.5	<11	<10	<10
4-nitrodiphenylamine	<10	<10	<10	<10	<10.5	<10.5	<11	<10	<10
triphenyl phosphate	<10	<10	<10	<10	<10.5	<10.5	<11	<10	<10
2,3,7,8-tetrachloro-dibenzo-p-dioxin	NA	NA	NA	NA	NA	NA	NA	NA	NA
2-nitrobiphenyl	NA	NA	NA	NA	NA	NA	NA	NA	<10
4-nitrobiphenyl	NA	NA	NA	NA	NA	NA	NA	NA	<10
Sub Total 2	0	0	0	0	0	0	0	0	0
Total Base/Neutral Compounds Analyzed	296.8	648.9	166.2	217.1	235	250	248	255	7

Table E-3. Summary of Base/Neutral Extractable Compounds in Ground Water, Monsanto Company, W.G. Krummrich Plant, Sauget, Il

Well Number:	GM-12B	GM-12B	GM-12C	GM-12C	GM-12C	GM-12C	GM-13	GM-13	GM-13
Date:	11/84	11/85	2/85	2/85*	5/85	5/85*	9/84**	11/85	2/86
USEPA Priority Pollutant Base/Neutral Extractable Organic Compounds concentrations are in ug/L									
acenaphthene	<10	<2.0	<1.9	<1.9	<1.9	<1.9	<4	<42	<100
acenapthylene	<10	<3.7	<3.5	<3.5	<3.5	<3.5	<3	<77	<180
anthracene	<10	<2.0	<1.9	<1.9	<1.9	<1.9	<4	<42	<100
benzidine	<10	<46	<44	<44	<44	<44	<60	<970	<2300
benzo (a) anthracene	<10	<8.2	<7.8	<7.8	<7.8	<7.8	<9	<170	<410
benzo (a) pyrene	<10	<2.6	<2.5	<2.5	<2.5	<2.5	<12	<55	<130
benzo (b) fluoroanthene	<10	<5.1	<4.8	<4.8	<4.8	<4.8	<11	<110	<250
benzo (ghi) perylene	<10	<4.3	<4.1	<4.1	<4.1	<4.1	<14	<90	<220
benzo (k) fluoranthene	<10	<3.7	<2.5	<2.5	<2.5	<2.5	<11	<77	<180
bis (2-chloroethoxy) methane	<10	<5.6	<5.3	<5.3	<5.3	<5.3	<4	<120	<280
bis (2-chloroethyl) ether	<10	<6.0	<5.7	<5.7	<5.7	<5.7	<4	<130	<300
bis (2-chloroisopropyl) ether	<10	<6.0	<5.7	<5.7	<5.7	<5.7	<3	<130	<300
bis (2-ethylhexyl) phthalate	10	<11	<10	<10	<10	<10	<10	<220	<530
4-bromophenyl phenyl ether	<10	<2	<1.9	<1.9	<1.9	<1.9	<16	<42	<100
butyl benzyl phthalate	<10	<11	<10	<10	<10	<10	<13	<220	<530
2-chloronaphthalene	<10	<2	<1.9	<1.9	<1.9	<1.9	<4	<42	<100
4-chlorophenyl phenyl ether	<10	<4.4	<4.2	<4.2	<4.2	<4.2	<9	<92	<220
chrysene	<10	<2.6	<2.5	<2.5	<2.5	<2.5	<9	<55	<130
enzo (a,h) anthracene	<10	<11	<2.5	<2.5	<2.5	<2.5	<16	<220	<530
,2-dichlorobenzene	<10	74.2	124	97.4	54	49.7	347	3,630	4,020
1,3-dichlorobenzene	<10	27.8	<2	<1.9	<1.9	<1.9	<6	97.3	126
1,4-dichlorobenzene	<10	27.1	<4	<4.4	<4.4	<4.4	31	1,310	2,260
3,3-dichlorobenzidine	<10	<17	<16.5	<16.5	<16.5	<16.5	<161	<360	<870
diethyl phthalate	<10	<11	<10	<10	<10	<10	<4	<220	<530
dimethyl phthalate	<10	<11	<10	<10	<10	<10	<4	<220	<530
di-n-butyl phthalate	<10	<11	<10	<10	<10	<10	<3	<220	<530
2,4-dinitrotoluene	<10	<6.0	<5.7	<5.7	<5.7	<5.7	<14	<130	<300
2,6-dinitrotoluene	<10	<2.0	<1.9	<1.9	<1.9	<1.9	<16	<42	<100
di-n-octyl phthalate	<10	<11	<10	<10	<10	<10	<6	<220	<530
1,2-diphenylhydrazine	<10	<11	<10	<10	<10	<10	<10	<220	<530
fluoranthene	<10	<2.3	<2.2	<2.2	<2.2	<2.2	<5	<48	<120
fluorene	<10	<2.0	<1.9	<1.9	<1.9	<1.9	<4	<42	<100
hexachlorobenzene	<10	<2.0	<1.9	<1.9	<1.9	<1.9	<15	<42	<100
hexachlorobutadiene	<10	<1	<0.9	<0.9	<0.9	<0.9	<13	<20	<47
hexachlorocyclopentadiene	<10	<11	<10	<10	<10	<10	<12	<220	<530
hexachloroethane	<10	<1.7	<1.6	<1.6	<1.6	<1.6	<10	<35	<84
indeno (1,2,3-c,d) pyrene	<10	<4.9	<3.7	<3.7	<3.7	<3.7	11	<100	<250
isophorone	<10	<2.3	<2.2	<2.2	<2.2	<2.2	<2	<48	<120
naphthalene	<10	<1.7	4.1	3.1	<1.6	1.8	<2	<35	<84
nitrobenzene	<10	<2.0	<1.9	<1.9	<1.9	<1.9	<5	<42	<100
n-nitrosodimethylamine	<10	<11	<10	<10	<10	<10	<10	<220	<530
n-nitrosodi-n-propylamine	<10	<11	<10	<10	<10	<10	<6	<220	<530
n-nitrosodiphenylamine	<10	<2.0	<1.9	<1.9	<1.9	<1.9	18	<42	<100
enanthrene	<10	<5.7	<5.4	<5.4	<5.4	<5.4	<4	<120	<280
ene	<10	<2.0	<1.9	<1.9	<1.9	<1.9	<5	<42	<100
,2,4-trichlorobenzene	<10	<2.0	<1.9	<1.9	<1.9	<1.9	18	<42	<100
Sub Total 1	10	129.1	128.1	100.5	54	51.5	425	5037.3	6406

Table E-3. Summary of Base/Neutral Extractable Compounds in Ground Water, Monsanto Company, W.G. Krummrich Plant, Sauget, Il

Well Number:	GM-12B	GM-12B	GM-12C	GM-12C	GM-12C	GM-12C	GM-13	GM-13	GM-13
Date:	11/84	11/85	2/85	2/85*	5/85	5/85*	9/84**	11/85	2/86
Miscellaneous Base/Neutral Extractable Organic Compounds concentrations are in ug/L									
2-nitroaniline	<10	21.5	<10	<10	<10	<10	<25-30	771	<530
4-nitroaniline	<10	<11	<10	<10	<10	<10	<25-30	346	<530
2-nitrochlorobenzene	<10	<10.5	<10	<10	<10	<10	<10	<220	<530
4-nitrochlorobenzene	<10	23.7	<10	<10	<10	<10	<10	1,290	<530
2,4-and 3,4-dinitrochlorobenzene	<10	<10.5	<10	<10	<10	<10	<10	<220	<530
4-nitrodiphenylamine	<10	<10.5	<10	<10	<10	<10	<10	<220	<530
triphenyl phosphate	<10	<10.5	<10	<10	<10	<10	<10	<220	<530
2,3,7,8-tetrachloro-dibenzo-p-dioxin	NA	NA	NA	NA	NA	NA	NA	NA	NA
2-nitrobiphenyl	NA	NA	NA	NA	NA	NA	<10	NA	NA
4-nitrobiphenyl	NA	NA	NA	NA	NA	NA	<10	NA	NA
Sub Total 2	0	45.2	0	0	0	0	0	2407	0
Total Base/Neutral Compounds Analyzed	10	174.3	128.1	100.5	54	51.5	425	7444.3	6406

Table E-3. Summary of Base/Neutral Extractable Compounds in Ground Water, Monsanto Company, W.G. Krummrich Plant, Sauget, Il

Well Number:	GM-14	GM-15	GM-16A	GM-16A	GM-16A	GM-16B	GM-16B	GM-16B	GM-17A
Date:	9/84**	9/84**	9/84**	5/85	11/85	9/84**	5/85	11/85	9/84
USEPA Priority Pollutant Base/Neutral Extractable Organic Compounds concentrations are in ug/L									
acenaphthene	NA	<4	<4	<1.9	<1.9	<4	1.9	<2.0	<4
acenapthylene	NA	<3	<3	<3.5	<3.6	<3	<3.5	<3.8	<3
anthracene	NA	<4	<4	<1.9	<1.9	<4	<1.9	<2.0	<4
benzidine	NA	<60	<60	<44	<45	<60	<44	<47	<60
benzo (a) anthracene	NA	<9	<9	<7.8	<8.0	<9	<7.8	<8.4	<9
benzo (a) pyrene	NA	<12	<12	<2.5	<2.6	<12	<2.5	<2.7	<12
benzo (b) fluoroanthene	NA	<11	<11	<4.8	<4.9	<11	<4.8	<5.2	<11
benzo (ghi) perylene	NA	<14	<14	<4.1	<4.2	<14	<4.1	<4.4	<14
benzo (k) fluoranthene	NA	<11	<11	<2.5	<3.6	<11	<2.5	<3.8	<11
bis (2-chloroethoxy) methane	NA	<4	<4	<5.3	<5.4	<4	<5.3	<5.7	<4
bis (2-chloroethyl) ether	NA	<4	<4	<5.7	<5.8	<4	<5.7	<6.1	<4
bis (2-chloroisopropyl) ether	NA	<3	<3	<6.0	<5.8	<3	<5.7	<6.1	<3
bis (2-ethylhexyl) phthalate	NA	<10	6	<10	<10	8	<10	24.7	2
4-bromophenyl phenyl ether	NA	<16	<16	<1.9	<1.9	<16	<1.9	<2	<16
butyl benzyl phthalate	NA	<13	<13	<10	<10	<13	<10	<11	<13
2-chloronaphthalene	NA	<4	<4	<1.9	<1.9	<4	<1.9	<2	<4
4-chlorophenyl phenyl ether	NA	<9	<9	<4.2	<4.3	<9	<4.2	<4.5	<9
chrysene	NA	<9	<9	<2.5	<2.6	<9	<2.5	<2.7	<9
dibenzo (a,h) anthracene	NA	<16	<16	<2.5	<10	<16	<2.5	<11	<16
1,2-dichlorobenzene	NA	185	<5	<1.9	<1.9	<5	<1.9	<2	<5
1,3-dichlorobenzene	NA	35	<6	<1.9	<1.9	<6	<1.9	<2	<6
1,4-dichlorobenzene	NA	<5	<5	<4.4	<4.5	<5	<4.4	<4.7	6
3,3-dichlorobenzidine	NA	<161	<161	<16.5	<17	<161	<16.5	<18	<161
diethyl phthalate	NA	1	<4	<10	<10	<4	<10	<11	<4
dimethyl phthalate	NA	<4	<4	<10	<10	<4	<10	<11	<4
di-n-butyl phthalate	NA	3	3	<10	<10	2	<10	<11	5
2,4-dinitrotoluene	NA	<14	<14	<5.7	<5.8	<14	<5.7	<6.1	<14
2,6-dinitrotoluene	NA	<16	<16	<1.9	<1.9	<16	<1.9	<2.0	<16
di-n-octyl phthalate	NA	<6	<6	<10	<10	<6	<10	<11	<6
1,2-diphenylhydrazine	NA	<10	<10	<10	<10	<10	<10	<11	<10
fluoranthene	NA	<5	<5	<2.2	<2.2	<5	<2.2	<2.4	<5
fluorene	NA	<4	<4	<1.9	<1.9	<4	<1.9	<2.0	<4
hexachlorobenzene	NA	<15	<15	<1.9	<1.9	<15	<1.9	<2.0	<15
hexachlorobutadiene	NA	<13	<13	<0.9	<0.9	<13	<0.9	<0.97	<13
hexachlorocyclopentadiene	NA	<12	<12	<10	<10	<12	<10	<11	<12
hexachloroethane	NA	<10	<10	<1.6	<1.6	<10	<1.6	<1.7	<10
indeno (1,2,3-c,d) pyrene	NA	<7	<7	<3.7	<4.8	<7	<3.7	<5.1	<7
isophorone	NA	<2	<2	<2.2	<2.2	<2	<2.2	<2.4	<2
naphthalene	NA	<2	<2	<1.6	<1.6	<2	<1.6	<1.7	<2
nitrobenzene	NA	8	<5	<1.9	<1.9	<5	<1.9	<2.0	<5
n-nitrosodimethylamine	NA	<10	<10	<10	<10	<10	<10	<11	<10
n-nitrosodi-n-propylamine	NA	<6	<6	<10	<10	<6	<10	<11	<6
n-nitrosodiphenylamine	NA	<82	<82	<1.9	<1.9	<82	<1.9	<2.0	<82
phenanthrene	NA	<4	<4	<5.4	<5.5	<4	<5.4	<5.8	<4
pyrene	NA	<5	<5	<1.9	<1.9	<5	<1.9	<2.0	<5
1,2,4-trichlorobenzene	NA	12	<7	<1.9	<1.9	<7	<1.9	<2.0	<7
Sub Total 1	NA	244	9	0	0	10	1.9	24.7	13

Table E-3. Summary of Base/Neutral Extractable Compounds in Ground Water, Monsanto Company, W.G. Krummrich Plant, Sauget, IL

Well Number:	GM-14	GM-15	GM-16A	GM-16A	GM-16A	GM-16B	GM-16B	GM-16B	GM-17A
Date:	9/84**	9/84**	9/84**	5/85	11/85	9/84**	5/85	11/85	9/84
Miscellaneous Base/Neutral Extractable Organic Compounds concentrations are in ug/L									
2-nitroaniline	NA	<25-30	<25-30	<10	<10	<25-30	<10	<11	<25-30
4-nitroaniline	NA	<25-30	<25-30	<10	<10	<25-30	<10	<11	<25-30
2-nitrochlorobenzene	NA	<10	<10	<10	<10.2	<10	<10	<10.8	<10
4-nitrochlorobenzene	NA	<10	<10	<10	<10.2	<10	<10	<10.8	<10
2,4-and 3,4-dinitrochlorobenzene	NA	<10	<10	<10	<10.2	<10	<10	<10.8	<10
4-nitrodiphenylamine	NA	<10	<10	<10	<10.2	<10	<10	<10.8	<10
triphenyl phosphate	NA	<10	<10	<10	<10.2	<10	<10	<10.8	<10
2,3,7,8-tetrachloro-dibenzo-p-dioxin	NA	NA	<0.00034	NA	NA	NA	NA	NA	NA
2-nitrobiphenyl	NA	<10	<10	NA	NA	<10	NA	NA	<10
4-nitrobiphenyl	NA	<10	<10	NA	NA	<10	NA	NA	<10
Sub Total 2	NA	0	0	0	0	0	0	0	0
Total Base/Neutral Compounds Analyzed	NA	244	9	0	0	10	1.9	24.7	13

Table E-3. Summary of Base/Neutral Extractable Compounds in Ground Water, Monsanto Company, W.G. Krummrich Plant, Sauget, Il

Well Number:	GM-17A	GM-17A	GM-17B	GM-17B	GM-17B	GM-17C	GM-17C	GM-17C	GM-18A
Date:	11/84	11/85	9/84**	11/84	11/85	9/84**	11/84	11/85	9/84**
USEPA Priority Pollutant Base/Neutral Extractable Organic Compounds concentrations are in ug/L									
acenaphthene	<10	<1.9	<4	<10	<3.8	1	<10	<1.9	<4
acenapthylene	<10	<3.5	<3	<10	<7.0	<3	<10	<3.5	<3
anthracene	<10	<1.9	<4	<10	<3.8	<4	<10	<1.9	<4
benzidine	<10	<44	<60	<10	<88	<60	<10	<44	<60
benzo (a) anthracene	<10	<7.8	<9	<10	<16	<9	<10	<7.9	<9
benzo (a) pyrene	<10	<2.5	<12	<10	<5	<12	<10	<2.5	<12
benzo (b) fluoroanthene	<10	<4.8	<11	<10	<9.6	<11	<10	<4.8	<11
benzo (ghi) perylene	<10	<4.1	<14	<10	<8.2	<14	<10	<4.1	<14
benzo (k) fluoranthene	<10	<3.5	<11	<10	<7	<11	<10	<3.5	<11
bis (2-chloroethoxy) methane	<10	<5.3	<4	<10	<11	<4	<10	<5.4	<4
bis (2-chloroethyl) ether	<10	<5.7	<4	<10	<11	<4	<10	<5.8	<4
bis (2-chloroisopropyl) ether	<10	<5.7	<3	<10	<11	<3	<10	<5.8	<3
bis (2-ethylhexyl) phthalate	<10	<10	<10	<10	<20	10	<10	<10	4
4-bromophenyl phenyl ether	<10	<1.9	<16	<10	<3.8	<16	<10	<1.9	<16
butyl benzyl phthalate	<10	<10	<13	<10	<20	<13	<10	<10	<13
2-chloronaphthalene	<10	<1.9	<4	<10	<3.8	<4	<10	<1.9	<4
4-chlorophenyl phenyl ether	<10	<4.2	<9	<10	<8.4	<9	<10	<4.2	<9
chrysene	<10	<2.5	<9	<10	<5.0	<9	<10	<2.5	<9
ibenzo (a,h) anthracene	<10	<10	<16	<10	<20	<16	<10	<10	<16
1,2-dichlorobenzene	<10	<1.9	<5	<10	4.57	113	147	296	<5
1,3-dichlorobenzene	<10	<1.9	5	<10	<3.8	776	57	126	<6
1,4-dichlorobenzene	<10	<4.4	47	70	64	<5	1,560	945	<5
3,3-dichlorobenzidine	<10	<17	<161	<10	<33	<161	<10	<17	<161
diethyl phthalate	<10	<10	<4	<10	<20	<4	<10	<10	<4
dimethyl phthalate	<10	<10	<4	<10	<20	<4	<10	<10	<4
di-n-butyl phthalate	<10	<10	<3	<10	<20	5	<10	<10	5
2,4-dinitrotoluene	<10	<5.7	<14	<10	<11	<14	<10	<5.8	<14
2,6-dinitrotoluene	<10	<1.9	<16	<10	<3.8	<16	<10	<1.9	<16
di-n-octyl phthalate	<10	<10	<6	<10	<20	<6	<10	<10	<6
1,2-diphenylhydrazine	<10	<10	<10	<10	<20	<10	<10	<10	<10
fluoranthene	<10	<2.2	<5	<10	<4.4	<5	<10	<2.2	<5
fluorene	<10	<1.9	<4	<10	<3.8	<4	<10	<1.9	<4
hexachlorobenzene	<10	<1.9	<15	<10	<3.8	<15	<10	<1.9	<15
hexachlorobutadiene	<10	<0.9	<13	<10	<1.8	<13	<10	<0.9	<13
hexachlorocyclopentadiene	<10	<10	<12	<10	<20	<12	<10	<10	<12
hexachloroethane	<10	<1.6	<10	<10	<3.2	<10	<10	<1.6	<10
indeno (1,2,3-c,d) pyrene	<10	<4.7	<7	<10	<9.4	<7	<10	<4.7	<7
isophorone	<10	<2.2	<2	<10	<4.4	<2	<10	<2.2	<2
naphthalene	<10	<1.6	<2	<10	<3.2	<2	<10	<1.6	<2
nitrobenzene	<10	<1.9	<5	<10	<3.8	<5	<10	<1.9	<5
n-nitrosodimethylamine	<10	<10	<10	<10	<20	<10	<10	<10	<10
n-nitrosodi-n-propylamine	<10	<10	<6	<10	<20	<6	<10	<10	<6
n-nitrosodiphenylamine	<10	<1.9	<82	<10	<3.8	<82	<10	<1.9	<82
henanthrene	<10	<5.4	<4	<10	<11	<4	<10	<5.5	<4
yrene	<10	<1.9	<5	<10	<3.8	<5	<10	<1.9	<5
1,2,4-trichlorobenzene	<10	<1.9	<7	<10	<3.8	10	<10	<1.9	<7
Sub Total 1	0	0	52	70	68.57	915	1764	1357	9

Table E-3. Summary of Base/Neutral Extractable Compounds in Ground Water, Monsanto Company, W.G. Krummrich Plant, Sauget, Il

Well Number:	GM-17A	GM-17A	GM-17B	GM-17B	GM-17B	GM-17C	GM-17C	GM-17C	GM-18A
Date:	11/84	11/85	9/84**	11/84	11/85	9/84**	11/84	11/85	9/84**
Miscellaneous Base/Neutral Extractable Organic Compounds concentrations are in ug/L									
2-nitroaniline	<10	<10	<25-30	<10	<20	<25-30	<10	<10	<25-30
4-nitroaniline	<10	<10	<25-30	<10	<20	<25-30	<10	<10	<25-30
2-nitrochlorobenzene	<10	<10	<10	<10	<20	<10	<10	<10	<10
4-nitrochlorobenzene	<10	<10	<10	<10	<20	<10	<10	<10	<10
2,4-and 3,4-dinitrochlorobenzene	<10	<10	<10	<10	<20	<10	<10	<10	<10
4-nitrodiphenylamine	<10	<10	<10	<10	<20	<10	<10	<10	<10
triphenyl phosphate	<10	<10	<10	<10	<20	<10	<10	<10	<10
2,3,7,8-tetrachloro-dibenzo-p-dioxin	NA	NA	NA	NA	NA	NA	NA	NA	NA
2-nitrobiphenyl	NA	NA	<10	NA	NA	<10	NA	NA	<10
4-nitrobiphenyl	NA	NA	<10	NA	NA	<10	NA	NA	<10
Sub Total 2	0	0	0	0	0	0	0	0	0
Total Base/Neutral Compounds Analyzed	0	.0	52	70	68.57	915	1764	1357	9

Table E-3. Summary of Base/Neutral Extractable Compounds in Ground Water, Monsanto Company, W.G. Krumarich Plant, Sauget, Il

Well Number:	GM-18A	GM-18A	GM-18B	GM-18B	GM-18B	GM-25A	GM-25A	GM-25B	GM-25B
Date:	5/85	11/85	9/84**	5/85	11/85	9/84	11/84	9/84	11/84
USEPA Priority Pollutant Base/Neutral Extractable Organic Compounds concentrations are in ug/L									
acenaphthene	<1.9	<2.0	<4	<1.9	<2.1	<4	<10	<4	<10
acenapthylene	<3.5	<3.7	<3	<3.5	<3.8	<3	<10	<3	<10
anthracene	<1.9	<2.0	<4	<1.9	<2.1	<4	<10	<4	<10
benzidine	<44	<46	<60	<44	<48	<60	<10	<60	<10
benzo (a) anthracene	<7.8	<8.2	<9	<7.8	<8.5	<9	<10	<9	<10
benzo (a) pyrene	<2.5	<2.6	<12	<2.5	<2.7	<12	<10	<12	<10
benzo (b) fluoroanthene	<4.8	<5.1	<11	<4.8	<5.2	<11	<10	<11	<10
benzo (ghi) perylene	<4.1	<4.3	<14	<4.1	<4.5	<14	<10	<14	<10
benzo (k) fluoranthene	<2.5	<3.7	<11	<2.5	<3.8	<11	<10	<11	<10
bis (2-chloroethoxy) methane	<5.3	<5.6	<4	<5.3	<5.8	<4	<10	<4	<10
bis (2-chloroethyl) ether	<5.7	<6.0	<4	<5.7	<6.2	<4	<10	<4	<10
bis (2-chloroisopropyl) ether	<6.0	<6.0	<3	<5.7	<6.2	<3	<10	<3	<10
bis (2-ethylhexyl) phthalate	<10	<11	3	<10	<11	19	22	14	<10
4-bromophenyl phenyl ether	<1.9	<2.0	<16	<1.9	<2.1	<16	<10	<16	<10
butyl benzyl phthalate	<10	<11	<13	<10	<11	<13	<10	<13	<10
2-chloronaphthalene	<1.9	<2.0	<4	<1.9	<2.1	<4	<10	<4	<10
4-chlorophenyl phenyl ether	<4.2	<4.4	<9	<4.2	<4.6	<9	<10	<9	<10
chrysene	<2.5	<2.6	<9	<2.5	<2.7	<9	<10	<9	<10
dibenzo (a,h) anthracene	<2.5	<11	<16	<2.5	<11	<16	<10	<16	<10
1,2-dichlorobenzene	<1.9	<2.0	<5	<1.9	<2.1	<5	<10	<5	<10
1,3-dichlorobenzene	<1.9	<2.0	<6	<1.9	<2.1	<6	<10	<6	<10
1,4-dichlorobenzene	<4.4	<4.6	<5	<4.4	<4.8	<5	<10	<5	<10
3,3-dichlorobenzidine	<16.5	<17	<161	<16.5	<18	<161	<10	<161	<10
diethyl phthalate	<10	<11	1	<10	<11	<4	<10	2	<10
dimethyl phthalate	<10	<11	<4	<10	<11	<4	<10	<4	<10
di-n-butyl phthalate	<10	<11	7	<10	<11	5	<10	10	<10
2,4-dinitrotoluene	<5.7	<6.0	<14	<5.7	<6.2	<14	<10	<14	<10
2,6-dinitrotoluene	<1.9	<2.0	<16	<1.9	<2.1	<16	<10	<16	<10
di-n-octyl phthalate	<10	<11	<6	<10	<11	<6	<10	<6	<10
1,2-diphenylhydrazine	<10	<11	<10	<10	<11	<10	<10	<10	<10
fluoranthene	<2.2	<2.3	<5	<2.2	<2.4	<5	<10	<5	<10
fluorene	<1.9	<2.0	<4	<1.9	<2.1	<4	<10	<4	<10
hexachlorobenzene	<1.9	<2	<15	<1.9	<2.1	<15	<10	<15	<10
hexachlorobutadiene	<0.9	<0.95	<13	<0.9	<1	<13	<10	<13	<10
hexachlorocyclopentadiene	<10	<11	<12	<10	<11	<12	<10	<12	<10
hexachloroethane	<1.6	<1.7	<10	<1.6	<1.7	<10	<10	<10	<10
indeno (1,2,3-c,d) pyrene	<3.7	<4.9	<7	<3.7	<5.1	<7	<10	<7	<10
isophorone	<2.2	<2.3	<2	<2.2	<2.4	<2	<10	<2	<10
naphthalene	<1.6	<1.7	<2	<1.6	<1.7	<2	<10	<2	<10
nitrobenzene	<1.9	<2.0	<5	<1.9	<2.1	<5	<10	<5	<10
n-nitrosodimethylamine	<10	<11	<10	<10	<11	<10	<10	<10	<10
n-nitrosodi-n-propylamine	<10	<11	<6	<10	<11	<6	<10	<6	<10
n-nitrosodiphenylamine	<1.9	<2.0	<82	<1.9	<2.1	<82	<10	<82	<10
phenanthrene	<5.4	<5.7	<4	<5.4	<5.9	<4	<10	<4	<10
pyrene	<1.9	<2.0	<5	<1.9	<2.1	<5	<10	<5	<10
1,2,4-trichlorobenzene	<1.9	<2.0	<7	<1.9	<2.1	<7	<10	<7	<10
Sub Total 1	0	0	11	0	0	24	22	26	0

Table E-3. Summary of Base/Neutral Extractable Compounds in Ground Water, Monsanto Company, W.G. Krummrich Plant, Sauget, Il

Well Number:	GM-18A	GM-18A	GM-18B	GM-18B	GM-18B	GM-25A	GM-25A	GM-25B	GM-25B
Date:	5/85	11/85	9/84**	5/85	11/85	9/84	11/84	9/84	11/84
Miscellaneous Base/Neutral Extractable Organic Compounds concentrations are in ug/L									
2-nitroaniline	<10	<11	<25-30	<10	<11	<25-30	<10	<25-30	<10
4-nitroaniline	<10	<11	<25-30	<10	<11	<25-30	<10	<25-30	<10
2-nitrochlorobenzene	<10	<10.5	<10	<10	<10.9	<10	<10	<10	<10
4-nitrochlorobenzene	<10	<10.5	<10	<10	<10.9	<10	<10	<10	<10
2,4-and 3,4-dinitrochlorobenzene	<10	<10.5	<10	<10	<10.9	<10	<10	<10	<10
4-nitrodiphenylamine	<10	<10.5	<10	<10	<10.9	<10	<10	<10	<10
triphenyl phosphate	<10	<10.5	<10	<10	<10.9	<10	<10	<10	<10
2,3,7,8-tetrachloro-dibenzo-p-dioxin	NA	NA	NA	NA	NA	NA	NA	NA	NA
2-nitrobiphenyl	NA	NA	<10	NA	NA	<10	NA	<10	NA
4-nitrobiphenyl	NA	NA	<10	NA	NA	<10	NA	<10	NA
Sub Total 2	0	0	0	0	0	0	0	0	0
Total Base/Neutral Compounds Analyzed	0	0	11	0	0	24	22	26	0

Table E-3. Summary of Base/Neutral Extractable Compounds in Ground Water, Monsanto Company, W.G. Krumrich Plant, Sauget, Il

Well Number:	GM-25B	GM-27B	GM-27B	GM-27B	GM-27C	GM-27C	GM-27C	GM-29B	GM-29B
Date:	11/85	9/84**	11/85	2/86	9/84**	11/85	2/86	9/84**	11/85
USEPA Priority Pollutant Base/Neutral Extractable Organic Compounds concentrations are in ug/L									
acenaphthene	<3.7	<4	<1.9	<2.0	<4	<1.9	<1.9	<4	<2.0
acenapthylene	<6.9	<3	<3.5	<3.6	<3	<3.5	<3.6	<3	<3.8
anthracene	<3.7	<4	<1.9	<2.0	<4	<1.9	<1.9	<4	<2.0
benzidine	<86	<60	<44	<45	<60	<44	<45	<60	<47
benzo (a) anthracene	<15	<9	<7.8	<8	<9	<7.8	<8	<9	<8.4
benzo (a) pyrene	<4.9	<12	<2.5	<2.6	<12	<2.5	<2.6	<12	<2.7
benzo (b) fluoroanthene	<9.4	<11	<4.8	<4.9	<11	<4.8	<4.9	<11	<5.2
benzo (ghi) perylene	<8.0	<14	<4.1	<4.2	<14	<4.1	<4.2	<14	<4.4
benzo (k) fluoranthene	<6.9	<11	<3.5	<3.6	<11	<3.5	<3.6	<11	<3.8
bis (2-chloroethoxy) methane	<10	<4	<5.3	<5.5	<4	<5.3	<5.4	<4	<5.7
bis (2-chloroethyl) ether	<11	<4	<5.7	<5.9	<4	<5.7	<5.8	<4	<6.1
bis (2-chloroisopropyl) ether	<11	<3	<5.7	<5.9	<3	<5.7	<5.8	<3	<6.1
bis (2-ethylhexyl) phthalate	36.3	9	<10	11.7	4	54	<10	11	<11
4-bromophenyl phenyl ether	<3.7	<16	<1.9	<2	<16	<1.9	<1.9	<16	<2.0
butyl benzyl phthalate	<20	<13	<10	<10	<13	<10	<10	<13	<11
2-chloronaphthalene	<3.7	<4	<1.9	<2	<4	<1.9	<1.9	<4	<2.0
4-chlorophenyl phenyl ether	<8.2	<9	<4.2	<4.3	<9	<4.2	<4.3	<9	<4.5
chrysene	<4.9	<9	<2.5	<2.6	<9	<2.5	<2.6	<9	<2.7
benzo (a,h) anthracene	<20	<16	<10	<10	<16	<10	<10	<16	<11
1,2-dichlorobenzene	<3.7	3	2.6	<2	3	72.8	103	<5	102
1,3-dichlorobenzene	<3.7	<6	<1.9	<2	<6	5.5	3.1	<6	<2.0
1,4-dichlorobenzene	<8.6	11	13.3	27.6	2	52	76.5	127	18.8
3,3-dichlorobenzidine	<32	<161	<17	<17	<161	<17	<17	<161	<19
diethyl phthalate	<20	<4	<10	<10	<4	<10	<10	<4	<11
dimethyl phthalate	<20	<4	<10	<10	<4	<10	<10	<4	<11
di-n-butyl phthalate	<20	6	<10	<10	8	<10	<10	7	<11
2,4-dinitrotoluene	<11	<14	<5.7	<5.9	<14	<5.7	<5.8	<14	<6.1
2,6-dinitrotoluene	<3.7	<16	<1.9	<2.0	<16	<1.9	<1.9	<16	<2.0
di-n-octyl phthalate	<20	<6	<10	<10	<6	<10	<10	<6	<11
1,2-diphenylhydrazine	<20	<10	<10	<10	<10	<10	<10	<10	<11
fluoranthene	<4.3	<5	<2.2	<2.3	<5	<2.2	<2.2	<5	<2.4
fluorene	<3.7	<4	<1.9	<2.0	<4	<1.9	<1.9	<4	<2.0
hexachlorobenzene	<3.7	<15	<1.9	<2.0	<15	<1.9	<1.9	<15	<2.0
hexachlorobutadiene	<1.8	<13	<0.9	<0.9	<13	<0.9	<0.9	<13	<1
hexachlorocyclopentadiene	<20	<12	<10	<10	<12	<10	<10	<12	<11
hexachloroethane	<3.1	<10	<1.6	<1.6	<10	<1.6	<1.6	<10	<1.7
indeno (1,2,3-c,d) pyrene	<9.2	<7	<4.7	<4.8	<7	<4.7	<4.8	<7	<5.1
isophorone	<4.3	<2	<2.2	<2.3	<2	<2.2	<2.2	<2	<2.4
naphthalene	<3.1	<2	<1.6	<1.6	<2	5.2	<1.6	<2	2.3
nitrobenzene	<3.7	<5	<1.9	<2.0	<5	<1.9	<1.9	<5	<2.0
n-nitrosodimethylamine	<20	<10	<10	<10	<10	<10	<10	<10	<11
n-nitrosodi-n-propylamine	<20	<6	<10	<10	<6	<10	<10	<6	<11
n-nitrosodiphenylamine	<3.7	<82	<1.9	<2.0	<82	<1.9	<1.9	<82	<2.0
phenanthrene	<11	<4	<5.4	<5.6	<4	<5.4	<5.5	<4	<5.8
pyrene	<3.7	<5	<1.9	<2.0	<5	<1.9	<1.9	<5	<2.0
1,2,4-trichlorobenzene	<3.7	<7	<1.9	<2.0	<7	<1.9	<1.9	<7	<10.5
Sub Total 1	36.3	29	15.9	39.3	17	189.5	182.6	145	123.1

Table E-3. Summary of Base/Neutral Extractable Compounds in Ground Water, Monsanto Company, W.G. Krummrich Plant, Sauget, Il

Well Number:	GM-25B	GM-27B	GM-27B	GM-27B	GM-27C	GM-27C	GM-27C	GM-28B	GM-28B
Date:	11/85	9/84**	11/85	2/86	9/84**	11/85	2/86	9/84**	11/85
Miscellaneous Base/Neutral Extractable Organic Compounds concentrations are in ug/L									
2-nitroaniline	<20	<25-30	<10	<10	<25-30	<10	<10	<25-30	<11
4-nitroaniline	<20	<25-30	<10	<10	<25-30	<10	<10	<25-30	<11
2-nitrochlorobenzene	<20	<10	<10	<10	<10	<10	<10	<10	<11
4-nitrochlorobenzene	<20	<10	<10	<10	<10	<10	<10	<10	<11
2,4-and 3,4-dinitrochlorobenzene	<20	<10	<10	<10	<10	<10	<10	<10	<11
4-nitrodiphenylamine	<20	<10	<10	<10	<10	<10	<10	<10	<11
triphenyl phosphate	<20	<10	<10	<10	<10	<10	<10	<10	<11
2,3,7,8-tetrachloro-dibenzo-p-dioxin	NA	<0.001	NA	NA	NA	NA	NA	<0.0016	NA
2-nitrobiphenyl	NA	<10	NA	NA	<10	NA	NA	<10	NA
4-nitrobiphenyl	NA	<10	NA	NA	<10	NA	NA	<10	NA
Sub Total 2	0	0	0	0	0	0	0	0	0
Total Base/Neutral Compounds Analyzed	36.3	29	15.9	39.3	17	189.5	182.6	145	123.1

Table E-3. Summary of Base/Neutral Extractable Compounds in Ground Water, Monsanto Company, W.G. Krummrich Plant, Sauget, Il

Well Number:	GM-29B	GM-28C	GM-28C	GM-28C	GM-29	GM-29	GM-30	GM-30	GM-30
Date:	2/86	9/84**	11/85	2/86	9/84**	11/85	9/84**	11/85	2/86
USEPA Priority Pollutant Base/Neutral Extractable Organic Compounds concentrations are in ug/L									
acenaphthene	<1.9	NA	<1.9	<1.9	<4	<2.3	<4	<2.1	<2.3
acenapthylene	<3.6	NA	<3.5	<3.5	<3	<4.2	<3	<3.9	<4.2
anthracene	<1.9	NA	<1.9	<1.9	<4	<2.3	<4	<2.1	<2.3
benzidine	<45	NA	<44	<44	<60	<52	<60	<49	<52
benzo (a) anthracene	<9	NA	<7.8	<7.9	<9	<9.3	<9	<8.7	<9.3
benzo (a) pyrene	<2.6	NA	<2.5	<2.5	<12	<3.0	<12	<2.8	<3.0
benzo (b) fluoroanthene	<4.9	NA	<4.8	<4.8	<11	<5.7	<11	<5.3	<5.7
benzo (ghi) perylene	<4.2	NA	<4.1	<4.1	<14	<4.9	<14	<4.6	<4.9
benzo (k) fluoranthene	<3.6	NA	<3.5	<3.5	<11	<4.2	<11	<3.9	<4.2
bis (2-chloroethoxy) methane	<5.4	NA	<5.3	<5.4	<4	<6.3	<4	<5.9	<6.3
bis (2-chloroethyl) ether	<5.8	NA	<5.7	<5.8	<4	<6.8	<4	<6.3	<6.8
bis (2-chloroisopropyl) ether	<5.8	NA	<5.7	<5.8	<3	<6.8	<3	<6.3	<6.8
bis (2-ethylhexyl) phthalate	<10	NA	<10	<10	17	<12	<10	<11	<12
4-bromophenyl phenyl ether	<1.9	NA	<1.9	<1.9	<16	<2.3	<16	<2.1	<2.3
butyl benzyl phthalate	<10	NA	<10	<10	<13	<12	<13	<11	<12
2-chloronapnthalene	<1.9	NA	<1.9	<1.9	<4	<2.3	<4	<2.1	<2.3
4-chlorophenyl phenyl ether	<4.3	NA	<4.2	<4.2	<9	<5.0	<9	<4.7	<5.0
chrysene	<2.6	NA	<2.5	<2.5	<9	<3.0	<9	<2.8	<3.0
benzo (a,h) anthracene	<10	NA	<10	<10	<16	<12	<16	<11	<12
1,2-dichlorobenzene	1,720	NA	38	3,270	<5	5	<5	3.7	4.7
1,3-dichlorobenzene	5.4	NA	<1.9	14.7	<6	<2.3	<6	<2.1	<2.3
1,4-dichlorobenzene	231	NA	10	103	<5	<5.2	<5	179	123
3,3-dichlorobenzidine	<17	NA	<17	<17	<161	<20	<161	<18	<20
diethyl phthalate	<10	NA	<10	<10	<4	<12	<4	<11	<12
dimethyl phthalate	<10	NA	<10	<10	<4	<12	<4	<11	<12
di-n-butyl phthalate	<10	NA	<10	<10	3	<12	3	<11	<12
2,4-dinitrotoluene	<5.8	NA	<5.7	<5.8	<14	<6.8	<14	<6.3	<6.8
2,6-dinitrotoluene	<1.9	NA	<1.9	<1.9	<16	<2.3	<16	<2.1	<2.3
di-n-octyl phthalate	<10	NA	<10	<10	<6	<12	<6	<11	<12
1,2-diphenylhydrazine	<10	NA	<10	<10	<10	<12	<10	<11	<12
fluoranthene	<2.3	NA	<2.2	<2.2	<5	<2.6	<5	<2.4	<2.6
fluorene	<1.9	NA	<1.9	<1.9	<4	<2.3	<4	<2.1	<2.3
hexachlorobenzene	<1.9	NA	<1.9	<1.9	<15	<2.3	<15	<2.1	<2.3
hexachlorobutadiene	<0.9	NA	<0.9	<0.9	<13	<1.1	<13	<1.0	<1.1
hexachlorocyclopentadiene	<10	NA	<10	<10	<12	<12	<12	<11	<12
hexachloroethane	<1.6	NA	<1.6	<1.6	<10	<1.9	<10	<1.8	<1.9
indeno (1,2,3-c,d) pyrene	<4.8	NA	<4.7	<4.7	<7	<5.6	<7	<5.2	<5.6
isophorone	<2.3	NA	<2.2	<2.2	<2	<2.6	<2	<2.4	<2.6
naphthalene	<1.6	NA	<1.6	<1.6	<2	3.8	<2	<1.8	<1.9
nitrobenzene	<1.9	NA	<1.9	<1.9	<5	<2.3	<5	<2.1	<2.3
n-nitrosodimethylamine	<10	NA	<10	<10	<10	<12	<10	<11	<12
n-nitrosodi-n-propylamine	<10	NA	<10	<10	<6	<12	<6	<11	<12
n-nitrosodiphenylamine	<1.9	NA	<1.9	<1.9	<82	<2.3	<82	<2.1	<2.3
phenanthrene	<5.5	NA	<5.4	<5.5	<4	<6.4	<4	<6.0	<6.4
pyrene	<1.9	NA	<1.9	<1.9	<5	<2.3	<5	<2.1	<2.3
1,2,4-trichlorobenzene	29.6	NA	16.2	20.3	<7	<2.3	<7	<2.1	<2.3
Sub Total 1	1986	NA	64.2	3408	20	8.8	3	182.7	127.7

Table E-3. Summary of Base/Neutral Extractable Compounds in Ground Water, Monsanto Company, W.G. Krummrich Plant, Sauget, Il

Well Number:	GM-28B	GM-28C	GM-28C	GM-28C	GM-29	GM-29	GM-30	GM-30	GM-30
Date:	2/86	9/84**	11/85	2/86	9/84**	11/85	9/84**	11/85	2/86
Miscellaneous Base/Neutral Extractable Organic Compounds concentrations are in ug/L									
2-nitroaniline	<10	NA	<10	<10	<25-30	<12	<25-30	<11	<12
4-nitroaniline	<10	NA	<10	<10	<25-30	<12	<25-30	<11	<12
2-nitrochlorobenzene	180	NA	<10	494	<10	<12	<10	<11.1	<12
4-nitrochlorobenzene	36.6	NA	<10	1,460	<10	<12	<10	<11.1	<12
2,4-and 3,4-dinitrochlorobenzene	<10	NA	<10	<10	<10	<12	<10	<11.1	<12
4-nitrodiphenylamine	<10	NA	<10	<10	<10	<12	<10	<11.1	<12
triphenyl phosphate	<10	NA	<10	<10	<10	<12	<10	<11.1	<12
2,3,7,8-tetrachloro-dibenzo-p-dioxin	NA	NA	NA	NA	NA	NA	NA	NA	NA
2-nitrobiphenyl	NA	NA	NA	NA	<10	NA	<10	NA	NA
4-nitrobiphenyl	NA	NA	NA	NA	<10	NA	<10	NA	NA
Sub Total 2	216.6	NA	0	1954	0	0	0	0	0
Total Base/Neutral Compounds Analyzed	2202.6	NA	64.2	5362	20	8.8	3	182.7	127.7

Table E-3. Summary of Base/Neutral Extractable Compounds in Ground Water, Monsanto Company, W.G. Krummrich Plant, Sauget, Il

Well Number:	GM-31A	GM-31A	GM-31A	GM-31A	GM-31Aa)	GM-31Ab)	GM-31B	GM-31B	GM-31B
Date:	2/85	5/85	11/85	11/85*	2/86	2/86	2/85	5/85	11/85
USEPA Priority Pollutant Base/Neutral Extractable Organic Compounds concentrations are in ug/L									
acenaphthene	<1.9	<1.9	<2.0	<2.0	<2.1	<2.0	<1.9	<1.9	<1.9
acenapthylene	<3.5	<3.5	<3.7	<3.7	<3.9	<3.7	<3.5	<3.5	<3.5
anthracene	<1.9	<1.9	<2.0	<2.0	<2.1	<2.0	<1.9	<1.9	<1.9
benzidine	<44	<44	<47	<46	<49	<46	<44	<44	<44
benzo (a) anthracene	<7.8	<7.8	<8.3	<8.2	<8.7	<8.2	<7.8	<7.8	<7.8
benzo (a) pyrene	<2.5	<2.5	<2.7	<2.6	<2.8	<2.6	<2.5	<2.5	<2.5
benzo (b) fluoroanthene	<4.8	<4.8	<5.1	<5.1	<11	<10	<4.8	<4.8	<4.8
benzo (ghi) perylene	<4.1	<4.1	<4.4	<4.3	<4.6	<4.3	<4.1	<4.1	<4.1
benzo (k) fluoranthene	<2.5	<2.5	<3.7	<3.7	<3.9	<3.7	<2.5	<2.5	<3.5
bis (2-chloroethoxy) methane	<5.3	<5.3	<5.6	<5.6	<5.9	<5.6	<5.3	<5.3	<5.3
bis (2-chloroethyl) ether	<5.7	<5.7	<6.1	<6.0	<6.3	<6.0	<5.7	<5.7	<5.7
bis (2-chloroisopropyl) ether	<5.7	<6.0	<6.1	<6.0	<6.3	<6.0	<5.7	<6.0	<5.7
bis (2-ethylhexyl) phthalate	<10	<10	<11	<11	<11	<11	<10	<10	33.9
4-bromophenyl phenyl ether	<1.9	<1.9	<2	<2	<2.1	<2	<1.9	<1.9	<1.9
butyl benzyl phthalate	<10	<10	<11	<11	<11	<11	<10	<10	<10
2-chloronaphthalene	<1.9	<1.9	<2	<2	<2.1	<2	<1.9	<1.9	<1.9
4-chlorophenyl phenyl ether	<4.2	<4.2	<4.5	<4.4	<4.7	<4.4	<3.5	<4.2	<4.2
chrysene	<2.5	<2.5	<2.7	<2.6	<2.8	<2.6	<1.9	<2.5	<2.5
dibenzo (a,h) anthracene	<2.5	<2.5	<11	<11	<11	<11	<44	<2.5	<10
1,2-dichlorobenzene	3.9	3	17.6	16.8	25.5	10.4	<7.8	<1.9	<1.9
1,3-dichlorobenzene	<1.9	<1.9	<2	<2	<2.1	<2	<2.5	<1.9	<1.9
1,4-dichlorobenzene	<4.4	<4.4	8.0	7.9	11.7	<4.6	<4.8	<4.4	<4.4
3,3-dichlorobenzidine	<16.5	<16.5	<18	<17	<18	<17	<4.1	<16.5	<17
diethyl phthalate	<10	<10	<11	<11	<11	<11	<2.5	<10	<10
dimethyl phthalate	<10	<10	<11	<11	<11	<11	<5.3	<10	<10
di-n-butyl phthalate	<10	<10	<11	<11	<11	<11	<5.7	<10	<10
2,4-dinitrotoluene	<5.7	<5.7	<6.1	<6.0	<6.3	<6.0	<5.7	<5.7	<5.7
2,6-dinitrotoluene	<1.9	<1.9	<2.0	<2.0	<2.1	<2.0	<10	<1.9	<1.9
di-n-octyl phthalate	<10	<10	<11	<11	<11	<11	<1.9	<10	<10
1,2-diphenylhydrazine	<10	<10	<11	<11	<11	<11	<10	<10	<10
fluoranthene	<2.2	<2.2	<2.3	<2.3	<2.4	<2.3	<2.2	<2.2	<2.2
fluorene	<1.9	<1.9	<2.0	<2.0	<2.1	<2.0	<1.9	<1.9	<1.9
hexachlorobenzene	<1.9	<1.9	<2.0	<2.0	<2.1	<2.0	<1.9	<1.9	<1.9
hexachlorobutadiene	<0.9	<0.9	<1.0	<1.0	<1.0	<1.0	<0.9	<0.9	<0.9
hexachlorocyclopentadiene	<10	<10	<11	<11	<11	<11	<10	<10	<10
hexachloroethane	<1.6	<1.6	<1.7	<1.7	<1.8	<1.7	<1.6	<1.6	<1.6
indeno (1,2,3-c,d) pyrene	<3.7	<3.7	<5.0	<4.9	<5.2	<4.9	<3.7	<3.7	<4.7
isophorone	<2.2	<2.2	<2.3	<2.3	<2.4	<2.3	<2.2	<2.2	<2.2
naphthalene	<1.6	<1.6	<1.7	<1.7	<1.8	<1.7	<1.6	<1.6	<1.6
nitrobenzene	21.7	15	87.8	93.5	168	130	<1.9	<1.9	<1.9
n-nitrosodimethylamine	<10	<10	<11	<11	<11	<11	<10	<10	<10
n-nitrosodi-n-propylamine	<10	<10	<11	<11	<11	<11	<10	<10	<10
n-nitrosodiphenylamine	2.8	<1.9	<2.0	<2.0	<2.1	<2.0	<1.9	<1.9	<1.9
phenanthrene	<5.4	<5.4	<5.7	<5.7	<6.0	<5.7	<5.4	<5.4	<5.4
pyrene	<1.9	<1.9	<2.0	<2.0	<2.1	<2.0	<1.9	<1.9	<1.9
1,2,4-trichlorobenzene	<1.9	<1.9	<2.0	<2.0	<2.1	<2.0	<1.9	<1.9	<1.9
Sub Total 1	28.4	18	113.4	118.2	205.2	140.4	0	0	33.9

Table E-3. Summary of Base/Neutral Extractable Compounds in Ground Water, Monsanto Company, W.G. Krummrich Plant, Sauget, Il

Well Number:	GM-31A	GM-31A	GM-31A	GM-31A	GM-31Aa)	GM-31Ab)	GM-31B	GM-31B	GM-31B
Date:	2/85	5/85	11/85	11/85*	2/86	2/86	2/85	5/85	11/85
Miscellaneous Base/Neutral Extractable Organic Compounds concentrations are in ug/L									
2-nitroaniline	<10	<10	<11	<11	NA	NA	<10	<10	<10
4-nitroaniline	<10	<10	<11	<11	NA	NA	<10	<10	<10
2-nitrochlorobenzene	<10	<10	579	542	NA	NA	<10	<10	<10
4-nitrochlorobenzene	122	<10	<11	<11	NA	NA	<10	<10	<10
2,4-and 3,4-dinitrochlorobenzene	<10	222	<11	<11	NA	NA	<10	<10	<10
4-nitrodiphenylamine	<10	<10	<11	<11	NA	NA	<10	<10	<10
triphenyl phosphate	<10	<10	<11	<11	NA	NA	<10	<10	<10
2,3,7,8-tetrachloro-dibenzo-p-dioxin	NA	NA	NA	NA	NA	NA	NA	NA	NA
2-nitrobiphenyl	<25	<25	41.8	42.9	<11	<11	<25	<25	<10
4-nitrobiphenyl	<25	<25	<11	<11	<11	<11	<25	<25	<10
Sub Total 2	122	222	620.8	584.9	0	0	0	0	0
Total Base/Neutral Compounds Analyzed	150.4	240	734.2	703.1	205.2	140.4	0	0	33.9

Table E-3. Summary of Base/Neutral Extractable Compounds in Ground Water, Monsanto Company, W.G. Krummrich Plant, Sauget, Il

Well Number:	GM-31B	GM-31C	GM-31C	GM-31C	GM-31C	B-24A	B-25A	B-25A	B-25B
Date:	11/85*	2/85	5/85	11/85	11/85*	2/86	6/84	11/85	6/84
USEPA Priority Pollutant Base/Neutral Extractable Organic Compounds concentrations are in ug/L									
acenaphthene	<1.9	<1.9	<1.9	<1.9	<1.9	<2.0	<80	<3.7	<80
acenapthylene	<3.5	<3.5	<3.5	<3.5	<3.5	<3.6	<60	<6.9	<60
anthracene	<1.9	<1.9	<1.9	<1.9	<1.9	<2.0	<80	<3.7	<80
benzidine	<44	<44	<44	<44	<44	<45	<1,200	<86	<1,200
benzo (a) anthracene	<7.8	<7.8	<7.8	<7.8	<7.8	<8	<180	<15	<180
benzo (a) pyrene	<2.5	<2.5	<2.5	<2.5	<2.5	<2.6	<240	<4.9	<240
benzo (b) fluoroanthene	<4.8	<4.8	<4.8	<4.8	<4.8	<10	<220	<9.4	<220
benzo (ghi) perylene	<4.1	<4.1	<4.1	<4.1	<4.1	<4.2	<280	<8.0	<280
benzo (k) fluoranthene	<3.5	<2.5	<2.5	<3.5	<3.5	<3.6	<220	<6.9	<220
bis (2-chloroethoxy) methane	<5.3	<5.3	<5.3	<5.3	<5.3	<5.5	<80	<10	<80
bis (2-chloroethyl) ether	<5.7	<5.7	<5.7	<5.7	<5.7	<5.9	<80	<11	<80
bis (2-chloroisopropyl) ether	<5.7	<5.7	<6.0	<5.7	<5.7	<5.9	<60	<11	<60
bis (2-ethylhexyl) phthalate	55.6	55.2	<10	84	<10	<10	<200	61.8	<200
4-bromophenyl phenyl ether	<1.9	<1.9	<1.9	<1.9	<1.9	<2	<320	<3.7	<320
butyl benzyl phthalate	<10	<10	<10	<10	<10	<10	<260	<20	<260
2-chloronaphthalene	<1.9	<1.9	<1.9	<1.9	<1.9	<2	<80	<3.7	<80
4-chlorophenyl phenyl ether	<4.2	<4.2	<4.2	<4.2	<4.2	<4.3	<180	<8.2	<180
chrysene	<2.5	<2.5	<2.5	<2.5	<2.5	<2.6	<150	<4.9	<180
enzo (a,h) anthracene	<10	<2.5	<2.5	<10	<10	<10	<320	<20	<320
,2-dichlorobenzene	<1.9	<1.9	<1.9	<1.9	<1.9	180	<100	3,790	<100
1,3-dichlorobenzene	<1.9	<1.9	<1.9	<1.9	<1.9	2.5	<120	12.6	<120
1,4-dichlorobenzene	<4.4	<4.4	<4.4	<4.4	<4.4	114	35	190	<100
3,3-dichlorobenzidine	<17	<16.5	<16.5	<17	<17	<17	<3,220	<32	<3,220
diethyl phthalate	<10	<10	<10	<10	<10	<10	<80	<20	<80
dimethyl phthalate	<10	<10	<10	<10	<10	<10	<80	<20	<80
di-n-butyl phthalate	<10	<10	<10	<10	<10	<10	<60	<20	91
2,4-dinitrotoluene	<5.7	<5.7	<5.7	<5.7	<5.7	<5.9	<280	<11	<280
2,6-dinitrotoluene	<1.9	<1.9	<1.9	<1.9	<1.9	<2.0	<320	<3.7	<320
di-n-octyl phthalate	<10	<10	<10	<10	<10	<10	<120	<20	<120
1,2-diphenylhydrazine	<10	<10	<10	<10	<10	<10	<200	<20	<200
fluoranthene	<2.2	<2.2	<2.2	<2.2	<2.2	<2.3	<100	<4.3	<100
fluorene	<1.9	<1.9	<1.9	<1.9	<1.9	<2.0	<80	<3.7	<80
hexachlorobenzene	<1.9	<1.9	<1.9	<1.9	<1.9	<2.0	<300	<3.7	<300
hexachlorobutadiene	<0.9	<0.9	<0.9	<0.9	<0.9	<0.9	<260	<1.8	<260
hexachlorocyclopentadiene	<10	<10	<10	<10	<10	<10	<240	<20	<240
hexachloroethane	<1.6	<1.6	<1.6	<1.6	<1.6	<1.6	<200	<3.1	<200
indeno (1,2,3-c,d) pyrene	<4.7	<3.7	<3.7	<4.7	<4.7	<4.8	<140	<9.2	<140
isophorone	<2.2	<2.2	<2.2	<2.2	<2.2	<2.3	<40	<4.3	<40
naphthalene	<1.6	<1.6	<1.6	<1.6	<1.6	15.7	2,350	193	<40
nitrobenzene	<1.9	<1.9	<1.9	<1.9	<1.9	2,850	<100	8,080	<100
n-nitrosodimethylamine	<10	<10	<10	<10	<10	<10	<200	<20	<200
n-nitrosodi-n-propylamine	<10	<10	<10	<10	<10	<10	<120	<20	<120
n-nitrosodiphenylamine	<1.9	<1.9	<1.9	<1.9	<1.9	<2.0	<1,640	<3.7	<1,640
henanthrene	<5.4	<5.4	<5.4	<5.4	<5.4	<5.6	<80	<11	<80
ene	<1.9	<1.9	<1.9	<1.9	<1.9	<2.0	<100	<3.7	<100
,2,4-trichlorobenzene	<1.9	<1.9	<1.9	<1.9	<1.9	17.2	<140	929	<140
Sub Total 1	55.6	55.2	0	84	0	3179.4	2385	13256.4	91

Table E-3. Summary of Base/Neutral Extractable Compounds in Ground Water, Monsanto Company, W.G. Krummrich Plant, Sauget, Il

Well Number:	GM-31B	GM-31C	GM-31C	GM-31C	GM-31C	B-24A	B-25A	B-25A	B-25B
Date:	11/85*	2/85	5/85	11/85	11/85*	2/86	6/84	11/85	6/84
Miscellaneous Base/Neutral Extractable Organic Compounds concentrations are in ug/L									
2-nitroaniline	<10	<10	<10	<10	<10	<10	NA	570	NA
4-nitroaniline	<10	<10	<10	<10	<10	<10	NA	79.2	NA
2-nitrochlorobenzene	<10	<10	<10	<10	<10	368,000	NA	226,000	NA
4-nitrochlorobenzene	<10	<10	<10	<10	<10	108,000	NA	102,000	NA
2,4-and 3,4-dinitrochlorobenzene	<10	<10	<10	<10	<10	<10	NA	<20	NA
4-nitrodiphenylamine	<10	<10	<10	<10	<10	161	NA	255	NA
triphenyl phosphate	<10	<10	<10	<10	<10	<10	NA	412	NA
2,3,7,8-tetrachloro-dibenzo-p-dioxin	NA	NA	NA	NA	NA	NA	NA	NA	NA
2-nitrobiphenyl	<10	<25	<25	<10	<10	NA	NA	NA	NA
4-nitrobiphenyl	<10	<25	<25	<10	<10	NA	NA	NA	NA
Sub Total 2	0	0	0	0	0	476161	NA	329316.2	NA
Total Base/Neutral Compounds Analyzed	55.6	55.2	0	84	0	479340.4	2385	342572.6	91

Table E-3. Summary of Base/Neutral Extractable Compounds in Ground Water, Monsanto Company, W.G. Krummrich Plant, Sauget, Il

Well Number:	B-25B	B-27B	B-27B	B-28A	B-29A	B-29A	B-29B	B-29B	B-29B
Date:	11/85	9/84**	9/84*	2/86	6/84	11/85	6/84	6/84*	6/84#
USEPA Priority Pollutant Base/Neutral Extractable Organic Compounds concentrations are in ug/L									
acenaphthene	<2.0	NA	NA	<2.0	<80	<3.7	<800	<80	<100
acenapthylene	<3.7	NA	NA	<3.7	<60	<6.9	<600	<60	<100
anthracene	<2.0	NA	NA	<2.0	<80	<3.7	<800	<80	<100
benzidine	<47	NA	NA	<47	<1,200	<86	<12,000	<1,200	<100
benzo (a) anthracene	<8.3	NA	NA	<8.3	<180	<15	<1,800	<180	<100
benzo (a) pyrene	<2.7	NA	NA	<2.7	<240	<4.9	<2,400	<240	<100
benzo (b) fluoroanthene	<5.1	NA	NA	<5.1	<220	<9.4	<2,200	<220	<100
benzo (ghi) perylene	<4.4	NA	NA	<4.4	<280	<8.0	<2,800	<280	<100
benzo (k) fluoranthene	<3.7	NA	NA	<3.7	<220	<6.9	<2,200	<220	<100
bis (2-chloroethoxy) aethane	<5.6	NA	NA	<5.6	<80	<10	<800	<80	<100
bis (2-chloroethyl) ether	<6.1	NA	NA	<6.1	<80	<11	<800	<80	<100
bis (2-chloroisopropyl) ether	<6.1	NA	NA	<6.1	<60	<11	<600	<60	<100
bis (2-ethylhexyl) phthalate	<11	NA	NA	<11	<200	<20	591	<200	<100
4-bromophenyl phenyl ether	<2	NA	NA	<2	<320	<3.7	<3,200	<320	<100
butyl benzyl phthalate	<11	NA	NA	<11	<260	<20	<2,600	<260	<100
2-chloronaphthalene	<2	NA	NA	<2	<80	<3.7	<800	<80	<100
4-chlorophenyl phenyl ether	<4.5	NA	NA	<4.5	<180	<8.2	<1,800	<180	<100
chrysene	<2.7	NA	NA	<2.7	<180	<4.9	<1,800	<180	<100
benzo (a,h) anthracene	<11	NA	NA	<11	<320	<20	<3,200	<320	<100
,2-dichlorobenzene	124	NA	NA	<2	<100	221	1,070	<100	13,500
1,3-dichlorobenzene	2.7	NA	NA	<2	<120	24	<1,200	<120	<100
1,4-dichlorobenzene	31	NA	NA	<4.7	<100	73.1	<1,000	240	<100
3,3-dichlorobenzidine	<18	NA	NA	<18	<3,220	<33.3	<32,200	<3,220	<100
diethyl phthalate	<11	NA	NA	<11	<80	<20	<800	<80	<100
dimethyl phthalate	<11	NA	NA	<11	<80	<20	<800	<80	<100
di-n-butyl phthalate	<11	NA	NA	<11	127	<20	304	<60	<100
2,4-dinitrotoluene	<6.1	NA	NA	<6.1	<280	<11	<2,800	<280	<100
2,6-dinitrotoluene	<2.0	NA	NA	<2.0	<320	<3.7	<3,200	<320	<100
di-n-octyl phthalate	<11	NA	NA	<11	<120	<20	<1,200	<120	<100
1,2-diphenylhydrazine	<11	NA	NA	<11	<200	<20	<2,000	<200	<100
fluoranthene	<2.3	NA	NA	<2.3	<100	<4.3	<1,000	<100	<100
fluorene	<2.0	NA	NA	<2.0	<80	<3.7	<800	<80	<100
hexachlorobenzene	<2.0	NA	NA	<2.0	<300	<3.7	<3,000	<300	<100
hexachlorobutadiene	<1	NA	NA	<1	<260	<1.8	<2,600	<260	<100
hexachlorocyclopentadiene	<11	NA	NA	<11	<240	<20	<2,400	<240	<100
hexachloroethane	<1.7	NA	NA	<1.7	<200	<3.1	<2,000	<200	<100
indeno (1,2,3-c,d) pyrene	<5.0	NA	NA	<5.0	<140	<9.2	<1,400	<140	<100
isophorone	<2.3	NA	NA	<2.3	<40	27.5	<400	<40	<100
naphthalene	31.7	NA	NA	<1.7	<40	<3.1	<400	11,600	<100
nitrobenzene	4,030	NA	NA	<2.0	<100	1,650	<1,000	<100	<100
n-nitrosodimethylamine	<11	NA	NA	<11	<200	<20	<2,000	<200	<100
n-nitrosodi-n-propylamine	<11	NA	NA	<11	<120	<20	<1,200	<120	<100
n-nitrosodiphenylamine	<2.0	NA	NA	<2.0	<1,640	<3.7	<16,400	<1,640	<100
henanthrene	<5.7	NA	NA	<5.7	<80	<11	<800	<80	<100
ene	<2.0	NA	NA	<2.0	<100	<3.7	<1,000	<100	<100
,2,4-trichlorobenzene	37.8	NA	NA	<2.0	<140	25.5	<1,400	<140	<100
Sub Total 1	4257.2	NA	NA	0	127	2021.1	1965	11840	13500

Table E-3. Summary of Base/Neutral Extractable Compounds in Ground Water, Monsanto Company, W.G. Krummrich Plant, Sauget, Il

Well Number:	B-25B	B-27B	B-27B	B-28A	B-29A	B-29A	B-29B	B-29B	B-29B
Date:	11/85	9/84**	9/84*	2/86	6/84	11/85	6/84	6/84*	6/84§
Miscellaneous Base/Neutral Extractable Organic Compounds concentrations are in ug/L									
2-nitroaniline	3,280	NA	NA	<11	NA	<20	NA	NA	NA
4-nitroaniline	1,780	NA	NA	<11	NA	189	NA	NA	NA
2-nitrochlorobenzene	25,600	NA	NA	<11	NA	<20	NA	NA	NA
4-nitrochlorobenzene	15,500	NA	NA	<11	NA	<20	NA	NA	NA
2,4-and 3,4-dinitrochlorobenzene	<11	NA	NA	<11	NA	<20	NA	NA	NA
4-nitrodiphenylamine	34.5	NA	NA	<11	NA	629	NA	NA	NA
triphenyl phosphate	<11	NA	NA	<11	NA	132	NA	NA	NA
2,3,7,8-tetrachloro-dibenzo-p-dioxin	NA	NA	NA	NA	NA	NA	NA	NA	NA
2-nitrobiphenyl	NA	NA	NA	NA	NA	NA	NA	NA	NA
4-nitrobiphenyl	NA	NA	NA	NA	NA	NA	NA	NA	NA
Sub Total 2	46194.5	NA	NA	0	NA	949	NA	NA	NA
Total Base/Neutral Compounds Analyzed	50451.7	NA	NA	0	127	2970.1	1965	11940	13500

Table E-3. Summary of Base/Neutral Extractable Compounds in Ground Water, Monsanto Company, W.S. Krumrich Plant, Sauget, Il

Well Number:	B-29B	B-29B	B-30B	B-31B	B-31B	B-31C	B-31C	B-31C	B-31C
Date:	11/84	11/85	9/84**	11/85	2/86	9/84**	9/84*	11/85	2/86
USEPA Priority Pollutant Base/Neutral Extractable Organic Compounds concentrations are in ug/L									
acenaphthene	<50	<3.8	NA	<1.9	<1.9	<4	<4	<1.9	<2.0
acenapthylene	<50	<7.0	NA	<3.5	<3.5	<3	<3	<3.5	<3.7
anthracene	<50	<3.8	NA	<1.9	<1.9	<4	<4	<1.9	<2.0
benzidine	<50	<88	NA	<44	<44	<60	<60	<45	<46
benzo (a) anthracene	<50	<16	NA	<7.8	<7.9	<9	<9	<8.0	<8.2
benzo (a) pyrene	<50	<5.0	NA	<2.5	<2.5	<12	<12	<2.6	<2.6
benzo (b) fluoroanthene	<50	<9.6	NA	<4.8	<4.8	<11	<11	<4.9	<5.1
benzo (ghi) perylene	<50	<8.2	NA	<4.1	<4.1	<14	<14	<4.2	<4.3
benzo (k) fluoranthene	<50	<7.0	NA	<3.5	<3.5	<11	<11	<3.6	<3.7
bis (2-chloroethoxy) methane	<50	<11	NA	<5.3	<5.4	<4	<4	<5.4	<5.6
bis (2-chloroethyl) ether	<50	<11	NA	<5.7	<5.8	<4	<4	<5.8	<6.0
bis (2-chloroisopropyl) ether	<50	<11	NA	<5.7	<5.8	<3	<3	<5.8	<6.0
bis (2-ethylhexyl) phthalate	<50	<20	NA	101	<10	<10	<10	<10	<11
4-bromophenyl phenyl ether	<50	<3.8	NA	<1.9	<1.9	<16	<16	<1.9	<2
butyl benzyl phthalate	<50	<20	NA	<10	<10	<13	<13	<10	<11
2-chloronaphthalene	<50	<3.8	NA	<1.9	<1.9	<4	<4	<1.9	<2
4-chlorophenyl phenyl ether	<50	<8.4	NA	<4.2	<4.2	<9	<9	<4.3	<4.4
chrysene	<50	<5.0	NA	<2.5	<2.5	<9	<9	<2.6	<2.6
benzo (a,h) anthracene	<50	<20	NA	<10	<10	<16	<16	<10	<11
,2-dichlorobenzene	4,200	779	NA	<1.9	<1.9	4	6	31.9	40.3
1,3-dichlorobenzene	<50	<3.8	NA	<1.9	<1.9	<6	<6	<1.9	<2
1,4-dichlorobenzene	<50	<8.8	NA	<4.4	<4.4	4	5	19.4	22.2
3,3-dichlorobenzidine	<50	<34	NA	<17	<17	<161	<161	<17	<17
diethyl phthalate	<50	<20	NA	<10	<10	<4	<4	<10	<11
dimethyl phthalate	<50	<20	NA	<10	<10	<4	<4	<10	<11
di-n-butyl phthalate	<50	<20	NA	4.5	<10	<3	<3	<10	<11
2,4-dinitrotoluene	<50	<11	NA	<5.7	<5.8	<14	<14	<5.8	<6.0
2,6-dinitrotoluene	<50	<3.8	NA	<1.9	<1.9	<16	<16	<1.9	<2.0
di-n-octyl phthalate	<50	<20	NA	<10	<10	<6	<6	<10	<11
1,2-diphenylhydrazine	<50	<20	NA	<10	<10	<10	<10	<10	<11
fluoranthene	<50	<4.4	NA	<2.2	<2.2	<5	<5	<2.2	<2.3
fluorene	<50	<3.8	NA	<1.9	<1.9	<4	<4	<1.9	<2.0
hexachlorobenzene	<50	<3.8	NA	<1.9	<1.9	<15	<15	<1.9	<2.0
hexachlorobutadiene	<50	<1.8	NA	<0.9	<0.9	<13	<13	<0.9	<1
hexachlorocyclopentadiene	<50	<20	NA	<10	<10	<12	<12	<10	<11
hexachloroethane	<50	<3.2	NA	<1.6	<1.6	<10	<10	<1.6	<1.7
indeno (1,2,3-c,d) pyrene	<50	<9.4	NA	<4.7	<4.7	<7	<7	<4.8	<4.9
isophorone	55	76.6	NA	<2.2	<2.2	<2	<2	<2.2	<2.3
naphthalene	125	58.6	NA	<1.6	<1.6	<2	<2	<1.6	<1.7
nitrobenzene	2,170	1,060	NA	<1.9	<1.9	<5	<5	<1.9	<2.0
n-nitrosodimethylamine	<50	<20	NA	<10	<10	<10	<10	<10	<11
n-nitrosodi-n-propylamine	<50	<20	NA	<10	<10	<6	<6	<10	<11
n-nitrosodiphenylamine	<50	<3.8	NA	<1.9	<1.9	<82	<82	<1.9	<2.0
henanthrene	<50	<11	NA	<5.4	<5.5	<4	<4	<5.5	<5.7
ene	<50	<3.8	NA	<1.9	<1.9	<5	<5	<1.9	<2.0
,2,4-trichlorobenzene	520	65.5	NA	<1.9	<1.9	<7	<7	<1.9	<2.0
Sub Total 1	7070	2039.7	NA	105.5	0	8	11	51.3	62.5

Table E-3. Summary of Base/Neutral Extractable Compounds in Ground Water, Monsanto Company, W.G. Krummrich Plant, Sauget, Il

Well Number:	B-29B	B-29B	B-30B	B-31B	B-31B	B-31C	B-31C	B-31C	B-31C
Date:	11/84	11/85	9/84**	11/85	2/86	9/84**	9/84*	11/85	2/86
Miscellaneous Base/Neutral Extractable Organic Compounds concentrations are in ug/L									
2-nitroaniline	<50	<20	NA	<10	<10	<25-30	<25-30	<10	<11
4-nitroaniline	375	601	NA	<10	<10	<25-30	<25-30	<10	<11
2-nitrochlorobenzene	e)	282	NA	<10	<10	<10	<10	<10	<11
4-nitrochlorobenzene	e)	<20	NA	<10	<10	<10	<10	<10	<11
2,4-and 3,4-dinitrochlorobenzene	<50	<20	NA	<10	<10	<10	<10	<10	<11
4-nitrodiphenylamine	601	949	NA	<10	<10	<10	<10	<10	<11
triphenyl phosphate	607	548	NA	<10	<10	<10	<10	<10	<11
2,3,7,8-tetrachloro-dibenzo-p-dioxin	NA	NA	NA	NA	NA	NA	NA	NA	NA
2-nitrobiphenyl	NA	NA	NA	NA	NA	<10	<10	NA	NA
4-nitrobiphenyl	NA	NA	NA	NA	NA	<10	<10	NA	NA
Sub Total 2	1583	2380	NA	0	0	0	0	0	0
Total Base/Neutral Compounds Analyzed	B653	4419.7	NA	105.5	0	B	11	51.3	62.5

Table E-3. Summary of Base/Neutral Extractable Compounds in Ground Water, Monsanto Company, W.G. Krummrich Plant, Sauget, Il

Well Number:	B-101	B-102	GM-106	GM-106	GM-106	P-1	P-2	P-2	P-6
Date:	9/84**	9/84**	11/85	2/86	2/86*	9/84**	6/84	11/85	6/84
USEPA Priority Pollutant Base/Neutral Extractable Organic Compounds concentrations are in ug/L									
acenaphthene	<4	<4	<1.9	<2.0	<1.9	<4	<1	<1.9	<1
acenapthylene	<3	<3	<3.5	<3.6	<3.6	<3	<1	<3.5	<1
anthracene	<4	<4	<1.9	<2.0	<1.9	<4	<1	<1.9	<1
benzidine	<60	<60	<44	<45	<45	<60	<1	<44	<1
benzo (a) anthracene	<9	<9	<7.9	<8	<8	<9	<1	<7.8	<1
benzo (a) pyrene	<12	<12	<2.5	<2.6	<2.6	<12	<1	<2.5	<1
benzo (b) fluoroanthene	<11	<11	<4.8	<4.9	<4.9	<11	<1	<4.8	<1
benzo (ghi) perylene	<14	<14	<4.1	<4.2	<4.2	<14	<1	<4.1	<1
benzo (k) fluoranthene	<11	<11	<3.5	<3.6	<3.6	<11	<1	<3.5	<1
bis (2-chloroethoxy) methane	<4	<4	<5.4	<5.5	<5.4	<4	<1	<5.3	<1
bis (2-chloroethyl) ether	<4	<4	<5.8	<5.9	<5.8	<4	<1	<5.7	<1
bis (2-chloroisopropyl) ether	<3	<3	<5.8	<5.9	<5.8	<3	<1	<5.7	<1
bis (2-ethylhexyl) phthalate	109	3	<10	<10	<10	4	1	<10	<1
4-bromophenyl phenyl ether	<16	<16	<1.9	<2	<1.9	<16	<1	<1.9	<1
butyl benzyl phthalate	<13	<13	<10	<10	<10	<13	<1	<10	<1
2-chloronaphthalene	<4	<4	<1.9	<2	<1.9	<4	<1	<1.9	<1
4-chlorophenyl phenyl ether	<9	<9	<4.2	<4.3	<4.3	<9	<1	<4.2	<1
chrysene	<9	<9	<2.5	<2.6	<2.6	<9	<1	<2.5	<1
[illegible]enzo (a,h) anthracene	<16	<16	<10	<10	<10	<16	<1	<10	<1
[illegible]-dichlorobenzene	<5	<5	<1.9	4.9	4.8	9	1	<1.9	<1
1,3-dichlorobenzene	28,500	<6	<1.9	<2	<1.9	<6	<1	<1.9	<1
1,4-dichlorobenzene	<5	<5	<4.4	<4.5	<4.5	1	7	21.4	<1
3,3-dichlorobenzidine	<161	<161	<17	<17	<17	<161	<1	<17	<1
diethyl phthalate	<4	<4	<10	<10	<10	<4	<1	<10	<1
dimethyl phthalate	<4	<4	<10	<10	<10	<4	<1	<10	<1
di-n-butyl phthalate	<3	1	<10	<10	<10	2	1	<10	<1
2,4-dinitrotoluene	65,700	<14	<5.8	<5.9	<5.8	<14	<1	<5.7	<1
2,6-dinitrotoluene	<16	<16	<1.9	<2.0	<1.9	<16	<1	<1.9	<1
di-n-octyl phthalate	<6	<6	<10	<10	<10	<6	<1	<10	<1
1,2-diphenylhydrazine	<10	<10	<10	<10	<10	<10	<1	<10	<1
fluoranthene	<5	<5	<2.2	<2.3	<2.2	<5	<1	<2.2	<1
fluorene	<4	<4	<1.9	<2.0	<1.9	<4	<1	<1.9	<1
hexachlorobenzene	<15	<15	<1.9	<2.0	<1.9	<15	<1	<1.9	<1
hexachlorobutadiene	<13	<13	<0.9	<0.9	<0.9	<13	<1	<0.9	<1
hexachlorocyclopentadiene	<12	<12	<10	<10	<10	<12	<1	<10	<1
hexachloroethane	<10	<10	<1.6	<1.6	<1.6	<10	<1	<1.6	<1
indeno (1,2,3-c,d) pyrene	<7	<7	<4.7	<4.8	<4.8	<7	<1	<4.7	<1
isophorone	<2	<2	<2.2	<2.3	<2.2	<2	<1	<2.2	<1
naphthalene	<2	<2	<1.6	<1.6	<1.6	<2	<1	<1.6	<1
nitrobenzene	<5	<5	3.3	7.9	8.2	<5	<1	<1.9	<1
n-nitrosodimethylamine	<10	<10	<10	<10	<10	<10	<1	<10	<1
n-nitrosodi-n-propylamine	<6	<6	<10	<10	<10	<6	<1	<10	<1
n-nitrosodiphenylamine	<82	<82	<1.9	<2.0	<1.9	<82	<1	<1.9	<1
[illegible]nanthrene	<4	<4	<5.5	<5.6	<5.5	<4	<1	<5.4	<1
[illegible]ne	<5	<5	<1.9	<2.0	<1.9	<5	<1	<1.9	<1
1,2,4-trichlorobenzene	<7	<7	<1.9	<2.0	<1.9	1	<1	<1.9	<1
Sub Total 1	94309	4	3.3	12.8	13	17	10	21.4	0

Table E-3. Summary of Base/Neutral Extractable Compounds in Ground Water, Monsanto Company, W.G. Krummrich Plant, Sauget, Il

Well Number:	B-101	B-102	GM-106	GM-106	GM-106	P-1	P-2	P-2	P-6
Date:	9/84**	9/84**	11/85	2/86	2/86*	9/84**	6/84	11/85	6/84
Miscellaneous Base/Neutral Extractable Organic Compounds concentrations are in ug/L									
2-nitroaniline	<25-30	<25-30	<10	<10	<10	<25-30	NA	<10	NA
4-nitroaniline	<25-30	<25-30	<10	<10	<10	<25-30	NA	<10	NA
2-nitrochlorobenzene	<10	<10	598	115	99.9	c)	NA	<10	NA
4-nitrochlorobenzene	<10	<10	108	353	398	c)[1]	NA	<10	NA
2,4-and 3,4-dinitrochlorobenzene	<10	<10	<10	<10	<10	<10	NA	<10	NA
4-nitrodiphenylamine	<10	<10	<10	<10	<10	<10	NA	<10	NA
triphenyl phosphate	<10	<10	<10	<10	<10	<10	NA	<10	NA
2,3,7,8-tetrachloro-dibenzo-p-dioxin	NA	NA	NA	NA	NA	NA	NA	NA	NA
2-nitrobiphenyl	<10	<10	NA	NA	NA	<10	NA	NA	NA
4-nitrobiphenyl	<10	<10	NA	NA	NA	<10	NA	NA	NA
Sub Total 2	0	0	706	468	497.9	0	NA	0	NA
Total Base/Neutral Compounds Analyzed	94309	4	709.3	480.8	510.9	17	10	21.4	0

Table E-3. Summary of Base/Neutral Extractable Compounds in Ground Water, Monsanto Company, W.G. Krumerich Plant, Sauget, Il

Well Number:	P-6	P-7	P-7	P-8	P-8	P-10	P-11	P-12	P-13
Date:	11/85	6/84	11/85	6/84	11/85	9/84**	9/84**	9/84**	6/84
USEPA Priority Pollutant Base/Neutral Extractable Organic Compounds concentrations are in ug/L									
acenaphthene	<2.0	<80	<380	<1	<1.9	<4	<4	<4	<1
acenapthylene	<3.7	<60	<710	<1	<3.5	<3	<3	<3	<1
anthracene	<2.0	<80	<380	<1	<1.9	<4	<4	<4	<1
benzidine	<47	1,940	<8900	1	<44	<60	<60	<60	<1
benzo (a) anthracene	<8.3	<180	<1600	<1	<7.8	<9	<9	<9	<1
benzo (a) pyrene	<2.7	<240	<510	<1	<2.5	<12	<12	<12	<1
benzo (b) fluoranthene	<5.1	<220	<970	<1	<4.8	<11	<11	<11	<1
benzo (ghi) perylene	<4.4	<280	<830	<1	<4.1	<14	<14	<14	<1
benzo (k) fluoranthene	<3.7	<220	<710	<1	<3.5	<11	<11	<11	<1
bis (2-chloroethoxy) methane	<5.6	<80	<1100	<1	<5.3	<4	<4	<4	<1
bis (2-chloroethyl) ether	<6.1	<80	<1200	<1	<5.7	<4	<4	<4	<1
bis (2-chloroisopropyl) ether	<6.1	<60	<1200	<1	<5.7	<3	<3	<3	<1
bis (2-ethylhexyl) phthalate	<11	21	<2000	19	12.7	3	15	<10	<1
4-bromophenyl phenyl ether	<2	<320	<380	<1	<1.9	<16	<16	<16	<1
butyl benzyl phthalate	<11	<260	<2000	<1	<10	<13	<13	<13	<1
2-chloronaphthalene	<2	<80	<380	<1	<1.9	<4	<4	<4	<1
4-chlorophenyl phenyl ether	<4.5	<180	<850	<1	<4.2	<9	<9	<9	<1
chrysene	<2.7	<180	<510	<1	<2.5	<9	<9	<9	<1
[illegible]zo (a,h) anthracene	<11	<320	<2000	<1	<10	<16	<16	<16	<1
[illegible]-dichlorobenzene	<2	73	531	1	45.4	<5	<5	61	<1
1,3-dichlorobenzene	<2	<120	<380	<1	<1.9	<6	<6	<6	<1
1,4-dichlorobenzene	<4.7	64	<890	12	121	<5	74	77	1
3,3-dichlorobenzidine	<18	<3,220	<3300	<1	<17	<161	<161	<161	<1
diethyl phthalate	<11	<80	<2000	<1	<10	<4	<4	<4	<1
dimethyl phthalate	<11	<80	<2000	<1	<10	<4	<4	<4	<1
di-n-butyl phthalate	<11	72	<2000	1	<10	5	6	6	<1
2,4-dinitrotoluene	<6.1	<280	<1200	<1	<5.7	<14	<14	<14	<1
2,6-dinitrotoluene	<2.0	<320	<380	<1	<1.9	<16	<16	<16	<1
di-n-octyl phthalate	<11	<120	<2000	<1	<10	<6	<6	<6	<1
1,2-diphenylhydrazine	<11	<200	<2000	<1	<10	<10	<10	<10	<1
fluoranthene	<2.3	<100	<440	<1	<2.2	<5	<5	<5	<1
fluorene	<2.0	<80	<380	<1	<1.9	<4	<4	<4	<1
hexachlorobenzene	<2.0	<300	<380	<1	<1.9	<15	<15	<15	<1
hexachlorobutadiene	<1.0	<260	<180	<1	<0.9	<13	<13	<13	<1
hexachlorocyclopentadiene	<11	<240	<2000	<1	<10	<12	<12	<12	<1
hexachloroethane	<1.7	<200	<320	<1	<1.6	<10	<10	<10	<1
indeno (1,2,3-c,d) pyrene	<5.0	<140	<950	<1	<4.7	<7	<7	<7	<1
isophorone	<2.3	<40	<440	<1	<2.2	<2	<2	<2	<1
naphthalene	<1.7	<40	<320	<1	<1.6	<2	<2	<2	<1
nitrobenzene	<2.0	<100	714	<1	<1.9	<5	<5	<5	<1
n-nitrosodimethylamine	<11	<200	<2000	<1	<10	<10	<10	<10	<1
n-nitrosodi-n-propylamine	<11	<120	<2000	<1	<10	<6	<6	<6	<1
n-nitrosodiphenylamine	<2.0	<1,640	<380	<1	<1.9	<82	11	<82	<1
[illegible]henanthrene	<5.7	<80	<1100	<1	<5.4	<4	<4	<4	<1
[illegible]e	<2.0	<100	<380	<1	<1.9	<5	<5	<5	<1
[illegible]4-trichlorobenzene	<2.0	<140	<380	<1	<1.9	<7	<7	<7	<1
Sub Total 1	0	2170	1245	34	179.1	8	106	144	1

Table E-3. Summary of Base/Neutral Extractable Compounds in Ground Water, Monsanto Company, W.G. Krummerich Plant, Sauget, Il

Well Number:	P-6	P-7	P-7	P-8	P-8	P-10	P-11	P-12	P-13
Date:	11/85	6/84	11/85	6/84	11/85	9/84**	9/84**	9/84**	6/84
Miscellaneous Base/Neutral Extractable Organic Compounds concentrations are in ug/L									
2-nitroaniline	<11	NA	<2000	NA	<10	<25-30	<25-30	<25-30	NA
4-nitroaniline	<11	NA	<2000	NA	<10	<25-30	<25-30	<25-30	NA
2-nitrochlorobenzene	<11	NA	303,000	NA	<10	<10	<10	<10	NA
4-nitrochlorobenzene	<11	NA	75,000	NA	<10	<10	<10	<10	NA
2,4-and 3,4-dinitrochlorobenzene	<11	NA	<2000	NA	<10	<10	<10	<10	NA
4-nitrodiphenylamine	<11	NA	<2000	NA	<10	<10	<10	<10	NA
triphenyl phosphate	<11	NA	<2000	NA	<10	<10	<10	<10	NA
2,3,7,8-tetrachloro-dibenzo-p-dioxin	NA	NA	NA	NA	NA	NA	NA	NA	NA
2-nitrobiphenyl	NA	NA	NA	NA	NA	<10	<10	<10	NA
4-nitrobiphenyl	NA	NA	NA	NA	NA	<10	<10	<10	NA
Sub Total 2	0	NA	378000	NA	0	0	0	0	NA
Total Base/Neutral Compounds Analyzed	0	2170	379245	34	179.1	8	106	144	1

Table E-3. Summary of Base/Neutral Extractable Compounds in Ground Water, Monsanto Company, W.G. Krummrich Plant, Sauget, Il

Well Number:	P-13	P-13	P-13	P-14	P-14	DW-1	DW-1	DW-4	DW-7
Date:	6/84*	6/84§	11/85	6/84	11/85	9/84**	11/85	9/84**	11/85
USEPA Priority Pollutant Base/Neutral Extractable Organic Compounds concentrations are in ug/L									
acenaphthene	<1	<10	<1.9	<1	<2.0	<4	<1.9	<4	<1.9
acenapthylene	<1	<10	<3.5	<1	<3.6	<3	<3.5	<3	<3.5
anthracene	<1	<10	<1.9	<1	<2.0	<4	<1.9	<4	<1.9
benzidine	<1	<10	<44	<1	<45	<60	<44	<60	<44
benzo (a) anthracene	<1	<10	<7.8	<1	<8.0	<9	<7.8	<9	<7.8
benzo (a) pyrene	<1	<10	<2.5	<1	<2.6	<12	<2.5	<12	<2.5
benzo (b) fluoranthene	<1	<10	<4.8	<1	<4.9	<11	<4.8	<11	<4.8
benzo (ghi) perylene	<1	<10	<4.1	<1	<4.2	<14	<4.1	<14	<4.1
benzo (k) fluoranthene	<1	<10	<3.5	<1	<3.6	<11	<3.5	<11	<3.5
bis (2-chloroethoxy) methane	<1	<10	<5.3	<1	<5.5	<4	<5.3	<4	<5.3
bis (2-chloroethyl) ether	<1	<10	<5.7	<1	<5.9	<4	<5.7	<4	<5.7
bis (2-chloroisopropyl) ether	<1	<10	<5.7	<1	<5.9	<3	<5.7	<3	<5.7
bis (2-ethylhexyl) phthalate	779	<10	<10	<1	<10	<10	<10	<10	<10
4-bromophenyl phenyl ether	<1	<10	<1.9	<1	<2	<16	<1.9	<16	<1.9
butyl benzyl phthalate	<1	<10	<10	<1	<10	<13	<10	<13	<10
2-chloronaphthalene	<1	<10	<1.9	<1	<2	<4	<1.9	<4	<1.9
4-chlorophenyl phenyl ether	<1	<10	<4.2	<1	<4.3	<9	<4.2	<9	<4.2
chrysene	<1	<10	<2.5	<1	<2.6	<9	<2.5	<9	<2.5
benzo (a,h) anthracene	<1	<10	<2.5	<1	<10	<16	<10	<16	<10
,2-dichlorobenzene	<1	<10	<1.9	2	18.7	<5	195	64	123
1,3-dichlorobenzene	<1	<10	<1.9	<1	<2	<6	35.7	14	16.5
1,4-dichlorobenzene	4	<10	15.9	6	34	124	704	324	370
3,3-dichlorobenzidine	<1	<10	<17	<1	<17	<161	<17	<161	<17
diethyl phthalate	<1	<10	<10	<1	<10	<4	<10	<4	<10
dimethyl phthalate	<1	<10	<10	<1	<10	<4	<10	<4	76.6
di-n-butyl phthalate	16	<10	<10	2	<10	3	<10	3	<10
2,4-dinitrotoluene	<1	<10	<5.7	<1	<5.9	<14	<5.7	<14	<5.7
2,6-dinitrotoluene	<1	<10	<1.9	<1	<2.0	<16	<1.9	<16	<1.9
di-n-octyl phthalate	<1	<10	<10	<1	<10	<6	<10	<6	<10
1,2-diphenylhydrazine	<1	<10	<10	<1	<10	<10	<10	<10	<10
fluoranthene	<1	<10	<2.2	<1	<2.3	<5	<2.2	<5	<2.2
fluorene	<1	<10	<1.9	<1	<2.0	<4	<1.9	<4	<1.9
hexachlorobenzene	<1	<10	<1.9	<1	<2.0	<15	<1.9	<15	<1.9
hexachlorobutadiene	<1	<10	<0.9	<1	<0.9	<13	<0.9	<13	<0.9
hexachlorocyclopentadiene	<1	<10	<10	<1	<10	<12	<10	<12	<10
hexachloroethane	<1	<10	<1.6	<1	<1.6	<10	<1.6	<10	<1.6
indeno (1,2,3-c,d) pyrene	<1	<10	<4.7	<1	<4.8	<7	<4.7	<7	<4.7
isophorone	<1	<10	<2.2	<1	<2.3	<2	<2.2	<2	<2.2
naphthalene	<1	<10	<1.6	<1	2.9	<2	<1.6	<2	<1.6
nitrobenzene	<1	<10	<1.9	<1	<2.0	<5	<1.9	<5	<1.9
n-nitrosodimethylamine	<1	<10	<10	<1	<10	<10	<10	<10	<10
n-nitrosodi-n-propylamine	<1	<10	<10	<1	<10	<6	<10	<6	<10
n-nitrosodiphenylamine	<1	<10	4.9	<1	<2.0	<82	<1.9	6	<1.9
henanthrene	1	<10	<5.4	<1	<5.6	<4	<5.4	<4	<5.4
ene	<1	<10	<1.9	<1	<2.0	<5	<1.9	<5	<1.9
,2,4-trichlorobenzene	<1	<10	<1.9	<1	<2.0	<7	<1.9	<7	3.4
Sub Total 1	800	0	20.8	10	55.6	127	934.7	411	589.5

Table E-3. Summary of Base/Neutral Extractable Compounds in Ground Water, Monsanto Company, W.G. Krummrich Plant, Sauget, Il

Well Number:	P-13	P-13	P-13	P-14	P-14	DW-1	DW-1	DW-4	DW-7
Date:	6/84*	6/84*	11/85	6/84	11/85	9/84**	11/85	9/84**	11/85
Miscellaneous Base/Neutral Extractable Organic Compounds concentrations are in ug/L									
2-nitroaniline	NA	NA	<10	NA	<10	<25-30	<10	<25-30	<10
4-nitroaniline	NA	NA	<10	NA	<10	<25-30	<10	<25-30	1,090
2-nitrochlorobenzene	NA	NA	<10	NA	<10	<10	<10	<10	357
4-nitrochlorobenzene	NA	NA	<10	NA	<10	<10	<10	<10	<10
2,4-and 3,4-dinitrochlorobenzene	NA	NA	<10	NA	<10	<10	<10	<10	<10
4-nitrodiphenylamine	NA	NA	<10	NA	<10	<10	<10	<10	<10
triphenyl phosphate	NA	NA	<10	NA	<10	<10	<10	<10	<10
2,3,7,8-tetrachloro-dibenzo-p-dioxin	NA	NA	NA	NA	NA	NA	NA	NA	NA
2-nitrobiphenyl	NA	NA	NA	NA	NA	<10	NA	<10	NA
4-nitrobiphenyl	NA	NA	NA	NA	NA	<10	NA	<10	NA
Sub Total 2	NA	NA	0	0	0	0	0	0	1447
Total Base/Neutral Compounds Analyzed	800	0	20.8	10	55.6	127	934.7	411	2036.5

Table E-3. Summary of Base/Neutral Extractable Compounds in Ground Water, Monsanto Company, W.G. Krummrich Plant, Sauget, Il

Well Number:	DW-7	DW-10	DW-18	DW-18	DW-18	DW-23	DW-24	DW-24	DW-29
Date:	2/86	9/84**	9/84**	9/84*	11/85	9/84**	9/84**	9/84*	9/84**
USEPA Priority Pollutant Base/Neutral Extractable Organic Compounds concentrations are in ug/L									
acenaphthene	<1.9	<4	<4	NA	<2.0	<4	<4	<4	<4
acenapthylene	<3.6	<3	<3	NA	<3.7	<3	<3	<3	<3
anthracene	<1.9	<4	<4	NA	<2.0	<4	<4	<4	<4
benzidine	<45	<60	<60	NA	<46	<60	<60	<60	<60
benzo (a) anthracene	<8	<9	<9	NA	<8.2	<9	<9	<9	<9
benzo (a) pyrene	<2.6	<12	<12	NA	<2.6	<12	<12	<12	<12
benzo (b) fluoroanthene	<4.9	<11	<11	NA	<5.1	<11	<11	<11	<11
benzo (ghi) perylene	<4.2	<14	<14	NA	<4.3	<14	<14	<14	<14
benzo (k) fluoranthene	<3.6	<11	<11	NA	<3.7	<11	<11	<11	<11
bis (2-chloroethoxy) methane	<5.4	<4	<4	NA	<5.6	<4	<4	<4	<4
bis (2-chloroethyl) ether	<5.8	<4	<4	NA	<6.0	<4	<4	<4	<4
bis (2-chloroisopropyl) ether	<5.8	<3	<3	NA	<6.0	<3	<3	<3	<3
bis (2-ethylhexyl) phthalate	<10	<10	<10	NA	<11	198	<10	<10	<10
4-bromophenyl phenyl ether	<1.9	<16	<16	NA	<2	<16	<16	<16	<16
butyl benzyl phthalate	<10	<13	<13	NA	<11	<13	<13	<13	<13
2-chloronaphthalene	<1.9	<4	<4	NA	<2	<4	<4	<4	<4
4-chlorophenyl phenyl ether	<4.3	<9	<9	NA	<4.4	<9	<9	<9	<9
chrysene	<2.6	<9	<9	NA	<2.6	<9	<9	<9	<9
benzo (a,h) anthracene	<10	<16	<16	NA	<11	<16	<16	<16	<16
,2-dichlorobenzene	20.7	965	1	NA	23.8	<5	<5	<5	<5
1,3-dichlorobenzene	<1.9	<6	<6	NA	<2	<6	<6	<6	<6
1,4-dichlorobenzene	37.9	<5	3	NA	71.9	<5	<5	<5	<5
3,3-dichlorobenzidine	<17	<161	<161	NA	<17	<161	<161	<161	<161
diethyl phthalate	<10	<4	<4	NA	<11	<4	<4	<4	<4
dimethyl phthalate	15.7	<4	<4	NA	<11	<4	<4	<4	<4
di-n-butyl phthalate	<10	<3	1	NA	<11	1	2	<3	3
2,4-dinitrotoluene	<5.8	<14	<14	NA	<6.0	<14	<14	<14	<14
2,6-dinitrotoluene	<1.9	<16	<16	NA	<2.0	<16	<16	<16	<16
di-n-octyl phthalate	<10	<6	<6	NA	<11	<6	<6	<6	<6
1,2-diphenylhydrazine	<10	<10	<10	NA	<11	<10	<10	<10	<10
fluoranthene	<2.2	<5	<5	NA	<2.3	<5	<5	<5	<5
fluorene	<1.9	<4	<4	NA	<2.0	<4	<4	<4	<4
hexachlorobenzene	<1.9	<15	<15	NA	<2.0	<15	<15	<15	<15
hexachlorobutadiene	<0.9	<13	<13	NA	<1.0	<13	<13	<13	<13
hexachlorocyclopentadiene	<10	<12	<12	NA	<11	<12	<12	<12	<12
hexachloroethane	<1.6	<10	<10	NA	<1.7	<10	<10	<10	<10
indeno (1,2,3-c,d) pyrene	<4.8	<7	<7	NA	<4.9	<7	<7	<7	<7
isophorone	<2.2	<2	<2	NA	<2.3	<2	<2	<2	<2
naphthalene	<1.6	<2	<2	NA	7.0	<2	<2	<2	<2
nitrobenzene	<1.9	<5	<5	NA	<2.0	<5	<5	<5	<5
n-nitrosodimethylamine	<10	<10	<10	NA	<11	<10	<10	<10	<10
n-nitrosodi-n-propylamine	<10	<6	<6	NA	<11	<6	<6	<6	<6
n-nitrosodiphenylamine	<1.9	42	<82	NA	3.7	<82	<82	<82	<82
henanthrene	<5.5	<4	<4	NA	<5.7	<4	<4	<4	<4
ene	<1.9	<5	<5	NA	<2.0	<5	<5	<5	<5
,2,4-trichlorobenzene	<1.9	<7	<7	NA	<2.0	<7	<7	<7	<7
Sub Total 1	74.3	1007	5	NA	106.4	189	2	0	3

Table E-3. Summary of Base/Neutral Extractable Compounds in Ground Water, Monsanto Company, W.G. Krummrich Plant, Sauget, Il

Well Number:	DW-7	DW-10	DW-18	DW-18	DW-18	DW-23	DW-24	DW-24	DW-29
Date:	2/86	9/84**	9/84**	9/84*	11/85	9/84**	9/84**	9/84*	9/84**
Miscellaneous Base/Neutral Extractable Organic Compounds concentrations are in ug/L									
2-nitroaniline	<10	<25-30	<25-30	NA	<11	<25-30	<25-30	<25-30	<25-30
4-nitroaniline	138	<25-30	<25-30	NA	<11	<25-30	<25-30	<25-30	<25-30
2-nitrochlorobenzene	<10	d)	<10	NA	<11	<10	<10	<10	<10
4-nitrochlorobenzene	<10	d)	<10	NA	<11	<10	<10	<10	<10
2,4-and 3,4-dinitrochlorobenzene	<10	<10	<10	NA	<11	<10	<10	<10	<10
4-nitrodiphenylamine	<10	<10	<10	NA	<11	<10	<10	<10	<10
triphenyl phosphate	<10	<10	<10	NA	<11	<10	<10	<10	<10
2,3,7,8-tetrachloro-dibenzo-p-dioxin	NA	NA	NA	NA	NA	NA	NA	NA	NA
2-nitrobiphenyl	NA	<10	<10	NA	NA	<10	<10	<10	<10
4-nitrobiphenyl	NA	<10	<10	NA	NA	<10	<10	<10	<10
Sub Total 2	138	0	0	NA	0	0	0	0	0
Total Base/Neutral Compounds Analyzed	212.3	1007	5	NA	106.4	189	2	0	3

Table E-3. Summary of Base/Neutral Extractable Compounds in Ground Water, Monsanto Company, W.S. Krumrich Plant, Sauget, Il

Well Number:	DW-29	DW-30	DW-33	DW-34	DW-34	DW-34	DW-1-85	DW-1-85	BK-3
Date:	9/84*	11/85	9/84**	9/84**	11/85	2/86	11/85	2/86	9/84**
USEPA Priority Pollutant Base/Neutral Extractable ganic Compounds oncentrations are in ug/L									
enaphthene	NA	<2.0	<4	<4	<3.8	<1.9	<3.8	<2.0	<4
enapthylene	NA	<3.6	<3	<3	<7.0	<3.5	<7.0	<3.7	<3
anthracene	NA	<2.0	<4	<4	<3.8	<1.9	<3.8	<2.0	<4
benzidine	NA	<45	<60	<60	<98	<44	<88	<47	<60
enzo (a) anthracene	NA	<8.0	<9	<9	<16	<7.9	<16	<8.3	<9
enzo (a) pyrene	NA	<2.6	<12	<12	<5.0	<2.5	<5.0	<2.7	<12
benzo (b) fluoroanthene	NA	<4.9	<11	<11	<9.6	<4.8	<9.6	<5.1	<11
enzo (ghi) perylene	NA	<4.2	<14	<14	<8.2	<4.1	<8.2	<4.4	<14
enzo (k) fluoranthene	NA	<3.6	<11	<11	<7.0	<3.5	<7.0	<3.7	<11
bis (2-chloroethoxy) methane	NA	<5.5	<4	<4	<11	<5.4	<11	<5.6	<4
bis (2-chloroethyl) ether	NA	<5.9	<4	<4	<11	<5.8	<11	<6.1	<4
is (2-chloroisopropyl) ether	NA	<5.9	<3	<3	<11	<5.8	<11	<6.1	<3
ois (2-ethylhexyl) phthalate	NA	<10	1	1	<20	<10	<20	<11	<10
4-bromophenyl phenyl ether	NA	<2	<16	<16	<3.8	<1.9	<3.8	<2	<16
utyl benzyl phthalate	NA	<10	<13	<13	<20	<10	<20	<11	<13
-chloronaphthalene	NA	<2	<4	<4	<3.8	<1.9	<3.8	<2	<4
4-chlorophenyl phenyl ether	NA	<4.3	<9	<9	<8.4	<4.2	<8.4	<4.5	<9
hrysene	NA	<2.6	<9	<9	<5.0	<2.5	<5.0	<2.7	<9
ene (a,h) anthracene	NA	<10	<16	<16	<20	<10	<20	<11	<16
-dichlorobenzene	NA	8.4	<5	2	<3.8	<1.9	47.5	12.6	27
1,3-dichlorobenzene	NA	<2	<6	3	<3.8	<1.9	22.3	6.2	17
,4-dichlorobenzene	NA	<4.5	<5	<5	<3.8	<4.4	515	255	128
,3-dichlorobenzidine	NA	<17	<161	<161	<33	<17	<33	<18	<161
diethyl phthalate	NA	<10	<4	3	<20	<10	<20	<11	<4
imethyl phthalate	NA	<10	<4	<4	<20	<10	<20	<11	<4
i-n-butyl phthalate	NA	<10	3	2	<20	<10	<20	<11	3
2,4-dinitrotoluene	NA	<5.9	<14	<14	<11	<5.8	<11	<6.1	<14
2,6-dinitrotoluene	NA	<2.0	<16	<16	<3.8	<1.9	<3.8	<2.0	<16
di-n-octyl phthalate	NA	<10	<6	<6	<20	<10	<20	<11	<6
1,2-diphenylhydrazine	NA	<10	<10	<10	<20	<10	<20	<11	<10
fluoranthene	NA	<2.3	<5	<5	<4.4	<2.2	<4.4	<2.3	<5
luorene	NA	<2.0	<4	<4	<3.8	<1.9	<3.8	<2.0	<4
exachlorobenzene	NA	<2.0	<15	<15	<3.8	<1.9	<3.8	<2.0	<15
hexachlorobutadiene	NA	<0.9	<13	<13	<1.8	<0.9	<1.8	<1.0	<13
exachlorocyclopentadiene	NA	<10	<12	<12	<20	<10	<20	<11	<12
exachloroethane	NA	<1.6	<10	<10	<3.2	<1.6	<3.2	<1.7	<10
indeno (1,2,3-c,d) pyrene	NA	<4.8	<7	<7	<9.4	<4.7	<9.4	<5	<7
isophorone	NA	<2.3	<2	<2	<4.4	<2.2	<4.4	<2.3	<2
aphthalene	NA	<1.6	<2	<2	<3.2	<1.6	<3.2	<1.7	<2
nitrobenzene	NA	<2.0	<5	<5	<3.8	<1.9	<3.8	<2.0	<5
n-nitrosodiaethylamine	NA	<10	<10	<10	<20	<10	<20	<11	<10
n-nitrosodi-n-propylamine	NA	<10	<6	<6	<20	<10	<20	<11	<6
n-nitrosodiphenylamine	NA	<2.0	<82	<82	<3.8	<1.9	<3.8	<2.0	2
anthrene	NA	<5.6	<4	<4	<11	<5.5	<11	<5.7	<4
ene	NA	<2.0	<5	<5	<3.8	<1.9	<3.8	<2.0	<5
2,4-trichlorobenzene	NA	<2.0	<7	<7	<3.8	<1.9	<3.8	<2.0	<7
Sub Total 1	NA	8.4	4	11	0	0	584.8	273.8	177

Table E-3. Summary of Base/Neutral Extractable Compounds in Ground Water, Monsanto Company, W.G. Krummrich Plant, Sauget, IL

Well Number:	DW-29	DW-30	DW-33	DW-34	DW-34	DW-34	DW-1-85	DW-1-85	BK-3
Date:	9/84*	11/85	9/84**	9/84**	11/85	2/86	11/85	2/86	9/84**
Miscellaneous Base/Neutral Extractable Organic Compounds concentrations are in ug/L									
2-nitroaniline	NA	<10	<25-30	<25-30	<20	<10	<20	<11	<25-30
4-nitroaniline	NA	<10	<25-30	<25-30	<20	<10	<20	<11	<25-30
2-nitrochlorobenzene	NA	<10	<10	<10	<20	<10	<20	<11	<10
4-nitrochlorobenzene	NA	38.8	<10	<10	<20	<10	<20	<11	<10
2,4-and 3,4-dinitrochlorobenzene	NA	<10	<10	<10	<20	<10	<20	<11	<10
4-nitrodiphenylamine	NA	<10	<10	<10	<20	<10	<20	<11	<10
triphenyl phosphate	NA	<10	<10	<10	<20	<10	<20	<11	<10
2,3,7,8-tetrachloro-dibenzo-p-dioxin	NA	NA	NA	NA	NA	NA	NA	NA	NA
2-nitrobiphenyl	NA	NA	<10	<10	NA	NA	NA	NA	<10
4-nitrobiphenyl	NA	NA	<10	<10	NA	NA	NA	NA	<10
Sub Total 2	NA	38.8	0	0	0	0	0	0	0
Total Base/Neutral Compounds Analyzed	NA	47.2	4	11	0	0	584.8	273.5	177

Table E-3. Summary of Base/Neutral Extractable Compounds in Ground Water, Monsanto Company, W.G. Krummrich Plant, Sauget, Il

Well Number:	BK-3	BK-3	MB-6	MB-6	MB-6	MB-7	MB-7	Field Blank	Field Blank
Date:	11/85	2/86	9/84**	11/85	2/86	9/84	11/85	6/84	6/84
USEPA Priority Pollutant Base/Neutral Extractable Organic Compounds concentrations are in ug/L									
acenaphthene	<1.9	<1.9	<4	27.3	6.4	<4	5.1	<4	<1
acenapthylene	<3.5	<3.6	<3	<3.5	<3.6	<3	<3.6	<3	<1
anthracene	<1.9	<1.9	<4	<1.9	<2.0	<4	<2.0	<4	<1
benzidine	<44	<45	<60	<44	<46	<60	<45	<60	<1
benzo (a) anthracene	<7.9	<8.0	<9	<7.9	<8	<9	<8.0	<9	<1
benzo (a) pyrene	<2.5	<2.6	<12	<2.5	<2.6	<12	<2.6	<12	<1
benzo (b) fluoroanthene	<4.8	<4.9	<11	<4.8	<5	<11	<4.9	<11	<1
benzo (ghi) perylene	<4.1	<4.2	<14	<4.1	<4.3	<14	<4.2	<14	<1
benzo (k) fluoranthene	<3.5	<3.6	<11	<3.5	<3.6	<11	<3.6	<11	<1
bis (2-chloroethoxy) methane	<5.4	<5.4	<4	<5.4	<5.5	<4	<5.4	<4	<1
bis (2-chloroethyl) ether	<5.8	<5.8	<4	<5.8	<5.9	<4	<5.8	<4	<1
bis (2-chloroisopropyl) ether	<5.8	<5.8	<3	<5.8	<5.9	<3	<5.8	<3	<1
bis (2-ethylhexyl) phthalate	<10	<10	<10	<10	<10	<10	<10	<10	<1
4-bromophenyl phenyl ether	<1.9	<1.9	<16	<1.9	<2	<16	<1.9	<16	<1
butyl benzyl phthalate	<10	<10	<13	<10	<10	<13	<10	<13	<1
2-chloronaphthalene	<1.9	<1.9	<4	<1.9	<2	<4	<1.9	<4	<1
4-chlorophenyl phenyl ether	<4.2	<4.3	<9	<4.2	<4.4	<9	<4.3	<9	<1
chrysene	<2.5	<2.6	<9	<2.5	<2.6	<9	<2.6	<9	<1
benzo (a,h) anthracene	<10	<10	<16	<10	<10	<16	<10	<16	<1
,2-dichlorobenzene	46.3	3.6	<5	<1.9	<2	<5	<1.9	<5	<1
1,3-dichlorobenzene	26.1	3.4	<6	<1.9	<2	<6	<1.9	<6	<1
1,4-dichlorobenzene	211	100	<5	<4.4	<4.6	<5	<4.5	<5	<1
3,3-dichlorobenzidine	<17	<17	<161	<17	<17	<161	<17	<161	<1
diethyl phthalate	<10	<10	<4	<10	<10	<4	<10	<4	<1
dimethyl phthalate	<10	<10	<4	<10	<10	<4	<10	<4	<1
di-n-butyl phthalate	<10	<10	2	<10	<10	3	<10	<3	<1
2,4-dinitrotoluene	<5.8	<5.8	<14	<5.8	<5.9	<14	<5.8	<14	<1
2,6-dinitrotoluene	<1.9	<1.9	<16	<1.9	<2.0	<16	<1.9	<16	<1
di-n-octyl phthalate	<10	<10	<6	<10	<10	<6	<10	<6	<1
1,2-diphenylhydrazine	<10	<10	<10	<10	<10	<10	<10	<10	<1
fluoranthene	<2.2	<2.2	<5	<2.2	<2.3	<5	<2.2	<5	<1
fluorene	<1.9	<1.9	<4	<1.9	<2.0	<4	<1.9	<4	<1
hexachlorobenzene	<1.9	<1.9	<15	<1.9	<2.0	<15	<1.9	<15	<1
hexachlorobutadiene	<0.9	<0.92	<13	<0.9	<0.9	<13	<0.9	<13	<1
hexachlorocyclopentadiene	<10	<10	<12	<10	<10	<12	<10	<12	<1
hexachloroethane	<1.6	<1.6	<10	<1.6	<1.7	<10	<1.6	<10	<1
indeno (1,2,3-c,d) pyrene	<4.7	<4.8	<7	<4.7	<4.9	<7	<4.8	<7	<1
isophorone	<2.2	<2.2	<2	<2.2	<2.3	<2	<2.2	<2	<1
naphthalene	17.5	14.4	<2	1,080	1,140	<2	<1.6	<2	<1
nitrobenzene	<1.9	<1.9	<5	<1.9	<2.0	<5	<1.9	<5	<1
n-nitrosodimethylamine	<10	<10	<10	<10	<10	<10	<10	<10	<1
n-nitrosodi-n-propylamine	<10	<10	<6	<10	<10	<6	<10	<6	<1
n-nitrosodiphenylamine	3.8	<1.9	<82	<1.9	<2.0	<82	<1.9	<82	<1
henanthrene	<5.5	<5.5	<4	<5.5	<5.6	<4	<5.5	<4	<1
ene	<1.9	<1.9	<5	<1.9	<2.0	<5	<1.9	<5	<1
,2,4-trichlorobenzene	<1.9	<1.9	<7	<1.9	<2.0	<7	<1.9	<7	<1
Sub Total 1	304.7	273.8	2	1107.3	1146.4	3	5.1	0	0

Table E-3. Summary of Base/Neutral Extractable Compounds in Ground Water, Monsanto Company, W.G. Krumarich Plant, Sauget, Il

Well Number:	BK-3	BK-3	WB-6	WB-6	WB-6	W9-7	WB-7	Field Blank	Field Blank
Date:	11/85	2/86	9/84**	11/85	2/86	9/84	11/85	6/84	6/84
Miscellaneous Base/Neutral Extractable Organic Compounds concentrations are in ug/L									
2-nitroaniline	<10	<10	<25-30	<10	<10	<25-30	<10	NA	NA
4-nitroaniline	<10	<10	<25-30	<10	<10	<25-30	<10	NA	NA
2-nitrochlorobenzene	<10	<10	<10	<10	<10	<10	<10	NA	NA
4-nitrochlorobenzene	<10	<10	<10	<10	<10	<10	<10	NA	NA
2,4-and 3,4-dinitrochlorobenzene	<10	<10	<10	<10	<10	<10	<10	NA	NA
4-nitrodiphenylamine	<10	<10	<10	<10	<10	<10	<10	NA	NA
triphenyl phosphate	<10	<10	<10	<10	<10	<10	<10	NA	NA
2,3,7,8-tetrachloro-dibenzo-p-dioxin	NA	NA	<10	NA	NA	NA	NA	NA	NA
2-nitrobiphenyl	NA	NA	<10	NA	NA	<10	NA	NA	NA
4-nitrobiphenyl	NA	NA	<10	NA	NA	<10	NA	NA	NA
Sub Total 2	0	0	0	0	0	0	0	NA	NA
Total Base/Neutral Compounds Analyzed	304.7	273.8	2	1107.3	1146.4	3	5.1	0	0

Table E-3. Summary of Base/Neutral Extractable Compounds in Ground Water, Monsanto Company, W.G. Krumrich Plant, Sauget, Il

Well Number:	Trip Blank	Trip Blank	Trip Blank	Lab Blank	Lab Blank	Lab Blank	Lab Blank	Lab Blank	Lab Blank
Date:	5/84	6/84	9/84	11/83	11/83	5/84	5/84	9/84	9/84
USEPA Priority Pollutant Base/Neutral Extractable Organic Compounds concentrations are in ug/L									
acenaphthene	<1	<4	<4	<1	<1	<1	<1	<4	<4
acenapthylene	<1	<3	<3	<1	<1	<1	<1	<3	<3
anthracene	<1	<4	<4	<1	<1	<1	<1	<4	<4
benzidine	<1	<60	<60	<1	<1	<1	<1	<60	<60
benzo (a) anthracene	<1	<9	<9	<1	<1	<1	<1	<9	<9
benzo (a) pyrene	<1	<12	<12	<1	<1	<1	<1	<12	<12
benzo (b) fluoroanthene	<1	<11	<11	<1	<1	<1	<1	<11	<11
benzo (ghi) perylene	<1	<14	<14	<1	<1	<1	<1	<14	<14
benzo (k) fluoranthene	<1	<11	<11	<1	<1	<1	<1	<11	<11
bis (2-chloroethoxy) methane	<1	<4	<4	<1	<1	<1	<1	<4	<4
bis (2-chloroethyl) ether	<1	<4	<4	<1	<1	<1	<1	<4	<4
bis (2-chloroisopropyl) ether	<1	<3	<3	<1	<1	<1	<1	<3	<3
bis (2-ethylhexyl) phthalate	<1	<10	<10	<1	<1	3	1	1	4
4-bromophenyl phenyl ether	<1	<16	<16	<1	<1	<1	<1	<16	<16
butyl benzyl phthalate	<1	<13	<13	<1	<1	<1	<1	<13	<13
2-chloronaphthalene	<1	<4	<4	<1	<1	<1	<1	<4	<4
4-chlorophenyl phenyl ether	<1	<9	<9	<1	<1	<1	<1	<9	<9
chrysene	<1	<9	<9	<1	<1	<1	<1	<9	<9
dibenzo (a,h) anthracene	<1	<16	<16	<1	<1	<1	<1	<16	<16
1,2-dichlorobenzene	<1	<5	<5	<1	<1	<1	<1	<5	<5
1,3-dichlorobenzene	<1	<6	<6	<1	<1	<1	<1	<6	<6
1,4-dichlorobenzene	<1	<5	<5	<1	<1	<1	<1	<5	<5
3,3-dichlorobenzidine	<1	<161	<161	<1	<1	<1	<1	<161	<161
diethyl phthalate	<1	<4	<4	<1	<1	1	1	<4	<4
dimethyl phthalate	<1	<4	<4	<1	<1	<1	<1	<4	<4
di-n-butyl phthalate	<1	<3	4	1	<1	<1	2	6	4
2,4-dinitrotoluene	<1	<14	<14	<1	<1	<1	<1	<14	<14
2,6-dinitrotoluene	<1	<16	<16	<1	<1	<1	<1	<16	<16
di-n-octyl phthalate	<1	<6	<6	<1	<1	<1	<1	<6	<6
1,2-diphenylhydrazine	<1	<10	<10	<1	<1	<1	<1	<10	<10
fluoranthene	<1	<5	<5	<1	<1	<1	<1	<5	<5
fluorene	<1	<4	<4	<1	<1	<1	<1	<4	<4
hexachlorobenzene	<1	<15	<15	<1	<1	<1	<1	<15	<15
hexachlorobutadiene	<1	<13	<13	<1	<1	<1	<1	<13	<13
hexachlorocyclopentadiene	<1	<12	<12	<1	<1	<1	<1	<12	<12
hexachloroethane	<1	<10	<10	<1	<1	<1	<1	<10	<10
indeno (1,2,3-c,d) pyrene	<1	<7	<7	<1	<1	<1	<1	<7	<7
isophorone	<1	<2	<2	<1	<1	<1	<1	<2	<2
naphthalene	<1	<2	<2	<1	<1	<1	<1	<2	<2
nitrobenzene	<1	<5	<5	<1	<1	<1	<1	<5	<5
n-nitrosodimethylamine	<1	<10	<10	<1	<1	<1	<1	<10	<10
n-nitrosodi-n-propylamine	<1	<6	<6	<1	<1	<1	<1	<6	<6
n-nitrosodiphenylamine	<1	<82	<82	<1	<1	<1	<1	<82	<82
phenanthrene	<1	<4	<4	<1	<1	<1	<1	<4	<4
pyrene	<1	<5	<5	<1	<1	<1	<1	<5	<5
1,2,4-trichlorobenzene	<1	<7	<7	<1	<1	<1	<1	<7	<7
Sub Total 1	0	0	4	1	0	4	4	7	8

Table E-3. Summary of Base/Neutral Extractable Compounds in Ground Water, Monsanto Company, W.G. Krummrich Plant, Sauget, Il

Well Number:	Trip Blank	Trip Blank	Trip Blank	Lab Blank	Lab Blank	Lab Blank	Lab Blank	Lab Blank	Lab Blank
Date:	5/84	6/84	9/84	11/83	11/83	5/84	5/84	9/84	9/84
Miscellaneous Base/Neutral Extractable Organic Compounds concentrations are in ug/L									
2-nitroaniline	NA	NA	NA	NA	NA	NA	NA	<25-30	<25-30
4-nitroaniline	NA	NA	NA	NA	NA	NA	NA	<25-30	<25-30
2-nitrochlorobenzene	NA	NA	NA	NA	NA	NA	NA	<10	<10
4-nitrochlorobenzene	NA	NA	NA	NA	NA	NA	NA	<10	<10
2,4-and 3,4-dinitrochlorobenzene	NA	NA	NA	NA	NA	NA	NA	<10	<10
4-nitrodiphenylamine	NA	NA	NA	NA	NA	NA	NA	<10	<10
triphenyl phosphate	NA	NA	NA	NA	NA	NA	NA	<10	<10
2,3,7,8-tetrachloro-dibenzo-p-dioxin	NA	NA	NA	NA	NA	NA	NA	NA	NA
2-nitrobiphenyl	NA	NA	NA	NA	NA	NA	NA	NA	NA
4-nitrobiphenyl	NA	NA	NA	NA	NA	NA	NA	NA	NA
Sub Total 2	NA	NA	NA	NA	NA	NA	NA	0	0
Total Base/Neutral Compounds Analyzed	0	0	4	1	0	4	4	7	8

Table E-3. Summary of Base/Neutral Extractable Compounds in Ground Water, Monsanto Company, W.S. Kruamrich Plant, Sauget, Il

Well Number:	Lab Blank	Lab Blank
Date:	9/84	9/84
USEPA Priority Pollutant Base/Neutral Extractable Organic Compounds concentrations are in ug/L		
acenaphthene	<4	<4
acenapthylene	<3	<3
anthracene	<4	<4
benzidine	<60	<60
benzo (a) anthracene	<9	<9
benzo (a) pyrene	<12	<12
benzo (b) fluoroanthene	<11	<11
benzo (ghi) perylene	<14	<14
benzo (k) fluoranthene	<11	<11
bis (2-chlorcethoxyl aethane	<4	<4
bis (2-chloroethyl) ether	<4	<4
bis (2-chloroisopropyl) ether	<3	<3
bis (2-ethylhexyl) phthalate	<10	<10
4-bromophenyl phenyl ether	<16	<16
butyl benzyl phthalate	<13	<13
2-chloronaphthalene	<4	<4
4-chlorophenyl phenyl ether	<9	<9
chrysene	<9	<9
enzo (a,h) anthracene	<16	<16
,2-dichlorobenzene	<5	<5
1,3-dichlorobenzene	<6	<6
1,4-dichlorobenzene	<5	<5
3,3-dichlorobenzidine	<161	<161
diethyl phthalate	<4	<4
diaethyl phthalate	<4	<4
di-n-butyl phthalate	23	<3
2,4-dinitrotoluene	<14	<14
2,6-dinitrotoluene	<16	<16
di-n-octyl phthalate	<6	<6
1,2-diphenylhydrazine	<10	<10
fluoranthene	<5	<5
fluorene	<4	<4
hexachlorobenzene	<15	<15
hexachlorobutadiene	<13	<13
hexachlorocyclopentadiene	<12	<12
hexachloroethane	<10	<10
indeno (1,2,3-c,d) pyrene	<7	<7
isophorone	<2	<2
naphthalene	<2	<2
nitrobenzene	<5	<5
n-nitrosodiaethylamine	<10	<10
n-nitrosodi-n-propylamine	<6	<6
n-nitrosodiphenylamine	<82	<82
nanthrene	<4	<4
ene	<5	<5
,2,4-trichlorobenzene	<7	<7
Sub Total 1	23	0

Table E-3. Summary of Base/Neutral Extractable Compounds in Ground Water, Monsanto Company, W.G. Krummrich Plant, Sauget, Il

Well Number:	Lab Blank	Lab Blank
Date:	9/84	9/84
Miscellaneous Base/Neutral Extractable Organic Compounds concentrations are in ug/L		
2-nitroaniline	<25-30	<25-30
4-nitroaniline	<25-30	<25-30
2-nitrochlorobenzene	<10	<10
4-nitrochlorobenzene	<10	<10
2,4-and 3,4-dinitrochlorobenzene	<10	<10
4-nitrodiphenylamine	<10	<10
triphenyl phosphate	<10	<10
2,3,7,8-tetrachloro-dibenzo-p-dioxin	NA	NA
2-nitrobiphenyl	NA	NA
4-nitrobiphenyl	NA	NA
Sub Total 2	0	0
Total Base/Neutral Compounds Analyzed	23	0

NA - Not analyzed.
\+ - Replicate Analyses
++ - Prior to analysis, this sample was held by Envirodyne Engineers, Inc. longer than the maximum allowable USEPA holding time.
‡ - Replicate analysis was performed by ETC.
a) - This sample was collected (unfiltered) for nitrobiphenyl analysis.
b) - This sample was collected (filtered) for nitrobiphenyl analysis.
c) - Envirodyne Engineers, Inc. reported 16 ug/L; however the result did not differentiate between the nitrochlorobenzene compounds.
d) - Envirodyne Engineers, Inc. reported 228 ug/L; however the result did not differentiate between the nitrochlorobenzene compounds.
e) - ETC reported 124,000 ug/L for 2-NCB, 3-NCB, and 4-NCB. The laboratory could not distinguish between these compounds, however they occur in roughly equal proportions.
< - Indicates that the compound was not detected at the detection limit which is the value shown next to the symbol.

Table E-4. Summary of Pesticide/PCB Compounds in Ground Water, Monsanto Company, W.G. Krummrich Plant, Sauget, Illinois. ***

Well Number:	GM-1	GM-1	GM-2	GM-2	GM-3	GM-3	GM-3	GM-4A	GM-4A	GM-4B
Date:	11/83	5/84	11/83	5/84	11/83	5/84	5/84*	11/83	5/84	9/84
USEPA Priority Pollutant Pesticide/PCB Compounds concentrations are in ug/L										
aldrin	<1	<1	<1	<1	<1	<1	<1	<1	<1	<0.04
alpha-BHC	<1	<1	<1	<1	<1	<1	<1	<1	<1	<0.02
beta-BHC	<1	<1	<1	<1	<1	<1	<1	<1	<1	<0.05
gamma-BHC	<1	<1	<1	<1	<1	<1	<1	<1	<1	<0.03
delta-BHC	<1	<1	<1	<1	<1	<1	<1	<1	<1	<0.04
chlordane	<1	<1	<1	<1	<1	<1	<1	<1	<1	<0.61
4,4'-DDT	<1	<1	<1	<1	<1	<1	<1	<1	<1	<0.96
4,4'-DDE	<1	<1	<1	<1	<1	<1	<1	<1	<1	<0.07
4,4'-DDD	<1	<1	<1	<1	<1	<1	<1	<1	<1	<0.07
dieldrin	<1	<1	<1	<1	<1	<1	<1	<1	<1	<0.007
endosulfan I	<1	<1	<1	<1	<1	<1	<1	<1	<1	<0.006
endosulfan II	<1	<1	<1	<1	<1	<1	<1	<1	<1	<0.1
endosulfan sulfate	<1	<1	<1	<1	<1	<1	<1	<1	<1	<0.15
ndrin	<1	<1	<1	<1	<1	<1	<1	<1	<1	<0.20
endrin aldehyde	<1	<1	<1	<1	<1	<1	<1	<1	<1	<0.022
heptachlor	<1	<1	<1	<1	<1	<1	<1	<1	<1	<0.04
heptachlor epoxide	<1	<1	<1	<1	<1	<1	<1	<1	<1	<0.05
PCB-1016	<1	<1	<1	<1	<1	<1	<1	<1	<1	<0.34
PCB-1221	<1	<1	<1	<1	<1	<1	<1	<1	<1	<1.33
PCB-1232	<1	<1	<1	<1	<1	<1	<1	<1	<1	<0.62
PCB-1242	<1	<1	<1	<1	<1	<1	<1	<1	<1	<0.82
PCB-1248	<1	<1	<1	<1	<1	<1	<1	<1	<1	<0.86
PCB-1254	<1	<1	<1	<1	<1	<1	<1	<1	<1	<1.23
PCB-1260	<1	<1	<1	<1	<1	<1	<1	<1	<1	<1.74
toxaphene	<1	<1	<1	<1	<1	<1	<1	<1	<1	<6.94
Total Pesticide/PCB Compounds	0	0	0	0	0	0	0	0	0	0

Table E-4. Summary of Pesticide/PCB Compounds in Ground Water, Monsanto Company, W.G. Krummrich Plant, Sauget, Illinois. ***

Well Number:	GM-4B	GM-4B	GM-4B	GM-4C	GM-4C	GM-5	GM-5	GM-6A	GM-6A	GM-6A
Date:	11/84	11/84*	2/85	2/85	5/85	11/83	5/84	11/83	5/84	11/84
USEPA Priority Pollutant Pesticide/PCB Compounds concentrations are in ug/L										
aldrin	<10	<10	<1.9	<2	<1.9	<1	<1	<10	<1	<10
alpha-BHC	<10	<10	<10	<10	<10	<1	<1	<10	<1	<10
beta-BHC	<10	<10	<4.2	<4	<4.2	<1	<1	<10	<1	<10
gamma-BHC	<10	<10	<10	<10	<10	<1	<1	<10	<1	<10
delta-BHC	<10	<10	<3.1	<3	<3.1	<1	<1	<10	<1	<10
chlordane	<10	<10	<10	<10	<10	<1	<1	<10	<1	<10
4,4'-DDT	<10	<10	<4.7	<5	<4.7	<1	<1	<10	<1	<10
4,4'-DDE	<10	<10	<5.6	<6	<5.6	<1	<1	<10	<1	<10
4,4'-DDD	<10	<10	<2.8	<3	<2.8	<1	<1	<10	<1	<10
dieldrin	<10	<10	<2.5	<3	<2.5	<1	<1	<10	<1	<10
endosulfan I	<10	<10	<10	<10	<10	<1	<1	<10	<1	<10
endosulfan II	<10	<10	<10	<10	<10	<1	<1	<10	<1	<10
endosulfan sulfate	<10	<10	<5.6	<6	<5.6	<1	<1	<10	<1	<10
endrin	<10	<10	<10	<10	<10	<1	<1	<10	<1	<10
endrin aldehyde	<10	<10	<10	<10	<10	<1	<1	<10	<1	<10
heptachlor	<10	<10	<1.9	<2	<1.9	<1	<1	<10	<1	<10
heptachlor epoxide	<10	<10	<2.2	<2	<2.2	<1	<1	<10	<1	<10
PCB-1016	<10	<10	<36	<36	<36	<1	<1	<10	<1	<10
PCB-1221	<10	<10	<30	<30	<30	<1	<1	<10	<1	<10
PCB-1232	<10	<10	<36	<36	<36	<1	<1	<10	<1	<10
PCB-1242	<10	<10	<36	<36	<36	<1	<1	<10	<1	<10
PCB-1248	<10	<10	<36	<36	<36	<1	<1	<10	<1	<10
PCB-1254	<10	<10	<36	<36	<36	<1	<1	<10	<1	<10
PCB-1260	<10	<10	<36	<36	<36	<1	<1	<10	<1	<10
toxaphene	<10	<10	<10	<10	<10	<1	<1	<10	<1	<10
Total Pesticide/PCB Compounds	0	0	0	0	0	0	0	0	0	0

Table E-4. Summary of Pesticide/PCB Compounds in Ground Water, Monsanto Company, W.G. Krummrich Plant, Sauget, Illinois. ***

Well Number:	GM-6B	GM-6B	GM-6B	GM-7	GM-7	GM-8	GM-8	GM-8	GM-8	GM-9A
Date:	9/84**	11/84	11/85	11/83	5/84	11/83	5/84	11/84	2/85	11/83
USEPA Priority Pollutant Pesticide/PCB Compounds concentrations are in ug/L										
aldrin	<0.004	<10	<1.9	<1	<1	<1	<1	<10	<2	<1
alpha-BHC	<0.002	<10	<10	<1	<1	<1	<1	<10	<10	<1
beta-BHC	<0.005	<10	<4.4	<1	<1	<1	<1	<10	<4	<1
gamma-BHC	<0.003	<10	<10	<1	<1	<1	<1	<10	<10	<1
delta-BHC	<0.004	<10	<3.1	<1	<1	<1	<1	<10	<3	<1
chlordane	<0.061	<10	<10	<1	<1	<1	<1	<10	<10	<1
4,4'-DDT	<0.096	<10	<2.8	<1	<1	<1	<1	<10	<5	<1
4,4'-DDE	<0.007	<10	<5.6	<1	<1	<1	<1	<10	<6	<1
4,4'-DDD	<0.007	<10	<4.7	<1	<1	<1	<1	<10	<3	<1
dieldrin	<0.007	<10	<2.5	<1	<1	<1	<1	<10	<3	<1
endosulfan I	<0.006	<10	<10	<1	<1	<1	<1	<10	<10	<1
endosulfan II	<0.011	<10	<10	<1	<1	<1	<1	<10	<10	<1
endosulfan sulfate	<0.042	<10	<5.6	<1	<1	<1	<1	<10	<6	<1
endrin	<0.02	<10	<10	<1	<1	<1	<1	<10	<10	<1
endrin aldehyde	<0.022	<10	<10	<1	<1	<1	<1	<10	<10	<1
heptachlor	<0.004	<10	<1.9	<1	<1	<1	<1	<10	<2	<1
heptachlor epoxide	<0.005	<10	<2.2	<1	<1	<1	<1	<10	<2	<1
PCB-1016	<0.034	<10	<36	<1	<1	<1	<1	<10	<36	<1
PCB-1221	<0.133	<10	<30	<1	<1	<1	<1	<10	<30	<1
PCB-1232	<0.062	<10	<36	<1	<1	<1	<1	<10	<36	<1
PCB-1242	<0.082	<10	<36	<1	<1	<1	<1	<10	<36	<1
PCB-1248	<0.086	<10	<36	<1	<1	<1	<1	<10	<36	<1
PCB-1254	<0.123	<10	<36	<1	<1	<1	<1	<10	<36	<1
PCB-1260	<0.174	<10	<36	<1	<1	<1	<1	<10	<36	<1
toxaphene	<0.694	<10	<10	<1	<1	<1	<1	<10	<10	<1
Total Pesticide/PCB Compounds	0	0	0	0	0	0	0	0	0	0

Table E-4. Summary of Pesticide/PCB Compounds in Ground Water, Monsanto Company, W.G. Krummrich Plant, Sauget, Illinois. ***

Well Number:	GM-9A	GM-9B	GM-9B	GM-9C	GM-9C	GM-10A	GM-10A	GM-10B	GM-10B	GM-10C
Date:	5/84	9/84	5/85	9/84	5/85	11/83	5/84	2/85	5/85	2/85
USEPA Priority Pollutant Pesticide/PCB Compounds concentrations are in ug/L										
aldrin	<1	<0.004	<1.9	<0.004	<1.9	<1	<1	<2.1	<1.9	<2
alpha-BHC	<1	0.012	<10	<0.002	<10	<1	<1	<11	<10	<10
beta-BHC	<1	<0.005	<4.2	<0.005	<4.2	<1	<1	<4.6	<4.2	<4
gamma-BHC	<1	<0.006	<10	0.003	<10	<1	<1	<11	<10	<10
delta-BHC	<1	<0.004	<3.1	<0.004	<3.1	<1	<1	<3.4	<3.1	<3
chlordane	<1	<0.061	<10	<0.061	<10	<1	<1	<11	<10	<10
4,4'-DDT	<1	<0.096	<4.7	<0.096	<4.7	<1	<1	<5.2	<4.7	<5
4,4'-DDE	<1	<0.007	<5.6	<0.007	<5.6	<1	<1	<6.2	<5.6	<6
4,4'-DDD	<1	<0.007	<2.8	<0.007	<2.8	<1	<1	<3.1	<2.8	<3
dieldrin	<1	<0.07	<2.5	<0.007	<2.5	<1	<1	<2.8	<2.5	<3
endosulfan I	<1	<0.06	<10	<0.006	<10	<1	<1	<11	<10	<10
endosulfan II	<1	<0.11	<10	<0.011	<10	<1	<1	<11	<10	<10
endosulfan sulfate	<1	<0.42	<5.6	<0.042	<5.6	<1	<1	<6.2	<5.6	<6
endrin	<1	<0.20	<10	<0.02	<10	<1	<1	<11	<10	<10
endrin aldehyde	<1	<0.22	<10	<0.022	<10	<1	<1	<11	<10	<10
heptachlor	<1	<0.004	<1.9	<0.004	<1.9	<1	<1	<2.1	<1.9	<2
heptachlor epoxide	<1	<0.005	<2.2	<0.004	<2.2	<1	<1	<2.4	<2.2	<2
PCB-1016	<1	<0.034	<36	<0.034	<36	<1	<1	<39.6	<36	<36
PCB-1221	<1	<0.133	<30	<0.133	<30	<1	<1	<33	<30	<30
PCB-1232	<1	<0.062	<36	<0.062	<36	<1	<1	<39.6	<36	<36
PCB-1242	<1	<0.082	<36	<0.082	<36	<1	<1	<39.6	<36	<36
PCB-1248	<1	<0.086	<36	<0.086	<36	<1	<1	<39.6	<36	<36
PCB-1254	<1	<0.123	<36	<0.123	<36	<1	<1	<39.6	<36	<36
PCB-1260	<1	<0.174	<36	<0.174	<36	<1	<1	<39.6	<36	<36
toxaphene	<1	<0.694	<10	<0.694	<10	<1	<1	<10	<10	<10
Total Pesticide/PCB Compounds	0	0.012	0	0.003	0	0	0	0	0	0

Table E-4. Summary of Pesticide/PCB Compounds in Ground Water, Monsanto Company, W.G. Krummrich Plant, Sauget, Illinois. ***

Well Number:	GM-10C	GM-11	GM-11	GM-12A	GM-12A	GM-12A	GM-12A	GM-12A	GM-12A	GM-12A
Date:	5/85	11/83	5/84	11/83	11/83*	5/84	5/84*	11/84	11/84*	2/85
USEPA Priority Pollutant Pesticide/PCB Compounds concentrations are in ug/L										
aldrin	<1.9	<1	<1	<1	<1	<1	<1	<10	<10	<1.9
alpha-BHC	<10	<1	<1	<1	<1	<1	<1	<10	<10	<10
beta-BHC	<4.2	<1	<1	<1	<1	<1	<1	<10	<10	<4.2
gamma-BHC	<10	<1	<1	<1	<1	<1	<1	<10	<10	<10
delta-BHC	<3.1	<1	<1	<1	<1	<1	<1	<10	<10	<3.1
chlordane	<10	<1	<1	<1	<1	<1	<1	<10	<10	<10
4,4'-DDT	<4.7	<1	<1	<1	<1	<1	<1	<10	<10	<4.7
4,4'-DDE	<5.6	<1	<1	<1	<1	<1	<1	<10	<10	<5.6
4,4'-DDD	<2.8	<1	<1	<1	<1	<1	<1	<10	<10	<2.8
dieldrin	<2.5	<1	<1	<1	<1	<1	<1	<10	<10	<2.5
endosulfan I	<10	<1	<1	<1	<1	<1	<1	<10	<10	<10
endosulfan II	<10	<1	<1	<1	<1	<1	<1	<10	<10	<10
endosulfan sulfate	<5.6	<1	<1	<1	<1	<1	<1	<10	<10	<5.6
endrin	<10	<1	<1	<1	<1	<1	<1	<10	<10	<10
endrin aldehyde	<10	<1	<1	<1	<1	<1	<1	<10	<10	<10
heptachlor	<1.9	<1	<1	<1	<1	<1	<1	<10	<10	<1.9
heptachlor epoxide	<2.2	<1	<1	<1	<1	<1	<1	<10	<10	<2.2
PCB-1016	<36	<1	<1	<1	<1	<1	<1	<10	<10	<36
PCB-1221	<30	<1	<1	<1	<1	<1	<1	<10	<10	<30
PCB-1232	<36	<1	<1	<1	<1	<1	<1	<10	<10	<36
PCB-1242	<36	<1	<1	<1	<1	<1	<1	<10	<10	<36
PCB-1248	<36	<1	<1	<1	<1	<1	<1	<10	<10	<36
PCB-1254	<36	<1	<1	<1	<1	<1	<1	<10	<10	<36
PCB-1260	<36	<1	<1	<1	<1	<1	<1	<10	<10	<36
toxaphene	<10	<1	<1	<1	<1	<1	<1	<10	<10	<10
Total Pesticide/PCB Compounds	0	0	0	0	0	0	0	0	0	0

Table E-4. Summary of Pesticide/PCB Compounds in Ground Water, Monsanto Company, W.G. Krummrich Plant, Sauget, Illinois. ***

Well Number:	GM-12A	GM-12A	GM-12A	GM-12A	GM-12A	GM-12B	GM-12B	GM-12C	GM-12C	GM-12C
Date:	2/85*	5/85	5/85*	2/86	2/86*	9/84	11/84	2/85	2/85*	5/85
USEPA Priority Pollutant Pesticide/PCB Compounds concentrations are in ug/L										
aldrin	<1.9	<1.9	<1.9	<2	<1.9	<0.02	<10	<1.9	<1.9	<1.9
alpha-BHC	<10	<10	<10	<11	<10	<0.01	<10	<10	<10	<10
beta-BHC	<4.2	<4.2	<4.2	<4.7	<4.4	<0.025	<10	<4.2	<4.2	<4.2
gamma-BHC	<10	<10	<10	<11	<10	<0.015	<10	<10	<10	<10
delta-BHC	<3.1	<3.1	<3.1	<3.3	<3.1	<0.02	<10	<3.1	<3.1	<3.1
chlordane	<10	<10	<10	<11	<10	<0.305	<10	<10	<10	<10
4,4'-DDT	<4.7	<4.7	<4.7	<3	<2.8	<0.48	<10	<4.7	<4.7	<4.7
4,4'-DDE	<5.6	<5.6	<5.6	<6	<5.7	<0.035	<10	<5.6	<5.6	<5.6
4,4'-DDD	<2.8	<2.8	<2.8	<5	<4.7	<0.035	<10	<2.8	<2.8	<2.8
dieldrin	<2.5	<2.5	<2.5	<2.7	<2.5	<0.007	<10	<2.5	<2.5	<2.5
endosulfan I	<10	<10	<10	<11	<10	<0.006	<10	<10	<10	<10
endosulfan II	<10	<10	<10	<11	<10	<0.011	<10	<10	<10	<10
endosulfan sulfate	<5.6	<5.6	<5.6	<6	<5.7	<0.042	<10	<5.6	<5.6	<5.6
drin	<10	<10	<10	<11	<10	<0.02	<10	<10	<10	<10
endrin aldehyde	<10	<10	<10	<11	<10	<0.022	<10	<10	<10	<10
heptachlor	<1.9	<1.9	<1.9	<2	<1.9	<0.02	<10	<1.9	<1.9	<1.9
heptachlor epoxide	<2.2	<2.2	<2.2	<2.3	<2.2	<0.025	<10	<2.2	<2.2	<2.2
PCB-1016	<36	<36	<36	<38	<36	<0.17	<10	<36	<36	<36
PCB-1221	<30	<30	<30	<32	<30	<0.665	<10	<30	<30	<30
PCB-1232	<36	<36	<36	<38	<36	<0.31	<10	<36	<36	<36
PCB-1242	<36	<36	<36	<38	<36	10.69	<10	<36	<36	<36
PCB-1248	<36	<36	<36	<38	<36	<0.43	<10	<36	<36	<36
PCB-1254	<36	<36	<36	<38	<36	<0.615	<10	<36	<36	<36
PCB-1260	<36	<36	<36	<38	<36	<0.87	<10	<36	<36	<36
toxaphene	<10	<10	<10	<11	<10	<3.47	<10	<10	<10	<10
Total Pesticide/PCB Compounds	0	0	0	0	0	10.69	0	0	0	0

Table E-4. Summary of Pesticide/PCB Compounds in Ground Water, Monsanto Company, W.G. Krummrich Plant, Sauget, Illinois. ***

Well Number:	GM-12C	GM-13	GM-13	GM-14	GM-15	GM-16A	GM-16A	GM-16A	GM-16B	GM-16B
Date:	5/85*	9/84	2/86	9/84	9/84	9/84**	5/85	11/85	9/84**	5/85
USEPA Priority Pollutant Pesticide/PCB Compounds concentrations are in ug/L										
aldrin	<1.9	0.58	<100	<4	0.055	<0.004	<1.9	<1.9	<0.004	<1.9
alpha-BHC	<10	35.4	<530	<2	0.005	<0.002	<10	<10	<0.002	<10
beta-BHC	<4.2	<0.05	<230	<5	0.108	<0.005	<4.2	<4.5	<0.005	<4.2
gamma-BHC	<10	0.73	<530	<3	0.008	<0.003	<10	<10	<0.003	<10
delta-BHC	<3.1	0.243	<160	<4	0.012	<0.004	<3.1	<3.2	<0.004	<3.1
chlordane	<10	<0.61	<530	<61	<0.061	<0.061	<10	<10	<0.061	<10
4,4'-DDT	<4.7	<0.96	<150	<96	<0.096	<0.096	<4.7	<2.9	<0.096	<4.7
4,4'-DDE	<5.6	<0.07	<290	<7	0.004	<0.007	<5.6	<5.7	<0.007	<5.6
4,4'-DDD	<2.8	<0.07	<250	<7	0.063	<0.007	<2.8	<4.8	<0.007	<2.8
dieldrin	<2.5	<0.07	<130	<14	<0.007	<0.007	<2.5	<2.6	<0.007	<2.5
endosulfan I	<10	<0.06	<530	<12	<0.006	<0.006	<10	<10	<0.006	<10
endosulfan II	<10	<0.011	<530	<0.011	<0.11	<0.011	<10	<10	<0.011	<10
endosulfan sulfate	<5.6	<0.042	<290	<0.042	<0.42	<0.042	<5.6	<5.7	<0.042	<5.6
endrin	<10	<0.02	<530	<14	<0.02	<0.02	<10	<10	<0.02	<10
endrin aldehyde	<10	<0.22	<530	<12	<0.022	<0.022	<10	<10	<0.022	<10
heptachlor	<1.9	68.2	<100	<4	0.027	<0.004	<1.9	<1.9	<0.004	<1.9
heptachlor epoxide	<2.2	1.01	<120	<5	<0.005	<0.005	<2.2	<2.2	<0.005	<2.2
PCB-1016	<36	<0.34	<1900	<34	<0.034	<0.034	<36	<37	<0.034	<36
PCB-1221	<30	<1.33	<1600	<133	<0.133	<0.133	<30	<31	<0.133	<30
PCB-1232	<36	<0.62	<1900	<62	<0.062	<0.062	<36	<37	<0.062	<36
PCB-1242	<36	<0.82	<1900	<82	<0.082	<0.082	<36	<37	<0.082	<36
PCB-1248	<36	<0.86	<1900	<86	<0.086	<0.086	<36	<37	<0.086	<36
PCB-1254	<36	<1.23	<1900	<123	4.99	<0.123	<36	<37	<0.123	<36
PCB-1260	<36	<1.74	<1900	<174	<0.174	<0.174	<36	<37	<0.174	<36
toxaphene	<10	<6.94	<530	<694	<0.694	<0.694	<10	<10	<0.694	<10
Total Pesticide/PCB Compounds	0	106.163	0	0	5.272	0	0	0	0	0

Table E-4. Summary of Pesticide/PCB Compounds in Ground Water, Monsanto Company, W.G. Krummrich Plant, Sauget, Illinois. ***

Well Number:	GM-16B	GM-16B	GM-17A	GM-17A	GM-17B	GM-17B	GM-17C	GM-17C	GM-18A	GM-18A
Date:	11/85	2/86	9/84	11/84	9/84	11/84	9/84	11/84	9/84	5/85
USEPA Priority Pollutant Pesticide/PCB Compounds concentrations are in ug/L										
aldrin	<2	NA	0.048	<10	0.017	<10	0.006	<10	0.0358	<1.9
alpha-BHC	<11	NA	0.10	<10	0.012	<10	0.046	<10	0.0276	<10
beta-BHC	<4.7	NA	<0.005	<10	0.101	<10	<0.005	<10	<0.005	<4.2
gamma-BHC	<11	NA	0.075	<10	0.014	<10	<0.003	<10	0.0144	<10
delta-BHC	<3.3	NA	<0.004	<10	0.023	<10	<0.004	<10	<0.004	<3.1
chlordane	<11	NA	<0.061	<10	<0.061	<10	<0.061	<10	<0.061	<10
4,4'-DDT	<3	NA	<0.096	<10	<0.096	<10	<0.096	<10	<0.096	<4.7
4,4'-DDE	<6	NA	<0.007	<10	<0.007	<10	<0.007	<10	<0.007	<5.6
4,4'-DDD	<5.1	NA	<0.005	<10	<0.007	<10	<0.007	<10	<0.007	<2.8
dieldrin	<2.7	NA	<0.007	<10	<0.007	<10	<0.007	<10	<0.007	<2.5
endosulfan I	<11	NA	<0.006	<10	<0.006	<10	<0.006	<10	<0.006	<10
endosulfan II	<11	NA	<0.011	<10	<0.011	<10	<0.011	<10	<0.011	<10
endosulfan sulfate	<6	NA	<0.042	<10	0.826	<10	0.139	<10	0.167	<5.6
endrin	<11	NA	<0.02	<10	<0.02	<10	<0.02	<10	<0.02	<10
endrin aldehyde	<11	NA	<0.022	<10	<0.022	<10	<0.022	<10	<0.022	<10
heptachlor	<2	NA	<0.04	<10	0.022	<10	<0.004	<10	<0.004	<1.9
heptachlor epoxide	<2.4	NA	<0.005	<10	<0.005	<10	<0.005	<10	<0.005	<2.2
PCB-1016	<39	<37	<0.034	<10	<0.034	<10	<0.034	<10	<0.034	<36
PCB-1221	<32	<31	<0.133	<10	<0.133	<10	<0.133	<10	<0.133	<30
PCB-1232	<39	<37	<0.062	<10	<0.062	<10	<0.062	<10	<0.062	<36
PCB-1242	<39	<37	<0.082	<10	<0.082	<10	<0.082	<10	<0.082	<36
PCB-1248	<39	<37	<0.086	<10	<0.086	<10	<0.086	<10	<0.086	<36
PCB-1254	<39	<37	<0.123	<10	<0.123	<10	<0.123	<10	<0.123	<36
PCB-1260	74.8	<37	<0.174	<10	<0.174	<10	<0.174	<10	<0.174	<36
toxaphene	<11	NA	<0.694	<10	<0.694	<10	<0.694	<10	<0.694	<10
Total Pesticide/PCB Compounds	74.8	0	0.223	0	1.015	0	0.191	0	0.2448	0

Table E-4. Summary of Pesticide/PCB Compounds in Ground Water, Monsanto Company, W.G. Krummrich Plant, Sauget, Illinois. ***

Well Number:	GM-18B	GM-18B	GM-25A	GM-25A	GM-25B	GM-25B	GM-27B	GM-27B	GM-27C	GM-27C
Date:	9/84	5/85	9/84	11/84	9/84	11/84	9/84	2/86	9/84	2/86
USEPA Priority Pollutant Pesticide/PCB Compounds concentrations are in ug/L										
aldrin	0.068	<2	0.003	<10	0.099	<10	0.016	<2	0.034	<1.9
alpha-BHC	0.009	<10	<0.002	<10	<0.002	<10	<0.002	<10	<0.002	<10
beta-BHC	0.004	<4	<0.005	<10	0.162	<10	<0.005	<4.5	<0.005	<4.5
gamma-BHC	0.072	<10	0.002	<10	0.219	<10	<0.003	<10	19.3	<10
delta-BHC	<0.004	<3	<0.004	<10	<0.004	<10	<0.004	<3.2	0.014	<3.2
chlordane	<0.061	<10	<0.061	<10	<0.061	<10	<0.061	<10	<0.061	<10
4,4'-DDT	<0.096	<5	<0.096	<10	<0.096	<10	<0.096	<2.9	<0.096	<2.9
4,4'-DDE	<0.007	<6	<0.007	<10	<0.007	<10	<0.007	<5.8	<0.007	<5.7
4,4'-DDD	0.014	<3	<0.007	<10	<0.007	<10	<0.007	<4.8	<0.007	<4.8
dieldrin	<0.007	<3	0.002	<10	0.052	<10	<0.007	<2.6	<0.07	<2.6
endosulfan I	<0.006	<10	<0.006	<10	<0.006	<10	<0.006	<10	<0.06	<10
endosulfan II	<0.011	<10	<0.011	<10	<0.011	<10	<1.1	<10	<0.11	<10
endosulfan sulfate	0.124	<6	<0.042	<10	0.161	<10	<4.2	<5.8	0.316	<5.7
endrin	<0.020	<10	<0.02	<10	<0.07	<10	35.8	<10	15.2	<10
endrin aldehyde	<0.022	<10	<0.022	<10	<0.022	<10	<0.22	<10	<0.22	<10
heptachlor	<0.004	<2	<0.004	<10	0.165	<10	0.01	<2	0.082	<1.9
heptachlor epoxide	0.006	<2	<0.005	<10	0.092	<10	<0.005	<2.3	<0.005	<2.2
PCB-1016	<0.034	<36	<0.034	<10	<0.034	<10	<0.034	<37	<0.034	<37
PCB-1221	<0.133	<30	<0.133	<10	<0.133	<10	<0.133	<31	<0.133	<31
PCB-1232	<0.062	<36	<0.062	<10	<0.062	<10	<0.062	<37	<0.062	<37
PCB-1242	<0.082	<36	<0.082	<10	<0.082	<10	<0.082	<37	<0.082	<37
PCB-1248	<0.086	<36	<0.086	<10	<0.086	<10	<0.086	<37	<0.086	<37
PCB-1254	<0.123	<36	<0.123	<10	<0.123	<10	<0.123	<37	<0.123	<37
PCB-1260	<0.174	<36	<0.174	<10	<0.174	<10	0.94	<37	<0.174	<37
toxaphene	<0.694	<10	<0.694	<10	<0.694	<10	<0.694	<10	<0.694	<10
Total Pesticide/PCB Compounds	0.297	0	0.007	0	0.95	0	36.766	0	34.946	0

Table E-4. Summary of Pesticide/PCB Compounds in Ground Water, Monsanto Company, W.G. Krummrich Plant, Sauget, Illinois. ***

Well Number:	GM-28B	GM-28B	GM-28C	GM-28C	GM-29	GM-29	GM-30	GM-30	GM-30	GM-31A
Date:	9/84	2/86	9/84	2/86	9/84**	11/85	9/84**	11/85	2/86	2/85
USEPA Priority Pollutant Pesticide/PCB Compounds concentrations are in ug/L										
aldrin	<0.004	<1.9	<0.04	<1.9	<0.004	<2.3	<0.004	<2.1	<2.3	<2
alpha-BHC	17.5	<10	<0.002	<10	<0.002	<12	<0.002	<11	<12	<10
beta-BHC	6.0	<4.5	<0.005	<4.4	<0.005	<5.2	<0.005	<4.9	<5.2	<4
gamma-BHC	42	<10	0.04	<10	<0.003	<12	<0.003	<11	<12	<10
delta-BHC	<0.004	<3.2	<0.04	<3.1	<0.004	<3.7	<0.004	<3.4	<3.7	<3
chlordane	<0.061	<10	<0.61	<10	<0.061	<12	<0.061	<11	<12	<10
4,4'-DDT	<0.096	<2.9	<0.96	<2.8	<0.096	<3.3	<0.096	<3.1	<3.3	<5
4,4'-DDE	<0.007	<5.7	<0.07	<5.7	<0.007	<6.7	<0.007	<6.2	<6.7	<6
4,4'-DDD	<0.007	<4.8	<0.07	<4.7	<0.007	<5.6	<0.007	<5.2	<5.6	<3
dieldrin	<0.007	<2.6	<0.7	<2.5	<0.007	<3	<0.007	<2.8	<3	<3
endosulfan I	<0.006	<10	<0.6	<10	<0.006	<12	<0.006	<11	<12	<10
endosulfan II	<1.1	<10	<1.1	<10	<0.011	<12	<0.011	<11	<12	<10
endosulfan sulfate	<4.2	<5.7	<4.2	<5.7	<0.042	<6.7	<0.042	<6.2	<6.7	<6
endrin	283	<10	<2.0	<10	<0.02	<12	<0.02	<11	<12	<10
endrin aldehyde	0.014	<10	0.014	<10	0.258	<12	<0.022	<11	<12	<10
heptachlor	2.09	<1.9	0.47	<1.9	<0.004	<2.3	<0.004	<2.1	<2.3	<2
heptachlor epoxide	<0.005	<2.3	<0.05	<2.2	<0.005	<2.6	<0.005	<2.4	<2.6	<2
PCB-1016	<0.034	<37	<0.34	<36	<0.034	<43	<0.034	<40	<43	<36
PCB-1221	<0.133	<31	<1.33	<30	<0.133	<36	<0.133	<33	<36	<30
PCB-1232	<0.062	<37	<0.62	<36	<0.062	<43	<0.062	<40	<43	<36
PCB-1242	<0.082	<37	<0.82	<36	<0.082	<43	<0.082	<40	<43	<36
PCB-1248	<0.086	<37	<0.86	<36	<0.086	<43	<0.086	<40	<43	<36
PCB-1254	<0.123	<37	<1.23	<36	<0.123	<43	<0.123	<40	<43	<36
PCB-1260	<0.174	<37	<1.74	<36	<0.174	<43	<0.174	<40	<43	<36
toxaphene	<0.694	<10	<6.94	<10	<0.694	<12	<0.694	<11	<12	<10
Total Pesticide/PCB Compounds	350.604	0	0.524	0	0.258	0	0	0	0	0

Table E-4. Summary of Pesticide/PCB Compounds in Ground Water, Monsanto Company, W.G. Krummrich Plant, Sauget, Illinois. ***

Well Number:	GM-31A	GM-31B	GM-31B	GM-31C	GM-31C	B-24A	B-25A	B-25B	B-27B	B-28A
Date:	5/85	2/85	5/85	2/85	5/85	2/86	6/84	6/84	9/84	2/86
USEPA Priority Pollutant Pesticide/PCB Compounds concentrations are in ug/L										
aldrin	<1.9	<2	<1.9	<2	<1.9	<2	<10	<10	<4	<2
alpha-BHC	<10	<10	<10	<10	<10	<10	<10	<10	<11	<11
beta-BHC	<4.2	<4	<4.2	<4	<4.2	<4.5	<10	<10	<5	<4.7
gamma-BHC	<10	<10	<10	<10	<10	<10	<10	<10	<3	<11
delta-BHC	<3.1	<3	<3.1	<3	<3.1	<3.2	<10	<10	<4	<3.3
chlordane	<10	<10	<10	<10	<10	<10	<100	<100	<61	<11
4,4'-DDT	<4.7	<5	<4.7	<5	<4.7	<2.9	<10	<10	<96	<3
4,4'-DDE	<5.6	<6	<5.6	<6	<5.6	<5.8	<10	<10	<7	<6
4,4'-DDD	<2.8	<3	<2.8	<3	<2.8	<4.8	<10	<10	<7	<5
dieldrin	<2.5	<3	<2.5	<3	<2.5	<2.6	<10	<10	<7	<2.7
endosulfan I	<10	<10	<10	<10	<10	<10	<10	<10	<6	<11
endosulfan II	<10	<10	<10	<10	<10	<10	<10	<10	<5.5	<11
endosulfan sulfate	<5.6	<6	<5.6	<6	<5.6	<5.8	<10	<10	<21	<6
drin	<10	<10	<10	<10	<10	<10	<10	<10	<20	<11
drin aldehyde	<10	<10	<10	<10	<10	<10	<10	<10	<22	<11
heptachlor	<1.9	<2	<1.9	<2	<1.9	<2	<10	<10	<4	<2
heptachlor epoxide	<2.2	<2	<2.2	<2	<2.2	<2.3	<10	<10	<5	<2.3
PCB-1016	<36	<36	<36	<36	<36	<37	<50	<50	<34	<38
PCB-1221	<30	<30	<30	<30	<30	<31	<50	<50	<133	<32
PCB-1232	<36	<36	<36	<36	<36	<37	<50	<50	<62	<38
PCB-1242	<36	<36	<36	<36	<36	<37	<50	<50	<82	<38
PCB-1248	<36	<36	<36	<36	<36	<37	<50	<50	<86	<38
PCB-1254	<36	<36	<36	<36	<36	<37	<50	<50	<123	<38
PCB-1260	<36	<36	<36	<36	<36	<37	<50	<50	<174	<38
toxaphene	<10	<10	<10	<10	<10	<10	<250	<250	<694	<11
Total Pesticide/PCB Compounds	0	0	0	0	0	0	0	0	0	0

Table E-4. Summary of Pesticide/PCB Compounds in Ground Water, Monsanto Company, W.G. Krummrich Plant, Sauget, Illinois. ***

Well Number:	B-29A	B-29B	B-29B	B-29B	B-29B	B-30B	B-31B	B-31B	B-31C	B-31C
Date:	6/84	6/84	6/84*	6/84#	11/84	9/84	11/85	2/86	9/84	9/84*
USEPA Priority Pollutant Pesticide/PCB Compounds concentrations are in ug/L										
aldrin	<10	<10	<10	<100	<50	<4	<1.9	<1.9	<0.04	0.03
alpha-BHC	<10	<10	<10	<100	<50	<11	<10	<10	<0.02	<0.002
beta-BHC	<10	<10	<10	<100	<50	<5	<4.4	<4.4	<0.05	<0.005
gamma-BHC	<10	<10	<10	<100	<50	<3	<10	<10	<0.03	<0.003
delta-BHC	<10	<10	<10	<100	<50	<4	<3.1	<3.1	<0.04	<0.004
chlordane	<100	<100	<100	<100	<50	<61	<10	<10	<0.61	<0.061
4,4'-DDT	<10	<10	<10	<100	<50	<96	<2.8	<2.8	<0.96	<0.096
4,4'-DDE	<10	<10	<10	<100	<50	<7	<5.6	<5.7	<0.07	<0.007
4,4'-DDD	<10	<10	<10	<100	<50	<7	<4.7	<4.7	<0.07	<0.007
dieldrin	<10	<10	<10	<100	<50	<7	<2.5	<2.5	<0.007	<0.007
endosulfan I	<10	<10	<10	<100	<50	<6	<10	<10	<0.006	<0.006
endosulfan II	<10	<10	<10	<100	<50	<11	<10	<10	<0.011	<0.011
endosulfan sulfate	<10	<10	<10	<100	<50	<42	<5.6	<5.7	<0.042	<0.042
endrin	<10	<10	<10	<100	<50	<20	<10	<10	<0.02	<0.02
endrin aldehyde	<10	<10	<10	<100	<50	<22	<10	<10	<0.022	<0.022
heptachlor	<10	<10	<10	<100	<50	<4	<1.9	<1.9	<0.04	<0.004
heptachlor epoxide	<10	<10	<10	<100	<50	<5	<2.2	<2.2	<0.05	<0.005
PCB-1016	<50	<50	<50	<100	<50	<34	<36	<36	<0.34	<0.034
PCB-1221	<50	<50	<50	<100	<50	<133	<30	<30	<1.33	<0.133
PCB-1232	<50	<50	<50	<100	<50	<62	<36	<36	<0.62	<0.062
PCB-1242	<50	<50	<50	<100	<50	<82	<36	<36	<0.82	<0.082
PCB-1248	<50	<50	<50	<100	<50	<86	<36	<36	<0.86	<0.086
PCB-1254	<50	<50	<50	<100	<50	<123	<36	<36	<1.23	<0.123
PCB-1260	<50	<50	<50	<100	<50	<174	<36	<36	<1.74	<0.174
toxaphene	<250	<250	<250	<100	<50	<694	<10	<10	<6.94	<0.694
Total Pesticide/PCB Compounds	0	0	0	0	0	0	0	0	0	0.03

Table E-4. Summary of Pesticide/PCB Compounds in Ground Water, Monsanto Company, W.G. Krummrich Plant, Sauget, Illinois. ***

Well Number:	B-31C	B-31C	B-101	B-102	GM-106	GM-106	GM-106	P-1	P-2	P-6
Date:	11/85	2/86	9/84	9/84	11/85	2/86	2/86*	9/84	6/84	6/84
USEPA Priority Pollutant Pesticide/PCB Compounds concentrations are in ug/L										
aldrin	<1.9	<2	NA	<4	<1.9	<2	<1.9	<0.08	<10	<10
alpha-BHC	<10	<11	NA	<2	<10	<10	<10	<0.04	<10	<10
beta-BHC	<4.5	<4.6	NA	<5	<4.5	<4.5	<4.5	<0.1	<10	<10
gamma-BHC	<10	<11	NA	<3	<10	<10	<10	<0.06	<10	<10
delta-BHC	<3.2	<3.3	NA	<4	<3.2	<3.2	<3.2	<0.08	<10	<10
chlordane	<10	<11	NA	<61	<10	<10	<10	<1.22	<100	<100
4,4'-DDT	<2.9	<2.9	NA	<96	<2.9	<2.9	<2.9	<1.92	<10	<10
4,4'-DDE	<5.7	<5.9	NA	<7	<5.7	<5.8	<5.7	<0.14	<10	<10
4,4'-DDD	<4.8	<4.9	NA	<7	<4.8	<4.8	<4.8	<0.14	<10	<10
dieldrin	<2.6	<2.6	<70	<0.007	<2.6	<2.6	<2.6	<0.007	<10	<10
endosulfan I	<10	<11	<60	<0.006	<10	<10	<10	<0.006	<10	<10
endosulfan II	<10	<11	<1.1	<0.011	<10	<10	<10	<0.011	<10	<10
endosulfan sulfate	<5.7	<5.9	<4.2	<0.042	<5.7	<5.8	<5.7	<0.042	<10	<10
drin	<10	<11	<200	<0.02	<10	<10	<10	<0.02	<10	<10
drin aldehyde	<10	<11	<220	<0.022	<10	<10	<10	<0.022	<10	<10
heptachlor	<1.9	<2	NA	<4	<1.9	<2	<1.9	<0.08	<10	<10
heptachlor epoxide	<2.2	<2.3	NA	<5	<2.2	<2.3	<2.2	<0.1	<10	<10
PCB-1016	<37	<38	NA	<34	<37	<37	<37	<0.68	<50	<50
PCB-1221	<31	<32	NA	<133	<31	<31	<31	<2.66	<50	<50
PCB-1232	<37	<38	NA	<62	<37	<37	<37	<1.24	<50	<50
PCB-1242	<37	<38	NA	<82	<37	<37	<37	<1.64	<50	<50
PCB-1248	<37	<38	NA	<86	<37	<37	<37	<1.72	<50	<50
PCB-1254	<37	<38	NA	<123	<37	<37	<37	<2.46	<50	<50
PCB-1260	<37	<38	NA	<174	<37	<37	<37	<3.48	<50	<50
toxaphene	<10	<11	NA	<694	<10	<10	<10	<13.88	<250	<250
Total Pesticide/PCB Compounds	0	0	0	0	0	0	0	0	0	0

Table E-4. Summary of Pesticide/PCB Compounds in Ground Water, Monsanto Company, W.G. Krummrich Plant, Sauget, Illinois. ***

Well Number:	P-7	P-8	P-10	P-11	P-12	P-13	P-13	P-13	P-14	DW-1
Date:	6/84	6/84	9/84	9/84	9/84	6/84	6/84*	6/84#	6/84	9/84**
USEPA Priority Pollutant Pesticide/PCB Compounds concentrations are in ug/L										
aldrin	<10	<10	<0.04	0.139	<0.004	<10	<10	<10	<10	<0.004
alpha-BHC	<10	<10	0.562	0.012	<0.002	<10	<10	<10	<10	<0.002
beta-BHC	<10	<10	<0.05	<0.005	<0.005	<10	<10	<10	<10	<0.005
gamma-BHC	<10	<10	<0.03	0.021	<0.003	<10	<10	<10	<10	<0.003
delta-BHC	<10	<10	<0.04	0.068	<0.004	<10	<10	<10	<10	<0.004
chlordane	<100	<100	<0.61	0.469	<0.061	<100	<100	<10	<100	<0.061
4,4'-DDT	<10	<10	<0.96	<0.096	<0.096	<10	<10	<10	<10	<0.096
4,4'-DDE	<10	<10	<0.07	<0.07	<0.007	<10	<10	<10	<10	<0.007
4,4'-DDD	<10	<10	<0.07	0.148	<0.007	<10	<10	<10	<10	<0.007
dieldrin	<10	<10	<0.07	0.018	<0.07	<10	<10	<10	<10	<0.007
endosulfan I	<10	<10	<0.06	<0.006	<0.06	<10	<10	<10	<10	<0.006
endosulfan II	<10	<10	<0.11	<0.011	<0.1	<10	<10	<10	<10	<0.011
endosulfan sulfate	<10	<10	<0.42	<0.042	<0.15	<10	<10	<10	<10	<0.042
endrin	<10	<10	<0.2	0.135	33.43	<10	<10	<10	<10	<0.02
endrin aldehyde	<10	<10	<0.22	<0.022	<0.22	<10	<10	<10	<10	<0.022
heptachlor	<10	<10	<0.04	0.301	0.110	<10	<10	<10	<10	<0.004
heptachlor epoxide	<10	<10	<0.05	<0.005	<0.005	<10	<10	<10	<10	<0.005
PCB-1016	<50	<50	<0.34	<0.034	<0.034	<50	<50	<10	<50	<0.034
PCB-1221	<50	<50	<0.133	<0.133	<0.133	<50	<50	<10	<50	<0.133
PCB-1232	<50	<50	<0.62	<0.062	<0.062	<50	<50	<10	<50	<0.062
PCB-1242	<50	<50	<0.82	<0.082	<0.082	<50	<50	<10	<50	<0.082
PCB-1248	<50	<50	<0.86	<0.086	<0.086	<50	<50	<10	<50	<0.086
PCB-1254	<50	<50	<1.23	<0.123	<0.123	<50	<50	<10	<50	<0.123
PCB-1260	<50	<50	<0.174	<0.174	<0.174	<50	<50	<10	<50	<0.174
toxaphene	<250	<250	<6.94	<0.694	<0.694	<250	<250	<10	<250	<0.694
Total Pesticide/PCB Compounds	0	0	0.562	1.311	33.54	0	0	0	0	0

Table E-4. Summary of Pesticide/PCB Compounds in Ground Water, Monsanto Company, W.G. Krummrich Plant, Sauget, Illinois. ***

Well Number:	DW-1	DW-4	DW-7	DW-7	DW-10	DW-18	DW-23	DW-24	DW-24	DW-29
Date:	11/85	9/84**	11/85	2/86	9/84**	9/84	9/84	9/84	9/84*	9/84
USEPA Priority Pollutant Pesticide/PCB Compounds concentrations are in ug/L										
aldrin	<1.9	<0.04	<1.9	<1.9	<0.04	0.005	<0.004	<0.004	<0.004	<0.004
alpha-BHC	<10	0.19	<10	<10	<0.02	<0.002	<0.002	<0.002	<0.002	<0.002
beta-BHC	<4.4	<0.05	<4.4	<4.5	<0.05	<0.005	<0.005	<0.005	<0.005	<0.005
gamma-BHC	<10	<0.03	<10	<10	<0.03	<0.003	<0.003	<0.003	<0.003	<0.003
delta-BHC	<3.1	<0.04	<3.1	<3.2	<0.04	<0.004	<0.004	<0.004	<0.004	<0.004
chlordane	<10	<0.61	<10	<10	<0.61	<0.61	<0.061	<0.061	<0.061	<0.061
4,4'-DDT	<2.8	<0.96	<2.8	<2.9	<0.96	<0.096	<0.096	<0.096	<0.096	<0.096
4,4'-DDE	<5.6	<0.07	<5.6	<5.7	<0.07	<0.007	<0.007	<0.007	<0.007	<0.007
4,4'-DDD	<4.7	<0.07	<4.7	<4.8	<0.07	<0.007	<0.007	<0.007	<0.007	<0.007
dieldrin	<2.5	<0.007	<2.5	<2.6	<0.007	<0.007	0.066	<0.007	<0.007	<0.007
endosulfan I	<10	0.27	<10	<10	0.136	<0.006	<0.006	<0.006	<0.006	0.025
endosulfan II	<10	<0.1	<10	<10	<0.011	<0.011	<0.011	<0.011	<0.011	<0.011
endosulfan sulfate	<5.6	<0.15	<5.6	<5.7	<0.042	<0.042	<0.042	<0.042	<0.042	<0.042
endrin	<10	<0.02	<10	<10	<0.020	<0.02	<0.02	<0.02	<0.02	<0.02
endrin aldehyde	<10	<0.022	<10	<10	<0.022	<0.022	<0.022	<0.022	<0.022	<0.022
heptachlor	<1.9	<0.04	<1.9	<1.9	<0.04	<0.004	<0.004	<0.004	<0.004	<0.004
heptachlor epoxide	<2.2	0.074	<2.2	<2.2	<0.05	<0.005	<0.005	<0.005	<0.005	<0.005
PCB-1016	<36	<0.34	<36	<37	<0.34	<0.034	<0.034	<0.034	<0.034	<0.034
PCB-1221	<30	<1.33	<30	<31	<1.33	<0.133	<0.133	<0.133	<0.133	<0.133
PCB-1232	<36	<0.62	<36	<37	<0.62	<0.062	<0.062	<0.062	<0.062	<0.062
PCB-1242	<36	<0.82	<36	<37	<0.82	<0.082	<0.082	<0.082	<0.082	<0.082
PCB-1248	<36	<0.86	<36	<37	<0.86	<0.086	<0.086	<0.086	<0.086	<0.086
PCB-1254	<36	<1.23	<36	<37	<1.23	<0.123	<0.123	<0.123	<0.123	<0.123
PCB-1260	<36	<1.74	<36	<37	<1.74	<0.174	<0.174	<0.174	<0.174	<0.174
toxaphene	<10	<6.94	<10	<10	<6.94	<0.694	<0.694	<0.694	<0.694	<0.694
Total Pesticide/PCB Compounds	0	0.534	0	0	0.136	0.005	0.066	0	0	0.025

Table E-4. Summary of Pesticide/PCB Compounds in Ground Water, Monsanto Company, W.G. Krummerich Plant, Sauget, Illinois. ***

Well Number:	DW-29	DW-30	DW-33	DW-34	DW-34	DW-34	DW-1-85	DW-1-85	BK-3	BK-3
Date:	9/84*	11/85	9/84**	9/84**	11/85	2/86	11/85	2/86	9/84	2/86
USEPA Priority Pollutant Pesticide/PCB Compounds concentrations are in ug/L										
aldrin	NA	<2.0	<0.004	<0.004	<3.8	<1.9	<3.8	<2	<0.004	<1.9
alpha-BHC	NA	<10	<0.002	<0.002	<20	<10	<20	<11	<0.002	<10
beta-BHC	NA	<4.5	<0.005	<0.005	<8.8	<4.4	<8.8	<4.7	0.013	<4.5
gamma-BHC	NA	<10	<0.003	<0.003	<20	<10	<20	<11	<0.003	<10
delta-BHC	NA	<3.2	<0.004	<0.004	<6.2	<3.1	<6.2	<3.3	<0.004	<3.2
chlordane	NA	<10	<0.061	<0.061	<20	<10	<20	<11	<0.061	<10
4,4'-DDT	NA	<2.9	<0.096	<0.096	<5.6	<2.8	<5.6	<3	<0.096	<2.9
4,4'-DDE	NA	<5.8	<0.007	<0.007	<11	<5.7	<11	<6	<0.007	<5.7
4,4'-DDD	NA	<4.8	<0.007	<0.007	<9.4	<4.7	<9.4	<5	<0.007	<4.8
dieldrin	NA	<2.6	0.02	<0.007	<5	<2.5	<5	<2.7	<0.007	<2.6
endosulfan I	NA	<10	<0.006	<0.006	<20	<10	<20	<11	<0.006	<10
endosulfan II	NA	<10	<0.011	<0.011	<20	<10	<20	<11	<0.011	<10
endosulfan sulfate	NA	<5.8	<0.042	<0.042	<11	<5.7	<11	<6	<0.042	<5.7
endrin	NA	<10	<0.02	<0.02	<20	<10	<20	<11	<0.02	<10
endrin aldehyde	NA	<10	<0.022	<0.022	<20	<10	<20	<11	<0.022	<10
heptachlor	NA	<2.0	<0.004	<0.004	<3.8	<1.9	<3.8	<2	0.019	<1.9
heptachlor epoxide	NA	<2.3	<0.005	<0.005	<4.4	<2.2	<4.4	<2.3	<0.005	<2.2
PCB-1016	NA	<37	<0.034	<0.034	<72	<36	<72	<38	<0.034	<37
PCB-1221	NA	<31	<0.133	<0.133	<60	<30	<60	<32	<0.133	<31
PCB-1232	NA	<37	<0.062	<0.062	<72	<36	<72	<38	<0.062	<37
PCB-1242	NA	<37	<0.082	<0.082	<72	<36	<72	<38	<0.082	<37
PCB-1248	NA	<37	<0.086	<0.086	<72	<36	<72	<38	<0.086	<37
PCB-1254	NA	<37	<0.123	<0.123	<72	<36	<72	<38	<0.123	<37
PCB-1260	NA	<37	<0.174	<0.174	<72	<36	<72	<38	<0.174	<37
toxaphene	NA	<10	<0.694	<0.694	<20	<10	<20	<11	<0.694	<10
Total Pesticide/PCB Compounds	NA	0	0.02	0	0	0	0	0	0.032	0

Table E-4. Summary of Pesticide/PCB Compounds in Ground Water, Monsanto Company, W.G. Krummrich Plant, Sauget, Illinois. ***

Well Number:	MB-6	MB-6	MB-6	MB-7	Field Blank	Trip Blank	Lab Blank
Date:	9/84**	11/85	2/86	9/84	6/84	6/84	9/84
USEPA Priority Pollutant Pesticide/PCB Compounds concentrations are in ug/L							
aldrin	<0.004	<1.9	<2	<0.004	<10	<10	<0.004
alpha-BHC	<0.002	<10	<10	0.0675	<10	<10	<0.002
beta-BHC	<0.005	<4.5	<4.6	<0.005	<10	<10	<0.005
gamma-BHC	<0.003	<10	<10	<0.003	<10	<10	<0.003
delta-BHC	<0.004	<3.2	<3.2	0.061	<10	<10	<0.004
chlordane	<0.061	<10	<10	<0.061	<100	<100	<0.061
4,4'-DDT	<0.096	<2.9	<2.9	<0.096	<10	<10	<0.096
4,4'-DDE	<0.007	<5.7	<5.9	<0.007	<10	<10	<0.007
4,4'-DDD	<0.007	<4.8	<4.9	<0.007	<10	<10	<0.007
dieldrin	<0.007	<2.6	<2.6	<0.007	<10	<10	<0.007
endosulfan I	<0.006	<10	<10	<0.006	<10	<10	<0.006
endosulfan II	<0.011	<10	<10	<0.011	<10	<10	<0.011
endosulfan sulfate	<0.042	<5.7	<5.8	<0.042	<10	<10	<0.042
endrin	<0.02	<10	<10	<0.02	<10	<10	<0.02
endrin aldehyde	<0.022	<10	<10	<0.022	<10	<10	<0.022
heptachlor	<0.004	<1.9	<2	<0.004	<10	<10	<0.004
heptachlor epoxide	<0.005	<2.2	<2.3	<0.005	<10	<10	<0.005
PCB-1016	<0.034	<37	<38	<0.034	<50	<50	<0.034
PCB-1221	<0.133	<31	<31	<0.133	<50	<50	<0.133
PCB-1232	<0.062	<37	<38	<0.062	<50	<50	<0.062
PCB-1242	<0.082	<37	<38	<0.082	<50	<50	<0.082
PCB-1248	<0.086	<37	<38	<0.086	<50	<50	<0.086
PCB-1254	<0.123	<37	<38	<0.123	<50	<50	<0.123
PCB-1260	<0.174	<37	<38	<0.174	<50	<50	<0.174
toxaphene	<0.694	<10	<10	<0.694	<250	<250	<0.694
Total Pesticide/PCB Compounds	0	0	0	0.1285	0	0	0

Table E-4. Summary of Pesticide/PCB Compounds in Ground Water, Monsanto Company, W.G. Krummrich Plant, Sauget, Illinois. ***

NA - Not analyzed.
@ - Replicate analysis was provided by ETC (Edison, New Jersey).
* - Replicate Analyses
** - Prior to analysis, this sample was held by Envirodyne Engineers, Inc. longer than the maximum allowable USEPA holding time.
*** - Envirodyne Engineers, Inc. (St. Louis, MO.) provided the laboratory services for the September 1984 sampling round. ETC (Edison, New Jersey) performed the analyses for the November 1984 through February 1986 sampling programs.
< - Indicates that the compound was not detected at the detection limit which is the value shown next to the symbol.

Table E-5. Summary of Metals and Miscellaneous Parameters in Ground Water, Monsanto Company, WG Krummrich Plant, Sauget, IL.

Well Number:	GM-1	GM-1	GM-1	GM-1	GM-2	GM-2	GM-2	GM-2	GM-3	GM-3
Date:	11/83	11/83*	2/84	5/84	11/83	11/83*	2/84	5/84	11/83	2/84
USEPA Priority Pollutant Metals (concentrations are in ug/L, except where noted)										
antimony	0.011	NA	NA	<0.05	0.165	NA	NA	<0.5	0.097	NA
arsenic	0.017	NA	NA	<0.01	<0.002	NA	NA	<0.01	0.007	NA
beryllium	0.023	NA	NA	<0.01	0.019	NA	NA	<0.01	0.027	NA
cadmium	<0.01	NA	NA	<0.02	0.030	NA	NA	<0.02	0.020	NA
chromium	0.411	NA	NA	<0.05	0.048	NA	NA	<0.05	0.051	NA
copper	NA	NA	NA	NA	NA	NA	NA	NA	NA	NA
lead	<0.001	NA	NA	<0.01	0.057	NA	NA	<0.01	0.035	NA
mercury	<0.0002	NA	NA	<0.0005	0.00047	NA	NA	<0.0005	0.00035	NA
nickel	0.08	NA	NA	<0.05	0.18	NA	NA	<0.05	0.09	NA
selenium	<0.002	NA	NA	<0.01	0.006	NA	NA	<0.01	<0.002	NA
silver	<0.001	NA	NA	<0.05	0.006	NA	NA	<0.05	0.002	NA
thallium	0.002	NA	NA	<0.2	0.062	NA	NA	<0.2	0.047	NA
zinc	0.334	NA	NA	0.07	3.26	NA	NA	0.52	6.41	NA
Miscellaneous Parameters										
pH (units)	NA	NA	8.1	7.6	NA	NA	7.5	7.3	8.5	8.2
spec. conductance (umhos/cm)	1,200	1,200	950	1,000	3,000	3,000	2,900	2,600	2,500	800
temperature (deg./centigrade)	12	12	14	14	11	11	14	15	12	13
TOC	608	248	24	13	638	448	7	8	72	9
total phenols	0.020	0.019	0.004	0.014	0.007	0.003	<0.002	<0.002	0.006	0.002
TOX	0.016	0.02	0.021	0.014	0.160	0.51	0.033	0.027	0.54	0.012
total dissolved solids (TDS)	NA	NA	NA	NA	NA	NA	NA	NA	NA	NA
bicarbonate, as CaCO3	NA	NA	NA	NA	NA	NA	NA	NA	NA	NA
calcium	NA	NA	NA	NA	NA	NA	NA	NA	NA	NA
chloride	NA	NA	50	48.5	NA	NA	275.0	169.0	NA	15
cyanide	<0.005	NA	NA	<0.005	0.005	NA	NA	<0.005	<0.005	NA
iron	NA	NA	NA	NA	NA	NA	NA	NA	NA	NA
magnesium	NA	NA	NA	NA	NA	NA	NA	NA	NA	NA
potassium	NA	NA	NA	NA	NA	NA	NA	NA	NA	NA
sodium	NA	NA	NA	NA	NA	NA	NA	NA	NA	NA
sulfate, as SO4	NA	NA	NA	NA	NA	NA	NA	NA	NA	NA

Table E-5. Suaaary of Metals and Miscellaneous Paraaeters in Ground Water, Monsanto Coapany, W6 Kruaarich Plant, Sauget, Il.

Well Nuaber:	GM-3	GM-3	GM-4A	GM-4A	GM-4A	GM-4B	GM-4B	GM-4B	GM-4B	GM-4B
Date:	5/84	5/84*	11/83	2/84	5/84	9/84	11/84	11/84*	2/85	11/85
USEPA Priority Pollutant Metals (concentrations are in ag/L, except where noted)										
antiaony	<0.5	<0.5	0.014	NA	<0.5	0.049	<0.07	<0.07	<0.1	NA
arsenic	<0.01	<0.01	<0.002	NA	<0.01	<0.001	<0.005	<0.005	<0.01	NA
beryllius	<0.01	<0.01	0.017	NA	<0.01	<0.002	<0.005	<0.005	<0.001	NA
cadaius	<0.02	<0.02	<0.01	NA	<0.02	<0.002	<0.005	<0.005	<0.004	NA
chroaius	<0.05	<0.05	<0.04	NA	<0.05	<0.004	<0.008	<0.008	<0.02	NA
copper	NA	NA	NA	NA	NA	<0.004	<0.008	<0.008	<0.01	NA
lead	<0.01	<0.01	<0.001	NA	<0.01	<0.004	<0.06	<0.06	<0.07	NA
aercury	<0.0005	<0.0005	<0.0002	NA	<0.0005	<0.0002	<0.0003	<0.0003	<0.0003	NA
nickel	<0.05	<0.05	<0.04	NA	<0.05	0.007	<0.01	<0.01	<0.01	NA
selaniua	<0.01	<0.01	<0.002	NA	<0.01	<0.001	<0.01	<0.005	<0.006	NA
silver	<0.05	<0.05	<0.001	NA	<0.05	<0.01	<0.008	<0.008	<0.008	NA
thalliua	<0.2	<0.02	0.003	NA	<0.2	0.212	<0.005	<0.005	<0.005	NA
zinc	1.09	1.11	0.014	NA	0.03	0.128	<0.008	<0.008	<0.006	NA
Miscellaneous Paraaeters										
pH (units)	7.9	7.9	7.8	7.6	7.1	6.6	7.0	7.0	7.5	6.7
spec. conductance (uahos/ca)	900	900	1,050	850	1,050	3,500	4,100	4,100	4,000	3,300
teaperature (deg./centigrade)	14	14	12	14	14	18	14	14	10	18
TOC	6	<5	42	12	6	34	NA	NA	NA	NA
total phenols	0.002	0.002	0.004	<0.002	0.003	NA	0.096	0.076	0.110	<0.05
TOX	0.005	0.01	0.017	0.019	0.007	NA	NA	NA	NA	NA
total dissolved solids (TDS)	NA	NA	NA	NA	NA	2,534	NA	NA	NA	NA
bicarbonate, as CACO3	NA	NA	NA	NA	NA	NA	NA	NA	NA	760
calciua	NA	NA	NA	NA	NA	NA	NA	NA	NA	270
chloride	11	12	NA	45	76	510	NA	NA	NA	449
cyanide	<0.005	<0.005	<0.005	NA	<0.005	NA	<0.025	<0.025	<0.025	<0.025
iron	NA	NA	NA	NA	NA	NA	NA	NA	NA	7.3
aagnesiua	NA	NA	NA	NA	NA	NA	NA	NA	NA	67.8
potassiua	NA	NA	NA	NA	NA	NA	NA	NA	NA	156
sodiua	NA	NA	NA	NA	NA	NA	NA	NA	NA	357
sulfate, as SO4	NA	NA	NA	NA	NA	NA	NA	NA	NA	770

Table E-5. Summary of Metals and Miscellaneous Parameters in Ground Water, Monsanto Company, WG Krummrich Plant, Sauget, Il.

Well Number:	GM-4B	GM-4C	GM-4C	GM-5	GM-5	GM-5	GM-6A	GM-6A	GM-6A	GM-6A
Date:	11/85*	2/85	5/85	11/83	2/84	5/84	11/83	2/84	5/84	11/84
USEPA Priority Pollutant Metals (concentrations are in mg/L, except where noted)										
antimony	NA	<0.07	<0.07	0.009	NA	<0.5	0.012	NA	<0.5	<0.08
arsenic	NA	<0.01	<0.01	<0.002	NA	<0.01	0.007	NA	<0.01	<0.005
beryllium	NA	<0.001	<0.001	0.013	NA	<0.01	0.012	NA	<0.01	<0.005
cadmium	NA	<0.003	<0.004	<0.01	NA	<0.02	0.01	NA	<0.02	<0.005
chromium	NA	<0.01	<0.01	<0.04	NA	<0.05	<0.04	NA	<0.05	<0.02
copper	NA	<0.02	<0.01	NA	NA	NA	NA	NA	NA	<0.01
lead	NA	<0.06	<0.07	0.001	NA	<0.01	0.004	NA	<0.01	<0.06
mercury	NA	<0.0003	<0.0002	<0.0002	NA	<0.0005	<0.0002	NA	<0.0005	<0.0003
nickel	NA	<0.04	<0.02	<0.04	NA	<0.05	0.05	NA	<0.05	0.014
selenium	NA	<0.006	<0.005	<0.002	NA	<0.01	0.002	NA	<0.01	0.015
silver	NA	<0.008	<0.009	<0.001	NA	<0.05	<0.001	NA	<0.05	<0.007
thallium	NA	0.006	<0.005	0.004	NA	<0.2	0.004	NA	<0.2	<0.005
zinc	NA	<0.05	0.04	0.011	NA	0.03	0.018	NA	0.05	0.012
Miscellaneous Parameters										
pH (units)	6.7	7.1	6.5	7.8	7.9	7.2	7.5	7.4	7.3	6.7
spec. conductance (umhos/cm)	3,300	2,600	1,200	625	650	700	2,000	1,900	2,600	1,470
temperature (deg./centigrade)	18	11	16	11	14	14	12	15	14	16.5
TC	NA	NA	NA	36	16	<5	36	11	11	NA
total phenols	<0.05	<0.05	<0.05	0.003	0.004	0.004	0.020	0.003	0.009	<0.05
TOX	NA	NA	NA	0.011	0.013	0.022	0.110	0.031	0.190	NA
total dissolved solids (TDS)	NA	NA	NA	NA	NA	NA	NA	NA	NA	NA
bicarbonate, as CACO3	810	NA	NA	NA	NA	NA	NA	NA	NA	NA
calcium	272	NA	NA	NA	NA	NA	NA	NA	NA	NA
chloride	451	NA	NA	NA	10	12	NA	55	117	NA
cyanide	<0.025	<0.025	<0.025	<0.005	NA	<0.005	<0.005	NA	<0.005	<0.025
iron	7.7	NA	NA	NA	NA	NA	NA	NA	NA	NA
magnesium	70.3	NA	NA	NA	NA	NA	NA	NA	NA	NA
potassium	150	NA	NA	NA	NA	NA	NA	NA	NA	NA
sodium	371	NA	NA	NA	NA	NA	NA	NA	NA	NA
sulfate, as SO4	770	NA	NA	NA	NA	NA	NA	NA	NA	NA

Table E-5. Summary of Metals and Miscellaneous Parameters in Ground Water, Monsanto Company, MG Krummrich Plant, Sauget, Il.

Well Number:	GM-6B	GM-6B	GM-6B	GM-7	GM-7	GM-7	GM-8	GM-8	GM-8	GM-8
Date:	9/84	11/84	11/85	11/83	2/84	5/84	11/83	2/84	5/84	11/84
USEPA Priority Pollutant Metals (concentrations are in ug/L, except where noted)										
antimony	0.053	<0.08	NA	0.01	NA	<0.5	0.012	NA	<0.5	<0.08
arsenic	<0.001	<0.005	NA	0.002	NA	0.03	<0.002	NA	<0.01	<0.005
beryllium	<0.002	<0.005	NA	0.01	NA	<0.01	0.012	NA	<0.01	<0.005
cadmium	<0.002	<0.005	NA	0.01	NA	-<0.02	<0.01	NA	<0.02	<0.005
chromium	<0.004	<0.02	NA	<0.04	NA	<0.05	<0.04	NA	<0.05	<0.02
copper	0.006	<0.01	NA	NA	NA	NA	NA	NA	NA	<0.01
lead	<0.004	<0.06	NA	0.001	NA	<0.01	0.005	NA	<0.01	<0.06
mercury	<0.0004	<0.0003	NA	<0.0002	NA	<0.005	<0.0002	NA	<0.0005	<0.0003
nickel	0.005	<0.01	NA	<0.04	NA	<0.05	<0.04	NA	<0.05	<0.01
selenium	<0.001	<0.005	NA	0.005	NA	<0.01	<0.002	NA	<0.01	0.005
silver	0.005	<0.007	NA	<0.001	NA	<0.05	0.002	NA	<0.05	<0.007
thallium	0.014	<0.005	NA	0.002	NA	<0.2	0.003	NA	<0.2	<0.005
zinc	0.078	<0.01	NA	0.015	NA	<0.03	0.010	NA	<0.03	0.015
Miscellaneous Parameters										
pH (units)	7.0	6.9	7.0	7.3	7.3	7.1	6.8	6.7	6.8	7.2
spec. conductance (umhos/cm)	1,660	2,500	1,500	1,150	1,400	1,300	1,200	1,150	1,500	825
temperature (deg./centigrade)	20	15	14	12	14	14	12	14	14	14
TOC	14	NA	NA	28	10	5	84	16	16	NA
total phenols	NA	0.057	<0.05	0.003	0.003	0.003	0.013	0.003	0.003	<0.05
TOX	NA	NA	NA	0.009	0.030	0.018	0.150	0.057	0.082	NA
total dissolved solids (TDS)	1,330	NA	NA	NA	NA	NA	NA	NA	NA	NA
bicarbonate, as CACO3	NA	NA	320	NA	NA	NA	NA	NA	NA	NA
calcium	NA	NA	232	NA	NA	NA	NA	NA	NA	NA
chloride	175	NA	111	NA	35	15	NA	10	150	NA
cyanide	NA	<0.025	<0.025	<0.005	NA	<0.005	0.021	NA	0.099	<0.025
iron	NA	NA	19.2	NA	NA	NA	NA	NA	NA	NA
magnesium	NA	NA	63.9	NA	NA	NA	NA	NA	NA	NA
potassium	NA	NA	11.1	NA	NA	NA	NA	NA	NA	NA
sodium	NA	NA	212	NA	NA	NA	NA	NA	NA	NA
sulfate, as SO4	NA	NA	69	NA	NA	NA	NA	NA	NA	NA

Table E-5. Summary of Metals and Miscellaneous Parameters in Ground Water, Monsanto Company, WS Krummrich Plant, Sauget, IL.

Well Number:	GM-8	GM-8	GM-9A	GM-9A	GM-9A	GM-9A	GM-9A	GM-9B	GM-9B	GM-9C
Date:	2/85	11/85	11/83	11/83*	2/84	2/84*	5/84	9/84	5/85	11/85
USEPA Priority Pollutant Metals (concentrations are in mg/L, except where noted)										
antimony	<0.07	NA	0.017	0.017	NA	NA	<0.5	0.049	<0.07	NA
arsenic	<0.01	NA	0.003	0.005	NA	NA	<0.01	<0.001	<0.01	NA
beryllium	<0.001	NA	0.013	<0.01	NA	NA	<0.01	<0.01	<0.001	NA
cadmium	<0.003	NA	0.010	<0.01	NA	NA	<0.02	7.46	<0.004	NA
chromium	<0.01	NA	<0.04	<0.04	NA	NA	<0.05	<0.04	<0.01	NA
copper	<0.02	NA	NA	NA	NA	NA	NA	0.05	<0.01	NA
lead	<0.06	NA	0.005	0.005	NA	NA	0.01	0.018	<0.07	NA
mercury	<0.0003	NA	<0.0002	<0.0002	NA	NA	<0.0005	<0.0002	<0.0002	NA
nickel	<0.04	NA	<0.04	<0.04	NA	NA	<0.05	0.026	<0.02	NA
selenium	<0.006	NA	0.004	0.003	NA	NA	<0.01	<0.001	<0.005	NA
silver	<0.008	NA	<0.001	<0.001	NA	NA	<0.05	<0.002	<0.009	NA
thallium	<0.005	NA	0.007	0.006	NA	NA	<0.2	0.015	<0.005	NA
zinc	0.06	NA	0.030	0.037	NA	NA	0.11	0.060	<0.01	NA
Miscellaneous Parameters										
pH (units)	7.3	7.2	7.0	NA	7.1	7.1	7.3	6.9	7.0	6.9
spec. conductance (umhos/cm)	950	1,250	8,500	8,500	4,000	4,000	3,500	1,450	950	900
temperature (deg./centigrade)	11	12	11	NA	14	14	16	18	16	16
TOC	NA	NA	112	130	25	24	27	50	NA	NA
total phenols	0.058	<0.05	0.190	NA	0.003	0.054	0.003	NA	<0.050	<0.050
TOX	NA	NA	0.750	NA	0.059	0.055	0.360	NA	NA	NA
total dissolved solids (TDS)	NA	NA	NA	NA	NA	NA	NA	956	NA	NA
bicarbonate, as CACO3	NA	NA	NA	NA	NA	NA	NA	NA	NA	NA
calcium	NA	NA	NA	NA	NA	NA	NA	NA	NA	NA
chloride	NA	NA	NA	NA	495	480	350	115	NA	NA
cyanide	<0.025	<0.025	0.016	NA	NA	NA	<0.005	NA	<0.025	<0.025
iron	NA	NA	NA	NA	NA	NA	NA	NA	NA	NA
magnesium	NA	NA	NA	NA	NA	NA	NA	NA	NA	NA
potassium	NA	NA	NA	NA	NA	NA	NA	NA	NA	NA
sodium	NA	NA	NA	NA	NA	NA	NA	NA	NA	NA
sulfate, as SO4	NA	NA	NA	NA	NA	NA	NA	NA	NA	NA

Table E-5. Summary of Metals and Miscellaneous Parameters in Ground Water, Monsanto Company, W6 Kruegrich Plant, Sauget, Il.

Well Number:	GM-9C	GM-9C	GM-9C	GM-10A	GM-10A	GM-10A	GM-10B	GM-10B	GM-10C	GM-10C
Date:	9/84	5/85	11/85	11/83	2/84	5/84	2/85	5/85	2/85	5/85
USEPA Priority Pollutant Metals (concentrations are in ug/L, except where noted)										
antimony	0.34	<0.07	NA	0.011	NA	<0.5	<0.07	<0.07	<0.08	<0.07
arsenic	<0.001	<0.01	NA	<0.002	NA	<0.01	0.016	0.036	<0.01	<0.01
beryllium	<0.01	<0.001	NA	<0.01	NA	<0.01	<0.001	<0.001	<0.001	<0.001
cadmium	4.82	<0.004	NA	<0.01	NA	<0.02	<0.003	<0.004	<0.005	<0.004
chromium	0.046	<0.01	NA	<0.04	NA	<0.05	<0.01	<0.01	<0.02	<0.01
copper	0.01	<0.01	NA	NA	NA	NA	<0.02	<0.01	<0.02	<0.01
lead	0.016	<0.07	NA	0.004	NA	<0.01	<0.06	<0.07	<0.1	<0.07
mercury	0.0004	<0.0002	NA	<0.0002	NA	<0.0005	<0.0003	<0.0002	<0.0003	<0.0002
nickel	0.068	<0.02	NA	<0.04	NA	<0.05	<0.04	<0.02	<0.03	<0.02
selenium	<0.001	<0.005	NA	0.003	NA	<0.01	<0.006	<0.005	<0.006	<0.005
silver	0.002	<0.009	NA	0.006	NA	<0.05	<0.008	<0.009	<0.01	<0.009
thallium	0.012	<0.005	NA	0.004	NA	<0.2	<0.005	<0.005	<0.005	<0.005
zinc	0.065	<0.01	NA	0.049	NA	0.09	<0.05	<0.01	<0.03	<0.01
Miscellaneous Parameters										
pH (units)	7.0	7.2	7.7	7.0	7.1	7.3	7.8	7.4	7.4	7.0
spec. conductance (umhos/cm)	1,800	900	2,300	2100	2,000	1,700	2,000	1,600	1,000	990
temperature (deg./centigrade)	18	16	17	11	15	15	10	16	11	16
TOC	8.8	NA	NA	72	9	10	NA	NA	NA	NA
total phenols	NA	<0.050	<0.050	<0.002	<0.002	<0.002	0.053	<0.05	<0.050	<0.05
TOX	NA	NA	NA	0.013	0.028	0.014	NA	NA	NA	NA
total dissolved solids (TDS)	1,080	NA	NA	NA	NA	NA	NA	NA	NA	NA
bicarbonate, as CACO3	NA	NA	NA	NA	NA	NA	NA	NA	NA	NA
calcium	NA	NA	NA	NA	NA	NA	NA	NA	NA	NA
chloride	236	NA	NA	NA	15	36	NA	NA	NA	NA
cyanide	NA	<0.025	<0.025	<0.005	NA	<0.005	<0.025	<0.025	<0.025	<0.025
iron	NA	NA	NA	NA	NA	NA	NA	NA	NA	NA
magnesium	NA	NA	NA	NA	NA	NA	NA	NA	NA	NA
potassium	NA	NA	NA	NA	NA	NA	NA	NA	NA	NA
sodium	NA	NA	NA	NA	NA	NA	NA	NA	NA	NA
sulfate, as SO4	NA	NA	NA	NA	NA	NA	NA	NA	NA	NA

Table E-5. Summary of Metals and Miscellaneous Parameters in Ground Water, Monsanto Company, W6 Krummrich Plant, Sauget, Il.

Well Number:	GM-11	GM-11	GM-11	GM-12A	GM-12A	GM-12A	GM-12A	GM-12A	GM-12A	GM-12A
Date:	11/83	2/84	5/84	11/83	2/84	2/84*	5/84	5/84*	11/84	11/84*
USEPA Priority Pollutant Metals (concentrations are in ug/L, except where noted)										
antimony	0.012	NA	<0.5	0.131	NA	NA	<0.5	<0.5	<0.07	<0.07
arsenic	<0.002	NA	<0.01	0.024	NA	NA	<0.01	<0.01	0.022	0.017
beryllium	<0.01	NA	<0.01	<0.01	NA	NA	<0.01	<0.01	<0.005	<0.005
cadmium	<0.01	NA	<0.02	0.03	NA	NA	<0.02	0.02	<0.005	<0.005
chromium	<0.04	NA	<0.05	<0.04	NA	NA	<0.05	<0.05	<0.008	<0.008
copper	NA	NA	NA	NA	NA	NA	NA	NA	<0.008	<0.008
lead	0.002	NA	<0.01	0.015	NA	NA	<0.01	<0.01	<0.06	<0.06
mercury	<0.0002	NA	<0.0005	<0.0002	NA	NA	<0.0005	<0.0005	<0.0003	<0.0003
nickel	<0.04	NA	<0.05	0.13	NA	NA	<0.05	<0.05	<0.01	<0.01
selenium	0.003	NA	<0.01	0.034	NA	NA	<0.01	<0.01	<0.01	<0.005
silver	<0.001	NA	<0.05	<0.001	NA	NA	<0.05	<0.05	<0.008	<0.008
thallium	0.003	NA	<0.2	0.023	NA	NA	<0.2	<0.2	<0.01	<0.005
zinc	0.019	NA	0.09	0.037	NA	NA	0.03	0.03	<0.008	<0.008
Miscellaneous Parameters										
pH (units)	7.3	7.2	7.3	7.9	7.8	7.8	7.8	7.8	6.9	6.9
spec. conductance (umhos/cm)	1,100	1,100	1,150	30,000	7,000	7,000	5,500	5,500	4,500	4,500
temperature (deg./centigrade)	12	13	14	12	16	16	16	16	14	14
TOC	36	18	10	113	29	30	25	22	NA	NA
total phenols	0.002	<0.002	<0.002	0.68	0.86	0.11	0.86	0.054	<0.05	0.079
TOX	0.022	0.033	0.015	4.7	5.2	5.1	4.7	5.5	NA	NA
total dissolved solids (TDS)	NA	NA	NA	NA	NA	NA	NA	NA	NA	NA
bicarbonate, as CACO3	NA	NA	NA	NA	NA	NA	NA	NA	NA	NA
calcium	NA	NA	NA	NA	NA	NA	NA	NA	NA	NA
chloride	NA	40	22	5,198	1,055	1,050	935	902	NA	NA
cyanide	<0.005	NA	<0.005	0.013	NA	NA	<0.005	<0.005	<0.025	<0.025
iron	NA	NA	NA	NA	NA	NA	NA	NA	NA	NA
magnesium	NA	NA	NA	NA	NA	NA	NA	NA	NA	NA
potassium	NA	NA	NA	NA	NA	NA	NA	NA	NA	NA
sodium	NA	NA	NA	NA	NA	NA	NA	NA	NA	NA
sulfate, as SO4	NA	NA	NA	NA	NA	NA	NA	NA	NA	NA

Table E-5. Summary of Metals and Miscellaneous Parameters in Ground Water, Monsanto Company, W6 Kruegrich Plant, Sauget, IL.

Well Number:	GM-12A	GM-12A	GM-12A	GM-12A	GM-12A	GM-12A	GM-12A	GM-12A	GM-12B	GM-12B
Date:	2/85	2/85*	5/85	5/85*	11/85	11/85*	2/86	2/86*	9/84	11/84
USEPA Priority Pollutant Metals (concentrations are in ug/L, except where noted)										
antimony	<0.1	<0.1	<0.07	<0.07	NA	NA	<0.050	<0.050	0.024	<0.07
arsenic	0.032	0.041	0.035	0.033	NA	NA	0.04	0.02	<0.001	<0.005
beryllium	<0.001	<0.001	<0.001	<0.001	NA	NA	<0.001	<0.001	<0.01	<0.005
cadmium	<0.004	<0.004	<0.004	<0.004	NA	NA	<0.003	<0.003	4.46	<0.005
chromium	<0.02	<0.02	<0.01	<0.01	NA	NA	<0.010	<0.010	0.089	<0.008
copper	<0.01	<0.01	<0.01	<0.01	NA	NA	<0.009	<0.009	0.05	<0.008
lead	<0.07	<0.07	<0.07	<0.07	NA	NA	<0.06	<0.06	0.012	<0.06
mercury	<0.0003	<0.0003	<0.0002	<0.0002	NA	NA	<0.0002	<0.0002	<0.0004	<0.0003
nickel	<0.01	<0.01	<0.02	<0.02	NA	NA	<0.01	<0.01	0.084	<0.01
selenium	<0.006	<0.006	<0.005	<0.005	NA	NA	<0.01	<0.01	<0.001	<0.005
silver	<0.008	<0.008	<0.009	<0.009	NA	NA	<0.01	<0.01	0.001	<0.008
thallium	<0.005	<0.005	<0.01	<0.01	NA	NA	<0.005	<0.30	0.013	<0.005
zinc	0.02	0.02	<0.01	<0.01	NA	NA	0.03	0.04	0.036	<0.008
Miscellaneous Parameters										
pH (units)	6.8	6.8	7.8	7.8	6.9	6.9	7.0	7.0	7.2	7.0
spec. conductance (umhos/cm)	3,000	3,000	1,050	1,050	9,800	9,800	3,125	3,125	1,400	1,400
temperature (deg./centigrade)	12	12	16	16	16	16	12	12	15	13
TOC	NA	NA	NA	NA	NA	NA	NA	NA	14	NA
total phenols	<0.05	0.062	0.069	0.055	0.251	0.189	0.0561	0.0637	NA	<0.05
TOX	NA	NA	NA	NA	NA	NA	NA	NA	NA	NA
total dissolved solids (TDS)	NA	NA	NA	NA	NA	NA	NA	NA	816	NA
bicarbonate, as CACO3	NA	NA	NA	NA	1090	850	NA	NA	NA	NA
calcium	NA	NA	NA	NA	524	514	NA	NA	NA	NA
chloride	NA	NA	NA	NA	1,610	1,070	NA	NA	109	NA
cyanide	<0.025	<0.025	<0.025	<0.025	<0.025	<0.025	<0.025	<0.025	NA	<0.025
iron	NA	NA	NA	NA	39.6	44.8	NA	NA	NA	NA
magnesium	NA	NA	NA	NA	129	127	NA	NA	NA	NA
potassium	NA	NA	NA	NA	11.4	11.2	NA	NA	NA	NA
sodium	NA	NA	NA	NA	1,250	1,230	NA	NA	NA	NA
sulfate, as SO4	NA	NA	NA	NA	930	910	NA	NA	NA	NA

Table E-5. Summary of Metals and Miscellaneous Parameters in Ground Water, Monsanto Company, WG Krummrich Plant, Sauget, IL.

Well Number:	GM-12B	GM-12C	GM-12C	GM-12C	GM-12C	GM-13	GM-13	GM-13	GM-14	GM-15
Date:	11/85	2/85	2/85*	5/85	5/85*	9/84	11/85	2/86	9/84	9/84
USEPA Priority Pollutant Metals (concentrations are in mg/L, except where noted)										
antimony	NA	<0.1	<0.1	<0.07	<0.07	0.042	NA	<0.05	0.187	0.021
arsenic	NA	<0.01	<0.01	<0.01	<0.01	0.003	NA	0.04	<0.001	<0.001
beryllium	NA	<0.001	<0.001	<0.001	<0.001	<0.01	NA	<0.001	<0.010	<0.01
cadmium	NA	<0.004	<0.004	<0.004	<0.004	16.1	NA	<0.003	25.8	9.16
chromium	NA	<0.02	<0.02	<0.01	<0.01	<0.04	NA	<0.01	<0.04	<0.04
copper	NA	<0.01	<0.01	<0.01	<0.01	0.02	NA	<0.009	0.03	0.02
lead	NA	<0.01	<0.07	<0.07	<0.07	0.021	NA	<0.06	0.10	0.018
mercury	NA	<0.0003	<0.0003	<0.0002	<0.0002	<0.0002	NA	<0.0002	<0.0004	<0.0002
nickel	NA	<0.01	<0.01	<0.02	<0.02	0.033	NA	0.03	0.111	0.038
selenium	NA	<0.006	<0.006	0.005	<0.005	<0.001	NA	<0.005	<0.001	<0.001
silver	NA	<0.008	<0.008	<0.009	<0.009	<0.002	NA	<0.01	<0.007	0.002
thallium	NA	<0.005	<0.005	<0.02	<0.010	0.014	NA	<0.005	0.04	0.011
zinc	NA	<0.006	<0.006	0.02	0.020	0.073	NA	0.04	0.221	0.018
Miscellaneous Parameters										
pH (units)	6.6	8.8	9.0	7.2	7.2	6.5	7.0	7.2	6.9	7.8
spec. conductance (umhos/cm)	2,800	2,500	2,500	780	780	2,500	1,100	1,170	3,400	2,400
temperature (deg./centigrade)	14	15	15	16	16	22	15	18	20	20
	NA	NA	NA	NA	NA	101	NA	NA	328	16
al phenols	0.0744	0.18	0.23	<0.05	<0.05	NA	16.1	1.330	NA	NA
TOX	NA	NA	NA	NA	NA	NA	NA	NA	NA	NA
total dissolved solids (TDS)	NA	NA	NA	NA	NA	1,648	NA	NA	4,938	1,624
bicarbonate, as CACO3	NA	NA	NA	NA	NA	NA	710	NA	NA	NA
calcium	NA	NA	NA	NA	NA	NA	69	NA	NA	NA
chloride	NA	NA	NA	NA	NA	470	46.3	NA	54	395
cyanide	<0.025	<0.025	0.034	<0.025	<0.025	NA	<0.025	<0.025	NA	NA
iron	NA	NA	NA	NA	NA	NA	6.8	NA	NA	NA
magnesium	NA	NA	NA	NA	NA	NA	10	NA	NA	NA
potassium	NA	NA	NA	NA	NA	NA	174	NA	NA	NA
sodium	NA	NA	NA	NA	NA	NA	71.5	NA	NA	NA
sulfate, as SO4	NA	NA	NA	NA	NA	NA	16	NA	NA	NA

Table E-5. Summary of Metals and Miscellaneous Parameters in Ground Water, Monsanto Company, MG Krummrich Plant, Sauget, Il.

Well Number:	GM-16A	SM-16A	GM-16A	GM-16B	GM-16B	GM-16B	GM-16B	GM-17A	GM-17A	GM-17A
Date:	9/84	5/85	11/85	9/84	5/85	11/85	2/86	9/84	11/84	11/85
USEPA Priority Pollutant Metals (concentrations are in mg/L, except where noted)										
antimony	0.056	<0.09	NA	0.018	<0.09	NA	NA	0.015	<0.08	NA
arsenic	<0.001	<0.01	NA	<0.001	<0.01	NA	NA	0.002	<0.01	NA
beryllium	<0.002	<0.002	NA	<0.002	<0.002	NA	NA	<0.002	<0.005	NA
cadmium	<0.002	<0.004	NA	<0.002	<0.004	NA	NA	<0.002	<0.005	NA
chromium	<0.004	<0.02	NA	<0.004	<0.02	NA	NA	<0.004	<0.02	NA
copper	0.008	<0.01	NA	<0.004	<0.01	NA	NA	<0.004	<0.01	NA
lead	<0.004	<0.1	NA	<0.004	<0.1	NA	NA	<0.004	<0.06	NA
mercury	0.00023	<0.0003	NA	<0.0004	<0.0003	NA	NA	<0.0002	<0.0003	NA
nickel	0.013	<0.03	NA	0.004	<0.03	NA	NA	0.023	<0.01	NA
selenium	<0.001	<0.005	NA	<0.001	<0.005	NA	NA	<0.001	<0.005	NA
silver	0.004	<0.01	NA	0.002	<0.01	NA	NA	<0.01	<0.007	NA
thallium	0.019	<0.005	NA	0.008	<0.005	NA	NA	0.17	<0.005	NA
zinc	0.04	0.02	NA	0.057	0.06	NA	NA	0.091	<0.01	NA
Miscellaneous Parameters										
pH (units)	6.9	6.9	6.9	7.8	7.2	7.0	7.1	6.4	6.6	6.7
spec. conductance (umhos/cm)	1,430	580	2,200	800	750	2,500	830	1,150	1,650	1,500
temperature (deg./centigrade)	20	16	13	20	16	13	13.5	20	16	16
TOC	5	NA	NA	10	NA	NA	NA	15	NA	NA
total phenols	NA	<0.050	<0.050	NA	0.057	0.0534	NA	NA	0.2	0.187
TOX	NA	NA	NA	NA	NA	NA	NA	NA	NA	NA
total dissolved solids (TDS)	914	NA	NA	354	NA	NA	NA	880	NA	NA
bicarbonate, as CaCO3	NA	NA	NA	NA	NA	NA	NA	NA	NA	NA
calcium	NA	NA	NA	NA	NA	NA	NA	NA	NA	NA
chloride	145	NA	NA	40	NA	NA	NA	120	NA	NA
cyanide	NA	<0.025	<0.025	NA	<0.025	<0.025	NA	NA	<0.025	<0.025
iron	NA	NA	NA	NA	NA	NA	NA	NA	NA	NA
magnesium	NA	NA	NA	NA	NA	NA	NA	NA	NA	NA
potassium	NA	NA	NA	NA	NA	NA	NA	NA	NA	NA
sodium	NA	NA	NA	NA	NA	NA	NA	NA	NA	NA
sulfate, as SO4	NA	NA	NA	NA	NA	NA	NA	NA	NA	NA

Table E-5. Summary of Metals and Miscellaneous Parameters in Ground Water, Monsanto Company, WG Krummrich Plant, Sauget, Il.

Well Number:	GM-17B	GM-17B	GM-17B	GM-17C	GM-17C	GM-17C	GM-18A	GM-18A	GM-19A	GM-19B
Date:	9/84	11/84	11/85	9/84	11/84	11/85	9/84	5/85	11/85	9/84
USEPA Priority Pollutant Metals (concentrations are in ug/L, except where noted)										
antimony	0.044	<0.08	NA	0.060	<0.08	NA	0.017	<0.09	NA	0.035
arsenic	0.001	<0.01	NA	<0.001	<0.005	NA	<0.001	<0.01	NA	0.001
beryllium	<0.002	<0.005	NA	<0.002	<0.005	NA	<0.002	<0.002	NA	<0.002
cadmium	<0.002	<0.005	NA	<0.002	<0.005	NA	<0.002	<0.004	NA	0.003
chromium	<0.004	<0.02	NA	<0.004	<0.02	NA	<0.004	<0.02	NA	<0.004
copper	<0.004	<0.01	NA	<0.004	<0.01	NA	<0.004	<0.01	NA	<0.004
lead	<0.004	<0.06	NA	<0.004	<0.06	NA	<0.004	<0.1	NA	<0.004
mercury	<0.0002	<0.0006	NA	<0.0002	<0.0003	NA	<0.0004	<0.0003	NA	<0.0002
nickel	0.008	<0.01	NA	0.009	<0.01	NA	<0.004	<0.03	NA	0.004
selenium	<0.001	<0.005	NA	<0.001	<0.005	NA	0.002	<0.005	NA	<0.001
silver	<0.01	<0.007	NA	<0.01	<0.007	NA	<0.010	<0.01	NA	<0.010
thallium	0.327	<0.005	NA	0.533	<0.005	NA	0.195	<0.005	NA	0.321
zinc	0.053	<0.01	NA	0.047	<0.01	NA	0.067	<0.01	NA	0.075
Miscellaneous Parameters										
pH (units)	6.6	6.9	7.4	6.3	6.8	7.3	6.5	6.6	7.0	6.4
spec. conductance (umhos/cm)	3,000	4,300	4,000	4,500	6,300	5,500	800	600	1,150	2,000
temperature (deg./centigrade)	20	18	16	20	18	16	18	16	12	18
TOC	56	NA	NA	17	NA	NA	4	NA	NA	4
total phenols	NA	0.82	1.69	NA	0.05	<0.05	NA	0.16	<0.05	NA
TOX	NA	NA	NA	NA	NA	NA	NA	NA	NA	NA
total dissolved solids (TDS)	2,516	NA	NA	3,384	NA	NA	663	NA	NA	1,544
bicarbonate, as CACO3	NA	NA	1,400	NA	NA	930	NA	NA	NA	NA
calcium	NA	NA	136	NA	NA	198	NA	NA	NA	NA
chloride	425	NA	633	1,265	NA	856	15	NA	NA	70
cyanide	NA	<0.025	<0.025	NA	<0.025	<0.025	NA	<0.025	<0.025	NA
iron	NA	NA	1	NA	NA	3.6	NA	NA	NA	NA
magnesium	NA	NA	28.5	NA	NA	64	NA	NA	NA	NA
potassium	NA	NA	16.4	NA	NA	406	NA	NA	NA	NA
sodium	NA	NA	825	NA	NA	785	NA	NA	NA	NA
sulfate, as SO4	NA	NA	21	NA	NA	700	NA	NA	NA	NA

Table E-5. Summary of Metals and Miscellaneous Parameters in Ground Water, Monsanto Company, WS Krummrich Plant, Sauget, IL.

Well Number:	GM-18B	GM-18B	GM-25A	GM-25A	GM-25B	GM-25B	GM-25B	GM-27B	GM-27B	GM-27B
Date:	5/85	11/85	9/84	11/84	9/84	11/84	11/85	9/84	11/85	2/86
USEPA Priority Pollutant Metals (concentrations are in ug/L, except where noted)										
antimony	<0.09	NA	0.011	<0.08	0.011	<0.07	NA	0.012	NA	<0.06
arsenic	<0.01	NA	<0.001	<0.005	<0.001	<0.005	NA	<0.001	NA	<0.01
beryllium	<0.002	NA	<0.002	<0.005	<0.002	<0.005	NA	<0.002	NA	<0.0009
cadmium	<0.004	NA	<0.002	<0.005	<0.002	<0.005	NA	<0.002	NA	<0.003
chromium	<0.02	NA	0.004	<0.02	<0.004	<0.008	NA	<0.004	NA	<0.008
copper	<0.01	NA	0.006	<0.01	<0.004	<0.008	NA	<0.004	NA	<0.006
lead	<0.1	NA	<0.004	<0.06	<0.004	<0.06	NA	<0.004	NA	<0.06
mercury	<0.0003	NA	<0.0002	<0.0003	<0.0002	<0.0003	NA	<0.0002	NA	<0.0002
nickel	<0.03	NA	<0.004	<0.01	<0.004	<0.01	NA	<0.004	NA	<0.009
selenium	<0.005	NA	0.002	<0.005	<0.001	<0.005	NA	<0.001	NA	<0.005
silver	<0.01	NA	<0.01	<0.007	<0.010	<0.008	NA	<0.01	NA	<0.010
thallium	<0.005	NA	0.127	<0.005	0.172	<0.01	NA	0.051	NA	<0.005
zinc	0.02	NA	0.07	<0.01	0.059	<0.008	NA	0.032	NA	0.02
Miscellaneous Parameters										
pH (units)	6.8	6.9	7.0	6.8	7.4	7.0	7.0	7.1	8.4	NA
spec. conductance (umhos/cm)	1,075	2,500	550	1,600	800	1,120	1,450	420	550	410
temperature (deg./centigrade)	16	15	19	14	18	13	12	18	12	12
TOC	NA	NA	3	NA	7	NA	NA	10	10.4	NA
total phenols	0.056	0.0506	NA	<0.05	NA	<0.05	<0.05	NA	<0.05	0.0536
TOX	NA	NA	NA	NA	NA	NA	NA	NA	NA	NA
total dissolved solids (TDS)	NA	NA	332	NA	629	NA	NA	294	NA	NA
bicarbonate, as CACO3	NA	NA	NA	NA	NA	NA	NA	NA	NA	NA
calcium	NA	NA	NA	NA	NA	NA	NA	NA	NA	NA
chloride	NA	NA	10	NA	35	NA	NA	35	NA	NA
cyanide	<0.025	<0.025	NA	<0.025	NA	<0.025	<0.025	NA	<0.025	<0.025
iron	NA	NA	NA	NA	NA	NA	NA	NA	NA	NA
magnesium	NA	NA	NA	NA	NA	NA	NA	NA	NA	NA
potassium	NA	NA	NA	NA	NA	NA	NA	NA	NA	NA
sodium	NA	NA	NA	NA	NA	NA	NA	NA	NA	NA
sulfate, as SO4	NA	NA	NA	NA	NA	NA	NA	NA	NA	NA

Table E-5. Summary of Metals and Miscellaneous Parameters in Ground Water, Monsanto Company, WG Krummrich Plant, Sauget, Il.

Well Number:	GM-27C	GM-27C	GM-27C	GM-28B	GM-28B	GM-28B	GM-28C	GM-28C	GM-28C	GM-29
Date:	9/84	11/85	2/86	9/84	11/85	2/86	9/84	11/85	2/86	9/84
USEPA Priority Pollutant Metals (concentrations are in mg/L, except where noted)										
antimony	0.011	NA	<0.06	0.015	NA	<0.06	0.039	NA	<0.06	0.183
arsenic	<0.001	NA	<0.01	<0.001	NA	<0.01	0.002	NA	<0.01	0.002
beryllium	<0.002	NA	<0.0009	<0.002	NA	<0.0009	<0.002	NA	<0.0009	<0.002
cadmium	<0.002	NA	<0.003	<0.002	NA	<0.003	0.003	NA	<0.003	0.014
chromium	<0.004	NA	<0.008	<0.004	NA	<0.008	<0.004	NA	<0.008	<0.004
copper	<0.004	NA	<0.006	<0.004	NA	<0.006	<0.004	NA	<0.006	0.016
lead	<0.004	NA	<0.06	<0.004	NA	<0.06	<0.004	NA	<0.06	0.007
mercury	<0.0002	NA	<0.0002	<0.0002	NA	<0.0002	<0.0002	NA	<0.0002	<0.0004
nickel	<0.004	NA	0.01	<0.004	NA	0.01	0.007	NA	<0.009	0.006
selenium	<0.001	NA	<0.005	<0.001	NA	<0.005	<0.001	NA	<0.005	<0.001
silver	<0.01	NA	<0.01	<0.01	NA	<0.01	<0.01	NA	<0.01	0.011
thallium	0.102	NA	<0.005	0.106	NA	<0.005	0.279	NA	<0.005	0.027
zinc	0.07	NA	0.058	0.038	NA	0.04	0.043	NA	0.16	0.079
Miscellaneous Parameters										
pH (units)	7.1	6.8	7.0	7.2	6.7	NA	6.9	7.3	NA	6.8
spec. conductance (umhos/cm)	700	1,600	1,000	1,100	2,500	1,230	2,500	2,500	1,290	2,300
temperature (deg./centigrade)	20	12	12	19	NA	13	19	NA	10	20
[illegible]	18	113.48	NA	114	1920	NA	252	1890	NA	16
total phenols	NA	0.346	0.152	NA	5.5	3.76	NA	1.036	1.980	NA
TOX	NA	NA	NA	NA	NA	NA	NA	NA	NA	NA
total dissolved solids (TDS)	482	NA	NA	832	NA	NA	2,250	NA	NA	4,236
bicarbonate, as CACO3	NA	NA	NA	NA	NA	NA	NA	820	NA	NA
calcium	NA	NA	NA	NA	NA	NA	NA	228	NA	NA
chloride	55	NA	NA	175	NA	NA	705	394	NA	1,105
cyanide	NA	NA	<0.025	NA	<0.025	<0.025	NA	<0.025	<0.025	NA
iron	NA	NA	NA	NA	NA	NA	NA	85.2	NA	NA
magnesium	NA	NA	NA	NA	NA	NA	NA	66.6	NA	NA
potassium	NA	NA	NA	NA	NA	NA	NA	11.9	NA	NA
sodium	NA	NA	NA	NA	NA	NA	NA	232	NA	NA
sulfate, as SO4	NA	NA	NA	NA	NA	NA	NA	16	NA	NA

Table E-5. Summary of Metals and Miscellaneous Parameters in Ground Water, Monsanto Company, W6 Krummrich Plant, Sauget, Il.

Well Number:	GM-29	GM-30	GM-30	GM-30	GM-31A	GM-31A	GM-31A	GM-31A	GM-31A	GM-31A
Date:	11/85	9/84	11/85	2/86	2/85	5/85	11/85	11/85*	2/86	2/86*
USEPA Priority Pollutant Metals (concentrations are in mg/L, except where noted)										
antimony	NA	0.211	NA	<0.06	<0.09	<0.09	NA	NA	NA	NA
arsenic	NA	0.001	NA	<0.01	<0.01	<0.01	NA	NA	NA	NA
beryllium	NA	<0.01	NA	<0.0009	<0.001	<0.002	NA	NA	NA	NA
cadmium	NA	<0.01	NA	0.005	<0.005	<0.004	NA	NA	NA	NA
chromium	NA	<0.04	NA	<0.008	<0.02	<0.02	NA	NA	NA	NA
copper	NA	0.04	NA	<0.006	<0.02	<0.01	NA	NA	NA	NA
lead	NA	0.17	NA	<0.06	<0.1	<0.1	NA	NA	NA	NA
mercury	NA	<0.00095	NA	0.0002	<0.0003	<0.0003	NA	NA	NA	NA
nickel	NA	0.584	NA	1.4	<0.03	<0.03	NA	NA	NA	NA
selenium	NA	<0.001	NA	0.06	<0.006	<0.005	NA	NA	NA	NA
silver	NA	0.004	NA	<0.01	<0.01	<0.01	NA	NA	NA	NA
thallium	NA	0.354	NA	<0.05	<0.005	<0.005	NA	NA	NA	NA
zinc	NA	0.558	NA	0.420	<0.03	0.1	NA	NA	NA	NA
Miscellaneous Parameters										
pH (units)	6.9	6.5	6.6	NA	7.4	6.4	7.0	7.0	7.3	7.3
spec. conductance (umhos/cm)	1,400	5,000	10,500	4,090	1,100	1,420	1,600	1,600	925	925
temperature (deg./centigrade)	15	24	14	11	11	16	16	16	11	11
TOC	NA	14	NA	NA	NA	NA	NA	NA	NA	NA
total phenols	0.0629	NA	0.0945	<0.05	89	19	10.5	10.5	NA	NA
TOX	NA	NA	NA	NA	NA	NA	NA	NA	NA	NA
total dissolved solids (TDS)	NA	10,422	NA	NA	NA	NA	NA	NA	NA	NA
bicarbonate, as CaCO3	NA	NA	NA	NA	NA	NA	NA	NA	NA	NA
calcium	NA	NA	NA	NA	NA	NA	NA	NA	NA	NA
chloride	NA	4,200	NA	NA	NA	NA	NA	NA	NA	NA
cyanide	<0.025	NA	<0.025	<0.025	<0.025	<0.025	<0.025	<0.025	NA	NA
iron	NA	NA	NA	NA	NA	NA	NA	NA	NA	NA
magnesium	NA	NA	NA	NA	NA	NA	NA	NA	NA	NA
potassium	NA	NA	NA	NA	NA	NA	NA	NA	NA	NA
sodium	NA	NA	NA	NA	NA	NA	NA	NA	NA	NA
sulfate, as SO4	NA	NA	NA	NA	NA	NA	NA	NA	NA	NA

Table E-5. Summary of Metals and Miscellaneous Parameters in Ground Water, Monsanto Company, W6 Krumrich Plant, Sauget, IL.

Well Number:	GM-31B	GM-31B	GM-31B	GM-31B	GM-31C	GM-31C	GM-31C	GM-31C	B-21B	B-21B
Date:	2/85	5/85	11/85	11/85*	2/85	5/85	11/85	11/85*	1/84	2/84
USEPA Priority Pollutant Metals (concentrations are in mg/L, except where noted)										
antimony	<0.07	<0.09	NA	NA	<0.07	<0.09	NA	NA	NA	NA
arsenic	<0.01	<0.01	NA	NA	<0.01	<0.01	NA	NA	NA	NA
beryllium	<0.001	<0.002	NA	NA	<0.001	<0.002	NA	NA	NA	NA
cadmium	<0.003	<0.004	NA	NA	<0.003	<0.004	NA	NA	NA	NA
chromium	<0.01	<0.02	NA	NA	<0.01	<0.02	NA	NA	NA	NA
copper	<0.02	<0.01	NA	NA	<0.02	<0.01	NA	NA	NA	NA
lead	<0.06	<0.1	NA	NA	<0.06	<0.1	NA	NA	NA	NA
mercury	<0.0003	<0.0003	NA	NA	<0.0003	<0.0003	NA	NA	NA	NA
nickel	<0.04	<0.03	NA	NA	<0.04	<0.03	NA	NA	NA	NA
selenium	<0.006	<0.005	NA	NA	<0.006	<0.005	NA	NA	NA	NA
silver	<0.008	<0.01	NA	NA	<0.008	<0.01	NA	NA	NA	NA
thallium	<0.005	<0.005	NA	NA	<0.005	<0.005	NA	NA	NA	NA
zinc	0.06	0.04	NA	NA	<0.05	0.02	NA	NA	NA	NA
Miscellaneous Parameters										
pH (units)	6.4	7.3	7.0	7.0	7.2	7.1	6.8	6.8	6.0	6.6
spec. conductance (umhos/cm)	1,450	2,000	3,000	3,000	1,400	1,850	3,750	3,750	4,100	1,650
temperature (deg./centigrade)	11	16	12	12	11	16	12	12	14.5	16.5
[illegible]	NA	NA	NA	NA	NA	NA	NA	NA	630	750
[illegible]al phenols	<0.05	<0.05	<0.05	0.0591	0.069	<0.05	<0.05	0.077	530*	630
TOX	NA	NA	NA	NA	NA	NA	NA	NA	260	490
total dissolved solids (TDS)	NA	NA	NA	NA	NA	NA	NA	NA	NA	NA
bicarbonate, as CACO3	NA	NA	NA	NA	NA	NA	NA	NA	NA	NA
calcium	NA	NA	NA	NA	NA	NA	NA	NA	NA	NA
chloride	NA	NA	NA	NA	NA	NA	NA	NA	NA	NA
cyanide	<0.025	<0.025	<0.025	<0.025	<0.025	<0.025	<0.025	<0.025	NA	NA
iron	NA	NA	NA	NA	NA	NA	NA	NA	NA	NA
magnesium	NA	NA	NA	NA	NA	NA	NA	NA	NA	NA
potassium	NA	NA	NA	NA	NA	NA	NA	NA	NA	NA
sodium	NA	NA	NA	NA	NA	NA	NA	NA	NA	NA
sulfate, as SO4	NA	NA	NA	NA	NA	NA	NA	NA	NA	NA

Table E-5. Summary of Metals and Miscellaneous Parameters in Ground Water, Monsanto Company, MG Krumarich Plant, Sauget, Il.

Well Number:	B-21B	B-21B	B-22A	B-22A	B-22A	B-22A	B-22B	B-22B	B-22B	B-22B
Date:	3/84	5/84	1/84	2/84	3/84	5/84	1/84	2/84	3/84	5/84
EPA Priority Pollutant Metals (concentrations are in ug/L, except where noted)										
ntimony	NA	NA	NA	NA	NA	NA	NA	NA	NA	NA
arsenic	NA	NA	NA	NA	NA	NA	NA	NA	NA	NA
eryllium	NA	NA	NA	NA	NA	NA	NA	NA	NA	NA
admium	NA	NA	NA	NA	NA	NA	NA	NA	NA	NA
hromium	NA	NA	NA	NA	NA	NA	NA	NA	NA	NA
opper	NA	NA	NA	NA	NA	NA	NA	NA	NA	NA
ead	NA	NA	NA	NA	NA	NA	NA	NA	NA	NA
ercury	NA	NA	NA	NA	NA	NA	NA	NA	NA	NA
nickel	NA	NA	NA	NA	NA	NA	NA	NA	NA	NA
elenium	NA	NA	NA	NA	NA	NA	NA	NA	NA	NA
ilver	NA	NA	NA	NA	NA	NA	NA	NA	NA	NA
hallium	NA	NA	NA	NA	NA	NA	NA	NA	NA	NA
inc	NA	NA	NA	NA	NA	NA	NA	NA	NA	NA
Miscellaneous Parameters										
H (units)	6.6	7.0	6.5	6.7	6.5	6.5	6.0	6.6	6.4	6.5
pec. conductance (umhos/cm)	3,150	3,350	2,750	1,300	3,200	4,200	2,050	1,000	1,950	1,850
emperature (deg./centigrade)	15.5	16	13.0	14	15	14.0	16.0	17	15	15.5
	1,600	1,600	NA	130	390	300	230	180	1,000	420
al phenols	380	380	21	35	28.5@	59	150	100	210	47@
TOX	440	540	330	92@	70	130	120	5.3	33	80
otal dissolved solids (TDS)	NA	NA	NA	NA	NA	NA	NA	NA	NA	NA
icarbonate, as CaCO3	NA	NA	NA	NA	NA	NA	NA	NA	NA	NA
alcium	NA	NA	NA	NA	NA	NA	NA	NA	NA	NA
hloride	NA	NA	NA	NA	NA	NA	NA	NA	NA	NA
yanide	NA	NA	NA	NA	NA	NA	NA	NA	NA	NA
iron	NA	NA	NA	NA	NA	NA	NA	NA	NA	NA
agnesium	NA	NA	NA	NA	NA	NA	NA	NA	NA	NA
otassium	NA	NA	NA	NA	NA	NA	NA	NA	NA	NA
odium	NA	NA	NA	NA	NA	NA	NA	NA	NA	NA
sulfate, as SO4	NA	NA	NA	NA	NA	NA	NA	NA	NA	NA

Table E-5. Summary of Metals and Miscellaneous Parameters in Ground Water, Monsanto Company, WS Krummrich Plant, Sauget, Il.

Well Number:	B-23B	B-23B	B-23B	B-23B	B-24A	B-24A	B-24A	B-24A	B-24A	B-24B
Date:	1/84	2/84	3/84	5/84	1/84	2/84	3/84	5/84	2/86	1/84
USEPA Priority Pollutant Metals (concentrations are in ug/L, except where noted)										
antimony	NA	NA	NA	NA	NA	NA	NA	NA	<0.05	NA
arsenic	NA	NA	NA	NA	NA	NA	NA	NA	0.01	NA
beryllium	NA	NA	NA	NA	NA	NA	NA	NA	0.002	NA
cadmium	NA	NA	NA	NA	NA	NA	NA	NA	<0.003	NA
chromium	NA	NA	NA	NA	NA	NA	NA	NA	0.11	NA
copper	NA	NA	NA	NA	NA	NA	NA	NA	<0.006	NA
lead	NA	NA	NA	NA	NA	NA	NA	NA	<0.06	NA
mercury	NA	NA	NA	NA	NA	NA	NA	NA	<0.0002	NA
nickel	NA	NA	NA	NA	NA	NA	NA	NA	0.05	NA
selenium	NA	NA	NA	NA	NA	NA	NA	NA	0.01	NA
silver	NA	NA	NA	NA	NA	NA	NA	NA	<0.01	NA
thallium	NA	NA	NA	NA	NA	NA	NA	NA	<0.1	NA
zinc	NA	NA	NA	NA	NA	NA	NA	NA	0.14	NA
Miscellaneous Parameters										
pH (units)	7.4	6.4	6.5	6.5	6.0	7.2	6.4	7.0	NA	6.0
spec. conductance (umhos/cm)	2,250	1,550	3,950	3,950	9,750	1,700	5,500	11,500	2,750	3,050
temperature (deg./centigrade)	NA	15.0	15	14.0	7	16.5	10	16	11	12.0
TOC	540	1,300	1,100	2,200	920	1,300	3,700	3,600	NA	330
total phenols	850	1,100#	1,000	900#	1,200	1,360	1,500	1,400	520	230
TOX	260	460	500	410	1,500	800	840	980	NA	310
total dissolved solids (TDS)	NA	NA	NA	NA	NA	NA	NA	NA	NA	NA
bicarbonate, as CACO3	NA	NA	NA	NA	NA	NA	NA	NA	NA	NA
calcium	NA	NA	NA	NA	NA	NA	NA	NA	NA	NA
chloride	NA	NA	NA	NA	NA	NA	NA	NA	NA	NA
cyanide	NA	NA	NA	NA	NA	NA	NA	NA	0.0638	NA
iron	NA	NA	NA	NA	NA	NA	NA	NA	NA	NA
magnesium	NA	NA	NA	NA	NA	NA	NA	NA	NA	NA
potassium	NA	NA	NA	NA	NA	NA	NA	NA	NA	NA
sodium	NA	NA	NA	NA	NA	NA	NA	NA	NA	NA
sulfate, as SO4	NA	NA	NA	NA	NA	NA	NA	NA	NA	NA

Table E-5. Summary of Metals and Miscellaneous Parameters in Ground Water, Monsanto Company, NE Krummrich Plant, Sauget, Il.

Well Number:	B-24B	B-24B	B-24B	B-24C	B-24C	B-24C	B-24C	B-25A	B-25A	B-25A
Date:	2/84	3/84	5/84	1/84	2/84	3/84	5/84	1/84	2/84	3/84
USEPA Priority Pollutant Metals (concentrations are in mg/L, except where noted)										
antimony	NA	NA	NA	NA	NA	NA	NA	NA	NA	NA
arsenic	NA	NA	NA	NA	NA	NA	NA	NA	NA	NA
beryllium	NA	NA	NA	NA	NA	NA	NA	NA	NA	NA
cadmium	NA	NA	NA	NA	NA	NA	NA	NA	NA	NA
chromium	NA	NA	NA	NA	NA	NA	NA	NA	NA	NA
copper	NA	NA	NA	NA	NA	NA	NA	NA	NA	NA
lead	NA	NA	NA	NA	NA	NA	NA	NA	NA	NA
mercury	NA	NA	NA	NA	NA	NA	NA	NA	NA	NA
nickel	NA	NA	NA	NA	NA	NA	NA	NA	NA	NA
selenium	NA	NA	NA	NA	NA	NA	NA	NA	NA	NA
silver	NA	NA	NA	NA	NA	NA	NA	NA	NA	NA
thallium	NA	NA	NA	NA	NA	NA	NA	NA	NA	NA
zinc	NA	NA	NA	NA	NA	NA	NA	NA	NA	NA
Miscellaneous Parameters										
pH (units)	6.6	6.4	6.0	7.0	6.4	6.4	6.5	6.2	6.3	5.9
spec. conductance (umhos/cm)	330	1,500	1,600	3,630	570	2,700	1,900	9,000	1,250	11,500
temperature (deg./centigrade)	14	12.5	14.5	12.5	14.5	14	15.0	NA	14	13.5
TOC	360	380	600	520	360	1,000	670	1,000	540	4,900
total phenols	300	90	394	390	360	800	69.5#	1,500	450	1,400
TOX	430	98	190	1,300	480	340	640	1,500	540	990
total dissolved solids (TDS)	NA	NA	NA	NA	NA	NA	NA	NA	NA	NA
bicarbonate, as CACO3	NA	NA	NA	NA	NA	NA	NA	NA	NA	NA
calcium	NA	NA	NA	NA	NA	NA	NA	NA	NA	NA
chloride	NA	NA	NA	NA	NA	NA	NA	NA	NA	NA
cyanide	NA	NA	NA	NA	NA	NA	NA	NA	NA	NA
iron	NA	NA	NA	NA	NA	NA	NA	NA	NA	NA
magnesium	NA	NA	NA	NA	NA	NA	NA	NA	NA	NA
potassium	NA	NA	NA	NA	NA	NA	NA	NA	NA	NA
sodium	NA	NA	NA	NA	NA	NA	NA	NA	NA	NA
sulfate, as SO4	NA	NA	NA	NA	NA	NA	NA	NA	NA	NA

Table E-5. Summary of Metals and Miscellaneous Parameters in Ground Water, Monsanto Company, #6 Krummrich Plant, Sauget, Il.

Well Number:	B-25A	B-25A	B-25A	B-25B	B-25B	B-25B	B-25B	B-25B	B-25B	B-26A
Date:	5/84	6/84	11/85	1/84	2/84	3/84	5/84	6/84	11/85	1/84
USEPA Priority Pollutant Metals (concentrations are in ug/L, except where noted)										
antimony	NA	0.68	NA	NA	NA	NA	NA	<0.06	NA	NA
arsenic	NA	<0.001	NA	NA	NA	NA	NA	<0.001	NA	NA
beryllium	NA	<0.01	NA	NA	NA	NA	NA	0.002	NA	NA
cadmium	NA	0.074	NA	NA	NA	NA	NA	0.008	NA	NA
chromium	NA	0.06	NA	NA	NA	NA	NA	0.150	NA	NA
copper	NA	0.03	NA	NA	NA	NA	NA	0.009	NA	NA
lead	NA	0.027	NA	NA	NA	NA	NA	0.041	NA	NA
mercury	NA	0.0052	NA	NA	NA	NA	NA	0.0006	NA	NA
nickel	NA	2.21	NA	NA	NA	NA	NA	0.091	NA	NA
selenium	NA	<0.001	NA	NA	NA	NA	NA	<0.001	NA	NA
silver	NA	0.018	NA	NA	NA	NA	NA	0.004	NA	NA
thallium	NA	0.108	NA	NA	NA	NA	NA	<0.002	NA	NA
zinc	NA	3.21	NA	NA	NA	NA	NA	0.054	NA	NA
Miscellaneous Parameters										
pH (units)	6.5	6.4	6.0	6.3	6.3	6.3	6.5	7.0	6.7	6.0
spec. conductance (umhos/cm)	1,250	16,000	5,500	3,150	1,500	1,250	2,900	2,600	4,500	1,370
temperature (deg./centigrade)	14.0	14	13	10.0	14	13.5	14.5	14	13	NA
TOC	3,400	NA	NA	370	590	980	820	NA	NA	4
total phenols	1,400	720	1,500	380	4250	290	160	95	410	0.46
TOX	780	NA	NA	380	430	310	180	NA	NA	14
total dissolved solids (TDS)	NA	NA	NA	NA	NA	NA	NA	NA	NA	NA
bicarbonate, as CACO3	NA	NA	NA	NA	NA	NA	NA	NA	NA	NA
calcium	NA	NA	NA	NA	NA	NA	NA	NA	NA	NA
chloride	NA	NA	NA	NA	NA	NA	NA	NA	NA	NA
cyanide	NA	<0.005	<0.025	NA	NA	NA	NA	<0.005	<0.025	NA
iron	NA	NA	NA	NA	NA	NA	NA	NA	NA	NA
magnesium	NA	NA	NA	NA	NA	NA	NA	NA	NA	NA
potassium	NA	NA	NA	NA	NA	NA	NA	NA	NA	NA
sodium	NA	NA	NA	NA	NA	NA	NA	NA	NA	NA
sulfate, as SO4	NA	NA	NA	NA	NA	NA	NA	NA	NA	NA

Table E-5. Summary of Metals and Miscellaneous Parameters in Ground Water, Monsanto Company, WG Krummrich Plant, Sauget, Il.

Well Number:	B-26A	B-26A	B-26A	B-26B	B-26B	B-26B	B-26B	B-27B	B-27B	B-27B
Date:	2/84	3/84	5/84	1/84	2/84	3/84	5/84	1/84	2/84	5/84
usEPA Priority Pollutant Metals (concentrations are in mg/L, except where noted)										
antimony	NA	NA	NA	NA	NA	NA	NA	NA	NA	NA
arsenic	NA	NA	NA	NA	NA	NA	NA	NA	NA	NA
beryllium	NA	NA	NA	NA	NA	NA	NA	NA	NA	NA
cadmium	NA	NA	NA	NA	NA	NA	NA	NA	NA	NA
chromium	NA	NA	NA	NA	NA	NA	NA	NA	NA	NA
copper	NA	NA	NA	NA	NA	NA	NA	NA	NA	NA
lead	NA	NA	NA	NA	NA	NA	NA	NA	NA	NA
mercury	NA	NA	NA	NA	NA	NA	NA	NA	NA	NA
nickel	NA	NA	NA	NA	NA	NA	NA	NA	NA	NA
selenium	NA	NA	NA	NA	NA	NA	NA	NA	NA	NA
silver	NA	NA	NA	NA	NA	NA	NA	NA	NA	NA
thallium	NA	NA	NA	NA	NA	NA	NA	NA	NA	NA
zinc	NA	NA	NA	NA	NA	NA	NA	NA	NA	NA
Miscellaneous Parameters										
pH (units)	6.9	6.8	6.5	6.0	6.8	6.6	6.5	6.6	6.2	6.5
spec. conductance (umhos/cm)	440	1,000	1,600	2,030	490	1,100	1,050	3,000	1,200	2,000
temperature (deg./centigrade)	13	15	15.0	13.0	13.5	14.0	13.0	NA	13	14.5
[illegible]	19	76	13	2	41	310	220	270	330	430
[illegible]al phenols	0.36#	0.34	0.155#	2.65#	2.95#	1.7	1.55#	190	200	130
TOX	1.8	0.35	1.8	20	8.4	0.85	2.0	190	140	74
total dissolved solids (TDS)	NA	NA	NA	NA	NA	NA	NA	NA	NA	NA
bicarbonate, as CACO3	NA	NA	NA	NA	NA	NA	NA	NA	NA	NA
calcium	NA	NA	NA	NA	NA	NA	NA	NA	NA	NA
chloride	NA	NA	NA	NA	NA	NA	NA	NA	NA	NA
cyanide	NA	NA	NA	NA	NA	NA	NA	NA	NA	NA
iron	NA	NA	NA	NA	NA	NA	NA	NA	NA	NA
magnesium	NA	NA	NA	NA	NA	NA	NA	NA	NA	NA
potassium	NA	NA	NA	NA	NA	NA	NA	NA	NA	NA
sodium	NA	NA	NA	NA	NA	NA	NA	NA	NA	NA
sulfate, as SO4	NA	NA	NA	NA	NA	NA	NA	NA	NA	NA

Table E-5. Summary of Metals and Miscellaneous Parameters in Ground Water, Monsanto Company, WG Krummrich Plant, Sauget, IL.

Well Number:	B-27B	B-27B	B-27B	B-28A	B-28A	B-28A	B-28A	B-28A	B-28B	B-28B
Date:	5/84	9/84	9/84*	1/84	2/84	3/84	5/84	2/86	1/84	2/84
USEPA Priority Pollutant Metals (concentrations are in mg/L, except where noted)										
antimony	NA	0.056	NA	NA	NA	NA	NA	<0.06	NA	NA
arsenic	NA	<0.001	NA	NA	NA	NA	NA	0.11	NA	NA
beryllium	NA	<0.002	NA	NA	NA	NA	NA	<0.0009	NA	NA
cadmium	NA	0.003	NA	NA	NA	NA	NA	<0.003	NA	NA
chromium	NA	0.008	NA	NA	NA	NA	NA	<0.009	NA	NA
copper	NA	<0.004	NA	NA	NA	NA	NA	<0.006	NA	NA
lead	NA	<0.004	NA	NA	NA	NA	NA	<0.06	NA	NA
mercury	NA	<0.0002	NA	NA	NA	NA	NA	<0.0002	NA	NA
nickel	NA	0.054	NA	NA	NA	NA	NA	0.01	NA	NA
selenium	NA	<0.001	NA	NA	NA	NA	NA	0.01	NA	NA
silver	NA	<0.01	NA	NA	NA	NA	NA	<0.01	NA	NA
thallium	NA	0.125	NA	NA	NA	NA	NA	0.005	NA	NA
zinc	NA	0.185	NA	NA	NA	NA	NA	0.04	NA	NA
Miscellaneous Parameters										
pH (units)	6.5	6.3	6.3	7.0	7.1	6.9	6.5	NA	6.9	6.6
spec. conductance (umhos/cm)	3,100	2,200	2,200	1,950	380	1,750	2,500	1,300	1,450	390
temperature (deg./centigrade)	14	20	20	12.0	13	17.0	15.0	13	12.5	13
	520	575	NA	NA	12	20	24	NA	80	30
total phenols	150	NA	NA	0.48	0.3	0.5	0.70#	<0.05	0.705#	0.41#
TOX	79	NA	NA	530	1.1	1.8	1.6	NA	6.7	1.1
total dissolved solids (TDS)	NA	3,658	485	NA	NA	NA	NA	NA	NA	NA
bicarbonate, as CACO3	NA	NA	NA	NA	NA	NA	NA	NA	NA	NA
calcium	NA	NA	NA	NA	NA	NA	NA	NA	NA	NA
chloride	NA	450	NA	NA	NA	NA	NA	NA	NA	NA
cyanide	NA	NA	NA	NA	NA	NA	NA	<0.025	NA	NA
iron	NA	NA	NA	NA	NA	NA	NA	NA	NA	NA
magnesium	NA	NA	NA	NA	NA	NA	NA	NA	NA	NA
potassium	NA	NA	NA	NA	NA	NA	NA	NA	NA	NA
sodium	NA	NA	NA	NA	NA	NA	NA	NA	NA	NA
sulfate, as SO4	NA	NA	NA	NA	NA	NA	NA	NA	NA	NA

Table E-5. Summary of Metals and Miscellaneous Parameters in Ground Water, Monsanto Company, WG Krummrich Plant, Sauget, Il.

Well Number:	B-28B	B-28B	B-29A	B-29A	B-29A	B-29A	B-29A	B-29A	B-29B	B-29B
Date:	3/84	5/84	1/84	2/84	3/84	5/84	6/84	11/85	1/84	2/84
USEPA Priority Pollutant Metals (concentrations are in mg/L, except where noted)										
antimony	NA	NA	NA	NA	NA	NA	2.6	NA	NA	NA
arsenic	NA	NA	NA	NA	NA	NA	0.001	NA	NA	NA
beryllium	NA	NA	NA	NA	NA	NA	<0.01	NA	NA	NA
cadmium	NA	NA	NA	NA	NA	NA	0.012	NA	NA	NA
chromium	NA	NA	NA	NA	NA	NA	<0.04	NA	NA	NA
copper	NA	NA	NA	NA	NA	NA	0.02	NA	NA	NA
lead	NA	NA	NA	NA	NA	NA	<0.1	NA	NA	NA
mercury	NA	NA	NA	NA	NA	NA	0.0069	NA	NA	NA
nickel	NA	NA	NA	NA	NA	NA	0.185	NA	NA	NA
selenium	NA	NA	NA	NA	NA	NA	<0.001	NA	NA	NA
silver	NA	NA	NA	NA	NA	NA	<0.02	NA	NA	NA
thallium	NA	NA	NA	NA	NA	NA	0.042	NA	NA	NA
zinc	NA	NA	NA	NA	NA	NA	0.069	NA	NA	NA
Miscellaneous Parameters										
pH (units)	6.6	6.5	6.8	6.5	6.7	6.5	6.8	6.9	6.9	6.9
spec. conductance (umhos/cm)	1,100	1,250	8,000	2,900	8,500	9,000	7,000	11,500	4,550	1,500
temperature (deg./centigrade)	15	14.0	12.0	9.0	15.0	13.0	14	13	12.5	14
TOC	30	30	5,400	7,000	390	7,900	NA	NA	4,400	3,100
total phenols	0.44#	0.375#	7,200	7,600	8,800	6,800	2.0	10000	5,100	3,400
TOX	0.85	1.5	390	645#	630#	580	NA	NA	1,200	410
total dissolved solids (TDS)	NA	NA	NA	NA	NA	NA	NA	NA	NA	NA
bicarbonate, as CACO3	NA	NA	NA	NA	NA	NA	NA	NA	NA	NA
calcium	NA	NA	NA	NA	NA	NA	NA	NA	NA	NA
chloride	NA	NA	NA	NA	NA	NA	NA	NA	NA	NA
cyanide	NA	NA	NA	NA	NA	NA	<0.005	<0.025	NA	NA
iron	NA	NA	NA	NA	NA	NA	NA	NA	NA	NA
magnesium	NA	NA	NA	NA	NA	NA	NA	NA	NA	NA
potassium	NA	NA	NA	NA	NA	NA	NA	NA	NA	NA
sodium	NA	NA	NA	NA	NA	NA	NA	NA	NA	NA
sulfate, as SO4	NA	NA	NA	NA	NA	NA	NA	NA	NA	NA

Table E-5. Summary of Metals and Miscellaneous Parameters in Ground Water, Monsanto Company, WG Krummrich Plant, Sauget, IL.

Well Number:	B-29B	B-29B	B-29B	B-29B	B-29B	B-29B	B-29B	B-30B	B-30B	B-30B
Date:	3/84	5/84	6/84	6/84*	6/84**	11/84	11/85	1/84	2/84	3/84
USEPA Priority Pollutant Metals (concentrations are in mg/L, except where noted)										
antimony	NA	NA	0.15	<0.14	<0.1	<0.07	NA	NA	NA	NA
arsenic	NA	NA	0.003	<0.001	<0.005	0.019	NA	NA	NA	NA
beryllium	NA	NA	<0.01	<0.010	<0.005	<0.005	NA	NA	NA	NA
cadmium	NA	NA	<0.01	<0.010	<0.007	<0.005	NA	NA	NA	NA
chromium	NA	NA	<0.04	<0.050	<0.020	<0.008	NA	NA	NA	NA
copper	NA	NA	<0.04	<0.040	<0.010	<0.008	NA	NA	NA	NA
lead	NA	NA	<0.01	<0.1	<0.1	<0.06	NA	NA	NA	NA
mercury	NA	NA	0.0064	<0.0051	<0.003	<0.002	NA	NA	NA	NA
nickel	NA	NA	0.076	0.079	0.04	0.031	NA	NA	NA	NA
selenium	NA	NA	<0.001	<0.001	0.009	<0.01	NA	NA	NA	NA
silver	NA	NA	<0.02	0.020	<0.01	<0.008	NA	NA	NA	NA
thallium	NA	NA	0.025	0.021	<0.005	<0.01	NA	NA	NA	NA
zinc	NA	NA	0.049	0.071	0.02	0.013	NA	NA	NA	NA
Miscellaneous Parameters										
pH (units)	6.7	6.5	6.9	6.9	6.9	7.2	6.9	6.8	6.7	6.6
spec. conductance (umhos/cm)	4,000	4,300	4,100	4,100	4100	5,000	5,400	8,000	1,950	2,200
temperature (deg./centigrade)	13.5	14.0	13.5	13.5	13.5	14	14	12.0	14.0	13.5
TOC	2,200	4,500	NA	NA	NA	NA	NA	1,400	630	730
total phenols	5,000	4,400	5,100	2,000	3040	3,300	10,000	1,200	630	420
TOX	300	400	NA	NA	NA	NA	NA	310	420	270
total dissolved solids (TDS)	NA	NA	NA	NA	NA	NA	NA	NA	NA	NA
bicarbonate, as CaCO3	NA	NA	NA	NA	NA	NA	1,300	NA	NA	NA
calcium	NA	NA	NA	NA	NA	NA	53.5	NA	NA	NA
chloride	NA	NA	NA	NA	NA	NA	351	NA	NA	NA
cyanide	NA	NA	<0.005	<0.005	<0.025	<0.025	<0.025	NA	NA	NA
iron	NA	NA	NA	NA	NA	NA	0.6	NA	NA	NA
magnesium	NA	NA	NA	NA	NA	NA	20.5	NA	NA	NA
potassium	NA	NA	NA	NA	NA	NA	11.5	NA	NA	NA
sodium	NA	NA	NA	NA	NA	NA	1,150	NA	NA	NA
sulfate, as SO4	NA	NA	NA	NA	NA	NA	730	NA	NA	NA

Table E-5. Summary of Metals and Miscellaneous Parameters in Ground Water, Monsanto Company, WG Krummrich Plant, Sauget, IL.

Well Number:	B-30B	B-30B	B-31B	B-31B	B-31B	B-31B	B-31C	B-31C	B-31C	B-31C
Date:	5/84	9/84	3/84	5/84	11/85	2/86	1/84	2/84	3/84	5/84
USEPA Priority Pollutant Metals (concentrations are in ug/L, except where noted)										
antimony	NA	0.072	NA	NA	<0.08	<0.06	NA	NA	NA	NA
arsenic	NA	0.006	NA	NA	<0.01	<0.01	NA	NA	NA	NA
beryllium	NA	<0.002	NA	NA	<0.0009	<0.0006	NA	NA	NA	NA
cadaium	NA	0.003	NA	NA	<0.002	<0.004	NA	NA	NA	NA
chromium	NA	<0.004	NA	NA	<0.02	0.040	NA	NA	NA	NA
copper	NA	0.004	NA	NA	<0.008	<0.020	NA	NA	NA	NA
lead	NA	0.005	NA	NA	<0.07	<0.060	NA	NA	NA	NA
mercury	NA	0.00091	NA	NA	<0.0003	<0.0003	NA	NA	NA	NA
nickel	NA	0.033	NA	NA	0.02	0.010	NA	NA	NA	NA
selenium	NA	<0.001	NA	NA	<0.005	<0.005	NA	NA	NA	NA
silver	NA	<0.01	NA	NA	<0.01	<0.030	NA	NA	NA	NA
thallium	NA	0.41	NA	NA	<0.005	<0.005	NA	NA	NA	NA
zinc	NA	0.12	NA	NA	0.04	0.05	NA	NA	NA	NA
Miscellaneous Parameters										
pH (units)	7.0	6.9	6.6	7.0	7.1	6.7	6.9	6.9	7.0	7.0
spec. conductance (umhos/cm)	4,950	3,500	950	1,050	2,500	1,375	1,050	350	900	975
temperature (deg./centigrade)	15.0	19	15.0	13.0	15	14	13	15	15	13.5
TOC	1,100	127	48	65	NA	NA	6	14	21	13
total phenols	4100	NA	0.31	0.028	<0.05	<0.05	0.2	0.23	0.76	0.2958
TOX	240	NA	1.4	0.14	NA	NA	1.2	0.4	0.28	0.48
total dissolved solids (TDS)	NA	4,704	NA	NA	NA	NA	NA	NA	NA	NA
bicarbonate, as CACO3	NA	NA	NA	NA	NA	NA	NA	NA	NA	NA
calcium	NA	NA	NA	NA	NA	NA	NA	NA	NA	NA
chloride	NA	990	NA	NA	NA	NA	NA	NA	NA	NA
cyanide	NA	NA	NA	NA	<0.025	<0.025	NA	NA	NA	NA
iron	NA	NA	NA	NA	NA	NA	NA	NA	NA	NA
magnesium	NA	NA	NA	NA	NA	NA	NA	NA	NA	NA
potassium	NA	NA	NA	NA	NA	NA	NA	NA	NA	NA
sodium	NA	NA	NA	NA	NA	NA	NA	NA	NA	NA
sulfate, as SO4	NA	NA	NA	NA	NA	NA	NA	NA	NA	NA

Table E-5. Summary of Metals and Miscellaneous Parameters in Ground Water, Monsanto Company, W6 Krumrich Plant, Sauget, IL.

Well Number:	B-31C	B-31C	B-31C	B-31C	B-101	B-102	GM-106	GM-106	GM-106	P-1
Date:	9/84	9/84*	11/85	2/86	9/84	9/84	11/85	2/86	2/86*	1/84
USEPA Priority Pollutant Metals (concentrations are in mg/L, except where noted)										
antimony	0.074	NA	<0.08	<0.06	0.019	0.078	<0.06	<0.050	<0.050	NA
arsenic	<0.001	NA	<0.01	<0.01	<0.001	<0.001	<0.01	<0.010	<0.010	NA
beryllium	<0.002	NA	<0.0009	<0.0009	<0.002	<0.002	<0.001	<0.001	<0.001	NA
cadmium	<0.002	NA	<0.002	<0.003	<0.002	<0.002	<0.004	<0.003	<0.003	NA
chromium	<0.004	NA	<0.02	<0.008	<0.004	<0.004	<0.02	<0.010	<0.010	NA
copper	<0.004	NA	<0.008	<0.006	<0.004	<0.004	<0.01	<0.009	<0.009	NA
lead	<0.004	NA	<0.07	<0.06	0.013	0.009	<0.05	<0.06	<0.060	NA
mercury	<0.0004	NA	<0.0003	<0.0002	<0.0004	<0.0004	<0.0002	<0.0002	<0.0002	NA
nickel	0.014	NA	<0.01	<0.009	<0.004	0.007	<0.02	<0.01	<0.010	NA
selenium	<0.001	NA	<0.005	<0.005	<0.001	<0.001	<0.005	<0.005	<0.005	NA
silver	0.003	NA	<0.01	<0.010	<0.002	0.003	<0.008	<0.010	<0.010	NA
thallium	0.011	NA	<0.005	<0.005	0.018	0.02	<0.005	<0.010	<0.005	NA
zinc	0.039	NA	0.05	0.064	0.26	0.561	<0.02	0.030	0.050	NA
Miscellaneous Parameters										
pH (units)	7.0	7.0	7.4	7.0	6.9	6.6	7.5	7.6	7.6	7.0
spec. conductance (umhos/cm)	400	400	2,750	950	1,050	1,620	1,300	1,060	1,060	850
temperature (deg./centigrade)	20	20	15	11	21	19	12	14	14	NA
TOC	8.1	NA	NA	NA	257	9	100*	NA	NA	9
total phenols	NA	NA	<0.05	<0.05	NA	NA	0.19	0.4	0.4	0.179
TOX	NA	NA	NA	NA	NA	NA	NA	NA	NA	1.9
total dissolved solids (TDS)	774	NA	NA	NA	976	1,276	NA	NA	NA	NA
bicarbonate, as CaCO3	NA	NA	NA	NA	NA	NA	NA	NA	NA	NA
calcium	NA	NA	NA	NA	NA	NA	NA	NA	NA	NA
chloride	29	NA	NA	NA	200	350	NA	NA	NA	NA
cyanide	NA	NA	<0.025	<0.025	NA	NA	0.24	0.172	0.179	NA
iron	NA	NA	NA	NA	NA	NA	NA	NA	NA	NA
magnesium	NA	NA	NA	NA	NA	NA	NA	NA	NA	NA
potassium	NA	NA	NA	NA	NA	NA	NA	NA	NA	NA
sodium	NA	NA	NA	NA	NA	NA	NA	NA	NA	NA
sulfate, as SO4	NA	NA	NA	NA	NA	NA	NA	NA	NA	NA

Table E-5. Summary of Metals and Miscellaneous Parameters in Ground Water, Monsanto Company, WG Krusarich Plant, Sauget, Il.

Well Number:	P-1	P-1	P-1
Date:	2/84	3/84	5/84
USEPA Priority Pollutant Metals (concentrations are in mg/L, except where noted)			
antimony	NA	NA	NA
arsenic	NA	NA	NA
beryllium	NA	NA	NA
cadmium	NA	NA	NA
chromium	NA	NA	NA
copper	NA	NA	NA
lead	NA	NA	NA
mercury	NA	NA	NA
nickel	NA	NA	NA
selenium	NA	NA	NA
silver	NA	NA	NA
thallium	NA	NA	NA
zinc	NA	NA	NA
Miscellaneous Parameters			
pH (units)	7.3	7.0	6.0
spec. conductance (umhos/cm)	NA	650	750
temperature (deg./centigrade)	12.0	14.0	13.5
TOC	26	15	32
total phenols	0.11	0.16#	0.22
TOX	2.0	0.35	1.1
total dissolved solids (TDS)	NA	NA	NA
bicarbonate, as CACO3	NA	NA	NA
calcium	NA	NA	NA
chloride	NA	NA	NA
cyanide	NA	NA	NA
iron	NA	NA	NA
magnesium	NA	NA	NA
potassium	NA	NA	NA
sodium	NA	NA	NA
sulfate, as SO4	NA	NA	NA

Table E-5. Summary of Metals and Miscellaneous Parameters in Ground Water, Monsanto Company, WG Krummrich Plant, Sauget, IL.

Well Number:	P-1	P-2	P-2	P-2	P-2	P-2	P-2	P-3	P-3	P-3
Date:	9/84	1/84	2/84	3/84	5/84	6/84	11/85	1/84	2/84	3/84
USEPA Priority Pollutant Metals (concentrations are in mg/L, except where noted)										
antimony	0.065	NA	NA	NA	NA	0.004	NA	NA	NA	NA
arsenic	0.007	NA	NA	NA	NA	0.041	NA	NA	NA	NA
beryllium	<0.002	NA	NA	NA	NA	0.098	NA	NA	NA	NA
cadmium	<0.002	NA	NA	NA	NA	0.002	NA	NA	NA	NA
chromium	<0.004	NA	NA	NA	NA	0.005	NA	NA	NA	NA
copper	<0.004	NA	NA	NA	NA	0.007	NA	NA	NA	NA
lead	<0.004	NA	NA	NA	NA	<0.004	NA	NA	NA	NA
mercury	<0.0004	NA	NA	NA	NA	<0.0002	NA	NA	NA	NA
nickel	0.006	NA	NA	NA	NA	0.007	NA	NA	NA	NA
selenium	<0.001	NA	NA	NA	NA	<0.001	NA	NA	NA	NA
silver	<0.002	NA	NA	NA	NA	<0.01	NA	NA	NA	NA
thallium	0.013	NA	NA	NA	NA	<0.02	NA	NA	NA	NA
zinc	0.124	NA	NA	NA	NA	0.034	NA	NA	NA	NA
Miscellaneous Parameters										
pH (units)	7.3	7.1	7.2	7.0	6.0	6.9	7.0	6.5	6.7	6.6
Spec. conductance (umhos/cm)	650	600	340	550	675	600	2,300	950	340	950
Temperature (deg./centigrade)	20	NA	12	15.0	13.0	15	14	12.5	12	15.0
	13	22	25	9	110	NA	NA	50	72	76
Total phenols	NA	0.29	0.168	0.34	0.17	0.036	0.0959	0.43	0.565	0.40
TOC	NA	0.89	1.5	0.39	1.6	NA	NA	2.6	8.9	0.25
Total dissolved solids (TDS)	510	NA	NA	NA	NA	NA	NA	NA	NA	NA
bicarbonate, as CACO3	NA	NA	NA	NA	NA	NA	NA	NA	NA	NA
calcium	NA	NA	NA	NA	NA	NA	NA	NA	NA	NA
chloride	29	NA	NA	NA	NA	NA	NA	NA	NA	NA
cyanide	NA	NA	NA	NA	NA	<0.005	<0.025	NA	NA	NA
iron	NA	NA	NA	NA	NA	NA	NA	NA	NA	NA
magnesium	NA	NA	NA	NA	NA	NA	NA	NA	NA	NA
potassium	NA	NA	NA	NA	NA	NA	NA	NA	NA	NA
sodium	NA	NA	NA	NA	NA	NA	NA	NA	NA	NA
sulfate, as SO4	NA	NA	NA	NA	NA	NA	NA	NA	NA	NA

Table E-5. Summary of Metals and Miscellaneous Parameters in Ground Water, Monsanto Company, WG Krummrich Plant, Sauget, IL.

Well Number:	P-3	P-4	P-4	P-4	P-4	P-5	P-5	P-5	P-5	P-6
Date:	5/84	1/84	2/84	3/84	5/84	1/84	2/84	3/84	5/84	1/84
USEPA Priority Pollutant Metals (concentrations are in ug/L, except where noted)										
antimony	NA	NA	NA	NA	NA	NA	NA	NA	NA	NA
arsenic	NA	NA	NA	NA	NA	NA	NA	NA	NA	NA
beryllium	NA	NA	NA	NA	NA	NA	NA	NA	NA	NA
cadmium	NA	NA	NA	NA	NA	NA	NA	NA	NA	NA
chromium	NA	NA	NA	NA	NA	NA	NA	NA	NA	NA
copper	NA	NA	NA	NA	NA	NA	NA	NA	NA	NA
lead	NA	NA	NA	NA	NA	NA	NA	NA	NA	NA
mercury	NA	NA	NA	NA	NA	NA	NA	NA	NA	NA
nickel	NA	NA	NA	NA	NA	NA	NA	NA	NA	NA
selenium	NA	NA	NA	NA	NA	NA	NA	NA	NA	NA
silver	NA	NA	NA	NA	NA	NA	NA	NA	NA	NA
thallium	NA	NA	NA	NA	NA	NA	NA	NA	NA	NA
zinc	NA	NA	NA	NA	NA	NA	NA	NA	NA	NA
Miscellaneous Parameters										
pH (units)	7.0	6.0	7.0	6.9	6.5	6.0	7.0	6.9	6.5	6.0
spec. conductance (umhos/cm)	1,300	1,250	390	600	900	875	350	350	350	850
temperature (deg./centigrade)	13.5	NA	13.5	13.0	13	11.5	13	14.0	13.0	NA
TOC	290	3	96	70	55	7	90	34	24	16
total phenols	0.49	1.08	0.855@	0.73	0.46	1.72@	1.44	0.56@	0.52@	0.225@
TOX	0.29	10	7.2	0.68	0.42	3.5	4.5	0.29	1.7	1.5
total dissolved solids (TDS)	NA	NA	NA	NA	NA	NA	NA	NA	NA	NA
bicarbonate, as CACO3	NA	NA	NA	NA	NA	NA	NA	NA	NA	NA
calcium	NA	NA	NA	NA	NA	NA	NA	NA	NA	NA
chloride	NA	NA	NA	NA	NA	NA	NA	NA	NA	NA
cyanide	NA	NA	NA	NA	NA	NA	NA	NA	NA	NA
iron	NA	NA	NA	NA	NA	NA	NA	NA	NA	NA
magnesium	NA	NA	NA	NA	NA	NA	NA	NA	NA	NA
potassium	NA	NA	NA	NA	NA	NA	NA	NA	NA	NA
sodium	NA	NA	NA	NA	NA	NA	NA	NA	NA	NA
sulfate, as SO4	NA	NA	NA	NA	NA	NA	NA	NA	NA	NA

Table E-5. Summary of Metals and Miscellaneous Parameters in Ground Water, Monsanto Company, W6 Krumwich Plant, Sauget, IL.

Well Number:	P-6	P-6	P-6	P-6	P-6	P-7	P-7	P-7	P-7	P-7
Date:	2/84	3/84	5/84	6/84	11/85	1/84	2/84	3/84	5/84	6/84
USEPA Priority Pollutant Metals (concentrations are in ug/L, except where noted)										
antimony	NA	NA	NA	<0.003	NA	NA	NA	NA	NA	0.004
arsenic	NA	NA	NA	0.074	NA	NA	NA	NA	NA	0.004
beryllium	NA	NA	NA	0.020	NA	NA	NA	NA	NA	0.005
cadmium	NA	NA	NA	0.003	NA	NA	NA	NA	NA	0.007
chromium	NA	NA	NA	0.008	NA	NA	NA	NA	NA	0.023
copper	NA	NA	NA	0.028	NA	NA	NA	NA	NA	<0.004
lead	NA	NA	NA	0.006	NA	NA	NA	NA	NA	0.014
mercury	NA	NA	NA	<0.0002	NA	NA	NA	NA	NA	0.0047
nickel	NA	NA	NA	0.009	NA	NA	NA	NA	NA	0.177
selenium	NA	NA	NA	<0.001	NA	NA	NA	NA	NA	<0.001
silver	NA	NA	NA	<0.01	NA	NA	NA	NA	NA	<0.01
thallium	NA	NA	NA	<0.02	NA	NA	NA	NA	NA	<0.02
zinc	NA	NA	NA	0.043	NA	NA	NA	NA	NA	0.129
Miscellaneous Parameters										
pH (units)	7.3	6.9	6.5	6.9	7.1	6.0	6.3	7.4	7.0	6.6
spec. conductance (umhos/cm)	550	1,250	1,700	1,500	3,000	4,300	800	4,200	4,700	4,650
temperature (deg./centigrade)	14	13.0	15.0	14	15	11	14	13.0	15.0	14
TOC	20	38	24	NA	NA	330	360	260	320	NA
total phenols	0.555#	1.6	0.44	0.045	0.0791	260	260	360	270	130
TOX	2.6	1.35#	0.62	NA	NA	670	370	500	280	NA
total dissolved solids (TDS)	NA	NA	NA	NA	NA	NA	NA	NA	NA	NA
bicarbonate, as CACO3	NA	NA	NA	NA	NA	NA	NA	NA	NA	NA
calcium	NA	NA	NA	NA	NA	NA	NA	NA	NA	NA
chloride	NA	NA	NA	NA	NA	NA	NA	NA	NA	NA
cyanide	NA	NA	NA	<0.005	<0.025	NA	NA	NA	NA	<0.005
iron	NA	NA	NA	NA	NA	NA	NA	NA	NA	NA
magnesium	NA	NA	NA	NA	NA	NA	NA	NA	NA	NA
potassium	NA	NA	NA	NA	NA	NA	NA	NA	NA	NA
sodium	NA	NA	NA	NA	NA	NA	NA	NA	NA	NA
sulfate, as SO4	NA	NA	NA	NA	NA	NA	NA	NA	NA	NA

Table E-5. Summary of Metals and Miscellaneous Parameters in Ground Water, Monsanto Company, W6 Krummrich Plant, Sauget, Il.

Well Number:	P-7	P-8	P-8	P-8	P-8	P-8	P-8	P-9	P-9	P-9
Date:	11/85	1/84	2/84	3/84	5/84	6/84	11/85	1/84	2/84	3/84
USEPA Priority Pollutant Metals (concentrations are in ug/L, except where noted)										
antimony	NA	NA	NA	NA	NA	<0.03	NA	NA	NA	NA
arsenic	NA	NA	NA	NA	NA	0.015	NA	NA	NA	NA
beryllium	NA	NA	NA	NA	NA	0.001	NA	NA	NA	NA
cadmium	NA	NA	NA	NA	NA	0.002	NA	NA	NA	NA
chromium	NA	NA	NA	NA	NA	<0.2	NA	NA	NA	NA
copper	NA	NA	NA	NA	NA	0.009	NA	NA	NA	NA
lead	NA	NA	NA	NA	NA	0.011	NA	NA	NA	NA
mercury	NA	NA	NA	NA	NA	<0.0002	NA	NA	NA	NA
nickel	NA	NA	NA	NA	NA	0.01	NA	NA	NA	NA
selenium	NA	NA	NA	NA	NA	<0.001	NA	NA	NA	NA
silver	NA	NA	NA	NA	NA	0.002	NA	NA	NA	NA
thallium	NA	NA	NA	NA	NA	<0.002	NA	NA	NA	NA
zinc	NA	NA	NA	NA	NA	0.05	NA	NA	NA	NA
Miscellaneous Parameters										
pH (units)	6.4	6.0	6.6	6.7	6.5	6.8	6.9	6.0	6.7	7.0
spec. conductance (umhos/cm)	4,500	3,250	490	1,500	900	800	2,300	2,340	NA	775
temperature (deg./centigrade)	14	11.0	13	12.0	14.5	13.5	14	11.5	13	12.5
TOC	NA	855	140	140	120	NA	NA	NA	150	91
total phenols	134.5	10.8	10.8	3.6	1.2	<0.005	0.34	1.46	1.04	0.88
TOX	NA	74	77	22	0.46	NA	NA	330	9.2	0.45
total dissolved solids (TDS)	NA	NA	NA	NA	NA	NA	NA	NA	NA	NA
bicarbonate, as CACO3	NA	NA	NA	NA	NA	NA	NA	NA	NA	NA
calcium	NA	NA	NA	NA	NA	NA	NA	NA	NA	NA
chloride	NA	NA	NA	NA	NA	NA	NA	NA	NA	NA
cyanide	0.035	NA	NA	NA	NA	<0.005	0.033	NA	NA	NA
iron	NA	NA	NA	NA	NA	NA	NA	NA	NA	NA
magnesium	NA	NA	NA	NA	NA	NA	NA	NA	NA	NA
potassium	NA	NA	NA	NA	NA	NA	NA	NA	NA	NA
sodium	NA	NA	NA	NA	NA	NA	NA	NA	NA	NA
sulfate, as SO4	NA	NA	NA	NA	NA	NA	NA	NA	NA	NA

Table E-5. Summary of Metals and Miscellaneous Parameters in Ground Water, Monsanto Company, MS Krumarich Plant, Sauget, IL.

Well Number:	P-9	P-10	P-10	P-10	P-10	P-10	P-11	P-11	P-11	P-11
Date:	5/84	1/84	2/84	3/84	5/84	9/84	1/84	2/84	3/84	5/84
USEPA Priority Pollutant Metals (concentrations are in mg/L, except where noted)										
antimony	NA	NA	NA	NA	NA	0.018	NA	NA	NA	NA
arsenic	NA	NA	NA	NA	NA	0.004	NA	NA	NA	NA
beryllium	NA	NA	NA	NA	NA	<0.002	NA	NA	NA	NA
cadmium	NA	NA	NA	NA	NA	<0.002	NA	NA	NA	NA
chromium	NA	NA	NA	NA	NA	<0.004	NA	NA	NA	NA
copper	NA	NA	NA	NA	NA	<0.004	NA	NA	NA	NA
lead	NA	NA	NA	NA	NA	<0.004	NA	NA	NA	NA
mercury	NA	NA	NA	NA	NA	<0.0002	NA	NA	NA	NA
nickel	NA	NA	NA	NA	NA	<0.004	NA	NA	NA	NA
selenium	NA	NA	NA	NA	NA	<0.001	NA	NA	NA	NA
silver	NA	NA	NA	NA	NA	<0.01	NA	NA	NA	NA
thallium	NA	NA	NA	NA	NA	0.067	NA	NA	NA	NA
zinc	NA	NA	NA	NA	NA	0.066	NA	NA	NA	NA
Miscellaneous Parameters										
pH (units)	6.5	6.0	6.3	6.9	6.5	7.1	6.0	5.6	6.9	6.0
spec. conductance (umhos/cm)	900	1,450	440	700	750	850	1,550	550	900	650
temperature (deg./centigrade)	14.0	9.5	14	13.0	13.0	19.5	12.5	13.5	12.5	13.0
TC	42	330	160	35	39	52	230	81	91	55
total phenols	0.46	5.8	2.08	1.158	0.61	NA	0.748	1.00	0.50	0.31
TOX	0.33	7.4	9.5	6.1	0.39	NA	17	13	0.59	0.46
total dissolved solids (TDS)	NA	NA	NA	NA	NA	570	NA	NA	NA	NA
bicarbonate, as CACO3	NA	NA	NA	NA	NA	NA	NA	NA	NA	NA
calcium	NA	NA	NA	NA	NA	NA	NA	NA	NA	NA
chloride	NA	NA	NA	NA	NA	110	NA	NA	NA	NA
cyanide	NA	NA	NA	NA	NA	NA	NA	NA	NA	NA
iron	NA	NA	NA	NA	NA	NA	NA	NA	NA	NA
magnesium	NA	NA	NA	NA	NA	NA	NA	NA	NA	NA
potassium	NA	NA	NA	NA	NA	NA	NA	NA	NA	NA
sodium	NA	NA	NA	NA	NA	NA	NA	NA	NA	NA
sulfate, as SO4	NA	NA	NA	NA	NA	NA	NA	NA	NA	NA

Table E-5. Summary of Metals and Miscellaneous Parameters in Ground Water, Monsanto Company, WG Krummrich Plant, Sauget, Il.

Well Number:	P-11	P-12	P-12	P-12	P-12	P-12	P-13	P-13	P-13	P-13
Date:	9/84	1/84	2/84	3/84	5/84	9/84	1/84	2/84	3/84	5/84
USEPA Priority Pollutant Metals (concentrations are in ug/L, except where noted)										
antimony	0.022	NA	NA	NA	NA	0.017	NA	NA	NA	NA
arsenic	0.008	NA	NA	NA	NA	0.009	NA	NA	NA	NA
beryllium	<0.002	NA	NA	NA	NA	<0.002	NA	NA	NA	NA
cadmium	<0.002	NA	NA	NA	NA	<0.002	NA	NA	NA	NA
chromium	<0.004	NA	NA	NA	NA	<0.004	NA	NA	NA	NA
copper	<0.004	NA	NA	NA	NA	<0.004	NA	NA	NA	NA
lead	<0.004	NA	NA	NA	NA	<0.004	NA	NA	NA	NA
mercury	<0.0002	NA	NA	NA	NA	<0.0002	NA	NA	NA	NA
nickel	0.012	NA	NA	NA	NA	<0.004	NA	NA	NA	NA
selenium	<0.001	NA	NA	NA	NA	<0.001	NA	NA	NA	NA
silver	<0.01	NA	NA	NA	NA	<0.01	NA	NA	NA	NA
thallium	0.07	NA	NA	NA	NA	0.043	NA	NA	NA	NA
zinc	0.049	NA	NA	NA	NA	0.056	NA	NA	NA	NA
Miscellaneous Parameters										
pH (units)	7.3	6.7	5.3	6.6	6.5	7.2	6.9	6.9	6.8	6.5
spec. conductance (uahos/cm)	900	1,000	440	500	580	600	1,500	1,100	950	950
temperature (deg./centigrade)	13	11.0	14	12.5	11.0	13	5.0	14.0	13.0	12.5
TOC	48	76	120	12	22	27	69	46	57	30
total phenols	NA	19	5.0	1.4	1.3	NA	0.94	0.15	0.19	0.22
TOX	NA	320	0.8	2.3	0.47	NA	300	2.5	0.36	0.30
total dissolved solids (TDS)	576	NA	NA	NA	NA	482	NA	NA	NA	NA
bicarbonate, as CACO3	NA	NA	NA	NA	NA	NA	NA	NA	NA	NA
calcium	NA	NA	NA	NA	NA	NA	NA	NA	NA	NA
chloride	90	NA	NA	NA	NA	70	NA	NA	NA	NA
cyanide	NA	NA	NA	NA	NA	NA	NA	NA	NA	NA
iron	NA	NA	NA	NA	NA	NA	NA	NA	NA	NA
magnesium	NA	NA	NA	NA	NA	NA	NA	NA	NA	NA
potassium	NA	NA	NA	NA	NA	NA	NA	NA	NA	NA
sodium	NA	NA	NA	NA	NA	NA	NA	NA	NA	NA
sulfate, as SO4	NA	NA	NA	NA	NA	NA	NA	NA	NA	NA

Table E-5. Summary of Metals and Miscellaneous Parameters in Ground Water, Monsanto Company, W6 Krumrich Plant, Sauget, Il.

Well Number:	P-13	P-13	P-13	P-13	P-14	P-14	P-14	P-14	P-14	P-14
Date:	6/84	6/84*	6/84**	11/85	1/84	2/84	3/84	5/84	6/84	11/85
USEPA Priority Pollutant Metals (concentrations are in ug/L, except where noted)										
antimony	0.004	0.004	<0.1	NA	NA	NA	NA	NA	0.018	NA
arsenic	0.093	0.013	0.14	NA	NA	NA	NA	NA	0.101	NA
beryllium	0.134	0.192	<0.005	NA	NA	NA	NA	NA	0.057	NA
cadmium	0.002	0.002	<0.007	NA	NA	NA	NA	NA	0.006	NA
chromium	0.005	0.006	<0.02	NA	NA	NA	NA	NA	0.01	NA
copper	0.006	<0.004	<0.01	NA	NA	NA	NA	NA	0.008	NA
lead	0.005	0.004	<0.1	NA	NA	NA	NA	NA	<0.004	NA
mercury	<0.0002	<0.0002	<0.003	NA	NA	NA	NA	NA	<0.0002	NA
nickel	0.004	0.005	<0.01	NA	NA	NA	NA	NA	<0.01	NA
selenium	0.001	<0.001	<0.005	NA	NA	NA	NA	NA	<0.001	NA
silver	<0.01	<0.01	<0.01	NA	NA	NA	NA	NA	<0.01	NA
thallium	<0.02	<0.02	<0.005	NA	NA	NA	NA	NA	<0.02	NA
zinc	0.020	0.06	<0.01	NA	NA	NA	NA	NA	0.04	NA
Miscellaneous Parameters										
pH (units)	7.0	7.0	7.0	6.9	6.7	6.8	6.7	6.5	6.8	NA
spec. conductance (umhos/cm)	1,000	1,000	1,100	2,000	2,850	1,200	2,700	3,100	2,800	NA
temperature (deg./centigrade)	14	14	14	14	12	15.5	14.0	13	14	NA
	NA	NA	NA	NA	160	44	87	42	NA	NA
total phenols	0.06	0.06	<0.05	0.099	1.41#	0.64	0.48	0.38	0.06	0.143
TOX	NA	NA	NA	NA	300	14	0.65	1.8	NA	NA
total dissolved solids (TDS)	NA	NA	NA	NA	NA	NA	NA	NA	NA	NA
bicarbonate, as CACO3	NA	NA	NA	NA	NA	NA	NA	NA	NA	NA
calcium	NA	NA	NA	NA	NA	NA	NA	NA	NA	NA
chloride	NA	NA	NA	NA	NA	NA	NA	NA	NA	NA
cyanide	<0.005	<0.025	<0.005	<0.025	NA	NA	NA	NA	<0.005	<0.025
iron	NA	NA	NA	NA	NA	NA	NA	NA	NA	NA
magnesium	NA	NA	NA	NA	NA	NA	NA	NA	NA	NA
potassium	NA	NA	NA	NA	NA	NA	NA	NA	NA	NA
sodium	NA	NA	NA	NA	NA	NA	NA	NA	NA	NA
sulfate, as SO4	NA	NA	NA	NA	NA	NA	NA	NA	NA	NA

Table E-5. Summary of Metals and Miscellaneous Parameters in Ground Water, Monsanto Company, WG Krummrich Plant, Sauget, Il.

Well Number:	DW-1	DW-1	DW-4	DW-7	DW-7	DW-10	DW-13	DW-18	DW-19	DW-23
Date:	9/84	11/85	9/84	11/85	2/86	9/84	9/84	9/84*	11/85	9/84
USEPA Priority Pollutant Metals (concentrations are in mg/L, except where noted)										
antimony	0.018	NA	0.13	<0.09	<0.05	0.038	0.18	NA	NA	0.065
arsenic	<0.001	NA	0.002	0.01	<0.01	0.004	<0.001	NA	NA	0.002
beryllium	<0.01	NA	0.018	<0.002	<0.001	<0.01	<0.002	NA	NA	<0.002
cadmium	1.97	NA	62.5	<0.002	<0.003	15.8	<0.002	NA	NA	<0.002
chromium	<0.04	NA	0.105	<0.01	<0.01	<0.04	<0.004	NA	NA	<0.004
copper	<0.001	NA	0.033	<0.006	<0.009	0.003	<0.004	NA	NA	<0.004
lead	0.018	NA	0.024	<0.04	<0.06	0.026	<0.004	NA	NA	<0.004
mercury	<0.0002	NA	<0.0002	<0.0002	<0.0002	<0.0002	<0.0004	NA	NA	<0.0004
nickel	0.024	NA	0.294	0.03	0.02	0.067	0.005	NA	NA	0.02
selenium	<0.001	NA	<0.001	<0.01	<0.005	<0.001	<0.001	NA	NA	<0.001
silver	0.003	NA	0.008	<0.007	<0.01	0.006	<0.002	NA	NA	0.004
thallium	0.019	NA	0.127	<0.01	<0.005	0.024	0.009	NA	NA	0.013
zinc	0.037	NA	0.206	0.091	0.054	0.106	0.02	NA	NA	0.028
Miscellaneous Parameters										
pH (units)	6.9	6.9	6.5	7.2	6.8	6.2	6.5	6.5	7.5	6.3
spec. conductance (umhos/cm)	1,060	3,000	2,600	2,000	950	1,300	450	450	700	850
temperature (deg./centigrade)	21	15	22	NA	17.5	21	19	19	15	20
TOC	12	NA	8	NA	NA	75	8.6	14	NA	12
total phenols	NA	1.220	NA	0.179	0.478	NA	NA	NA	0.098	NA
TOX	NA	NA	NA	NA	NA	NA	NA	NA	NA	NA
total dissolved solids (TDS)	1,226	NA	3,274	NA	NA	1,930	400	NA	NA	914
bicarbonate, as CACO3	NA	NA	NA	NA	NA	NA	NA	NA	NA	NA
calcium	NA	NA	NA	NA	NA	NA	NA	NA	NA	NA
chloride	386	NA	403	NA	NA	1,063	33	33	NA	43
cyanide	NA	<0.025	NA	<0.025	<0.025	NA	NA	NA	<0.025	NA
iron	NA	NA	NA	NA	NA	NA	NA	NA	NA	NA
magnesium	NA	NA	NA	NA	NA	NA	NA	NA	NA	NA
potassium	NA	NA	NA	NA	NA	NA	NA	NA	NA	NA
sodium	NA	NA	NA	NA	NA	NA	NA	NA	NA	NA
sulfate, as SO4	NA	NA	NA	NA	NA	NA	NA	NA	NA	NA

Table E-5. Suaaary of Metals and Miscellaneous Paraaeters in Ground Water, Monsanto Coapany, #6 Kruaarich Plant, Sauget, Il.

Well Nuaber:	DW-1-85	BK-3	BK-3	BK-3	MW-6	MW-6	MW-6	MW-7	MW-7	Field Blank
Date:	2/86	9/84	11/85	2/86	9/84	11/85	2/86	9/84	11/85	11/83
USEPA Priority Pollutant Metals (concentrations are in ag/L, except where noted)										
antiaony	<0.060	0.062	NA	<0.050	0.033	NA	<0.05	0.022	NA	NA
arsenic	<0.010	<0.001	NA	<0.010	0.019	NA	0.07	<0.001	NA	NA
beryllius	<0.0009	<0.002	NA	<0.001	<0.002	NA	<0.001	<0.002	NA	NA
cadaius	<0.003	0.008	NA	<0.003	<0.002	NA	<0.003	<0.002	NA	NA
chroaius	<0.008	<0.004	NA	<0.010	<0.004	NA	<0.01	<0.004	NA	NA
copper	<0.006	<0.004	NA	<0.009	<0.004	NA	<0.009	<0.004	NA	NA
lead	<0.060	0.006	NA	<0.06	0.004	NA	<0.06	<0.004	NA	NA
aercury	<0.0002	<0.0004	NA	<0.0002	<0.0002	NA	<0.0002	<0.0002	NA	NA
nickel	<0.009	0.010	NA	<0.01	<0.004	NA	<0.01	<0.004	NA	NA
selenius	<0.005	<0.001	NA	<0.005	<0.001	NA	<0.005	<0.001	NA	NA
silver	<0.01	0.004	NA	<0.01	0.002	NA	<0.01	<0.01	NA	NA
thallius	<0.005	0.016	NA	<0.005	0.025	NA	<0.005	0.143	NA	NA
zinc	0.04	0.035	NA	0.030	0.024	NA	0.054	0.097	NA	NA
Miscellaneous Paraaeters										
pH (units)	NA	7.7	7.5	7.7	6.9	6.7	7.1	6.6	7.0	NA
spec. conductance (uahos/ca)	1,350	2,500	3,100	1,625	950	1,000	620	850	925	<50
teaperature (deg./centigrade)	13	19	15	16	15	15	14	15	17	16
TOC	NA	36	NA	NA	16	NA	NA	3	NA	2
total phenols	<0.05	NA	0.101	<0.050	NA	0.13	0.139	NA	<0.05	0.002
TOX	NA	NA	NA	NA	NA	NA	NA	NA	NA	<0.005
total dissolved solids (TDS)	NA	1,814	NA	NA	524	NA	NA	602	NA	NA
bicarbonate, as CACO3	NA	NA	870	NA	NA	NA	NA	NA	NA	NA
calciua	NA	NA	70.4	NA	NA	NA	NA	NA	NA	NA
chloride	NA	930	714	NA	124	NA	NA	40	NA	NA
cyanide	<0.025	NA	<0.025	<0.025	NA	<0.025	<0.025	NA	<0.025	NA
iron	NA	NA	0.2	NA	NA	NA	NA	NA	NA	NA
aagnesiua	NA	NA	104	NA	NA	NA	NA	NA	NA	NA
potassiua	NA	NA	343	NA	NA	NA	NA	NA	NA	NA
sodiua	NA	NA	328	NA	NA	NA	NA	NA	NA	NA
sulfate, as SO4	NA	NA	35	NA	NA	NA	NA	NA	NA	NA

Table E-5. Summary of Metals and Miscellaneous Parameters in Ground Water, Monsanto Company, WS Krumwich Plant, Sauget, IL.

Well Number:	DW-24	DW-24	DW-29	DW-29	DW-30	DW-33	DW-34	DW-34	DW-34	DW-1-85
Date:	9/84	9/84*	9/84	9/84*	11/85	9/84	9/84	11/85	2/86	11/85
USEPA Priority Pollutant Metals (concentrations are in mg/L, except where noted)										
antimony	0.876	NA	0.086	NA	<0.09	0.02	0.026	NA	<0.050	<0.08
arsenic	0.004	NA	0.019	NA	<0.01	0.003	0.077	NA	0.170	<0.01
beryllium	<0.002	NA	<0.002	NA	<0.002	0.02	<0.010	NA	<0.001	<0.0009
cadmium	<0.002	NA	<0.002	NA	<0.002	2.84	0.93	NA	0.003	<0.002
chromium	<0.004	NA	<0.004	NA	<0.01	<0.04	0.031	NA	<0.010	<0.02
copper	<0.004	NA	<0.004	NA	<0.006	0.012	0.009	NA	<0.009	<0.008
lead	<0.004	NA	<0.004	NA	<0.04	0.021	0.016	NA	<0.060	<0.07
mercury	<0.0004	NA	0.0004	NA	<0.0002	<0.0002	<0.0002	NA	<0.0002	<0.0003
nickel	0.004	NA	0.01	NA	<0.01	0.22	0.037	NA	<0.010	<0.01
selenium	<0.001	NA	<0.001	NA	<0.005	<0.001	<0.001	NA	<0.005	<0.005
silver	0.002	NA	0.004	NA	<0.007	0.002	0.002	NA	<0.010	<0.01
thallium	0.021	NA	0.018	NA	<0.005	0.021	0.021	NA	<0.005	<0.005
zinc	0.024	NA	0.035	NA	<0.006	0.077	0.071	NA	0.056	0.01
Miscellaneous Parameters										
pH (units)	6.3	6.3	6.5	6.5	6.8	6.9	6.4	6.8	7.0	7.2
spec. conductance (umhos/cm)	700	700	1,100	1,100	1,250	900	1,000	1,500	760	3,250
temperature (deg./centigrade)	21	21	20	20	16	20	21	19	12	13
DO	7.9	NA	49	46	NA	8.2	23	NA	NA	NA
total phenols	NA	NA	NA	NA	<0.05	NA	NA	0.0722	<0.050	0.135
TOX	NA	NA	NA	NA	NA	NA	NA	NA	NA	NA
total dissolved solids (TDS)	634	NA	1,170	1,194	NA	1,064	3,294	NA	NA	NA
bicarbonate, as CACO3	NA	NA	NA	NA	NA	NA	NA	NA	NA	NA
calcium	NA	NA	NA	NA	NA	NA	NA	NA	NA	NA
chloride	38	NA	95	96	NA	247	196	NA	NA	NA
cyanide	NA	NA	NA	NA	<0.025	NA	NA	<0.025	<0.025	<0.025
iron	NA	NA	NA	NA	NA	NA	NA	NA	NA	NA
magnesium	NA	NA	NA	NA	NA	NA	NA	NA	NA	NA
potassium	NA	NA	NA	NA	NA	NA	NA	NA	NA	NA
sodium	NA	NA	NA	NA	NA	NA	NA	NA	NA	NA
sulfate, as SO4	NA	NA	NA	NA	NA	NA	NA	NA	NA	NA

Table E-5. Summary of Metals and Miscellaneous Parameters in Ground Water, Monsanto Company, WG Krummrich Plant, Sauget, IL.

Well Number:	Field Blank	Field Blank	Field Blank	Trip Blank	Trip Blank	Trip Blank	Trip Blank	Lab Blank
Date:	2/84	5/84	6/84	11/83	2/84	5/84	6/84	2/84
USEPA Priority Pollutant Metals (concentrations are in mg/L, except where noted)								
antimony	NA	NA	<0.03	NA	NA	NA	<0.004	NA
arsenic	NA	NA	<0.001	NA	NA	NA	<0.001	NA
beryllium	NA	NA	<0.001	NA	NA	NA	<0.001	NA
cadmium	NA	NA	0.001	NA	NA	NA	<0.001	NA
chromium	NA	NA	<0.004	NA	NA	NA	<0.004	NA
copper	NA	NA	0.008	NA	NA	NA	<0.004	NA
lead	NA	NA	<0.01	NA	NA	NA	<0.004	NA
mercury	NA	NA	<0.0002	NA	NA	NA	<0.0002	NA
nickel	NA	NA	0.005	NA	NA	NA	<0.004	NA
selenium	NA	NA	<0.001	NA	NA	NA	<0.001	NA
silver	NA	NA	<0.002	NA	NA	NA	<0.01	NA
thallium	NA	NA	<0.002	NA	NA	NA	<0.02	NA
zinc	NA	NA	0.013	NA	NA	NA	<0.002	NA
Miscellaneous Parameters								
pH (units)	7.0	7.0	7	NA	NA	NA	NA	NA
spec. conductance (umhos/cm)	110	60	30	NA	NA	NA	NA	NA
temperature (deg./centigrade)	10	17	30	NA	NA	NA	NA	NA
TC	<5	6	NA	2	<5	<5	NA	<5
total phenols	<0.002	<0.002	<0.005	<0.002	<0.002	0.006	<0.005	<0.002
TOX	0.019	NA	NA	0.013	0.009	0.025	NA	0.009
total dissolved solids (TDS)	NA	NA	NA	NA	NA	NA	NA	NA
bicarbonate, as CACO3	NA	NA	NA	NA	NA	NA	NA	NA
calcium	NA	NA	NA	NA	NA	NA	NA	NA
chloride	35	NA	NA	NA	NA	NA	NA	NA
cyanide	NA	<0.005	<0.005	NA	NA	NA	<0.005	NA
iron	NA	NA	NA	NA	NA	NA	NA	NA
magnesium	NA	NA	NA	NA	NA	NA	NA	NA
potassium	NA	NA	NA	NA	NA	NA	NA	NA
sodium	NA	NA	NA	NA	NA	NA	NA	NA
sulfate, as SO4	NA	NA	NA	NA	NA	NA	NA	NA

* - Replicate Analyses
** - Replicate analysis performed by ETC.
NA - Not analyzed.
- Average of two analyses.
< - Indicates that the compound was not detected at the detection limit which is the value shown next to the symbol.

APPENDIX F

Tables From 1993 Evaluation of
Ground-Water Conditions

Table 1. Annual Ground-Water Monitoring Program, November 1992, Monsanto Company, W.G. Krummrich Plant, Sauget, Illinois.

Well Number	Well Depth (feet below land surface)	USEPA Priority Pollutants: Volatile Organic Compounds	USEPA Priority Pollutants: Acid Extractable Organic Compounds	USEPA Priority Pollutants: Base/Neutral Extractable Organic Compounds	Nonpriority Pollutants: Volatile Organic Compounds	Nonpriority Pollutants: Acid Extractable Organic Compounds	Nonpriority Pollutants: Base/Neutral Extractable Organic Compounds
Plant Area							
GM-4A	28	IX	IX	IX			
GM-4B	87	IX	IX	IX			
GM-4C	104	IX	IX	IX			
GM-5	36	IX	IX	IX			
GM-6A	34	IX	IX	IX			
GM-6B	88	IX	IX	IX			
GM-9A	28	X					
GM-9B	75	X					
GM-9C	108	X					
GM-10A	28	X					
GM-10B	78	X					
GM-10C	111	X					
GM-12A (1)	33.5	IX	IX	IX			
GM-12B	89	IX	IX	IX			
GM-12C	114.5	IX	IX	IX			
GM-17A	38	IX	IX	IX			
GM-17B	78	IX	IX	IX			
GM-17C	107	IX	IX	IX			
GM-18B	92	X	X	X			
GM-20B	90	X	X	X			
GM-54B	86.5	X	X	X			X (2)
GM-58A	39.5	X	X	X			X (2)
GM-59A	39	X	X	X			X (2)
Landfill Area							
GM-27B	82	X		X			X (3)
GM-27C	105	X	X	X		X	X (3)

X Compounds selected for analysis.
IX Appendix IX compounds.
(1) Replicate sample.
(2) This sample requires an analysis of 2-nitrobiphenyl and 4-nitrobiphenyl in addition to the other nonpriority pollutant base/neutral compounds (see Table 2).
(3) This sample requires an analysis of the nonpriority pollutant base/neutral compounds with the exception of 2-nitrobiphenyl and 4-nitrobiphenyl (see Table 2).

Table 1. Annual Ground-Water Monitoring Program, November 1992, Monsanto Company, W.G. Krummrich Plant, Sauget, Illinois.

Well Number	Well Depth (feet below land surface)	USEPA Priority Pollutants: Volatile Organic Compounds	USEPA Priority Pollutants: Acid Extractable Organic Compounds	USEPA Priority Pollutants: Base/Neutral Extractable Organic Compounds	Nonpriority Pollutants: Volatile Organic Compounds	Nonpriority Pollutants: Acid Extractable Organic Compounds	Nonpriority Pollutants: Base/Neutral Extractable Organic Compounds
Landfill Area (Cont.)							
GM-28B	93	X	X	X		X	X (3)
GM-28C	107	X	X	X		X	X (3)
P-2	47	X		X			X (3)
P-6	30.5	X		X			X (3)
P-7	33	X	X	X		X	X (3)
P-8	53.5	X	X	X		X	X (3)
P-13	53.5	X		X			X (3)
P-14	32.5	X		X			X (3)
GM-106	165.7	X	X	X			X (3)
GM-55C	131	X	X	X	X	X	X (3)
GM-56C	111	X	X	X	X	X	X (3)
GM-57C (1)	116	X	X	X	X	X	X (3)
GM-62A	51	X					
GM-62B (1)	91	X					
GM-62C	132	X					
Blanks							
Field Blank (3 Samples)		X	X	X			
Trip Blank (6 Samples)		X					

X Compounds selected for analysis.
IX Appendix IX compounds.
(1) Replicate sample.
(2) This sample requires an analysis of 2-nitrobiphenyl and 4-nitrobiphenyl in addition to the other nonpriority pollutant base/neutral componds (see Table 2).
(3) This sample requires an analysis of the nonpriority pollutant base/neutral compounds with the exception of 2-nitrobiphenyl and 4-nitrobiphenyl (see Table 2).

Table 2. Supplemental List of Nonpriority Pollutant Compounds, November 1992, Monsanto Company, W. G. Krummrich Plant, Sauget, Illinois.

Volatile Organic Compounds

Methyl-iso-butyl ketone

Methyl-isoamyl ketone

m-Xylene

o-Xylene/p-Xylene

Acid Extractable Organic Compounds

4-Chlorophenol

Base/Neutral Extractable Organic Compounds

Aniline

2-Chloroaniline

3-Chloroaniline

4-Chloroaniline

2-Nitroaniline

4-Nitroaniline

2-Nitrochlorobenzene

4-Nitrochlorobenzene

2,4- and 3,4-Dinitrochlorobenzene

4-Nitrodiphenylamine

2-Nitrobiphenyl (only Wells GM-54B, GM-58A, and GM-59A)

4-Nitrobiphenyl (only Wells GM-54B, GM-58A, and GM-59A)

A:MONSANTO.TBL

APPENDIX G

Water Quality Data (1986-1994)

SUMMARY OF GROUNDWATER QUALITY DATA MONSANTO COMPANY SAUGET, ILLINOIS

January 1995

Geraghty & Miller, Inc.
125 East Bethpage Road
Plainview, New York 11803
(516) 249-7600

APPENDICES

A. Table 1 - Summary of Volatile Organic Compounds.

B. Table 2 - Summary of Acid Extractable Organic Compounds.

C. Table 3 - Summary of Base/Neutral Extractable Organic Compounds.

APPENDIX A

TABLE 1 - SUMMARY OF VOLATILE ORGANIC COMPOUNDS

Well Number:	GM-4A	GM-4A	GM-4A	GM-4A	GM-4A	GM-4A	GM-4A	GM-4A	GM-4A	GM-4A
Date:	12/86	5/87	11/87	5/88	11/88	11/89	11/90	11/91	11/92	9/94
Laboratory:	ETC	ETC	ETC	ETC	ETC	ETC	ETC	ETC	ETC	SL
Volatile Organic Compounds concentrations are in ug/L										
Acrolein	<100	<100	<100	<100	<100	<100	<100	<100	<20	<100
Acrylonitrile	<100	<100	<100	<100	<100	<100	<100	<100	<10	<100
Benzene	<4.4	<4.4	<4.4	<4.4	<4.4	**4.84**	<4.4	<4.4	<4.4	<5.0
Bis (chloromethyl) ether	<10	<10	<10	<10	<10	<10	<10	<10	NA	NA
Bromoform	<4.7	<4.7	<4.7	<4.7	<4.7	<4.7	<4.7	<4.7	<4.7	<5.0
Carbon tetrachloride	<2.8	<2.8	<2.8	<2.8	<2.8	<2.8	<2.8	<2.8	<2.8	<5.0
Chlorobenzene	<6	<6.0	<6.0	<6.0	<6.0	**20.7**	**9.44**	<6.0	<6.0	<5.0
Chlorodibromomethane	<3.1	<3.1	<3.1	<3.1	<3.1	<3.1	<3.1	<3.1	<3.1	<5.0
Chloroethane	<10	<10	<10	<10	<10	<10	<10	<10	<10	<10
2-Chloroethylvinyl ether	<10	<10	<10	<10	<10	<10	<10	<10	NA	<50
Chloroform	<1.6	<1.6	<1.6	**1.9**	<1.6	<1.6	<1.6	<1.6	<1.6	<5.0
Dichlorobromomethane	<2.2	<2.2	<2.2	<2.2	<2.2	<2.2	<2.2	<2.2	<2.2	<5.0
Dichlorodifluoromethane	<10	<10	<10	<10	<10	<10	<10	<10	<10	<5.0
1,1-Dichloroethane	<4.7	<4.7	<4.7	<4.7	<4.7	<4.7	<4.7	<4.7	<4.7	<5.0
1,2-Dichloroethane	<2.8	<2.8	<2.8	<2.8	<2.8	<2.8	<2.8	<2.8	<2.8	<5.0
1,1-Dichloroethylene	<2.8	<2.8	<2.8	<2.8	<2.8	<2.8	<2.8	<2.8	<2.8	<5.0
1,2-Dichloropropane	<6	<6	<6.0	<6.0	<6.0	<6.0	<6.0	<6.0	<6.0	<5.0
cis-1,3-Dichloropropylene	<5	<5	<5.0	<5.0	<5.0	<5.0	<5.0	<5.0	<5.0	<5.0
Ethylbenzene	<7.2	<7.2	<7.2	<7.2	<7.2	<7.2	<7.2	<7.2	<7.2	<5.0
Methyl bromide	<10	<10	<10	<10	<10	<10	<10	<10	<10	<10
Methyl chloride	<10	<10	<10	<10	<10	<10	<10	<10	<10	<10
Methylene chloride	<2.8	**41.5**	**3.23**	**13.3**	**13.6**	**3.71**	<2.8	<2.8	<2.8	<5.0
1,1,2,2-Tetrachloroethane	<6.9	<6.9	<6.9	<6.9	<6.9	<6.9	<6.9	<6.9	<6.9	<5.0
Tetrachloroethylene	<4.1	<4.1	<4.1	<4.1	<4.1	<4.1	<4.1	<4.1	<4.1	<5.0
Toluene	<6	<6	<6.0	<6.0	<6.0	<6.0	<6.0	<6.0	<6.0	<5.0
1,2-trans-Dichloroethylene	<1.6	<1.6	<1.6	<1.6	<1.6	<1.6	<1.6	<1.6	<1.6	<5.0
1,1,1-Trichloroethane	<3.8	<3.8	<3.8	<3.8	<3.8	<3.8	<3.8	<3.8	<3.8	<5.0
1,1,2-Trichloroethane	<5	<5	<5.0	<5.0	<5.0	<5.0	<5.0	<5.0	<5.0	<5.0
Trichloroethylene	<1.9	<1.9	<1.9	<1.9	<1.9	<1.9	<1.9	<1.9	<1.9	<5.0
Trichlorofluoromethane	<10	<10	<10	<10	<10	<10	<10	<10	<10	<5.0
Vinyl chloride	<10	<10	<10	<10	<10	<10	<10	<10	<10	<10
trans-1,3-Dichloropropylene	<10	<10	<10	<10	<10	<10	<10	<10	<10	<5.0
Sub Total 1	0	42	3	15	14	29	9	0	0	0
Miscellaneous Volatile Organic Compounds										
Acetone	NA	NA	NA	NA	NA	NA	NA	NA	<10	NA
Methyl ethyl ketone	NA	NA	NA	NA	NA	NA	NA	NA	<10	NA
Carbon disulfide	NA	NA	NA	NA	NA	NA	NA	NA	<10	NA
2-Hexanone	NA	NA	NA	NA	NA	NA	NA	NA	<10	NA
Styrene	NA	NA	NA	NA	NA	NA	NA	NA	<10	NA
Methyl-iso-butyl ketone	NA	NA	NA	NA	NA	NA	NA	NA	<10	<25
Methyl isoamyl ketone	NA	NA	NA	NA	NA	NA	NA	NA	NA	<25
m-Xylene	NA	NA	NA	NA	NA	NA	NA	NA	<10	<5.0
o-Xylene/p-Xylene	NA	NA	NA	NA	NA	NA	NA	NA	<10	<5.0
Sub Total 2	0	0	0	0	0	0	0	0	0	0
Total VOCs Analyzed	0	42	3	15	14	29	9	0	0	0

See footnotes on last page.

g:\technicl\tables\monsanto\krumm1a.xls

Well Number:	GM-4B	GM-4B	GM-4B	GM-4B	GM-4B	GM-4B	GM-4B	GM-4B	GM-4B	GM-4B
Date:	12/86	5/87	11/87	5/88	11/88	5/89	11/89	5/90	11/90	5/91
Laboratory:	ETC	ETC	ETC	ETC	ETC	ETC	ETC	ETC	ETC	ETC
Volatile Organic Compounds concentrations are in ug/L										
Acrolein	<100	<5,000	<500	<100	<100	<1,000	<10,000	<25,000	<20,000	<5,000
Acrylonitrile	<100	<5,000	<500	<100	<100	<1,000	<10,000	<25,000	<20,000	<5,000
Benzene	<4.4	<220	**31.9**	<4.4	**13.2**	**127**	<440	<1,100	<880	<220
Bis (chloromethyl) ether	<10	<500	<50	<10	<10	<100	<1,000	<2,500	<2,000	<500
Bromoform	<4.7	<240	<24	<4.7	<4.7	<47	<470	<1,200	<940	<240
Carbon tetrachloride	<2.8	<140	<14	<2.8	<2.8	<28	<280	<700	<560	<140
Chlorobenzene	<6	**3,060**	**1,990**	<6.0	<6.0	**3,610**	**8,120**	**11,800**	**14,600**	**8,990**
Chlorodibromomethane	<3.1	<160	<16	<3.1	<3.1	<31	<310	<780	<620	<160
Chloroethane	<10	<500	<50	<10	<10	<100	<1,000	<2,500	<2,000	<500
2-Chloroethylvinyl ether	<10	<500	<50	<10	<10	<100	<1,000	<2,500	<2,000	<500
Chloroform	<1.6	<80	<8.0	**2.0**	<1.6	<16	<160	<400	<320	<80
Dichlorobromomethane	<2.2	<110	<11	<2.2	<2.2	<22	<220	<550	<440	<110
Dichlorodifluoromethane	<10	<500	<50	<10	<10	<100	<1,000	<2,500	<2,000	<500
1,1-Dichloroethane	<4.7	<240	<24	<4.7	<4.7	<47	<470	<1,200	<940	<240
1,2-Dichloroethane	<2.8	<140	<14	<2.8	<2.8	<28	<280	<700	<560	<140
1,1-Dichloroethylene	<2.8	<140	<14	<2.8	<2.8	<28	<280	<700	<560	<140
1,2-Dichloropropane	<6	<300	<30	<6.0	<6.0	<60	<600	<1,500	<1,200	<300
cis-1,3-Dichloropropylene	<5	<250	<25	<5.0	<5.0	<50	<500	<1,300	<1,000	<250
Ethylbenzene	<7.2	<360	<36	<7.2	<7.2	<72	<720	<1,800	<1,400	<360
Methyl bromide	<10	<500	<50	<10	<10	<100	<1,000	<2,500	<2,000	<500
Methyl chloride	<10	<500	<50	<10	<10	<100	<1,000	<2,500	<2,000	<500
Methylene chloride	<2.8	**208**	<14	**64.9**	<2.8	<28	<280	**2,180**	<560	<140
1,1,2,2-Tetrachloroethane	<6.9	<350	<35	<6.9	<6.9	<69	<690	<1,700	<1,400	<350
Tetrachloroethylene	<4.1	<210	<21	<4.1	<4.1	<41	<410	<1,000	<820	<210
Toluene	<6	<300	<30	<6.0	<6.0	<60	<600	<1,500	<1,200	<300
1,2-trans-Dichloroethylene	<1.6	<80	<8.0	<1.6	<1.6	<16	<160	<400	<320	<80
1,1,1-Trichloroethane	<3.8	<190	<19	<3.8	<3.8	<38	<380	<950	<760	<190
1,1,2-Trichloroethane	<5	<250	<25	<5.0	<5.0	<50	<500	<1,300	<1,000	<250
Trichloroethylene	<1.9	<95	<9.5	<1.9	<1.9	<19	<190	<480	<380	
Trichlorofluoromethane	<10	<500	<50	<10	<10	<100	<1,000	<2,500	<2,000	
Vinyl chloride	<10	<500	<50	<10	<10	<100	<1,000	<2,500	<2,000	<500
trans-1,3-Dichloropropylene	<10	<500	<50	<10	<10	<100	<1,000	<2,500	<2,000	<500
Sub Total 1	0	3,258	2,022	67	13	3,637	8,120	13,980	14,600	8,990
Miscellaneous Volatile Organic Compounds										
Acetone	NA	NA	NA	NA	NA	NA	NA	NA	NA	NA
Methyl ethyl ketone	NA	NA	NA	NA	NA	NA	NA	NA	NA	NA
Carbon disulfide	NA	NA	NA	NA	NA	NA	NA	NA	NA	NA
2-Hexanone	NA	NA	NA	NA	NA	NA	NA	NA	NA	NA
Styrene	NA	NA	NA	NA	NA	NA	NA	NA	NA	NA
Methyl-iso-butyl ketone	NA	NA	NA	NA	NA	NA	NA	NA	NA	NA
Methyl isoamyl ketone	NA	NA	NA	NA	NA	NA	NA	NA	NA	NA
m-Xylene	NA	NA	NA	NA	NA	NA	NA	NA	NA	NA
o-Xylene/p-Xylene	NA	NA	NA	NA	NA	NA	NA	NA	NA	NA
Sub Total 2	0	0	0	0	0	0	0	0	0	0
Total VOCs Analyzed	0	3,258	2,022	67	13	3,637	8,120	13,980	14,600	8,990

See footnotes on last page.

g:\technicl\tables\monsanto\krumm1a.xls

Table 1. Summary of Volatile Organic Compounds in Groundwater, Krummrich Plant, Sauget, Illinois.

Well Number:	GM-4B	GM-4B	GM-4B	GM-4B	GM-4C	GM-4C	GM-4C	GM-4C	GM-4C	GM-4C
Date:	11/91	11/92	9/94	9/94*	12/86	5/87	11/87	5/88	11/88	5/89
Laboratory:	ETC	ETC	SL	SL	ETC	ETC	ETC	ETC	ETC	ETC
Volatile Organic Compounds concentrations are in ug/L										
Acrolein	<25,000	<200	<2500	<50,000	<100	<5,000	<1,000	<100	<100	<1,000
Acrylonitrile	<25,000	<100	<2500	<50,000	<100	<5,000	<1,000	<100	<100	<1,000
Benzene	<1,100	**136**	**67,000**	**29,000**	<4.4	<220	<44	<4.4	<4.4	**290**
Bis (chloromethyl) ether	<2,500	NA	NA	NA	<10	<500	<100	<10	<10	<100
Bromoform	<1,200	<120	<120	<2,500	<4.7	<240	<47	<4.7	<4.7	<47
Carbon tetrachloride	<700	<70	<120	<2,500	<2.8	<140	<28	<2.8	<2.8	<28
Chlorobenzene	**10,700**	**3,880**	**2,000**	**1,800**	<6	**1,770**	**2,490**	<6.0	**71.6**	**5,440**
Chlorodibromomethane	<780	<78	<120	<2,500	<3.1	<160	<31	<3.1	<3.1	<31
Chloroethane	<2,500	<250	<250	<5,000	<10	<500	<100	<10	<10	<100
2-Chloroethylvinyl ether	<2,500	NA	<1200	<25,000	<10	<500	<100	<10	<10	<100
Chloroform	<400	<40	<120	<2,500	<1.6	<80	**46**	<1.6	<1.6	<16
Dichlorobromomethane	<550	<55	<120	<2,500	<2.2	<110	<22	<2.2	<2.2	<22
Dichlorodifluoromethane	<2,500	<250	<120	<2,500	<10	<500	<100	<10	<10	<100
1,1-Dichloroethane	<1,200	<120	<120	<2,500	<4.7	<240	<47	<4.7	<4.7	<47
1,2-Dichloroethane	<700	<70	<120	<2,500	<2.8	<140	<28	<2.8	<2.8	<28
1,1-Dichloroethylene	<700	<70	<120	<2,500	<2.8	<140	<28	<2.8	<2.8	<28
1,2-Dichloropropane	<1,500	<150	<120	<2,500	<6	<300	<60	<6.0	<6.0	<60
cis-1,3-Dichloropropylene	<1,300	<130	<120	<2,500	<5	<250	<50	<5.0	<5.0	<50
Ethylbenzene	<1,800	<180	<120	<2,500	<7.2	<360	<72	<7.2	<7.2	<72
Methyl bromide	<2,500	<250	<5000	<5,000	<10	<500	<100	<10	<10	<100
Methyl chloride	<2,500	<250	<250	<5,000	<10	<500	<100	<10	<10	<100
Methylene chloride	<700	<70	<120	<2,500	<2.8	**203**	<28	**38.4**	<2.8	**60.5**
1,1,2,2-Tetrachloroethane	<1,700	<170	<120	<2,500	<6.9	<350	<69	<6.9	<6.9	<69
Tetrachloroethylene	<1,000	<100	<120	<2,500	<4.1	<210	<41	<4.1	<4.1	<41
Toluene	<1,500	<150	<120	<2,500	<6	<300	<60	<6	<6	<60
1,2-trans-Dichloroethylene	<400	<40	<120	<2,500	<1.6	<80	<16	<1.6	<1.6	<16
1,1,1-Trichloroethane	<950	<95	<120	<2,500	<3.8	<190	<38	<3.8	<3.8	<38
1,1,2-Trichloroethane	<1,300	<130	<120	<2,500	<5	<250	<50	<5	<5	<50
Trichloroethylene	<480	<48	<120	<2,500	<1.9	<95	<19	<1.9	<1.9	<19
Trichlorofluoromethane	<2,500	<250	<120	<2,500	<10	<500	<100	<10	<10	<100
Vinyl chloride	<2,500	<250	<250	<5,000	<10	<500	<100	<10	<10	<100
trans-1,3-Dichloropropylene	<2,500	<250	<120	<2,500	<10	<500	<100	<10	<10	<100
Sub Total 1	10,700	4,016	59,000	30,800	0	1,973	2,536	38	72	5,791
Miscellaneous Volatile Organic Compounds										
Acetone	NA	<250	NA	NA	NA	NA	NA	NA	NA	NA
Methyl ethyl ketone	NA	<250	NA	NA	NA	NA	NA	NA	NA	NA
Carbon disulfide	NA	<250	NA	NA	NA	NA	NA	NA	NA	NA
2-Hexanone	NA	<250	NA	NA	NA	NA	NA	NA	NA	NA
Styrene	NA	<250	NA	NA	NA	NA	NA	NA	NA	NA
Methyl-iso-butyl ketone	NA	<10	<620	<12,000	NA	NA	NA	NA	NA	NA
Methyl isoamyl ketone	NA	NA	<620	<12,000	NA	NA	NA	NA	NA	NA
m-Xylene	NA	<250	<120	<2,500	NA	NA	NA	NA	NA	NA
o-Xylene/p-Xylene	NA	<250	<120	<2,500	NA	NA	NA	NA	NA	NA
Sub Total 2	0	0	0	0	0	0	0	0	0	0
Total VOCs Analyzed	10,700	4,016	59,000	30,800	0	1,973	2,536	38	72	5,791

See footnotes on last page.

Well Number:	GM-4C	GM-4C	GM-4C	GM-4C	GM-4C	GM-4C	GM-4C	GM-5	GM-5	GM-6A
Date:	11/89	5/90	11/90	5/91	11/91	11/92	9/94	11/92	9/94	11/92
Laboratory:	ETC	ETC	ETC	ETC	ETC	ETC	SL	ETC	SL	ETC
Volatile Organic Compounds concentrations are in ug/L										
Acrolein	<10,000	<25,000	<10,000	<5,000	<5,000	<2,000	<50000	<20	<100	<50
Acrylonitrile	<10,000	<25,000	<10,000	<5,000	<5,000	<1,000	<50000	<10	<100	<25
Benzene	**693**	<1,100	<440	<220	**337**	<1,100	**32000**	<4.4	<5	**745**
Bis (chloromethyl) ether	<1,000	<2,500	<1,000	<500	<500	NA	NA	NA	NA	NA
Bromoform	<470	<1,200	<470	<240	<240	<1,200	<2500	<4.7	<5	<24
Carbon tetrachloride	<280	<700	<280	<140	<140	<700	<2500	<2.8	<5	<14
Chlorobenzene	**14,700**	**16,700**	**10,700**	**10,800**	**14,100**	**20400**	<2500	<6.0	<5	**2420**
Chlorodibromomethane	<310	<780	<310	<160	<160	<780	<2500	<3.1	<5	<16
Chloroethane	<1,000	<2,500	<1,000	<500	<500	<2,500	<5000	<10	<10	<50
2-Chloroethylvinyl ether	<1,000	<2,500	<1,000	<500	<500	NA	<25000	NA	<50	NA
Chloroform	<160	<400	<160	<80	<80	<400	<2500	<1.6	<5	<8.0
Dichlorobromomethane	<220	<550	<220	<110	<110	<550	<2500	<2.2	<5	<11
Dichlorodifluoromethane	<1,000	<2,500	<1,000	<500	<500	<2,500	<2500	<10	<5	<50
1,1-Dichloroethane	<470	<1,200	<470	<240	<240	<1,200	<2500	<4.7	<5	<24
1,2-Dichloroethane	<280	<700	<280	<140	<140	<700	<2500	<2.8	<5	<14
1,1-Dichloroethylene	<280	<700	<280	<140	<140	<700	<2500	<2.8	<5	<14
1,2-Dichloropropane	<600	<1,500	<600	<300	<300	<1,500	<2500	<6.0	<5	<30
cis-1,3-Dichloropropylene	<500	<1,300	<500	<250	<250	<1,300	<2500	<5.0	<5	<25
Ethylbenzene	<720	<1,800	<720	<360	<360	<1,800	<2500	<7.2	<5	<36
Methyl bromide	<1,000	<2,500	<1,000	<500	<500	<2,500	<5000	<10	<10	<50
Methyl chloride	<1,000	<2,500	<1,000	<500	<500	<2,500	<5000	<10	<10	<50
Methylene chloride	**455**	**1,250**	<280	**159**	**142**	<700	<2500	<2.8	<5	<14
1,1,2,2-Tetrachloroethane	<690	<1,700	<690	<350	<350	<1,700	<2500	<6.9	<5	<35
Tetrachloroethylene	<410	<1,000	<410	<210	<210	<1,000	<2500	<4.1	<5	<21
Toluene	<600	<1,500	<600	<300	<300	<1,500	<2500	<6.0	<5	<30
1,2-trans-Dichloroethylene	<160	<400	<160	<80	<80	<400	<2500	<1.6	<5	<8.0
1,1,1-Trichloroethane	<380	<950	<380	<190	<190	<950	<2500	<3.8	<5	**74.2**
1,1,2-Trichloroethane	<500	<1,300	<500	<250	<250	<1,300	<2500	<5.0	<5	<25
Trichloroethylene	<190	<480	<190	<95	<95	<480	<2500	<1.9	<5	
Trichlorofluoromethane	<1,000	<2,500	<1,000	<500	<500	<2,500	<2500	<10	<5	
Vinyl chloride	<1,000	<2,500	<1,000	<500	<500	<2,500	<5000	<10	<10	<50
trans-1,3-Dichloropropylene	<1,000	<2,500	<1,000	<500	<500	<2,500	<12000	<10	<5	<50
Sub Total 1	15,848	17,950	10,700	10,959	14,579	20,400	32,000	0	0	3,239
Miscellaneous Volatile Organic Compounds										
Acetone	NA	NA	NA	NA	NA	<2,500	NA	<10	NA	<50
Methyl ethyl ketone	NA	NA	NA	NA	NA	<2,500	NA	<10	NA	<50
Carbon disulfide	NA	NA	NA	NA	NA	<2,500	NA	<10	NA	<50
2-Hexanone	NA	NA	NA	NA	NA	<2,500	NA	<10	NA	<50
Styrene	NA	NA	NA	NA	NA	<2,500	NA	<10	NA	<50
Methyl-iso-butyl ketone	NA	NA	NA	NA	NA	<2,500	<12000	<10	<25	<50
Methyl isoamyl ketone	NA	NA	NA	NA	NA	NA	<12000	NA	<25	NA
m-Xylene	NA	NA	NA	NA	NA	<2,500	<2500	<10	<5	<50
o-Xylene/p-Xylene	NA	NA	NA	NA	NA	<2,500	<2500	<10	<5	<50
Sub Total 2	0	0	0	0	0	0	0	0	0	0
Total VOCs Analyzed	15,848	17,950	10,700	10,959	14,579	20,400	32,000	0	0	3,239

See footnotes on last page.

g:\technic\tables\monsanto\krumm1a.xls

Table 1. Summary of Volatile Organic Compounds in Groundwater, Krummrich Plant, Sauget, Illinois.

Well Number:	GM-6B	GM-9A	GM-9A	GM-9A	GM-9A	GM-9A	GM-9A	GM-9A	GM-9A	GM-9A
Date:	11/92	12/86	5/87	11/87	5/88	11/88	11/89	11/90	11/91	11/92
Laboratory:	ETC	ETC	ETC	ETC	ETC	ETC	ETC	ETC	ETC	ETC
Volatile Organic Compounds concentrations are in ug/L										
Acrolein	<20	<1,000	<100	<100	<100	<100	<100	<2,000	<250	<2,500
Acrylonitrile	<10	<1,000	<100	<100	<100	<100	<100	<2,000	<250	<2,500
Benzene	<4.4	**74.4**	**8.6**	<4.4	<4.4	<4.4	<4.4	**1,290**	**69.0**	**863**
Bis (chloromethyl) ether	NA	<100	<10	<10	<10	<10	<10	<200	<25	<250
Bromoform	<4.7	<47	<4.7	<4.7	<4.7	<4.7	<4.7	<94	<12	<120
Carbon tetrachloride	<2.8	<28	<2.8	<2.8	<2.8	<2.8	<2.8	<56	<7.0	<70
Chlorobenzene	**180**	<60	**138**	<6.0	<6.0	<6.0	<6.0	**2,090**	**443**	**2,010**
Chlorodibromomethane	<3.1	<31	<3.1	<3.1	<3.1	<3.1	<3.1	<62	<7.8	<78
Chloroethane	<10	<100	<10	<10	<10	<10	<10	<200	<25	<250
2-Chloroethylvinyl ether	NA	<100	<10	<10	<10	<10	<10	<200	<25	<250
Chloroform	<1.6	<16	<1.6	<1.6	<1.6	<1.6	<1.6	<32	<4.0	<40
Dichlorobromomethane	<2.2	<22	<2.2	<2.2	<2.2	<2.2	<2.2	<44	<5.5	<55
Dichlorodifluoromethane	<10	<100	<10	<10	<10	<10	<10	<200	<25	<250
1,1-Dichloroethane	<4.7	<47	**6.2**	<4.7	<4.7	<4.7	<4.7	<94	<12	<120
1,2-Dichloroethane	<2.8	<28	<2.8	<2.8	<2.8	<2.8	<2.8	<56	<7.0	<70
1,1-Dichloroethylene	<2.8	<28	**7.1**	<2.8	<2.8	<2.8	<2.8	<56	<7.0	<70
1,2-Dichloropropane	<6.0	<60	<6	<6.0	<6.0	<6.0	<6.0	<120	<15	<150
cis-1,3-Dichloropropylene	<5.0	<50	<5	<5.0	<5.0	<5.0	<5.0	<100	<13	<130
Ethylbenzene	<7.2	<72	<7.2	<7.2	<7.2	<7.2	<7.2	<140	<18	<180
Methyl bromide	<10	<100	<10	<10	<10	<10	<10	<200	<25	<250
Methyl chloride	<10	<100	<10	<10	<10	<10	<10	<200	<25	<250
Methylene chloride	<2.8	<28	<2.8	**11.6**	**7.4**	**5.46**	<2.8	<56	<7.0	<70
1,1,2,2-Tetrachloroethane	<6.9	<69	<6.9	<6.9	<6.9	<6.9	<6.9	<140	<17	<170
Tetrachloroethylene	<4.1	<41	<4.1	<4.1	<4.1	<4.1	<4.1	<82	<10	<100
Toluene	<6.0	<60	<6	<6.0	<6.0	<6.0	<6.0	<120	<15	<150
1,2-trans-Dichloroethylene	<1.6	<16	<1.6	<1.6	<1.6	<1.6	<1.6	<32	<4.0	<40
1,1,1-Trichloroethane	<3.8	<38	**112**	<3.8	<3.8	**5.92**	**4.46**	<76	<9.5	<95
1,1,2-Trichloroethane	<5.0	<50	<5	<5.0	<5.0	<5.0	<5.0	<100	<13	<130
Trichloroethylene	<1.9	<19	<1.9	<1.9	<1.9	<1.9	<1.9	<38	<4.8	<48
Trichlorofluoromethane	<10	<100	<10	<10	<10	<10	<10	<200	<25	<250
Vinyl chloride	<10	<100	<10	<10	<10	<10	<10	<200	<25	<250
trans-1,3-Dichloropropylene	<10	<100	<10	<10	<10	<10	<10	<200	<25	<250
Sub Total 1	180	74	272	12	7	11	4	3,380	512	2,873
Miscellaneous Volatile Organic Compounds										
Acetone	<10	NA	NA	NA	NA	NA	NA	NA	NA	NA
Methyl ethyl ketone	<10	NA	NA	NA	NA	NA	NA	NA	NA	NA
Carbon disulfide	<10	NA	NA	NA	NA	NA	NA	NA	NA	NA
2-Hexanone	<10	NA	NA	NA	NA	NA	NA	NA	NA	NA
Styrene	<10	NA	NA	NA	NA	NA	NA	NA	NA	NA
Methyl-iso-butyl ketone	<10	NA	NA	NA	NA	NA	NA	NA	NA	NA
Methyl isoamyl ketone	NA	NA	NA	NA	NA	NA	NA	NA	NA	NA
m-Xylene	<10	NA	NA	NA	NA	NA	NA	NA	NA	NA
o-Xylene/p-Xylene	<10	NA	NA	NA	NA	NA	NA	NA	NA	NA
Sub Total 2	0	0	0	0	0	0	0	0	0	0
Total VOCs Analyzed	180	74	272	12	7	11	4	3,380	512	2,873

See footnotes on last page.

g:\technic\tables\monsanto\krumm1a.xls

Well Number:	GM-9A	GM-9B	GM-9B	GM-9B	GM-9B	GM-9B	GM-9B	GM-9B	GM-9B	GM-9B
Date:	9/94	12/86	5/87	11/87	5/88	11/88	11/89	11/90	11/91	11/92
Laboratory:	SL	ETC	ETC	ETC	ETC	ETC	ETC	ETC	ETC	ETC
Volatile Organic Compounds concentrations are in ug/L										
Acrolein	<1,000	<100	<100	<100	<500	<100	<100	<2,000	<500	<2,500
Acrylonitrile	<1,000	<100	<100	<100	<500	<100	<100	<2,000	<500	<2,500
Benzene	**810**	<4.4	**10.8**	**11.9**	<22	**7.66**	**5.60**	**1,680**	**717**	**3,960**
Bis (chloromethyl) ether	NA	<10	<10	<10	<50	<10	<10	<200	<50	<250
Bromoform	<50	<4.7	<4.7	<4.7	<24	<4.7	<4.7	<94	<24	<120
Carbon tetrachloride	<50	<2.8	<2.8	<2.8	<14	<2.8	<2.8	<56	<14	<70
Chlorobenzene	**1,400**	<6	**96.6**	**130.0**	**248**	**187**	**124**	**289**	**621**	**486**
Chlorodibromomethane	<50	<3.1	<3.1	<3.1	<16	<3.1	<3.1	<62	<16	<78
Chloroethane	<100	<10	<10	<10	<50	<10	<10	<200	<50	<250
2-Chloroethylvinyl ether	<500	<10	<10	<10	<50	<10	<10	<200	<50	<250
Chloroform	<50	<1.6	<1.6	<1.6	<8.0	<1.6	<1.6	<32	<8.0	<40
Dichlorobromomethane	<50	<2.2	<2.2	<2.2	<11	<2.2	<2.2	<44	<11	<55
Dichlorodifluoromethane	<50	<10	<10	<10	<50	<10	<10	<200	<50	<250
1,1-Dichloroethane	<50	<4.7	**34.6**	**31.1**	<24	<4.7	<4.7	<94	<24	<120
1,2-Dichloroethane	<50	<2.8	<2.8	<2.8	<14	<2.8	<2.8	<56	<14	<70
1,1-Dichloroethylene	<50	<2.8	**13.6**	**5.94**	<14	<2.8	<2.8	<56	<14	<70
1,2-Dichloropropane	<50	<6	<6	<6.0	<30	<6	<6.0	<120	<30	<150
cis-1,3-Dichloropropylene	<50	<5	<5	<5.0	<25	<5	<5.0	<100	<25	<130
Ethylbenzene	<50	<7.2	<7.2	<7.2	<36	<7.2	<7.2	<140	<36	<180
Methyl bromide	<100	<10	<10	<10	<50	<10	<10	<200	<50	<250
Methyl chloride	<100	<10	<10	<10	<50	<10	<10	<200	<50	<250
Methylene chloride	<50	<2.8	<2.8	<2.8	**39.3**	**7.84**	<2.8	<56	**15.7**	<70
1,1,2,2-Tetrachloroethane	<50	<6.9	<6.9	<6.9	<35	<6.9	<6.9	<140	<35	<170
Tetrachloroethylene	<50	<4.1	<4.1	<4.1	<21	<4.1	<4.1	<82	<21	<100
Toluene	<50	<6	<6	<6.0	<30	<6	<6.0	<120	<30	<150
1,2-trans-Dichloroethylene	<50	<1.6	**146**	**110**	**22.6**	<1.6	<1.6	<32	<8.0	<40
1,1,1-Trichloroethane	<50	<3.8	**8.4**	<3.8	<19	<3.8	<3.8	<76	<19	<95
1,1,2-Trichloroethane	<50	<5	<5	<5.0	<25	<5	<5.0	<100	<25	<130
Trichloroethylene	<50	<1.9	<1.9	<1.9	<9.5	<1.9	<1.9	<38	<9.5	
Trichlorofluoromethane	<50	<10	<10	<10	<50	<10	<10	<200	<50	
Vinyl chloride	<100	<10	**22.8**	**13.9**	<50	**73.8**	<10	<200	<50	<250
trans-1,3-Dichloropropylene	<50	<10	<10	<10	<50	<10	<10	<200	<50	<250
Sub Total 1	2,210	0	333	303	310	276	130	1,969	1,354	4,446
Miscellaneous Volatile Organic Compounds										
Acetone	NA	NA	NA	NA	NA	NA	NA	NA	NA	NA
Methyl ethyl ketone	NA	NA	NA	NA	NA	NA	NA	NA	NA	NA
Carbon disulfide	NA	NA	NA	NA	NA	NA	NA	NA	NA	NA
2-Hexanone	NA	NA	NA	NA	NA	NA	NA	NA	NA	NA
Styrene	NA	NA	NA	NA	NA	NA	NA	NA	NA	NA
Methyl-iso-butyl ketone	<250	NA	NA	NA	NA	NA	NA	NA	NA	NA
Methyl isoamyl ketone	<250	NA	NA	NA	NA	NA	NA	NA	NA	NA
m-Xylene	**120**	NA	NA	NA	NA	NA	NA	NA	NA	NA
o-Xylene/p-Xylene	<50	NA	NA	NA	NA	NA	NA	NA	NA	NA
Sub Total 2	120	0	0	0	0	0	0	0	0	0
Total VOCs Analyzed	2,330	0	333	303	310	276	130	1,969	1,354	4,446

See footnotes on last page.

g:\technicl\tables\monsanto\krumm1a.xls

Well Number:	GM-9B	GM-9C	GM-9C	GM-9C	GM-9C	GM-9C	GM-9C	GM-9C	GM-9C	GM-9C
Date:	9/94	12/86	5/87	11/87	5/88	11/88	11/89	11/90	11/91	11/92
Laboratory:	SL	ETC	ETC	ETC	ETC	ETC	ETC	ETC	ETC	ETC
USEPA Priority Pollutant Volatile Organic Compounds concentrations are in ug/L										
Acrolein	<20,000	<100	<100	<100	<100	<100	<100	<2,000	<1,000	<500
Acrylonitrile	<20,000	<100	<100	<100	<100	<100	<100	<2,000	<1,000	<500
Benzene	**3,300**	<4.4	**30.9**	**11.9**	<4.4	**22.5**	**5.43**	**1,730**	**313**	**299**
Bis (chloromethyl) ether	NA	<10	<10	<10	<10	<10	<10	<200	<100	<50
Bromoform	<100	<4.7	<4.7	<4.7	<4.7	<4.7	<4.7	<94	<47	<24
Carbon tetrachloride	<100	<2.8	<2.8	<2.8	<2.8	<2.8	<2.8	<56	<28	<14
Chlorobenzene	**540**	**17.9**	**636.0**	**214.0**	<6.0	**139**	**56.9**	**307**	**1,060**	**584**
Chlorodibromomethane	<100	<3.1	<3.1	<3.1	<3.1	<3.1	<3.1	<62	<31	<16
Chloroethane	<200	<10	<10	<10	<10	<10	<10	<200	<100	<50
2-Chloroethylvinyl ether	<1,000	<10	<10	<10	<10	<10	<10	<200	<100	<50
Chloroform	<100	<1.6	<1.6	<1.6	<1.6	<1.6	<1.6	<32	<16	<8.0
Dichlorobromomethane	<100	<2.2	<2.2	<2.2	<2.2	<2.2	<2.2	<44	<22	<11
Dichlorodifluoromethane	<100	<10	<10	<10	<10	<10	<10	<200	<100	<50
1,1-Dichloroethane	<100	<4.7	<4.7	<4.7	<4.7	<4.7	<4.7	<94	<47	<24
1,2-Dichloroethane	<100	<2.8	<2.8	<2.8	<2.8	<2.8	<2.8	<56	<28	<14
1,1-Dichloroethylene	<100	<2.8	<2.8	<2.8	<2.8	<2.8	<2.8	<56	<28	<14
1,2-Dichloropropane	<100	<6	<6	<6.0	<6.0	<6	<6.0	<120	<60	<30
cis-1,3-Dichloropropylene	<100	<5	<5	<5.0	<5.0	<5	<5.0	<100	<50	<25
Ethylbenzene	<100	<7.2	**10.7**	<7.2	<7.2	<7.2	<7.2	<140	<72	<36
Methyl bromide	<200	<10	<10	<10	<10	<10	<10	<200	<100	<50
Methyl chloride	<200	<10	<10	<10	<10	<10	<10	<200	<100	<50
Methylene chloride	<100	<2.8	<2.8	**9.40**	**34.5**	**8.14**	<2.8	<56	<28	<14
1,1,2,2-Tetrachloroethane	<100	<6.9	<6.9	<6.9	<6.9	<6.9	<6.9	<140	<69	<35
Tetrachloroethylene	<100	<4.1	<4.1	<4.1	<4.1	<4.1	<4.1	<82	<41	<21
Toluene	<100	<6	<6	**10.8**	<6.0	<6	<6.0	<120	<60	<30
1,2-trans-Dichloroethylene	<100	<1.6	<1.6	<1.6	<1.6	<1.6	<1.6	<32	,16	<8.0
1,1,1-Trichloroethane	<100	<3.8	<3.8	<3.8	<3.8	<3.8	<3.8	<76	<38	<19
1,1,2-Trichloroethane	<100	<5	<5	<5.0	<5.0	<5	<5.0	<100	<50	<25
Trichloroethylene	<100	<1.9	<1.9	<1.9	<1.9	<1.9	<1.9	<38	<19	<9.5
Trichlorofluoromethane	<100	<10	<10	<10	<10	<10	<10	<200	<100	<50
Vinyl chloride	<200	<10	<10	<10	<10	<10	<10	<200	<100	<50
trans-1,3-Dichloropropylene	<100	<10	<10	<10	<10	<10	<10	<200	<100	<50
Sub Total 1	3,840	18	678	246	35	170	62	2,037	1,373	883
Miscellaneous Volatile Organic Compounds										
Acetone	NA	NA	NA	NA	NA	NA	NA	NA	NA	NA
Methyl ethyl ketone	NA	NA	NA	NA	NA	NA	NA	NA	NA	NA
Carbon disulfide	NA	NA	NA	NA	NA	NA	NA	NA	NA	NA
2-Hexanone	NA	NA	NA	NA	NA	NA	NA	NA	NA	NA
Styrene	NA	NA	NA	NA	NA	NA	NA	NA	NA	NA
Methyl-iso-butyl ketone	<500	NA	NA	NA	NA	NA	NA	NA	NA	NA
Methyl isoamyl ketone	<500	NA	NA	NA	NA	NA	NA	NA	NA	NA
m-Xylene	<100	NA	NA	NA	NA	NA	NA	NA	NA	NA
o-Xylene/p-Xylene	<100	NA	NA	NA	NA	NA	NA	NA	NA	NA
Sub Total 2	0	0	0	0	0	0	0	0	0	0
Total VOCs Analyzed	3,840	18	678	246	35	170	62	2,037	1,373	883

See footnotes on last page.

g:\technicl\tables\monsanto\krumm1a.xls

Well Number:	GM-9C	GM-10A	GM-10A	GM-10A	GM-10A	GM-10A	GM-10A	GM-10A	GM-10A	GM-10A
Date:	9/94	12/86	5/87	11/87	5/88	11/88	11/89	11/90	11/92	9/94
Laboratory:	SL	ETC	ETC	ETC	ETC	ETC	ETC	ETC	ETC	SL
USEPA Priority Pollutant Volatile Organic Compounds concentrations are in ug/L										
Acrolein	<500	<100	<100	<100	<100	<100	<100	<5,000	<100	<100
Acrylonitrile	<500	<100	<100	<100	<100	<100	<100	<5,000	<100	<100
Benzene	**150**	<4.4	<4.4	<4.4	<4.4	<4.4	<4.4	**5,030**	<4.4	<5
Bis (chloromethyl) ether	NA	<10	<10	<10	<10	<10	<10	<500	<10	NA
Bromoform	<25	<4.7	<4.7	<4.7	<4.7	<4.7	<4.7	<240	<4.7	<5
Carbon tetrachloride	<25	<2.8	<2.8	<2.8	<2.8	<2.8	<2.8	<140	<2.8	<5
Chlorobenzene	**200**	<6	<6	<6.0	<6.0	<6.0	<6.0	<300	<6.0	<5
Chlorodibromomethane	<25	<3.1	<3.1	<3.1	<3.1	<3.1	<3.1	<160	<3.1	<5
Chloroethane	<50	<10	<10	<10	<10	<10	<10	<500	<10	<10
2-Chloroethylvinyl ether	<250	<10	<10	<10	<10	<10	<10	<500	<10	<50
Chloroform	<25	<1.6	<1.6	<1.6	<1.6	<1.6	<1.6	<80	<1.6	<5
Dichlorobromomethane	<25	<2.2	<2.2	<2.2	<2.2	<2.2	<2.2	<110	<2.2	<5
Dichlorodifluoromethane	<25	<10	<10	<10	<10	<10	<10	<500	<10	<5
1,1-Dichloroethane	<25	<4.7	<4.7	<4.7	<4.7	<4.7	<4.7	<240	<4.7	<5
1,2-Dichloroethane	<25	<2.8	<2.8	<2.8	<2.8	<2.8	<2.8	<140	<2.8	<5
1,1-Dichloroethylene	<25	<2.8	<2.8	<2.8	<2.8	<2.8	<2.8	<140	<2.8	<5
1,2-Dichloropropane	<25	<6	<6	<6.0	<6.0	<6.0	<6.0	<300	<6.0	<5
cis-1,3-Dichloropropylene	<25	<5	<5	<5.0	<5.0	<5.0	<5.0	<250	<5.0	<5
Ethylbenzene	<25	<7.2	<7.2	<7.2	<7.2	<7.2	<7.2	<360	<7.2	<5
Methyl bromide	<50	<10	<10	<10	<10	<10	<10	<500	<10	<10
Methyl chloride	<50	<10	<10	<10	<10	<10	<10	<500	<10	<10
Methylene chloride	<25	<2.8	<2.8	<2.8	**37.2**	**7.09**	<2.8	<140	<2.8	<5
1,1,2,2-Tetrachloroethane	<25	<6.9	<6.9	<6.9	<6.9	<6.9	<6.9	<350	<6.9	<5
Tetrachloroethylene	<25	<4.1	<4.1	<4.1	<4.1	<4.1	<4.1	<210	<4.1	<5
Toluene	<25	<6	<6	<6.0	<6.0	<6.0	<6.0	<300	<6.0	<5
1,2-trans-Dichloroethylene	<25	<1.6	<1.6	<1.6	<1.6	<1.6	<1.6	<80	<1.6	<5
1,1,1-Trichloroethane	<25	<3.8	<3.8	<3.8	<3.8	<3.8	<3.8	<190	<3.8	<5
1,1,2-Trichloroethane	<25	<5	<5	<5.0	<5.0	<5.0	<5.0	<250	<5.0	
Trichloroethylene	<25	<1.9	<1.9	<1.9	<1.9	<1.9	<1.9	<95	<1.9	
Trichlorofluoromethane	<25	<10	<10	<10	<10	<10	<10	<500	<10	<5
Vinyl chloride	<50	<10	<10	<10	<10	<10	<10	<500	<10	<10
trans-1,3-Dichloropropylene	<25	<10	<10	<10	<10	<10	<10	<500	<10	<5
Sub Total 1	350	0	0	0	37	7	0	5,030	0	0
Miscellaneous Volatile Organic Compounds										
Acetone	NA	NA	NA	NA	NA	NA	NA	NA	NA	NA
Methyl ethyl ketone	NA	NA	NA	NA	NA	NA	NA	NA	NA	NA
Carbon disulfide	NA	NA	NA	NA	NA	NA	NA	NA	NA	NA
2-Hexanone	NA	NA	NA	NA	NA	NA	NA	NA	NA	NA
Styrene	NA	NA	NA	NA	NA	NA	NA	NA	NA	NA
Methyl-iso-butyl ketone	<120	NA	NA	NA	NA	NA	NA	NA	NA	<25
Methyl isoamyl ketone	<120	NA	NA	NA	NA	NA	NA	NA	NA	<25
m-Xylene	<25	NA	NA	NA	NA	NA	NA	NA	NA	<5
o-Xylene/p-Xylene	<25	NA	NA	NA	NA	NA	NA	NA	NA	<5
Sub Total 2	0	0	0	0	0	0	0	0	0	0
Total VOCs Analyzed	350	0	0	0	37	7	0	5,030	0	0

See footnotes on last page.

g:\technicl\tables\monsanto\krumm1a.xls

Table 1. Summary of Volatile Organic Compounds in Groundwater, Krummrich Plant, Sauget, Illinois.

Well Number:	GM-10B	GM-10B	GM-10B	GM-10B	GM-10B	GM-10B	GM-10B	GM-10B	GM-10B	GM-10B
Date:	12/86	5/87	11/87	5/88	11/88	11/89	11/90	11/91	11/92	9/94
Laboratory:	ETC	ETC	ETC	ETC	ETC	ETC	ETC	ETC	ETC	SL
USEPA Priority Pollutant Volatile Organic Compounds concentrations are in ug/L										
Acrolein	<1,000	<100	<100	<100	<100	<1,000	<100	<1,000	<5,000	<2,500
Acrylonitrile	<1,000	<100	<100	<100	<100	<1,000	<100	<1,000	<5,000	<2,500
Benzene	<44	<4.4	**13.1**	<4.4	<4.4	<44	**10.2**	**63.0**	<220	<120
Bis (chloromethyl) ether	<100	<10	<10	<10	<10	<100	<10	<100	<500	NA
Bromoform	<47	<4.7	<4.7	<4.7	<4.7	<47	<4.7	<47	<240	<120
Carbon tetrachloride	<28	<2.8	<2.8	<2.8	<2.8	<28	<2.8	<28	<140	<120
Chlorobenzene	**299**	<6	**616**	<6.0	<6.0	**502**	**7.46**	**1,250**	**3,140**	**2,300**
Chlorodibromomethane	<31	<3.1	<3.1	<3.1	<3.1	<31	<3.1	<31	<160	<120
Chloroethane	<100	<10	<10	<10	<10	<100	<10	<100	<500	<250
2-Chloroethylvinyl ether	<100	<10	<10	<10	<10	<100	<10	<100	<500	<1,200
Chloroform	<16	<1.6	<1.6	**1.7**	<1.6	<16	<1.6	<16	<80	<120
Dichlorobromomethane	<22	<2.2	<2.2	<2.2	<2.2	<22	<2.2	<22	<110	<120
Dichlorodifluoromethane	<100	<10	<10	<10	<10	<100	<10	<100	<500	<120
1,1-Dichloroethane	<47	<4.7	<4.7	<4.7	<4.7	<47	<4.7	<47	<240	<120
1,2-Dichloroethane	<28	<2.8	<2.8	<2.8	<2.8	<28	<2.8	<28	<140	<120
1,1-Dichloroethylene	<28	<2.8	<2.8	<2.8	<2.8	<28	<2.8	<28	<140	<120
1,2-Dichloropropane	<60	<6	<6.0	<6.0	<6.0	<60	<6.0	<60	<300	<120
cis-1,3-Dichloropropylene	<50	<5	<5.0	<5.0	<5.0	<50	<5.0	<50	<250	<120
Ethylbenzene	<72	<7.2	<7.2	<7.2	<7.2	<72	<7.2	<72	<360	<120
Methyl bromide	<100	<10	<10	<10	<10	<100	<10	<100	<500	<250
Methyl chloride	<100	<10	<10	<10	<10	<100	<10	<100	<500	<250
Methylene chloride	<28	**5**	<2.8	**35.1**	**7.45**	<28	<2.8	<28	<140	<120
1,1,2,2-Tetrachloroethane	<69	<6.9	<6.9	<6.9	<6.9	<69	<6.9	<69	<350	<120
Tetrachloroethylene	<41	<4.1	<4.1	<4.1	<4.1	<41	<4.1	<41	<210	<120
Toluene	<60	<6	<6.0	<6.0	<6.0	<60	<6.0	<60	<300	<120
1,2-trans-Dichloroethylene	<16	<1.6	<1.6	<1.6	<1.6	<16	<1.6	<16	<80	<120
1,1,1-Trichloroethane	<38	<3.8	<3.8	<3.8	<3.8	<38	<3.8	<38	<190	<120
1,1,2-Trichloroethane	<50	<5	<5.0	<5.0	<5.0	<50	<5.0	<50	<250	<120
Trichloroethylene	<19	<1.9	<1.9	<1.9	<1.9	<19	<1.9	<19	<95	<120
Trichlorofluoromethane	<100	<10	<10	<10	<10	<100	<10	<100	<500	<120
Vinyl chloride	<100	<10	<10	<10	<10	<100	<10	<100	<500	<250
trans-1,3-Dichloropropylene	<100	<10	<10	<10	<10	<100	<10	<100	<500	<120
Sub Total 1	299	5	629	37	7	502	18	1,313	3,140	2,300
Miscellaneous Volatile Organic Compounds										
Acetone	NA	NA	NA	NA	NA	NA	NA	NA	NA	NA
Methyl ethyl ketone	NA	NA	NA	NA	NA	NA	NA	NA	NA	NA
Carbon disulfide	NA	NA	NA	NA	NA	NA	NA	NA	NA	NA
2-Hexanone	NA	NA	NA	NA	NA	NA	NA	NA	NA	NA
Styrene	NA	NA	NA	NA	NA	NA	NA	NA	NA	NA
Methyl-iso-butyl ketone	NA	NA	NA	NA	NA	NA	NA	NA	NA	<620
Methyl isoamyl ketone	NA	NA	NA	NA	NA	NA	NA	NA	NA	<620
m-Xylene	NA	NA	NA	NA	NA	NA	NA	NA	NA	<120
o-Xylene/p-Xylene	NA	NA	NA	NA	NA	NA	NA	NA	NA	<120
Sub Total 2	0	0	0	0	0	0	0	0	0	0
Total VOCs Analyzed	299	5	629	37	7	502	18	1,313	3,140	2,300

See footnotes on last page.

g:\technic\tables\monsanto\krumm1a.xls

Well Number:	GM-10C	GM-10C	GM-10C	GM-10C	GM-10C	GM-10C	GM-10C	GM-10C	GM-10C	GM-12A
Date:	12/86	5/87	11/87	11/88	11/89	11/90	11/91	11/92	9/94	12/86
Laboratory:	ETC	ETC	ETC	ETC	ETC	ETC	ETC	ETC	SL	
USEPA Priority Pollutant Volatile Organic Compounds concentrations are in ug/L										
Acrolein	<100	<100	<100	<100	<100	<500	<100	<100	<100	<1,000
Acrylonitrile	<100	<100	<100	<100	<100	<500	<100	<100	<100	<1,000
Benzene	<4.4	<4.4	<4.4	<4.4	<4.4	<22	<4.4	<4.4	<5	**967**
Bis (chloromethyl) ether	<10	<10	<10	<10	<10	<50	<10	<10	NA	<100
Bromoform	<4.7	<4.7	<4.7	<4.7	<4.7	<24	<4.7	<4.7	<5	<47
Carbon tetrachloride	<2.8	<2.8	<2.8	<2.8	<2.8	<14	<2.8	<2.8	<5	<28
Chlorobenzene	**23.4**	**38.9**	**42.8**	**42.7**	**752.0**	**421**	**83.2**	**18.2**	**120**	**560**
Chlorodibromomethane	<3.1	<3.1	<3.1	<3.1	<3.1	<16	<3.1	<3.1	<5	<31
Chloroethane	<10	<10	<10	<10	<10	<50	<10	<10	<10	<100
2-Chloroethylvinyl ether	<10	<10	<10	<10	<10	<50	<10	<10	<50	<100
Chloroform	<1.6	<1.6	<1.6	<1.6	<1.6	<8.0	<1.6	<1.6	<5	<16
Dichlorobromomethane	<2.2	<2.2	<2.2	<2.2	<2.2	<11	<2.2	<2.2	<5	<22
Dichlorodifluoromethane	<10	<10	<10	<10	<10	<50	<10	<10	<5	<100
1,1-Dichloroethane	<4.7	<4.7	<4.7	<4.7	<4.7	<24	<4.7	<4.7	<5	<47
1,2-Dichloroethane	<2.8	<2.8	<2.8	<2.8	<2.8	<14	<2.8	<2.8	<5	<28
1,1-Dichloroethylene	<2.8	<2.8	<2.8	<2.8	<2.8	<14	<2.8	<2.8	<5	<28
1,2-Dichloropropane	<6	<6	<6.0	<6.0	<6.0	<30	<6.0	<6.0	<5	<60
cis-1,3-Dichloropropylene	<5	<5	<5.0	<5.0	<5.0	<25	<5.0	<5.0	<5	<50
Ethylbenzene	<7.2	<7.2	<7.2	<7.2	<7.2	<36	<7.2	<7.2	<5	<72
Methyl bromide	<10	<10	<10	<10	<10	<50	<10	<10	<10	<100
Methyl chloride	<10	<10	<10	<10	<10	<50	<10	<10	<10	<100
Methylene chloride	**14.4**	**17.4**	**6.64**	<2.8	<2.8	<14	<2.8	<2.8	<5	**66**
1,1,2,2-Tetrachloroethane	<6.9	<6.9	<6.9	<6.9	<6.9	<35	<6.9	<6.9	<5	<69
Tetrachloroethylene	<4.1	<4.1	<4.1	<4.1	<4.1	<21	<4.1	<4.1	<5	<41
Toluene	<6	<6	**48.7**	<6.0	<6.0	<30	**6.72**	<6.0	<5	<60
1,2-trans-Dichloroethylene	<1.6	<1.6	<1.6	<1.6	<1.6	<8.0	<1.6	<1.6	<5	<16
1,1,1-Trichloroethane	<3.8	<3.8	<3.8	<3.8	<3.8	<19	<3.8	<3.8	<5	
1,1,2-Trichloroethane	<5	<5	<5.0	<5.0	<5.0	<25	<5.0	<5.0	<5	
Trichloroethylene	<1.9	<1.9	<1.9	<1.9	<1.9	<9.5	<1.9	<1.9	<5	<19
Trichlorofluoromethane	<10	<10	<10	<10	<10	<50	<10	<10	<5	<100
Vinyl chloride	<10	<10	<10	<10	<10	<50	<10	<10	<10	<100
trans-1,3-Dichloropropylene	<10	<10	<10	<10	<10	<50	<10	<10	<5	<100
Sub Total 1	38	56	98	43	752	421	90	18	120	1,583
Miscellaneous Volatile Organic Compounds										
Acetone	NA	NA	NA	NA	NA	NA	NA	NA	NA	NA
Methyl ethyl ketone	NA	NA	NA	NA	NA	NA	NA	NA	NA	NA
Carbon disulfide	NA	NA	NA	NA	NA	NA	NA	NA	NA	NA
2-Hexanone	NA	NA	NA	NA	NA	NA	NA	NA	NA	NA
Styrene	NA	NA	NA	NA	NA	NA	NA	NA	NA	NA
Methyl-iso-butyl ketone	NA	NA	NA	NA	NA	NA	NA	NA	<25	<100
Methyl isoamyl ketone	NA	NA	NA	NA	NA	NA	NA	NA	<25	<100
m-Xylene	NA	NA	NA	NA	NA	NA	NA	NA	<5	<100
o-Xylene/p-Xylene	NA	NA	NA	NA	NA	NA	NA	NA	<5	<100
Sub Total 2	0	0	0	0	0	0	0	0	0	0
Total VOCs Analyzed	38	56	98	43	752	421	90	18	120	1,583

See footnotes on last page.

g:\technicl\tables\monsanto\krumm1a.xls

Well Number:	GM-10C	GM-12A	GM-12A	GM-12A	GM-12A	GM-12A	GM-12A	GM-12A	GM-12A	GM-12A
Date:	5/88	12/86*	5/87	5/87*	11/87	11/87*	5/88	5/88*	11/88	11/88 *
Laboratory:	ETC	ETC	ETC	ETC	ETC	ETC	ETC	ETC	ETC	ETC
USEPA Priority Pollutant Volatile Organic Compounds concentrations are in ug/L										
Acrolein	<100	<1,000	<1,000	<1,000	<500	<500	<1,000	<1,000	<1,000	<1,000
Acrylonitrile	<100	<1,000	<1,000	<1,000	<500	<500	<1,000	<1,000	<1,000	<1,000
Benzene	<4.4	**632**	**428**	**545**	**817**	**597**	**587**	**583**	**674**	**613**
Bis (chloromethyl) ether	<10	<100	<100	<100	<50	<50	<100	<100	<100	<100
Bromoform	<4.7	<47	<47	<47	<24	<24	<47	<47	<47	<47
Carbon tetrachloride	<2.8	<28	<28	<28	<14	<14	<28	<28	<28	<28
Chlorobenzene	**38.4**	**377**	**261**	**334**	**283**	**243**	**276**	**261**	**179**	**162**
Chlorodibromomethane	<3.1	<31	<31	<31	<16	<16	<31	<31	<31	<31
Chloroethane	<10	<100	<100	<100	<50	<50	<100	<100	<100	<100
2-Chloroethylvinyl ether	<10	<100	<100	<100	<50	<50	<100	<100	<100	<100
Chloroform	**1.8**	<16	<16	<16	<8.0	<8.0	<16	<16	<16	<16
Dichlorobromomethane	<2.2	<22	<22	<22	<11	<11	<22	<22	<22	<22
Dichlorodifluoromethane	<10	<100	<100	<100	<50	<50	<100	<100	<100	<100
1,1-Dichloroethane	<4.7	<47	<47	<47	<24	<24	<47	<47	<47	<47
1,2-Dichloroethane	<2.8	<28	<28	<28	<14	<14	<28	<28	<28	<28
1,1-Dichloroethylene	<2.8	<28	<28	<28	<14	<14	<28	<28	<28	<28
1,2-Dichloropropane	<6.0	<60	<60	<60	<30	<30	<60	<60	<60	<60
cis-1,3-Dichloropropylene	<5.0	<50	<50	<50	<36	<25	<50	<50	<50	<50
Ethylbenzene	<7.2	<72	<72	<72	<50	<36	<72	<72	<72	<72
Methyl bromide	<10	<100	<100	<100	<50	<50	<100	<100	<100	<100
Methyl chloride	<10	<100	<100	<100	<50	<50	<100	<100	<100	<100
Methylene chloride	**8.0**	**80**	**67.4**	**64**	<14	**18.8**	**120**	**101**	**49.3**	**263**
1,1,2,2-Tetrachloroethane	<6.9	<69	<69	<69	<35	<35	<69	<69	<69	<69
Tetrachloroethylene	<4.1	<41	<41	<41	<21	<21	<41	<41	<41	<41
Toluene	<6.0	<60	<60	<60	<30	<30	<60	<60	<60	<60
1,2-trans-Dichloroethylene	<1.6	<16	<16	<16	<8.0	<8.0	<16	<16	<16	<16
1,1,1-Trichloroethane	<3.8	<38	<38	<38	<19	<19	<38	<38	<38	<38
1,1,2-Trichloroethane	<5.0	<50	<50	<50	<25	<25	<50	<50	<50	<50
Trichloroethylene	<1.9	<19	<19	<19	<9.5	<9.5	<19	<19	<19	<19
Trichlorofluoromethane	<10	<100	<100	<100	<50	<50	<100	<100	<100	<100
Vinyl chloride	<10	<100	<100	<100	<50	<50	<100	<100	<100	<100
trans-1,3-Dichloropropylene	<10	<100	<100	<100	<50	<50	<100	<100	<100	<100
Sub Total 1	48	1,089	756	943	1,100	859	983	935	902	1,038
Miscellaneous Volatile Organic Compounds										
Acetone	NA	NA	NA	NA	NA	NA	NA	NA	NA	NA
Methyl ethyl ketone	NA	NA	NA	NA	NA	NA	NA	NA	NA	NA
Carbon disulfide	NA	NA	NA	NA	NA	NA	NA	NA	NA	NA
2-Hexanone	NA	NA	NA	NA	NA	NA	NA	NA	NA	NA
Styrene	NA	NA	NA	NA	NA	NA	NA	NA	NA	NA
Methyl-iso-butyl ketone	NA	<100	<100	<100	<50	<50	<100	<100	<100	<100
Methyl isoamyl ketone	NA	<100	<100	<100	<50	<50	<100	<100	<100	<100
m-Xylene	NA	<100	<100	<100	<50	<50	<100	<100	<100	<100
o-Xylene/p-Xylene	NA	<100	<100	<100	<50	<50	<100	<100	<100	<100
Sub Total 2	0	0	0	0	0	0	0	0	0	0
Total VOCs Analyzed	48	1,089	756	943	1,100	859	983	935	902	1,038

See footnotes on last page.

g:\technic\tables\monsanto\krumm1a.xls

Well Number:	GM-12A	GM-12A	GM-12A	GM-12A	GM-12A	GM-12A	GM-12A	GM-12A	GM-12A	GM-12A
Date:	11/88	5/89	5/89 *	11/89	11/89*	5/90	5/90*	11/90	11/90*	5/91
Laboratory:	SL	ETC	ETC	ETC	ETC	ETC	ETC	ETC	ETC	
USEPA Priority Pollutant Volatile Organic Compounds concentrations are in ug/L										
Acrolein	<500	<1,000	<1,000	<2,000	<2,000	<5,000	<5,000	<5,000	<5,000	<1,000
Acrylonitrile	<500	<1,000	<1,000	<2,000	<2,000	<5,000	<5,000	<5,000	<5,000	<1,000
Benzene	**410**	**752**	**678**	**559**	**676**	**2,850**	**2,520**	<220	**3,650**	**1,280**
Bis (chloromethyl) ether	<100	<100	<100	<200	<200	<500	<500	<500	<500	<100
Bromoform	<50	<47	<47	<94	<94	<240	<240	<240	<240	<47
Carbon tetrachloride	<50	<28	<28	<56	<56	<140	<140	<140	<140	<28
Chlorobenzene	**130**	**96.6**	**93.0**	<120	<120	**432**	**426**	**2,750**	**1,180**	**183**
Chlorodibromomethane	<50	<31	<31	<62	<62	<160	<160	<160	<160	<31
Chloroethane	<100	<100	<100	<200	<200	<500	<500	<500	<500	<100
2-Chloroethylvinyl ether	<50	<100	<100	<200	<200	<500	<500	<500	<500	<100
Chloroform	<50	<16	<16	<32	<32	<80	<80	<80	<80	<16
Dichlorobromomethane	<50	<22	<22	<44	<44	<110	<110	<110	<110	<22
Dichlorodifluoromethane	<100	<100	<100	<200	<200	<500	<500	<500	<500	<100
1,1-Dichloroethane	<50	<47	<47	<94	<94	<240	<240	<240	<240	<47
1,2-Dichloroethane	<50	<28	<28	<56	<56	<140	<140	<140	<140	<28
1,1-Dichloroethylene	<50	<28	<28	<56	<56	<140	<140	<140	<140	<28
1,2-Dichloropropane	<50	<60	<60	<120	<120	<300	<300	<300	<300	<60
cis-1,3-Dichloropropylene	<50	<50	<50	<100	<100	<250	<250	<250	<250	<50
Ethylbenzene	<50	<72	<72	<140	<140	<360	<360	<360	<360	<72
Methyl bromide	<100	<100	<100	<200	<200	<500	<500	<500	<500	<100
Methyl chloride	<100	<100	<100	<200	<200	<500	<500	<500	<500	<100
Methylene chloride	<50	**40.9**	**39.0**	**126**	**147.0**	<140	**432**	<140	<140	**32.0**
1,1,2,2-Tetrachloroethane	<50	<69	<69	<140	<140	<350	<350	<350	<350	<69
Tetrachloroethylene	<50	<41	<41	<82	<82	<210	<210	<210	<210	<41
Toluene	<50	<60	<60	<120	<120	<300	<300	<300	<300	<60
1,2-trans-Dichloroethylene	<50	<16	<16	<32	<32	<80	<80	<80	<80	<16
1,1,1-Trichloroethane	<50	<38	<38	<76	<76	<190	<190	<190	<190	
1,1,2-Trichloroethane	<50	<50	<50	<100	<100	<250	<250	<250	<250	
Trichloroethylene	<50	<19	<19	**43.6**	<38	<95	<95	<95	<95	<19
Trichlorofluoromethane	<50	<100	<100	<200	<200	<500	<500	<500	<500	<100
Vinyl chloride	<100	<100	<100	<200	<200	<500	<500	<500	<500	<100
trans-1,3-Dichloropropylene	<50	<100	<100	<200	<200	<500	<500	<500	<500	<100
Sub Total 1	540	889	810	729	823	3,282	3,377	2,750	4,830	1,495
Miscellaneous Volatile Organic Compounds										
Acetone	NA	NA	NA	NA	NA	NA	NA	NA	NA	NA
Methyl ethyl ketone	NA	NA	NA	NA	NA	NA	NA	NA	NA	NA
Carbon disulfide	NA	NA	NA	NA	NA	NA	NA	NA	NA	NA
2-Hexanone	NA	NA	NA	NA	NA	NA	NA	NA	NA	NA
Styrene	NA	NA	NA	NA	NA	NA	NA	NA	NA	NA
Methyl-iso-butyl ketone	<500	<100	<100	<200	<200	<500	<500	<500	<500	<100
Methyl isoamyl ketone	<100	<100	<100	<200	<200	<500	<500	<500	<500	NA
m-Xylene	<50	<100	<100	<200	<200	<500	<500	<500	<500	<100
o-Xylene/p-Xylene	<50	<100	<100	<200	<200	<500	<500	<500	<500	<100
Sub Total 2	0	0	0	0	0	0	0	0	0	0
Total VOCs Analyzed	540	889	810	729	823	3,282	3,377	2,750	4,830	1,495

See footnotes on last page.

g:\technicl\tables\monsanto\krumm1a.xls

Well Number:	GM-12A	GM-12A	GM-12A	GM-12A	GM-12A	GM-12A	GM-12A	GM-12B	GM-12B	GM-12B
Date:	5/91*	11/91	11/91*	11/92	11/92*	9/94	9/94*	12/86	5/87	11/87
Laboratory:	ETC	ETC	ETC	ETC	ETC	SL	SL	ETC	ETC	ETC
USEPA Priority Pollutant Volatile Organic Compounds concentrations are in ug/L										
Acrolein	<1,000	<100	<1,000	<100	<100	<2,000	<2,000	<100	<100	<500
Acrylonitrile	<1,000	<100	<1,000	<50	<50	<2,000	<2,000	<100	<100	<500
Benzene	**1,100**	**1,530**	**1,580**	**15.7**	**1,950**	**3,300**	**3,000**	**469**	**11.3**	**1,780**
Bis (chloromethyl) ether	<100	<100	<100	NA	NA	NA	NA	<10	<10	<50
Bromoform	<47	<47	<47	<4.7	<47	<100	<100	<4.7	<4.7	<24
Carbon tetrachloride	<28	<28	<28	<2.8	<28	<100	<100	<2.8	<2.8	<14
Chlorobenzene	**169**	**186**	**183**	<6.0	**112**	**240**	**200**	<6	<6	<30
Chlorodibromomethane	<31	<31	<31	<3.1	<31	<100	<100	<3.1	<3.1	<16
Chloroethane	<100	<100	<100	<10	<100	<200	<200	<10	<10	<50
2-Chloroethylvinyl ether	<100	<100	<100	NA	NA	<1,000	<1,000	<10	<10	<50
Chloroform	<16	<16	<16	<1.6	<16	<100	<100	<1.6	<1.6	<8.0
Dichlorobromomethane	<22	<22	<22	<2.2	<22	<100	<100	<2.2	<2.2	<11
Dichlorodifluoromethane	<100	<100	<100	<10	<100	<100	<100	<10	<10	<50
1,1-Dichloroethane	<47	<47	<47	<4.7	<47	<100	<100	<4.7	<4.7	<24
1,2-Dichloroethane	<28	<28	<28	<2.8	<28	<100	<100	<2.8	<2.8	<14
1,1-Dichloroethylene	<28	<28	<28	<2.8	<28	<100	<100	<2.8	<2.8	<14
1,2-Dichloropropane	<60	<60	<60	<6.0	<60	<100	<100	<6	<6	<30
cis-1,3-Dichloropropylene	<50	<50	<50	<5.0	<50	<100	<100	<5	<5	<25
Ethylbenzene	<72	<72	<72	<7.2	<72	<100	<100	<7.2	<7.2	<36
Methyl bromide	<100	<100	<100	<10	<100	<200	<200	<10	<10	<50
Methyl chloride	<100	<100	<100	<10	<100	<200	<200	<10	<10	<50
Methylene chloride	**39.4**	<28	<28	<2.8	<28	<100	<100	<2.8	**16.1**	<14
1,1,2,2-Tetrachloroethane	<69	<69	<69	<6.9	<69	<100	<100	<6.9	<6.9	<35
Tetrachloroethylene	<41	<41	<41	<4.1	<41	<100	<100	<4.1	<4.1	<21
Toluene	<60	<60	<60	<6.0	<60	<100	<100	**17.2**	<6.0	**35.4**
1,2-trans-Dichloroethylene	<16	<16	<16	<1.6	<16	<100	<100	<1.6	<1.6	<8.0
1,1,1-Trichloroethane	<38	<38	<38	<3.8	<38	<100	<100	<3.8	<3.8	<19
1,1,2-Trichloroethane	<50	<50	<50	<5.0	<50	<100	<100	<5	<5	<25
Trichloroethylene	<19	<19	<19	<1.9	<19	<100	<100	<1.9	<1.9	<9.5
Trichlorofluoromethane	<100	<100	<100	<10	<100	<100	<100	<10	<10	<50
Vinyl chloride	<100	<100	<100	<10	<100	<200	<200	<10	<10	<50
trans-1,3-Dichloropropylene	<100	<100	<100	<10	<100	<100	<100	<10	<10	<50
Sub Total 1	1,308	1,716	1,763	16	2,062	3,540	3,200	486	27	1,815
Miscellaneous Volatile Organic Compounds										
Acetone	NA	NA	NA	<10	<100	NA	NA	NA	NA	NA
Methyl ethyl ketone	NA	NA	NA	<10	<100	NA	NA	NA	NA	NA
Carbon disulfide	NA	NA	NA	<10	<100	NA	NA	NA	NA	NA
2-Hexanone	NA	NA	NA	NA	<100	NA	NA	NA	NA	NA
Styrene	NA	NA	NA	<10	<100	NA	NA	NA	NA	NA
Methyl-iso-butyl ketone	<100	<100	<100	NA	<100	<500	<500	<10	<10	<50
Methyl isoamyl ketone	NA	<100	<100	NA	NA	<500	<500	<10	<10	<50
m-Xylene	<100	<100	<100	NA	<100	<100	<100	<10	<10	<50
o-Xylene/p-Xylene	<100	<100	<100	NA	<100	<100	<100	**20.9**	**20.9**	**64.7**
Sub Total 2	0	0	0	0	0	0	0	21	21	55
Total VOCs Analyzed	1,308	1,716	1,763	16	2,062	3,540	3,200	507	48	1,870

See footnotes on last page.

g:\technicl\tables\monsanto\krumm1a.xls

Well Number:	GM-12B	GM-12B	GM-12B	GM-12B	GM-12B	GM-12B	GM-12B	GM-12B	GM-12B	GM-12B
Date:	5/88	11/88	5/89	11/89	5/90	11/90	5/91	11/91	11/92	9/94
Laboratory:	ETC	ETC	ETC	ETC	ETC	ETC	ETC	ETC	ETC	SL
USEPA Priority Pollutant Volatile Organic Compounds concentrations are in ug/L										
Acrolein	<1,000	<1,000	<5,000	<5,000	<1,000	<100	<2,500	<1,000	<50	<10,000
Acrylonitrile	<1,000	<1,000	<5,000	<5,000	<1,000	<100	<2,500	<1,000	<25	<10,000
Benzene	**398**	**1,990**	**1,920**	**2,810**	**634**	<4.4	**2,400**	**2,100**	**524**	**9,400**
Bis (chloromethyl) ether	<100	<100	<500	<500	<100	<10	<250	<100	NA	NA
Bromoform	<47	<47	<240	<240	<47	<4.7	<120	<47	<24	<500
Carbon tetrachloride	<28	<28	<140	<140	<28	<2.8	<70	<28	<14	<500
Chlorobenzene	<60	<60	<300	<300	<60	<6.0	<150	<60	<30	<500
Chlorodibromomethane	<31	<31	<160	<160	<31	<3.1	<78	<31	<16	<500
Chloroethane	<100	<100	<500	<500	<100	<10	<250	<100	<50	<1,000
2-Chloroethylvinyl ether	<100	<100	<500	<500	<100	<10	<250	<100	NA	<5,000
Chloroform	<16	<16	<80	<80	<16	<1.6	<40	<16	<8.0	<500
Dichlorobromomethane	<22	<22	<110	<110	<22	<2.2	<55	<22	<11	<500
Dichlorodifluoromethane	<100	<100	<500	<500	<100	<10	<250	<100	<50	<500
1,1-Dichloroethane	<47	<47	<240	<240	<47	<4.7	<120	<47	<24	<500
1,2-Dichloroethane	<28	<28	<140	<140	<28	<2.8	<70	<28	<14	<500
1,1-Dichloroethylene	<28	<28	<140	<140	<28	<2.8	<70	<28	<14	<500
1,2-Dichloropropane	<60	<60	<300	<300	<60	<6.0	<150	<60	<30	<500
cis-1,3-Dichloropropylene	<50	<50	<250	<250	<50	<5.0	<130	<50	<25	<500
Ethylbenzene	<72	<72	<360	<360	<72	<7.2	<180	<72	<36	<500
Methyl bromide	<100	<100	<500	<500	<100	<10	<250	<100	<50	<1,000
Methyl chloride	<100	<100	<500	<500	<100	<10	<250	<100	<50	<1,000
Methylene chloride	<28	**223**	**232**	<140	**33.8**	<2.8	<70	<28	<14	<500
1,1,2,2-Tetrachloroethane	<69	<69	<350	<350	<69	<6.9	<170	<69	<35	<500
Tetrachloroethylene	<41	<41	<210	<210	<41	<4.1	<100	<41	<21	<500
Toluene	<60	<60	<300	<300	<60	<6.0	<150	<60	<30	<500
1,2-trans-Dichloroethylene	<16	**16.1**	<80	<80	<16	<1.6	<40	<16	<8.0	<500
1,1,1-Trichloroethane	<38	<38	<190	<190	<38	<3.8	<95	<38	<19	<500
',2-Trichloroethane	<50	<50	<250	<250	<50	<5.0	<130	<50	<25	<500
ichloroethylene	<19	<19	<95	<95	<19	<1.9	<48	<19	<9.5	<500
Trichlorofluoromethane	<100	<100	<500	<500	<100	<10	<250	<100	<50	<500
Vinyl chloride	<100	<100	<500	<500	<100	<10	<250	<100	<50	<1,000
trans-1,3-Dichloropropylene	<100	<100	<500	<500	<100	<10	<250	<100	<50	<500
Sub Total 1	398	2,229	2,152	2,810	668	0	2,400	2,100	524	9,400
Miscellaneous Volatile Organic Compounds										
Acetone	NA	NA	NA	NA	NA	NA	NA	NA	**257**	NA
Methyl ethyl ketone	NA	NA	NA	NA	NA	NA	NA	NA	<50	NA
Carbon disulfide	NA	NA	NA	NA	NA	NA	NA	NA	<50	NA
2-Hexanone	NA	NA	NA	NA	NA	NA	NA	NA	<50	NA
Styrene	NA	NA	NA	NA	NA	NA	NA	NA	<50	NA
Methyl-iso-butyl ketone	<100	<100	<500	<500	<100	<10	<250	<100	<50	<2,500
Methyl isoamyl ketone	<100	<100	<500	<500	<100	<10	NA	<100	NA	<2,500
m-Xylene	**1,110**	**143**	<500	<500	<100	<10	<250	<100	<50	<500
o-Xylene/p-Xylene	**832**	**141**	<500	<500	<100	<10	<250	<100	<50	<500
Sub Total 2	1,942	284	0	0	0	0	0	0	257	0
Total VOCs Analyzed	2,340	2,513	2,152	2,810	668	0	2,400	2,100	781	9,400

See footnotes on last page.

I:\technic\tables\monsanto\krumm1a.xls

Well Number:	GM-12C	GM-12C	GM-12C	GM-17A	GM-17A	GM-17A	GM-17A	GM-17A	GM-17A	GM-17A
Date:	11/91	11/92	9/94	12/86	5/87	11/87	5/88	11/88	11/89	11/90
Laboratory:	ETC	ETC	SL	ETC	ETC	ETC	ETC	ETC	ETC	ETC
USEPA Priority Pollutant Volatile Organic Compounds concentrations are in ug/L										
Acrolein	<100	<20	<100	<100,000	<100,000	<10,000	<500,000	<100,000	0,000,000	<500,000
Acrylonitrile	<100	<10	<100	<100,000	<100,000	<10,000	<500,000	<100,000	0,000,000	<500,000
Benzene	<4.4	<4.4	<5	**482,000**	**517,000**	**654,000**	**537,000**	**700,000**	**286,000**	**561,000**
Bis (chloromethyl) ether	<10	NA	NA	<10,000	<10,000	<1,000	<50,000	<10,000	1,000,000	<50,000
Bromoform	<4.7	<4.7	<5	<4,700	<4,700	<470	<24,000	<4,700	<470,000	<24,000
Carbon tetrachloride	<2.8	<2.8	<5	<2,800	<2,800	<280	<14,000	<2,800	<280,000	<14,000
Chlorobenzene	<6.0	**13.2**	**16**	**163,000**	**221,000**	**234,000**	**233,000**	**155,000**	**129,000**	**267,000**
Chlorodibromomethane	<3.1	<3.1	<5	<3,100	<3,100	<310	<16,000	<3,100	3,100,000	<16,000
Chloroethane	<10	<10	<10	<10,000	<10,000	<1,000	<50,000	<10,000	1,000,000	<50,000
2-Chloroethylvinyl ether	<10	NA	<50	<10,000	<10,000	<1,000	<50,000	<10,000	1,000,000	<50,000
Chloroform	<1.6	<1.6	<5	<1,600	<1,600	<160	<8,000	<1,600	<160,000	<8,000
Dichlorobromomethane	<2.2	<2.2	<5	<2,200	<2,200	<220	<11,000	<2,200	<220,000	<11,000
Dichlorodifluoromethane	<10	<10	<5	<10,000	<10,000	<1,000	<50,000	<10,000	1,000,000	<50,000
1,1-Dichloroethane	<4.7	<4.7	<5	<4,700	<4,700	<470	<24,000	<4,700	<470,000	<24,000
1,2-Dichloroethane	<2.8	<2.8	<5	<2,800	<2,800	<280	<14,000	<2,800	<280,000	<14,000
1,1-Dichloroethylene	<2.8	<2.8	<5	<2,800	<2,800	<280	<14,000	<2,800	<280,000	<14,000
1,2-Dichloropropane	<6.0	<6.0	<5	<6,000	<6,000	<600	<30,000	<6,000	<600,000	<30,000
cis-1,3-Dichloropropylene	<5.0	<5.0	<5	<5,000	<5,000	<1,000	<25,000	<5,000	<500,000	<25,000
Ethylbenzene	<7.2	<7.2	<5	<7,200	<7,200	<720	<36,000	<7,200	<720,000	<36,000
Methyl bromide	<10	<10	<10	<10,000	<10,000	<1,000	<50,000	<10,000	1,000,000	<50,000
Methyl chloride	<10	<10	<10	<10,000	<10,000	<1,000	<50,000	<10,000	1,000,000	<50,000
Methylene chloride	<2.8	<2.8	<5	<2,800	**17,200**	**890**	<14,000	**9,460**	<28,000	<14,000
1,1,2,2-Tetrachloroethane	<6.9	<6.9	<5	<6,900	<6,900	<690	<35,000	<6,900	<690,000	<35,000
Tetrachloroethylene	<4.1	<4.1	<5	<4,100	<4,100	<410	<21,000	<4,100	<410,000	<21,000
Toluene	<6.0	<6.0	<5	<6,000	<6,000	<600	<30,000	<6,000	<600,000	<30,000
1,2-trans-Dichloroethylene	<1.6	<1.6	<5	<1,600	<1,600	<160	<8,000	<1,600	<160,000	<8,000
1,1,1-Trichloroethane	<3.8	<3.8	<5	<3,800	<3,800	<380	<19,000	<3,800	<380,000	<19,000
1,1,2-Trichloroethane	<5.0	<5.0	<5	<5,000	<5,000	<500	<25,000	<5,000	<500,000	<25,000
Trichloroethylene	<1.9	<1.9	<5	<1,900	<1,900	<190	<9,500	<1,900	<190,000	<9,500
Trichlorofluoromethane	<10	<10	<5	<10,000	<10,000	<1,000	<50,000	<10,000	1,000,000	<50,000
Vinyl chloride	<10	<10	<10	<10,000	<10,000	<1,000	<50,000	<10,000	1,000,000	<50,000
trans-1,3-Dichloropropylene	<10	<10	<10	<10,000	<10,000	<500	<50,000	<10,000	1,000,000	<50,000
Sub Total 1	0	13	15	635,000	755,200	888,890	770,000	864,460	415,000	818,000
Miscellaneous Volatile Organic Compounds										
Acetone	NA	<10	NA	NA	NA	NA	NA	NA	NA	NA
Methyl ethyl ketone	NA	<10	NA	NA	NA	NA	NA	NA	NA	NA
Carbon disulfide	NA	<10	NA	NA	NA	NA	NA	NA	NA	NA
2-Hexanone	NA	<10	NA	NA	NA	NA	NA	NA	NA	NA
Styrene	NA	<10	NA	NA	NA	NA	NA	NA	NA	NA
Methyl-iso-butyl ketone	<10	<10	<25	NA	NA	NA	NA	NA	NA	NA
Methyl isoamyl ketone	<10	NA	<25	NA	NA	NA	NA	NA	NA	NA
m-Xylene	<10	<10	<5	NA	NA	NA	NA	NA	NA	NA
o-Xylene/p-Xylene	<10	<10	<5	NA	NA	NA	NA	NA	NA	NA
Sub Total 2	0	0	0	0	0	0	0	0	0	0
Total VOCs Analyzed	0	13	15	635,000	755,200	888,890	770,000	864,460	415,000	818,000

See footnotes on last page.

g:\technic\tables\monsanto\krumm1a.xls

Well Number:	GM-17A	GM-17A	GM-17A	GM-17B	GM-17B	GM-17B	GM-17B	GM-17B	GM-17B	GM-17B
Date:	11/91	11/92	9/94	12/86	5/87	11/87	5/88	11/88	5/89	11/89
Laboratory:	ETC	ETC	SL	ETC	ETC	ETC	ETC	ETC	ETC	ETC
USEPA Priority Pollutant Volatile Organic Compounds concentrations are in ug/L										
Acrolein	<500,000	<20,000	<250,000	<2,000	<100,000	<10,000	<10,000	<1,000	<1,000	<10,000
Acrylonitrile	<500,000	<10,000	<250,000	<2,000	<100,000	<10,000	<10,000	<1,000	<1,000	<10,000
Benzene	**127,000**	**532,000**	**380,000**	**52,900**	**70,600**	**69,300**	**9,610**	<44	**220**	<440
Bis (chloromethyl) ether	<50,000	NA	NA	<200	<10,000	<1,000	<1,000	<100	<100	<1,000
Bromoform	<24,000	<24,000	<12,000	<94	<4,700	<470	<470	<47	<47	<470
Carbon tetrachloride	<14,000	<14,000	<12,000	<56	<2,800	<280	<280	<28	<28	<280
Chlorobenzene	**42,000**	**341,000**	**310,000**	**9,260**	**13,500**	**8,530**	**2,210**	**622**	**6,390**	**10,100**
Chlorodibromomethane	<16,000	<16,000	<12,000	<62	<3,100	<310	<310	<31	<31	<310
Chloroethane	<50,000	<50,000	<25,000	<200	<10,000	<1,000	<1,000	<100	<100	<1,000
2-Chloroethylvinyl ether	<50,000	NA	<120,000	<200	<10,000	<1,000	<1,000	<100	<100	<1,000
Chloroform	<8,000	<8,000	<12,000	<32	<1,600	<160	<160	<16	<16	<160
Dichlorobromomethane	<11,000	<11,000	<12,000	<44	<2,200	<220	<220	<22	<22	<220
Dichlorodifluoromethane	<50,000	<50,000	<12,000	<200	<10,000	<1,000	<1,000	<100	<100	<1,000
1,1-Dichloroethane	<24,000	<24,000	<12,000	<94	<4,700	<470	<470	<47	<47	<470
1,2-Dichloroethane	<14,000	<14,000	<12,000	<56	<2,800	<280	<280	<28	<28	<280
1,1-Dichloroethylene	<14,000	<14,000	<12,000	<56	<2,800	<280	<280	<28	<28	<280
1,2-Dichloropropane	<30,000	<30,000	<12,000	<120	<6,000	<600	<600	<60	<60	<600
cis-1,3-Dichloropropylene	<25,000	<25,000	<12,000	<120	<5,000	<1,000	<500	<50	<50	<500
Ethylbenzene	<36,000	<36,000	<12,000	<140	<7,200	<720	<720	<72	<72	<750
Methyl bromide	<50,000	<50,000	<25,000	<200	<10,000	<1,000	<1,000	<100	<100	<1,000
Methyl chloride	<50,000	<50,000	<25,000	<200	<10,000	<1,000	<1,000	<100	<100	<1,000
Methylene chloride	<14,000	**31,400**	<12,000	<56	**15,700**	**1,220**	<280	**662**	**37.9**	**364**
1,1,2,2-Tetrachloroethane	<35,000	<35,000	<12,000	<140	<6,900	<690	<690	<69	<69	<690
Tetrachloroethylene	<21,000	<21,000	<12,000	<82	<4,100	<410	<410	<41	<41	<410
Toluene	<30,000	<30,000	<12,000	<120	<6,000	<600	<600	<60	<60	<600
1,2-trans-Dichloroethylene	<8,000	<8,000	<12,000	<32	<1,600	<160	<160	<16	<16	<160
1,1,1-Trichloroethane	<19,000	<19,000	<12,000	<76	<3,800	<380	<380	<38	<38	<380
1,1,2-Trichloroethane	<25,000	<25,000	<12,000	<100	<5,000	<500	<500	<50	<50	<500
Trichloroethylene	<9,500	<9,500	<12,000	<38	<1,900	<190	<190	<19	<19	<190
Trichlorofluoromethane	**76,700**	<50,000	<12,000	<200	<10,000	<1,000	<1,000	<100	<100	<1,000
Vinyl chloride	<50,000	<50,000	<25,000	<200	<10,000	<1,000	<1,000	<100	<100	<1,000
trans-1,3-Dichloropropylene	<50,000	<50,000	<12,000	<200	<10,000	<500	<1,000	<100	<100	<1,000
Sub Total 1	245,700	904,400	690,000	62,160	99,800	79,050	11,820	1,284	6,648	10,464
Miscellaneous Volatile Organic Compounds										
Acetone	NA	<50,000	NA	NA	NA	NA	NA	NA	NA	NA
Methyl ethyl ketone	NA	<50,000	NA	NA	NA	NA	NA	NA	NA	NA
Carbon disulfide	NA	<50,000	NA	NA	NA	NA	NA	NA	NA	NA
2-Hexanone	NA	<50,000	NA	NA	NA	NA	NA	NA	NA	NA
Styrene	NA	<50,000	NA	NA	NA	NA	NA	NA	NA	NA
Methyl-iso-butyl ketone	NA	<50,000	<62,000	NA	NA	NA	NA	NA	NA	NA
Methyl isoamyl ketone	NA	NA	<62,000	NA	NA	NA	NA	NA	NA	NA
m-Xylene	NA	<50,000	<12,000	NA	NA	NA	NA	NA	NA	NA
o-Xylene/p-Xylene	NA	<50,000	<12,000	NA	NA	NA	NA	NA	NA	NA
Sub Total 2	0	0	0	0	0	0	0	0	0	0
Total VOCs Analyzed	245,700	904,400	690,000	62,160	99,800	79,050	11,820	1,284	6,648	10,464

See footnotes on last page.

g:\technicl\tables\monsanto\krumm1a.xls

Well Number:	GM-17B	GM-17B	GM-17B	GM-17B	GM-17B	GM-17B	GM-17C	GM-17C	GM-17C	GM-17C
Date:	5/90	11/90	5/91	11/91	11/92	9/94	12/86	5/87	11/87	5/88
Laboratory:	ETC	ETC	ETC	ETC	ETC	SL	ETC	ETC	ETC	ETC
USEPA Priority Pollutant Volatile Organic Compounds concentrations are in ug/L										
Acrolein	<500	<10,000	<5,000	<10,000	<200	<2,500	<10,000	<5,000	<10,000	<10,000
Acrylonitrile	<500	<10,000	<5,000	<10,000	<100	<2,500	<10,000	<5,000	<10,000	<10,000
Benzene	<22	<440	**249**	<440	<110	<120	<440	<220	<440	<440
Bis (chloromethyl) ether	<50	<1,000	<500	<1,000	NA	NA	<1,000	<500	<1,000	<1,000
Bromoform	<24	<470	<240	<470	<120	<120	<470	<240	<470	<470
Carbon tetrachloride	<14	<280	<140	<280	<70	<120	<280	<140	<280	<280
Chlorobenzene	**120**	**8,670**	**7,030**	**10,700**	**5,400**	**1,200**	**6,290**	**20,200**	**21,400**	**3,110**
Chlorodibromomethane	<16	<310	<160	<310	<78	<120	<310	<160	<310	<310
Chloroethane	<50	<1,000	<500	<1,000	<250	<250	<1,000	<500	<1,000	<1,000
2-Chloroethylvinyl ether	<50	<1,000	<500	<1,000	NA	<1,200	<1,000	<500	<1,000	<1,000
Chloroform	<8.0	<160	<80	<160	<40	<120	<160	<80	<160	<160
Dichlorobromomethane	<11	<220	<110	<220	<55	<120	<220	<110	<220	<220
Dichlorodifluoromethane	<50	<1,000	<500	<1,000	<250	<120	<1,000	<500	<1,000	<1,000
1,1-Dichloroethane	<24	<470	<240	<470	<120	<120	<470	<240	<470	<470
1,2-Dichloroethane	<14	<280	<140	<280	<70	<120	<280	<140	<280	<280
1,1-Dichloroethylene	<14	<280	<140	<280	<70	<120	<280	<140	<280	<280
1,2-Dichloropropane	<30	<600	<300	<600	<150	<120	<600	<300	<600	<600
cis-1,3-Dichloropropylene	<25	<500	<250	<500	<130	<120	<500	<250	<500	<500
Ethylbenzene	<36	<720	<360	<720	<180	<120	<720	<360	<720	<720
Methyl bromide	<50	<1,000	<500	<1,000	<250	<250	<1,000	<500	<1,000	<1,000
Methyl chloride	<50	<1,000	<500	<1,000	<250	<250	<1,000	<500	<1,000	<1,000
Methylene chloride	**19.7**	<280	**152**	<280	<70	<120	**1,030**	**361**	<280	<280
1,1,2,2-Tetrachloroethane	<35	<690	<350	<690	<170	<120	<690	<350	<690	<690
Tetrachloroethylene	<21	<410	<210	<410	<100	<120	<410	<210	<410	<410
Toluene	<30	<600	<300	<600	<150	<120	<600	<300	<600	<600
1,2-trans-Dichloroethylene	<8.0	<160	<80	<160	<40	<120	<160	<80	<160	<160
1,1,1-Trichloroethane	<19	<380	<190	<380	<95	<120	<380	<190	<380	<380
1,1,2-Trichloroethane	<25	<500	<250	<500	<130	<120	<500	<250	<500	<500
Trichloroethylene	<9.5	<190	<95	<190	<48	<120	<190	<95	<190	<190
Trichlorofluoromethane	<50	<1,000	<500	<1,000	<250	<120	<1,000	<500	<1,000	<1,000
Vinyl chloride	<50	<1,000	<500	<1,000	<250	<250	<1,000	<500	<1,000	<1,000
trans-1,3-Dichloropropylene	<50	<1,000	<500	<1,000	<250	<120	<1,000	<500	<1,000	<1,000
Sub Total 1	140	8,670	7,431	10,700	5,400	1,200	7,320	20,561	21,400	3,110
Miscellaneous Volatile Organic Compounds										
Acetone	NA	NA	NA	NA	<250	NA	NA	NA	NA	NA
Methyl ethyl ketone	NA	NA	NA	NA	<250	NA	NA	NA	NA	NA
Carbon disulfide	NA	NA	NA	NA	<250	NA	NA	NA	NA	NA
2-Hexanone	NA	NA	NA	NA	<250	NA	NA	NA	NA	NA
Styrene	NA	NA	NA	NA	<250	NA	NA	NA	NA	NA
Methyl-iso-butyl ketone	NA	NA	NA	NA	<250	<620	NA	NA	NA	NA
Methyl isoamyl ketone	NA	NA	NA	NA	NA	<620	NA	NA	NA	NA
m-Xylene	NA	NA	NA	NA	<250	<120	NA	NA	NA	NA
o-Xylene/p-Xylene	NA	NA	NA	NA	<250	<120	NA	NA	NA	NA
Sub Total 2	0	0	0	0	0	0	0	0	0	0
Total VOCs Analyzed	140	8,670	7,431	10,700	5,400	1,200	7,320	20,561	21,400	3,110

See footnotes on last page.

g:\technicl\tables\monsanto\krumm1a.xls

Well Number:	GM-17C	GM-17C	GM-17C	GM-17C	GM-17C	GM-17C	GM-17C	GM-17C	GM-17C	GM-18B
Date:	11/88	5/89	11/89	5/90	11/90	5/91	11/91	11/92	9/94	11/92
Laboratory:	ETC	ETC	ETC	ETC	ETC	ETC	ETC	ETC	SL	ETC
USEPA Priority Pollutant Volatile Organic Compounds concentrations are in ug/L										
Acrolein	<10,000	<100	<2,000	<1,000	<5,000	<2,000	<10,000	<200	<20,000	<100
Acrylonitrile	<10,000	<100	<2,000	<1,000	<5,000	<2,000	<10,000	<100	<20,000	<100
Benzene	<440	**22.5**	<88	**92.8**	<220	**133**	<440	**390**	**4,200**	<4.4
Bis (chloromethyl) ether	<1,000	<10	<200	<100	<500	<200	<1,000	NA	NA	<10
Bromoform	<470	<4.7	<94	<47	<240	<94	<470	<240	<1,000	<4.7
Carbon tetrachloride	<280	<2.8	<56	<28	<140	<56	<280	<140	<1,000	<2.8
Chlorobenzene	**3,480**	**701**	**1,430**	**923**	**3,330**	**1,740**	**7,690**	**6,520**	**27,000**	**29.2**
Chlorodibromomethane	<310	<3.1	<62	<31	<160	<62	<310	<160	<1,000	<3.1
Chloroethane	<1,000	<10	<200	<100	<500	<200	<1,000	<500	<2,000	<10
2-Chloroethylvinyl ether	<1,000	<10	<200	<100	<500	<200	<1,000	NA	<10,000	<10
Chloroform	<160	<1.6	<32	<16	<80	<32	<160	<80	<1,000	<1.6
Dichlorobromomethane	<220	<2.2	<44	<22	<110	<44	<220	<110	<1,000	<2.2
Dichlorodifluoromethane	<1,000	<10	<200	<100	<500	<200	<1,000	<500	<1,000	<10
1,1-Dichloroethane	<470	<4.7	<94	<47	<240	<94	<470	<240	<1,000	<4.7
1,2-Dichloroethane	<280	<2.8	<56	<28	<140	<56	<280	<140	<1,000	<2.8
1,1-Dichloroethylene	<280	<2.8	<56	<28	<140	<56	<280	<140	<1,000	<2.8
1,2-Dichloropropane	<600	<6.0	<120	<60	<300	<120	<600	<300	<1,000	<6.0
cis-1,3-Dichloropropylene	<500	<5.0	<100	<50	<250	<100	<500	<250	<1,000	<5.0
Ethylbenzene	<720	<7.2	<140	<72	<360	<140	<720	<360	<1,000	<7.2
Methyl bromide	<1,000	<10	<200	<100	<500	<200	<1,000	<500	<2,000	<10
Methyl chloride	<1,000	<10	<200	<100	<500	<200	<1,000	<500	<2,000	<10
Methylene chloride	**422**	**4.75**	<56	<28	<140	<56	<280	<140	<1,000	**6.19**
1,1,2,2-Tetrachloroethane	<690	<6.9	<140	<69	<350	<140	<690	<350	<1,000	<6.9
Tetrachloroethylene	<410	<4.1	<82	<41	<210	<82	<410	<210	<1,000	<4.1
Toluene	<600	<6.0	<120	<60	<300	<120	<600	<300	<1,000	<6.0
1,2-trans-Dichloroethylene	<160	<1.6	<32	<16	<80	<32	<160	<80	<1,000	<1.6
1,1,1-Trichloroethane	<380	<3.8	<76	<38	<190	<76	<380	<190	<1,000	<3.8
1,1,2-Trichloroethane	<500	<5.0	<100	<50	<250	<100	<500	<250	<1,000	
Trichloroethylene	<190	<1.9	<38	<19	<95	<38	<190	<95	<1,000	
Trichlorofluoromethane	<1,000	<10	<200	<100	<500	<200	<1,000	<500	<1,000	<10
Vinyl chloride	<1,000	<10	<200	<100	<500	<200	<1,000	<500	<2,000	<10
trans-1,3-Dichloropropylene	<1,000	<10	<200	<100	<500	<200	<1,000	<500	<1,000	<10
Sub Total 1	3,902	728	1,430	1,016	3,330	1,873	7,690	6,910	31,200	34
Miscellaneous Volatile Organic Compounds										
Acetone	NA	NA	NA	NA	NA	NA	NA	<500	NA	NA
Methyl ethyl ketone	NA	NA	NA	NA	NA	NA	NA	<500	NA	NA
Carbon disulfide	NA	NA	NA	NA	NA	NA	NA	<500	NA	NA
2-Hexanone	NA	NA	NA	NA	NA	NA	NA	<500	NA	NA
Styrene	NA	NA	NA	NA	NA	NA	NA	<500	NA	NA
Methyl-iso-butyl ketone	NA	NA	NA	NA	NA	NA	NA	<500	<5,000	NA
Methyl isoamyl ketone	NA	NA	NA	NA	NA	NA	NA	NA	<5,000	NA
m-Xylene	NA	NA	NA	NA	NA	NA	NA	<500	<1,000	NA
o-Xylene/p-Xylene	NA	NA	NA	NA	NA	NA	NA	<500	<1,000	NA
Sub Total 2	0	0	0	0	0	0	0	0	0	0
Total VOCs Analyzed	3,902	728	1,430	1,016	3,330	1,873	7,690	6,910	31,200	34

See footnotes on last page.

g:\technic\tables\monsanto\krumm1a.xls

Well Number:	GM-20B	GM-20B	GM-27B	GM-27B	GM-27B	GM-27B	GM-27B	GM-27B	GM-27B	GM-27B
Date:	11/92	9/94	12/86	5/87	11/87	5/88	11/89	11/90	11/91	11/92
Laboratory:	ETC	SL	ETC	ETC	ETC	ETC	ETC	ETC	ETC	ETC
USEPA Priority Pollutant Volatile Organic Compounds concentrations are in ug/L										
Acrolein	<100	<500	<100	<100	<50,000	<10,000	<5,000	<10,000	<10,000	<10,000
Acrylonitrile	<100	<500	<100	<100	<50,000	<10,000	<5,000	<10,000	<10,000	<10,000
Benzene	<4.4	<25	**237**	**156**	**9,980**	**670**	**2,460**	**1,170**	**1,070**	**1,010**
Bis (chloromethyl) ether	<10	NA	<10	<10	<5,000	<1,000	<500	<1,000	<1,000	<1,000
Bromoform	<4.7	<25	<4.7	<4.7	<2,400	<470	<240	<470	<470	<470
Carbon tetrachloride	<2.8	<25	<2.8	<2.8	<1,400	<280	<140	<280	<280	<280
Chlorobenzene	**20**	**450**	**383**	**193**	**60,200**	**2,940**	**10,500**	**10,100**	**8,760**	**10,800**
Chlorodibromomethane	<3.1	<25	<3.1	<3.1	<1,600	<310	<160	<310	<310	<310
Chloroethane	<10	<50	<10	<10	<5,000	<1,000	<500	<1,000	<1,000	<1,000
2-Chloroethylvinyl ether	<10	<250	<10	<10	<5,000	<1,000	<500	<1,000	<1,000	<1,000
Chloroform	<1.6	<25	<1.6	<1.6	<800	<160	<80	<160	<160	<160
Dichlorobromomethane	<2.2	<25	<2.2	<2.2	<1,100	<220	<110	<220	<220	<220
Dichlorodifluoromethane	<10	<25	<10	<10	<5,000	<1,000	<500	<1,000	<1,000	<1,000
1,1-Dichloroethane	<4.7	**41**	<4.7	<4.7	<2,400	<470	<240	<470	<470	<470
1,2-Dichloroethane	<2.8	<25	<2.8	<2.8	<1,400	<280	<140	<280	<280	<280
1,1-Dichloroethylene	<2.8	<25	<2.8	<2.8	<1,400	<280	<140	<280	<280	<280
1,2-Dichloropropane	<6.0	<25	<6	<6	<3,000	<600	<300	<600	<600	<600
cis-1,3-Dichloropropylene	<5.0	<25	<5	<5	<2,500	<500	<250	<500	<500	<500
Ethylbenzene	<7.2	<25	<7.2	<7.2	<3,600	<720	<360	<720	<720	<720
Methyl bromide	<10	<50	<10	<10	<5,000	<1,000	<500	<1,000	<1,000	<1,000
Methyl chloride	<10	<50	<10	<10	<5,000	<1,000	<500	<1,000	<1,000	<1,000
Methylene chloride	<2.8	<50	**9.6**	<2.8	<1,400	<280	**227**	<280	<280	<280
1,1,2,2-Tetrachloroethane	<6.9	<50	<6.9	<6.9	<3,500	<690	<350	<690	<690	<690
Tetrachloroethylene	<4.1	<50	<4.1	<4.1	<2,100	<410	<210	<410	<410	<410
Toluene	<6.0	<50	**6**	<6	<3,000	<600	**1,400**	**1,120**	**857**	**809**
1,2-trans-Dichloroethylene	<1.6	<50	<1.6	<1.6	<800	<160	<80	<160	<160	<160
1,1,1-Trichloroethane	<3.8	<50	<3.8	<3.8	<1,900	<380	<190	<380	<380	<380
1,1,2-Trichloroethane	<5.0	<50	<5	<5	<2,500	<500	<250	<500	<500	<500
Trichloroethylene	<1.9	<50	<1.9	<1.9	<950	<190	<95	<190	<190	<190
Trichlorofluoromethane	<10	<50	<10	<10	<5,000	<1,000	<500	<1,000	<1,000	<1,000
Vinyl chloride	<10	<50	<10	<10	<5,000	<1,000	<500	<1,000	<1,000	<1,000
trans-1,3-Dichloropropylene	<10	<25	<10	<10	<5,000	<1,000	<500	<1,000	<1,000	<1,000
Sub Total 1	20	491	636	349	70,180	3,610	14,587	12,390	10,687	12,619
Miscellaneous Volatile Organic Compounds										
Acetone	NA	NA	NA	NA	NA	NA	NA	NA	NA	NA
Methyl ethyl ketone	NA	NA	NA	NA	NA	NA	NA	NA	NA	NA
Carbon disulfide	NA	NA	NA	NA	NA	NA	NA	NA	NA	NA
2-Hexanone	NA	NA	NA	NA	NA	NA	NA	NA	NA	NA
Styrene	NA	NA	NA	NA	NA	NA	NA	NA	NA	NA
Methyl-iso-butyl ketone	NA	<120	NA	NA	<5,000	NA	NA	NA	NA	NA
Methyl isoamyl ketone	NA	<120	NA	NA	<5,000	NA	NA	NA	NA	NA
m-Xylene	NA	<25	NA	NA	<5,000	NA	NA	NA	NA	NA
o-Xylene/p-Xylene	NA	<25	NA	NA	<5,000	NA	NA	NA	NA	NA
Sub Total 2	0	0	0	0	0	0	0	0	0	0
Total VOCs Analyzed	20	491	636	349	70,180	3,610	14,587	12,390	10,687	12,619

See footnotes on last page.

g:\technic\tables\monsanto\krumm1a.xls

Well Number:	GM-27C	GM-27C	GM-27C	GM-27C	GM-27C	GM-27C	GM-27C	GM-27C	GM-27C	GM-28B
Date:	12/86	5/87	11/87	5/88	11/88	11/89	11/90	11/91	11/92	12/86
Laboratory:	ETC	ETC	ETC	ETC	ETC	ETC	ETC	ETC	ETC	ETC
USEPA Priority Pollutant Volatile Organic Compounds concentrations are in ug/L										
Acrolein	<100	<100	<1,000	<5,000	<1,000	<5,000	<500	<1,000	<1,000	<2,000
Acrylonitrile	<100	<100	<1,000	<5,000	<1,000	<5,000	<500	<1,000	<1,000	<2,000
Benzene	**159**	**122**	**433**	**346**	**529**	**331**	**414**	**323**	**263**	**289**
Bis (chloromethyl) ether	<10	<10	<100	<500	<100	<500	<50	<100	<100	<200
Bromoform	<4.7	<4.7	<47	<240	<47	<240	<24	<47	<47	<94
Carbon tetrachloride	<2.8	<2.8	<28	<140	<28	<140	<14	<28	<28	<56
Chlorobenzene	**385**	**318**	**1,300**	**710**	**2,030**	**1,840**	**2,440**	**1,850**	**1,610**	**3,310**
Chlorodibromomethane	<3.1	<3.1	<31	<160	<31	<160	<16	<31	<31	<62
Chloroethane	<10	<10	<100	<500	<100	<500	<50	<100	<100	<200
2-Chloroethylvinyl ether	<10	<10	<100	<500	<100	<500	<50	<100	<100	<200
Chloroform	<1.6	<1.6	<16	<80	<16	<80	<8.0	<16	<16	<32
Dichlorobromomethane	<2.2	<2.2	<22	<110	<22	<110	<11	<22	<22	<44
Dichlorodifluoromethane	<10	<10	<100	<500	<100	<500	<50	<100	<100	<200
1,1-Dichloroethane	<4.7	<4.7	<47	<240	<47	<240	<24	<47	<47	<94
1,2-Dichloroethane	<2.8	<2.8	<28	<140	<28	<140	<14	<28	<28	<56
1,1-Dichloroethylene	<2.8	<2.8	<28	<140	<28	<140	<14	<28	<28	<56
1,2-Dichloropropane	<6	<6	<60	<300	<60	<300	<30	<60	<60	<120
cis-1,3-Dichloropropylene	<5	<5	<50	<250	<50	<250	<25	<50	<50	<100
Ethylbenzene	<7.2	<7.2	<72	<360	<72	<360	<36	<72	<72	<140
Methyl bromide	<10	<10	<100	<500	<100	<500	<50	<100	<100	<200
Methyl chloride	<10	<10	<100	<500	<100	<500	<50	<100	<100	<200
Methylene chloride	<2.8	<2.8	<28	<140	**203**	**693**	<14	<28	<28	<56
1,1,2,2-Tetrachloroethane	<6.9	<6.9	<69	<350	<69	<350	<35	<69	<69	<140
Tetrachloroethylene	<4.1	<4.1	<41	<210	<41	<210	<21	<41	<41	<82
Toluene	<6	<6	<60	<300	**232**	<300	**90.6**	<60	<60	<120
1,2-trans-Dichloroethylene	<1.6	<1.6	<16	<80	<16	<80	<8.0	<16	<16	<32
1,1,1-Trichloroethane	<3.8	<3.8	<38	<190	<38	<190	<19	<38	<38	<76
1,1,2-Trichloroethane	<5	<5	<50	<250	<50	<250	<25	<50	<50	
Trichloroethylene	<1.9	<1.9	<19	<95	<19	<95	<9.5	<19	<19	
Trichlorofluoromethane	<10	<10	<100	<500	<100	<500	<50	<100	<100	<200
Vinyl chloride	<10	<10	<100	<500	<100	<500	<50	<100	<100	<200
trans-1,3-Dichloropropylene	<10	<10	<100	<500	<100	<500	<50	<100	<100	<200
Sub Total 1	544	440	1,733	1,056	2,994	2,864	2,945	2,173	1,773	3,599
Miscellaneous Volatile Organic Compounds										
Acetone	NA	NA	NA	NA	NA	NA	NA	NA	NA	NA
Methyl ethyl ketone	NA	NA	NA	NA	NA	NA	NA	NA	NA	NA
Carbon disulfide	NA	NA	NA	NA	NA	NA	NA	NA	NA	NA
2-Hexanone	NA	NA	NA	NA	NA	NA	NA	NA	NA	NA
Styrene	NA	NA	NA	NA	NA	NA	NA	NA	NA	NA
Methyl-iso-butyl ketone	NA	NA	<100	NA	NA	NA	NA	NA	NA	NA
Methyl isoamyl ketone	NA	NA	<100	NA	NA	NA	NA	NA	NA	NA
m-Xylene	NA	NA	<100	NA	NA	NA	NA	NA	NA	NA
o-Xylene/p-Xylene	NA	NA	<100	NA	NA	NA	NA	NA	NA	NA
Sub Total 2	0	0	0	0	0	0	0	0	0	0
Total VOCs Analyzed	544	440	1,733	1,056	2,994	2,864	2,945	2,173	1,773	3,599

See footnotes on last page.

g:\technic\tables\monsanto\krumm1a.xls

Well Number:	GM-28B	GM-28B	GM-28B	GM-28B	GM-28B	GM-28B	GM-28B	GM-28C	GM-28C	GM-28C
Date:	5/87	11/87	5/88	3/89	11/89	11/90	11/91	12/86	5/87	11/87
Laboratory:	ETC	ETC	ETC	ETC	ETC	ETC	ETC	ETC	ETC	ETC
USEPA Priority Pollutant Volatile Organic Compounds concentrations are in ug/L										
Acrolein	<5,000	<1,000	<10,000	<1,000	<5,000	<5,000	<2,500	<100	<5,000	<1,000
Acrylonitrile	<5,000	<1,000	<10,000	<1,000	<5,000	<5,000	<2,500	<100	<5,000	<1,000
Benzene	<220	**485**	<440	**86.5**	<220	<220	<110	**582**	<220	**297**
Bis (chloromethyl) ether	<500	<100	<1,000	<100	<500	<500	<250	<10	<500	<100
Bromoform	<240	<47	<470	<47	<240	<240	<120	<4.7	<240	<47
Carbon tetrachloride	<140	<28	<280	<28	<140	<140	<70	<2.8	<140	<28
Chlorobenzene	**447**	**4,060**	**2,200**	**2,760**	**2,660**	**3,560**	**2,410**	**4,530**	**621**	**4,910**
Chlorodibromomethane	<160	<31	<310	<31	<160	<160	<78	<3.1	<160	<31
Chloroethane	<500	<100	<1,000	<100	<500	<500	<250	<10	<500	<100
2-Chloroethylvinyl ether	<500	<100	<1,000	<100	<500	<500	<250	<10	<500	<100
Chloroform	<80	<16	<160	<16	<80	<80	<40	<1.6	<80	<16
Dichlorobromomethane	<110	<22	<220	<22	<110	<110	<55	<2.2	<110	<22
Dichlorodifluoromethane	<500	<100	<1,000	<100	<500	<500	<250	<10	<500	<100
1,1-Dichloroethane	<240	<47	<470	<47	<240	<240	<120	<4.7	<240	<47
1,2-Dichloroethane	<140	<28	<280	<28	<140	<140	<70	<2.8	<140	<28
1,1-Dichloroethylene	<140	<28	<280	<28	<140	<140	<70	<2.8	<140	<28
1,2-Dichloropropane	<300	<60	<600	<60	<300	<300	<150	<6	<300	<60
cis-1,3-Dichloropropylene	<250	<50	<500	<50	<250	<250	<130	<5	<250	<50
Ethylbenzene	<360	<72	<720	<100	<360	<360	<180	<7.2	<360	<72
Methyl bromide	<500	<100	<1,000	<100	<500	<500	<250	<10	<500	<100
Methyl chloride	<500	<100	<1,000	**79.2**	<500	<500	<250	<10	<500	<100
Methylene chloride	**360**	**1,350**	<280	<69	**706**	<140	<70	<2.8	**254**	**1,790**
1,1,2,2-Tetrachloroethane	<350	<69	<690	<41	<350	<350	<170	<6.9	<350	<69
Tetrachloroethylene	<210	<41	<410	**215**	<210	<210	<100	<4.1	<210	<41
Toluene	<300	**321**	<600	<16	<300	**533**	<150	<6	<300	**115**
1,2-trans-Dichloroethylene	<80	<16	<160	<38	<80	<80	<40	<1.6	<80	<16
1,1,1-Trichloroethane	<190	<38	<380	<50	<190	<190	<95	<3.8	<190	<38
1,1,2-Trichloroethane	<250	<50	<500	<19	<250	<250	<130	<5	<250	<50
Trichloroethylene	<95	<19	<190	<100	<95	<95	<48	<1.9	<95	<19
Trichlorofluoromethane	<500	<100	<1,000	<100	<500	<500	<250	<10	<500	<100
Vinyl chloride	<500	<100	<1,000	<100	<500	<500	<250	<10	<500	<100
trans-1,3-Dichloropropylene	<500	<100	<1,000	<72	<500	<500	<250	<10	<500	<100
Sub Total 1	807	6,216	2,200	3,140	3,266	4,093	2,410	5,112	875	7,112
Miscellaneous Volatile Organic Compounds										
Acetone	NA	NA	NA	NA	NA	NA	NA	NA	NA	NA
Methyl ethyl ketone	NA	NA	NA	NA	NA	NA	NA	NA	NA	NA
Carbon disulfide	NA	NA	NA	NA	NA	NA	NA	NA	NA	NA
2-Hexanone	NA	NA	NA	NA	NA	NA	NA	NA	NA	NA
Styrene	NA	NA	NA	NA	NA	NA	NA	NA	NA	NA
Methyl-iso-butyl ketone	NA	**1,250**	NA	<100	NA	NA	NA	NA	NA	**236**
Methyl isoamyl ketone	NA	<100	NA	<100	NA	NA	NA	NA	NA	<100
m-Xylene	NA	**149**	NA	<100	NA	NA	NA	NA	NA	<100
o-Xylene/p-Xylene	NA	**116**	NA	<100	NA	NA	NA	NA	NA	<100
Sub Total 2	0	1,515	0	0	0	0	0	0	0	236
Total VOCs Analyzed	807	7,731	2,200	3,140	3,266	4,093	2,410	5,112	875	7,348

See footnotes on last page.

g:\technic\tables\monsanto\krumm1a.xls

Well Number:	GM-28C	GM-28C	GM-28C	GM-28C	GM-28C	GM-28C	GM-28C	GM-28C	GM-31A	GM-31A
Date:	5/88	11/88	3/89	3/89*	11/89	11/90	11/91	11/92	12/86	12/86*
Laboratory:	ETC	ETC	ETC	ETC	ETC	ETC	ETC	ETC	ETC	ETC
USEPA Priority Pollutant Volatile Organic Compounds concentrations are in ug/L										
Acrolein	<10,000	<5,000	<5,000	<5,000	<5,000	<5,000	<2,500	<2,000	<100	<100
Acrylonitrile	<10,000	<5,000	<5,000	<5,000	<5,000	<5,000	<2,500	<2,000	<100	<100
Benzene	<440	<220	<220	<220	<220	<220	<110	<88	**15.5**	**15.2**
Bis (chloromethyl) ether	<1,000	<500	<500	<500	<500	<500	<250	<200	<10	<10
Bromoform	<470	<240	<240	<240	<240	<240	<120	<94	<4.7	<4.7
Carbon tetrachloride	<280	<140	<140	<140	<140	<140	<70	<56	<2.8	<2.8
Chlorobenzene	**4,700**	**2,920**	**2,510**	**3,220**	**2,840**	**3,680**	**2,800**	**1,480**	**6.5**	**7.1**
Chlorodibromomethane	<310	<160	<160	<160	<160	<160	<78	<62	<3.1	<3.1
Chloroethane	<1,000	<500	<500	<500	<500	<500	<250	<200	<10	<10
2-Chloroethylvinyl ether	<1,000	<500	<500	<500	<500	<500	<250	<200	<10	<10
Chloroform	<160	<80	<80	<80	<80	<80	<40	<32	<1.6	<1.6
Dichlorobromomethane	<220	<110	<110	<110	<110	<110	<55	<44	<2.2	<2.2
Dichlorodifluoromethane	<1,000	<500	<500	<500	<500	<500	<250	<200	<10	<10
1,1-Dichloroethane	<470	<240	<240	<240	<240	<240	<120	<94	<4.7	<4.7
1,2-Dichloroethane	<280	<140	<140	<140	<140	<140	<70	<56	<2.8	<2.8
1,1-Dichloroethylene	<280	<140	<140	<140	<140	<140	<70	<56	<2.8	<2.8
1,2-Dichloropropane	<600	<300	<300	<300	<300	<300	<150	<120	<6	<6
cis-1,3-Dichloropropylene	<500	<250	<250	<250	<250	<250	<130	<100	<5	<5
Ethylbenzene	<720	<360	<500	<500	<360	<360	<180	<140	<7.2	<7.2
Methyl bromide	<1,000	<500	<500	<500	<500	<500	<250	<200	<10	<10
Methyl chloride	<1,000	<500	<140	<140	<500	<500	<250	<200	<10	<10
Methylene chloride	<280	**283**	<350	<350	**488**	<140	<70	<56	**4.4**	**12.7**
1,1,2,2-Tetrachloroethane	<690	<350	<210	<210	<350	<350	<170	<140	<6.9	<6.9
Tetrachloroethylene	<410	<210	<300	<300	<210	<210	<100	<82	<4.1	<4.1
Toluene	<600	<300	<80	<80	<300	**431**	<150	<120	<6	<6
1,2-trans-Dichloroethylene	<160	<80	<190	<190	<80	<80	<40	<32	<1.6	<1.6
1,1,1-Trichloroethane	<380	<190	<250	<250	<190	<190	<95	<76	<3.8	<3.8
1,1,2-Trichloroethane	<500	<250	<95	<95	<250	<250	<130	<100	<5	
Trichloroethylene	<190	<95	<500	<500	<95	<95	<48	<38	<1.9	
Trichlorofluoromethane	<1,000	<500	<500	<500	<500	<500	<250	<200	<10	<10
Vinyl chloride	<1,000	<500	<500	<500	<500	<500	<250	<200	<10	<10
trans-1,3-Dichloropropylene	<1,000	<500	<360	<360	<500	<500	<250	<200	<10	<10
Sub Total 1	4,700	3,203	2,510	3,220	3,328	4,011	2,800	1,480	26	35
Miscellaneous Volatile Organic Compounds										
Acetone	NA	NA	NA	NA	NA	NA	NA	NA	NA	NA
Methyl ethyl ketone	NA	NA	NA	NA	NA	NA	NA	NA	NA	NA
Carbon disulfide	NA	NA	NA	NA	NA	NA	NA	NA	NA	NA
2-Hexanone	NA	NA	NA	NA	NA	NA	NA	NA	NA	NA
Styrene	NA	NA	NA	NA	NA	NA	NA	NA	NA	NA
Methyl-iso-butyl ketone	NA	NA	<500	<500	NA	NA	NA	NA	<10	<10
Methyl isoamyl ketone	NA	NA	<500	<500	NA	NA	NA	NA	<10	<10
m-Xylene	NA	NA	<500	<500	NA	NA	NA	NA	<10	<10
o-Xylene/p-Xylene	NA	NA	<500	<500	NA	NA	NA	NA	<10	<10
Sub Total 2	0	0	0	0	0	0	0	0	0	0
Total VOCs Analyzed	4,700	3,203	2,510	3,220	3,328	4,011	2,800	1,480	26	35

See footnotes on last page.

g:\technicl\tables\monsanto\krumm1a.xls

Well Number:	GM-31A	GM-31A	GM-31A	GM-31A	GM-31A	GM-31A	GM-31A	GM-31A	GM-31A	GM-31A
Date:	5/87	5/87*	11/87	11/87*	5/88	5/88*	11/88	11/88*	11/88	11/88*
Laboratory:	ETC	ETC	ETC	ETC	ETC	ETC	ETC	ETC	SL	SL
USEPA Priority Pollutant Volatile Organic Compounds concentrations are in ug/L										
Acrolein	<100	<100	<500	<100	<100	<100	<500	<500	<500	<500
Acrylonitrile	<100	<100	<500	<100	<100	<100	<500	<500	<500	<500
Benzene	**13**	**13.2**	**1,220**	**973**	**45.8**	**46.1**	**30.1**	**25.1**	**70**	**84**
Bis (chloromethyl) ether	<10	<10	<50	<10	<10	<10	<50	<50	<100	<100
Bromoform	<4.7	<4.7	<24	<4.7	<4.7	<4.7	<24	<24	<50	<50
Carbon tetrachloride	<2.8	<2.8	<14	<2.8	<2.8	<2.8	<14	<14	<50	<50
Chlorobenzene	**18.1**	**18.4**	<30	**26.0**	<6.0	<6.0	<30	<30	<50	<50
Chlorodibromomethane	<3.1	<3.1	<16	<3.1	<3.1	<3.1	<16	<16	<50	<50
Chloroethane	<10	<10	<50	<10	<10	<10	<50	<50	<100	<100
2-Chloroethylvinyl ether	<10	<10	<50	<10	<10	<10	<50	<50	<50	<50
Chloroform	<1.6	<1.6	<8.0	<1.6	<1.6	<1.6	<8.0	<8.0	<50	<50
Dichlorobromomethane	<2.2	<2.2	<11	<2.2	<2.2	<2.2	<11	<11	<50	<50
Dichlorodifluoromethane	<10	<10	<50	<10	<10	<10	<50	<50	<100	<100
1,1-Dichloroethane	<4.7	<4.7	<24	<4.7	<4.7	<4.7	<24	<24	<50	<50
1,2-Dichloroethane	<2.8	<2.8	<14	<2.8	<2.8	<2.8	<14	<14	<50	<50
1,1-Dichloroethylene	<2.8	<2.8	<14	<2.8	<2.8	<2.8	<14	<14	<50	<50
1,2-Dichloropropane	<6	<6	<30	<6.0	<6.0	<6.0	<30	<30	<50	<50
cis-1,3-Dichloropropylene	<5	<5	<25	<5.0	<5.0	<5.0	<25	<25	<50	<50
Ethylbenzene	<7.2	<7.2	<36	<7.2	<7.2	<7.2	<36	<36	<50	<50
Methyl bromide	<10	<10	<50	<10	<10	<10	<50	<50	<100	<100
Methyl chloride	<10	<10	<50	<10	<10	<10	<50	<50	<100	<100
Methylene chloride	**9.3**	**14.6**	**33.8**	**4.71**	**9.8**	**7.6**	**29.9**	**52.8**	<50	<50
1,1,2,2-Tetrachloroethane	<6.9	<6.9	<35	<6.9	<6.9	<6.9	<35	<35	<50	<50
Tetrachloroethylene	<4.1	<4.1	<21	<4.1	<4.1	<4.1	<21	<21	<50	<50
Toluene	<6	<6	<30	<6.0	<6.0	<6.0	<30	<30	<50	<50
1,2-trans-Dichloroethylene	<1.6	<1.6	<8.0	<1.6	<1.6	<1.6	<8.0	<8.0	<50	<50
1,1,1-Trichloroethane	<3.8	<3.8	<19	<3.8	<3.8	<3.8	<19	<19	<50	<50
1,1,2-Trichloroethane	<5	<5	<25	<5.0	<5.0	<5.0	<25	<25	<50	<50
Trichloroethylene	<1.9	<1.9	<9.5	<1.9	<1.9	<1.9	<9.5	<9.5	<50	<50
Trichlorofluoromethane	<10	<10	<50	<10	<10	<10	<50	<50	<50	<50
Vinyl chloride	<10	<10	<50	<10	<10	<10	<50	<50	<100	<100
trans-1,3-Dichloropropylene	<10	<10	<50	<10	<10	<10	<50	<50	<50	<50
Sub Total 1	40	46	1,254	1,004	56	54	60	78	70	84
Miscellaneous Volatile Organic Compounds										
Acetone	NA	NA	NA	NA	NA	NA	NA	NA	NA	NA
Methyl ethyl ketone	NA	NA	NA	NA	NA	NA	NA	NA	NA	NA
Carbon disulfide	NA	NA	NA	NA	NA	NA	NA	NA	NA	NA
2-Hexanone	NA	NA	NA	NA	NA	NA	NA	NA	NA	NA
Styrene	NA	NA	NA	NA	NA	NA	NA	NA	NA	NA
Methyl-iso-butyl ketone	<10	<10	<50	<10	<10	<10	<50	<50	<500	<500
Methyl isoamyl ketone	<10	<10	<50	<10	<10	<10	<50	<50	<100	<100
m-Xylene	<10	<10	<50	<10	<10	<10	<50	<50	<50	<50
o-Xylene/p-Xylene	<10	<10	<50	<10	<10	<10	<50	<50	<50	<50
Sub Total 2	0	0	0	0	0	0	0	0	0	0
Total VOCs Analyzed	40	46	1,254	1,004	56	54	60	78	70	84

See footnotes on last page.

g:\technicl\tables\monsanto\krumm1a.xls

Well Number:	GM-31A	GM-31A	GM-31A	GM-31A	GM-31B	GM-31B	GM-31B	GM-31B	GM-31B	GM-31B
Date:	11/89	11/89*	11/90	11/90*	12/86	12/86*	5/87	5/87*	11/87	1*/**/**
Laboratory:	ETC	ETC	ETC	ETC	ETC	ETC	ETC	ETC	ETC	
USEPA Priority Pollutant Volatile Organic Compounds concentrations are in ug/L										
Acrolein	<100	<100	<100	<100	<100	<100	<100	<100	<100	<100
Acrylonitrile	<100	<100	<100	<100	<100	<100	<100	<100	<100	<100
Benzene	**15.6**	**17.0**	**10.4**	<4.4	<4.4	<4.4	<4.4	<4.4	<4.4	<4.4
Bis (chloromethyl) ether	<10	<10	<10	<10	<10	<10	<10	<10	<10	<10
Bromoform	<4.7	<4.7	<4.7	<4.7	<4.7	<4.7	<4.7	<4.7	<4.7	<4.7
Carbon tetrachloride	<2.8	<2.8	<2.8	<2.8	<2.8	<2.8	<2.8	<2.8	<2.8	<2.8
Chlorobenzene	**12.1**	**12.1**	**12.8**	**8.48**	<6	<6	**7.1**	**10.3**	<6.0	**8.7**
Chlorodibromomethane	<3.1	<3.1	<3.1	<3.1	<3.1	<3.1	<3.1	<3.1	<3.1	<3.1
Chloroethane	<10	<10	<10	<10	<10	<10	<10	<10	<10	<10
2-Chloroethylvinyl ether	<10	<10	<10	<10	<10	<10	<10	<10	<10	<10
Chloroform	<1.6	<1.6	<1.6	<1.6	<1.6	<1.6	<1.6	<1.6	<1.6	<1.6
Dichlorobromomethane	<2.2	<2.2	<2.2	<2.2	<2.2	<2.2	<2.2	<2.2	<2.2	<2.2
Dichlorodifluoromethane	<10	<10	<10	<10	<10	<10	<10	<10	<10	<10
1,1-Dichloroethane	<4.7	<4.7	<4.7	<4.7	<4.7	<4.7	<4.7	<4.7	<4.7	<4.7
1,2-Dichloroethane	<2.8	<2.8	<2.8	<2.8	<2.8	<2.8	<2.8	<2.8	<2.8	<2.8
1,1-Dichloroethylene	<2.8	<2.8	<2.8	<2.8	<2.8	<2.8	<2.8	<2.8	<2.8	<2.8
1,2-Dichloropropane	<6.0	<6.0	<6.0	<6.0	<6	<6	<6	<6	<6.0	<6.0
cis-1,3-Dichloropropylene	<5.0	<5.0	<5.0	<5.0	<5	<5	<5	<5	<5.0	<5.0
Ethylbenzene	<7.2	<7.2	<7.2	<7.2	<7.2	<7.2	<7.2	<7.2	<7.2	<7.2
Methyl bromide	<10	<10	<10	<10	<10	<10	<10	<10	<10	<10
Methyl chloride	<10	<10	<10	<10	<10	<10	<10	<10	<10	<10
Methylene chloride	<2.8	<2.8	<2.8	<2.8	**4.4**	**14.6**	**15**	**44.5**	**13.4**	**14.3**
1,1,2,2-Tetrachloroethane	<6.9	<6.9	<6.9	<6.9	<6.9	<6.9	<6.9	<6.9	<6.9	<6.9
Tetrachloroethylene	<4.1	<4.1	<4.1	<4.1	<4.1	<4.1	<4.1	<4.1	<4.1	<4.1
Toluene	<6.0	<6.0	<6.0	<6.0	<6	<6	<6	<6	<6.0	<6.0
1,2-trans-Dichloroethylene	<1.6	<1.6	<1.6	<1.6	<1.6	<1.6	<1.6	<1.6	<1.6	
1,1,1-Trichloroethane	<3.8	<3.8	<3.8	<3.8	<3.8	<3.8	<3.8	<3.8	<3.8	
1,1,2-Trichloroethane	<5.0	<5.0	<5.0	<5.0	<5	<5	<5	<5	<5.0	<5.0
Trichloroethylene	<1.9	<1.9	<1.9	<1.9	<1.9	<1.9	<1.9	<1.9	<1.9	<1.9
Trichlorofluoromethane	<10	<10	<10	<10	<10	<10	<10	<10	<10	<10
Vinyl chloride	<10	<10	<10	<10	<10	<10	<10	<10	**15.4**	**20.5**
trans-1,3-Dichloropropylene	<10	<10	<10	<10	<10	<10	<10	<10	<10	<10
Sub Total 1	28	29	23	8	4	15	22	55	29	43
Miscellaneous Volatile Organic Compounds										
Acetone	NA	NA	NA	NA	NA	NA	NA	NA	NA	NA
Methyl ethyl ketone	NA	NA	NA	NA	NA	NA	NA	NA	NA	NA
Carbon disulfide	NA	NA	NA	NA	NA	NA	NA	NA	NA	NA
2-Hexanone	NA	NA	NA	NA	NA	NA	NA	NA	NA	NA
Styrene	NA	NA	NA	NA	NA	NA	NA	NA	NA	NA
Methyl-iso-butyl ketone	<10	<10	<10	<10	NA	NA	NA	NA	NA	NA
Methyl isoamyl ketone	<10	<10	<10	<10	NA	NA	NA	NA	NA	NA
m-Xylene	<10	<10	<10	<10	NA	NA	NA	NA	NA	NA
o-Xylene/p-Xylene	<10	<10	<10	<10	NA	NA	NA	NA	NA	NA
Sub Total 2	0	0	0	0	0	0	0	0	0	0
Total VOCs Analyzed	28	29	23	8.48	4	15	22	55	29	43

See footnotes on last page.

g:\technic\tables\monsanto\krumm1a.xls

Well Number:	GM-31B	GM-31B	GM-31B	GM-31B	GM-31B	GM-31B	GM-31B	GM-31B	GM-31B	GM-31B
Date:	5/88	5/88*	11/88	11/88*	5/89	11/89	11/89*	5/90	11/90	11/90*
Laboratory:	ETC	ETC	ETC	ETC	ETC	ETC	ETC	ETC	ETC	ETC
USEPA Priority Pollutant Volatile Organic Compounds concentrations are in ug/L										
Acrolein	<100	<100	<100	<100	<100	<200	<100	<100	<100	<100
Acrylonitrile	<100	<100	<100	<100	<100	<200	<100	<100	<100	<100
Benzene	<4.4	<4.4	**14.2**	**9.83**	<4.4	**32.8**	<4.4	**6.53**	<4.4	<4.4
Bis (chloromethyl) ether	<10	<10	<10	<10	<10	<20	<10	<10	<10	<10
Bromoform	<4.7	<4.7	<4.7	<4.7	<4.7	<9.4	<4.7	<4.7	<4.7	<4.7
Carbon tetrachloride	<2.8	<2.8	<2.8	<2.8	<2.8	<5.6	<2.8	<2.8	<2.8	<2.8
Chlorobenzene	<6.0	<6.0	<6.0	<6.0	**8.26**	**387**	<6.0	**16.7**	<6.0	<6.0
Chlorodibromomethane	<3.1	<3.1	<3.1	<3.1	<3.1	<6.2	<3.1	<3.1	<3.1	<3.1
Chloroethane	<10	<10	<10	<10	<10	<20	<10	<10	<10	<10
2-Chloroethylvinyl ether	<10	<10	<10	<10	<10	<20	<10	<10	<10	<10
Chloroform	<1.6	<1.6	<1.6	<1.6	<1.6	<3.2	<1.6	<1.6	<1.6	<1.6
Dichlorobromomethane	<2.2	<2.2	<2.2	<2.2	<2.2	<4.4	<2.2	<2.2	<2.2	<2.2
Dichlorodifluoromethane	<10	<10	<10	<10	<10	<20	<10	<10	<10	<10
1,1-Dichloroethane	<4.7	<4.7	<4.7	<4.7	<4.7	<9.4	<4.7	<4.7	<4.7	<4.7
1,2-Dichloroethane	<2.8	<2.8	<2.8	<2.8	<2.8	<5.6	<2.8	<2.8	<2.8	<2.8
1,1-Dichloroethylene	<2.8	<2.8	<2.8	<2.8	<2.8	<5.6	<2.8	<2.8	<2.8	<2.8
1,2-Dichloropropane	<6.0	<6.0	<6.0	<6.0	<6.0	<12	<6.0	<6.0	<6.0	<6.0
cis-1,3-Dichloropropylene	<5.0	<5.0	<5.0	<5.0	<5.0	<10	<5.0	<5.0	<5.0	<5.0
Ethylbenzene	<7.2	<7.2	<7.2	<7.2	<7.2	<14	<7.2	<7.2	<7.2	<7.2
Methyl bromide	<10	<10	<10	<10	<10	<20	<10	<10	<10	<10
Methyl chloride	<10	<10	<10	<10	<10	<20	<10	<10	<10	<10
Methylene chloride	**6.3**	**6.1**	**13.2**	**4.6**	<2.8	**9.62**	<2.8	**4.59**	<2.8	<2.8
1,1,2,2-Tetrachloroethane	<6.9	<6.9	<6.9	<6.9	<6.9	<14	<6.9	<6.9	<6.9	<6.9
Tetrachloroethylene	<4.1	<4.1	<4.1	<4.1	<4.1	<8.2	<4.1	<4.1	<4.1	<4.1
Toluene	<6.0	<6.0	<6.0	**8.75**	<6.0	<12	<6.0	<6.0	**17.6**	**11.6**
1,2-trans-Dichloroethylene	<1.6	<1.6	<1.6	<1.6	<1.6	<3.2	**2.70**	**2.00**	**3.53**	<1.6
1,1,1-Trichloroethane	<3.8	<3.8	<3.8	<3.8	<3.8	<7.6	<3.8	<3.8	<3.8	<3.8
1,1,2-Trichloroethane	<5.0	<5.0	<5.0	<5.0	<5.0	<10	<5.0	<5.0	<5.0	<5.0
Trichloroethylene	<1.9	<1.9	<1.9	<1.9	<1.9	<3.8	<1.9	<1.9	<1.9	<1.9
Trichlorofluoromethane	<10	<10	<10	<10	<10	<20	<10	<10	<10	<10
Vinyl chloride	**24.3**	**24.2**	<10	<10	**30.1**	<20	<10	**14.4**	**19.4**	**12.7**
trans-1,3-Dichloropropylene	<10	<10	<10	<10	<10	<20	<10	<10	<10	<10
Sub Total 1	31	30	27	23	38	429	3	43	41	24
Miscellaneous Volatile Organic Compounds										
Acetone	NA	NA	NA	NA	NA	NA	NA	NA	NA	NA
Methyl ethyl ketone	NA	NA	NA	NA	NA	NA	NA	NA	NA	NA
Carbon disulfide	NA	NA	NA	NA	NA	NA	NA	NA	NA	NA
2-Hexanone	NA	NA	NA	NA	NA	NA	NA	NA	NA	NA
Styrene	NA	NA	NA	NA	NA	NA	NA	NA	NA	NA
Methyl-iso-butyl ketone	NA	NA	NA	NA	NA	NA	NA	NA	NA	NA
Methyl isoamyl ketone	NA	NA	NA	NA	NA	NA	NA	NA	NA	NA
m-Xylene	NA	NA	NA	NA	NA	NA	NA	NA	NA	NA
o-Xylene/p-Xylene	NA	NA	NA	NA	NA	NA	NA	NA	NA	NA
Sub Total 2	0	0	0	0	0	0	0	0	0	0
Total VOCs Analyzed	31	30	27	23	38	429	3	43	41	24

See footnotes on last page.

g:\technicl\tables\monsanto\krumm1a.xls

Well Number:	GM-31B	GM-31C	GM-31C	GM-31C	GM-31C	GM-31C	GM-31C	GM-31C	GM-31C	GM-31C
Date:	5/91	12/86	5/87	11/87	5/88	11/88	5/89	11/89	5/90	1*
Laboratory:	ETC	ETC	ETC	ETC	ETC	ETC	ETC	ETC	ETC	
USEPA Priority Pollutant Volatile Organic Compounds concentrations are in ug/L										
Acrolein	<100	<100	<100	<100	<100	<2,000	<100	<100	<500	<100
Acrylonitrile	<100	<100	<100	<100	<100	<2,000	<100	<100	<500	<100
Benzene	**16.6**	<4.4	<4.4	**16.4**	<4.4	**144**	**94.1**	<4.4	**34.2**	**21.7**
Bis (chloromethyl) ether	<10	<10	<10	<10	<10	<200	<10	<10	<50	<10
Bromoform	<4.7	<4.7	<4.7	<4.7	<4.7	<94	<4.7	<4.7	<24	<4.7
Carbon tetrachloride	<2.8	<2.8	<2.8	<2.8	<2.8	<56	<2.8	<2.8	<14	<2.8
Chlorobenzene	**82.1**	**52.7**	<6	**174**	<6.0	**1,070**	**1,120**	<6.0	**364**	**233**
Chlorodibromomethane	<3.1	<3.1	<3.1	<3.1	<3.1	<62	<3.1	<3.1	<16	<3.1
Chloroethane	<10	<10	<10	<10	<10	<200	<10	<10	<50	<10
2-Chloroethylvinyl ether	<10	<10	<10	<10	<10	<200	<10	<10	<50	<10
Chloroform	<1.6	<1.6	<1.6	<1.6	<1.6	<32	<1.6	<1.6	<8.0	<1.6
Dichlorobromomethane	<2.2	<2.2	<2.2	<2.2	<2.2	<44	<2.2	<2.2	<11	<2.2
Dichlorodifluoromethane	<10	<10	<10	<10	<10	<200	<10	<10	<50	<10
1,1-Dichloroethane	<4.7	<4.7	<4.7	<4.7	<4.7	<94	<4.7	<4.7	<24	<4.7
1,2-Dichloroethane	<2.8	<2.8	<2.8	<2.8	<2.8	<56	<2.8	<2.8	<14	<2.8
1,1-Dichloroethylene	<2.8	<2.8	<2.8	<2.8	<2.8	<56	<2.8	<2.8	<14	<2.8
1,2-Dichloropropane	<6.0	<6	<6	<6.0	<6.0	<120	<6.0	<6.0	<30	<6.0
cis-1,3-Dichloropropylene	<5.0	<5	<5	<5.0	<5.0	<100	<5.0	<5.0	<25	<5.0
Ethylbenzene	<7.2	<7.2	<7.2	<7.2	<7.2	<140	<7.2	<7.2	<36	<7.2
Methyl bromide	<10	<10	<10	<10	<10	<200	<10	<10	<50	<10
Methyl chloride	<10	<10	<10	<10	<10	<200	<10	<10	<50	<10
Methylene chloride	<2.8	**16.6**	**20.7**	<2.8	**7.1**	**122**	<2.8	**3.94**	**20.1**	<2.8
1,1,2,2-Tetrachloroethane	<6.9	<6.9	<6.9	<6.9	<6.9	<140	<6.9	<6.9	<35	<6.9
Tetrachloroethylene	<4.1	<4.1	<4.1	<4.1	<4.1	<82	<4.1	<4.1	<21	<4.1
Toluene	<6.0	<6	<6	<6.0	<6.0	<120	<6.0	<6.0	<30	**89.7**
1,2-trans-Dichloroethylene	**4.21**	<1.6	**2.6**	<1.6	<1.6	<32	<1.6	<1.6	<8.0	
1,1,1-Trichloroethane	<3.8	<3.8	<3.8	<3.8	<3.8	<76	<3.8	<3.8	<19	
1,1,2-Trichloroethane	<5.0	<5	<5	<5.0	<5.0	<100	<5.0	<5.0	<25	<5.0
Trichloroethylene	<1.9	<1.9	<1.9	<1.9	<1.9	<38	<1.9	<1.9	<9.5	<1.9
Trichlorofluoromethane	<10	<10	<10	<10	<10	<200	<10	<10	<50	<10
Vinyl chloride	**30.2**	<10	<10	**11.2**	<10	<200	<10	**21.0**	<50	<10
trans-1,3-Dichloropropylene	<10	<10	<10	<10	<10	<200	<10	<10	<50	<10
Sub Total 1	133	69	23	201	7	1,336	1,214	25	408	354
Miscellaneous Volatile Organic Compounds										
Acetone	NA	NA	NA	NA	NA	NA	NA	NA	NA	NA
Methyl ethyl ketone	NA	NA	NA	NA	NA	NA	NA	NA	NA	NA
Carbon disulfide	NA	NA	NA	NA	NA	NA	NA	NA	NA	NA
2-Hexanone	NA	NA	NA	NA	NA	NA	NA	NA	NA	NA
Styrene	NA	NA	NA	NA	NA	NA	NA	NA	NA	NA
Methyl-iso-butyl ketone	NA	NA	NA	NA	NA	NA	NA	NA	NA	NA
Methyl isoamyl ketone	NA	NA	NA	NA	NA	NA	NA	NA	NA	NA
m-Xylene	NA	NA	NA	NA	NA	NA	NA	NA	NA	NA
o-Xylene/p-Xylene	NA	NA	NA	NA	NA	NA	NA	NA	NA	NA
Sub Total 2	0	0	0	0	0	0	0	0	0	0
Total VOCs Analyzed	133	69	23	201	7	1,336	1,214	25	408	354

See footnotes on last page.

g:\technicl\tables\monsanto\krumm1a.xls

Well Number:	GM-31C	GM-54A	GM-54A	GM-54A	GM-54B	GM-54B	GM-54B	GM-54B	GM-54B	GM-54B
Date:	5/91	11/87	5/88	9/94	11/87	5/88	11/88	4/89	10/89	11/90
Laboratory:	ETC	ETC	ETC	SL	ETC	ETC	ETC	ETC	ETC	ETC
USEPA Priority Pollutant Volatile Organic Compounds concentrations are in ug/L										
Acrolein	<100	<100	<100	<100	<100	<100	<100	<100	<1,000	<100
Acrylonitrile	<100	<100	<100	<100	<100	<100	<100	<100	<1,000	<100
Benzene	<4.4	<4.4	<4.4	<5	<4.4	**28.3**	<4.4	**59.2**	<44	**6.50**
Bis (chloromethyl) ether	<10	<10	<10	NA	<10	<10	<10	<10	<100	<10
Bromoform	<4.7	<4.7	<4.7	<5	<4.7	<4.7	<4.7	<4.7	<47	<4.7
Carbon tetrachloride	<2.8	<2.8	<2.8	<5	<2.8	<2.8	<2.8	<2.8	<28	<2.8
Chlorobenzene	**56.6**	<6.0	<6.0	<5	**83.0**	**181.0**	**123**	**466**	**436**	**177**
Chlorodibromomethane	<3.1	<3.1	<3.1	<5	<3.1	<3.1	<3.1	<3.1	<31	<3.1
Chloroethane	<10	<10	<10	<10	<10	<10	<10	<10	<100	<10
2-Chloroethylvinyl ether	<10	<10	<10	<50	<10	<10	<10	<10	<100	<10
Chloroform	<1.6	<1.6	<1.6	<5	<1.6	<1.6	<1.6	<1.6	<16	<1.6
Dichlorobromomethane	<2.2	<2.2	<2.2	<5	<2.2	<2.2	<2.2	<2.2	<22	<2.2
Dichlorodifluoromethane	<10	<10	<10	<5	<10	<10	<10	<10	<100	<10
1,1-Dichloroethane	<4.7	<4.7	<4.7	<5	<4.7	<4.7	<4.7	<4.7	<47	<4.7
1,2-Dichloroethane	<2.8	<2.8	<2.8	<5	<2.8	<2.8	<2.8	<2.8	<28	<2.8
1,1-Dichloroethylene	<2.8	<2.8	<2.8	<5	<2.8	<2.8	<2.8	<2.8	<28	<2.8
1,2-Dichloropropane	<6.0	<6.0	<6.0	<5	<6.0	<6.0	<6.0	<6.0	<60	<6.0
cis-1,3-Dichloropropylene	<5.0	<5.0	<5.0	<5	<5.0	<5.0	<5.0	<5.0	<50	<5.0
Ethylbenzene	<7.2	<7.2	<7.2	<5	<7.2	<7.2	<7.2	<7.2	<72	<7.2
Methyl bromide	<10	<10	<10	<10	<10	<10	<10	<10	<100	<10
Methyl chloride	<10	<10	<10	<10	<10	<10	<10	<10	<100	<10
Methylene chloride	<2.8	**9.37**	**34**	<5	**13.6**	**44.4**	**71.1**	**3.32**	**36.9**	<2.8
1,1,2,2-Tetrachloroethane	<6.9	<6.9	<6.9	<5	<6.9	<6.9	<6.9	<6.9	<69	<6.9
Tetrachloroethylene	<4.1	<4.1	<4.1	<5	**4.12**	<4.1	<4.1	<4.1	<41	<4.1
Toluene	<6.0	<6.0	<6.0	<5	<6.0	<6.0	<6.0	<6.0	<60	**10.6**
1,2-trans-Dichloroethylene	<1.6	<1.6	<1.6	<5	<1.6	<1.6	<1.6	<1.6	<16	<1.6
1,1,1-Trichloroethane	<3.8	<3.8	<3.8	<5	<3.8	<3.8	<3.8	<3.8	<38	<3.8
1,1,2-Trichloroethane	<5.0	<5.0	<5.0	<5	<5.0	<5.0	<5.0	<5.0	<50	<5.0
Trichloroethylene	<1.9	<1.9	<1.9	<5	<1.9	<1.9	<1.9	<1.9	<19	<1.9
Trichlorofluoromethane	<10	<10	<10	<5	<10	<10	<10	<10	<100	<10
Vinyl chloride	<10	<10	<10	<10	<10	<10	<10	<10	<100	<10
trans-1,3-Dichloropropylene	<10	<10	<10	<5	<10	<10	<10	<10	<100	<10
Sub Total 1	57	9	34	0	101	254	194	529	471	194
Miscellaneous Volatile Organic Compounds										
Acetone	NA	NA	NA	NA	NA	NA	NA	NA	NA	NA
Methyl ethyl ketone	NA	NA	NA	NA	NA	NA	NA	NA	NA	NA
Carbon disulfide	NA	NA	NA	NA	NA	NA	NA	NA	NA	NA
2-Hexanone	NA	NA	NA	NA	NA	NA	NA	NA	NA	NA
Styrene	NA	NA	NA	NA	NA	NA	NA	NA	NA	NA
Methyl-iso-butyl ketone	NA	<10	<10	<25	<10	<10	NA	NA	NA	NA
Methyl isoamyl ketone	NA	<10	<10	<25	<10	<10	NA	NA	NA	NA
m-Xylene	NA	<10	<10	<5	<10	<10	NA	NA	NA	NA
o-Xylene/p-Xylene	NA	<10	<10	<5	<10	<10	NA	NA	NA	NA
Sub Total 2	0	0	0	0	0	0	0	0	0	0
Total VOCs Analyzed	57	9	34	0	101	254	194	529	471	194

See footnotes on last page.

g:\technicl\tables\monsanto\krumm1a.xls

Well Number:	GM-54B	GM-54B	GM-54B	GM-55C	GM-55C	GM-55C	GM-55C	GM-55C	GM-55C	GM-55C
Date:	11/91	11/92	9/94	11/87	5/88	11/88	11/89	11/90	11/91	11/92
Laboratory:	ETC	ETC	SL	ETC	ETC	ETC	ETC	ETC	ETC	ETC
USEPA Priority Pollutant Volatile Organic Compounds concentrations are in ug/L										
Acrolein	<100	<100	<500	<1,000	<10,000	<5,000	<5,000	<5,000	<2,500	<2,500
Acrylonitrile	<100	<100	<500	<1,000	<10,000	<5,000	<5,000	<5,000	<2,500	<2,500
Benzene	<4.4	**12.2**	<25	**163**	<440	<220	<220	<220	<110	<110
Bis (chloromethyl) ether	<10	<10	NA	<100	<1,000	<500	<500	<500	<250	<250
Bromoform	<4.7	<4.7	<25	<47	<470	<240	<240	<240	<120	<120
Carbon tetrachloride	<2.8	<2.8	<25	<28	<280	<140	<140	<140	<70	<70
Chlorobenzene	**69.0**	**108**	**340**	**4,030**	**3,360**	**2,700**	**3,220**	**2,580**	**2,990**	**1,410**
Chlorodibromomethane	<3.1	<3.1	<25	<31	<310	<160	<160	<160	<78	<78
Chloroethane	<10	<10	<50	<100	<1,000	<500	<500	<500	<250	<250
2-Chloroethylvinyl ether	<10	<10	<250	<100	<1,000	<500	<500	<500	<250	<250
Chloroform	<1.6	<1.6	<25	<16	<160	<80	<80	<80	<40	<40
Dichlorobromomethane	<2.2	<2.2	<25	<22	<220	<110	<110	<110	<55	<55
Dichlorodifluoromethane	<10	<10	<25	<100	<1,000	<500	<500	<500	<250	<250
1,1-Dichloroethane	<4.7	<4.7	<25	<47	<470	<240	<240	<240	<120	<120
1,2-Dichloroethane	<2.8	<2.8	<25	<28	<280	<140	<140	<140	<70	<70
1,1-Dichloroethylene	<2.8	<2.8	<25	<28	<280	<140	<140	<140	<70	<70
1,2-Dichloropropane	<6.0	<6.0	<25	<60	<600	<300	<300	<300	<150	<150
cis-1,3-Dichloropropylene	<5.0	<5.0	<25	<50	<500	<250	<250	<250	<130	<130
Ethylbenzene	<7.2	<7.2	<25	<72	<720	<360	<360	<360	<180	<180
Methyl bromide	<10	<10	<50	<100	<1,000	<500	<500	<500	<250	<250
Methyl chloride	<10	<10	<50	<100	<1,000	<500	<500	<500	<250	<250
Methylene chloride	<2.8	<2.8	<25	**48.9**	**415**	**255**	**140**	<140	<70	<70
1,1,2,2-Tetrachloroethane	<6.9	<6.9	<25	<69	<690	<350	<350	<350	<170	<170
Tetrachloroethylene	<4.1	<4.1	<25	<41	<410	<210	<210	<210	<100	<100
Toluene	<6.0	<6.0	<25	<60	<600	<300	<300	<300	<150	<150
1,2-trans-Dichloroethylene	<1.6	<1.6	<25	<16	<160	<80	<80	<80	<40	<40
1,1,1-Trichloroethane	<3.8	<3.8	<25	<38	<380	<190	<190	<190	<95	<95
1,1,2-Trichloroethane	<5.0	<5.0	<25	<50	<500	<250	<250	<250	<130	<[illegible]
Trichloroethylene	<1.9	<1.9	<25	<19	<190	<95	<95	<95	<48	[illegible]
Trichlorofluoromethane	<10	<10	<25	<100	<1,000	<500	<500	<500	<250	<250
Vinyl chloride	<10	<10	<50	<100	<1,000	<500	<500	<500	<250	<250
trans-1,3-Dichloropropylene	<10	<10	<25	<100	<1,000	<500	<500	<500	<250	<250
Sub Total 1	69	120	340	4,242	3,775	2,955	3,360	2,580	2,990	1,410
Miscellaneous Volatile Organic Compounds										
Acetone	NA	NA	NA	NA	NA	NA	NA	NA	NA	NA
Methyl ethyl ketone	NA	NA	NA	NA	NA	NA	NA	NA	NA	NA
Carbon disulfide	NA	NA	NA	NA	NA	NA	NA	NA	NA	NA
2-Hexanone	NA	NA	NA	NA	NA	NA	NA	NA	NA	NA
Styrene	NA	NA	NA	NA	NA	NA	NA	NA	NA	NA
Methyl-iso-butyl ketone	NA	NA	<120	<100	<1,000	<500	<500	<500	<250	<250
Methyl isoamyl ketone	NA	NA	<120	<100	<1,000	<500	<500	<500	<250	<250
m-Xylene	NA	NA	<25	<100	<1,000	<500	<500	<500	<250	<250
o-Xylene/p-Xylene	NA	NA	<25	<100	<1,000	<500	<500	<500	<250	<250
Sub Total 2	0	0	0	0	0	0	0	0	0	0
Total VOCs Analyzed	69	120	340	4,242	3,775	2,955	3,360	2,580	2,990	1,410

See footnotes on last page.

g:\technicl\tables\monsanto\krumm1a.xls

Well Number:	GM-55C	GM-56C	GM-56C	GM-56C	GM-56C	GM-56C	GM-56C	GM-56C	GM-57C	GM-57C
Date:	11/92*	11/87	5/88	11/88	11/88	11/89	11/90	11/91	11/87	11/87*
Laboratory:	ETC	ETC	ETC	ETC	SL	ETC	ETC	ETC	ETC	ETC
USEPA Priority Pollutant Volatile Organic Compounds concentrations are in ug/L										
Acrolein	<2,500	<1,000	<1,000	<5,000	<1,000	<1,000	<5,000	<1,000	<1,000	<5,000
Acrylonitrile	<2,500	<1,000	<1,000	<5,000	<1,000	<1,000	<5,000	<1,000	<1,000	<5,000
Benzene	<110	**510**	**153**	<220	**250**	**108**	<220	<44	**605**	**459**
Bis (chloromethyl) ether	<250	<100	<100	<500	<100	<100	<500	<100	<100	<500
Bromoform	<120	<47	<47	<240	<50	<47	<240	<47	<47	<240
Carbon tetrachloride	<70	<28	<28	<140	<50	<28	<140	<28	<28	<140
Chlorobenzene	**1,590**	**3,980**	**1,000**	**2,400**	**4,200**	**3,100**	**4,620**	**1,280**	**6,050**	**3,740**
Chlorodibromomethane	<78	<31	<31	<160	<50	<31	<160	<31	<31	<160
Chloroethane	<250	<100	<100	<500	<100	<100	<500	<100	<100	<500
2-Chloroethylvinyl ether	<250	<100	<100	<500	<50	<100	<500	<100	<100	<500
Chloroform	<40	<16	<16	<80	<50	<16	<80	<16	<16	<80
Dichlorobromomethane	<55	<22	<22	<110	<50	<22	<110	<22	<22	<110
Dichlorodifluoromethane	<250	<100	<100	<500	<100	<100	<500	<100	<100	<500
1,1-Dichloroethane	<120	<47	<47	<240	<50	<47	<240	<47	<47	<240
1,2-Dichloroethane	<70	<28	<28	<140	<50	<28	<140	<28	**1,910**	**1,690**
1,1-Dichloroethylene	<70	<28	<28	<140	<50	<28	<140	<28	<28	<140
1,2-Dichloropropane	<150	<60	<60	<300	<50	<60	<300	<60	<60	<300
cis-1,3-Dichloropropylene	<130	<50	<50	<250	<50	<50	<250	<50	<50	<250
Ethylbenzene	<180	**150**	<72	<360	**140**	**105**	<360	<72	**160**	<500
Methyl bromide	<250	<100	<100	<500	<100	<100	<500	<100	<100	<500
Methyl chloride	<250	<100	<100	<500	<100	<100	<500	<100	<100	<500
Methylene chloride	<70	<28	<28	**240**	<50	<28	<140	<28	**84.0**	**231**
1,1,2,2-Tetrachloroethane	<170	<69	<69	<350	<50	<69	<350	<69	<69	<350
Tetrachloroethylene	<100	**80.9**	<41	<210	**67**	**64.7**	<210	<41	**102**	<210
Toluene	<150	**1,810**	**232**	**698**	**1,200**	**700**	**1,360**	<60	**1,210**	**775**
1,2-trans-Dichloroethylene	<40	<16	<16	<80	<50	<16	<80	<16	<16	<80
1,1,1-Trichloroethane	<95	<38	<38	<190	<50	<38	<190	<38	<38	<190
1,1,2-Trichloroethane	<130	<50	<50	<250	<50	<50	<250	<50	<50	<250
Trichloroethylene	<48	**192**	<19	<95	<50	**30.6**	<95	<19	**88.4**	<95
Trichlorofluoromethane	<250	<100	<100	<500	<50	<100	<500	<100	<100	<500
Vinyl chloride	<250	<100	<100	<500	<100	<100	<500	<100	<100	<500
trans-1,3-Dichloropropylene	<250	<100	<100	<500	<50	<100	<500	<100	<100	<500
Sub Total 1	1,590	6,723	1,385	3,338	5,857	4,108	5,980	1,280	9,219	6,895
Miscellaneous Volatile Organic Compounds										
Acetone	NA	NA	NA	NA	NA	NA	NA	NA	NA	NA
Methyl ethyl ketone	NA	NA	NA	NA	NA	NA	NA	NA	NA	NA
Carbon disulfide	NA	NA	NA	NA	NA	NA	NA	NA	NA	NA
2-Hexanone	NA	NA	NA	NA	NA	NA	NA	NA	NA	NA
Styrene	NA	NA	NA	NA	NA	NA	NA	NA	NA	NA
Methyl-iso-butyl ketone	<250	**287**	<100	<500	<500	<100	<500	<100	**841**	**687**
Methyl isoamyl ketone	<250	<100	<100	<500	<100	<100	<500	<100	<100	<500
m-Xylene	<250	**846**	<100	<500	**260**	**458**	**813**	**229**	**901**	**533**
o-Xylene/p-Xylene	<250	**450**	NA	<500	**130**	**293**	<500	**116**	**465**	<500
Sub Total 2	0	1,583	0	0	390	751	813	345	2,207	1,220
Total VOCs Analyzed	1,590	8,306	1,385	3,338	6,247	4,859	6,793	1,625	11,426	8,115

See footnotes on last page.

g:\technic\tables\monsanto\krumm1a.xls

Well Number:	GM-57C	GM-57C	GM-57C	GM-57C	GM-57C	GM-57C	GM-57C	GM-57C	GM-57C	GM-57C
Date:	5/88	5/88*	11/88	11/88	3/89	11/89	11/89*	11/90	11/90*	11
Laboratory:	ETC	ETC	ETC	SL	ETC	ETC	ETC	ETC	ETC	E
USEPA Priority Pollutant Volatile Organic Compounds concentrations are in ug/L										
Acrolein	<10,000	<10,000	<5,000	<1,000	<10,000	<10,000	<5,000	<5,000	<5,000	<2,500
Acrylonitrile	<10,000	<10,000	<5,000	<1,000	<10,000	<10,000	<5,000	<5,000	<5,000	<2,500
Benzene	<440	<440	**566**	**520**	<440	<440	<220	**613**	**607**	**220**
Bis (chloromethyl) ether	<1,000	<1,000	<500	<100	<1,000	<1,000	<500	<500	<500	<250
Bromoform	<470	<470	<240	<50	<470	<470	<240	<240	<240	<120
Carbon tetrachloride	<280	<280	<140	<50	<280	<280	<140	<140	<140	<70
Chlorobenzene	**3,020**	**3,020**	**4,510**	**5,200**	**7,380**	**2,320**	**2,330**	**5,850**	**5,650**	**4,900**
Chlorodibromomethane	<310	<310	<160	<50	<310	<310	<160	<160	<160	<78
Chloroethane	<1,000	<1,000	<500	<100	<1,000	<1,000	<500	<500	<500	<250
2-Chloroethylvinyl ether	<1,000	<1,000	<500	<50	<1,000	<1,000	<500	<500	<500	<250
Chloroform	<160	<160	<80	<50	<160	<160	<80	<80	<80	<40
Dichlorobromomethane	<220	<220	<110	<50	<220	<220	<110	<110	<110	<55
Dichlorodifluoromethane	<1,000	<1,000	<500	<100	<1,000	<1,000	<500	<500	<500	<250
1,1-Dichloroethane	<470	<470	<240	<50	<470	<470	<240	<240	<240	<120
1,2-Dichloroethane	<280	<280	**1,260**	<50	**555**	<280	**286**	**811**	**787**	**112**
1,1-Dichloroethylene	<280	<280	<140	<50	<280	<280	<140	<140	<140	<70
1,2-Dichloropropane	<600	<600	<300	<50	<600	<600	<300	<300	<300	<150
cis-1,3-Dichloropropylene	<500	<500	<250	<50	<500	<500	<250	<250	<250	<130
Ethylbenzene	<720	<720	<500	**190**	<1,000	<720	<360	<360	<360	**279**
Methyl bromide	<1,000	<1,000	<500	<100	<1,000	<1,000	<500	<500	<500	<250
Methyl chloride	<1,000	<1,000	<500	<100	**466**	<1,000	<500	<500	<500	<250
Methylene chloride	**417**	<280	**284**	**58**	<690	<280	<140	<140	<140	<70
1,1,2,2-Tetrachloroethane	<690	<690	<350	<50	<410	<690	<350	<350	<350	<170
Tetrachloroethylene	<410	<410	<210	**95**	**1220**	<410	<210	<210	<210	<100
Toluene	<600	<600	**817**	**890**	<160	<600	**328**	**1,160**	**2,070**	**742**
1,2-trans-Dichloroethylene	<160	<160	<80	<50	<380	<160	<80	<80	<80	<
1,1,1-Trichloroethane	<380	<380	<190	<50	<500	<380	<190	<190	<190	·
1,1,2-Trichloroethane	<500	<500	<250	<50	<190	<500	<250	<250	<250	<130
Trichloroethylene	<190	<190	<95	<50	<1,000	<190	<95	<95	<95	<48
Trichlorofluoromethane	<1,000	<1,000	<500	<50	<1,000	<1,000	<500	<500	<500	<250
Vinyl chloride	<1,000	<1,000	<500	<100	<1,000	<1,000	<500	<500	<500	<250
trans-1,3-Dichloropropylene	<1,000	<1,000	<360	<50	**720**	<1,000	<500	<500	<500	<250
Sub Total 1	3,437	3,020	7,437	6,953	9,621	2,320	2,944	8,424	9,114	6,253
Miscellaneous Volatile Organic Compounds										
Acetone	NA	NA	NA	NA	NA	NA	NA	NA	NA	NA
Methyl ethyl ketone	NA	NA	NA	NA	NA	NA	NA	NA	NA	NA
Carbon disulfide	NA	NA	NA	NA	NA	NA	NA	NA	NA	NA
2-Hexanone	NA	NA	NA	NA	NA	NA	NA	NA	NA	NA
Styrene	NA	NA	NA	NA	NA	NA	NA	NA	NA	NA
Methyl-iso-butyl ketone	<1,000	<1,000	**621**	<500	<1,000	<1,000	<500	<500	<500	<250
Methyl isoamyl ketone	<1,000	<1,000	<500	<100	<1,000	<1,000	<500	<500	<500	<250
m-Xylene	<1,000	<1,000	<500	**240**	<1,000	<1,000	<500	<500	<500	**962**
o-Xylene/p-Xylene	<1,000	<1,000	<500	**120**	<1,000	<1,000	<500	<500	<500	**538**
Sub Total 2	0	0	521	360	0	0	0	0	0	1,500
Total VOCs Analyzed	3,437	3,020	7,958	7,313	9,621	2,320	2,944	8,424	9,114	7,753

See footnotes on last page.

Well Number:	GM-57C	GM-58A	GM-58A	GM-58A	GM-58A	GM-58A	GM-58A	GM-58A	GM-58A	GM-59A
Date:	11/91*	11/87	5/88	11/88	11/89	11/90	11/91	11/92	9/94	11/87
Laboratory:	ETC	ETC	ETC	ETC	ETC	ETC	ETC	ETC	SL	ETC
USEPA Priority Pollutant Volatile Organic Compounds concentrations are in ug/L										
Acrolein	<2,500	<100	<100	<100	<100	<100	<100	<100	<100	<100
Acrylonitrile	<2,500	<100	<100	<100	<100	<100	<100	<100	<100	<100
Benzene	**225**	<4.4	<4.4	<4.4	<4.4	**9.55**	<4.4	<4.4	<5	<4.4
Bis (chloromethyl) ether	<250	<10	<10	<10	<10	<10	<10	<10	NA	<10
Bromoform	<120	<4.7	<4.7	<4.7	<4.7	<4.7	<4.7	<4.7	<5	<4.7
Carbon tetrachloride	<70	<2.8	<2.8	<2.8	<2.8	<2.8	<2.8	<2.8	<5	<2.8
Chlorobenzene	**4,570**	<6.0	<6.0	<6.0	<6.0	**17.4**	**9.17**	**14.1**	<5	<6.0
Chlorodibromomethane	<78	<3.1	<3.1	<3.1	<3.1	<3.1	<3.1	<3.1	<5	<3.1
Chloroethane	<250	<10	<10	<10	<10	<10	<10	<10	<10	<10
2-Chloroethylvinyl ether	<250	<10	<10	<10	<10	<10	<10	<10	<50	<10
Chloroform	<40	<1.6	<1.6	<1.6	<1.6	<1.6	<1.6	<1.6	<5	<1.6
Dichlorobromomethane	<55	<2.2	<2.2	<2.2	<2.2	<2.2	<2.2	<2.2	<5	<2.2
Dichlorodifluoromethane	<250	<10	<10	<10	<10	<10	<10	<10	<5	<10
1,1-Dichloroethane	<120	<4.7	<4.7	<4.7	<4.7	<4.7	<4.7	<4.7	<5	<4.7
1,2-Dichloroethane	<70	<2.8	<2.8	<2.8	<2.8	<2.8	<2.8	<2.8	<5	<2.8
1,1-Dichloroethylene	<70	<2.8	<2.8	<2.8	<2.8	<2.8	<2.8	<2.8	<5	<2.8
1,2-Dichloropropane	<150	<6.0	<6.0	<6.0	<6.0	<6.0	<6.0	<6.0	<5	<6.0
cis-1,3-Dichloropropylene	<130	<5.0	<5.0	<5.0	<5.0	<5.0	<5.0	<5.0	<5	<5.0
Ethylbenzene	**280**	<7.2	<7.2	<7.2	<7.2	<7.2	<7.2	<7.2	<5	<7.2
Methyl bromide	<250	<10	<10	<10	<10	<10	<10	<10	<10	<10
Methyl chloride	<250	<10	<10	<10	<10	<10	<10	<10	<10	<10
Methylene chloride	<70	**12.1**	**9.7**	**51.2**	**3.05**	<2.8	<2.8	<2.8	<5	**6.88**
1,1,2,2-Tetrachloroethane	<170	<6.9	<6.9	<6.9	<6.9	<6.9	<6.9	<6.9	<5	<6.9
Tetrachloroethylene	**107**	<4.1	<4.1	<4.1	<4.1	<4.1	<4.1	<4.1	<5	<4.1
Toluene	**800**	<6.0	<6.0	<6.0	<6.0	<6.0	<6.0	<6.0	<5	<6.0
1,2-trans-Dichloroethylene	<95	<1.6	<1.6	<1.6	<1.6	<1.6	<1.6	<1.6	<5	<1.6
1,1,1-Trichloroethane	<130	<3.8	<3.8	<3.8	<3.8	<3.8	<3.8	<3.8	<5	<3.8
1,1,2-Trichloroethane	<48	<5.0	<5.0	<5.0	<5.0	<5.0	<5.0	<5.0	<5	<5.0
Trichloroethylene	<250	<1.9	<1.9	<1.9	<1.9	<1.9	<1.9	<1.9	<5	<1.9
Trichlorofluoromethane	<250	<10	<10	<10	<10	<10	<10	<10	<5	<10
Vinyl chloride	<250	<10	<10	<10	<10	<10	<10	<10	<10	<10
trans-1,3-Dichloropropylene	<250	<10	<10	<10	<10	<10	<10	<10	<5	<10
Sub Total 1	5,982	12	10	51	3	27	9	14	0	7
Miscellaneous Volatile Organic Compounds										
Acetone	NA	NA	NA	NA	NA	NA	NA	NA	NA	NA
Methyl ethyl ketone	NA	NA	NA	NA	NA	NA	NA	NA	NA	NA
Carbon disulfide	NA	NA	NA	NA	NA	NA	NA	NA	NA	NA
2-Hexanone	NA	NA	NA	NA	NA	NA	NA	NA	NA	NA
Styrene	NA	NA	NA	NA	NA	NA	NA	NA	NA	NA
Methyl-iso-butyl ketone	<250	<10	<10	NA	NA	NA	NA	NA	<25	<10
Methyl isoamyl ketone	<250	<10	<10	NA	NA	NA	NA	NA	<25	<10
m-Xylene	**953**	<10	<10	NA	NA	NA	NA	NA	**6**	<10
o-Xylene/p-Xylene	**539**	<10	<10	NA	NA	NA	NA	NA	**6**	<10
Sub Total 2	1,492	0	0	0	0	0	0	0	10	0
Total VOCs Analyzed	7,474	12	10	51	3	27	9	14	10	7

See footnotes on last page.

Well Number:	GM-59A	GM-59A	GM-59A	GM-59A	GM-59A	GM-59A	B-25A	B-26A	B-28A	GM-106
Date:	5/88	11/88	11/89	11/90	11/91	11/92	3/87	3/87	3/87	
Laboratory:	ETC	ETC	ETC	ETC	ETC	ETC	ETC	ETC	ETC	
USEPA Priority Pollutant Volatile Organic Compounds concentrations are in ug/L										
Acrolein	<100	<100	<100	<100	<100	<100	<1,000	<100	<1,000	<100
Acrylonitrile	<100	<100	<100	<100	<100	<100	<1,000	<100	<1,000	<100
Benzene	<4.4	<4.4	<4.4	<4.4	<4.4	<4.4	**92**	**42.3**	<44	<4.4
Bis (chloromethyl) ether	<10	<10	<10	<10	<10	<10	<100	<10	<100	<10
Bromoform	<4.7	<4.7	<4.7	<4.7	<4.7	<4.7	<47	<4.7	<47	<4.7
Carbon tetrachloride	<2.8	<2.8	<2.8	<2.8	<2.8	<2.8	<28	<2.8	<28	<2.8
Chlorobenzene	<6.0	<6.0	<6.0	<6.0	<6.0	<6.0	**8,210**	**168**	**929**	**63.7**
Chlorodibromomethane	<3.1	<3.1	<3.1	<3.1	<3.1	<3.1	<31	<3.1	<31	<3.1
Chloroethane	<10	<10	<10	<10	<10	<10	**200**	<10	<100	<10
2-Chloroethylvinyl ether	<10	<10	<10	<10	<10	<10	<100	<10	<100	<10
Chloroform	<1.6	<1.6	<1.6	<1.6	<1.6	<1.6	**70.7**	<1.6	<16	<1.6
Dichlorobromomethane	<2.2	<2.2	<2.2	<2.2	<2.2	<2.2	<22	<2.2	<22	<2.2
Dichlorodifluoromethane	<10	<10	<10	<10	<10	<10	<100	<10	<100	<10
1,1-Dichloroethane	<4.7	<4.7	<4.7	<4.7	<4.7	<4.7	<47	**8.86**	<47	<4.7
1,2-Dichloroethane	<2.8	<2.8	<2.8	<2.8	<2.8	<2.8	**16,500**	<2.8	<28	<2.8
1,1-Dichloroethylene	<2.8	<2.8	<2.8	<2.8	<2.8	<2.8	<28	<2.8	<28	<2.8
1,2-Dichloropropane	<6.0	<6.0	<6.0	<6.0	<6.0	<6.0	<60	<6.0	<60	<6.0
cis-1,3-Dichloropropylene	<5.0	<5.0	<5.0	<5.0	<5.0	<5.0	<50	<5.0	<50	<5.0
Ethylbenzene	<7.2	<7.2	<7.2	<7.2	<7.2	<7.2	<72	<7.2	<72	<7.2
Methyl bromide	<10	<10	<10	<10	<10	<10	<100	<10	<100	<10
Methyl chloride	<10	<10	<10	<10	<10	<10	<100	<10	<100	<10
Methylene chloride	<2.8	**54.9**	**3.31**	<2.8	<2.8	<2.8	<28	<2.8	<28	**9.4**
1,1,2,2-Tetrachloroethane	<6.9	<6.9	<6.9	<6.9	<6.9	<6.9	<69	<6.9	<69	<6.9
Tetrachloroethylene	<4.1	<4.1	<4.1	<4.1	<4.1	<4.1	<41	<4.1	<41	<4.1
Toluene	<6.0	<6.0	<6.0	<6.0	<6.0	<6.0	**465**	<6.0	<60	**27.7**
1,2-trans-Dichloroethylene	<1.6	<1.6	<1.6	<1.6	<1.6	<1.6	<16	**4.64**	<16	
1,1,1-Trichloroethane	<3.8	<3.8	<3.8	<3.8	<3.8	<3.8	<38	<3.8	<38	
1,1,2-Trichloroethane	<5.0	<5.0	<5.0	<5.0	<5.0	<5.0	<50	<5.0	<50	<5.0
Trichloroethylene	<1.9	<1.9	<1.9	<1.9	<1.9	<1.9	<19	<1.9	<19	<1.9
Trichlorofluoromethane	<10	<10	<10	<10	<10	<10	<100	<10	<100	<10
Vinyl chloride	<10	<10	<10	<10	<10	<10	<100	<10	<100	<10
trans-1,3-Dichloropropylene	<10	<10	<10	<10	<10	<10	<100	<10	<100	<10
Sub Total 1	0	55	3	0	0	0	25,538	214	929	101
Miscellaneous Volatile Organic Compounds										
Acetone	NA	NA	NA	NA	NA	NA	**19,400**	<10	<100	NA
Methyl ethyl ketone	NA	NA	NA	NA	NA	NA	<100	<10	<100	NA
Carbon disulfide	NA	NA	NA	NA	NA	NA	<100	<10	<100	NA
2-Hexanone	NA	NA	NA	NA	NA	NA	<100	<10	<100	NA
Styrene	NA	NA	NA	NA	NA	NA	<100	<10	<100	NA
Methyl-iso-butyl ketone	<10	NA	NA	NA	NA	NA	**206**	<10	<100	NA
Methyl isoamyl ketone	<10	NA	NA	NA	NA	NA	NA	NA	NA	NA
m-Xylene	<10	NA	NA	NA	NA	NA	<100	<10	<100	NA
o-Xylene/p-Xylene	<10	NA	NA	NA	NA	NA	<100	<10	<100	NA
Sub Total 2	0	0	0	0	0	0	19,606	0	0	0
Total VOCs Analyzed	0	55	3	0	0	0	45,144	214	929	101

See footnotes on last page.

g:\technic\tables\monanto\krumm1b.xls

Table 1. Summary of Volatile Organic Compounds in Groundwater, Krummrich Plant, Sauget, Illinois.

Well Number:	GM-106	GM-106	GM-106	GM-106	GM-106	GM-106	GM-106	GM-106	P-1	P-1
Date:	5/87	11/87	5/88	11/88	11/89	11/90	11/91	11/92	3/87	11/87
Laboratory:	ETC	ETC	ETC	ETC	ETC	ETC	ETC	ETC	ETC	ETC
USEPA Priority Pollutant Volatile Organic Compounds concentrations are in ug/L										
Acrolein	<100	<1,000	<1,000	<2,500	<5,000	<500	<1,000	<10,000	<100	<1,000
Acrylonitrile	<100	<1,000	<1,000	<2,500	<5,000	<500	<1,000	<10,000	<100	<1,000
Benzene	**8.1**	**44.6**	<44	<110	<220	**56.0**	**61.8**	<440	<4.4	**102**
Bis (chloromethyl) ether	<10	<100	<100	<250	<500	<50	<100	<1,000	<10	<100
Bromoform	<4.7	<47	<47	<120	<240	<24	<47	<470	<4.7	<47
Carbon tetrachloride	<2.8	<28	<28	<70	<140	<14	<28	<280	<2.8	<28
Chlorobenzene	**119.0**	**970**	**584**	**1,760**	**1,940**	**1,270**	**1,420**	**2,110**	**454**	**1,110**
Chlorodibromomethane	<3.1	<31	<31	<78	<160	<16	<31	<310	<3.1	<31
Chloroethane	<10	<100	<100	<250	<500	<50	<100	<1,000	<10	<100
2-Chloroethylvinyl ether	<10	<100	<100	<250	<500	<50	<100	<1,000	<10	<100
Chloroform	<1.6	<16	<16	<40	<80	<8.0	<16	<160	<1.6	<16
Dichlorobromomethane	<2.2	<22	<22	<55	<110	<11	<22	<220	<2.2	<22
Dichlorodifluoromethane	<10	<100	<100	<250	<500	<50	<100	<1,000	<10	<100
1,1-Dichloroethane	<4.7	<47	<47	<120	<240	<24	<47	<470	<4.7	<47
1,2-Dichloroethane	<2.8	<28	<28	<70	<140	<14	<28	<280	<2.8	<28
1,1-Dichloroethylene	<2.8	<28	<28	<70	<140	<14	<28	<280	<2.8	**35.1**
1,2-Dichloropropane	<6.0	<60	<60	<150	<300	<30	<60	<600	<6.0	<60
cis-1,3-Dichloropropylene	<5.0	<60	<60	<130	<250	<25	<50	<500	<5.0	<50
Ethylbenzene	**7.3**	<72	<72	<180	<360	**79.2**	**85.2**	<720	<7.2	<72
Methyl bromide	<10	<100	<100	<250	<500	<50	<100	<1,000	<10	<100
Methyl chloride	<10	<100	<100	<250	<500	<50	<100	<1,000	<10	<100
Methylene chloride	**7.2**	**38.8**	<28	**760**	**228**	<14	<28	<280	<2.8	**95.0**
1,1,2,2-Tetrachloroethane	<6.9	<69	<69	<170	<350	<35	<69	<690	<6.9	<69
Tetrachloroethylene	<4.1	<41	<41	<100	<210	**43.6**	**49.3**	<410	<4.1	<41
Toluene	**37.1**	**307**	**177**	**488**	**571**	**407**	**429**	**764**	<6.0	<60
1,2-trans-Dichloroethylene	<1.6	<16	<16	<40	<80	<8.0	<16	<160	<1.6	**29.2**
1,1,1-Trichloroethane	<3.8	<38	<38	<95	<190	<19	<38	<380	<3.8	<38
1,1,2-Trichloroethane	<5.0	<50	<50	<130	<250	<25	<50	<500	<5.0	<50
Trichloroethylene	<1.9	<19	<19	<48	<95	**22.2**	<19	<190	<1.9	<19
Trichlorofluoromethane	<10	<100	<100	<250	<500	<50	<100	<1,000	<10	<100
Vinyl chloride	<10	<100	<100	<250	<500	<50	<100	<1,000	<10	<100
trans-1,3-Dichloropropylene	<10	<100	<100	<250	<500	<50	<100	<1,000	<10	<100
Sub Total 1	179	1,360	761	2,998	2,739	1,877	2,045	2,874	454	1,371
Miscellaneous Volatile Organic Compounds										
Acetone	NA	NA	NA	NA	NA	NA	NA	NA	**30.4**	NA
Methyl ethyl ketone	NA	NA	NA	NA	NA	NA	NA	NA	<10	NA
Carbon disulfide	NA	NA	NA	NA	NA	NA	NA	NA	<10	NA
2-Hexanone	NA	NA	NA	NA	NA	NA	NA	NA	<10	NA
Styrene	NA	NA	NA	NA	NA	NA	NA	NA	<10	NA
Methyl-iso-butyl ketone	NA	NA	NA	NA	NA	NA	NA	NA	<10	<100
Methyl isoamyl ketone	NA	NA	NA	NA	NA	NA	NA	NA	NA	<100
m-Xylene	NA	NA	NA	NA	NA	NA	NA	NA	<10	<100
o-Xylene/p-Xylene	NA	NA	NA	NA	NA	NA	NA	NA	<10	<100
Sub Total 2	0	0	0	0	0	0	0	0	30	0
Total VOCs Analyzed	179	1,360	761	2,998	2,739	1,877	2,045	2,874	484	1,371

See footnotes on last page.

g:\technic\tables\monanto\krumm1b.xls

Well Number:	P-2	P-2	P-2	P-2	P-2	P-2	P-2	P-2	P-2	P-3
Date:	12/86	5/87	11/87	5/88	11/88	11/89	11/90	11/91	11/92	[illegible]
Laboratory:	ETC	ETC	ETC	ETC	ETC	ETC	ETC	ETC	ETC	
USEPA Priority Pollutant Volatile Organic Compounds concentrations are in ug/L										
Acrolein	<100	<100	<1,000	<2,000	<2,000	<5,000	<5,000	<2,500	<5,000	<1,000
Acrylonitrile	<100	<100	<1,000	<2,000	<2,000	<5,000	<5,000	<2,500	<5,000	<1,000
Benzene	**56.1**	**50.8**	**140**	**88.3**	**571**	**272**	**241**	**514**	**245**	**2,220**
Bis (chloromethyl) ether	<10	<10	<100	<200	<200	<500	<500	<250	<500	<100
Bromoform	<4.7	<4.7	<47	<94	<94	<240	<240	<120	<240	<47
Carbon tetrachloride	<2.8	<2.8	<28	<56	<56	<140	<140	<70	<140	<28
Chlorobenzene	**618**	**497**	**1,040**	**605**	**1,510**	**1,810**	**2,950**	**3,670**	**3,480**	**346**
Chlorodibromomethane	<3.1	<3.1	<31	<62	<62	<160	<160	<78	<160	<31
Chloroethane	<10	<10	<100	<200	<200	<500	<500	<250	<500	<100
2-Chloroethylvinyl ether	<10	<10	<100	<200	<200	<500	<500	<250	<500	<100
Chloroform	<1.6	<1.6	<16	<32	<32	<80	<80	<40	<80	<16
Dichlorobromomethane	<2.2	<2.2	<22	<44	<44	<110	<110	<55	<110	<22
Dichlorodifluoromethane	<10	<10	<100	<200	<200	<500	<500	<250	<500	<100
1,1-Dichloroethane	<4.7	<4.7	<47	<94	<94	<240	<240	<120	<240	<47
1,2-Dichloroethane	<2.8	<2.8	<28	<56	<56	<140	<140	<70	<140	<28
1,1-Dichloroethylene	<2.8	<2.8	<28	<56	<56	<140	<140	<70	<140	<28
1,2-Dichloropropane	<6.0	<6.0	<60	<120	<120	<300	<300	<150	<300	<60
cis-1,3-Dichloropropylene	<5.0	<5.0	<50	<100	<100	<250	<250	<130	<250	<50
Ethylbenzene	<7.2	<7.2	<72	<140	<140	<360	<360	<180	<360	<72
Methyl bromide	<10	<10	<100	<200	<200	<500	<500	<250	<500	<100
Methyl chloride	<10	<10	<100	<200	<200	<500	<500	<250	<500	<100
Methylene chloride	**13.6**	<2.8	<28	<56	**664**	<140	<140	<70	<140	<28
1,1,2,2-Tetrachloroethane	<6.9	<6.9	<69	<140	<140	<350	<350	<170	<350	<69
Tetrachloroethylene	<4.1	<4.1	<41	<82	<82	<210	<210	<100	<210	<41
Toluene	<6.0	<6.0	<60	<120	**198**	<300	**306**	**717**	<300	<60
1,2-trans-Dichloroethylene	<1.6	<1.6	<16	<32	**609**	<80	<80	<40	<80	
1,1,1-Trichloroethane	<3.8	<3.8	<38	<76	**146**	<190	<190	<95	<190	
1,1,2-Trichloroethane	<5.0	<5.0	<50	<100	<100	<250	<250	<130	<250	[illegible]
Trichloroethylene	<1.9	<1.9	<19	<38	**249**	<95	<95	<48	<95	<19
Trichlorofluoromethane	<10	<10	<100	<200	<200	<500	<500	<250	<500	<100
Vinyl chloride	<10	<10	<100	<200	**1,290**	<500	<500	<250	<500	<100
trans-1,3-Dichloropropylene	<10	<10	<100	<200	<200	<500	<500	<250	<500	<100
Sub Total 1	688	548	1,180	693	5,237	2,082	3,497	4,901	3,725	2,566
Miscellaneous Volatile Organic Compounds										
Acetone	NA	NA	NA	NA	NA	NA	NA	NA	NA	NA
Methyl ethyl ketone	NA	NA	NA	NA	NA	NA	NA	NA	NA	NA
Carbon disulfide	NA	NA	NA	NA	NA	NA	NA	NA	NA	NA
2-Hexanone	NA	NA	NA	NA	NA	NA	NA	NA	NA	NA
Styrene	NA	NA	NA	NA	NA	NA	NA	NA	NA	NA
Methyl-iso-butyl ketone	NA	NA	<100	NA	NA	NA	NA	NA	NA	**400**
Methyl isoamyl ketone	NA	NA	<100	NA	NA	NA	NA	NA	NA	<100
m-Xylene	NA	NA	<100	NA	NA	NA	NA	NA	NA	<100
o-Xylene/p-Xylene	NA	NA	<100	NA	NA	NA	NA	NA	NA	<100
Sub Total 2	0	0	0	0	0	0	0	0	0	400
Total VOCs Analyzed	688	548	1,180	693	5,237	2,082	3,497	4,901	3,725	2,966

See footnotes on last page.

g:\technicl\tables\monanto\krumm1b.xls

Well Number:	P-6	P-6	P-6	P-6	P-6	P-6	P-6	P-6	P-6	P-7
Date:	12/86	5/87	11/87	5/88	11/88	11/89	11/90	11/91	11/92	12/86
Laboratory:	ETC	ETC	ETC	ETC	ETC	ETC	ETC	ETC	ETC	ETC
USEPA Priority Pollutant Volatile Organic Compounds concentrations are in ug/L										
Acrolein	<100	<100	<100	<100	<1,000	<5,000	<500	<100	<100	<10,000
Acrylonitrile	<100	<100	<100	<100	<1,000	<5,000	<500	<100	<100	<10,000
Benzene	**79.2**	<4.4	<4.4	<4.4	**419**	**434**	**230**	**117**	**173**	**623**
Bis (chloromethyl) ether	<10	<10	<10	<10	<100	<500	<50	<10	<10	<1,000
Bromoform	<4.7	<4.7	<4.7	<4.7	<47	<240	<24	<4.7	<4.7	<470
Carbon tetrachloride	<2.8	<2.8	<2.8	<2.8	<28	<140	<14	<2.8	<2.8	<280
Chlorobenzene	**366**	**33.1**	**7.48**	<6.0	**837**	**1,000**	**998**	**292**	**352**	**1,470**
Chlorodibromomethane	<3.1	<3.1	<3.1	<3.1	<31	<160	<16	<3.1	<3.1	<310
Chloroethane	<10	<10	<10	<10	<100	<500	<50	<10	<10	<1,000
2-Chloroethylvinyl ether	<10	<10	<10	<10	<100	<500	<50	<10	<10	<1,000
Chloroform	<1.6	<1.6	<1.6	<1.6	**28.8**	<80	<8.0	<1.6	<1.6	<160
Dichlorobromomethane	<2.2	<2.2	<2.2	<2.2	<22	<110	<11	<2.2	<2.2	<220
Dichlorodifluoromethane	<10	<10	<10	<10	<100	<500	<50	<10	<10	<1,000
1,1-Dichloroethane	<4.7	<4.7	<4.7	<4.7	**164**	<240	<24	<4.7	<4.7	<470
1,2-Dichloroethane	<2.8	<2.8	<2.8	<2.8	<28	<140	<14	<2.8	<2.8	<280
1,1-Dichloroethylene	<2.8	<2.8	<2.8	<2.8	<28	<140	<14	<2.8	<2.8	<280
1,2-Dichloropropane	<6.0	<6.0	<6.0	<6.0	<60	<300	<30	<6.0	<6.0	<600
cis-1,3-Dichloropropylene	<5.0	<5.0	<5.0	<5.0	<50	<250	<25	<5.0	<5.0	<500
Ethylbenzene	<7.2	<7.2	<7.2	<7.2	<72	<360	<36	<7.2	<7.2	<720
Methyl bromide	<10	<10	<10	<10	<100	<500	<50	<10	<10	<1,000
Methyl chloride	<10	<10	<10	<10	<100	<500	<50	<10	<10	<1,000
Methylene chloride	**33.9**	<2.8	**3.87**	<2.8	**581.0**	**170**	<14	<2.8	<2.8	**1,230**
1,1,2,2-Tetrachloroethane	<6.9	<6.9	<6.9	<6.9	<69	<350	<35	<6.9	<6.9	<690
Tetrachloroethylene	<4.1	<4.1	<4.1	<4.1	<41	<210	<21	<4.1	<4.1	<410
Toluene	<6.0	<6.0	<6.0	<6.0	**189**	<300	<30	<6.0	<6.0	<600
1,2-trans-Dichloroethylene	<1.6	<1.6	<1.6	<1.6	**585**	<80	<8.0	<1.6	<1.6	<160
1,1,1-Trichloroethane	<3.8	<3.8	<3.8	<3.8	**104**	<190	<19	<3.8	<3.8	<380
1,1,2-Trichloroethane	<5.0	<5.0	<5.0	<5.0	<50	<250	<25	<5.0	<5.0	<500
Trichloroethylene	<1.9	<1.9	<1.9	<1.9	**207**	<95	<9.5	<1.9	<1.9	<190
Trichlorofluoromethane	<10	<10	<10	<10	<100	<500	<50	<10	<10	<1,000
Vinyl chloride	<10	<10	<10	<10	**1,580**	<500	<50	<10	<10	<1,000
trans-1,3-Dichloropropylene	<10	<10	<10	<10	<100	<500	<50	<10	<10	<1,000
Sub Total 1	479	33	11	0	4,685	1,604	1,228	409	525	3,223
Miscellaneous Volatile Organic Compounds										
Acetone	NA	NA	NA	NA	NA	NA	NA	NA	NA	NA
Methyl ethyl ketone	NA	NA	NA	NA	NA	NA	NA	NA	NA	NA
Carbon disulfide	NA	NA	NA	NA	NA	NA	NA	NA	NA	NA
2-Hexanone	NA	NA	NA	NA	NA	NA	NA	NA	NA	NA
Styrene	NA	NA	NA	NA	NA	NA	NA	NA	NA	NA
Methyl-iso-butyl ketone	NA	NA	<10	NA	NA	NA	NA	NA	NA	NA
Methyl isoamyl ketone	NA	NA	<10	NA	NA	NA	NA	NA	NA	NA
m-Xylene	NA	NA	<10	NA	NA	NA	NA	NA	NA	NA
o-Xylene/p-Xylene	NA	NA	<10	NA	NA	NA	NA	NA	NA	NA
Sub Total 2	0	0	0	0	0	0	0	0	0	0
Total VOCs Analyzed	479	33	11	0	4,685	1,604	1,228	409	525	3,223

See footnotes on last page.

g:\technicl\tables\monanto\krumm1b.xls

Well Number:	P-7	P-7	P-7	P-7	P-7	P-7	P-7	P-7	P-8	P-8
Date:	3/87	5/87	11/87	5/88	11/88	11/90	11/91	11/92	12/86	5/87
Laboratory:	ETC	ETC	ETC	ETC	ETC	ETC	ETC	ETC	ETC	
USEPA Priority Pollutant Volatile Organic Compounds concentrations are in ug/L										
Acrolein	<10,000	<50,000	<1,000	<2,000	<10,000	<5,000	<2,500	<5,000	<1,000	<1,000
Acrylonitrile	<10,000	<50,000	<1,000	<2,000	<10,000	<5,000	<2,500	<5,000	<1,000	<1,000
Benzene	**1,420**	**11,300**	**1,830**	**861**	**6,650**	**1,790**	**1,460**	**1,650**	**194**	**424**
Bis (chloromethyl) ether	<1,000	<5,000	<100	<200	<1,000	<500	<250	<500	<100	<100
Bromoform	<470	<2,400	**62.3**	<94	<470	<240	<120	<240	<47	<47
Carbon tetrachloride	<280	<1,400	<28	<56	<280	<140	<70	<140	<28	<28
Chlorobenzene	**4,310**	**25,200**	**3,290**	**1,560**	**9,000**	**4,860**	**4,250**	**3,550**	**909**	**2,180**
Chlorodibromomethane	<310	<1600	<31	<62	<310	<160	<78	<160	<31	<31
Chloroethane	<1,000	<5,000	<100	<200	<1,000	<500	<250	<500	<100	<100
2-Chloroethylvinyl ether	<1,000	<5,000	<100	<200	<1,000	<500	<250	<500	<100	<100
Chloroform	<160	<800	<16	<32	**462**	<80	<40	<80	<16	<16
Dichlorobromomethane	<220	<1,100	<22	<44	<220	<110	<55	<110	<22	<22
Dichlorodifluoromethane	<1,000	<500	<100	<200	<1,000	<500	<250	<500	<100	<100
1,1-Dichloroethane	<470	<2,400	<47	<94	**2,880**	<240	<120	<240	<47	<47
1,2-Dichloroethane	<280	<1,400	<28	<56	<280	<140	<70	<140	<28	<28
1,1-Dichloroethylene	<280	<1,400	<28	<56	**373**	<140	<70	<140	<28	<28
1,2-Dichloropropane	<600	<3,000	<60	<120	<600	<300	<150	<300	<60	<60
cis-1,3-Dichloropropylene	<500	<2,500	<50	<100	<500	<250	<130	<250	<50	<50
Ethylbenzene	<720	<3,600	<72	<140	<720	<360	<180	<360	<72	<72
Methyl bromide	<1,000	<5,000	<100	<200	<1,000	<500	<250	<500	<100	<100
Methyl chloride	<1,000	<5,000	<100	<200	<1,000	<500	<250	<500	<100	<100
Methylene chloride	<280	**18,200**	<28	<56	**10,200**	<140	<70	<140	<28	<28
1,1,2,2-Tetrachloroethane	<690	<3,500	**117**	<140	<690	<350	<170	<350	<69	<69
Tetrachloroethylene	<410	<2100	<41	,82	<410	<210	<100	<210	<41	<41
Toluene	<600	<3,000	**251**	<120	**3,620**	**613**	**408**	<300	<60	<60
1,2-trans-Dichloroethylene	<160	<800	<16	<32	**11,300**	<80	<40	<80	<16	
1,1,1-Trichloroethane	<380	<1,900	<38	<76	**2,720**	<190	<95	<190	<38	
1,1,2-Trichloroethane	<500	<2,500	<50	<100	<500	<250	<130	<250	<50	
Trichloroethylene	<190	<950	<19	<38	**4,610**	<95	<48	<95	<19	<19
Trichlorofluoromethane	<1,000	<5,000	<100	<200	<1,000	<500	<250	<500	<100	<100
Vinyl chloride	<1,000	<5,000	<100	<200	**24,500**	<500	<250	<500	<100	<100
trans-1,3-Dichloropropylene	<1,000	<5,000	<100	<200	<1,000	<500	<250	<500	<100	<100
Sub Total 1	5,730	54,700	5,550	2,421	75,315	7,263	6,118	5,200	1,103	2,604
Miscellaneous Volatile Organic Compounds										
Acetone	**3,120**	NA	NA	NA	NA	NA	NA	NA	NA	NA
Methyl ethyl ketone	<1,000	NA	NA	NA	NA	NA	NA	NA	NA	NA
Carbon disulfide	<1,000	NA	NA	NA	NA	NA	NA	NA	NA	NA
2-Hexanone	<1,000	NA	NA	NA	NA	NA	NA	NA	NA	NA
Styrene	<1,000	NA	NA	NA	NA	NA	NA	NA	NA	NA
Methyl-iso-butyl ketone	<1,000	NA	**172**	NA	NA	NA	NA	NA	NA	NA
Methyl isoamyl ketone	NA	NA	<100	NA	NA	NA	NA	NA	NA	NA
m-Xylene	<1,000	NA	<100	NA	NA	NA	NA	NA	NA	NA
o-Xylene/p-Xylene	<1,000	NA	<100	NA	NA	NA	NA	NA	NA	NA
Sub Total 2	3,120	0	172	0	0	0	0	0	0	0
Total VOCs Analyzed	8,850	54,700	5,722	2,421	75,315	7,263	6,118	5,200	1,103	2,604

See footnotes on last page.

Well Number:	P-8	P-8	P-8	P-8	P-8	P-8	P-8	P-8	P-10	P-11
Date:	11/87	5/88	11/88	3/89	11/89	11/90	11/91	11/92	11/87	3/87
Laboratory:	ETC	ETC	ETC	ETC	ETC	ETC	ETC	ETC	ETC	ETC
USEPA Priority Pollutant Volatile Organic Compounds concentrations are in ug/L										
Acrolein	<1,000	<1,000	<2,000	<10,000	<5,000	<5,000	<2,500	<5,000	<1,000	<100
Acrylonitrile	<1,000	<1,000	<2,000	<10,000	<5,000	<5,000	<2,500	<5,000	<1,000	<100
Benzene	**1,390**	**1,720**	**1,980**	**1,680**	**3,340**	**1,990**	**2,380**	**2,160**	**1,080**	**120**
Bis (chloromethyl) ether	<100	<100	<200	<1,000	<500	<500	<250	<500	<100	<10
Bromoform	<47	<47	<94	<470	<240	<240	<120	<240	<47	<4.7
Carbon tetrachloride	<28	<28	<56	<280	<140	<140	<70	<140	<28	<2.8
Chlorobenzene	**4,910**	**3,180**	**3,810**	**3,660**	**4,340**	**5,280**	**4,450**	**3,640**	**5,210**	**483**
Chlorodibromomethane	<31	<31	<62	<310	<160	<160	<78	<160	<31	<3.1
Chloroethane	<100	<100	<200	<1,000	<500	<500	<250	<500	<100	<10
2-Chloroethylvinyl ether	<100	<100	<200	<1,000	<500	<500	<250	<500	<100	<10
Chloroform	<16	<16	**121**	<160	<80	<80	<40	<80	<16	<1.6
Dichlorobromomethane	<22	<22	<44	<220	<110	<110	<55	<110	<22	<2.2
Dichlorodifluoromethane	<100	<100	<200	<1,000	<500	<500	<250	<500	<100	<10
1,1-Dichloroethane	<47	<47	<94	<470	<240	<240	<120	<240	<47	<4.7
1,2-Dichloroethane	**73.9**	<28	**303**	<280	<140	**409**	**2,200**	**1,860**	**49.6**	<2.8
1,1-Dichloroethylene	<28	<28	<56	<280	<140	<140	<70	<140	<28	<2.8
1,2-Dichloropropane	<60	<60	<120	<600	<300	<300	<150	<300	<60	<6.0
cis-1,3-Dichloropropylene	<50	<50	<100	<500	<250	<250	<130	<250	<50	<5.0
Ethylbenzene	**79.1**	<72	<140	<1,000	<360	<360	<180	<360	**137**	<7.2
Methyl bromide	<100	<100	<200	<1,000	<500	<500	<250	<500	<100	<10
Methyl chloride	<100	<100	<200	**466**	<500	<500	<250	<500	<100	<10
Methylene chloride	**217**	**558**	**495**	<690	**1,080**	**516**	**279**	<140	**653**	<2.8
1,1,2,2-Tetrachloroethane	<69	<69	<140	<410	<350	<350	<170	<350	<69	<6.9
Tetrachloroethylene	<41	<41	<82	<600	<210	<210	<100	<210	<41	<4.1
Toluene	**590**	**538**	**603**	<160	**512**	**1,300**	**637**	**387**	**103**	<6.0
1,2-trans-Dichloroethylene	<16	<16	<32	<380	<80	<80	<40	<80	**25.4**	<1.6
1,1,1-Trichloroethane	<38	<38	<76	<500	<190	<190	<95	<190	<38	<3.8
1,1,2-Trichloroethane	<50	<50	<100	<190	<250	<250	<130	<250	<50	<5.0
Trichloroethylene	<19	**24.3**	<38	<1,000	<95	<95	<48	<95	<19	<1.9
Trichlorofluoromethane	<100	<100	<200	<1,000	<500	<500	<250	<500	<100	<10
Vinyl chloride	<100	<100	<200	<1,000	<500	<500	<250	<500	<100	<10
trans-1,3-Dichloropropylene	<100	<100	<200	<720	<500	<500	<250	<500	<100	<10
Sub Total 1	7,260	6,020	7,312	5,806	9,272	9,495	9,946	7,947	7,258	603
Miscellaneous Volatile Organic Compounds										
Acetone	NA	NA	NA	NA	NA	NA	NA	NA	NA	**22.9**
Methyl ethyl ketone	NA	NA	NA	NA	NA	NA	NA	NA	NA	<10
Carbon disulfide	NA	NA	NA	NA	NA	NA	NA	NA	NA	<10
2-Hexanone	NA	NA	NA	NA	NA	NA	NA	NA	NA	<10
Styrene	NA	NA	NA	NA	NA	NA	NA	NA	NA	<10
Methyl-iso-butyl ketone	**2,860**	NA	NA	**1,920**	NA	NA	NA	NA	<100	<10
Methyl isoamyl ketone	<100	NA	NA	<1,000	NA	NA	NA	NA	<100	NA
m-Xylene	**173**	NA	NA	<1,000	NA	NA	NA	NA	<100	<10
o-Xylene/p-Xylene	**144**	NA	NA	<1,000	NA	NA	NA	NA	**137**	<10
Sub Total 2	3,177	0	0	1,920	0	0	0	0	137	23
Total VOCs Analyzed	10,437	6,020	7,312	7,726	9,272	9,495	9,946	7,947	7,395	626

See footnotes on last page.

Well Number:	P-11	P-12	P-13	P-13	P-13	P-13	P-13	P-13	P-13	P-13
Date:	11/87	11/87	12/86	5/87	11/87	5/88	11/88	11/89	11/90	11
Laboratory:	ETC	ETC	ETC	ETC	ETC	ETC	ETC	ETC	ETC	
USEPA Priority Pollutant Volatile Organic Compounds concentrations are in ug/L										
Acrolein	<1,000	<50,000	<1,000	<100	<100	<1,000	<1,000	<5,000	<5,000	<2,500
Acrylonitrile	<1,000	<50,000	<1,000	<100	<100	<1,000	<1,000	<5,000	<5,000	<2,500
Benzene	**337**	**7,330**	**46.8**	**89.7**	**365**	**684**	**1,040**	**3,410**	**2,200**	**2,970**
Bis (chloromethyl) ether	<100	<5,000	<100	<10	<100	<100	<100	<500	<500	<250
Bromoform	<47	<2,400	<47	<4.7	<47	<47	<47	<240	<240	<120
Carbon tetrachloride	<28	<1,400	<28	<2.8	<28	<28	<28	<140	<140	<70
Chlorobenzene	**1,660**	**37,400**	**226**	**306**	**881**	**1,050**	**1,500**	**5,530**	**4,560**	**6,400**
Chlorodibromomethane	<31	<1600	<31	<3.1	<31	<31	<31	<160	<160	<78
Chloroethane	<100	<5,000	<100	<10	<100	<100	<100	<500	<500	<250
2-Chloroethylvinyl ether	<100	<5,000	<100	<10	<100	<100	<100	<500	<500	<250
Chloroform	<16	<800	<16	<1.6	<16	<16	<16	<80	<80	<40
Dichlorobromomethane	<22	<1,100	<22	<2.2	<22	<22	<22	<110	<110	<55
Dichlorodifluoromethane	<100	<5,000	<100	<10	<100	<100	<100	<500	<500	<250
1,1-Dichloroethane	<47	<2,400	<47	<4.7	<47	<47	<47	<240	<240	<120
1,2-Dichloroethane	<28	<1,400	<28	<2.8	<28	<28	<28	<140	<140	<70
1,1-Dichloroethylene	<28	<1,400	<28	<2.8	<28	<28	<28	<140	<140	<70
1,2-Dichloropropane	<60	<3,000	<60	<6.0	<60	<60	<60	<300	<300	<150
cis-1,3-Dichloropropylene	<50	<2,500	<50	<5.0	<50	<50	<50	<250	<250	<130
Ethylbenzene	<72	<5,000	<72	<7.2	<72	<72	<72	<360	<360	<180
Methyl bromide	<100	<5,000	<100	<10	<100	<100	<100	<500	<500	<250
Methyl chloride	<100	<5,000	<100	<10	<100	<100	<100	<500	<500	<250
Methylene chloride	**2,260**	<1,400	**114**	<2.8	<28	<28	**136**	**398**	<140	<70
1,1,2,2-Tetrachloroethane	<69	<3,500	<69	<6.9	<69	<69	<69	<350	<350	<170
Tetrachloroethylene	<41	<2100	<41	<4.1	<41	<41	<41	<210	<210	<100
Toluene	<60	<3,000	<60	<6.0	<60	<60	<60	**928**	<300	**448**
1,2-trans-Dichloroethylene	<16	<800	<16	<1.6	<16	<16	<16	<80	<80	
1,1,1-Trichloroethane	<38	<1,900	<38	<3.8	<38	<38	<38	<190	<190	
1,1,2-Trichloroethane	<50	<2,500	<50	<5.0	<50	<50	<50	<250	<250	<130
Trichloroethylene	<19	<950	<19	<1.9	<19	<19	<19	<95	<95	<48
Trichlorofluoromethane	<100	<5,000	<100	<10	<100	<100	<100	<500	<500	<250
Vinyl chloride	<100	<5,000	<100	<10	<100	<100	<100	<500	<500	<250
trans-1,3-Dichloropropylene	<100	<3,600	<100	<10	<100	<100	<100	<500	<500	<250
Sub Total 1	4,257	44,730	385	395	1,246	1,734	2,676	10,266	6,760	9,818
Miscellaneous Volatile Organic Compounds										
Acetone	NA	NA	NA	NA	NA	NA	NA	NA	NA	NA
Methyl ethyl ketone	NA	NA	NA	NA	NA	NA	NA	NA	NA	NA
Carbon disulfide	NA	NA	NA	NA	NA	NA	NA	NA	NA	NA
2-Hexanone	NA	NA	NA	NA	NA	NA	NA	NA	NA	NA
Styrene	NA	NA	NA	NA	NA	NA	NA	NA	NA	NA
Methyl-iso-butyl ketone	<100	<5,000	NA	NA	<100	NA	NA	NA	NA	NA
Methyl isoamyl ketone	<100	<5,000	NA	NA	<100	NA	NA	NA	NA	NA
m-Xylene	<100	<5,000	NA	NA	<100	NA	NA	NA	NA	NA
o-Xylene/p-Xylene	<100	<5,000	NA	NA	<100	NA	NA	NA	NA	NA
Sub Total 2	0	0	0	0	0	0	0	0	0	0
Total VOCs Analyzed	4,257	44,730	385	395	1,246	1,734	2,676	10,266	6,760	9,818

See footnotes on last page.

Well Number:	P-13	P-14	P-14	P-14	P-14	P-14	P-14	P-14	P-14	P-14
Date:	11/92	12/86	5/87	11/87	5/88	11/88	11/89	11/90	11/91	11/92
Laboratory:	ETC	ETC	ETC	ETC	ETC	ETC	ETC	ETC	ETC	ETC
USEPA Priority Pollutant Volatile Organic Compounds concentrations are in ug/L										
Acrolein	<10,000	<100	<10,0000	<100	<10,0000	<50,000	<5,000	<10,0000	<50,000	<20,0000
Acrylonitrile	<10,000	<100	<10,0000	<100	<10,0000	<50,000	<5,000	<10,0000	<50,000	<20,0000
Benzene	**2,340**	<4.4	<4400	<4.4	<4,400	<2,200	<220	<4,400	**2,200**	<8,800
Bis (chloromethyl) ether	<1,000	<10	<10,000	<10	<10,000	<5,000	<500	<10,000	<5,000	<20,000
Bromoform	<470	<4.7	<4700	<4.7	<4,700	<2,400	<240	<4,700	<2,400	<9,400
Carbon tetrachloride	<280	<2.8	<2800	<2.8	<2,800	<1,400	<140	<2,800	<1,400	<5,600
Chlorobenzene	**5,430**	<6.0	**158,000**	<6.0	**37,200**	**12,100**	**17,500**	**40,900**	**59,400**	**64,700**
Chlorodibromomethane	<310	<3.1	<3100	<3.1	<3,100	<1,600	<160	<3,100	<1,600	<6,200
Chloroethane	<1,000	<10	<10,000	<10	<10,000	<5,000	<500	<10,000	<5,000	<20,000
2-Chloroethylvinyl ether	<1,000	<10	<10,000	<10	<10,000	<5,000	<500	<10,000	<5,000	<20,000
Chloroform	<160	<1.6	<1600	<1.6	<1,600	<800	<80	<1,600	<800	<3,200
Dichlorobromomethane	<220	<2.2	<2200	<2.2	<2,200	<1,100	<110	<2,200	<1,100	<4,400
Dichlorodifluoromethane	<1,000	<10	<10,000	<10	<10,000	<5,000	<500	<10,000	<5,000	<20,000
1,1-Dichloroethane	<470	<4.7	<4700	<4.7	<4,700	<2,400	<240	<4,700	<2,400	<9,400
1,2-Dichloroethane	<280	<2.8	<2800	<2.8	<2,800	<1,400	<140	<2,800	<1,400	<5,600
1,1-Dichloroethylene	<280	<2.8	<2800	<2.8	<2,800	<1,400	<140	<2,800	<1,400	<5,600
1,2-Dichloropropane	<600	<6.0	<6000	<6.0	<6,000	<3,000	<300	<6,000	<3,000	<12,000
cis-1,3-Dichloropropylene	<500	<5.0	<5,000	<5.0	<5,000	<2,500	<250	<5,000	<2,500	<10,000
Ethylbenzene	<720	<7.2	<7200	<7.2	<7,200	<5,000	<360	<7,200	<5,000	<14,000
Methyl bromide	<1,000	<10	<10,000	<10	<10,000	<5,000	<500	<10,000	<5,000	<20,000
Methyl chloride	<1,000	<10	<10,000	<10	<10,000	<5,000	<500	<10,000	<5,000	<20,000
Methylene chloride	<280	**468**	**22,400**	**26.5**	<2,800	<1,400	**280**	<2,800	<1,400	<5600
1,1,2,2-Tetrachloroethane	<690	<6.9	<6900	<6.9	<6,900	<3,500	<350	<6,900	<3,500	<14,000
Tetrachloroethylene	<410	<4.1	<4100	<4.1	<4,100	<2,100	<210	<4,100	<2,100	<8,200
Toluene	<600	<6.0	<6000	<6.0	<6,000	<3,000	<300	<6,000	<3,000	<12,000
1,2-trans-Dichloroethylene	<160	<1.6	<1600	<1.6	<1,600	<800	<80	<1,600	<800	<3,200
1,1,1-Trichloroethane	<380	<3.8	<3800	<3.8	<3,800	<1,900	<190	<3,800	<1,900	<7,600
1,1,2-Trichloroethane	<500	<5.0	<5,000	<5.0	<5,000	<2,500	<250	<5,000	<2,500	<10,000
Trichloroethylene	<190	<1.9	<1,900	<1.9	<1,900	<950	<95	<1,900	<950	<3800
Trichlorofluoromethane	<1,000	<10	<10,000	<10	<10,000	<5,000	<500	<10,000	<5,000	<20,000
Vinyl chloride	<1,000	<10	<10,000	<10	<10,000	<5,000	<500	<10,000	<5,000	<20,000
trans-1,3-Dichloropropylene	<1,000	<10	<10,000	<10	<10,000	<3,600	<500	<10,000	<5,000	<20,000
Sub Total 1	7,770	468	180,400	27	37,200	12,100	17,780	40,900	61,600	64,700
Miscellaneous Volatile Organic Compounds										
Acetone	NA	NA	NA	NA	NA	NA	NA	NA	NA	NA
Methyl ethyl ketone	NA	NA	NA	NA	NA	NA	NA	NA	NA	NA
Carbon disulfide	NA	NA	NA	NA	NA	NA	NA	NA	NA	NA
2-Hexanone	NA	NA	NA	NA	NA	NA	NA	NA	NA	NA
Styrene	NA	NA	NA	NA	NA	NA	NA	NA	NA	NA
Methyl-iso-butyl ketone	NA	NA	NA	<10	NA	NA	NA	NA	NA	NA
Methyl isoamyl ketone	NA	NA	NA	<10	NA	NA	NA	NA	NA	NA
m-Xylene	NA	NA	NA	<10	NA	NA	NA	NA	NA	NA
o-Xylene/p-Xylene	NA	NA	NA	<10	NA	NA	NA	NA	NA	NA
Sub Total 2	0	0	0	0	0	0	0	0	0	0
Total VOCs Analyzed	7,770	468	180,400	27	37,200	12,100	17,780	40,900	61,600	64,700

See footnotes on last page.

g:\technic\tables\monanto\krumm1b.xls

Well Number:	Field Blank	Field Blank	Field Blank	Field Blank	Field Blank	Field Blank	Field Blank	Field Blank	Field Blank	Field Blank
Date:	12/86	3/87	5/87	11/87	5/88	11/88	11/88	3/89	5/89	1
Laboratory:	ETC	ETC	ETC	ETC	ETC	ETC	ETC	ETC	ETC	
USEPA Priority Pollutant Volatile Organic Compounds concentrations are in ug/L										
Acrolein	<100	<100	<100	<100	<100	<100	<50	<100	<100	<100
Acrylonitrile	<100	<100	<100	<100	<100	<100	<50	<100	<100	<100
Benzene	<4.4	<4.4	<4.4	<4.4	<4.4	<4.4	<5	<4.4	<4.4	<4.4
Bis (chloromethyl) ether	<10	<10	<10	<10	<10	<10	<10	<10	<10	<10
Bromoform	<4.7	<4.7	<4.7	<4.7	<4.7	<4.7	<5	<4.7	<4.7	<4.7
Carbon tetrachloride	<2.8	<2.8	<2.8	<2.8	<2.8	<2.8	<5	<2.8	<2.8	<2.8
Chlorobenzene	<6.0	<6.0	<6.0	<6.0	<6.0	<6.0	<5	<6.0	<6.0	<6.0
Chlorodibromomethane	<3.1	<3.1	<3.1	**3.90**	<3.1	<3.1	<5	<3.1	<3.1	<3.1
Chloroethane	<10	<10	<10	<10	<10	<10	<10	<10	<10	<10
2-Chloroethylvinyl ether	<10	<10	<10	<10	<10	<10	<5	<10	<10	<10
Chloroform	<1.6	<1.6	<1.6	**39.7**	<1.6	<1.6	<5	<1.6	<1.6	<1.6
Dichlorobromomethane	<2.2	<2.2	<2.2	**16.5**	<2.2	<2.2	<5	<2.2	<2.2	<2.2
Dichlorodifluoromethane	<10	<10	<10	<10	<10	**23.1**	<10	<10	<10	<10
1,1-Dichloroethane	<4.7	<4.7	<4.7	<4.7	<4.7	<4.7	<5	<4.7	<4.7	<4.7
1,2-Dichloroethane	<2.8	<2.8	<2.8	<2.8	<2.8	<2.8	<5	<2.8	<2.8	<2.8
1,1-Dichloroethylene	<2.8	<2.8	<2.8	<2.8	<2.8	<2.8	<5	<2.8	<2.8	<2.8
1,2-Dichloropropane	<6.0	<6.0	<6.0	<6.0	<6.0	<6.0	<5	<6.0	<6.0	<6.0
cis-1,3-Dichloropropylene	<5.0	<5.0	<5.0	<5.0	<5.0	<5.0	<5	<5.0	<5.0	<5.0
Ethylbenzene	<7.2	<7.2	<7.2	<7.2	<7.2	<7.2	<5	<10	<7.2	<7.2
Methyl bromide	<10	<10	<10	<10	<10	<10	<10	<10	<10	<10
Methyl chloride	<10	<10	<10	<10	<10	<10	<10	<2.8	<10	<10
Methylene chloride	**8.4**	<2.8	<2.8	**9.67**	**10.2**	**29.2**	<5	<6.9	**4.20**	<2.8
1,1,2,2-Tetrachloroethane	<6.9	<6.9	<6.9	<6.9	<6.9	<6.9	<5	<4.1	<6.9	<6.9
Tetrachloroethylene	<4.1	<4.1	<4.1	<4.1	<4.1	<4.1	<5	<6.0	<4.1	<4.1
Toluene	<6.0	<6.0	<6.0	<6.0	<6.0	<6.0	<5	<1.6	<6.0	<6.0
1,2-trans-Dichloroethylene	<1.6	<1.6	<1.6	<1.6	<1.6	<1.6	<5	<3.8	<1.6	
1,1,1-Trichloroethane	<3.8	<3.8	<3.8	<3.8	<3.8	<3.8	<5	<5.0	<3.8	
1,1,2-Trichloroethane	<5.0	<5.0	<5.0	<5.0	<5.0	<5.0	<5	<1.9	<5.0	<5.0
Trichloroethylene	<1.9	<1.9	<1.9	<1.9	<1.9	<1.9	<5	<10	<1.9	<1.9
Trichlorofluoromethane	<10	<10	<10	<10	<10	<10	<5	<10	<10	<10
Vinyl chloride	<10	<10	<10	<10	<10	<10	<10	<10	<10	<10
trans-1,3-Dichloropropylene	<10	<10	<10	<10	<10	<10	<5	<7.2	<10	<10
Sub Total 1	8	0	0	70	10	52	0	0	4	0
Miscellaneous Volatile Organic Compounds										
Acetone	NA	<10	NA	NA	NA	NA	NA	NA	NA	NA
Methyl ethyl ketone	NA	<10	NA	NA	NA	NA	NA	NA	NA	NA
Carbon disulfide	NA	<10	NA	NA	NA	NA	NA	NA	NA	NA
2-Hexanone	NA	<10	NA	NA	NA	NA	NA	NA	NA	NA
Styrene	NA	<10	NA	NA	NA	NA	NA	NA	NA	NA
Methyl-iso-butyl ketone	NA	<10	NA	NA	NA	NA	<500	NA	NA	NA
Methyl isoamyl ketone	NA	NA	NA	NA	NA	NA	<100	NA	NA	NA
m-Xylene	NA	<10	NA	NA	NA	NA	<50	NA	NA	NA
o-Xylene/p-Xylene	NA	<10	NA	NA	NA	NA	<50	NA	NA	NA
Sub Total 2	0	0	0	0	0	0	0	0	0	0
Total VOCs Analyzed	8	0	0	70	10	52	0	0	4	0

See footnotes on last page.

g:\technic\tables\monanto\krumm1b.xls

Well Number:	Field Blank	Field Blank	Field Blank	Field Blank	Field Blank	Field Blank	Field Blank	Trip Blank	Trip Blank	Trip Blank
Date:	5/90	11/90	5/91	11/91	11/9/92	11/12/92	9/94	12/86	3/87	5/87
Laboratory:	ETC	ETC	ETC	ETC	ETC	ETC	SL	ETC	ETC	ETC
USEPA Priority Pollutant Volatile Organic Compounds concentrations are in ug/L										
Acrolein	<100	<100	<100	<100	<100	<100	<100	<100	<100	<100
Acrylonitrile	<100	<100	<100	<100	<100	<100	<100	<100	<100	<100
Benzene	<4.4	<4.4	<4.4	<4.4	<4.4	<4.4	<5	<4.4	<4.4	<4.4
Bis (chloromethyl) ether	<10	<10	<10	<10	<10	<10	NA	<10	<10	<10
Bromoform	<4.7	<4.7	<4.7	<4.7	<4.7	<4.7	<5	<4.7	<4.7	<4.7
Carbon tetrachloride	<2.8	<2.8	<2.8	<2.8	<2.8	<2.8	<5	<2.8	<2.8	<2.8
Chlorobenzene	<6.0	<6.0	<6.0	<6.0	<6.0	<6.0	<5	<6.0	<6.0	<6.0
Chlorodibromomethane	<3.1	<3.1	<3.1	<3.1	<3.1	<3.1	<5	<3.1	<3.1	<3.1
Chloroethane	<10	<10	<10	<10	<10	<10	<10	<10	<10	<10
2-Chloroethylvinyl ether	<10	<10	<10	<10	<10	<10	<50	<10	<10	<10
Chloroform	<1.6	<1.6	<1.6	<1.6	<1.6	<1.6	<5	<1.6	<1.6	<1.6
Dichlorobromomethane	<2.2	<2.2	3.76	<2.2	<2.2	<2.2	<5	<2.2	<2.2	<2.2
Dichlorodifluoromethane	<10	<10	<10	<10	<10	<10	<5	<10	<10	<10
1,1-Dichloroethane	<4.7	<4.7	<4.7	<4.7	<4.7	<4.7	<5	<4.7	<4.7	<4.7
1,2-Dichloroethane	<2.8	<2.8	<2.8	<2.8	<2.8	<2.8	<5	<2.8	<2.8	<2.8
1,1-Dichloroethylene	<2.8	<2.8	<2.8	<2.8	<2.8	<2.8	<5	<2.8	<2.8	<2.8
1,2-Dichloropropane	<6.0	<6.0	<6.0	<6.0	<6.0	<6.0	<5	<6.0	<6.0	<6.0
cis-1,3-Dichloropropylene	<5.0	<5.0	<5.0	<5.0	<5.0	<5.0	<5	<5.0	<5.0	<5.0
Ethylbenzene	<7.2	<7.2	<7.2	<7.2	<7.2	<7.2	<5	<7.2	<7.2	<7.2
Methyl bromide	<10	<10	<10	<10	<10	<10	<10	<10	<10	<10
Methyl chloride	<10	<10	<10	<10	<10	<10	<10	<10	<10	<10
Methylene chloride	9.01	<2.8	<2.8	<2.8	3.7	<2.8	<5	4.2	<2.8	<2.8
1,1,2,2-Tetrachloroethane	<6.9	<6.9	<6.9	<6.9	<6.9	<6.9	<5	<6.9	<6.9	<6.9
Tetrachloroethylene	<4.1	<4.1	<4.1	<4.1	<4.1	<4.1	<5	<4.1	<4.1	<4.1
Toluene	<6.0	<6.0	<6.0	<6.0	<6.0	<6.0	<5	<6.0	<6.0	<6.0
1,2-trans-Dichloroethylene	<1.6	<1.6	<1.6	<1.6	<1.6	<1.6	<5	<1.6	<1.6	<1.6
1,1,1-Trichloroethane	<3.8	<3.8	<3.8	<3.8	<3.8	<3.8	<5	<3.8	<3.8	<3.8
1,1,2-Trichloroethane	<5.0	<5.0	<5.0	<5.0	<5.0	<5.0	<5	<5.0	<5.0	<5.0
Trichloroethylene	<1.9	<1.9	<1.9	<1.9	<1.9	<1.9	<5	<1.9	<1.9	<1.9
Trichlorofluoromethane	<10	<10	<10	<10	<10	<10	<5	<10	<10	<10
Vinyl chloride	<10	<10	<10	<10	<10	<10	<10	<10	<10	<10
trans-1,3-Dichloropropylene	<10	<10	<10	<10	<10	<10	<5	<10	<10	<10
Sub Total 1	9	0	4	0	4	0	0	4	0	0
Miscellaneous Volatile Organic Compounds										
Acetone	NA	NA	NA	NA	NA	NA	NA	NA	40.1	NA
Methyl ethyl ketone	NA	NA	NA	NA	NA	NA	NA	NA	<10	NA
Carbon disulfide	NA	NA	NA	NA	NA	NA	NA	NA	<10	NA
2-Hexanone	NA	NA	NA	NA	NA	NA	NA	NA	<10	NA
Styrene	NA	NA	NA	NA	NA	NA	NA	NA	<10	NA
Methyl-iso-butyl ketone	NA	<10	NA	NA	NA	NA	<25	NA	<10	NA
Methyl isoamyl ketone	NA	<10	NA	NA	NA	NA	<25	NA	NA	NA
m-Xylene	NA	<10	NA	NA	NA	NA	<5	NA	<10	NA
o-Xylene/p-Xylene	NA	<10	NA	NA	NA	NA	<5	NA	<10	NA
Sub Total 2	0	0	0	0	0	0	0	0	40	0
Total VOCs Analyzed	9	0	4	0	4	0	0	4	40	0

See footnotes on last page.

g:\technic\tables\monanto\krumm1b.xls

Well Number:	Trip Blank	Trip Blank	Trip Blank	Trip Blank	Trip Blank	Trip Blank	Trip Blank	Trip Blank	Trip Blank	Trip
Date:	11/87	5/88	11/88	11/88	5/89	11/89	5/90	11/90	5/91	
Laboratory:	ETC	ETC	ETC	ETC	ETC	ETC	ETC	ETC	ETC	ETC
USEPA Priority Pollutant Volatile Organic Compounds concentrations are in ug/L										
Acrolein	<100	<100	<100	<50	<100	<100	<100	<100	<100	<100
Acrylonitrile	<100	<100	<100	<50	<100	<100	<100	<100	<100	<100
Benzene	<4.4	<4.4	<4.4	<5	<4.4	<4.4	<4.4	<4.4	<4.4	<4.4
Bis (chloromethyl) ether	<10	<10	<10	<5	<10	<10	<10	<10	<10	<10
Bromoform	<4.7	<4.7	<4.7	<5	<4.7	<4.7	<4.7	<4.7	<4.7	<4.7
Carbon tetrachloride	<2.8	<2.8	<2.8	<5	<2.8	<2.8	<2.8	<2.8	<2.8	<2.8
Chlorobenzene	<6.0	<6.0	<6.0	<5	<6.0	<6.0	<6.0	<6.0	<6.0	<6.0
Chlorodibromomethane	<3.1	<3.1	<3.1	<5	<3.1	<3.1	<3.1	<3.1	<3.1	<3.1
Chloroethane	<10	<10	<10	<10	<10	<10	<10	<10	<10	<10
2-Chloroethylvinyl ether	<10	<10	<10	<10	<10	<10	<10	<10	<10	<10
Chloroform	<1.6	<1.6	<1.6	<5	<1.6	<1.6	<1.6	<1.6	<1.6	<1.6
Dichlorobromomethane	<2.2	<2.2	<2.2	<5	<2.2	<2.2	<2.2	<2.2	<2.2	<2.2
Dichlorodifluoromethane	<10	<10	**26**	<10	<10	<10	<10	<10	<10	<10
1,1-Dichloroethane	<4.7	<4.7	<4.7	<5	<4.7	<4.7	<4.7	<4.7	<4.7	<4.7
1,2-Dichloroethane	<2.8	<2.8	<2.8	<5	<2.8	<2.8	<2.8	<2.8	<2.8	<2.8
1,1-Dichloroethylene	<2.8	<2.8	<2.8	<5	<2.8	<2.8	<2.8	<2.8	<2.8	<2.8
1,2-Dichloropropane	<6.0	<6.0	<6.0	<5	<6.0	<6.0	<6.0	<6.0	<6.0	<6.0
cis-1,3-Dichloropropylene	<5.0	<5.0	<5.0	<5	<5.0	<5.0	<5.0	<5.0	<5.0	<5.0
Ethylbenzene	<7.2	<7.2	<7.2	<5	<10	<7.2	<7.2	<7.2	<7.2	<7.2
Methyl bromide	<10	<10	<10	<10	<10	<10	<10	<10	<10	<10
Methyl chloride	<10	<10	<10	<10	<2.8	<10	<10	<10	<10	<10
Methylene chloride	<2.8	<2.8	**6.50**	<5	<6.9	**8.76**	**7.75**	<2.8	**15.8**	<2.8
1,1,2,2-Tetrachloroethane	<6.9	<6.9	<6.9	<5	<4.1	<6.9	<6.9	<6.9	<6.9	<6.9
Tetrachloroethylene	<4.1	<4.1	<4.1	<5	<6.0	<4.1	<4.1	<4.1	<4.1	<4.1
Toluene	<6.0	<6.0	<6.0	<5	<1.6	<6.0	<6.0	<6.0	<6.0	
1,2-trans-Dichloroethylene	<1.6	<1.6	<1.6	<5	<3.8	<1.6	<1.6	<1.6	<1.6	
1,1,1-Trichloroethane	<3.8	<3.8	<3.8	<5	<5.0	<3.8	<3.8	<3.8	<3.8	<3.8
1,1,2-Trichloroethane	<5.0	<5.0	<5.0	<5	<1.9	<5.0	<5.0	<5.0	<5.0	<5.0
Trichloroethylene	<1.9	<1.9	<1.9	<5	<10	<1.9	<1.9	<1.9	<1.9	<1.9
Trichlorofluoromethane	<10	<10	<10	<5	<10	<10	<10	<10	<10	**30.1**
Vinyl chloride	<10	<10	<10	<10	<10	<10	<10	<10	<10	<10
trans-1,3-Dichloropropylene	<10	<10	<10	<5	<7.2	<10	<10	<10	<10	<10
Sub Total 1	0	0	33	0	0	9	8	0	16	30
Miscellaneous Volatile Organic Compounds										
Acetone	NA	NA	NA	NA	NA	NA	NA	NA	NA	NA
Methyl ethyl ketone	NA	NA	NA	NA	NA	NA	NA	NA	NA	NA
Carbon disulfide	NA	NA	NA	NA	NA	NA	NA	NA	NA	NA
2-Hexanone	NA	NA	NA	NA	NA	NA	NA	NA	NA	NA
Styrene	NA	NA	NA	NA	NA	NA	NA	NA	NA	NA
Methyl-iso-butyl ketone	NA	NA	NA	NA	NA	NA	NA	NA	NA	NA
Methyl isoamyl ketone	NA	NA	NA	NA	NA	NA	NA	NA	NA	NA
m-Xylene	NA	NA	NA	NA	NA	NA	NA	NA	NA	NA
o-Xylene/p-Xylene	NA	NA	NA	NA	NA	NA	NA	NA	NA	NA
Sub Total 2	0	0	0	0	0	0	0	0	0	0
Total VOCs Analyzed	0	0	33	0	0	9	8	0	16	30

g:\technicl\tables\monanto\krumm1b.xls

Well Number:	Trip Blank	Trip Blank	Trip Blank	Trip Blank	Trip Blank	Trip Blank	Trip Blank	Trip Blank 1	Trip Blank 2	Trip Blank 3
Date:	11/4/92	11/4/92	11/5/92	11/5/92	11/9/92	11/11/92	11/12/92	9/94	9/94	9/94
Laboratory:	ETC	ETC	ETC	ETC	ETC	ETC	ETC	SL	SL	SL
USEPA Priority Pollutant Volatile Organic Compounds concentrations are in ug/L										
Acrolein	<100	<100	<100	<100	<100	<100	<100	<100	<100	<100
Acrylonitrile	<100	<100	<100	<100	<100	<100	<100	<100	<100	<100
Benzene	<4.4	<4.4	<4.4	<4.4	<4.4	<4.4	<4.4	NA	NA	NA
Bis (chloromethyl) ether	<10	<10	<10	<10	<10	<10	<10	<5	<5	<5
Bromoform	<4.7	<4.7	<4.7	<4.7	<4.7	<4.7	<4.7	<5	<5	<5
Carbon tetrachloride	<2.8	<2.8	<2.8	<2.8	<2.8	<2.8	<2.8	<5	<5	<5
Chlorobenzene	<6.0	<6.0	<6.0	<6.0	<6.0	<6.0	<6.0	<5	<5	<5
Chlorodibromomethane	<3.1	<3.1	<3.1	<3.1	<3.1	<3.1	<3.1	<5	<5	<5
Chloroethane	<10	<10	<10	<10	<10	<10	<10	<10	<10	<10
2-Chloroethylvinyl ether	<10	<10	<10	<10	<10	<10	<10	<50	<50	<50
Chloroform	<1.6	<1.6	<1.6	<1.6	<1.6	<1.6	<1.6	<5	<5	<5
Dichlorobromomethane	<2.2	<2.2	<2.2	<2.2	<2.2	<2.2	<2.2	<5	<5	<5
Dichlorodifluoromethane	<10	<10	<10	<10	<10	<10	<10	<5	<5	<5
1,1-Dichloroethane	<4.7	<4.7	<4.7	<4.7	<4.7	<4.7	<4.7	<5	<5	<5
1,2-Dichloroethane	<2.8	<2.8	<2.8	<2.8	<2.8	<2.8	<2.8	<5	<5	<5
1,1-Dichloroethylene	<2.8	<2.8	<2.8	<2.8	<2.8	<2.8	<2.8	<5	<5	<5
1,2-Dichloropropane	<6.0	<6.0	<6.0	<6.0	<6.0	<6.0	<6.0	<5	<5	<5
cis-1,3-Dichloropropylene	<5.0	<5.0	<5.0	<5.0	<5.0	<5.0	<5.0	<5	<5	<5
Ethylbenzene	<7.2	<7.2	<7.2	<7.2	<7.2	<7.2	<7.2	<5	<5	<5
Methyl bromide	<10	<10	<10	<10	<10	<10	<10	<10	<10	<10
Methyl chloride	<10	<10	<10	<10	<10	<10	<10	<10	<10	<10
Methylene chloride	<2.8	<2.8	2.88	<2.8	<2.8	<2.8	<2.8	<5	<5	<5
1,1,2,2-Tetrachloroethane	<6.9	<6.9	<6.9	<6.9	<6.9	<6.9	<6.9	<5	<5	<5
Tetrachloroethylene	<4.1	<4.1	<4.1	<4.1	<4.1	<4.1	<4.1	<5	<5	<5
Toluene	<6.0	<6.0	<6.0	<6.0	<6.0	<6.0	<6.0	<5	<5	<5
1,2-trans-Dichloroethylene	<1.6	<1.6	<1.6	<1.6	<1.6	<1.6	<1.6	<5	<5	<5
1,1,1-Trichloroethane	<3.8	<3.8	<3.8	<3.8	<3.8	<3.8	<3.8	<5	<5	<5
1,1,2-Trichloroethane	<5.0	<5.0	<5.0	<5.0	<5.0	<5.0	<5.0	<5	<5	<5
Trichloroethylene	<1.9	<1.9	<1.9	<1.9	<1.9	<1.9	<1.9	<5	<5	<5
Trichlorofluoromethane	<10	<10	<10	<10	<10	<10	<10	<5	<5	<5
Vinyl chloride	<10	<10	<10	<10	<10	<10	<10	<10	<10	<10
trans-1,3-Dichloropropylene	<10	<10	<10	<10	<10	<10	<10	<5	<5	<5
Sub Total 1	0	0	3	0	0	0	0	0	0	0
Miscellaneous Volatile Organic Compounds										
Acetone	NA	NA	NA	NA	NA	NA	NA	NA	NA	NA
Methyl ethyl ketone	NA	NA	NA	NA	NA	NA	NA	NA	NA	NA
Carbon disulfide	NA	NA	NA	NA	NA	NA	NA	NA	NA	NA
2-Hexanone	NA	NA	NA	NA	NA	NA	NA	NA	NA	NA
Styrene	NA	NA	NA	NA	NA	NA	NA	NA	NA	NA
Methyl-iso-butyl ketone	NA	NA	NA	NA	NA	NA	NA	<25	<25	<25
Methyl isoamyl ketone	NA	NA	NA	NA	NA	NA	NA	<25	<25	<25
m-Xylene	NA	NA	NA	NA	NA	NA	NA	<5	<5	<5
o-Xylene/p-Xylene	NA	NA	NA	NA	NA	NA	NA	<5	<5	<5
Sub Total 2	0	0	0	0	0	0	0	0	0	0
Total VOCs Analyzed	0	0	3	0	0	0	0	0	0	0

NA Not analyzed.
* Replicate sample.
ETC Environmental Testing and Certification, Edison, New Jersey.
SL Savannah Laboratories and Environmental Testing, Savannah, Georgia.

g:\technic\tables\monanto\krumm1b.xls

APPENDIX B

TABLE 2 - SUMMARY OF ACID EXTRACTABLE ORGANIC COMPOUNDS

Table 2. Summary of Acid Extractable Compounds in Ground Water, Krummrich Plant, Sauget, Illinois.

Well Number:	GM-4A	GM-4A	GM-4A	GM-4A	GM-4A	GM-4A	GM-4A	GM-4A	GM-4A	GM-4B
Date:	12/86	5/87	11/87	5/88	11/88	11/89	11/90	11/91	11/92	12/86
Laboratory:	ETC	ETC	ETC	ETC	ETC	ETC	ETC	ETC	ETC	ETC
USEPA Priority Pollutant Acid Extractable Organic Compounds Concentrations are in ug/L										
-Chlorophenol	NA	NA	<3.4	<3.5	<3.8	<3.6	<3.3	<3.3	<3.3	NA
4-Dichlorophenol	NA	NA	<2.8	<2.9	<3.1	<2.9	<2.7	<2.7	<2.7	NA
4-Dimethylphenol	NA	NA	<2.8	<2.9	<3.1	<2.9	<2.7	<2.7	<2.7	NA
6-Dinitro-o-cresol	NA	NA	<24	<26	<28	<26	<24	<24	<24	NA
4-Dinitrophenol	NA	NA	<43	<45	<48	<46	<42	<42	<42	NA
Nitrophenol	NA	NA	<3.7	<3.8	<4.1	<3.9	<3.6	<3.6	<3.6	NA
Nitrophenol	NA	NA	<2.4	<2.6	<2.8	<2.6	<2.4	<2.4	<2.4	NA
Chloro-m-cresol	NA	NA	<3.1	<3.2	<3.4	<3.3	<3.0	<3.0	<3.0	NA
entachlorophenol	NA	NA	<3.7	<3.8	<4.1	<3.9	<3.6	<3.6	<3.6	NA
henol	NA	NA	<1.5	<1.6	<1.7	<1.6	<1.5	<1.5	<1.5	NA
4,6-Trichlorophenol	NA	NA	<2.8	<2.9	<3.1	<2.9	<2.7	<2.7	<2.7	NA
Sub Total 1	0	0	0	0	0	0	0	0	0	0
Miscellaneous Acid Extractable Organic Compounds										
Chlo nol	<10	<10	<10	<11	<11	<11	<10	<10	NA	<11
Me nol	NA	NA	NA	NA	NA	NA	NA	NA	<10	NA
Me enol	NA	NA	NA	NA	NA	NA	NA	NA	<10	NA
nzoic acid	NA	NA	NA	NA	NA	NA	NA	NA	NA	NA
,5-Trichlorophenol	NA	NA	NA	NA	NA	NA	NA	NA	<10	NA
Sub Total 2	0	0	0	0	0	0	0	0	0	0
Total Acid Compounds Analyzed	0	0	0	0	0	0	0	0	0	0

Not analyzed.
Replicate sample.
C Environmental Testing and Certification, Edison, New Jersey.
Savannah Laboratories and Environmental Testing, Savannah, Georgia.

Table 2. Summary of Acid Extractable Compounds in Ground Water, Krummrich Plant, Sauget, Illinois.

Well Number:	GM-17A	GM-17A	GM-17A	GM-17A	GM-17A	GM-17A	GM-17A	GM-17A	GM-17A	GM
Date:	12/86	5/87	11/87	5/88	11/88	11/89	11/90	11/91	11/92	
Laboratory:	ETC	ETC	ETC	ETC	ETC	ETC	ETC	ETC	ETC	ETC
USEPA Priority Pollutant Acid Extractable Organic Compounds concentrations are in ug/L										
2-Chlorophenol	51.6	67.7	38.3	98.4	68.6	59.1	54.3	3.35	25.9	21.5
2,4-Dichlorophenol	<2.9	<2.9	<2.8	<3.0	<2.8	<2.8	<2.7	<2.8	<2.7	<2.9
2,4-Dimethylphenol	<2.9	<2.9	<2.8	<3.0	<2.8	<2.8	<2.7	<2.8	<2.7	<2.9
4,6-Dinitro-o-cresol	<25	<26	<25	<27	<25	<25	<24	<24	<24	<26
2,4-Dinitrophenol	<44	<45	<44	<47	<44	<44	<42	<43	<42	<46
2-Nitrophenol	<3.8	<3.9	<3.8	<4.0	<3.8	<3.8	<3.6	<3.7	<3.6	<3.9
4-Nitrophenol	<2.5	<2.6	<2.5	<2.7	<2.5	<2.5	<2.4	<2.4	<2.4	<2.6
p-Chloro-m-cresol	<3.2	<3.2	<3.1	<3.3	<3.1	<3.1	<3.0	<3.1	<3.0	<3.3
Pentachlorophenol	<3.8	<3.9	<3.8	<4.0	<3.8	<3.8	<3.6	<3.7	<3.6	<3.9
Phenol	<1.6	73	62.8	110	106	183	25.0	2.9	12.8	372
2,4,6-Trichlorophenol	<2.9	<2.9	<2.8	<3.0	<2.8	<2.8	<2.7	<2.8	<2.7	<2.9
Sub Total 1	52	141	101	208	175	242	79	6	39	394
Miscellaneous Acid Extractable Organic Compounds										
4-Chlorophenol	NA	NA	33	NA	NA	NA	NA	NA	NA	NA
2-Methylphenol	NA	NA	NA	NA	NA	NA	NA	NA	<10	
4-Methylphenol	NA	NA	NA	NA	NA	NA	NA	NA	<10	
Benzoic acid	NA	NA	NA	NA	NA	NA	NA	NA	NA	NA
2,4,5-Trichlorophenol	NA	NA	NA	NA	NA	NA	NA	NA	<10	NA
Sub Total 2	0	0	33	0	0	0	0	0	0	0
Total Acid Compounds Analyzed	52	141	134	208	175	242	79	6	39	394

NA Not analyzed.
• Replicate sample.
ETC Environmental Testing and Certification, Edison, New Jersey.
SL Savannah Laboratories and Environmental Testing, Savannah, Georgia.

Table 2. Summary of Acid Extractable Compounds in Ground Water, Krummrich Plant, Sauget, Illinois.

Well Number:	GM-17B	GM-17B	GM-17B	GM-17B	GM-17B	GM-17B	GM-17B	GM-17B	GM-17B	GM-17B
Date:	5/87	11/87	5/88	11/88	5/89	11/89	5/90	11/90	5/91	11/91
Laboratory:	ETC	ETC	ETC	ETC	ETC	ETC	ETC	ETC	ETC	ETC
USEPA Priority Pollutant Acid Extractable Organic Compounds concentrations are in ug/L										
2-Chlorophenol	**91.6**	**23.4**	**46.9**	**36.8**	**24.6**	**15.5**	**20.7**	**18.1**	**21.3**	**25.7**
2,4-Dichlorophenol	<3.1	<2.8	<2.8	<3.2	<2.9	<2.8	<2.8	<2.7	<2.7	<2.7
2,4-Dimethylphenol	<3.1	<2.8	<2.8	<3.2	<2.9	<2.8	<2.8	<2.7	<2.7	<2.7
4,6-Dinitro-o-cresol	<28	<25	<24	<29	<26	<25	<25	<24	<24	<24
2,4-Dinitrophenol	<49	<43	<43	<50	<45	<44	<44	<42	<42	<42
2-Nitrophenol	<4.2	<3.7	<3.7	<4.3	<3.9	<3.8	<3.8	<3.6	<3.6	<3.6
4-Nitrophenol	<2.8	<2.5	<2.4	<2.9	<2.6	<2.5	<2.5	<2.4	<2.4	<2.4
p-Chloro-m-cresol	<3.5	<3.1	<3.1	<3.6	<3.2	<3.2	<3.2	<3.0	<3.0	<3.0
Pentachlorophenol	<4.2	<3.7	<3.7	<4.3	<3.9	<3.8	<3.8	<3.6	<3.6	<3.6
Phenol	**646**	**235**	**330**	<1.8	<1.6	**2.06**	<1.6	<1.5	<1.5	**3.16**
2,4,6-Trichlorophenol	<3.1	<2.8	<2.8	<3.2	<2.9	<2.8	<2.8	<2.7	<2.7	<2.7
Sub Total 1	638	258	377	37	25	18	21	18	21	29
Miscellaneous Acid Extractable Organic Compounds										
4-Chlorophenol	NA	**14.7**	NA	NA	NA	NA	NA	NA	NA	NA
2-Methylphenol	NA	NA	NA	NA	NA	NA	NA	NA	NA	NA
4-Methylphenol	NA	NA	NA	NA	NA	NA	NA	NA	NA	NA
Benzoic acid	NA	NA	NA	NA	NA	NA	NA	NA	NA	NA
2,4,5-Trichlorophenol	NA	NA	NA	NA	NA	NA	NA	NA	NA	NA
Sub Total 2	0	15	0	0	0	0	0	0	0	0
Total Acid Compounds Analyzed	638	273	377	37	25	18	21	18	21	29

NA Not analyzed.
• Replicate sample.
ETC Environmental Testing and Certification, Edison, New Jersey.
SL Savannah Laboratories and Environmental Testing, Savannah, Georgia.

Table 2. Summary of Acid Extractable Compounds in Ground Water, Krummrich Plant, Sauget, Illinois.

Well Number:	GM-17B	GM-17B	GM-17C	GM-17C	GM-17C	GM-17C	GM-17C	GM-17C	GM-17C	GM
Date:	11/92	9/94	12/86	5/87	11/87	5/88	11/88	5/89	11/89	
Laboratory:	ETC	SL	ETC	ETC	ETC	ETC	ETC	ETC	ETC	ETC
USEPA Priority Pollutant Acid Extractable Organic Compounds concentrations are in ug/L										
2-Chlorophenol	**13.2**	<100	**30.8**	**34**	**19.4**	**34.9**	<34	**26.1**	**6.23**	<18
2,4-Dichlorophenol	<2.7	<100	**10**	**4.7**	**3.44**	**12.1**	<28	**17.7**	**10.3**	<15
2,4-Dimethylphenol	<2.7	<100	<3.3	<2.7	<2.8	<2.8	<28	<2.8	<2.8	<15
4,6-Dinitro-o-cresol	<24	<500	<29	<24	<25	<25	<240	<25	<25	<130
2,4-Dinitrophenol	<42	<500	<51	<42	<44	<44	<430	<44	<44	<230
2-Nitrophenol	<3.6	<100	<4.3	<3.6	<3.8	<3.8	<37	<3.8	<3.8	<20
4-Nitrophenol	<2.4	<500	<2.9	<2.4	<2.5	<2.5	<24	<2.5	<2.5	<13
p-Chloro-m-cresol	<3.0	<100	<3.6	<3	<3.1	<3.1	<31	<3.2	<3.1	<16
Pentachlorophenol	<3.6	<500	<4.3	<3.6	<3.8	<3.8	<37	<3.8	<3.8	<20
Phenol	<1.5	<100	<1.8	<1.5	**4.07**	<1.6	<15	<1.6	<1.6	<8.2
2,4,6-Trichlorophenol	<2.7	<100	<3.3	<2.7	<2.8	<2.8	<28	<2.8	<2.8	<15
Sub Total 1	13	0	41	39	27	47	0	44	17	0
Miscellaneous Acid Extractable Organic Compounds										
4-Chlorophenol	NA	<100	NA	NA	**26.6**	NA	<100	NA	NA	NA
2-Methylphenol	<10	NA	NA	NA	NA	NA	NA	NA	NA	
4-Methylphenol	<10	NA	NA	NA	NA	NA	NA	NA	NA	
Benzoic acid	NA	NA	NA	NA	NA	NA	NA	NA	NA	NA
2,4,5-Trichlorophenol	<10	NA	NA	NA	NA	NA	NA	NA	NA	NA
Sub Total 2	0	0	0	0	27	0	0	0	0	0
Total Acid Compounds Analyzed	13	0	41	39	54	47	0	44	17	0

NA Not analyzed.
• Replicate sample.
ETC Environmental Testing and Certification, Edison, New Jersey.
SL Savannah Laboratories and Environmental Testing, Savannah, Georgia.

Table 2. Summary of Acid Extractable Compounds in Ground Water, Krummrich Plant, Sauget, Illinois.

Well Number:	GM-17C	GM-17C	GM-17C	GM-17C	G,-17C	GM-18B	GM-20B	GM-20B	GM-27B	GM-27B
Date:	11/90	5/91	11/91	11/92	9/94	11/92	11/92	9/94	11/87	11/91
Laboratory:	ETC	ETC	ETC	ETC	SL	ETC	ETC	SL	ETC	ETC
USEPA Priority Pollutant Acid Extractable Organic Compounds concentrations are in ug/L										
2-Chlorophenol	**15.5**	**25.3**	**15.7**	**42.8**	<50	<3.3	<3.3	<10	<3.8	<330
2,4-Dichlorophenol	**6.47**	**2.82**	**7.93**	**9.02**	<50	<2.7	<2.7	<10	<3.1	<270
2,4-Dimethylphenol	<2.7	<2.8	<2.7	<2.7	<50	<2.7	<2.7	<10	**7.44**	<270
4,6-Dinitro-o-cresol	<24	<24	<24	<24	<250	<24	<24	<50	<27	<2400
2,4-Dinitrophenol	<42	<43	<42	<42	<250	<42	<42	<50	<48	<4200
2-Nitrophenol	<3.6	<3.7	<3.6	<3.6	<50	<3.6	<3.6	<10	<4.1	<360
4-Nitrophenol	<2.4	<2.4	<2.4	<2.4	<250	<2.4	<2.4	<50	<2.7	<240
p-Chloro-m-cresol	<3.0	<3.1	<3.0	<3.0	<50	<3.0	<3.0	<10	<3.4	<300
Pentachlorophenol	<3.6	<3.7	<3.6	<3.6	<250	<3.6	<3.6	<50	<4.1	<360
Phenol	<1.5	<1.5	**3.25**	<1.5	<50	**1.72**	<1.5	<10	<1.7	**1910**
2,4,6-Trichlorophenol	<2.7	<2.8	<2.7	<2.7	<50	<2.7	<2.7	<10	<3.1	<270
Sub Total 1	22	28	27	52	0	2	0	0	7	1,910
Miscellaneous Acid Extractable Organic Compounds										
4-Chlorophenol	NA	NA	NA	NA	<50	NA	NA	<10	NA	NA
2-Methylphenol	NA	NA	NA	<10	NA	NA	NA	NA	NA	NA
4-Methylphenol	NA	NA	NA	<10	NA	NA	NA	NA	NA	NA
Benzoic acid	NA	NA	NA	NA	NA	NA	NA	NA	NA	NA
2,4,5-Trichlorophenol	NA	NA	NA	<10	NA	NA	NA	NA	NA	NA
Sub Total 2	0	0	0	0	0	0	0	0	0	0
Total Acid Compounds Analyzed	22	28	27	52	0	2	0	0	7	1,910

NA Not analyzed.
* Replicate sample.
ETC Environmental Testing and Certification, Edison, New Jersey.
SL Savannah Laboratories and Environmental Testing, Savannah, Georgia.

Table 2. Summary of Acid Extractable Compounds in Ground Water, Krummrich Plant, Sauget, Illinois.

Well Number:	GM-27B	GM-27C	GM-27C	GM-27C	GM-27C	GM-27C	GM-27C	GM-27C	GM-27C	GI
Date:	11/92	12/86	5/87	11/87	5/88	11/88	11/89	11/90	11/91	
Laboratory:	ETC	ETC	ETC	ETC	ETC	ETC	ETC	ETC	ETC	ETC
USEPA Priority Pollutant Acid Extractable Organic Compounds concentrations are in ug/L										
2-Chlorophenol	<3.3	NA	NA	**6.34**	**4.7**	<3.4	**12.7**	<3.3	<33	**8.03**
2,4-Dichlorophenol	<2.7	NA	NA	<3.1	<3.1	<2.8	<3.1	<2.7	<27	<2.8
2,4-Dimethylphenol	<2.7	NA	NA	**8.44**	**18.6**	**59.9**	**18.3**	<2.7	<27	<2.8
4,6-Dinitro-o-cresol	<24	NA	NA	<27	<27	<24	<28	<24	<240	<24
2,4-Dinitrophenol	<42	NA	NA	<48	<48	<43	<48	<42	<420	<43
2-Nitrophenol	<3.6	NA	NA	<4.1	<4.1	<3.7	<4.1	<3.6	<36	<3.7
4-Nitrophenol	<2.4	NA	NA	<2.7	<2.7	<2.4	<2.8	<2.4	<24	<2.4
p-Chloro-m-cresol	<3.0	NA	NA	<3.4	<3.4	<3.1	<3.4	<3.0	<30	<3.1
Pentachlorophenol	<3.6	NA	NA	<4.1	<4.1	<3.7	<4.1	<3.6	<36	<3.7
Phenol	<1.5	NA	NA	<1.7	**2.7**	**113**	<1.7	<1.5	<15	<1.5
2,4,6-Trichlorophenol	<2.7	NA	NA	<3.1	<3.1	<2.8	<3.1	<2.7	<27	<2.8
Sub Total 1	0	0	0	15	26	173	31	0	0	8
Miscellaneous Acid Extractable Organic Compounds										
4-Chlorophenol	NA	<11	<10	**25**	**24.9**	**387**	<11	<10	<100	[illegible]
2-Methylphenol	NA	NA	NA	NA	NA	NA	NA	NA	NA	
4-Methylphenol	NA	NA	NA	NA	NA	NA	NA	NA	NA	NA
Benzoic acid	NA	NA	NA	NA	NA	NA	NA	NA	NA	NA
2,4,5-Trichlorophenol	NA	NA	NA	NA	NA	NA	NA	NA	NA	NA
Sub Total 2	0	0	0	25	25	387	0	0	0	0
Total Acid Compounds Analyzed	0	0	0	40	51	560	31	0	0	8

NA Not analyzed.
• Replicate sample.
ETC Environmental Testing and Certification, Edison, New Jersey.
SL Savannah Laboratories and Environmental Testing, Savannah, Georgia.

Table 2. Summary of Acid Extractable Compounds In Ground Water, Krummrich Plant, Sauget, Illinois.

Well Number:	GM-28B	GM-28B	GM-28B	GM-28B	GM-28B	GM-28B	GM-28B	GM-28B	GM-28C	GM-28C
Date:	12/86	5/87	11/87	5/88	3/89	11/89	11/90	11/91	12/86	5/87
Laboratory:	ETC	ETC	ETC	ETC	ETC	ETC	ETC	ETC	ETC	ETC
USEPA Priority Pollutant Acid Extractable Organic Compounds concentrations are in ug/L										
2-Chlorophenol	NA	NA	**5,570**	**5,610**	**1,140**	**5,510**	**111**	**206**	NA	NA
2,4-Dichlorophenol	NA	NA	**18,600**	**34,700**	**6,070**	**1,930**	**2,700**	**804**	NA	NA
2,4-Dimethylphenol	NA	NA	**1,220**	**2,040**	**311**	**631**	**24.8**	<55	NA	NA
4,6-Dinitro-o-cresol	NA	NA	<1200	<300	<250	<260	<24	<490	NA	NA
2,4-Dinitrophenol	NA	NA	<2100	<520	<430	<460	<42	<850	NA	NA
2-Nitrophenol	NA	NA	<180	<44	<37	<40	<3.6	<73	NA	NA
4-Nitrophenol	NA	NA	<120	<30	<25	<26	<2.4	<49	NA	NA
p-Chloro-m-cresol	NA	NA	<150	<37	<31	<33	<3.0	<61	NA	NA
Pentachlorophenol	NA	NA	<180	**1,270**	**296**	<40	**43.7**	<73	NA	NA
Phenol	NA	NA	**21,300**	**29,500**	**3,390**	**7,840**	**352**	**442**	NA	NA
2,4,6-Trichlorophenol	NA	NA	**5,950**	**13,800**	<28	**501**	**457**	**226**	NA	NA
Sub Total 1	0	0	52,640	86,920	10,207	16,312	3,689	1,677	0	0
Miscellaneous Acid Extractable Organic Compounds										
4-Chlorophenol	**684**	<56	**8,070**	**11,900**	**6,580**	<110	<10	**1,380**	**439**	<64
2-Methylphenol	NA	NA	NA	NA	NA	NA	NA	NA	NA	NA
4-Methylphenol	NA	NA	NA	NA	NA	NA	NA	NA	NA	NA
Benzoic acid	NA	NA	NA	NA	NA	NA	NA	NA	NA	NA
2,4,5-Trichlorophenol	NA	NA	NA	NA	NA	NA	NA	NA	NA	NA
Sub Total 2	684	0	8,070	11,900	6,580	0	0	1,380	439	0
Total Acid Compounds Analyzed	684	0	60,710	98,820	16,787	16,312	3,689	3,057	439	0

NA Not analyzed.
* Replicate sample.
ETC Environmental Testing and Certification, Edison, New Jersey.
SL Savannah Laboratories and Environmental Testing, Savannah, Georgia.

Table 2. Summary of Acid Extractable Compounds in Ground Water, Krummrich Plant, Sauget, Illinois.

Well Number:	GM-28C	GM-28C	GM-28C	GM-28C	GM-28C	GM-28C	GM-28C	GM-28C	GM-28C	GM
Date:	11/87	5/88	11/88	3/89	3/89*	11/89	11/90	11/91	11/92	
Laboratory:	ETC	ETC	ETC	ETC	ETC	ETC	ETC	ETC	ETC	ETC
USEPA Priority Pollutant Acid Extractable Organic Compounds concentrations are in ug/L										
2-Chlorophenol	**868**	**1,120**	<3.8	<3,400	<330	**205**	<3,300	**149**	<170	<3.5
2,4-Dichlorophenol	**4,430**	**8,440**	**4,630**	<2,800	**3,630**	**461**	<2,700	**497**	<140	**11.2**
2,4-Dimethylphenol	**253**	**192**	**42.7**	<2,800	<270	**39.0**	<2,700	<55	<140	<2.9
4,6-Dinitro-o-cresol	<270	<34	<27	<24,000	<2,400	<28	<24,000	<490	<1,200	<25
2,4-Dinitrophenol	<470	<59	<48	<43,000	<4,200	<49	<42,000	<860	<2,100	**26,200**
2-Nitrophenol	<40	<5.1	<4.1	<3,700	<360	<4.2	<3,600	<73	<180	**12**
4-Nitrophenol	<27	<3.4	<2.7	<2,400	<240	<2.8	<2,400	<49	<120	<2.5
p-Chloro-m-cresol	<33	<4.2	<3.4	<3,100	<300	<3.5	<3,000	<61	<150	<3.2
Pentachlorophenol	**113**	**116**	**67**	<3,700	<360	<4.2	<3,600	<73	<180	<3.8
Phenol	**1,260**	**2,910**	<1.7	<1,500	**263**	**119**	<1,500	**229**	<76	**6.6**
2,4,6-Trichlorophenol	**1,660**	**1,570**	<3.1	<2,800	**415**	**383**	<2,700	**78.4**	<140	**1,740**
Sub Total 1	8,584	14,348	4,730	0	4,308	1,207	0	953	0	27,970
Miscellaneous Acid Extractable Organic Compounds										
4-Chlorophenol	**2,250**	**2,610**	**691**	<10,000	<1,000	<12	<10,000	<200	<10	
2-Methylphenol	NA	NA	NA	NA	NA	NA	NA	NA	NA	
4-Methylphenol	NA	NA	NA	NA	NA	NA	NA	NA	NA	
Benzoic acid	NA	NA	NA	NA	NA	NA	NA	NA	NA	NA
2,4,5-Trichlorophenol	NA	NA	NA	NA	NA	NA	NA	NA	NA	NA
Sub Total 2	2,250	2,610	691	0	0	0	0	0	0	0
Total Acid Compounds Analyzed	10,834	16,958	5,421	0	4,308	1,207	0	953	0	27,970

NA Not analyzed.
* Replicate sample.
ETC Environmental Testing and Certification, Edison, New Jersey.
SL Savannah Laboratories and Environmental Testing, Savannah, Georgia.

Table 2. Summary of Acid Extractable Compounds in Ground Water, Krummrich Plant, Sauget, Illinois.

Well Number:	GM-31A	GM-31A	GM-31A	GM-31A	GM-31A	GM-31A	GM-31A	GM-31A	GM-31A	GM-31A
Date:	12/86*	5/87	5/87*	11/87	11/87*	5/88	5/88*	11/88	11/88*	11/88
Laboratory:	ETC	ETC	ETC	ETC	ETC	ETC	ETC	ETC	ETC	SL
USEPA Priority Pollutant Acid Extractable Organic Compounds concentrations are in ug/L										
2-Chlorophenol	<3.8	<78	<37	<34	**4.64**	<33	<35	<180	<340	<100
2,4-Dichlorophenol	**10.6**	<64	<30	<28	**24.6**	<27	<28	<140	<280	<100
2,4-Dimethylphenol	<3.1	<64	<30	<28	<2.8	<27	<28	<140	<280	<100
4,6-Dinitro-o-cresol	<27	<560	<270	<250	<25	<240	<250	<1,300	<2,500	<500
2,4-Dinitrophenol	**20,600**	**12,400**	**7,630**	**2,040**	**2,520**	**447**	**299**	<2,200	<4,300	<500
2-Nitrophenol	**11.8**	<85	<40	<38	**13.7**	**251**	**193**	<190	<370	**140**
4-Nitrophenol	<2.7	**158**	**72.9**	**136**	**159**	<24	<25	<130	<250	<500
p-Chloro-m-cresol	<3.4	<71	<33	<31	<3.1	<30	<31	<160	<310	<100
Pentachlorophenol	<4.1	<85	<40	<38	<3.8	<36	<38	<190	<370	<100
Phenol	**6.1**	<35	**25.6**	<16	**9.87**	**50,400**	**119,000**	**339,000**	**586,000**	**340,000**
2,4,6-Trichlorophenol	**1,560**	**2,310**	**2,200**	**955**	**1,010**	**591**	**590**	**538**	<280	<100
Sub Total 1	22,188	14,868	9,929	3,131	3,742	51,689	120,082	339,538	586,000	340,140
Miscellaneous Acid Extractable Organic Compounds										
4-Chlorophenol	NA	NA	NA	<100	NA	NA	NA	NA	NA	NA
2-Methylphenol	NA	NA	NA	NA	NA	NA	NA	NA	NA	NA
4-Methylphenol	NA	NA	NA	NA	NA	NA	NA	NA	NA	NA
Benzoic acid	NA	NA	NA	NA	NA	NA	NA	NA	NA	NA
2,4,5-Trichlorophenol	NA	NA	NA	NA	NA	NA	NA	NA	NA	NA
Sub Total 2	0	0	0	0	0	0	0	0	0	0
Total Acid Compounds Analyzed	22,188	14,868	9,929	3,131	3,742	51,689	120,082	339,538	586,000	340,140

NA Not analyzed.
* Replicate sample.
ETC Environmental Testing and Certification, Edison, New Jersey.
SL Savannah Laboratories and Environmental Testing, Savannah, Georgia.

KRUMACID.XLS

Table 2. Summary of Acid Extractable Compounds in Ground Water, Krummrich Plant, Sauget, Illinois.

Well Number:	GM-31A	GM-31A	GM-31A	GM-31A	GM-31A	GM-54A	GM-54A	GM-54A	GM-54B	G
Date:	11/88*	11/89	11/89*	11/90	11/90*	11/87	5/88	9/94	11/87	
Laboratory:	SL	ETC	ETC	ETC	ETC	ETC	ETC	SL	ETC	ETC
USEPA Priority Pollutant Acid Extractable Organic Compounds concentrations are in ug/L										
2-Chlorophenol	<100	<3.4	<3.4	<33	<35	<3.5	<3.6	<10	**3.99**	<3.6
2,4-Dichlorophenol	<100	**44.0**	**40.1**	<27	<29	<2.8	<2.9	<10	**3.96**	<3.0
2,4-Dimethylphenol	<100	<2.8	<2.8	<27	<29	<2.8	<2.9	<10	<2.9	<3.0
4,6-Dinitro-o-cresol	<500	<24	<25	<240	<260	<25	<26	<50	<26	<26
2,4-Dinitrophenol	<500	**282**	**244**	<420	<450	<44	<46	<50	<45	<46
2-Nitrophenol	**140**	**59.2**	**45.7**	<36	<39	<3.8	<3.9	<10	<3.9	<4.0
4-Nitrophenol	<500	**171**	**132**	<24	<26	<3.5	<2.6	<50	<2.6	<2.6
p-Chloro-m-cresol	<100	<3.1	<3.1	<30	<32	<3.2	,3.3	<10	<3.2	<3.3
Pentachlorophenol	<100	**20.5**	**23.5**	<36	<39	<3.8	<3.9	<50	<3.9	<4.0
Phenol	**270,000**	**1,020**	**934**	<15	<19	<1.6	<1.6	<10	<1.6	<1.6
2,4,6-Trichlorophenol	<100	**878**	**924**	**353**	**363**	<2.8	<2.9	<10	<2.9	<3.0
Sub Total 1	270,140	2,475	2,343	353	363	0	0	0	8	0
Miscellaneous Acid Extractable Organic Compounds										
4-Chlorophenol	NA	**878**	**924**	NA	NA	<11	<11	<10	<11	<11
2-Methylphenol	NA	NA	NA	NA	NA	NA	NA	NA	NA	
4-Methylphenol	NA	NA	NA	NA	NA	NA	NA	NA	NA	
Benzoic acid	NA	NA	NA	NA	NA	NA	NA	NA	NA	NA
2,4,5-Trichlorophenol	NA	NA	NA	NA	NA	NA	NA	NA	NA	NA
Sub Total 2	0	878	924	0	0	0	0	0	0	0
Total Acid Compounds Analyzed	270,140	3,353	3,267	353	363	0	0	0	8	0

NA Not analyzed.
* Replicate sample.
ETC Environmental Testing and Certification, Edison, New Jersey.
SL Savannah Laboratories and Environmental Testing, Savannah, Georgia.

Table 2. Summary of Acid Extractable Compounds in Ground Water, Krummrich Plant, Sauget, Illinois.

Well Number:	GM-54B	GM-54B	GM-54B	GM-54B	GM-54B	GM-54B	GM-54B	GM-55C	GM-55C	GM-55C
Date:	11/88	5/89	11/89	11/90	11/91	11/92	9/94	11/87	5/88	11/88
Laboratory:	ETC	ETC	ETC	ETC	ETC	ETC	SL	ETC	ETC	ETC
USEPA Priority Pollutant Acid Extractable Organic Compounds concentrations are in ug/L										
2-Chlorophenol	<3.7	**5.46**	**7.24**	**3.5**	<3.3	<3.3	<10	**10.9**	**31**	<370
2,4-Dichlorophenol	<3.0	<3.1	<2.8	<2.7	<2.7	<2.7	<10	<2.8	**196**	<300
2,4-Dimethylphenol	<3.0	<3.1	<2.8	<2.7	<2.7	<2.7	<10	<2.8	**4.3**	<300
4,6-Dinitro-o-cresol	<27	**28**	<24	<24	<24	<24	<50	<25	<28	<2,700
2,4-Dinitrophenol	<47	**48**	<43	<42	<42	<42	<50	<44	<49	<4,700
2-Nitrophenol	<4.0	**4.1**	<3.7	<3.6	<3.6	<3.6	<10	<3.8	<4.2	<400
4-Nitrophenol	<2.7	**2.8**	<2.4	<2.4	<2.4	<2.4	<50	<2.5	<2.8	<270
p-Chloro-m-cresol	<3.3	**3.4**	<3.1	<3.0	<3.0	<3.0	<10	<3.1	<3.5	<340
Pentachlorophenol	<4.0	**4.1**	<3.7	<3.6	<3.6	<3.6	<50	<3.8	<4.2	<400
Phenol	<1.7	**1.74**	**5.28**	<1.5	<1.5	<1.5	<10	<1.6	**24.6**	<170
2,4,6-Trichlorophenol	<3.0	**3.1**	<2.8	<2.7	<2.7	<2.7	<10	<2.8	**22**	<300
Sub Total 1	0	101	13	4	0	0	0	11	278	0
Miscellaneous Acid Extractable Organic Compounds										
4-Chlorophenol	NA	NA	NA	NA	NA	NA	<10	<10	**254**	<1100
2-Methylphenol	NA	NA	NA	NA	NA	NA	NA	NA	NA	NA
4-Methylphenol	NA	NA	NA	NA	NA	NA	NA	NA	NA	NA
Benzoic acid	NA	NA	NA	NA	NA	NA	NA	NA	NA	NA
2,4,5-Trichlorophenol	NA	NA	NA	NA	NA	NA	NA	NA	NA	NA
Sub Total 2	0	0	0	0	0	0	0	0	254	0
Total Acid Compounds Analyzed	0	101	13	4	0	0	0	11	532	0

NA Not analyzed.
* Replicate sample.
ETC Environmental Testing and Certification, Edison, New Jersey.
SL Savannah Laboratories and Environmental Testing, Savannah, Georgia.

Table 2. Summary of Acid Extractable Compounds in Ground Water, Krummrich Plant, Sauget, Illinois.

Well Number:	GM-55C	GM-55C	GM-55C	GM-55C	GM-55C	GM-56C	GM-56C	GM-56C	GM-56C	GI
Date:	11/89	11/90	11/91	11/92	11/92*	11/87	5/88	11/88	11/88	
Laboratory:	ETC	ETC	ETC	ETC	ETC	ETC	ETC	ETC	ETC	ETC
USEPA Priority Pollutant Acid Extractable Organic Compounds concentrations are in ug/L										
2-Chlorophenol	<400	<33	<340	<330	<330	**2,020**	**4,680**	**238**	**240**	**684**
2,4-Dichlorophenol	**417**	<27	**281**	<270	<270	**6,010**	**5,190**	**3,010**	**3,100**	**1,410**
2,4-Dimethylphenol	<330	**58.5**	<280	<270	<270	**348**	**663**	<160	<100	<3.1
4,6-Dinitro-o-cresol	<2,900	<240	<2,500	<2,400	<2,400	<1,200	<29	<1,500	<500	<27
2,4-Dinitrophenol	<5,100	<420	<4,300	<4,200	<4,200	<2,100	<51	<2,600	<500	<48
2-Nitrophenol	<430	<36	<370	<360	<360	<180	<4.4	<220	<100	<4.1
4-Nitrophenol	<290	<24	<250	<240	<240	<120	<2.9	<150	<500	<2.7
p-Chloro-m-cresol	<360	<30	<310	<300	<300	<150	<3.7	<180	<100	<3.4
Pentachlorophenol	<430	<36	<370	<360	<360	<180	**18**	<220	<100	<4.1
Phenol	<180	<15	<150	<150	<150	**2,340**	**5,100**	**1,880**	**210**	<1.7
2,4,6-Trichlorophenol	<330	**62.5**	<280	<270	<270	**2,020**	**1,830**	**1,420**	**1,300**	**880**
Sub Total 1	417	121	281	0	0	12,738	17,381	6,549	4,850	2,874
Miscellaneous Acid Extractable Organic Compounds										
4-Chlorophenol	<1200	<100	<1,000	<1,000	<1,000	**9,200**	**14,100**	<610	<100	<11
2-Methylphenol	NA	NA	NA	NA	NA	NA	NA	NA	NA	
4-Methylphenol	NA	NA	NA	NA	NA	NA	NA	NA	NA	
Benzoic acid	NA	NA	NA	NA	NA	NA	NA	NA	NA	NA
2,4,5-Trichlorophenol	NA	NA	NA	NA	NA	NA	NA	NA	NA	NA
Sub Total 2	0	0	0	0	0	9,200	14,100	0	0	0
Total Acid Compounds Analyzed	417	121	281	0	0	21,938	31,481	6,549	4,850	2,874

NA Not analyzed.
* Replicate sample.
ETC Environmental Testing and Certification, Edison, New Jersey.
SL Savannah Laboratories and Environmental Testing, Savannah, Georgia.

Table 2. Summary of Acid Extractable Compounds in Ground Water, Krummrich Plant, Sauget, Illinois.

Well Number:	GM-56C	GM-56C	GM-57C	GM-57C	GM-57C	GM-57C	GM-57C	GM-57C	GM-57C	GM-57C
Date:	11/90	11/91	11/87	11/87*	5/88	5/88*	11/88	11/88	3/89	11/89
Laboratory:	ETC	ETC	ETC	ETC	ETC	ETC	ETC	ETC	ETC	ETC
USEPA Priority Pollutant Acid Extractable Organic Compounds concentrations are in ug/L										
2-Chlorophenol	<340	2,650	5,690	5,460	4,680	8,440	5,110	8,500	1,280	4,390
2,4-Dichlorophenol	1,910	1,380	4,530	4,560	5,990	9,470	6,310	7,800	4,260	8,750
2,4-Dimethylphenol	<280	<27	196	<160	180	209	<300	<100	<28	192
4,6-Dinitro-o-cresol	<2,500	<240	<1,300	<1,400	<240	<25	<2,700	<500	<250	<290
2,4-Dinitrophenol	<4,300	<420	<2,300	<2,400	<420	<43	<4,700	<500	<444	<500
2-Nitrophenol	<370	<36	<200	<210	<36	<3.7	<400	<100	<38	<43
4-Nitrophenol	<250	<24	<130	<140	<24	<2.5	<270	<500	<25	<29
p-Chloro-m-cresol	<310	<30	<160	<170	<30	<3.1	<330	<100	<32	<36
Pentachlorophenol	<370	<36	<200	<210	<36	24	<400	<100	<38	<43
Phenol	233	9,150	28,700	33,000	14,400	28,000	13,700	13,000	3,100	7,650
2,4,6-Trichlorophenol	1,050	<27	992	922	1,250	1,580	1,120	1,300	523	1,490
Sub Total 1	3,193	13,180	40,108	43,942	26,500	47,723	26,240	30,600	9,163	22,472
Miscellaneous Acid Extractable Organic Compounds										
4-Chlorophenol	<1,000	9,440	11,300	11,700	7,530	12,300	13,700	18,000	4,310	5,360
2-Methylphenol	NA	NA	NA	NA	NA	NA	NA	NA	NA	NA
4-Methylphenol	NA	NA	NA	NA	NA	NA	NA	NA	NA	NA
Benzoic acid	NA	NA	NA	NA	NA	NA	NA	NA	NA	NA
2,4,5-Trichlorophenol	NA	NA	NA	NA	NA	NA	NA	NA	NA	NA
Sub Total 2	0	9,440	11,300	11,700	7,530	12,300	13,700	18,000	4,310	5,360
Total Acid Compounds Analyzed	3,193	22,620	51,408	55,642	34,030	60,023	39,940	48,600	13,473	27,832

NA Not analyzed.
* Replicate sample.
ETC Environmental Testing and Certification, Edison, New Jersey.
SL Savannah Laboratories and Environmental Testing, Savannah, Georgia.

Table 2. Summary of Acid Extractable Compounds in Ground Water, Krummrich Plant, Sauget, Illinois.

Well Number:	GM-57C	GM-57C	GM-57C	GM-57C	GM-57C	GM-58A	GM-58A	GM-58A	GM-58A	GM
Date:	11/89*	11/90	11/90*	11/91	11/91*	11/87	5/88	11/88	11/89	
Laboratory:	ETC	ETC	ETC	ETC	ETC	ETC	ETC	ETC	ETC	ETC
USEPA Priority Pollutant Acid Extractable Organic Compounds concentrations are in ug/L										
2-Chlorophenol	**5,330**	**4,270**	**3,480**	**879**	**878**	<3.4	<3.8	<3.4	<3.4	<3.3
2,4-Dichlorophenol	**9,710**	**11,900**	**12,800**	**3,660**	**4,120**	<2.8	<3.1	<2.8	<2.8	<2.7
2,4-Dimethylphenol	**200**	**200**	**222**	<140	<140	<2.8	<3.1	<2.8	<2.8	<2.7
4,6-Dinitro-o-cresol	<250	<1,200	<250	<1,200	<1,200	<24	<27	<25	<25	<24
2,4-Dinitrophenol	<440	<2,100	<430	<2,100	<2,100	<43	<48	<43	<44	<42
2-Nitrophenol	<38	<180	<37	<180	<180	<3.7	<4.1	<3.7	<3.7	<3.6
4-Nitrophenol	<25	<120	<25	<120	<120	<2.4	<2.7	<2.5	<2.5	<2.4
p-Chloro-m-cresol	<32	<150	<31	<150	<150	<3.1	<3.4	,3.1	,3.1	<3.0
Pentachlorophenol	<38	<180	**80.8**	<180	<180	<3.7	<4.1	<3.7	<3.7	<3.6
Phenol	**10,300**	**4,490**	**4,460**	**961**	**963**	**4.08**	<1.7	<1.5	<1.6	<1.5
2,4,6-Trichlorophenol	**1,260**	**3,030**	**2,680**	**1,040**	**1,220**	**5.29**	**3.6**	<2.8	**9.13**	**9.98**
Sub Total 1	26,800	23,890	23,723	6,540	7,181	9	4	0	9	10
Miscellaneous Acid Extractable Organic Compounds										
4-Chlorophenol	**3,630**	**5,110**	**6,710**	**2,360**	**2,690**	<10	<11	NA	NA	NA
2-Methylphenol	NA	NA	NA	NA	NA	NA	NA	NA	NA	
4-Methylphenol	NA	NA	NA	NA	NA	NA	NA	NA	NA	
Benzoic acid	NA	NA	NA	NA	NA	NA	NA	NA	NA	NA
2,4,5-Trichlorophenol	NA	NA	NA	NA	NA	NA	NA	NA	NA	NA
Sub Total 2	3,630	5,110	6,710	2,360	2,690	0	0	0	0	0
Total Acid Compounds Analyzed	30,430	29,000	30,433	8,900	9,871	9	4	0	9	10

NA Not analyzed.
* Replicate sample.
ETC Environmental Testing and Certification, Edison, New Jersey.
SL Savannah Laboratories and Environmental Testing, Savannah, Georgia.

Table 2. Summary of Acid Extractable Compounds in Ground Water, Krummrich Plant, Sauget, Illinois.

Well Number:	GM-58A	GM-58A	GM-58A	GM-58A	GM-59A	GM-59A	GM-59A	GM-59A	GM-59A	GM-59A
Date:	11/91	11/91	11/92	9/94	11/87	5/88	11/88	11/89	11/90	11/91
Laboratory:	ETC	ETC	ETC	SL	ETC	ETC	ETC	ETC	ETC	ETC
USEPA Priority Pollutant Acid Extractable Organic Compounds concentrations are in ug/L										
2-Chlorophenol	<3.9	<3.9	<3.3	<10	<3.4	<3.3	<3.7	<3.5	<3.4	<3.3
2,4-Dichlorophenol	<3.2	<3.2	<2.7	<10	<2.8	<2.7	<3.0	<2.8	<2.8	<2.2
2,4-Dimethylphenol	<3.2	<3.2	<2.7	<10	<2.8	<2.7	<3.0	<2.8	<2.8	<2.7
4,6-Dinitro-o-cresol	<28	<28	<24	<50	<24	<24	<27	<25	<25	<24
2,4-Dinitrophenol	<49	<49	<42	<50	<43	<42	<47	<44	<43	<42
2-Nitrophenol	<4.2	<4.2	<3.6	<10	<3.7	<3.6	<4.0	<3.8	<3.7	<3.6
4-Nitrophenol	<2.8	<2.8	<2.4	<50	<2.4	<2.4	<2.7	<2.5	<2.5	<2.4
p-Chloro-m-cresol	<3.5	<3.5	<3.0	<10	<3.1	<3.0	<3.3	<3.2	<3.1	<3.0
Pentachlorophenol	<4.2	<4.2	<3.6	<50	<3.7	<3.6	<4.0	<3.8	<3.7	<3.6
Phenol	<1.8	<1.8	<1.5	<10	<1.5	<1.5	<1.7	<1.6	<1.5	<1.5
2,4,6-Trichlorophenol	<3.2	<3.2	<2.7	<10	<2.8	<2.7	<3.0	<2.8	<2.8	<2.7
Sub Total 1	0	0	0	0	0	0	0	0	0	0
Miscellaneous Acid Extractable Organic Compounds										
4-Chlorophenol	NA	NA	NA	<10	<10	<10	NA	NA	NA	NA
2-Methylphenol	NA	NA	NA	NA	NA	NA	NA	NA	NA	NA
4-Methylphenol	NA	NA	NA	NA	NA	NA	NA	NA	NA	NA
Benzoic acid	NA	NA	NA	NA	NA	NA	NA	NA	NA	NA
2,4,5-Trichlorophenol	NA	NA	NA	NA	NA	NA	NA	NA	NA	NA
Sub Total 2	0	0	0	0	0	0	0	0	0	0
Total Acid Compounds Analyzed	0	0	0	0	0	0	0	0	0	0

NA Not analyzed.
* Replicate sample.
ETC Environmental Testing and Certification, Edison, New Jersey.
SL Savannah Laboratories and Environmental Testing, Savannah, Georgia.

KRUMACID.XLS

Table 2. Summary of Acid Extractable Compounds in Ground Water, Krummrich Plant, Sauget, Illinois.

Well Number:	GM-59A	B-25A	B-26A	B-28A	GM-106	GM-106	GM-106	GM-106	GM-106	GM
Date:	11/92	3/87	3/87	3/87	12/86	5/87	11/87	5/88	11/88	
Laboratory:	ETC	ETC	ETC	ETC	ETC	ETC	ETC	ETC	ETC	ETC
USEPA Priority Pollutant Acid Extractable Organic Compounds concentrations are in ug/L										
2-Chlorophenol	<3.3	**116,000**	**10.3**	**10.5**	**26.5**	**58.7**	**174**	**261**	**266**	<380
2,4-Dichlorophenol	<2.7	**182,000**	<2.7	<2.7	**38.5**	**58.7**	**552**	**1,260**	**884**	**1,290**
2,4-Dimethylphenol	<2.7	**1,620**	<2.7	<2.7	<2.9	**4.4**	**14.9**	**19.1**	<27	<310
4,6-Dinitro-o-cresol	<24	<13,000	<24	<24	<26	<24	<24	<25	<240	<2800
2,4-Dinitrophenol	<42	<24,000	<42	<42	<45	<42	<42	<43	<420	<4800
2-Nitrophenol	<3.6	<2,000	<3.6	<3.6	<3.8	<3.6	<3.6	<3.7	<36	<410
4-Nitrophenol	<2.4	<1,300	<2.4	<2.4	<2.6	<2.4	<2.4	<2.5	<24	<280
p-Chloro-m-cresol	<3.0	<1,700	<3	,3	<3.2	<3	<3.0	<3.1	<30	<340
Pentachlorophenol	<3.6	<2,000	<3.6	<3.6	<3.8	<3.6	**10.9**	**9.6**	<36	<410
Phenol	<1.5	**403,000**	**5.4**	<1.5	**12.9**	**1.8**	**71.3**	**184**	**104**	**224**
2,4,6-Trichlorophenol	<2.7	**26,900**	<2.7	<2.7	**52.1**	**82.2**	**667**	**1,070**	**1,100**	**1,000**
Sub Total 1	0	728,520	16	11	130	206	1,490	2,804	2,354	2,514
Miscellaneous Acid Extractable Organic Compounds										
4-Chlorophenol	NA	NA	NA	NA	NA	NA	**183**	NA	NA	<1,[illegible]
2-Methylphenol	NA	<5,600	<10	<10	NA	NA	NA	NA	NA	
4-Methylphenol	NA	**47,000**	<10	<10	NA	NA	NA	NA	NA	[illegible]
Benzoic acid	NA	**50,800**	<10	<10	NA	NA	NA	NA	NA	NA
2,4,5-Trichlorophenol	NA	<5,600	<10	<10	NA	NA	NA	NA	NA	NA
Sub Total 2	0	97,800	0	0	0	0	183	0	0	0
Total Acid Compounds Analyzed	0	826,320	16	11	130	206	1,673	2,804	2,354	2,514

NA Not analyzed.
* Replicate sample.
ETC Environmental Testing and Certification, Edison, New Jersey.
SL Savannah Laboratories and Environmental Testing, Savannah, Georgia.

Table 2. Summary of Acid Extractable Compounds in Ground Water, Krummrich Plant, Sauget, Illinois.

Well Number:	GM-106	GM-106	GM-106	P-1	P-1	P-2	P-3	P-6	P-6	P-7
Date:	11/90	11/91	11/92	3/87	11/87	11/87	11/87	11/87	11/91	12/86
Laboratory:	ETC	ETC	ETC	ETC	ETC	ETC	ETC	ETC	ETC	ETC
USEPA Priority Pollutant Acid Extractable Organic Compounds concentrations are in ug/L										
2-Chlorophenol	**242**	**307**	**292**	**5.6**	**11.3**	**8.82**	<3.3	<3.3	<3.3	**776**
2,4-Dichlorophenol	**542**	**1,440**	**1,770**	<3.0	<2.7	<2.8	<2.7	<2.7	<2.7	**2,540**
2,4-Dimethylphenol	**21.3**	<54	<140	<3.0	<2.7	<2.8	<2.7	<2.7	<2.7	<2.7
4,6-Dinitro-o-cresol	<24	<480	<1,300	<27	<24	<25	<24	<24	<24	<24
2,4-Dinitrophenol	<42	<840	<2,200	<47	<42	<43	<42	<42	<42	<42
2-Nitrophenol	<3.6	<72	<190	<4.0	<3.6	<3.7	<3.6	<3.6	<3.6	<3.6
4-Nitrophenol	<2.4	<48	<130	<2.7	,2.4	<2.5	<2.4	<2.4	<2.4	**68.6**
p-Chloro-m-cresol	<3.0	<60	<160	<3.3	<3.0	<3.1	<3.0	<3.0	<3.0	<3.0
Pentachlorophenol	**17.9**	<72	<190	<4.0	<3.6	<3.7	<3.6	<3.6	<3.6	<3.6
Phenol	**117**	**331**	**242**	<1.7	<1.5	**70.4**	**22.8**	<1.5	<1.5	**9,410**
2,4,6-Trichlorophenol	**976**	**1,420**	**1,960**	<3.0	<2.7	<2.8	<2.7	<2.7	<2.7	**599**
Sub Total 1	1,916	3,498	4,264	6	11	79	23	0	0	13,394
Miscellaneous Acid Extractable Organic Compounds										
4-Chlorophenol	NA	NA	NA	NA	**12.7**	<10	<10	<10	NA	**2,600**
2-Methylphenol	NA	NA	NA	<11	NA	NA	NA	NA	NA	NA
4-Methylphenol	NA	NA	NA	<11	NA	NA	NA	NA	NA	NA
Benzoic acid	NA	NA	NA	<11	NA	NA	NA	NA	NA	NA
2,4,5-Trichlorophenol	NA	NA	NA	<11	NA	NA	NA	NA	NA	NA
Sub Total 2	0	0	0	0	13	0	0	0	0	2,600
Total Acid Compounds Analyzed	1,916	3,498	4,264	6	24	79	23	0	0	15,994

NA Not analyzed.
* Replicate sample.
ETC Environmental Testing and Certification, Edison, New Jersey.
SL Savannah Laboratories and Environmental Testing, Savannah, Georgia.

Table 2. Summary of Acid Extractable Compounds in Ground Water, Krummrich Plant, Sauget, Illinois.

Well Number:	P-7	P-7	P-7	P-7	P-7	P-7	P-7	P-7	P-7	
Date:	5/87	3/87	11/87	5/88	11/88	3/89	11/89	11/90	11/91	
Laboratory:	ETC	ETC	ETC	ETC	ETC	ETC	ETC	ETC	ETC	ETC
USEPA Priority Pollutant Acid Extractable Organic Compounds concentrations are in ug/L										
2-Chlorophenol	866	1,660	331	1,590	982	580	2,550	1,080	402	<830
2,4-Dichlorophenol	2,120	<30	748	7,960	6,490	1,910	7,090	4,530	2,000	876
2,4-Dimethylphenol	<2.7	<30	<2.8	<3.1	<28	<28	<32	<54	<2.8	<680
4,6-Dinitro-o-cresol	<24	<260	<24	<27	<250	<250	<280	<480	<25	<6,100
2,4-Dinitrophenol	<42	<460	<43	<48	<430	<430	<490	<840	<43	<11,000
2-Nitrophenol	<3.6	<40	<3.7	<4.1	<37	<37	<42	<72	<3.7	<910
4-Nitrophenol	<2.4	130	18.2	79.5	<25	<25	<28	<48	57.5	<610
p-Chloro-m-cresol	<3.0	<33	<3.1	<3.4	<31	<31	<35	<60	<3.1	<760
Pentachlorophenol	<3.6	<40	<3.7	<4.1	<37	<37	<42	<72	<3.7	<910
Phenol	8,930	11,400	3,090	19,000	7,410	6,750	21,500	5,930	4,550	2,400
2,4,6-Trichlorophenol	602	2,170	336	2,820	3,180	509	3,810	1,720	741	<680
Sub Total 1	12,518	15,360	4,523	31,450	31,450	9,749	34,950	13,260	7,751	3,276
Miscellaneous Acid Extractable Organic Compounds										
4-Chlorophenol	4,820	NA	4,650	5,660	2,130	2,650	<120	<200	<10	<2 [illegible]
2-Methylphenol	NA	<110	NA	NA	NA	NA	NA	NA	NA	
4-Methylphenol	NA	<110	NA	NA	NA	NA	NA	NA	NA	[illegible]
Benzoic acid	NA	1,720	NA	NA	NA	NA	NA	NA	NA	NA
2,4,5-Trichlorophenol	NA	<110	NA	NA	NA	NA	NA	NA	NA	NA
Sub Total 2	4,820	1,720	4,650	5,660	2,130	2,650	0	0	0	0
Total Acid Compounds Analyzed	17,338	17,080	9,173	37,110	33,580	12,399	34,950	13,260	7,751	3,276

NA Not analyzed.
• Replicate sample.
ETC Environmental Testing and Certification, Edison, New Jersey.
SL Savannah Laboratories and Environmental Testing, Savannah, Georgia.

Table 2. Summary of Acid Extractable Compounds in Ground Water, Krummrich Plant, Sauget, Illinois.

Well Number:	P-8	P-8	P-8	P-8	P-8	P-8	P-8	P-8	P-8	P-8
Date:	12/86	5/87	11/87	5/88	11/88	3/89	11/89	11/90	11/91	11/92
Laboratory:	ETC	ETC	ETC	ETC	ETC	ETC	ETC	ETC	ETC	ETC
USEPA Priority Pollutant Acid Extractable Organic Compounds concentrations are in ug/L										
2-Chlorophenol	NA	NA	**1,330**	**5,290**	**5,100**	**6,450**	**10,700**	**3,590**	**5,060**	**8,310**
2,4-Dichlorophenol	NA	NA	**413**	**3,880**	**4,450**	**3,680**	**9,780**	**4,140**	**5,230**	**7,760**
2,4-Dimethylphenol	NA	NA	<54	**410**	**318**	<1,400	<1,500	**185**	**111**	**312**
4,6-Dinitro-o-cresol	NA	NA	<480	<2,600	<2,400	<12,000	<14,000	<240	<480	<1,200
2,4-Dinitrophenol	NA	NA	<840	<4,500	<4,300	<21,000	<24,000	<430	<850	<2,100
2-Nitrophenol	NA	NA	<72	<380	<370	<1800	<2,000	<37	<73	<180
4-Nitrophenol	NA	NA	<48	<260	<240	<1200	<1,400	<24	<48	<120
p-Chloro-m-cresol	NA	NA	<60	<320	<310	<1500	<1,700	<31	<61	<150
Pentachlorophenol	NA	NA	<72	<380	<370	<1800	<2,000	<37	<73	<180
Phenol	NA	NA	**10,400**	**38,700**	**6,080**	**8,490**	**29,200**	**10,800**	**9,320**	**37,400**
2,4,6-Trichlorophenol	NA	NA	**112**	**446**	**370**	<1400	<1500	**452**	**414**	**770**
Sub Total 1	0	0	12,255	48,726	19,318	18,620	49,680	19,167	20,125	54,552
Miscellaneous Acid Extractable Organic Compounds										
4-Chlorophenol	<11	<11	**3,820**	**13,400**	**9,600**	<5,100	**19,400**	**6,200**	**28,600**	<5,100
2-Methylphenol	NA	NA	NA	NA	NA	<5,100	NA	NA	NA	NA
4-Methylphenol	NA	NA	NA	NA	NA	<5,100	NA	NA	NA	NA
Benzoic acid	NA	NA	NA	NA	NA	<5,100	NA	NA	NA	NA
2,4,5-Trichlorophenol	NA	NA	NA	NA	NA	NA	NA	NA	NA	NA
Sub Total 2	0	0	3,820	13,400	9,600	0	19,400	6,200	28,600	0
Total Acid Compounds Analyzed	0	0	16,075	62,126	28,918	18,620	69,080	25,367	48,725	54,552

NA Not analyzed.
* Replicate sample.
ETC Environmental Testing and Certification, Edison, New Jersey.
SL Savannah Laboratories and Environmental Testing, Savannah, Georgia.

Table 2. Summary of Acid Extractable Compounds in Ground Water, Krummrich Plant, Sauget, Illinois.

Well Number:	P-10	P-11	P-11	P-12	P-13	P-14	Field Blank	Field Blank	Field Blank	Field
Date:	11/87	3/87	11/87	11/87	11/87	11/87	3/87	11/90	11/91	11
Laboratory:	ETC	ETC	ETC	ETC	ETC	ETC	ETC	ETC	ETC	ETC
USEPA Priority Pollutant Acid Extractable Organic Compounds concentrations are in ug/L										
2-Chlorophenol	**22.4**	<3.6	<3.4	**45.7**	**3.80**	**26.6**	<3.5	<3.3	<3.4	<3.3
2,4-Dichlorophenol	<2.7	<3.0	<2.8	<2.7	<2.7	<3.0	<2.9	<2.7	<2.8	<2.7
2,4-Dimethylphenol	**9.64**	<3.0	<2.8	**32.7**	<2.7	<3.0	<2.9	<2.7	<2.8	<2.7
4,6-Dinitro-o-cresol	<24	<26	<25	<24	<24	<26	<26	<24	<24	<24
2,4-Dinitrophenol	<42	<46	<43	<42	<42	<46	<45	<42	<43	<42
2-Nitrophenol	<3.6	<4.0	<3.7	<3.6	<3.6	<4.0	<3.8	<3.6	<3.7	<3.6
4-Nitrophenol	<2.4	<2.6	<2.5	<2.4	<2.4	<2.6	<2.6	<2.4	<2.4	<2.4
p-Chloro-m-cresol	<3.0	<3.3	<3.1	<3.0	<3.0	<3.3	**4.1**	<3.0	<3.1	<3.0
Pentachlorophenol	<3.6	<4.0	<3.7	<3.6	<3.6	<4.0	<3.8	<3.6	<3.7	<3.6
Phenol	**69.3**	**5.1**	<1.5	**2,680**	<1.5	<1.6	<1.6	<1.5	<1.5	<1.5
2,4,6-Trichlorophenol	<2.7	<3	<2.8	<2.7	<2.7	<3.0	<2.9	<2.7	<2.8	<2.7
Sub Total 1	101	5	0	2,758	4	27	4	0	0	0
Miscellaneous Acid Extractable Organic Compounds										
4-Chlorophenol	**2,330**	NA	<10	**3,380**	<10	**12.9**	NA	<10	NA	NA
2-Methylphenol	NA	<11	NA	NA	NA	NA	<11	NA	NA	
4-Methylphenol	NA	<11	NA	NA	NA	NA	<11	NA	NA	
Benzoic acid	NA	<11	NA	NA	NA	NA	<11	NA	NA	NA
2,4,5-Trichlorophenol	NA	<11	NA	NA	NA	NA	<11	NA	NA	NA
Sub Total 2	2,330	0	0	3,380	0	13	0	0	0	0
Total Acid Compounds Analyzed	2,431	5	0	6,138	4	40	4	0	0	0

NA Not analyzed.
* Replicate sample.
ETC Environmental Testing and Certification, Edison, New Jersey.
SL Savannah Laboratories and Environmental Testing, Savannah, Georgia.

Table 2. Summary of Acid Extractable Compounds in Ground Water, Krummrich Plant, Sauget, Illinois.

	Field	Field
Well Number:	Blank	Blank
Date:	11/12/92	9/94
Laboratory:	ETC	SL
USEPA Priority Pollutant Acid Extractable Organic Compounds concentrations are in ug/L		
2-Chlorophenol	<3.3	<10
2,4-Dichlorophenol	<2.7	<10
2,4-Dimethylphenol	<2.7	<10
4,6-Dinitro-o-cresol	<24	<50
2,4-Dinitrophenol	<42	<50
2-Nitrophenol	<3.6	<10
4-Nitrophenol	<2.4	<50
p-Chloro-m-cresol	<3.0	<10
Pentachlorophenol	<3.6	<50
Phenol	<1.5	<10
2,4,6-Trichlorophenol	<2.7	<10
Sub Total 1	0	0
Miscellaneous Acid Extractable Organic Compounds		
4-Chlorophenol	NA	<10
2-Methylphenol	NA	NA
4-Methylphenol	NA	NA
Benzoic acid	NA	NA
2,4,5-Trichlorophenol	NA	NA
Sub Total 2	0	0
Total Acid Compounds Analyzed	0	0

NA Not analyzed.
* Replicate sample.
ETC Environmental Testing and Certification, Edison, New Jersey.
SL Savannah Laboratories and Environmental Testing, Savannah, Georgia.

APPENDIX C

TABLE 3 - SUMMARY OF BASE/NEUTRAL EXTRACTABLE ORGANIC COMPOUNDS

Table 3. Summary of Base/Neutral Compounds in Ground Water, Krummrich Plant, Sauget, Illinois.

USEPA Priority Pollutant Base/Neutral Extractable Organic Compounds concentrations are in ug/L	Well Number:	GM-4A	GM-4B	GM-4B	GM-4B	GM-4C	GM-4C	GM-5	GM-5	GM-6A	GM-6B	GM-12A	GM-12A	GM-
	Date:	11/92	11/92	9/94	9/94*	11/92	9/94	11/92	9/94	11/92	11/92	11/92	11/92*	11
	Laboratory:	ETC	ETC	SL	SL	ETC	SL	ETC	SL	ETC	ETC	ETC	ETC	
Acenaphthene		<1.9	<1.9	<50	<50	<1.9	<10	<1.9	<10	<1.9	<1.9	<1.9	<2.1	<
Acenapthylene		<3.5	<3.5	<50	<50	<3.5	<10	<3.5	<10	<3.5	<3.5	<3.5	<3.9	<
Anthracene		<1.9	<1.9	<50	<50	<1.9	<10	<1.9	<10	<1.9	<1.9	<1.9	<2.1	<
Benzidine		NA	NA	<400	<400	NA	<80	NA	<80	NA	NA	NA	NA	
Benzo (a) anthracene		<7.8	<7.8	<50	<50	<7.8	<10	<7.8	<10	<7.8	<7.8	<7.8	<8.7	<
Benzo (a) pyrene		<2.5	<2.5	<50	<50	<2.5	<10	<2.5	<10	<2.5	<2.5	<2.5	<2.8	<
Benzo (b) fluoroanthene		<4.8	<4.8	<50	<50	<4.8	<10	<4.8	<10	<4.8	<4.8	<4.8	<5.3	<
Benzo (ghi) perylene		<4.1	<4.1	<50	<50	<4.1	<10	<4.1	<10	<4.1	<4.1	<4.1	<4.6	<
Benzo (k) fluoranthene		<2.5	<2.5	<50	<50	<2.5	<10	<2.5	<10	<2.5	<2.5	<2.5	<2.8	<
Bis (2-chloroethoxy) methane		<5.3	<5.3	<50	<50	<5.3	<10	<5.3	<10	<5.3	<5.3	<5.3	<5.9	<
Bis (2-chloroethyl) ether		<5.7	<5.7	<50	<50	<5.7	<10	<5.7	<10	<5.7	<5.7	<5.7	<6.3	<
Bis (2-chloroisopropyl) ether		<5.7	<5.7	<50	<50	<5.7	<10	<5.7	<10	<5.7	<5.7	<5.7	<6.3	<
Bis (2-ethylhexyl) phthalate		<10	<10	190	240	<10	53	<10	<10	<10	14.7	<10	<11	<
4-Bromophenyl phenyl ether		<1.9	<1.9	<50	<50	<1.9	<10	<1.9	<10	<1.9	<1.9	<1.9	<2.1	<
Butyl benzyl phthalate		<10	<10	<50	<50	<10	<10	<10	<10	<10	<10	<10	<11	<
2-Chloronaphthalene		<1.9	<1.9	<50	<50	<1.9	<10	<1.9	<10	<1.9	<1.9	<1.9	<2.1	<
4-Chlorophenyl phenyl ether		<4.2	<4.2	<50	<50	<4.2	<10	<4.2	<10	<4.2	<4.2	<4.2	<4.7	<
Chrysene		<2.5	<2.5	<50	<50	<2.5	<10	<2.5	<10	<2.5	<2.5	<2.5	<2.8	<
Dibenzo (a,h) anthracene		<2.5	<2.5	<50	<50	<2.5	<10	<2.5	<10	<2.5	<2.5	<2.5	<2.8	<
1,2-Dichlorobenzene		<1.9	5.13	<50	<50	<1.9	<10	<1.9	<10	25.7	8.24	142	264	<
1,3-Dichlorobenzene		<1.9	18.7	<50	<50	14.6	<10	<1.9	<10	<1.9	4.3	<1.9	<2.1	<
1,4-Dichlorobenzene		<4.4	135	<50	<50	15.5	26	<4.4	<10	17.9	117	<4.4	<4.9	<
3,3-Dichlorobenzidine		<16.5	<16.5	<100	<100	<16.5	<20	<16.5	<20	<16.5	<16.5	<16.5	<18.3	<1
Diethyl phthalate		<10	<10	<50	<50	<10	<10	<10	<10	<10	<10	<10	<11	<
Dimethyl phthalate		<5.0	<5.0	<50	<50	<5.0	<10	<5.0	<10	<5.0	<5.0	<5.0	<5.6	<
Di-n-butyl phthalate		<10	<10	<50	<50	<10	<10	<10	<10	<10	<10	<10	<11	<
2,4-Dinitrotoluene		<5.7	<5.7	<50	<50	<5.7	<10	<5.7	<10	<5.7	<5.7	<5.7	<6.3	<
2,6-Dinitrotoluene		<1.9	<1.9	<50	<50	<1.9	<10	<1.9	<10	<1.9	<1.9	<1.9	<2.1	<
Di-n-octyl phthalate		<10	<10	<50	<50	<10	<10	<10	<10	<10	<10	<10	<11	<
1,2-Diphenylhydrazine		NA	NA	<50	<50	NA	<10	NA	<10	NA	NA	NA	NA	
Fluoranthene		<2.2	<2.2	<50	<50	<2.2	<10	<2.2	<10	<2.2	<2.2	<2.2	<2.4	<2
Fluorene		<1.9	<1.9	<50	<50	<1.9	<10	<1.9	<10	<1.9	<1.9	<1.9	<2.1	<1
Hexachlorobenzene		<1.9	<1.9	<50	<50	<1.9	<10	<1.9	<10	<1.9	<1.9	<1.9	<2.1	<1
Hexachlorobutadiene		<.90	<.90	<50	<50	<.90	<10	<.90	<10	<.90	<.90	<.90	<1.0	<.
Hexachlorocyclopentadiene		<10	<10	<50	<50	<10	<10	<10	<10	<10	<10	<10	<11	<
Hexachloroethane		<1.6	<1.6	<50	<50	<1.6	<10	<1.6	<10	<1.6	<1.6	<1.6	<1.8	<1
Indeno (1,2,3-c,d) pyrene		<3.7	<3.7	<50	<50	<3.7	<10	<3.7	<10	<3.7	<3.7	<3.7	<4.1	<3
Isophorone		<2.2	<2.2	<50	<50	<2.2	<10	<2.2	<10	<2.2	<2.2	<2.2	<2.4	<2
Naphthalene		<1.6	<1.6	<50	<50	<1.6	<10	<1.6	<10	<1.6	<1.6	<1.6	1.9	<1
Nitrobenzene		<1.9	<1.9	<50	<50	<1.9	<10	<1.9	<10	<1.9	<1.9	<1.9	<2.1	<1
n-Nitrosodimethylamine		<10	<10	<50	<50	<10	<10	<10	<10	<10	<10	<10	<11	<
n-Nitrosodi-n-propylamine		<10	<10	<50	<50	<10	<10	<10	<10	<10	<10	<10	<11	<
n-Nitrosodiphenylamine		<1.9	6.26	<50	<50	7.13	<10	<1.9	<10	<1.9	17.4	<1.9	<2.1	<1
Phenanthrene		<5.4	<5.4	<50	<50	<5.4	<10	<5.4	<10	<5.4	<5.4	<5.4	<6.0	<5
Pyrene		<1.9	<1.9	<50	<50	<1.9	<10	<1.9	<10	<1.9	<1.9	<1.9	<2.1	<1
1,2,4-Trichlorobenzene		<1.9	<1.9	<50	<50	<1.9	<10	<1.9	<10	<1.9	<1.9	<1.9	<2.1	<1
Sub Total 1		0	165	190	240	37	79	0	0	44	162	142	266	

See last pa footnotes.

Table 3. Summary of Base/Neutral Compounds in Ground Water, Krummrich Plant, Sauget, Illinois.

Well Number:	GM-4A	GM-4B	GM-4B	GM-4B	GM-4C	GM-4C	GM-5	GM-5	GM-6A	GM-6B	GM-12A	GM-12A	GM-12B
Date:	11/92	11/92	9/94	9/94*	11/92	9/94	11/92	9/94	11/92	11/92	11/92	11/92*	11/92
Laboratory:	ETC	ETC	SL	SL	ETC	SL	ETC	SL	ETC	ETC	ETC	ETC	ETC
Miscellaneous Base/Neutral Extractable Organic Compounds concentrations are in ug/L													
2,4-and 3,4-Dinitrochlorobenzene	NA	NA	<50	<50	NA	<10	NA	<10	NA	NA	NA	NA	NA
2-Nitroaniline	<10	<10	NA	NA	<10	NA	<10	NA	<10	<10	<10	<11	<10
4-Nitroaniline	<10	<10	NA	NA	<10	NA	<10	NA	<10	<10	<10	<11	<10
2-Nitrochlorobenzene	<10	<10	<50	<50	<10	<10	<10	<10	<10	<10	NA	NA	NA
3-Nitrochlorobenzene	NA	NA	<50	<50	NA	<10	NA	<10	NA	NA	NA	NA	NA
4-Nitrochlorobenzene	<10	611	<50	<50	<10	<10	<10	<10	<10	<10	NA	NA	NA
4-Nitrodiphenylamine	NA	NA	<50	<50	NA	<10	NA	<10	NA	NA	NA	NA	NA
Triphenyl phosphate	NA	NA	NA	NA	NA	NA	NA	NA	NA	NA	NA	NA	NA
2,3,7,8-Tetrachloro-dibenzo-p-dioxin	NA	NA	NA	NA	NA	NA	NA	NA	NA	NA	NA	NA	NA
2-Nitrobiphenyl	NA	NA	<50	<50	NA	<10	NA	<10	NA	NA	NA	NA	NA
4-Nitrobiphenyl	NA	NA	<50	<50	NA	<10	NA	<10	NA	NA	NA	NA	NA
Benzyl alcohol	<10	<10	NA	NA	<10	NA	<10	NA	<10	<10	<10	<11	<10
Aniline	<10	<10	<250	110 J	<10	70	<10	<50	<10	<10	1280	2820	<10
4-Chloroaniline	<10	196	<50	130	3,650	64	<10	<10	<10	36.6	<10	<11	<10
2-Methylnaphthalene	<10	<10	NA	NA	<10	NA	<10	NA	<10	<10	<10	<11	<10
N-nitroaniline	NA	NA	NA	NA	NA	NA	NA	NA	NA	NA	NA	NA	NA
Dibenzofuran	<10	<10	NA	NA	<10	NA	<10	NA	<10	<10	<10	<11	<10
3-Chloroaniline	<10	588	<50	**	<10	**	<10	<10	<10	<10	NA	NA	NA
2-Chloroaniline	<10	611	<50	59	16.9	50	<10	<10	188	43.9	NA	NA	NA
Sub Total 2	0	2,006	0	189	3,667	184	0	0	188	81	1,280	2,820	0
Total Base/Neutral Compounds	0	2,171	190	429	3,704	263	0	0	232	242	1,422	3,086	0

See last page for footnotes.

Table 3. Summary of Base/Neutral Compounds in Ground Water, Krummrich Plant, Sauget, Illinois.

Well Number:	GM-12C	GM-17A	GM-17B	GM-17B	GM-17B	GM-17B	GM-17B	GM-17B	GM-17B
Date:	11/92	11/92	12/86	5/87	11/87	5/88	11/88	5/89	11/89
Laboratory:	ETC	ETC	ETC	ETC	ETC	ETC	ETC	ETC	ETC
USEPA Priority Pollutant Base/Neutral Extractable Organic Compounds concentrations are in ug/L									
Acenaphthene	<1.9	<1.9	<2.1	<2.2	<2.0	<1.9	<2.3	<2.0	<2.0
Acenapthylene	<3.5	<3.5	<3.8	<4.1	<3.6	<3.6	<4.2	<3.8	<3.7
Anthracene	<1.9	<1.9	<2.1	<2.2	<2.0	<1.9	<2.3	<2.0	<2.0
Benzidine	NA	NA	<48	<51	<45	<45	<52	<47	<46
Benzo (a) anthracene	<7.8	<7.8	<8.5	<9.1	<8.0	<8.0	<9.3	<8.4	<8.2
Benzo (a) pyrene	<2.5	<2.5	<2.7	<2.9	<2.6	<2.6	<3.0	<2.7	<2.6
Benzo (b) fluoroanthene	<4.8	<4.8	<11	<12	<10	<4.9	<5.7	<5.2	<5.1
Benzo (ghi) perylene	<4.1	<4.1	<4.5	<4.8	<4.2	<4.2	<4.9	<4.4	<4.3
Benzo (k) fluoranthene	<2.5	<2.5	<3.8	<4.1	<3.6	<2.6	<3.0	<2.7	<2.6
Bis (2-chloroethoxy) methane	<5.3	<5.3	<5.8	<6.2	<5.5	<5.4	<6.3	<5.7	<5.6
Bis (2-chloroethyl) ether	<5.7	<5.7	<6.2	<6.6	<5.9	<5.8	<6.8	<6.1	<6.0
Bis (2-chloroisopropyl) ether	<5.7	<5.7	<6.2	<6.6	<5.9	<5.8	<6.8	<6.1	<6.0
Bis (2-ethylhexyl) phthalate	<10	<10	<11	<12	<10	<10	**48.9**	<11	**51.5**
4-Bromophenyl phenyl ether	<1.9	<1.9	<2.1	<2.2	<2.0	<1.9	<2.3	<2.0	<2.0
Butyl benzyl phthalate	<10	<10	<11	<12	<10	<10	<12	<11	<11
2-Chloronaphthalene	<1.9	<1.9	<2.1	<2.2	<2.0	<1.9	<2.3	<2.0	<2.0
4-Chlorophenyl phenyl ether	<4.2	<4.2	<4.6	<4.9	<4.3	<4.3	<5.0	<4.5	<4.4
Chrysene	<2.5	<2.5	<2.7	<2.9	<2.6	<2.6	<3.0	<2.7	<2.6
Dibenzo (a,h) anthracene	<2.5	<2.5	<11	<12	<10	<10	<12	<11	11
1,2-Dichlorobenzene	**36.3**	**2.24**	**2.6**	<2.2	<2.0	<1.9	<2.3	**9.48**	**10.8**
1,3-Dichlorobenzene	<1.9	<1.9	<2.1	<2.2	<2.0	<1.9	**54.9**	<2.0	<2.0
1,4-Dichlorobenzene	<4.4	**15.8**	**50.8**	**32.6**	**26.5**	**12.4**	**5.44**	**74.5**	**80.5**
3,3-Dichlorobenzidine	<16.5	<16.5	<18	<19	<17	<17	<20	<18	<17
Diethyl phthalate	<10	<10	<11	<12	<10	<10	<12	<11	<11
Dimethyl phthalate	<5.0	<5.0	<11	<12	<10	<10	<12	<11	<11
Di-n-butyl phthalate	<10	<10	<11	**17.3**	<10	<10	<12	<11	<11
2,4-Dinitrotoluene	<5.7	<5.7	<6.2	<6.6	<5.9	<5.8	<6.8	<6.1	<6.0
2,6-Dinitrotoluene	<1.9	<1.9	<2.1	<2.2	<2.0	<1.9	<2.3	<2.0	<2.0
Di-n-octyl phthalate	<10	<10	<11	<12	<10	<10	<12	<11	<11
1,2-Diphenylhydrazine	NA	NA	<11	<12	<10	<10	<12	<11	<11
Fluoranthene	<2.2	<2.2	<2.4	<2.6	<2.3	<2.2	<2.6	<2.4	<2.3
Fluorene	<1.9	<1.9	<2.1	<2.2	<2.0	<1.9	<2.3	<2.0	<2.0
Hexachlorobenzene	<1.9	<1.9	<2.1	<2.2	<2.0	<2.0	<2.3	<2.0	<2.0
Hexachlorobutadiene	<.90	<.90	<1	<1	<.93	<0.9	<1.1	<.97	<.95
Hexachlorocyclopentadiene	<10	<10	<11	<12	<10	<10	<12	<11	<11
Hexachloroethane	<1.6	<1.6	<1.7	<1.9	<1.6	<1.6	<1.9	<1.7	<1.7
Indeno (1,2,3-c,d) pyrene	<3.7	<3.7	<5.1	<5.5	<4.8	<4.8	<5.6	<5.1	<4.9
Isophorone	<2.2	<2.2	<2.4	<2.6	<2.3	<2.2	<2.6	<2.4	<2.3
Naphthalene	<1.6	<1.6	<1.7	<1.9	<1.6	<1.6	<1.9	<1.7	<1.7
Nitrobenzene	<1.9	<1.9	<2.1	<2.2	<2.0	<1.9	<2.3	<2.0	<2.0
n-Nitrosodimethylamine	<10	<10	<11	<12	<10	<10	<12	<11	<11
n-Nitrosodi-n-propylamine	<10	<10	<11	<12	<10	<10	<12	<11	<11
n-Nitrosodiphenylamine	<1.9	<1.9	<2.1	<2.2	<2.0	<1.9	<2.3	<2.0	<2.0
Phenanthrene	<5.4	<5.4	<5.9	<6.3	<5.6	<5.5	<6.4	<5.8	<5.7
Pyrene	<1.9	<1.9	<2.1	<2.2	<2.0	<1.9	<2.3	<2.0	<2.0
1,2,4-Trichlorobenzene	<1.9	<1.9	<2.1	<2.2	<2.0	<1.9	<2.3	<2.0	<2.0
Sub Total 1	36	18	53		27	12	109	84	143

See last page for footnotes.

Table 3. Summary of Base/Neutral Compounds in Ground Water, Krummrich Plant, Sauget, Illinois.

Well Number:	GM-12C	GM-17A	GM-17B	GM-17B	GM-17B	GM-17B	GM-17B	GM-17B	GM-17B
Date:	11/92	11/92	12/86	5/87	11/87	5/88	11/88	5/89	11/89
Laboratory:	ETC	ETC	ETC	ETC	ETC	ETC	ETC	ETC	ETC
Miscellaneous Base/Neutral Extractable Organic Compounds concentrations are in ug/L									
2,4-and 3,4-Dinitrochlorobenzene	NA	NA	NA	NA	NA	NA	NA	NA	NA
2-Nitroaniline	<10	<10	NA	NA	NA	NA	NA	NA	NA
4-Nitroaniline	<10	<10	NA	NA	NA	NA	NA	NA	NA
2-Nitrochlorobenzene	NA	<10	NA	NA	NA	NA	NA	NA	NA
3-Nitrochlorobenzene	NA	NA	NA	NA	NA	NA	NA	NA	NA
4-Nitrochlorobenzene	NA	<10	NA	NA	NA	NA	NA	NA	NA
4-Nitrodiphenylamine	NA	NA	NA	NA	NA	NA	NA	NA	NA
Triphenyl phosphate	NA	NA	NA	NA	NA	NA	NA	NA	NA
2,3,7,8-Tetrachloro-dibenzo-p-dioxin	NA	NA	NA	NA	NA	NA	NA	NA	NA
2-Nitrobiphenyl	NA	NA	NA	NA	NA	NA	NA	NA	NA
4-Nitrobiphenyl	NA	NA	NA	NA	NA	NA	NA	NA	NA
Benzyl alcohol	<10	<10	NA	NA	NA	NA	NA	NA	NA
Aniline	<10	<10	NA	NA	NA	NA	NA	NA	NA
4-Chloroaniline	<10	<10	NA	NA	NA	NA	NA	NA	NA
2-Methylnaphthalene	<10	<10	NA	NA	NA	NA	NA	NA	NA
N-nitroaniline	NA	NA	NA	NA	NA	NA	NA	NA	NA
Dibenzofuran	<10	<10	NA	NA	NA	NA	NA	NA	NA
3-Chloroaniline	NA	<10	NA	NA	NA	NA	NA	NA	NA
2-Chloroaniline	NA	<10	NA	NA	NA	NA	NA	NA	NA
Sub Total 2	0	0	0	0	0	0	0	0	0
Total Base/Neutral Compounds	36	18	53	50	27	12	109	84	143

See last page for footnotes.

Table 3. Summary of Base/Neutral Compounds in Ground Water, Krummrich Plant, Sauget, Illinois.

Well Number:	GM-17B	GM-17B	GM-17B	GM-17B	GM-17B	GM-17B	GM-17C	GM-17C	GM-17C	GM-17C
Date:	5/90	11/90	5/91	11/91	11/92	9/94	12/86	5/87	11/87	5/88
Laboratory:	ETC	ETC	ETC	ETC	ETC	SL	ETC	ETC	ETC	ETC
USEPA Priority Pollutant Base/Neutral Extractable Organic Compounds concentrations are in ug/L										
Acenaphthene	<2.0	<1.9	<1.9	<1.9	<1.9	<10	<1.9	<190	<40	<2.0
Acenapthylene	<3.7	<3.5	<3.5	<3.5	<3.5	<10	<3.5	<350	<73	<3.6
Anthracene	<2.0	<1.9	<1.9	<1.9	<1.9	<10	<1.9	<190	<40	<2.0
Benzidine	<46	<44	<44	<44	NA	<80	<44	<4400	<920	<46
Benzo (a) anthracene	<8.2	<7.8	<7.8	<7.9	<7.8	<10	<7.8	<790	<160	<8.1
Benzo (a) pyrene	<2.6	<2.5	<2.5	<2.5	<2.5	<10	<2.5	<250	<52	<2.6
Benzo (b) fluoroanthene	<5.1	<4.8	<4.8	<4.8	<4.8	<10	<10	<1,000	<210	<5.0
Benzo (ghi) perylene	<4.3	<4.1	<4.1	<4.1	<4.1	<10	<4.1	<410	<85	<4.3
Benzo (k) fluoranthene	<2.6	<2.5	<2.5	<2.5	<2.5	<10	<3.5	<350	<73	<2.6
Bis (2-chloroethoxy) methane	<5.6	<5.3	<5.3	<5.4	<5.3	<10	<5.3	<540	<110	<5.5
Bis (2-chloroethyl) ether	<6.0	<5.7	<5.7	<5.8	<5.7	<10	<5.7	<580	<120	<5.9
Bis (2-chloroisopropyl) ether	<6.0	<5.7	<5.7	<5.8	<5.7	<10	<5.7	<580	<120	<5.9
Bis (2-ethylhexyl) phthalate	<11	12.6	18.7	<10	<10	<10	<10	<1,000	<210	22.5
4-Bromophenyl phenyl ether	<2.0	<1.9	<1.9	<1.9	<1.9	<10	<1.9	<190	<40	<2.0
Butyl benzyl phthalate	<11	<10	<10	<10	<10	<10	<10	<1,000	<210	<10
2-Chloronaphthalene	<2.0	<1.9	<1.9	<1.9	<1.9	<10	<1.9	<190	<40	<2.0
4-Chlorophenyl phenyl ether	<4.4	<4.2	<4.2	<4.2	<4.2	<10	<4.2	<420	<87	<4.4
Chrysene	<2.6	<2.5	<2.5	<2.5	<2.5	<10	<2.5	<250	<52	<2.6
Dibenzo (a,h) anthracene	<11	<2.5	<2.5	<2.5	<2.5	<10	<10	<1,000	<210	<10
1,2-Dichlorobenzene	28.8	14.7	19.0	<1.9	15.5	<10	102	<190	83.4	69.4
1,3-Dichlorobenzene	12.3	2.68	3.00	<1.9	<1.9	<10	56.7	<190	44.1	39.8
1,4-Dichlorobenzene	275	142	153	<4.4	109	170	653	2,120	1,370	1,070
3,3-Dichlorobenzidine	<17	<16.5	<16.5	<16.7	<16.5	<20	<17	<1700	<340	<17
Diethyl phthalate	<11	<10	<10	<10	<10	<10	<10	<1,000	<210	<10
Dimethyl phthalate	<11	<10	<10	<10	<5.0	<10	<10	<1,000	<210	<10
Di-n-butyl phthalate	<11	<10	<10	<10	<10	<10	<10	<1,000	<210	<10
2,4-Dinitrotoluene	<6.0	<5.7	<5.7	<5.8	<5.7	<10	<5.7	<580	<120	<5.9
2,6-Dinitrotoluene	<2.0	<1.9	<1.9	<1.9	<1.9	<10	<1.9	<190	<40	<2.0
Di-n-octyl phthalate	<11	<10	<10	<10	<10	<10	<10	<1,000	<210	<10
1,2-Diphenylhydrazine	<11	<10	<10	<10	NA	<10	<10	<1,000	<210	<10
Fluoranthene	<2.3	<2.2	<2.2	<2.2	<2.2	<10	<2.2	<220	<46	<2.3
Fluorene	<2.0	<1.9	<1.9	<1.9	<1.9	<10	<1.9	<190	<40	<2.0
Hexachlorobenzene	<2.0	<1.9	<1.9	<1.9	<1.9	<10	<1.9	<190	<40	<2.0
Hexachlorobutadiene	<.95	<90	<0.9	<.91	<.90	<10	<0.9	<91	<19	<0.9
Hexachlorocyclopentadiene	<11	<10	<10	<10	<10	<10	<10	<1,000	<210	<10
Hexachloroethane	<1.7	<1.6	<1.6	<1.6	<1.6	<10	<1.6	<160	<33	<1.7
Indeno (1,2,3-c,d) pyrene	<4.9	<3.7	<3.7	<3.7	<3.7	<10	<4.7	<470	<98	<4.9
Isophorone	<2.3	<2.2	<2.2	<2.2	<2.2	<10	<2.2	<220	<46	<2.3
Naphthalene	<1.7	<1.6	<1.6	<1.6	<1.6	<10	<1.6	<160	<33	<1.7
Nitrobenzene	<2.0	<1.9	<1.9	<1.9	<1.9	<10	<1.9	<190	<40	<2.0
n-Nitrosodimethylamine	<11	<10	<10	<10	<10	<10	<10	<1,000	<210	<10
n-Nitrosodi-n-propylamine	<11	<10	<10	<10	<10	<10	<10	<1,000	<210	<10
n-Nitrosodiphenylamine	<2.0	<1.9	<1.9	<1.9	<1.9	<10	<1.9	<190	<40	<2.0
Phenanthrene	<5.7	<5.4	<5.4	<5.5	<5.4	<10	<5.4	<550	<110	<5.6
Pyrene	<2.0	<1.9	<1.9	<1.9	<1.9	<10	<1.9	<190	<40	<2.0
1,2,4-Trichlorobenzene	<2.0	<1.9	<1.9	<1.9	<1.9	<10	<1.9	<190	<40	<2.0
Sub Total 1	316	172	194		125	170	812	2,120	1,498	1,202

See last page for footnotes.

Table 3. Summary of Base/Neutral Compounds in Ground Water, Krummrich Plant, Sauget, Illinois.

Well Number:	GM-17B	GM-17B	GM-17B	GM-17B	GM-17B	GM-17B	GM-17C	GM-17C	GM-17C	GM-17C
Date:	5/90	11/90	5/91	11/91	11/92	9/94	12/86	5/87	11/87	5/88
Laboratory:	ETC	ETC	ETC	ETC	ETC	SL	ETC	ETC	ETC	ETC
Miscellaneous Base/Neutral Extractable Organic Compounds concentrations are in ug/L										
2,4-and 3,4-Dinitrochlorobenzene	NA	NA	NA	NA	NA	10	NA	NA	NA	NA
2-Nitroaniline	NA	NA	NA	NA	<10	NA	NA	NA	NA	NA
4-Nitroaniline	NA	NA	NA	NA	<10	NA	NA	NA	NA	NA
2-Nitrochlorobenzene	NA	NA	NA	NA	<10	<10	NA	NA	NA	NA
3-Nitrochlorobenzene	NA	NA	NA	NA	NA	<10	NA	NA	NA	NA
4-Nitrochlorobenzene	NA	NA	NA	NA	<10	<10	NA	NA	NA	NA
4-Nitrodiphenylamine	NA	NA	NA	NA	NA	<10	NA	NA	NA	NA
Triphenyl phosphate	NA	NA	NA	NA	NA	NA	NA	NA	NA	NA
2,3,7,8-Tetrachloro-dibenzo-p-dioxin	NA	NA	NA	NA	NA	NA	NA	NA	NA	NA
2-Nitrobiphenyl	NA	NA	NA	NA	NA	<10	NA	NA	NA	NA
4-Nitrobiphenyl	NA	NA	NA	NA	NA	<10	NA	NA	NA	NA
Benzyl alcohol	NA	NA	NA	NA	<10	NA	NA	NA	NA	NA
Aniline	NA	NA	NA	NA	<10	<500	NA	NA	NA	NA
4-Chloroaniline	NA	NA	NA	NA	1740	370	NA	NA	NA	NA
2-Methylnaphthalene	NA	NA	NA	NA	<10	NA	NA	NA	NA	NA
N-nitroaniline	NA	NA	NA	NA	NA	NA	NA	NA	NA	NA
Dibenzofuran	NA	NA	NA	NA	<10	NA	NA	NA	NA	NA
3-Chloroaniline	NA	NA	NA	NA	<10	••	NA	NA	NA	NA
2-Chloroaniline	NA	NA	NA	NA	688	1,400	NA	NA	NA	NA
Sub Total 2	0	0	0	0	2,428	1,770	0	0	0	0
Total Base/Neutral Compounds	316	172	194	0	2,553	1,940	812	2,120	1,498	1,202

See last page for footnotes.

Table 3. Summary of Base/Neutral Compounds in Ground Water, Krummrich Plant, Sauget, Illinois.

Well Number:	GM-17C	GM-17C	GM-17C	GM-17C	GM-17C	GM-17C	GM-17C	GM-17C	GM-17C	GM-18B	GM-20B
Date:	11/88	5/89	11/89	5/90	11/90	5/91	11/91	11/92	9/94	11/92	11/92
Laboratory:	ETC	ETC	ETC	ETC	ETC	ETC	ETC	ETC	SL	ETC	SL
USEPA Priority Pollutant Base/Neutral Extractable Organic Compounds concentrations are in ug/L											
Acenaphthene	<19	<2.0	<2.0	<10	<1.9	<1.9	<1.9	<1.9	<10	<1.9	<1.9
Acenapthylene	<36	<3.7	<3.6	<19	<3.5	<3.6	<3.5	<3.5	<10	<3.5	<3.5
Anthracene	<19	<2.0	<2.0	<10	<1.9	<1.9	<1.9	<1.9	<10	<1.9	<1.9
Benzidine	<450	<46	<46	<240	<44	<45	<44	NA	<80	<44	<44
Benzo (a) anthracene	<80	<8.2	<8.1	<42	<7.8	<8.0	<7.9	<7.8	<10	<7.9	<7.9
Benzo (a) pyrene	<26	<2.6	<2.6	<14	<2.5	<2.6	<2.5	<2.5	<10	<2.5	<2.5
Benzo (b) fluoroanthene	<49	<5.1	<5.0	<26	<4.8	<4.9	<4.8	<4.8	<10	<4.8	<4.8
Benzo (ghi) perylene	<42	<4.3	<4.3	<22	<4.1	<4.2	<4.1	<4.1	<10	<4.1	<4.1
Benzo (k) fluoranthene	<26	<2.6	<2.6	<14	<2.5	<2.6	<2.5	<2.5	<10	<2.5	<2.5
Bis (2-chloroethoxy) methane	<54	<5.6	<5.5	<29	<5.3	<5.4	<5.4	<5.3	<10	<5.4	<5.4
Bis (2-chloroethyl) ether	<58	<6.0	<5.9	<31	<5.7	<5.8	<5.8	<5.7	<10	<5.8	<5.8
Bis (2-chloroisopropyl) ether	<58	<6.0	<5.9	<31	<5.7	<5.8	<5.8	<5.7	<10	<5.8	<5.8
Bis (2-ethylhexyl) phthalate	144	11	59.6	<54	17.2	<10	<10	<10	<10	27.7	<10
4-Bromophenyl phenyl ether	<19	<2.0	<2.0	<10	<1.9	<1.9	<1.9	<1.9	<10	<1.9	<1.9
Butyl benzyl phthalate	<100	<11	<10	<54	<10	<10	<10	<10	<10	<10	<10
2-Chloronaphthalene	<19	<2.0	<2.0	<10	<1.9	<1.9	<1.9	<1.9	<10	<1.9	<1.9
4-Chlorophenyl phenyl ether	<43	<4.4	<4.4	<23	<4.2	<4.3	<4.2	<4.2	<10	<4.2	<4.2
Chrysene	<26	<2.6	<2.6	<14	<2.5	<2.6	<2.5	<2.5	<10	<2.5	<2.5
Dibenzo (a,h) anthracene	<100	<11	<10	<54	<2.5	<2.6	<2.5	<2.5	<10	<2.5	<2.5
1,2-Dichlorobenzene	94.2	61.0	40.1	43.0	40.3	30.9	<1.9	13.1	<10	2.99	<1.9
1,3-Dichlorobenzene	42.1	36.9	31.3	35.1	50.2	41.3	<1.9	43.4	<10	<1.9	<1.9
1,4-Dichlorobenzene	1,190	304	475	833	953	544	<4.4	305	520	<4.4	<4.4
3,3-Dichlorobenzidine	<170	<17	<17	<90	<16.5	<16.8	<16.7	<16.5	<20	<16.7	<16.7
Diethyl phthalate	<100	<11	<10	<54	<10	<10	<10	<10	<10	<10	<10
Dimethyl phthalate	<100	<11	<10	<54	<10	<10	<10	<5.0	<10	<5.1	<5.1
Di-n-butyl phthalate	<100	<11	<10	<54	<10	<10	<10	<10	<10	<10	<10
2,4-Dinitrotoluene	<58	<6.0	<5.9	<31	<5.7	<5.8	<5.8	<5.7	<10	<5.8	<5.8
2,6-Dinitrotoluene	<19	<2.0	<2.0	<10	<1.9	<1.9	<1.9	<1.9	<10	<1.9	<1.9
Di-n-octyl phthalate	<100	<11	<10	<54	<10	<10	<10	<10	<10	<10	<10
1,2-Diphenylhydrazine	<100	<11	<10	<54	<10	<10	<10	NA	<10	<10	<10
Fluoranthene	<22	<2.3	<2.3	<12	<2.2	<2.2	<2.2	<2.2	<10	<2.2	<2.2
Fluorene	<19	<2.0	<2.0	<10	<1.9	<1.9	<1.9	<1.9	<10	<1.9	<1.9
Hexachlorobenzene	<19	<2.0	<2.0	<10	<1.9	<1.9	<1.9	<1.9	<10	<1.9	<1.9
Hexachlorobutadiene	9.2	<9.5	<.94	<4.9	<90	<0.92	<.91	<.90	<10	<.91	<.91
Hexachlorocyclopentadiene	<100	<11	<10	<54	<10	<10	<10	<10	<10	<10	<10
Hexachloroethane	<16	<1.7	<1.7	<8.7	<1.6	<1.6	<1.6	<1.6	<10	<1.6	<1.6
Indeno (1,2,3-c,d) pyrene	<48	<4.9	<4.9	<26	<3.7	<3.8	<3.7	<3.7	<10	<3.7	<3.7
Isophorone	<22	<2.3	<2.3	<12	<2.2	<2.2	<2.2	<2.2	<10	<2.2	<2.2
Naphthalene	<16	<1.7	<1.7	<8.7	3.55	<1.6	<1.6	<1.6	<10	<1.6	<1.6
Nitrobenzene	<19	<2.0	<2.0	<10	<1.9	<1.9	<1.9	<1.9	<10	<1.9	<1.9
n-Nitrosodimethylamine	<100	<11	<10	<54	<10	<10	<10	<10	<10	<10	<10
n-Nitrosodi-n-propylamine	<100	<11	<10	<54	<10	<10	<10	<10	<10	<10	<10
n-Nitrosodiphenylamine	<19	16.3	<2.0	<10	2.24	<1.9	<1.9	5.85	<10	<1.9	<1.9
Phenanthrene	<55	<5.7	<5.6	<29	<5.4	<5.5	<5.5	<5.4	<10	<5.5	<5.5
Pyrene	<19	<2.0	<2.0	<10	<1.9	<1.9	<1.9	<1.9	<10	<1.9	<1.9
1,2,4-Trichlorobenzene	<19	<2.0	<2.0	<10	<1.9	<1.9	<1.9	<1.9	<10	<1.9	<1.9
Sub Total 1	1,480	429	606		1,066	616	0	367	520	31	

See last page for footnotes.

GERAGHTY & MILLER, INC.

Table 3. Summary of Base/Neutral Compounds in Ground Water, Krummrich Plant, Sauget, Illinois.

Well Number:	GM-17C	GM-17C	GM-17C	GM-17C	GM-17C	GM-17C	GM-17C	GM-17C	GM-17C	GM-18B	GM-20B
Date:	11/88	5/89	11/89	5/90	11/90	5/91	11/91	11/92	9/94	11/92	11/92
Laboratory:	ETC	ETC	ETC	ETC	ETC	ETC	ETC	ETC	SL	ETC	SL
Miscellaneous Base/Neutral Extractable Organic Compounds concentrations are in ug/L											
2,4-and 3,4-Dinitrochlorobenzene	NA	NA	NA	NA	NA	NA	NA	NA	<10	NA	NA
2-Nitroaniline	NA	NA	NA	NA	NA	NA	NA	<10	NA	NA	NA
4-Nitroaniline	NA	NA	NA	NA	NA	NA	NA	<10	NA	NA	NA
2-Nitrochlorobenzene	NA	NA	NA	NA	NA	NA	NA	<10	<10	NA	NA
3-Nitrochlorobenzene	NA	NA	NA	NA	NA	NA	NA	NA	<10	NA	NA
4-Nitrochlorobenzene	NA	NA	NA	NA	NA	NA	NA	<10	<10	NA	NA
4-Nitrodiphenylamine	NA	NA	NA	NA	NA	NA	NA	NA	<10	NA	NA
Triphenyl phosphate	NA	NA	NA	NA	NA	NA	NA	NA	NA	NA	NA
2,3,7,8-Tetrachloro-dibenzo-p-dioxin	NA	NA	NA	NA	NA	NA	NA	NA	NA	NA	NA
2-Nitrobiphenyl	NA	NA	NA	NA	NA	NA	NA	NA	<10	NA	NA
4-Nitrobiphenyl	NA	NA	NA	NA	NA	NA	NA	NA	<10	NA	NA
Benzyl alcohol	NA	NA	NA	NA	NA	NA	NA	<10	NA	NA	NA
Aniline	NA	NA	NA	NA	NA	NA	NA	<10	<250	NA	NA
4-Chloroaniline	NA	NA	NA	NA	NA	NA	NA	**186**	**170**	NA	NA
2-Methylnaphthalene	NA	NA	NA	NA	NA	NA	NA	<10	NA	NA	NA
N-nitroaniline	NA	NA	NA	NA	NA	NA	NA	NA	NA	NA	NA
Dibenzofuran	NA	NA	NA	NA	NA	NA	NA	<10	NA	NA	NA
3-Chloroaniline	NA	NA	NA	NA	NA	NA	NA	<10	••	NA	NA
2-Chloroaniline	NA	NA	NA	NA	NA	NA	NA	**327**	**380**	NA	NA
Sub Total 2	0	0	0	0	0	0	0	513	550	0	0
Total Base/Neutral Compounds	1,480	429	606	911	1,066	616	0	880	1,070	31	0

See last page for footnotes.

Table 3. Summary of Base/Neutral Compounds in Ground Water, Krummrich Plant, Sauget, Illinois.

Well Number:	GM-20B	GM-27B	GM-27B	GM-27B	GM-27B	GM-27B	GM-27C	GM-27C	GM-27C	GM-27C
Date:	9/94	11/87	11/89	11/90	11/91	11/92	11/87	11/89	11/90	11/91
Laboratory:	SL	ETC	ETC	ETC	ETC	ETC	ETC	ETC	ETC	ETC
USEPA Priority Pollutant Base/Neutral Extractable Organic Compounds concentrations are in ug/L										
Acenaphthene	<10	<2.2	<210	<100	<190	<1.9	<2.2	<2.2	<1.9	<19
Acenapthylene	<10	<4.0	<390	<190	<350	<3.5	<4.0	<4.0	<3.5	<35
Anthracene	<10	<2.2	<210	<100	<190	<1.9	<2.2	<2.2	<1.9	<19
Benzidine	<80	<50	<4900	<2,300	<4400	<44	<50	<51	<44	<440
Benzo (a) anthracene	<10	<8.9	<870	<410	<780	<7.9	<8.9	<9.0	<7.9	<78
Benzo (a) pyrene	<10	<2.8	<280	<130	<250	<2.5	6.33	<2.9	<2.5	<25
Benzo (b) fluoroanthene	<10	<11	<530	<260	<480	<4.8	<11	<5.5	<4.8	<48
Benzo (ghi) perylene	<10	<4.7	<460	<220	<410	<4.1	<4.7	<4.7	<4.1	<41
Benzo (k) fluoranthene	<10	<4.0	<280	<130	<250	<2.5	9.51	<2.9	<2.5	<25
Bis (2-chloroethoxy) methane	<10	<6.0	<590	<280	<530	<5.4	<6.0	<6.1	<5.4	<53
Bis (2-chloroethyl) ether	<10	<6.5	<630	<300	<570	<5.8	<6.5	<6.6	<5.8	<57
Bis (2-chloroisopropyl) ether	<10	<6.5	<630	<300	<570	<5.8	<6.5	<6.6	<5.8	<57
Bis (2-ethylhexyl) phthalate	<10	<11	<1,100	<530	<1,000	<10	<11	<11	27.0	<100
4-Bromophenyl phenyl ether	<10	<2.2	<210	<100	<190	<1.9	<2.2	<2.2	<1.9	<19
Butyl benzyl phthalate	<10	<11	<1,100	<530	<1,000	<10	<11	<11	<10	<100
2-Chloronaphthalene	<10	<2.2	<210	<100	<190	<1.9	<2.2	<2.2	<1.9	<19
4-Chlorophenyl phenyl ether	<10	<4.8	<470	<220	<420	<4.2	<4.8	<4.8	<4.2	<42
Chrysene	<10	3.77	<280	<130	<250	<2.5	8.73	<2.9	<2.5	<25
Dibenzo (a,h) anthracene	<10	<11	<1,100	<130	<250	<2.5	<11	<11	<2.5	<25
1,2-Dichlorobenzene	<10	<2.2	<210	<100	<190	26.6	400	22.6	6.21	25.5
1,3-Dichlorobenzene	<10	<2.2	<210	<100	<190	18	<2.2	3.36	2.78	<19
1,4-Dichlorobenzene	83	397	617	812	888	764	65.1	94.5	122	159
3,3-Dichlorobenzidine	<20	<19.3	<1800	<878	<1650	<16.7	<19.3	<19	<16.7	<165
Diethyl phthalate	<10	<11	<1,100	<530	<1,000	<10	<11	<11	<10	<100
Dimethyl phthalate	<10	<11	<1,100	<530	<1,000	<5.1	<11	<11	<10	<100
Di-n-butyl phthalate	<10	<11	<1,100	<530	<1,000	<10	<11	<11	34.1	<100
2,4-Dinitrotoluene	<10	<6.5	<630	<300	<570	<5.8	<6.5	<6.6	<5.8	<57
2,6-Dinitrotoluene	<10	<2.2	<210	<100	<190	<1.9	<2.2	<2.2	<1.9	<19
Di-n-octyl phthalate	<10	<11	<1,100	<530	<1,000	<10	<11	<11	<10	<100
1,2-Diphenylhydrazine	<10	<11	<1,100	<530	<1,000	<10	<11	<11	<10	<100
Fluoranthene	<10	6.58	<240	<120	<220	<2.2	15.7	<2.5	<2.2	<22
Fluorene	<10	<2.2	<210	<100	<190	<1.9	<2.2	<2.2	<1.9	<19
Hexachlorobenzene	<10	<2.2	<210	<100	<190	<1.9	<2.2	<2.2	<1.9	<19
Hexachlorobutadiene	<10	<1.0	<100	<48	<90	<.91	<1.0	<1.0	<91	<9.0
Hexachlorocyclopentadiene	<10	<11	<1,100	<530	<1,000	<10	<11	<11	<10	<100
Hexachloroethane	<10	<1.8	<180	<85	<160	<1.6	<1.8	<1.8	<1.6	<16
Indeno (1,2,3-c,d) pyrene	<10	<5.3	<520	<200	<370	<3.7	<5.3	<5.4	<3.7	<37
Isophorone	<10	<2.5	<240	<120	<220	<2.2	<2.5	<2.5	<2.2	<22
Naphthalene	<10	23.9	<180	<85	<160	8.82	4.55	3.92	5.79	<16
Nitrobenzene	<10	<2.2	<210	<100	<190	<1.9	<2.2	<2.2	<1.9	<19
n-Nitrosodimethylamine	<10	<11	<1,100	<530	<1,000	<10	<11	<11	<10	<100
n-Nitrosodi-n-propylamine	<10	<11	<1,100	<530	<1,000	<10	<11	<11	<10	<100
n-Nitrosodiphenylamine	<10	2.84	<210	<100	<190	4.31	<2.2	<2.2	<1.9	<19
Phenanthrene	<10	<6.1	<600	<290	<540	<5.5	<6.1	<6.2	<5.5	<54
Pyrene	<10	5.59	<210	<100	<190	<1.9	13.9	<2.2	,1.9	<19
1,2,4-Trichlorobenzene	<10	<2.2	<210	<100	<190	<1.9	<2.2	<2.2	<1.9	<19
Sub Total 1	83	440	617		888	822	524	124	198	185

See last page for footnotes.

Table 3. Summary of Base/Neutral Compounds in Ground Water, Krummrich Plant, Sauget, Illinois.

Well Number:	GM-20B	GM-27B	GM-27B	GM-27B	GM-27B	GM-27B	GM-27C	GM-27C	GM-27C	GM-27C
Date:	9/94	11/87	11/89	11/90	11/91	11/92	11/87	11/89	11/90	11/91
Laboratory:	SL	ETC	ETC	ETC	ETC	ETC	ETC	ETC	ETC	ETC
Miscellaneous Base/Neutral Extractable Organic Compounds concentrations are in ug/L										
2,4-and 3,4-Dinitrochlorobenzene	<10	<11	<1,100	<530	<1,000	<10	<11	<11	<10	<100
2-Nitroaniline	NA	<11	<1,100	<530	<1,000	<10	<11	<11	<10	<100
4-Nitroaniline	NA	<11	<1,100	<530	<1,000	<10	<11	<11	126	<100
2-Nitrochlorobenzene	<10	<11	<1,100	<530	<1,000	<10	<11	79.8	<10	<100
3-Nitrochlorobenzene	<10	NA	NA	NA	<1,000	NA	NA	NA	NA	<100
4-Nitrochlorobenzene	<10	<11	<1,100	<530	<1,000	<10	<11	20.1	<10	<100
4-Nitrodiphenylamine	<10	<11	<1,100	<530	<1,000	<10	<11	<11	<10	<100
Triphenyl phosphate	NA	<11	<1,100	<530	<1,000	NA	<11	<11	<10	<100
2,3,7,8-Tetrachloro-dibenzo-p-dioxin	NA	NA	NA	NA	<1,000	NA	NA	NA	NA	NA
2-Nitrobiphenyl	<10	NA	<1,100	NA	<1,000	NA	NA	<11	NA	NA
4-Nitrobiphenyl	<10	NA	<1,100	NA	<1,000	<10	NA	<11	NA	NA
Benzyl alcohol	NA	NA	NA	NA	<1,000	NA	NA	NA	NA	NA
Aniline	<50	NA	444,000	302,000	159,000	6,410	NA	869	48,000	27,600
4-Chloroaniline	<10	NA	NA	NA	31,600	<10	NA	NA	NA	12,500
2-Methylnaphthalene	NA	NA	NA	NA	<1,000	<10	NA	NA	NA	NA
N-nitroaniline	NA	NA	NA	NA	<1,000	NA	NA	NA	NA	NA
Dibenzofuran	NA	NA	NA	NA	<1,000	NA	NA	NA	NA	NA
3-Chloroaniline	<10	NA	NA	NA	34,400	<10	NA	NA	NA	10,800
2-Chloroaniline	140	NA	NA	NA	24,800	3,220	NA	NA	NA	6,590
Sub Total 2	140	0	444,000	302,000	249,800	9,630	0	969	48,126	57,490
Total Base/Neutral Compounds	223	440	444,617	302,812	250,688	10,452	524	1,093	48,324	57,675

See last page for footnotes.

Table 3. Summary of Base/Neutral Compounds in Ground Water, Krummrich Plant, Sauget, Illinois.

Well Number:	GM-27C	GM-28B	GM-28B	GM-28B	GM-28B	GM-28B	GM-28B	GM-28B	GM-28B
Date:	11/92	12/86	5/87	11/87	5/88	3/89	11/89	11/90	11/91
Laboratory:	ETC	ETC	ETC	ETC	ETC	ETC	ETC	ETC	ETC
USEPA Priority Pollutant Base/Neutral Extractable Organic Compounds concentrations are in ug/L									
Acenaphthene	<1.9	NA	NA	<190	<120	<20	<21	<1.9	<39
Acenapthylene	<3.6	NA	NA	<350	<220	<36	<38	<3.5	<71
Anthracene	<1.9	NA	NA	<190	<120	<20	<21	<1.9	<39
Benzidine	<45	NA	NA	<4400	<2,700	<450	<480	<44	<890
Benzo (a) anthracene	<8.0	NA	NA	<790	<480	<80	<86	<7.8	<160
Benzo (a) pyrene	<2.6	NA	NA	<250	<150	<26	<27	<2.5	<51
Benzo (b) fluoroanthene	<4.9	NA	NA	<1,000	<300	<49	<53	<4.8	<97
Benzo (ghi) perylene	<4.2	NA	NA	<410	<250	<42	<45	<4.1	<83
Benzo (k) fluoranthene	<2.6	NA	NA	<350	<150	<26	<27	<2.5	<51
Bis (2-chloroethoxy) methane	<5.4	NA	NA	<540	<330	<55	<58	<5.3	<110
Bis (2-chloroethyl) ether	<5.8	NA	NA	<580	<350	<59	<63	<5.7	<120
Bis (2-chloroisopropyl) ether	<5.8	NA	NA	<580	<350	<59	<63	<5.7	<120
Bis (2-ethylhexyl) phthalate	<10	NA	NA	<1,000	<620	<100	<110	115	<200
4-Bromophenyl phenyl ether	<1.9	NA	NA	<190	<120	<20	<21	<1.9	<39
Butyl benzyl phthalate	<10	NA	NA	<1,000	<620	<100	<110	<10	<200
2-Chloronaphthalene	<1.9	NA	NA	<190	<120	<20	<21	<1.9	<39
4-Chlorophenyl phenyl ether	<4.3	NA	NA	<420	<260	<43	<46	<4.2	<85
Chrysene	<2.6	NA	NA	<250	<150	<26	<27	<2.5	<51
Dibenzo (a,h) anthracene	<2.6	NA	NA	<1,000	<620	<100	<110	<2.5	<51
1,2-Dichlorobenzene	9.3	NA	NA	3,830	4,560	3,380	6,770	2,430	4,160
1,3-Dichlorobenzene	3.73	NA	NA	<190	<120	<20	<21	11.4	<39
1,4-Dichlorobenzene	119	NA	NA	<440	338	200	378	129	188
3,3-Dichlorobenzidine	<16.8	NA	NA	<1700	<1,000	<170	<180	<16.5	<335
Diethyl phthalate	<10	NA	NA	<1,000	<620	<100	<110	<10	<200
Dimethyl phthalate	<5.1	NA	NA	<1,000	<620	<100	<110	<10	<200
Di-n-butyl phthalate	<10	NA	NA	<1,000	<620	<100	<110	<10	<200
2,4-Dinitrotoluene	<5.8	NA	NA	<580	<350	<59	<63	<5.7	<120
2,6-Dinitrotoluene	<1.9	NA	NA	<190	<120	<20	<21	<1.9	<39
Di-n-octyl phthalate	<10	NA	NA	<1,000	<620	<100	<110	<10	<200
1,2-Diphenylhydrazine	<10	NA	NA	<1,000	<620	<100	<110	<10	<200
Fluoranthene	<2.2	NA	NA	<220	<140	<23	<24	<2.2	<45
Fluorene	<1.9	NA	NA	<190	<120	<20	<21	<1.9	<39
Hexachlorobenzene	<1.9	NA	NA	<190	<120	<20	<21	<1.9	<39
Hexachlorobutadiene	<.92	NA	NA	<91	<56	<9.3	<9.9	<90	<18
Hexachlorocyclopentadiene	<10	NA	NA	<1,000	<620	<100	<110	<10	<200
Hexachloroethane	<1.6	NA	NA	<160	<99	<16	<18	<1.6	<32
Indeno (1,2,3-c,d) pyrene	<3.8	NA	NA	<470	<290	<48	<52	<3.7	<75
Isophorone	<2.2	NA	NA	<220	<140	<23	<24	<2.2	<45
Naphthalene	2.77	NA	NA	<160	<99	<16	<18	<1.6	<32
Nitrobenzene	<1.9	NA	NA	1,190	919	<20	<21	154	<39
n-Nitrosodimethylamine	<10	NA	NA	<1,000	<620	<100	<110	<10	<200
n-Nitrosodi-n-propylamine	<10	NA	NA	<1,000	<620	<100	<110	<10	<200
n-Nitrosodiphenylamine	<1.9	NA	NA	<190	<120	<20	<21	<1.9	<39
Phenanthrene	<5.5	NA	NA	<550	<330	<56	<59	<5.4	<110
Pyrene	<1.9	NA	NA	<190	<120	<20	<21	<1.9	<39
1,2,4-Trichlorobenzene	<1.9	NA	NA	<190	<120	<20	<21	172	62.9
Sub Total 1	135	0	0	5	5,817	3,580	7,148	3,011	4,411

See last page for footnotes.

Table 3. Summary of Base/Neutral Compounds in Ground Water, Krummrich Plant, Sauget, Illinois.

Well Number:	GM-27C	GM-28B	GM-28B	GM-28B	GM-28B	GM-28B	GM-28B	GM-28B	GM-28B
Date:	11/92	12/86	5/87	11/87	5/88	3/89	11/89	11/90	11/91
Laboratory:	ETC	ETC	ETC	ETC	ETC	ETC	ETC	ETC	ETC
Miscellaneous Base/Neutral Extractable Organic Compounds concentrations are in ug/L									
2,4-and 3,4-Dinitrochlorobenzene	<10	<11	<1,100	<1,000	<620	<100	<110	<10	<200
2-Nitroaniline	<10	<11	<1,100	<1,000	<620	<100	<110	<10	<200
4-Nitroaniline	<10	<11	<1,100	<1,000	<620	<100	<110	<10	<200
2-Nitrochlorobenzene	<10	<11	<1,100	13,100	17,900	8,660	222	22,700	2,120
3-Nitrochlorobenzene	NA	NA	NA	NA	NA	NA	NA	NA	918
4-Nitrochlorobenzene	<10	<11	<1,100	28,800	43,800	34,700	470	63,000	2,030
4-Nitrodiphenylamine	<10	<11	<1,100	<1,000	<620	<100	<110	<10	<200
Triphenyl phosphate	NA	<11	<1,100	<1,000	<620	<100	<110	<10	<200
2,3,7,8-Tetrachloro-dibenzo-p-dioxin	NA	NA	NA	NA	NA	NA	NA	NA	NA
2-Nitrobiphenyl	NA	NA	NA	NA	<620	NA	<110	NA	NA
4-Nitrobiphenyl	<10	NA	NA	NA	<620	NA	<110	NA	NA
Benzyl alcohol	NA	NA	NA	NA	NA	NA	NA	NA	NA
Aniline	14,500	NA	NA	NA	NA	NA	6,780	2,630	1,020
4-Chloroaniline	9,110	NA	NA	NA	NA	NA	NA	NA	53,100
2-Methylnaphthalene	NA	NA	NA	NA	NA	NA	NA	NA	NA
N-nitroaniline	NA	NA	NA	NA	NA	NA	NA	NA	NA
Dibenzofuran	NA	NA	NA	NA	NA	NA	NA	NA	NA
3-Chloroaniline	<10	NA	NA	NA	NA	NA	NA	NA	46,000
2-Chloroaniline	4,460	NA	NA	NA	NA	NA	NA	NA	36,200
Sub Total 2	28,070	0	0	41,900	61,700	43,360	7,472	88,330	141,388
Total Base/Neutral Compounds	28,205	0	0	46,920	67,517	46,940	14,620	91,341	145,799

See last page for footnotes.

Table 3. Summary of Base/Neutral Compounds in Ground Water, Krummrich Plant, Sauget, Illinois.

Well Number:	GM-28C	GM-28C	GM-28C	GM-28C	GM-28C	GM-28C	GM-28C	GM-28C	GM-28C
Date:	12/86	5/87	11/87	5/88	11/88	3/89	3/89 *	11/89	11/90
Laboratory:	ETC	ETC	ETC	ETC	ETC	ETC	ETC	ETC	ETC
USEPA Priority Pollutant Base/Neutral Extractable Organic Compounds concentrations are in ug/L									
Acenaphthene	NA	NA	<1.9	<130	<2.2	<1,900	<190	<2.2	<1,900
Acenapthylene	NA	NA	<3.5	<250	<4.0	<3,600	<350	<4.1	<3,500
Anthracene	NA	NA	<1.9	<130	<2.2	<1,900	<190	<2.2	<1,900
Benzidine	NA	NA	<44	<3,100	<50	<45,000	<4400	<51	<44,000
Benzo (a) anthracene	NA	NA	<7.8	<550	<8.9	<8,000	<780	<9.1	<7,800
Benzo (a) pyrene	NA	NA	<2.5	<180	<2.8	<2,600	<250	<2.9	<2,500
Benzo (b) fluoroanthene	NA	NA	<10	<340	<5.5	<4,900	<480	<5.6	<4,800
Benzo (ghi) perylene	NA	NA	<4.1	<290	<4.7	<4,200	<410	<4.8	<4,100
Benzo (k) fluoranthene	NA	NA	<3.5	<180	<2.8	<2,600	<250	<2.9	<2,500
Bis (2-chloroethoxy) methane	NA	NA	<5.3	<370	<6.0	<5,400	<530	<6.2	<5,300
Bis (2-chloroethyl) ether	NA	NA	<5.7	<400	<6.5	<5,800	<570	<6.6	<5,700
Bis (2-chloroisopropyl) ether	NA	NA	<5.7	<400	<6.5	<5,800	<570	<6.6	<5,700
Bis (2-ethylhexyl) phthalate	NA	NA	<10	<700	32.7	<10,000	<1,000	23.9	<10,000
4-Bromophenyl phenyl ether	NA	NA	<1.9	<130	<2.2	<1,900	<190	<2.2	<1,900
Butyl benzyl phthalate	NA	NA	<10	<700	<11	<10,000	<1,000	<12	<10,000
2-Chloronaphthalene	NA	NA	<1.9	<130	<2.2	<1,900	<190	<2.2	<1,900
4-Chlorophenyl phenyl ether	NA	NA	<4.2	<300	<4.8	<4,300	<430	<4.9	<4,200
Chrysene	NA	NA	<2.5	<180	<2.8	<2,600	<250	<2.9	<2,500
Dibenzo (a,h) anthracene	NA	NA	<10	<700	<11	<10,000	<1,000	<12	<2,500
1,2-Dichlorobenzene	NA	NA	3,040	3,370	5,810	5,470	5,640	3,880	9,810
1,3-Dichlorobenzene	NA	NA	<1.9	<130	11.1	<1,900	<190	17.4	<1,900
1,4-Dichlorobenzene	NA	NA	193	<310	199	<4,500	<440	167	<4,400
3,3-Dichlorobenzidine	NA	NA	47.0	<1,200	<19	<17,000	<1700	<19	<16,500
Diethyl phthalate	NA	NA	<10	<700	<11	<10,000	<1,000	<12	<10,000
Dimethyl phthalate	NA	NA	<10	<700	<11	<10,000	<1,000	<12	<10,000
Di-n-butyl phthalate	NA	NA	<10	<700	<11	<10,000	<1,000	<12	<10,000
2,4-Dinitrotoluene	NA	NA	<5.7	<400	<6.5	<5,800	<570	<6.6	<5,700
2,6-Dinitrotoluene	NA	NA	<1.9	<130	<2.2	<1,900	<190	<2.2	<1,900
Di-n-octyl phthalate	NA	NA	<10	<700	<11	<10,000	<1,000	<12	<10,000
1,2-Diphenylhydrazine	NA	NA	<10	<700	<11	<10,000	<1,000	<12	<10,000
Fluoranthene	NA	NA	<2.2	<150	<2.5	<2,200	<220	<2.6	<2,200
Fluorene	NA	NA	<1.9	<130	<2.2	<1,900	<190	<2.2	<1,900
Hexachlorobenzene	NA	NA	<1.9	<130	<2.2	<1,900	<190	<2.2	<1,900
Hexachlorobutadiene	NA	NA	<.90	<63	<1.0	<920	<90	<1.0	<900
Hexachlorocyclopentadiene	NA	NA	<10	<700	<11	10,000	<1,000	<12	<10,000
Hexachloroethane	NA	NA	<1.6	<110	<1.8	<2,600	<160	<1.9	<1,600
Indeno (1,2,3-c,d) pyrene	NA	NA	<4.7	<330	<5.3	<4,800	<470	<5.5	<3,700
Isophorone	NA	NA	<2.2	<150	<2.5	<2,200	<220	<2.6	<2,200
Naphthalene	NA	NA	<1.6	<110	<1.8	<1,600	<160	2.91	<1,600
Nitrobenzene	NA	NA	<1.9	<130	9.81	<1,900	210	<2.2	<1,900
n-Nitrosodimethylamine	NA	NA	<10	<700	<11	<10,000	<1,000	<12	<10,000
n-Nitrosodi-n-propylamine	NA	NA	<10	<700	<11	<10,000	<1,000	<12	<10,000
n-Nitrosodiphenylamine	NA	NA	<1.9	<130	<2.2	<1,900	<190	<2.2	,1,900
Phenanthrene	NA	NA	<5.4	<380	<6.1	<5,500	<540	<6.3	<5,400
Pyrene	NA	NA	<1.9	<130	<2.2	<1,900	<190	<2.2	<1,900
1,2,4-Trichlorobenzene	NA	NA	<1.9	<130	138	<1,900	<190	57.1	<1,900
Sub Total 1	0	0	3,280	3,(	6,201	15,470	5,850	4,148	9,810

See last page for footnotes.

Table 3. Summary of Base/Neutral Compounds in Ground Water, Krummrich Plant, Sauget, Illinois.

Well Number:	GM-28C	GM-28C	GM-28C	GM-28C	GM-28C	GM-28C	GM-28C	GM-28C	GM-28C
Date:	12/86	5/87	11/87	5/88	11/88	3/89	3/89 *	11/89	11/90
Laboratory:	ETC	ETC	ETC	ETC	ETC	ETC	ETC	ETC	ETC
Miscellaneous Base/Neutral Extractable Organic Compounds concentrations are in ug/L									
2,4-and 3,4-Dinitrochlorobenzene	<11	<1300	<10	<700	<11	<1,0000	<1,000	<12	<10,000
2-Nitroaniline	<11	<1300	<10	<700	21.9	<1,0000	<1,000	<12	<10,000
4-Nitroaniline	<11	<1300	<10	<700	<11	<1,0000	<1,000	<12	<10,000
2-Nitrochlorobenzene	<11	<1300	17,400	15,400	23,700	20,500	26,300	238	70,100
3-Nitrochlorobenzene	NA	NA	NA	NA	NA	NA	NA	NA	NA
4-Nitrochlorobenzene	<11	<1300	36,000	30,600	45,300	27,600	55,800	591	79,500
4-Nitrodiphenylamine	<11	<1300	56.3	<700	107	<1,0000	<1,000	<12	<10,000
Triphenyl phosphate	<11	<1300	<10	<700	<11	<1,0000	<1,000	<12	<10,000
2,3,7,8-Tetrachloro-dibenzo-p-dioxin	NA	NA	NA	NA	NA	NA	NA	NA	NA
2-Nitrobiphenyl	NA	NA	NA	<700	NA	NA	NA	<12	NA
4-Nitrobiphenyl	NA	NA	NA	<700	NA	NA	NA	<12	NA
Benzyl alcohol	NA	NA	NA	NA	NA	NA	NA	NA	NA
Aniline	NA	NA	NA	NA	NA	NA	NA	8,920	<10,000
4-Chloroaniline	NA	NA	NA	NA	NA	NA	NA	NA	NA
2-Methylnaphthalene	NA	NA	NA	NA	NA	NA	NA	NA	NA
N-nitroaniline	NA	NA	NA	NA	NA	NA	NA	NA	NA
Dibenzofuran	NA	NA	NA	NA	NA	NA	NA	NA	NA
3-Chloroaniline	NA	NA	NA	NA	NA	NA	NA	NA	NA
2-Chloroaniline	NA	NA	NA	NA	NA	NA	NA	NA	NA
Sub Total 2	0	0	53,456	46,000	69,129	48,100	82,100	9,749	149,600
Total Base/Neutral Compounds	0	0	56,736	49,370	75,330	63,570	87,950	13,897	159,410

See last page for footnotes.

Table 3. Summary of Base/Neutral Compounds in Ground Water, Krummrich Plant, Sauget, Illinois.

Well Number:	GM-28C	GM-28C	GM-31A	GM-31A	GM-31A	GM-31A	GM-31A	GM-31A	GM-31A
Date:	11/91	11/92	12/86	12/86*	5/87	5/87*	11/87	11/87*	5/88
Laboratory:	ETC	ETC	ETC	ETC	ETC	ETC	ETC	ETC	ETC
USEPA Priority Pollutant Base/Neutral Extractable Organic Compounds concentrations are in ug/L									
Acenaphthene	<39	<96	<2.0	<2.2	<220	<210	<2	<2.0	<1.9
Acenapthylene	<71	<180	<3.7	<4.0	<410	<390	<3.6	<3.6	<3.5
Anthracene	<39	<96	<2.0	<2.2	<220	<210	<2	<2.0	<1.9
Benzidine	<900	<2200	<47	<50	<5200	<4900	<46	<46	<44
Benzo (a) anthracene	<160	<390	<8.3	<8.9	<920	<870	<8.1	<8.1	<7.8
Benzo (a) pyrene	<51	<130	1	<2.9	<290	<280	<2.6	<2.6	<2.5
Benzo (b) fluoroanthene	<98	<240	<11	<11	<1200	<1,100	<10	<10	<4.8
Benzo (ghi) perylene	<84	<210	<4.3	<4.7	<480	<460	<4.3	<4.3	<4.1
Benzo (k) fluoranthene	<51	<130	<3.7	<4.0	<410	<390	<3.6	<3.6	<2.5
Bis (2-chloroethoxy) methane	<110	<270	<5.6	<6.1	<620	<590	<5.5	<5.5	<5.3
Bis (2-chloroethyl) ether	<120	<290	<6.0	<6.5	<670	<630	<5.9	<5.9	<5.7
Bis (2-chloroisopropyl) ether	<120	<290	<6.0	<6.5	<670	<630	<5.9	<5.9	<5.7
Bis (2-ethylhexyl) phthalate	<200	<510	<11	<11	<1200	<1,100	<10	<10	<10
4-Bromophenyl phenyl ether	<39	<96	<2	<2.2	<220	<210	<2	<2.0	<1.9
Butyl benzyl phthalate	<200	<510	<11	<11	<1200	<1,100	<10	<10	<10
2-Chloronaphthalene	<39	<96	<2	<2.2	<220	<210	<2	<2.0	<1.9
4-Chlorophenyl phenyl ether	<86	<210	<4.4	<4.8	<490	<470	<4.4	<4.4	<4.2
Chrysene	<51	<130	<2.6	<2.9	<290	<280	<2.6	<2.6	<2.5
Dibenzo (a,h) anthracene	<51	<130	<11	<11	<1200	<1,100	<10	<10	<10
1,2-Dichlorobenzene	3,330	1040	6.6	5.5	<220	<210	22.2	19.8	24.3
1,3-Dichlorobenzene	<39	<96	<2	<2.2	<220	<210	<2	<2.0	<1.9
1,4-Dichlorobenzene	138	<220	7.4	6	<520	<490	11.9	11.7	12.2
3,3-Dichlorobenzidine	<337	<833	<17	<19	<1,900	<1800	<17	<17	<17
Diethyl phthalate	<200	<510	<11	<11	<1200	<1,100	<10	<10	<10
Dimethyl phthalate	<200	<250	<11	<11	<1200	<1,100	<10	<10	<10
Di-n-butyl phthalate	<200	<510	<11	<11	<1200	<1,100	<10	<10	<10
2,4-Dinitrotoluene	<120	<290	<6.0	<6.5	<670	<630	<5.9	<5.9	<5.7
2,6-Dinitrotoluene	<39	<96	<2.0	<2.2	<220	<210	<2	<2.0	<1.9
Di-n-octyl phthalate	<200	<510	<11	<11	<1200	<1,100	<10	<10	<10
1,2-Diphenylhydrazine	<200	<510	<11	<11	<1200	<1,100	<10	<10	<10
Fluoranthene	<45	<110	<2.3	<2.5	<260	<240	<2.3	<2.3	<2.2
Fluorene	<39	<96	<2.0	<2.2	<220	<210	<2	<2.0	<1.9
Hexachlorobenzene	<39	<96	<2.0	<2.2	<220	<210	<2	<2.0	<1.9
Hexachlorobutadiene	<18	<45	<1.0	<1.0	<110	<100	<.94	<.94	<0.9
Hexachlorocyclopentadiene	<200	<510	<11	<11	<1200	<1,100	<10	<10	<10
Hexachloroethane	<33	<81	<1.7	<1.8	<190	<180	<1.7	<1.7	<1.6
Indeno (1,2,3-c,d) pyrene	<76	<190	<5	<5.4	<550	<520	<4.9	<4.9	<4.7
Isophorone	<45	<110	<2.3	<2.5	<260	<240	<2.3	<2.3	<2.2
Naphthalene	<33	<81	<1.7	<1.8	<190	<180	<1.7	<1.7	<1.6
Nitrobenzene	<39	<96	32.4	23.5	<220	<210	309	307	84.9
n-Nitrosodimethylamine	<200	<510	<11	<11	<1200	<1,100	<10	<10	<10
n-Nitrosodi-n-propylamine	<200	<510	<11	<11	<1200	<1,100	<10	<10	<10
n-Nitrosodiphenylamine	<39	<96	<2.0	<2.2	<220	<210	<2	<2.0	<1.9
Phenanthrene	<110	<270	<5.7	<6.2	<640	<600	<5.6	<5.6	<5.4
Pyrene	<39	<96	<2.0	<2.2	<220	<210	<2	<2.0	<1.9
1,2,4-Trichlorobenzene	43.3	<96	<2.0	<2.2	<220	<210	<2	<2.0	<1.9
Sub Total 1	3,511	1,040	47		0	0	343	339	121

See last page for footnotes.

Table 3. Summary of Base/Neutral Compounds in Ground Water, Krummrich Plant, Sauget, Illinois.

Well Number:	GM-28C	GM-28C	GM-31A	GM-31A	GM-31A	GM-31A	GM-31A	GM-31A	GM-31A
Date:	11/91	11/92	12/86	12/86*	5/87	5/87*	11/87	11/87*	5/88
Laboratory:	ETC	ETC	ETC	ETC	ETC	ETC	ETC	ETC	ETC
Miscellaneous Base/Neutral Extractable Organic Compounds concentrations are in ug/L									
2,4-and 3,4-Dinitrochlorobenzene	<200	<510	48,400	43,500	9,780	16,300	19,800	22,900	1,170
2-Nitroaniline	<200	<510	<11	<11	<1,200	<1,100	21.3	20.8	15.9
4-Nitroaniline	<200	<510	<11	<11	<1,200	<1,100	<10	<10	<10
2-Nitrochlorobenzene	1,740	<510	1,820	1,900	2,600	2,890	4,190	4,460	2,400
3-Nitrochlorobenzene	730	NA	NA	NA	NA	NA	NA	NA	NA
4-Nitrochlorobenzene	1,420	<510	4,910	4,450	4,770	5,700	8,330	9,130	2,480
4-Nitrodiphenylamine	<200	<510	<11	<11	<1,200	<1,100	<10	<10	<10
Triphenyl phosphate	<200	NA	<11	<11	<1,200	<1,100	<10	<10	<10
2,3,7,8-Tetrachloro-dibenzo-p-dioxin	NA	NA	NA	NA	NA	NA	NA	NA	NA
2-Nitrobiphenyl	NA	NA	<11	<11	<1,200	<1,100	<10	<10	<10
4-Nitrobiphenyl	NA	<510	<11	<11	<1,200	<1,100	<10	<10	<10
Benzyl alcohol	NA	NA	NA	NA	NA	NA	NA	NA	NA
Aniline	3,930	1,530	NA	NA	NA	NA	NA	NA	NA
4-Chloroaniline	51,900	5,390	NA	NA	NA	NA	NA	NA	NA
2-Methylnaphthalene	NA	NA	NA	NA	NA	NA	NA	NA	NA
N-nitroaniline	NA	NA	NA	NA	NA	NA	NA	NA	NA
Dibenzofuran	NA	NA	NA	NA	NA	NA	NA	NA	NA
3-Chloroaniline	52,400	18,000	NA	NA	NA	NA	NA	NA	NA
2-Chloroaniline	59,100	12,000	NA	NA	NA	NA	NA	NA	NA
Sub Total 2	171,220	36,920	55,130	49,850	17,150	24,890	32,341	36,511	6,066
Total Base/Neutral Compounds	174,731	37,960	55,177	49,885	17,150	24,890	32,684	36,849	6,187

See last page for footnotes.

Table 3. Summary of Base/Neutral Compounds in Ground Water, Krummrich Plant, Sauget, Illinois.

Well Number:	GM-31A	GM-31A	GM-31A	GM-31A	GM-31A	GM-31A	GM-31A	GM-31A	GM-31A
Date:	5/88*	11/88	11/88 *	11/88	11/88 *	11/89	11/89 *	11/90	11/90*
Laboratory:	ETC	ETC	ETC	SL	SL	ETC	ETC	ETC	ETC
USEPA Priority Pollutant Base/Neutral Extractable Organic Compounds concentrations are in ug/L									
Acenaphthene	<2.0	<100	<200	<100	<100	<1.9	<2.0	<19	<20
Acenapthylene	<3.7	<190	<360	<100	<100	<3.6	<3.6	<35	<38
Anthracene	<2.0	<100	<200	<100	<100	<1.9	<2.0	<19	<20
Benzidine	<46	<2,300	<4,500	<800	<800	<45	<45	<440	<470
Benzo (a) anthracene	<8.2	<410	<800	<100	<100	<8.0	<8.0	<78	<84
Benzo (a) pyrene	<2.6	<130	<260	<100	<100	<2.6	<2.6	<25	<27
Benzo (b) fluoroanthene	<5.0	<260	<490	<100	<100	<4.9	<4.9	<48	<52
Benzo (ghi) perylene	<4.3	<220	<420	<100	<100	<4.2	<4.2	<41	<44
Benzo (k) fluoranthene	<2.6	<130	<260	<100	<100	<2.6	<2.6	<25	<27
Bis (2-chloroethoxy) methane	<5.5	<280	<550	<100	<100	<5.4	<5.5	<53	<57
Bis (2-chloroethyl) ether	<6.0	<300	<590	<100	<100	<5.8	<5.9	<57	<61
Bis (2-chloroisopropyl) ether	<6.0	<300	<590	<100	<100	<5.8	<5.9	<57	<61
Bis (2-ethylhexyl) phthalate	<10	<530	<1,000	<100	<100	<10	<10	<100	<110
4-Bromophenyl phenyl ether	<2.0	<100	<200	<100	<100	<1.9	<2.0	<19	<20
Butyl benzyl phthalate	<10	<530	<1,000	<100	<100	<10	<10	<100	<110
2-Chloronaphthalene	<2.0	<100	<200	<100	<100	<1.9	<2.0	<19	<20
4-Chlorophenyl phenyl ether	<4.4	<220	<430	<100	<100	<4.3	<4.3	<42	<45
Chrysene	<2.6	<130	<260	<100	<100	<2.6	<2.6	<25	<27
Dibenzo (a,h) anthracene	<10	<530	<1,000	<100	<100	<10	<10	<25	<27
1,2-Dichlorobenzene	23.3	243	<200	<100	<100	42.8	37.6	41.1	40.5
1,3-Dichlorobenzene	<2.0	<100	<200	<100	<100	<1.9	<2.0	<19	<20
1,4-Dichlorobenzene	11.8	<230	<450	<100	<100	15.7	15.0	<44	<47
3,3-Dichlorobenzidine	<17	<880	<1,700	<200	<200	<17	<17	<165	<177
Diethyl phthalate	<10	<530	<1,000	<100	<100	<10	<10	<100	<110
Dimethyl phthalate	<10	<530	<1,000	<100	<100	<10	<10	<100	<110
Di-n-butyl phthalate	<10	<530	<1,000	<100	<100	<10	<10	<100	<110
2,4-Dinitrotoluene	<6.0	<300	<590	<100	<100	<5.8	<5.9	<57	<61
2,6-Dinitrotoluene	<2.0	<100	<200	<100	<100	<1.9	<2.0	<19	<20
Di-n-octyl phthalate	<10	<530	<1,000	<100	<100	<10	<10	<100	<110
1,2-Diphenylhydrazine	<10	<530	<1,000	<100	<100	<10	<10	<100	<110
Fluoranthene	<2.3	<120	<230	<100	<100	<2.2	<2.3	<22	<24
Fluorene	<2.0	<100	<200	<100	<100	<1.9	<2.0	<19	<20
Hexachlorobenzene	<2.0	<100	<200	<100	<100	<1.9	<2.0	<19	<20
Hexachlorobutadiene	<0.9	<48	<93	<100	<100	<.92	<.93	<9.0	<9.7
Hexachlorocyclopentadiene	<10	<530	<1,000	<100	<100	<10	<10	<100	<110
Hexachloroethane	<1.7	<85	<160	<100	<100	<1.6	<1.6	<16	<17
Indeno (1,2,3-c,d) pyrene	<4.9	<250	<480	<100	<100	<4.8	<4.8	<37	<40
Isophorone	<2.3	<120	<230	<100	<100	<2.2	<2.3	<22	<24
Naphthalene	<1.7	<85	<160	<100	<100	<1.6	<1.6	<16	<17
Nitrobenzene	75.9	217	<200	290	250	129	114	90.9	64.5
n-Nitrosodimethylamine	<10	<530	<1,000	<100	<100	<10	<10	<100	<110
n-Nitrosodi-n-propylamine	<10	<530	<1,000	<100	<100	<10	<10	<100	<110
n-Nitrosodiphenylamine	<2.0	<100	<200	<100	<100	<1.9	<2.0	<19	<20
Phenanthrene	<5.7	<290	<560	<100	<100	<5.5	<5.6	<54	<58
Pyrene	<2.0	<100	<200	<100	<100	<1.9	<2.0	<19	<20
1,2,4-Trichlorobenzene	<2.0	<100	<200	<100	<100	<1.9	<2.0	<19	<20
Sub Total 1	111	460	0		250	188	167	132	105

See last page for footnotes.

Table 3. Summary of Base/Neutral Compounds in Ground Water, Krummrich Plant, Sauget, Illinois.

Well Number:	GM-31A	GM-31A	GM-31A	GM-31A	GM-31A	GM-31A	GM-31A	GM-31A	GM-31A
Date:	5/88*	11/88	11/88 *	11/88	11/88 *	11/89	11/89 *	11/90	11/90*
Laboratory:	ETC	ETC	ETC	SL	SL	ETC	ETC	ETC	ETC
Miscellaneous Base/Neutral Extractable Organic Compounds concentrations are in ug/L									
2,4-and 3,4-Dinitrochlorobenzene	1,250	2,700	2,690	1,500	2,700	157	278	1,480	1,470
2-Nitroaniline	16.3	<530	<1,000	<500	<500	13.8	13.1	<100	<110
4-Nitroaniline	<10	<530	<1,000	<500	<500	<10	<10	<100	<110
2-Nitrochlorobenzene	723	596	<1,000	590	530	200	175	410	381
3-Nitrochlorobenzene	NA	NA	NA	NA	NA	NA	NA	NA	NA
4-Nitrochlorobenzene	2,330	3,200	5,510	3,700	3,000	798	754	1170	1060
4-Nitrodiphenylamine	<10	<530	<1,000	<200	<200	<10	<10	<100	<110
Triphenyl phosphate	<10	<530	<1,000	<100	<100	<10	<10	<100	<110
2,3,7,8-Tetrachloro-dibenzo-p-dioxin	NA	NA	NA	NA	NA	NA	NA	NA	NA
2-Nitrobiphenyl	<10	<530	<1,000	280	230	274	291	293	252
4-Nitrobiphenyl	<10	<530	<1,000	<100	<100	<10	<10	<100	<110
Benzyl alcohol	NA	NA	NA	NA	NA	NA	NA	NA	NA
Aniline	NA	NA	NA	NA	NA	NA	NA	<100	<110
4-Chloroaniline	NA	NA	NA	NA	NA	NA	NA	NA	NA
2-Methylnaphthalene	NA	NA	NA	NA	NA	NA	NA	NA	NA
N-nitroaniline	NA	NA	NA	NA	NA	NA	NA	NA	NA
Dibenzofuran	NA	NA	NA	NA	NA	NA	NA	NA	NA
3-Chloroaniline	NA	NA	NA	NA	NA	NA	NA	NA	NA
2-Chloroaniline	NA	NA	NA	NA	NA	NA	NA	NA	NA
Sub Total 2	4,319	6,496	8,200	6,070	6,460	1,443	1,511	3,353	3,163
Total Base/Neutral Compounds	4,430	6,956	8,200	6,360	6,710	1,630	1,678	3,485	3,268

See last page for footnotes.

Table 3. Summary of Base/Neutral Compounds in Ground Water, Krummrich Plant, Sauget, Illinois.

Well Number:	GM-54A	GM-54A	GM-54A	GM-54B	GM-54B	GM-54B	GM-54B	GM-54B	GM-54B	GM-54B
Date:	11/87	5/88	9/94	11/87	5/88	11/88	5/89	11/89	11/90	11/91
Laboratory:	ETC	ETC	SL	ETC	ETC	ETC	ETC	ETC	ETC	ETC
USEPA Priority Pollutant Base/Neutral Extractable Organic Compounds concentrations are in ug/L										
Acenaphthene	<2.0	<2.1	<10	<2.1	<2.0	<2.1	<2.2	<1.9	<1.9	<1.9
Acenapthylene	<3.7	<3.8	<10	<3.8	<3.7	<3.9	<4.0	<3.6	<3.5	<3.5
Anthracene	<2.0	<2.1	<10	<2.1	<2.0	<2.1	<2.2	<1.9	<1.9	<1.9
Benzidine	<46	<48	<80	<48	<47	<49	<51	<45	<44	<44
Benzo (a) anthracene	<8.2	<8.5	<10	<8.5	<8.3	<8.7	<9.0	<8.0	<7.8	<7.9
Benzo (a) pyrene	<2.6	<2.7	<10	<2.7	<2.7	<2.8	<2.9	<2.6	<2.5	<2.5
Benzo (b) fluoroanthene	<11	<5.2	<10	<11	<5.1	<5.3	<5.5	<4.9	<4.8	<4.8
Benzo (ghi) perylene	<4.3	<4.5	<10	<4.5	<4.4	<4.6	<4.7	<4.2	<4.1	<4.1
Benzo (k) fluoranthene	<3.7	<2.7	<10	<3.8	<2.7	<2.8	<2.9	<2.6	<2.5	<2.5
Bis (2-chloroethoxy) methane	<5.6	<5.8	<10	<5.8	<5.6	<5.9	<6.1	<5.4	<5.3	<5.4
Bis (2-chloroethyl) ether	<6.0	<6.2	<10	<6.2	<6.1	<6.3	<6.6	<5.8	<5.7	<5.8
Bis (2-chloroisopropyl) ether	<6.0	<6.2	<10	<6.2	<6.1	<6.3	<6.6	<5.8	<5.7	<5.8
Bis (2-ethylhexyl) phthalate	<11	<11	<10	18.4	<11	<11	<11	33.1	11.4	<10
4-Bromophenyl phenyl ether	<2.0	<2.1	<10	<2.1	<2.0	<2.1	<2.2	<1.9	<1.9	<1.9
Butyl benzyl phthalate	<11	<11	<10	<11	<11	<11	<11	<10	<10	<10
2-Chloronaphthalene	<2.0	<2.1	<10	<2.1	<2.0	<2.1	<2.2	<1.9	<1.9	<1.9
4-Chlorophenyl phenyl ether	<4.4	<4.6	<10	<4.6	<4.5	<4.7	<4.8	<4.3	<4.2	<4.2
Chrysene	<2.6	<2.7	<10	<2.7	<2.7	<2.8	<2.9	<2.6	<2.5	<2.5
Dibenzo (a,h) anthracene	<11	<11	<10	<11	<11	<11	<11	<10	<2.5	<2.5
1,2-Dichlorobenzene	<2.0	<2.1	<10	<2.1	<2.0	<2.1	<2.2	<1.9	<1.9	<1.9
1,3-Dichlorobenzene	<2.0	<2.1	<10	<2.1	<2.0	<2.1	<2.2	<1.9	<1.9	<1.9
1,4-Dichlorobenzene	<4.6	<4.8	<10	<4.8	<4.7	<4.9	<5.1	<4.5	<4.4	<4.4
3,3-Dichlorobenzidine	<17	<18	<20	<18	<18	<18	<19	<17	<16.5	<16.7
Diethyl phthalate	<11	<11	<10	<11	<11	<11	<11	<10	<10	<10
Dimethyl phthalate	<11	<11	<10	<11	<11	<11	<11	<10	<10	<10
Di-n-butyl phthalate	<11	<11	<10	<11	<11	<11	<11	<10	<10	<10
2,4-Dinitrotoluene	<6.0	<6.2	<10	<6.2	<6.1	<6.3	<6.6	<5.8	<5.7	<5.8
2,6-Dinitrotoluene	<2.0	<2.1	<10	<2.1	<2.0	<2.1	<2.2	<1.9	<1.9	<1.9
Di-n-octyl phthalate	<11	<11	<10	50.4	<11	<11	<11	<10	<10	<10
1,2-Diphenylhydrazine	<11	<11	<10	<11	<11	<11	<11	<10	<10	<10
Fluoranthene	<2.3	<2.4	<10	<2.4	<2.3	<2.4	<2.5	<2.2	<2.2	<2.2
Fluorene	<2.0	<2.1	<10	<2.1	<2.0	<2.1	<2.2	<1.9	<1.9	<1.9
Hexachlorobenzene	<2.0	<2.1	<10	<2.1	<2.0	<2.1	<2.2	<1.9	<1.9	<1.9
Hexachlorobutadiene	<.95	<1.0	<10	<.98	<1.0	<1.0	<1.0	<.92	<90	<.91
Hexachlorocyclopentadiene	<11	<11	<10	<11	<11	<11	<11	<10	<10	<10
Hexachloroethane	<1.7	<1.7	<10	<1.7	<1.7	<1.8	<1.8	<1.6	<1.6	<1.6
Indeno (1,2,3-c,d) pyrene	<4.9	<5.1	<10	<5.1	<5.0	<5.2	<5.4	<4.8	<3.7	<3.7
Isophorone	<2.3	<2.4	<10	<2.4	<2.3	<2.4	<2.5	<2.2	<2.2	<2.2
Naphthalene	<1.7	<1.7	<10	<1.7	<1.7	<1.8	<1.8	<1.6	<1.6	<1.6
Nitrobenzene	<2.0	<2.1	<10	<2.1	<2.0	<2.1	<2.2	<1.9	<1.9	<1.9
n-Nitrosodimethylamine	<11	<11	<10	<11	<11	<11	<11	<10	<10	<10
n-Nitrosodi-n-propylamine	<11	<11	<10	<11	<11	<11	<11	<10	<10	<10
n-Nitrosodiphenylamine	<2.0	<2.1	<10	<2.1	<2.0	<2.1	<2.2	<1.9	<1.9	<1.9
Phenanthrene	<5.7	<5.9	<10	<5.9	<5.7	<6.0	<6.2	<5.5	<5.4	<5.5
Pyrene	<2.0	<2.1	<10	<2.1	<2.0	<2.1	<2.2	<1.9	<1.9	<1.9
1,2,4-Trichlorobenzene	<2.0	<2.1	<10	<2.1	<2.0	<2.1	<2.2	<1.9	<1.9	<1.9
Sub Total 1	0	0	0		0	0	0	33	11	0

See last page for footnotes.

Table 3. Summary of Base/Neutral Compounds in Ground Water, Krummrich Plant, Sauget, Illinois.

Well Number:	GM-54A	GM-54A	GM-54A	GM-54B	GM-54B	GM-54B	GM-54B	GM-54B	GM-54B	GM-54B
Date:	11/87	5/88	9/94	11/87	5/88	11/88	5/89	11/89	11/90	11/91
Laboratory:	ETC	ETC	SL	ETC	ETC	ETC	ETC	ETC	ETC	ETC
Miscellaneous Base/Neutral Extractable Organic Compounds concentrations are in ug/L										
2,4-and 3,4-Dinitrochlorobenzene	<11	<11	<10	<11	<11	<11	<11	<10	<10	<10
2-Nitroaniline	<11	<11	NA	<11	<11	<11	<11	<10	<10	<10
4-Nitroaniline	<11	<11	NA	<11	<11	<11	<11	NA	<10	<10
2-Nitrochlorobenzene	<11	<11	<10	24.7	<11	<11	<10	<10	<10	<10
3-Nitrochlorobenzene	NA	NA	<10	NA	NA	NA	NA	NA	NA	NA
4-Nitrochlorobenzene	<11	<11	<10	<11	<11	<11	<10	NA	<10	<10
4-Nitrodiphenylamine	<11	<11	<10	<11	<11	<11	<11	<10	<10	<10
Triphenyl phosphate	NA	NA	NA	NA	NA	NA	NA	<10	<10	<10
2,3,7,8-Tetrachloro-dibenzo-p-dioxin	NA	NA	NA	NA	NA	NA	NA	NA	NA	NA
2-Nitrobiphenyl	<11	<11	<10	<11	<11	<11	<11	<10	<10	<10
4-Nitrobiphenyl	<11	<11	<10	<11	<11	<11	<11	<10	<10	<10
Benzyl alcohol	NA	NA	NA	NA	NA	NA	NA	NA	NA	NA
Aniline	NA	NA	<50	NA	NA	NA	NA	NA	<10	<10
4-Chloroaniline	NA	NA	<10	NA	NA	NA	NA	NA	NA	NA
2-Methylnaphthalene	NA	NA	NA	NA	NA	NA	NA	NA	NA	NA
N-nitroaniline	NA	NA	NA	NA	NA	NA	NA	NA	NA	NA
Dibenzofuran	NA	NA	NA	NA	NA	NA	NA	NA	NA	NA
3-Chloroaniline	NA	NA	<10	NA	NA	NA	NA	NA	NA	NA
2-Chloroaniline	NA	NA	<10	NA	NA	NA	NA	NA	NA	NA
Sub Total 2	0	0	0	25	0	0	0	0	0	0
Total Base/Neutral Compounds	0	0	0	94	0	0	0	33	11	0

See last page for footnotes.

Table 3. Summary of Base/Neutral Compounds in Ground Water, Krummrich Plant, Sauget, Illinois.

Well Number:	GM-54B	GM-54B	GM-55C	GM-55C	GM-55C	GM-55C	GM-55C	GM-55C	GM-55C	GM-55C
Date:	11/92	9/94	11/87	5/88	11/88	11/89	11/90	11/91	11/92	11/92*
Laboratory:	ETC	SL	ETC	ETC	ETC	ETC	ETC	ETC	ETC	ETC
USEPA Priority Pollutant Base/Neutral Extractable Organic Compounds concentrations are in ug/L										
Acenaphthene	<1.9	<10	<2.0	<45	<210	<230	<19	<200	<190	<190
Acenapthylene	<3.5	<10	<3.6	<82	<390	<420	<35	<360	<350	<350
Anthracene	<1.9	<10	<2.0	<45	<210	<230	<19	<200	<190	<190
Benzidine	<44	<80	<46	<1,000	<4,900	<5300	<440	<4500	<4400	<4400
Benzo (a) anthracene	<7.9	<10	<8.1	<180	<880	<940	<78	<800	<790	<780
Benzo (a) pyrene	<2.5	<10	<2.6	<59	<280	<300	<25	<260	<250	<250
Benzo (b) fluoroanthene	<4.8	<10	<10	<110	<540	<580	<48	<490	<480	<480
Benzo (ghi) perylene	<4.1	<10	<4.3	<96	<460	<490	<41	<420	<410	<410
Benzo (k) fluoranthene	<2.5	<10	<3.6	<59	<280	<300	<25	<260	<250	<250
Bis (2-chloroethoxy) methane	<5.4	<10	<5.5	<120	<600	<640	<53	<550	<540	<530
Bis (2-chloroethyl) ether	<5.8	<10	5.9	<130	<640	<690	<57	<590	<580	<570
Bis (2-chloroisopropyl) ether	<5.8	<10	5.9	<130	<640	<690	<57	<590	<580	<570
Bis (2-ethylhexyl) phthalate	<10	50	<10	<240	<1,100	<1200	<100	<1,000	<1,000	<1,000
4-Bromophenyl phenyl ether	<1.9	<10	<2.0	<45	<210	<230	<19	<200	<190	<190
Butyl benzyl phthalate	<10	<10	<10	<240	<1,100	<1200	<100	<1,000	<1,000	<1,000
2-Chloronaphthalene	<1.9	<10	<2.0	<45	<210	<230	<19	<200	<190	<190
4-Chlorophenyl phenyl ether	<4.2	<10	<4.4	<99	<470	<510	<42	<430	<420	<420
Chrysene	<2.5	<10	<2.6	<59	<280	<300	<25	<260	<250	<250
Dibenzo (a,h) anthracene	<2.5	<10	<10	<240	<1,100	<1200	<25	<260	<250	<250
1,2-Dichlorobenzene	<1.9	<10	6.00	693	4,030	4,760	2,390	8,730	7910	8110
1,3-Dichlorobenzene	<1.9	<10	<2.0	<45	<210	<230	<19	<200	<190	<190
1,4-Dichlorobenzene	<4.4	<10	38.7	311	<490	<530	<44	<450	<440	<440
3,3-Dichlorobenzidine	<16.7	<20	<17	<390	<1,900	<2000	<165	<1700	<1670	<1650
Diethyl phthalate	<10	<10	<10	<240	<1,100	<1200	<100	<1,000	<1,000	<1,000
Dimethyl phthalate	<5.1	<10	<10	<240	<1,100	<1200	<100	<1,000	<510	<500
Di-n-butyl phthalate	<10	<10	<10	<240	<1,100	<1200	<100	<1,000	<1,000	<1,000
2,4-Dinitrotoluene	<5.8	<10	<5.9	<130	<640	<690	<57	<590	<580	<570
2,6-Dinitrotoluene	<1.9	<10	<2.0	<45	<210	<230	<19	<200	<190	<190
Di-n-octyl phthalate	<10	<10	<10	<240	<1,100	<1200	<100	<1,000	<1,000	<1,000
1,2-Diphenylhydrazine	<10	<10	<10	<240	<1,100	<1200	<100	<1,000	<1,000	<1,000
Fluoranthene	<2.2	<10	4.21	<52	<250	<270	<22	<230	<220	<220
Fluorene	<1.9	<10	<2.0	<45	<210	<230	<19	<200	<190	<190
Hexachlorobenzene	<1.9	<10	<2.0	<45	<210	<230	<19	<200	<190	<190
Hexachlorobutadiene	<.91	<10	<.94	<21	<100	<110	<9.0	<93	<91	<90
Hexachlorocyclopentadiene	<10	<10	<10	<240	<1,100	<1200	<100	<1,000	<1,000	<1,000
Hexachloroethane	<1.6	<10	<1.7	<38	<180	<190	<16	<160	<160	<160
Indeno (1,2,3-c,d) pyrene	<3.7	<10	<4.9	<110	<530	<570	<37	<380	<370	<370
Isophorone	<2.2	<10	<2.3	<52	<250	<270	<22	<230	<220	<220
Naphthalene	<1.6	<10	<1.7	<38	<180	<190	<16	<160	<160	<160
Nitrobenzene	<1.9	<10	<2.0	<45	<210	<230	,19	<200	<190	<190
n-Nitrosodimethylamine	<10	<10	<10	<240	<1,100	<1200	<100	<1,000	<1,000	<1,000
n-Nitrosodi-n-propylamine	<10	<10	<10	<240	<1,100	<1200	<100	<1,000	<1,000	<1,000
n-Nitrosodiphenylamine	<1.9	<10	<2.0	<45	<210	<230	<19	<200	<190	<190
Phenanthrene	<5.5	<10	<5.6	<130	<610	<650	<54	<560	<550	<540
Pyrene	<1.9	<10	3.14	<45	<210	<230	<19	<200	<190	<190
1,2,4-Trichlorobenzene	<1.9	<10	<2.0	<45	<210	<230	<19	<200	<190	<190
Sub Total 1	0	50	64	1/	4,030	4,760	2,390	8,730	7,910	8,110

See last page for footnotes.

Table 3. Summary of Base/Neutral Compounds in Ground Water, Krummrich Plant, Sauget, Illinois.

Well Number:	GM-54B	GM-54B	GM-55C	GM-55C	GM-55C	GM-55C	GM-55C	GM-55C	GM-55C	GM-55C
Date:	11/92	9/94	11/87	5/88	11/88	11/89	11/90	11/91	11/92	11/92*
Laboratory:	ETC	SL	ETC	ETC	ETC	ETC	ETC	ETC	ETC	ETC
Miscellaneous Base/Neutral Extractable Organic Compounds concentrations are in ug/L										
2,4-and 3,4-Dinitrochlorobenzene	NA	<10	<10	<240	<1,100	<1200	<100	<1,000	<1,000	<1,000
2-Nitroaniline	NA	NA	<10	<240	<1,100	<1200	<100	<1,000	<1,000	<1,000
4-Nitroaniline	NA	NA	<10	<240	<1,100	<1200	<100	<1,000	<1,000	<1,000
2-Nitrochlorobenzene	<10	<10	<10	2,980	41,700	38,800	<100	42,300	116,000	99,000
3-Nitrochlorobenzene	NA	<10	NA	NA	NA	NA	NA	30,900	NA	NA
4-Nitrochlorobenzene	<10	<10	14.6	1,140	74,600	66,700	<100	34,800	115,000	99,200
4-Nitrodiphenylamine	<10	<10	<10	<240	<1,100	<1200	<100	<1,000	<1,000	<1,000
Triphenyl phosphate	NA	NA	<10	<240	<1,100	<1200	<100	<1,000	NA	NA
2,3,7,8-Tetrachloro-dibenzo-p-dioxin	NA	NA	NA	NA	NA	NA	NA	NA	NA	NA
2-Nitrobiphenyl	<10	<10	NA	<240	NA	<1200	NA	NA	NA	NA
4-Nitrobiphenyl	<10	<10	NA	<240	NA	<1200	NA	NA	<1,000	<1,000
Benzyl alcohol	NA	NA	NA	NA	NA	NA	NA	NA	NA	NA
Aniline	NA	<50	NA	NA	NA	1,220	24,800	<1,000	<1,000	<1,000
4-Chloroaniline	157	<10	NA	NA	NA	NA	NA	17,200	24,300	23,900
2-Methylnaphthalene	NA	NA	NA	NA	NA	NA	NA	NA	NA	NA
N-nitroaniline	NA	NA	NA	NA	NA	NA	NA	NA	NA	NA
Dibenzofuran	NA	NA	NA	NA	NA	NA	NA	NA	NA	NA
3-Chloroaniline	125	<10	NA	NA	NA	NA	NA	9,170	12,900	12,100
2-Chloroaniline	17.3	<10	NA	NA	NA	NA	NA	35,300	58,100	44,700
Sub Total 2	299	0	15	4,120	116,300	106,720	24,800	169,670	326,300	278,900
Total Base/Neutral Compounds	299	50	78	5,124	120,330	111,480	27,190	178,400	334,210	287,010

See last page for footnotes.

Table 3. Summary of Base/Neutral Compounds in Ground Water, Krummrich Plant, Sauget, Illinois.

Well Number:	GM-56C	GM-56C	GM-56C	GM-56C	GM-56C	GM-56C	GM-56C	GM-57C	GM-57C
Date:	11/87	5/88	11/88	11/88	11/89	11/90	11/91	11/87	11/87*
Laboratory:	ETC	ETC	ETC	SL	SL	ETC	ETC	ETC	ETC
USEPA Priority Pollutant Base/Neutral Extractable Organic Compounds concentrations are in ug/L									
Acenaphthene	<190	<120	<120	<100	<2.2	<200	<19	<210	<220
Acenapthylene	<360	<210	<210	<100	<4.0	<360	<35	<380	<400
Anthracene	<190	<120	<120	<100	<2.2	<200	<19	<210	<220
Benzidine	<4500	<2700	<2700	<800	<50	<4500	<440	<4800	<5100
Benzo (a) anthracene	<800	<480	<480	<100	<8.9	<800	<79	<860	<900
Benzo (a) pyrene	<260	<150	<150	<100	<2.8	<260	<25	<270	<290
Benzo (b) fluoroanthene	<1,000	<290	<290	<100	<5.5	<490	<48	<1,100	<1,100
Benzo (ghi) perylene	<420	<250	<250	<100	<4.7	<420	<41	<450	<470
Benzo (k) fluoranthene	<360	<150	<150	<100	<2.8	<260	<25	<380	<400
Bis (2-chloroethoxy) methane	<540	<320	<320	<100	<6.0	<550	<54	<580	<610
Bis (2-chloroethyl) ether	<580	<350	<350	<100	<6.5	<590	<58	<630	<660
Bis (2-chloroisopropyl) ether	<580	<350	<350	<100	<6.5	<590	<58	<630	<660
Bis (2-ethylhexyl) phthalate	<1,000	<610	<610	<100	<11	<1,000	<100	<1,100	<1,100
4-Bromophenyl phenyl ether	<190	<120	<120	<100	<2.2	<200	<19	<210	<220
Butyl benzyl phthalate	<1,000	<610	<610	<100	<11	<1,000	<100	<1,100	<1,100
2-Chloronaphthalene	<190	<120	<120	<100	<2.2	<200	<19	<210	<220
4-Chlorophenyl phenyl ether	<430	<260	<260	<100	<4.8	<430	<42	<460	<480
Chrysene	<260	<150	<150	<100	<2.8	<260	<25	<270	<290
Dibenzo (a,h) anthracene	<1,000	<610	<610	<100	<11	<260	<25	<1,100	<1,100
1,2-Dichlorobenzene	**1,570**	**880**	**1,260**	**1,000**	**693**	**1,100**	**204**	**638**	**575**
1,3-Dichlorobenzene	<190	<120	<120	<100	13.1	<200	<19	<210	<220
1,4-Dichlorobenzene	<450	<270	<270	120	96.8	<450	<44	<480	<510
3,3-Dichlorobenzidine	<1700	<1040	<1,000	<200	<19	<1700	<167	<1800	<1,900
Diethyl phthalate	<1,000	<610	<610	<100	<11	<1,000	<100	<1,100	<1,100
Dimethyl phthalate	<1,000	<610	<610	<100	<11	<1,000	<100	<1,100	<1,100
Di-n-butyl phthalate	<1,000	<610	<610	<100	<11	<1,000	<100	<1,100	<1,100
2,4-Dinitrotoluene	<580	<350	<350	<100	<6.5	<590	<58	<630	<660
2,6-Dinitrotoluene	<190	<120	<120	<100	<2.2	<200	<19	<210	<220
Di-n-octyl phthalate	<1,000	<610	<610	<100	<11	<1,000	<100	<1,100	<1,100
1,2-Diphenylhydrazine	<1,000	<610	<610	<100	<11	<1,000	<100	<1,100	<1,100
Fluoranthene	<220	<130	<130	<100	<2.5	<230	<22	<240	<250
Fluorene	<190	<120	<120	<100	<2.2	<200	<19	<210	<220
Hexachlorobenzene	<190	<120	<120	<100	<2.2	<200	<19	<210	<220
Hexachlorobutadiene	<92	<55	<55	<100	<1.0	<93	<9.1	<99	<100
Hexachlorocyclopentadiene	<1,000	<610	<610	<100	<11	<1,000	<100	<1,100	<1,100
Hexachloroethane	<160	<98	<98	<100	<1.8	<160	<16	<180	<180
Indeno (1,2,3-c,d) pyrene	<480	<290	<290	<100	<5.3	<380	<37	<520	<540
Isophorone	<220	<130	<130	<100	<2.5	<230	<22	<240	<250
Naphthalene	<160	<98	<98	<100	40.9	<160	19.7	<180	<180
Nitrobenzene	<190	<120	223	220	135	306	<19	430	449
n-Nitrosodimethylamine	<1,000	<610	<610	<100	<11	<1,000	<100	<1,100	<1,100
n-Nitrosodi-n-propylamine	<1,000	<610	<610	<100	<11	<1,000	<100	<1,100	<1,100
n-Nitrosodiphenylamine	<190	<120	<120	<100	<2.2	<200	<19	<210	<220
Phenanthrene	<550	<330	<330	<100	<6.1	<560	<55	<590	<620
Pyrene	<190	<120	<120	<100	<2.2	<200	<19	<210	<220
1,2,4-Trichlorobenzene	<190	<120	<120	<100	39.8	<200	<19	<210	<220
Sub Total 1	1,570	880	1,483	1,[illegible]	1,019	1,406	224	1,068	1,024

See last page for footnotes.

Table 3. Summary of Base/Neutral Compounds in Ground Water, Krummrich Plant, Sauget, Illinois.

Well Number:	GM-56C	GM-56C	GM-56C	GM-56C	GM-56C	GM-56C	GM-56C	GM-57C	GM-57C
Date:	11/87	5/88	11/88	11/88	11/89	11/90	11/91	11/87	11/87*
Laboratory:	ETC	ETC	ETC	SL	SL	ETC	ETC	ETC	ETC
Miscellaneous Base/Neutral Extractable Organic Compounds concentrations are in ug/L									
2,4-and 3,4-Dinitrochlorobenzene	<1,000	<610	<610	<100	<11	<1,000	<100	<1,100	<1,100
2-Nitroaniline	<1,000	<610	<610	<500	<11	<1,000	<100	<1,100	<1,100
4-Nitroaniline	<1,000	<610	<610	<500	<11	<1,000	<100	<1,100	<1,100
2-Nitrochlorobenzene	84,900	26,300	70,700	130,000	68,800	136,000	564	82,100	85,600
3-Nitrochlorobenzene	NA	NA	NA	NA	NA	NA	2,030	NA	NA
4-Nitrochlorobenzene	24,800	7,360	17,500	30,000	17,000	33,500	<100	21,400	21,700
4-Nitrodiphenylamine	<1,000	<610	<610	<200	<11	<1,000	<100	<1,100	<1,100
Triphenyl phosphate	<1,000	<610	<610	<100	<11	<1,000	<100	<1,100	<1,100
2,3,7,8-Tetrachloro-dibenzo-p-dioxin	NA	NA	NA	NA	NA	NA	NA	NA	NA
2-Nitrobiphenyl	NA	<610	NA	NA	<11	NA	NA	<1,100	<1,100
4-Nitrobiphenyl	NA	<610	NA	NA	<11	NA	NA	<1,100	<1,100
Benzyl alcohol	NA	NA	NA	NA	NA	NA	NA	NA	NA
Aniline	NA	NA	NA	NA	34,300	23,100	20,600	NA	NA
4-Chloroaniline	NA	NA	NA	NA	NA	NA	56,900	NA	NA
2-Methylnaphthalene	NA	NA	NA	NA	NA	NA	NA	NA	NA
N-nitroaniline	NA	NA	NA	NA	NA	NA	NA	NA	NA
Dibenzofuran	NA	NA	NA	NA	NA	NA	NA	NA	NA
3-Chloroaniline	NA	NA	NA	NA	NA	NA	25,200	NA	NA
2-Chloroaniline	NA	NA	NA	NA	NA	NA	183,000	NA	NA
Sub Total 2	109,700	33,660	88,200	160,000	120,100	192,600	288,294	103,500	107,300
Total Base/Neutral Compounds	111,270	34,540	89,683	161,340	121,119	194,006	288,518	104,568	108,324

See last page for footnotes.

Table 3. Summary of Base/Neutral Compounds in Ground Water, Krummrich Plant, Sauget, Illinois.

Well Number:	GM-57C	GM-57C	GM-57C	GM-57C	GM-57C	GM-57C	GM-57C	GM-57C	GM-57C
Date:	5/88	5/88*	11/88	11/88	3/89	11/89	11/89 *	11/90	11/90*
Laboratory:	ETC	ETC	ETC	SL	ETC	ETC	ETC	ETC	ETC
USEPA Priority Pollutant Base/Neutral Extractable Organic Compounds concentrations are in ug/L									
Acenaphthene	<96	<98	<210	<100	<20	<23	<20	<96	<20
Acenapthylene	<180	<180	<390	<100	<37	<42	<37	<180	<36
Anthracene	<96	<98	<210	<100	<20	<23	<20	<96	<20
Benzidine	<2,200	<2,300	<4,900	<800	<460	<520	<460	<2,200	<450
Benzo (a) anthracene	<390	<400	<870	<100	<82	<93	<82	<390	<80
Benzo (a) pyrene	<130	<130	<280	<100	<26	<30	<26	<130	<26
Benzo (b) fluoroanthene	<240	<250	<530	<100	<51	<57	<51	<240	<49
Benzo (ghi) perylene	<210	<210	<460	<100	<43	<49	<43	<210	<42
Benzo (k) fluoranthene	<130	<130	<280	<100	<26	<30	<26	<130	<26
Bis (2-chloroethoxy) methane	<270	<270	<590	<100	<56	<63	<56	<270	<55
Bis (2-chloroethyl) ether	<290	<290	<630	<100	<60	<68	<60	<290	<59
Bis (2-chloroisopropyl) ether	<290	<290	<630	<100	<60	<68	<60	<290	<59
Bis (2-ethylhexyl) phthalate	<510	<520	<1,100	<100	<110	<120	<110	<510	<100
4-Bromophenyl phenyl ether	<96	<98	<210	<100	<20	<23	<20	<96	<20
Butyl benzyl phthalate	<510	<520	<1,100	<100	<110	<120	<110	<510	<100
2-Chloronaphthalene	<96	<98	<210	<100	<20	<23	<20	<96	<20
4-Chlorophenyl phenyl ether	<210	<220	<470	<100	<44	<50	<44	<210	<43
Chrysene	<130	<130	<280	<100	<26	<30	<26	<130	<26
Dibenzo (a,h) anthracene	<510	<520	<1,100	<100	<110	<120	<110	<130	<26
1,2-Dichlorobenzene	837	922	650	540	598	562	591	555	599
1,3-Dichlorobenzene	<96	<98	<210	<100	<20	<23	<20	<96	<20
1,4-Dichlorobenzene	387	395	<490	320	298	413	449	456	447
3,3-Dichlorobenzidine	<830	<850	<1,800	<200	<170	<200	<170	<833	<170
Diethyl phthalate	<510	<520	<1,100	<100	<110	<120	<110	<510	<100
Dimethyl phthalate	<510	<520	<1,100	<100	<110	<120	<110	<510	<100
Di-n-butyl phthalate	<510	<520	<1,100	<100	<110	<120	<110	<510	<100
2,4-Dinitrotoluene	<290	<290	<630	<100	<60	<68	<60	<290	<59
2,6-Dinitrotoluene	<96	<98	<210	<100	<20	<23	<20	<96	<20
Di-n-octyl phthalate	<510	<520	<1,100	<100	<110	<120	<110	<510	<100
1,2-Diphenylhydrazine	<510	<520	<1,100	<100	<110	<120	<110	<510	<100
Fluoranthene	<110	<110	<240	<100	<23	<26	<23	<110	<23
Fluorene	<96	<98	<210	<100	<20	<23	<20	<96	<20
Hexachlorobenzene	<96	<98	<210	<100	<20	<23	<20	<96	<20
Hexachlorobutadiene	<45	<46	<100	<100	<9.5	<11	<9.5	<45	<9.3
Hexachlorocyclopentadiene	<510	<520	<1,100	<100	<110	<120	<110	<510	<100
Hexachloroethane	<81	<82	<180	<100	<17	<19	<17	<81	<16
Indeno (1,2,3-c,d) pyrene	<240	<240	<520	<100	<49	<56	<49	<190	<38
Isophorone	<110	<110	<240	<100	<23	<26	<23	<110	<23
Naphthalene	<81	<82	<180	<100	<17	35.5	34.9	<81	22.2
Nitrobenzene	<96	<98	321	260	<20	579	219	674	1010
n-Nitrosodimethylamine	<510	<520	<1,100	<100	<110	<120	<110	<510	<100
n-Nitrosodi-n-propylamine	<510	<520	<1,100	<100	<110	<120	<110	<510	<100
n-Nitrosodiphenylamine	<96	<98	<210	<100	<20	<23	<20	<96	<20
Phenanthrene	<270	<280	<600	<100	<57	<64	<57	<270	<56
Pyrene	<96	<98	<210	<100	<20	<23	<20	<96	<20
1,2,4-Trichlorobenzene	<96	<98	<210	<100	<20	98.8	95.7	<96	59.0
Sub Total 1	1,224	1,317	971	1,(	896	1,688	1,390	1,685	2,137

See last page for footnotes.

Table 3. Summary of Base/Neutral Compounds in Ground Water, Krummrich Plant, Sauget, Illinois.

Well Number:	GM-57C	GM-57C	GM-57C	GM-57C	GM-57C	GM-57C	GM-57C	GM-57C	GM-57C
Date:	5/88	5/88*	11/88	11/88	3/89	11/89	11/89 *	11/90	11/90*
Laboratory:	ETC	ETC	ETC	SL	ETC	ETC	ETC	ETC	ETC
Miscellaneous Base/Neutral Extractable Organic Compounds concentrations are in ug/L									
2,4-and 3,4-Dinitrochlorobenzene	<510	<520	<1,100	<100	<110	<120	<110	<510	<100
2-Nitroaniline	<510	<520	<1,100	<500	<110	<120	<110	<510	<100
4-Nitroaniline	<510	<520	<1,100	<500	<110	<120	<110	<510	<100
2-Nitrochlorobenzene	124,000	142,000	219,000	100,000	112,000	109,000	123,000	116,000	169,000
3-Nitrochlorobenzene	NA	NA	NA	NA	NA	NA	NA	NA	NA
4-Nitrochlorobenzene	25,800	30,600	40,500	31,000	33,900	21,400	21,200	26,300	33,000
4-Nitrodiphenylamine	<510	<520	<1,100	<200	<110	<120	<110	<510	<100
Triphenyl phosphate	<510	<520	<1,100	<100	<110	<120	<110	<510	<100
2,3,7,8-Tetrachloro-dibenzo-p-dioxin	NA	NA	NA	NA	NA	NA	NA	NA	NA
2-Nitrobiphenyl	<510	<520	NA	NA	NA	<120	NA	NA	NA
4-Nitrobiphenyl	<510	<520	NA	NA	NA	<120	NA	NA	NA
Benzyl alcohol	NA	NA	NA	NA	NA	NA	NA	NA	NA
Aniline	NA	NA	NA	NA	NA	38,800	44,800	35,200	41,300
4-Chloroaniline	NA	NA	NA	NA	NA	NA	NA	NA	NA
2-Methylnaphthalene	NA	NA	NA	NA	NA	NA	NA	NA	NA
N-nitroaniline	NA	NA	NA	NA	NA	NA	NA	NA	NA
Dibenzofuran	NA	NA	NA	NA	NA	NA	NA	NA	NA
3-Chloroaniline	NA	NA	NA	NA	NA	NA	NA	NA	NA
2-Chloroaniline	NA	NA	NA	NA	NA	NA	NA	NA	NA
Sub Total 2	149,800	172,600	259,500	131,000	145,900	169,200	189,000	177,500	243,300
Total Base/Neutral Compounds	151,024	173,917	260,471	132,120	146,796	170,888	190,390	179,185	245,437

See last page for footnotes.

Table 3. Summary of Base/Neutral Compounds in Ground Water, Krummrich Plant, Sauget, Illinois.

Well Number:	GM-57C	GM-57C	GM-58A	GM-58A	GM-58A	GM-58A	GM-58A	GM-58A	GM-58A	GM-58A
Date:	11/91	11/91*	11/87	5/88	11/88	11/89	11/90	11/91	11/92	9/94
Laboratory:	ETC	ETC	ETC	ETC	ETC	ETC	ETC	ETC	ETC	SL
USEPA Priority Pollutant Base/Neutral Extractable Organic Compounds concentrations are in ug/L										
Acenaphthene	<95	<95	<1.9	<2.2	<2.0	<2.0	<1.9	<2.2	<1.9	<10
Acenapthylene	<180	<180	<3.6	<4.0	<3.6	<3.6	<3.5	<4.1	<3.5	<10
Anthracene	<95	<95	<1.9	<2.2	<2.0	<2.0	<1.9	<2.2	<1.9	<10
Benzidine	<2200	<2200	<45	<50	<45	<46	<44	<52	<44	<80
Benzo (a) anthracene	<390	<390	<8.0	<8.9	<8.0	<8.1	<7.8	<9.2	<7.9	<10
Benzo (a) pyrene	<130	<130	<2.6	<2.8	<2.6	<2.6	<2.5	<2.9	<2.5	<10
Benzo (b) fluoroanthene	<240	<240	<10	<5.5	<4.9	<5.0	<4.8	<5.6	<4.8	<10
Benzo (ghi) perylene	<210	<210	<4.2	<4.7	<4.2	<4.3	<4.1	<4.8	<4.1	<10
Benzo (k) fluoranthene	<130	<130	<3.6	<2.8	<2.6	<2.6	<2.5	<2.9	<2.5	<10
Bis (2-chloroethoxy) methane	<270	<270	<5.4	<6.0	<5.5	<5.5	<5.3	<6.2	<5.4	<10
Bis (2-chloroethyl) ether	<290	<290	<5.8	<6.5	<5.9	<5.9	<5.7	<6.7	<5.8	<10
Bis (2-chloroisopropyl) ether	<290	<290	<5.8	<6.5	<5.9	<5.9	<5.7	<6.7	<5.8	<10
Bis (2-ethylhexyl) phthalate	<500	<500	<10	<11	<10	<10	<10	<12	<10	<10
4-Bromophenyl phenyl ether	<95	<95	<1.9	<2.2	<2.0	<2.0	<1.9	<2.2	<1.9	<10
Butyl benzyl phthalate	<500	<500	<10	<11	<10	<10	<10	<12	<10	<10
2-Chloronaphthalene	<95	<95	<1.9	<2.2	<2.0	<2.0	<1.9	<2.2	<1.9	<10
4-Chlorophenyl phenyl ether	<210	<210	<4.3	<4.8	<4.3	<4.4	<4.2	<4.9	<4.2	<10
Chrysene	<130	<130	<2.6	<2.8	<2.6	<2.6	<2.5	<2.9	<2.5	<10
Dibenzo (a,h) anthracene	<130	<130	<10	<11	<10	<10	<2.5	<2.9	<2.5	<10
1,2-Dichlorobenzene	674	709	<1.9	<2.2	<2.0	<2.0	<1.9	<2.2	<1.9	<10
1,3-Dichlorobenzene	<95	<95	<1.9	<2.2	<2.0	<2.0	<1.9	<2.2	<1.9	<10
1,4-Dichlorobenzene	312	346	<4.5	<5.0	<4.5	<4.6	<4.4	<5.2	<4.4	<10
3,3-Dichlorobenzidine	<825	<825	<17	<19	<17	<17	<16.5	<19.4	<16.7	<20
Diethyl phthalate	<500	<500	<10	<11	<10	<10	<10	<12	<10	<10
Dimethyl phthalate	<500	<500	<10	<11	<10	<10	<10	<12	<5.1	<10
Di-n-butyl phthalate	<500	<500	<10	<11	<10	<10	<10	<12	<10	<10
2,4-Dinitrotoluene	<290	<290	<5.8	<6.5	<5.9	<5.9	<5.7	<6.7	<5.8	<10
2,6-Dinitrotoluene	<95	<95	<1.9	<2.2	<2.0	<2.0	<1.9	<2.2	<1.9	<10
Di-n-octyl phthalate	<500	<500	<10	<11	12.6	<10	<10	<12	<10	<10
1,2-Diphenylhydrazine	<500	<500	<10	<11	<10	<10	<10	<12	<10	<10
Fluoranthene	<110	<110	<2.2	<2.5	<2.3	<2.3	<2.2	<2.6	<2.2	<10
Fluorene	<95	<95	<1.9	<2.2	<2.0	<2.0	<1.9	<2.2	<1.9	<10
Hexachlorobenzene	<95	<95	<1.9	<2.2	<2.0	<2.0	<1.9	<2.2	<1.9	<10
Hexachlorobutadiene	<45	<45	<.92	<1.0	<0.93	<.94	<90	<1.1	<.91	<10
Hexachlorocyclopentadiene	<500	<500	<10	<11	<10	<10	<10	<12	<10	<10
Hexachloroethane	<80	<80	<1.6	<1.8	<1.6	<1.7	<1.6	<1.9	<1.6	<10
Indeno (1,2,3-c,d) pyrene	<190	<190	<4.8	<5.3	<4.8	<4.9	<3.7	<4.4	<3.7	<10
Isophorone	<110	<110	<2.2	<2.5	<2.3	<2.3	<2.2	<2.6	<2.2	<10
Naphthalene	<80	<80	<1.6	<1.8	<1.6	<1.7	<1.6	<1.9	<1.6	<10
Nitrobenzene	<95	<95	<1.9	<2.2	<2.0	3.30	4.15	<2.2	<1.9	<10
n-Nitrosodimethylamine	<500	<500	<10	<11	<10	<10	<10	<12	<10	<10
n-Nitrosodi-n-propylamine	<500	<500	<10	<11	<10	<10	<10	<12	<10	<10
n-Nitrosodiphenylamine	<95	<95	<1.9	<2.2	<2.0	<2.0	<1.9	<2.2	<1.9	<10
Phenanthrene	<270	<270	<5.5	<6.1	5.6	<5.6	<5.4	<6.4	<5.5	<10
Pyrene	<95	<95	<1.9	<2.2	<2.0	<2.0	<1.9	<2.2	<1.9	<10
1,2,4-Trichlorobenzene	<95	99.5	<1.9	<2.2	<2.0	<2.0	<1.9	<2.2	<1.9	<10
Sub Total 1	986	1,155	0		18	3	4	0	0	0

See last page for footnotes.

Table 3. Summary of Base/Neutral Compounds in Ground Water, Krummrich Plant, Sauget, Illinois.

Well Number:	GM-57C	GM-57C	GM-58A	GM-58A	GM-58A	GM-58A	GM-58A	GM-58A	GM-58A	GM-58
Date:	11/91	11/91*	11/87	5/88	11/88	11/89	11/90	11/91	11/92	9/94
Laboratory:	ETC	ETC	ETC	ETC	ETC	ETC	ETC	ETC	ETC	SL
Miscellaneous Base/Neutral Extractable Organic Compounds concentrations are in ug/L										
2,4-and 3,4-Dinitrochlorobenzene	<500	<500	31.0	<11	16.6	19.8	15.2	21.5	<10	<10
2-Nitroaniline	<500	<500	<10	<11	<10	<10	<10	<12	<10	NA
4-Nitroaniline	<500	<500	<10	<11	<10	<10	<10	<12	<10	NA
2-Nitrochlorobenzene	<500	<500	<10	14.1	12.9	13.8	67.6	<12	40.3	29
3-Nitrochlorobenzene	<500	<500	NA	NA	NA	NA	NA	NA	NA	<10
4-Nitrochlorobenzene	<500	<500	19.4	31.1	28.7	87.2	52.8	<12	<10	**
4-Nitrodiphenylamine	<500	<500	<10	<11	<10	<10	<10	<12	NA	<10
Triphenyl phosphate	<500	<500	<10	<11	<10	<10	<10	<12	<10	NA
2,3,7,8-Tetrachloro-dibenzo-p-dioxin	NA	NA	NA	NA	NA	NA	NA	NA	NA	NA
2-Nitrobiphenyl	NA	NA	<10	<11	<10	<10	<10	<12	<10	<10
4-Nitrobiphenyl	NA	NA	<10	<11	<10	<10	<10	<12	<10	<10
Benzyl alcohol	NA	NA	NA	NA	NA	NA	NA	NA	NA	NA
Aniline	31,100	34,500	NA	NA	NA	NA	<10	<12	<10	<50
4-Chloroaniline	26,200	44,300	NA	NA	NA	NA	NA	NA	<10	<10
2-Methylnaphthalene	NA	NA	NA	NA	NA	NA	NA	NA	NA	NA
N-nitroaniline	NA	NA	NA	NA	NA	NA	NA	NA	NA	NA
Dibenzofuran	NA	NA	NA	NA	NA	NA	NA	NA	<10	NA
3-Chloroaniline	41,800	25,500	NA	NA	NA	NA	NA	NA	<10	<10
2-Chloroaniline	195,000	<500	NA	NA	NA	NA	NA	NA	NA	<10
Sub Total 2	294,100	104,300	50	45	58	121	136	22	40	29
Total Base/Neutral Compounds	295,086	105,455	50	45	76	124	140	22	40	29

See last page for footnotes.

Table 3. Summary of Base/Neutral Compounds in Ground Water, Krummrich Plant, Sauget, Illinois.

Well Number:	GM-59A	GM-59A	GM-59A	GM-59A	GM-59A	GM-59A	GM-59A	B-25A	B-26A
Date:	11/87	5/88	11/88	11/89	11/90	11/91	11/92	3/87	3/87
Laboratory:	ETC	ETC	ETC	ETC	ETC	ETC	ETC	ETC	ETC
USEPA Priority Pollutant Base/Neutral Extractable Organic Compounds concentrations are in ug/L									
Acenaphthene	<1.9	<1.9	<2.1	<2.0	<2.0	<1.9	<1.9	<210	<2.1
Acenapthylene	<3.6	<3.5	<3.9	<3.7	<3.6	<3.5	<3.5	<390	<3.9
Anthracene	<1.9	<1.9	<2.1	<2.0	<2.0	<1.9	<1.9	<210	<2.1
Benzidine	<45	<44	<49	<46	<45	<44	<44	<4,900	<49
Benzo (a) anthracene	<8.0	<7.8	<8.7	<8.2	<8.0	<7.9	<7.9	<880	<8.7
Benzo (a) pyrene	<2.6	<2.5	<2.8	<2.6	<2.6	<2.5	<2.5	<280	<2.8
Benzo (b) fluoroanthene	<10	<4.8	<5.3	<5.1	<4.9	<4.8	<4.8	<1,100	<11
Benzo (ghi) perylene	<4.2	<4.1	<4.6	<4.3	<4.2	<4.1	<4.1	<460	<4.6
Benzo (k) fluoranthene	<3.6	<2.5	<2.8	<2.6	<2.6	<2.5	<2.5	<390	<3.9
Bis (2-chloroethoxy) methane	<5.4	<5.3	<5.9	<5.6	<5.5	<5.4	<5.4	<600	<5.9
Bis (2-chloroethyl) ether	<5.8	<5.7	<6.3	<6.0	<5.9	<5.8	<5.8	<640	<6.3
Bis (2-chloroisopropyl) ether	<5.8	<5.7	<6.3	<6.0	<5.9	<5.8	<5.8	<640	<6.3
Bis (2-ethylhexyl) phthalate	<10	<10	<11	<11	<10	<10	<10	<1,100	13.1
4-Bromophenyl phenyl ether	<1.9	<1.9	<2.1	<2.0	<2.0	<1.9	<1.9	<210	<2.1
Butyl benzyl phthalate	<10	<10	<11	<11	<10	<10	<10	<1,100	<11
2-Chloronaphthalene	<1.9	<1.9	<2.1	<2.0	<2.0	<1.9	<1.9	<210	<2.1
4-Chlorophenyl phenyl ether	<4.3	<4.2	<4.7	<4.4	<4.3	<4.2	<4.2	<470	<4.7
Chrysene	<2.6	<2.5	<2.8	<2.6	<2.6	<2.5	<2.5	<280	<2.8
Dibenzo (a,h) anthracene	<10	<10	<11	<11	<2.6	<2.5	<2.5	<1,100	<11
1,2-Dichlorobenzene	<1.9	<1.9	<2.1	<2.0	<2.0	<1.9	<1.9	8,800	2.76
1,3-Dichlorobenzene	<1.9	<1.9	<2.1	<2.0	<2.0	<1.9	<1.9	<210	<2.1
1,4-Dichlorobenzene	<4.5	<4.4	<4.9	<4.6	<4.5	<4.4	<4.4	<490	<4.9
3,3-Dichlorobenzidine	<17	<17	<18	<17	<17.0	<16.7	<16.7	<1,900	<18
Diethyl phthalate	<10	<10	<11	<11	<10	<10	<10	<1,100	<11
Dimethyl phthalate	<10	<10	<11	<11	<10	<10	<5.1	<1,100	<11
Di-n-butyl phthalate	<10	<10	<11	<11	<10	<10	<10	<1,100	<11
2,4-Dinitrotoluene	<5.8	<5.7	<6.3	<6.0	<5.9	<5.8	<5.8	<640	<6.3
2,6-Dinitrotoluene	<1.9	<1.9	<2.1	<2.0	<2.0	<1.9	<1.9	<210	<2.1
Di-n-octyl phthalate	<10	<10	<11	<11	<10	<10	<10	<1,100	<11
1,2-Diphenylhydrazine	<10	<10	<11	<11	<10	<10	<10	<1,100	<11
Fluoranthene	<2.2	<2.2	<2.4	<2.3	<2.3	<2.2	<2.2	<250	<2.4
Fluorene	<1.9	<1.9	<2.1	<2.0	<2.0	<1.9	<1.9	<210	<2.1
Hexachlorobenzene	<1.9	<1.9	<2.1	<2.0	<2.0	<1.9	<1.9	<210	<2.1
Hexachlorobutadiene	<.92	<0.9	<1.0	<.95	<93	<.91	<.91	<100	<1.0
Hexachlorocyclopentadiene	<10	<10	<11	<11	<10	<10	<10	<1,100	<11
Hexachloroethane	<1.6	<1.6	<1.8	<1.7	<1.6	<1.6	<1.6	<180	<1.8
Indeno (1,2,3-c,d) pyrene	<4.8	<4.7	<5.2	<4.9	<3.8	<3.7	<3.7	<530	<5.2
Isophorone	<2.2	<2.2	<2.4	<2.3	<2.3	<2.2	<2.2	<250	<2.4
Naphthalene	<1.6	<1.6	<1.8	<1.7	<1.6	<1.6	<1.6	872	<1.8
Nitrobenzene	<1.9	<1.9	<2.1	<2.0	<2.0	<1.9	<1.9	12,900	15.8
n-Nitrosodimethylamine	<10	<10	<11	<11	<10	<10	<10	<1,100	<11
n-Nitrosodi-n-propylamine	<10	<10	<11	<11	<10	<10	<10	<1,100	<11
n-Nitrosodiphenylamine	<1.9	<1.9	<2.1	<2.0	<2.0	<1.9	<1.9	<210	<2.1
Phenanthrene	<5.5	<5.4	<6.0	<5.7	<5.6	<5.5	<5.5	<610	<6.0
Pyrene	<1.9	<1.9	<2.1	<2.0	<2.0	<1.9	<1.9	<210	<2.1
1,2,4-Trichlorobenzene	<1.9	<1.9	<2.1	<2.0	<2.0	<1.9	<1.9	2,170	<2.1
Sub Total 1	0	0	0		0	0	0	24,742	32

See last page for footnotes.

Table 3. Summary of Base/Neutral Compounds in Ground Water, Krummrich Plant, Sauget, Illinois.

Well Number:	GM-59A	GM-59A	GM-59A	GM-59A	GM-59A	GM-59A	GM-59A	B-25A	B-26A
Date:	11/87	5/88	11/88	11/89	11/90	11/91	11/92	3/87	3/87
Laboratory:	ETC	ETC	ETC	ETC	ETC	ETC	ETC	ETC	ETC
Miscellaneous Base/Neutral Extractable Organic Compounds concentrations are in ug/L									
2,4-and 3,4-Dinitrochlorobenzene	<10	<10	13.5	<11	<10	<10	<10	NA	NA
2-Nitroaniline	<10	<10	<11	<11	<10	<10	<10	1,160	<11
4-Nitroaniline	<10	<10	<11	<11	<10	<10	<10	<1,100	<11
2-Nitrochlorobenzene	<10	<10	12	<11	<10	<10	<10	NA	NA
3-Nitrochlorobenzene	NA	NA	NA	NA	NA	NA	NA	NA	NA
4-Nitrochlorobenzene	<10	<10	27.2	<11	<10	<10	<10	NA	NA
4-Nitrodiphenylamine	<10	<10	<11	<11	<10	<10	<10	NA	NA
Triphenyl phosphate	<10	<10	<11	<11	<10	<10	NA	NA	NA
2,3,7,8-Tetrachloro-dibenzo-p-dioxin	NA	NA	NA	NA	NA	NA	NA	NA	NA
2-Nitrobiphenyl	<10	<10	<11	<11	<10	<10	<10	NA	NA
4-Nitrobiphenyl	<10	<10	<11	<11	<10	<10	<10	NA	NA
Benzyl alcohol	NA	NA	NA	NA	<10	NA	NA	1,830	<11
Aniline	NA	NA	NA	NA	NA	<10	NA	<1,000	20
4-Chloroaniline	NA	NA	NA	NA	NA	NA	<10	5,380	710
2-Methylnaphthalene	NA	NA	NA	NA	NA	NA	NA	<1,000	<11
N-nitroaniline	NA	NA	NA	NA	NA	NA	NA	<1,000	<11
Dibenzofuran	NA	NA	NA	NA	NA	NA	NA	<1,000	<11
3-Chloroaniline	NA	NA	NA	NA	NA	NA	<10	NA	NA
2-Chloroaniline	NA	NA	NA	NA	NA	NA	<10	NA	NA
Sub Total 2	0	0	53	0	0	0	0	8,370	730
Total Base/Neutral Compounds	0	0	53	0	0	0	0	33,112	762

See last page for footnotes.

Table 3. Summary of Base/Neutral Compounds in Ground Water, Krummrich Plant, Sauget, Illinois.

Well Number:	B-28A	GM-106	GM-106	GM-106	GM-106	GM-106	GM-106	GM-106	GM-106
Date:	3/87	12/86	5/87	11/87	5/88	11/88	11/89	11/90	11/91
Laboratory:	ETC	ETC	ETC	ETC	ETC	ETC	ETC	ETC	ETC
USEPA Priority Pollutant Base/Neutral Extractable Organic Compounds concentrations are in ug/L									
Acenaphthene	<2.0	<2.0	<1.9	<1.9	<39	<19	<220	<1.9	<38
Acenapthylene	<3.8	<3.7	<3.5	<3.5	<72	<35	<400	<3.5	<70
Anthracene	<2.0	<2.0	<1.9	<1.9	<39	<19	<220	<1.9	<38
Benzidine	<47	<47	<44	<44	<910	<440	<5100	<44	<880
Benzo (a) anthracene	<8.4	<8.3	<7.9	<7.8	<160	<79	<900	<7.8	<160
Benzo (a) pyrene	<2.7	<2.7	<2.5	<2.5	<52	<25	<290	<2.5	<50
Benzo (b) fluoroanthene	<11	<11	<10	<10	<99	<48	<550	<4.8	<96
Benzo (ghi) perylene	<4.4	<4.4	<4.1	<4.1	<85	<41	<470	<4.1	<82
Benzo (k) fluoranthene	<3.8	<3.7	<3.5	<3.5	<52	<25	<290	<2.5	<50
Bis (2-chloroethoxy) methane	<5.7	<5.6	<5.4	<5.3	<110	<54	<610	<5.3	<110
Bis (2-chloroethyl) ether	<6.1	<6.1	<5.8	<5.7	<120	<58	<660	<5.7	<110
Bis (2-chloroisopropyl) ether	<6.1	<6.1	<5.8	<5.7	<120	<58	<660	<5.7	<110
Bis (2-ethylhexyl) phthalate	<11	<11	<10	<10	<210	<100	<1,100	<10	<200
4-Bromophenyl phenyl ether	<2.0	<2	<1.9	<1.9	<39	<19	<220	<1.9	<38
Butyl benzyl phthalate	<11	<11	<10	<10	<210	<100	<1,100	<10	<200
2-Chloronaphthalene	<2.0	<2	<1.9	<1.9	<39	<19	<220	<1.9	<38
4-Chlorophenyl phenyl ether	<4.5	<4.5	<4.2	<4.2	<87	<42	<480	<4.2	<84
Chrysene	<2.7	<2.7	<2.5	<2.5	<52	<25	<290	<2.5	<50
Dibenzo (a,h) anthracene	<11	<11	<10	<10	<210	<100	<1,100	<2.5	<50
1,2-Dichlorobenzene	<2.0	2.7	6.4	56.6	85.8	126	<220	120	184
1,3-Dichlorobenzene	<2.0	<2	<1.9	<1.9	<39	<19	<220	4.23	<38
1,4-Dichlorobenzene	<4.7	<4.7	<4.4	10.4	<91	<44	<510	26.8	<88
3,3-Dichlorobenzidine	<18.3	<18	<17	<17.0	<340	<170	<1,900	<16.5	<330
Diethyl phthalate	<11	<11	<10	<10	<210	<100	<1,100	<10	<200
Dimethyl phthalate	<11	<11	<10	<10	<210	<100	<1,100	<10	<200
Di-n-butyl phthalate	<11	<11	<10	<10	<210	<100	<1,100	<10	<200
2,4-Dinitrotoluene	<6.1	<6.1	<5.8	<5.7	<120	<58	<660	<5.7	<110
2,6-Dinitrotoluene	<2.0	<2.0	<1.9	<1.9	<39	<19	<220	<1.9	<38
Di-n-octyl phthalate	<11	<11	<10	<10	<210	<100	<1,100	<10	<200
1,2-Diphenylhydrazine	<11	<11	<10	<10	<210	<100	<1,100	<10	<200
Fluoranthene	<2.4	<2.3	<2.2	<2.2	<45	<22	<250	<2.2	<44
Fluorene	<2.0	<2.0	<1.9	<1.9	<39	<19	<220	<1.9	<38
Hexachlorobenzene	<2.0	<2.0	<1.9	<1.9	<39	<19	<220	<1.9	<38
Hexachlorobutadiene	<.97	<1.0	<0.9	<0.90	<19	<9.1	<100	<90	<18
Hexachlorocyclopentadiene	<11	<11	<10	<10	<210	<100	<1,100	<10	<200
Hexachloroethane	<1.7	<1.7	<1.6	<1.6	<33	<16	<180	<1.6	<32
Indeno (1,2,3-c,d) pyrene	<5.1	<5.0	<4.7	<4.7	<97	<47	<540	<3.7	<74
Isophorone	<2.4	<2.3	<2.2	<2.2	<45	<22	<250	<2.2	<44
Naphthalene	<1.7	<1.7	2.7	6.35	<33	16.8	<180	11.5	<32
Nitrobenzene	<2.0	<2.0	<1.9	19.8	<39	50.9	<220	132	<38
n-Nitrosodimethylamine	<11	<11	<10	<10	<210	<100	<1,100	<10	<200
n-Nitrosodi-n-propylamine	<11	<11	<10	<10	<210	<100	<1,100	<10	<200
n-Nitrosodiphenylamine	<2.0	<2.0	<1.9	<1.9	<39	<19	<220	<1.9	<38
Phenanthrene	<5.8	<5.7	<5.5	<5.4	<110	<55	<620	<5.4	<110
Pyrene	<2.0	<2.0	<1.9	<1.9	<39	<19	<220	<1.9	<38
1,2,4-Trichlorobenzene	<2.0	<2.0	<1.9	<1.9	<39	<19	<220	4.75	<38
Sub Total 1	0	3	9		86	194	0	299	184

See last page for footnotes.

Table 3. Summary of Base/Neutral Compounds in Ground Water, Krummrich Plant, Sauget, Illinois.

Well Number:	B-28A	GM-106	GM-106	GM-106	GM-106	GM-106	GM-106	GM-106	GM-106
Date:	3/87	12/86	5/87	11/87	5/88	11/88	11/89	11/90	11/91
Laboratory:	ETC	ETC	ETC	ETC	ETC	ETC	ETC	ETC	ETC
Miscellaneous Base/Neutral Extractable Organic Compounds concentrations are in ug/L									
2,4-and 3,4-Dinitrochlorobenzene	NA	<11	<10	<10	<210	<100	<1,100	<10	<200
2-Nitroaniline	<11	<11	<10	<10	<210	<100	<1,100	<10	<200
4-Nitroaniline	<11	<11	<10	<10	<210	<100	<1,100	<10	<200
2-Nitrochlorobenzene	NA	1,450	2,670	59,900	5,050	99,000	5,410	66,800	<200
3-Nitrochlorobenzene	NA	NA	NA	NA	NA	NA	NA	NA	<200
4-Nitrochlorobenzene	NA	172	452	9,950	795	14,300	<1,100	15300	<200
4-Nitrodiphenylamine	NA	<11	<10	<10	<210	<100	<1,100	<10	<200
Triphenyl phosphate	NA	<11	<10	<10	<210	<100	<1,100	<10	<200
2,3,7,8-Tetrachloro-dibenzo-p-dioxin	NA	NA	NA	NA	NA	NA	NA	NA	NA
2-Nitrobiphenyl	NA	NA	NA	NA	<210	NA	<1,100	NA	NA
4-Nitrobiphenyl	NA	NA	NA	NA	<210	NA	<1,100	NA	NA
Benzyl alcohol	<11	NA	NA	NA	NA	NA	NA	NA	NA
Aniline	<11	NA	NA	NA	NA	NA	3,420	2,250	3,290
4-Chloroaniline	<11	NA	NA	NA	NA	NA	NA	NA	19,900
2-Methylnaphthalene	<11	NA	NA	NA	NA	NA	NA	NA	NA
N-nitroaniline	<11	NA	NA	NA	NA	NA	NA	NA	NA
Dibenzofuran	<11	NA	NA	NA	NA	NA	NA	NA	NA
3-Chloroaniline	NA	NA	NA	NA	NA	NA	NA	NA	7,820
2-Chloroaniline	NA	NA	NA	NA	NA	NA	NA	NA	10,900
Sub Total 2	0	1,622	3,122	69,850	5,845	113,300	8,830	84,350	41,910
Total Base/Neutral Compounds	0	1,625	3,131	69,943	5,931	113,494	8,830	84,649	42,094

See last page for footnotes.

Table 3. Summary of Base/Neutral Compounds in Ground Water, Krummrich Plant, Sauget, Illinois.

Well Number:	GM-106	P-1	P-1	P-2	P-2	P-2	P-2	P-2	P-3
Date:	11/92	3/87	11/87	11/87	11/89	11/90	11/91	11/92	11/87
Laboratory:	ETC	ETC	ETC	ETC	ETC	ETC	ETC	ETC	ETC
USEPA Priority Pollutant Base/Neutral Extractable Organic Compounds concentrations are in ug/L									
Acenaphthene	<99	<2.1	<1.9	<2.0	<21	<21	<19	<480	<1.9
Acenapthylene	<180	<3.9	<3.5	<3.6	<39	<38	<35	<880	<3.5
Anthracene	<99	<2.1	<1.9	<2.0	<21	<21	<19	<480	<1.9
Benzidine	<2300	<49	<44	<45	<490	<480	<440	<1,1000	<44
Benzo (a) anthracene	<410	<8.7	<7.8	<8.0	<87	<85	<78	<2000	<7.8
Benzo (a) pyrene	<130	<2.8	<2.5	<2.6	<28	<27	<25	<630	<2.5
Benzo (b) fluoroanthene	<250	<11	<10	<10	<53	<52	<48	<1200	<10
Benzo (ghi) perylene	<210	<4.6	<4.1	<4.2	<46	<45	<41	<1,000	<4.1
Benzo (k) fluoranthene	<130	<3.9	<3.5	<3.6	<28	<27	<25	<630	<3.5
Bis (2-chloroethoxy) methane	<280	<5.9	<5.3	<5.5	<59	<58	<53	<1300	<5.3
Bis (2-chloroethyl) ether	<300	<6.3	<5.7	<5.9	<63	<62	<57	<1,400	<5.7
Bis (2-chloroisopropyl) ether	<300	<6.3	<5.7	<5.9	<63	<62	<57	<1,400	<5.7
Bis (2-ethylhexyl) phthalate	<520	<11	<10	<10	<110	<110	<100	<2,500	<10
4-Bromophenyl phenyl ether	<99	<2.1	<1.9	<2.0	<21	<21	<19	<480	<1.9
Butyl benzyl phthalate	<520	<11	<10	<10	<110	<110	<100	<2,500	<10
2-Chloronaphthalene	<99	<2.1	<1.9	<2.0	<21	<21	<19	<480	<1.9
4-Chlorophenyl phenyl ether	<220	<4.7	<4.2	<4.3	<47	<46	<42	<1,100	<4.2
Chrysene	<130	<2.8	<2.5	<2.6	<28	<27	<25	<630	<2.5
Dibenzo (a,h) anthracene	<130	<11	<10	<10	<110	<27	<25	<630	<10
1,2-Dichlorobenzene	241	<2.1	2.54	4.59	769	5,770	1,890	3350	<1.9
1,3-Dichlorobenzene	<99	<2.1	2.11	<2.0	<21	<21	<19	<480	<1.9
1,4-Dichlorobenzene	<230	10.2	18.2	25.4	64.8	<48	75.0	<1,100	<4.4
3,3-Dichlorobenzidine	<859	<18	<17	<17	<180	<179	<165	<4130	<17
Diethyl phthalate	<520	<11	<10	<10	<110	<110	<100	<2,500	<10
Dimethyl phthalate	<260	<11	<10	<10	<110	<110	<100	<1300	<10
Di-n-butyl phthalate	<520	<11	<10	<10	<110	<110	<100	<2,500	<10
2,4-Dinitrotoluene	<300	<6.3	<5.7	<5.9	<63	<62	<57	<1,400	<5.7
2,6-Dinitrotoluene	<99	<2.1	<1.9	<2.0	<21	<21	<19	<480	<1.9
Di-n-octyl phthalate	<520	<11	<10	<10	<110	<110	<100	<2,500	<10
1,2-Diphenylhydrazine	<520	<11	<10	<10	<110	<110	<100	<2,500	<10
Fluoranthene	<110	<2.4	<2.2	<2.3	<24	<24	<22	<550	<2.2
Fluorene	<99	<2.1	<1.9	<2.0	<21	<21	<19	<480	<1.9
Hexachlorobenzene	<99	<2.1	<1.9	<2.0	<21	<21	<19	<480	<1.9
Hexachlorobutadiene	<47	<1.0	<0.90	<.93	<10	<9.8	<9.0	<230	<0.90
Hexachlorocyclopentadiene	<520	<11	<10	<10	<110	<110	<100	<2,500	<10
Hexachloroethane	<83	<1.8	<1.6	<1.6	<18	<17	<16	<400	<1.6
Indeno (1,2,3-c,d) pyrene	<190	<5.2	<4.7	<4.8	<52	<40	<37	<930	<4.7
Isophorone	<110	<2.4	<2.2	<2.3	<24	<24	<22	<550	<2.2
Naphthalene	<83	<1.8	<1.6	<1.6	<18	<17	<16	<400	<1.6
Nitrobenzene	282	<2.1	<1.9	<2.0	<21	46.3	<19	<480	<1.9
n-Nitrosodimethylamine	<520	<11	<10	<10	<110	<110	<100	<2,500	<10
n-Nitrosodi-n-propylamine	<520	<11	<10	<10	<110	<110	<100	<2,500	<10
n-Nitrosodiphenylamine	<99	<2.1	<1.9	<2.0	<21	<21	<19	<480	<1.9
Phenanthrene	<280	<6.0	<5.4	<5.6	<60	<59	<54	<1,400	<5.4
Pyrene	<99	<2.1	<1.9	<2.0	<21	<21	<19	<480	<1.9
1,2,4-Trichlorobenzene	<99	<2.1	<1.9	<2.0	<21	44.9	<19	<480	<1.9
Sub Total 1	523	10	23		834	5,861	1,965	3,350	0

See last page for footnotes.

Table 3. Summary of Base/Neutral Compounds in Ground Water, Krummrich Plant, Sauget, Illinois.

Well Number:	GM-106	P-1	P-1	P-2	P-2	P-2	P-2	P-2	P-3
Date:	11/92	3/87	11/87	11/87	11/89	11/90	11/91	11/92	11/87
Laboratory:	ETC	ETC	ETC	ETC	ETC	ETC	ETC	ETC	ETC
Miscellaneous Base/Neutral Extractable Organic Compounds concentrations are in ug/L									
2,4-and 3,4-Dinitrochlorobenzene	<520	NA	<10	<10	<110	<110	<100	<2,500	<10
2-Nitroaniline	<520	<11	<10	<10	<110	<110	<100	<100	<10
4-Nitroaniline	<520	<11	<10	<10	<110	<110	<100	<2,500	<10
2-Nitrochlorobenzene	20938	NA	<10	<10	<110	52,600	179	<2,500	<10
3-Nitrochlorobenzene	NA	NA	NA	NA	NA	NA	865	NA	NA
4-Nitrochlorobenzene	5365	NA	<10	<10	<110	98,000	<100	<2,500	<10
4-Nitrodiphenylamine	<520	NA	<10	<10	<110	<110	<100	<2,500	<10
Triphenyl phosphate	NA	NA	<10	<10	<110	<110	<100	NA	<10
2,3,7,8-Tetrachloro-dibenzo-p-dioxin	NA	NA	NA	NA	NA	NA	NA	NA	NA
2-Nitrobiphenyl	NA	NA	NA	NA	<110	NA	NA	NA	NA
4-Nitrobiphenyl	NA	NA	NA	NA	<110	NA	NA	NA	NA
Benzyl alcohol	NA	<11	NA	NA	NA	NA	NA	NA	NA
Aniline	8780	<11	NA	NA	35,000	2,400	19,400	15,800	NA
4-Chloroaniline	18,600	<11	NA	NA	NA	NA	50,400	90,800	NA
2-Methylnaphthalene	NA	<11	NA	NA	NA	NA	NA	NA	NA
N-nitroaniline	NA	<11	NA	NA	NA	NA	NA	NA	NA
Dibenzofuran	NA	<11	NA	NA	NA	NA	NA	NA	NA
3-Chloroaniline	<520	NA	NA	NA	NA	NA	57,200	<2,500	NA
2-Chloroaniline	78,229	NA	NA	NA	NA	NA	72,000	92,100	NA
Sub Total 2	131,912	0	0	0	35,000	153,000	200,044	198,700	0
Total Base/Neutral Compounds	132,435	10	23	30	35,834	158,861	202,009	202,050	0

See last page for footnotes.

Table 3. Summary of Base/Neutral Compounds in Ground Water, Krummrich Plant, Sauget, Illinois.

Well Number:	P-6	P-6	P-6	P-6	P-6	P-7	P-7	P-7	P-7
Date:	11/87	11/89	11/90	11/91	11/92	12/86	3/87	5/87	11/87
Laboratory:	ETC	ETC	ETC	ETC	ETC	ETC	ETC	ETC	ETC
USEPA Priority Pollutant Base/Neutral Extractable Organic Compounds concentrations are in ug/L									
Acenaphthene	<1.9	<2.0	<1.9	<1.9	<1.9	<1.9	<2.1	<38	<1.9
Acenapthylene	<3.5	<3.6	<3.5	<3.5	<3.5	<3.5	<3.8	<70	<3.6
Anthracene	<1.9	<2.0	<1.9	<1.9	<1.9	<1.9	<2.1	<38	<1.9
Benzidine	<44	<46	<44	<44	<44	<44	<48	<880	<45
Benzo (a) anthracene	<7.8	<8.1	<7.8	<7.9	<7.8	<7.8	<8.6	<160	<8.0
Benzo (a) pyrene	<2.5	<2.6	<2.5	<2.5	<2.5	<2.5	<2.7	<50	<2.6
Benzo (b) fluoroanthene	<10	<5.0	<4.8	<4.8	<4.8	<4.8	<11	<200	<10
Benzo (ghi) perylene	<4.1	<4.3	<4.1	<4.1	<4.1	<4.1	<4.5	<82	<4.2
Benzo (k) fluoranthene	<3.5	<2.6	<2.5	<2.5	<2.5	<2.5	<3.8	<70	<3.6
Bis (2-chloroethoxy) methane	<5.3	<5.5	<5.3	,5.4	<5.3	<5.3	<5.8	<110	<5.4
Bis (2-chloroethyl) ether	<5.7	<5.9	<5.7	<5.8	<5.7	<5.7	<6.3	<110	<5.8
Bis (2-chloroisopropyl) ether	<5.7	<5.9	<5.7	<5.8	<5.7	<5.7	<6.3	<110	<5.8
Bis (2-ethylhexyl) phthalate	<10	<10	<10	<10	<10	<2.5	<11	<200	<10
4-Bromophenyl phenyl ether	<1.9	<2.0	<1.9	<1.9	<1.9	<1.9	<2.1	<38	<1.9
Butyl benzyl phthalate	<10	<10	<10	<10	<10	<2.5	<11	<200	<10
2-Chloronaphthalene	<1.9	<2.0	<1.9	<1.9	<1.9	<1.9	940	<38	<1.9
4-Chlorophenyl phenyl ether	<4.2	<4.4	<4.2	<4.2	<4.2	<4.2	<4.6	<84	<4.3
Chrysene	<2.5	<2.6	<2.5	<2.5	<2.5	<2.5	<2.7	<50	<2.6
Dibenzo (a,h) anthracene	<10	<10	<2.5	<2.5	<2.5	<2.5	<11	<200	<10
1,2-Dichlorobenzene	2.82	44.6	33.3	11.0	9.8	88.1	346	190	106
1,3-Dichlorobenzene	<1.9	<2.0	<1.9	<1.9	<1.9	2	7.00	<38	2.29
1,4-Dichlorobenzene	<4.4	53.4	49.9	16.7	14.1	154	585	321	148
3,3-Dichlorobenzidine	<17	<17	<16.5	<16.7	<16.5	<16.5	<18.7	<330	<17
Diethyl phthalate	<10	<10	<10	<10	<10	<1.9	<11	<200	<10
Dimethyl phthalate	<10	<10	<10	<10	<5.0	<1.6	<11	<200	<10
Di-n-butyl phthalate	<10	<10	<10	<10	<10	<2.5	<11	<200	<10
2,4-Dinitrotoluene	<5.7	<5.9	<5.7	<5.8	<5.7	<5.7	<6.3	<110	<5.8
2,6-Dinitrotoluene	<1.9	<2.0	<1.9	<1.9	<1.9	<1.9	<2.1	<38	<1.9
Di-n-octyl phthalate	<10	<10	<10	<10	<10	<2.5	<11	<200	<10
1,2-Diphenylhydrazine	<10	<10	<10	<10	<10	<10	<11	<200	<10
Fluoranthene	<2.2	<2.3	<2.2	<2.2	<2.2	<2.2	<2.4	<44	<2.2
Fluorene	<1.9	<2.0	<1.9	<1.9	<1.9	<1.9	<2.1	<38	<1.9
Hexachlorobenzene	<1.9	<2.0	<1.9	<1.9	<1.9	<1.9	<2.1	<38	<1.9
Hexachlorobutadiene	<0.90	<.94	<90	<.91	<.90	<0.9	<.99	<18	<.92
Hexachlorocyclopentadiene	<10	<10	<10	<10	<10	<10	<11	<200	<10
Hexachloroethane	<1.6	<1.7	<1.6	<1.6	<1.6	<1.6	<1.8	<32	<1.6
Indeno (1,2,3-c,d) pyrene	<4.7	<4.9	<3.7	<3.7	<3.7	<3.7	<5.2	<94	<4.8
Isophorone	<2.2	<2.3	<2.2	<2.2	<2.2	<2.2	<2.4	<44	<2.2
Naphthalene	<1.6	<1.7	<1.6	<1.6	<1.6	<1.6	7.95	<32	<1.6
Nitrobenzene	<1.9	<2.0	<1.9	<1.9	<1.9	357	113	286	<1.9
n-Nitrosodimethylamine	<10	<10	<10	<10	<10	<10	<11	<200	<10
n-Nitrosodi-n-propylamine	<10	<10	<10	<10	<10	<10	<11	<200	<10
n-Nitrosodiphenylamine	<1.9	<2.0	<1.9	<1.9	<1.9	<1.9	<2.1	<38	<1.9
Phenanthrene	<5.4	<5.6	<5.4	<5.5	<5.4	<5.4	<5.9	<110	<5.5
Pyrene	<1.9	<2.0	<1.9	<1.9	<1.9	<1.9	<2.1	<38	<1.9
1,2,4-Trichlorobenzene	<1.9	<2.0	<1.9	<1.9	<1.9	4.8	33.4	<38	<1.9
Sub Total 1	3	98	83		24	606	2,032	797	256

See last page for footnotes.

Table 3. Summary of Base/Neutral Compounds in Ground Water, Krummrich Plant, Sauget, Illinois.

Well Number:	P-6	P-6	P-6	P-6	P-6	P-7	P-7	P-7	P-7
Date:	11/87	11/89	11/90	11/91	11/92	12/86	3/87	5/87	11/87
Laboratory:	ETC	ETC	ETC	ETC	ETC	ETC	ETC	ETC	ETC
Miscellaneous Base/Neutral Extractable Organic Compounds concentrations are in ug/L									
2,4-and 3,4-Dinitrochlorobenzene	<10	<10	<10	<10	<10	<10	NA	<200	<10
2-Nitroaniline	<10	<10	<10	<10	<10	<10	<11	<200	<10
4-Nitroaniline	<10	<10	<10	<10	<10	52	62.2	<200	11.3
2-Nitrochlorobenzene	<10	<10	<10	<10	<10	27,000	NA	40,800	22,400
3-Nitrochlorobenzene	NA	NA	NA	<10	NA	NA	NA	NA	NA
4-Nitrochlorobenzene	<10	<10	<10	<10	<10	8,590	NA	11,900	5,230
4-Nitrodiphenylamine	<10	<10	<10	<10	<10	202	NA	<200	160
Triphenyl phosphate	<10	<10	<10	<10	NA	<10	NA	<200	<10
2,3,7,8-Tetrachloro-dibenzo-p-dioxin	NA	NA	NA	NA	NA	NA	NA	NA	NA
2-Nitrobiphenyl	NA	<10	NA	NA	NA	NA	NA	NA	NA
4-Nitrobiphenyl	NA	<10	NA	NA	NA	NA	NA	NA	NA
Benzyl alcohol	NA	NA	NA	NA	NA	NA	171	NA	NA
Aniline	NA	10,200	95.5	<10	<10	NA	6,360	NA	NA
4-Chloroaniline	NA	NA	NA	1,570	56	NA	15,000	NA	NA
2-Methylnaphthalene	NA	NA	NA	NA	NA	NA	<11	NA	NA
N-nitroaniline	NA	NA	NA	NA	NA	NA	<11	NA	NA
Dibenzofuran	NA	NA	NA	NA	NA	NA	<11	NA	NA
3-Chloroaniline	NA	NA	NA	<10	<10	NA	NA	NA	NA
2-Chloroaniline	NA	NA	NA	3,880	688	NA	NA	NA	NA
Sub Total 2	0	10,200	96	5,450	744	35,844	21,593	52,700	27,801
Total Base/Neutral Compounds	3	10,298	179	5,478	768	36,450	23,626	53,497	28,058

See last page for footnotes.

Table 3. Summary of Base/Neutral Compounds in Ground Water, Krummrich Plant, Sauget, Illinois.

Well Number:	P-7	P-7	P-7	P-7	P-7	P-7	P-7	P-8	P-8
Date:	5/88	11/88	3/89	11/89	11/90	11/91	11/92	11/87	3/89
Laboratory:	ETC	ETC	ETC	ETC	ETC	ETC	ETC	ETC	ETC
USEPA Priority Pollutant Base/Neutral Extractable Organic Compounds concentrations are in ug/L									
Acenaphthene	<220	<20	<20	<22	<38	<2.0	<480	<190	<970
Acenapthylene	<400	<36	<36	<41	<70	<3.6	<880	<350	<1800
Anthracene	<220	<20	<20	<22	<38	<2.0	<480	<190	<970
Benzidine	<5,000	<450	<450	<520	<880	<45	<1,1000	<4400	<22000
Benzo (a) anthracene	<890	<80	<80	<92	<160	<8.0	<2000	<790	<4000
Benzo (a) pyrene	<290	<26	<26	<29	<50	<2.6	<630	<250	<1300
Benzo (b) fluoroanthene	<550	<49	<49	<56	<96	<4.9	<1200	<1,000	<2,400
Benzo (ghi) perylene	<470	<42	<42	<48	<82	<4.2	<1,000	<410	<2100
Benzo (k) fluoranthene	<290	<26	<26	<29	<50	<2.6	<630	<350	<1300
Bis (2-chloroethoxy) methane	<610	<55	<55	<62	<110	<5.5	<1300	<530	<2700
Bis (2-chloroethyl) ether	<650	<59	<59	<67	<110	<5.9	<1,400	<570	<2900
Bis (2-chloroisopropyl) ether	<650	<59	<59	<67	<110	<5.9	<1,400	<580	<2900
Bis (2-ethylhexyl) phthalate	<1,100	188	<100	<120	<200	<10	<2,500	<1,000	<5100
4-Bromophenyl phenyl ether	<220	<20	<20	<22	<38	<2.0	<480	<190	<970
Butyl benzyl phthalate	<1,100	<100	<100	<120	<200	<10	<2,500	<1,000	<5100
2-Chloronaphthalene	<220	<20	<20	<22	<38	<2.0	<480	<190	<970
4-Chlorophenyl phenyl ether	<480	<43	<43	<49	<84	<4.3	<1,100	<420	<2100
Chrysene	<290	<26	<26	<29	<50	<2.6	<630	<250	<1300
Dibenzo (a,h) anthracene	<1,100	<100	<100	<120	<50	<2.6	<630	<1,000	<5100
1,2-Dichlorobenzene	424	949	250	781	603	396	<480	<190	<970
1,3-Dichlorobenzene	<220	<20	<20	<22	<38	8.68	<480	<190	<970
1,4-Dichlorobenzene	797	1,580	441	1,350	998	572	<1,100	<440	<2200
3,3-Dichlorobenzidine	<1,900	<175	<170	<190	<330	<17.0	<4170	<1700	<8400
Diethyl phthalate	<1,100	<100	<100	<120	<200	<10	<2,500	<1,000	<5100
Dimethyl phthalate	<1,100	<100	<100	<120	<200	<10	<1300	<1,000	<5100
Di-n-butyl phthalate	<1,100	<100	<100	<120	<200	<10	<2,500	<1,000	<5100
2,4-Dinitrotoluene	<650	<59	<59	<67	<110	<5.9	<1,400	<570	<2900
2,6-Dinitrotoluene	<220	<20	<20	<22	<38	<2.0	<480	<190	<970
Di-n-octyl phthalate	<1,100	<100	<100	<120	<200	<10	<2,500	<1,000	<5100
1,2-Diphenylhydrazine	<1,100	<100	<100	<120	<200	<10	<2,500	<1,000	<5100
Fluoranthene	<250	<23	<23	<26	<44	<2.3	<560	<220	<1,100
Fluorene	<220	<20	<20	<22	<38	<2.0	<480	<190	<970
Hexachlorobenzene	<220	<20	<20	<22	<38	<2.0	<480	<190	<970
Hexachlorobutadiene	<100	<9.3	<9.3	<11	<18	<.93	<230	<90	<460
Hexachlorocyclopentadiene	<1,100	<100	<100	<120	<200	<10	<2,500	<1,000	<5100
Hexachloroethane	<180	<16	<16	<19	<32	<1.6	<400	<160	<820
Indeno (1,2,3-c,d) pyrene	<540	<48	<48	<55	<74	<3.8	<930	<470	<2,400
Isophorone	<250	<23	<23	<26	<44	<2.3	<560	<220	<1,100
Naphthalene	<180	<16	<16	<19	<32	7.73	<400	<160	<820
Nitrobenzene	6,770	516	473	1,760	1,040	169	<480	<190	2,220
n-Nitrosodimethylamine	<1,100	<100	<100	<120	<200	<10	<2,500	<1,000	<5100
n-Nitrosodi-n-propylamine	<1,100	<100	<100	<120	<200	<10	<2,500	<1,000	<5100
n-Nitrosodiphenylamine	<220	<20	<20	<22	<38	<2.0	<480	<190	<970
Phenanthrene	<620	<56	<56	<64	<110	<5.6	<1,400	<540	<2800
Pyrene	<220	<20	<20	<22	<38	<2.0	<480	<190	<970
1,2,4-Trichlorobenzene	<220	117	<20	46.6	39.2	37.7	<480	<190	<970
Sub Total 1	7,991	3,350	1,164	3	2,678	1,191	0	0	2,220

See last page for footnotes.

Table 3. Summary of Base/Neutral Compounds in Ground Water, Krummrich Plant, Sauget, Illinois.

Well Number:	P-7	P-7	P-7	P-7	P-7	P-7	P-7	P-8	P-8
Date:	5/88	11/88	3/89	11/89	11/90	11/91	11/92	11/87	3/89
Laboratory:	ETC	ETC	ETC	ETC	ETC	ETC	ETC	ETC	ETC
Miscellaneous Base/Neutral Extractable Organic Compounds concentrations are in ug/L									
2,4-and 3,4-Dinitrochlorobenzene	<1,100	NA	<100	<120	<200	<10	<2,500	<1,000	<5100
2-Nitroaniline	<1,100	NA	<100	<120	<200	<10	<2,500	<1,000	<5100
4-Nitroaniline	<1,100	NA	<100	<120	<200	<10	<2,500	<1,000	<5100
2-Nitrochlorobenzene	64,900	NA	62,600	357,000	196,000	29,700	8110	55,100	57,100
3-Nitrochlorobenzene	NA	NA	NA	NA	NA	114,000	NA	NA	NA
4-Nitrochlorobenzene	29,100	NA	19,400	90,600	48,100	4,900	<2,500	32,400	14,200
4-Nitrodiphenylamine	<1,100	NA	<100	627	<200	<10	<2,500	<1,000	<5100
Triphenyl phosphate	<1,100	NA	NA	<120	<200	<10	NA	<1,000	<5100
2,3,7,8-Tetrachloro-dibenzo-p-dioxin	NA	NA	NA	NA	NA	NA	NA	NA	NA
2-Nitrobiphenyl	<1,100	NA	NA	<120	NA	NA	NA	NA	NA
4-Nitrobiphenyl	<1,100	NA	NA	<120	NA	NA	NA	NA	NA
Benzyl alcohol	NA	NA	NA	NA	NA	NA	NA	NA	<5100
Aniline	NA	NA	NA	22,300	7,230	3,100	3190	NA	155,000
4-Chloroaniline	NA	NA	NA	NA	NA	12,500	23,600	NA	49,100
2-Methylnaphthalene	NA	NA	NA	NA	NA	NA	NA	NA	NA
N-nitroaniline	NA	NA	NA	NA	NA	NA	NA	NA	NA
Dibenzofuran	NA	NA	NA	NA	NA	NA	NA	NA	NA
3-Chloroaniline	NA	NA	NA	NA	NA	3,110	<2,500	NA	NA
2-Chloroaniline	NA	NA	NA	NA	NA	58,900	86,600	NA	NA
Sub Total 2	94,000	0	82,000	470,527	251,330	226,210	121,500	87,500	275,400
Total Base/Neutral Compounds	101,991	3,350	83,164	474,465	254,008	227,401	121,500	87,500	277,620

See last page for footnotes.

Table 3. Summary of Base/Neutral Compounds in Ground Water, Krummrich Plant, Sauget, Illinois.

Well Number:	P-8	P-8	P-8	P-8	P-10	P-11	P-11	P-12	P-13
Date:	11/89	11/90	11/91	11/92	11/87	3/87	11/87	11/87	11/87
Laboratory:	ETC	ETC	ETC	ETC	ETC	ETC	ETC	ETC	ETC
USEPA Priority Pollutant Base/Neutral Extractable Organic Compounds concentrations are in ug/L									
Acenaphthene	<1,100	<19	<38	<97	<190	<2.1	<2.0	<1.9	<1.9
Acenapthylene	<2000	<36	<71	<180	<350	<3.8	<3.6	<3.5	<3.5
Anthracene	<1,100	<19	<38	<97	<190	<2.1	<2.0	<1.9	<1.9
Benzidine	<2,5000	<450	<890	<2200	<4400	<48	<45	<44	<44
Benzo (a) anthracene	<4400	<80	<160	<400	<790	<8.6	<8.0	<7.8	<7.8
Benzo (a) pyrene	<1,400	<26	<51	<130	<250	<2.7	<2.6	<2.5	<2.5
Benzo (b) fluoroanthene	<2700	<49	<97	<240	<1,000	<11	<10	<10	<10
Benzo (ghi) perylene	<2300	<42	<83	<210	<410	<4.5	<4.2	<4.1	<4.1
Benzo (k) fluoranthene	<1,400	<26	<51	<130	<350	<3.8	<3.6	<3.5	<3.5
Bis (2-chloroethoxy) methane	<3,000	<54	<110	<270	<540	<5.8	<5.5	<5.3	<5.3
Bis (2-chloroethyl) ether	<3200	<58	<120	<290	<580	<6.3	<5.9	<5.7	<5.7
Bis (2-chloroisopropyl) ether	<3200	<58	<120	<290	<580	<6.3	<5.9	<5.7	<5.7
Bis (2-ethylhexyl) phthalate	<5700	<100	<200	<510	<1,000	<11	<10	<10	<10
4-Bromophenyl phenyl ether	<1,100	<19	<38	<97	<190	<2.1	<2.0	<1.9	<1.9
Butyl benzyl phthalate	<5700	<100	<200	<510	<1,000	<11	<10	<10	<10
2-Chloronaphthalene	<1,100	<19	<38	<97	<190	<2.1	<2.0	<1.9	<1.9
4-Chlorophenyl phenyl ether	<2,400	<43	<85	<210	<420	<4.6	<4.3	<4.2	<4.2
Chrysene	<1,400	<26	<51	<130	<250	<2.7	<2.6	<2.5	<2.5
Dibenzo (a,h) anthracene	<5700	<26	<51	<130	<1,000	<11	<10	<10	<10
1,2-Dichlorobenzene	<1,100	153	172	155	<190	5.4	6.00	1,790	<1.9
1,3-Dichlorobenzene	<1,100	<19	<38	<97	<190	<2.1	<2.0	<1.9	<1.9
1,4-Dichlorobenzene	<2,500	265	230	304	449	82.3	111	252	22.5
3,3-Dichlorobenzidine	<9400	<168	<333	<842	<1700	<18.7	<17	<17	<17
Diethyl phthalate	<5700	<100	<200	<510	<1,000	<11	<10	<10	<10
Dimethyl phthalate	<5700	<100	<200	<260	<1,000	<11	<10	<10	<10
Di-n-butyl phthalate	<5700	<100	<200	<510	<1,000	<11	<10	<10	<10
2,4-Dinitrotoluene	<3200	<58	<120	<290	<580	<6.3	<5.9	<5.7	<5.7
2,6-Dinitrotoluene	<1,100	<19	<38	<97	<190	<2.1	<2.0	<1.9	<1.9
Di-n-octyl phthalate	<5700	<100	<200	<510	<1,000	<11	<10	<10	<10
1,2-Diphenylhydrazine	<5700	<100	<200	<510	<1,000	<11	<10	<10	<10
Fluoranthene	<1200	<22	<44	<110	<220	<2.4	<2.3	<2.2	<2.2
Fluorene	<1,100	<19	<38	<97	<190	<2.1	<2.0	<1.9	<1.9
Hexachlorobenzene	<1,100	<19	<38	<97	<190	<2.1	<2.0	<1.9	<1.9
Hexachlorobutadiene	<510	<9.2	<18	<46	<91	<.99	<.93	<0.90	<0.90
Hexachlorocyclopentadiene	<5700	<100	<200	<510	<1,000	<11	<10	<10	<10
Hexachloroethane	<910	<16	<32	<82	<160	<1.8	<1.6	<1.6	<1.6
Indeno (1,2,3-c,d) pyrene	<2700	<38	<75	<190	<470	<5.2	<4.8	<4.7	<4.7
Isophorone	<1200	<22	<44	<110	<220	<2.4	<2.3	<2.2	<2.2
Naphthalene	<910	<16	<32	<82	<160	<1.8	<1.6	<1.6	<1.6
Nitrobenzene	4,270	2,470	1,940	3600	<190	<2.1	<2.0	<1.9	<1.9
n-Nitrosodimethylamine	<5700	<100	<200	<510	<1,000	<11	<10	<10	<10
n-Nitrosodi-n-propylamine	<5700	<100	<200	<510	<1,000	<11	<10	<10	<10
n-Nitrosodiphenylamine	<1,100	<19	<38	<97	<190	<2.1	<2.0	<1.9	9.00
Phenanthrene	<3100	<55	<110	<280	<550	<5.9	<5.6	<5.4	<5.4
Pyrene	<1,100	<19	<38	<97	<190	<2.1	<2.0	<1.9	<1.9
1,2,4-Trichlorobenzene	<1,100	<19	<38	<97	<190	<2.1	<2.0	<1.9	<1.9
Sub Total 1	4,270	2,888	2,342	4	449	88	117	2,042	32

See last page for footnotes.

Table 3. Summary of Base/Neutral Compounds in Ground Water, Krummrich Plant, Sauget, Illinois.

Well Number:	P-8	P-8	P-8	P-8	P-10	P-11	P-11	P-12	P-13
Date:	11/89	11/90	11/91	11/92	11/87	3/87	11/87	11/87	11/87
Laboratory:	ETC	ETC	ETC	ETC	ETC	ETC	ETC	ETC	ETC
Miscellaneous Base/Neutral Extractable Organic Compounds concentrations are in ug/L									
2,4-and 3,4-Dinitrochlorobenzene	<5700	<100	<200	<510	<1,000	NA	<10	<10	<10
2-Nitroaniline	<5700	<100	<200	<510	<1,000	<11	<10	<10	<10
4-Nitroaniline	<5700	<100	<200	<510	<1,000	<11	<10	<10	<10
2-Nitrochlorobenzene	463,000	180,000	171,000	105,000	<1,000	NA	<10	<10	<10
3-Nitrochlorobenzene	NA	NA	461,000	NA	NA	NA	NA	NA	NA
4-Nitrochlorobenzene	185,000	88,500	21,500	14,500	<1,000	NA	<10	<10	<10
4-Nitrodiphenylamine	<5700	<100	<200	<510	<1,000	NA	<10	<10	<10
Triphenyl phosphate	<5700	<100	<200	NA	<1,000	NA	<10	<10	<10
2,3,7,8-Tetrachloro-dibenzo-p-dioxin	NA	NA	NA	NA	NA	NA	NA	NA	NA
2-Nitrobiphenyl	<5700	NA	NA	NA	NA	NA	NA	NA	NA
4-Nitrobiphenyl	<5700	NA	NA	NA	NA	<11	NA	NA	NA
Benzyl alcohol	NA	NA	NA	NA	NA	<11	NA	NA	NA
Aniline	522,000	160,000	163,000	62,700	NA	<11	NA	NA	NA
4-Chloroaniline	NA	NA	105,000	87,300	NA	4,020	NA	NA	NA
2-Methylnaphthalene	NA	NA	NA	NA	NA	<11	NA	NA	NA
N-nitroaniline	NA	NA	NA	NA	NA	<11	NA	NA	NA
Dibenzofuran	NA	NA	NA	NA	NA	<11	NA	NA	NA
3-Chloroaniline	NA	NA	22,500	<510	NA	NA	NA	NA	NA
2-Chloroaniline	NA	NA	329,000	191,000	NA	NA	NA	NA	NA
Sub Total 2	1,170,000	428,500	1,273,000	460,500	0	4,020	0	0	0
Total Base/Neutral Compounds	1,174,270	431,388	1,275,342	464,559	449	4,108	117	2,042	32

See last page for footnotes.

Table 3. Summary of Base/Neutral Compounds in Ground Water, Krummrich Plant, Sauget, Illinois.

Well Number:	P-13	P-13	P-13	P-13	P-14	P-14	P-14	P-14	P-14
Date:	11/89	11/90	11/91	11/92	11/87	11/89	11/90	11/91	11/92
Laboratory:	ETC	ETC	ETC	ETC	ETC	ETC	ETC	ETC	ETC
USEPA Priority Pollutant Base/Neutral Extractable Organic Compounds concentrations are in ug/L									
Acenaphthene	<200	<2.0	<390	<20	<1.9	<2.0	<2.0	<1.9	<1.9
Acenapthylene	<370	<3.8	<710	<36	<3.5	<3.6	<3.8	<3.6	<3.5
Anthracene	<200	<2.0	<390	<20	<1.9	<2.0	<2.0	<1.9	<1.9
Benzidine	<4600	<47	<9000	<450	<44	<45	<47	<45	<44
Benzo (a) anthracene	<820	<8.4	<1600	<80	<7.8	<8.0	<8.4	<8.0	<7.8
Benzo (a) pyrene	<260	<2.7	<510	<26	<2.5	<2.6	<2.7	<2.6	<2.5
Benzo (b) fluoroanthene	<510	<5.2	<980	<49	<10	<4.9	<5.2	<4.9	<4.8
Benzo (ghi) perylene	<430	<4.4	<840	<42	<4.1	<4.2	<4.4	<4.2	<4.1
Benzo (k) fluoranthene	<260	<2.7	<510	<26	<3.5	<2.6	<2.7	<2.6	<2.5
Bis (2-chloroethoxy) methane	<560	<5.7	<1,100	<55	<5.3	<5.5	<5.7	<5.4	<5.3
Bis (2-chloroethyl) ether	<600	<6.1	<1200	<59	<5.7	<5.9	<6.1	<5.8	<5.7
Bis (2-chloroisopropyl) ether	<600	<6.1	<2000	<59	<5.7	<5.9	<6.1	<5.8	<5.7
Bis (2-ethylhexyl) phthalate	<1,100	<11	<390	<100	<10	<10	<11	<10	<10
4-Bromophenyl phenyl ether	<200	<2.0	<2000	<20	<1.9	<2.0	<2.0	<1.9	<1.9
Butyl benzyl phthalate	<1,100	<11	<390	<100	<10	<10	<11	<10	<10
2-Chloronaphthalene	<200	<2.0	<860	<20	<1.9	<2.0	<2.0	<1.9	<1.9
4-Chlorophenyl phenyl ether	<440	<4.5	<510	<43	<4.2	<4.3	<4.5	<4.3	<4.2
Chrysene	<260	<2.7	<510	<26	<2.5	<2.6	<2.7	<2.6	<2.5
Dibenzo (a,h) anthracene	<1,100	<2.7	<390	<26	<10	<10	<2.7	<2.6	<2.5
1,2-Dichlorobenzene	<200	6.51	<390	31.1	22.0	20.7	29.4	18.2	14.2
1,3-Dichlorobenzene	<200	<2.0	<900	<20	<1.9	<2.0	<2.0	<1.9	<1.9
1,4-Dichlorobenzene	<460	104	<3370	398	35.7	35.5	47.3	28.7	25.2
3,3-Dichlorobenzidine	<1700	<17.7	<2000	<170	<17	<17	<17.7	<16.8	<16.5
Diethyl phthalate	<1,100	<11	<2000	<100	<10	<10	<11	<10	<10
Dimethyl phthalate	<1,100	<11	<2000	<52	<10	<10	<11	<10	<5.0
Di-n-butyl phthalate	<1,100	<11	<1200	<100	<10	<10	<11	<10	<10
2,4-Dinitrotoluene	<600	<6.1	<390	<59	<5.7	<5.9	<6.1	<5.8	<5.7
2,6-Dinitrotoluene	<200	<2.0	<2000	<20	<1.9	<2.0	<2.0	<1.9	<1.9
Di-n-octyl phthalate	<1,100	<11	<2000	<100	<10	<10	<11	<10	<10
1,2-Diphenylhydrazine	<1,100	<11	<450	<100	<10	<10	<11	<10	<10
Fluoranthene	<230	<2.4	<390	<23	<2.2	<2.3	<2.4	<2.2	<2.2
Fluorene	<200	<2.0	<390	<20	<1.9	<2.0	<2.0	<1.9	<1.9
Hexachlorobenzene	<200	<2.0	<180	<20	<1.9	<2.0	<2.0	<1.9	<1.9
Hexachlorobutadiene	<95	<97	<2000	<9.3	<0.90	<.93	<97	<.92	<.90
Hexachlorocyclopentadiene	<1,100	<11	<330	<100	<10	<10	<11	<10	<10
Hexachloroethane	<170	<1.7	<760	<16	<1.6	<1.6	<1.7	<1.6	<1.6
Indeno (1,2,3-c,d) pyrene	<490	<4.0	<450	<38	<4.7	<4.8	<4.0	<3.8	<3.7
Isophorone	<230	<2.4	<330	<23	<2.2	<2.3	<2.4	<2.2	<2.2
Naphthalene	<170	7.94	<390	38.6	<1.6	<1.6	<1.7	<1.6	<1.6
Nitrobenzene	<200	<2.0	<2000	<20	<1.9	<2.0	<2.0	<1.9	<1.9
n-Nitrosodimethylamine	<1,100	<11	<2000	<100	<10	<10	<11	<10	<10
n-Nitrosodi-n-propylamine	<1,100	<11	<390	<100	<10	<10	<11	<10	<10
n-Nitrosodiphenylamine	<200	<2.0	<1,100	<20	<1.9	<2.0	<2.0	<1.9	<1.9
Phenanthrene	<570	<5.8	<390	<56	<5.4	<5.6	<5.8	<5.5	<5.4
Pyrene	<200	<2.0	<390	<20	<1.9	<2.0	<2.0	<1.9	<1.9
1,2,4-Trichlorobenzene	<200	<2.0	<2000	<20	<1.9	<2.0	<2.0	<1.9	<1.9
Sub Total 1	0	118	0		58	56	77	47	39

See last page for footnotes

Table 3. Summary of Base/Neutral Compounds in Ground Water, Krummrich Plant, Sauget, Illinois.

Well Number:	P-13	P-13	P-13	P-13	P-14	P-14	P-14	P-14	P-14
Date:	11/89	11/90	11/91	11/92	11/87	11/89	11/90	11/91	11/92
Laboratory:	ETC	ETC	ETC	ETC	ETC	ETC	ETC	ETC	ETC
Miscellaneous Base/Neutral Extractable Organic Compounds concentrations are in ug/L									
2,4-and 3,4-Dinitrochlorobenzene	<1,100	<11	<2000	<100	<10	<10	<11	<10	<10
2-Nitroaniline	<1,100	<11	<2000	<100	<10	<10	<11	<10	<10
4-Nitroaniline	<1,100	<11	<2000	<100	<10	<10	<11	<10	<10
2-Nitrochlorobenzene	<1,100	<11	<2000	<100	<10	<10	<11	<10	<10
3-Nitrochlorobenzene	NA	NA	<2000	NA	NA	NA	NA	<10	NA
4-Nitrochlorobenzene	<1,100	<11	<2000	<100	<10	<10	<11	<10	<10
4-Nitrodiphenylamine	<1,100	<11	<2000	<100	<10	<10	<11	<10	<10
Triphenyl phosphate	<1,100	<11	<2000	NA	<10	<10	<11	<10	NA
2,3,7,8-Tetrachloro-dibenzo-p-dioxin	NA	NA	NA	NA	NA	NA	NA	NA	NA
2-Nitrobiphenyl	<1,100	NA	NA	NA	NA	<10	NA	NA	NA
4-Nitrobiphenyl	<1,100	NA	NA	NA	NA	<10	NA	NA	NA
Benzyl alcohol	NA	NA	NA	NA	NA	NA	NA	NA	<10
Aniline	685,000	71,600	288,000	527000	NA	11.2	<11	<10	<10
4-Chloroaniline	NA	NA	9,970	30,700	NA	NA	NA	<10	55.6
2-Methylnaphthalene	NA	NA	NA	NA	NA	NA	NA	NA	NA
N-nitroaniline	NA	NA	NA	NA	NA	NA	NA	NA	NA
Dibenzofuran	NA	NA	NA	NA	NA	NA	NA	NA	NA
3-Chloroaniline	NA	NA	13,500	13000	NA	NA	NA	<10	<10
2-Chloroaniline	NA	NA	12,400	29000	NA	NA	NA	103	105
Sub Total 2	685,000	71,600	323,870	599,700	0	11	0	103	161
Total Base/Neutral Compounds	685,000	71,718	323,870	600,168	58	67	77	150	200

See last page for footnotes.

Table 3. Summary of Base/Neutral Compounds in Ground Water, Krummrich Plant, Sauget, Illinois.

Well Number:	Field Blank	Field Blank	Field Blank	Field Blank	Field Blank	Field Blank	Trip Blank
Date:	3/87	11/90	11/91	11/9/92	11/12/92	9/94	3/87
Laboratory:	ETC	ETC	ETC	ETC	ETC	SL	ETC
USEPA Priority Pollutant Base/Neutral Extractable Organic Compounds concentrations are in ug/L							
Acenaphthene	<2.0	<1.9	<1.9	<1.9	<1.9	<10	<2.1
Acenapthylene	<3.7	<3.5	<3.6	<3.5	<3.5	<10	<3.9
Anthracene	<2.0	<1.9	<1.9	<1.9	<1.9	<10	<2.1
Benzidine	<47	<44	<45	<44	<44	<80	<49
Benzo (a) anthracene	<8.3	<7.8	<8.0	<7.9	<7.9	<10	<8.7
Benzo (a) pyrene	<2.7	<2.5	<2.6	<2.5	<2.5	<10	<2.8
Benzo (b) fluoroanthene	<11	<4.8	<4.9	<4.8	<4.8	<10	<11
Benzo (ghi) perylene	<4.4	<4.1	<4.2	<4.1	<4.1	<10	<4.6
Benzo (k) fluoranthene	<3.7	<2.5	<2.6	<2.5	<2.5	<10	<3.9
Bis (2-chloroethoxy) methane	<5.6	<5.3	<5.4	<5.4	<5.4	<10	<5.9
Bis (2-chloroethyl) ether	<6.1	<5.7	<5.8	<5.8	<5.8	<10	<6.3
Bis (2-chloroisopropyl) ether	<6.1	<5.7	<5.8	<5.8	<5.8	<10	<6.3
Bis (2-ethylhexyl) phthalate	<11	<10	<10	<10	<10	<10	<11
4-Bromophenyl phenyl ether	<2.0	<1.9	<1.9	<1.9	<1.9	<10	<2.1
Butyl benzyl phthalate	<11	<10	<10	<10	<10	<10	<11
2-Chloronaphthalene	<2.0	<1.9	<1.9	<1.9	<1.9	<10	<2.1
4-Chlorophenyl phenyl ether	<4.5	<4.2	<4.3	<4.2	<4.2	<10	<4.7
Chrysene	<2.7	<2.5	<2.6	<2.5	<2.5	<10	<2.8
Dibenzo (a,h) anthracene	<11	<2.5	<2.6	<2.5	<2.5	<10	<11
1,2-Dichlorobenzene	<2.0	<1.9	<1.9	<1.9	<1.9	<10	<2.1
1,3-Dichlorobenzene	<2.0	<1.9	<1.9	<1.9	<1.9	<10	<2.1
1,4-Dichlorobenzene	<4.7	<4.4	<4.5	<4.4	<4.4	<10	<4.9
3,3-Dichlorobenzidine	<18	<16.5	<16.8	<16.7	<16.7	<20	<18
Diethyl phthalate	<11	<10	<10	<10	<10	<10	<11
Dimethyl phthalate	<11	<10	<10	<5.1	<5.1	<10	<11
Di-n-butyl phthalate	<11	<10	<10	<10	<10	<10	<11
2,4-Dinitrotoluene	<6.1	<5.7	<5.8	<5.8	<5.8	<10	<6.3
2,6-Dinitrotoluene	<2.0	<1.9	<1.9	<1.9	<1.9	<10	<2.1
Di-n-octyl phthalate	<11	<10	<10	<10	<10	<10	<11
1,2-Diphenylhydrazine	<11	<10	<10	<10	<10	<10	<11
Fluoranthene	<2.3	<2.2	<2.2	<2.2	<2.2	<10	<2.4
Fluorene	<2.0	<1.9	<1.9	<1.9	<1.9	<10	<2.1
Hexachlorobenzene	<2.0	<1.9	<1.9	<1.9	<1.9	<10	<2.1
Hexachlorobutadiene	<.96	<90	<.92	<.91	<.91	<10	<1.0
Hexachlorocyclopentadiene	<11	<10	<10	<10	<10	<10	<11
Hexachloroethane	<1.7	<1.6	<1.6	<1.6	<1.6	<10	<1.8
Indeno (1,2,3-c,d) pyrene	<5.0	<3.7	<3.8	<3.7	<3.7	<10	<5.2
Isophorone	<2.3	<2.2	<2.2	<2.2	<2.2	<10	<2.4
Naphthalene	<1.7	<1.6	<1.6	<1.6	<1.6	<10	<1.8
Nitrobenzene	<2.0	<1.9	<1.9	<1.9	<1.9	<10	<2.1
n-Nitrosodimethylamine	<11	<10	<10	<10	<10	<10	<11
n-Nitrosodi-n-propylamine	<11	<10	<10	<10	<10	<10	<11
n-Nitrosodiphenylamine	<2.0	<1.9	<1.9	<1.9	<1.9	<10	<2.1
Phenanthrene	<5.7	<5.4	<5.5	<5.5	<5.5	<10	<6.0
Pyrene	<2.0	<1.9	<1.9	<1.9	<1.9	<10	<2.1
1,2,4-Trichlorobenzene	<2.0	<1.9	<1.9	<1.9	<1.9	<10	<2.1
Sub Total 1	0	0	0	0	0	0	0

See last page for footnotes.

Table 3. Summary of Base/Neutral Compounds in Ground Water, Krummrich Plant, Sauget, Illinois.

Well Number:	Field Blank	Field Blank	Field Blank	Field Blank	Field Blank	Field Blank	Trip Blank
Date:	3/87	11/90	11/91	11/9/92	11/12/92	9/94	3/87
Laboratory:	ETC	ETC	ETC	ETC	ETC	SL	ETC
Miscellaneous Base/Neutral Extractable Organic Compounds concentrations are in ug/L							
2,4-and 3,4-Dinitrochlorobenzene	NA	<10	NA	NA	NA	<10	NA
2-Nitroaniline	<11	<10	NA	NA	NA	NA	<11
4-Nitroaniline	<11	<10	NA	NA	NA	NA	<11
2-Nitrochlorobenzene	NA	<10	NA	NA	NA	<10	NA
3-Nitrochlorobenzene	NA	NA	NA	NA	NA	<10	NA
4-Nitrochlorobenzene	NA	<10	NA	NA	NA	<10	NA
4-Nitrodiphenylamine	NA	<10	NA	NA	NA	<10	NA
Triphenyl phosphate	NA	<10	NA	NA	NA	NA	NA
2,3,7,8-Tetrachloro-dibenzo-p-dioxin	NA	<10	NA	NA	NA	NA	NA
2-Nitrobiphenyl	NA	NA	NA	NA	NA	<10	NA
4-Nitrobiphenyl	<11	<10	NA	NA	NA	<10	<11
Benzyl alcohol	<11	<10	NA	NA	NA	NA	<11
Aniline	<11	NA	NA	NA	NA	<50	<11
4-Chloroaniline	<11	<10	NA	NA	NA	<10	<11
2-Methylnaphthalene	<11	NA	NA	NA	NA	NA	<11
N-nitroaniline	<11	NA	NA	NA	NA	NA	<11
Dibenzofuran	<11	NA	NA	NA	NA	NA	<11
3-Chloroaniline	NA	NA	NA	NA	NA	<10	NA
2-Chloroaniline	NA	NA	NA	NA	NA	<10	NA
Sub Total 2	0	0	0	0	0	0	0
Total Base/Neutral Compounds	0	0	0	0	0	0	0

NA Not analyzed.
• Replicate sample.
ETC Environmental Testing and Certification, Edison, New Jersey.
SL Savannah Laboratories and Environmental Testing, Savannah, Georgia.
•• The compounds 2- and 4-nitrochlorobenzene and 3- and 4-chloroniline were found to coelute by Savannah Laboratories.
J Estimated value.

g:\technicl\tables\monsanto\krumm3.xls

APPENDIX H

Graphs of Water Quality Data

WATER-TABLE (SHALLOW) ZONE WELLS

Figure E-1. Well GM-12A - Concentrations of Benzene and Chlorobenzene vs. Time.

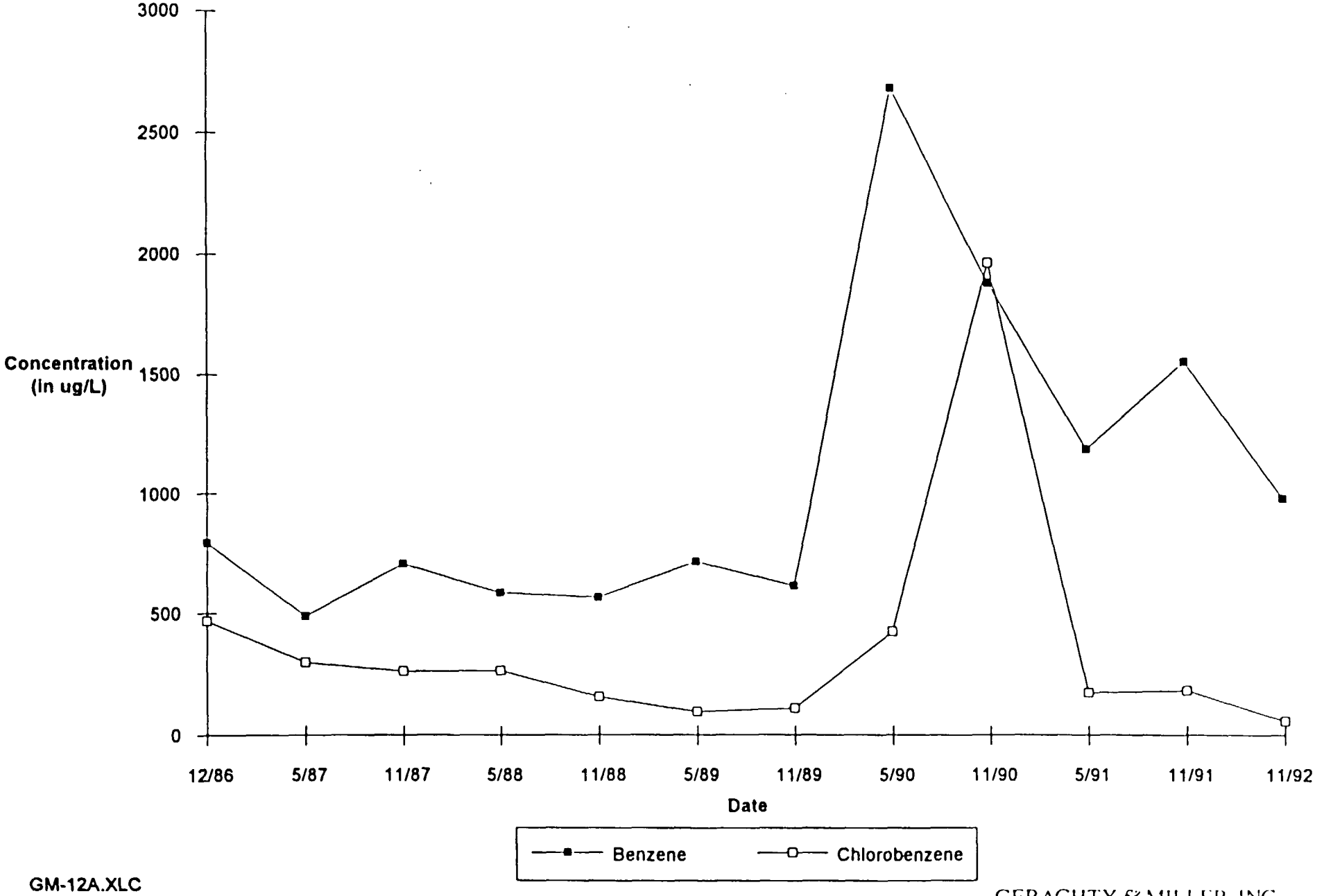

GM-12A.XLC

GERAGHTY & MILLER, INC.

Figure E-2. Well GM-9A - Concentrations of Benzene and Chlorobenzene vs. Time.

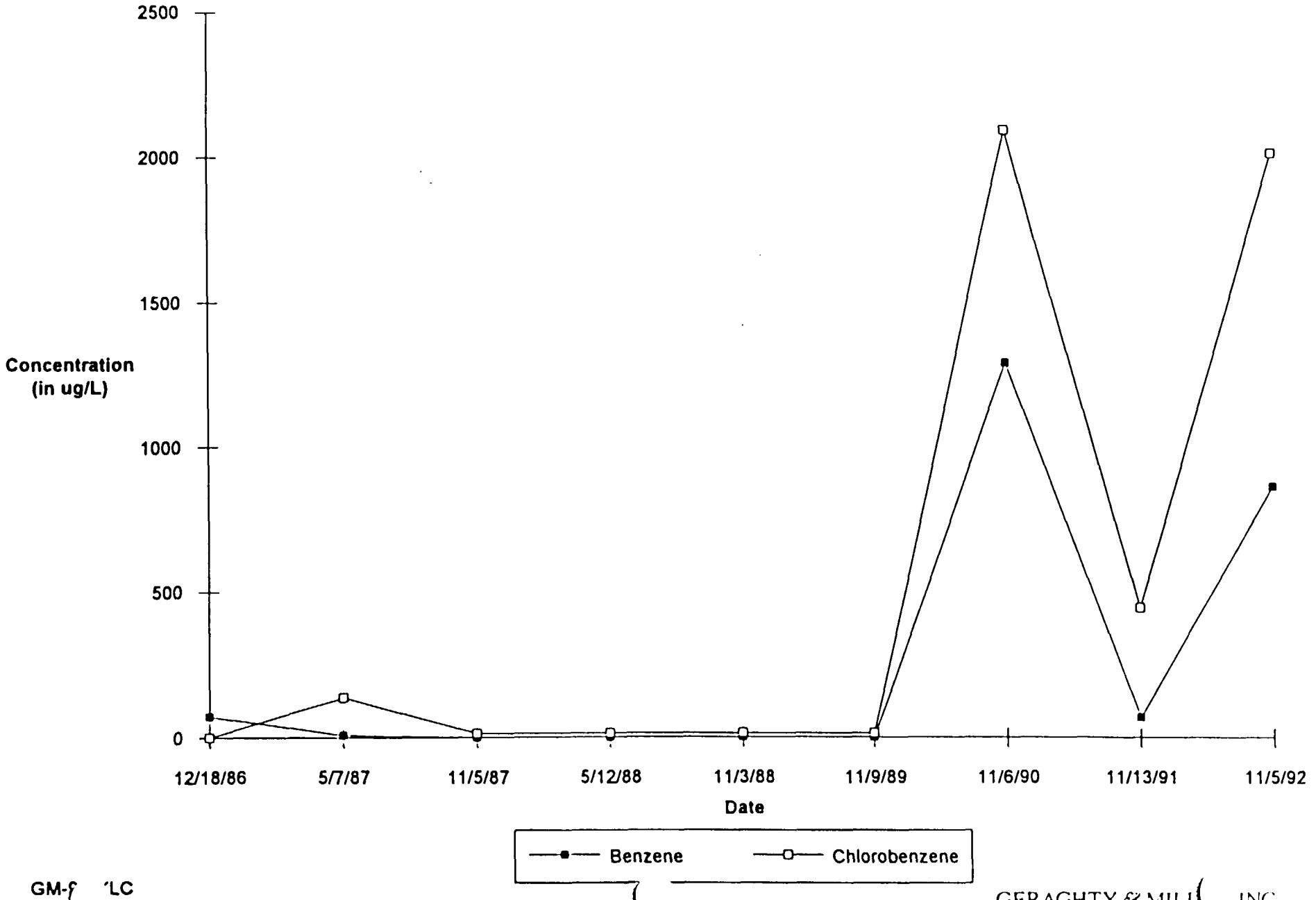

GM-[illegible] 'LC

GERAGHTY & MILLER INC.

Figure E-3. Well GM-10A - Concentrations of Benzene and Chlorobenzene vs. Time.

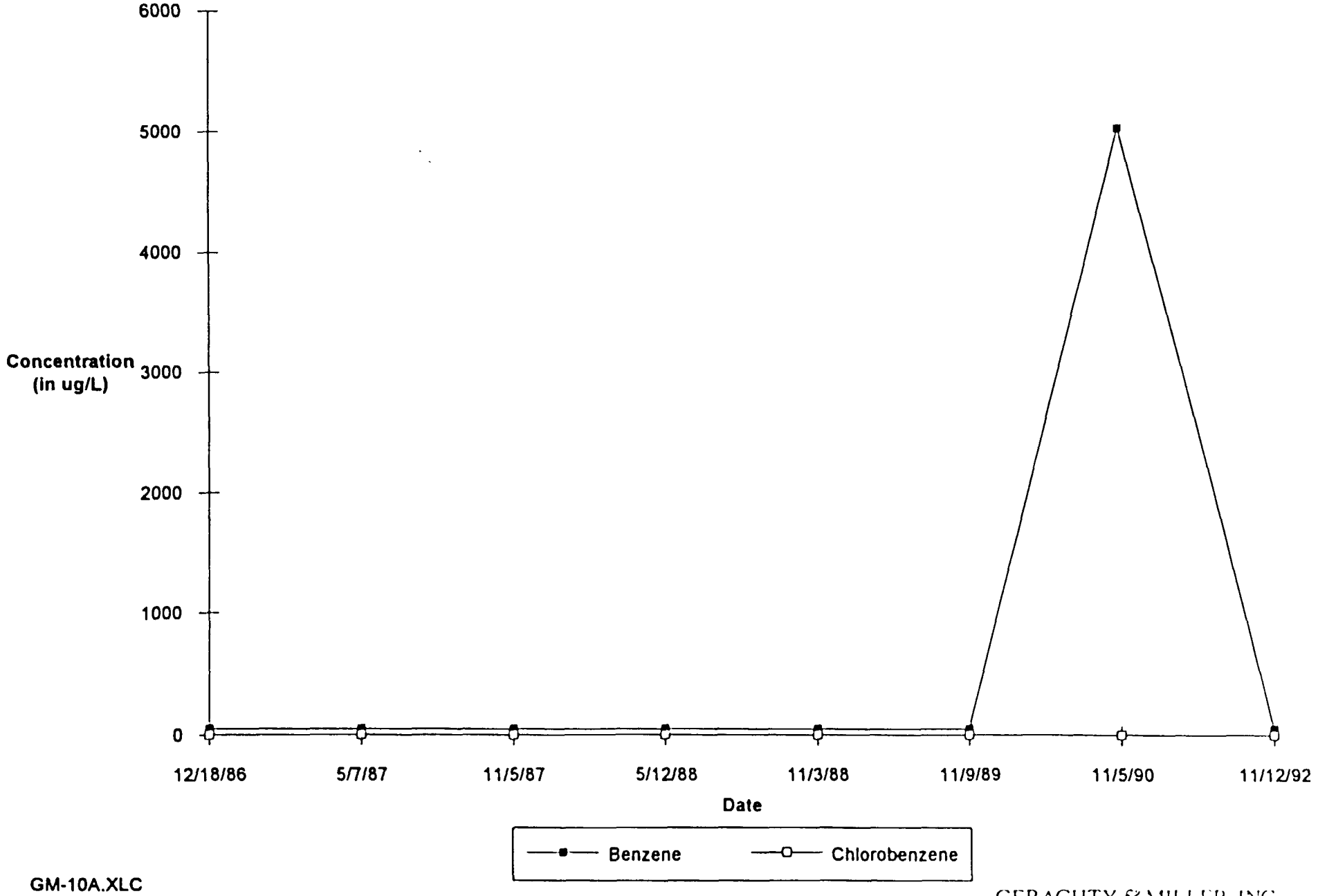

GM-10A.XLC

GERAGHTY & MILLER, INC.

Figure E-4. Well GM-4A - Concentrations of Benzene and Chlorobenzene vs. Time.

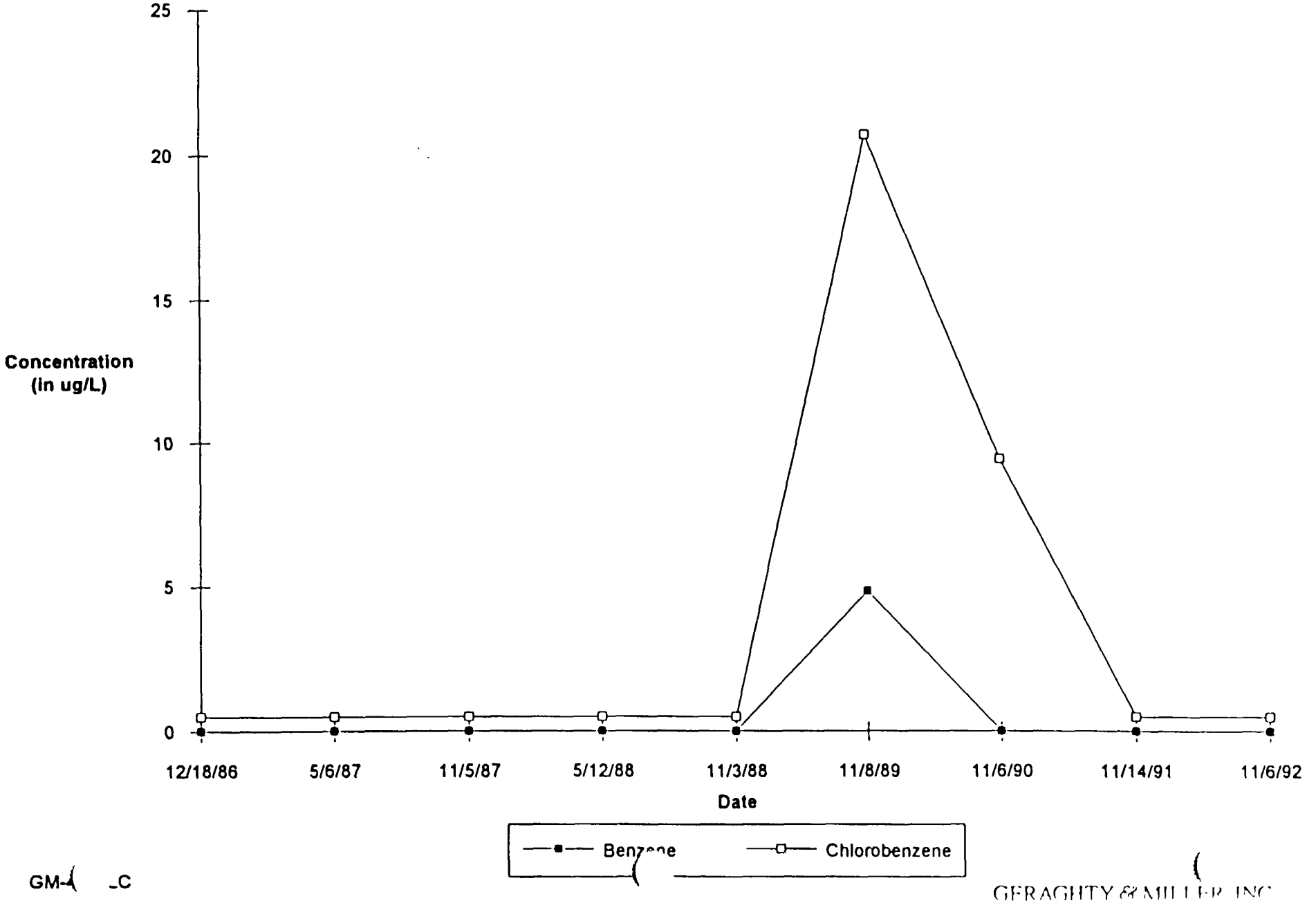

GM-4 _C

GERAGHTY & MILLER, INC.

Figure E-5. Well GM-17A - Concentrations of Benzene and Chlorobenzene vs. Time.

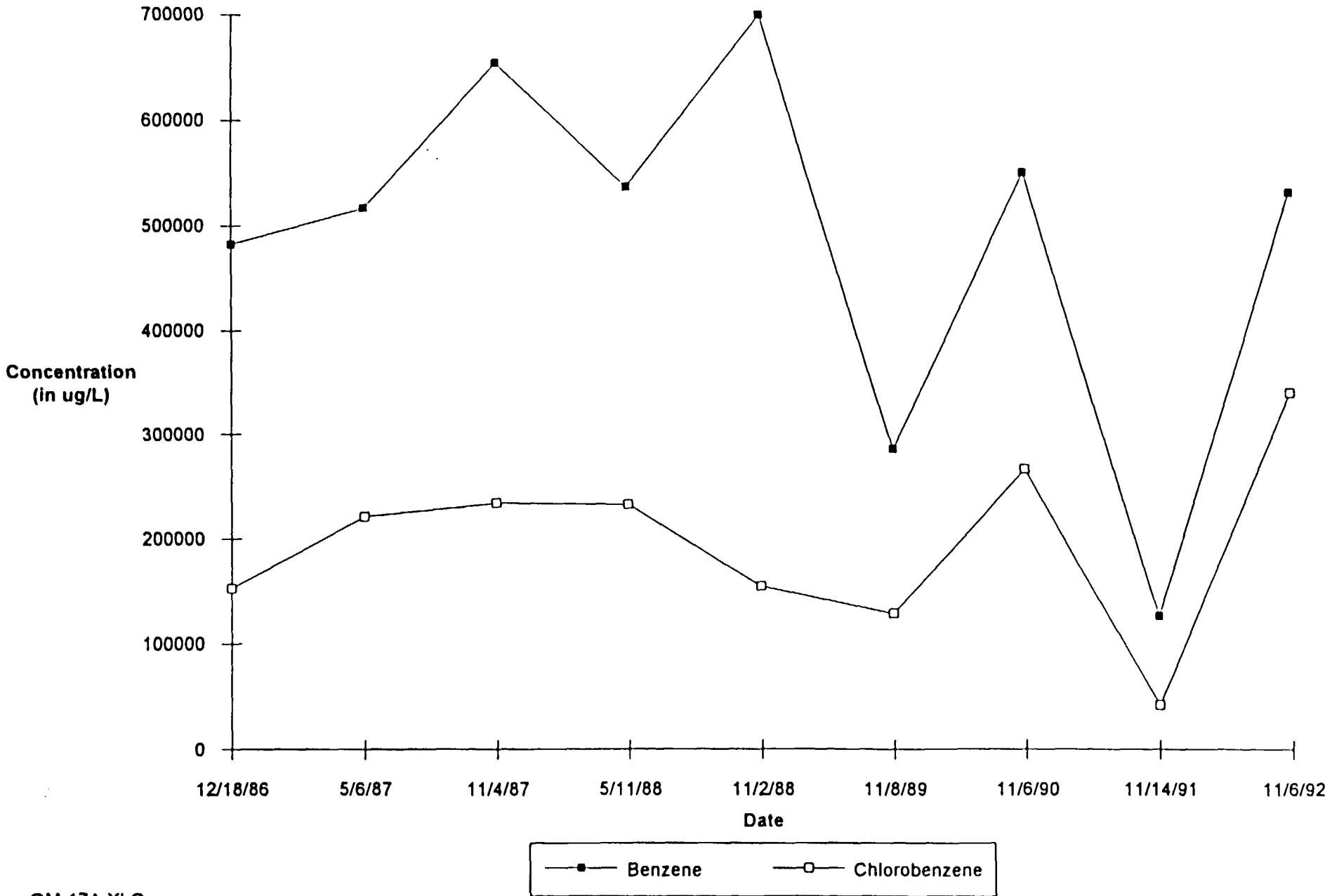

GM-17A.XLC

Figure E-6. Well GM-31A - Concentrations of Phenolic Compounds and 2-NCB/4-NCB/2,4-DNCB/3,4-DNCB/2-Nitrobiphenyl/4-Nitrobiphenyl vs. Time.

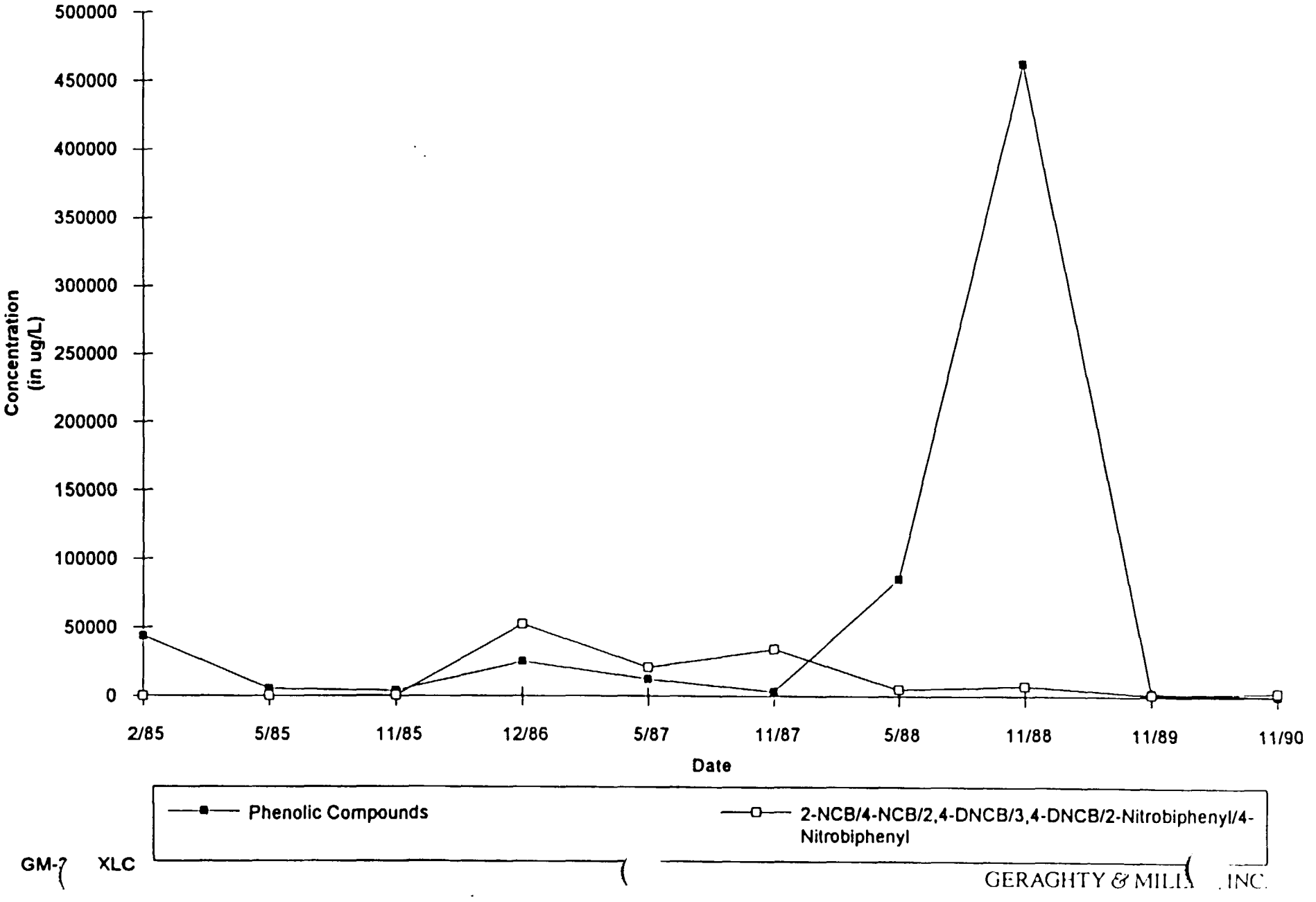

Figure E-7. Well GM-58A - Concentrations of Phenolic Compounds and 2-NCB/4-NCB/2,4-DNCB/3,4-DNCB/2-Nitrobiphenyl/4-Nitrobiphenyl vs. Time.

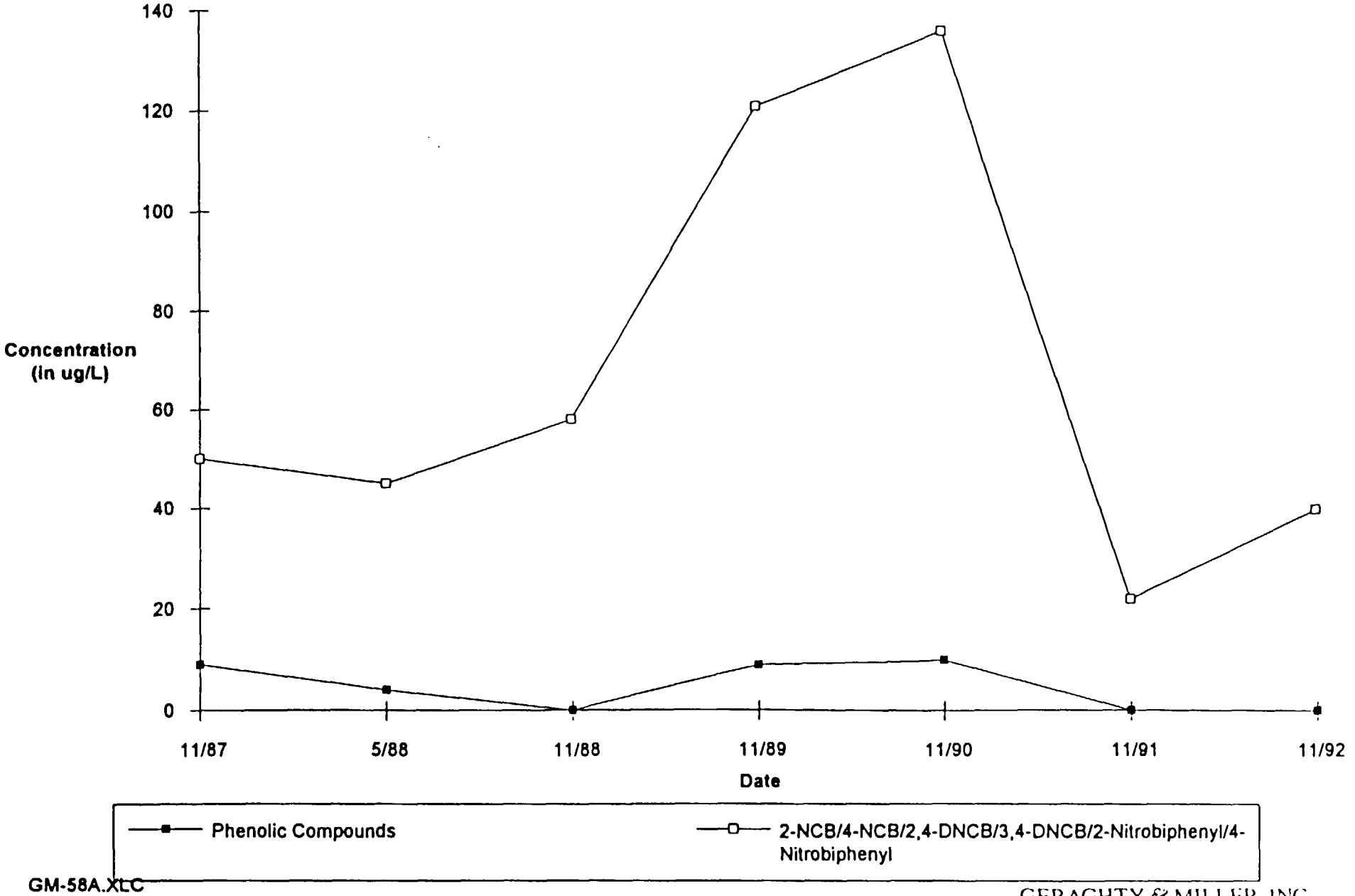

Figure E-8. Well-59A - Concentrations of Phenolic Compounds and 2-NCB/4-NCB/2,4-DNCB/3,4-DNCB/2-Nitrobiphenyl/4-Nitrobiphenyl vs. Time.

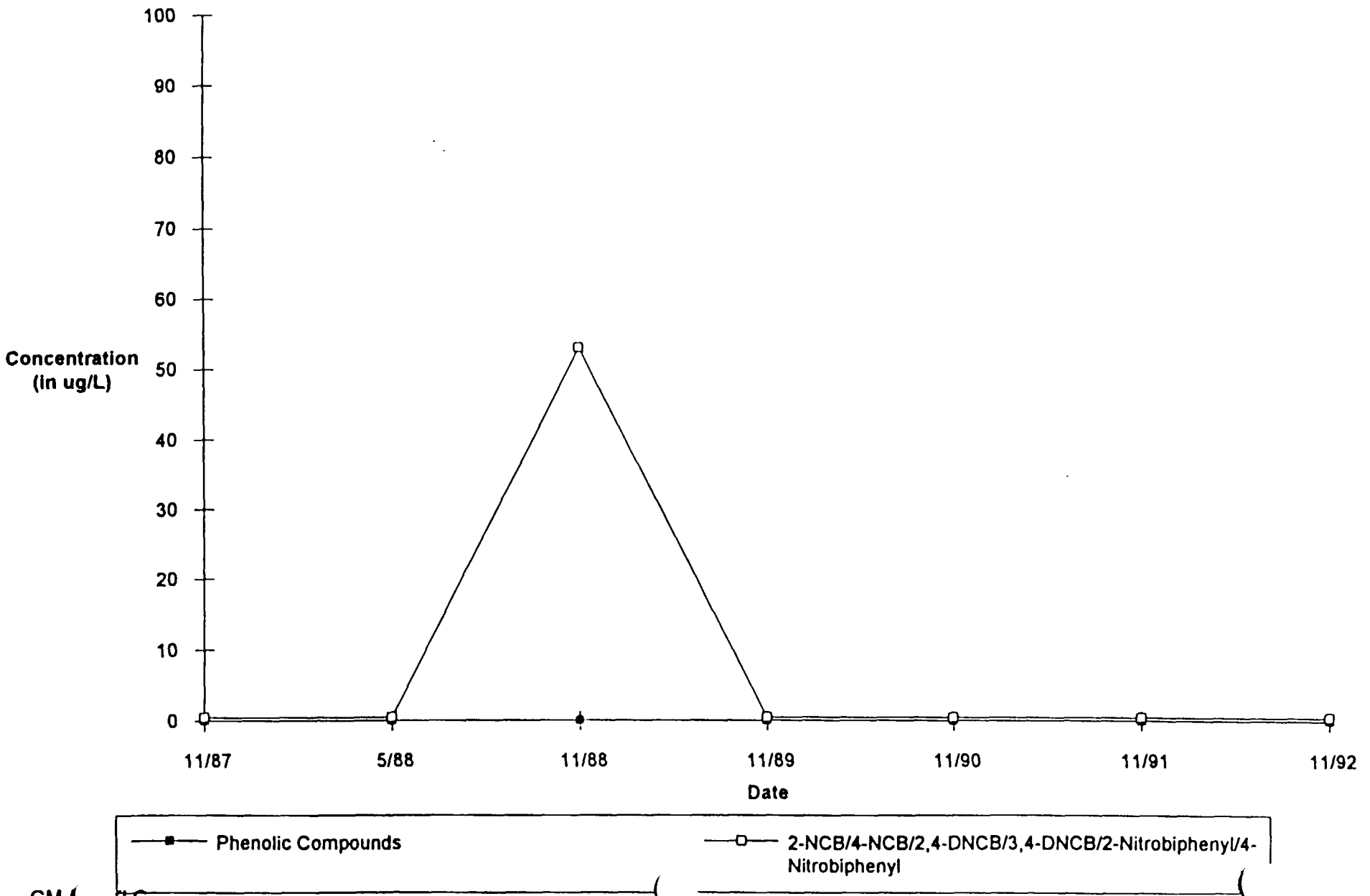

INTERMEDIATE ZONE WELLS

Figure E-9. Well GM-12B - Concentrations of Total Xylenes and Benzene vs. Time.

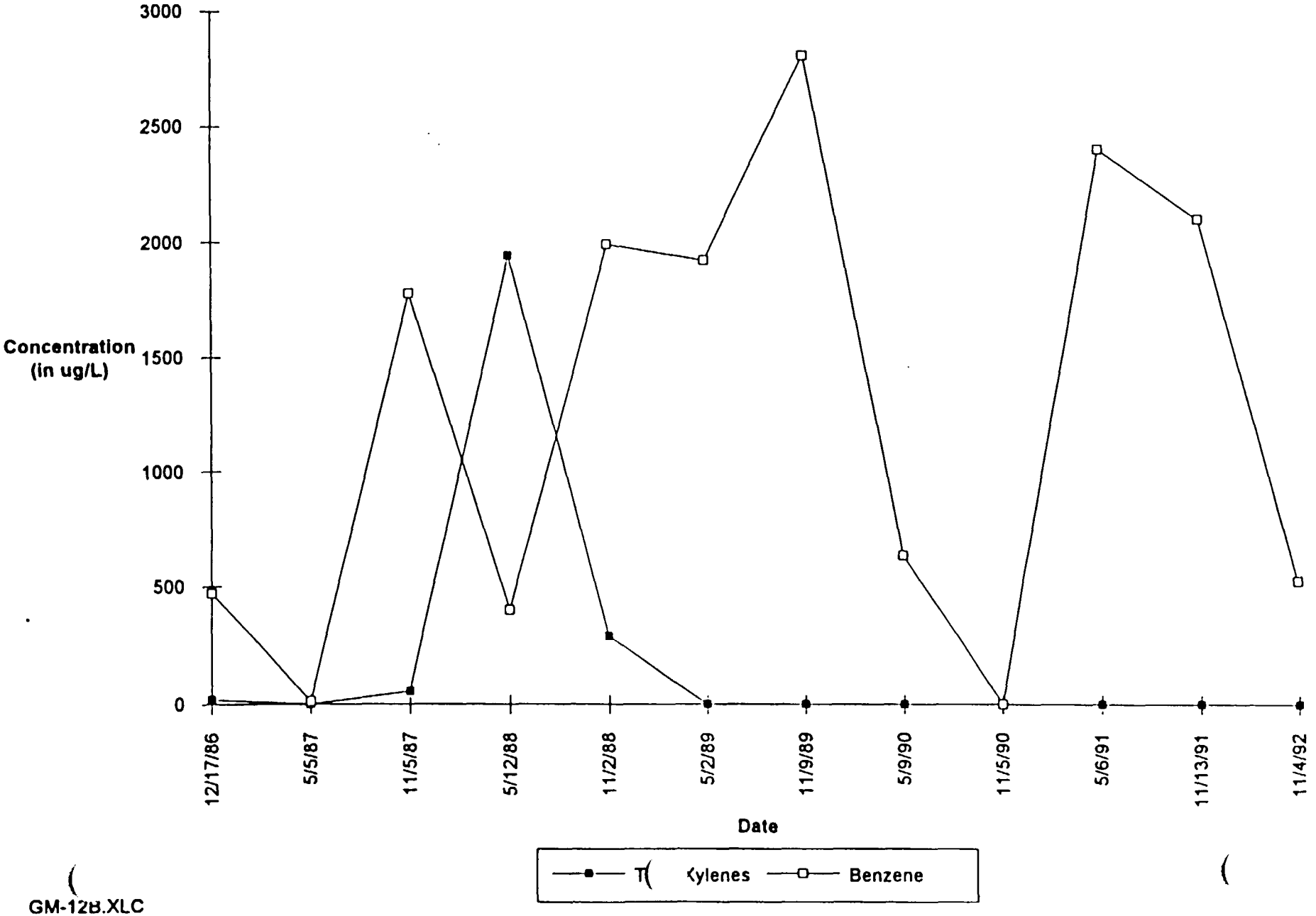

GM-12B.XLC

Figure E-10. Well GM-9B - Concentrations of Benzene and Chlorobenzene vs. Time.

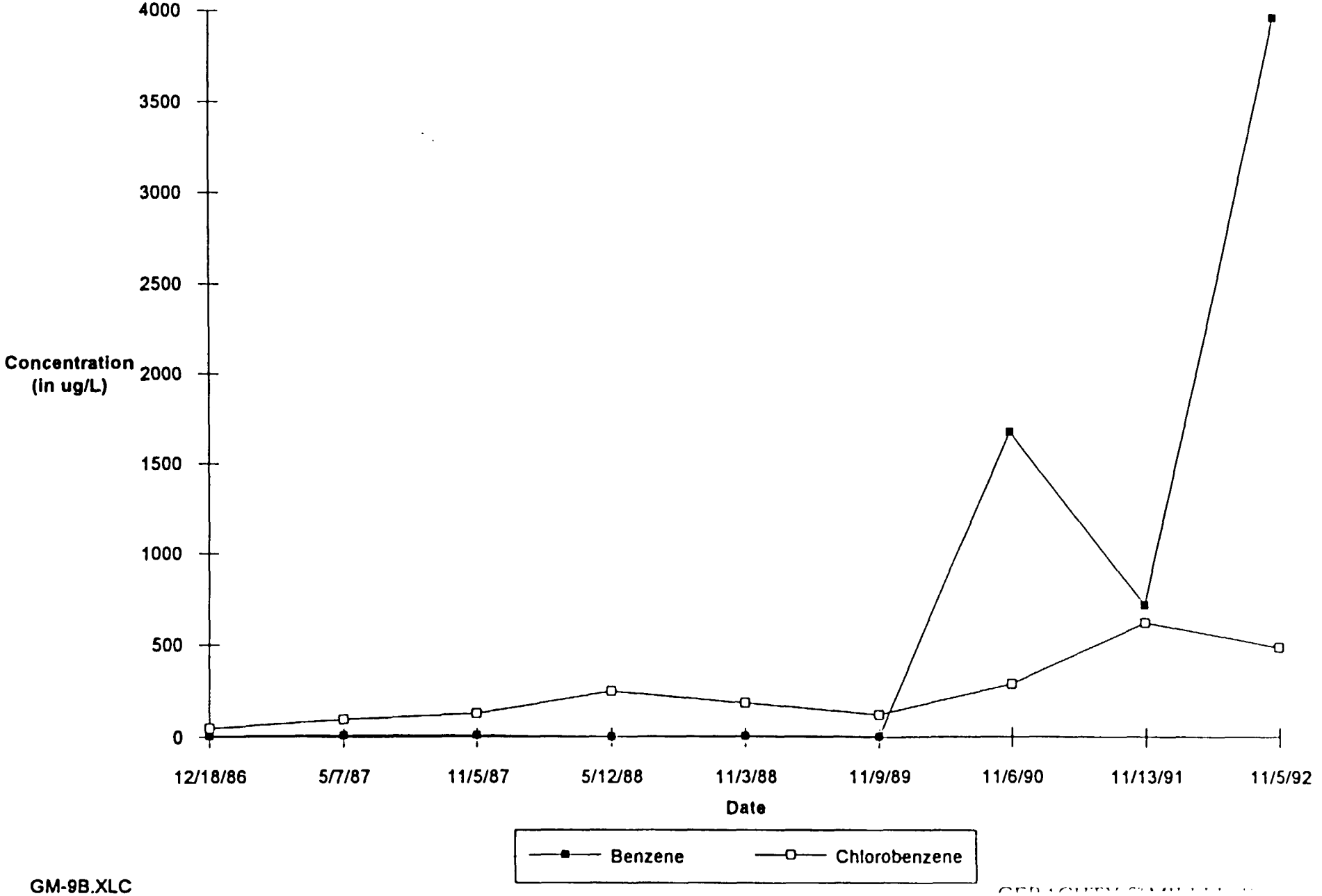

GM-9B.XLC

Figure E-11. Well GM-10B - Concentrations of Benzene and Chlorobenzene vs. Time.

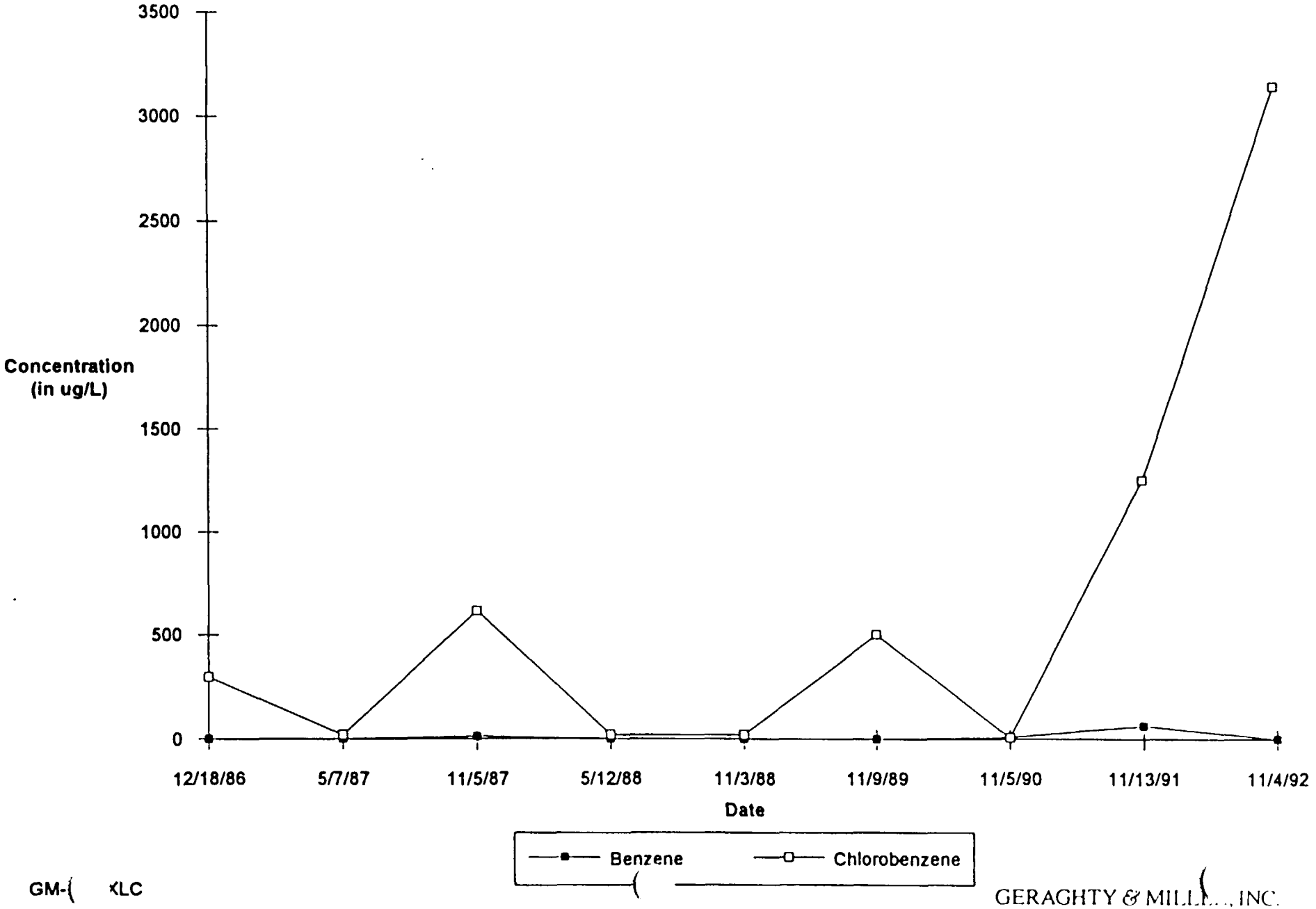

GM-(KLC

GERAGHTY & MILL..., INC.

Figure E-12. Well GM-4B - Concentrations of Benzene and Chlorobenzene vs. Time.

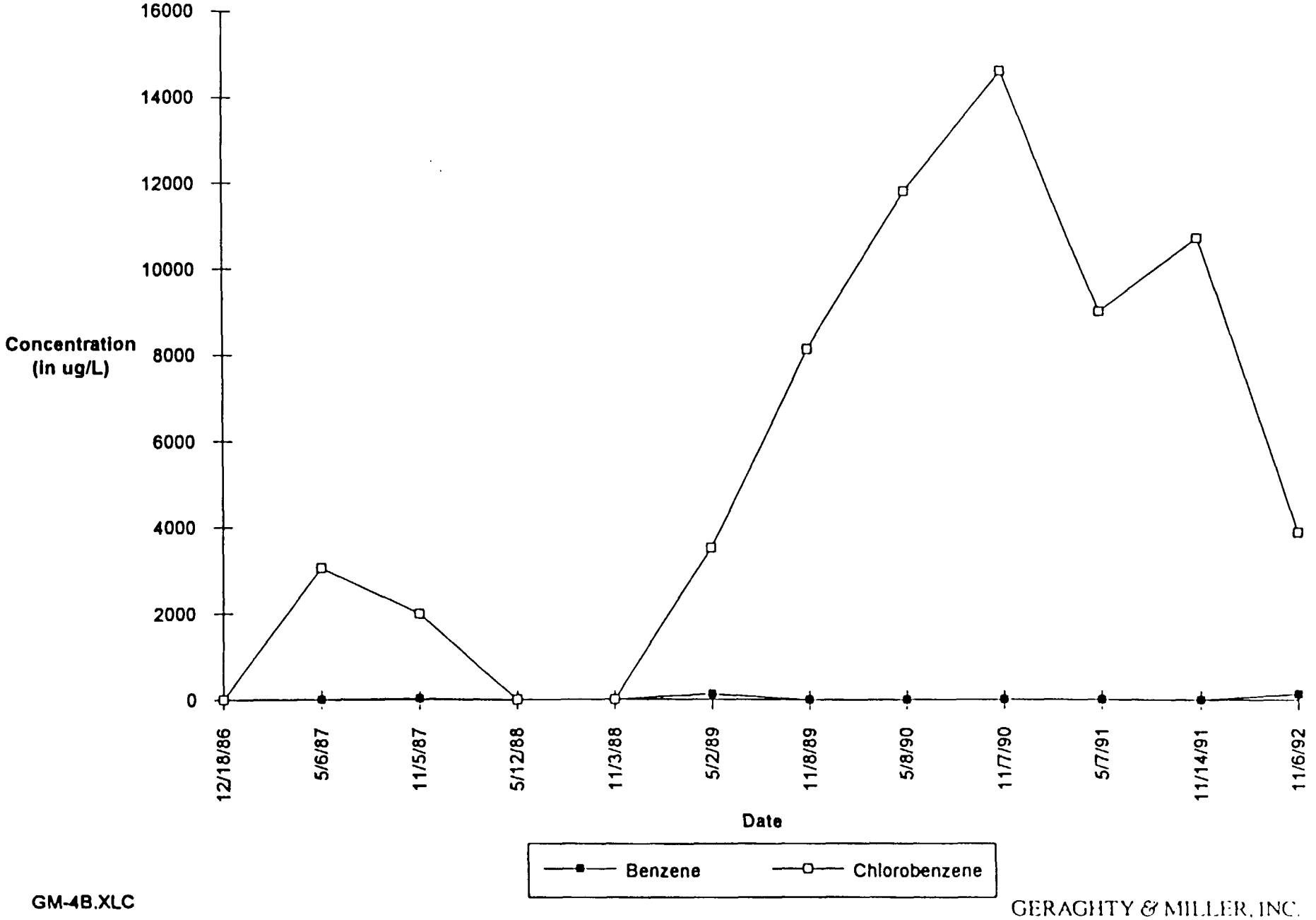

GM-4B.XLC

GERAGHTY & MILLER, INC.

Figure E-13. Well GM-17B - Concentrations of Benzene and Chlorobenzene vs. Time.

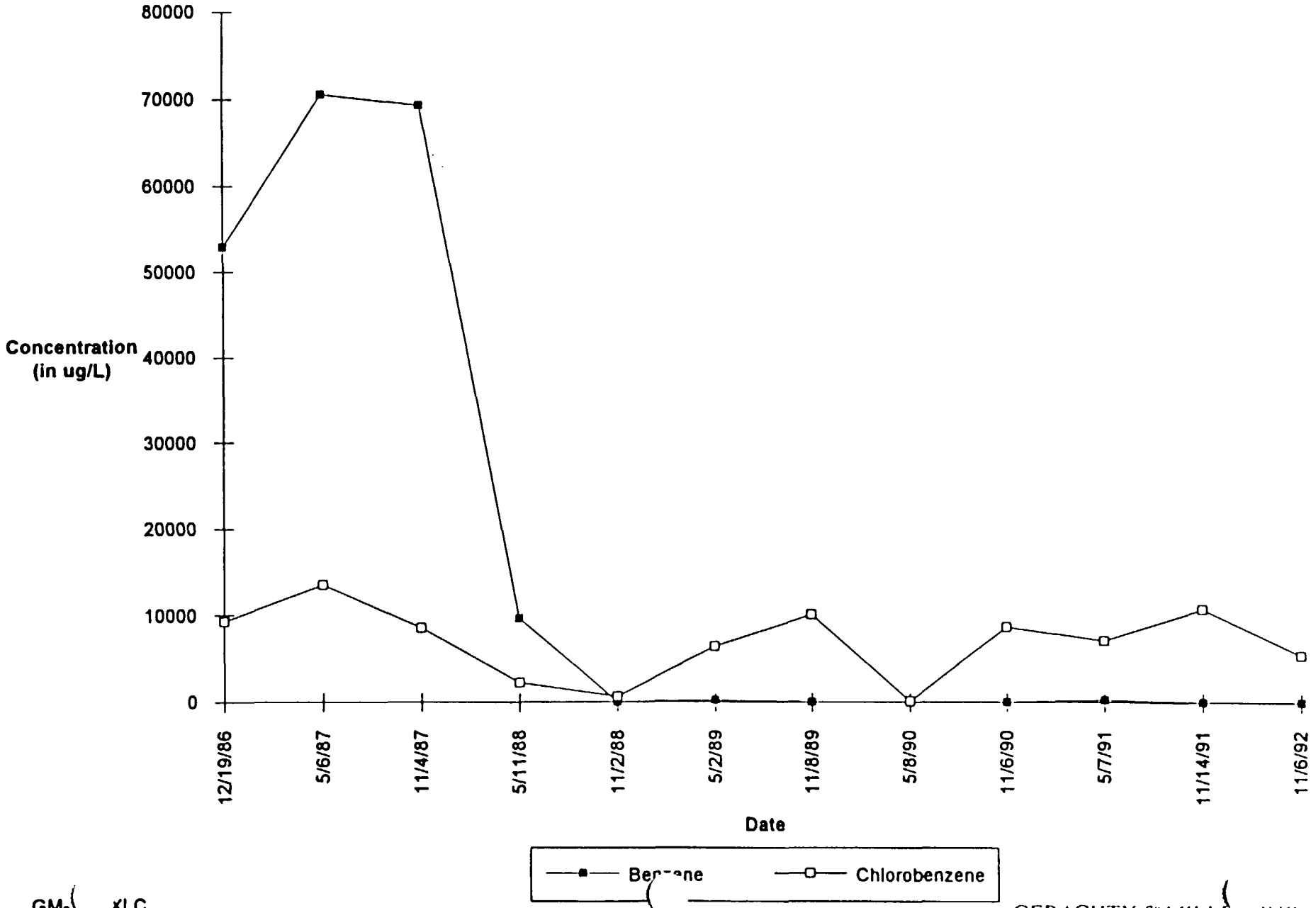

GM-(XLC

GERAGHTY & MILLER, INC.

Figure E-14. Well GM-31B - Concentrations of Benzene and Chlorobenzene vs. Time.

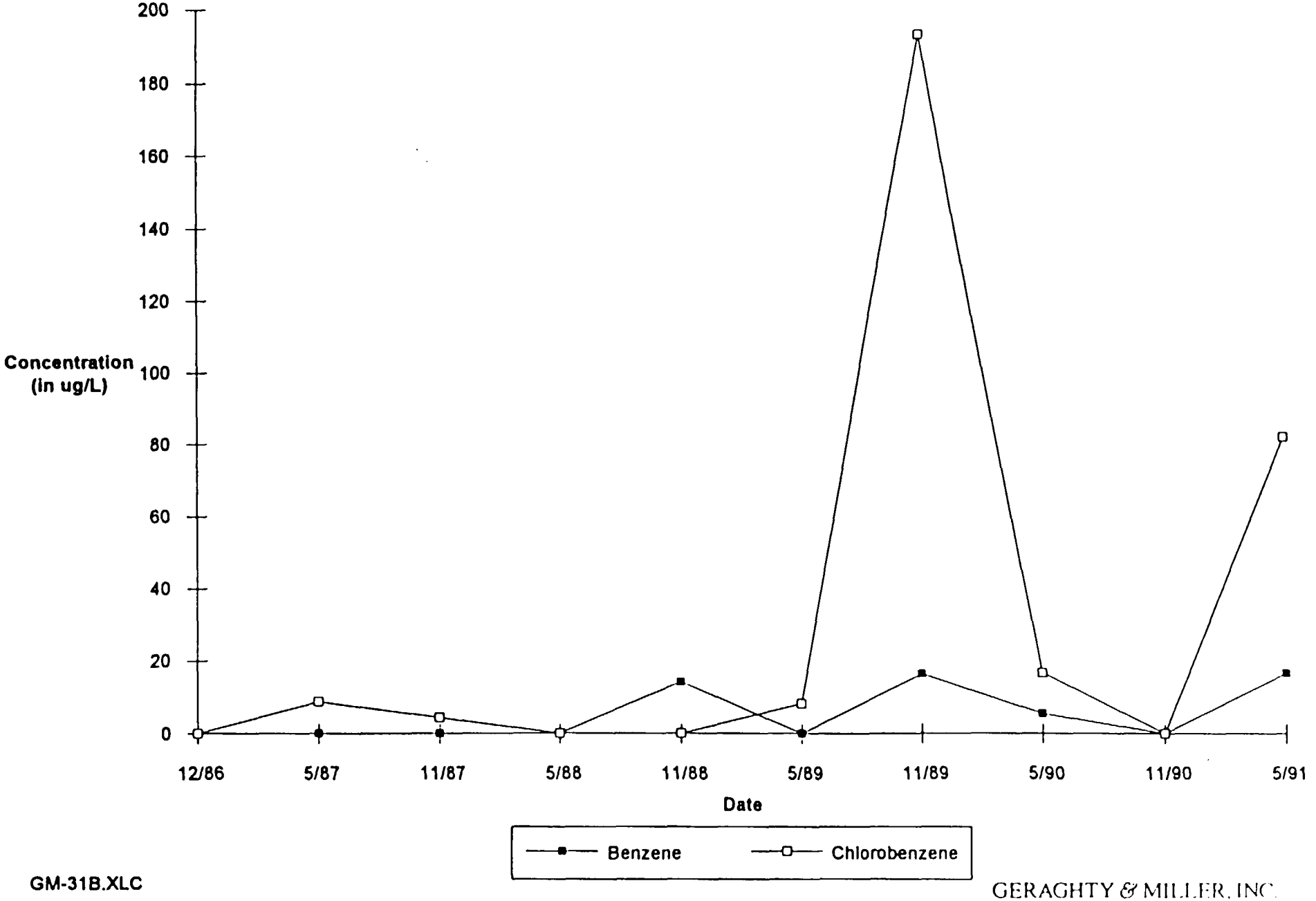

GM-31B.XLC

GERAGHTY & MILLER, INC.

DEEP ZONE WELLS

Figure E-15. Well GM-12C - Concentrations of Benzene and Chlorobenzene vs. Time.

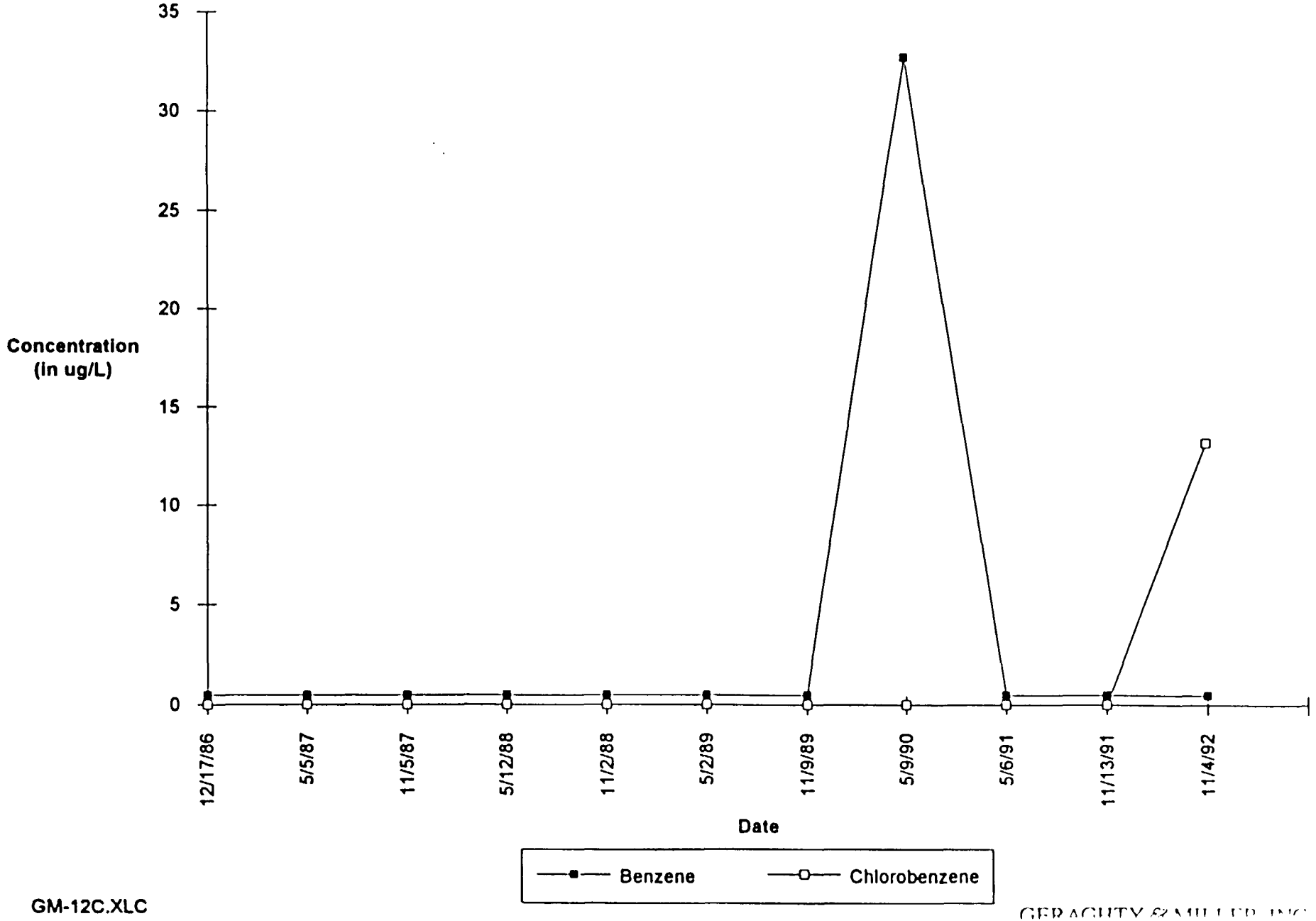

GM-12C.XLC

GERAGHTY & MILLER, INC.

Figure E-16. Well GM-9C - Concentrations of Benzene and Chlorobenzene vs. Time.

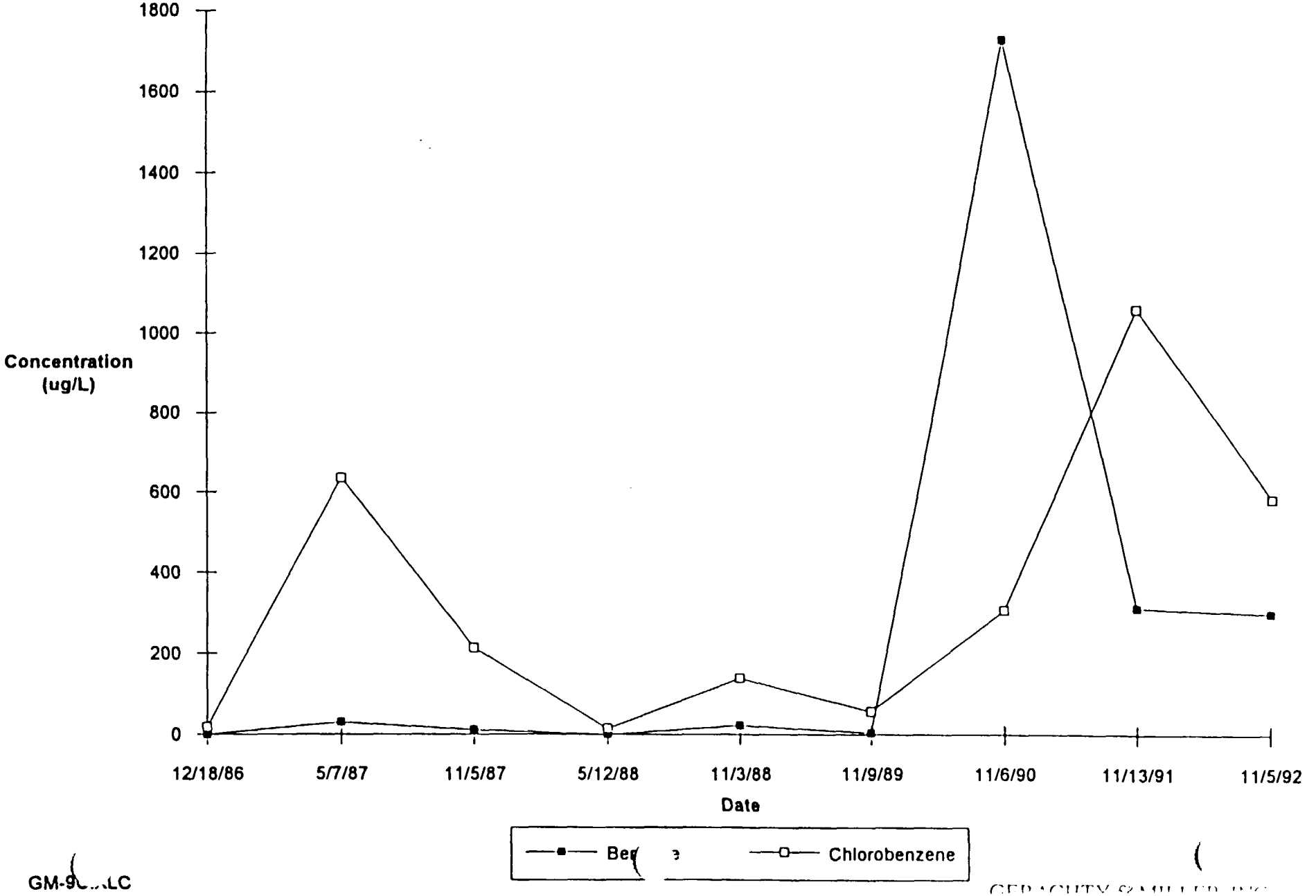

GM-9C.LC

Figure E-17. Well GM-10C - Concentrations of Benzene and Chlorobenzene vs. Time.

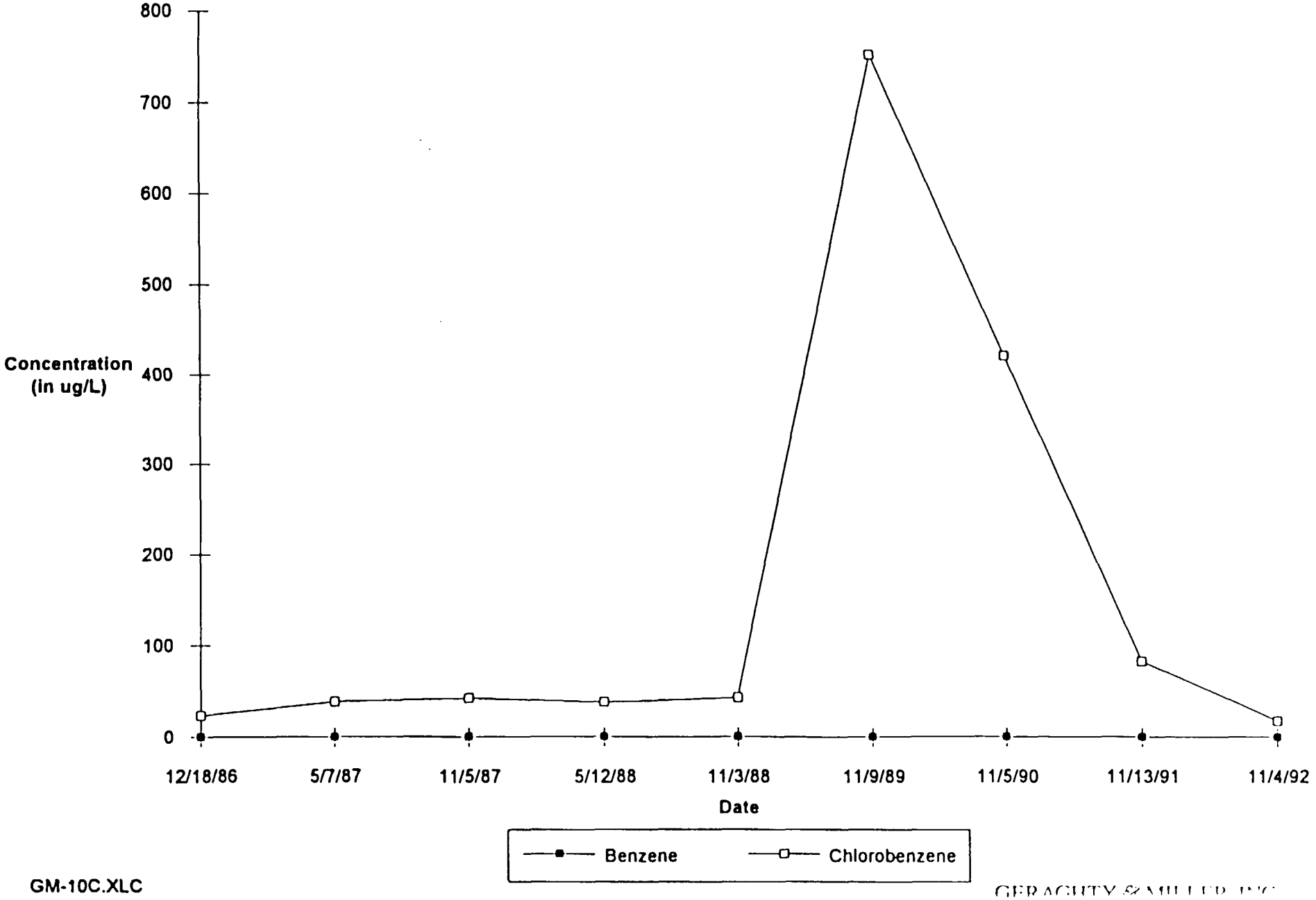

GM-10C.XLC

GERAGHTY & MILLER, INC.

Figure E-18. Well GM-4C - Concentrations of Benzene and Chlorobenzene vs. Time.

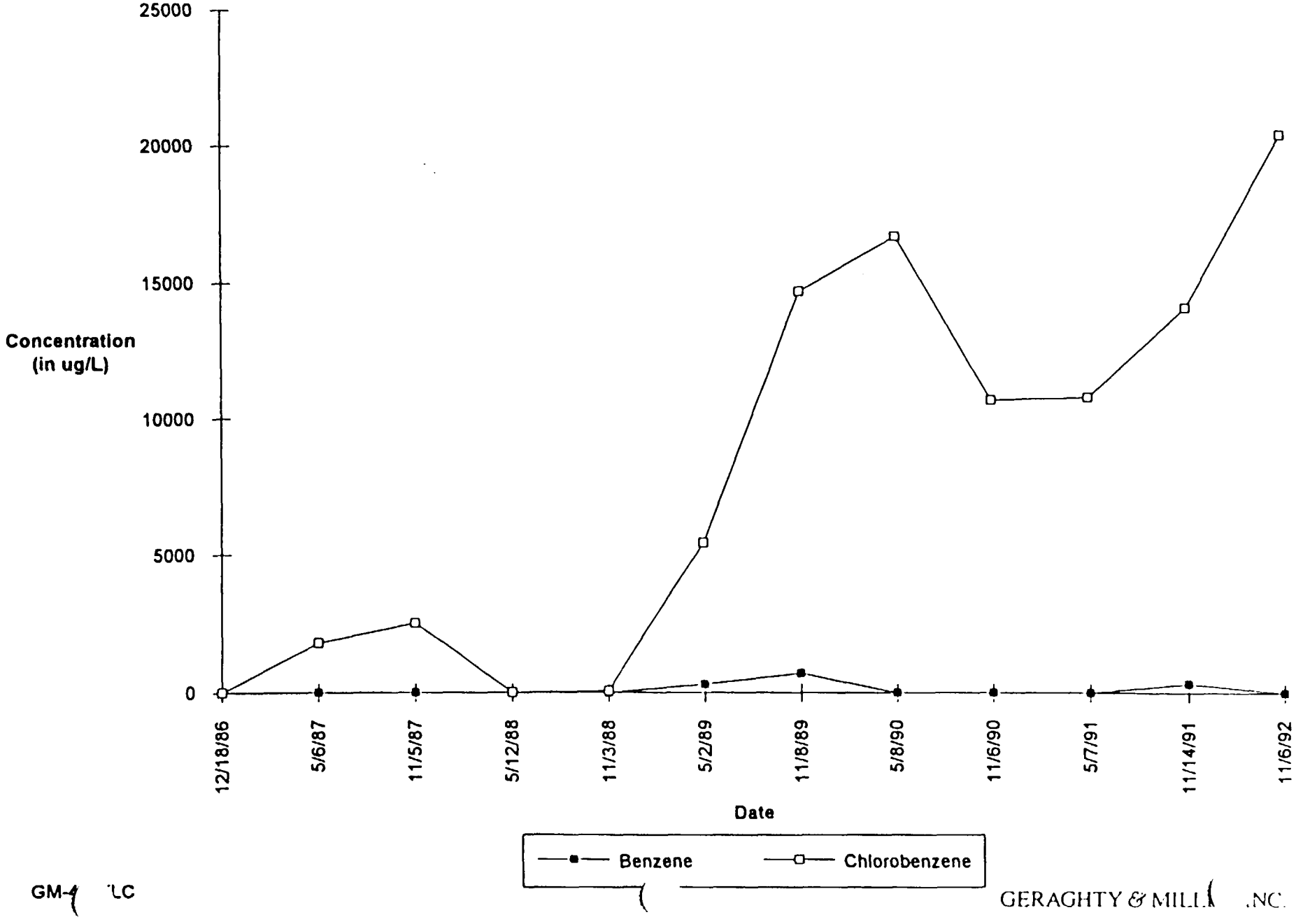

GM-4 LC

GERAGHTY & MILL .NC.

Figure E-19. Well GM-17C - Concentrations of Benzene and Chlorobenzene vs. Time.

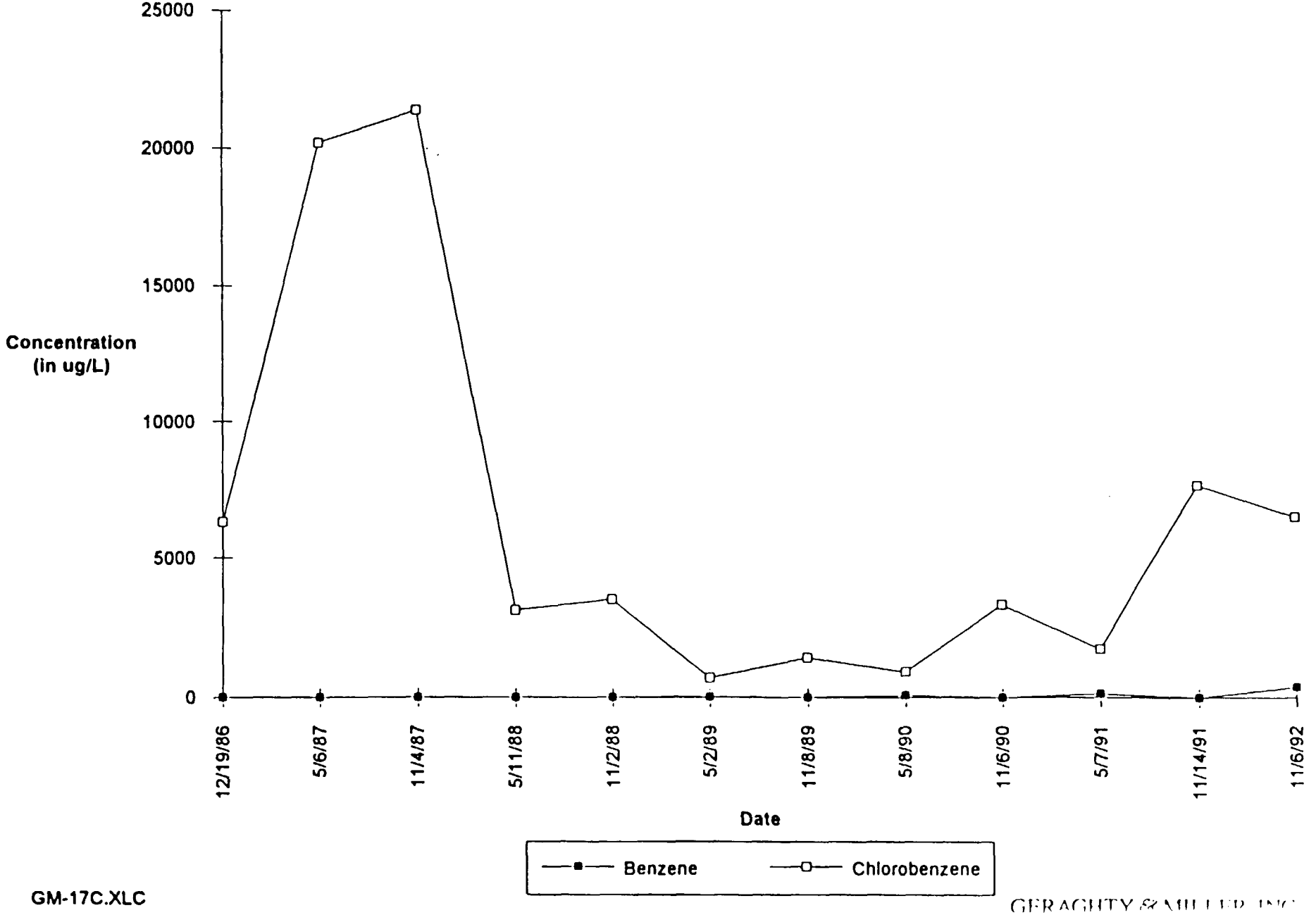

GM-17C.XLC

GERAGHTY & MILLER, INC.

Figure E-20. Well GM-31C - Concentrations of Benzene and Chlorobenzene vs. Time.

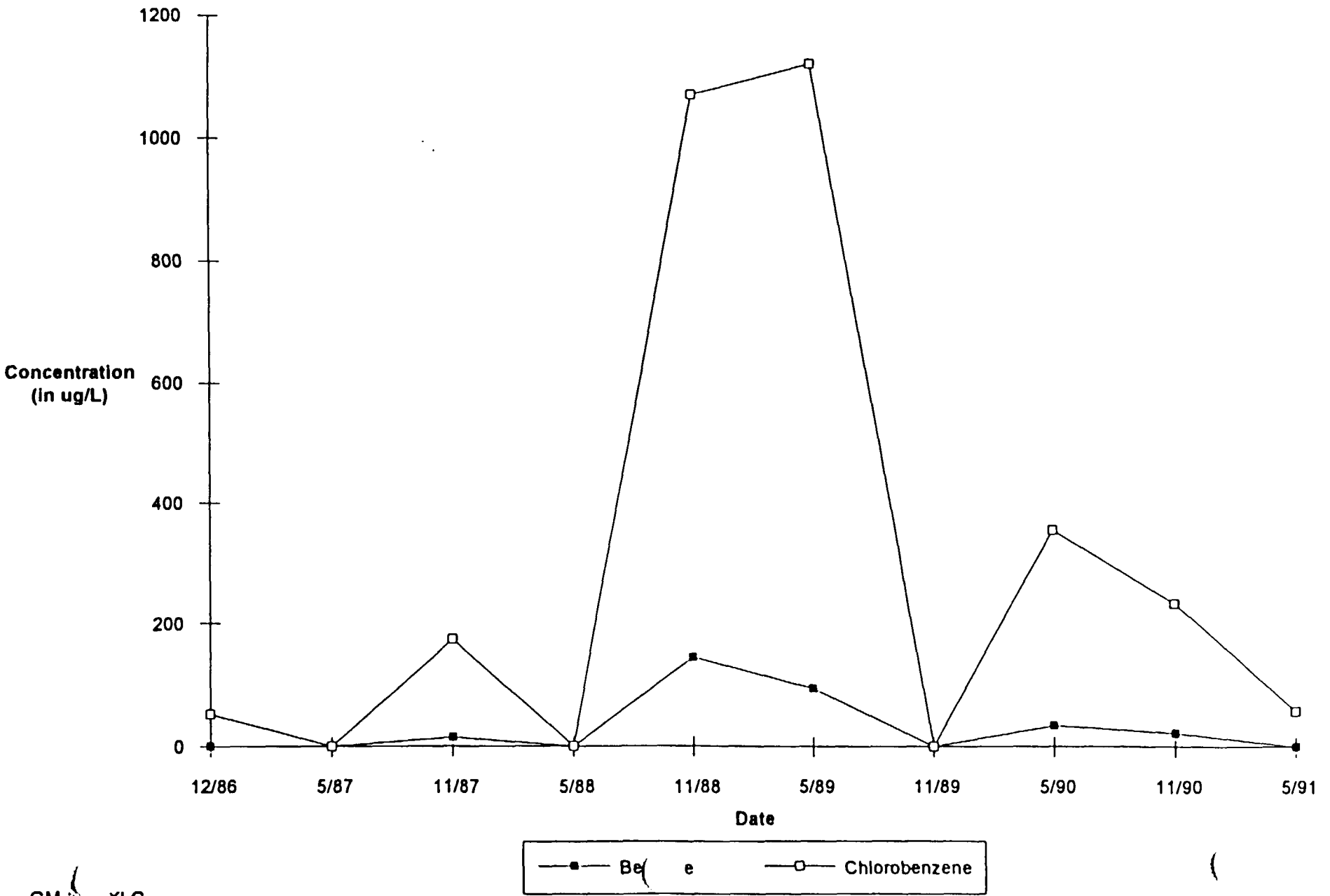

GM-31C.XLC

APPENDIX I

1994 Sampling Program

Table 1. Well Depths and Parameters, 1994 W.G. Krummrich Plant Annual Sampling Program, Monsanto Company, Sauget, Illinois.

Well ID	Well Depth (ft below grade)	Appendix IX VOCs	Appendix IX Acid and Base/Neutrals*
WGK Plant Area			
GM-4A	28	X	
GM-4B	87	X (replicate)	X (replicate)
GM-4C	104	X	X
GM-5	36	X	X
GM-9A	28	X	
GM-9B	75	X	
GM-9C	108	X	
GM-10A	28	X	
GM-10B	78	X	
GM-10C	111	X	
GM-12A	33.5	X (replicate)	
GM-12B	89	X	
GM-12C	114.5	X	
GM-17A	38	X	
GM-17B	78	X	X
GM-17C	107	X	X
GM-58A	39.5	X	X

Table 1. Well Depths and Parameters, 1994 W.G. Krummrich Plant Annual Sampling Program, Monsanto Company, Sauget, Illinois.

Well ID	Well Depth (ft below grade)	Appendix IX VOCs	Appendix IX Acid and Base/Neutrals*
Village Wells			
GM-20B	90	X	X
GM-54A	38.5	X	X
GM-54B	86.5	X	X
Blanks			
Field Blank (1)		X	X
Trip Blank (Daily)		X	

* The following additional base/neutral compounds were added to the Appendix IX analysis.

2-Chloraniline	2,4-Dinitrochlorobenzene
3-Chloraniline	3,4-Dinotrochlorobenzene
2-Nitrochlorobenzene	4-Nitrophenylamine
3-Nitrochlorobenzene	2-Nitrobiphenyl
4-Nitrochlorobenzene	4-Nitrobiphenyl

g:\aproject\monsanto\my0023 003\corres\miller15 let