# SDMS US EPA REGION V -1

SOME IMAGES WITHIN THIS DOCUMENT MAY BE ILLEGIBLE DUE TO BAD SOURCE DOCUMENTS.

# Description of Current Conditions

# W.G. Krummrich Plant

# Sauget, Illinois

# Volume 2

# DRAFT

**September 1, 2000**

**Submitted To:**

**US Environmental Protection Agency**
**Chicago, Illinois**

**Submitted By:**

**Solutia Inc**
**Sauget, Illinois**

## Volume 2 Appendices

Appendix 16 Site Soil Data, Solutia/Monsanto Samples

Appendix 17 Site Soil Data, IEPA Samples

Appendix 18 Geologic Logs
Appendix 18A 1986 Geraghty & Miller Report (Volume I)
Appendix 18B 1993 Geraghty & Miller Report

Appendix 19 Well Construction Information
Appendix 19A 1986 Geraghty & Miller Report (Volume I)
Appendix 19B 1986 Geraghty & Miller Report (Volume III)
Appendix 19C 1993 Geraghty & Miller Report
Appendix 19D 1997 Roux Report (Volume II)
Appendix 19E 1998 Roux Report

Appendix 20 Groundwater Levels
Appendix 20A 1986 Geraghty & Miller Report (Volume I)
Appendix 20B 1998 Roux Report

Appendix 21 Groundwater Flow Patterns

Appendix 22 Groundwater Velocity
Appendix 22A 1986 Geraghty & Miller Report (Volume I)
Appendix 22B 1997 Roux Report (Volume I)

Appendix 23 1986 Geraghty & Miller Report (Volumes I, II and III)

# Appendix 16

# Site Soil Data
# Solutia/Monsanto Samples

Table 4
Site Soil Data Summary

| | BBU-B1 (6-8') | | BBU-B10 (6-8') | | BBU-B11 (6-8') | |
|---|---|---|---|---|---|---|
| 1,1,1,2-Tetrachloroethane | 27 | U | 33 | U | 270 | U |
| 1,1,1-Trichloroethane | 27 | U | 33 | U | 270 | U |
| 1,1,2,2-Tetrachloroethane | 27 | U | 33 | U | 270 | U |
| 1,1,2-Trichloroethane | 27 | U | 33 | U | 270 | U |
| 1,1-Dichloroethane | 27 | U | 33 | U | 270 | U |
| 1,1-Dichloroethene | 27 | U | 33 | U | 270 | U |
| 1,1-Dichloropropylene | 27 | U | 33 | U | 270 | U |
| 1,2,3-Trichlorobenzene | 27 | U | 33 | U | 270 | U |
| 1,2,3-Trichloropropane | 27 | U | 33 | U | 270 | U |
| 1,2,4-Trichlorobenzene | 27 | U | 33 | U | 270 | U |
| 1,2,4-Trichlorobenzene | 420 | U | 440 | U | 440 | U |
| 1,2,4-Trimethylbenzene | 27 | U | 33 | U | 270 | U |
| 1,2-Dibromo-3-chloropropane | 27 | U | 33 | U | 270 | U |
| 1,2-Dibromoethane (EDB) | 27 | U | 33 | U | 270 | U |
| 1,2-Dichlorobenzene | 420 | U | 440 | U | 440 | U |
| 1,2-Dichloroethane | 27 | U | 33 | U | 270 | U |
| 1,2-Dichloropropane | 27 | U | 33 | U | 270 | U |
| 1,3,5-Trimethylbenzene | 27 | U | 33 | U | 270 | U |
| 1,3-Dichlorobenzene | 420 | U | 440 | U | 440 | U |
| 1,3-Dichloropropane | 27 | U | 33 | U | 270 | U |
| 1,4-Dichlorobenzene | 420 | U | 580 | | 440 | U |
| 2,2-Dichloropropane | 27 | U | 33 | U | 270 | U |
| 2,2'-Oxybis(1-Chloropropane) | NA | | NA | | NA | |
| 2,4,5-Trichlorophenol | 420 | U | 440 | U | 440 | U |
| 2,4,6-Trichlorophenol | 420 | U | 440 | U | 440 | U |
| 2,4-Dichlorophenol | 420 | U | 440 | U | 440 | U |
| 2,4-Dimethylphenol | 420 | U | 440 | U | 440 | U |
| 2,4-Dinitrophenol | 2200 | U | 2300 | U | 2300 | U |
| 2,4-Dinitrotoluene | 420 | U | 440 | U | 440 | U |
| 2,6-Dinitrotoluene | 420 | U | 440 | U | 440 | U |
| 2-Butanone (MEK) | 140 | U | 415 | | 1400 | U |
| 2-Chloronaphthalene | 420 | U | 440 | U | 440 | U |
| 2-Chlorophenol | 420 | U | 440 | U | 440 | U |
| 2-Chlorotoluene | 27 | U | 33 | U | 270 | U |
| 2-Hexanone | NA | | NA | | NA | |
| 2-Methyl-4,6-dinitrophenol | 2200 | U | 2300 | U | 2300 | U |
| 2-Methylnaphthalene | 420 | U | 440 | U | 440 | U |
| 2-Methylphenol (o-cresol) | 420 | U | 440 | U | 440 | U |
| 2-Nitroaniline | 2200 | U | 2300 | U | 2300 | U |
| 2-Nitrophenol | 420 | U | 440 | U | 440 | U |
| 3&4-Methylphenol (m&p-cresol) | 420 | U | 440 | U | 440 | U |
| 3,3'-Dichlorobenzidine | 850 | U | 890 | U | 890 | U |
| 3-Nitroaniline | 2200 | U | 2300 | U | 2300 | U |
| 4,6-Dinitro-2-methylphenol | NA | | NA | | NA | |
| 4-Bromophenyl phenyl ether | 420 | U | 440 | U | 440 | U |
| 4-Chloro-3-methylphenol | 420 | U | 440 | U | 440 | U |
| -Chloroaniline | 850 | U | 890 | U | 890 | U |

NA= Not Analyzed.

Table 4
Site Soil Data Summary

| | BBU-B1 (6-8') | | BBU-B10 (6-8') | | BBU-B11 (6-8') | |
|---|---|---|---|---|---|---|
| 4-Chlorophenylphenyl ether | 420 | U | 440 | U | 440 | U |
| 4-Chlorotoluene | 27 | U | 33 | U | 270 | U |
| 4-Methyl-2-pentanone (MIBK) | 140 | U | 160 | U | 1400 | U |
| 4-Nitroaniline | 2200 | U | 2300 | U | 2300 | U |
| 4-Nitrophenol | 2200 | U | 2300 | U | 2300 | U |
| Acenaphthene | 420 | U | 440 | U | 440 | U |
| Acenaphthylene | 420 | U | 440 | U | 440 | U |
| Acetone | 270 | U | 260 | | 2700 | U |
| Anthracene | 420 | U | 440 | U | 440 | U |
| Aroclor-1016 | NA | | NA | | NA | |
| Aroclor-1221 | NA | | NA | | NA | |
| Aroclor-1232 | NA | | NA | | NA | |
| Aroclor-1242 | NA | | NA | | NA | |
| Aroclor-1248 | NA | | NA | | NA | |
| Aroclor-1254 | NA | | NA | | NA | |
| Aroclor-1260 | NA | | NA | | NA | |
| Benzene | 27 | U | 33 | U | 270 | U |
| Benzidine | 3500 | U | 3600 | U | 3600 | U |
| Benzo(a)anthracene | 420 | U | 440 | U | 440 | U |
| Benzo(a)pyrene | 420 | U | 440 | U | 440 | U |
| Benzo(b)fluoranthene | 420 | U | 440 | U | 440 | U |
| Benzo(g,h,i)perylene | 420 | U | 440 | U | 440 | U |
| Benzo(k)fluoranthene | 420 | U | 440 | U | 440 | U |
| Benzoic acid | 2200 | U | 2300 | U | 2300 | U |
| Benzyl alcohol | 420 | U | 440 | U | 440 | U |
| bis(2-Chloroethoxy)methane | 420 | U | 440 | U | 440 | U |
| bis(2-Chloroethyl)ether | 420 | U | 440 | U | 440 | U |
| bis(2-Chloroisopropyl)ether | 420 | U | 440 | U | 440 | U |
| bis(2-Ethylhexyl)phthalate | 420 | U | 440 | U | 540 | |
| Bromobenzene | 27 | U | 33 | U | 270 | U |
| Bromochloromethane | 27 | U | 33 | U | 270 | U |
| Bromodichloromethane | 27 | U | 33 | U | 270 | U |
| Bromoform | 27 | U | 33 | U | 270 | U |
| Bromomethane | 54 | U | 67 | U | 540 | U |
| Butylbenzylphthalate | 420 | U | 440 | U | 440 | U |
| Carbazole | NA | | NA | | NA | |
| Carbon disulfide | NA | | NA | | NA | |
| Carbon tetrachloride | 27 | U | 33 | U | 270 | U |
| Chlorobenzene | 71 | | 94 | | 270 | U |
| Chlorodibromomethane | 27 | U | 33 | U | 270 | U |
| Chloroethane | 54 | U | 67 | U | 540 | U |
| Chloroform | 27 | U | 33 | U | 270 | U |
| Chloromethane | 54 | U | 67 | U | 540 | U |
| Chrysene | 420 | U | 440 | U | 440 | U |
| cis-1,2-Dichloroethene | 27 | U | 33 | U | 270 | U |
| cis-1,3-Dichloropropene | NA | | NA | | NA | |
| Dibenzo(a,h)anthracene | 420 | U | 440 | U | 440 | U |

NA= Not Analyzed.

Table 4
Site Soil Data Summary

| | BBU-B1 (6-8') | | BBU-B10 (6-8') | | BBU-B11 (6-8') | |
|---|---|---|---|---|---|---|
| Dibenzofuran | 420 | U | 440 | U | 440 | U |
| Dibromomethane | 27 | U | 33 | U | 270 | U |
| Dichlorodifluoromethane | 27 | U | 33 | U | 270 | U |
| Dibromochloromethane | NA | | NA | | NA | |
| Diethylphthalate | 420 | U | 440 | U | 440 | U |
| Dimethylphthalate | 420 | U | 440 | U | 440 | U |
| Di-n-butylphthalate | 420 | U | 440 | U | 440 | U |
| Di-n-octylphthalate | 420 | U | 440 | U | 440 | U |
| Ethylbenzene | 27 | U | 33 | U | 270 | U |
| Fluoranthene | 420 | U | 440 | U | 440 | U |
| Fluorene | 420 | U | 440 | U | 440 | U |
| Hexachlorobenzene | 420 | U | 440 | U | 440 | U |
| Hexachlorobutadiene | 27 | U | 33 | U | 270 | U |
| Hexachlorocyclopentadiene | 420 | U | 440 | U | 440 | U |
| Hexachloroethane | 420 | U | 440 | U | 440 | U |
| Indeno(1,2,3-cd)pyrene | 420 | U | 440 | U | 440 | U |
| Isophorone | 420 | U | 440 | U | 440 | U |
| Isopropylbenzene | 27 | U | 33 | U | 270 | U |
| m&p-Xylene | 27 | U | 33 | U | 270 | U |
| Methylene chloride (Dichloromethane) | 27 | U | 33 | U | 270 | U |
| Naphthalene | 27 | U | 33 | U | 270 | U |
| Naphthalene | 420 | U | 440 | U | 440 | U |
| n-Butylbenzene | 27 | U | 33 | U | 270 | U |
| Nitrobenzene | 420 | U | 440 | U | 440 | U |
| N-Nitrosodimethylamine | 420 | U | 440 | U | 440 | U |
| n-Nitrosodi-n-propylamine | 420 | U | 440 | U | 440 | U |
| N-Nitrosodiphenylamine/Diphenylamine | 420 | U | 440 | U | 440 | U |
| n-Propylbenzene | 27 | U | 33 | U | 270 | U |
| o-Xylene | 27 | U | 33 | U | 270 | U |
| Pentachlorophenol | 2200 | U | 2300 | U | 2300 | U |
| Phenanthrene | 420 | U | 440 | U | 440 | U |
| Phenol | 420 | U | 440 | U | 440 | U |
| p-Isopropyltoluene | 27 | U | 33 | U | 270 | U |
| Pyrene | 420 | U | 440 | U | 440 | U |
| sec-Butylbenzene | 27 | U | 33 | U | 270 | U |
| Styrene | 27 | U | 33 | U | 270 | U |
| tert-Butylbenzene | 27 | U | 33 | U | 270 | U |
| Tetrachloroethene | 27 | U | 33 | U | 270 | U |
| Toluene | 27 | U | 33 | U | 270 | U |
| trans-1,2-Dichloroethene | 27 | U | 33 | U | 270 | U |
| trans-1,3-Dichloropropene | NA | | NA | | NA | |
| Trichloroethene | 27 | U | 33 | U | 270 | U |
| Trichlorofluoromethane | 27 | U | 33 | U | 270 | U |
| Vinyl chloride | 54 | U | NA | | 540 | U |
| Xylenes, Total | NA | | NA | | NA | |

NA= Not Analyzed.

Table 4
Site Soil Data Summary

| | BBU-B12 (6-8') | | BBU-B14 (6-8') | | BBU-B15 (5-7') | |
|---|---|---|---|---|---|---|
| 1,1,1,2-Tetrachloroethane | 270 | U | 6.4 | U | 6.4 | U |
| 1,1,1-Trichloroethane | 270 | U | 6.4 | U | 6.4 | U |
| 1,1,2,2-Tetrachloroethane | 270 | U | 6.4 | U | 6.4 | U |
| 1,1,2-Trichloroethane | 270 | U | 6.4 | U | 6.4 | U |
| 1,1-Dichloroethane | 270 | U | 6.4 | U | 6.4 | U |
| 1,1-Dichloroethene | 270 | U | 6.4 | U | 6.4 | U |
| 1,1-Dichloropropylene | 270 | U | 6.4 | U | 6.4 | U |
| 1,2,3-Trichlorobenzene | 270 | U | 6.4 | U | 6.4 | U |
| 1,2,3-Trichloropropane | 270 | U | 6.4 | U | 6.4 | U |
| 1,2,4-Trichlorobenzene | 440 | | 6.4 | U | 6.4 | U |
| 1,2,4-Trichlorobenzene | 8900 | U | 440 | U | 420 | U |
| 1,2,4-Trimethylbenzene | 270 | U | 6.4 | U | 6.4 | U |
| 1,2-Dibromo-3-chloropropane | 270 | U | 6.4 | U | 6.4 | U |
| 1,2-Dibromoethane (EDB) | 270 | U | 6.4 | U | 6.4 | U |
| 1,2-Dichlorobenzene | 8900 | U | 440 | U | 420 | U |
| 1,2-Dichloroethane | 270 | U | 6.4 | U | 6.4 | U |
| 1,2-Dichloropropane | 270 | U | 6.4 | U | 6.4 | U |
| 1,3,5-Trimethylbenzene | 270 | U | 6.4 | U | 6.4 | U |
| 1,3-Dichlorobenzene | 8900 | U | 440 | U | 420 | U |
| 1,3-Dichloropropane | 270 | U | 6.4 | U | 6.4 | U |
| 1,4-Dichlorobenzene | 8900 | U | 440 | U | 900 | |
| 2,2-Dichloropropane | 270 | U | 6.4 | U | 6.4 | U |
| 2,2'-Oxybis(1-Chloropropane) | NA | | NA | | NA | |
| 2,4,5-Trichlorophenol | 8900 | U | 440 | U | 420 | U |
| 2,4,6-Trichlorophenol | 8900 | U | 440 | U | 420 | U |
| 2,4-Dichlorophenol | 8900 | U | 440 | U | 420 | U |
| 2,4-Dimethylphenol | 8900 | U | 440 | U | 420 | U |
| 2,4-Dinitrophenol | 46000 | U | 2300 | U | 2200 | U |
| 2,4-Dinitrotoluene | 8900 | U | 440 | U | 420 | U |
| 2,6-Dinitrotoluene | 8900 | U | 440 | U | 420 | U |
| 2-Butanone (MEK) | 1400 | U | 32 | U | 32 | U |
| 2-Chloronaphthalene | 8900 | U | 440 | U | 420 | U |
| 2-Chlorophenol | 8900 | U | 440 | U | 420 | U |
| 2-Chlorotoluene | 270 | U | 6.4 | U | 6.4 | U |
| 2-Hexanone | NA | | NA | | NA | |
| 2-Methyl-4,6-dinitrophenol | 46000 | U | 2300 | U | 2200 | U |
| 2-Methylnaphthalene | 8900 | U | 440 | U | 420 | U |
| 2-Methylphenol (o-cresol) | 8900 | U | 440 | U | 420 | U |
| 2-Nitroaniline | 46000 | U | 2300 | U | 2200 | U |
| 2-Nitrophenol | 8900 | U | 440 | U | 420 | U |
| 3&4-Methylphenol (m&p-cresol) | 8900 | U | 440 | U | 420 | U |
| 3,3'-Dichlorobenzidine | 18000 | U | 880 | U | 840 | U |
| 3-Nitroaniline | 46000 | U | 2300 | U | 2200 | U |
| 4,6-Dinitro-2-methylphenol | NA | | NA | | NA | |
| 4-Bromophenyl phenyl ether | 8900 | U | 440 | U | 420 | U |
| 4-Chloro-3-methylphenol | 8900 | U | 440 | U | 420 | U |
| 4-Chloroaniline | 18000 | U | 880 | U | 840 | U |

NA= Not Analyzed.

Table 4
Site Soil Data Summary

| | BBU-B12 (6-8') | | BBU-B14 (6-8') | | BBU-B15 (5-7') | |
|---|---|---|---|---|---|---|
| 4-Chlorophenylphenyl ether | 8900 | U | 440 | U | 420 | U |
| 4-Chlorotoluene | 270 | U | 6.4 | U | 6.4 | U |
| 4-Methyl-2-pentanone (MIBK) | 1400 | U | 32 | U | 32 | U |
| 4-Nitroaniline | 46000 | U | 2300 | U | 2200 | U |
| 4-Nitrophenol | 46000 | U | 2300 | U | 2200 | U |
| Acenaphthene | 8900 | U | 440 | U | 420 | U |
| Acenaphthylene | 8900 | U | 440 | U | 420 | U |
| Acetone | 2700 | U | 110 | | 64 | U |
| Anthracene | 8900 | U | 440 | U | 420 | U |
| Aroclor-1016 | NA | | NA | | NA | |
| Aroclor-1221 | NA | | NA | | NA | |
| Aroclor-1232 | NA | | NA | | NA | |
| Aroclor-1242 | NA | | NA | | NA | |
| Aroclor-1248 | NA | | NA | | NA | |
| Aroclor-1254 | NA | | NA | | NA | |
| Aroclor-1260 | NA | | NA | | NA | |
| Benzene | 3100 | | 6.4 | U | 6.4 | U |
| Benzidine | 73000 | U | 3600 | U | 3400 | U |
| Benzo(a)anthracene | 8900 | U | 440 | U | 420 | U |
| Benzo(a)pyrene | 8900 | U | 440 | U | 420 | U |
| Benzo(b)fluoranthene | 8900 | U | 440 | U | 420 | U |
| Benzo(g,h,i)perylene | 8900 | U | 440 | U | 420 | U |
| Benzo(k)fluoranthene | 8900 | U | 440 | U | 420 | U |
| Benzoic acid | 46000 | U | 2300 | U | 2200 | U |
| Benzyl alcohol | 8900 | U | 440 | U | 420 | U |
| bis(2-Chloroethoxy)methane | 8900 | U | 440 | U | 420 | U |
| bis(2-Chloroethyl)ether | 8900 | U | 440 | U | 420 | U |
| bis(2-Chloroisopropyl)ether | 8900 | U | 440 | U | 420 | U |
| bis(2-Ethylhexyl)phthalate | 8900 | U | 440 | U | 6.4 | U |
| Bromobenzene | 270 | U | 6.4 | U | 6.4 | U |
| Bromochloromethane | 270 | U | 6.4 | U | 6.4 | U |
| Bromodichloromethane | 270 | U | 6.4 | U | 6.4 | U |
| Bromoform | 270 | U | 6.4 | U | 13 | U |
| Bromomethane | 540 | U | 13 | U | 420 | U |
| Butylbenzylphthalate | 8900 | U | 440 | U | 6.4 | U |
| Carbazole | NA | | NA | | NA | |
| Carbon disulfide | NA | | NA | | NA | |
| Carbon tetrachloride | 270 | U | 6.4 | U | 6.4 | U |
| Chlorobenzene | 270 | U | 34 | | 6.4 | U |
| Chlorodibromomethane | 270 | U | 6.4 | U | 13 | U |
| Chloroethane | 540 | U | 13 | U | 6.4 | U |
| Chloroform | 270 | U | 6.4 | U | 13 | U |
| Chloromethane | 540 | U | 13 | U | 420 | U |
| Chrysene | 8900 | U | 440 | U | 6.4 | U |
| cis-1,2-Dichloroethene | 270 | U | 6.4 | U | 420 | U |
| cis-1,3-Dichloropropene | NA | | NA | | NA | |
| Dibenzo(a,h)anthracene | 8900 | U | 440 | U | 420 | U |

NA= Not Analyzed.

Table 4
Site Soil Data Summary

| | BBU-B12 (6-8') | | BBU-B14 (6-8') | | BBU-B15 (5-7') | |
|---|---|---|---|---|---|---|
| Dibenzofuran | 8900 | U | 440 | U | 6.4 | U |
| Dibromomethane | 270 | U | 6.4 | U | 6.4 | U |
| Dichlorodifluoromethane | 270 | U | 6.4 | U | 420 | U |
| Dibromochloromethane | NA | | NA | | NA | |
| Diethylphthalate | 8900 | U | 440 | U | 420 | U |
| Dimethylphthalate | 8900 | U | 440 | U | 420 | U |
| Di-n-butylphthalate | 8900 | U | 440 | U | 420 | U |
| Di-n-octylphthalate | 8900 | U | 440 | U | 6.4 | U |
| Ethylbenzene | 270 | U | 6.4 | U | 420 | U |
| Fluoranthene | 8900 | U | 440 | U | 420 | U |
| Fluorene | 8900 | U | 440 | U | 420 | U |
| Hexachlorobenzene | 8900 | U | 440 | U | 6.4 | U |
| Hexachlorobutadiene | 270 | U | 6.4 | U | 420 | U |
| Hexachlorocyclopentadiene | 8900 | U | 440 | U | 420 | U |
| Hexachloroethane | 8900 | U | 440 | U | 420 | U |
| Indeno(1,2,3-cd)pyrene | 8900 | U | 440 | U | 420 | U |
| Isophorone | 8900 | U | 440 | U | 6.4 | U |
| Isopropylbenzene | 270 | U | 6.4 | U | 6.4 | U |
| m&p-Xylene | 270 | U | 6.4 | U | 6.4 | U |
| Methylene chloride (Dichloromethane) | 270 | U | 6.4 | U | 6.4 | U |
| Naphthalene | 270 | U | 6.4 | U | 420 | U |
| Naphthalene | 8900 | U | 440 | U | 6.4 | U |
| n-Butylbenzene | 270 | U | 6.4 | U | 420 | U |
| Nitrobenzene | 8900 | U | 440 | U | 420 | U |
| N-Nitrosodimethylamine | 8900 | U | 440 | U | 420 | U |
| n-Nitrosodi-n-propylamine | 8900 | U | 440 | U | 420 | U |
| N-Nitrosodiphenylamine/Diphenylamine | 8900 | U | 440 | U | 6.4 | U |
| n-Propylbenzene | 270 | U | 6.4 | U | 6.4 | U |
| o-Xylene | 270 | U | 6.4 | U | 2200 | U |
| Pentachlorophenol | 82000 | | 2300 | U | 420 | U |
| Phenanthrene | 8900 | U | 440 | U | 420 | U |
| Phenol | 8900 | U | 440 | U | 6.4 | U |
| p-Isopropyltoluene | 270 | U | 6.4 | U | 420 | U |
| Pyrene | 8900 | U | 440 | U | 6.4 | U |
| sec-Butylbenzene | 270 | U | 6.4 | U | 6.4 | U |
| Styrene | 270 | U | 6.4 | U | 6.4 | U |
| tert-Butylbenzene | 270 | U | 6.4 | U | 6.4 | U |
| Tetrachloroethene | 270 | U | 6.4 | U | 6.4 | U |
| Toluene | 270 | U | 6.4 | U | 6.4 | U |
| trans-1,2-Dichloroethene | 270 | U | 6.4 | U | 6.4 | U |
| trans-1,3-Dichloropropene | NA | | NA | | NA | |
| Trichloroethene | 270 | U | 6.4 | U | 6.4 | U |
| Trichlorofluoromethane | 270 | U | 6.4 | U | NA | |
| Vinyl chloride | NA | | NA | | NA | |
| Xylenes, Total | NA | | NA | | NA | |

NA= Not Analyzed.

Table 4
Site Soil Data Summary

| | BBU-B16 (4-6') | | BBU-B17 (3-5') | | BBU-B18 (2-4') | |
|---|---|---|---|---|---|---|
| 1,1,1,2-Tetrachloroethane | 6.3 | U | 5.9 | U | 6 | U |
| 1,1,1-Trichloroethane | 6.3 | U | 5.9 | U | 6 | U |
| 1,1,2,2-Tetrachloroethane | 6.3 | U | 5.9 | U | 6 | U |
| 1,1,2-Trichloroethane | 6.3 | U | 5.9 | U | 6 | U |
| 1,1-Dichloroethane | 6.3 | U | 5.9 | U | 6 | U |
| 1,1-Dichloroethene | 6.3 | U | 5.9 | U | 6 | U |
| 1,1-Dichloropropylene | 6.3 | U | 5.9 | U | 6 | U |
| 1,2,3-Trichlorobenzene | 6.3 | U | 5.9 | U | 6 | U |
| 1,2,3-Trichloropropane | 6.3 | U | 5.9 | U | 6 | U |
| 1,2,4-Trichlorobenzene | 6.3 | U | 5.9 | U | 6 | U |
| 1,2,4-Trichlorobenzene | 420 | U | 380 | U | 1300 | |
| 1,2,4-Trimethylbenzene | 6.3 | U | 5.9 | U | 6 | U |
| 1,2-Dibromo-3-chloropropane | 6.3 | U | 5.9 | U | 6 | U |
| 1,2-Dibromoethane (EDB) | 6.3 | U | 5.9 | U | 6 | U |
| 1,2-Dichlorobenzene | 420 | U | 380 | U | 3900 | |
| 1,2-Dichloroethane | 6.3 | U | 5.9 | U | 6 | U |
| 1,2-Dichloropropane | 6.3 | U | 5.9 | U | 6 | U |
| 1,3,5-Trimethylbenzene | 6.3 | U | 5.9 | U | 6 | U |
| 1,3-Dichlorobenzene | 420 | U | 380 | U | 800 | U |
| 1,3-Dichloropropane | 6.3 | U | 5.9 | U | 6 | U |
| 1,4-Dichlorobenzene | 420 | U | 380 | U | 5900 | |
| 2,2-Dichloropropane | 6.3 | U | 5.9 | U | 6 | U |
| 2,2'-Oxybis(1-Chloropropane) | NA | | NA | | NA | |
| 2,4,5-Trichlorophenol | 420 | U | 380 | U | 800 | U |
| 2,4,6-Trichlorophenol | 420 | U | 380 | U | 800 | U |
| 2,4-Dichlorophenol | 420 | U | 380 | U | 800 | U |
| 2,4-Dimethylphenol | 420 | U | 380 | U | 800 | U |
| 2,4-Dinitrophenol | 2200 | U | 1900 | U | 4100 | U |
| 2,4-Dinitrotoluene | 420 | U | 380 | U | 800 | U |
| 2,6-Dinitrotoluene | 420 | U | 380 | U | 800 | U |
| 2-Butanone (MEK) | 32 | U | 30 | U | 30 | U |
| 2-Chloronaphthalene | 420 | U | 380 | U | 800 | U |
| 2-Chlorophenol | 420 | U | 380 | U | 800 | U |
| 2-Chlorotoluene | 6.3 | U | 5.9 | U | 6 | U |
| 2-Hexanone | NA | | NA | | NA | |
| 2-Methyl-4,6-dinitrophenol | 2200 | U | 1900 | U | 4100 | U |
| 2-Methylnaphthalene | 420 | U | 380 | U | 800 | U |
| 2-Methylphenol (o-cresol) | 420 | U | 380 | U | 800 | U |
| 2-Nitroaniline | 2200 | U | 1900 | U | 4100 | U |
| 2-Nitrophenol | 420 | U | 380 | U | 800 | U |
| 3&4-Methylphenol (m&p-cresol) | 420 | U | 380 | U | 800 | U |
| 3,3'-Dichlorobenzidine | 850 | U | 750 | U | 1600 | U |
| 3-Nitroaniline | 2200 | U | 1900 | U | 4100 | U |
| 4,6-Dinitro-2-methylphenol | NA | | NA | | NA | |
| 4-Bromophenyl phenyl ether | 420 | U | 380 | U | 800 | U |
| 4-Chloro-3-methylphenol | 420 | U | 380 | U | 800 | U |
| 4-Chloroaniline | 850 | U | 750 | U | 1600 | U |

NA= Not Analyzed.

Table 4
Site Soil Data Summary

| | BBU-B16 (4-6') | | BBU-B17 (3-5') | | BBU-B18 (2-4') | |
|---|---|---|---|---|---|---|
| 4-Chlorophenylphenyl ether | 420 | U | 380 | U | 800 | U |
| 4-Chlorotoluene | 6.3 | U | 5.9 | U | 6 | U |
| 4-Methyl-2-pentanone (MIBK) | 32 | U | 30 | U | 30 | U |
| 4-Nitroaniline | 2200 | U | 1900 | U | 4100 | U |
| 4-Nitrophenol | 2200 | U | 1900 | U | 4100 | U |
| Acenaphthene | 420 | U | 380 | U | 800 | U |
| Acenaphthylene | 420 | U | 380 | U | 800 | U |
| Acetone | 63 | U | 59 | U | 60 | U |
| Anthracene | 420 | U | 380 | U | 800 | U |
| Aroclor-1016 | NA | | NA | | NA | |
| Aroclor-1221 | NA | | NA | | NA | |
| Aroclor-1232 | NA | | NA | | NA | |
| Aroclor-1242 | NA | | NA | | NA | |
| Aroclor-1248 | NA | | NA | | NA | |
| Aroclor-1254 | NA | | NA | | NA | |
| Aroclor-1260 | NA | | NA | | NA | |
| Benzene | 6.3 | U | 5.9 | U | 6 | U |
| Benzidine | 3500 | U | 3100 | U | 6600 | U |
| Benzo(a)anthracene | 420 | U | 380 | U | 800 | U |
| Benzo(a)pyrene | 420 | U | 380 | U | 800 | U |
| Benzo(b)fluoranthene | 420 | U | 380 | U | 800 | U |
| Benzo(g,h,i)perylene | 420 | U | 380 | U | 800 | U |
| Benzo(k)fluoranthene | 420 | U | 380 | U | 800 | U |
| Benzoic acid | 2200 | U | 1900 | U | 4100 | U |
| Benzyl alcohol | 420 | U | 380 | U | 800 | U |
| bis(2-Chloroethoxy)methane | 420 | U | 380 | U | 800 | U |
| bis(2-Chloroethyl)ether | 420 | U | 380 | U | 800 | U |
| bis(2-Chloroisopropyl)ether | 420 | U | 380 | U | 800 | U |
| bis(2-Ethylhexyl)phthalate | 420 | U | 380 | U | 800 | U |
| Bromobenzene | 6.3 | U | 5.9 | U | 6 | U |
| Bromochloromethane | 6.3 | U | 5.9 | U | 6 | U |
| Bromodichloromethane | 6.3 | U | 5.9 | U | 6 | U |
| Bromoform | 6.3 | U | 5.9 | U | 6 | U |
| Bromomethane | 12 | U | 12 | U | 12 | U |
| Butylbenzylphthalate | 420 | U | 380 | U | 800 | U |
| Carbazole | NA | | NA | | NA | |
| Carbon disulfide | NA | | NA | | NA | |
| Carbon tetrachloride | 6.3 | U | 5.9 | U | 6 | U |
| Chlorobenzene | 9.6 | | 5.9 | | 13 | |
| Chlorodibromomethane | 6.3 | U | 5.9 | U | 6 | U |
| Chloroethane | 12 | U | 12 | U | 12 | U |
| Chloroform | 6.3 | U | 5.9 | U | 6 | U |
| Chloromethane | 12 | U | 12 | U | 12 | U |
| Chrysene | 420 | U | 380 | U | 800 | U |
| cis-1,2-Dichloroethene | 6.3 | U | 5.9 | U | 6 | U |
| cis-1,3-Dichloropropene | NA | | NA | | NA | |
| Dibenzo(a,h)anthracene | 420 | U | 380 | U | 800 | U |

NA= Not Analyzed.

Table 4
Site Soil Data Summary

| | BBU-B16 (4-6') | | BBU-B17 (3-5') | | BBU-B18 (2-4') | |
|---|---|---|---|---|---|---|
| Dibenzofuran | 420 | U | 380 | U | 800 | U |
| Dibromomethane | 6.3 | U | 5.9 | U | 6 | U |
| Dichlorodifluoromethane | 6.3 | U | 5.9 | U | 6 | U |
| Dibromochloromethane | NA | | NA | | NA | |
| Diethylphthalate | 420 | U | 380 | U | 800 | U |
| Dimethylphthalate | 420 | U | 380 | U | 800 | U |
| Di-n-butylphthalate | 420 | U | 380 | U | 800 | U |
| Di-n-octylphthalate | 420 | U | 380 | U | 800 | U |
| Ethylbenzene | 6.3 | U | 5.9 | U | 6 | U |
| Fluoranthene | 420 | U | 380 | U | 800 | U |
| Fluorene | 420 | U | 380 | U | 800 | U |
| Hexachlorobenzene | 420 | U | 380 | U | 800 | U |
| Hexachlorobutadiene | 6.3 | U | 5.9 | U | 6 | U |
| Hexachlorocyclopentadiene | 420 | U | 380 | U | 800 | U |
| Hexachloroethane | 420 | U | 380 | U | 800 | U |
| Indeno(1,2,3-cd)pyrene | 420 | U | 380 | U | 800 | U |
| Isophorone | 420 | U | 380 | U | 800 | U |
| Isopropylbenzene | 6.3 | U | 5.9 | U | 6 | U |
| m&p-Xylene | 6.3 | U | 5.9 | U | 6 | U |
| Methylene chloride (Dichloromethane) | 6.3 | U | 5.9 | U | 6 | U |
| Naphthalene | 6.3 | U | 5.9 | U | 6 | U |
| Naphthalene | 420 | U | 380 | U | 800 | U |
| n-Butylbenzene | 6.3 | U | 5.9 | U | 6 | U |
| Nitrobenzene | 420 | U | 380 | U | 800 | U |
| N-Nitrosodimethylamine | 420 | U | 380 | U | 800 | U |
| n-Nitrosodi-n-propylamine | 420 | U | 380 | U | 800 | U |
| N-Nitrosodiphenylamine/Diphenylamine | 420 | U | 380 | U | 800 | U |
| n-Propylbenzene | 6.3 | U | 5.9 | U | 6 | U |
| o-Xylene | 6.3 | U | 5.9 | U | 6 | U |
| Pentachlorophenol | 2200 | U | 1900 | U | 5800 | |
| Phenanthrene | 420 | U | 380 | U | 800 | U |
| Phenol | 420 | U | 380 | U | 800 | U |
| p-Isopropyltoluene | 6.3 | U | 5.9 | U | 6 | U |
| Pyrene | 420 | U | 380 | U | 800 | U |
| sec-Butylbenzene | 6.3 | U | 5.9 | U | 6 | U |
| Styrene | 6.3 | U | 5.9 | U | 6 | U |
| tert-Butylbenzene | 6.3 | U | 5.9 | U | 6 | U |
| Tetrachloroethene | 6.3 | U | 5.9 | U | 6 | U |
| Toluene | 6.3 | U | 5.9 | U | 6 | U |
| trans-1,2-Dichloroethene | 6.3 | U | 5.9 | U | 6 | U |
| trans-1,3-Dichloropropene | NA | | NA | | NA | |
| Trichloroethene | 6.3 | U | 5.9 | U | 6 | U |
| Trichlorofluoromethane | 6.3 | U | 5.9 | U | 6 | U |
| Vinyl chloride | NA | | 12 | U | 12 | U |
| Xylenes, Total | NA | | NA | | NA | |

NA= Not Analyzed.

Table 4
Site Soil Data Summary

| | BBU-B18 (5-7') | | BBU-B2(4-6') | | BBU-B3(4-6') | |
|---|---|---|---|---|---|---|
| 1,1,1,2-Tetrachloroethane | 6800 | U | 6 | U | 11 | U |
| 1,1,1-Trichloroethane | 6800 | U | 6 | U | 11 | U |
| 1,1,2,2-Tetrachloroethane | 6800 | U | 6 | U | 11 | U |
| 1,1,2-Trichloroethane | 6800 | U | 6 | U | 11 | U |
| 1,1-Dichloroethane | 6800 | U | 6 | U | 11 | U |
| 1,1-Dichloroethene | 6800 | U | 6 | U | 11 | U |
| 1,1-Dichloropropylene | 6800 | U | 6 | U | 11 | U |
| 1,2,3-Trichlorobenzene | 6800 | U | 6 | U | 11 | U |
| 1,2,3-Trichloropropane | 6800 | U | 6 | U | 11 | U |
| 1,2,4-Trichlorobenzene | 36000 | | 6 | U | 11 | U |
| 1,2,4-Trichlorobenzene | 8900 | U | 410 | U | 1800 | U |
| 1,2,4-Trimethylbenzene | 6800 | U | 6 | U | 11 | U |
| 1,2-Dibromo-3-chloropropane | 6800 | U | 6 | U | 11 | U |
| 1,2-Dibromoethane (EDB) | 6800 | U | 6 | U | 11 | U |
| 1,2-Dichlorobenzene | 21000 | | 410 | U | 5800 | |
| 1,2-Dichloroethane | 6800 | U | 6 | U | 11 | U |
| 1,2-Dichloropropane | 6800 | U | 6 | U | 11 | U |
| 1,3,5-Trimethylbenzene | 6800 | U | 6 | U | 11 | U |
| 1,3-Dichlorobenzene | 8900 | U | 410 | U | 1800 | U |
| 1,3-Dichloropropane | 6800 | U | 6 | U | 11 | U |
| 1,4-Dichlorobenzene | 69000 | | 410 | U | 16000 | |
| 2,2-Dichloropropane | 6800 | U | 6 | U | 11 | U |
| 2,2'-Oxybis(1-Chloropropane) | NA | | NA | | NA | |
| 2,4,5-Trichlorophenol | 8900 | U | 410 | U | 1800 | U |
| 2,4,6-Trichlorophenol | 8900 | U | 410 | U | 1800 | U |
| 2,4-Dichlorophenol | 8900 | U | 410 | U | 1800 | U |
| 2,4-Dimethylphenol | 8900 | U | 410 | U | 1800 | U |
| 2,4-Dinitrophenol | 46000 | U | 2100 | U | 9400 | U |
| 2,4-Dinitrotoluene | 8900 | U | 410 | U | 1800 | U |
| 2,6-Dinitrotoluene | 8900 | U | 410 | U | 1800 | U |
| 2-Butanone (MEK) | 34000 | U | 30 | U | 55 | U |
| 2-Chloronaphthalene | 8900 | U | 410 | U | 1800 | U |
| 2-Chlorophenol | 8900 | U | 410 | U | 1800 | U |
| 2-Chlorotoluene | 6800 | U | 6 | U | 11 | U |
| 2-Hexanone | NA | | NA | | NA | |
| 2-Methyl-4,6-dinitrophenol | 46000 | U | 2100 | U | 9400 | U |
| 2-Methylnaphthalene | 8900 | U | 410 | U | 1800 | U |
| 2-Methylphenol (o-cresol) | 8900 | U | 410 | U | 1800 | U |
| 2-Nitroaniline | 46000 | U | 2100 | U | 9400 | U |
| 2-Nitrophenol | 8900 | U | 410 | U | 1800 | U |
| 3&4-Methylphenol (m&p-cresol) | 8900 | U | 410 | U | 1800 | U |
| 3,3'-Dichlorobenzidine | 18000 | U | 820 | U | 3700 | U |
| 3-Nitroaniline | 46000 | U | 2100 | U | 9400 | U |
| 4,6-Dinitro-2-methylphenol | NA | | NA | | NA | |
| 4-Bromophenyl phenyl ether | 8900 | U | 410 | U | 1800 | U |
| 4-Chloro-3-methylphenol | 8900 | U | 410 | U | 1800 | U |
| 4-Chloroaniline | 18000 | U | 820 | U | 3700 | U |

NA= Not Analyzed.

Table 4
Site Soil Data Summary

| | BBU-B18 (5-7') | | BBU-B2(4-6') | | BBU-B3(4-6') | |
|---|---|---|---|---|---|---|
| 4-Chlorophenylphenyl ether | 8900 | U | 410 | U | 1800 | U |
| 4-Chlorotoluene | 6800 | U | 6 | U | 11 | U |
| 4-Methyl-2-pentanone (MIBK) | 34000 | U | 30 | U | 55 | U |
| 4-Nitroaniline | 46000 | U | 2100 | U | 9400 | U |
| 4-Nitrophenol | 46000 | U | 2100 | U | 9400 | U |
| Acenaphthene | 8900 | U | 410 | U | 1800 | U |
| Acenaphthylene | 8900 | U | 410 | U | 1800 | U |
| Acetone | 68000 | U | 280 | | 110 | U |
| Anthracene | 8900 | U | 410 | U | 1800 | U |
| Aroclor-1016 | NA | | NA | | 92 | U |
| Aroclor-1221 | NA | | NA | | 180 | U |
| Aroclor-1232 | NA | | NA | | 92 | U |
| Aroclor-1242 | NA | | NA | | 92 | U |
| Aroclor-1248 | NA | | NA | | 210 | |
| Aroclor-1254 | NA | | NA | | 420 | |
| Aroclor-1260 | NA | | NA | | 860 | |
| Benzene | 240000 | | 6 | U | 11 | U |
| Benzidine | 73000 | U | 3400 | U | 15000 | U |
| Benzo(a)anthracene | 8900 | U | 410 | U | 1900 | |
| Benzo(a)pyrene | 8900 | U | 410 | U | 1800 | U |
| Benzo(b)fluoranthene | 8900 | U | 410 | U | 2400 | |
| Benzo(g,h,i)perylene | 8900 | U | 410 | U | 1800 | U |
| Benzo(k)fluoranthene | 8900 | U | 410 | U | 1800 | U |
| Benzoic acid | 46000 | U | 2100 | U | 9400 | U |
| Benzyl alcohol | 8900 | U | 410 | U | 1800 | U |
| bis(2-Chloroethoxy)methane | 8900 | U | 410 | U | 1800 | U |
| bis(2-Chloroethyl)ether | 8900 | U | 410 | U | 1800 | U |
| bis(2-Chloroisopropyl)ether | 8900 | U | 410 | U | 1800 | U |
| bis(2-Ethylhexyl)phthalate | 8900 | U | 410 | U | 1800 | U |
| Bromobenzene | 6800 | U | 6 | U | 11 | U |
| Bromochloromethane | 6800 | U | 6 | U | 11 | U |
| Bromodichloromethane | 6800 | U | 6 | U | 11 | U |
| Bromoform | 6800 | U | 6 | U | 11 | U |
| Bromomethane | 14000 | U | 12 | U | 23 | U |
| Butylbenzylphthalate | 8900 | U | 410 | U | 1800 | U |
| Carbazole | NA | | NA | | NA | |
| Carbon disulfide | NA | | NA | | NA | |
| Carbon tetrachloride | 6800 | U | 6 | U | 11 | U |
| Chlorobenzene | 20000 | | 28 | | 11 | U |
| Chlorodibromomethane | 6800 | U | 6 | U | 11 | U |
| Chloroethane | 14000 | U | 12 | U | 23 | U |
| Chloroform | 6800 | U | 6 | U | 11 | U |
| Chloromethane | 14000 | U | 12 | U | 23 | U |
| Chrysene | 8900 | U | 410 | U | 2100 | |
| cis-1,2-Dichloroethene | 6800 | U | 6 | U | 11 | U |
| cis-1,3-Dichloropropene | NA | | NA | | NA | |
| Dibenzo(a,h)anthracene | 8900 | U | 410 | U | 1800 | U |

NA= Not Analyzed.

Table 4
Site Soil Data Summary

| | BBU-B18 (5-7') | | BBU-B2(4-6') | | BBU-B3(4-6') | |
|---|---|---|---|---|---|---|
| Dibenzofuran | 8900 | U | 410 | U | 1800 | U |
| Dibromomethane | 6800 | U | 6 | U | 11 | U |
| Dichlorodifluoromethane | 6800 | U | 6 | U | 11 | U |
| Dibromochloromethane | NA | | NA | | NA | |
| Diethylphthalate | 8900 | U | 410 | U | 1800 | U |
| Dimethylphthalate | 8900 | U | 410 | U | 1800 | U |
| Di-n-butylphthalate | 8900 | U | 410 | U | 1800 | U |
| Di-n-octylphthalate | 8900 | U | 410 | U | 1800 | U |
| Ethylbenzene | 6800 | U | 6 | U | 11 | U |
| Fluoranthene | 8900 | U | 410 | U | 2200 | |
| Fluorene | 8900 | U | 410 | U | 1800 | U |
| Hexachlorobenzene | 8900 | U | 410 | U | 1800 | U |
| Hexachlorobutadiene | 6800 | U | 6 | U | 11 | U |
| Hexachlorocyclopentadiene | 8900 | U | 410 | U | 1800 | U |
| Hexachloroethane | 8900 | U | 410 | U | 1800 | U |
| Indeno(1,2,3-cd)pyrene | 8900 | U | 410 | U | 1800 | U |
| Isophorone | 8900 | U | 410 | U | 1800 | U |
| Isopropylbenzene | 6800 | U | 6 | U | 11 | U |
| m&p-Xylene | 6800 | U | 6 | U | 11 | U |
| Methylene chloride (Dichloromethane) | 6800 | U | 6 | U | 11 | U |
| Naphthalene | 6800 | U | 6 | U | 11 | U |
| Naphthalene | 8900 | U | 410 | U | 1800 | U |
| n-Butylbenzene | 6800 | U | 6 | U | 11 | U |
| Nitrobenzene | 8900 | U | 410 | U | 1800 | U |
| N-Nitrosodimethylamine | 8900 | U | 410 | U | 1800 | U |
| n-Nitrosodi-n-propylamine | 8900 | U | 410 | U | 1800 | U |
| N-Nitrosodiphenylamine/Diphenylamine | 8900 | U | 410 | U | 1800 | U |
| n-Propylbenzene | 6800 | U | 6 | U | 11 | U |
| o-Xylene | 6800 | U | 6 | U | 11 | U |
| Pentachlorophenol | 46000 | U | 2100 | U | 9400 | U |
| Phenanthrene | 8900 | U | 410 | U | 1800 | U |
| Phenol | 8900 | U | 410 | U | 1800 | U |
| p-Isopropyltoluene | 6800 | U | 6 | U | 11 | U |
| Pyrene | 8900 | U | 410 | U | 2100 | |
| sec-Butylbenzene | 6800 | U | 6 | U | 11 | U |
| Styrene | 6800 | U | 6 | U | 11 | U |
| tert-Butylbenzene | 6800 | U | 6 | U | 11 | U |
| Tetrachloroethene | 6800 | U | 6 | U | 11 | U |
| Toluene | 6800 | U | 6 | U | 11 | U |
| trans-1,2-Dichloroethene | 6800 | U | 6 | U | 11 | U |
| trans-1,3-Dichloropropene | NA | | NA | | NA | |
| Trichloroethene | 6800 | U | 6 | U | 11 | U |
| Trichlorofluoromethane | 6800 | U | 6 | U | 11 | U |
| Vinyl chloride | 14000 | U | 12 | U | 23 | U |
| Xylenes, Total | NA | | NA | | NA | |

NA= Not Analyzed.

Table 4
Site Soil Data Summary

| | BBU-B3(6-8") | | BBU-B4(6-8") | | BBU-B52(2-2.5') | |
|---|---|---|---|---|---|---|
| 1,1,1,2-Tetrachloroethane | 33 | U | 28 | U | NA | |
| 1,1,1-Trichloroethane | 33 | U | 28 | U | 13 | U |
| 1,1,2,2-Tetrachloroethane | 33 | U | 28 | U | 13 | U |
| 1,1,2-Trichloroethane | 33 | U | 28 | U | 13 | U |
| 1,1-Dichloroethane | 33 | U | 28 | U | 13 | U |
| 1,1-Dichloroethene | 33 | U | 28 | U | 13 | U |
| 1,1-Dichloropropylene | 33 | U | 28 | U | NA | |
| 1,2,3-Trichlorobenzene | 33 | U | 28 | U | NA | |
| 1,2,3-Trichloropropane | 33 | U | 28 | U | NA | |
| 1,2,4-Trichlorobenzene | 33 | U | 28 | U | NA | |
| 1,2,4-Trichlorobenzene | 460 | U | 440 | U | NA | |
| 1,2,4-Trimethylbenzene | 33 | U | 28 | U | NA | |
| 1,2-Dibromo-3-chloropropane | 33 | U | 28 | U | NA | |
| 1,2-Dibromoethane (EDB) | 33 | U | 28 | U | NA | |
| 1,2-Dichlorobenzene | 460 | U | 440 | U | NA | |
| 1,2-Dichloroethane | 33 | U | 28 | U | 13 | U |
| 1,2-Dichloropropane | 33 | U | 28 | U | 13 | U |
| 1,3,5-Trimethylbenzene | 33 | U | 28 | U | NA | |
| 1,3-Dichlorobenzene | 460 | U | 440 | U | NA | |
| 1,3-Dichloropropane | 33 | U | 28 | U | NA | |
| 1,4-Dichlorobenzene | 460 | | 440 | U | NA | |
| 2,2-Dichloropropane | 33 | U | 28 | U | NA | |
| 2,2'-Oxybis(1-Chloropropane) | NA | | NA | | NA | |
| 2,4,5-Trichlorophenol | 460 | U | 440 | U | NA | |
| 2,4,6-Trichlorophenol | 460 | U | 440 | U | NA | |
| 2,4-Dichlorophenol | 460 | U | 440 | U | NA | |
| 2,4-Dimethylphenol | 460 | U | 440 | U | NA | |
| 2,4-Dinitrophenol | 2400 | U | 2200 | U | NA | |
| 2,4-Dinitrotoluene | 460 | U | 440 | U | NA | |
| 2,6-Dinitrotoluene | 460 | U | 440 | U | NA | |
| 2-Butanone (MEK) | 160 | U | 140 | U | 65 | U |
| 2-Chloronaphthalene | 460 | U | 440 | U | NA | |
| 2-Chlorophenol | 460 | U | 440 | U | NA | |
| 2-Chlorotoluene | 33 | U | 28 | U | NA | |
| 2-Hexanone | NA | | NA | | 65 | U |
| 2-Methyl-4,6-dinitrophenol | 2400 | U | 2200 | U | NA | |
| 2-Methylnaphthalene | 460 | U | 440 | U | NA | |
| 2-Methylphenol (o-cresol) | 460 | U | 440 | U | NA | |
| 2-Nitroaniline | 2400 | U | 2200 | U | NA | |
| 2-Nitrophenol | 460 | U | 440 | U | NA | |
| 3&4-Methylphenol (m&p-cresol) | 460 | U | 440 | U | NA | |
| 3,3'-Dichlorobenzidine | 920 | U | 880 | U | NA | |
| 3-Nitroaniline | 2400 | U | 2200 | U | NA | |
| 4,6-Dinitro-2-methylphenol | NA | | NA | | NA | |
| 4-Bromophenyl phenyl ether | 460 | U | 440 | U | NA | |
| 4-Chloro-3-methylphenol | 460 | U | 440 | U | NA | |
| 4-Chloroaniline | 920 | U | 880 | U | NA | |

NA= Not Analyzed.

Table 4
Site Soil Data Summary

| | BBU-B3(6-8") | | BBU-B4(6-8") | | BBU-B52(2-2.5') | |
|---|---|---|---|---|---|---|
| 4-Chlorophenylphenyl ether | 460 | U | 440 | U | NA | |
| 4-Chlorotoluene | 33 | U | 28 | U | NA | |
| 4-Methyl-2-pentanone (MIBK) | 160 | U | 140 | U | 65 | U |
| 4-Nitroaniline | 2400 | U | 2200 | U | NA | |
| 4-Nitrophenol | 2400 | U | 2200 | U | NA | |
| Acenaphthene | 460 | U | 440 | U | NA | |
| Acenaphthylene | 460 | U | 440 | U | NA | |
| Acetone | 330 | U | 280 | U | 130 | U |
| Anthracene | 460 | U | 440 | U | NA | |
| Aroclor-1016 | NA | | NA | | NA | |
| Aroclor-1221 | NA | | NA | | NA | |
| Aroclor-1232 | NA | | NA | | NA | |
| Aroclor-1242 | NA | | NA | | NA | |
| Aroclor-1248 | NA | | NA | | NA | |
| Aroclor-1254 | NA | | NA | | NA | |
| Aroclor-1260 | NA | | NA | | NA | |
| Benzene | 33 | U | 28 | U | 13 | U |
| Benzidine | 3800 | U | 3600 | U | NA | |
| Benzo(a)anthracene | 460 | U | 440 | U | NA | |
| Benzo(a)pyrene | 460 | U | 440 | U | NA | |
| Benzo(b)fluoranthene | 460 | U | 440 | U | NA | |
| Benzo(g,h,i)perylene | 460 | U | 440 | U | NA | |
| Benzo(k)fluoranthene | 460 | U | 440 | U | NA | |
| Benzoic acid | 2400 | U | 2200 | U | NA | |
| Benzyl alcohol | 460 | U | 440 | U | NA | |
| bis(2-Chloroethoxy)methane | 460 | U | 440 | U | NA | |
| bis(2-Chloroethyl)ether | 460 | U | 440 | U | NA | |
| bis(2-Chloroisopropyl)ether | 460 | U | 440 | U | NA | |
| bis(2-Ethylhexyl)phthalate | 460 | U | 450 | | NA | |
| Bromobenzene | 33 | U | 28 | U | NA | |
| Bromochloromethane | 33 | U | 28 | U | NA | |
| Bromodichloromethane | 33 | U | 28 | U | 13 | U |
| Bromoform | 33 | U | 28 | U | 13 | U |
| Bromomethane | 67 | U | 56 | U | 26 | U |
| Butylbenzylphthalate | 460 | U | 440 | U | NA | |
| Carbazole | NA | | NA | | NA | |
| Carbon disulfide | NA | | NA | | 16 | |
| Carbon tetrachloride | 33 | U | 28 | U | 13 | U |
| Chlorobenzene | 160 | | 50 | | 13 | U |
| Chlorodibromomethane | 33 | U | 28 | U | NA | |
| Chloroethane | 67 | U | 56 | U | 26 | U |
| Chloroform | 33 | U | 28 | U | 13 | U |
| Chloromethane | 67 | U | 56 | U | 26 | U |
| Chrysene | 460 | U | 440 | U | NA | |
| cis-1,2-Dichloroethene | 33 | U | 28 | U | 13 | U |
| cis-1,3-Dichloropropene | NA | | NA | | 13 | U |
| Dibenzo(a,h)anthracene | 460 | U | 440 | U | NA | |

NA= Not Analyzed.

Table 4
Site Soil Data Summary

| | BBU-B3(6-8") | | BBU-B4(6-8") | | BBU-B52(2-2.5') | |
|---|---|---|---|---|---|---|
| Dibenzofuran | 460 | U | 440 | U | NA | |
| Dibromomethane | 33 | U | 28 | U | NA | |
| Dichlorodifluoromethane | 33 | U | 28 | U | 13 | U |
| Dibromochloromethane | NA | | NA | | NA | |
| Diethylphthalate | 460 | U | 440 | U | NA | |
| Dimethylphthalate | 460 | U | 440 | U | NA | |
| Di-n-butylphthalate | 460 | U | 440 | U | NA | |
| Di-n-octylphthalate | 460 | U | 440 | U | NA | |
| Ethylbenzene | 33 | U | 28 | U | 13 | U |
| Fluoranthene | 460 | U | 440 | U | NA | |
| Fluorene | 460 | U | 440 | U | NA | |
| Hexachlorobenzene | 460 | U | 440 | U | NA | |
| Hexachlorobutadiene | 33 | U | 28 | U | NA | |
| Hexachlorocyclopentadiene | 460 | U | 440 | U | NA | |
| Hexachloroethane | 460 | U | 440 | U | NA | |
| Indeno(1,2,3-cd)pyrene | 460 | U | 440 | U | NA | |
| Isophorone | 460 | U | 440 | U | NA | |
| Isopropylbenzene | 33 | U | 28 | U | NA | |
| m&p-Xylene | 33 | U | 28 | U | NA | |
| Methylene chloride (Dichloromethane) | 33 | U | 28 | U | 13 | U |
| Naphthalene | 33 | U | 28 | U | NA | |
| Naphthalene | 460 | U | 440 | U | NA | |
| n-Butylbenzene | 33 | U | 28 | U | NA | |
| Nitrobenzene | 460 | U | 440 | U | NA | |
| N-Nitrosodimethylamine | 460 | U | 440 | U | NA | |
| n-Nitrosodi-n-propylamine | 460 | U | 440 | U | NA | |
| N-Nitrosodiphenylamine/Diphenylamine | 460 | U | 440 | U | NA | |
| n-Propylbenzene | 33 | U | 28 | U | NA | |
| o-Xylene | 33 | U | 28 | U | NA | |
| Pentachlorophenol | 2400 | U | 2200 | U | NA | |
| Phenanthrene | 460 | U | 440 | U | NA | |
| Phenol | 460 | U | 440 | U | NA | |
| p-Isopropyltoluene | 33 | U | 28 | U | NA | |
| Pyrene | 460 | U | 440 | U | NA | |
| sec-Butylbenzene | 33 | U | 28 | U | NA | |
| Styrene | 33 | U | 28 | U | 13 | U |
| tert-Butylbenzene | 33 | U | 28 | U | NA | |
| Tetrachloroethene | 33 | U | 28 | U | 13 | U |
| Toluene | 33 | U | 28 | U | 13 | U |
| trans-1,2-Dichloroethene | 33 | U | 28 | U | NA | |
| trans-1,3-Dichloropropene | NA | | NA | | 13 | U |
| Trichloroethene | 33 | U | 28 | U | 13 | U |
| Trichlorofluoromethane | 33 | U | 28 | U | NA | |
| Vinyl chloride | 67 | U | 56 | U | 26 | U |
| Xylenes, Total | NA | | NA | | NA | |

NA= Not Analyzed.

Table 4
Site Soil Data Summary

| | BBU-B52(3.5-4') | | B53-11-13' | | -B53-13-13.5' | |
|---|---|---|---|---|---|---|
| 1,1,1,2-Tetrachloroethane | NA | | NA | | NA | |
| 1,1,1-Trichloroethane | NA | | NA | | 7 | U |
| 1,1,2,2-Tetrachloroethane | NA | | NA | | 7 | U |
| 1,1,2-Trichloroethane | NA | | NA | | 7 | U |
| 1,1-Dichloroethane | NA | | NA | | 7 | U |
| 1,1-Dichloroethene | NA | | NA | | 7 | U |
| 1,1-Dichloropropylene | NA | | NA | | NA | |
| 1,2,3-Trichlorobenzene | NA | | NA | | NA | |
| 1,2,3-Trichloropropane | NA | | NA | | NA | |
| 1,2,4-Trichlorobenzene | 410 | U | 2600 | | NA | |
| 1,2,4-Trichlorobenzene | NA | | NA | | NA | |
| 1,2,4-Trimethylbenzene | NA | | NA | | NA | |
| 1,2-Dibromo-3-chloropropane | NA | | NA | | NA | |
| 1,2-Dibromoethane (EDB) | NA | | NA | | NA | |
| 1,2-Dichlorobenzene | 410 | U | 360 | U | NA | |
| 1,2-Dichloroethane | NA | | NA | | 7 | U |
| 1,2-Dichloropropane | NA | | NA | | 7 | U |
| 1,3,5-Trimethylbenzene | NA | | NA | | NA | |
| 1,3-Dichlorobenzene | 410 | U | 360 | U | NA | |
| 1,3-Dichloropropane | NA | | NA | | NA | |
| 1,4-Dichlorobenzene | 410 | U | 360 | U | NA | |
| 2,2-Dichloropropane | NA | | NA | | NA | |
| 2,2'-Oxybis(1-Chloropropane) | 410 | U | 360 | U | NA | |
| 2,4,5-Trichlorophenol | 410 | U | 360 | U | NA | |
| 2,4,6-Trichlorophenol | 410 | U | 360 | U | NA | |
| 2,4-Dichlorophenol | 410 | U | 360 | U | NA | |
| 2,4-Dimethylphenol | 410 | U | 360 | U | NA | |
| 2,4-Dinitrophenol | 2100 | U | 1900 | U | NA | |
| 2,4-Dinitrotoluene | 410 | U | 360 | U | NA | |
| 2,6-Dinitrotoluene | 410 | U | 360 | U | NA | |
| 2-Butanone (MEK) | NA | | NA | | 35 | U |
| 2-Chloronaphthalene | 410 | U | 360 | U | NA | |
| 2-Chlorophenol | 410 | U | 360 | U | NA | |
| 2-Chlorotoluene | NA | | NA | | NA | |
| 2-Hexanone | NA | | NA | | 35 | U |
| 2-Methyl-4,6-dinitrophenol | NA | | NA | | NA | |
| 2-Methylnaphthalene | 410 | U | 360 | U | NA | |
| 2-Methylphenol (o-cresol) | 410 | U | 360 | U | NA | |
| 2-Nitroaniline | 2100 | U | 1900 | U | NA | |
| 2-Nitrophenol | 410 | U | 360 | U | NA | |
| 3&4-Methylphenol (m&p-cresol) | 410 | U | 360 | U | NA | |
| 3,3'-Dichlorobenzidine | 820 | U | 730 | U | NA | |
| 3-Nitroaniline | 2100 | U | 1900 | U | NA | |
| 4,6-Dinitro-2-methylphenol | 2100 | U | 1900 | U | NA | |
| 4-Bromophenyl phenyl ether | 410 | U | 360 | U | NA | |
| 4-Chloro-3-methylphenol | 410 | U | 360 | U | NA | |
| 4-Chloroaniline | 820 | U | 730 | U | NA | |

NA= Not Analyzed.

Table 4
Site Soil Data Summary

| | BBU-B52(3.5-4') | | B53-11-13' | | -B53-13-13.5' | |
|---|---|---|---|---|---|---|
| 4-Chlorophenylphenyl ether | 410 | U | 360 | U | NA | |
| 4-Chlorotoluene | NA | | NA | | NA | |
| 4-Methyl-2-pentanone (MIBK) | NA | | NA | | 35 | U |
| 4-Nitroaniline | 2100 | U | 1900 | U | NA | |
| 4-Nitrophenol | 2100 | U | 1900 | U | NA | |
| Acenaphthene | 410 | U | 360 | U | NA | |
| Acenaphthylene | 410 | U | 360 | U | NA | |
| Acetone | NA | | NA | | 70 | U |
| Anthracene | 410 | U | 360 | U | NA | |
| Aroclor-1016 | NA | | NA | | NA | |
| Aroclor-1221 | NA | | NA | | NA | |
| Aroclor-1232 | NA | | NA | | NA | |
| Aroclor-1242 | NA | | NA | | NA | |
| Aroclor-1248 | NA | | NA | | NA | |
| Aroclor-1254 | NA | | NA | | NA | |
| Aroclor-1260 | NA | | NA | | NA | |
| Benzene | NA | | NA | | 7 | U |
| Benzidine | NA | | NA | | NA | |
| Benzo(a)anthracene | 410 | U | 360 | U | NA | |
| Benzo(a)pyrene | 410 | U | 360 | U | NA | |
| Benzo(b)fluoranthene | 410 | U | 360 | U | NA | |
| Benzo(g,h,i)perylene | 410 | U | 360 | U | NA | |
| Benzo(k)fluoranthene | 410 | U | 360 | U | NA | |
| Benzoic acid | NA | | NA | | NA | |
| Benzyl alcohol | NA | | NA | | NA | |
| bis(2-Chloroethoxy)methane | 410 | U | 360 | U | NA | |
| bis(2-Chloroethyl)ether | 410 | U | 360 | U | NA | |
| bis(2-Chloroisopropyl)ether | NA | | NA | | NA | |
| bis(2-Ethylhexyl)phthalate | 410 | U | 360 | U | NA | |
| Bromobenzene | NA | U | NA | | NA | |
| Bromochloromethane | NA | U | NA | | NA | |
| Bromodichloromethane | NA | U | NA | | 7 | U |
| Bromoform | NA | U | NA | | 7 | U |
| Bromomethane | NA | U | NA | | 14 | U |
| Butylbenzylphthalate | 410 | U | 360 | U | NA | |
| Carbazole | 410 | U | 360 | U | NA | |
| Carbon disulfide | NA | | NA | | 7 | U |
| Carbon tetrachloride | NA | | NA | | 7 | U |
| Chlorobenzene | NA | | NA | | 5 | |
| Chlorodibromomethane | NA | | NA | | NA | |
| Chloroethane | NA | | NA | | 14 | U |
| Chloroform | NA | | NA | | 7 | U |
| Chloromethane | NA | | NA | | 14 | U |
| Chrysene | 410 | U | 360 | U | NA | |
| cis-1,2-Dichloroethene | NA | | NA | | 7 | U |
| cis-1,3-Dichloropropene | NA | | NA | | 7 | U |
| Dibenzo(a,h)anthracene | 410 | U | 360 | U | NA | |

NA= Not Analyzed.

Table 4
Site Soil Data Summary

| | BBU-B52(3.5-4') | | B53-11-13' | | -B53-13-13.5' | |
|---|---|---|---|---|---|---|
| Dibenzofuran | 410 | U | 360 | U | NA | |
| Dibromomethane | NA | | NA | | NA | |
| Dichlorodifluoromethane | NA | | NA | | 7 | U |
| Dibromochloromethane | NA | | NA | | NA | |
| Diethylphthalate | 410 | U | 360 | U | NA | |
| Dimethylphthalate | 410 | U | 360 | U | NA | |
| Di-n-butylphthalate | 410 | U | 360 | U | NA | |
| Di-n-octylphthalate | 410 | U | 360 | U | NA | |
| Ethylbenzene | NA | | NA | | 7 | U |
| Fluoranthene | 410 | U | 360 | U | NA | |
| Fluorene | 410 | U | 360 | U | NA | |
| Hexachlorobenzene | 410 | U | 360 | U | NA | |
| Hexachlorobutadiene | 410 | U | 360 | U | NA | |
| Hexachlorocyclopentadiene | 410 | U | 360 | U | NA | |
| Hexachloroethane | 410 | U | 360 | U | NA | |
| Indeno(1,2,3-cd)pyrene | 410 | U | 360 | U | NA | |
| Isophorone | 410 | U | 360 | U | NA | |
| Isopropylbenzene | NA | | NA | | NA | |
| m&p-Xylene | NA | | NA | | NA | |
| Methylene chloride (Dichloromethane) | NA | | NA | | 7 | U |
| Naphthalene | 410 | U | 360 | U | NA | |
| Naphthalene | NA | | NA | | NA | |
| n-Butylbenzene | NA | | NA | | NA | |
| Nitrobenzene | 410 | U | 360 | U | NA | |
| N-Nitrosodimethylamine | NA | | NA | | NA | |
| n-Nitrosodi-n-propylamine | 410 | U | 360 | U | NA | |
| N-Nitrosodiphenylamine/Diphenylamine | 410 | | 360 | U | NA | |
| n-Propylbenzene | NA | | NA | | NA | |
| o-Xylene | NA | | NA | | NA | |
| Pentachlorophenol | 2100 | | 3200 | | NA | |
| Phenanthrene | 410 | | 360 | U | NA | |
| Phenol | 410 | | 360 | U | NA | |
| p-Isopropyltoluene | NA | | NA | | NA | |
| Pyrene | 410 | | 360 | U | NA | |
| sec-Butylbenzene | NA | | NA | | NA | |
| Styrene | NA | | NA | | 7 | U |
| tert-Butylbenzene | NA | | NA | | NA | |
| Tetrachloroethene | NA | | NA | | 7 | U |
| Toluene | NA | | NA | | 7 | U |
| trans-1,2-Dichloroethene | NA | | NA | | NA | |
| trans-1,3-Dichloropropene | NA | | NA | | 7 | U |
| Trichloroethene | NA | | NA | | 7 | U |
| Trichlorofluoromethane | NA | | NA | | NA | |
| Vinyl chloride | NA | | NA | | 14 | U |
| Xylenes, Total | NA | | NA | | 14 | U |

NA= Not Analyzed.

Table 4
Site Soil Data Summary

| | BBU-B53-2-2.5' | | B54-12-14' | | BBU-B54-2-2.5' | |
|---|---|---|---|---|---|---|
| 1,1,1,2-Tetrachloroethane | NA | | NA | | NA | |
| 1,1,1-Trichloroethane | 8.6 | U | NA | | 7.2 | U |
| 1,1,2,2-Tetrachloroethane | 8.6 | U | 360 | U | 7.2 | U |
| 1,1,2-Trichloroethane | 8.6 | U | 360 | U | 7.2 | U |
| 1,1-Dichloroethane | 8.6 | U | 360 | U | 7.2 | U |
| 1,1-Dichloroethene | 8.6 | U | 360 | U | 7.2 | U |
| 1,1-Dichloropropylene | NA | | NA | | NA | |
| 1,2,3-Trichlorobenzene | NA | | NA | | NA | |
| 1,2,3-Trichloropropane | NA | | NA | | NA | |
| 1,2,4-Trichlorobenzene | NA | | 450 | U | NA | |
| 1,2,4-Trichlorobenzene | NA | | NA | | NA | |
| 1,2,4-Trimethylbenzene | NA | | NA | | NA | |
| 1,2-Dibromo-3-chloropropane | NA | | NA | | NA | |
| 1,2-Dibromoethane (EDB) | NA | | NA | | NA | |
| 1,2-Dichlorobenzene | NA | | 450 | U | NA | |
| 1,2-Dichloroethane | 8.6 | U | 360 | U | 7.2 | U |
| 1,2-Dichloropropane | 8.6 | U | 360 | U | 7.2 | U |
| 1,3,5-Trimethylbenzene | NA | | NA | | NA | |
| 1,3-Dichlorobenzene | NA | | 450 | U | NA | |
| 1,3-Dichloropropane | NA | | NA | | NA | |
| 1,4-Dichlorobenzene | NA | | 450 | U | NA | |
| 2,2-Dichloropropane | NA | | NA | | NA | |
| 2,2'-Oxybis(1-Chloropropane) | NA | | 450 | U | NA | |
| 2,4,5-Trichlorophenol | NA | | 450 | U | NA | |
| 2,4,6-Trichlorophenol | NA | | 450 | U | NA | |
| 2,4-Dichlorophenol | NA | | 450 | U | NA | |
| 2,4-Dimethylphenol | NA | | 450 | U | NA | |
| 2,4-Dinitrophenol | NA | | 2300 | U | NA | |
| 2,4-Dinitrotoluene | NA | | 450 | U | NA | |
| 2,6-Dinitrotoluene | NA | | 450 | U | NA | |
| 2-Butanone (MEK) | 43 | U | 1800 | U | 36 | U |
| 2-Chloronaphthalene | NA | | 450 | U | NA | |
| 2-Chlorophenol | NA | | 450 | U | NA | |
| 2-Chlorotoluene | NA | | NA | | NA | |
| 2-Hexanone | 43 | U | 1800 | U | 36 | U |
| 2-Methyl-4,6-dinitrophenol | NA | | NA | | NA | |
| 2-Methylnaphthalene | NA | | 450 | U | NA | |
| 2-Methylphenol (o-cresol) | NA | | 450 | U | NA | |
| 2-Nitroaniline | NA | | 2300 | U | NA | |
| 2-Nitrophenol | NA | | 450 | U | NA | |
| 3&4-Methylphenol (m&p-cresol) | NA | | 450 | U | NA | |
| 3,3'-Dichlorobenzidine | NA | | 900 | U | NA | |
| 3-Nitroaniline | NA | | 2300 | U | NA | |
| 4,6-Dinitro-2-methylphenol | NA | | 2300 | U | NA | |
| 4-Bromophenyl phenyl ether | NA | | 450 | U | NA | |
| 4-Chloro-3-methylphenol | NA | | 450 | U | NA | |
| 4-Chloroaniline | NA | | 900 | U | NA | |

NA= Not Analyzed.

Table 4
Site Soil Data Summary

| | BBU-B53-2-2.5' | | B54-12-14' | | BBU-B54-2-2.5' | |
|---|---|---|---|---|---|---|
| 4-Chlorophenylphenyl ether | NA | | 450 | U | NA | |
| 4-Chlorotoluene | NA | | NA | | NA | |
| 4-Methyl-2-pentanone (MIBK) | 43 | U | 1800 | U | 36 | U |
| 4-Nitroaniline | NA | | 2300 | U | NA | |
| 4-Nitrophenol | NA | | 2300 | U | NA | |
| Acenaphthene | NA | | 450 | U | NA | |
| Acenaphthylene | NA | | 450 | U | NA | |
| Acetone | 86 | U | 3600 | U | 72 | U |
| Anthracene | NA | U | 450 | U | NA | |
| Aroclor-1016 | NA | U | NA | | NA | |
| Aroclor-1221 | NA | U | NA | | NA | |
| Aroclor-1232 | NA | U | NA | | NA | |
| Aroclor-1242 | NA | U | NA | | NA | |
| Aroclor-1248 | NA | U | NA | | NA | |
| Aroclor-1254 | NA | U | NA | | NA | |
| Aroclor-1260 | NA | U | NA | | NA | |
| Benzene | 8.6 | U | 5100 | | 7.2 | U |
| Benzidine | NA | | NA | | NA | |
| Benzo(a)anthracene | NA | | 450 | U | NA | |
| Benzo(a)pyrene | NA | | 450 | U | NA | |
| Benzo(b)fluoranthene | NA | | 450 | U | NA | |
| Benzo(g,h,i)perylene | NA | | 450 | U | NA | |
| Benzo(k)fluoranthene | NA | | 450 | U | NA | |
| Benzoic acid | NA | | NA | | NA | |
| Benzyl alcohol | NA | | NA | | NA | |
| bis(2-Chloroethoxy)methane | NA | | 450 | U | NA | |
| bis(2-Chloroethyl)ether | NA | | 450 | U | NA | |
| bis(2-Chloroisopropyl)ether | NA | | NA | | NA | |
| bis(2-Ethylhexyl)phthalate | NA | | 450 | U | NA | |
| Bromobenzene | NA | | NA | | NA | |
| Bromochloromethane | NA | | NA | | NA | |
| Bromodichloromethane | 8.6 | U | 360 | U | 7.2 | U |
| Bromoform | 8.6 | U | 360 | U | 7.2 | U |
| Bromomethane | 17 | U | 720 | U | 14 | U |
| Butylbenzylphthalate | NA | | 450 | U | NA | |
| Carbazole | NA | | 450 | U | NA | |
| Carbon disulfide | 8.6 | U | 360 | U | 7.2 | U |
| Carbon tetrachloride | 8.6 | U | 360 | U | 7.2 | U |
| Chlorobenzene | 8.6 | U | 190 | | 7.2 | U |
| Chlorodibromomethane | NA | | NA | | NA | |
| Chloroethane | 17 | U | 720 | U | 14 | U |
| Chloroform | 8.6 | U | 360 | U | 7.2 | U |
| Chloromethane | 17 | U | 720 | U | 14 | U |
| Chrysene | NA | | 450 | U | NA | |
| cis-1,2-Dichloroethene | 8.6 | U | 360 | U | 7.2 | U |
| cis-1,3-Dichloropropene | 8.6 | U | 360 | U | 7.2 | U |
| Dibenzo(a,h)anthracene | NA | | 450 | U | NA | |

NA= Not Analyzed.

Table 4
Site Soil Data Summary

| | BBU-B53-2-2.5' | | B54-12-14' | | BBU-B54-2-2.5' | |
|---|---|---|---|---|---|---|
| Dibenzofuran | NA | | 450 | U | NA | |
| Dibromomethane | NA | | NA | | NA | |
| Dichlorodifluoromethane | NA | | 360 | U | NA | |
| Dibromochloromethane | 8.6 | U | 450 | U | 7.2 | U |
| Diethylphthalate | NA | | 450 | U | NA | |
| Dimethylphthalate | NA | | NA | | NA | |
| Di-n-butylphthalate | NA | | 450 | U | NA | |
| Di-n-octylphthalate | NA | | 450 | U | NA | |
| Ethylbenzene | 8.6 | U | 360 | U | 7.2 | U |
| Fluoranthene | NA | | 450 | U | NA | |
| Fluorene | NA | | 450 | U | NA | |
| Hexachlorobenzene | NA | | 450 | U | NA | |
| Hexachlorobutadiene | NA | | 450 | U | NA | |
| Hexachlorocyclopentadiene | NA | | 450 | U | NA | |
| Hexachloroethane | NA | | 450 | U | NA | |
| Indeno(1,2,3-cd)pyrene | NA | | 450 | U | NA | |
| Isophorone | NA | | 450 | U | NA | |
| Isopropylbenzene | NA | | NA | | NA | |
| m&p-Xylene | NA | | NA | | NA | |
| Methylene chloride (Dichloromethane) | 8.6 | | 360 | U | 7.2 | U |
| Naphthalene | NA | | 450 | U | NA | |
| Naphthalene | NA | | NA | | NA | |
| n-Butylbenzene | NA | | NA | | NA | |
| Nitrobenzene | NA | | 450 | U | NA | |
| N-Nitrosodimethylamine | NA | | NA | | NA | |
| n-Nitrosodi-n-propylamine | NA | | 450 | U | NA | |
| N-Nitrosodiphenylamine/Diphenylamine | NA | | 450 | U | NA | |
| n-Propylbenzene | NA | | NA | | NA | |
| o-Xylene | NA | | NA | | NA | |
| Pentachlorophenol | NA | | 2300 | U | NA | |
| Phenanthrene | NA | | 450 | U | NA | |
| Phenol | NA | | 450 | U | NA | |
| p-Isopropyltoluene | NA | | NA | | NA | |
| Pyrene | NA | | 450 | U | NA | |
| sec-Butylbenzene | NA | | NA | | NA | |
| Styrene | 8.6 | | 360 | U | 7.2 | U |
| tert-Butylbenzene | NA | | NA | | NA | |
| Tetrachloroethene | 8.6 | | 360 | U | 37 | |
| Toluene | 8.6 | | 360 | U | 7.2 | U |
| trans-1,2-Dichloroethene | NA | | NA | | NA | |
| trans-1,3-Dichloropropene | 8.6 | | 360 | U | 7.2 | U |
| Trichloroethene | 8.6 | | 360 | U | 7.2 | U |
| Trichlorofluoromethane | NA | | NA | | NA | |
| Vinyl chloride | 17 | | 720 | U | 14 | U |
| Xylenes, Total | 17 | | 720 | U | 14 | U |

NA= Not Analyzed.

Table 4
Site Soil Data Summary

| | BBU-B54-2-4' | | BBU-B56-3' | | BBU-B56-4-6' | |
|---|---|---|---|---|---|---|
| 1,1,1,2-Tetrachloroethane | NA | | NA | | NA | |
| 1,1,1-Trichloroethane | NA | | 6.7 | U | 300 | U |
| 1,1,2,2-Tetrachloroethane | NA | | 6.7 | U | 300 | U |
| 1,1,2-Trichloroethane | NA | | 6.7 | U | 300 | U |
| 1,1-Dichloroethane | NA | | 6.7 | U | 300 | U |
| 1,1-Dichloroethene | NA | | 6.7 | U | 300 | U |
| 1,1-Dichloropropylene | NA | | NA | | NA | |
| 1,2,3-Trichlorobenzene | NA | | NA | | NA | |
| 1,2,3-Trichloropropane | NA | | NA | | NA | |
| 1,2,4-Trichlorobenzene | NA | | 17000 | U | 810 | U |
| 1,2,4-Trichlorobenzene | 67000 | | NA | | NA | |
| 1,2,4-Trimethylbenzene | NA | | NA | | NA | |
| 1,2-Dibromo-3-chloropropane | NA | | NA | | NA | |
| 1,2-Dibromoethane (EDB) | NA | | NA | | NA | |
| 1,2-Dichlorobenzene | 7300 | | 17000 | U | 810 | U |
| 1,2-Dichloroethane | NA | | 6.7 | U | 300 | U |
| 1,2-Dichloropropane | NA | | 6.7 | U | 300 | U |
| 1,3,5-Trimethylbenzene | NA | | NA | | NA | |
| 1,3-Dichlorobenzene | 8400 | U | 17000 | U | 810 | U |
| 1,3-Dichloropropane | NA | | NA | | NA | |
| 1,4-Dichlorobenzene | 27000 | | 17000 | U | 650 | |
| 2,2-Dichloropropane | NA | | NA | | NA | |
| 2,2'-Oxybis(1-Chloropropane) | 8400 | U | 17000 | U | 810 | U |
| 2,4,5-Trichlorophenol | 8400 | U | 17000 | U | 810 | U |
| 2,4,6-Trichlorophenol | 8400 | U | 17000 | U | 810 | U |
| 2,4-Dichlorophenol | 8400 | U | 17000 | U | 810 | U |
| 2,4-Dimethylphenol | 8400 | U | 17000 | U | 810 | U |
| 2,4-Dinitrophenol | 43000 | U | 89000 | U | 4200 | U |
| 2,4-Dinitrotoluene | 8400 | U | 17000 | U | 810 | U |
| 2,6-Dinitrotoluene | 8400 | U | 17000 | U | 810 | U |
| 2-Butanone (MEK) | NA | | 34 | U | 1500 | U |
| 2-Chloronaphthalene | 8400 | U | 17000 | U | 810 | U |
| 2-Chlorophenol | 8400 | U | 17000 | U | 810 | U |
| 2-Chlorotoluene | NA | | NA | | NA | |
| 2-Hexanone | NA | | 34 | U | 1500 | U |
| 2-Methyl-4,6-dinitrophenol | NA | | NA | | NA | |
| 2-Methylnaphthalene | 8400 | U | 17000 | U | 810 | U |
| 2-Methylphenol (o-cresol) | 8400 | U | 17000 | U | 810 | U |
| 2-Nitroaniline | 43000 | U | 89000 | U | 4200 | U |
| 2-Nitrophenol | 8400 | U | 17000 | U | 810 | U |
| 3&4-Methylphenol (m&p-cresol) | 8400 | U | 17000 | U | 810 | U |
| 3,3'-Dichlorobenzidine | 17000 | U | 35000 | U | 1600 | U |
| 3-Nitroaniline | 43000 | U | 89000 | U | 4200 | U |
| 4,6-Dinitro-2-methylphenol | 43000 | U | 89000 | U | 4200 | U |
| 4-Bromophenyl phenyl ether | 8400 | U | 17000 | U | 810 | U |
| 4-Chloro-3-methylphenol | 8400 | U | 17000 | U | 810 | U |
| 4-Chloroaniline | 17000 | U | 35000 | U | 1600 | U |

NA= Not Analyzed.

Table 4
Site Soil Data Summary

| | BBU-B54-2-4' | | BBU-B56-3' | | BBU-B56-4-6' | |
|---|---|---|---|---|---|---|
| 4-Chlorophenylphenyl ether | 8400 | U | 17000 | U | 810 | U |
| 4-Chlorotoluene | NA | | NA | | NA | |
| 4-Methyl-2-pentanone (MIBK) | NA | | 34 | U | 1500 | U |
| 4-Nitroaniline | 43000 | U | 89000 | U | 4200 | U |
| 4-Nitrophenol | 43000 | U | 89000 | U | 4200 | U |
| Acenaphthene | 8400 | U | 17000 | U | 810 | U |
| Acenaphthylene | 8400 | U | 17000 | U | 810 | U |
| Acetone | NA | | 44 | J | 3000 | U |
| Anthracene | 8400 | U | 17000 | U | 810 | U |
| Aroclor-1016 | NA | | NA | | NA | |
| Aroclor-1221 | NA | | NA | | NA | |
| Aroclor-1232 | NA | | NA | | NA | |
| Aroclor-1242 | NA | | NA | | NA | |
| Aroclor-1248 | NA | | NA | | NA | |
| Aroclor-1254 | NA | | NA | | NA | |
| Aroclor-1260 | NA | | NA | | NA | |
| Benzene | NA | | 13 | | 5600 | |
| Benzidine | NA | | NA | | NA | |
| Benzo(a)anthracene | 8400 | U | 17000 | U | 810 | U |
| Benzo(a)pyrene | 8400 | U | 17000 | U | 810 | U |
| Benzo(b)fluoranthene | 8400 | U | 17000 | U | 810 | U |
| Benzo(g,h,i)perylene | 8400 | U | 17000 | U | 810 | U |
| Benzo(k)fluoranthene | 8400 | U | 17000 | U | 810 | U |
| Benzoic acid | NA | | NA | | NA | |
| Benzyl alcohol | NA | | NA | | NA | |
| bis(2-Chloroethoxy)methane | 8400 | U | 17000 | U | 810 | U |
| bis(2-Chloroethyl)ether | 8400 | U | 17000 | U | 810 | U |
| bis(2-Chloroisopropyl)ether | NA | | NA | | NA | |
| bis(2-Ethylhexyl)phthalate | 8400 | U | 17000 | U | 810 | U |
| Bromobenzene | NA | | NA | | NA | |
| Bromochloromethane | NA | | NA | | NA | |
| Bromodichloromethane | NA | | 6.7 | U | 300 | U |
| Bromoform | NA | | 6.7 | U | 300 | U |
| Bromomethane | NA | | 13 | U | 610 | U |
| Butylbenzylphthalate | 8400 | U | 17000 | U | 810 | U |
| Carbazole | 8400 | U | 17000 | U | 810 | U |
| Carbon disulfide | NA | | 6.7 | U | 300 | U |
| Carbon tetrachloride | NA | | 6.7 | U | 300 | U |
| Chlorobenzene | NA | | 6.7 | U | 670 | |
| Chlorodibromomethane | NA | | NA | | NA | |
| Chloroethane | NA | | 13 | U | 610 | U |
| Chloroform | NA | | 6.7 | U | 240 | |
| Chloromethane | NA | | 13 | U | 610 | U |
| Chrysene | 8400 | U | 17000 | U | 810 | U |
| cis-1,2-Dichloroethene | NA | | 6.7 | U | 300 | U |
| cis-1,3-Dichloropropene | NA | | 6.7 | U | 300 | U |
| Dibenzo(a,h)anthracene | 8400 | U | 17000 | U | 810 | U |

NA= Not Analyzed.

Table 4
Site Soil Data Summary

| | BBU-B54-2-4' | | BBU-B56-3' | | BBU-B56-4-6' | |
|---|---|---|---|---|---|---|
| Dibenzofuran | 8400 | U | 17000 | U | 810 | U |
| Dibromomethane | NA | | NA | | NA | |
| Dichlorodifluoromethane | NA | | 6.7 | U | 300 | U |
| Dibromochloromethane | NA | | NA | | NA | |
| Diethylphthalate | 8400 | U | 17000 | U | 810 | U |
| Dimethylphthalate | 8400 | U | 17000 | U | 810 | U |
| Di-n-butylphthalate | 8400 | U | 17000 | U | 810 | U |
| Di-n-octylphthalate | 8400 | U | 17000 | U | 810 | U |
| Ethylbenzene | NA | | 6.7 | U | 300 | U |
| Fluoranthene | 8400 | U | 17000 | U | 810 | U |
| Fluorene | 8400 | U | 17000 | U | 810 | U |
| Hexachlorobenzene | 8400 | U | 17000 | U | 810 | U |
| Hexachlorobutadiene | 8400 | U | 17000 | U | 810 | U |
| Hexachlorocyclopentadiene | 8400 | U | 17000 | U | 810 | U |
| Hexachloroethane | 8400 | U | 17000 | U | 810 | U |
| Indeno(1,2,3-cd)pyrene | 8400 | U | 17000 | U | 810 | U |
| Isophorone | 8400 | U | 17000 | U | 810 | U |
| Isopropylbenzene | NA | | NA | | NA | |
| m&p-Xylene | NA | | NA | | NA | |
| Methylene chloride (Dichloromethane) | NA | | 6.7 | U | 300 | U |
| Naphthalene | NA | | 17000 | U | 810 | U |
| Naphthalene | 8400 | U | NA | | NA | |
| n-Butylbenzene | NA | | NA | | NA | |
| Nitrobenzene | 8400 | U | 17000 | U | 810 | U |
| N-Nitrosodimethylamine | NA | | NA | | NA | |
| n-Nitrosodi-n-propylamine | 8400 | U | NA | | NA | |
| N-Nitrosodiphenylamine/Diphenylamine | 8400 | U | 17000 | U | 810 | U |
| n-Propylbenzene | NA | | NA | | NA | |
| o-Xylene | NA | | NA | | NA | |
| Pentachlorophenol | 43000 | U | 89000 | U | 4200 | U |
| Phenanthrene | 8400 | U | 17000 | U | 810 | U |
| Phenol | 8400 | U | 17000 | U | 810 | U |
| p-Isopropyltoluene | NA | | NA | | NA | |
| Pyrene | 8400 | U | 17000 | U | 810 | U |
| sec-Butylbenzene | NA | | NA | | NA | |
| Styrene | NA | | 6.7 | U | 300 | U |
| tert-Butylbenzene | NA | | NA | | NA | |
| Tetrachloroethene | NA | | 6.7 | U | 350 | |
| Toluene | NA | | 6.7 | U | 300 | U |
| trans-1,2-Dichloroethene | NA | | NA | | NA | |
| trans-1,3-Dichloropropene | NA | | 6.7 | U | 300 | U |
| Trichloroethene | NA | | 4.4 | | 300 | U |
| Trichlorofluoromethane | NA | | NA | | NA | |
| Vinyl chloride | NA | | 13 | U | 610 | U |
| Xylenes, Total | NA | | 13 | U | 610 | U |

NA= Not Analyzed.

Table 4
Site Soil Data Summary

| | BBU-B57-8-9' | | BBU-B59-2-4' | | BBU-B59-6-8' | |
|---|---|---|---|---|---|---|
| 1,1,1,2-Tetrachloroethane | NA | | NA | | NA | |
| 1,1,1-Trichloroethane | 240 | U | 380 | U | 600 | U |
| 1,1,2,2-Tetrachloroethane | 240 | U | 380 | U | 600 | U |
| 1,1,2-Trichloroethane | 240 | U | 380 | U | 600 | U |
| 1,1-Dichloroethane | 240 | U | 380 | U | 600 | U |
| 1,1-Dichloroethene | 240 | U | 380 | U | 600 | U |
| 1,1-Dichloropropylene | NA | | NA | | NA | |
| 1,2,3-Trichlorobenzene | NA | | NA | | NA | |
| 1,2,3-Trichloropropane | NA | | NA | | NA | |
| 1,2,4-Trichlorobenzene | 440 | U | 1500000 | | 430 | U |
| 1,2,4-Trichlorobenzene | NA | | NA | | NA | |
| 1,2,4-Trimethylbenzene | NA | | NA | | NA | |
| 1,2-Dibromo-3-chloropropane | NA | | NA | | NA | |
| 1,2-Dibromoethane (EDB) | NA | | NA | | NA | |
| 1,2-Dichlorobenzene | 440 | U | 76000 | U | 430 | U |
| 1,2-Dichloroethane | 240 | U | 380 | U | 600 | U |
| 1,2-Dichloropropane | 240 | U | 380 | U | 600 | U |
| 1,3,5-Trimethylbenzene | NA | | NA | | NA | |
| 1,3-Dichlorobenzene | 440 | U | 76000 | U | 430 | U |
| 1,3-Dichloropropane | NA | | NA | | NA | |
| 1,4-Dichlorobenzene | 440 | U | 410000 | | 430 | U |
| 2,2-Dichloropropane | NA | | NA | | NA | |
| 2,2'-Oxybis(1-Chloropropane) | 440 | U | 76000 | U | 430 | U |
| 2,4,5-Trichlorophenol | 440 | U | 76000 | U | 430 | U |
| 2,4,6-Trichlorophenol | 440 | U | 76000 | U | 430 | U |
| 2,4-Dichlorophenol | 440 | U | 76000 | U | 430 | U |
| 2,4-Dimethylphenol | 440 | U | 76000 | U | 430 | U |
| 2,4-Dinitrophenol | 2300 | U | 390000 | U | 2200 | U |
| 2,4-Dinitrotoluene | 440 | U | 76000 | U | 430 | U |
| 2,6-Dinitrotoluene | 440 | U | 76000 | U | 430 | U |
| 2-Butanone (MEK) | 1200 | U | 1900 | U | 3000 | U |
| 2-Chloronaphthalene | 440 | U | 76000 | U | 430 | U |
| 2-Chlorophenol | 440 | U | 76000 | U | 430 | U |
| 2-Chlorotoluene | NA | | NA | | NA | |
| 2-Hexanone | 1200 | U | 1900 | U | 3000 | U |
| 2-Methyl-4,6-dinitrophenol | NA | | NA | | NA | |
| 2-Methylnaphthalene | 440 | U | 76000 | U | 430 | U |
| 2-Methylphenol (o-cresol) | 440 | U | 76000 | U | 430 | U |
| 2-Nitroaniline | 2300 | U | 390000 | U | 2200 | U |
| 2-Nitrophenol | 440 | U | 76000 | U | 430 | U |
| 3&4-Methylphenol (m&p-cresol) | 440 | U | 76000 | U | 430 | U |
| 3,3'-Dichlorobenzidine | 880 | U | 150000 | U | 870 | U |
| 3-Nitroaniline | 2300 | U | 390000 | U | 2200 | U |
| 4,6-Dinitro-2-methylphenol | 2300 | U | 390000 | U | 2200 | U |
| 4-Bromophenyl phenyl ether | 440 | U | 76000 | U | 430 | U |
| 4-Chloro-3-methylphenol | 440 | U | 76000 | U | 430 | U |
| 4-Chloroaniline | 880 | U | 150000 | U | 870 | U |

NA= Not Analyzed.

Table 4
Site Soil Data Summary

| | BBU-B57-8-9' | | BBU-B59-2-4' | | BBU-B59-6-8' | |
|---|---|---|---|---|---|---|
| 4-Chlorophenylphenyl ether | 440 | U | 76000 | U | 430 | U |
| 4-Chlorotoluene | NA | | NA | | NA | |
| 4-Methyl-2-pentanone (MIBK) | 1200 | U | 1900 | U | 3000 | U |
| 4-Nitroaniline | 2300 | U | 390000 | U | 2200 | U |
| 4-Nitrophenol | 2300 | U | 390000 | U | 2200 | U |
| Acenaphthene | 440 | U | 76000 | U | 430 | U |
| Acenaphthylene | 440 | U | 76000 | U | 430 | U |
| Acetone | 2400 | U | 3800 | U | 6000 | U |
| Anthracene | 440 | U | 76000 | U | 430 | U |
| Aroclor-1016 | NA | | NA | | NA | |
| Aroclor-1221 | NA | | NA | | NA | |
| Aroclor-1232 | NA | | NA | | NA | |
| Aroclor-1242 | NA | | NA | | NA | |
| Aroclor-1248 | NA | | NA | | NA | |
| Aroclor-1254 | NA | | NA | | NA | |
| Aroclor-1260 | NA | | NA | | NA | |
| Benzene | 540 | | 3000 | | 12000 | |
| Benzidine | NA | | NA | | NA | |
| Benzo(a)anthracene | 440 | U | 76000 | U | 430 | U |
| Benzo(a)pyrene | 440 | U | 76000 | U | 430 | U |
| Benzo(b)fluoranthene | 440 | U | 76000 | U | 430 | U |
| Benzo(g,h,i)perylene | 440 | U | 76000 | U | 430 | U |
| Benzo(k)fluoranthene | 440 | U | 76000 | U | 430 | U |
| Benzoic acid | NA | | NA | | NA | |
| Benzyl alcohol | NA | | NA | | NA | |
| bis(2-Chloroethoxy)methane | 440 | U | 76000 | U | 430 | U |
| bis(2-Chloroethyl)ether | 440 | U | 76000 | U | 430 | U |
| bis(2-Chloroisopropyl)ether | NA | | NA | | NA | |
| bis(2-Ethylhexyl)phthalate | 440 | U | 76000 | U | 430 | U |
| Bromobenzene | NA | | NA | | NA | |
| Bromochloromethane | NA | | NA | | NA | |
| Bromodichloromethane | 240 | U | 380 | U | 600 | U |
| Bromoform | 240 | U | 380 | U | 600 | U |
| Bromomethane | 480 | U | 750 | U | 1200 | U |
| Butylbenzylphthalate | 440 | U | 76000 | U | 430 | U |
| Carbazole | 440 | U | 76000 | U | 430 | U |
| Carbon disulfide | 240 | U | 380 | U | 600 | U |
| Carbon tetrachloride | 240 | U | 380 | U | 600 | U |
| Chlorobenzene | 700 | | 540 | | 640 | |
| Chlorodibromomethane | NA | | NA | | NA | |
| Chloroethane | 480 | U | 750 | U | 1200 | U |
| Chloroform | 240 | U | 380 | U | 600 | U |
| Chloromethane | 480 | U | 750 | U | 1200 | U |
| Chrysene | 440 | U | 76000 | U | 430 | U |
| cis-1,2-Dichloroethene | 240 | U | 380 | U | 600 | U |
| cis-1,3-Dichloropropene | 240 | U | 380 | U | 600 | U |
| Dibenzo(a,h)anthracene | 440 | U | 76000 | U | 430 | U |

NA= Not Analyzed.

Table 4
Site Soil Data Summary

| | BBU-B57-8-9' | | BBU-B59-2-4' | | BBU-B59-6-8' | |
|---|---|---|---|---|---|---|
| Dibenzofuran | 440 | U | 76000 | U | 430 | U |
| Dibromomethane | NA | | NA | | NA | |
| Dichlorodifluoromethane | 240 | U | NA | | NA | |
| Dibromochloromethane | NA | | 380 | U | 600 | U |
| Diethylphthalate | 440 | U | 76000 | U | 430 | U |
| Dimethylphthalate | 440 | U | 76000 | U | 430 | U |
| Di-n-butylphthalate | 440 | U | 76000 | U | 430 | U |
| Di-n-octylphthalate | 440 | U | 76000 | U | 430 | U |
| Ethylbenzene | 240 | U | 380 | U | 600 | U |
| Fluoranthene | 440 | U | 76000 | U | 430 | U |
| Fluorene | 440 | U | 76000 | U | 430 | U |
| Hexachlorobenzene | 440 | U | 76000 | U | 430 | U |
| Hexachlorobutadiene | 440 | U | 76000 | U | 430 | U |
| Hexachlorocyclopentadiene | 440 | U | 76000 | U | 430 | U |
| Hexachloroethane | 440 | U | 76000 | U | 430 | U |
| Indeno(1,2,3-cd)pyrene | 440 | U | 76000 | U | 430 | U |
| Isophorone | 440 | U | 76000 | U | 430 | U |
| Isopropylbenzene | NA | | NA | | NA | |
| m&p-Xylene | NA | | NA | | NA | |
| Methylene chloride (Dichloromethane) | 240 | U | 380 | U | 600 | U |
| Naphthalene | 440 | U | 76000 | U | 430 | U |
| Naphthalene | NA | | NA | | NA | |
| n-Butylbenzene | NA | | NA | | NA | |
| Nitrobenzene | 440 | U | 76000 | U | 430 | U |
| N-Nitrosodimethylamine | NA | | 76000 | U | 430 | U |
| n-Nitrosodi-n-propylamine | 440 | U | NA | | NA | |
| N-Nitrosodiphenylamine/Diphenylamine | 440 | U | 76000 | U | 430 | U |
| n-Propylbenzene | NA | | NA | | NA | |
| o-Xylene | NA | | NA | | NA | |
| Pentachlorophenol | 2300 | U | 390000 | U | 2200 | U |
| Phenanthrene | 440 | U | 76000 | U | 430 | U |
| Phenol | 440 | U | 76000 | U | 560 | |
| p-Isopropyltoluene | NA | | NA | | NA | |
| Pyrene | 440 | U | 76000 | U | 430 | U |
| sec-Butylbenzene | NA | | NA | | NA | |
| Styrene | 240 | U | 380 | U | 600 | U |
| tert-Butylbenzene | NA | | 380 | U | 600 | U |
| Tetrachloroethene | 240 | U | NA | | NA | |
| Toluene | 240 | U | 380 | U | 600 | U |
| trans-1,2-Dichloroethene | NA | | NA | | NA | |
| trans-1,3-Dichloropropene | 240 | U | 380 | U | 600 | U |
| Trichloroethene | 240 | U | 380 | U | 600 | U |
| Trichlorofluoromethane | NA | | NA | | NA | |
| Vinyl chloride | 480 | U | 750 | U | 1200 | U |
| Xylenes, Total | 480 | U | 750 | U | 1200 | U |

NA= Not Analyzed.

Table 4
Site Soil Data Summary

| | BBU-B6 (6-8') | | BBU-B7 (6-8') | | BBU-B8 (6-8') | | BBU-B9 (6-8') | |
|---|---|---|---|---|---|---|---|---|
| 1,1,1,2-Tetrachloroethane | 6.5 | U | 34 | U | 3400 | U | 26 | U |
| 1,1,1-Trichloroethane | 6.5 | U | 34 | U | 3400 | U | 26 | U |
| 1,1,2,2-Tetrachloroethane | 6.5 | U | 34 | U | 3400 | U | 26 | U |
| 1,1,2-Trichloroethane | 6.5 | U | 34 | U | 3400 | U | 26 | U |
| 1,1-Dichloroethane | 6.5 | U | 34 | U | 3400 | U | 26 | U |
| 1,1-Dichloroethene | 6.5 | U | 34 | U | 3400 | U | 26 | U |
| 1,1-Dichloropropylene | 6.5 | U | 34 | U | 3400 | U | 26 | U |
| 1,2,3-Trichlorobenzene | 6.5 | U | 34 | U | 3400 | U | 26 | U |
| 1,2,3-Trichloropropane | 6.5 | U | 34 | U | 3400 | U | 26 | U |
| 1,2,4-Trichlorobenzene | 6.5 | U | 34 | U | 9800 | | 26 | U |
| 1,2,4-Trichlorobenzene | 430 | U | 440 | U | 450 | U | 430 | U |
| 1,2,4-Trimethylbenzene | 6.5 | U | 34 | U | 3400 | U | 26 | U |
| 1,2-Dibromo-3-chloropropane | 6.5 | U | 34 | U | 3400 | U | 26 | U |
| 1,2-Dibromoethane (EDB) | 6.5 | U | 34 | U | 3400 | U | 26 | U |
| 1,2-Dichlorobenzene | 430 | U | 440 | U | 450 | U | 430 | U |
| 1,2-Dichloroethane | 6.5 | U | 34 | U | 3400 | U | 26 | U |
| 1,2-Dichloropropane | 6.5 | U | 34 | U | 3400 | U | 26 | U |
| 1,3,5-Trimethylbenzene | 6.5 | U | 34 | U | 3400 | U | 26 | U |
| 1,3-Dichlorobenzene | 430 | U | 440 | U | 450 | U | 430 | U |
| 1,3-Dichloropropane | 6.5 | U | 34 | U | 3400 | U | 26 | U |
| 1,4-Dichlorobenzene | 430 | U | 440 | U | 450 | U | 430 | U |
| 2,2-Dichloropropane | 6.5 | U | 34 | U | 3400 | U | 26 | U |
| 2,2'-Oxybis(1-Chloropropane) | NA | | NA | | NA | | NA | |
| 2,4,5-Trichlorophenol | 430 | U | 440 | U | 450 | U | 430 | U |
| 2,4,6-Trichlorophenol | 430 | U | 440 | U | 450 | U | 430 | U |
| 2,4-Dichlorophenol | 430 | U | 440 | U | 450 | U | 430 | U |
| 2,4-Dimethylphenol | 430 | U | 440 | U | 450 | U | 430 | U |
| 2,4-Dinitrophenol | 2200 | U | 2300 | U | 2300 | U | 2200 | U |
| 2,4-Dinitrotoluene | 430 | U | 440 | U | 450 | U | 430 | U |
| 2,6-Dinitrotoluene | 430 | U | 440 | U | 450 | U | 430 | U |
| 2-Butanone (MEK) | 46 | | 170 | U | 17000 | U | 120 | |
| 2-Chloronaphthalene | 430 | U | 440 | U | 450 | U | 430 | U |
| 2-Chlorophenol | 430 | U | 440 | U | 450 | U | 430 | U |
| 2-Chlorotoluene | 6.5 | U | 34 | U | 3400 | U | 26 | U |
| 2-Hexanone | NA | | NA | | NA | | NA | |
| 2-Methyl-4,6-dinitrophenol | 2201 | U | 2301 | U | 2301 | U | 2201 | U |
| 2-Methylnaphthalene | 430 | U | 440 | U | 450 | U | 430 | U |
| 2-Methylphenol (o-cresol) | 430 | U | 440 | U | 450 | U | 430 | U |
| 2-Nitroaniline | 2200 | U | 2300 | U | 2300 | U | 2200 | U |
| 2-Nitrophenol | 430 | U | 440 | U | 450 | U | 430 | U |
| 3&4-Methylphenol (m&p-cresol) | 430 | U | 440 | U | 450 | U | 430 | U |
| 3,3'-Dichlorobenzidine | 860 | U | 880 | U | 900 | U | 860 | U |
| 3-Nitroaniline | 2200 | U | 2300 | U | 2300 | U | 2200 | U |
| 4,6-Dinitro-2-methylphenol | NA | | NA | | NA | | NA | |
| 4-Bromophenyl phenyl ether | 430 | U | 440 | U | 450 | U | 430 | U |
| 4-Chloro-3-methylphenol | 430 | U | 440 | U | 450 | U | 430 | U |
| 4-Chloroaniline | 860 | U | 880 | U | 900 | U | 860 | U |

NA= Not Analyzed.

Table 4
Site Soil Data Summary

| | BBU-B6 (6-8') | | BBU-B7 (6-8') | | BBU-B8 (6-8') | | BBU-B9 (6-8') | |
|---|---|---|---|---|---|---|---|---|
| 4-Chlorophenylphenyl ether | 430 | U | 440 | U | 450 | U | 430 | U |
| 4-Chlorotoluene | 6.5 | U | 34 | U | 3400 | U | 26 | U |
| 4-Methyl-2-pentanone (MIBK) | 32 | U | 170 | U | 17000 | U | 130 | U |
| 4-Nitroaniline | 2200 | U | 2300 | U | 2300 | U | 2200 | U |
| 4-Nitrophenol | 2200 | U | 2300 | U | 2300 | U | 2200 | U |
| Acenaphthene | 430 | U | 440 | U | 450 | U | 430 | U |
| Acenaphthylene | 430 | U | 440 | U | 450 | U | 430 | U |
| Acetone | 280 | | 260 | | 34000 | U | 460 | |
| Anthracene | 430 | U | 440 | U | 450 | U | 430 | U |
| Aroclor-1016 | NA | | NA | | NA | | NA | |
| Aroclor-1221 | NA | | NA | | NA | | NA | |
| Aroclor-1232 | NA | | NA | | NA | | NA | |
| Aroclor-1242 | NA | | NA | | NA | | NA | |
| Aroclor-1248 | NA | | NA | | NA | | NA | |
| Aroclor-1254 | NA | | NA | | NA | | NA | |
| Aroclor-1260 | NA | | NA | | NA | | NA | |
| Benzene | 6.5 | U | 34 | U | 16000 | | 26 | U |
| Benzidine | 3500 | U | 3600 | U | 3700 | U | 3500 | U |
| Benzo(a)anthracene | 430 | U | 440 | U | 450 | U | 430 | U |
| Benzo(a)pyrene | 430 | U | 440 | U | 450 | U | 430 | U |
| Benzo(b)fluoranthene | 430 | U | 440 | U | 450 | U | 430 | U |
| Benzo(g,h,i)perylene | 430 | U | 440 | U | 450 | U | 430 | U |
| Benzo(k)fluoranthene | 430 | U | 440 | U | 450 | U | 430 | U |
| Benzoic acid | 2200 | U | 2300 | U | 2300 | U | 2200 | U |
| Benzyl alcohol | 430 | U | 440 | U | 450 | U | 430 | U |
| bis(2-Chloroethoxy)methane | 430 | U | 440 | U | 450 | U | 430 | U |
| bis(2-Chloroethyl)ether | 430 | U | 440 | U | 450 | U | 430 | U |
| bis(2-Chloroisopropyl)ether | 430 | U | 440 | U | 450 | U | 430 | U |
| bis(2-Ethylhexyl)phthalate | 430 | U | 440 | U | 450 | U | 430 | U |
| Bromobenzene | 6.5 | U | 34 | U | 3400 | U | 26 | U |
| Bromochloromethane | 6.5 | U | 34 | U | 3400 | U | 26 | U |
| Bromodichloromethane | 6.5 | U | 34 | U | 3400 | U | 26 | U |
| Bromoform | 6.5 | U | 34 | U | 3400 | U | 26 | U |
| Bromomethane | 13 | U | 69 | U | 6800 | U | 52 | U |
| Butylbenzylphthalate | 430 | U | 440 | U | 450 | U | 430 | U |
| Carbazole | NA | | NA | | NA | | NA | |
| Carbon disulfide | NA | | NA | | NA | | NA | |
| Carbon tetrachloride | 6.5 | U | 34 | U | 3400 | U | 26 | U |
| Chlorobenzene | 34 | | 71 | | 19000 | | 210 | |
| Chlorodibromomethane | 6.5 | U | 34 | U | 3400 | U | 26 | U |
| Chloroethane | 13 | U | 69 | U | 6800 | U | 52 | U |
| Chloroform | 6.5 | U | 34 | U | 3400 | U | 26 | U |
| Chloromethane | 13 | U | 69 | U | 6800 | U | 52 | U |
| Chrysene | 430 | U | 440 | U | 450 | U | 430 | U |
| cis-1,2-Dichloroethene | 6.5 | U | 34 | U | 3400 | U | 26 | U |
| cis-1,3-Dichloropropene | NA | | NA | | NA | | NA | |
| Dibenzo(a,h)anthracene | 430 | U | 440 | U | 450 | U | 430 | U |

NA= Not Analyzed.

Table 4
Site Soil Data Summary

| | BBU-B6 (6-8') | | BBU-B7 (6-8') | | BBU-B8 (6-8') | | BBU-B9 (6-8') | |
|---|---|---|---|---|---|---|---|---|
| Dibenzofuran | 430 | U | 440 | U | 450 | U | 430 | U |
| Dibromomethane | 6.5 | U | 34 | U | 3400 | U | 26 | U |
| Dichlorodifluoromethane | 6.5 | U | 34 | U | 3400 | U | 26 | U |
| Dibromochloromethane | NA | | NA | | NA | | NA | |
| Diethylphthalate | 430 | U | 440 | U | 450 | U | 430 | U |
| Dimethylphthalate | 430 | U | 440 | U | 450 | U | 430 | U |
| Di-n-butylphthalate | 430 | U | 440 | U | 450 | U | 430 | U |
| Di-n-octylphthalate | 430 | U | 440 | U | 450 | U | 430 | U |
| Ethylbenzene | 6.5 | U | 34 | U | 3400 | U | 26 | U |
| Fluoranthene | 430 | U | 440 | U | 450 | U | 430 | U |
| Fluorene | 430 | U | 440 | U | 450 | U | 430 | U |
| Hexachlorobenzene | 430 | U | 440 | U | 450 | U | 430 | U |
| Hexachlorobutadiene | 430 | U | 440 | U | 450 | U | 430 | U |
| Hexachlorocyclopentadiene | 430 | U | 440 | U | 450 | U | 430 | U |
| Hexachloroethane | 430 | U | 440 | U | 450 | U | 430 | U |
| Indeno(1,2,3-cd)pyrene | 430 | U | 440 | U | 450 | U | 430 | U |
| Isophorone | 430 | U | 440 | U | 450 | U | 430 | U |
| Isopropylbenzene | 6.5 | U | 34 | U | 3400 | U | 26 | U |
| m&p-Xylene | 6.5 | U | 34 | U | 3400 | U | 26 | U |
| Methylene chloride (Dichloromethane) | 6.5 | U | 34 | U | 3400 | U | 26 | U |
| Naphthalene | 6.5 | U | 34 | U | 3400 | U | 26 | U |
| Naphthalene | 430 | U | 440 | U | 450 | U | 430 | U |
| n-Butylbenzene | 6.5 | U | 34 | U | 3400 | U | 26 | U |
| Nitrobenzene | 430 | U | 440 | U | 450 | U | 430 | U |
| N-Nitrosodimethylamine | 430 | U | 440 | U | 450 | U | 430 | U |
| n-Nitrosodi-n-propylamine | 430 | U | 440 | U | 450 | U | 430 | U |
| N-Nitrosodiphenylamine/Diphenylamine | 430 | U | 440 | U | 450 | U | 430 | U |
| n-Propylbenzene | 6.5 | U | 34 | U | 3400 | U | 26 | U |
| o-Xylene | 6.5 | U | 34 | U | 3400 | U | 26 | U |
| Pentachlorophenol | 2200 | U | 2300 | U | 2300 | U | 2200 | U |
| Phenanthrene | 430 | U | 440 | U | 450 | U | 430 | U |
| Phenol | 430 | U | 440 | U | 450 | U | 430 | U |
| p-Isopropyltoluene | 6.5 | U | 34 | U | 3400 | U | 26 | U |
| Pyrene | 430 | U | 440 | U | 450 | U | 430 | U |
| sec-Butylbenzene | 6.5 | U | 34 | U | 3400 | U | 26 | U |
| Styrene | 6.5 | U | 34 | U | 3400 | U | 26 | U |
| tert-Butylbenzene | 6.5 | U | 34 | U | 3400 | U | 26 | U |
| Tetrachloroethene | 6.5 | U | 34 | U | 3400 | U | 26 | U |
| Toluene | 6.5 | U | 34 | U | 3400 | U | 26 | U |
| trans-1,2-Dichloroethene | 6.5 | U | 34 | U | 3400 | U | 26 | U |
| trans-1,3-Dichloropropene | NA | | NA | | NA | | NA | |
| Trichloroethene | 6.5 | U | 34 | U | 3400 | U | 26 | U |
| Trichlorofluoromethane | 6.5 | U | 34 | U | 3400 | U | 26 | U |
| Vinyl chloride | 13 | U | 69 | U | 6800 | U | 52 | U |
| Xylenes, Total | NA | | NA | | NA | | NA | |

NA= Not Analyzed.

Table 4
Site Soil Data Summary

| | BBU-NE Entrance (3-9') | | BBU-NW Entrance (3-9') | |
|---|---|---|---|---|
| 1,1,1,2-Tetrachloroethane | 5.4 | U | 5.6 | U |
| 1,1,1-Trichloroethane | 5.4 | U | 5.6 | U |
| 1,1,2,2-Tetrachloroethane | 5.4 | U | 5.6 | U |
| 1,1,2-Trichloroethane | 5.4 | U | 5.6 | U |
| 1,1-Dichloroethane | 5.4 | U | 5.6 | U |
| 1,1-Dichloroethene | 5.4 | U | 5.6 | U |
| 1,1-Dichloropropylene | 5.4 | U | 5.6 | U |
| 1,2,3-Trichlorobenzene | 5.4 | U | 5.6 | U |
| 1,2,3-Trichloropropane | 5.4 | U | 5.6 | U |
| 1,2,4-Trichlorobenzene | 5.4 | U | 5.6 | U |
| 1,2,4-Trichlorobenzene | 350 | U | 9900 | |
| 1,2,4-Trimethylbenzene | 5.4 | U | 5.6 | U |
| 1,2-Dibromo-3-chloropropane | 5.4 | U | 5.6 | U |
| 1,2-Dibromoethane (EDB) | 5.4 | U | 5.6 | U |
| 1,2-Dichlorobenzene | 350 | U | 11000 | |
| 1,2-Dichloroethane | 5.4 | U | 5.6 | U |
| 1,2-Dichloropropane | 5.4 | U | 5.6 | U |
| 1,3,5-Trimethylbenzene | 5.4 | U | 5.6 | U |
| 1,3-Dichlorobenzene | 350 | U | 1500 | U |
| 1,3-Dichloropropane | 5.4 | U | 5.6 | U |
| 1,4-Dichlorobenzene | 350 | U | 1500 | U |
| 2,2-Dichloropropane | 5.4 | U | 5.6 | U |
| 2,2'-Oxybis(1-Chloropropane) | NA | | NA | |
| 2,4,5-Trichlorophenol | 350 | U | 1500 | U |
| 2,4,6-Trichlorophenol | 350 | U | 1500 | U |
| 2,4-Dichlorophenol | 350 | U | 1500 | U |
| 2,4-Dimethylphenol | 350 | U | 1500 | U |
| 2,4-Dinitrophenol | 1800 | U | 7900 | U |
| 2,4-Dinitrotoluene | 350 | U | 1500 | U |
| 2,6-Dinitrotoluene | 350 | U | 1500 | U |
| 2-Butanone (MEK) | 27 | U | 28 | U |
| 2-Chloronaphthalene | 350 | U | 1500 | U |
| 2-Chlorophenol | 350 | U | 1500 | U |
| 2-Chlorotoluene | 5.4 | U | 5.6 | U |
| 2-Hexanone | NA | | NA | |
| 2-Methyl-4,6-dinitrophenol | 1801 | U | 7901 | U |
| 2-Methylnaphthalene | 350 | U | 1500 | U |
| 2-Methylphenol (o-cresol) | 350 | U | 1500 | U |
| 2-Nitroaniline | 1800 | U | 7900 | U |
| 2-Nitrophenol | 350 | U | 1500 | U |
| 3&4-Methylphenol (m&p-cresol) | 350 | U | 1500 | U |
| 3,3'-Dichlorobenzidine | 710 | U | 3000 | U |
| 3-Nitroaniline | 1800 | U | 7900 | U |
| 4,6-Dinitro-2-methylphenol | NA | | NA | |
| 4-Bromophenyl phenyl ether | 350 | U | 1500 | U |
| 4-Chloro-3-methylphenol | 350 | U | 1500 | U |
| 4-Chloroaniline | 710 | U | 3000 | U |

NA= Not Analyzed.

Table 4
Site Soil Data Summary

| | BBU-NE Entrance (3-9') | | BBU-NW Entrance (3-9') | |
|---|---|---|---|---|
| 4-Chlorophenylphenyl ether | 350 | U | 1500 | U |
| 4-Chlorotoluene | 5.4 | U | 5.6 | U |
| 4-Methyl-2-pentanone (MIBK) | 27 | U | 28 | U |
| 4-Nitroaniline | 1800 | U | 7900 | U |
| 4-Nitrophenol | 1800 | U | 7900 | U |
| Acenaphthene | 350 | U | 1500 | U |
| Acenaphthylene | 350 | U | 1500 | U |
| Acetone | 54 | U | 56 | U |
| Anthracene | 350 | U | 1500 | U |
| Aroclor-1016 | NA | | NA | |
| Aroclor-1221 | NA | | NA | |
| Aroclor-1232 | NA | | NA | |
| Aroclor-1242 | NA | | NA | |
| Aroclor-1248 | NA | | NA | |
| Aroclor-1254 | NA | | NA | |
| Aroclor-1260 | NA | | NA | |
| Benzene | 5.4 | U | 5.6 | U |
| Benzidine | 2900 | U | 12000 | U |
| Benzo(a)anthracene | 780 | | 1500 | U |
| Benzo(a)pyrene | 720 | | 1500 | U |
| Benzo(b)fluoranthene | 1200 | | 1500 | U |
| Benzo(g,h,i)perylene | 350 | U | 1500 | U |
| Benzo(k)fluoranthene | 550 | | 1500 | U |
| Benzoic acid | 1800 | U | 7900 | U |
| Benzyl alcohol | 350 | U | 1500 | U |
| bis(2-Chloroethoxy)methane | 350 | U | 1500 | U |
| bis(2-Chloroethyl)ether | 350 | U | 1500 | U |
| bis(2-Chloroisopropyl)ether | 350 | U | 1500 | U |
| bis(2-Ethylhexyl)phthalate | 350 | U | 1500 | U |
| Bromobenzene | 5.4 | U | 5.6 | U |
| Bromochloromethane | 5.4 | U | 5.6 | U |
| Bromodichloromethane | 5.4 | U | 5.6 | U |
| Bromoform | 5.4 | U | 5.6 | U |
| Bromomethane | 11 | U | 11 | U |
| Butylbenzylphthalate | 350 | U | 1500 | U |
| Carbazole | NA | | NA | |
| Carbon disulfide | NA | | NA | |
| Carbon tetrachloride | 5.4 | U | 5.6 | U |
| Chlorobenzene | 5.4 | U | 25 | |
| Chlorodibromomethane | 5.4 | U | 5.6 | U |
| Chloroethane | 11 | U | 11 | U |
| Chloroform | 5.4 | U | 6.7 | |
| Chloromethane | 11 | U | 11 | U |
| Chrysene | 940 | | 1500 | U |
| cis-1,2-Dichloroethene | 5.4 | U | 5.6 | U |
| cis-1,3-Dichloropropene | NA | | NA | |
| Dibenzo(a,h)anthracene | 350 | U | 1500 | U |

NA= Not Analyzed.

Table 4
Site Soil Data Summary

| | BBU-NE Entrance (3-9') | | BBU-NW Entrance (3-9') | |
|---|---|---|---|---|
| Dibenzofuran | 350 | U | 1500 | U |
| Dibromomethane | 5.4 | U | 5.6 | U |
| Dichlorodifluoromethane | 5.4 | U | 5.6 | U |
| Dibromochloromethane | NA | | NA | |
| Diethylphthalate | 350 | U | 1500 | U |
| Dimethylphthalate | 350 | U | 1500 | U |
| Di-n-butylphthalate | 350 | U | 1500 | U |
| Di-n-octylphthalate | 350 | U | 1500 | U |
| Ethylbenzene | 5.4 | U | 5.6 | U |
| Fluoranthene | 1700 | | 1500 | U |
| Fluorene | 350 | U | 1500 | U |
| Hexachlorobenzene | 350 | U | 1500 | U |
| Hexachlorobutadiene | 350 | U | 1500 | U |
| Hexachlorocyclopentadiene | 350 | U | 1500 | U |
| Hexachloroethane | 350 | U | 1500 | U |
| Indeno(1,2,3-cd)pyrene | 350 | U | 1500 | U |
| Isophorone | 350 | U | 1500 | U |
| Isopropylbenzene | 5.4 | U | 5.6 | U |
| m&p-Xylene | 5.4 | U | 5.6 | U |
| Methylene chloride (Dichloromethane) | 5.4 | U | 5.6 | U |
| Naphthalene | 5.4 | U | 5.6 | U |
| Naphthalene | 350 | U | 1500 | U |
| n-Butylbenzene | 5.4 | U | 5.6 | U |
| Nitrobenzene | 350 | U | 1500 | U |
| N-Nitrosodimethylamine | 350 | U | 1500 | U |
| n-Nitrosodi-n-propylamine | 350 | U | 1500 | U |
| N-Nitrosodiphenylamine/Diphenylamine | 350 | U | 1500 | U |
| n-Propylbenzene | 5.4 | U | 5.6 | U |
| o-Xylene | 5.4 | U | 5.6 | U |
| Pentachlorophenol | 1800 | U | 7900 | U |
| Phenanthrene | 1400 | | 1500 | U |
| Phenol | 350 | U | 1500 | U |
| p-Isopropyltoluene | 5.4 | U | 5.6 | U |
| Pyrene | 1600 | | 1500 | U |
| sec-Butylbenzene | 5.4 | U | 5.6 | U |
| Styrene | 5.4 | U | 5.6 | U |
| tert-Butylbenzene | 5.4 | U | 5.6 | U |
| Tetrachloroethene | 5.4 | U | 5.6 | U |
| Toluene | 5.4 | U | 5.6 | U |
| trans-1,2-Dichloroethene | 5.4 | U | 5.6 | U |
| trans-1,3-Dichloropropene | NA | | NA | |
| Trichloroethene | 5.4 | U | 5.6 | U |
| Trichlorofluoromethane | 5.4 | U | 15 | |
| Vinyl chloride | 11 | U | 11 | U |
| Xylenes, Total | NA | | NA | |

NA= Not Analyzed.

Table 4
Site Soil Data Summary

| | KR/BC-34 (4-6') | | KR/BC-B1 (4-6') | | KR/BC-B29 (6-8') | |
|---|---|---|---|---|---|---|
| 1,1,1,2-Tetrachloroethane | 8900 | U | 3000 | U | 600 | U |
| 1,1,1-Trichloroethane | 8900 | U | 3000 | U | 600 | U |
| 1,1,2,2-Tetrachloroethane | 8900 | U | 3000 | U | 600 | U |
| 1,1,2-Trichloroethane | 8900 | U | 3000 | U | 600 | U |
| 1,1-Dichloroethane | 8900 | U | 3000 | U | 600 | U |
| 1,1-Dichloroethene | 8900 | U | 3000 | U | 600 | U |
| 1,1-Dichloropropylene | 8900 | U | 3000 | U | 600 | U |
| 1,2,3-Trichlorobenzene | 8900 | U | 3000 | U | 600 | U |
| 1,2,3-Trichloropropane | 8900 | U | 3000 | U | 600 | U |
| 1,2,4-Trichlorobenzene | 8900 | U | 3000 | U | 600 | U |
| 1,2,4-Trichlorobenzene | 5800 | U | 20000 | U | 2000 | U |
| 1,2,4-Trimethylbenzene | 8900 | U | 3000 | U | 600 | U |
| 1,2-Dibromo-3-chloropropane | 8900 | U | 3000 | U | 600 | U |
| 1,2-Dibromoethane (EDB) | 8900 | U | 3000 | U | 600 | U |
| 1,2-Dichlorobenzene | 59000 | | 200000 | | 5400 | |
| 1,2-Dichloroethane | 8900 | U | 3000 | U | 600 | U |
| 1,2-Dichloropropane | 8900 | U | 3000 | U | 600 | U |
| 1,3,5-Trimethylbenzene | 8900 | U | 3000 | U | 600 | U |
| 1,3-Dichlorobenzene | 5800 | U | 20000 | U | 2000 | U |
| 1,3-Dichloropropane | 8900 | U | 3000 | U | 600 | U |
| 1,4-Dichlorobenzene | 14000 | | 45000 | | 2000 | U |
| 2,2-Dichloropropane | 8900 | U | 3000 | U | 600 | U |
| 2,2'-Oxybis(1-Chloropropane) | NA | | NA | | NA | |
| 2,4,5-Trichlorophenol | 5800 | U | 20000 | U | 2000 | U |
| 2,4,6-Trichlorophenol | 5800 | U | 20000 | U | 2000 | U |
| 2,4-Dichlorophenol | 5800 | U | 20000 | U | 2000 | U |
| 2,4-Dimethylphenol | 5800 | U | 20000 | U | 2000 | U |
| 2,4-Dinitrophenol | 30000 | U | 100000 | U | 10000 | U |
| 2,4-Dinitrotoluene | 5800 | U | 20000 | U | 2000 | U |
| 2,6-Dinitrotoluene | 5800 | U | 20000 | U | 2000 | U |
| 2-Butanone (MEK) | 44000 | U | 15000 | U | 3000 | U |
| 2-Chloronaphthalene | 5800 | U | 20000 | U | 2000 | U |
| 2-Chlorophenol | 5800 | U | 20000 | U | 2000 | U |
| 2-Chlorotoluene | 8900 | U | 3000 | U | 600 | U |
| 2-Hexanone | NA | | NA | | NA | |
| 2-Methyl-4,6-dinitrophenol | 30001 | U | 100001 | U | 10001 | U |
| 2-Methylnaphthalene | 5800 | U | 20000 | U | 2000 | U |
| 2-Methylphenol (o-cresol) | 5800 | U | 20000 | U | 2000 | U |
| 2-Nitroaniline | 30000 | U | 100000 | U | 10000 | U |
| 2-Nitrophenol | 5800 | U | 20000 | U | 2000 | U |
| 3&4-Methylphenol (m&p-cresol) | 5800 | U | 20000 | U | 2000 | U |
| 3,3'-Dichlorobenzidine | 12000 | U | 39000 | U | 3900 | U |
| 3-Nitroaniline | 30000 | U | 100000 | U | 10000 | U |
| 4,6-Dinitro-2-methylphenol | NA | | NA | | NA | |
| 4-Bromophenyl phenyl ether | 5800 | U | 20000 | U | 2000 | U |
| 4-Chloro-3-methylphenol | 5800 | U | 20000 | U | 2000 | U |
| 4-Chloroaniline | 12000 | U | 39000 | U | 3900 | U |

NA= Not Analyzed.

Table 4
Site Soil Data Summary

| | KR/BC-34 (4-6') | | KR/BC-B1 (4-6') | | KR/BC-B29 (6-8') | |
|---|---|---|---|---|---|---|
| 4-Chlorophenylphenyl ether | 5800 | U | 20000 | U | 2000 | U |
| 4-Chlorotoluene | 8900 | U | 3000 | U | 600 | U |
| 4-Methyl-2-pentanone (MIBK) | 44000 | U | 15000 | U | 3000 | U |
| 4-Nitroaniline | 30000 | U | 100000 | U | 10000 | U |
| 4-Nitrophenol | 30000 | U | 100000 | U | 10000 | U |
| Acenaphthene | 5800 | U | 20000 | U | 2000 | U |
| Acenaphthylene | 5800 | U | 20000 | U | 2000 | U |
| Acetone | 89000 | U | 30000 | U | 6000 | U |
| Anthracene | 5800 | U | 20000 | U | 2000 | U |
| Aroclor-1016 | NA | | NA | | NA | |
| Aroclor-1221 | NA | | NA | | NA | |
| Aroclor-1232 | NA | | NA | | NA | |
| Aroclor-1242 | NA | | NA | | NA | |
| Aroclor-1248 | NA | | NA | | NA | |
| Aroclor-1254 | NA | | NA | | NA | |
| Aroclor-1260 | NA | | NA | | NA | |
| Benzene | 8900 | U | 3000 | U | 600 | U |
| Benzidine | 48000 | U | 160000 | U | 16000 | U |
| Benzo(a)anthracene | 5800 | U | 20000 | U | 2000 | U |
| Benzo(a)pyrene | 5800 | U | 20000 | U | 2000 | U |
| Benzo(b)fluoranthene | 5800 | U | 20000 | U | 2000 | U |
| Benzo(g,h,i)perylene | 5800 | U | 20000 | U | 2000 | U |
| Benzo(k)fluoranthene | 5800 | U | 20000 | U | 2000 | U |
| Benzoic acid | 30000 | U | 100000 | U | 10000 | U |
| Benzyl alcohol | 5800 | U | 20000 | U | 2000 | U |
| bis(2-Chloroethoxy)methane | 5800 | U | 20000 | U | 2000 | U |
| bis(2-Chloroethyl)ether | 5800 | U | 20000 | U | 2000 | U |
| bis(2-Chloroisopropyl)ether | 5800 | U | 20000 | U | 2000 | U |
| bis(2-Ethylhexyl)phthalate | 5800 | U | 20000 | U | 2000 | U |
| Bromobenzene | 8900 | U | 3000 | U | 600 | U |
| Bromochloromethane | 8900 | U | 3000 | U | 600 | U |
| Bromodichloromethane | 8900 | U | 3000 | U | 600 | U |
| Bromoform | 8900 | U | 3000 | U | 600 | U |
| Bromomethane | 18000 | U | 6000 | U | 1200 | U |
| Butylbenzylphthalate | 5800 | U | 20000 | U | 2000 | U |
| Carbazole | NA | | NA | | NA | |
| Carbon disulfide | NA | | NA | | NA | |
| Carbon tetrachloride | 8900 | U | 3000 | U | 600 | U |
| Chlorobenzene | 240000 | | 38000 | | 22000 | |
| Chlorodibromomethane | 8900 | U | 3000 | U | 600 | U |
| Chloroethane | 18000 | U | 6000 | U | 1200 | U |
| Chloroform | 8900 | U | 3000 | U | 600 | U |
| Chloromethane | 18000 | U | 6000 | U | 1200 | U |
| Chrysene | 5800 | U | 20000 | U | 2000 | U |
| cis-1,2-Dichloroethene | 8900 | U | 3000 | U | 600 | U |
| cis-1,3-Dichloropropene | NA | | NA | | NA | |
| Dibenzo(a,h)anthracene | 5800 | U | 20000 | U | 2000 | U |

NA= Not Analyzed.

Table 4
Site Soil Data Summary

| | KR/BC-34 (4-6') | | KR/BC-B1 (4-6') | | KR/BC-B29 (6-8') | |
|---|---|---|---|---|---|---|
| Dibenzofuran | 5800 | U | 20000 | U | 2000 | U |
| Dibromomethane | 8900 | U | 3000 | U | 600 | U |
| Dichlorodifluoromethane | 8900 | U | 3000 | U | 600 | U |
| Dibromochloromethane | NA | | NA | | NA | |
| Diethylphthalate | 5800 | U | 20000 | U | 2000 | U |
| Dimethylphthalate | 5800 | U | 20000 | U | 2000 | U |
| Di-n-butylphthalate | 5800 | U | 20000 | U | 2000 | U |
| Di-n-octylphthalate | 5800 | U | 20000 | U | 2000 | U |
| Ethylbenzene | 8900 | U | 3000 | U | 600 | U |
| Fluoranthene | 5800 | U | 20000 | U | 2000 | U |
| Fluorene | 5800 | U | 20000 | U | 2000 | U |
| Hexachlorobenzene | 5800 | U | 20000 | U | 2000 | U |
| Hexachlorobutadiene | 5800 | U | 20000 | U | 2000 | U |
| Hexachlorocyclopentadiene | 5800 | U | 20000 | U | 2000 | U |
| Hexachloroethane | 5800 | U | 20000 | U | 2000 | U |
| Indeno(1,2,3-cd)pyrene | 5800 | U | 20000 | U | 2000 | U |
| Isophorone | 5800 | U | 20000 | U | 2000 | U |
| Isopropylbenzene | 8900 | U | 3000 | U | 600 | U |
| m&p-Xylene | 8900 | U | 3000 | U | 600 | U |
| Methylene chloride (Dichloromethane) | 8900 | U | 3000 | U | 600 | U |
| Naphthalene | 8900 | U | 3000 | U | 600 | U |
| Naphthalene | 5800 | U | 20000 | U | 2000 | U |
| n-Butylbenzene | 8900 | U | 3000 | U | 600 | U |
| Nitrobenzene | 5800 | U | 20000 | U | 2000 | U |
| N-Nitrosodimethylamine | 5800 | U | 20000 | U | 2000 | U |
| n-Nitrosodi-n-propylamine | 5800 | U | 20000 | U | 2000 | U |
| N-Nitrosodiphenylamine/Diphenylamine | 5800 | U | 20000 | U | 2000 | U |
| n-Propylbenzene | 8900 | U | 3000 | U | 600 | U |
| o-Xylene | 8900 | U | 3000 | U | 780 | |
| Pentachlorophenol | 30000 | U | 100000 | U | 10000 | U |
| Phenanthrene | 5800 | U | 20000 | U | 2000 | U |
| Phenol | 5800 | U | 20000 | U | 2000 | U |
| p-Isopropyltoluene | 8900 | U | 3000 | U | 600 | U |
| Pyrene | 5800 | U | 20000 | U | 2000 | U |
| sec-Butylbenzene | 8900 | U | 3000 | U | 600 | U |
| Styrene | 8900 | U | 3000 | U | 600 | U |
| tert-Butylbenzene | 8900 | U | 3000 | U | 980 | |
| Tetrachloroethene | 8900 | U | 3000 | U | 600 | U |
| Toluene | 8900 | U | 3000 | U | 600 | U |
| trans-1,2-Dichloroethene | 8900 | U | 3000 | U | 600 | U |
| trans-1,3-Dichloropropene | NA | | NA | | NA | |
| Trichloroethene | 8900 | U | 3000 | U | 600 | U |
| Trichlorofluoromethane | 8900 | U | 3000 | U | 600 | U |
| Vinyl chloride | 18000 | U | 6000 | U | 1200 | U |
| Xylenes, Total | NA | | NA | | NA | |

NA= Not Analyzed.

Table 4
Site Soil Data Summary

| | KR/BC-B30-4-6 | | KR/BC-B31 (2-4') | | KR/BC-B32 (2-4') | |
|---|---|---|---|---|---|---|
| 1,1,1,2-Tetrachloroethane | 3100 | U | 31 | U | 1500 | U |
| 1,1,1-Trichloroethane | 3100 | U | 31 | U | 1500 | U |
| 1,1,2,2-Tetrachloroethane | 3100 | U | 31 | U | 1500 | U |
| 1,1,2-Trichloroethane | 3100 | U | 31 | U | 1500 | U |
| 1,1-Dichloroethane | 3100 | U | 31 | U | 1500 | U |
| 1,1-Dichloroethene | 3100 | U | 31 | U | 1500 | U |
| 1,1-Dichloropropylene | 3100 | U | 31 | U | 1500 | U |
| 1,2,3-Trichlorobenzene | 3100 | U | 31 | U | 1500 | U |
| 1,2,3-Trichloropropane | 3100 | U | 31 | U | 1500 | U |
| 1,2,4-Trichlorobenzene | 3100 | U | 31 | U | 4700 | |
| 1,2,4-Trichlorobenzene | 4100 | U | 560 | | 810 | |
| 1,2,4-Trimethylbenzene | 3100 | U | 31 | U | 1500 | U |
| 1,2-Dibromo-3-chloropropane | 3100 | U | 31 | U | 1500 | U |
| 1,2-Dibromoethane (EDB) | 3100 | U | 31 | U | 1500 | U |
| 1,2-Dichlorobenzene | 21000 | | 1600 | | 1100 | |
| 1,2-Dichloroethane | 3100 | U | 31 | U | 1500 | U |
| 1,2-Dichloropropane | 3100 | U | 31 | U | 1500 | U |
| 1,3,5-Trimethylbenzene | 3100 | U | 31 | U | 1500 | U |
| 1,3-Dichlorobenzene | 4100 | U | 410 | U | 440 | |
| 1,3-Dichloropropane | 3100 | U | 31 | U | 1500 | U |
| 1,4-Dichlorobenzene | 4100 | U | 1500 | | 1500 | |
| 2,2-Dichloropropane | 3100 | U | 31 | U | 1500 | U |
| 2,2'-Oxybis(1-Chloropropane) | NA | | NA | | NA | |
| 2,4,5-Trichlorophenol | 4100 | U | 410 | U | 400 | U |
| 2,4,6-Trichlorophenol | 4100 | U | 410 | U | 400 | U |
| 2,4-Dichlorophenol | 4100 | U | 410 | U | 400 | U |
| 2,4-Dimethylphenol | 4100 | U | 410 | U | 400 | U |
| 2,4-Dinitrophenol | 21000 | U | 2100 | U | 2100 | U |
| 2,4-Dinitrotoluene | 4100 | U | 410 | U | 400 | U |
| 2,6-Dinitrotoluene | 4100 | U | 410 | U | 400 | U |
| 2-Butanone (MEK) | 16000 | U | 160 | U | 7500 | U |
| 2-Chloronaphthalene | 4100 | U | 410 | U | 400 | U |
| 2-Chlorophenol | 4100 | U | 410 | U | 400 | U |
| 2-Chlorotoluene | 3100 | U | 31 | U | 1500 | U |
| 2-Hexanone | NA | | NA | | NA | |
| 2-Methyl-4,6-dinitrophenol | 21001 | U | 2101 | U | 2101 | U |
| 2-Methylnaphthalene | 4100 | U | 410 | U | 400 | U |
| 2-Methylphenol (o-cresol) | 4100 | U | 410 | U | 400 | U |
| 2-Nitroaniline | 21000 | U | 2100 | U | 2100 | U |
| 2-Nitrophenol | 4100 | U | 410 | U | 400 | U |
| 3&4-Methylphenol (m&p-cresol) | 4100 | U | 410 | U | 400 | U |
| 3,3'-Dichlorobenzidine | 8200 | U | 820 | U | 800 | U |
| 3-Nitroaniline | 21000 | U | 2100 | U | 2100 | U |
| 4,6-Dinitro-2-methylphenol | NA | | NA | | NA | |
| 4-Bromophenyl phenyl ether | 4100 | U | 410 | U | 400 | U |
| 4-Chloro-3-methylphenol | 4100 | U | 410 | U | 400 | U |
| 4-Chloroaniline | 8200 | U | 820 | U | 800 | U |

NA= Not Analyzed.

Table 4
Site Soil Data Summary

| | KR/BC-B30-4-6 | | KR/BC-B31 (2-4') | | KR/BC-B32 (2-4') | |
|---|---|---|---|---|---|---|
| 4-Chlorophenylphenyl ether | 4100 | U | 410 | U | 400 | U |
| 4-Chlorotoluene | 3100 | U | 31 | U | 1500 | U |
| 4-Methyl-2-pentanone (MIBK) | 16000 | U | 160 | U | 7500 | U |
| 4-Nitroaniline | 21000 | U | 2100 | U | 2100 | U |
| 4-Nitrophenol | 21000 | U | 2100 | U | 2100 | U |
| Acenaphthene | 4100 | U | 410 | U | 400 | U |
| Acenaphthylene | 4100 | U | 410 | U | 400 | U |
| Acetone | 31000 | U | 310 | U | 15000 | U |
| Anthracene | 4100 | U | 410 | U | 400 | U |
| Aroclor-1016 | NA | | NA | | NA | |
| Aroclor-1221 | NA | | NA | | NA | |
| Aroclor-1232 | NA | | NA | | NA | |
| Aroclor-1242 | NA | | NA | | NA | |
| Aroclor-1248 | NA | | NA | | NA | |
| Aroclor-1254 | NA | | NA | | NA | |
| Aroclor-1260 | NA | | NA | | NA | |
| Benzene | 3100 | U | 31 | U | 1500 | U |
| Benzidine | 34000 | U | 3400 | U | 3300 | U |
| Benzo(a)anthracene | 4100 | U | 410 | U | 400 | U |
| Benzo(a)pyrene | 4100 | U | 410 | U | 400 | U |
| Benzo(b)fluoranthene | 4100 | U | 410 | U | 400 | U |
| Benzo(g,h,i)perylene | 4100 | U | 410 | U | 400 | U |
| Benzo(k)fluoranthene | 4100 | U | 410 | U | 400 | U |
| Benzoic acid | 21000 | U | 2100 | U | 2100 | U |
| Benzyl alcohol | 4100 | U | 410 | U | 400 | U |
| bis(2-Chloroethoxy)methane | 4100 | U | 410 | U | 400 | U |
| bis(2-Chloroethyl)ether | 4100 | U | 410 | U | 400 | U |
| bis(2-Chloroisopropyl)ether | 4100 | U | 410 | U | 400 | U |
| bis(2-Ethylhexyl)phthalate | 4100 | U | 410 | U | 400 | U |
| Bromobenzene | 3100 | U | 31 | U | 1500 | U |
| Bromochloromethane | 3100 | U | 31 | U | 1500 | U |
| Bromodichloromethane | 3100 | U | 31 | U | 1500 | U |
| Bromoform | 3100 | U | 31 | U | 1500 | U |
| Bromomethane | 6200 | U | 62 | U | 3000 | U |
| Butylbenzylphthalate | 4100 | U | 410 | U | 400 | U |
| Carbazole | NA | | NA | | NA | |
| Carbon disulfide | NA | | NA | | NA | |
| Carbon tetrachloride | 3100 | U | 31 | U | 1500 | U |
| Chlorobenzene | 56000 | | 470 | | 38000 | |
| Chlorodibromomethane | 3100 | U | 31 | U | 1500 | U |
| Chloroethane | 6200 | U | 62 | U | 3000 | U |
| Chloroform | 3100 | U | 31 | U | 1500 | U |
| Chloromethane | 6200 | U | 62 | U | 3000 | U |
| Chrysene | 4100 | U | 410 | U | 400 | U |
| cis-1,2-Dichloroethene | 3100 | U | 31 | U | 1500 | U |
| cis-1,3-Dichloropropene | NA | | NA | | NA | |
| Dibenzo(a,h)anthracene | 4100 | U | 410 | U | 400 | U |

NA= Not Analyzed.

Table 4
Site Soil Data Summary

| | KR/BC-B30-4-6 | | KR/BC-B31 (2-4') | | KR/BC-B32 (2-4') | |
|---|---|---|---|---|---|---|
| Dibenzofuran | 4100 | U | 410 | U | 400 | U |
| Dibromomethane | 3100 | U | 31 | U | 1500 | U |
| Dichlorodifluoromethane | 3100 | U | 31 | U | 1500 | U |
| Dibromochloromethane | NA | | NA | | NA | |
| Diethylphthalate | 4100 | U | 410 | U | 400 | U |
| Dimethylphthalate | 4100 | U | 410 | U | 400 | U |
| Di-n-butylphthalate | 4100 | U | 410 | U | 400 | U |
| Di-n-octylphthalate | 4100 | U | 2.9 | | 400 | U |
| Ethylbenzene | 3100 | U | 31 | U | 1500 | U |
| Fluoranthene | 4100 | U | 410 | U | 400 | U |
| Fluorene | 4100 | U | 410 | U | 400 | U |
| Hexachlorobenzene | 4100 | U | 410 | U | 400 | U |
| Hexachlorobutadiene | 4100 | U | 410 | U | 400 | U |
| Hexachlorocyclopentadiene | 4100 | U | 410 | U | 400 | U |
| Hexachloroethane | 4100 | U | 410 | U | 400 | U |
| Indeno(1,2,3-cd)pyrene | 4100 | U | 410 | U | 400 | U |
| Isophorone | 4100 | U | 410 | U | 400 | U |
| Isopropylbenzene | 3100 | U | 31 | U | 1500 | U |
| m&p-Xylene | 3100 | U | 31 | U | 1500 | U |
| Methylene chloride (Dichloromethane) | 3100 | U | 31 | U | 1500 | U |
| Naphthalene | 3100 | U | 31 | U | 1500 | U |
| Naphthalene | 4100 | U | 410 | U | 400 | U |
| n-Butylbenzene | 3100 | U | 31 | U | 1500 | U |
| Nitrobenzene | 4100 | U | 410 | U | 400 | U |
| N-Nitrosodimethylamine | 4100 | U | 410 | U | 400 | U |
| n-Nitrosodi-n-propylamine | 4100 | U | 410 | U | 400 | U |
| N-Nitrosodiphenylamine/Diphenylamine | 4100 | U | 410 | U | 400 | U |
| n-Propylbenzene | 3100 | U | 31 | U | 1500 | U |
| o-Xylene | 3100 | U | 31 | U | 1500 | U |
| Pentachlorophenol | 21000 | U | 2100 | U | 2100 | U |
| Phenanthrene | 4100 | U | 410 | U | 400 | U |
| Phenol | 4100 | U | 410 | U | 400 | U |
| p-Isopropyltoluene | 3100 | U | 31 | U | 1500 | U |
| Pyrene | 4100 | U | 410 | U | 400 | U |
| sec-Butylbenzene | 3100 | U | 31 | U | 1500 | U |
| Styrene | 3100 | U | 31 | U | 1500 | U |
| tert-Butylbenzene | 3100 | U | 31 | U | 1500 | U |
| Tetrachloroethene | 3100 | U | 31 | U | 1500 | U |
| Toluene | 3100 | U | 31 | U | 1500 | U |
| trans-1,2-Dichloroethene | 3100 | U | 31 | U | 1500 | U |
| trans-1,3-Dichloropropene | NA | | NA | | NA | |
| Trichloroethene | 3100 | U | 31 | U | 1500 | U |
| Trichlorofluoromethane | 3100 | U | 31 | U | 1500 | U |
| Vinyl chloride | 6200 | U | 62 | U | 3000 | U |
| Xylenes, Total | NA | | NA | | NA | |

NA= Not Analyzed.

Table 4
Site Soil Data Summary

| | KR/BC-B33 (6-8') | | KR/BC-B35 (2-4'( | | KR/BC-B36 (0-2') | |
|---|---|---|---|---|---|---|
| 1,1,1,2-Tetrachloroethane | 6700 | U | 6100 | U | 5300 | U |
| 1,1,1-Trichloroethane | 6700 | U | 6100 | U | 5300 | U |
| 1,1,2,2-Tetrachloroethane | 6700 | U | 6100 | U | 5300 | U |
| 1,1,2-Trichloroethane | 6700 | U | 6100 | U | 5300 | U |
| 1,1-Dichloroethane | 6700 | U | 6100 | U | 5300 | U |
| 1,1-Dichloroethene | 6700 | U | 6100 | U | 5300 | U |
| 1,1-Dichloropropylene | 6700 | U | 6100 | U | 5300 | U |
| 1,2,3-Trichlorobenzene | 6700 | U | 6100 | U | 5300 | U |
| 1,2,3-Trichloropropane | 6700 | U | 6100 | U | 5300 | U |
| 1,2,4-Trichlorobenzene | 6700 | U | 6100 | U | 5300 | U |
| 1,2,4-Trichlorobenzene | 4400 | U | 2000 | U | 350 | U |
| 1,2,4-Trimethylbenzene | 6700 | U | 6100 | U | 5300 | U |
| 1,2-Dibromo-3-chloropropane | 6700 | U | 6100 | U | 5300 | U |
| 1,2-Dibromoethane (EDB) | 6700 | U | 6100 | U | 5300 | U |
| 1,2-Dichlorobenzene | 4400 | U | 2200 | | 370 | |
| 1,2-Dichloroethane | 6700 | U | 6100 | U | 5300 | U |
| 1,2-Dichloropropane | 6700 | U | 6100 | U | 5300 | U |
| 1,3,5-Trimethylbenzene | 6700 | U | 6100 | U | 5300 | U |
| 1,3-Dichlorobenzene | 4400 | U | 2000 | U | 350 | U |
| 1,3-Dichloropropane | 6700 | U | 6100 | U | 5300 | U |
| 1,4-Dichlorobenzene | 4400 | | 5300 | | 580 | |
| 2,2-Dichloropropane | 6700 | U | 6100 | U | 5300 | U |
| 2,2'-Oxybis(1-Chloropropane) | NA | | NA | | NA | |
| 2,4,5-Trichlorophenol | 4400 | U | 2000 | U | 350 | U |
| 2,4,6-Trichlorophenol | 4400 | U | 2000 | U | 350 | U |
| 2,4-Dichlorophenol | 4400 | U | 2000 | U | 350 | U |
| 2,4-Dimethylphenol | 4400 | U | 2000 | U | 350 | U |
| 2,4-Dinitrophenol | 22000 | U | 10000 | U | 1800 | U |
| 2,4-Dinitrotoluene | 4400 | U | 2000 | U | 350 | U |
| 2,6-Dinitrotoluene | 4400 | U | 2000 | U | 350 | U |
| 2-Butanone (MEK) | 34000 | U | 30000 | U | 220000 | U |
| 2-Chloronaphthalene | 4400 | U | 2000 | U | 350 | U |
| 2-Chlorophenol | 4400 | U | 2000 | U | 350 | U |
| 2-Chlorotoluene | 8200 | | 6100 | U | 5300 | U |
| 2-Hexanone | NA | | NA | | NA | |
| 2-Methyl-4,6-dinitrophenol | 22001 | U | 10001 | U | 1801 | U |
| 2-Methylnaphthalene | 4400 | U | 2000 | U | 970 | |
| 2-Methylphenol (o-cresol) | 4400 | U | 2000 | U | 350 | U |
| 2-Nitroaniline | 22000 | U | 10000 | U | 1800 | U |
| 2-Nitrophenol | 4400 | U | 2000 | U | 350 | U |
| 3&4-Methylphenol (m&p-cresol) | 4400 | U | 2000 | U | 350 | U |
| 3,3'-Dichlorobenzidine | 8800 | U | 4000 | U | 700 | U |
| 3-Nitroaniline | 22000 | U | 10000 | U | 1800 | U |
| 4,6-Dinitro-2-methylphenol | NA | | NA | | NA | |
| 4-Bromophenyl phenyl ether | 4400 | U | 2000 | U | 350 | U |
| 4-Chloro-3-methylphenol | 4400 | U | 2000 | U | 350 | U |
| 4-Chloroaniline | 8800 | U | 9100 | | 700 | U |

NA= Not Analyzed.

Table 4
Site Soil Data Summary

| | KR/BC-B33 (6-8') | | KR/BC-B35 (2-4'( | | KR/BC-B36 (0-2') | |
|---|---|---|---|---|---|---|
| 4-Chlorophenylphenyl ether | 4400 | U | 2000 | U | 350 | U |
| 4-Chlorotoluene | 6700 | U | 6100 | U | 5300 | U |
| 4-Methyl-2-pentanone (MIBK) | 34000 | U | 30000 | U | 220000 | U |
| 4-Nitroaniline | 22000 | U | 10000 | U | 1800 | U |
| 4-Nitrophenol | 22000 | U | 10000 | U | 1800 | U |
| Acenaphthene | 4400 | U | 2000 | U | 350 | U |
| Acenaphthylene | 4400 | U | 2000 | U | 350 | U |
| Acetone | 67000 | U | 61000 | U | 450000 | U |
| Anthracene | 4400 | U | 2000 | U | 350 | U |
| Aroclor-1016 | NA | | NA | | NA | |
| Aroclor-1221 | NA | | NA | | NA | |
| Aroclor-1232 | NA | | NA | | NA | |
| Aroclor-1242 | NA | | NA | | NA | |
| Aroclor-1248 | NA | | NA | | NA | |
| Aroclor-1254 | NA | | NA | | NA | |
| Aroclor-1260 | NA | | NA | | NA | |
| Benzene | 6700 | U | 6100 | U | 5300 | U |
| Benzidine | 36000 | U | 16000 | U | 2900 | U |
| Benzo(a)anthracene | 4400 | U | 2000 | U | 350 | U |
| Benzo(a)pyrene | 4400 | U | 2000 | U | 350 | U |
| Benzo(b)fluoranthene | 4400 | U | 2000 | U | 350 | U |
| Benzo(g,h,i)perylene | 4400 | U | 2000 | U | 350 | U |
| Benzo(k)fluoranthene | 4400 | U | 2000 | U | 350 | U |
| Benzoic acid | 22000 | U | 10000 | U | 1800 | U |
| Benzyl alcohol | 6200 | | 2000 | U | 640 | |
| bis(2-Chloroethoxy)methane | 4400 | U | 2000 | U | 350 | U |
| bis(2-Chloroethyl)ether | 4400 | U | 2000 | U | 350 | U |
| bis(2-Chloroisopropyl)ether | 4400 | U | 2000 | U | 350 | U |
| bis(2-Ethylhexyl)phthalate | 4400 | U | 2000 | U | 350 | U |
| Bromobenzene | 6700 | U | 6100 | U | 5300 | U |
| Bromochloromethane | 6700 | U | 6100 | U | 5300 | U |
| Bromodichloromethane | 6700 | U | 6100 | U | 5300 | U |
| Bromoform | 6700 | U | 6100 | U | 5300 | U |
| Bromomethane | 13000 | U | 12000 | U | 11000 | U |
| Butylbenzylphthalate | 4400 | U | 2000 | U | 350 | U |
| Carbazole | NA | | NA | | NA | |
| Carbon disulfide | NA | | NA | | NA | |
| Carbon tetrachloride | 6700 | U | 6100 | U | 5300 | U |
| Chlorobenzene | 30000 | | 210000 | | 5300 | U |
| Chlorodibromomethane | 6700 | U | 6100 | U | 5300 | U |
| Chloroethane | 13000 | U | 12000 | U | 11000 | U |
| Chloroform | 6700 | U | 6100 | U | 5300 | U |
| Chloromethane | 13000 | U | 12000 | U | 11000 | U |
| Chrysene | 4400 | U | 2000 | U | 350 | U |
| cis-1,2-Dichloroethene | 6700 | U | 6100 | U | 5300 | U |
| cis-1,3-Dichloropropene | NA | | NA | | NA | |
| Dibenzo(a,h)anthracene | 4400 | U | 2000 | U | 350 | U |

NA= Not Analyzed.

Table 4
Site Soil Data Summary

| | KR/BC-B33 (6-8') | | KR/BC-B35 (2-4'( | | KR/BC-B36 (0-2') | |
|---|---|---|---|---|---|---|
| Dibenzofuran | 4400 | U | 2000 | U | 350 | U |
| Dibromomethane | 6700 | U | 6100 | U | 5300 | U |
| Dichlorodifluoromethane | 6700 | U | 6100 | U | 5300 | U |
| Dibromochloromethane | NA | | NA | | NA | |
| Diethylphthalate | 4400 | U | 2000 | U | 350 | U |
| Dimethylphthalate | 4400 | U | 2000 | U | 350 | U |
| Di-n-butylphthalate | 4400 | U | 2000 | U | 350 | U |
| Di-n-octylphthalate | 4400 | U | 2000 | U | 350 | U |
| Ethylbenzene | 6700 | U | 6100 | U | 5300 | U |
| Fluoranthene | 4400 | U | 2000 | U | 350 | U |
| Fluorene | 4400 | U | 2000 | U | 350 | U |
| Hexachlorobenzene | 4400 | U | 2000 | U | 350 | U |
| Hexachlorobutadiene | 4400 | U | 2000 | U | 350 | U |
| Hexachlorocyclopentadiene | 4400 | U | 2000 | U | 350 | U |
| Hexachloroethane | 4400 | U | 2000 | U | 350 | U |
| Indeno(1,2,3-cd)pyrene | 4400 | U | 2000 | U | 350 | U |
| Isophorone | 4400 | U | 2000 | U | 350 | U |
| Isopropylbenzene | 6700 | U | 6100 | U | 5300 | U |
| m&p-Xylene | 6700 | U | 6100 | U | 45000 | |
| Methylene chloride (Dichloromethane) | 6700 | U | 6100 | U | 5300 | U |
| Naphthalene | 6700 | U | 6100 | U | 5300 | U |
| Naphthalene | 4400 | U | 2000 | U | 350 | U |
| n-Butylbenzene | 6700 | U | 6100 | U | 5300 | U |
| Nitrobenzene | 4400 | U | 2000 | U | 350 | U |
| N-Nitrosodimethylamine | 4400 | U | 2000 | U | 350 | U |
| n-Nitrosodi-n-propylamine | 4400 | U | 2000 | U | 350 | U |
| N-Nitrosodiphenylamine/Diphenylamine | 4400 | U | 2000 | U | 350 | U |
| n-Propylbenzene | 6700 | U | 6100 | U | 5300 | U |
| o-Xylene | 6700 | U | 6100 | U | 51000 | |
| Pentachlorophenol | 22000 | U | 10000 | U | 1800 | U |
| Phenanthrene | 4400 | U | 2000 | U | 350 | U |
| Phenol | 4400 | U | 2000 | U | 350 | U |
| p-Isopropyltoluene | 6700 | U | 6100 | U | 5300 | U |
| Pyrene | 4400 | U | 2000 | U | 360 | |
| sec-Butylbenzene | 6700 | U | 6100 | U | 5300 | U |
| Styrene | 6700 | U | 6100 | U | 5300 | U |
| tert-Butylbenzene | 6700 | U | 6100 | U | 5300 | U |
| Tetrachloroethene | 6700 | U | 6100 | U | 5300 | U |
| Toluene | 220000 | | 17000 | | 5300 | U |
| trans-1,2-Dichloroethene | 6700 | U | 6100 | U | 5300 | U |
| trans-1,3-Dichloropropene | NA | | NA | | NA | |
| Trichloroethene | 6700 | U | 6100 | U | 5300 | U |
| Trichlorofluoromethane | 6700 | U | 6100 | U | 5300 | U |
| Vinyl chloride | 13000 | U | 12000 | U | 11000 | U |
| Xylenes, Total | NA | | NA | | NA | |

NA= Not Analyzed.

Table 4
Site Soil Data Summary

| | KR/BC-B36 (6-8') | | KR/BC-B37 (2-4') | | KR/BC-B38 (4-6') | |
|---|---|---|---|---|---|---|
| 1,1,1,2-Tetrachloroethane | 1600 | U | 6400 | U | 15000 | U |
| 1,1,1-Trichloroethane | 1600 | U | 6400 | U | 15000 | U |
| 1,1,2,2-Tetrachloroethane | 1600 | U | 6400 | U | 15000 | U |
| 1,1,2-Trichloroethane | 1600 | U | 6400 | U | 15000 | U |
| 1,1-Dichloroethane | 1600 | U | 6400 | U | 15000 | U |
| 1,1-Dichloroethene | 1600 | U | 6400 | U | 15000 | U |
| 1,1-Dichloropropylene | 1600 | U | 6400 | U | 15000 | U |
| 1,2,3-Trichlorobenzene | 1600 | U | 6400 | U | 15000 | U |
| 1,2,3-Trichloropropane | 1600 | U | 6400 | U | 15000 | U |
| 1,2,4-Trichlorobenzene | 1600 | U | 6400 | U | 15000 | U |
| 1,2,4-Trichlorobenzene | 1300 | | 2100 | U | 9700 | U |
| 1,2,4-Trimethylbenzene | 1600 | U | 6400 | U | 15000 | U |
| 1,2-Dibromo-3-chloropropane | 1600 | U | 6400 | U | 15000 | U |
| 1,2-Dibromoethane (EDB) | 1600 | U | 6400 | U | 15000 | U |
| 1,2-Dichlorobenzene | 7600 | | 6000 | | 79000 | |
| 1,2-Dichloroethane | 1600 | U | 6400 | U | 15000 | U |
| 1,2-Dichloropropane | 1600 | U | 6400 | U | 15000 | U |
| 1,3,5-Trimethylbenzene | 1600 | U | 6400 | U | 15000 | U |
| 1,3-Dichlorobenzene | 830 | U | 2100 | U | 9700 | U |
| 1,3-Dichloropropane | 1600 | U | 6400 | U | 15000 | U |
| 1,4-Dichlorobenzene | 1700 | | 17000 | | 19000 | |
| 2,2-Dichloropropane | 1600 | U | 6400 | U | 15000 | U |
| 2,2'-Oxybis(1-Chloropropane) | NA | | NA | | NA | |
| 2,4,5-Trichlorophenol | 830 | U | 2100 | U | 9700 | U |
| 2,4,6-Trichlorophenol | 830 | U | 2100 | U | 9700 | U |
| 2,4-Dichlorophenol | 830 | U | 2100 | U | 9700 | U |
| 2,4-Dimethylphenol | 830 | U | 2100 | U | 9700 | U |
| 2,4-Dinitrophenol | 4300 | U | 11000 | U | 50000 | U |
| 2,4-Dinitrotoluene | 830 | U | 2100 | U | 9700 | U |
| 2,6-Dinitrotoluene | 830 | U | 2100 | U | 9700 | U |
| 2-Butanone (MEK) | 8000 | U | 32000 | U | 75000 | U |
| 2-Chloronaphthalene | 830 | U | 2100 | U | 9700 | U |
| 2-Chlorophenol | 830 | U | 2100 | U | 9700 | U |
| 2-Chlorotoluene | 1600 | U | 6400 | U | 15000 | U |
| 2-Hexanone | NA | | NA | | NA | |
| 2-Methyl-4,6-dinitrophenol | 4301 | U | 11001 | U | 50001 | U |
| 2-Methylnaphthalene | 830 | U | 2100 | U | 9700 | U |
| 2-Methylphenol (o-cresol) | 830 | U | 2100 | U | 9700 | U |
| 2-Nitroaniline | 4300 | U | 11000 | U | 50000 | U |
| 2-Nitrophenol | 830 | U | 2100 | U | 9700 | U |
| 3&4-Methylphenol (m&p-cresol) | 830 | U | 2100 | U | 9700 | U |
| 3,3'-Dichlorobenzidine | 1700 | U | 4200 | U | 19000 | U |
| 3-Nitroaniline | 4300 | U | 11000 | U | 50000 | U |
| 4,6-Dinitro-2-methylphenol | NA | | NA | | NA | |
| 4-Bromophenyl phenyl ether | 830 | U | 2100 | U | 9700 | U |
| 4-Chloro-3-methylphenol | 830 | U | 2100 | U | 9700 | U |
| 4-Chloroaniline | 1700 | U | 4200 | U | 19000 | U |

NA= Not Analyzed.

Table 4
Site Soil Data Summary

| | KR/BC-B36 (6-8') | | KR/BC-B37 (2-4') | | KR/BC-B38 (4-6') | |
|---|---|---|---|---|---|---|
| 4-Chlorophenylphenyl ether | 830 | U | 2100 | U | 9700 | U |
| 4-Chlorotoluene | 1600 | U | 6400 | U | 15000 | U |
| 4-Methyl-2-pentanone (MIBK) | 8000 | U | 32000 | U | 75000 | U |
| 4-Nitroaniline | 4300 | U | 11000 | U | 50000 | U |
| 4-Nitrophenol | 4300 | U | 11000 | U | 50000 | U |
| Acenaphthene | 830 | U | 2100 | U | 9700 | U |
| Acenaphthylene | 830 | U | 2100 | U | 9700 | U |
| Acetone | 16000 | U | 64000 | U | 150000 | U |
| Anthracene | 830 | U | 2100 | U | 9700 | U |
| Aroclor-1016 | NA | | NA | | NA | |
| Aroclor-1221 | NA | | NA | | NA | |
| Aroclor-1232 | NA | | NA | | NA | |
| Aroclor-1242 | NA | | NA | | NA | |
| Aroclor-1248 | NA | | NA | | NA | |
| Aroclor-1254 | NA | | NA | | NA | |
| Aroclor-1260 | NA | | NA | | NA | |
| Benzene | 1600 | U | 6400 | U | 15000 | U |
| Benzidine | 6800 | U | 17000 | U | 79000 | U |
| Benzo(a)anthracene | 830 | U | 2100 | U | 9700 | U |
| Benzo(a)pyrene | 830 | U | 2100 | U | 9700 | U |
| Benzo(b)fluoranthene | 830 | U | 2100 | U | 9700 | U |
| Benzo(g,h,i)perylene | 830 | U | 2100 | U | 9700 | U |
| Benzo(k)fluoranthene | 830 | U | 2100 | U | 9700 | U |
| Benzoic acid | 4300 | U | 11000 | U | 50000 | U |
| Benzyl alcohol | 830 | U | 2100 | U | 9700 | U |
| bis(2-Chloroethoxy)methane | 830 | U | 2100 | U | 9700 | U |
| bis(2-Chloroethyl)ether | 830 | U | 2100 | U | 9700 | U |
| bis(2-Chloroisopropyl)ether | 830 | U | 2100 | U | 9700 | U |
| bis(2-Ethylhexyl)phthalate | 830 | U | 2100 | U | 9700 | U |
| Bromobenzene | 1600 | U | 6400 | U | 15000 | U |
| Bromochloromethane | 1600 | U | 6400 | U | 15000 | U |
| Bromodichloromethane | 1600 | U | 6400 | U | 15000 | U |
| Bromoform | 1600 | U | 6400 | U | 15000 | U |
| Bromomethane | 3200 | U | 13000 | U | 29000 | U |
| Butylbenzylphthalate | 830 | U | 2100 | U | 9700 | U |
| Carbazole | NA | | NA | | NA | |
| Carbon disulfide | NA | | NA | | NA | |
| Carbon tetrachloride | 1600 | U | 6400 | U | 15000 | U |
| Chlorobenzene | 26000 | | 200000 | | 500000 | |
| Chlorodibromomethane | 1600 | U | 6400 | U | 15000 | U |
| Chloroethane | 3200 | U | 13000 | U | 29000 | U |
| Chloroform | 1600 | U | 6400 | U | 15000 | U |
| Chloromethane | 3200 | U | 13000 | U | 29000 | U |
| Chrysene | 830 | U | 2100 | U | 9700 | U |
| cis-1,2-Dichloroethene | 1600 | U | 6400 | U | 15000 | U |
| cis-1,3-Dichloropropene | NA | | NA | | NA | |
| Dibenzo(a,h)anthracene | 830 | U | 2100 | U | 9700 | U |

NA= Not Analyzed.

Table 4
Site Soil Data Summary

| | KR/BC-B36 (6-8') | | KR/BC-B37 (2-4') | | KR/BC-B38 (4-6') | |
|---|---|---|---|---|---|---|
| Dibenzofuran | 830 | U | 2100 | U | 9700 | U |
| Dibromomethane | 1600 | U | 6400 | U | 15000 | U |
| Dichlorodifluoromethane | 1600 | U | 6400 | U | 15000 | U |
| Dibromochloromethane | NA | | NA | | NA | |
| Diethylphthalate | 830 | U | 2100 | U | 9700 | U |
| Dimethylphthalate | 830 | U | 2100 | U | 9700 | U |
| Di-n-butylphthalate | 830 | U | 2100 | U | 9700 | U |
| Di-n-octylphthalate | 830 | U | 2100 | U | 9700 | U |
| Ethylbenzene | 1600 | U | 6400 | U | 15000 | U |
| Fluoranthene | 830 | U | 2100 | U | 9700 | U |
| Fluorene | 830 | U | 2100 | U | 9700 | U |
| Hexachlorobenzene | 830 | U | 2100 | U | 9700 | U |
| Hexachlorobutadiene | 830 | U | 2100 | U | 9700 | U |
| Hexachlorocyclopentadiene | 830 | U | 2100 | U | 9700 | U |
| Hexachloroethane | 830 | U | 2100 | U | 9700 | U |
| Indeno(1,2,3-cd)pyrene | 830 | U | 2100 | U | 9700 | U |
| Isophorone | 830 | U | 2100 | U | 9700 | U |
| Isopropylbenzene | 1600 | U | 6400 | U | 15000 | U |
| m&p-Xylene | 1600 | U | 6400 | U | 15000 | U |
| Methylene chloride (Dichloromethane) | 1600 | U | 6400 | U | 15000 | U |
| Naphthalene | 1600 | U | 6400 | U | 15000 | U |
| Naphthalene | 830 | U | 2100 | U | 9700 | U |
| n-Butylbenzene | 1600 | U | 6400 | U | 15000 | U |
| Nitrobenzene | 830 | U | 2100 | U | 9700 | U |
| N-Nitrosodimethylamine | 830 | U | 2100 | U | 9700 | U |
| n-Nitrosodi-n-propylamine | 830 | U | 2100 | U | 9700 | U |
| N-Nitrosodiphenylamine/Diphenylamine | 830 | U | 2100 | U | 9700 | U |
| n-Propylbenzene | 1600 | U | 6400 | U | 15000 | U |
| o-Xylene | 1600 | U | 6400 | U | 15000 | U |
| Pentachlorophenol | 4300 | U | 11000 | U | 50000 | U |
| Phenanthrene | 830 | U | 2100 | U | 9700 | U |
| Phenol | 830 | U | 2100 | U | 9700 | U |
| p-Isopropyltoluene | 1600 | U | 6400 | U | 15000 | U |
| Pyrene | 830 | U | 2100 | U | 9700 | U |
| sec-Butylbenzene | 1600 | U | 6400 | U | 15000 | U |
| Styrene | 1600 | U | 6400 | U | 15000 | U |
| tert-Butylbenzene | 1600 | U | 6400 | U | 15000 | U |
| Tetrachloroethene | 1600 | U | 6400 | U | 15000 | U |
| Toluene | 1600 | U | 6400 | U | 15000 | U |
| trans-1,2-Dichloroethene | 1600 | U | 6400 | U | 15000 | U |
| trans-1,3-Dichloropropene | NA | | NA | | NA | |
| Trichloroethene | 1600 | U | 6400 | U | 15000 | U |
| Trichlorofluoromethane | 1600 | U | 6400 | U | 15000 | U |
| Vinyl chloride | 3200 | U | 13000 | U | 29000 | U |
| Xylenes, Total | NA | | NA | | NA | |

NA= Not Analyzed.

Table 4
Site Soil Data Summary

| | KR/BC-B39 (4-6') | | KR/BC-B40 (6-8') | | KR/BC-B42 (2-4') | |
|---|---|---|---|---|---|---|
| 1,1,1,2-Tetrachloroethane | 16000 | U | 30000 | U | 15000 | U |
| 1,1,1-Trichloroethane | 16000 | U | 30000 | U | 15000 | U |
| 1,1,2,2-Tetrachloroethane | 16000 | U | 30000 | U | 15000 | U |
| 1,1,2-Trichloroethane | 16000 | U | 30000 | U | 15000 | U |
| 1,1-Dichloroethane | 16000 | U | 30000 | U | 15000 | U |
| 1,1-Dichloroethene | 16000 | U | 30000 | U | 15000 | U |
| 1,1-Dichloropropylene | 16000 | U | 30000 | U | 15000 | U |
| 1,2,3-Trichlorobenzene | 16000 | U | 30000 | U | 15000 | U |
| 1,2,3-Trichloropropane | 16000 | U | 30000 | U | 15000 | U |
| 1,2,4-Trichlorobenzene | 16000 | U | 30000 | U | 15000 | U |
| 1,2,4-Trichlorobenzene | 4200 | U | 4000 | U | 4000 | U |
| 1,2,4-Trimethylbenzene | 16000 | U | 30000 | U | 15000 | U |
| 1,2-Dibromo-3-chloropropane | 16000 | U | 30000 | U | 15000 | U |
| 1,2-Dibromoethane (EDB) | 16000 | U | 30000 | U | 15000 | U |
| 1,2-Dichlorobenzene | 25000 | | 45000 | | 46000 | |
| 1,2-Dichloroethane | 16000 | U | 30000 | U | 15000 | U |
| 1,2-Dichloropropane | 16000 | U | 30000 | U | 15000 | U |
| 1,3,5-Trimethylbenzene | 16000 | U | 30000 | U | 15000 | U |
| 1,3-Dichlorobenzene | 4200 | U | 4000 | U | 4000 | U |
| 1,3-Dichloropropane | 16000 | U | 30000 | U | 15000 | U |
| 1,4-Dichlorobenzene | 5500 | | 9400 | | 12000 | |
| 2,2-Dichloropropane | 16000 | U | 30000 | U | 15000 | U |
| 2,2'-Oxybis(1-Chloropropane) | NA | | NA | | NA | |
| 2,4,5-Trichlorophenol | 4200 | U | 4000 | U | 4000 | U |
| 2,4,6-Trichlorophenol | 4200 | U | 4000 | U | 4000 | U |
| 2,4-Dichlorophenol | 4200 | U | 4000 | U | 4000 | U |
| 2,4-Dimethylphenol | 4200 | U | 4000 | U | 4000 | U |
| 2,4-Dinitrophenol | 22000 | U | 20000 | U | 20000 | U |
| 2,4-Dinitrotoluene | 4200 | U | 4000 | U | 4000 | U |
| 2,6-Dinitrotoluene | 4200 | U | 4000 | U | 4000 | U |
| 2-Butanone (MEK) | 80000 | U | 150000 | U | 75000 | U |
| 2-Chloronaphthalene | 4200 | U | 4000 | U | 4000 | U |
| 2-Chlorophenol | 4200 | U | 4000 | U | 4000 | U |
| 2-Chlorotoluene | 16000 | U | 30000 | U | 15000 | U |
| 2-Hexanone | NA | | NA | | NA | |
| 2-Methyl-4,6-dinitrophenol | 22000 | U | 20000 | U | 20000 | U |
| 2-Methylnaphthalene | 4200 | U | 4000 | U | 4000 | U |
| 2-Methylphenol (o-cresol) | 4200 | U | 4000 | U | 4000 | U |
| 2-Nitroaniline | 22000 | U | 20000 | U | 20000 | U |
| 2-Nitrophenol | 4200 | U | 4000 | U | 4000 | U |
| 3&4-Methylphenol (m&p-cresol) | 4200 | U | 4000 | U | 4000 | U |
| 3,3'-Dichlorobenzidine | 8400 | U | 8000 | U | 8000 | U |
| 3-Nitroaniline | 22000 | U | 20000 | U | 20000 | U |
| 4,6-Dinitro-2-methylphenol | NA | | NA | | NA | |
| 4-Bromophenyl phenyl ether | 4200 | U | 4000 | U | 4000 | U |
| 4-Chloro-3-methylphenol | 4200 | U | 4000 | U | 4000 | U |
| 4-Chloroaniline | 8400 | U | 8000 | U | 12000 | |

NA= Not Analyzed.

Table 4
Site Soil Data Summary

| | KR/BC-B39 (4-6') | | KR/BC-B40 (6-8') | | KR/BC-B42 (2-4') | |
|---|---|---|---|---|---|---|
| 4-Chlorophenylphenyl ether | 4200 | U | 4000 | U | 4000 | U |
| 4-Chlorotoluene | 16000 | U | 30000 | U | 15000 | U |
| 4-Methyl-2-pentanone (MIBK) | 80000 | U | 150000 | U | 75000 | U |
| 4-Nitroaniline | 22000 | U | 20000 | U | 20000 | U |
| 4-Nitrophenol | 22000 | U | 20000 | U | 20000 | U |
| Acenaphthene | 4200 | U | 4000 | U | 4000 | U |
| Acenaphthylene | 4200 | U | 4000 | U | 4000 | U |
| Acetone | 160000 | U | 300000 | U | 150000 | U |
| Anthracene | 4200 | U | 4000 | U | 4000 | U |
| Aroclor-1016 | 2100 | U | 400 | U | NA | |
| Aroclor-1221 | 4300 | U | 800 | U | NA | |
| Aroclor-1232 | 2100 | U | 400 | U | NA | |
| Aroclor-1242 | 2100 | U | 400 | U | NA | |
| Aroclor-1248 | 25000 | | 2000 | | NA | |
| Aroclor-1254 | 6200 | | 1800 | | NA | |
| Aroclor-1260 | 3100 | | 2600 | | NA | |
| Benzene | 16000 | U | 30000 | U | 15000 | U |
| Benzidine | 34000 | U | 32000 | U | 32000 | U |
| Benzo(a)anthracene | 4200 | U | 4000 | U | 4000 | U |
| Benzo(a)pyrene | 4200 | U | 4000 | U | 4000 | U |
| Benzo(b)fluoranthene | 4200 | U | 4000 | U | 4000 | U |
| Benzo(g,h,i)perylene | 4200 | U | 4000 | U | 4000 | U |
| Benzo(k)fluoranthene | 4200 | U | 4000 | U | 4000 | U |
| Benzoic acid | 22000 | U | 20000 | U | 20000 | U |
| Benzyl alcohol | 4200 | U | 4000 | U | 4000 | U |
| bis(2-Chloroethoxy)methane | 4200 | U | 4000 | U | 4000 | U |
| bis(2-Chloroethyl)ether | 4200 | U | 4000 | U | 4000 | U |
| bis(2-Chloroisopropyl)ether | 4200 | U | 4000 | U | 4000 | U |
| bis(2-Ethylhexyl)phthalate | 4200 | U | 4000 | U | 4000 | U |
| Bromobenzene | 16000 | U | 30000 | U | 15000 | U |
| Bromochloromethane | 16000 | U | 30000 | U | 15000 | U |
| Bromodichloromethane | 16000 | U | 30000 | U | 15000 | U |
| Bromoform | 16000 | U | 30000 | U | 15000 | U |
| Bromomethane | 32000 | U | 60000 | U | 30000 | U |
| Butylbenzylphthalate | 4200 | U | 4000 | U | 4000 | U |
| Carbazole | NA | | NA | | NA | |
| Carbon disulfide | NA | | NA | | NA | |
| Carbon tetrachloride | 16000 | U | 30000 | U | 15000 | U |
| Chlorobenzene | 240000 | | 1000000 | | 360000 | |
| Chlorodibromomethane | 16000 | U | 30000 | U | 15000 | U |
| Chloroethane | 32000 | U | 60000 | U | 30000 | U |
| Chloroform | 16000 | U | 30000 | U | 15000 | U |
| Chloromethane | 32000 | U | 60000 | U | 30000 | U |
| Chrysene | 4200 | U | 100 | | 4000 | U |
| cis-1,2-Dichloroethene | 16000 | U | 30000 | U | 15000 | U |
| cis-1,3-Dichloropropene | NA | | NA | | NA | |
| Dibenzo(a,h)anthracene | 4200 | U | 4000 | U | 4000 | U |

NA= Not Analyzed.

Table 4
Site Soil Data Summary

| | KR/BC-B39 (4-6') | | KR/BC-B40 (6-8') | | KR/BC-B42 (2-4') | |
|---|---|---|---|---|---|---|
| Dibenzofuran | 4200 | U | 4000 | U | 4000 | U |
| Dibromomethane | 16000 | U | 30000 | U | 15000 | U |
| Dichlorodifluoromethane | 16000 | U | 30000 | U | 15000 | U |
| Dibromochloromethane | NA | | NA | | NA | |
| Diethylphthalate | 4200 | U | 4000 | U | 4000 | U |
| Dimethylphthalate | 4200 | U | 4000 | U | 4000 | U |
| Di-n-butylphthalate | 4200 | U | 4000 | U | 4000 | U |
| Di-n-octylphthalate | 4200 | U | 4000 | U | 4000 | U |
| Ethylbenzene | 16000 | U | 30000 | U | 15000 | U |
| Fluoranthene | 4200 | U | 4000 | U | 4000 | U |
| Fluorene | 4200 | U | 4000 | U | 4000 | U |
| Hexachlorobenzene | 4200 | U | 4000 | U | 4000 | U |
| Hexachlorobutadiene | 16000 | U | 30000 | U | 4000 | U |
| Hexachlorocyclopentadiene | 4200 | U | 4000 | U | 4000 | U |
| Hexachloroethane | 4200 | U | 4000 | U | 4000 | U |
| Indeno(1,2,3-cd)pyrene | 4200 | U | 4000 | U | 4000 | U |
| Isophorone | 4200 | U | 4000 | U | 4000 | U |
| Isopropylbenzene | 16000 | U | 30000 | U | 15000 | U |
| m&p-Xylene | 16000 | U | 30000 | U | 15000 | U |
| Methylene chloride (Dichloromethane) | 16000 | U | 30000 | U | 15000 | U |
| Naphthalene | 16000 | U | 30000 | U | 15000 | U |
| Naphthalene | 4200 | U | 4000 | U | 4000 | U |
| n-Butylbenzene | 16000 | U | 30000 | U | 15000 | U |
| Nitrobenzene | 4200 | U | 4000 | U | 4000 | U |
| N-Nitrosodimethylamine | 4200 | U | 4000 | U | 4000 | U |
| n-Nitrosodi-n-propylamine | 4200 | U | 4000 | U | 4000 | U |
| N-Nitrosodiphenylamine/Diphenylamine | 4200 | U | 4000 | U | 4000 | U |
| n-Propylbenzene | 16000 | U | 30000 | U | 15000 | U |
| o-Xylene | 16000 | U | 30000 | U | 15000 | U |
| Pentachlorophenol | 22000 | U | 20000 | U | 20000 | U |
| Phenanthrene | 4200 | U | 4000 | U | 4000 | U |
| Phenol | 4200 | U | 4000 | U | 4000 | U |
| p-Isopropyltoluene | 16000 | U | 30000 | U | 15000 | U |
| Pyrene | 4200 | U | 4000 | U | 4000 | U |
| sec-Butylbenzene | 16000 | U | 30000 | U | 15000 | U |
| Styrene | 16000 | U | 30000 | U | 15000 | U |
| tert-Butylbenzene | 16000 | U | 30000 | U | 15000 | U |
| Tetrachloroethene | 16000 | U | 30000 | U | 15000 | U |
| Toluene | 16000 | U | 30000 | U | 15000 | U |
| trans-1,2-Dichloroethene | 16000 | U | 30000 | U | 15000 | U |
| trans-1,3-Dichloropropene | NA | | NA | | NA | |
| Trichloroethene | 16000 | U | 30000 | U | 15000 | U |
| Trichlorofluoromethane | 16000 | U | 30000 | U | 15000 | U |
| Vinyl chloride | 32000 | U | 60000 | U | 30000 | U |
| Xylenes, Total | NA | | NA | | NA | |

NA= Not Analyzed.

Table 4
Site Soil Data Summary

| | KR/BC-B40 (0-2) | | KR/BC-B43-4-6 | | KR-BC-B28 (6-8') | |
|---|---|---|---|---|---|---|
| 1,1,1,2-Tetrachloroethane | 15000 | U | 1200 | U | 15000 | U |
| 1,1,1-Trichloroethane | 15000 | U | 1200 | U | 15000 | U |
| 1,1,2,2-Tetrachloroethane | 15000 | U | 1200 | U | 15000 | U |
| 1,1,2-Trichloroethane | 15000 | U | 1200 | U | 15000 | U |
| 1,1-Dichloroethane | 15000 | U | 1200 | U | 15000 | U |
| 1,1-Dichloroethene | 15000 | U | 1200 | U | 15000 | U |
| 1,1-Dichloropropylene | 15000 | U | 1200 | U | 15000 | U |
| 1,2,3-Trichlorobenzene | 15000 | U | 1200 | U | 15000 | U |
| 1,2,3-Trichloropropane | 15000 | U | 1200 | U | 15000 | U |
| 1,2,4-Trichlorobenzene | 15000 | U | 1200 | U | 15000 | U |
| 1,2,4-Trichlorobenzene | 8000 | U | 3900 | U | 1600 | U |
| 1,2,4-Trimethylbenzene | 15000 | U | 1200 | U | 15000 | U |
| 1,2-Dibromo-3-chloropropane | 15000 | U | 1200 | U | 15000 | U |
| 1,2-Dibromoethane (EDB) | 15000 | U | 1200 | U | 15000 | U |
| 1,2-Dichlorobenzene | 39000 | | 19000 | | 3400 | |
| 1,2-Dichloroethane | 15000 | U | 1200 | U | 15000 | U |
| 1,2-Dichloropropane | 15000 | U | 1200 | U | 15000 | U |
| 1,3,5-Trimethylbenzene | 15000 | U | 1200 | U | 15000 | U |
| 1,3-Dichlorobenzene | 8000 | U | 3900 | U | 1600 | U |
| 1,3-Dichloropropane | 15000 | U | 1200 | U | 15000 | U |
| 1,4-Dichlorobenzene | 20000 | | 3900 | U | 1600 | U |
| 2,2-Dichloropropane | 15000 | U | 1200 | U | 15000 | U |
| 2,2'-Oxybis(1-Chloropropane) | NA | | NA | | NA | |
| 2,4,5-Trichlorophenol | 8000 | U | 3900 | U | 1600 | U |
| 2,4,6-Trichlorophenol | 8000 | U | 3900 | U | 1600 | U |
| 2,4-Dichlorophenol | 8000 | U | 3900 | U | 1600 | U |
| 2,4-Dimethylphenol | 8000 | U | 3900 | U | 1600 | U |
| 2,4-Dinitrophenol | 41000 | U | 20000 | U | 8100 | U |
| 2,4-Dinitrotoluene | 8000 | U | 3900 | U | 1600 | U |
| 2,6-Dinitrotoluene | 8000 | U | 3900 | U | 1600 | U |
| 2-Butanone (MEK) | 75000 | U | 6000 | U | 75000 | U |
| 2-Chloronaphthalene | 8000 | U | 3900 | U | 1600 | U |
| 2-Chlorophenol | 8000 | U | 3900 | U | 1600 | U |
| 2-Chlorotoluene | 15000 | U | 1200 | U | 15000 | U |
| 2-Hexanone | NA | | NA | | NA | |
| 2-Methyl-4,6-dinitrophenol | 41000 | U | 20000 | U | 8100 | U |
| 2-Methylnaphthalene | 8000 | U | 3900 | U | 1600 | U |
| 2-Methylphenol (o-cresol) | 8000 | U | 3900 | U | 1600 | U |
| 2-Nitroaniline | 41000 | U | 20000 | U | 8100 | U |
| 2-Nitrophenol | 8000 | U | 3900 | U | 1600 | U |
| 3&4-Methylphenol (m&p-cresol) | 8000 | U | 3900 | U | 1600 | U |
| 3,3'-Dichlorobenzidine | 16000 | U | 7800 | U | 3100 | U |
| 3-Nitroaniline | 41000 | U | 20000 | U | 8100 | U |
| 4,6-Dinitro-2-methylphenol | NA | | NA | | NA | |
| 4-Bromophenyl phenyl ether | 8000 | U | 3900 | U | 1600 | U |
| 4-Chloro-3-methylphenol | 8000 | U | 3900 | U | 1600 | U |
| 4-Chloroaniline | 16000 | | 7800 | U | 3100 | U |

NA= Not Analyzed.

Table 4
Site Soil Data Summary

| | KR/BC-B40 (0-2) | | KR/BC-B43-4-6 | | KR-BC-B28 (6-8') | |
|---|---|---|---|---|---|---|
| 4-Chlorophenylphenyl ether | 8000 | U | 3900 | U | 1600 | U |
| 4-Chlorotoluene | 15000 | U | 1200 | U | 15000 | U |
| 4-Methyl-2-pentanone (MIBK) | 75000 | U | 6000 | U | 75000 | U |
| 4-Nitroaniline | 41000 | U | 20000 | U | 8100 | U |
| 4-Nitrophenol | 41000 | U | 20000 | U | 8100 | U |
| Acenaphthene | 8000 | U | 3900 | U | 1600 | U |
| Acenaphthylene | 8000 | U | 3900 | U | 1600 | U |
| Acetone | 150000 | U | 12000 | U | 150000 | U |
| Anthracene | 8000 | U | 3900 | U | 1600 | U |
| Aroclor-1016 | NA | | NA | | NA | |
| Aroclor-1221 | NA | | NA | | NA | |
| Aroclor-1232 | NA | | NA | | NA | |
| Aroclor-1242 | NA | | NA | | NA | |
| Aroclor-1248 | NA | | NA | | NA | |
| Aroclor-1254 | NA | | NA | | NA | |
| Aroclor-1260 | NA | | NA | | NA | |
| Benzene | 15000 | U | 1200 | U | 15000 | U |
| Benzidine | 65000 | U | 32000 | U | 13000 | U |
| Benzo(a)anthracene | 8000 | U | 3900 | U | 1600 | U |
| Benzo(a)pyrene | 8000 | U | 3900 | U | 1600 | U |
| Benzo(b)fluoranthene | 8000 | U | 3900 | U | 1600 | U |
| Benzo(g,h,i)perylene | 8000 | U | 3900 | U | 1600 | U |
| Benzo(k)fluoranthene | 8000 | U | 3900 | U | 1600 | U |
| Benzoic acid | 41000 | U | 20000 | U | 8100 | U |
| Benzyl alcohol | 8000 | U | 3900 | U | 1600 | U |
| bis(2-Chloroethoxy)methane | 8000 | U | 3900 | U | 1600 | U |
| bis(2-Chloroethyl)ether | 8000 | U | 3900 | U | 1600 | U |
| bis(2-Chloroisopropyl)ether | 8000 | U | 3900 | U | 1600 | U |
| bis(2-Ethylhexyl)phthalate | 8000 | U | 3900 | U | 1600 | U |
| Bromobenzene | 15000 | U | 1200 | U | 15000 | U |
| Bromochloromethane | 15000 | U | 1200 | U | 15000 | U |
| Bromodichloromethane | 15000 | U | 1200 | U | 15000 | U |
| Bromoform | 15000 | U | 1200 | U | 15000 | U |
| Bromomethane | 30000 | U | 2400 | U | 30000 | U |
| Butylbenzylphthalate | 8000 | U | 3900 | U | 1600 | U |
| Carbazole | NA | | NA | | NA | |
| Carbon disulfide | NA | | NA | | NA | |
| Carbon tetrachloride | 15000 | U | 1200 | U | 15000 | U |
| Chlorobenzene | 500000 | | 12000 | | 420000 | |
| Chlorodibromomethane | 15000 | U | 1200 | U | 15000 | U |
| Chloroethane | 30000 | U | 2400 | U | 30000 | U |
| Chloroform | 15000 | U | 1200 | U | 15000 | U |
| Chloromethane | 30000 | U | 2400 | U | 30000 | U |
| Chrysene | 8000 | U | 3900 | U | 1600 | U |
| cis-1,2-Dichloroethene | 15000 | U | 1200 | U | 15000 | U |
| cis-1,3-Dichloropropene | NA | | NA | | NA | |
| Dibenzo(a,h)anthracene | 8000 | U | 3900 | U | 1600 | U |

NA= Not Analyzed.

Table 4
Site Soil Data Summary

| | KR/BC-B40 (0-2) | | KR/BC-B43-4-6 | | KR-BC-B28 (6-8') | |
|---|---|---|---|---|---|---|
| Dibenzofuran | 8000 | U | 3900 | U | 1600 | U |
| Dibromomethane | 15000 | U | 1200 | U | 15000 | U |
| Dichlorodifluoromethane | 15000 | U | 1200 | U | 15000 | U |
| Dibromochloromethane | NA | | NA | | NA | |
| Diethylphthalate | 8000 | U | 3900 | U | 1600 | U |
| Dimethylphthalate | 8000 | U | 3900 | U | 1600 | U |
| Di-n-butylphthalate | 8000 | U | 3900 | U | 1600 | U |
| Di-n-octylphthalate | 8000 | U | 3900 | U | 1600 | U |
| Ethylbenzene | 15000 | U | 1200 | U | 15000 | U |
| Fluoranthene | 8000 | U | 3900 | U | 1600 | U |
| Fluorene | 8000 | U | 3900 | U | 1600 | U |
| Hexachlorobenzene | 8000 | U | 3900 | U | 1600 | U |
| Hexachlorobutadiene | 8000 | U | 3900 | U | 1600 | U |
| Hexachlorocyclopentadiene | 8000 | U | 3900 | U | 1600 | U |
| Hexachloroethane | 8000 | U | 3900 | U | 1600 | U |
| Indeno(1,2,3-cd)pyrene | 8000 | U | 3900 | U | 1600 | U |
| Isophorone | 8000 | U | 3900 | U | 1600 | U |
| Isopropylbenzene | 15000 | U | 1200 | U | 15000 | U |
| m&p-Xylene | 15000 | U | 1200 | U | 15000 | U |
| Methylene chloride (Dichloromethane) | 15000 | U | 1200 | U | 15000 | U |
| Naphthalene | 15000 | U | 1200 | U | 15000 | U |
| Naphthalene | 8000 | U | 3900 | U | 1600 | U |
| n-Butylbenzene | 15000 | U | 1200 | U | 15000 | U |
| Nitrobenzene | 8000 | U | 3900 | U | 1600 | U |
| N-Nitrosodimethylamine | 8000 | U | 3900 | U | 1600 | U |
| n-Nitrosodi-n-propylamine | 8000 | U | 3900 | U | 1600 | U |
| N-Nitrosodiphenylamine/Diphenylamine | 8000 | U | 3900 | U | 1600 | U |
| n-Propylbenzene | 15000 | U | 1200 | U | 15000 | U |
| o-Xylene | 15000 | U | 1200 | U | 15000 | U |
| Pentachlorophenol | 41000 | U | 20000 | U | 8100 | U |
| Phenanthrene | 8000 | U | 3900 | U | 1600 | U |
| Phenol | 8000 | U | 3900 | U | 1600 | U |
| p-Isopropyltoluene | 15000 | U | 1200 | U | 15000 | U |
| Pyrene | 8000 | U | 3900 | U | 1600 | U |
| sec-Butylbenzene | 15000 | U | 1200 | U | 15000 | U |
| Styrene | 15000 | U | 1200 | U | 15000 | U |
| tert-Butylbenzene | 15000 | U | 1200 | U | 15000 | U |
| Tetrachloroethene | 15000 | U | 1200 | U | 15000 | U |
| Toluene | 15000 | U | 1200 | U | 15000 | U |
| trans-1,2-Dichloroethene | 15000 | U | 1200 | U | 15000 | U |
| trans-1,3-Dichloropropene | NA | | NA | | NA | |
| Trichloroethene | 15000 | U | 1200 | U | 15000 | U |
| Trichlorofluoromethane | 15000 | U | 1200 | U | 15000 | U |
| Vinyl chloride | 30000 | U | 2400 | U | 30000 | U |
| Xylenes, Total | NA | | NA | | NA | |

NA= Not Analyzed.

Table 4
Site Soil Data Summary

| | NTF-B72-4-6' | | NTF-B73-2-4' | | NTF-B74-6-8' | |
|---|---|---|---|---|---|---|
| 1,1,1,2-Tetrachloroethane | NA | | NA | | NA | |
| 1,1,1-Trichloroethane | 210 | U | 560 | U | 7100 | U |
| 1,1,2,2-Tetrachloroethane | 210 | U | 560 | U | 7100 | U |
| 1,1,2-Trichloroethane | 210 | U | 560 | U | 7100 | U |
| 1,1-Dichloroethane | 210 | U | 560 | U | 7100 | U |
| 1,1-Dichloroethene | 210 | U | 560 | U | 7100 | U |
| 1,1-Dichloropropylene | NA | | NA | | NA | |
| 1,2,3-Trichlorobenzene | NA | | NA | | NA | |
| 1,2,3-Trichloropropane | NA | | NA | | NA | |
| 1,2,4-Trichlorobenzene | 830 | U | 410 | U | 470 | U |
| 1,2,4-Trichlorobenzene | NA | | NA | | NA | |
| 1,2,4-Trimethylbenzene | NA | | NA | | NA | |
| 1,2-Dibromo-3-chloropropane | NA | | NA | | NA | |
| 1,2-Dibromoethane (EDB) | NA | | NA | | NA | |
| 1,2-Dichlorobenzene | 830 | U | 410 | U | 470 | U |
| 1,2-Dichloroethane | 210 | U | 560 | U | 7100 | U |
| 1,2-Dichloropropane | 210 | U | 560 | U | 7100 | U |
| 1,3,5-Trimethylbenzene | NA | | NA | | NA | |
| 1,3-Dichlorobenzene | 830 | U | 410 | U | 470 | U |
| 1,3-Dichloropropane | NA | | NA | | NA | |
| 1,4-Dichlorobenzene | 830 | U | 410 | U | 470 | U |
| 2,2-Dichloropropane | NA | | NA | | NA | |
| 2,2'-Oxybis(1-Chloropropane) | 830 | U | 410 | U | 470 | U |
| 2,4,5-Trichlorophenol | 830 | U | 410 | U | 470 | U |
| 2,4,6-Trichlorophenol | 830 | U | 410 | U | 470 | U |
| 2,4-Dichlorophenol | 830 | U | 410 | U | 470 | U |
| 2,4-Dimethylphenol | 830 | U | 410 | U | 470 | U |
| 2,4-Dinitrophenol | 4300 | U | 2100 | U | 2400 | U |
| 2,4-Dinitrotoluene | 830 | U | 410 | U | 470 | U |
| 2,6-Dinitrotoluene | 830 | U | 410 | U | 470 | U |
| 2-Butanone (MEK) | 1100 | U | 2800 | U | 36000 | U |
| 2-Chloronaphthalene | 830 | U | 410 | U | 470 | U |
| 2-Chlorophenol | 830 | U | 410 | U | 470 | U |
| 2-Chlorotoluene | NA | | NA | | NA | |
| 2-Hexanone | 1100 | U | 2800 | U | 36000 | U |
| 2-Methyl-4,6-dinitrophenol | NA | | NA | | NA | |
| 2-Methylnaphthalene | 830 | U | 410 | U | 470 | U |
| 2-Methylphenol (o-cresol) | 830 | U | 410 | U | 470 | U |
| 2-Nitroaniline | 4300 | U | 2100 | U | 2400 | U |
| 2-Nitrophenol | 830 | U | 410 | U | 470 | U |
| 3&4-Methylphenol (m&p-cresol) | NA | | NA | | NA | |
| 3,3'-Dichlorobenzidine | 1600 | U | 810 | U | 940 | U |
| 3-Nitroaniline | 4300 | U | 2100 | U | 2400 | U |
| 4,6-Dinitro-2-methylphenol | 4300 | U | 2100 | U | 2400 | U |
| 4-Bromophenyl phenyl ether | 830 | U | 410 | U | 470 | U |
| 4-Chloro-3-methylphenol | 830 | U | 410 | U | 470 | U |
| 4-Chloroaniline | 1600 | U | 810 | U | 940 | U |

NA= Not Analyzed.

Table 4
Site Soil Data Summary

| | NTF-B72-4-6' | | NTF-B73-2-4' | | NTF-B74-6-8' | |
|---|---|---|---|---|---|---|
| 4-Chlorophenylphenyl ether | 830 | U | 410 | U | 470 | U |
| 4-Chlorotoluene | NA | | NA | | NA | |
| 4-Methyl-2-pentanone (MIBK) | 1100 | U | 2800 | U | 36000 | U |
| 4-Nitroaniline | 4300 | U | 2100 | U | 2400 | U |
| 4-Nitrophenol | 4300 | U | 2100 | U | 2400 | U |
| Acenaphthene | 830 | U | 410 | U | 470 | U |
| Acenaphthylene | 830 | U | 410 | U | 470 | U |
| Acetone | 2100 | U | 5600 | U | 71000 | U |
| Anthracene | 830 | U | 410 | U | 470 | U |
| Aroclor-1016 | 250 | U | 41 | U | 47 | U |
| Aroclor-1221 | 510 | U | 83 | U | 96 | U |
| Aroclor-1232 | 250 | U | 41 | U | 47 | U |
| Aroclor-1242 | 250 | U | 41 | U | 47 | U |
| Aroclor-1248 | 250 | U | 41 | U | 47 | U |
| Aroclor-1254 | 250 | U | 41 | U | 47 | U |
| Aroclor-1260 | 250 | U | 41 | U | 47 | U |
| Benzene | 210 | U | 560 | U | 7100 | U |
| Benzidine | NA | | NA | | NA | |
| Benzo(a)anthracene | 830 | U | 410 | U | 470 | U |
| Benzo(a)pyrene | 830 | U | 410 | U | 470 | U |
| Benzo(b)fluoranthene | 830 | U | 410 | U | 470 | U |
| Benzo(g,h,i)perylene | 830 | U | 410 | U | 470 | U |
| Benzo(k)fluoranthene | 830 | U | 410 | U | 470 | U |
| Benzoic acid | NA | | NA | | NA | |
| Benzyl alcohol | NA | | NA | | NA | |
| bis(2-Chloroethoxy)methane | 830 | U | 410 | U | 470 | U |
| bis(2-Chloroethyl)ether | 830 | U | 410 | U | 470 | U |
| bis(2-Chloroisopropyl)ether | NA | | NA | | NA | |
| bis(2-Ethylhexyl)phthalate | 830 | U | 410 | U | 470 | U |
| Bromobenzene | NA | | NA | | NA | |
| Bromochloromethane | NA | | NA | | NA | |
| Bromodichloromethane | 210 | U | 560 | U | 7100 | U |
| Bromoform | 210 | U | 560 | U | 7100 | U |
| Bromomethane | 430 | U | 1100 | U | 14000 | U |
| Butylbenzylphthalate | 830 | U | 410 | U | 470 | U |
| Carbazole | 830 | U | 410 | U | 470 | U |
| Carbon disulfide | 210 | U | 560 | U | 7100 | U |
| Carbon tetrachloride | 210 | U | 560 | U | 7100 | U |
| Chlorobenzene | 520 | | 13000 | | 210000 | |
| Chlorodibromomethane | NA | | NA | | NA | |
| Chloroethane | 430 | U | 1100 | U | 14000 | U |
| Chloroform | 210 | U | 560 | U | 7100 | U |
| Chloromethane | 430 | U | 1100 | U | 14000 | U |
| Chrysene | 830 | U | 410 | U | 470 | U |
| cis-1,2-Dichloroethene | 210 | U | 560 | U | 7100 | U |
| cis-1,3-Dichloropropene | 210 | U | 560 | U | 7100 | U |
| Dibenzo(a,h)anthracene | 830 | U | 410 | U | 470 | U |

NA= Not Analyzed.

Table 4
Site Soil Data Summary

| | NTF-B72-4-6' | | NTF-B73-2-4' | | NTF-B74-6-8' | |
|---|---|---|---|---|---|---|
| Dibenzofuran | 830 | U | 410 | U | 470 | U |
| Dibromomethane | NA | | NA | | NA | |
| Dichlorodifluoromethane | NA | | NA | | NA | |
| Dibromochloromethane | 210 | U | 560 | U | 7100 | U |
| Diethylphthalate | 830 | U | 410 | U | 470 | U |
| Dimethylphthalate | 830 | U | 410 | U | 470 | U |
| Di-n-butylphthalate | 830 | U | 410 | U | 470 | U |
| Di-n-octylphthalate | 830 | U | 410 | U | 470 | U |
| Ethylbenzene | 210 | U | 560 | U | 7100 | U |
| Fluoranthene | 830 | U | 410 | U | 470 | U |
| Fluorene | 830 | U | 410 | U | 470 | U |
| Hexachlorobenzene | 830 | U | 410 | U | 470 | U |
| Hexachlorobutadiene | 830 | U | 410 | U | 470 | U |
| Hexachlorocyclopentadiene | 830 | U | 410 | U | 470 | U |
| Hexachloroethane | 830 | U | 410 | U | 470 | U |
| Indeno(1,2,3-cd)pyrene | 830 | U | 410 | U | 470 | U |
| Isophorone | 830 | U | 410 | U | 470 | U |
| Isopropylbenzene | NA | | NA | | NA | |
| m&p-Xylene | NA | | NA | | NA | |
| Methylene chloride (Dichloromethane) | 210 | U | 560 | U | 7100 | U |
| Naphthalene | NA | | NA | | NA | |
| Naphthalene | 830 | U | 410 | U | 470 | U |
| n-Butylbenzene | NA | | NA | | NA | |
| Nitrobenzene | 830 | U | 410 | U | 470 | U |
| N-Nitrosodimethylamine | NA | | NA | | NA | |
| n-Nitrosodi-n-propylamine | 830 | U | 410 | U | 470 | U |
| N-Nitrosodiphenylamine/Diphenylamine | 830 | U | 410 | U | 470 | U |
| n-Propylbenzene | NA | | NA | | NA | |
| o-Xylene | NA | | NA | | NA | |
| Pentachlorophenol | 4300 | U | 2100 | U | 2400 | U |
| Phenanthrene | 830 | U | 410 | U | 470 | U |
| Phenol | 830 | U | 410 | U | 470 | U |
| p-Isopropyltoluene | NA | | NA | | NA | |
| Pyrene | 830 | U | 410 | U | 470 | U |
| sec-Butylbenzene | NA | | NA | | NA | |
| Styrene | 210 | U | 560 | U | 7100 | U |
| tert-Butylbenzene | NA | | NA | | NA | |
| Tetrachloroethene | 210 | U | 560 | U | 7100 | U |
| Toluene | 210 | U | 560 | U | 7100 | U |
| trans-1,2-Dichloroethene | NA | | NA | | NA | |
| trans-1,3-Dichloropropene | 210 | U | 560 | U | 7100 | U |
| Trichloroethene | 210 | U | 560 | U | 7100 | U |
| Trichlorofluoromethane | NA | | NA | | NA | |
| Vinyl chloride | 430 | U | 1100 | U | 14000 | U |
| Xylenes, Total | 430 | U | 1100 | U | 14000 | U |

NA= Not Analyzed.

Table 4
Site Soil Data Summary

| | NTF-B75-16-20' | | NTF-B77-16-18' | | NTF-B78-16-18' | |
|---|---|---|---|---|---|---|
| 1,1,1,2-Tetrachloroethane | NA | | NA | | NA | |
| 1,1,1-Trichloroethane | 260 | U | 220 | U | 5.8 | U |
| 1,1,2,2-Tetrachloroethane | 260 | U | 220 | U | 5.8 | U |
| 1,1,2-Trichloroethane | 260 | U | 220 | U | 5.8 | U |
| 1,1-Dichloroethane | 260 | U | 220 | U | 5.8 | U |
| 1,1-Dichloroethene | 260 | U | 220 | U | 5.8 | U |
| 1,1-Dichloropropylene | NA | | NA | | NA | |
| 1,2,3-Trichlorobenzene | NA | | NA | | NA | |
| 1,2,3-Trichloropropane | NA | | NA | | NA | |
| 1,2,4-Trichlorobenzene | 4200 | U | 3700 | U | 340 | U |
| 1,2,4-Trichlorobenzene | NA | | NA | | NA | |
| 1,2,4-Trimethylbenzene | NA | | NA | | NA | |
| 1,2-Dibromo-3-chloropropane | NA | | NA | | NA | |
| 1,2-Dibromoethane (EDB) | NA | | NA | | NA | |
| 1,2-Dichlorobenzene | 4200 | U | 3700 | U | 340 | U |
| 1,2-Dichloroethane | 260 | U | 220 | U | 5.8 | U |
| 1,2-Dichloropropane | 260 | U | 220 | U | 5.8 | U |
| 1,3,5-Trimethylbenzene | NA | | NA | | NA | |
| 1,3-Dichlorobenzene | 4200 | U | 3700 | U | 340 | U |
| 1,3-Dichloropropane | NA | | NA | | NA | |
| 1,4-Dichlorobenzene | 4200 | U | 3700 | U | 340 | U |
| 2,2-Dichloropropane | NA | | NA | | NA | |
| 2,2'-Oxybis(1-Chloropropane) | 4200 | U | 3700 | U | 340 | U |
| 2,4,5-Trichlorophenol | 4200 | U | 3700 | U | 340 | U |
| 2,4,6-Trichlorophenol | 4200 | U | 3700 | U | 340 | U |
| 2,4-Dichlorophenol | 4200 | U | 3700 | U | 340 | U |
| 2,4-Dimethylphenol | 4200 | U | 3700 | U | 340 | U |
| 2,4-Dinitrophenol | 22000 | U | 19000 | U | 1800 | U |
| 2,4-Dinitrotoluene | 4200 | U | 3700 | U | 340 | U |
| 2,6-Dinitrotoluene | 4200 | U | 3700 | U | 340 | U |
| 2-Butanone (MEK) | 1300 | U | 1100 | U | 29 | U |
| 2-Chloronaphthalene | 4200 | U | 3700 | U | 340 | U |
| 2-Chlorophenol | 4200 | U | 3700 | U | 340 | U |
| 2-Chlorotoluene | NA | | NA | | NA | |
| 2-Hexanone | 1300 | U | 1100 | U | 29 | U |
| 2-Methyl-4,6-dinitrophenol | NA | | NA | | NA | |
| 2-Methylnaphthalene | 6800 | | 6800 | | 340 | U |
| 2-Methylphenol (o-cresol) | 4200 | U | 3700 | U | 340 | U |
| 2-Nitroaniline | 22000 | U | 19000 | U | 1800 | U |
| 2-Nitrophenol | 4200 | U | 3700 | U | 340 | U |
| 3&4-Methylphenol (m&p-cresol) | NA | | NA | | NA | |
| 3,3'-Dichlorobenzidine | 8500 | U | 7400 | U | 690 | U |
| 3-Nitroaniline | 22000 | U | 19000 | U | 1800 | U |
| 4,6-Dinitro-2-methylphenol | 22000 | U | 19000 | U | 1800 | U |
| 4-Bromophenyl phenyl ether | 4200 | U | 3700 | U | 340 | U |
| 4-Chloro-3-methylphenol | 4200 | U | 3700 | U | 340 | U |
| 4-Chloroaniline | 8500 | U | 7400 | U | 690 | U |

NA= Not Analyzed.

Table 4
Site Soil Data Summary

| | NTF-B75-16-20' | | NTF-B77-16-18' | | NTF-B78-16-18' | |
|---|---|---|---|---|---|---|
| 4-Chlorophenylphenyl ether | 4200 | U | 3700 | U | 340 | U |
| 4-Chlorotoluene | NA | | NA | | NA | |
| 4-Methyl-2-pentanone (MIBK) | 1300 | U | 1100 | U | 29 | U |
| 4-Nitroaniline | 22000 | U | 19000 | U | 1800 | U |
| 4-Nitrophenol | 22000 | U | 19000 | U | 1800 | U |
| Acenaphthene | 4200 | U | 3700 | U | 340 | U |
| Acenaphthylene | 4200 | U | 3700 | U | 340 | U |
| Acetone | 2600 | U | 2200 | U | 58 | U |
| Anthracene | 4200 | U | 3700 | U | 340 | U |
| Aroclor-1016 | 42 | U | 33 | U | 34 | U |
| Aroclor-1221 | 86 | U | 67 | U | 70 | U |
| Aroclor-1232 | 42 | U | 33 | U | 34 | U |
| Aroclor-1242 | 42 | U | 33 | U | 34 | U |
| Aroclor-1248 | 42 | U | 33 | U | 34 | U |
| Aroclor-1254 | 42 | U | 33 | U | 34 | U |
| Aroclor-1260 | 42 | U | 33 | U | 34 | U |
| Benzene | 320 | | 220 | U | 5.8 | U |
| Benzidine | NA | | NA | | NA | |
| Benzo(a)anthracene | 4200 | U | 3700 | U | 340 | U |
| Benzo(a)pyrene | 4200 | U | 3700 | U | 340 | U |
| Benzo(b)fluoranthene | 4200 | U | 3700 | U | 340 | U |
| Benzo(g,h,i)perylene | 4200 | U | 3700 | U | 340 | U |
| Benzo(k)fluoranthene | 4200 | U | 3700 | U | 340 | U |
| Benzoic acid | NA | | NA | | NA | |
| Benzyl alcohol | NA | | NA | | NA | |
| bis(2-Chloroethoxy)methane | 4200 | U | 3700 | U | 340 | U |
| bis(2-Chloroethyl)ether | 4200 | U | 3700 | U | 340 | U |
| bis(2-Chloroisopropyl)ether | NA | | NA | | NA | |
| bis(2-Ethylhexyl)phthalate | 4200 | U | 3700 | U | 340 | U |
| Bromobenzene | NA | | NA | | NA | |
| Bromochloromethane | NA | | NA | | NA | |
| Bromodichloromethane | 260 | U | 220 | U | 5.8 | U |
| Bromoform | 260 | U | 220 | U | 5.8 | U |
| Bromomethane | 510 | U | 450 | U | 12 | U |
| Butylbenzylphthalate | 4200 | U | 3700 | U | 340 | U |
| Carbazole | 4200 | U | 3700 | U | 340 | U |
| Carbon disulfide | 260 | U | 220 | U | 3.2 | |
| Carbon tetrachloride | 260 | U | 220 | U | 5.8 | U |
| Chlorobenzene | 260 | U | 600 | | 10 | |
| Chlorodibromomethane | NA | | NA | | NA | |
| Chloroethane | 510 | U | 450 | U | 12 | U |
| Chloroform | 260 | U | 220 | U | 5.8 | U |
| Chloromethane | 510 | U | 450 | U | 12 | U |
| Chrysene | 4200 | U | 3700 | U | 340 | U |
| cis-1,2-Dichloroethene | 260 | U | 220 | U | 5.8 | U |
| cis-1,3-Dichloropropene | 260 | U | 220 | U | 5.8 | U |
| Dibenzo(a,h)anthracene | 4200 | U | 3700 | U | 340 | U |

NA= Not Analyzed.

Table 4
Site Soil Data Summary

| | NTF-B75-16-20' | | NTF-B77-16-18' | | NTF-B78-16-18' | |
|---|---|---|---|---|---|---|
| Dibenzofuran | 4200 | U | 3700 | U | 340 | U |
| Dibromomethane | NA | | NA | | NA | |
| Dichlorodifluoromethane | NA | | NA | | NA | |
| Dibromochloromethane | 260 | U | 220 | U | 5.8 | U |
| Diethylphthalate | 4200 | U | 3700 | U | 340 | U |
| Dimethylphthalate | 4200 | U | 3700 | U | 340 | U |
| Di-n-butylphthalate | 4200 | U | 3700 | U | 340 | U |
| Di-n-octylphthalate | 4200 | U | 3700 | U | 340 | U |
| Ethylbenzene | 260 | U | 220 | U | 5.8 | U |
| Fluoranthene | 4200 | U | 3700 | U | 340 | U |
| Fluorene | 4200 | U | 3700 | U | 340 | U |
| Hexachlorobenzene | 4200 | U | 3700 | U | 340 | U |
| Hexachlorobutadiene | 4200 | U | 3700 | U | 340 | U |
| Hexachlorocyclopentadiene | 4200 | U | 3700 | U | 340 | U |
| Hexachloroethane | 4200 | U | 3700 | U | 340 | U |
| Indeno(1,2,3-cd)pyrene | 4200 | U | 3700 | U | 340 | U |
| Isophorone | 4200 | U | 3700 | U | 340 | U |
| Isopropylbenzene | NA | | NA | | NA | |
| m&p-Xylene | NA | | NA | | NA | |
| Methylene chloride (Dichloromethane) | 260 | U | 220 | U | 5.8 | U |
| Naphthalene | NA | | NA | | NA | |
| Naphthalene | 3000 | | 3700 | U | 340 | U |
| n-Butylbenzene | NA | | NA | | NA | |
| Nitrobenzene | 4200 | U | 3700 | U | 340 | U |
| N-Nitrosodimethylamine | NA | | NA | | NA | |
| n-Nitrosodi-n-propylamine | 4200 | U | 3700 | U | 340 | U |
| N-Nitrosodiphenylamine/Diphenylamine | 4200 | U | 3700 | U | 340 | U |
| n-Propylbenzene | NA | | NA | | NA | |
| o-Xylene | NA | | NA | | NA | |
| Pentachlorophenol | 22000 | U | 19000 | U | 1800 | U |
| Phenanthrene | 4200 | U | 2100 | | 340 | U |
| Phenol | 4200 | U | 3700 | U | 340 | U |
| p-Isopropyltoluene | NA | | NA | | NA | |
| Pyrene | 4200 | U | 3700 | U | 340 | U |
| sec-Butylbenzene | NA | | NA | | NA | |
| Styrene | 260 | U | 220 | U | 5.8 | U |
| tert-Butylbenzene | NA | | NA | | NA | |
| Tetrachloroethene | 260 | U | 220 | U | 5.8 | U |
| Toluene | 260 | U | 220 | U | 5.8 | U |
| trans-1,2-Dichloroethene | NA | | NA | | NA | |
| trans-1,3-Dichloropropene | 260 | U | 220 | U | 5.8 | U |
| Trichloroethene | 260 | U | 220 | U | 5.8 | U |
| Trichlorofluoromethane | NA | | NA | | NA | |
| Vinyl chloride | 510 | U | 450 | U | 12 | U |
| Xylenes, Total | 510 | U | 450 | U | 12 | U |

NA= Not Analyzed.

Table 4
Site Soil Data Summary

| | PCB-B19 (4-6') | | PCB-B20 (4-6') | | PCB-B21 (4-6') | |
|---|---|---|---|---|---|---|
| 1,1,1,2-Tetrachloroethane | 4.9 | U | 6.2 | U | 5.2 | U |
| 1,1,1-Trichloroethane | 4.9 | U | 6.2 | U | 5.2 | U |
| 1,1,2,2-Tetrachloroethane | 4.9 | U | 6.2 | U | 5.2 | U |
| 1,1,2-Trichloroethane | 4.9 | U | 6.2 | U | 5.2 | U |
| 1,1-Dichloroethane | 4.9 | U | 6.2 | U | 5.2 | U |
| 1,1-Dichloroethene | 4.9 | U | 6.2 | U | 5.2 | U |
| 1,1-Dichloropropylene | 4.9 | U | 6.2 | U | 5.2 | U |
| 1,2,3-Trichlorobenzene | 4.9 | U | 6.2 | U | 5.2 | U |
| 1,2,3-Trichloropropane | 4.9 | U | 6.2 | U | 5.2 | U |
| 1,2,4-Trichlorobenzene | 4.9 | U | 6.2 | U | 5.2 | U |
| 1,2,4-Trichlorobenzene | 370 | U | 410 | U | 350 | U |
| 1,2,4-Trimethylbenzene | 4.9 | U | 6.2 | U | 5.2 | U |
| 1,2-Dibromo-3-chloropropane | 4.9 | U | 6.2 | U | 5.2 | U |
| 1,2-Dibromoethane (EDB) | 4.9 | U | 6.2 | U | 5.2 | U |
| 1,2-Dichlorobenzene | 370 | U | 410 | U | 350 | U |
| 1,2-Dichloroethane | 4.9 | U | 6.2 | U | 5.2 | U |
| 1,2-Dichloropropane | 4.9 | U | 6.2 | U | 5.2 | U |
| 1,3,5-Trimethylbenzene | 4.9 | U | 6.2 | U | 5.2 | U |
| 1,3-Dichlorobenzene | 370 | U | 410 | U | 350 | U |
| 1,3-Dichloropropane | 4.9 | U | 6.2 | U | 5.2 | U |
| 1,4-Dichlorobenzene | 370 | U | 410 | U | 350 | U |
| 2,2-Dichloropropane | 4.9 | U | 6.2 | U | 5.2 | U |
| 2,2'-Oxybis(1-Chloropropane) | NA | | NA | | NA | |
| 2,4,5-Trichlorophenol | 370 | U | 410 | U | 350 | U |
| 2,4,6-Trichlorophenol | 370 | U | 410 | U | 350 | U |
| 2,4-Dichlorophenol | 370 | U | 410 | U | 350 | U |
| 2,4-Dimethylphenol | 370 | U | 410 | U | 350 | U |
| 2,4-Dinitrophenol | 1900 | U | 2100 | U | 1800 | U |
| 2,4-Dinitrotoluene | 370 | U | 410 | U | 350 | U |
| 2,6-Dinitrotoluene | 370 | U | 410 | U | 350 | U |
| 2-Butanone (MEK) | 24 | U | 31 | U | 26 | U |
| 2-Chloronaphthalene | 370 | U | 410 | U | 350 | U |
| 2-Chlorophenol | 370 | U | 410 | U | 350 | U |
| 2-Chlorotoluene | 4.9 | U | 6.2 | U | 5.2 | U |
| 2-Hexanone | NA | | NA | | NA | |
| 2-Methyl-4,6-dinitrophenol | 1900 | U | 2100 | U | 1800 | U |
| 2-Methylnaphthalene | 370 | U | 410 | U | 350 | U |
| 2-Methylphenol (o-cresol) | 370 | U | 410 | U | 350 | U |
| 2-Nitroaniline | 1900 | U | 2100 | U | 1800 | U |
| 2-Nitrophenol | 370 | U | 410 | U | 350 | U |
| 3&4-Methylphenol (m&p-cresol) | 370 | U | 410 | U | 350 | U |
| 3,3'-Dichlorobenzidine | 730 | U | 810 | U | 690 | U |
| 3-Nitroaniline | 1900 | U | 2100 | U | 1800 | U |
| 4,6-Dinitro-2-methylphenol | NA | | NA | | NA | |
| 4-Bromophenyl phenyl ether | 370 | U | 410 | U | 350 | U |
| 4-Chloro-3-methylphenol | 370 | U | 410 | U | 350 | U |
| 4-Chloroaniline | 730 | U | 810 | U | 690 | U |

NA= Not Analyzed.

Table 4
Site Soil Data Summary

| | PCB-B19 (4-6') | | PCB-B20 (4-6') | | PCB-B21 (4-6') | |
|---|---|---|---|---|---|---|
| 4-Chlorophenylphenyl ether | 370 | U | 410 | U | 350 | U |
| 4-Chlorotoluene | 4.9 | U | 6.2 | U | 5.2 | U |
| 4-Methyl-2-pentanone (MIBK) | 24 | U | 31 | U | 26 | U |
| 4-Nitroaniline | 1900 | U | 2100 | U | 1800 | U |
| 4-Nitrophenol | 1900 | U | 2100 | U | 1800 | U |
| Acenaphthene | 370 | U | 410 | U | 350 | U |
| Acenaphthylene | 370 | U | 410 | U | 350 | U |
| Acetone | 49 | U | 62 | U | 52 | U |
| Anthracene | 370 | U | 410 | U | 350 | U |
| Aroclor-1016 | 36 | U | 41 | U | 35 | U |
| Aroclor-1221 | 74 | U | 83 | U | 70 | U |
| Aroclor-1232 | 36 | U | 41 | U | 35 | U |
| Aroclor-1242 | 36 | U | 41 | U | 35 | U |
| Aroclor-1248 | 36 | U | 41 | U | 150 | |
| Aroclor-1254 | 36 | U | 41 | U | 100 | |
| Aroclor-1260 | 36 | U | 41 | U | 72 | |
| Benzene | 4.9 | U | 6.2 | U | 5.2 | U |
| Benzidine | 3000 | U | 3300 | U | 2800 | U |
| Benzo(a)anthracene | 370 | U | 410 | U | 350 | U |
| Benzo(a)pyrene | 370 | U | 410 | U | 350 | U |
| Benzo(b)fluoranthene | 370 | U | 410 | U | 350 | U |
| Benzo(g,h,i)perylene | 370 | U | 410 | U | 350 | U |
| Benzo(k)fluoranthene | 370 | U | 410 | U | 350 | U |
| Benzoic acid | 1900 | U | 2100 | U | 1800 | U |
| Benzyl alcohol | 370 | U | 410 | U | 350 | U |
| bis(2-Chloroethoxy)methane | 370 | U | 410 | U | 350 | U |
| bis(2-Chloroethyl)ether | 370 | U | 410 | U | 350 | U |
| bis(2-Chloroisopropyl)ether | 370 | U | 410 | U | 350 | U |
| bis(2-Ethylhexyl)phthalate | 370 | U | 410 | U | 350 | U |
| Bromobenzene | 4.9 | U | 6.2 | U | 5.2 | U |
| Bromochloromethane | 4.9 | U | 6.2 | U | 5.2 | U |
| Bromodichloromethane | 4.9 | U | 6.2 | U | 5.2 | U |
| Bromoform | 4.9 | U | 6.2 | U | 5.2 | U |
| Bromomethane | 9.8 | U | 12 | U | 10 | U |
| Butylbenzylphthalate | 370 | U | 410 | U | 350 | U |
| Carbazole | NA | | NA | | NA | |
| Carbon disulfide | NA | | NA | | NA | |
| Carbon tetrachloride | 4.9 | U | 6.2 | U | 5.2 | U |
| Chlorobenzene | 4.9 | U | 90 | | 5.2 | U |
| Chlorodibromomethane | 4.9 | U | 6.2 | U | 5.2 | U |
| Chloroethane | 9.8 | U | 12 | U | 10 | U |
| Chloroform | 4.9 | U | 6.2 | U | 5.2 | U |
| Chloromethane | 9.8 | U | 12 | U | 10 | U |
| Chrysene | 370 | U | 410 | U | 350 | U |
| cis-1,2-Dichloroethene | 4.9 | U | 6.2 | U | 5.2 | U |
| cis-1,3-Dichloropropene | NA | | NA | | NA | |
| Dibenzo(a,h)anthracene | 370 | U | 410 | U | 350 | U |

NA= Not Analyzed.

Table 4
Site Soil Data Summary

| | PCB-B19 (4-6') | | PCB-B20 (4-6') | | PCB-B21 (4-6') | |
|---|---|---|---|---|---|---|
| Dibenzofuran | 370 | U | 410 | U | 350 | U |
| Dibromomethane | 4.9 | U | 6.2 | U | 5.2 | U |
| Dichlorodifluoromethane | 4.9 | U | 6.2 | U | 5.2 | U |
| Dibromochloromethane | NA | | NA | | NA | |
| Diethylphthalate | 370 | U | 410 | U | 350 | U |
| Dimethylphthalate | 370 | U | 410 | U | 350 | U |
| Di-n-butylphthalate | 370 | U | 410 | U | 350 | U |
| Di-n-octylphthalate | 370 | U | 410 | U | 350 | U |
| Ethylbenzene | 4.9 | U | 6.2 | U | 5.2 | U |
| Fluoranthene | 370 | U | 410 | U | 350 | U |
| Fluorene | 370 | U | 410 | U | 350 | U |
| Hexachlorobenzene | 370 | U | 410 | U | 350 | U |
| Hexachlorobutadiene | 4.9 | U | 6.2 | U | 5.2 | U |
| Hexachlorocyclopentadiene | 370 | U | 410 | U | 350 | U |
| Hexachloroethane | 370 | U | 410 | U | 350 | U |
| Indeno(1,2,3-cd)pyrene | 370 | U | 410 | U | 350 | U |
| Isophorone | 370 | U | 410 | U | 350 | U |
| Isopropylbenzene | 4.9 | U | 6.2 | U | 5.2 | U |
| m&p-Xylene | 4.9 | U | 6.5 | | 5.2 | U |
| Methylene chloride (Dichloromethane) | 4.9 | U | 6.2 | U | 5.2 | U |
| Naphthalene | 4.9 | U | 6.2 | U | 5.2 | U |
| Naphthalene | 370 | U | 410 | U | 350 | U |
| n-Butylbenzene | 4.9 | U | 6.2 | U | 5.2 | U |
| Nitrobenzene | 370 | U | 410 | U | 350 | U |
| N-Nitrosodimethylamine | 370 | U | 410 | U | 350 | U |
| n-Nitrosodi-n-propylamine | 370 | U | 410 | U | 350 | U |
| N-Nitrosodiphenylamine/Diphenylamine | 370 | U | 410 | U | 350 | U |
| n-Propylbenzene | 4.9 | U | 6.2 | U | 5.2 | U |
| o-Xylene | 4.9 | U | 6.2 | U | 5.2 | U |
| Pentachlorophenol | 1900 | U | 2100 | U | 1800 | U |
| Phenanthrene | 370 | U | 410 | U | 350 | U |
| Phenol | 370 | U | 410 | U | 350 | U |
| p-Isopropyltoluene | 4.9 | U | 6.2 | U | 5.2 | U |
| Pyrene | 370 | U | 410 | U | 350 | U |
| sec-Butylbenzene | 4.9 | U | 6.2 | U | 5.2 | U |
| Styrene | 4.9 | U | 6.2 | U | 5.2 | U |
| tert-Butylbenzene | 4.9 | U | 6.2 | U | 5.2 | U |
| Tetrachloroethene | 4.9 | U | 6.2 | U | 5.2 | U |
| Toluene | 4.9 | U | 6.2 | U | 5.2 | U |
| trans-1,2-Dichloroethene | 4.9 | U | 6.2 | U | 5.2 | U |
| trans-1,3-Dichloropropene | NA | | NA | | NA | |
| Trichloroethene | 4.9 | U | 6.2 | U | 5.2 | U |
| Trichlorofluoromethane | 4.9 | U | 6.2 | U | 5.2 | U |
| Vinyl chloride | 9.8 | U | 12 | U | 10 | U |
| Xylenes, Total | NA | | NA | | NA | |

NA= Not Analyzed.

Table 4
Site Soil Data Summary

| | PCB-B23 (4-6') | | PCB-B24 (6-8') | | PCB-B25 (4-6') | |
|---|---|---|---|---|---|---|
| 1,1,1,2-Tetrachloroethane | 5.8 | U | 5.6 | U | 6.6 | U |
| 1,1,1-Trichloroethane | 5.8 | U | 5.6 | U | 6.6 | U |
| 1,1,2,2-Tetrachloroethane | 5.8 | U | 5.6 | U | 6.6 | U |
| 1,1,2-Trichloroethane | 5.8 | U | 5.6 | U | 6.6 | U |
| 1,1-Dichloroethane | 5.8 | U | 5.6 | U | 6.6 | U |
| 1,1-Dichloroethene | 5.8 | U | 5.6 | U | 6.6 | U |
| 1,1-Dichloropropylene | 5.8 | U | 5.6 | U | 6.6 | U |
| 1,2,3-Trichlorobenzene | 5.8 | U | 5.6 | U | 6.6 | U |
| 1,2,3-Trichloropropane | 5.8 | U | 5.6 | U | 6.6 | U |
| 1,2,4-Trichlorobenzene | 5.8 | U | 5.6 | U | 6.6 | U |
| 1,2,4-Trichlorobenzene | 390 | U | 410 | U | 440 | U |
| 1,2,4-Trimethylbenzene | 5.8 | U | 5.6 | U | 6.6 | U |
| 1,2-Dibromo-3-chloropropane | 5.8 | U | 5.6 | U | 6.6 | U |
| 1,2-Dibromoethane (EDB) | 5.8 | U | 5.6 | U | 6.6 | U |
| 1,2-Dichlorobenzene | 390 | U | 410 | U | 440 | U |
| 1,2-Dichloroethane | 5.8 | U | 5.6 | U | 6.6 | U |
| 1,2-Dichloropropane | 5.8 | U | 5.6 | U | 6.6 | U |
| 1,3,5-Trimethylbenzene | 5.8 | U | 5.6 | U | 6.6 | U |
| 1,3-Dichlorobenzene | 390 | U | 410 | U | 440 | U |
| 1,3-Dichloropropane | 5.8 | U | 5.6 | U | 6.6 | U |
| 1,4-Dichlorobenzene | 390 | U | 410 | U | 440 | U |
| 2,2-Dichloropropane | 5.8 | U | 5.6 | U | 6.6 | U |
| 2,2'-Oxybis(1-Chloropropane) | NA | | NA | | NA | |
| 2,4,5-Trichlorophenol | 390 | U | 410 | U | 440 | U |
| 2,4,6-Trichlorophenol | 390 | U | 410 | U | 440 | U |
| 2,4-Dichlorophenol | 390 | U | 410 | U | 440 | U |
| 2,4-Dimethylphenol | 390 | U | 410 | U | 440 | U |
| 2,4-Dinitrophenol | 2000 | U | 2100 | U | 2300 | U |
| 2,4-Dinitrotoluene | 390 | U | 410 | U | 440 | U |
| 2,6-Dinitrotoluene | 390 | U | 410 | U | 440 | U |
| 2-Butanone (MEK) | 29 | U | 28 | U | 33 | U |
| 2-Chloronaphthalene | 390 | U | 410 | U | 440 | U |
| 2-Chlorophenol | 390 | U | 410 | U | 440 | U |
| 2-Chlorotoluene | 5.8 | U | 5.6 | U | 6.6 | U |
| 2-Hexanone | NA | | NA | | NA | |
| 2-Methyl-4,6-dinitrophenol | 2000 | U | 2100 | U | 2300 | U |
| 2-Methylnaphthalene | 390 | U | 410 | U | 440 | U |
| 2-Methylphenol (o-cresol) | 390 | U | 410 | U | 440 | U |
| 2-Nitroaniline | 2000 | U | 2100 | U | 2300 | U |
| 2-Nitrophenol | 390 | U | 410 | U | 440 | U |
| 3&4-Methylphenol (m&p-cresol) | 390 | U | 410 | U | 440 | U |
| 3,3'-Dichlorobenzidine | 780 | U | 820 | U | 890 | U |
| 3-Nitroaniline | 2000 | U | 2100 | U | 2300 | U |
| 4,6-Dinitro-2-methylphenol | NA | | NA | | NA | |
| 4-Bromophenyl phenyl ether | 390 | U | 410 | U | 440 | U |
| 4-Chloro-3-methylphenol | 390 | U | 410 | U | 440 | U |
| 4-Chloroaniline | 780 | U | 820 | U | 890 | U |

NA= Not Analyzed.

Table 4
Site Soil Data Summary

| | PCB-B23 (4-6') | | PCB-B24 (6-8') | | PCB-B25 (4-6') | |
|---|---|---|---|---|---|---|
| 4-Chlorophenylphenyl ether | 390 | U | 410 | U | 440 | U |
| 4-Chlorotoluene | 5.8 | U | 5.6 | U | 6.6 | U |
| 4-Methyl-2-pentanone (MIBK) | 29 | U | 28 | U | 33 | U |
| 4-Nitroaniline | 2000 | U | 2100 | U | 2300 | U |
| 4-Nitrophenol | 2000 | U | 2100 | U | 2300 | U |
| Acenaphthene | 390 | U | 410 | U | 440 | U |
| Acenaphthylene | 390 | U | 410 | U | 440 | U |
| Acetone | 58 | U | 56 | U | 66 | U |
| Anthracene | 390 | U | 410 | U | 440 | U |
| Aroclor-1016 | 39 | U | 2100 | U | 44 | U |
| Aroclor-1221 | 79 | U | 4200 | U | 90 | U |
| Aroclor-1232 | 39 | U | 2100 | U | 44 | U |
| Aroclor-1242 | 220 | | 2100 | U | 44 | U |
| Aroclor-1248 | 39 | U | 7400 | | 44 | U |
| Aroclor-1254 | 100 | | 4400 | | 44 | U |
| Aroclor-1260 | 84 | | 2400 | | 44 | U |
| Benzene | 5.8 | U | 5.6 | U | 6.6 | U |
| Benzidine | 3200 | U | 3400 | U | 3600 | U |
| Benzo(a)anthracene | 390 | U | 410 | U | 440 | U |
| Benzo(a)pyrene | 390 | U | 410 | U | 440 | U |
| Benzo(b)fluoranthene | 390 | U | 410 | U | 440 | U |
| Benzo(g,h,i)perylene | 390 | U | 410 | U | 440 | U |
| Benzo(k)fluoranthene | 390 | U | 410 | U | 440 | U |
| Benzoic acid | 2000 | U | 2100 | U | 2300 | U |
| Benzyl alcohol | 390 | U | 410 | U | 440 | U |
| bis(2-Chloroethoxy)methane | 390 | U | 410 | U | 440 | U |
| bis(2-Chloroethyl)ether | 390 | U | 410 | U | 440 | U |
| bis(2-Chloroisopropyl)ether | 390 | U | 410 | U | 440 | U |
| bis(2-Ethylhexyl)phthalate | 390 | U | 410 | U | 440 | U |
| Bromobenzene | 5.8 | U | 5.6 | U | 6.6 | U |
| Bromochloromethane | 5.8 | U | 5.6 | U | 6.6 | U |
| Bromodichloromethane | 5.8 | U | 5.6 | U | 6.6 | U |
| Bromoform | 5.8 | U | 5.6 | U | 6.6 | U |
| Bromomethane | 12 | U | 11 | U | 13 | U |
| Butylbenzylphthalate | 390 | U | 410 | U | 440 | U |
| Carbazole | NA | | NA | | NA | |
| Carbon disulfide | NA | | NA | | NA | |
| Carbon tetrachloride | 5.8 | U | 5.6 | U | 6.6 | U |
| Chlorobenzene | 20 | | 19 | | 9.4 | |
| Chlorodibromomethane | 5.8 | U | 5.6 | U | 6.6 | U |
| Chloroethane | 12 | U | 11 | U | 13 | U |
| Chloroform | 5.8 | U | 5.6 | U | 6.6 | U |
| Chloromethane | 12 | U | 11 | U | 13 | U |
| Chrysene | 390 | U | 410 | U | 440 | U |
| cis-1,2-Dichloroethene | 5.8 | U | 5.6 | U | 6.6 | U |
| cis-1,3-Dichloropropene | NA | | NA | | NA | |
| Dibenzo(a,h)anthracene | 390 | U | 410 | U | 440 | U |

NA= Not Analyzed.

Table 4
Site Soil Data Summary

| | PCB-B23 (4-6') | | PCB-B24 (6-8') | | PCB-B25 (4-6') | |
|---|---|---|---|---|---|---|
| Dibenzofuran | 390 | U | 410 | U | 440 | U |
| Dibromomethane | 5.8 | U | 5.6 | U | 6.6 | U |
| Dichlorodifluoromethane | 5.8 | U | 5.6 | U | 6.6 | U |
| Dibromochloromethane | NA | | NA | | NA | |
| Diethylphthalate | 390 | U | 410 | U | 440 | U |
| Dimethylphthalate | 390 | U | 410 | U | 440 | U |
| Di-n-butylphthalate | 390 | U | 410 | U | 440 | U |
| Di-n-octylphthalate | 390 | U | 410 | U | 440 | U |
| Ethylbenzene | 5.8 | U | 5.6 | U | 6.6 | U |
| Fluoranthene | 390 | U | 410 | U | 440 | U |
| Fluorene | 390 | U | 410 | U | 440 | U |
| Hexachlorobenzene | 390 | U | 410 | U | 440 | U |
| Hexachlorobutadiene | 5.8 | U | 5.6 | U | 6.6 | U |
| Hexachlorocyclopentadiene | 390 | U | 410 | U | 440 | U |
| Hexachloroethane | 390 | U | 410 | U | 440 | U |
| Indeno(1,2,3-cd)pyrene | 390 | U | 410 | U | 440 | U |
| Isophorone | 390 | U | 410 | U | 440 | U |
| Isopropylbenzene | 5.8 | U | 5.6 | U | 6.6 | U |
| m&p-Xylene | 5.8 | U | 5.6 | U | 6.6 | U |
| Methylene chloride (Dichloromethane) | 5.8 | U | 5.6 | U | 6.6 | U |
| Naphthalene | 5.8 | U | 5.6 | U | 6.6 | U |
| Naphthalene | 390 | U | 410 | U | 440 | U |
| n-Butylbenzene | 5.8 | U | 5.6 | U | 6.6 | U |
| Nitrobenzene | 390 | U | 410 | U | 440 | U |
| N-Nitrosodimethylamine | 390 | U | 410 | U | 440 | U |
| n-Nitrosodi-n-propylamine | 390 | U | 410 | U | 440 | U |
| N-Nitrosodiphenylamine/Diphenylamine | 390 | U | 410 | U | 440 | U |
| n-Propylbenzene | 5.8 | U | 5.6 | U | 6.6 | U |
| o-Xylene | 5.8 | U | 5.6 | U | 6.6 | U |
| Pentachlorophenol | 2000 | U | 2100 | U | 2300 | U |
| Phenanthrene | 390 | U | 410 | U | 440 | U |
| Phenol | 390 | U | 410 | U | 440 | U |
| p-Isopropyltoluene | 5.8 | U | 5.6 | U | 6.6 | U |
| Pyrene | 390 | U | 410 | U | 440 | U |
| sec-Butylbenzene | 5.8 | U | 5.6 | U | 6.6 | U |
| Styrene | 5.8 | U | 5.6 | U | 6.6 | U |
| tert-Butylbenzene | 5.8 | U | 5.6 | U | 6.6 | U |
| Tetrachloroethene | 5.8 | U | 5.6 | U | 6.6 | U |
| Toluene | 5.8 | U | 5.6 | U | 6.6 | U |
| trans-1,2-Dichloroethene | 5.8 | U | 5.6 | U | 6.6 | U |
| trans-1,3-Dichloropropene | NA | | NA | | NA | |
| Trichloroethene | 5.8 | U | 5.6 | U | 6.6 | U |
| Trichlorofluoromethane | 5.8 | U | 5.6 | U | 6.6 | U |
| Vinyl chloride | 12 | U | 11 | U | 13 | U |
| Xylenes, Total | NA | | NA | | NA | |

NA= Not Analyzed.

Table 4
Site Soil Data Summary

| | PCB-B26 (2-4') | | PCB-B27 (4-6') | | PCB-B60-0-2' | |
|---|---|---|---|---|---|---|
| 1,1,1,2-Tetrachloroethane | 67000 | U | 6.6 | U | NA | |
| 1,1,1-Trichloroethane | 67000 | U | 6.6 | U | NA | |
| 1,1,2,2-Tetrachloroethane | 67000 | U | 6.6 | U | NA | |
| 1,1,2-Trichloroethane | 67000 | U | 6.6 | U | NA | |
| 1,1-Dichloroethane | 67000 | U | 6.6 | U | NA | |
| 1,1-Dichloroethene | 67000 | U | 6.6 | U | NA | |
| 1,1-Dichloropropylene | 67000 | U | 6.6 | U | NA | |
| 1,2,3-Trichlorobenzene | 260000 | | 6.6 | U | NA | |
| 1,2,3-Trichloropropane | 67000 | U | 6.6 | U | NA | |
| 1,2,4-Trichlorobenzene | 590000 | | 6.6 | U | 350 | U |
| 1,2,4-Trichlorobenzene | 7200000 | | 460 | U | NA | |
| 1,2,4-Trimethylbenzene | 67000 | U | 6.6 | U | NA | |
| 1,2-Dibromo-3-chloropropane | 67000 | U | 6.6 | U | NA | |
| 1,2-Dibromoethane (EDB) | 67000 | U | 6.6 | U | NA | |
| 1,2-Dichlorobenzene | 880000 | U | 460 | U | 350 | U |
| 1,2-Dichloroethane | 67000 | U | 6.6 | U | NA | |
| 1,2-Dichloropropane | 67000 | U | 6.6 | U | NA | |
| 1,3,5-Trimethylbenzene | 67000 | U | 6.6 | U | NA | |
| 1,3-Dichlorobenzene | 880000 | U | 460 | U | 350 | U |
| 1,3-Dichloropropane | 67000 | U | 6.6 | U | NA | |
| 1,4-Dichlorobenzene | 4000000 | | 460 | U | 350 | U |
| 2,2-Dichloropropane | 67000 | U | 6.6 | U | NA | |
| 2,2'-Oxybis(1-Chloropropane) | NA | | NA | | 350 | U |
| 2,4,5-Trichlorophenol | 880000 | U | 460 | U | 350 | U |
| 2,4,6-Trichlorophenol | 880000 | U | 460 | U | 350 | U |
| 2,4-Dichlorophenol | 880000 | U | 460 | U | 350 | U |
| 2,4-Dimethylphenol | 880000 | U | 460 | U | 350 | U |
| 2,4-Dinitrophenol | 4500000 | U | 2400 | U | 1800 | U |
| 2,4-Dinitrotoluene | 880000 | U | 460 | U | 350 | U |
| 2,6-Dinitrotoluene | 880000 | U | 460 | U | 350 | U |
| 2-Butanone (MEK) | 340000 | U | 33 | U | NA | |
| 2-Chloronaphthalene | 880000 | U | 460 | U | 350 | U |
| 2-Chlorophenol | 880000 | U | 460 | U | 350 | U |
| 2-Chlorotoluene | 67000 | U | 6.6 | U | NA | |
| 2-Hexanone | NA | | NA | | NA | |
| 2-Methyl-4,6-dinitrophenol | 4500000 | U | 2400 | U | NA | |
| 2-Methylnaphthalene | 880000 | U | 460 | U | 350 | U |
| 2-Methylphenol (o-cresol) | 880000 | U | 460 | U | 350 | U |
| 2-Nitroaniline | 4500000 | U | 2400 | U | 1800 | U |
| 2-Nitrophenol | 880000 | U | 460 | U | 350 | U |
| 3&4-Methylphenol (m&p-cresol) | 880000 | U | 460 | U | 700 | U |
| 3,3'-Dichlorobenzidine | 1800000 | U | 910 | U | 350 | U |
| 3-Nitroaniline | 4500000 | U | 2400 | U | 1800 | U |
| 4,6-Dinitro-2-methylphenol | NA | | NA | | 1800 | U |
| 4-Bromophenyl phenyl ether | 880000 | U | 460 | U | 350 | U |
| 4-Chloro-3-methylphenol | 880000 | U | 460 | U | 350 | U |
| 4-Chloroaniline | 1800000 | U | 910 | U | 700 | U |

NA= Not Analyzed.

Table 4
Site Soil Data Summary

| | PCB-B26 (2-4') | | PCB-B27 (4-6') | | PCB-B60-0-2' | |
|---|---|---|---|---|---|---|
| 4-Chlorophenylphenyl ether | 880000 | U | 460 | U | 350 | U |
| 4-Chlorotoluene | 67000 | U | 6.6 | U | NA | |
| 4-Methyl-2-pentanone (MIBK) | 340000 | U | 33 | U | NA | |
| 4-Nitroaniline | 4500000 | U | 2400 | U | 1800 | U |
| 4-Nitrophenol | 4500000 | U | 2400 | U | 1800 | U |
| Acenaphthene | 880000 | U | 480 | | 350 | U |
| Acenaphthylene | 880000 | U | 460 | U | 350 | U |
| Acetone | 670000 | U | 66 | U | NA | |
| Anthracene | 880000 | U | 1200 | | 200 | |
| Aroclor-1016 | 440000 | U | 45 | U | 700 | U |
| Aroclor-1221 | 890000 | U | 92 | U | 1400 | U |
| Aroclor-1232 | 440000 | U | 45 | U | 700 | U |
| Aroclor-1242 | 5000000 | | 45 | U | 700 | U |
| Aroclor-1248 | 440000 | U | 210 | | 9500 | |
| Aroclor-1254 | 2300000 | | 170 | | 18000 | |
| Aroclor-1260 | 1900000 | | 220 | | 20000 | |
| Benzene | 67000 | U | 6.6 | U | NA | |
| Benzidine | 7200000 | U | 3700 | U | NA | |
| Benzo(a)anthracene | 880000 | U | 1700 | | 460 | |
| Benzo(a)pyrene | 880000 | U | 1400 | | 440 | |
| Benzo(b)fluoranthene | 880000 | U | 1700 | | 650 | |
| Benzo(g,h,i)perylene | 880000 | U | 510 | | 350 | |
| Benzo(k)fluoranthene | 880000 | U | 730 | | 350 | U |
| Benzoic acid | 4500000 | U | 2400 | U | NA | |
| Benzyl alcohol | 880000 | U | 460 | U | NA | |
| bis(2-Chloroethoxy)methane | 880000 | U | 460 | U | 350 | U |
| bis(2-Chloroethyl)ether | 880000 | U | 460 | U | 350 | U |
| bis(2-Chloroisopropyl)ether | 880000 | U | 460 | U | NA | |
| bis(2-Ethylhexyl)phthalate | 880000 | U | 460 | U | 210 | |
| Bromobenzene | 67000 | U | 6.6 | U | NA | |
| Bromochloromethane | 67000 | U | 6.6 | U | NA | |
| Bromodichloromethane | 67000 | U | 6.6 | U | NA | |
| Bromoform | 67000 | U | 6.6 | U | NA | |
| Bromomethane | 130000 | U | 13 | U | NA | |
| Butylbenzylphthalate | 880000 | U | 460 | U | 350 | U |
| Carbazole | NA | | NA | | 350 | U |
| Carbon disulfide | NA | | NA | | NA | |
| Carbon tetrachloride | 67000 | U | 6.6 | U | NA | |
| Chlorobenzene | 67000 | U | 50 | | NA | |
| Chlorodibromomethane | 67000 | U | 6.6 | U | NA | |
| Chloroethane | 130000 | U | 13 | U | NA | |
| Chloroform | 67000 | U | 6.6 | U | NA | |
| Chloromethane | 130000 | U | 13 | U | NA | |
| Chrysene | 880000 | U | 1600 | | 560 | |
| cis-1,2-Dichloroethene | 67000 | U | 7 | | NA | |
| cis-1,3-Dichloropropene | NA | | NA | | NA | |
| Dibenzo(a,h)anthracene | 880000 | U | 460 | U | 350 | U |

NA= Not Analyzed.

Table 4
Site Soil Data Summary

| | PCB-B26 (2-4') | | PCB-B27 (4-6') | | PCB-B60-0-2' | |
|---|---|---|---|---|---|---|
| Dibenzofuran | 880000 | U | 460 | U | 350 | U |
| Dibromomethane | 67000 | U | 6.6 | U | NA | |
| Dichlorodifluoromethane | 67000 | U | 6.6 | U | NA | |
| Dibromochloromethane | NA | | NA | | NA | |
| Diethylphthalate | 880000 | U | 460 | U | 350 | U |
| Dimethylphthalate | 880000 | U | 460 | U | 350 | U |
| Di-n-butylphthalate | 880000 | U | 460 | U | 350 | U |
| Di-n-octylphthalate | 880000 | U | 460 | U | 350 | U |
| Ethylbenzene | 67000 | U | 6.6 | U | NA | |
| Fluoranthene | 880000 | U | 2800 | | 1100 | |
| Fluorene | 880000 | U | 560 | | 350 | U |
| Hexachlorobenzene | 880000 | U | 460 | U | 350 | U |
| Hexachlorobutadiene | 67000 | U | 6.6 | U | 350 | U |
| Hexachlorocyclopentadiene | 880000 | U | 460 | U | 350 | U |
| Hexachloroethane | 880000 | U | 460 | U | 350 | U |
| Indeno(1,2,3-cd)pyrene | 880000 | U | 460 | U | 240 | |
| Isophorone | 880000 | U | 460 | U | 350 | U |
| Isopropylbenzene | 67000 | U | 6.6 | U | NA | |
| m&p-Xylene | 67000 | U | 6.6 | U | NA | |
| Methylene chloride (Dichloromethane) | 67000 | U | 6.6 | U | NA | |
| Naphthalene | 67000 | U | 6.6 | U | 350 | U |
| Naphthalene | 880000 | U | 460 | U | NA | |
| n-Butylbenzene | 67000 | U | 6.6 | U | NA | |
| Nitrobenzene | 880000 | U | 460 | U | 350 | U |
| N-Nitrosodimethylamine | 880000 | U | 460 | U | NA | |
| n-Nitrosodi-n-propylamine | 880000 | U | 460 | U | 350 | U |
| N-Nitrosodiphenylamine/Diphenylamine | 880000 | U | 460 | U | 350 | U |
| n-Propylbenzene | 67000 | U | 6.6 | U | NA | |
| o-Xylene | 67000 | U | 6.6 | U | NA | |
| Pentachlorophenol | 4500000 | U | 2400 | U | 1800 | U |
| Phenanthrene | 880000 | U | 4700 | | 850 | |
| Phenol | 880000 | U | 1000 | | 350 | U |
| p-Isopropyltoluene | 67000 | U | 6.6 | U | NA | |
| Pyrene | 880000 | U | 3800 | | 780 | |
| sec-Butylbenzene | 67000 | U | 6.6 | U | NA | |
| Styrene | 67000 | U | 6.6 | U | NA | |
| tert-Butylbenzene | 67000 | U | 6.6 | U | NA | |
| Tetrachloroethene | 67000 | U | 6.6 | U | NA | |
| Toluene | 67000 | U | 6.6 | U | NA | |
| trans-1,2-Dichloroethene | 67000 | U | 6.6 | U | NA | |
| trans-1,3-Dichloropropene | NA | | NA | | NA | |
| Trichloroethene | 67000 | U | 6.6 | U | NA | |
| Trichlorofluoromethane | 67000 | U | 6.6 | U | NA | |
| Vinyl chloride | 130000 | U | 13 | U | NA | |
| Xylenes, Total | NA | | NA | | NA | |

NA= Not Analyzed.

Table 4
Site Soil Data Summary

| | PCB-B60-4-6' | | PCB-B61-0-2' | |
|---|---|---|---|---|
| 1,1,1,2-Tetrachloroethane | NA | | NA | |
| 1,1,1-Trichloroethane | NA | | NA | |
| 1,1,2,2-Tetrachloroethane | NA | | NA | |
| 1,1,2-Trichloroethane | NA | | NA | |
| 1,1-Dichloroethane | NA | | NA | |
| 1,1-Dichloroethene | NA | | NA | |
| 1,1-Dichloropropylene | NA | | NA | |
| 1,2,3-Trichlorobenzene | NA | | NA | |
| 1,2,3-Trichloropropane | NA | | NA | |
| 1,2,4-Trichlorobenzene | 450 | U | 390 | U |
| 1,2,4-Trichlorobenzene | NA | | NA | |
| 1,2,4-Trimethylbenzene | NA | | NA | |
| 1,2-Dibromo-3-chloropropane | NA | | NA | |
| 1,2-Dibromoethane (EDB) | NA | | NA | |
| 1,2-Dichlorobenzene | 450 | U | 390 | U |
| 1,2-Dichloroethane | NA | | NA | |
| 1,2-Dichloropropane | NA | | NA | |
| 1,3,5-Trimethylbenzene | NA | | NA | |
| 1,3-Dichlorobenzene | 450 | U | 390 | U |
| 1,3-Dichloropropane | NA | | NA | |
| 1,4-Dichlorobenzene | 450 | U | 390 | U |
| 2,2-Dichloropropane | NA | | NA | |
| 2,2'-Oxybis(1-Chloropropane) | 450 | U | 390 | U |
| 2,4,5-Trichlorophenol | 450 | U | 390 | U |
| 2,4,6-Trichlorophenol | 450 | U | 390 | U |
| 2,4-Dichlorophenol | 450 | U | 390 | U |
| 2,4-Dimethylphenol | 450 | U | 390 | U |
| 2,4-Dinitrophenol | 2300 | U | 2000 | U |
| 2,4-Dinitrotoluene | 450 | U | 390 | U |
| 2,6-Dinitrotoluene | 450 | U | 390 | U |
| 2-Butanone (MEK) | NA | | NA | |
| 2-Chloronaphthalene | 450 | U | 390 | U |
| 2-Chlorophenol | 450 | U | 390 | U |
| 2-Chlorotoluene | NA | | NA | |
| 2-Hexanone | NA | | NA | |
| 2-Methyl-4,6-dinitrophenol | NA | | NA | |
| 2-Methylnaphthalene | 450 | U | 390 | U |
| 2-Methylphenol (o-cresol) | 450 | U | 390 | U |
| 2-Nitroaniline | 2300 | U | 2000 | U |
| 2-Nitrophenol | 450 | U | 390 | U |
| 3&4-Methylphenol (m&p-cresol) | 900 | U | 780 | U |
| 3,3'-Dichlorobenzidine | 450 | U | 390 | U |
| 3-Nitroaniline | 2300 | U | 2000 | U |
| 4,6-Dinitro-2-methylphenol | 2300 | U | 2000 | U |
| 4-Bromophenyl phenyl ether | 450 | U | 390 | U |
| 4-Chloro-3-methylphenol | 450 | U | 390 | U |
| 4-Chloroaniline | 900 | U | 780 | U |

NA= Not Analyzed.

Table 4
Site Soil Data Summary

| | PCB-B60-4-6' | | PCB-B61-0-2' | |
|---|---|---|---|---|
| 4-Chlorophenylphenyl ether | 450 | U | 390 | U |
| 4-Chlorotoluene | NA | | NA | |
| 4-Methyl-2-pentanone (MIBK) | NA | | NA | |
| 4-Nitroaniline | 2300 | U | 2000 | U |
| 4-Nitrophenol | 2300 | U | 2000 | U |
| Acenaphthene | 450 | U | 390 | U |
| Acenaphthylene | 450 | U | 390 | U |
| Acetone | NA | | NA | |
| Anthracene | 450 | U | 390 | U |
| Aroclor-1016 | 45 | U | 780 | U |
| Aroclor-1221 | 92 | U | 1600 | U |
| Aroclor-1232 | 45 | U | 780 | U |
| Aroclor-1242 | 87 | | 780 | U |
| Aroclor-1248 | 45 | U | 780 | U |
| Aroclor-1254 | 68 | | 4200 | |
| Aroclor-1260 | 63 | | 3200 | |
| Benzene | NA | | NA | |
| Benzidine | NA | | NA | |
| Benzo(a)anthracene | 450 | U | 390 | U |
| Benzo(a)pyrene | 450 | U | 390 | U |
| Benzo(b)fluoranthene | 450 | U | 390 | U |
| Benzo(g,h,i)perylene | 450 | U | 390 | U |
| Benzo(k)fluoranthene | 450 | U | 390 | U |
| Benzoic acid | NA | | NA | |
| Benzyl alcohol | NA | | NA | |
| bis(2-Chloroethoxy)methane | 450 | U | 390 | U |
| bis(2-Chloroethyl)ether | 450 | U | 390 | U |
| bis(2-Chloroisopropyl)ether | NA | | NA | |
| bis(2-Ethylhexyl)phthalate | 450 | U | 390 | U |
| Bromobenzene | NA | | NA | |
| Bromochloromethane | NA | | NA | |
| Bromodichloromethane | NA | | NA | |
| Bromoform | NA | | NA | |
| Bromomethane | NA | | NA | |
| Butylbenzylphthalate | 450 | U | 390 | U |
| Carbazole | 450 | U | 390 | U |
| Carbon disulfide | NA | | NA | |
| Carbon tetrachloride | NA | | NA | |
| Chlorobenzene | NA | | NA | |
| Chlorodibromomethane | NA | | NA | |
| Chloroethane | NA | | NA | |
| Chloroform | NA | | NA | |
| Chloromethane | NA | | NA | |
| Chrysene | 450 | U | 390 | U |
| cis-1,2-Dichloroethene | NA | | NA | |
| cis-1,3-Dichloropropene | NA | | NA | |
| Dibenzo(a,h)anthracene | 450 | U | 390 | U |

NA= Not Analyzed.

Table 4
Site Soil Data Summary

| | PCB-B60-4-6' | | PCB-B61-0-2' | |
|---|---|---|---|---|
| Dibenzofuran | 450 | U | 390 | U |
| Dibromomethane | NA | | NA | |
| Dichlorodifluoromethane | NA | | NA | |
| Dibromochloromethane | NA | | NA | |
| Diethylphthalate | 450 | U | 390 | U |
| Dimethylphthalate | 450 | U | 390 | U |
| Di-n-butylphthalate | 450 | U | 390 | U |
| Di-n-octylphthalate | 450 | U | 390 | U |
| Ethylbenzene | NA | | NA | |
| Fluoranthene | 450 | U | 390 | U |
| Fluorene | 450 | U | 390 | U |
| Hexachlorobenzene | 450 | U | 390 | U |
| Hexachlorobutadiene | 450 | U | 390 | U |
| Hexachlorocyclopentadiene | 450 | U | 390 | U |
| Hexachloroethane | 450 | U | 390 | U |
| Indeno(1,2,3-cd)pyrene | 450 | U | 390 | U |
| Isophorone | 450 | U | 390 | U |
| Isopropylbenzene | NA | | NA | |
| m&p-Xylene | NA | | NA | |
| Methylene chloride (Dichloromethane) | NA | | NA | |
| Naphthalene | 450 | U | 390 | U |
| Naphthalene | NA | | NA | |
| n-Butylbenzene | NA | | NA | |
| Nitrobenzene | 450 | U | 390 | U |
| N-Nitrosodimethylamine | NA | | NA | |
| n-Nitrosodi-n-propylamine | 450 | U | 390 | U |
| N-Nitrosodiphenylamine/Diphenylamine | 450 | U | 390 | U |
| n-Propylbenzene | NA | | NA | |
| o-Xylene | NA | | NA | |
| Pentachlorophenol | 2300 | U | 2000 | U |
| Phenanthrene | 450 | U | 390 | U |
| Phenol | 450 | U | 390 | U |
| p-Isopropyltoluene | NA | | NA | |
| Pyrene | 450 | U | 390 | U |
| sec-Butylbenzene | NA | | NA | |
| Styrene | NA | | NA | |
| tert-Butylbenzene | NA | | NA | |
| Tetrachloroethene | NA | | NA | |
| Toluene | NA | | NA | |
| trans-1,2-Dichloroethene | NA | | NA | |
| trans-1,3-Dichloropropene | NA | | NA | |
| Trichloroethene | NA | | NA | |
| Trichlorofluoromethane | NA | | NA | |
| Vinyl chloride | NA | | NA | |
| Xylenes, Total | NA | | NA | |

NA= Not Analyzed.

Table 4
Site Soil Data Summary

| | PCB-B61-4-6' | | PCB-B62-2-4' | |
|---|---|---|---|---|
| 1,1,1,2-Tetrachloroethane | NA | | NA | |
| 1,1,1-Trichloroethane | NA | | NA | |
| 1,1,2,2-Tetrachloroethane | NA | | NA | |
| 1,1,2-Trichloroethane | NA | | NA | |
| 1,1-Dichloroethane | NA | | NA | |
| 1,1-Dichloroethene | NA | | NA | |
| 1,1-Dichloropropylene | NA | | NA | |
| 1,2,3-Trichlorobenzene | NA | | NA | |
| 1,2,3-Trichloropropane | NA | | NA | |
| 1,2,4-Trichlorobenzene | 460 | U | 440 | U |
| 1,2,4-Trichlorobenzene | NA | | NA | |
| 1,2,4-Trimethylbenzene | NA | | NA | |
| 1,2-Dibromo-3-chloropropane | NA | | NA | |
| 1,2-Dibromoethane (EDB) | NA | | NA | |
| 1,2-Dichlorobenzene | 460 | U | 440 | U |
| 1,2-Dichloroethane | NA | | NA | |
| 1,2-Dichloropropane | NA | | NA | |
| 1,3,5-Trimethylbenzene | NA | | NA | |
| 1,3-Dichlorobenzene | 460 | U | 440 | U |
| 1,3-Dichloropropane | NA | | NA | |
| 1,4-Dichlorobenzene | 460 | U | 440 | U |
| 2,2-Dichloropropane | NA | | NA | |
| 2,2'-Oxybis(1-Chloropropane) | 460 | U | 440 | U |
| 2,4,5-Trichlorophenol | 460 | U | 440 | U |
| 2,4,6-Trichlorophenol | 460 | U | 440 | U |
| 2,4-Dichlorophenol | 460 | U | 440 | U |
| 2,4-Dimethylphenol | 460 | U | 440 | U |
| 2,4-Dinitrophenol | 2400 | U | 2300 | U |
| 2,4-Dinitrotoluene | 460 | U | 440 | U |
| 2,6-Dinitrotoluene | 460 | U | 440 | U |
| 2-Butanone (MEK) | NA | | NA | |
| 2-Chloronaphthalene | 460 | U | 440 | U |
| 2-Chlorophenol | 460 | U | 440 | U |
| 2-Chlorotoluene | NA | | NA | |
| 2-Hexanone | NA | | NA | |
| 2-Methyl-4,6-dinitrophenol | NA | | NA | |
| 2-Methylnaphthalene | 460 | U | 440 | U |
| 2-Methylphenol (o-cresol) | 460 | U | 440 | U |
| 2-Nitroaniline | 2400 | U | 2300 | U |
| 2-Nitrophenol | 460 | U | 440 | U |
| 3&4-Methylphenol (m&p-cresol) | 930 | U | 890 | U |
| 3,3'-Dichlorobenzidine | 460 | U | 440 | U |
| 3-Nitroaniline | 2400 | U | 2300 | U |
| 4,6-Dinitro-2-methylphenol | 2400 | U | 2300 | U |
| 4-Bromophenyl phenyl ether | 460 | U | 440 | U |
| 4-Chloro-3-methylphenol | 460 | U | 440 | U |
| 4-Chloroaniline | 930 | U | 890 | U |

NA= Not Analyzed.

Table 4
Site Soil Data Summary

| | PCB-B61-4-6' | | PCB-B62-2-4' | |
|---|---|---|---|---|
| 4-Chlorophenylphenyl ether | 460 | U | 440 | U |
| 4-Chlorotoluene | NA | | NA | |
| 4-Methyl-2-pentanone (MIBK) | NA | | NA | |
| 4-Nitroaniline | 2400 | U | 2300 | U |
| 4-Nitrophenol | 2400 | U | 2300 | U |
| Acenaphthene | 460 | U | 440 | U |
| Acenaphthylene | 460 | U | 440 | U |
| Acetone | NA | | NA | |
| Anthracene | 460 | U | 440 | U |
| Aroclor-1016 | 46 | U | 44 | U |
| Aroclor-1221 | 94 | U | 90 | U |
| Aroclor-1232 | 46 | U | 44 | U |
| Aroclor-1242 | 46 | U | 44 | U |
| Aroclor-1248 | 46 | U | 21 | J |
| Aroclor-1254 | 46 | U | 33 | J |
| Aroclor-1260 | 46 | U | 44 | U |
| Benzene | NA | | NA | |
| Benzidine | NA | | NA | |
| Benzo(a)anthracene | 460 | U | 440 | U |
| Benzo(a)pyrene | 460 | U | 440 | U |
| Benzo(b)fluoranthene | 460 | U | 380 | J |
| Benzo(g,h,i)perylene | 460 | U | 440 | U |
| Benzo(k)fluoranthene | 460 | U | 440 | U |
| Benzoic acid | NA | | NA | |
| Benzyl alcohol | NA | | NA | |
| bis(2-Chloroethoxy)methane | 460 | U | 440 | U |
| bis(2-Chloroethyl)ether | 460 | U | 440 | U |
| bis(2-Chloroisopropyl)ether | NA | | NA | |
| bis(2-Ethylhexyl)phthalate | 300 | J | 440 | U |
| Bromobenzene | NA | | NA | |
| Bromochloromethane | NA | | NA | |
| Bromodichloromethane | NA | | NA | |
| Bromoform | NA | | NA | |
| Bromomethane | NA | | NA | |
| Butylbenzylphthalate | 460 | U | 440 | U |
| Carbazole | 460 | U | 440 | U |
| Carbon disulfide | NA | | NA | |
| Carbon tetrachloride | NA | | NA | |
| Chlorobenzene | NA | | NA | |
| Chlorodibromomethane | NA | | NA | |
| Chloroethane | NA | | NA | |
| Chloroform | NA | | NA | |
| Chloromethane | NA | | NA | |
| Chrysene | 460 | U | 300 | J |
| cis-1,2-Dichloroethene | NA | | NA | |
| cis-1,3-Dichloropropene | NA | | NA | |
| Dibenzo(a,h)anthracene | 460 | U | 440 | U |

NA= Not Analyzed.

Table 4
Site Soil Data Summary

| | PCB-B61-4-6' | | PCB-B62-2-4' | |
|---|---|---|---|---|
| Dibenzofuran | 460 | U | 440 | U |
| Dibromomethane | NA | | NA | |
| Dichlorodifluoromethane | NA | | NA | |
| Dibromochloromethane | NA | | NA | |
| Diethylphthalate | 460 | U | 440 | U |
| Dimethylphthalate | 460 | U | 440 | U |
| Di-n-butylphthalate | 460 | U | 440 | U |
| Di-n-octylphthalate | 460 | U | 440 | U |
| Ethylbenzene | NA | | NA | |
| Fluoranthene | 460 | U | 330 | J |
| Fluorene | 460 | U | 440 | U |
| Hexachlorobenzene | 460 | U | 440 | U |
| Hexachlorobutadiene | 460 | U | 440 | U |
| Hexachlorocyclopentadiene | 460 | U | 440 | U |
| Hexachloroethane | 460 | U | 440 | U |
| Indeno(1,2,3-cd)pyrene | 460 | U | 440 | U |
| Isophorone | 460 | U | 440 | U |
| Isopropylbenzene | NA | | NA | |
| m&p-Xylene | NA | | NA | |
| Methylene chloride (Dichloromethane) | NA | | NA | |
| Naphthalene | 460 | U | 440 | U |
| Naphthalene | NA | | NA | |
| n-Butylbenzene | NA | | NA | |
| Nitrobenzene | 460 | U | 440 | U |
| N-Nitrosodimethylamine | NA | | NA | |
| n-Nitrosodi-n-propylamine | 460 | U | 440 | U |
| N-Nitrosodiphenylamine/Diphenylamine | 460 | U | 440 | U |
| n-Propylbenzene | NA | | NA | |
| o-Xylene | NA | | NA | |
| Pentachlorophenol | 2400 | U | 2300 | U |
| Phenanthrene | 460 | U | 440 | U |
| Phenol | 460 | U | 440 | U |
| p-Isopropyltoluene | NA | | NA | |
| Pyrene | 460 | U | 440 | U |
| sec-Butylbenzene | NA | | NA | |
| Styrene | NA | | NA | |
| tert-Butylbenzene | NA | | NA | |
| Tetrachloroethene | NA | | NA | |
| Toluene | NA | | NA | |
| trans-1,2-Dichloroethene | NA | | NA | |
| trans-1,3-Dichloropropene | NA | | NA | |
| Trichloroethene | NA | | NA | |
| Trichlorofluoromethane | NA | | NA | |
| Vinyl chloride | NA | | NA | |
| Xylenes, Total | NA | | NA | |

NA= Not Analyzed.

Table 4
Site Soil Data Summary

| | PCB-B62-6-8' | | SCT-B44-4-6 | | SCT-B45-4-6 | |
|---|---|---|---|---|---|---|
| 1,1,1,2-Tetrachloroethane | NA | | 6.5 | U | 2300000 | U |
| 1,1,1-Trichloroethane | NA | | 6.5 | U | 2300000 | U |
| 1,1,2,2-Tetrachloroethane | NA | | 6.5 | U | 2300000 | U |
| 1,1,2-Trichloroethane | NA | | 6.5 | U | 2300000 | U |
| 1,1-Dichloroethane | NA | | 6.5 | U | 2300000 | U |
| 1,1-Dichloroethene | NA | | 6.5 | U | 2300000 | U |
| 1,1-Dichloropropylene | NA | | 6.5 | U | 2300000 | U |
| 1,2,3-Trichlorobenzene | NA | | 6.5 | U | 2300000 | U |
| 1,2,3-Trichloropropane | NA | | 6.5 | U | 2300000 | U |
| 1,2,4-Trichlorobenzene | 410 | U | 16 | | 2300000 | U |
| 1,2,4-Trichlorobenzene | NA | | 660 | | 370 | U |
| 1,2,4-Trimethylbenzene | NA | | 6.5 | U | 2300000 | U |
| 1,2-Dibromo-3-chloropropane | NA | | 6.5 | U | 2300000 | U |
| 1,2-Dibromoethane (EDB) | NA | | 6.5 | U | 2300000 | U |
| 1,2-Dichlorobenzene | 410 | U | 780 | | 370 | U |
| 1,2-Dichloroethane | NA | | 6.5 | U | 2300000 | U |
| 1,2-Dichloropropane | NA | | 6.5 | U | 2300000 | U |
| 1,3,5-Trimethylbenzene | NA | | 6.5 | U | 2300000 | U |
| 1,3-Dichlorobenzene | 410 | U | 380 | U | 370 | U |
| 1,3-Dichloropropane | NA | | 6.5 | U | 2300000 | U |
| 1,4-Dichlorobenzene | 410 | U | 490 | | 370 | U |
| 2,2-Dichloropropane | NA | | 6.5 | U | 2300000 | U |
| 2,2'-Oxybis(1-Chloropropane) | 410 | U | NA | | NA | |
| 2,4,5-Trichlorophenol | 410 | U | 380 | U | 370 | U |
| 2,4,6-Trichlorophenol | 410 | U | 380 | U | 370 | U |
| 2,4-Dichlorophenol | 410 | U | 490 | | 370 | U |
| 2,4-Dimethylphenol | 410 | U | 380 | U | 610 | |
| 2,4-Dinitrophenol | 2100 | U | 2000 | U | 1900 | U |
| 2,4-Dinitrotoluene | 410 | U | 380 | U | 370 | U |
| 2,6-Dinitrotoluene | 410 | U | 380 | U | 370 | U |
| 2-Butanone (MEK) | NA | | 32 | U | 12000000 | U |
| 2-Chloronaphthalene | 410 | U | 380 | U | 370 | U |
| 2-Chlorophenol | 410 | U | 380 | U | 370 | U |
| 2-Chlorotoluene | NA | | 6.5 | U | 2300000 | U |
| 2-Hexanone | NA | | NA | | NA | |
| 2-Methyl-4,6-dinitrophenol | NA | | 2000 | U | 1900 | U |
| 2-Methylnaphthalene | 410 | U | 380 | U | 370 | U |
| 2-Methylphenol (o-cresol) | 410 | U | 380 | U | 370 | U |
| 2-Nitroaniline | 2100 | U | 2000 | U | 1900 | U |
| 2-Nitrophenol | 410 | U | 380 | U | 370 | U |
| 3&4-Methylphenol (m&p-cresol) | 820 | U | 380 | U | 370 | U |
| 3,3'-Dichlorobenzidine | 410 | U | 760 | U | 740 | U |
| 3-Nitroaniline | 2100 | U | 2000 | U | 1900 | U |
| 4,6-Dinitro-2-methylphenol | 2100 | U | NA | | NA | |
| 4-Bromophenyl phenyl ether | 410 | U | 380 | U | 370 | U |
| 4-Chloro-3-methylphenol | 410 | U | 380 | U | 370 | U |
| 4-Chloroaniline | 820 | U | 760 | U | 740 | U |

NA= Not Analyzed.

Table 4
Site Soil Data Summary

| | PCB-B62-6-8' | | SCT-B44-4-6 | | SCT-B45-4-6 | |
|---|---|---|---|---|---|---|
| 4-Chlorophenylphenyl ether | 410 | U | 380 | U | 370 | U |
| 4-Chlorotoluene | NA | | 6.5 | U | 2300000 | U |
| 4-Methyl-2-pentanone (MIBK) | NA | | 32 | U | 12000000 | U |
| 4-Nitroaniline | 2100 | U | 2000 | U | 1900 | U |
| 4-Nitrophenol | 2100 | U | 2000 | U | 1900 | U |
| Acenaphthene | 410 | U | 380 | U | 370 | U |
| Acenaphthylene | 410 | U | 380 | U | 370 | U |
| Acetone | NA | | 65 | U | 23000000 | U |
| Anthracene | 410 | U | 380 | U | 370 | U |
| Aroclor-1016 | 41 | U | NA | | 43 | U |
| Aroclor-1221 | 84 | U | NA | | 87 | U |
| Aroclor-1232 | 41 | U | NA | | 43 | U |
| Aroclor-1242 | 41 | U | NA | | 38 | U |
| Aroclor-1248 | 41 | U | NA | | 43 | U |
| Aroclor-1254 | 41 | U | NA | | 86 | |
| Aroclor-1260 | 41 | U | NA | | 190 | |
| Benzene | NA | | 6.5 | U | 2300000 | U |
| Benzidine | NA | | 3100 | U | 3000 | U |
| Benzo(a)anthracene | 410 | U | 380 | U | 370 | U |
| Benzo(a)pyrene | 410 | U | 380 | U | 370 | U |
| Benzo(b)fluoranthene | 410 | U | 380 | U | 370 | U |
| Benzo(g,h,i)perylene | 410 | U | 380 | U | 370 | U |
| Benzo(k)fluoranthene | 410 | U | 380 | U | 370 | U |
| Benzoic acid | NA | | 2000 | U | 1900 | U |
| Benzyl alcohol | NA | | 380 | U | 370 | U |
| bis(2-Chloroethoxy)methane | 410 | U | 380 | U | 370 | U |
| bis(2-Chloroethyl)ether | 410 | U | 380 | U | 370 | U |
| bis(2-Chloroisopropyl)ether | NA | | 380 | U | 370 | U |
| bis(2-Ethylhexyl)phthalate | 410 | U | 380 | U | 370 | U |
| Bromobenzene | NA | | 6.5 | U | 2300000 | U |
| Bromochloromethane | NA | | 6.5 | U | 2300000 | U |
| Bromodichloromethane | NA | | 6.5 | U | 2300000 | U |
| Bromoform | NA | | 6.5 | U | 2300000 | U |
| Bromomethane | NA | | 13 | U | 4500000 | U |
| Butylbenzylphthalate | 410 | U | 2500 | | 370 | U |
| Carbazole | 410 | U | NA | | NA | |
| Carbon disulfide | NA | | NA | | NA | |
| Carbon tetrachloride | NA | | 6.5 | U | 2300000 | U |
| Chlorobenzene | NA | | 200 | | 2300000 | U |
| Chlorodibromomethane | NA | | 6.5 | U | 2300000 | U |
| Chloroethane | NA | | 13 | U | 4500000 | U |
| Chloroform | NA | | 6.5 | U | 2300000 | U |
| Chloromethane | NA | | 13 | U | 4500000 | U |
| Chrysene | 410 | U | 380 | U | 370 | U |
| cis-1,2-Dichloroethene | NA | | 6.5 | U | 2300000 | U |
| cis-1,3-Dichloropropene | NA | | NA | | NA | |
| Dibenzo(a,h)anthracene | 410 | U | 380 | U | 370 | U |

NA= Not Analyzed.

Table 4
Site Soil Data Summary

| | PCB-B62-6-8' | | SCT-B44-4-6 | | SCT-B45-4-6 | |
|---|---|---|---|---|---|---|
| Dibenzofuran | 410 | U | 380 | U | 370 | U |
| Dibromomethane | NA | | 6.5 | U | 2300000 | U |
| Dichlorodifluoromethane | NA | | 6.5 | U | 2300000 | U |
| Dibromochloromethane | NA | | NA | | NA | |
| Diethylphthalate | 410 | U | 380 | U | 370 | U |
| Dimethylphthalate | 410 | U | 380 | U | 370 | U |
| Di-n-butylphthalate | 410 | U | 380 | U | 370 | U |
| Di-n-octylphthalate | 410 | U | 380 | U | 370 | U |
| Ethylbenzene | NA | | 6.5 | U | 3300000 | |
| Fluoranthene | 410 | U | 380 | U | 370 | U |
| Fluorene | 410 | U | 380 | U | 370 | U |
| Hexachlorobenzene | 410 | U | 380 | U | 370 | U |
| Hexachlorobutadiene | 410 | U | 6.5 | U | 2300000 | U |
| Hexachlorocyclopentadiene | 410 | U | 380 | U | 370 | U |
| Hexachloroethane | 410 | U | 380 | U | 370 | U |
| Indeno(1,2,3-cd)pyrene | 410 | U | 380 | U | 370 | U |
| Isophorone | 410 | U | 380 | U | 370 | U |
| Isopropylbenzene | NA | | 29 | | 2300000 | U |
| m&p-Xylene | NA | | 20 | | 15000000 | |
| Methylene chloride (Dichloromethane) | NA | | 6.5 | U | 2300000 | U |
| Naphthalene | 410 | U | 6.5 | U | 2300000 | U |
| Naphthalene | NA | | 380 | U | 370 | U |
| n-Butylbenzene | NA | | 6.5 | U | 2300000 | U |
| Nitrobenzene | 410 | U | 380 | U | 370 | U |
| N-Nitrosodimethylamine | NA | | 380 | U | 370 | U |
| n-Nitrosodi-n-propylamine | 410 | U | 380 | U | 370 | U |
| N-Nitrosodiphenylamine/Diphenylamine | 410 | U | 380 | U | 370 | U |
| n-Propylbenzene | NA | | 6.5 | U | 2300000 | U |
| o-Xylene | NA | | 17 | | 38000000 | |
| Pentachlorophenol | 2100 | U | 2000 | U | 1900 | U |
| Phenanthrene | 410 | U | 380 | U | 370 | U |
| Phenol | 410 | U | 380 | U | 370 | U |
| p-Isopropyltoluene | NA | | 6.5 | U | 2300000 | U |
| Pyrene | 410 | U | 380 | U | 370 | U |
| sec-Butylbenzene | NA | | 6.5 | U | 2300000 | U |
| Styrene | NA | | 6.5 | U | 2300000 | U |
| tert-Butylbenzene | NA | | 6.5 | U | 2300000 | U |
| Tetrachloroethene | NA | | 6.5 | U | 2300000 | U |
| Toluene | NA | | 6.5 | U | 2300000 | U |
| trans-1,2-Dichloroethene | NA | | 6.5 | U | 2300000 | U |
| trans-1,3-Dichloropropene | NA | | NA | | NA | |
| Trichloroethene | NA | | 6.5 | U | 2300000 | U |
| Trichlorofluoromethane | NA | | 6.5 | U | 2300000 | U |
| Vinyl chloride | NA | | 13 | U | 4500000 | U |
| Xylenes, Total | NA | | NA | | NA | |

NA= Not Analyzed.

Table 4
Site Soil Data Summary

| | SCT-B46-4-6 | | SCT-B47-2-4 | | SCT-B48-2-4 | | SCT-B48-8-10 | |
|---|---|---|---|---|---|---|---|---|
| Dibenzofuran | 350 | U | 340 | U | 6500 | U | 90000 | U |
| Dibromomethane | 420 | U | 5.9 | U | 50000 | U | 140000 | U |
| Dichlorodifluoromethane | 420 | U | 5.9 | U | 50000 | U | 140000 | U |
| Dibromochloromethane | NA | | NA | | NA | | NA | |
| Diethylphthalate | 350 | U | 340 | U | 6500 | U | 90000 | U |
| Dimethylphthalate | 350 | U | 340 | U | 6500 | U | 90000 | U |
| Di-n-butylphthalate | 350 | U | 340 | U | 6500 | U | 90000 | U |
| Di-n-octylphthalate | 350 | U | 340 | U | 6500 | U | 90000 | U |
| Ethylbenzene | 420 | U | 5.9 | U | 50000 | U | 140000 | U |
| Fluoranthene | 350 | U | 340 | U | 6500 | U | 90000 | U |
| Fluorene | 350 | U | 340 | U | 6500 | U | 90000 | U |
| Hexachlorobenzene | 350 | U | 340 | U | 6500 | U | 90000 | U |
| Hexachlorobutadiene | 420 | U | 5.9 | U | 50000 | U | 140000 | U |
| Hexachlorocyclopentadiene | 350 | U | 340 | U | 6500 | U | 90000 | U |
| Hexachloroethane | 350 | U | 340 | U | 6500 | U | 90000 | U |
| Indeno(1,2,3-cd)pyrene | 350 | U | 340 | U | 6500 | U | 90000 | U |
| Isophorone | 350 | U | 340 | U | 6500 | U | 90000 | U |
| Isopropylbenzene | 420 | U | 5.9 | U | 50000 | U | 140000 | U |
| m&p-Xylene | 420 | U | 8.9 | | 50000 | U | 140000 | U |
| Methylene chloride (Dichloromethane) | 420 | U | 5.9 | U | 50000 | U | 140000 | U |
| Naphthalene | 420 | U | 5.9 | U | 50000 | U | 140000 | U |
| Naphthalene | 350 | U | 340 | U | 6500 | U | 90000 | U |
| n-Butylbenzene | 420 | U | 5.9 | U | 50000 | U | 140000 | U |
| Nitrobenzene | 350 | U | 340 | U | 6500 | U | 90000 | U |
| N-Nitrosodimethylamine | 350 | U | 340 | U | 6500 | U | 90000 | U |
| n-Nitrosodi-n-propylamine | 350 | U | 340 | U | 6500 | U | 90000 | U |
| N-Nitrosodiphenylamine/Diphenylamine | 350 | U | 340 | U | 6500 | U | 90000 | U |
| n-Propylbenzene | 420 | U | 5.9 | U | 50000 | U | 140000 | U |
| o-Xylene | 590 | | 93 | | 50000 | U | 140000 | U |
| Pentachlorophenol | 1800 | U | 1800 | U | 34000 | U | 470000 | U |
| Phenanthrene | 350 | U | 340 | U | 6500 | U | 90000 | U |
| Phenol | 350 | U | 340 | U | 6500 | U | 90000 | U |
| p-Isopropyltoluene | 420 | U | 5.9 | U | 50000 | U | 140000 | U |
| Pyrene | 350 | U | 340 | U | 6500 | U | 90000 | U |
| sec-Butylbenzene | 420 | U | 5.9 | U | 50000 | U | 140000 | U |
| Styrene | 420 | U | 5.9 | U | 50000 | U | 140000 | U |
| tert-Butylbenzene | 420 | U | 5.9 | U | 50000 | U | 140000 | U |
| Tetrachloroethene | 420 | U | 5.9 | U | 50000 | U | 140000 | U |
| Toluene | 420 | U | 5.9 | U | 50000 | U | 140000 | U |
| trans-1,2-Dichloroethene | 420 | U | 5.9 | U | 50000 | U | 140000 | U |
| trans-1,3-Dichloropropene | NA | | NA | | NA | | NA | |
| Trichloroethene | 420 | U | 5.9 | U | 50000 | U | 140000 | U |
| Trichlorofluoromethane | 420 | U | 5.9 | U | 50000 | U | 140000 | U |
| Vinyl chloride | 850 | U | 12 | U | 100000 | U | 280000 | U |
| Xylenes, Total | NA | | NA | | NA | | NA | |

NA= Not Analyzed.

Table 4
Site Soil Data Summary

| | SCT-B46-4-6 | | SCT-B47-2-4 | | SCT-B48-2-4 | | SCT-B48-8-10 | |
|---|---|---|---|---|---|---|---|---|
| 4-Chlorophenylphenyl ether | 350 | U | 340 | U | 6500 | U | 90000 | U |
| 4-Chlorotoluene | 4300 | | 100 | | 50000 | U | 140000 | U |
| 4-Methyl-2-pentanone (MIBK) | 2100 | U | 30 | U | 250000 | U | 700000 | U |
| 4-Nitroaniline | 1800 | U | 1800 | U | 34000 | U | 470000 | U |
| 4-Nitrophenol | 1800 | U | 1800 | U | 34000 | U | 470000 | U |
| Acenaphthene | 350 | U | 340 | U | 6500 | U | 90000 | U |
| Acenaphthylene | 350 | U | 340 | U | 6500 | U | 90000 | U |
| Acetone | 4200 | U | 120 | | 500000 | U | 1400000 | U |
| Anthracene | 350 | U | 340 | U | 6500 | U | 90000 | U |
| Aroclor-1016 | NA | | NA | | NA | | NA | |
| Aroclor-1221 | NA | | NA | | NA | | NA | |
| Aroclor-1232 | NA | | NA | | NA | | NA | |
| Aroclor-1242 | NA | | NA | | NA | | NA | |
| Aroclor-1248 | NA | | NA | | NA | | NA | |
| Aroclor-1254 | NA | | NA | | NA | | NA | |
| Aroclor-1260 | NA | | NA | | NA | | NA | |
| Benzene | 420 | U | 5.9 | U | 50000 | U | 140000 | U |
| Benzidine | 2900 | U | 2800 | U | 53000 | U | 740000 | U |
| Benzo(a)anthracene | 350 | U | 340 | U | 6500 | U | 90000 | U |
| Benzo(a)pyrene | 350 | U | 340 | U | 6500 | U | 90000 | U |
| Benzo(b)fluoranthene | 350 | U | 340 | U | 6500 | U | 90000 | U |
| Benzo(g,h,i)perylene | 350 | U | 340 | U | 6500 | U | 90000 | U |
| Benzo(k)fluoranthene | 350 | U | 340 | U | 6500 | U | 90000 | U |
| Benzoic acid | 1800 | U | 1800 | U | 34000 | U | 470000 | U |
| Benzyl alcohol | 350 | U | 340 | U | 6500 | U | 90000 | U |
| bis(2-Chloroethoxy)methane | 350 | U | 340 | U | 6500 | U | 90000 | U |
| bis(2-Chloroethyl)ether | 350 | U | 340 | U | 6500 | U | 90000 | U |
| bis(2-Chloroisopropyl)ether | 350 | U | 340 | U | 6500 | U | 90000 | U |
| bis(2-Ethylhexyl)phthalate | 350 | U | 690 | | 6500 | U | 90000 | U |
| Bromobenzene | 420 | U | 5.9 | U | 50000 | U | 140000 | U |
| Bromochloromethane | 420 | U | 5.9 | U | 50000 | U | 140000 | U |
| Bromodichloromethane | 420 | U | 5.9 | U | 50000 | U | 140000 | U |
| Bromoform | 420 | U | 5.9 | U | 50000 | U | 140000 | U |
| Bromomethane | 850 | U | 12 | U | 100000 | U | 280000 | U |
| Butylbenzylphthalate | 350 | U | 340 | U | 6500 | U | 90000 | U |
| Carbazole | NA | | NA | | NA | | NA | |
| Carbon disulfide | NA | | NA | | NA | | NA | |
| Carbon tetrachloride | 420 | U | 5.9 | U | 50000 | U | 140000 | U |
| Chlorobenzene | 520 | | 12 | | 1500000 | | 5200000 | |
| Chlorodibromomethane | 420 | U | 5.9 | U | 50000 | U | 140000 | U |
| Chloroethane | 850 | U | 12 | U | 100000 | U | 280000 | U |
| Chloroform | 420 | U | 5.9 | U | 50000 | U | 140000 | U |
| Chloromethane | 850 | U | 12 | U | 100000 | U | 280000 | U |
| Chrysene | 350 | U | 340 | U | 6500 | U | 90000 | U |
| cis-1,2-Dichloroethene | 420 | U | 5.9 | U | 50000 | U | 140000 | U |
| cis-1,3-Dichloropropene | NA | | NA | | NA | | NA | |
| Dibenzo(a,h)anthracene | 350 | U | 340 | U | 6500 | U | 90000 | U |

NA= Not Analyzed.

Table 4
Site Soil Data Summary

| | SCT-B46-4-6 | | SCT-B47-2-4 | | SCT-B48-2-4 | | SCT-B48-8-10 | |
|---|---|---|---|---|---|---|---|---|
| 1,1,1,2-Tetrachloroethane | 420 | U | 5.9 | U | 50000 | U | 140000 | U |
| 1,1,1-Trichloroethane | 420 | U | 5.9 | U | 50000 | U | 140000 | U |
| 1,1,2,2-Tetrachloroethane | 420 | U | 5.9 | U | 50000 | U | 140000 | U |
| 1,1,2-Trichloroethane | 420 | U | 5.9 | U | 50000 | U | 140000 | U |
| 1,1-Dichloroethane | 420 | U | 5.9 | U | 50000 | U | 140000 | U |
| 1,1-Dichloroethene | 420 | U | 5.9 | U | 50000 | U | 140000 | U |
| 1,1-Dichloropropylene | 420 | U | 5.9 | U | 50000 | U | 140000 | U |
| 1,2,3-Trichlorobenzene | 420 | U | 5.9 | U | 50000 | U | 140000 | U |
| 1,2,3-Trichloropropane | 420 | U | 5.9 | U | 50000 | U | 140000 | U |
| 1,2,4-Trichlorobenzene | 420 | U | 5.9 | U | 150000 | | 360000 | |
| 1,2,4-Trichlorobenzene | 350 | U | 340 | U | 62000 | | 300000 | |
| 1,2,4-Trimethylbenzene | 420 | U | 5.9 | U | 50000 | U | 140000 | U |
| 1,2-Dibromo-3-chloropropane | 420 | U | 5.9 | U | 50000 | U | 140000 | U |
| 1,2-Dibromoethane (EDB) | 420 | U | 5.9 | U | 50000 | U | 140000 | U |
| 1,2-Dichlorobenzene | 350 | U | 340 | U | 40000 | | 420000 | |
| 1,2-Dichloroethane | 420 | U | 5.9 | U | 50000 | U | 140000 | U |
| 1,2-Dichloropropane | 420 | U | 5.9 | U | 50000 | U | 140000 | U |
| 1,3,5-Trimethylbenzene | 420 | U | 5.9 | U | 50000 | U | 140000 | U |
| 1,3-Dichlorobenzene | 350 | U | 340 | U | 6500 | U | 90000 | U |
| 1,3-Dichloropropane | 420 | U | 5.9 | U | 50000 | U | 140000 | U |
| 1,4-Dichlorobenzene | 350 | U | 340 | U | 64000 | | 510000 | |
| 2,2-Dichloropropane | 420 | U | 5.9 | U | 50000 | U | 140000 | U |
| 2,2'-Oxybis(1-Chloropropane) | NA | | NA | | NA | | NA | |
| 2,4,5-Trichlorophenol | 350 | U | 340 | U | 6500 | U | 90000 | U |
| 2,4,6-Trichlorophenol | 350 | U | 340 | U | 6500 | U | 90000 | U |
| 2,4-Dichlorophenol | 350 | U | 340 | U | 6500 | U | 90000 | U |
| 2,4-Dimethylphenol | 350 | U | 340 | U | 6500 | U | 90000 | U |
| 2,4-Dinitrophenol | 1800 | U | 1800 | U | 34000 | U | 470000 | U |
| 2,4-Dinitrotoluene | 350 | U | 340 | U | 6500 | U | 90000 | U |
| 2,6-Dinitrotoluene | 350 | U | 340 | U | 6500 | U | 90000 | U |
| 2-Butanone (MEK) | 2100 | U | 30 | U | 250000 | U | 700000 | U |
| 2-Chloronaphthalene | 350 | U | 340 | U | 6500 | U | 90000 | U |
| 2-Chlorophenol | 350 | U | 340 | U | 6500 | U | 90000 | U |
| 2-Chlorotoluene | 12000 | | 140 | | 50000 | U | 140000 | U |
| 2-Hexanone | NA | | NA | | NA | | NA | |
| 2-Methyl-4,6-dinitrophenol | 1800 | U | 1800 | U | 34000 | U | 470000 | U |
| 2-Methylnaphthalene | 350 | U | 340 | U | 6500 | U | 90000 | U |
| 2-Methylphenol (o-cresol) | 350 | U | 340 | U | 6500 | U | 90000 | U |
| 2-Nitroaniline | 1800 | U | 1800 | U | 34000 | U | 470000 | U |
| 2-Nitrophenol | 350 | U | 340 | U | 6500 | U | 90000 | U |
| 3&4-Methylphenol (m&p-cresol) | 350 | U | 340 | U | 6500 | U | 90000 | U |
| 3,3'-Dichlorobenzidine | 700 | U | 690 | U | 13000 | U | 180000 | U |
| 3-Nitroaniline | 1800 | U | 1800 | U | 34000 | U | 470000 | U |
| 4,6-Dinitro-2-methylphenol | NA | | NA | | NA | | NA | |
| 4-Bromophenyl phenyl ether | 350 | U | 340 | U | 6500 | U | 90000 | U |
| 4-Chloro-3-methylphenol | 350 | U | 340 | U | 6500 | U | 90000 | U |
| 4-Chloroaniline | 700 | U | 690 | U | 13000 | U | 180000 | U |

NA= Not Analyzed.

Table 4
Site Soil Data Summary

| | SCT-B49-4-6 | | SCT-B50-6-8 | | SCT-B51-6-8 | | SCT-B68-2-4' | |
|---|---|---|---|---|---|---|---|---|
| 1,1,1,2-Tetrachloroethane | 430 | U | 1300 | U | 260000 | U | NA | |
| 1,1,1-Trichloroethane | 430 | U | 1300 | U | 260000 | U | 5.3 | U |
| 1,1,2,2-Tetrachloroethane | 430 | U | 1300 | U | 260000 | U | 5.3 | U |
| 1,1,2-Trichloroethane | 430 | U | 1300 | U | 260000 | U | 5.3 | U |
| 1,1-Dichloroethane | 430 | U | 1300 | U | 260000 | U | 5.3 | U |
| 1,1-Dichloroethene | 430 | U | 1300 | U | 260000 | U | 5.3 | U |
| 1,1-Dichloropropylene | 430 | U | 1300 | U | 260000 | U | NA | |
| 1,2,3-Trichlorobenzene | 430 | U | 1300 | U | 260000 | U | NA | |
| 1,2,3-Trichloropropane | 430 | U | 1300 | U | 260000 | U | NA | |
| 1,2,4-Trichlorobenzene | 430 | U | 1300 | U | 260000 | U | 410 | U |
| 1,2,4-Trichlorobenzene | 350 | U | 1300 | | 8400 | U | NA | |
| 1,2,4-Trimethylbenzene | 430 | U | 1300 | U | 260000 | U | NA | |
| 1,2-Dibromo-3-chloropropane | 430 | U | 1300 | U | 260000 | U | NA | |
| 1,2-Dibromoethane (EDB) | 430 | U | 1300 | U | 260000 | U | NA | |
| 1,2-Dichlorobenzene | 350 | U | 2400 | | 53000 | | 240 | |
| 1,2-Dichloroethane | 430 | U | 1300 | U | 260000 | U | 5.3 | U |
| 1,2-Dichloropropane | 430 | U | 1300 | U | 260000 | U | 5.3 | U |
| 1,3,5-Trimethylbenzene | 430 | U | 1300 | U | 260000 | U | NA | |
| 1,3-Dichlorobenzene | 350 | U | 430 | U | 8400 | U | 410 | U |
| 1,3-Dichloropropane | 430 | U | 1300 | U | 260000 | U | NA | |
| 1,4-Dichlorobenzene | 350 | U | 1300 | | 100000 | | 410 | U |
| 2,2-Dichloropropane | 430 | U | 1300 | U | 260000 | U | NA | |
| 2,2'-Oxybis(1-Chloropropane) | NA | | NA | | NA | | 410 | U |
| 2,4,5-Trichlorophenol | 350 | U | 430 | U | 8400 | U | 410 | U |
| 2,4,6-Trichlorophenol | 350 | U | 430 | U | 8400 | U | 410 | U |
| 2,4-Dichlorophenol | 350 | U | 430 | U | 8400 | U | 410 | U |
| 2,4-Dimethylphenol | 350 | U | 430 | U | 8400 | U | 410 | U |
| 2,4-Dinitrophenol | 1800 | U | 2200 | U | 43000 | U | 2100 | U |
| 2,4-Dinitrotoluene | 350 | U | 430 | U | 8400 | U | 410 | U |
| 2,6-Dinitrotoluene | 350 | U | 430 | U | 8400 | U | 410 | U |
| 2-Butanone (MEK) | 2200 | U | 8000 | U | 1300000 | U | 27 | U |
| 2-Chloronaphthalene | 350 | U | 430 | U | 8400 | U | 410 | U |
| 2-Chlorophenol | 350 | U | 430 | U | 8400 | U | 410 | U |
| 2-Chlorotoluene | 430 | U | 1300 | U | 260000 | U | NA | |
| 2-Hexanone | NA | | NA | | NA | | 27 | U |
| 2-Methyl-4,6-dinitrophenol | 1800 | U | 2200 | U | 43000 | U | NA | |
| 2-Methylnaphthalene | 350 | U | 430 | U | 8400 | U | 410 | U |
| 2-Methylphenol (o-cresol) | 350 | U | 430 | U | 8400 | U | 410 | U |
| 2-Nitroaniline | 1800 | U | 2200 | U | 43000 | U | 2100 | U |
| 2-Nitrophenol | 350 | U | 430 | U | 8400 | U | 410 | U |
| 3&4-Methylphenol (m&p-cresol) | 350 | U | 430 | U | 8400 | U | 410 | U |
| 3,3'-Dichlorobenzidine | 700 | U | 850 | U | 17000 | U | 810 | U |
| 3-Nitroaniline | 1800 | U | 2200 | U | 43000 | U | 2100 | U |
| 4,6-Dinitro-2-methylphenol | NA | | NA | | NA | | 2100 | U |
| 4-Bromophenyl phenyl ether | 350 | U | 430 | U | 8400 | U | 410 | U |
| 4-Chloro-3-methylphenol | 350 | U | 430 | U | 8400 | U | 410 | U |
| 4-Chloroaniline | 700 | U | 850 | U | 17000 | U | 810 | U |

NA= Not Analyzed.

Table 4
Site Soil Data Summary

| | SCT-B49-4-6 | | SCT-B50-6-8 | | SCT-B51-6-8 | | SCT-B68-2-4' | |
|---|---|---|---|---|---|---|---|---|
| 4-Chlorophenylphenyl ether | 350 | U | 430 | U | 8400 | U | 410 | U |
| 4-Chlorotoluene | 430 | U | 1300 | U | 260000 | U | NA | |
| 4-Methyl-2-pentanone (MIBK) | 2200 | U | 8000 | U | 1300000 | U | 27 | U |
| 4-Nitroaniline | 1800 | U | 2200 | U | 43000 | U | 2100 | U |
| 4-Nitrophenol | 1800 | U | 2200 | U | 43000 | U | 2100 | U |
| Acenaphthene | 350 | U | 430 | U | 8400 | U | 410 | U |
| Acenaphthylene | 350 | U | 430 | U | 8400 | U | 410 | U |
| Acetone | 4300 | U | 13000 | U | 2600000 | U | 53 | U |
| Anthracene | 350 | U | 430 | U | 8400 | U | 410 | U |
| Aroclor-1016 | NA | | NA | | 38 | U | NA | |
| Aroclor-1221 | NA | | NA | | 76 | U | NA | |
| Aroclor-1232 | NA | | NA | | 38 | U | NA | |
| Aroclor-1242 | NA | | NA | | 250 | | NA | |
| Aroclor-1248 | NA | | NA | | 38 | U | NA | |
| Aroclor-1254 | NA | | NA | | 56 | | NA | |
| Aroclor-1260 | NA | | NA | | 110 | | NA | |
| Benzene | 430 | U | 1300 | U | 260000 | U | 5.3 | U |
| Benzidine | 2900 | U | 3500 | U | 69000 | U | NA | |
| Benzo(a)anthracene | 350 | U | 430 | U | 8400 | U | 410 | U |
| Benzo(a)pyrene | 350 | U | 430 | U | 8400 | U | 410 | U |
| Benzo(b)fluoranthene | 350 | U | 490 | | 8400 | U | 410 | U |
| Benzo(g,h,i)perylene | 350 | U | 430 | U | 8400 | U | 410 | U |
| Benzo(k)fluoranthene | 350 | U | 430 | U | 8400 | U | 410 | U |
| Benzoic acid | 1800 | U | 2200 | U | 43000 | U | NA | |
| Benzyl alcohol | 350 | U | 430 | U | 8400 | U | NA | |
| bis(2-Chloroethoxy)methane | 350 | U | 430 | U | 8400 | U | 410 | U |
| bis(2-Chloroethyl)ether | 350 | U | 430 | U | 8400 | U | 410 | U |
| bis(2-Chloroisopropyl)ether | 350 | U | 430 | U | 8400 | U | NA | |
| bis(2-Ethylhexyl)phthalate | 350 | U | 430 | U | 8400 | U | 940 | |
| Bromobenzene | 430 | U | 1300 | U | 260000 | U | NA | |
| Bromochloromethane | 430 | U | 1300 | U | 260000 | U | 5.3 | U |
| Bromodichloromethane | 430 | U | 1300 | U | 260000 | U | NA | |
| Bromoform | 430 | U | 1300 | U | 260000 | U | 5.3 | U |
| Bromomethane | 860 | U | 2600 | U | 520000 | U | 11 | U |
| Butylbenzylphthalate | 350 | U | 430 | U | 8400 | U | 410 | U |
| Carbazole | NA | | NA | | NA | | 410 | U |
| Carbon disulfide | NA | | NA | | NA | | 5.3 | U |
| Carbon tetrachloride | 430 | U | 1300 | U | 260000 | U | 5.3 | U |
| Chlorobenzene | 1100 | | 24000 | | 7900000 | | 13 | |
| Chlorodibromomethane | 430 | U | 1300 | U | 260000 | U | NA | |
| Chloroethane | 860 | U | 2600 | U | 520000 | U | 11 | U |
| Chloroform | 430 | U | 1300 | U | 260000 | U | 5.3 | U |
| Chloromethane | 860 | U | 2600 | U | 520000 | U | 11 | U |
| Chrysene | 350 | U | 430 | U | 8400 | U | 410 | U |
| cis-1,2-Dichloroethene | 430 | U | 1300 | U | 260000 | U | 5.3 | U |
| cis-1,3-Dichloropropene | NA | | NA | | NA | | 5.3 | U |
| Dibenzo(a,h)anthracene | 350 | U | 430 | U | 8400 | U | 410 | U |

NA= Not Analyzed.

Table 4
Site Soil Data Summary

| | SCT-B49-4-6 | | SCT-B50-6-8 | | SCT-B51-6-8 | | SCT-B68-2-4' | |
|---|---|---|---|---|---|---|---|---|
| Dibenzofuran | 350 | U | 430 | U | 8400 | U | 410 | U |
| Dibromomethane | 430 | U | 1300 | U | 260000 | U | NA | |
| Dichlorodifluoromethane | 430 | U | 1300 | U | 260000 | U | NA | |
| Dibromochloromethane | NA | | NA | | NA | | 5.3 | U |
| Diethylphthalate | 350 | U | 430 | U | 8400 | U | 410 | U |
| Dimethylphthalate | 350 | U | 430 | U | 8400 | U | 410 | U |
| Di-n-butylphthalate | 350 | U | 430 | U | 8400 | U | 410 | U |
| Di-n-octylphthalate | 350 | U | 430 | U | 8400 | U | 410 | U |
| Ethylbenzene | 430 | U | 1300 | U | 260000 | U | 5.3 | U |
| Fluoranthene | 350 | U | 520 | | 8400 | U | 410 | U |
| Fluorene | 350 | U | 430 | U | 8400 | U | 410 | U |
| Hexachlorobenzene | 350 | U | 500 | | 8400 | U | 260 | |
| Hexachlorobutadiene | 430 | U | 1300 | U | 260000 | U | 410 | U |
| Hexachlorocyclopentadiene | 350 | U | 430 | U | 8400 | U | 410 | U |
| Hexachloroethane | 350 | U | 430 | U | 8400 | U | 410 | U |
| Indeno(1,2,3-cd)pyrene | 350 | U | 430 | U | 8400 | U | 410 | U |
| Isophorone | 350 | U | 430 | U | 8400 | U | 410 | U |
| Isopropylbenzene | 430 | U | 1300 | U | 260000 | U | NA | |
| m&p-Xylene | 430 | U | 1300 | U | 260000 | U | NA | |
| Methylene chloride (Dichloromethane) | 430 | U | 1300 | U | 260000 | U | 5.3 | U |
| Naphthalene | 430 | U | 1300 | U | 260000 | U | 410 | U |
| Naphthalene | 350 | U | 430 | U | 8400 | U | NA | |
| n-Butylbenzene | 430 | U | 1300 | U | 260000 | U | NA | |
| Nitrobenzene | 350 | U | 430 | U | 8400 | U | 410 | U |
| N-Nitrosodimethylamine | 350 | U | 430 | U | 8400 | U | NA | |
| n-Nitrosodi-n-propylamine | 350 | U | 430 | U | 8400 | U | 410 | U |
| N-Nitrosodiphenylamine/Diphenylamine | 350 | U | 430 | U | 8400 | U | 410 | U |
| n-Propylbenzene | 430 | U | 1300 | U | 260000 | U | NA | |
| o-Xylene | 430 | U | 1300 | U | 260000 | U | NA | |
| Pentachlorophenol | 1800 | U | 2200 | U | 43000 | U | 2100 | U |
| Phenanthrene | 350 | U | 430 | U | 8400 | U | 410 | U |
| Phenol | 350 | U | 430 | U | 8400 | U | 410 | U |
| p-Isopropyltoluene | 430 | U | 1300 | U | 260000 | U | NA | |
| Pyrene | 350 | U | 430 | U | 8400 | U | 410 | U |
| sec-Butylbenzene | 430 | U | 1300 | U | 260000 | U | NA | |
| Styrene | 430 | U | 1300 | U | 260000 | U | 5.3 | U |
| tert-Butylbenzene | 430 | U | 1300 | U | 260000 | U | NA | |
| Tetrachloroethene | 430 | U | 1300 | U | 260000 | U | 8.4 | |
| Toluene | 430 | U | 1300 | U | 260000 | U | 5.3 | U |
| trans-1,2-Dichloroethene | 430 | U | 1300 | U | 260000 | U | NA | |
| trans-1,3-Dichloropropene | NA | | NA | | NA | | 5.3 | U |
| Trichloroethene | 430 | U | 1300 | U | 260000 | U | 5.3 | U |
| Trichlorofluoromethane | 430 | U | 1300 | U | 260000 | U | NA | |
| Vinyl chloride | 860 | U | 2600 | U | 520000 | U | 11 | U |
| Xylenes, Total | NA | | NA | | NA | | 11 | U |

NA= Not Analyzed.

Table 4
Site Soil Data Summary

| | SCT-B69-2-4' | | SCT-B69-6-8' | | SOT-B64-6-8' | | SOT-B66-16-18' | |
|---|---|---|---|---|---|---|---|---|
| 1,1,1,2-Tetrachloroethane | NA | | NA | | NA | | NA | |
| 1,1,1-Trichloroethane | 220 | U | 5800 | U | 11000 | U | 6 | U |
| 1,1,2,2-Tetrachloroethane | 220 | U | 5800 | U | 11000 | U | 6 | U |
| 1,1,2-Trichloroethane | 220 | U | 5800 | U | 11000 | U | 6 | U |
| 1,1-Dichloroethane | 220 | U | 5800 | U | 11000 | U | 6 | U |
| 1,1-Dichloroethene | 220 | U | 5800 | U | 11000 | U | 6 | U |
| 1,1-Dichloropropylene | NA | | NA | | NA | | NA | |
| 1,2,3-Trichlorobenzene | NA | | NA | | NA | | NA | |
| 1,2,3-Trichloropropane | NA | | NA | | NA | | NA | |
| 1,2,4-Trichlorobenzene | 430 | U | 260 | J | NA | | NA | |
| 1,2,4-Trichlorobenzene | NA | | NA | | NA | | NA | |
| 1,2,4-Trimethylbenzene | NA | | NA | | NA | | NA | |
| 1,2-Dibromo-3-chloropropane | NA | | NA | | NA | | NA | |
| 1,2-Dibromoethane (EDB) | NA | | NA | | NA | | NA | |
| 1,2-Dichlorobenzene | 430 | U | 1300 | | NA | | NA | |
| 1,2-Dichloroethane | 220 | U | 5800 | U | 11000 | U | 6 | U |
| 1,2-Dichloropropane | 220 | U | 5800 | U | 11000 | U | 6 | U |
| 1,3,5-Trimethylbenzene | NA | | NA | | NA | | NA | |
| 1,3-Dichlorobenzene | 430 | U | 360 | U | NA | | NA | |
| 1,3-Dichloropropane | NA | | NA | | NA | | NA | |
| 1,4-Dichlorobenzene | 430 | U | 2600 | | NA | | NA | |
| 2,2-Dichloropropane | NA | | NA | | NA | | NA | |
| 2,2'-Oxybis(1-Chloropropane) | 430 | U | 360 | U | NA | | NA | |
| 2,4,5-Trichlorophenol | 430 | U | 360 | U | NA | | NA | |
| 2,4,6-Trichlorophenol | 430 | U | 360 | U | NA | | NA | |
| 2,4-Dichlorophenol | 430 | U | 360 | U | NA | | NA | |
| 2,4-Dimethylphenol | 430 | U | 360 | U | NA | | NA | |
| 2,4-Dinitrophenol | 2200 | U | 1900 | U | NA | | NA | |
| 2,4-Dinitrotoluene | 430 | U | 360 | U | NA | | NA | |
| 2,6-Dinitrotoluene | 430 | U | 360 | U | NA | | NA | |
| 2-Butanone (MEK) | 1100 | U | 29000 | U | 55000 | U | 30 | U |
| 2-Chloronaphthalene | 430 | U | 360 | U | NA | | NA | |
| 2-Chlorophenol | 430 | U | 360 | U | NA | | NA | |
| 2-Chlorotoluene | NA | | NA | | NA | | NA | |
| 2-Hexanone | 1100 | U | 29000 | U | 55000 | U | 30 | U |
| 2-Methyl-4,6-dinitrophenol | NA | | NA | | NA | | NA | |
| 2-Methylnaphthalene | 430 | U | 360 | U | NA | | NA | |
| 2-Methylphenol (o-cresol) | 430 | U | 360 | U | NA | | NA | |
| 2-Nitroaniline | 2200 | U | 1900 | U | NA | | NA | |
| 2-Nitrophenol | 430 | U | 360 | U | NA | | NA | |
| 3&4-Methylphenol (m&p-cresol) | 430 | U | 360 | U | NA | | NA | |
| 3,3'-Dichlorobenzidine | 860 | U | 730 | U | NA | | NA | |
| 3-Nitroaniline | 2200 | U | 1900 | U | NA | | NA | |
| 4,6-Dinitro-2-methylphenol | 2200 | U | 1900 | U | NA | | NA | |
| 4-Bromophenyl phenyl ether | 430 | U | 360 | U | NA | | NA | |
| 4-Chloro-3-methylphenol | 430 | U | 360 | U | NA | | NA | |
| 4-Chloroaniline | 860 | U | 730 | U | NA | | NA | |

NA= Not Analyzed.

Table 4
Site Soil Data Summary

| | SCT-B69-2-4' | | SCT-B69-6-8' | | SOT-B64-6-8' | | SOT-B66-16-18' | |
|---|---|---|---|---|---|---|---|---|
| 4-Chlorophenylphenyl ether | 430 | U | 360 | U | NA | | NA | |
| 4-Chlorotoluene | NA | | NA | | NA | | NA | |
| 4-Methyl-2-pentanone (MIBK) | 1100 | U | 29000 | U | 55000 | U | 30 | U |
| 4-Nitroaniline | 2200 | U | 1900 | U | NA | | NA | |
| 4-Nitrophenol | 2200 | U | 1900 | U | NA | | NA | |
| Acenaphthene | 430 | U | 360 | U | NA | | NA | |
| Acenaphthylene | 430 | U | 360 | U | NA | | NA | |
| Acetone | 2200 | U | 58000 | U | 110000 | U | 60 | U |
| Anthracene | 430 | U | 360 | U | NA | | NA | |
| Aroclor-1016 | NA | | NA | | NA | | NA | |
| Aroclor-1221 | NA | | NA | | NA | | NA | |
| Aroclor-1232 | NA | | NA | | NA | | NA | |
| Aroclor-1242 | NA | | NA | | NA | | NA | |
| Aroclor-1248 | NA | | NA | | NA | | NA | |
| Aroclor-1254 | NA | | NA | | NA | | NA | |
| Aroclor-1260 | NA | | NA | | NA | | NA | |
| Benzene | 220 | U | 5800 | U | 11000 | U | 6 | U |
| Benzidine | NA | | NA | | NA | | NA | |
| Benzo(a)anthracene | 430 | U | 360 | U | NA | | NA | |
| Benzo(a)pyrene | 430 | U | 360 | U | NA | | NA | |
| Benzo(b)fluoranthene | 430 | U | 360 | U | NA | | NA | |
| Benzo(g,h,i)perylene | 430 | U | 360 | U | NA | | NA | |
| Benzo(k)fluoranthene | 430 | U | 360 | U | NA | | NA | |
| Benzoic acid | NA | | NA | | NA | | NA | |
| Benzyl alcohol | NA | | NA | | NA | | NA | |
| bis(2-Chloroethoxy)methane | 430 | U | 360 | U | NA | | NA | |
| bis(2-Chloroethyl)ether | 430 | U | 360 | U | NA | | NA | |
| bis(2-Chloroisopropyl)ether | NA | | NA | | NA | | NA | |
| bis(2-Ethylhexyl)phthalate | 430 | U | 360 | U | NA | | NA | |
| Bromobenzene | NA | | NA | | NA | | NA | |
| Bromochloromethane | 220 | U | 5800 | U | NA | | NA | |
| Bromodichloromethane | NA | | NA | | 11000 | U | 6 | U |
| Bromoform | 220 | U | 5800 | U | 11000 | U | 6 | U |
| Bromomethane | 440 | U | 12000 | U | 22000 | U | 12 | U |
| Butylbenzylphthalate | 430 | U | 360 | U | NA | | NA | |
| Carbazole | 430 | U | 360 | U | NA | | NA | |
| Carbon disulfide | 220 | U | 5800 | U | 11000 | U | 6 | U |
| Carbon tetrachloride | 220 | U | 5800 | U | 11000 | U | 6 | U |
| Chlorobenzene | 1900 | | 110000 | | 11000 | U | 3 | |
| Chlorodibromomethane | NA | | NA | | NA | | NA | |
| Chloroethane | 440 | U | 12000 | U | 22000 | U | 12 | U |
| Chloroform | 220 | U | 5800 | U | 11000 | U | 6 | U |
| Chloromethane | 440 | U | 12000 | U | 22000 | U | 12 | U |
| Chrysene | 430 | U | 360 | U | NA | | NA | |
| cis-1,2-Dichloroethene | 220 | U | 5800 | U | 11000 | U | 6 | U |
| cis-1,3-Dichloropropene | 220 | U | 5800 | U | 11000 | U | 6 | U |
| Dibenzo(a,h)anthracene | 430 | U | 360 | U | NA | | NA | |

NA= Not Analyzed.

Table 4
Site Soil Data Summary

| | SCT-B69-2-4' | | SCT-B69-6-8' | | SOT-B64-6-8' | | SOT-B66-16-18' | |
|---|---|---|---|---|---|---|---|---|
| Dibenzofuran | 430 | U | 360 | U | NA | | NA | |
| Dibromomethane | NA | | NA | | NA | | NA | |
| Dichlorodifluoromethane | NA | | NA | | NA | | NA | |
| Dibromochloromethane | 220 | U | 5800 | U | 11000 | U | 6 | U |
| Diethylphthalate | 430 | U | 360 | U | NA | | NA | |
| Dimethylphthalate | 430 | U | 360 | U | NA | | NA | |
| Di-n-butylphthalate | 430 | U | 360 | U | NA | | NA | |
| Di-n-octylphthalate | 430 | U | 360 | U | NA | | NA | |
| Ethylbenzene | 220 | U | 5800 | U | 48000 | | 6 | U |
| Fluoranthene | 430 | U | 210 | | NA | | NA | |
| Fluorene | 430 | U | 360 | U | NA | | NA | |
| Hexachlorobenzene | 480 | | 360 | U | NA | | NA | |
| Hexachlorobutadiene | 430 | U | 360 | U | NA | | NA | |
| Hexachlorocyclopentadiene | 430 | U | 360 | U | NA | | NA | |
| Hexachloroethane | 430 | U | 360 | U | NA | | NA | |
| Indeno(1,2,3-cd)pyrene | 430 | U | 360 | U | NA | | NA | |
| Isophorone | 430 | U | 360 | U | NA | | NA | |
| Isopropylbenzene | NA | | NA | | NA | | NA | |
| m&p-Xylene | NA | | NA | | 11000 | U | 6 | U |
| Methylene chloride (Dichloromethane) | 220 | U | 5800 | U | NA | | NA | |
| Naphthalene | 430 | U | 360 | U | NA | | NA | |
| Naphthalene | NA | | NA | | NA | | NA | |
| n-Butylbenzene | NA | | NA | | NA | | NA | |
| Nitrobenzene | 430 | U | 360 | U | NA | | NA | |
| N-Nitrosodimethylamine | NA | | NA | | NA | | NA | |
| n-Nitrosodi-n-propylamine | 430 | U | 360 | U | NA | | NA | |
| N-Nitrosodiphenylamine/Diphenylamine | 430 | U | 360 | U | NA | | NA | |
| n-Propylbenzene | NA | | NA | | NA | | NA | |
| o-Xylene | NA | | NA | | NA | | NA | |
| Pentachlorophenol | 2200 | U | 1900 | U | NA | | NA | |
| Phenanthrene | 430 | U | 360 | U | NA | | NA | |
| Phenol | 430 | U | 360 | U | NA | | NA | |
| p-Isopropyltoluene | NA | | NA | | NA | | NA | |
| Pyrene | 430 | U | 200 | | NA | | NA | |
| sec-Butylbenzene | NA | | NA | | NA | | NA | |
| Styrene | 220 | U | 5800 | U | 11000 | U | 6 | U |
| tert-Butylbenzene | NA | | NA | | NA | | NA | |
| Tetrachloroethene | 220 | U | 5800 | U | 11000 | U | 6 | U |
| Toluene | 220 | U | 5800 | U | 11000 | U | 6 | U |
| trans-1,2-Dichloroethene | NA | | NA | | NA | | NA | |
| trans-1,3-Dichloropropene | 220 | U | 5800 | U | 11000 | U | 6 | U |
| Trichloroethene | 220 | U | 5800 | U | 11000 | U | 6 | U |
| Trichlorofluoromethane | NA | | NA | | NA | | NA | |
| Vinyl chloride | 440 | U | 12000 | U | 22000 | U | 12 | U |
| Xylenes, Total | 440 | U | 12000 | U | 690000 | | 39 | |

NA= Not Analyzed.

Table 4
Site Soil Data Summary

| | SOT-B66-2-4' | | BBU-B52(14-16') | | BBU-B53-3-3.5' | |
|---|---|---|---|---|---|---|
| 1,1,1,2-Tetrachloroethane | NA | | NA | | NA | |
| 1,1,1-Trichloroethane | 190 | U | 240 | U | NA | |
| 1,1,2,2-Tetrachloroethane | 190 | U | 240 | U | NA | |
| 1,1,2-Trichloroethane | 190 | U | 240 | U | NA | |
| 1,1-Dichloroethane | 190 | U | 240 | U | NA | |
| 1,1-Dichloroethene | 190 | U | 420 | U | NA | |
| 1,1-Dichloropropylene | NA | | NA | | NA | |
| 1,2,3-Trichlorobenzene | NA | | NA | | NA | |
| 1,2,3-Trichloropropane | NA | | NA | | NA | |
| 1,2,4-Trichlorobenzene | NA | | NA | | 1400000 | E |
| 1,2,4-Trichlorobenzene | NA | | 420 | U | NA | |
| 1,2,4-Trimethylbenzene | NA | | NA | | NA | |
| 1,2-Dibromo-3-chloropropane | NA | | NA | | NA | |
| 1,2-Dibromoethane (EDB) | NA | | NA | | NA | |
| 1,2-Dichlorobenzene | NA | | 950 | | 15000 | J |
| 1,2-Dichloroethane | 190 | U | 240 | U | NA | |
| 1,2-Dichloropropane | 190 | U | 420 | U | NA | |
| 1,3,5-Trimethylbenzene | NA | | NA | | NA | |
| 1,3-Dichlorobenzene | NA | | 420 | U | 23000 | U |
| 1,3-Dichloropropane | NA | | NA | | NA | |
| 1,4-Dichlorobenzene | NA | | 420 | U | 23000 | U |
| 2,2-Dichloropropane | NA | | NA | | NA | |
| 2,2'-Oxybis(1-Chloropropane) | NA | | 420 | U | 23000 | U |
| 2,4,5-Trichlorophenol | NA | | 420 | U | 23000 | U |
| 2,4,6-Trichlorophenol | NA | | 420 | U | 23000 | U |
| 2,4-Dichlorophenol | NA | | 420 | U | 23000 | U |
| 2,4-Dimethylphenol | NA | | 2200 | U | 23000 | U |
| 2,4-Dinitrophenol | NA | | 420 | U | 120000 | U |
| 2,4-Dinitrotoluene | NA | | 420 | U | 23000 | U |
| 2,6-Dinitrotoluene | NA | | 1200 | U | 23000 | U |
| 2-Butanone (MEK) | 960 | U | 420 | U | NA | |
| 2-Chloronaphthalene | NA | | 420 | U | 23000 | U |
| 2-Chlorophenol | NA | | 1200 | U | 23000 | U |
| 2-Chlorotoluene | NA | | NA | | NA | |
| 2-Hexanone | 960 | U | 420 | U | NA | |
| 2-Methyl-4,6-dinitrophenol | NA | | NA | | NA | |
| 2-Methylnaphthalene | NA | | 420 | U | 23000 | U |
| 2-Methylphenol (o-cresol) | NA | | 2200 | U | 23000 | U |
| 2-Nitroaniline | NA | | 420 | U | 120000 | U |
| 2-Nitrophenol | NA | | 840 | U | 23000 | U |
| 3&4-Methylphenol (m&p-cresol) | NA | | 2200 | U | 23000 | U |
| 3,3'-Dichlorobenzidine | NA | | 420 | U | 46000 | U |
| 3-Nitroaniline | NA | | 2200 | U | 120000 | U |
| 4,6-Dinitro-2-methylphenol | NA | | 420 | U | 120000 | U |
| 4-Bromophenyl phenyl ether | NA | | 420 | U | 23000 | U |
| 4-Chloro-3-methylphenol | NA | | 840 | U | 23000 | U |
| 4-Chloroaniline | NA | | 420 | U | 46000 | U |

NA= Not Analyzed.

Table 4
Site Soil Data Summary

| | SOT-B66-2-4' | | BBU-B52(14-16') | | BBU-B53-3-3.5' | |
|---|---|---|---|---|---|---|
| 4-Chlorophenylphenyl ether | NA | | 1200 | U | 23000 | U |
| 4-Chlorotoluene | NA | | NA | | NA | |
| 4-Methyl-2-pentanone (MIBK) | 960 | U | 2200 | U | NA | |
| 4-Nitroaniline | NA | | 2200 | U | 120000 | U |
| 4-Nitrophenol | NA | | 420 | U | 120000 | U |
| Acenaphthene | NA | | 420 | U | 23000 | U |
| Acenaphthylene | NA | | 2400 | U | 23000 | U |
| Acetone | 1900 | U | 420 | U | NA | |
| Anthracene | NA | | 47000 | | 23000 | U |
| Aroclor-1016 | NA | | NA | | NA | |
| Aroclor-1221 | NA | | NA | | NA | |
| Aroclor-1232 | NA | | NA | | NA | |
| Aroclor-1242 | NA | | NA | | NA | |
| Aroclor-1248 | NA | | NA | | NA | |
| Aroclor-1254 | NA | | NA | | NA | |
| Aroclor-1260 | NA | | NA | | NA | |
| Benzene | 190 | U | 420 | U | NA | |
| Benzidine | NA | | NA | | NA | |
| Benzo(a)anthracene | NA | | 420 | U | 23000 | U |
| Benzo(a)pyrene | NA | | 420 | U | 23000 | U |
| Benzo(b)fluoranthene | NA | | 420 | U | 23000 | U |
| Benzo(g,h,i)perylene | NA | | 420 | U | 23000 | U |
| Benzo(k)fluoranthene | NA | | 420 | U | 23000 | U |
| Benzoic acid | NA | | NA | | NA | |
| Benzyl alcohol | NA | | NA | | NA | |
| bis(2-Chloroethoxy)methane | NA | | 420 | U | 23000 | U |
| bis(2-Chloroethyl)ether | NA | | 420 | U | 23000 | U |
| bis(2-Chloroisopropyl)ether | NA | | NA | | NA | |
| bis(2-Ethylhexyl)phthalate | NA | | 240 | U | 23000 | U |
| Bromobenzene | NA | | NA | | NA | |
| Bromochloromethane | NA | | NA | | NA | |
| Bromodichloromethane | 190 | U | 240 | U | NA | |
| Bromoform | 190 | U | 480 | U | NA | |
| Bromomethane | 380 | U | 420 | U | NA | |
| Butylbenzylphthalate | NA | | 420 | U | 23000 | U |
| Carbazole | NA | | 240 | U | 23000 | U |
| Carbon disulfide | 190 | U | 240 | U | 23000 | U |
| Carbon tetrachloride | 190 | U | 240 | U | NA | |
| Chlorobenzene | 230 | | 480 | U | NA | |
| Chlorodibromomethane | NA | | NA | | NA | |
| Chloroethane | 380 | U | 240 | U | NA | |
| Chloroform | 190 | U | 480 | U | NA | |
| Chloromethane | 380 | U | 420 | U | NA | |
| Chrysene | NA | | 240 | U | NA | |
| cis-1,2-Dichloroethene | 190 | U | 240 | U | NA | |
| cis-1,3-Dichloropropene | 190 | U | 420 | U | NA | |
| Dibenzo(a,h)anthracene | NA | | 420 | U | 23000 | U |

NA= Not Analyzed.

Table 4
Site Soil Data Summary

| | SOT-B66-2-4' | | BBU-B52(14-16') | | BBU-B53-3-3.5' | |
|---|---|---|---|---|---|---|
| Dibenzofuran | NA | | 240 | U | 23000 | U |
| Dibromomethane | NA | | NA | | NA | U |
| Dichlorodifluoromethane | NA | | NA | | NA | U |
| Dibromochloromethane | 190 | U | 420 | U | NA | U |
| Diethylphthalate | NA | | 420 | U | 23000 | U |
| Dimethylphthalate | NA | | 420 | U | 23000 | U |
| Di-n-butylphthalate | NA | | 420 | U | 23000 | U |
| Di-n-octylphthalate | NA | | 240 | U | 23000 | U |
| Ethylbenzene | 140 | | 420 | U | NA | |
| Fluoranthene | NA | | 420 | U | 23000 | U |
| Fluorene | NA | | 420 | U | 23000 | U |
| Hexachlorobenzene | NA | | 420 | U | 23000 | U |
| Hexachlorobutadiene | NA | | 420 | U | 23000 | U |
| Hexachlorocyclopentadiene | NA | | 420 | U | 23000 | U |
| Hexachloroethane | NA | | 420 | U | 23000 | U |
| Indeno(1,2,3-cd)pyrene | NA | | 420 | U | 23000 | U |
| Isophorone | NA | | 240 | U | 23000 | U |
| Isopropylbenzene | NA | | NA | | NA | |
| m&p-Xylene | 190 | U | NA | | NA | |
| Methylene chloride (Dichloromethane) | NA | | 420 | U | NA | |
| Naphthalene | NA | | 420 | U | 23000 | U |
| Naphthalene | NA | | NA | | NA | |
| n-Butylbenzene | NA | | NA | | NA | |
| Nitrobenzene | NA | | 420 | U | 23000 | E |
| N-Nitrosodimethylamine | NA | | 420 | U | NA | |
| n-Nitrosodi-n-propylamine | NA | | NA | | 23000 | U |
| N-Nitrosodiphenylamine/Diphenylamine | NA | | 2200 | U | 23000 | U |
| n-Propylbenzene | NA | | NA | | NA | |
| o-Xylene | NA | | NA | | NA | |
| Pentachlorophenol | NA | | 420 | U | 1500000 | U |
| Phenanthrene | NA | | 420 | U | 23000 | |
| Phenol | NA | | 420 | U | 23000 | |
| p-Isopropyltoluene | NA | | NA | | NA | |
| Pyrene | NA | | 240 | U | 23000 | |
| sec-Butylbenzene | NA | | NA | | NA | |
| Styrene | 190 | U | 240 | U | NA | |
| tert-Butylbenzene | NA | | NA | | NA | |
| Tetrachloroethene | 190 | U | 240 | U | NA | |
| Toluene | 190 | U | 240 | U | NA | |
| trans-1,2-Dichloroethene | NA | | NA | | NA | |
| trans-1,3-Dichloropropene | 190 | U | 240 | U | NA | |
| Trichloroethene | 190 | U | 480 | U | NA | |
| Trichlorofluoromethane | NA | | NA | | NA | |
| Vinyl chloride | 380 | U | 480 | U | NA | |
| Xylenes, Total | 3000 | | 4800 | U | NA | |

NA= Not Analyzed.

Table 4
Site Soil Data Summary

| | SOT-B65-2-4' | | SOT-B64-6-8' DUP | | BBU-B55-2-4 | |
|---|---|---|---|---|---|---|
| 1,1,1,2-Tetrachloroethane | NA | | 10000 | U | 280 | U |
| 1,1,1-Trichloroethane | 230 | U | 10000 | U | 280 | U |
| 1,1,2,2-Tetrachloroethane | 230 | U | 10000 | U | 280 | U |
| 1,1,2-Trichloroethane | 230 | U | 10000 | U | 280 | U |
| 1,1-Dichloroethane | 230 | U | 10000 | U | 280 | U |
| 1,1-Dichloroethene | 230 | U | NA | | NA | |
| 1,1-Dichloropropylene | NA | | NA | | NA | |
| 1,2,3-Trichlorobenzene | NA | | NA | | NA | |
| 1,2,3-Trichloropropane | NA | | NA | | 6200 | |
| 1,2,4-Trichlorobenzene | NA | | NA | | NA | |
| 1,2,4-Trichlorobenzene | NA | | NA | | NA | |
| 1,2,4-Trimethylbenzene | NA | | NA | | NA | |
| 1,2-Dibromo-3-chloropropane | NA | | NA | | NA | |
| 1,2-Dibromoethane (EDB) | NA | | NA | | 9000 | |
| 1,2-Dichlorobenzene | NA | | 10000 | U | 280 | U |
| 1,2-Dichloroethane | 230 | U | 10000 | U | 280 | U |
| 1,2-Dichloropropane | 230 | U | NA | | NA | |
| 1,3,5-Trimethylbenzene | NA | | NA | | 230 | |
| 1,3-Dichlorobenzene | NA | | NA | | NA | |
| 1,3-Dichloropropane | NA | | NA | | 26000 | |
| 1,4-Dichlorobenzene | NA | | NA | | NA | |
| 2,2-Dichloropropane | NA | | NA | | 420 | U |
| 2,2'-Oxybis(1-Chloropropane) | NA | | NA | | 330 | |
| 2,4,5-Trichlorophenol | NA | | NA | | 2400 | |
| 2,4,6-Trichlorophenol | NA | | NA | | 420 | |
| 2,4-Dichlorophenol | NA | | NA | | 420 | U |
| 2,4-Dimethylphenol | NA | | NA | | 2200 | U |
| 2,4-Dinitrophenol | NA | | NA | | 420 | U |
| 2,4-Dinitrotoluene | NA | | NA | | 420 | U |
| 2,6-Dinitrotoluene | NA | | 51000 | U | 1400 | U |
| 2-Butanone (MEK) | 1200 | U | NA | | 420 | U |
| 2-Chloronaphthalene | NA | | NA | | 420 | U |
| 2-Chlorophenol | NA | | NA | | NA | |
| 2-Chlorotoluene | NA | | 51000 | U | 1400 | U |
| 2-Hexanone | 1200 | U | NA | | 290 | |
| 2-Methyl-4,6-dinitrophenol | 1200 | U | NA | | 420 | U |
| 2-Methylnaphthalene | NA | | NA | | NA | |
| 2-Methylphenol (o-cresol) | NA | | NA | | 2200 | U |
| 2-Nitroaniline | NA | | NA | | 420 | U |
| 2-Nitrophenol | NA | | NA | | 420 | U |
| 3&4-Methylphenol (m&p-cresol) | NA | | NA | | 850 | U |
| 3,3'-Dichlorobenzidine | NA | | NA | | 2200 | U |
| 3-Nitroaniline | NA | | NA | | 2200 | U |
| 4,6-Dinitro-2-methylphenol | NA | | NA | | 420 | U |
| 4-Bromophenyl phenyl ether | NA | | NA | | 420 | U |
| 4-Chloro-3-methylphenol | NA | | NA | | 850 | U |
| 4-Chloroaniline | NA | | NA | | 420 | U |

NA= Not Analyzed.

Table 4
Site Soil Data Summary

| | SOT-B65-2-4' | | SOT-B64-6-8' DUP | | BBU-B55-2-4 | |
|---|---|---|---|---|---|---|
| 4-Chlorophenylphenyl ether | NA | | NA | | NA | |
| 4-Chlorotoluene | NA | | 51000 | U | 1400 | U |
| 4-Methyl-2-pentanone (MIBK) | NA | | NA | | 2200 | U |
| 4-Nitroaniline | NA | | NA | | 2200 | U |
| 4-Nitrophenol | NA | | NA | | 420 | U |
| Acenaphthene | NA | | NA | | 420 | U |
| Acenaphthylene | NA | | 100000 | U | 2800 | U |
| Acetone | 2300 | U | NA | | 770 | |
| Anthracene | NA | | NA | | NA | |
| Aroclor-1016 | NA | | NA | | NA | |
| Aroclor-1221 | NA | | NA | | NA | |
| Aroclor-1232 | NA | | NA | | NA | |
| Aroclor-1242 | NA | | NA | | NA | |
| Aroclor-1248 | NA | | NA | | NA | |
| Aroclor-1254 | NA | | NA | | NA | |
| Aroclor-1260 | NA | | 10000 | U | 1100 | |
| Benzene | 230 | U | NA | | NA | |
| Benzidine | NA | | NA | | 420 | U |
| Benzo(a)anthracene | NA | | NA | | 240 | |
| Benzo(a)pyrene | NA | | NA | | 420 | U |
| Benzo(b)fluoranthene | NA | | NA | | 420 | U |
| Benzo(g,h,i)perylene | NA | | NA | | 440 | |
| Benzo(k)fluoranthene | NA | | NA | | NA | |
| Benzoic acid | NA | | NA | | NA | |
| Benzyl alcohol | NA | | NA | | 420 | U |
| bis(2-Chloroethoxy)methane | NA | | NA | | 420 | U |
| bis(2-Chloroethyl)ether | NA | | NA | | NA | |
| bis(2-Chloroisopropyl)ether | NA | | NA | | 420 | U |
| bis(2-Ethylhexyl)phthalate | NA | | NA | | NA | |
| Bromobenzene | NA | | NA | | NA | |
| Bromochloromethane | NA | | 10000 | U | 280 | U |
| Bromodichloromethane | 230 | U | 10000 | U | 280 | U |
| Bromoform | 230 | U | 20000 | U | 560 | U |
| Bromomethane | 460 | U | NA | | 420 | U |
| Butylbenzylphthalate | NA | | NA | | 420 | U |
| Carbazole | NA | | 10000 | U | 280 | U |
| Carbon disulfide | 230 | U | 10000 | U | 280 | U |
| Carbon tetrachloride | 230 | U | 10000 | U | 280 | U |
| Chlorobenzene | 840 | | 20000 | U | NA | |
| Chlorodibromomethane | NA | | NA | | 560 | U |
| Chloroethane | 460 | U | 10000 | U | 170 | |
| Chloroform | 230 | U | NA | | 560 | U |
| Chloromethane | 460 | U | NA | | 420 | U |
| Chrysene | NA | | 10000 | U | 280 | U |
| cis-1,2-Dichloroethene | 230 | U | NA | | 280 | U |
| cis-1,3-Dichloropropene | 230 | U | NA | | 420 | U |
| Dibenzo(a,h)anthracene | NA | | NA | | 420 | U |

NA= Not Analyzed.

Table 4
Site Soil Data Summary

| | SOT-B65-2-4' | | SOT-B64-6-8' DUP | | BBU-B55-2-4 | |
|---|---|---|---|---|---|---|
| Dibenzofuran | NA | | NA | | NA | |
| Dibromomethane | NA | | NA | | 280 | U |
| Dichlorodifluoromethane | 230 | U | 10000 | U | NA | |
| Dibromochloromethane | NA | | NA | | 420 | U |
| Diethylphthalate | NA | | NA | | 420 | U |
| Dimethylphthalate | NA | | NA | | 420 | U |
| Di-n-butylphthalate | NA | | NA | | 420 | U |
| Di-n-octylphthalate | NA | | 94000 | | 280 | U |
| Ethylbenzene | 4800 | | NA | | 630 | |
| Fluoranthene | NA | | NA | | 420 | U |
| Fluorene | NA | | NA | | 1100 | |
| Hexachlorobenzene | NA | | NA | | 260 | |
| Hexachlorobutadiene | NA | | NA | | 420 | U |
| Hexachlorocyclopentadiene | NA | | NA | | 420 | U |
| Hexachloroethane | NA | | NA | | 420 | U |
| Indeno(1,2,3-cd)pyrene | NA | | NA | | 420 | U |
| Isophorone | NA | | NA | | NA | |
| Isopropylbenzene | NA | | NA | | NA | |
| m&p-Xylene | NA | | 10000 | U | 280 | U |
| Methylene chloride (Dichloromethane) | 230 | U | NA | | 420 | U |
| Naphthalene | NA | | NA | | NA | |
| Naphthalene | NA | | NA | | NA | |
| n-Butylbenzene | NA | | NA | | 420 | U |
| Nitrobenzene | NA | | NA | | NA | |
| N-Nitrosodimethylamine | NA | | NA | | 420 | U |
| n-Nitrosodi-n-propylamine | NA | | NA | | 420 | U |
| N-Nitrosodiphenylamine/Diphenylamine | NA | | NA | | NA | |
| n-Propylbenzene | NA | | NA | | NA | |
| o-Xylene | NA | | NA | | 130000 | |
| Pentachlorophenol | NA | | NA | | 420 | U |
| Phenanthrene | NA | | NA | | 420 | U |
| Phenol | NA | | NA | | NA | |
| p-Isopropyltoluene | NA | | NA | | 250 | |
| Pyrene | NA | | NA | | NA | |
| sec-Butylbenzene | NA | | 10000 | U | 280 | U |
| Styrene | 230 | U | NA | | NA | |
| tert-Butylbenzene | NA | | 10000 | U | 830 | |
| Tetrachloroethene | 230 | U | 10000 | U | 280 | U |
| Toluene | 230 | U | NA | | 280 | U |
| trans-1,2-Dichloroethene | NA | | 10000 | U | NA | |
| trans-1,3-Dichloropropene | 230 | U | 10000 | U | 280 | U |
| Trichloroethene | 230 | U | NA | | NA | |
| Trichlorofluoromethane | NA | | 20000 | U | 560 | U |
| Vinyl chloride | 460 | U | 1500000 | E | 560 | U |
| Xylenes, Total | 23000 | | NA | | NA | |

NA= Not Analyzed.

Table 4
Site Soil Data Summary

| | BBU-B55-6-8' | | BBU-B57-3' | | BBU-B58-7-8' | |
|---|---|---|---|---|---|---|
| 1,1,1,2-Tetrachloroethane | 250 | U | NA | | NA | |
| 1,1,1-Trichloroethane | 250 | U | 1400 | U | 7200 | U |
| 1,1,2,2-Tetrachloroethane | 250 | U | 1400 | U | 7200 | U |
| 1,1,2-Trichloroethane | 250 | U | 1400 | U | 7200 | U |
| 1,1-Dichloroethane | 250 | U | 1400 | U | 7200 | U |
| 1,1-Dichloroethene | 450 | U | 1400 | U | 7200 | U |
| 1,1-Dichloropropylene | NA | | NA | | NA | |
| 1,2,3-Trichlorobenzene | NA | | NA | | NA | |
| 1,2,3-Trichloropropane | NA | | NA | | NA | |
| 1,2,4-Trichlorobenzene | 450 | U | 16000 | | 440 | U |
| 1,2,4-Trichlorobenzene | NA | | NA | | NA | |
| 1,2,4-Trimethylbenzene | NA | | NA | | NA | |
| 1,2-Dibromo-3-chloropropane | NA | | NA | | NA | |
| 1,2-Dibromoethane (EDB) | NA | | NA | | NA | |
| 1,2-Dichlorobenzene | 250 | U | 180000 | | 440 | U |
| 1,2-Dichloroethane | 250 | U | 4700 | | 7200 | U |
| 1,2-Dichloropropane | 450 | U | 1400 | U | 7200 | U |
| 1,3,5-Trimethylbenzene | NA | | NA | | NA | |
| 1,3-Dichlorobenzene | 800 | | 8600 | U | 440 | U |
| 1,3-Dichloropropane | NA | | NA | | NA | |
| 1,4-Dichlorobenzene | 450 | U | 300000 | | 440 | U |
| 2,2-Dichloropropane | NA | | NA | | NA | |
| 2,2'-Oxybis(1-Chloropropane) | 450 | U | 8600 | U | 440 | U |
| 2,4,5-Trichlorophenol | 250 | | 8600 | U | 440 | U |
| 2,4,6-Trichlorophenol | 450 | U | 8600 | U | 440 | U |
| 2,4-Dichlorophenol | 450 | U | 8600 | U | 440 | U |
| 2,4-Dimethylphenol | 2300 | U | 8600 | U | 440 | U |
| 2,4-Dinitrophenol | 450 | U | 44000 | U | 2200 | U |
| 2,4-Dinitrotoluene | 450 | U | 8600 | U | 440 | U |
| 2,6-Dinitrotoluene | 1300 | U | 8600 | U | 440 | U |
| 2-Butanone (MEK) | 450 | U | 6800 | U | 36000 | U |
| 2-Chloronaphthalene | 450 | U | 8600 | U | 440 | U |
| 2-Chlorophenol | 1300 | U | 8600 | U | 440 | U |
| 2-Chlorotoluene | NA | | NA | | NA | |
| 2-Hexanone | 450 | U | 6800 | U | 36000 | U |
| 2-Methyl-4,6-dinitrophenol | NA | | NA | | NA | |
| 2-Methylnaphthalene | 450 | U | 8600 | U | 440 | U |
| 2-Methylphenol (o-cresol) | 2300 | U | 8600 | U | 440 | U |
| 2-Nitroaniline | 450 | U | 44000 | U | 2200 | U |
| 2-Nitrophenol | 900 | U | 8600 | U | 440 | U |
| 3&4-Methylphenol (m&p-cresol) | 2300 | U | 8600 | U | 440 | U |
| 3,3'-Dichlorobenzidine | 450 | U | 17000 | U | 880 | U |
| 3-Nitroaniline | 2300 | U | 44000 | U | 2200 | U |
| 4,6-Dinitro-2-methylphenol | 450 | U | 44000 | U | 2200 | U |
| 4-Bromophenyl phenyl ether | 450 | U | 8600 | U | 440 | U |
| 4-Chloro-3-methylphenol | 900 | U | 8600 | U | 440 | U |
| 4-Chloroaniline | 450 | U | 17000 | U | 880 | U |

NA= Not Analyzed.

Table 4
Site Soil Data Summary

| | BBU-B55-6-8' | | BBU-B57-3' | | BBU-B58-7-8' | |
|---|---|---|---|---|---|---|
| 4-Chlorophenylphenyl ether | 1300 | U | 8600 | U | 440 | U |
| 4-Chlorotoluene | NA | | NA | | NA | |
| 4-Methyl-2-pentanone (MIBK) | 2300 | U | 6800 | U | 36000 | U |
| 4-Nitroaniline | 2300 | U | 44000 | U | 2200 | U |
| 4-Nitrophenol | 450 | U | 44000 | U | 2200 | U |
| Acenaphthene | 450 | U | 8600 | U | 440 | U |
| Acenaphthylene | 2500 | U | 8600 | U | 440 | U |
| Acetone | 450 | U | 14000 | U | 72000 | U |
| Anthracene | 5900 | | 8600 | U | 440 | U |
| Aroclor-1016 | NA | | NA | | NA | |
| Aroclor-1221 | NA | | NA | | NA | |
| Aroclor-1232 | NA | | NA | | NA | |
| Aroclor-1242 | NA | | NA | | NA | |
| Aroclor-1248 | NA | | NA | | NA | |
| Aroclor-1254 | NA | | NA | | NA | |
| Aroclor-1260 | NA | | NA | | NA | |
| Benzene | 450 | U | 230000 | | 640000 | |
| Benzidine | NA | | NA | | NA | |
| Benzo(a)anthracene | 450 | U | 8600 | U | 440 | U |
| Benzo(a)pyrene | 450 | U | 8600 | U | 440 | U |
| Benzo(b)fluoranthene | 450 | U | 8600 | U | 440 | U |
| Benzo(g,h,i)perylene | 450 | U | 8600 | U | 440 | U |
| Benzo(k)fluoranthene | 450 | U | 8600 | U | 440 | U |
| Benzoic acid | NA | | NA | | NA | |
| Benzyl alcohol | NA | | NA | | NA | |
| bis(2-Chloroethoxy)methane | 450 | U | 8600 | U | 440 | U |
| bis(2-Chloroethyl)ether | 250 | | 8600 | U | 440 | U |
| bis(2-Chloroisopropyl)ether | NA | | NA | | NA | |
| bis(2-Ethylhexyl)phthalate | 250 | U | 8600 | U | 440 | U |
| Bromobenzene | NA | | NA | | NA | |
| Bromochloromethane | NA | | NA | | NA | |
| Bromodichloromethane | 250 | U | 1400 | U | 7200 | U |
| Bromoform | 510 | U | 1400 | U | 7200 | U |
| Bromomethane | 450 | U | 2700 | U | 14000 | U |
| Butylbenzylphthalate | 450 | U | 8600 | U | 440 | U |
| Carbazole | 250 | U | 8600 | U | 440 | U |
| Carbon disulfide | 250 | U | 1400 | U | 7200 | U |
| Carbon tetrachloride | 250 | U | 1400 | U | 7200 | U |
| Chlorobenzene | 510 | U | 70000 | | 7200 | U |
| Chlorodibromomethane | NA | | NA | | NA | |
| Chloroethane | 250 | U | 2700 | U | 14000 | U |
| Chloroform | 510 | U | 1400 | U | 7200 | U |
| Chloromethane | 450 | U | 2700 | U | 14000 | U |
| Chrysene | 250 | U | 8600 | U | 440 | U |
| cis-1,2-Dichloroethene | 250 | U | 1400 | U | 7200 | U |
| cis-1,3-Dichloropropene | 450 | U | 1400 | U | 7200 | U |
| Dibenzo(a,h)anthracene | 450 | U | 8600 | U | 440 | U |

NA= Not Analyzed.

Table 4
Site Soil Data Summary

| | BBU-B55-6-8' | | BBU-B57-3' | | BBU-B58-7-8' | |
|---|---|---|---|---|---|---|
| Dibenzofuran | 250 | U | 8600 | U | 440 | U |
| Dibromomethane | NA | | NA | | NA | |
| Dichlorodifluoromethane | NA | | NA | | NA | |
| Dibromochloromethane | 450 | U | 1400 | U | 7200 | U |
| Diethylphthalate | 450 | U | 8600 | U | 440 | U |
| Dimethylphthalate | 450 | U | 8600 | U | 440 | U |
| Di-n-butylphthalate | 450 | U | 8600 | U | 440 | U |
| Di-n-octylphthalate | 250 | U | 8600 | U | 440 | U |
| Ethylbenzene | 450 | U | 1400 | U | 7200 | U |
| Fluoranthene | 450 | U | 8600 | U | 440 | U |
| Fluorene | 450 | U | 8600 | U | 440 | U |
| Hexachlorobenzene | 450 | U | 8600 | U | 440 | U |
| Hexachlorobutadiene | 450 | U | 8600 | U | 440 | U |
| Hexachlorocyclopentadiene | 450 | U | 8600 | U | 440 | U |
| Hexachloroethane | 450 | U | 8600 | U | 440 | U |
| Indeno(1,2,3-cd)pyrene | 450 | U | 8600 | U | 440 | U |
| Isophorone | 250 | U | 8600 | U | 440 | U |
| Isopropylbenzene | NA | | NA | | NA | |
| m&p-Xylene | NA | | NA | | NA | |
| Methylene chloride (Dichloromethane) | 450 | U | 1400 | U | 7200 | U |
| Naphthalene | 450 | U | 8600 | U | 440 | U |
| Naphthalene | NA | | NA | | NA | |
| n-Butylbenzene | NA | | NA | | NA | |
| Nitrobenzene | 450 | U | 8600 | U | 440 | U |
| N-Nitrosodimethylamine | NA | | NA | | NA | |
| n-Nitrosodi-n-propylamine | 450 | U | 8600 | U | 440 | U |
| N-Nitrosodiphenylamine/Diphenylamine | 36000 | | 8600 | U | 440 | U |
| n-Propylbenzene | NA | | NA | | NA | |
| o-Xylene | NA | | NA | | NA | |
| Pentachlorophenol | 450 | U | 44000 | U | 2200 | U |
| Phenanthrene | 450 | U | 8600 | U | 440 | U |
| Phenol | 450 | U | 8600 | U | 460 | |
| p-Isopropyltoluene | NA | | NA | | NA | |
| Pyrene | 250 | U | 8600 | U | 440 | U |
| sec-Butylbenzene | NA | | NA | | NA | |
| Styrene | 250 | U | 1400 | U | 7200 | U |
| tert-Butylbenzene | 250 | U | 1400 | U | 7200 | U |
| Tetrachloroethene | NA | | NA | | NA | |
| Toluene | 250 | U | 1400 | U | 7200 | U |
| trans-1,2-Dichloroethene | 250 | U | 1400 | U | 7200 | U |
| trans-1,3-Dichloropropene | NA | | NA | | NA | |
| Trichloroethene | 510 | U | 1400 | U | 7200 | U |
| Trichlorofluoromethane | NA | | NA | | NA | |
| Vinyl chloride | 510 | U | 2700 | U | 14000 | U |
| Xylenes, Total | NA | | 2700 | U | 14000 | U |

NA= Not Analyzed.

Table 4
Site Soil Data Summary

| | BBU-B58-3-4' | | BBU-B58-7-8' | | NTF-B77-0-2' | |
|---|---|---|---|---|---|---|
| 1,1,1,2-Tetrachloroethane | NA | | NA | | NA | |
| 1,1,1-Trichloroethane | 41000 | U | 7200 | U | 3000 | U |
| 1,1,2,2-Tetrachloroethane | 41000 | U | 7200 | U | 3000 | U |
| 1,1,2-Trichloroethane | 41000 | U | 7200 | U | 3000 | U |
| 1,1-Dichloroethane | 41000 | U | 7200 | U | 3000 | U |
| 1,1-Dichloroethene | 41000 | U | 7200 | U | 3000 | U |
| 1,1-Dichloropropylene | NA | | NA | | NA | |
| 1,2,3-Trichlorobenzene | NA | | NA | | NA | |
| 1,2,3-Trichloropropane | NA | | NA | | NA | |
| 1,2,4-Trichlorobenzene | 7800 | | 440 | U | 3900 | U |
| 1,2,4-Trichlorobenzene | NA | | NA | | NA | |
| 1,2,4-Trimethylbenzene | NA | | NA | | NA | |
| 1,2-Dibromo-3-chloropropane | NA | | NA | | NA | |
| 1,2-Dibromoethane (EDB) | NA | | NA | | NA | |
| 1,2-Dichlorobenzene | 3300 | | 440 | U | 37000 | |
| 1,2-Dichloroethane | 41000 | U | 7200 | U | 3000 | U |
| 1,2-Dichloropropane | 41000 | U | 7200 | U | 3000 | U |
| 1,3,5-Trimethylbenzene | NA | | NA | | NA | |
| 1,3-Dichlorobenzene | 410 | U | 440 | U | 3900 | U |
| 1,3-Dichloropropane | NA | | NA | | NA | |
| 1,4-Dichlorobenzene | 11000 | | 440 | U | 5900 | |
| 2,2-Dichloropropane | NA | | NA | | NA | |
| 2,2'-Oxybis(1-Chloropropane) | 410 | U | 440 | U | 3900 | U |
| 2,4,5-Trichlorophenol | 350 | | 440 | U | 3900 | U |
| 2,4,6-Trichlorophenol | 1000 | | 440 | U | 3900 | U |
| 2,4-Dichlorophenol | 300 | | 440 | U | 3900 | U |
| 2,4-Dimethylphenol | 410 | U | 440 | U | 3900 | U |
| 2,4-Dinitrophenol | 2100 | U | 2200 | U | 20000 | U |
| 2,4-Dinitrotoluene | 410 | U | 440 | U | 3900 | U |
| 2,6-Dinitrotoluene | 410 | U | 440 | U | 3900 | U |
| 2-Butanone (MEK) | 200000 | U | 36000 | U | 15000 | U |
| 2-Chloronaphthalene | 410 | U | 440 | U | 3900 | U |
| 2-Chlorophenol | 410 | U | 440 | U | 3900 | U |
| 2-Chlorotoluene | NA | | NA | | NA | |
| 2-Hexanone | 200000 | U | 36000 | U | 15000 | U |
| 2-Methyl-4,6-dinitrophenol | NA | | NA | | NA | |
| 2-Methylnaphthalene | 410 | U | 440 | U | 3900 | U |
| 2-Methylphenol (o-cresol) | 410 | U | 440 | U | 3900 | U |
| 2-Nitroaniline | 2100 | U | 2200 | U | 20000 | U |
| 2-Nitrophenol | 410 | U | 440 | U | 3900 | U |
| 3&4-Methylphenol (m&p-cresol) | 410 | U | 440 | U | 3900 | U |
| 3,3'-Dichlorobenzidine | 810 | U | 880 | U | 7800 | U |
| 3-Nitroaniline | 2100 | U | 2200 | U | 20000 | U |
| 4,6-Dinitro-2-methylphenol | 2100 | U | 2200 | U | 20000 | U |
| 4-Bromophenyl phenyl ether | 410 | U | 440 | U | 3900 | U |
| 4-Chloro-3-methylphenol | 410 | U | 440 | U | 3900 | U |
| 4-Chloroaniline | 1000 | | 880 | U | 7800 | U |

NA= Not Analyzed.

Table 4
Site Soil Data Summary

| | BBU-B58-3-4' | | BBU-B58-7-8' | | NTF-B77-0-2' | |
|---|---|---|---|---|---|---|
| 4-Chlorophenylphenyl ether | 410 | U | 440 | U | 3900 | U |
| 4-Chlorotoluene | NA | | NA | | NA | |
| 4-Methyl-2-pentanone (MIBK) | 200000 | U | 36000 | U | 15000 | U |
| 4-Nitroaniline | 2100 | U | 2200 | U | 20000 | U |
| 4-Nitrophenol | 2100 | U | 2200 | U | 20000 | U |
| Acenaphthene | 410 | U | 440 | U | 3900 | U |
| Acenaphthylene | 410 | U | 440 | U | 3900 | U |
| Acetone | 410000 | U | 72000 | U | 30000 | U |
| Anthracene | 410 | U | 440 | U | 3900 | U |
| Aroclor-1016 | NA | | NA | | 39 | U |
| Aroclor-1221 | NA | | NA | | 80 | U |
| Aroclor-1232 | NA | | NA | | 39 | U |
| Aroclor-1242 | NA | | NA | | 39 | U |
| Aroclor-1248 | NA | | NA | | 120 | |
| Aroclor-1254 | NA | | NA | | 460 | |
| Aroclor-1260 | NA | | NA | | 500 | |
| Benzene | 1200000 | | 640000 | | 3000 | U |
| Benzidine | NA | | NA | | NA | |
| Benzo(a)anthracene | 410 | U | 440 | U | 3900 | U |
| Benzo(a)pyrene | 410 | U | 440 | U | 3900 | U |
| Benzo(b)fluoranthene | 410 | U | 440 | U | 3900 | U |
| Benzo(g,h,i)perylene | 410 | U | 440 | U | 3900 | U |
| Benzo(k)fluoranthene | 410 | U | 440 | U | 3900 | U |
| Benzoic acid | NA | | NA | | NA | |
| Benzyl alcohol | NA | | NA | | NA | |
| bis(2-Chloroethoxy)methane | 410 | U | 440 | U | 3900 | U |
| bis(2-Chloroethyl)ether | 410 | U | 440 | U | 3900 | U |
| bis(2-Chloroisopropyl)ether | NA | | NA | | NA | |
| bis(2-Ethylhexyl)phthalate | 410 | U | 440 | U | 3900 | U |
| Bromobenzene | NA | | NA | | NA | |
| Bromochloromethane | NA | | NA | | NA | |
| Bromodichloromethane | 41000 | U | 7200 | U | 3000 | U |
| Bromoform | 41000 | U | 7200 | U | 3000 | U |
| Bromomethane | 81000 | U | 14000 | U | 6000 | U |
| Butylbenzylphthalate | 410 | U | 440 | U | 3900 | U |
| Carbazole | 410 | U | 440 | U | 3900 | U |
| Carbon disulfide | 41000 | U | 7200 | U | 3000 | U |
| Carbon tetrachloride | 41000 | U | 7200 | U | 3000 | U |
| Chlorobenzene | 41000 | U | 7200 | U | 160000 | E |
| Chlorodibromomethane | NA | | NA | | NA | |
| Chloroethane | 81000 | U | 14000 | U | 6000 | U |
| Chloroform | 41000 | U | 7200 | U | 3000 | U |
| Chloromethane | 81000 | U | 14000 | U | 6000 | U |
| Chrysene | 410 | U | 440 | U | 3900 | U |
| cis-1,2-Dichloroethene | 41000 | U | 7200 | U | 3000 | U |
| cis-1,3-Dichloropropene | 41000 | U | 7200 | U | 3000 | U |
| Dibenzo(a,h)anthracene | 410 | U | 440 | U | 3900 | U |

NA= Not Analyzed.

Table 4
Site Soil Data Summary

| | BBU-B58-3-4' | | BBU-B58-7-8' | | NTF-B77-0-2' | |
|---|---|---|---|---|---|---|
| Dibenzofuran | 410 | U | 440 | U | 3900 | U |
| Dibromomethane | NA | | NA | | NA | |
| Dichlorodifluoromethane | NA | | NA | | NA | |
| Dibromochloromethane | 41000 | U | 7200 | U | 3000 | U |
| Diethylphthalate | 410 | U | 440 | U | 3900 | U |
| Dimethylphthalate | 410 | U | 440 | U | 3900 | U |
| Di-n-butylphthalate | 410 | U | 440 | U | 3900 | U |
| Di-n-octylphthalate | 410 | U | 440 | U | 3900 | U |
| Ethylbenzene | 41000 | U | 7200 | U | 3000 | U |
| Fluoranthene | 410 | U | 440 | U | 3900 | U |
| Fluorene | 410 | U | 440 | U | 3900 | U |
| Hexachlorobenzene | 720 | | 440 | U | 3900 | U |
| Hexachlorobutadiene | 410 | U | 440 | U | 3900 | U |
| Hexachlorocyclopentadiene | 410 | U | 440 | U | 3900 | U |
| Hexachloroethane | 410 | U | 440 | U | 3900 | U |
| Indeno(1,2,3-cd)pyrene | 410 | U | 440 | U | 3900 | U |
| Isophorone | 410 | U | 440 | U | 3900 | U |
| Isopropylbenzene | NA | | NA | | NA | |
| m&p-Xylene | NA | | NA | | NA | |
| Methylene chloride (Dichloromethane) | 41000 | U | 7200 | U | 3000 | U |
| Naphthalene | 410 | U | 440 | U | 3900 | U |
| Naphthalene | NA | | NA | | NA | |
| n-Butylbenzene | NA | | NA | | NA | |
| Nitrobenzene | 410 | U | 440 | U | 3900 | U |
| N-Nitrosodimethylamine | NA | | NA | | NA | |
| n-Nitrosodi-n-propylamine | 410 | U | 440 | U | 3900 | U |
| N-Nitrosodiphenylamine/Diphenylamine | 410 | U | 440 | U | 3900 | U |
| n-Propylbenzene | NA | | NA | | NA | |
| o-Xylene | NA | | NA | | NA | |
| Pentachlorophenol | 19000 | | 2200 | U | 20000 | U |
| Phenanthrene | 410 | U | 440 | U | 3900 | U |
| Phenol | 1700 | | 460 | | 3900 | U |
| p-Isopropyltoluene | NA | | NA | | NA | |
| Pyrene | 410 | U | 440 | U | 3900 | U |
| sec-Butylbenzene | NA | | NA | | NA | |
| Styrene | 41000 | U | 7200 | U | 3000 | U |
| tert-Butylbenzene | 41000 | U | 7200 | U | NA | |
| Tetrachloroethene | NA | | NA | | 3000 | U |
| Toluene | 41000 | U | 7200 | U | 3000 | U |
| trans-1,2-Dichloroethene | 41000 | U | 7200 | U | NA | |
| trans-1,3-Dichloropropene | NA | | NA | | 3000 | U |
| Trichloroethene | 41000 | U | 7200 | U | 3000 | U |
| Trichlorofluoromethane | NA | | NA | | NA | |
| Vinyl chloride | 81000 | U | 14000 | U | 6000 | U |
| Xylenes, Total | 81000 | U | 14000 | U | 6000 | U |

NA= Not Analyzed.

Table 4
Site Soil Data Summary

| | NTF-B73-6-8' | | NTF-B74-2-4' | |
|---|---|---|---|---|
| 1,1,1,2-Tetrachloroethane | NA | | NA | |
| 1,1,1-Trichloroethane | 380 | U | 7600 | U |
| 1,1,2,2-Tetrachloroethane | 380 | U | 7600 | U |
| 1,1,2-Trichloroethane | 380 | U | 7600 | U |
| 1,1-Dichloroethane | 380 | U | 7600 | U |
| 1,1-Dichloroethene | 380 | U | 7600 | U |
| 1,1-Dichloropropylene | NA | | NA | |
| 1,2,3-Trichlorobenzene | NA | | NA | |
| 1,2,3-Trichloropropane | NA | | NA | |
| 1,2,4-Trichlorobenzene | 450 | U | 900 | U |
| 1,2,4-Trichlorobenzene | NA | | NA | |
| 1,2,4-Trimethylbenzene | NA | | NA | |
| 1,2-Dibromo-3-chloropropane | NA | | NA | |
| 1,2-Dibromoethane (EDB) | NA | | NA | |
| 1,2-Dichlorobenzene | 450 | U | 570 | J |
| 1,2-Dichloroethane | 380 | U | 7600 | U |
| 1,2-Dichloropropane | 380 | U | 7600 | U |
| 1,3,5-Trimethylbenzene | NA | | NA | |
| 1,3-Dichlorobenzene | 450 | U | 900 | U |
| 1,3-Dichloropropane | NA | | NA | |
| 1,4-Dichlorobenzene | 450 | U | 2400 | |
| 2,2-Dichloropropane | NA | | NA | |
| 2,2'-Oxybis(1-Chloropropane) | 450 | U | 900 | U |
| 2,4,5-Trichlorophenol | 450 | U | 900 | U |
| 2,4,6-Trichlorophenol | 450 | U | 900 | U |
| 2,4-Dichlorophenol | 450 | U | 900 | U |
| 2,4-Dimethylphenol | 450 | U | 900 | U |
| 2,4-Dinitrophenol | 2300 | U | 4600 | U |
| 2,4-Dinitrotoluene | 450 | U | 900 | U |
| 2,6-Dinitrotoluene | 450 | U | 900 | U |
| 2-Butanone (MEK) | 1900 | U | 38000 | U |
| 2-Chloronaphthalene | 450 | U | 900 | U |
| 2-Chlorophenol | 450 | U | 3600 | |
| 2-Chlorotoluene | NA | | NA | |
| 2-Hexanone | 1900 | U | 38000 | U |
| 2-Methyl-4,6-dinitrophenol | NA | | NA | |
| 2-Methylnaphthalene | 450 | U | 890 | J |
| 2-Methylphenol (o-cresol) | 450 | U | 900 | U |
| 2-Nitroaniline | 2300 | U | 4600 | U |
| 2-Nitrophenol | 450 | U | 900 | U |
| 3&4-Methylphenol (m&p-cresol) | 450 | U | 900 | U |
| 3,3'-Dichlorobenzidine | 910 | U | 1800 | U |
| 3-Nitroaniline | 2300 | U | 4600 | U |
| 4,6-Dinitro-2-methylphenol | 2300 | U | 4600 | U |
| 4-Bromophenyl phenyl ether | 450 | U | 900 | U |
| 4-Chloro-3-methylphenol | 450 | U | 900 | U |
| 4-Chloroaniline | 910 | U | 1800 | U |

NA= Not Analyzed.

Table 4
Site Soil Data Summary

| | NTF-B73-6-8' | | NTF-B74-2-4' | |
|---|---|---|---|---|
| 4-Chlorophenylphenyl ether | 450 | U | 900 | U |
| 4-Chlorotoluene | NA | | NA | |
| 4-Methyl-2-pentanone (MIBK) | 1900 | U | 38000 | U |
| 4-Nitroaniline | 2300 | U | 4600 | U |
| 4-Nitrophenol | 2300 | U | 4600 | U |
| Acenaphthene | 450 | U | 900 | U |
| Acenaphthylene | 450 | U | 900 | U |
| Acetone | 3800 | U | 76000 | U |
| Anthracene | 450 | U | 900 | U |
| Aroclor-1016 | 46 | U | 45 | U |
| Aroclor-1221 | 93 | U | 92 | U |
| Aroclor-1232 | 46 | U | 45 | U |
| Aroclor-1242 | 46 | U | 45 | U |
| Aroclor-1248 | 46 | U | 45 | U |
| Aroclor-1254 | 46 | U | 45 | U |
| Aroclor-1260 | 46 | U | 45 | U |
| Benzene | 380 | U | 7600 | U |
| Benzidine | NA | | NA | |
| Benzo(a)anthracene | 450 | U | 900 | U |
| Benzo(a)pyrene | 450 | U | 900 | U |
| Benzo(b)fluoranthene | 450 | U | 900 | U |
| Benzo(g,h,i)perylene | 450 | U | 900 | U |
| Benzo(k)fluoranthene | 450 | U | 900 | U |
| Benzoic acid | NA | | NA | |
| Benzyl alcohol | NA | | NA | |
| bis(2-Chloroethoxy)methane | 450 | U | 900 | U |
| bis(2-Chloroethyl)ether | 450 | U | 900 | U |
| bis(2-Chloroisopropyl)ether | NA | | NA | |
| bis(2-Ethylhexyl)phthalate | 450 | U | 900 | U |
| Bromobenzene | NA | | NA | |
| Bromochloromethane | NA | | NA | |
| Bromodichloromethane | 380 | U | 7600 | U |
| Bromoform | 380 | U | 7600 | U |
| Bromomethane | 750 | U | 15000 | U |
| Butylbenzylphthalate | 450 | U | 900 | U |
| Carbazole | 450 | U | 900 | U |
| Carbon disulfide | 380 | U | 7600 | U |
| Carbon tetrachloride | 380 | U | 7600 | U |
| Chlorobenzene | 20000 | | 2300000 | E |
| Chlorodibromomethane | NA | | NA | |
| Chloroethane | 750 | U | 15000 | U |
| Chloroform | 380 | U | 7600 | U |
| Chloromethane | 750 | U | 15000 | U |
| Chrysene | 450 | U | 900 | U |
| cis-1,2-Dichloroethene | 380 | U | 7600 | U |
| cis-1,3-Dichloropropene | 380 | U | 7600 | U |
| Dibenzo(a,h)anthracene | 450 | U | 900 | U |

NA= Not Analyzed.

Table 4
Site Soil Data Summary

| | NTF-B73-6-8' | | NTF-B74-2-4' | |
|---|---|---|---|---|
| Dibenzofuran | 450 | U | 900 | U |
| Dibromomethane | NA | | NA | |
| Dichlorodifluoromethane | NA | | NA | |
| Dibromochloromethane | 380 | U | 7600 | U |
| Diethylphthalate | 450 | U | 900 | U |
| Dimethylphthalate | 450 | U | 900 | U |
| Di-n-butylphthalate | 450 | U | 900 | U |
| Di-n-octylphthalate | 450 | U | 900 | U |
| Ethylbenzene | 380 | | 7600 | U |
| Fluoranthene | 450 | U | 900 | U |
| Fluorene | 450 | U | 900 | U |
| Hexachlorobenzene | 450 | U | 900 | U |
| Hexachlorobutadiene | 450 | U | 900 | U |
| Hexachlorocyclopentadiene | 450 | U | 900 | U |
| Hexachloroethane | 450 | U | 900 | U |
| Indeno(1,2,3-cd)pyrene | 450 | U | 900 | U |
| Isophorone | 450 | U | 900 | U |
| Isopropylbenzene | NA | | NA | |
| m&p-Xylene | NA | | NA | |
| Methylene chloride (Dichloromethane) | 350 | | 7600 | U |
| Naphthalene | 450 | U | 2300 | |
| Naphthalene | NA | | NA | |
| n-Butylbenzene | NA | | NA | |
| Nitrobenzene | 450 | U | 900 | U |
| N-Nitrosodimethylamine | NA | | NA | |
| n-Nitrosodi-n-propylamine | 450 | U | 900 | U |
| N-Nitrosodiphenylamine/Diphenylamine | 450 | U | 900 | U |
| n-Propylbenzene | NA | | NA | |
| o-Xylene | NA | | NA | |
| Pentachlorophenol | 2300 | U | 4600 | U |
| Phenanthrene | 450 | U | 720 | J |
| Phenol | 450 | U | 900 | U |
| p-Isopropyltoluene | NA | | NA | |
| Pyrene | 450 | U | 900 | U |
| sec-Butylbenzene | NA | | NA | |
| Styrene | 380 | U | 7600 | U |
| tert-Butylbenzene | NA | | NA | |
| Tetrachloroethene | 380 | U | 7600 | U |
| Toluene | 380 | U | 34000 | |
| trans-1,2-Dichloroethene | NA | | NA | |
| trans-1,3-Dichloropropene | 380 | U | 7600 | U |
| Trichloroethene | 380 | U | 7600 | U |
| Trichlorofluoromethane | NA | | NA | |
| Vinyl chloride | 750 | U | 15000 | U |
| Xylenes, Total | 980 | | 15000 | U |

NA= Not Analyzed.

Table 4
Site Soil Data Summary

| | NTF-B75-0-2' | | NTF-B76-18-20' | |
|---|---|---|---|---|
| 1,1,1,2-Tetrachloroethane | NA | | NA | |
| 1,1,1-Trichloroethane | 2800 | U | 2900 | U |
| 1,1,2,2-Tetrachloroethane | 2800 | U | 2900 | U |
| 1,1,2-Trichloroethane | 2800 | U | 2900 | U |
| 1,1-Dichloroethane | 2800 | U | 2900 | U |
| 1,1-Dichloroethene | 2800 | U | 2900 | U |
| 1,1-Dichloropropylene | NA | | NA | |
| 1,2,3-Trichlorobenzene | NA | | NA | |
| 1,2,3-Trichloropropane | NA | | NA | |
| 1,2,4-Trichlorobenzene | 370 | U | 3900 | U |
| 1,2,4-Trichlorobenzene | NA | | NA | |
| 1,2,4-Trimethylbenzene | NA | | NA | |
| 1,2-Dibromo-3-chloropropane | NA | | NA | |
| 1,2-Dibromoethane (EDB) | NA | | NA | |
| 1,2-Dichlorobenzene | 370 | U | 3900 | U |
| 1,2-Dichloroethane | 2800 | U | 2900 | U |
| 1,2-Dichloropropane | 2800 | U | 2900 | U |
| 1,3,5-Trimethylbenzene | NA | | NA | |
| 1,3-Dichlorobenzene | 370 | U | 3900 | U |
| 1,3-Dichloropropane | NA | | NA | |
| 1,4-Dichlorobenzene | 370 | U | 3900 | U |
| 2,2-Dichloropropane | NA | | NA | |
| 2,2'-Oxybis(1-Chloropropane) | 370 | U | 3900 | U |
| 2,4,5-Trichlorophenol | 370 | U | 3900 | U |
| 2,4,6-Trichlorophenol | 370 | U | 3900 | U |
| 2,4-Dichlorophenol | 370 | U | 3900 | U |
| 2,4-Dimethylphenol | 370 | U | 3900 | U |
| 2,4-Dinitrophenol | 1900 | U | 20000 | U |
| 2,4-Dinitrotoluene | 370 | U | 3900 | U |
| 2,6-Dinitrotoluene | 370 | U | 3900 | U |
| 2-Butanone (MEK) | 14000 | U | 15000 | U |
| 2-Chloronaphthalene | 370 | U | 3900 | U |
| 2-Chlorophenol | 370 | U | 3900 | U |
| 2-Chlorotoluene | NA | | NA | |
| 2-Hexanone | 14000 | U | 15000 | U |
| 2-Methyl-4,6-dinitrophenol | NA | | NA | |
| 2-Methylnaphthalene | 370 | U | 10000 | |
| 2-Methylphenol (o-cresol) | 370 | U | 3900 | U |
| 2-Nitroaniline | 1900 | U | 20000 | U |
| 2-Nitrophenol | 370 | U | 3900 | U |
| 3&4-Methylphenol (m&p-cresol) | 370 | U | 3900 | U |
| 3,3'-Dichlorobenzidine | 740 | U | 7800 | U |
| 3-Nitroaniline | 1900 | U | 20000 | U |
| 4,6-Dinitro-2-methylphenol | 1900 | U | 20000 | U |
| 4-Bromophenyl phenyl ether | 370 | U | 3900 | U |
| 4-Chloro-3-methylphenol | 370 | U | 3900 | U |
| 4-Chloroaniline | 740 | U | 7800 | U |

NA= Not Analyzed.

Table 4
Site Soil Data Summary

| | NTF-B75-0-2' | | NTF-B76-18-20' | |
|---|---|---|---|---|
| 4-Chlorophenylphenyl ether | 370 | U | 3900 | U |
| 4-Chlorotoluene | NA | | NA | |
| 4-Methyl-2-pentanone (MIBK) | 14000 | U | 15000 | U |
| 4-Nitroaniline | 1900 | U | 20000 | U |
| 4-Nitrophenol | 1900 | U | 20000 | U |
| Acenaphthene | 370 | U | 3900 | U |
| Acenaphthylene | 370 | U | 3900 | U |
| Acetone | 28000 | U | 29000 | U |
| Anthracene | 370 | U | 3900 | U |
| Aroclor-1016 | 37 | U | 39 | U |
| Aroclor-1221 | 75 | U | 79 | U |
| Aroclor-1232 | 37 | U | 39 | U |
| Aroclor-1242 | 37 | U | 39 | U |
| Aroclor-1248 | 37 | U | 39 | U |
| Aroclor-1254 | 37 | U | 39 | |
| Aroclor-1260 | 37 | U | 39 | U |
| Benzene | 2800 | U | 210000 | |
| Benzidine | NA | | NA | |
| Benzo(a)anthracene | 370 | U | 3900 | U |
| Benzo(a)pyrene | 370 | U | 3900 | U |
| Benzo(b)fluoranthene | 370 | U | 3900 | U |
| Benzo(g,h,i)perylene | 370 | U | 3900 | U |
| Benzo(k)fluoranthene | 370 | U | 3900 | U |
| Benzoic acid | NA | | NA | |
| Benzyl alcohol | NA | | NA | |
| bis(2-Chloroethoxy)methane | 370 | U | 3900 | U |
| bis(2-Chloroethyl)ether | 370 | U | 3900 | U |
| bis(2-Chloroisopropyl)ether | NA | | NA | |
| bis(2-Ethylhexyl)phthalate | 370 | U | 3900 | U |
| Bromobenzene | NA | | NA | |
| Bromochloromethane | NA | | NA | |
| Bromodichloromethane | 2800 | U | 2900 | U |
| Bromoform | 2800 | U | 2900 | U |
| Bromomethane | 5600 | U | 5900 | U |
| Butylbenzylphthalate | 370 | U | 3900 | U |
| Carbazole | 370 | U | 3900 | U |
| Carbon disulfide | 2800 | U | 2900 | U |
| Carbon tetrachloride | 2800 | U | 2900 | U |
| Chlorobenzene | 440000 | | 2900 | U |
| Chlorodibromomethane | NA | | NA | |
| Chloroethane | 5600 | U | 5900 | U |
| Chloroform | 2800 | U | 2900 | U |
| Chloromethane | 5600 | U | 5900 | U |
| Chrysene | 370 | U | 3900 | U |
| cis-1,2-Dichloroethene | 2800 | U | 2900 | U |
| cis-1,3-Dichloropropene | 2800 | U | 2900 | U |
| Dibenzo(a,h)anthracene | 370 | U | 3900 | U |

NA= Not Analyzed.

Table 4
Site Soil Data Summary

| | NTF-B75-0-2' | | NTF-B76-18-20' | |
|---|---|---|---|---|
| Dibenzofuran | 370 | U | 3900 | U |
| Dibromomethane | NA | | NA | |
| Dichlorodifluoromethane | NA | | NA | |
| Dibromochloromethane | 2800 | U | 2900 | U |
| Diethylphthalate | 370 | U | 3900 | U |
| Dimethylphthalate | 370 | U | 3900 | U |
| Di-n-butylphthalate | 370 | U | 3900 | U |
| Di-n-octylphthalate | 370 | U | 3900 | U |
| Ethylbenzene | 2800 | U | 2900 | U |
| Fluoranthene | 370 | U | 3900 | U |
| Fluorene | 370 | U | 3900 | U |
| Hexachlorobenzene | 370 | U | 3900 | U |
| Hexachlorobutadiene | 370 | U | 3900 | U |
| Hexachlorocyclopentadiene | 370 | U | 3900 | U |
| Hexachloroethane | 370 | U | 3900 | U |
| Indeno(1,2,3-cd)pyrene | 370 | U | 3900 | U |
| Isophorone | 370 | U | 3900 | U |
| Isopropylbenzene | NA | | NA | |
| m&p-Xylene | NA | | NA | |
| Methylene chloride (Dichloromethane) | 2800 | U | 2900 | U |
| Naphthalene | 370 | U | 6900 | |
| Naphthalene | NA | | NA | |
| n-Butylbenzene | NA | | NA | |
| Nitrobenzene | 370 | U | 3900 | U |
| N-Nitrosodimethylamine | NA | | NA | |
| n-Nitrosodi-n-propylamine | 370 | U | 3900 | U |
| N-Nitrosodiphenylamine/Diphenylamine | 370 | U | 3900 | U |
| n-Propylbenzene | NA | | NA | |
| o-Xylene | NA | | NA | |
| Pentachlorophenol | 1900 | U | 20000 | U |
| Phenanthrene | 370 | U | 3900 | U |
| Phenol | 370 | U | 3900 | U |
| p-Isopropyltoluene | NA | | NA | |
| Pyrene | 370 | U | 3900 | U |
| sec-Butylbenzene | NA | | NA | |
| Styrene | 2800 | U | 2900 | U |
| tert-Butylbenzene | NA | | NA | |
| Tetrachloroethene | 2800 | U | 2900 | U |
| Toluene | 2800 | U | 2900 | U |
| trans-1,2-Dichloroethene | NA | | NA | |
| trans-1,3-Dichloropropene | 2800 | U | 2900 | U |
| Trichloroethene | 2800 | U | 2900 | U |
| Trichlorofluoromethane | NA | | NA | |
| Vinyl chloride | 5600 | U | 5900 | U |
| Xylenes, Total | 5600 | U | 5900 | U |

NA= Not Analyzed.

Table 4
Site Soil Data Summary

| | SCT-B67-10-12' | | SCT-B68-4-6' | | SCT-B70-6-8' | |
|---|---|---|---|---|---|---|
| 1,1,1,2-Tetrachloroethane | NA | | NA | | NA | |
| 1,1,1-Trichloroethane | 7000 | U | 6000 | U | 5600 | U |
| 1,1,2,2-Tetrachloroethane | 7000 | U | 6000 | U | 5600 | U |
| 1,1,2-Trichloroethane | 7000 | U | 6000 | U | 5600 | U |
| 1,1-Dichloroethane | 7000 | U | 6000 | U | 5600 | U |
| 1,1-Dichloroethene | 7000 | U | 6000 | U | 5600 | U |
| 1,1-Dichloropropylene | NA | | NA | | NA | |
| 1,2,3-Trichlorobenzene | NA | | NA | | NA | |
| 1,2,3-Trichloropropane | NA | | NA | | NA | |
| 1,2,4-Trichlorobenzene | 20000 | | 2000 | | 2000 | |
| 1,2,4-Trichlorobenzene | NA | | NA | | NA | |
| 1,2,4-Trimethylbenzene | NA | | NA | | NA | |
| 1,2-Dibromo-3-chloropropane | NA | | NA | | NA | |
| 1,2-Dibromoethane (EDB) | 83000 | | 4700 | | 15000 | |
| 1,2-Dichlorobenzene | 7000 | U | 6000 | U | 5600 | U |
| 1,2-Dichloroethane | 7000 | U | 6000 | U | 5600 | U |
| 1,2-Dichloropropane | NA | | NA | | NA | |
| 1,3,5-Trimethylbenzene | 6100 | | 250 | | 750 | |
| 1,3-Dichlorobenzene | NA | | NA | | NA | |
| 1,3-Dichloropropane | 84000 | | 4700 | | 20000 | |
| 1,4-Dichlorobenzene | NA | | NA | | NA | |
| 2,2-Dichloropropane | 950 | U | 410 | U | 400 | U |
| 2,2'-Oxybis(1-Chloropropane) | 950 | U | 410 | U | 400 | U |
| 2,4,5-Trichlorophenol | 950 | U | 410 | U | 400 | U |
| 2,4,6-Trichlorophenol | 950 | U | 410 | U | 220 | |
| 2,4-Dichlorophenol | 950 | U | 410 | U | 400 | U |
| 2,4-Dimethylphenol | 4900 | U | 2100 | U | 2100 | U |
| 2,4-Dinitrophenol | 950 | U | 410 | U | 400 | U |
| 2,4-Dinitrotoluene | 950 | U | 410 | U | 400 | U |
| 2,6-Dinitrotoluene | 35000 | U | 30000 | U | 28000 | U |
| 2-Butanone (MEK) | 4800 | U | 410 | U | 400 | U |
| 2-Chloronaphthalene | 950 | U | 410 | U | 400 | U |
| 2-Chlorophenol | 760 | | 30000 | U | 28000 | U |
| 2-Chlorotoluene | 35000 | U | 410 | U | 400 | U |
| 2-Hexanone | NA | | NA | | NA | |
| 2-Methyl-4,6-dinitrophenol | 950 | U | NA | | NA | |
| 2-Methylnaphthalene | 950 | U | 410 | U | 400 | U |
| 2-Methylphenol (o-cresol) | 4900 | U | 2100 | U | NA | |
| 2-Nitroaniline | 950 | U | 410 | U | 400 | U |
| 2-Nitrophenol | 950 | U | 410 | U | 400 | U |
| 3&4-Methylphenol (m&p-cresol) | 1900 | U | 810 | U | 800 | U |
| 3,3'-Dichlorobenzidine | 4900 | U | 2100 | U | 2100 | U |
| 3-Nitroaniline | 4900 | U | 2100 | U | 2100 | U |
| 4,6-Dinitro-2-methylphenol | 950 | U | 410 | U | 400 | U |
| 4-Bromophenyl phenyl ether | 950 | U | 410 | U | 400 | U |
| 4-Chloro-3-methylphenol | 1900 | U | 810 | U | 800 | U |
| 4-Chloroaniline | 950 | U | 410 | U | 400 | U |

NA= Not Analyzed.

Table 4
Site Soil Data Summary

| | SCT-B67-10-12' | | SCT-B68-4-6' | | SCT-B70-6-8' | |
|---|---|---|---|---|---|---|
| 4-Chlorophenylphenyl ether | NA | | NA | | NA | |
| 4-Chlorotoluene | 35000 | U | 30000 | U | 28000 | U |
| 4-Methyl-2-pentanone (MIBK) | 4900 | U | 2100 | U | 2100 | U |
| 4-Nitroaniline | 4900 | U | 2100 | U | 2100 | U |
| 4-Nitrophenol | 950 | U | 410 | U | 400 | U |
| Acenaphthene | 950 | U | 410 | U | 400 | U |
| Acenaphthylene | 70000 | U | 60000 | U | 56000 | U |
| Acetone | 950 | U | 410 | U | 400 | U |
| Anthracene | NA | | NA | | NA | |
| Aroclor-1016 | NA | | NA | | NA | |
| Aroclor-1221 | NA | | NA | | NA | |
| Aroclor-1232 | NA | | NA | | NA | |
| Aroclor-1242 | NA | | NA | | NA | |
| Aroclor-1248 | NA | | NA | | NA | |
| Aroclor-1254 | NA | | NA | | NA | |
| Aroclor-1260 | 170000 | | 6000 | U | 40000 | |
| Benzene | NA | | NA | | NA | |
| Benzidine | 950 | U | 410 | U | 400 | U |
| Benzo(a)anthracene | 950 | U | 410 | U | 400 | U |
| Benzo(a)pyrene | 950 | U | 410 | U | 400 | U |
| Benzo(b)fluoranthene | 950 | U | 410 | U | 400 | U |
| Benzo(g,h,i)perylene | 950 | U | 410 | U | 400 | U |
| Benzo(k)fluoranthene | NA | | NA | | NA | |
| Benzoic acid | NA | | NA | | NA | |
| Benzyl alcohol | 950 | U | 410 | U | 400 | U |
| bis(2-Chloroethoxy)methane | 950 | U | 410 | U | 400 | U |
| bis(2-Chloroethyl)ether | NA | | NA | | NA | |
| bis(2-Chloroisopropyl)ether | 950 | U | 410 | U | 400 | U |
| bis(2-Ethylhexyl)phthalate | NA | | NA | | NA | |
| Bromobenzene | NA | | NA | | NA | |
| Bromochloromethane | 7000 | U | 6000 | U | 5600 | U |
| Bromodichloromethane | 7000 | U | 6000 | U | 5600 | U |
| Bromoform | 14000 | U | 12000 | U | 11000 | U |
| Bromomethane | 950 | U | 410 | U | 400 | U |
| Butylbenzylphthalate | 950 | U | 410 | U | 400 | U |
| Carbazole | 7000 | U | 6000 | U | 5600 | U |
| Carbon disulfide | 7000 | U | 6000 | U | 5600 | U |
| Carbon tetrachloride | 2500000 | | 600000 | | 470000 | |
| Chlorobenzene | NA | | NA | | NA | |
| Chlorodibromomethane | 14000 | U | 12000 | U | 11000 | U |
| Chloroethane | 7000 | U | 6000 | U | 5600 | U |
| Chloroform | 14000 | U | 12000 | U | 11000 | U |
| Chloromethane | 950 | U | 410 | U | 400 | U |
| Chrysene | 7000 | U | 6000 | U | 5600 | U |
| cis-1,2-Dichloroethene | 7000 | U | 6000 | U | 5600 | U |
| cis-1,3-Dichloropropene | 950 | U | 410 | U | 400 | U |
| Dibenzo(a,h)anthracene | 950 | U | 410 | U | 400 | U |

NA= Not Analyzed.

Table 4
Site Soil Data Summary

| | SCT-B67-10-12' | | SCT-B68-4-6' | | SCT-B70-6-8' | |
|---|---|---|---|---|---|---|
| Dibenzofuran | NA | | NA | | NA | |
| Dibromomethane | NA | | NA | | NA | |
| Dichlorodifluoromethane | 7000 | U | 6000 | U | 5600 | U |
| Dibromochloromethane | 950 | U | 410 | U | 400 | U |
| Diethylphthalate | 950 | U | 410 | U | 400 | U |
| Dimethylphthalate | 950 | U | 410 | U | 400 | U |
| Di-n-butylphthalate | 950 | U | 410 | U | 400 | U |
| Di-n-octylphthalate | 7000 | U | 6000 | U | 5600 | U |
| Ethylbenzene | 950 | U | 410 | U | 400 | U |
| Fluoranthene | 950 | U | 410 | U | 400 | U |
| Fluorene | 950 | U | 410 | U | 400 | U |
| Hexachlorobenzene | 950 | U | 410 | U | 400 | U |
| Hexachlorobutadiene | 950 | U | 410 | U | 400 | U |
| Hexachlorocyclopentadiene | 950 | U | 410 | U | 400 | U |
| Hexachloroethane | 950 | U | 410 | U | 400 | U |
| Indeno(1,2,3-cd)pyrene | 950 | U | 410 | U | 400 | U |
| Isophorone | NA | | NA | | NA | |
| Isopropylbenzene | NA | | NA | | NA | |
| m&p-Xylene | 7000 | U | 6000 | U | 5600 | U |
| Methylene chloride (Dichloromethane) | 500 | | 410 | U | 400 | U |
| Naphthalene | NA | | NA | | NA | |
| Naphthalene | 950 | U | 410 | U | 400 | U |
| n-Butylbenzene | NA | | NA | | NA | |
| Nitrobenzene | 950 | U | 410 | U | 400 | U |
| N-Nitrosodimethylamine | 950 | U | 410 | U | 400 | U |
| n-Nitrosodi-n-propylamine | NA | | NA | | NA | |
| N-Nitrosodiphenylamine/Diphenylamine | NA | | NA | | NA | |
| n-Propylbenzene | 4900 | U | 2100 | U | 2100 | U |
| o-Xylene | 950 | U | 410 | U | 400 | U |
| Pentachlorophenol | 950 | U | 410 | U | 400 | U |
| Phenanthrene | NA | | NA | | NA | |
| Phenol | 950 | U | 410 | U | 400 | U |
| p-Isopropyltoluene | NA | | NA | | NA | |
| Pyrene | 7000 | U | 6000 | U | 5600 | U |
| sec-Butylbenzene | NA | | NA | | NA | |
| Styrene | 7000 | U | 6000 | U | 5600 | U |
| tert-Butylbenzene | 7000 | U | 6000 | U | 5600 | U |
| Tetrachloroethene | NA | | NA | | NA | |
| Toluene | 7000 | U | 6000 | U | 5600 | U |
| trans-1,2-Dichloroethene | 7000 | U | 6000 | U | 5600 | U |
| trans-1,3-Dichloropropene | NA | | NA | | NA | |
| Trichloroethene | 14000 | U | 12000 | U | 11000 | U |
| Trichlorofluoromethane | 14000 | U | 12000 | U | 11000 | U |
| Vinyl chloride | NA | | NA | | NA | |
| Xylenes, Total | NA | | NA | | NA | |

NA= Not Analyzed.

Table 4
Site Soil Data Summary

| | SCT-B71-6-8' | | SOT-B64-12-14' | |
|---|---|---|---|---|
| 1,1,1,2-Tetrachloroethane | NA | | NA | |
| 1,1,1-Trichloroethane | 5100 | U | 4000 | U |
| 1,1,2,2-Tetrachloroethane | 5100 | U | 4000 | U |
| 1,1,2-Trichloroethane | 5100 | U | 4000 | U |
| 1,1-Dichloroethane | 5100 | U | 4000 | U |
| 1,1-Dichloroethene | 5100 | U | 4000 | U |
| 1,1-Dichloropropylene | NA | | NA | |
| 1,2,3-Trichlorobenzene | NA | | NA | |
| 1,2,3-Trichloropropane | NA | | NA | |
| 1,2,4-Trichlorobenzene | 1000 | | NA | |
| 1,2,4-Trichlorobenzene | NA | | NA | |
| 1,2,4-Trimethylbenzene | NA | | NA | |
| 1,2-Dibromo-3-chloropropane | NA | | NA | |
| 1,2-Dibromoethane (EDB) | 14000 | | NA | |
| 1,2-Dichlorobenzene | 5100 | U | 4000 | U |
| 1,2-Dichloroethane | 5100 | U | 4000 | U |
| 1,2-Dichloropropane | NA | | NA | |
| 1,3,5-Trimethylbenzene | 220 | | NA | |
| 1,3-Dichlorobenzene | NA | | NA | |
| 1,3-Dichloropropane | 16000 | | NA | |
| 1,4-Dichlorobenzene | NA | | NA | |
| 2,2-Dichloropropane | 390 | U | NA | |
| 2,2'-Oxybis(1-Chloropropane) | 390 | U | NA | |
| 2,4,5-Trichlorophenol | 390 | U | NA | |
| 2,4,6-Trichlorophenol | 390 | U | NA | |
| 2,4-Dichlorophenol | 390 | U | NA | |
| 2,4-Dimethylphenol | 2000 | U | NA | |
| 2,4-Dinitrophenol | 390 | U | NA | |
| 2,4-Dinitrotoluene | 390 | U | NA | |
| 2,6-Dinitrotoluene | 25000 | U | 20000 | U |
| 2-Butanone (MEK) | 390 | U | NA | |
| 2-Chloronaphthalene | 320 | | NA | |
| 2-Chlorophenol | 25000 | U | 20000 | U |
| 2-Chlorotoluene | 390 | U | NA | |
| 2-Hexanone | NA | | NA | |
| 2-Methyl-4,6-dinitrophenol | NA | | NA | |
| 2-Methylnaphthalene | 390 | U | NA | |
| 2-Methylphenol (o-cresol) | NA | | NA | |
| 2-Nitroaniline | 390 | U | NA | |
| 2-Nitrophenol | 390 | U | NA | |
| 3&4-Methylphenol (m&p-cresol) | 770 | U | NA | |
| 3,3'-Dichlorobenzidine | 2000 | U | NA | |
| 3-Nitroaniline | 2000 | U | NA | |
| 4,6-Dinitro-2-methylphenol | 390 | U | NA | |
| 4-Bromophenyl phenyl ether | 390 | U | NA | |
| 4-Chloro-3-methylphenol | 770 | U | NA | |
| 4-Chloroaniline | 390 | U | NA | |

NA= Not Analyzed.

Table 4
Site Soil Data Summary

| | SCT-B71-6-8' | | SOT-B64-12-14' | |
|---|---|---|---|---|
| 4-Chlorophenylphenyl ether | NA | | NA | |
| 4-Chlorotoluene | 25000 | U | 20000 | U |
| 4-Methyl-2-pentanone (MIBK) | 2000 | U | NA | |
| 4-Nitroaniline | 2000 | U | NA | |
| 4-Nitrophenol | 390 | U | NA | |
| Acenaphthene | 390 | U | NA | |
| Acenaphthylene | 51000 | U | 40000 | U |
| Acetone | 390 | U | NA | |
| Anthracene | NA | | NA | |
| Aroclor-1016 | NA | | NA | |
| Aroclor-1221 | NA | | NA | |
| Aroclor-1232 | NA | | NA | |
| Aroclor-1242 | NA | | NA | |
| Aroclor-1248 | NA | | NA | |
| Aroclor-1254 | NA | | NA | |
| Aroclor-1260 | 230000 | | 4000 | U |
| Benzene | NA | | NA | |
| Benzidine | 390 | U | NA | |
| Benzo(a)anthracene | 390 | U | NA | |
| Benzo(a)pyrene | 390 | U | NA | |
| Benzo(b)fluoranthene | 390 | U | NA | |
| Benzo(g,h,i)perylene | 390 | U | NA | |
| Benzo(k)fluoranthene | NA | | NA | |
| Benzoic acid | NA | | NA | |
| Benzyl alcohol | 390 | U | NA | |
| bis(2-Chloroethoxy)methane | 390 | U | NA | |
| bis(2-Chloroethyl)ether | NA | | NA | |
| bis(2-Chloroisopropyl)ether | 390 | U | NA | |
| bis(2-Ethylhexyl)phthalate | NA | | NA | |
| Bromobenzene | NA | | NA | |
| Bromochloromethane | 5100 | U | 4000 | U |
| Bromodichloromethane | 5100 | U | 4000 | U |
| Bromoform | 10000 | U | 8000 | U |
| Bromomethane | 390 | U | NA | |
| Butylbenzylphthalate | 390 | U | NA | |
| Carbazole | 5100 | U | 4000 | U |
| Carbon disulfide | 5100 | U | 4000 | U |
| Carbon tetrachloride | 700000 | | 4000 | U |
| Chlorobenzene | NA | | NA | |
| Chlorodibromomethane | 10000 | U | 8000 | U |
| Chloroethane | 5100 | U | 4000 | U |
| Chloroform | 10000 | U | 8000 | U |
| Chloromethane | 390 | U | NA | |
| Chrysene | 5100 | U | 4000 | U |
| cis-1,2-Dichloroethene | 5100 | U | 4000 | U |
| cis-1,3-Dichloropropene | 390 | U | NA | |
| Dibenzo(a,h)anthracene | 390 | U | NA | |

NA= Not Analyzed.

Table 4
Site Soil Data Summary

| | SCT-B71-6-8' | | SOT-B64-12-14' | |
|---|---|---|---|---|
| Dibenzofuran | NA | | NA | |
| Dibromomethane | NA | | NA | |
| Dichlorodifluoromethane | 5100 | U | 4000 | U |
| Dibromochloromethane | 390 | U | NA | |
| Diethylphthalate | 390 | U | NA | |
| Dimethylphthalate | 390 | U | NA | |
| Di-n-butylphthalate | 390 | U | NA | |
| Di-n-octylphthalate | 5100 | U | 42000 | |
| Ethylbenzene | 390 | U | NA | |
| Fluoranthene | 390 | U | NA | |
| Fluorene | 390 | U | NA | |
| Hexachlorobenzene | 390 | U | NA | |
| Hexachlorobutadiene | 390 | U | NA | |
| Hexachlorocyclopentadiene | 390 | U | NA | |
| Hexachloroethane | 390 | U | NA | |
| Indeno(1,2,3-cd)pyrene | 390 | U | NA | |
| Isophorone | NA | | NA | |
| Isopropylbenzene | NA | | NA | |
| m&p-Xylene | 5100 | U | 4000 | U |
| Methylene chloride (Dichloromethane) | 290 | | NA | |
| Naphthalene | NA | | NA | |
| Naphthalene | 390 | U | NA | |
| n-Butylbenzene | NA | | NA | |
| Nitrobenzene | 390 | U | NA | |
| N-Nitrosodimethylamine | 390 | U | NA | |
| n-Nitrosodi-n-propylamine | NA | | NA | |
| N-Nitrosodiphenylamine/Diphenylamine | NA | | NA | |
| n-Propylbenzene | 2000 | U | NA | |
| o-Xylene | 390 | U | NA | |
| Pentachlorophenol | 350 | | NA | |
| Phenanthrene | NA | | NA | |
| Phenol | 390 | U | NA | |
| p-Isopropyltoluene | NA | | NA | |
| Pyrene | 5100 | U | 4000 | U |
| sec-Butylbenzene | NA | | NA | |
| Styrene | 5100 | U | 4000 | U |
| tert-Butylbenzene | 5100 | U | 16000 | |
| Tetrachloroethene | NA | | NA | |
| Toluene | 5100 | U | 4000 | U |
| trans-1,2-Dichloroethene | 5100 | U | 4000 | U |
| trans-1,3-Dichloropropene | NA | | NA | |
| Trichloroethene | 10000 | U | 8000 | U |
| Trichlorofluoromethane | 10000 | U | 420000 | |
| Vinyl chloride | NA | | NA | |
| Xylenes, Total | NA | | NA | |

NA= Not Analyzed.

Table 4
Site Data Summary Statistics

| CHEMICAL NAME | Count | Min | Max | ArithMean | GeoMean | *std. Dev* | 95% CI |
|---|---|---|---|---|---|---|---|
| 1,1,1,2-Tetrachloroethane | 55 | 0 | 0 | 0 | 0 | 0 | 0 |
| 1,1,1-Trichloroethane | 113 | 0 | 0 | 0 | 0 | 0 | 0 |
| 1,1,2,2-Tetrachloroethane | 113 | 0 | 0 | 0 | 0 | 0 | 0 |
| 1,1,2-Trichloroethane | 113 | 0 | 0 | 0 | 0 | 0 | 0 |
| 1,1-Dichloroethane | 113 | 0 | 0 | 0 | 0 | 0 | 0 |
| 1,1-Dichloroethene | 113 | 0 | 0 | 0 | 0 | 0 | 0 |
| 1,1-Dichloropropylene | 55 | 0 | 0 | 0 | 0 | 0 | 0 |
| 1,2,3-Trichlorobenzene | 55 | 0 | 260000 | 31215 | 155 | 158671 | 41934 |
| 1,2,3-Trichloropropane | 55 | 0 | 0 | 0 | 0 | 0 | 0 |
| 1,2,4-Trichlorobenzene | 163 | 0 | 7200000 | 92846 | 481 | 609577 | 93580 |
| 1,2,4-Trimethylbenzene | 55 | 0 | 0 | 0 | 0 | 0 | 0 |
| 1,2-Dibromo-3-chloropropane | 55 | 0 | 0 | 0 | 0 | 0 | 0 |
| 1,2-Dibromoethane (EDB) | 55 | 0 | 0 | 0 | 0 | 0 | 0 |
| 1,2-Dichlorobenzene | 108 | 0 | 420000 | 20804 | 1710 | 64972 | 12254 |
| 1,2-Dichloroethane | 113 | 0 | 5000 | 21390 | 304 | 118235 | 21800 |
| 1,2-Dichloropropane | 113 | 0 | 0 | 0 | 0 | 0 | 0 |
| 1,3,5-Trimethylbenzene | 55 | 0 | 0 | 0 | 0 | 0 | 0 |
| 1,3-Dichlorobenzene | 108 | 0 | 5000000 | 6607 | 625 | 42801 | 8072 |
| 1,3-Dichloropropane | 55 | 0 | 0 | 0 | 0 | 0 | 0 |
| 1,4-Dichlorobenzene | 108 | 0 | 4000000 | 58079 | 1991 | 541585 | 102141 |
| 2,2-Dichloropropane | 55 | 0 | 0 | 0 | 0 | 0 | 0 |
| 2,2'-Oxybis(1-Chloropropane) (bis-2-chlor | 53 | 0 | 0 | 0 | 0 | 0 | 0 |
| 2,4,5-Trichlorophenol | 108 | 0 | 350 | 6451 | 573 | 42814 | 8075 |
| 2,4,6-Trichlorophenol | 108 | 0 | 2400 | 6476 | 590 | 42811 | 8074 |
| 2,4-Dichlorophenol | 108 | 0 | 490 | 6454 | 579 | 42813 | 8074 |
| 2,4-Dimethylphenol | 108 | 0 | 610 | 6452 | 574 | 42814 | 8075 |
| 2,4-Dinitrophenol | 108 | 0 | 0 | 0 | 0 | 0 | 0 |
| 2,4-Dinitrotoluene | 108 | 0 | 0 | 0 | 0 | 0 | 0 |
| 2,6-Dinitrotoluene | 108 | 0 | 0 | 0 | 0 | 0 | 0 |
| 2-Butanone (MEK) | 113 | 0 | 415 | 109793 | 1338 | 626269 | 115470 |
| 2-Chloronaphthalene | 108 | 0 | 0 | 0 | 0 | 0 | 0 |
| 2-Chlorophenol | 108 | 0 | 3600 | 6481 | 584 | 42811 | 8074 |
| 2-Chlorotoluene | 55 | 0 | 12000 | 27402 | 175 | 155489 | 41093 |
| 2-Hexanone | 58 | 0 | 0 | 0 | 0 | 0 | 0 |
| 2-Methyl-4,6-dinitrophenol | 55 | 0 | 0 | 0 | 0 | 0 | 0 |
| 2-Methylnaphthalene | 108 | 0 | 10000 | 6624 | 605 | 42807 | 8073 |
| 2-Methylphenol (o-cresol) | 108 | 0 | 0 | 0 | 0 | 0 | 0 |
| 2-Nitroaniline | 108 | 0 | 0 | 0 | 0 | 0 | 0 |
| 2-Nitrophenol | 108 | 0 | 0 | 0 | 0 | 0 | 0 |
| 3&4-Methylphenol (m&p-cresol) | 55 | 0 | 0 | 0 | 0 | 0 | 0 |
| 3,3'-Dichlorobenzidine | 108 | 0 | 0 | 0 | 0 | 0 | 0 |
| 3-Methylphenol/4-Methylphenol (m&p-Cre | 53 | 0 | 0 | 0 | 0 | 0 | 0 |
| 3-Nitroaniline | 108 | 0 | 0 | 0 | 0 | 0 | 0 |
| 4,6-Dinitro-2-methylphenol | 53 | 0 | 0 | 0 | 0 | 0 | 0 |
| 4-Bromophenyl phenyl ether | 55 | 0 | 0 | 0 | 0 | 0 | 0 |
| 4-Bromophenylphenyl ether | 53 | 0 | 0 | 0 | 0 | 0 | 0 |
| 4-Chloro-3-methylphenol | 108 | 0 | 0 | 0 | 0 | 0 | 0 |
| 4-Chloroaniline | 108 | 0 | 16000 | 13362 | 1216 | 87553 | 16512 |
| 4-Chlorophenylphenyl ether | 108 | 0 | 0 | 0 | 0 | 0 | 0 |
| 4-Chlorotoluene | 55 | 0 | 4300 | 27173 | 168 | 155519 | 41101 |
| 4-Methyl-2-pentanone (MIBK) | 113 | 0 | 1100 | 109793 | 1293 | 612552 | 112941 |
| 4-Nitroaniline | 108 | 0 | 0 | 0 | 0 | 0 | 0 |
| 4-Nitrophenol | 108 | 0 | 0 | 0 | 0 | 0 | 0 |
| Acenaphthene | 108 | 0 | 480 | 6451 | 571 | 42814 | 8075 |

# Appendix 17

# Site Soil Data
# IEPA Samples

# W. G. KRUMMRICH/SOLUTIA
## SOIL SAMPLE SUMMARY

| SAMPLING POINT | X101 | X102 | X103 | X104 | X105 | X106 | X107 |
|---|---|---|---|---|---|---|---|
| | ECRP0 | ECRP1 | ECRP2 | ECRP3 | ECRP4 | ECRP5 | ECRP6 |
| | Background | | | | | | |
| | 5-10-99 | 5-11-99 | 5-11-99 | 5-11-99 | 5-11-99 | 5-12-99 | 5-11-99 |
| | Soil | Soil | Soil | Soil | Soil | Soil | Soil |
| pH (in Lab) | 7.2 | 7.3 | 7.1 | 7.4 | 7.6 | 7.3 | 7.3 |
| **VOLATILES (Encore)** | S01 | S02 | S03 | S04 | S05 | S06 | S07 |
| Vinyl Chloride | – | – | – | 10 J | – | – | – |
| Acetone | – | 67 | 27 JB | 16 J | – | – | – |
| Methylene Chloride | 4 J | – | – | – | – | – | – |
| Carbon Disulfide | – | – | – | 4 J | 6 J | 23 | 6 J |
| 1,1-Dichloroethane | – | – | – | 10 | – | – | – |
| 2-Butanone | – | – | – | – | 390 J | 5 J | – |
| cis-1,2-Dichloroethene | – | – | – | 27 | – | – | – |
| Chloroform | – | 5 J | – | – | 5 J | – | – |
| Benzene | – | – | 3 J | 6 | 220000 D | 14 | 890 D |
| Trichloroethene | – | – | – | 7 | – | – | – |
| 4-Methyl-2-Pentanone | – | 4 J | – | 8 J | – | – | – |
| Toluene | 5 J | 6 J | 5 J | – | 1700 D | 4 J | 8 |
| Tetrachloroethene | – | 22 | – | – | – | – | – |
| Chlorobenzene | – | 1100 | – | 420 D | 130 J | 1300 D | 94 |
| Ethylbenzene | – | 9 | – | – | 6700 D | – | 110 |
| Styrene | – | – | – | – | – | – | – |
| Xylene (total) | 4 J | 94 | 3 J | – | 2800 D | 3 J | 14 J |
| Isopropylbenzene | – | 5 J | – | – | 1800 EJ | 35 | 110 |
| Bromobenzene | – | 47 | – | – | – | – | – |
| n-Propylbenzene | – | – | – | – | 2700 D | – | 32 |
| 2-Chlorotoluene | – | 5 J | – | – | – | – | – |
| 4-Chlorotoluene | – | 5 J | – | – | – | – | – |
| tert-Butylbenzene | – | 24 | – | – | 34000 D | 1500 D | – |
| 1,2,4-Trimethylbenzene | – | – | – | – | 1500 D | – | – |
| sec-Butylbenzene | – | – | – | – | 2700 D | 12 | 16 |
| 1,3-Dichlorobenzene | – | 16000 D | – | 160 | – | – | – |
| p-Isopropyltoluene | – | – | – | – | 400 EJ | – | – |
| 1,4-Dichlorobenzene | – | 290000 D | – | 650 D | 17 J | 10 | 6 |
| 1,2-Dichlorobenzene | – | 850000 D | – | 90 J | 140 J | 19 | – |
| n-Butylbenzene | – | – | – | – | 190 EJ | – | – |
| 1,2,4-Trichlorobenzene | – | 53000 D | – | 140 J | – | – | 15 J |
| Naphthalene | – | – | – | – | 1600 J | – | – |
| Hexachlorobutadiene | – | 10 J | – | – | – | – | – |
| 1,2,3-Trichlorobenzene | – | 17000 D | – | 11 J | – | – | – |
| | ug/Kg | ug/Kg | ug/Kg | ug/Kg | ug/Kg | ug/Kg | ug/Kg |
| **SEMIVOLATILES** | | | | | | | |
| Phenol | – | – | – | – | 560 J | – | – |
| 2-Chlorophenol | – | – | – | – | – | – | – |
| 1,3-Dichlorobenzene | – | 980 | – | – | 120 J | – | – |
| 1,4-Dichlorobenzene | – | 10000 D | – | – | 790 | – | – |
| 1,2-Dichlorobenzene | – | 29000 D | 24 J | – | 2100 | – | – |
| 4-Methylphenol | – | – | – | – | – | – | – |
| Nitrobenzene | – | 34 J | – | – | – | – | 300 J |
| 2-Nitrophenol | – | – | – | – | – | – | – |
| 2,4-Dichlorophenol | – | 54 J | – | – | – | – | 130 J |
| 1,2,4-Trichlorobenzene | – | 14000 D | – | – | 1100 | – | 76 J |
| Naphthalene | – | 72 J | – | – | 740 J | – | 25 J |
| 4-Chloroaniline | – | – | – | – | – | – | – |
| Hexachlorobutadiene | – | – | – | – | – | – | – |
| 2-Methylnaphthalene | – | 120 J | – | – | 430 J | – | – |
| 2,4,6-Trichlorophenol | – | 47 J | – | – | – | – | 1200 |
| 2,4,5-Trichlorophenol | – | – | – | – | – | – | – |
| 2-Nitroaniline | – | – | – | – | – | – | – |
| 3-Nitroaniline | – | – | – | – | – | – | – |
| Acenaphthene | – | – | – | – | – | – | – |
| 4-Nitrophenol | – | – | – | – | – | – | – |
| Dibenzofuran | – | 34 J | – | – | – | – | 97 J |
| Diethylphthalate | – | – | – | – | – | – | – |
| Fluorene | – | – | – | – | – | – | – |
| 4-Nitroaniline | – | – | – | – | – | – | – |
| N-Nitrosodiphenylamine | – | – | – | – | – | – | – |
| Hexachlorobenzene | – | – | – | – | – | – | – |
| Pentachlorophenol | – | 700 J | – | – | – | – | 3800 D |
| Phenanthrene | – | 200 J | 45 J | – | – | – | 310 J |
| Anthracene | – | 38 J | – | – | – | – | 59 J |
| Di-n-butylphthalate | – | – | – | 22 J | – | 34 J | – |
| Fluoranthene | – | 460 | 61 J | – | 560 J | – | 190 J |
| Pyrene | – | 340 J | 47 J | – | 330 J | – | 170 J |
| Butylbenzylphthalate | – | 160 J | – | – | – | – | – |
| Benzo(a)anthracene | – | 200 J | 21 J | – | 130 J | – | 73 J |
| Chrysene | – | 270 J | 26 J | – | 170 J | – | 110 J |
| bis(2-Ethylhexyl)phthalate | 23 BJ | 140 BJ | 33 BJ | – | 190 BJ | 22 BJ | 54 BJ |
| Benzo(b)fluoranthene | – | 360 | – | – | 170 J | – | 58 J |
| Benzo(k)fluoranthene | – | 120 J | 22 J | – | 95 J | – | – |
| Benzo(a)pyrene | – | 210 J | – | – | 110 J | – | – |
| Indeno(1,2,3-cd)pyrene | – | 160 J | – | – | 72 J | – | 23 J |
| Dibenz(a,h)anthracene | – | – | – | – | – | – | – |
| Benzo(g,h,i)perylene | – | 190 J | – | – | 87 J | – | 27 J |
| | ug/Kg | ug/Kg | ug/Kg | ug/Kg | ug/Kg | ug/Kg | ug/Kg |

All samples were collected on-site within the property boundaries.

– Constituent analyzed for but not detected, constituent value below Contract Required Quantitation Limit (CRQL).

# W. G. KRUMMRICH/SOLUTIA
## SOIL SAMPLE SUMMARY

| SAMPLING POINT | X108 | X109 | X110 | X111 | X112 | X113 | X114 | X115 | X116 |
|---|---|---|---|---|---|---|---|---|---|
| | ECRP7 | ECRP8 | ECRP9 | ECRQ0 | ECRQ1 | ECRQ9 | ECRR0 | ECRR1 | ECRR2 Dup. of X114 |
| | 5-12-99 Soil | 5-13-99 Soil | 5-13-99 Soil | 5-12-99 Soil | 5-13-99 Soil | 5-13-99 Soil | 5-13-99 Soil | 5-12-99 Soil | 5-13-99 Soil |
| pH (in Lab) | 6.9 | 7.4 | 6.8 | 6.9 | 7.4 | 6.8 | 6.9 | 7.4 | 6.8 |
| **VOLATILES (Encore)** | S08 | S09 | S10 | S11 | S12 | S13 | S14 | S15 | S16 |
| Vinyl Chloride | – | – | – | – | – | – | – | – | – |
| Acetone | 110 BJ | – | 21 J | 54 BJ | 61 J | 20 J | 18 J | 50 J | 20 J |
| Methylene Chloride | – | – | – | – | – | – | – | – | – |
| Carbon Disulfide | – | – | – | 6 J | 3 J | – | – | – | – |
| 1,1-Dichloroethane | – | – | – | – | – | – | – | – | – |
| 2-Butanone | 18 J | – | – | 40 J | 6 J | – | – | – | – |
| cis-1,2-Dichloroethene | – | – | – | – | – | – | – | – | – |
| Chloroform | – | – | – | – | – | – | – | – | – |
| Benzene | – | 2000000 D | 4 J | 96 J | – | – | – | 3 J | – |
| Trichloroethene | – | – | – | – | – | – | – | – | – |
| 4-Methyl-2-Pentanone | 33 J | – | – | 13 J | – | – | – | – | – |
| Toluene | 190 J | 150 J | – | 16000 D | 4 J | 4 J | 4 J | 4 J | – |
| Tetrachloroethene | 10 J | – | – | – | – | – | – | – | – |
| Chlorobenzene | 760 D | 5200 J | – | 28000 D | – | – | – | – | – |
| Ethylbenzene | 13 J | – | – | 530 D | – | – | – | – | – |
| Styrene | – | – | – | – | – | – | – | – | – |
| Xylene (total) | 61 J | – | – | 2060 D | 4 J | 3 J | – | – | – |
| Isopropylbenzene | – | – | – | 9 J | – | – | – | – | – |
| Bromobenzene | – | – | – | – | – | – | – | – | – |
| n-Propylbenzene | – | – | – | – | – | – | – | – | – |
| 2-Chlorotoluene | 30000 D | – | – | 21000 D | – | – | – | – | – |
| 4-Chlorotoluene | 13000 D | – | – | 11000 D | – | – | – | – | – |
| tert-Butylbenzene | – | – | – | 49 J | – | – | – | – | – |
| 1,2,4-Trimethylbenzene | 8 J | – | – | 16 J | – | – | – | – | – |
| sec-Butylbenzene | – | – | – | – | – | – | – | – | – |
| 1,3-Dichlorobenzene | – | 1100 J | – | 800 D | – | – | – | – | – |
| p-Isopropyltoluene | – | – | – | 9 J | – | – | – | – | – |
| 1,4-Dichlorobenzene | 44 J | 76000 D | – | 11000 D | – | – | – | – | – |
| 1,2-Dichlorobenzene | 56 J | 26000 EJ | – | 1100 | – | – | – | – | – |
| n-Butylbenzene | – | – | – | – | – | – | – | – | – |
| 1,2,4-Trichlorobenzene | 16 J | 5200 J | – | 8 J | – | – | – | – | – |
| Naphthalene | 77 J | 410 J | – | 310 D | – | – | – | – | – |
| Hexachlorobutadiene | – | – | – | – | – | – | – | – | – |
| 1,2,3-Trichlorobenzene | 5 J | 410 J | – | – | – | – | – | – | – |
| | ug/Kg | ug/Kg | ug/Kg | ug/Kg | ug/Kg | ug/Kg | ug/Kg | ug/Kg | ug/Kg |
| **SEMIVOLATILES** | | | | | | | | | |
| Phenol | – | 7200 | – | 1200 J | – | – | – | – | – |
| 2-Chlorophenol | – | – | – | – | – | – | – | – | – |
| 1,3-Dichlorobenzene | – | 420 J | – | 850 J | – | – | – | – | – |
| 1,4-Dichlorobenzene | 110 J | 29000 | 57 J | 14000 | – | – | – | 170 J | – |
| 1,2-Dichlorobenzene | 110 J | 8100 | – | 3400 | – | – | – | 64 J | – |
| 4-Methylphenol | – | – | – | – | – | – | – | – | – |
| Nitrobenzene | – | 280 J | – | – | – | – | – | – | – |
| 2-Nitrophenol | – | – | – | – | – | – | – | – | – |
| 2,4-Dichlorophenol | 1600 J | – | 200 J | – | – | – | – | – | – |
| 1,2,4-Trichlorobenzene | – | 3200 J | – | 820 J | – | – | – | – | – |
| Naphthalene | 160 J | – | – | 390 J | – | – | – | – | – |
| 4-Chloroaniline | – | 84000 D | 250 J | 5600 | 68 J | – | – | – | – |
| Hexachlorobutadiene | – | – | – | – | – | – | – | – | – |
| 2-Methylnaphthalene | 120 J | 220 J | – | 600 J | – | 31 J | – | – | – |
| 2,4,6-Trichlorophenol | 16000 D | 500 J | – | – | – | – | – | – | – |
| 2,4,5-Trichlorophenol | 740 J | 400 J | – | – | – | – | – | – | – |
| 2-Nitroaniline | – | – | – | – | – | – | – | – | – |
| 3-Nitroaniline | – | – | – | – | – | – | – | – | – |
| Acenaphthene | 120 J | – | – | – | – | – | – | – | – |
| 4-Nitrophenol | – | – | – | – | – | – | – | – | – |
| Dibenzofuran | 350.0 J | – | – | – | – | 21 J | – | – | – |
| Diethylphthalate | – | – | – | – | – | – | – | – | – |
| Fluorene | – | – | – | 470 J | – | – | – | – | – |
| 4-Nitroaniline | – | – | – | – | – | – | – | – | – |
| N-Nitrosodiphenylamine | – | – | – | – | – | – | – | – | – |
| Hexachlorobenzene | – | 690 J | – | – | – | – | – | – | – |
| Pentachlorophenol | 46000 D | 11000 | 200 J | – | – | – | – | – | – |
| Phenanthrene | 930 J | 810 J | – | 1600 J | – | 140 J | – | – | – |
| Anthracene | 330 J | – | – | 450 J | – | 28 J | – | – | – |
| Di-n-butylphthalate | – | – | – | 210 J | 26 J | 41 J | 22 J | 37 J | 21 J |
| Fluoranthene | 750 J | 610 J | 120 J | 1500 J | – | 210 J | – | – | – |
| Pyrene | 850 J | 630 J | 120 J | 1300 J | – | 180 J | – | – | – |
| Butylbenzylphthalate | – | – | – | – | – | – | – | – | – |
| Benzo(a)anthracene | 370 J | 340 J | 80 J | 650 J | – | 110 J | – | – | – |
| Chrysene | 900 J | 410 J | 110 J | 790 J | – | 130 J | – | – | – |
| bis(2-Ethylhexyl)phthalate | – | 1600 BJ | 350 BJ | 420 BJ | 48 BJ | 95 BJ | 48 BJ | 52 BJ | 31 BJ |
| Benzo(b)fluoranthene | 370 J | – | 100 J | 480 J | – | 150 J | – | – | – |
| Benzo(k)fluoranthene | – | – | 77 J | 360 J | – | 88 J | – | – | – |
| Benzo(a)pyrene | 170 J | 260 J | 94 J | 430 J | – | 110 J | – | – | – |
| Indeno(1,2,3-cd)pyrene | 110 J | – | 100 J | 270 J | – | 85 J | – | – | – |
| Dibenz(a,h)anthracene | – | – | – | 130 J | – | – | – | – | – |
| Benzo(g,h,i)perylene | 150 J | – | 130 J | 330 J | – | 86 J | – | – | – |
| | ug/Kg | ug/Kg | ug/Kg | ug/Kg | ug/Kg | ug/Kg | ug/Kg | ug/Kg | ug/Kg |

All samples were collected on-site within the property boundaries.
– Constituent analyzed for but not detected. constituent value below Contract Required Quantitation Limit (CRQL).

# W. G. KRUMMRICH/SOLUTIA
## SOIL SAMPLE SUMMARY

| SAMPLING POINT | X101 | X102 | X103 | X104 | X105 | X106 | X107 |
|---|---|---|---|---|---|---|---|
| | ECRP0 | ECRP1 | ECRP2 | ECRP3 | ECRP4 | ECRP5 | ECRP6 |
| | Background | | | | | | |
| | 5-10-99 | 5-11-99 | 5-11-99 | 5-11-99 | 5-11-99 | 5-12-99 | 5-11-99 |
| | Soil | Soil | Soil | Soil | Soil | Soil | Soil |
| pH (in Lab) | 7.2 | 7.3 | 7.1 | 7.4 | 7.6 | 7.3 | 7.3 |
| **PESTICIDES** | | | | | | | |
| alpha-BHC | – | 16 PJ | – | – | – | – | 11 PJ |
| beta-BHC | – | – | – | – | 5.9 P | – | 92 P |
| delta-BHC | – | 120 P | – | – | 3.6 | – | 90 P |
| gamma-BHC (Lindane) | – | – | – | – | – | – | – |
| Heptachlor | 1.4 PJ | – | 2.3 P | 0.94 PJ | – | 1.9 PJ | – |
| Aldrin | – | 82 P | – | – | 4.6 P | – | 38 |
| Heptachlor epoxide | – | 72 P | – | 4.6 P | – | 0.89 PJ | 40 P |
| Endosulfan I | – | 120 P | – | | – | – | 270 P |
| Dieldrin | – | – | – | – | 18 | – | 90 P |
| 4,4'-DDE | – | 100 P | 1.1 PJ | – | 14 P | – | – |
| Endrin | – | 58 P | – | – | 3.2 PJ | – | 130 P |
| Endosulfan II | – | 52 P | – | – | 12 P | – | 32 PJ |
| 4,4'-DDD | – | 230 P | – | – | 14 P | – | – |
| Endosulfan Sulfate | – | 74 P | 3.4 J | – | 12 P | – | 83 P |
| 4,4'-DDT | – | 100 | – | – | 56 P | – | 1600 E |
| Methoxychlor | – | – | – | – | – | – | 410 P |
| Endrine ketone | – | 40 P | – | – | – | – | 74 P |
| Endrine aldehyde | – | 110 P | – | – | – | – | 410 P |
| alpha-chlordane | – | 190 P | – | – | 5 P | – | 85 P |
| gamma-Chlordane | 0.38 PJ | 150 P | – | 0.39 PJ | 10 P | 0.58 PJ | 100 P |
| Aroclor-1248 | – | – | – | – | – | – | – |
| Aroclor-1254 | – | – | – | – | 610 | – | – |
| Aroclor-1260 | – | – | – | – | – | – | – |
| | ug/Kg | ug/Kg | ug/Kg | ug/Kg | ug/Kg | ug/Kg | ug/Kg |
| **INORGANICS** | MEBWN6 | MEBWN7 | MEBWN8 | MEBWN9 | MEBWP0 | MEBWP1 | MEBWP2 |
| Aluminum | 6590 | 14600 | 4810 | 1910 | 2090 | 4040 | 5580 |
| Antimony | – | – | – | – | 0.72 B | 0.64 B | 8 B |
| Arsenic | 7.3 | 5.2 | 5 | 2.7 | 1.7 B | 4.4 | 12.4 |
| Barium | 230 | 249 | 206 | 100 | 76.1 | 169 | 173 |
| Beryllium | 0.52 B | 0.41 B | 0.41 B | 0.11 B | 0.18 B | 0.32 B | 0.46 B |
| Cadmium | 0.14 B | – | – | 0.18 B | – | – | 7.5 |
| Calcium | 18200 | 1820 | 15000 | 1340 | 5150 | 11200 | 11600 |
| Chromium | 11 | 36.9 | 8.4 | 5.8 | 4.1 | 7.2 | 11.7 |
| Cobalt | 6.8 B | 5.7 B | 5.3 B | 1.5 B | 3.9 B | 4.8 B | 4.9 B |
| Copper | 14.6 | 30.6 | 10.5 | 6.8 | 9.6 | 37.5 | 75.7 |
| Iron | 12700 | 20700 | 10100 | 5840 | 5290 | 8700 | 10300 |
| Lead | 9.5 | 11.2 | 7.2 | 4.7 | 4.8 | 6.5 | 567 |
| Magnesium | 6770 | 2920 | 5730 | 619 B | 2600 | 5040 | 5190 |
| Manganese | 331 | 130 | 218 | 21.8 | 80.8 | 210 | 189 |
| Mercury | 0.14 | 0.14 | 0.12 B | 0.12 | 0.1 B | 0.51 | 0.58 |
| Nickel | 17.8 | 21.4 | 13.6 | 3.8 B | 10.7 | 10.7 | 13.6 |
| Potassium | 1320 | 1800 | 1260 B | 584 B | 532 B | 939 B | 1170 B |
| Selenium | – | – | – | – | – | – | – |
| Silver | 0.83 B | 1.2 B | 0.72 B | 0.43 B | 0.35 B | 0.67 B | 0.93 B |
| Sodium | 224 B | 592 B | 565 B | 973 B | 197 B | 674 B | 547 B |
| Thallium | – | – | – | – | – | – | – |
| Vanadium | 19.5 | 66.8 | 16.1 | 11.4 B | 7 B | 13.3 | 16.8 |
| Zinc | 41.5 | 123 | 34.9 | 28.1 | 33.2 | 109 | 1260 |
| Cyanide | – | 0.19 B | 0.31 B | 0.45 B | – | – | 0.15 B |
| | mg/Kg | mg/Kg | mg/Kg | mg/Kg | mg/Kg | mg/Kg | mg/Kg |

All samples were collected on-site within the property boundaries.
– Constituent analyzed for but not detected, constituent value below Contract Required Quantitation Limit (CRQL).

# W. G. KRUMMRICH/SOLUTIA
## SOIL SAMPLE SUMMARY

| SAMPLING POINT | X108 ECRP7 | X109 ECRP8 | X110 ECRP9 | X111 ECRQ0 | X112 ECRQ1 | X113 ECRQ9 | X114 ECRR0 | X115 ECRR1 | X116 ECRR2 Dup. of X114 |
|---|---|---|---|---|---|---|---|---|---|
| | 5-12-99 Soil | 5-13-99 Soil | 5-13-99 Soil | 5-12-99 Soil | 5-13-99 Soil | 5-13-99 Soil | 5-13-99 Soil | 5-12-99 Soil | 5-13-99 Soil |
| pH (In Lab) | 6.9 | 7.4 | 6.8 | 6.9 | 7.4 | 6.8 | 6.9 | 7.4 | 6.8 |
| **PESTICIDES** | | | | | | | | | |
| alpha-BHC | 26 P | – | – | – | – | – | – | – | – |
| beta-BHC | 1400 DP | 73 P | – | – | – | – | – | – | – |
| delta-BHC | 120 P | – | – | – | – | – | – | – | – |
| gamma-BHC (Lindane) | – | 46 P | – | – | – | – | – | – | – |
| Heptachlor | – | 34 P | – | 59 P | 2 P | – | 1.9 PJ | – | – |
| Aldrin | 230 P | – | 26 | – | – | 1.6 J | 0.66 PJ | – | – |
| Heptachlor epoxide | 150 P | 120 P | 26 P | 32 P | – | 1.8 PJ | – | – | – |
| Endosulfan I | 130 | 68 P | 26 P | 27 | – | – | – | – | – |
| Dieldrin | 560 | 600 P | 32 P | 76 P | – | – | 0.81 PJ | – | – |
| 4,4'-DDE | 120 P | 430 P | 17 P | 100 | – | 1.1 PJ | – | – | – |
| Endrin | – | 430 P | – | 48 P | – | 3.2 PJ | – | – | – |
| Endosulfan II | 39 PJ | 590 P | 52 | – | 0.53 J | 2.5 J | 1.4 PJ | – | – |
| 4,4'-DDD | – | – | 45 DP | 170 P | 0.66 J | 3.4 J | – | – | – |
| Endosulfan Sulfate | – | – | 35 P | 97 P | 0.47 PJ | 2.1 PJ | – | – | – |
| 4,4'-DDT | 330 | 5500 E | 10 P | 280 P | 2.4 PJ | 2.2 PJ | – | – | – |
| Methoxychlor | – | 200 PJ | 31 P | 400 P | – | – | – | – | – |
| Endrine ketone | – | – | – | – | – | 2.2 PJ | 0.62 PJ | – | – |
| Endrine aldehyde | 220 | 460 | 60 DP | 200 P | – | 3.8 PJ | 0.99 J | – | – |
| alpha-chlordane | 57 P | 45 P | 5.9 P | 25 P | – | – | – | – | – |
| gamma-Chlordane | 350 D | – | 9.6 P | – | 1.1 J | 1.5 PJ | – | – | – |
| Aroclor-1248 | – | – | – | – | – | – | – | – | – |
| Aroclor-1254 | – | 22000 P | – | – | – | – | – | | – |
| Aroclor-1260 | – | 22000 P | – | – | – | – | – | – | – |
| | ug/Kg | ug/Kg | ug/Kg | ug/Kg | ug/Kg | ug/Kg | ug/Kg | ug/Kg | ug/Kg |
| **INORGANICS** | MEBWP3 | MEBWP4 | MEBWP5 | MEBWP6 | MEBWP7 | MEBWT5 | MEBWT6 | MEBWT4 | MEBWR6 |
| Aluminum | 6130 | 15500 | 6270 | 6530 | 5040 | 7200 | 3470 | 7290 | 4170 |
| Antimony | – | 1.4 B | 1.2 B | 3.9 B | – | 1.1 B | – | 0.69 B | 0.52 B |
| Arsenic | 5.3 | 9.4 | 6.8 | 7.6 | 4.8 | 6.3 | 4.7 | 7.4 | 4.6 |
| Barium | 181 | 246 | 133 | 122 | 182 | 211 | 146 | 225 | 160 |
| Beryllium | 0.46 B | 1.2 B | 0.41 B | 0.56 B | 0.4 B | 0.56 B | 0.33 B | 0.61 B | 0.33 B |
| Cadmium | 3.4 | – | 3.2 | 1.3 B | 3.2 | 0.61 B | – | – | – |
| Calcium | 8320 | 4710 | 62500 | 74200 | 15300 | 8500 | 12800 | 20600 | 13000 |
| Chromium | 9.8 | 19.8 | 12.3 | 18.4 | 8.7 | 10.6 | 6.6 | 11.3 | 7.4 |
| Cobalt | 12.2 B | 8.7 B | 4.7 B | 4.6 B | 4.6 B | 6.4 B | 4.4 B | 7.3 B | 4.7 B |
| Copper | 9.7 | 305 | 143 | 95.2 | 11.3 | 17.1 | 5.8 B | 16.7 | 6.5 |
| Iron | 12200 | 20300 | 11300 | 16200 | 9760 | 12900 | 8330 | 14600 | 8860 |
| Lead | 8.3 | 126 | 105 | 234 | 9.1 | 18.3 | 6.7 | 11.4 | 7.3 |
| Magnesium | 5480 | 4000 | 5960 | 5810 | 5780 | 4100 | 4890 | 6360 | 5150 |
| Manganese | 108 | 112 | 169 | 136 | 225 | 383 | 180 | 388 | 193 |
| Mercury | 0.96 | 0.3 | 0.48 | 1.1 | 0.12 | 0.11 B | 0.1 B | 0.14 | 0.12 |
| Nickel | 24.6 | 37.8 | 35 | 311 | 12.2 | 16.6 | 11.5 | 18.7 | 12 |
| Potassium | 1400 | 3050 | 1340 | 1350 | 1360 | 1730 | 794 B | 1770 | 956 B |
| Selenium | – | 0.91 B | – | – | – | – | – | – | – |
| Silver | 0.72 B | 2.3 B | 1.6 B | 1.3 B | 0.45 B | 0.84 B | 0.85 B | 0.81 B | 0.45 B |
| Sodium | 275 B | 1100 B | 259 B | 442 B | 226 B | 310 B | 156 B | 314 B | 206 B |
| Thallium | – | – | – | – | – | – | – | – | – |
| Vanadium | 16.5 | 36.8 | 17.5 | 20.9 | 15.7 | 20.1 | 12.1 B | 21.6 | 14 |
| Zinc | 60.1 | 308 | 477 | 306 | 49.4 | 105 | 29.5 | 53 | 29.7 |
| Cyanide | 0.2 B | – | 0.16 B | 0.42 B | 0.1 B | – | 0.12 B | – | – |
| | mg/Kg | mg/Kg | mg/Kg | mg/Kg | mg/Kg | mg/Kg | mg/Kg | mg/Kg | mg/Kg |

All samples were collected on-site within the property boundaries.
– Constituent analyzed for but not detected, constituent value below Contract Required Quantitation Limit (CRQL).

# Appendix 18

# Geologic Logs

# Appendix 18A

# 1986 Geraghty & Miller Report

# GEOLOGIC LOGS FOR MONITORING WELLS

## INSTALLED UNDER THE DIRECTION OF GERAGHTY & MILLER, INC.

## MONSANTO COMPANY, W.G. KRUMMRICH PLANT, SAUGET, ILLINOIS

| Description | Depth (feet) |
|---|---|
| **Well GM-1** | |
| Silt, clayey, brown | 0 - 3.5 |
| Sand, very fine, silty, tan | 3.5- 6 |
| Silt, clayey, gray and brown | 6 - 12 |
| Sand, very fine, very silty, gray | 12 - 22 |
| Sand, fine, silty, gray | 22 - 32 |
| Sand, fine to medium, gray; trace of coarse sand | 32 - 36 |
| **Well GM-2** | |
| Gravel (fill) | 0 - 2 |
| Sand, very fine to fine, silty, gray and yellowish-brown | 2 - 7 |
| Clay, silty, gray | 7 - 12 |
| Sand, very fine to fine, tan | 12 - 18 |
| Silt, sandy, gray | 18 - 20 |
| Sand, very fine to fine, silty, gray | 20 - 21 |
| Sand, very fine to fine, brown; some silt | 21 - 35 |
| Sand, fine to medium, gray | 35 - 44 |
| **Well GM-3** | |
| Sand, very fine to fine, brown; some silt | 0 - 2 |
| Sand, very fine to fine, tan | 2 - 10 |
| Silt, sandy, brown | 10 - 12 |
| Sand, very fine to fine, very silty, brown | 12 - 15 |
| Sand, very fine to fine, tan; trace silt | 15 - 22 |
| Sand, fine to medium, brown and gray | 22 - 32 |
| Sand, fine to medium, brown; some coarse sand and fine gravel | 32 - 36 |
| **Wells GM-4ABC** | |
| Clay, dark brown | 0 - 3 |
| Sand, very fine, very silty, tan | 3 - 7 |
| Sand, fine, tan | 7 - 17 |
| Sand, fine, brown; some silt | 17 - 22 |
| Sand, fine to medium, brown; trace coarse sand | 22 - 70 |
| Sand, fine to coarse, gray; with gravel | 70 - 88 |
| **Well GM-5** | |
| Sand, very fine to fine, brown; some silt | 0 - 2 |
| Sand, very fine to fine, tan | 2 - 27 |
| Sand, very fine to fine, tan; some medium sand | 27 - 36 |

| Description | Depth (feet) |
|---|---|
| **Well GM-6AB** | |
| Sand, very fine, silty, dark gray | 0 - 3 |
| Sand, very fine, silty, tan | 3 - 8 |
| Clay, gray; some silt | 8 - 13 |
| Sand, very fine, tan | 13 - 21 |
| Sand, very fine, tan; some silt | 21 - 27 |
| Sand, fine, silty; trace of medium and coarse sand | 27 - 32 |
| Sand, fine to medium, gray; trace of coarse sand | 32 - 70 |
| Sand, fine to coarse, gray; with fine to medium gravel | 70 - 88 |
| **Well GM-7** | |
| Silt, sandy, brown | 0 - 1 |
| Sand, very fine, brown; some silt | 1 - 4 |
| Silt, gray | 4 - 5 |
| Sand, very fine, gray; some silt | 5 - 12 |
| Sand, very fine, tan | 12 - 22 |
| Sand, very fine, brown; some silt | 22 - 27 |
| Sand, very fine to fine, brown; some medium sand | 27 - 36 |
| **Well GM-8** | |
| Sand, very fine, silty, brown | 0 - 2 |
| Sand, very fine, tan | 2 - 14 |
| Silt, gray and brown | 14 - 14.5 |
| Sand, very fine, tan | 14.5- 22 |
| Sand, very fine, brownish-gray; some silt | 22 - 27 |
| Sand, very fine to fine, gray; some silt and medium sand | 27 - 36 |
| **Wells GM-9ABC** | |
| Gravel (fill) | 0 - 2 |
| Cinders, black (fill) | 2 - 3 |
| Sand, very fine to fine, silty, brown | 3 - 12 |
| Clay, silty, gray | 12 - 14 |
| Sand, very fine to fine, silty, brown | 14 - 22 |
| Sand, very fine to fine, silty, gray | 22 - 50 |
| Sand, fine to medium, gray; trace of gravel | 50 - 80 |
| Sand, fine to coarse, gray; with fine to medium gravel | 80 -108 |

| Description | Depth (feet) |
|---|---|
| **Wells GM-10ABC** | |
| Topsoil | 0 - 1 |
| Silt, sandy, brown | 1 - 6 |
| Sand, very fine to fine, very silty, brown | 6 - 40 |
| Sand, fine to medium, gray; little gravel | 40 - 72 |
| Gravel, fine to medium; with fine to coarse sand | 72 - 80 |
| Sand, fine to coarse, brown; little gravel | 80 - 84 |
| Gravel, fine to medium; with fine to coarse sand | 84 -104 |
| Gravel, fine to medium with fine to coarse sand; some cobbles | 104 -111 |
| **Well GM-11** | |
| Silt, sandy, brown | 0 - 2 |
| Gravel, coarse (fill) | 2 - 3 |
| Silt, clayey, gray; trace gravel | 3 - 9.5 |
| Sand, silty, fine, tan | 9.5- 17 |
| Sand, very silt, very fine, gray | 17 - 26 |
| **Wells GM-12ABC** | |
| Cinders and gravel, black (fill) | 0 - 8.5 |
| Clay, gray | 8.5- 17 |
| Silt, clayey, gray | 17 - 18.5 |
| Sand, very fine to fine, very silty, gray | 18.5- 22 |
| Sand, very fine to fine, gray; some silt | 22 - 35.5 |
| Sand, fine, gray; some silt | 35.5- 50 |
| Sand, fine to medium; brownish-gray | 50 - 70 |
| Sand, fine to coarse, brownish-gray; with fine to medium gravel | 70 - 114.5 |
| **Well GM-13** | |
| Gravel (fill) | 0 - 2 |
| Sand, very fine to fine, silty, brown | 2 - 11 |
| Silt, clayey, gray | 11 - 13 |
| Sand, very fine to fine, silty, brown | 13 - 21 |
| Sand, fine, silty, gray | 21 - 38 |
| **Well GM-14** | |
| Gravel (fill) | 0 - 2 |
| Silt, clayey, brown; some sand | 2 - 5 |
| Sand, very fine to fine, silty, brown | 5 - 29 |
| Sand, fine, silty, gray | 29 - 38 |
| **Well GM-15** | |
| Gravel (fill) | 0 - 2 |
| Silt, clayey, gray and brown; some sand | 2 - 9 |
| Sand, very fine to fine, silty, gray | 9 - 38 |

| Description | Depth (feet) |
|---|---|
| **Wells GM-16AB** | |
| Silt, sandy, brown | 1 - 6 |
| Sand, very fine to fine, very silty, brown | 6 - 29 |
| Sand, fine, gray; some silt | 29 - 40 |
| Sand, fine, gray | 40 - 50 |
| Sand, fine to medium, gray; some gravel | 50 - 70 |
| Sand, fine to coarse, gray; with gravel | 70 - 90 |
| **Wells GM-17ABC** | |
| Sand, very fine, silty, brown | 0 - 4 |
| Clay, gray; some silt and fine sand | 4 - 11 |
| Sand, very fine, tan; some silt | 11 - 23 |
| Sand, very fine, brown; trace of medium sand and silt | 23 - 50 |
| Sand, fine to medium, gray; some fine gravel | 50 - 70 |
| Sand, fine to coarse, gray; with fine to medium gravel | 70 -107 |
| **Wells GM-18AB** | |
| Silt, clayey, brown; trace of fine sand and gravel | 0 - 6 |
| Sand, fine, grayish-brown; some silt | 6 - 38 |
| Sand, fine, grayish-brown | 38 - 50 |
| Sand, fine to medium, grayish-brown; some fine gravel and coal fragments | 50 - 80 |
| Sand, fine to coarse, gray; with fine to medium gravel | 80 - 92 |
| **Wells GM-25AB** | |
| Sand, very fine, silty, brown | 0 - 14 |
| Sand, fine, brown; some silt | 14 - 33 |
| Sand, fine, gray | 33 - 50 |
| Sand, fine to medium, gray; some silt and coarse sand | 50 - 70 |
| Sand, fine to coarse, gray; some fine to medium gravel | 70 - 88 |
| **Wells GM-27BC** | |
| Sand, fine, silty, brown and black | 0 - 13 |
| Silt, sandy, gray; some fine sand | 13 - 22 |
| Sand, fine, gray; some silt | 22 - 33 |
| Clay, silty, gray; some fine sand | 33 - 36 |
| Sand, fine, silty, gray | 36 - 48 |
| Sand, fine to medium, gray; little silt | 48 - 75 |
| Sand, fine to coarse, gray; some fine to medium gravel | 75 -105 |

| Description | Depth (feet) |
|---|---|
| **Wells GM-28BC** | |
| Sand, fine, gray; some silt | 0 - 18 |
| Clay, silty, gray | 18 - 20 |
| Sand, fine, gray; some silt | 20 - 29 |
| Clay, silty, gray | 29 - 32 |
| Silt, gray; trace of fine gravel, with intermittent sand seams | 32 - 58 |
| Sand, fine to coarse, gray; some fine gravel | 58 - 95 |
| **Well GM-29** | |
| Gravel (fill) | 0 - 2 |
| Sand, fine, silty, gray | 2 - 3 |
| Silt, clayey, gray; with green stains | 3 - 4 |
| Clay, silty, gray | 4 - 5.5 |
| Sand, fine, silty, gray; some clay | 5.5- 8 |
| Silt, sandy, black | 8 - 10 |
| Silt, sandy, gray | 10 - 21 |
| Sand, fine, gray; some silt | 21 - 25 |
| **Well GM-30** | |
| Gravel, with cinders, some red brick (fill) | 0 - 6 |
| Clay, silty, grayish-green | 6 - 10 |
| Silt, clayey, gray; trace of fine sand | 10 - 15 |
| Sand, very fine to fine, gray; some silt | 15 - 20 |
| **Wells GM-31ABC** | |
| Sand, very fine, silty, brown | 0 - 10.5 |
| Sand, fine, brown | 10.5- 12 |
| Sand, very fine, silty, brown | 12 - 17 |
| Sand, fine to medium brown | 17 - 23 |
| Sand, medium, brown | 23 - 40 |
| Sand, coarse, little gravel, brown | 40 - 41.5 |
| Sand, fine to medium, brown | 41.5- 70 |
| Sand, fine to coarse, brown | 70 - 80 |
| Sand, fine to coarse, brown; some fine gravel | 80 -126.5 |
| **Well GM-32** | |
| Gravel, cinders, brown and gray (fill) | 0 - 2 |
| Sand, fine, silty, brown | 2 - 7 |
| Sand, fine to medium, brown | 7 - 25 |

| Description | Depth (feet) |
|---|---|
| Well GM-33 | |
| Clay, dark gray, wood, cinders (fill) | 0 - 6.5 |
| Clay, dark gray, silt | 6.5- 9 |
| Sand, fine, gray | 9 - 11 |
| Sand, very fine, silty, gray | 11 - 13 |
| Sand, fine, gray | 13 - 16.5 |
| Sand, fine to medium, gray | 16.5- 25 |
| Well GM-34 | |
| Clay, dark gray, cinders (fill) | 0 - 6.5 |
| Clay, dark gray, silty | 6.5- 9 |
| Sand, fine, dark gray (oil sheen on augers and spoons) | 9 - 25 |
| Well GM-35 | |
| Sand, fine, gray, some gravel, cinders (fill) | 0 - 4 |
| Sand, fine, silty, dark gray | 4 - 10.8 |
| Clay, gray | 10.8- 12 |
| Sand, very fine, silty, little clay, gray | 12 - 16 |
| Sand, fine to medium, gray to brown | 16 - 19.5 |
| Silt, some clay, gray | 19.5- 20 |
| Sand, fine, silty, gray | 20 - 21.5 |
| Clay, silty, gray | 21.5- 25 |
| Well GM-36 | |
| Gravel, sand, brown (fill) | 0 - 2.5 |
| Clay, silty, brown | 2.5- 8 |
| Sand, fine to medium, brown | 8 - 25 |
| Well GM-37 | |
| Gravel, sand, some clay, dark brown (fill) | 0 - 2 |
| Clay, silty, brown | 2 - 10.5 |
| Sand, fine, trace of silt, gray | 10.5- 14.5 |
| Sand, fine to medium, gray | 14.5- 25 |
| Well GM-38 | |
| Topsoil | 0 - 1 |
| Sand, very fine, silty, brown | 1 - 18 |
| Sand, very fine, silty, gray | 18 - 19 |
| Sand, fine to medium, gray | 19 - 26.5 |

| Description | Depth (feet) |
|---|---|
| Well GM-39 | |
| Cinders, gravel, black (fill) | 0 - 1.5 |
| Cinders, black (fill) | 1.5- 8 |
| Clay, silty, gray | 8 - 9 |
| Well GM-40 | |
| Cinders, gravel, black (fill) | 0 - 1 |
| Cinders, black (fill) | 1 - 7.5 |
| Clay, silty, gray | 7.5- 8 |
| Well GM-41 | |
| Cinders, gravel, medium sand (fill) | 0 - 2 |
| Cinders, medium sand (fill) | 2 - 7.9 |
| Clay, silty, brown-gray | 7.9- 8 |
| Well GM-42 | |
| Gravel, cinders, white and black (fill) | 0 - 2 |
| Cinders, black (fill) | 2 - 7 |
| Clay, silty, gray | 7 - 8 |
| Well GM-43 | |
| Cinders, black (fill) | 0 - 5 |
| Clay, silty, gray | 5 - 6 |
| Well GM-44 | |
| Cinders, gravel, black (fill) | 0 - 1 |
| Cinders, black (fill) | 1 - 5 |
| Clay, gray | 5 - 6 |
| Well GM-45 | |
| Cinders, black | 0 - 5.5 |
| Gravel, brown | 5.5- 7 |
| Gravel, wood chips, brown | 5.5- 7.5 |
| Gravel, brown to black | 7.5- 9 |
| Cinders, gravel, black | 9 - 12 |
| Clay, silty, gray | 12 - 12.5 |
| Silt, clayey, trace of sand | 17 - 17.5 |
| Clay, gray | 17 - 17.8 |
| Silt, clayey, gray | 17.8- 18 |

| Description | Depth (feet) |
|---|---|
| **Well GM-46** | |
| Gravel, sandy, gray | 0 - 3.5 |
| Silt, some very fine sand, little clay, brown | 3.5- 10 |
| Sand, very fine, silty, gray | 10 - 18 |
| Sand, fine to medium, gray | 18 - 27 |
| **Well GM-47** | |
| Pavement, gravel, gray to dark brown | 0 - 1 |
| Sand, fine, silty, gray | 1 - 7 |
| Cinders, coarse sand, black | 7 - 7.5 |
| Clay, gray, silty | 7.5- 11 |
| **Well GM-48** | |
| Sand, fine, silty, gray | 0 - 2 |
| Gravel, brick, medium sand, cinders, brown | 2 - 3.5 |
| Cinders, black | 3.5- 7 |
| Sand, medium, cinders, black | 7 - 10 |
| Silt, some fine sand, trace of clay, gray | 10 - 12.5 |
| **Well GM-49** | |
| Gravel, medium sand, white and brown | 0 - 2 |
| Sand, fine, silty, brown | 2 - 7.5 |
| Sand, very fine to fine, silty, brown | 7.5- 13 |
| Silt, clayey, brown | 13 - 13.5 |
| **Well GM-106** | |
| Sand, fine to medium, brownish-gray; some fine gravel | 0 - 15 |
| Sand, fine to coarse, brown; some fine to coarse gravel, little silt and clay | 15 - 20 |
| Sand, very fine to fine, brown; some silt, trace of fine gravel | 20 - 25 |
| Silt and clay, brown; little fine sand | 25 - 40 |
| Sand, very fine to fine, gray; some silt | 40 - 50 |
| Sand, fine to medium, brownish-gray and medium to coarse gravel | 50 - 55 |
| Sand, fine to medium, gray; some medium to coarse gravel, trace of silt | 55 - 67 |
| Clay, gray; some silt | 67 - 68 |
| Sand, fine to coarse, gray some fine to coarse gravel and cobbles | 68 -113 |
| Gravel, fine to coarse and medium to coarse sand, gray; few cobbles and boulders | 113 -116 |
| Sand, fine to coarse, gray and fine to coarse gravel; some cobbles and thin layers (6") of silty clay | 116 -126 |
| Limestone, gray | 126 -165.7 |

# GEOLOGIC LOGS FOR SOIL BORINGS

## INSTALLED UNDER THE DIRECTION OF GERAGHTY & MILLER, INC.

## MONSANTO COMPANY, W.G. KRUMMRICH PLANT, SAUGET, ILLINOIS

| Description | Depth (feet) |
|---|---|
| **Site BG-13** | |
| Gravel (fill for parking lot) | 0 - 1 |
| Sand, fine, silty, brown; with black stains from 7 to 8.5 feet | 1 - 8.5 |
| Sand, fine, silty, black | 8.5- 10 |
| Sand, fine, silty, gray | 10 - 11.5 |
| **Site BG-14** | |
| Gravel (fill for parking lot) | 0 - 2 |
| Sand, fine, silty, gray | 2 - 4 |
| Clay, silty, brown, trace sand | 4 - 7 |
| Silt, clayey, sandy, brown | 7 - 8.5 |
| Silt, sandy, dark gray | 8.5- 11 |
| Sand, fine, silty, gray | 11 - 11.5 |
| **Site BG-15** | |
| Gravel (fill in lot) | 0 - 1 |
| Clay, silty, gray; trace gravel (fill) | 1 - 2.5 |
| Sand, fine to medium, black, with gravel (fill) | 2.5- 4 |
| Silt, gravel, rock fragments, bricks, gray, brown and black; some black stains (fill) | 4 - 5.5 |
| Silt, gray and black; trace fine sand | 5.5- 7 |
| Clay, silty, gray | 7 - 8.5 |
| Sand, fine, brown; some silt (organic liquid present on drilling tools) | 8.5- 11.5 |
| **Site BG-16** | |
| Gravel (fill in lot) | 0 - 1 |
| Sand, fine, clayey, silty, brown and gray | 1 - 4 |
| Sand, fine, silty, gray with black stains | 4 - 7 |
| Silt, sandy, gray | 7 - 8.5 |
| Sand, silty, fine, gray | 8.5- 10 |

| Description | Depth (feet) |
|---|---|
| **Site BG-17** | |
| Gravel (fill in lot) | 0 - 1 |
| Silt, black; with gravel | 1 - 4 |
| Sand, silty, black; with gravel | 4 - 10 |
| **Site BG-18** | |
| Gravel (fill in lot) | 0 - 1 |
| Gravel and sand (fill) | 1 - 2.5 |
| Sand, fine, black | 2.5- 4 |
| Silt, clayey, greenish-gray; some fine snand | 4 - 6 |
| Sand, fine, gray; some silt | 6 - 10 |
| **Site BG-19** | |
| Gravel (fill in lot) | 0 - 2 |
| Silt, clayey, black | 2 - 4 |
| Sand, fine, silty, grayish-green and gray | 4 - 11 |
| **Site BG-21** | |
| Silt, clayey, brown (fill) | 0 - 1.5 |
| Silt, clayey, gray; some sand | 1.5- 5 |
| Sand, fine, silty, gray | 5 - 10.5 |
| **Site BG-23** | |
| Asphalt, gravel and red brick (fill) | 0 - 1.5 |
| Sand, fine, brown | 1.5- 2 |
| Clay, silty, gray and brown | 2 - 5 |
| Sand, fine, brown, some silt | 5 - 9.5 |
| **Site BG-24** | |
| Sand, medium, some gravel and cinders, gray (fill) | 0 - 5.0 |
| Sand, very fine, silty, brown | 5.0- 7.0 |
| Sand, fine, brown | 7.0- 16.0 |
| Clay, gray | 16.0- 17.0 |
| Sand, fine, silty, brown | 17.0- 17.5 |
| Sand, medium to fine, dark gray | 17.5- 18.5 |
| Sand, medium, brown | 18.5- 25.0 |

| Description | Depth (feet) |
|---|---|
| **Site BG-31** | |
| Gravel, cinders, brown and gray (fill) | 0 - 2.0 |
| Sand, fine, silty, gray | 2.0 - 21.0 |
| **Site BG-35** | |
| Cinders, gravel, black (fill) | 0 - 2.0 |
| Sand, fine to medium, black (from 4.0 to 11.0) | 2.0 - 11.0 |
| Clay, silty, black | 11.0 - 12.0 |
| **Site BG-37** | |
| Cinders, gravel, white and black (fill) | 0 - 2.0 |
| Cinders, black (fill) | 2.0 - 3.0 |
| Clay, silty, cinders, black (fill) | 3.0 - 7.5 |
| Clay, dark gray | 7.5 - 8.0 |
| **Site BG-38 (Well 42)** | |
| Gravel, cinders, white and black (fill) | 0 - 2.0 |
| Cinders, black (fill) | 2.0 - 7.0 |
| Clay, silty, gray | 7.0 - 8.0 |
| **Site BG-39** | |
| Cinders, black (fill) | 0 - 6.0 |
| Clay, gray, silt | 6.0 - 6.1 |

# Appendix 18B

# 1993 Geraghty & Miller Report

# SAMPLE/CORE LOG

BORING/WELL: GM-54A PROJECT NO: N0308SG3 PAGE: 1

SITE LOCATION: Monsanto Company Sauget, Illinois DRILLING STARTED: 10/6/87 DRILLING COMPLETED: 10/6/87

TOTAL DEPTH DRILLED: 39 ft HOLE DIAMETER: 8 in. TYPE OF SAMPLE/ CORING DEVICE: Split Spoon Core Barrel

LENGTH & DIAMETER OF CORING DEVICE: 2' x 2" SAMPLING INTERVAL: 5 ft

LAND-SURFACE ELEVATION: { } SURVEYED { } ESTIMATED DATUM:

DRILLING FLUID USED: None DRILLING METHOD: Auger (4-1/4" I.D.)

DRILLING CONTRACTOR: John Mathes & Assoc. DRILLER: Kent HELPER: Quentin

PREPARED BY: B. Blum HAMMER WEIGHT: 140 lb HAMMER DROP: 30 in.

| SAMPLE NO | SAMPLE DEPTH FROM | SAMPLE DEPTH TO | CORE RECVRY | BLOW COUNTS | SAMPLE/CORE DESCRIPTION |
|---|---|---|---|---|---|
| | 5 | 7 | 1.5 | 2-2- | Silt, brown, dry. |
| | | | | 1-2 | |
| | 10 | 12 | 1.5 | 2-4- | Silt, brown (10.0'-10.5') grading into a fine sand, |
| | | | | 3-4 | light brown with 20-25 percent silt. Dry. |
| | 15 | 17 | 2.0 | 1-3- | Sand, fine, gray-brown (15'-16') silt, brown |
| | | | | 6-6 | (16'-16.3') grading into a fine sand with 20-25 |
| | | | | | percent silt (16.3'-17'), wet. |
| | | | | | Note: "A-rods" show wet line at ~12'. |
| | 20 | 22 | 2.0 | 6-9- | Sand, fine, gray-brown with 10-15 percent silt |
| | | | | 15-26 | grading into a fine sand, brown with 20-25 percent |
| | | | | | silt (21'-22'), wet. Wood cuttings are coming |
| | | | | | up from auger flytes. |
| * | 25 | 27 | 0.5 | 2-2- | Sand, medium to coarse, brown with assorted colors, |
| | | | | 3-3 | wet. |
| | 30 | 32 | 2.0 | 1-2- | Same as above. |
| | | | | 2-6 | |
| | 35 | 37 | 2.0 | 3-4 | Sand, medium, light brown to gray. |
| | | | | 6-8 | |
| | | | | | |
| * | | | | | Second attempt: first core barrel at this depth was |
| | | | | | empty - however, blow counts are from first |
| | | | | | attempted sample. |
| | | | | | |
| | | | | | |

# SAMPLE/CORE LOG

BORING/WELL: GM-54B PROJECT NO: NO308SG3 PAGE: 1

SITE LOCATION: Monsanto Company Sauget, Illinois DRILLING STARTED: 9/28/87 DRILLING COMPLETED: 9/29/87

TOTAL DEPTH DRILLED: 93 ft HOLE DIAMETER: 8 in. TYPE OF SAMPLE/ CORING DEVICE: Flume or Split Spoon Core Barrel

LENGTH & DIAMETER OF CORING DEVICE: 2' x 2" SAMPLING INTERVAL: 10 ft

LAND-SURFACE ELEVATION: { } SURVEYED { } ESTIMATED DATUM:

DRILLING FLUID USED: Bentonite & Water DRILLING METHOD: Hydraulic (mud) Rotary

DRILLING CONTRACTOR: John Mathes & Assoc. DRILLER: Chris Hebel HELPER: Dave Ellis

PREPARED BY: B. Blum HAMMER WEIGHT: 140 lb HAMMER DROP: 30 in.

| SAMPLE NO | SAMPLE DEPTH FROM | SAMPLE DEPTH TO | CORE RECVRY | BLOW COUNTS | SAMPLE/CORE DESCRIPTION |
|---|---|---|---|---|---|
| 9/28 | 0 | 10 | | Flume | No sample collected. |
| | 10 | 20 | | Flume | Silt, and sand, fine; brown. |
| | 20 | 30 | | Flume | |
| | 30 | 40 | | Flume | |
| | Sample | collec | ted | | |
| | 40 | 50 | | Flume | Sand, fine to medium (75%) brown; silt (25%) |
| | | | | | coarsening downwards to sand, medium to coarse. |
| 9/29 | 50 | 60 | | Flume | Sand, fine to coarse (85%) silt (15%) brown; with a |
| | | | | | lot of lignite. |
| | 60 | 70 | | Flume | At 65' wood chips were coming out of flume. Material |
| | | | | | is same as above with wood. |
| | 70 | 80 | | Flume | At 72' hit some kind of obstruction (wood) through it |
| | | | | | at 75'. Material is same as above. |
| | 80 | 90 | | | Same as above. |
| | 87 | 89 | 2 | Split | Sand, medium to coarse, gray; well sorted. Only 6" |
| | | | | Spoon | of recovery was virgin formation. The other 18" |
| | | | | | was backwash. |
| | 90 | 93 | | Flume | Same as above. |
| | | | | | |
| | | | | | |
| | | | | | |
| | | | | | |
| | | | | | |
| | | | | | |

# SAMPLE/CORE LOG

BORING/WELL: GM-58A PROJECT NO: N0308SG3 PAGE: 1

SITE LOCATION: Monsanto Company Sauget, Illinois DRILLING STARTED: 10/7/87 DRILLING COMPLETED: 10/7/87

TOTAL DEPTH DRILLED: 39 ft HOLE DIAMETER: 8 in. TYPE OF SAMPLE/ CORING DEVICE: Split Spoon Core Barrel

LENGTH & DIAMETER OF CORING DEVICE: 2' x 2" SAMPLING INTERVAL: 5 ft

LAND-SURFACE ELEVATION: { } SURVEYED { } ESTIMATED DATUM:

DRILLING FLUID USED: None DRILLING METHOD: Hollow Stem Auger

DRILLING CONTRACTOR: John Mathes & Assoc. DRILLER: Kent HELPER: Quentin

PREPARED BY: B. Blum HAMMER WEIGHT: 140 lb HAMMER DROP: 30 in.

| SAMPLE NO | SAMPLE DEPTH | | CORE RECVRY | BLOW COUNTS | SAMPLE/CORE DESCRIPTION |
|---|---|---|---|---|---|
| | FROM | TO | | | |
| | 5 | 7 | 2.0 | 2-3- | Silt, light brown, dry. |
| | | | | 3-4 | |
| | 10 | 12 | 2.0 | 4-9- | Sand, fine, light brown with 20-25 percent silt. |
| | | | | 17-26 | |
| | 15 | 17 | 2.0 | 4-4- | Same as above. |
| | | | | 5-6 | |
| | 20 | 22 | 2.0 | 5-6- | Same as above, wet. |
| | | | | 9-12 | |
| | 25 | 27 | 2.0 | 2-6- | Same as above with 10-15 percent silt. |
| | | | | 11-14 | |
| | 30 | 32 | 2.0 | 3-5- | Sand, fine, brown with 50 percent silt. |
| | | | | 7-9 | |
| | 35 | 37 | 2.0 | 3-6- | Sand, fine to medium with 5 percent silt. |
| | | | | 9-12 | |

# SAMPLE/CORE LOG

BORING/WELL: GM-59A PROJECT NO: NO308SG3 PAGE: 1

SITE LOCATION: Monsanto Company Sauget, Illinois DRILLING STARTED: 10/8/87 DRILLING COMPLETED: 10/8/87

TOTAL DEPTH DRILLED: 39 ft HOLE DIAMETER: 8 in. TYPE OF SAMPLE/ CORING DEVICE: Split Spoon Core Barrel

LENGTH & DIAMETER OF CORING DEVICE: 2' x 2" SAMPLING INTERVAL: 5 ft

LAND-SURFACE ELEVATION: { } SURVEYED { } ESTIMATED DATUM:

DRILLING FLUID USED: None DRILLING METHOD: Hollow Stem Auger

DRILLING CONTRACTOR: John Mathes & Assoc. DRILLER: Kent HELPER: Quentin

PREPARED BY: B. Blum HAMMER WEIGHT: 140 lb HAMMER DROP: 30 in.

| SAMPLE NO | SAMPLE DEPTH FROM | SAMPLE DEPTH TO | CORE RECVRY | BLOW COUNTS | SAMPLE/CORE DESCRIPTION |
|---|---|---|---|---|---|
| | 5 | 7 | 2 | 3-6- | Sand, very fine, tan; with lenses of silt, dry. |
| | | | | 9-14 | |
| | 10 | 12 | 2 | 4-8- | Silt, brown, dry. |
| | | | | 12-13 | |
| | 15 | 17 | 2 | 5-6- | Sand, very fine, tan; with lenses of silt. |
| | | | | 7-8 | |
| | 20 | 22 | 2 | 0-1- | Sand, fine, brown; with 10-15 percent silt, moist. |
| | | | | 2-4 | |
| | 25 | 27 | 2 | 1-2- | Sand, fine, brown; well sorted with a lens of silt. |
| | | | | 8-11 | |
| | 30 | 32 | 2 | 2-3- | Same as above. |
| | | | | 12-15 | |
| | 35 | 37 | 2 | 2-3- | Sand, fine, brown; with 10 to 15 percent silt. |
| | | | | 9-13 | |

# SAMPLE/CORE LOG

BORING/WELL: GM-55C PROJECT NO: N0896WG1 PAGE: 1 of 2

SITE LOCATION: Kirkland & Ellis, Sauget, Illinois DRILLING STARTED: 9/30/87 DRILLING COMPLETED: 10/1/87

TOTAL DEPTH DRILLED: 131 ft HOLE DIAMETER: 8 in. TYPE OF SAMPLE/ CORING DEVICE: Flume or Split Spoon Core Barrel

LENGTH & DIAMETER OF CORING DEVICE: 2' x 2" SAMPLING INTERVAL: 10 ft

LAND-SURFACE ELEVATION: { } SURVEYED { } ESTIMATED DATUM:

DRILLING FLUID USED: Bentonite & Water DRILLING METHOD: Hydraulic (mud) Rotary

DRILLING CONTRACTOR: John Mathes & Assoc. DRILLER: Chris Hebel HELPER: Dave Ellis

PREPARED BY: B. Blum HAMMER WEIGHT: 140 lb HAMMER DROP: 30 in.

| SAMPLE NO | SAMPLE DEPTH FROM | SAMPLE DEPTH TO | CORE RECVRY | BLOW COUNTS | SAMPLE/CORE DESCRIPTION |
|---|---|---|---|---|---|
| 9/30 | 0 | 10 | | Flume | No sample - Silt and clay gray-black. Too fine to |
| | | | | | to fall out of suspension of mud. |
| | 10 | 20 | | Flume | Silt and clay, gray-black. |
| | 20 | 30 | | Flume | Same as above with some wood. Driller describes |
| | | | | | formation drilling like "smooth clay." |
| | 30 | 40 | | Flume | Same as above. |
| | 40 | 50 | | Flume | Same as above grading into sand, fine. Rods |
| | | | | | started bouncing at about 49'. |
| | 50 | 60 | | Flume | Same as above (fine sand). The sand is not falling |
| | | | | | out of suspension due to thick drilling fluid. |
| | 60 | 70 | | Flume | Same as above - start to notice lignite. |
| 10/1 | 70 | 80 | | Flume | Same as above - coarsening with depth. Higher |
| | | | | | percentages of medium to coarse sand. |
| | 80 | 90 | | Flume | At 83' driller thought he hit some wood or boulder. |
| | | | | | Material is the same as above. No wood seen in |
| | | | | | pit. Broken rock chips. |
| | 90 | 100 | | Flume | Sand, medium to coarse with gravel. |
| | 97 | 97 | 0.75 | 29-42 | Sand, medium, gray with gravel. |
| | | | | 50/1" | |
| | 100 | 110 | | Flume | Same as above - at 100' to 101' and 107' the rods |
| | | | | | were bouncing due to cobbles. Pieces of broken |
| | | | | | rock seen in flume sample. At 107' rods were |
| | | | | | bouncing and drilling was more difficult. |
| | | | | | |

SAMPLE/CORE LOG (Cont.d)

BORING/WELL: GM-55C PREPARED BY: B. Blum PAGE: 2 of 2

| SAMPLE NO | SAMPLE DEPTH | | CORE RECVRY | BLOW COUNTS | SAMPLE/CORE DESCRIPTION |
|---|---|---|---|---|---|
| | FROM | TO | | | |
| 10/1 | 100 | 110 | | Flume | Flume sample has a lot of angular material, coarse |
| (cont) | | | | | sand and gravel size. In addition, pods of silt |
| | | | | | are present. Most likely till. |
| | 110 | 118 | | Flume | Same as above. Rods were jumping from 105' to 106'. |
| | 118 | 119.5 | 1.5 | 76-90- | Sand, medium to coarse with gravel in a matrix of |
| | | | | 100 | fine sand, silt, gray; most likely till. |
| | 120 | 131 | | Flume | Same as above. Refusal. |

# SAMPLE/CORE LOG

BORING/WELL: GM-56C PROJECT NO: N0896WG1 PAGE: 1

SITE LOCATION: Kirkland & Ellis Sauget, Illinois DRILLING STARTED: 10/5/87 DRILLING COMPLETED: 10/6/87

TOTAL DEPTH DRILLED: 121 FT HOLE DIAMETER: 8 in. TYPE OF SAMPLE/ CORING DEVICE: Flume or Split Spoon Core Barrel

LENGTH & DIAMETER OF CORING DEVICE: 2' x 2" SAMPLING INTERVAL: 10 ft

LAND-SURFACE ELEVATION: { } SURVEYED { } ESTIMATED DATUM:

DRILLING FLUID USED: Bentonite & Water DRILLING METHOD: Hydraulic (mud) Rotary

DRILLING CONTRACTOR: John Mathes & Assoc. DRILLER: Chris Hebel HELPER: Dave Ellis

PREPARED BY: B. Blum HAMMER WEIGHT: 140 lb HAMMER DROP: 30 in.

| SAMPLE NO | SAMPLE DEPTH | | CORE RECVRY | BLOW COUNTS | SAMPLE/CORE DESCRIPTION |
|---|---|---|---|---|---|
| | FROM | TO | | | |
| 10/5 | 0 | 10 | | Flume | Clay and silt - gray grading into sand, fine, light |
| | | | | | brown. |
| | 10 | 20 | | Flume | Clay and silt, with sand, fine, gray and brown. |
| | 20 | 30 | | Flume | Same as above. Trace sand is coarsening slightly. |
| | 30 | 40 | | Flume | Same as above. |
| | 40 | 50 | | Flume | Same as above to 45'. Sand 45-50'. |
| | 50 | 60 | | Flume | Sand, medium, gray-brown; some coarse sand and |
| | | | | | gravel. |
| | 60 | 70 | | Flume | Same as above with some pebbles too. |
| | 70 | 80 | | Flume | Same as above. At 80' drilling through cobbles or |
| | | | | | boulders. |
| | 80 | 90 | | Flume | Same as above. Hit cobbles at 83'. |
| | 90 | 100 | | Flume | Same as above. |
| 10/6 | 100 | 107 | | Flume | Same as above. |
| | 108 | 109 | 1.0 | Split | Clay, gray with sand, medium to coarse. (Coarse |
| | | | | Spoon | material may be backwash). |
| | | | | 19-50- | |
| | | | | 100/4" | |
| | 110 | 121 | | | Sand, medium to coarse, with broken rock chips |
| | | | | | (from boulders or cobbles). Most likely till. |
| | | | | | |
| | | | | | Refusal. |
| | | | | | |

SAMPLE/CORE LOG

BORING/WELL: GM-57C PROJECT NO: N0896WG1 PAGE: 1

SITE LOCATION: Kirkland & Ellis Sauget, Illinois DRILLING STARTED: 10/7/87 DRILLING COMPLETED: 10/9/87

TOTAL DEPTH DRILLED: 116 FT HOLE DIAMETER: 8 in. TYPE OF SAMPLE/ CORING DEVICE: Flume or Split Spoon Core Barrel

LENGTH & DIAMETER OF CORING DEVICE: 2' x 2" SAMPLING INTERVAL: 10 ft

LAND-SURFACE ELEVATION: { } SURVEYED { } ESTIMATED DATUM:

DRILLING FLUID USED: Bentonite & Water DRILLING METHOD: Hydraulic (mud) Rotary

DRILLING CONTRACTOR: John Mathes & Assoc. DRILLER: Chris Hebel HELPER: Dave Ellis

PREPARED BY: B. Blum HAMMER WEIGHT: 140 lb HAMMER DROP: 30 in.

| SAMPLE NO | SAMPLE DEPTH FROM | SAMPLE DEPTH TO | CORE RECVRY | BLOW COUNTS | SAMPLE/CORE DESCRIPTION |
|---|---|---|---|---|---|
| 10/7 | 0 | 10 | | Flume | Large stone and fill consisting of brick, cinder, and various sorted gravels and sand. |
| | 10 | 20 | | Flume | Same as above. |
| | 20 | 30 | | Flume | Same as above from 20-23 feet grading into a sand, fine with silt. |
| | 30 | 40 | | Flume | Same as above. |
| 10/8 | 40 | 50 | | Flume | Same as above. |
| | 50 | 60 | | Flume | Sand, fine and medium with silt and some gravel. |
| | 60 | 70 | | Flume | Same as above. |
| | 70 | 80 | | Flume | Hit wood obstruction at 72'. Material is sand, fine to medium with gravel. |
| 10/9 | 80 | 90 | | Flume | Hit cobbles and boulders at 83'-86'. |
| | 90 | 97 | | Flume | Same as above. |
| | 97 | 99 | 0.75 | 24-13-14-25 | Sand, fine to coarse, gray (30%), gravel (30%), pebbles and broken rock chips (20%), silt and clay (20%). |
| | 100 | 110 | | | Hit Boulders at 101'-102', 107'-108'. Same as above. |
| | 110 | 116 | | | In boulders. Same as above. Drills like till. |
| | | | | | |
| | | | | | Refusal. |
| | | | | | |
| | | | | | |
| | | | | | |
| | | | | | |

# Appendix 19

# Well Construction Information

# Appendix 19A

# 1986 Geraghty & Miller Report

# Volume I

Table 4. Summary of Construction Details for Monitoring Wells Installed Under the Direction of Geraghty & Miller, Inc., Monsanto Company, W.G. Krummrich Plant, Sauget, Illinois.

| Well No. | Date Completed | Well Diameter (inches) | Depth (feet below land surface) | Screen Setting (feet below land surface) | Interval Gravel Packed (feet below land surface)[1] | Interval Sealed With Bentonite (feet below land surface) | Interval Sealed with Grout (feet below land surface)[2] | Height of Measuring Point (feet above land surface)[3] | Elevation of Measuring Point (feet above mean sea level)[4] |
|---|---|---|---|---|---|---|---|---|---|
| GM-1 | 11- 1-83 | 6 | 34 | 19 - 34 | 16 - 28 | 15 - 16 | 2 - 15 | 2.6 (2.3)[5] | 413.65 |
| GM-2 | 11- 8-83 | 6 | 41 | 26 - 41 | None | 21 - 22 | 2 - 21 | 2.2 (2.0)[5] | 417.37 |
| GM-3 | 11- 7-83 | 6 | 36 | 21 - 36 | 19 - 24 | 18 - 19 | 2 - 18 | 3.9 (3.7)[5] | 411.31 |
| GM-4A | 11- 2-83 | 2 | 28 | 13 - 28 | 12 - 14 | 11 - 12 | 2 - 11 | 2.8 | 406.43 |
| GM-4B | 7-17-84 | 4 | 87 | 67 - 87 | 65 - 87 | 55 - 65 | 2 - 65 | 3.0 | 406.70 |
| GM-4C | 1-11-84 | 4 | 104 | 92.5-102.5 | 90 -102.5 | 75 - 90 | 2 - 75 | 2.5 | 406.51 |
| GM-5 | 11- 3-83 | 2 | 36 | 21 - 36 | 18.5- 24 | 17.5- 18.5 | 2 - 17.5 | 2.5 | 414.94 |
| GM-6A | 11- 2-83 | 2 | 34 | 19 - 34 | 16 - 22 | 15 - 16 | 2 - 15 | 2.0 | 414.59 |
| GM-6B | 7-26-84 | 4 | 88 | 68 - 88 | 62.5- 88 | 47.5-62.5 | 6 - 47.5 | 3.1 | 416.04 |
| GM-7 | 11- 3-83 | 2 | 36 | 21 - 36 | 17 - 23 | 16 - 17 | 2 - 16 | 2.5 | 414.95 |
| GM-8 | 11- 2-83 | 2 | 34 | 19 - 34 | None | 15 - 16 | 2 - 15 | 2.0 | 418.49 |
| GM-9A | 11-10-83 | 2 | 28 | 13 - 28 | 11.5- 15.5 | 10.5- 11.5 | 2 - 10.5 | 2.7 | 414.47 |
| GM-9B | 8-17-84 | 4 | 75 | 55 - 75 | 50 - 75 | 38 - 50 | 2 - 38 | 1.9 | 412.36 |
| GM-9C | 8-15-84 | 4 | 108 | 88 -108 | 84 -108 | 70 - 84 | 2 - 70 | 1.5 | 411.97 |
| GM-10A | 11- 9-83 | 2 | 28 | 13 - 28 | 11 - 12.5 | 10 - 11 | 2 - 10 | 2.2 | 412.97 |
| GM-10B | 1-22-85 | 4 | 78 | 54 - 74 | 48 - 74 | 38 - 48 | 2 - 38 | 2.5 | 413.90 |
| GM-10C | 1-18-85 | 4 | 111 | 94 -109 | 85 -109 | 75 - 85 | 2 - 75 | 2.5 | 413.78 |

Table 4. (Cont'd.)

| Well No. | Date Completed | Well Diameter (inches) | Depth (feet below land surface) | Screen Setting (feet below land surface) | Interval Gravel Packed (feet below land surface)[1] | Interval Sealed With Bentonite (feet below land surface) | Interval Sealed with Grout (feet below land surface)[2] | Height of Measuring Point (feet above land surface)[3] | Elevation of Measuring Point (feet above mean sea level)[4] |
|---|---|---|---|---|---|---|---|---|---|
| GM-11 | 10-31-83 | 2 | 25 | 10 - 25 | 8.5- 21 | 7.5- 8.5 | 2 - 7.5 | 2.6 | 412.95 |
| GM-12A | 11- 9-83 | 2 | 33.5 | 18.5- 33.5 | 16 - 23 | 15 - 16 | 2 - 15 | 3.0 | 416.47 |
| GM-12B | 8-13-84 | 4 | 89 | 69 - 89 | 65 - 89 | 50 - 65 | 2 - 50 | 2.6 | 416.80 |
| GM-12C | 1-17-85 | 4 | 114.5 | 94 -114.5 | 90 -114 | 75 - 90 | 2 - 75 | 2.5 | 416.79 |
| GM-13 | 8-15-84 | 2 | 38 | 18 - 38 | 16 - 38 | 15 - 16 | 2 - 15 | 2.0 | 415.47 |
| GM-14 | 8-16-84 | 2 | 38 | 18 - 38 | 16 - 38 | 15 - 16 | 2 - 15 | 2.5 | 411.26 |
| GM-15 | 8-17-84 | 2 | 38 | 15 - 38 | 12.5- 38 | 11.5- 12.5 | 2 - 11.5 | 2.0 | 413.71 |
| GM-16A | 8-14-84 | 2 | 38 | 18 - 38 | 16 - 38 | 15 - 16 | 2 - 15 | 2.1 | 412.03 |
| GM-16B | 8- 9-84 | 4 | 90 | 60 - 87 | 56 - 68 | 42 - 46 | 2 - 42 | 2.0 | 412.40 |
| GM-17A | 7- 6-84 | 2 | 38 | 18 - 38 | 16 - 38 | 15 - 16 | 2 - 15 | 3.0 | 412.57 |
| GM-17B | 7-25-84 | 4 | 78 | 58 - 78 | 52.5- 78 | 42 - 52.5 | 2 - 42 | 3.0 | 412.93 |
| GM-17C | 7-24-84 | 4 | 107 | 87 -107 | 80 -107 | 70 - 80 | 2 - 70 | 3.2 | 412.42 |
| GM-18A | 7- 5-84 | 2 | 38 | 18 - 38 | 16 - 38 | 15 - 16 | 2 - 15 | 2.6 | 414.23 |
| GM-18B | 7-12-84 | 2 | 92 | 72 - 92 | 68 - 92 | 56 - 68 | 2 - 56 | 2.8 | 414.02 |
| GM-25A | 8-14-84 | 2 | 38 | 13 - 38 | 10 - 38 | 9 - 10 | 2 - 9 | 1.4 | 414.20 |
| GM-25B | 7-27-84 | 4 | 88 | 68 - 88 | 62 - 88 | 47 - 62 | 2 - 47 | 3.0 | 415.46 |
| GM-27B | 8- 6-84 | 4 | 82 | 62 - 82 | 55 - 72 | 45 - 55 | 2 - 45 | 2.8 | 426.04 (425.61)[6] |
| GM-27C | 8- 3-84 | 4 | 105 | 85 -105 | 80 -115 | 68 - 80 | 2 - 80 | 2.9 | 426.76 (426.39)[6] |

Table 4. (Cont'd.)

| Well No. | Date Completed | Well Diameter (inches) | Depth (feet below land surface) | Screen Setting (feet below land surface) | Interval Gravel Packed (feet below land surface)[1] | Interval Sealed With Bentonite (feet below land surface) | Interval Sealed with Grout (feet below land surface)[2] | Height of Measuring Point (feet above land surface)[3] | Elevation of Measuring Point (feet above mean sea level)[4] |
|---|---|---|---|---|---|---|---|---|---|
| GM-28B | 7- 3-84 | 4 | 93 | 70.5- 90.5 | 67 - 93 | 55 - 67 | 2 - 55 | 3.0 | 423.88 |
| GM-28C | 7- 5-84 | 4 | 107 | 87 -107 | 85 -107 | 72 - 85 | 2 - 72 | 2.9 | 423.78 |
| GM-29 | 8-24-84 | 2 | 20.5 | 13 - 18.5 | 6 - 18 | 5 - 6 | 2 - 5 | 2.2 | 411.06 |
| GM-30 | 8-30-84 | 2 | 21.2 | 14.2- 19.2 | 5 - 16 | 4 - 5 | 2 - 4 | 1.8 | 416.09 |
| GM-31A | 11-26-84 | 2 | 40 | 19 - 39 | 16 - 39 | 14 - 16 | 2 - 14 | 2.0 | 418.63 |
| GM-31B | 1- 9-85 | 4 | 94 | 65.5- 85.5 | 59 - 85.5 | 49 - 59 | 2 - 49 | 2.5 | 418.92 |
| GM-31C | 1- 8-85 | 4 | 126.5 | 97 -117 | 93 -117 | 83 - 93 | 2 - 83 | 2.5 | 419.29 |
| GM-32 | 11-27-84 | 2 | 25 | 9 - 24 | 7 - 24 | 5 - 7 | 2 - 5 | 0.8 | 409.49 |
| GM-33 | 11-28-84 | 2 | 25 | 5 - 25 | 4 - 25 | 3 - 4 | 2 - 3 | 2.0 | 410.88 |
| GM-34 | 11-29-84 | 2 | 25 | 5 - 25 | 3.5- 25 | 2.5- 3.5 | 2 - 2.5 | 2.1 | 410.82 |
| GM-35 | 11-29-84 | 2 | 25 | 5 - 25 | 4 - 25 | 3 - 4 | 2 - 3 | 2.0 | 410.88 |
| GM-36 | 11-30-84 | 2 | 25 | 5 - 25 | 4 - 25 | 3 - 4 | 2 - 3 | 1.4 | 409.53 |
| GM-37 | 11-30-84 | 2 | 25 | 4.3- 24.3 | 3 - 24.3 | 2.5- 3 | 2 - 2.5 | 2.3 | 409.67 |
| GM-38 | 12- 3-84 | 2 | 25 | 4.5- 24.5 | 3 - 24.5 | 2.5- 3 | 2 - 2.5 | 2.0 | 412.51 |
| GM-39 | 12- 4-84 | 2 | 8 | 3 - 8 | 2 - 8 | 1.5- 2 | 1 - 1.5 | 1.9 | 415.59 |
| GM-40 | 12- 4-84 | 2 | 8 | 3 - 8 | 2 - 8 | 1.5- 2 | 1 - 1.5 | 2.0 | 415.75 |
| GM-41 | 12- 4-84 | 2 | 8 | 3 - 8 | 2 - 8 | 1.5- 2 | 1 - 1.5 | 1.2 | 414.75 |
| GM-42 | 12- 5-84 | 2 | 8 | 3 - 8 | 2 - 8 | 1.5- 2 | 1 - 1.5 | 1.5 | 414.48 |
| GM-43 | 12- 5-84 | 2 | 8 | 2 - 7 | 1.6- 7 | 1.2- 1.6 | 0.5- 1.2 | 1.7 | 414.38 |
| GM-44 | 12- 5-84 | 2 | 8 | 2 - 7 | 1.5- 7 | 1.1- 1.5 | 0.5- 1.1 | 1.6 | 414.44 |
| GM-45 | 12- 6-84 | 2 | 18 | 1.5-11.5 | 1 - 11.5 | 0.5- 1 | 0 - 0.5 | 1.3 | 410.10 |

Table 4. (Cont'd.)

| Well No. | Date Completed | Well Diameter (inches) | Depth (feet below land surface) | Screen Setting (feet below land surface) | Interval Gravel Packed (feet below land surface)[1] | Interval Sealed With Bentonite (feet below land surface) | Interval Sealed with Grout (feet below land surface)[2] | Height of Measuring Point (feet above land surface)[3] | Elevation of Measuring Point (feet above mean sea level)[4] |
|---|---|---|---|---|---|---|---|---|---|
| GM-46 | 12- 7-84 | 2 | 25 | 5 - 25 | 4 - 25 | 3 - 4 | 2 - 2.3 | 2.6 | 411.60 |
| GM-47 | 12-10-84 | 2 | 10 | 5 - 10 | 4 - 10 | 3 - 4 | 1.5- 3 | -0.45 | 412.34 |
| GM-48 | 12-10-84 | 2 | 12 | 2 - 12 | 1.9- 12 | 1.5- 9 | 0.5- 1.5 | 1.4 | 411.00 |
| GM-49 | 12-10-84 | 2 | 13 | 3 - 13 | 2.5- 13 | 2 - 2.5 | 0.5- 2 | -0.4 | 408.43 |
| GM-106 | 6-27-85 | 8 | 165.7 | None[7] | None | None | 0 -133.5 | 1.2 | 424.82[8] |

1) Gravel pack is absent in some wells and partially covers the screened interval in others due to a collapse of the natural formation around the well prior to setting the gravel pack.

2) The grout was mixed with 90 percent cement and 10 percent bentonite and each well has a cement seal at the surface.

3) The measuring point on each well is the top of the well casing and not the protective outer casing. For each well that has a water-level recorder, the measuring point is the top of the water-level recorder shelter base, except on Well B-106.

4) The elevations were determined to the top of the steel well casings for each well and to the top of the recorder shelter base for the wells installed with water-level recorders. The conversions to the W.G. Krummrich datum is 413.50 feet (NGVD) equals 101.00 feet (W.G. Krummrich datum).

5) Height of the 6-inch casing above land surface.

6) Elevation of the top of the coupling.

7) Rock was encountered at 126 feet below land surface and an open hole exists from 133.5 to 165.7 feet below land surface. The 8-inch casing was grouted 7.5 feet into the rock inside a 12-inch casing which is set at the rock surface.

8) Elevation of the top of the well casing and not the recorder shelter base.

Table 5. Summary of Construction Details for Monitoring Wells Installed Under the Direction of D'Appolonia Waste Management Services, Inc. Monsanto Company, W.G. Krummrich Plant, Sauget, Illinois

| Well No. | Date Completed | Well Diameter (inches) | Depth (feet below land surface) | Screen Setting (feet below land surface)[1] | Interval Gravel Packed (feet below land surface)[2] | Interval Sealed With Bentonite (feet below land surface) | Interval Sealed with Grout (feet below land surface)[3] | Height of Measuring Point (feet above land surface)[4] | Elevation of Measuring Point (feet above mean sea level)[5] |
|---|---|---|---|---|---|---|---|---|---|
| B-21A | 3-14-82 | 4 | 28 | 20.8- 25.8 | None | 13 - 19 | 0 - 13 | 2.0 | 428.53 |
| B-21B | 3-13-82 | 4 | 49.5 | 37.3- 47.3 | None | 28.5- 34.5 | 0 - 28.5 | 1.8 | 428.37 |
| B-22A | 3-15-82 | 4 | 35 | 27.8- 32.8 | 26 - 34 | 20 - 26 | 0 - 20 | 1.9 | 428.16 |
| B-22B | 3-13-82 | 4 | 55 | 42.8- 52.8 | None | 35 - 41 | 0 - 35 | 2.1 | 428.16 |
| B-23B | 3-16-82 | 4 | 49.5 | 42.3- 47.3 | 40.5- 48 | 34.5- 40.5 | 0 - 34.5 | 2.1 | 428.17 |
| B-24A | 3-20-82 | 4 | 27.5 | 20.3- 25.3 | None | 12 - 18 | 0 - 12 | 2.0 | 422.49 |
| B-24B | 3-19-82 | 4 | 50 | 37.8- 47.8 | None | 30.5- 36.5 | 0 - 30.5 | 1.9 | 422.28 |
| B-24C | 3-18-82 | 4 | 69 | 56.8- 66.8 | None | 31-37/52-55 | 0 - 31 | 1.7 | 422.52 |
| B-25A | 3-31-82 | 4 | 35.2 | 28 - 33 | 25.9- 34.1 | 19 - 25.9 | 0 - 19 | 1.8 | 428.47 |
| B-25B | 3-17-82 | 4 | 49.5 | 37.3- 47.3 | None | 30 - 36 | 0 - 30 | 2.0 | 427.35 |
| B-26A | 3-23-82 | 4 | 33.2 | 26 - 31 | 24 - 29 | 17 - 24 | 0 - 17 | 1.9 | 423.71 |
| B-26B | 3-22-82 | 4 | 49.8 | 37.6- 47.6 | 36 - 49.8 | 28 - 36 | 0 - 28 | 2.0 | 423.62 |
| B-27B | 3-24-82 | 4 | 42 | 29.8- 39.8 | 28 - 36 | 20 - 28 | 0 - 20 | 1.8 | 425.83 |
| B-28A | 3-26-82 | 4 | 32.5 | 25.3- 30.3 | 23.1- 31 | 16 - 23.1 | 0 - 16 | 1.6 | 423.04 |
| B-28B | 3-26-82 | 4 | 49.5 | 37.3- 47.3 | 34.8- 37 | 28 - 34.8 | 0 - 28 | 1.8 | 423.08 |

Table 5. (Cont'd.)

| Well No. | Date Completed | Well Diameter (inches) | Depth (feet below land surface) | Screen Setting (feet below land surface)[1] | Interval Gravel Packed (feet below land surface)[2] | Interval Sealed With Bentonite (feet below land surface) | Interval Sealed with Grout (feet below land surface)[3] | Height of Measuring Point (feet above land surface)[4] | Elevation of Measuring Point (feet above mean sea level)[5] |
|---|---|---|---|---|---|---|---|---|---|
| B-29A | 4- 1-82 | 4 | 33.2 | 26 - 31 | 23.4- 32 | 17 - 23.4 | 0 - 17 | 1.9 | 429.03 |
| B-29B | 3-27-82 | 4 | 49.5 | 37.3- 47.3 | None | 28 - 35 | 0 - 28 | 1.7 | 429.06 |
| B-30B | 3-29-82 | 4 | 49 | 36.8- 46.8 | 33.7- 38.6 | 27 - 33.7 | 0 - 27 | 2.2 | 430.52 |
| B-31B | 4- 2-82 | 4 | 34.5 | 27.3- 32.3 | None | 18.5- 24.7 | 0 - 18.5 | 1.5 | 421.68 |
| B-31C | 4- 6-82 | 4 | 67.3 | 60.1- 65.1 | None | 30 - 54 | 0 - 30 | 2.2 | 421.88 |
| B-101 | 12- 9-83 | 0.75 | 169.2[6] | 167.7-169.2 | 154 -169.2 | 153 -154 | 0 -153 | 2.4 | 427.09 |
| B-102 | 12- 5-83 | 0.75 | 162.0[7] | 159.5-162.0 | 147 -162 | 146 -147 | 0 -146 | 2.1 | 423.84 |
| B-103 | 11-17-83 | 0.75 | 165.8[8] | 163.0-165.5 | 149 -165.8 | 145.5-149 | 0 -145.5 | 0.7 | 427.33 |
| B-105 | 11- 2-83 | 0.75 | 154.0[9] | 151.5-154.0 | 134 -154 | 133 -134 | 0 -133 | 0.2 | 420.93 |

1) Each well has a 2.2-foot sump (well casing) below the screen setting.

2) Coarse sand was added to each annulus whenever the formation did not collapse around the well screen.

3) The grout consisted of a mixture of bentonite and cement.

4) The measuring point on each well is the top of the steel well casing and not the protective outer casing.

5) The elevations were determined to the top of the steel well casings.

6) The top of rock was encountered at 148.5 feet below land surface.

7) The top of rock was encountered at 142.5 feet below land surface.

8) The top of rock was encountered at 144.5 feet below land surface.

9) The top of rock was encountered at 131.0 feet below land surface.

Table 6. Summary of Construction Details for Monitoring Wells Installed Under the Direction of Law Engineering Testing Company, Monsanto Company, W.G. Krummrich Plant, Sauget, Illinois

| Well No. | Date Completed | Well Diameter (inches) | Depth (feet below land surface) | Screen Setting (feet below land surface)[1] | Interval Gravel Packed (feet below land surface)[2] | Interval Sealed With Bentonite (feet below land surface)[3] | Interval Sealed with Grout (feet below land surface)[4] | Height of Measuring Point (feet above land surface)[5] | Elevation of Measuring Point (feet above mean sea level)[6] |
|---|---|---|---|---|---|---|---|---|---|
| P- 1 | 1-20-82 | 2 | 47 | 40 - 45 | - | - | 0 - 40 | 1.8 | 405.71 |
| P- 2 | 1-26-82 | 2 | 47 | 40 - 45 | - | - | 0 - 40 | 1.5 | 405.88 |
| P- 3 | 2-18-82 | 2 | 47 | 40 - 45 | - | - | 0 - 40 | 1.4 | 405.86 |
| P- 4 | 3- 4-82 | 2 | 47.5 | 40.5- 45.5 | - | - | 0 - 40.5 | 1.7 | 405.81 |
| P- 5 | 3 -5-82 | 2 | 54.5 | 47.5- 52.5 | - | - | 0 - 47.5 | 2.5 | 406.31 |
| P- 6 | 3- 9-82 | 2 | 30.5 | 23.5- 28.5 | - | - | 0 - 23.5 | 1.7 | 408.99 |
| P- 7 | 3- 8-82 | 2 | 33 | 26 - 31 | - | - | 0 - 26 | 1.6 | 408.03 |
| P- 8 | 3- 2-82 | 2 | 53.5 | 46.5- 51.5 | - | - | 0 - 46.5 | 1.7 | 406.64 |
| P- 9 | 3- 1-82 | 2 | 50 | 43 - 48 | - | - | 0 - 43 | 2.1 | 406.76 |
| P-10 | 2-23-82 | 2 | 54 | 47 - 52 | - | - | 0 - 47 | 1.9 | 406.68 |
| P-11 | 3- 6-82 | 2 | 51 | 44 - 49 | - | - | 0 - 44 | 1.8 | 407.16 |
| P-12 | 2-22-82 | 2 | 50.5 | 43.5- 48.5 | - | - | 0 - 43.5 | 2.1 | 407.67 |
| P-13 | 2-21-82 | 2 | 53.5 | 46.5- 51.5 | - | - | 0 - 46.5 | 1.8 | 407.70 |
| P-14 | 3- 7-82 | 2 | 32.5 | 25.5- 30.5 | - | - | 0 - 25.5 | 2.0 | 410.86 |

1) Each well has a 2-foot sump (well casing) below the screen setting.

2) Silica sand was added to each annulus whenever the formation did not collapse around the well screen. Specific details for each well were not included in Law Engineering's well construction details.

3) Ten gallons of a thick bentonite slurry was set above the silica sand/natural formation in each well prior to sealing the wells with grout.

4) The grout was mixed with 90 percent cement and 10 percent bentonite.

5) The measuring point on each well is the top of the steel well casing and not the protective outer casing.

6) The elevations were determined to the top of the steel well casings.

# Appendix 19B

# 1986 Geraghty & Miller Report

# Volume III

GERAGHTY & MILLER, INC.
Ground-Water Consultants

# WELL CONSTRUCTION LOG

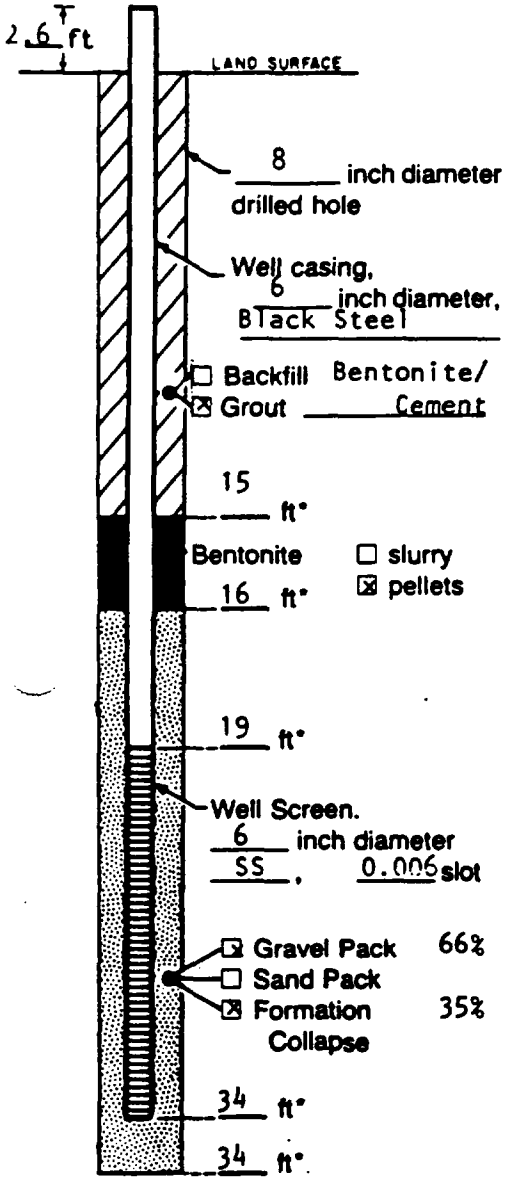


Measuring Point is Top of Well Casing Unless Otherwise Noted.

*Depth Below Land Surface

Project: Monsanto Company  Well: GM-1
Town/City: Sauget
County: St. Clair  State: IL
Permit No.:
Land-Surface Elevation and Datum: _____ feet  ☒ surveyed ☐ estimated
Measuring Point 413.65 Ft (MSL)
Installation Dates(s): 11/1/83
Drilling Method: Mud Rotary
Drilling Contractor: John Mathes & Assoc.
Drilling Fluid:

Development Techniques(s) and Date(s)
Pumped with bladder pump; surged with compressed air.

Fluid Loss During Drilling: _____ gallons
Water Removed During Development: 480 gallons
Static Depth to Water: _____ feet below M.P.
Pumping Depth to Water: _____ feet below M.P.
Pumping Duration: 4 hours
Yield: 2 gpm  Date:
Specific Capacity: _____ gpm/ft
Well Purpose: Ground-water monitoring well

Remarks:

Prepared by: D. Colton

GERAGHTY & MILLER, INC.
Ground-Water Consultants

# WELL CONSTRUCTION LOG

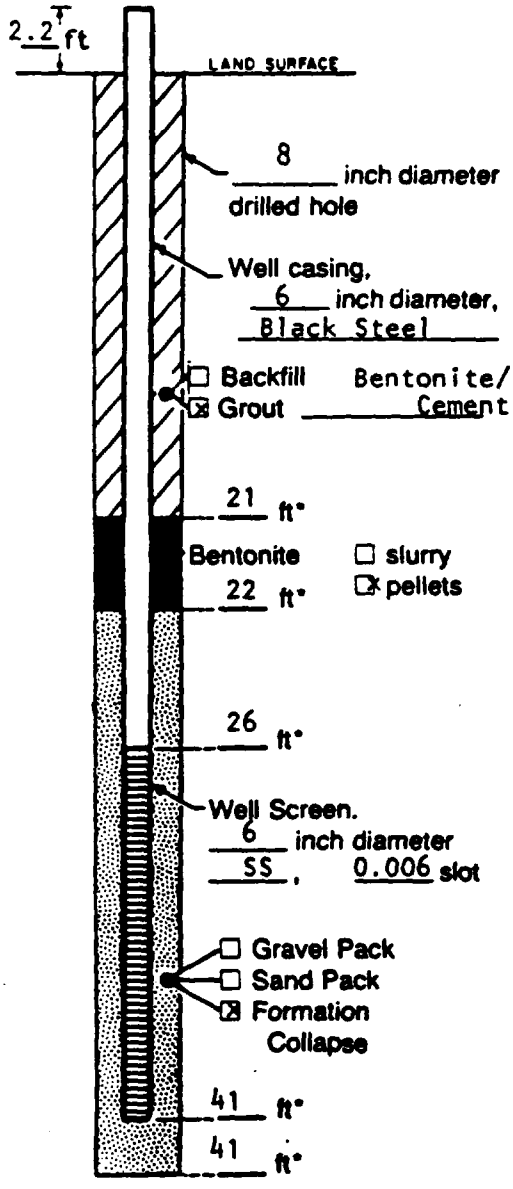


Measuring Point is Top of Well Casing Unless Otherwise Noted.

*Depth Below Land Surface

Project: Monsanto Company  Well: GM-2
Town/City: Sauget
County: St. Clair  State: IL
Permit No.:
Land-Surface Elevation and Datum: _____ feet  ☒ surveyed
Measuring Point 417.37 Ft (MSL)  ☐ estimated
Installation Dates(s): 11/8/83
Drilling Method: Mud Rotary
Drilling Contractor: John Mathes & Assoc.
Drilling Fluid: Bentonite

Development Techniques(s) and Date(s)
Surged with compressed air.

Fluid Loss During Drilling: _____ gallons
Water Removed During Development: 480 gallons
Static Depth to Water: _____ feet below M.P.
Pumping Depth to Water: _____ feet below M.P.
Pumping Duration: 4 hours
Yield: 2 gpm  Date: _____
Specific Capacity: _____ gpm/ft
Well Purpose: Ground-water monitoring well

Remarks:

Prepared by: D. Colton

GERAGHTY & MILLER, INC.
Ground-Water Consultants

# WELL CONSTRUCTION LOG

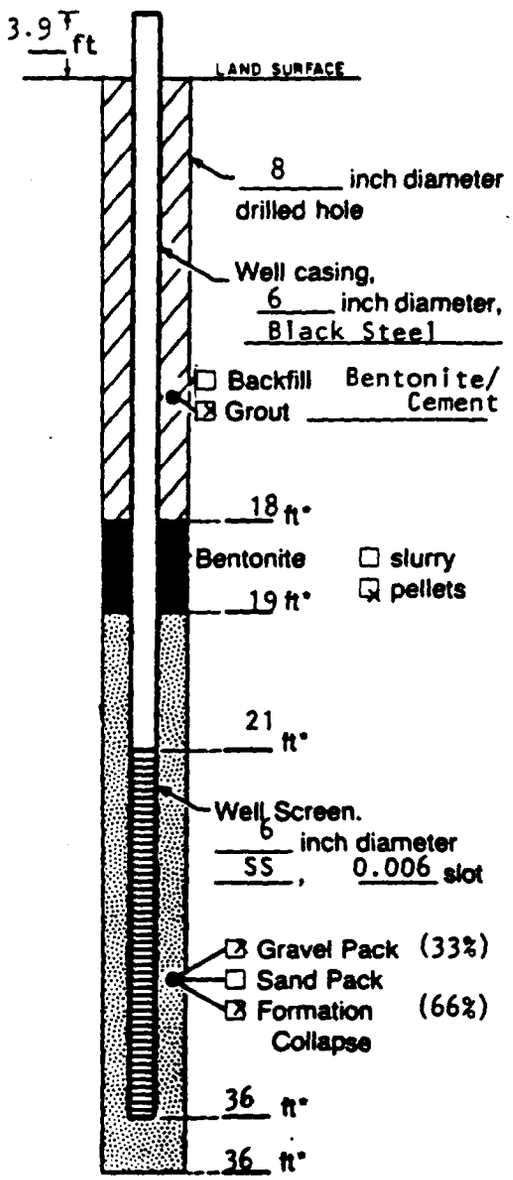


Measuring Point is Top of Well Casing Unless Otherwise Noted.

*Depth Below Land Surface

Project: Monsanto Company  Well: GM-3
Town/City: Sauget
County: St. Clair  State: IL
Permit No.:
Land-Surface Elevation and Datum: _____ feet  ☒ surveyed
Monitoring Point 416.31 Ft (MSL)  ☐ estimated
Installation Dates(s): 11/7/83
Drilling Method: Mud Rotary
Drilling Contractor: John Mathes & Assoc.
Drilling Fluid: Bentonite

Development Techniques(s) and Date(s)
Surged with compressed air.

Fluid Loss During Drilling: _____ gallons
Water Removed During Development: 480 gallons
Static Depth to Water: _____ feet below M.P.
Pumping Depth to Water: _____ feet below M.P.
Pumping Duration: 4 hours
Yield: 2 gpm  Date: _____
Specific Capacity: _____ gpm/ft
Well Purpose: Ground-water monitoring well

Remarks:

Prepared by: D. Colton

GERAGHTY & MILLER, INC.
Ground-Water Consultants

# WELL CONSTRUCTION LOG

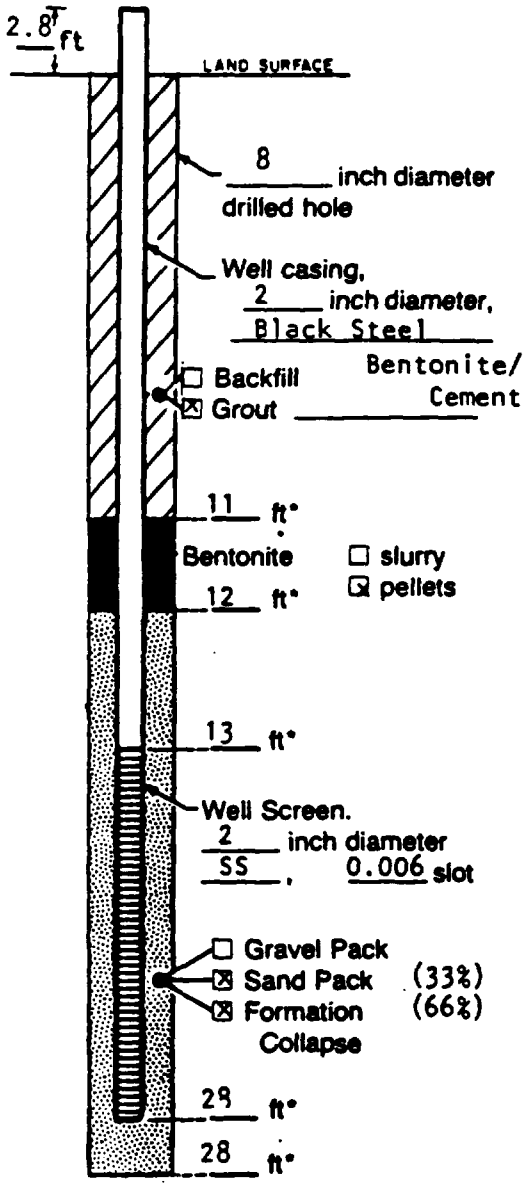


Measuring Point is Top of Well Casing Unless Otherwise Noted.

*Depth Below Land Surface

Project: Monsanto Company  Well: GM-4A
Town/City: Sauget
County: St. Clair  State: Illinois
Permit No.:
Land-Surface Elevation and Datum: _____ feet  ☒ surveyed  ☐ estimated
Measuring Point 406.43 Ft (MSL)
Installation Dates(s): 11/2/83
Drilling Method: Hollow Stem Auger
Drilling Contractor: John Mathes & Assoc.
Drilling Fluid: Water

Development Techniques(s) and Date(s)
Surged with compressed air; pumped with bladder pump.

Fluid Loss During Drilling: 150 gallons
Water Removed During Development: 240 gallons
Static Depth to Water: _____ feet below M.P.
Pumping Depth to Water: _____ feet below M.P.
Pumping Duration: 4 hours
Yield: 1 gpm  Date: _____
Specific Capacity: _____ gpm/ft
Well Purpose: Ground-water monitoring well

Remarks:

Prepared by: D. Colton

GERAGHTY & MILLER, INC.
Ground-Water Consultants

# WELL CONSTRUCTION LOG

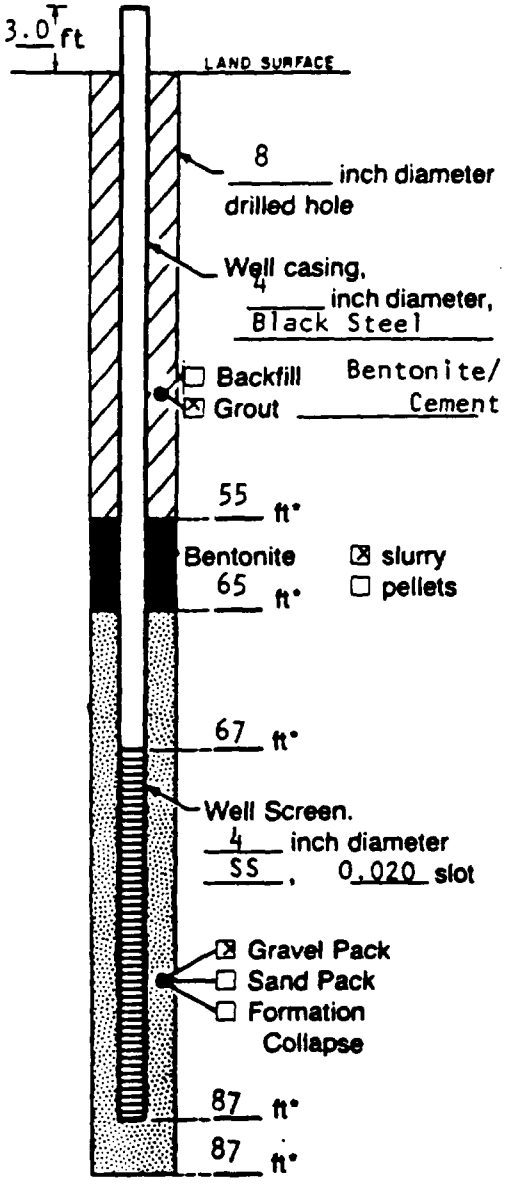


Measuring Point is Top of Well Casing Unless Otherwise Noted.

*Depth Below Land Surface

Project: Monsanto Company  Well: GM-4B
Town/City: Sauget
County: St. Clair  State: IL
Permit No.:
Land-Surface Elevation and Datum: _____ feet  ☒ surveyed
Measuring Point 406.70 Ft (MSL)  ☐ estimated
Installation Dates(s): 7/17/84
Drilling Method: Mud Rotary
Drilling Contractor: John Mathes & Assoc.
Drilling Fluid: Bentonite

Development Techniques(s) and Date(s)
Surged with compressed air.

Fluid Loss During Drilling: _____ gallons
Water Removed During Development: 1200 gallons
Static Depth to Water: _____ feet below M.P.
Pumping Depth to Water: _____ feet below M.P.
Pumping Duration: 2 hours
Yield: 10 gpm  Date: _____
Specific Capacity: _____ gpm/ft
Well Purpose: Ground-water monitoring well

Remarks:

Prepared by: D. Colton

GERAGHTY & MILLER, INC.
Ground-Water Consultants

# WELL CONSTRUCTION LOG

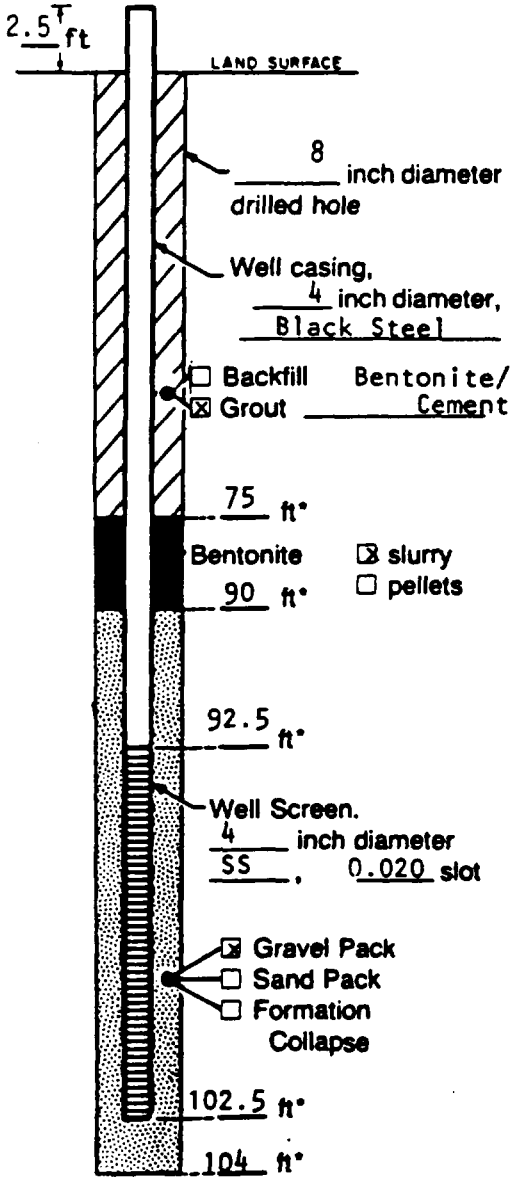


Measuring Point is Top of Well Casing Unless Otherwise Noted.

*Depth Below Land Surface

Project: Monsanto Company  Well: GM-4C
Town/City: Sauget
County: St. Clair  State: Il
Permit No.:
Land-Surface Elevation and Datum: _____ feet  ☒ surveyed
Measuring Point 406.51 Ft (MSL)  ☐ estimated
Installation Dates(s): 1/11/84
Drilling Method: Mud Rotary
Drilling Contractor: John Mathes & Assoc.
Drilling Fluid: Bentonite

Development Techniques(s) and Date(s)
Surged with compressed air.

Fluid Loss During Drilling: _____ gallons
Water Removed During Development: 1200 gallons
Static Depth to Water: _____ feet below M.P.
Pumping Depth to Water: _____ feet below M.P.
Pumping Duration: 2 hours
Yield: 10 gpm  Date: _____
Specific Capacity: _____ gpm/ft
Well Purpose: Ground-water monitoring well

Remarks:

Prepared by: D. Colton

GERAGHTY & MILLER, INC.
Ground-Water Consultants

# WELL CONSTRUCTION LOG

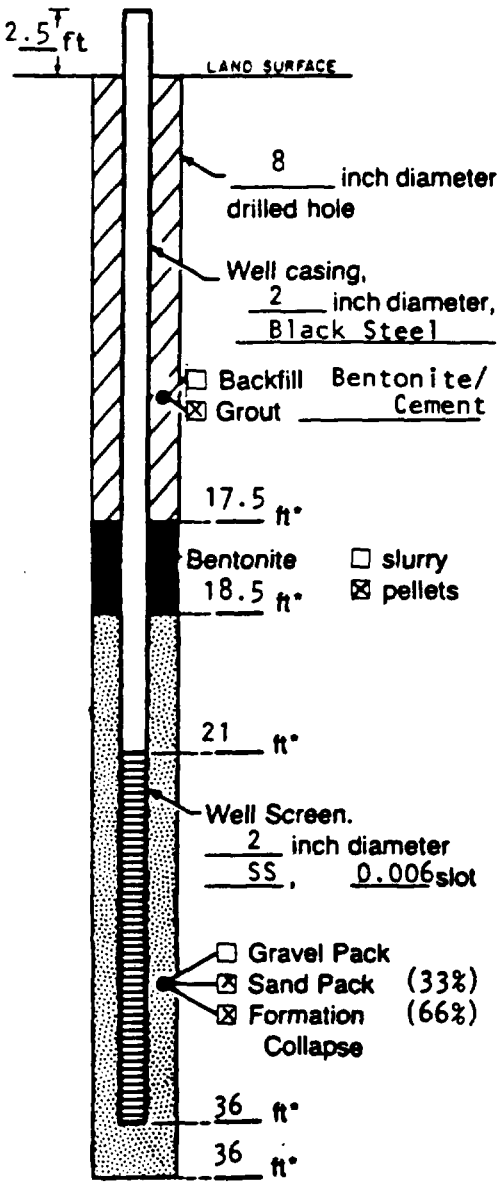


Measuring Point is Top of Well Casing Unless Otherwise Noted.

*Depth Below Land Surface

Project Monsanto Company Well GM-5
Town/City Sauget
County St. Clair State IL
Permit No.
Land-Surface Elevation
and Datum _____ feet ☒ surveyed
Measuring Point 414.94 Ft (MSL) ☐ estimated
Installation Dates(s) 11/3/83
Drilling Method Hollow Stem Auger
Drilling Contractor John Mathes & Assoc.
Drilling Fluid Water

Development Techniques(s) and Date(s)
Pumped with bladder pump; surged with compressed air.

Fluid Loss During Drilling 200 gallons
Water Removed During Development 240 gallons
Static Depth to Water _____ feet below M.P.
Pumping Depth to Water _____ feet below M.P.
Pumping Duration 4 hours
Yield 1 gpm Date _____
Specific Capacity _____ gpm/ft
Well Purpose Ground-Water Monitoring well

Remarks

Prepared by D. Colton

GERAGHTY & MILLER, INC.
Ground-Water Consultants

# WELL CONSTRUCTION LOG

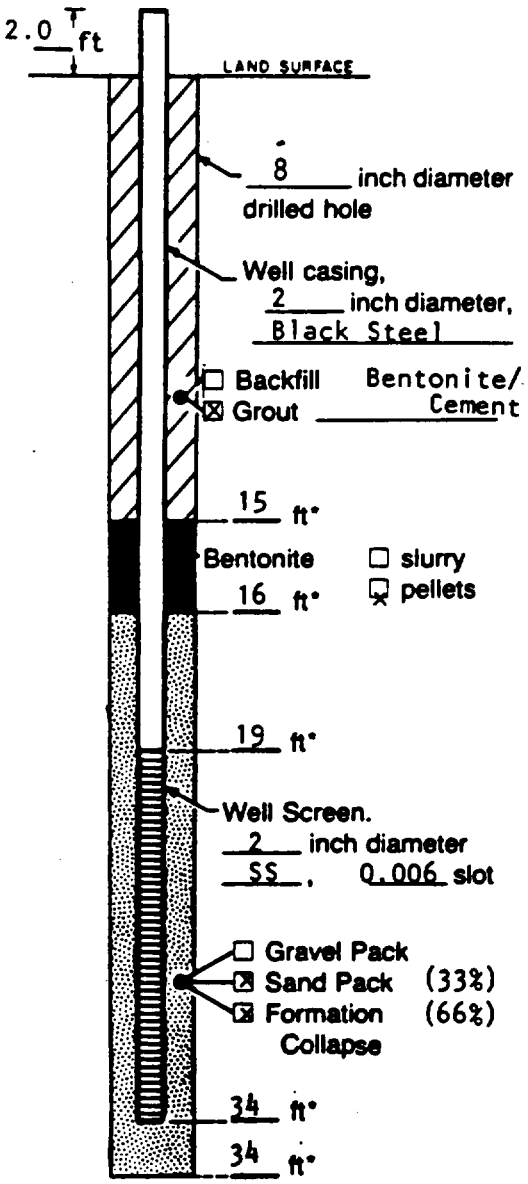


Measuring Point is Top of Well Casing Unless Otherwise Noted.

*Depth Below Land Surface

Project: Monsanto Company  Well: GM-6A
Town/City: Sauget
County: St. Clair  State: IL
Permit No.:
Land-Surface Elevation and Datum: _____ feet  ☒ surveyed
Measuring Point 414.59 Ft (MSL)  ☐ estimated
Installation Dates(s): 11/2/83
Drilling Method: Hollow Stem Auger
Drilling Contractor: John Mathes & Assoc.
Drilling Fluid: Water

Development Techniques(s) and Date(s)
Pumped with bladder pump; surged with compressed air.

Fluid Loss During Drilling: 200 gallons
Water Removed During Development: 240 gallons
Static Depth to Water: _____ feet below M.P.
Pumping Depth to Water: _____ feet below M.P.
Pumping Duration: 4 hours
Yield: 1 gpm  Date: _____
Specific Capacity: _____ gpm/ft
Well Purpose: Ground-water monitoring well

Remarks:

Prepared by: D. Colton

GERAGHTY & MILLER, INC.
Ground-Water Consultants

# WELL CONSTRUCTION LOG

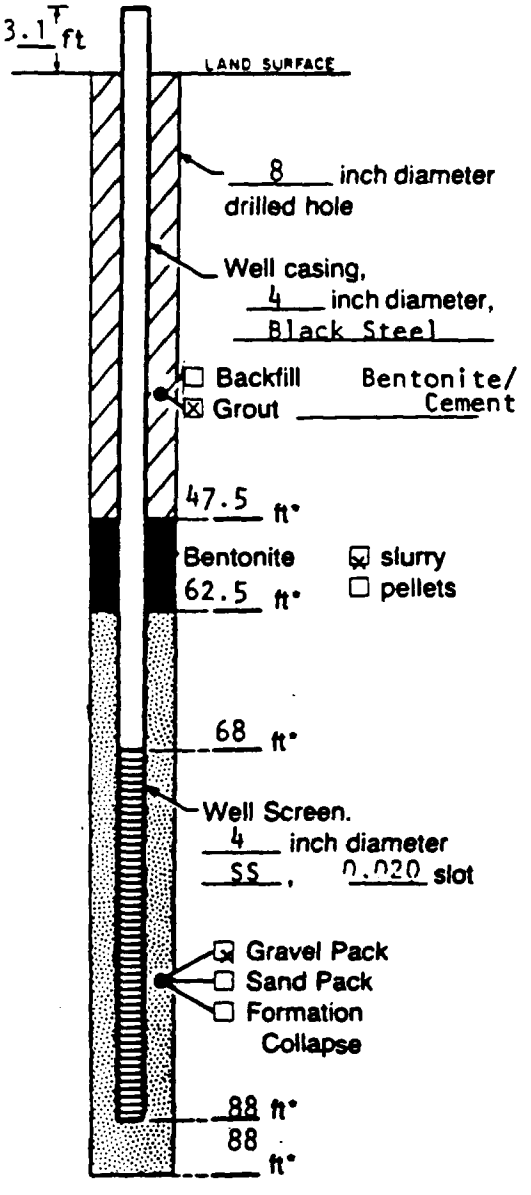


Measuring Point is Top of Well Casing Unless Otherwise Noted.

*Depth Below Land Surface

Project: Monsanto Company  Well: GM-6B
Town/City: Sauget
County: St. Clair  State: IL
Permit No.:
Land-Surface Elevation and Datum: _____ feet  ☒ surveyed
Measuring Point 416.04 Ft (MSL)  ☐ estimated
Installation Dates(s): 7/26/84
Drilling Method: Mud Rotary
Drilling Contractor: John Mathes & Assoc.
Drilling Fluid: Bentonite

Development Techniques(s) and Date(s)
Surged with compressed air.

Fluid Loss During Drilling: _____ gallons
Water Removed During Development: 1200 gallons
Static Depth to Water: _____ feet below M.P.
Pumping Depth to Water: _____ feet below M.P.
Pumping Duration: 2 hours
Yield: 10 gpm  Date: _____
Specific Capacity: _____ gpm/ft
Well Purpose: Ground-water monitoring well

Remarks:

Prepared by: D. Colton

GERAGHTY & MILLER, INC.
Ground-Water Consultants

# WELL CONSTRUCTION LOG

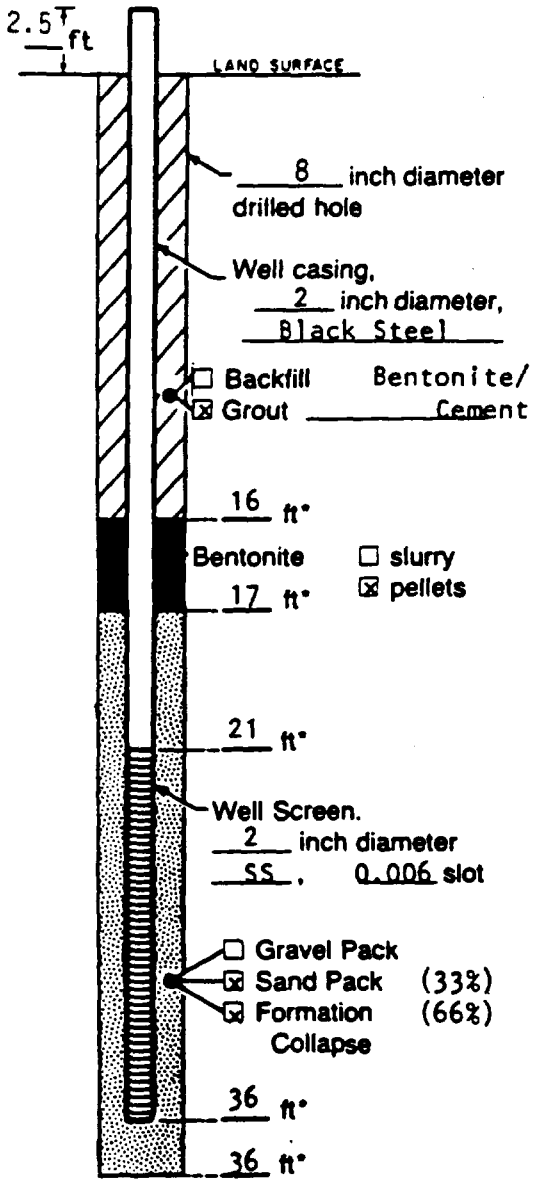


Measuring Point is Top of Well Casing Unless Otherwise Noted.

*Depth Below Land Surface

Project Monsanto Company Well GM-7
Town/City Sauget
County St. Clair State IL
Permit No.
Land-Surface Elevation
and Datum _____ feet ☒ surveyed
Measuring Point 414.95 Ft (MSL) ☐ estimated
Installation Dates(s) 11/3/83
Drilling Method Hollow Stem Auger
Drilling Contractor John Mathes & Assoc.
Drilling Fluid Water

Development Techniques(s) and Date(s)
Pumped with bladder pump; surged with compressed air.

Fluid Loss During Drilling _____ gallons
Water Removed During Development 200 gallons
Static Depth to Water 240 feet below M.P.
Pumping Depth to Water _____ feet below M.P.
Pumping Duration 4 hours
Yield 1 gpm Date _____
Specific Capacity _____ gpm/ft
Well Purpose Ground-water monitoring well

Remarks

Prepared by D. Colton

GERAGHTY & MILLER, INC.
Ground-Water Consultants

# WELL CONSTRUCTION LOG

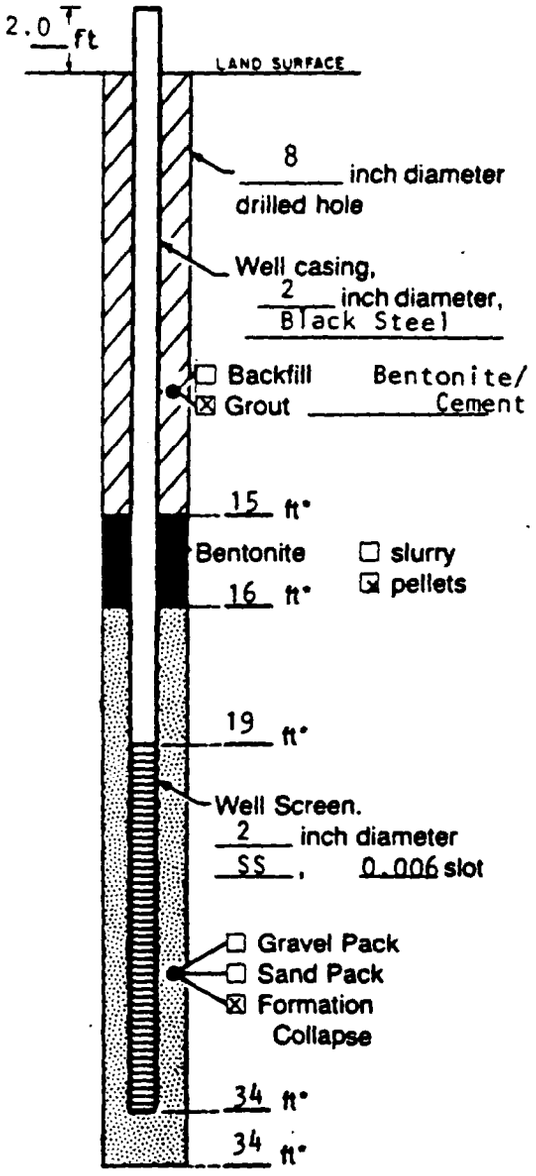


Measuring Point is Top of Well Casing Unless Otherwise Noted.

*Depth Below Land Surface

Project: Monsanto Company  Well: GM-8
Town/City: Sauget
County: St. Clair  State: IL
Permit No.:
Land-Surface Elevation and Datum: _____ feet  ☒ surveyed
Measuring Point 418.49 Ft (MSL)  ☐ estimated
Installation Dates(s): 11/2/83
Drilling Method: Hollow Stem Auger
Drilling Contractor: John Mathes & Assoc.
Drilling Fluid: Water

Development Techniques(s) and Date(s)
Pumped with bladder pump; surged with compressed air.

Fluid Loss During Drilling: 250 gallons
Water Removed During Development: 270 gallons
Static Depth to Water: _____ feet below M.P.
Pumping Depth to Water: _____ feet below M.P.
Pumping Duration: 4.5 hours
Yield: 1 gpm  Date: _____
Specific Capacity: _____ gpm/ft
Well Purpose: Ground-water monitoring well

Remarks:

Prepared by: D. Colton

GERAGHTY & MILLER, INC.
Ground-Water Consultants

# WELL CONSTRUCTION LOG

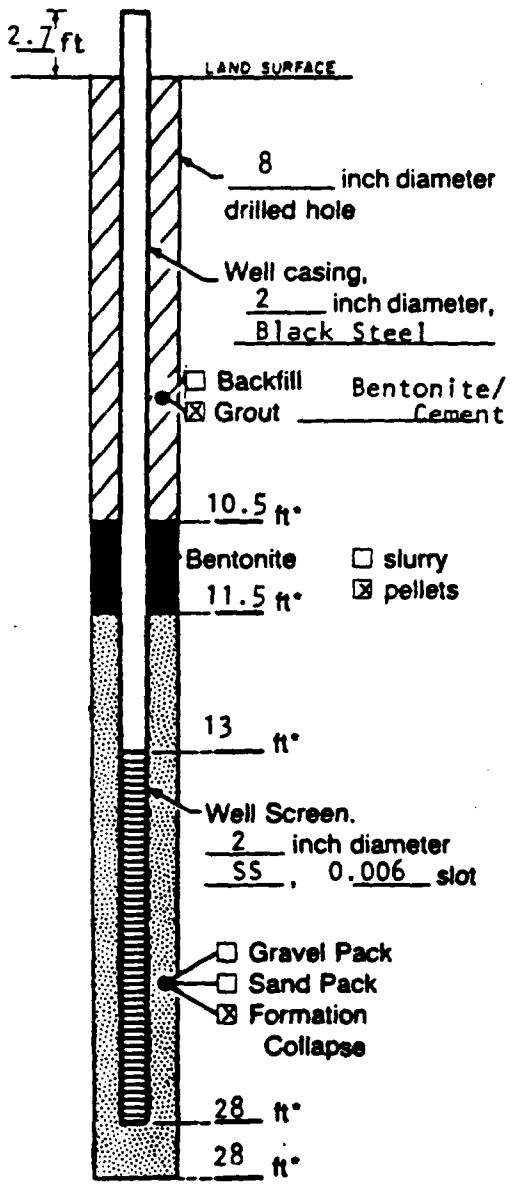


Measuring Point is Top of Well Casing Unless Otherwise Noted.

*Depth Below Land Surface

Project: Monsanto Company  Well: GM-9A
Town/City: Sauget
County: St. Clair  State: IL
Permit No.:
Land-Surface Elevation and Datum: _____ feet  ☒ surveyed
Measuring Point 414.47 Ft (MSL)  ☐ estimated
Installation Dates(s): 11/10/83
Drilling Method: Hollow Stem Auger
Drilling Contractor: John Mathes & Assoc.
Drilling Fluid: Water

Development Techniques(s) and Date(s)
Pumped with bladder pump; surged with compressed air.

Fluid Loss During Drilling: 200 gallons
Water Removed During Development: 240 gallons
Static Depth to Water: _____ feet below M.P.
Pumping Depth to Water: _____ feet below M.P.
Pumping Duration: 4 hours
Yield: 1 gpm  Date: _____
Specific Capacity: _____ gpm/ft
Well Purpose: Ground-water monitoring well

Remarks:

Prepared by: D. Colton

GERAGHTY & MILLER, INC.
Ground-Water Consultants

# WELL CONSTRUCTION LOG

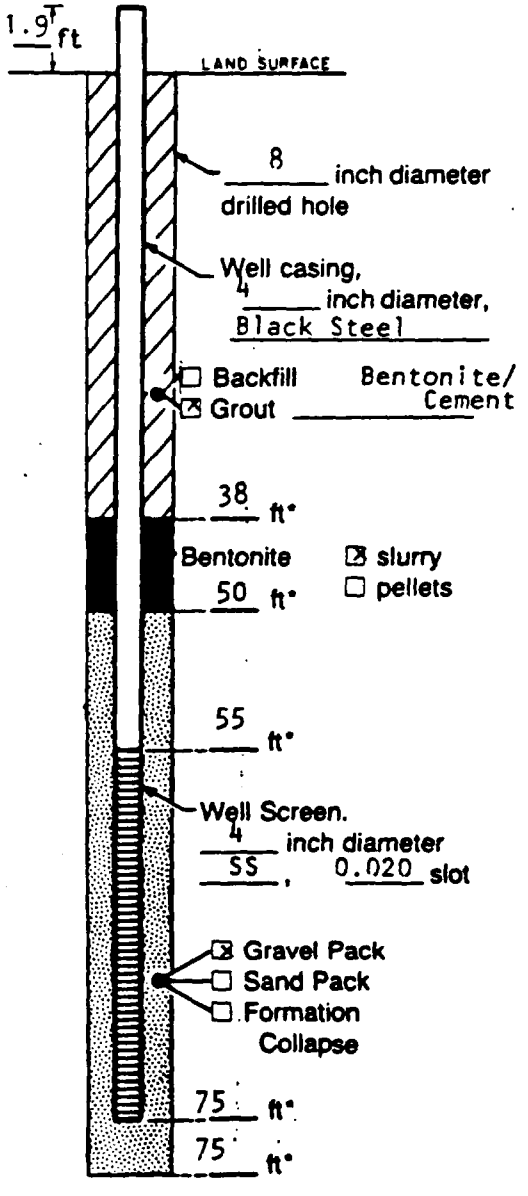


Measuring Point is Top of Well Casing Unless Otherwise Noted.

*Depth Below Land Surface

Project: Monsanto Company  Well: GM-9B
Town/City: Sauget
County: St. Clair  State: Il
Permit No.:
Land-Surface Elevation and Datum: _____ feet  ☒ surveyed  ☐ estimated
Measuring Point 412.36 Ft (MSL)
Installation Dates(s): 8/17/84
Drilling Method: Mud Rotary
Drilling Contractor: John Mathes & Assoc.
Drilling Fluid: Bentonite

Development Techniques(s) and Date(s)
Surged with compressed air.

Fluid Loss During Drilling: _____ gallons
Water Removed During Development: 1200 gallons
Static Depth to Water: _____ feet below M.P.
Pumping Depth to Water: _____ feet below M.P.
Pumping Duration: 2 hours
Yield: 10 gpm  Date: _____
Specific Capacity: _____ gpm/ft
Well Purpose: Ground-water monitoring well

Remarks:

Prepared by: D. Colton

GERAGHTY & MILLER, INC.
Ground-Water Consultants

# WELL CONSTRUCTION LOG

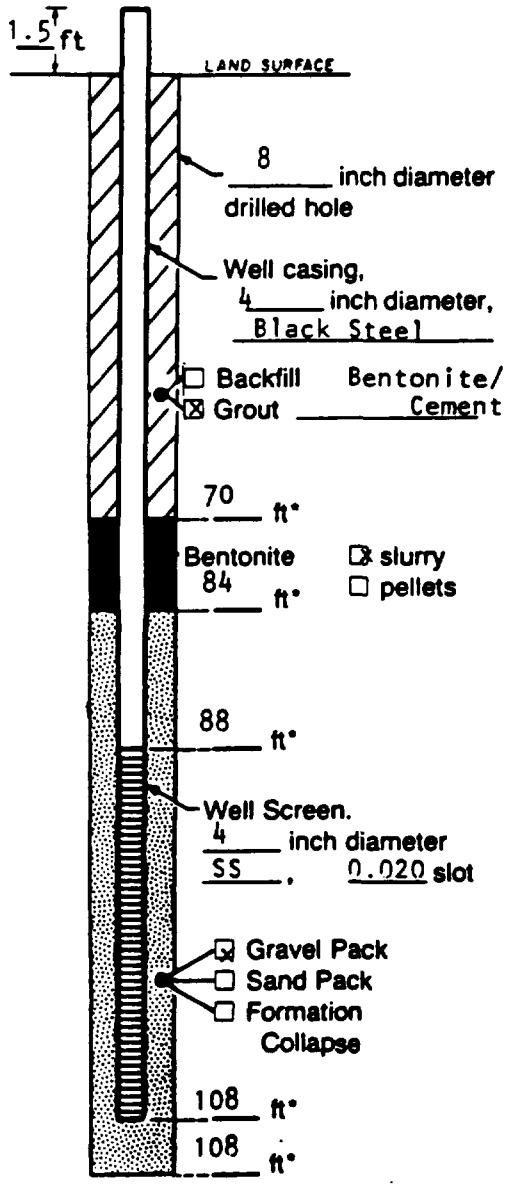


Measuring Point is Top of Well Casing Unless Otherwise Noted.

*Depth Below Land Surface

Project: Monsanto Company  Well: GM-9C
Town/City: Sauget
County: St. Clair  State: IL
Permit No.:
Land-Surface Elevation and Datum: _____ feet  ☒ surveyed
Measuring Point 416.97 Ft (MSL)  ☐ estimated
Installation Dates(s): 8/15/84
Drilling Method: Mud Rotary
Drilling Contractor: John Mathes & Assoc.
Drilling Fluid: Bentonite

Development Techniques(s) and Date(s)
Surged with compressed air.

Fluid Loss During Drilling: _____ gallons
Water Removed During Development: 1200 gallons
Static Depth to Water: _____ feet below M.P.
Pumping Depth to Water: _____ feet below M.P.
Pumping Duration: 2 hours
Yield: 10 gpm  Date: _____
Specific Capacity: _____ gpm/ft
Well Purpose: Ground-water monitoring well

Remarks:

Prepared by: D. Colton

GERAGHTY & MILLER, INC.
Ground-Water Consultants

# WELL CONSTRUCTION LOG

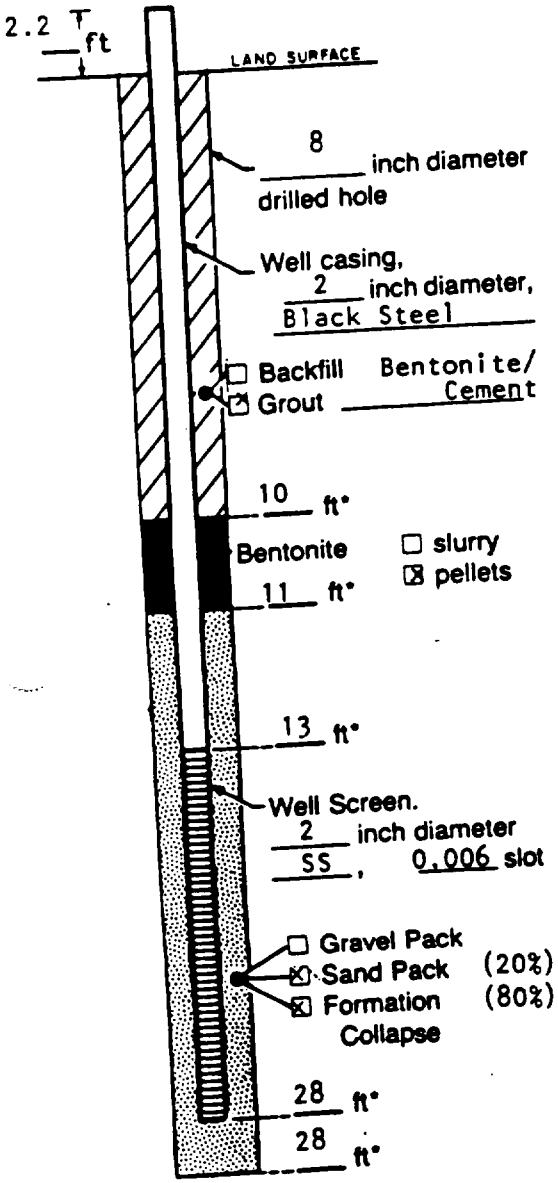


Measuring Point is Top of Well Casing Unless Otherwise Noted.

*Depth Below Land Surface

Project: Monsanto Company — Well: GM-10A
Town/City: Sauget
County: St. Clair — State: IL
Permit No.:
Land-Surface Elevation and Datum: _____ feet ☒ surveyed ☐ estimated
Measuring Point 412.97 Ft (MSL)
Installation Dates(s): 11/9/83
Drilling Method: Hollow Stem Auger
Drilling Contractor: John Mathes & Assoc.
Drilling Fluid: Water

Development Techniques(s) and Date(s)
Pumped with bladder pump; surged with compressed air.

Fluid Loss During Drilling: 200 gallons
Water Removed During Development: 240 gallons
Static Depth to Water: _____ feet below M.P.
Pumping Depth to Water: _____ feet below M.P.
Pumping Duration: 4 hours
Date: _____
Yield: 1 gpm
Specific Capacity: _____ gpm/ft
Well Purpose: Ground-water monitoring well

Remarks:

Prepared by: D. Colton

GERAGHTY & MILLER, INC.
Ground-Water Consultants

# WELL CONSTRUCTION LOG

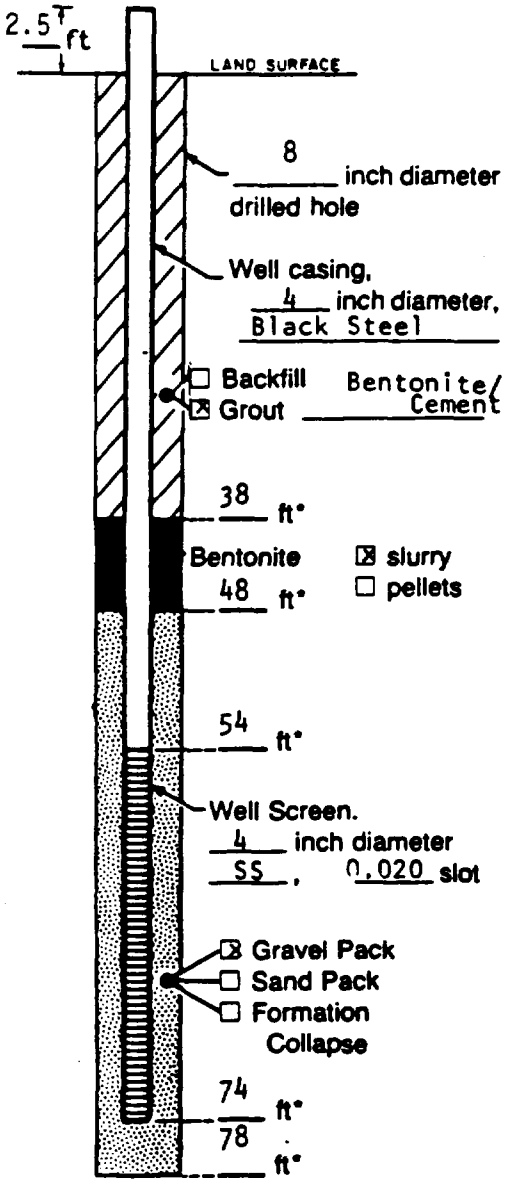


Measuring Point is Top of Well Casing Unless Otherwise Noted.

*Depth Below Land Surface

Project: Monsanto Company  Well: GM-10B
Town/City: Sauget
County: St. Clair  State: IL
Permit No.:
Land-Surface Elevation and Datum: _____ feet  ☒ surveyed  ☐ estimated
Measuring Point 413.90 Ft (MSL)
Installation Dates(s): 1/22/85
Drilling Method: Mud Rotary
Drilling Contractor: John Mathes & Assoc.
Drilling Fluid: Bentonite

Development Techniques(s) and Date(s)
Surged with compressed air.

Fluid Loss During Drilling: _____ gallons
Water Removed During Development: 1200 gallons
Static Depth to Water: _____ feet below M.P.
Pumping Depth to Water: _____ feet below M.P.
Pumping Duration: 2 hours
Yield: 10 gpm  Date: _____
Specific Capacity: _____ gpm/ft
Well Purpose: Ground-water monitoring well

Remarks:

Prepared by: D. Colton

GERAGHTY & MILLER, INC.
Ground-Water Consultants

# WELL CONSTRUCTION LOG

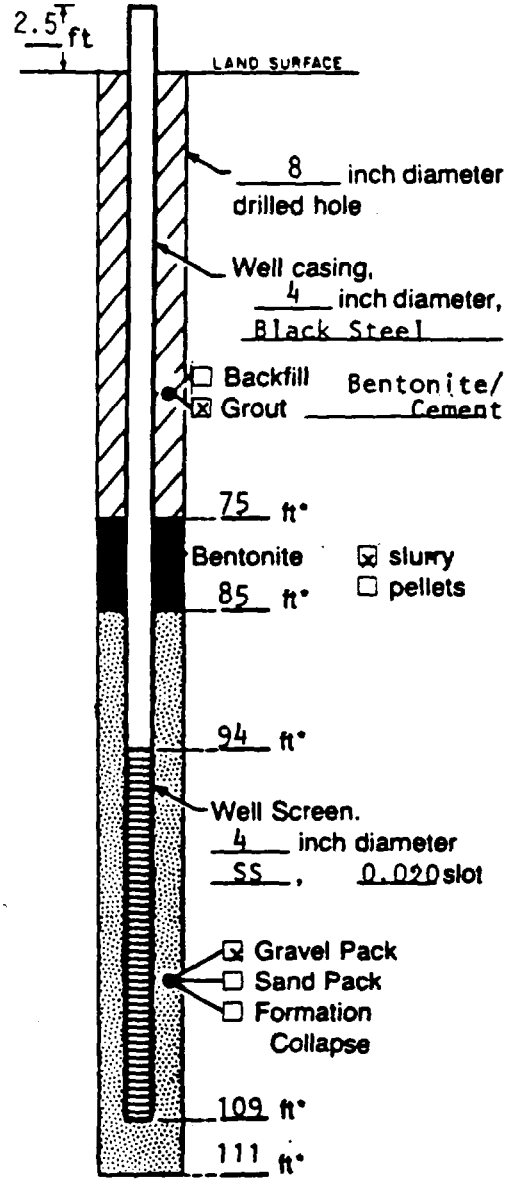


Measuring Point is Top of Well Casing Unless Otherwise Noted.

*Depth Below Land Surface

Project: Monsanto Company Well: GM-10C
Town/City: Sauget
County: St. Clair State: IL
Permit No.:
Land-Surface Elevation and Datum: _____ feet ☒ surveyed
Measuring Point 413.78 Ft (MSL) ☐ estimated
Installation Dates(s): 1/18/85
Drilling Method: Mud Rotary
Drilling Contractor: John Mathes & Assoc.
Drilling Fluid: Bentonite

Development Techniques(s) and Date(s)
Surged with compressed air.

Fluid Loss During Drilling: _____ gallons
Water Removed During Development: 1200 gallons
Static Depth to Water: _____ feet below M.P.
Pumping Depth to Water: _____ feet below M.P.
Pumping Duration: 2 hours
Yield: 10 gpm Date: _____
Specific Capacity: _____ gpm/ft
Well Purpose: Ground-water monitoring well

Remarks:

Prepared by: D. Colton

GERAGHTY & MILLER, INC.
Ground-Water Consultants

# WELL CONSTRUCTION LOG

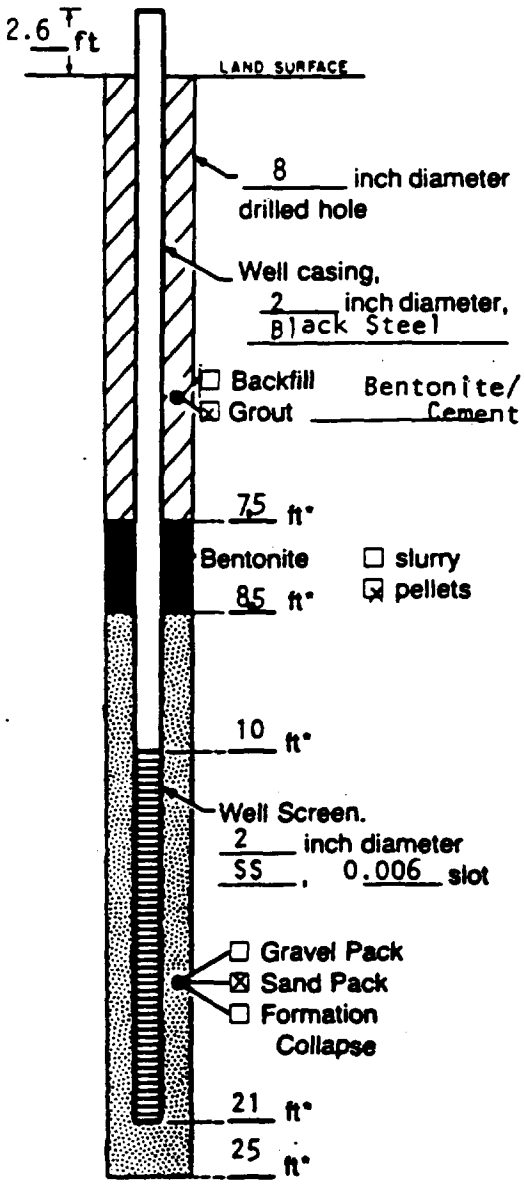


Measuring Point is Top of Well Casing Unless Otherwise Noted.

*Depth Below Land Surface

Project: Monsanto Company  Well: GM-11
Town/City: Sauget
County: St. Clair  State: IL
Permit No.:
Land-Surface Elevation and Datum: _____ feet  ☒ surveyed  ☐ estimated
Measuring Point 412.95 Ft (MSL)
Installation Dates(s): 10/31/83
Drilling Method: Hollow Stem Auger
Drilling Contractor: John Mathes & Assoc.
Drilling Fluid: Water

Development Techniques(s) and Date(s)
Pumped with bladder pump; surged with compressed air.

Fluid Loss During Drilling: 200 gallons
Water Removed During Development: 240 gallons
Static Depth to Water: _____ feet below M.P.
Pumping Depth to Water: _____ feet below M.P.
Pumping Duration: 4 hours
Yield: 1 gpm  Date: _____
Specific Capacity: _____ gpm/ft
Well Purpose: Ground-water monitoring well

Remarks:

Prepared by: D. Colton

GERAGHTY & MILLER, INC.
Ground-Water Consultants

# WELL CONSTRUCTION LOG

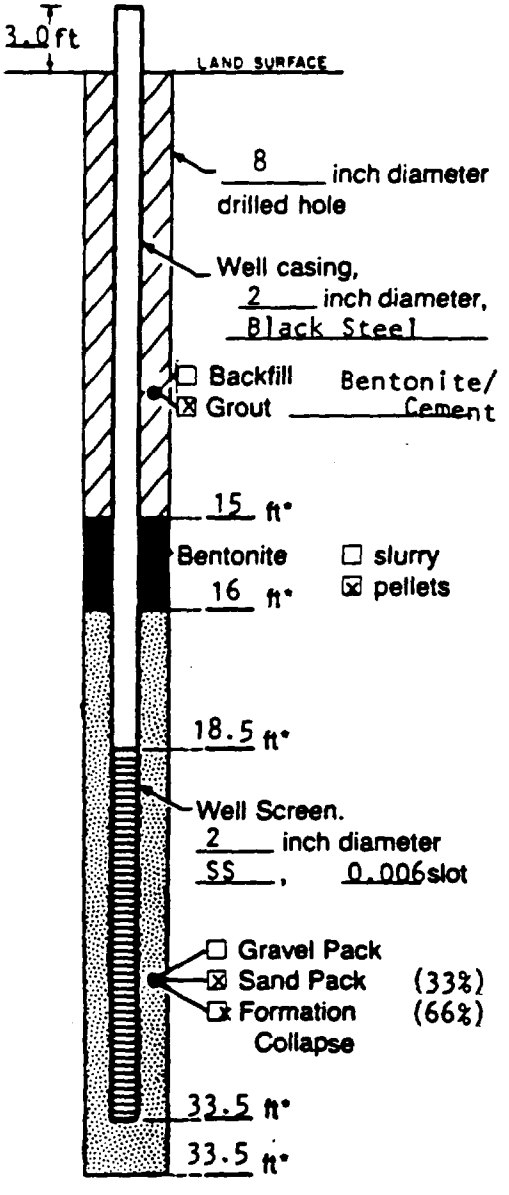


Measuring Point is Top of Well Casing Unless Otherwise Noted.

*Depth Below Land Surface

Project: Monsanto Company  Well: GM-12A
Town/City: Sauget
County: St. Clair  State: IL
Permit No.:
Land-Surface Elevation and Datum: _____ feet  ☒ surveyed
Measuring Point 416.47 Ft (MSL)  ☐ estimated
Installation Dates(s): 11/9/83
Drilling Method: Hollow Stem Auger
Drilling Contractor: John Mathes & Assoc.
Drilling Fluid: Water

Development Techniques(s) and Date(s)
Pumped with bladder pump; surged with compressed air.

Fluid Loss During Drilling: 200 gallons
Water Removed During Development: 240 gallons
Static Depth to Water: _____ feet below M.P.
Pumping Depth to Water: _____ feet below M.P.
Pumping Duration: 4 hours
Yield: 1 gpm  Date: _____
Specific Capacity: _____ gpm/ft
Well Purpose: Ground-water monitoring well

Remarks:

Prepared by: D. Colton

GERAGHTY & MILLER, INC.
Ground-Water Consultants

# WELL CONSTRUCTION LOG

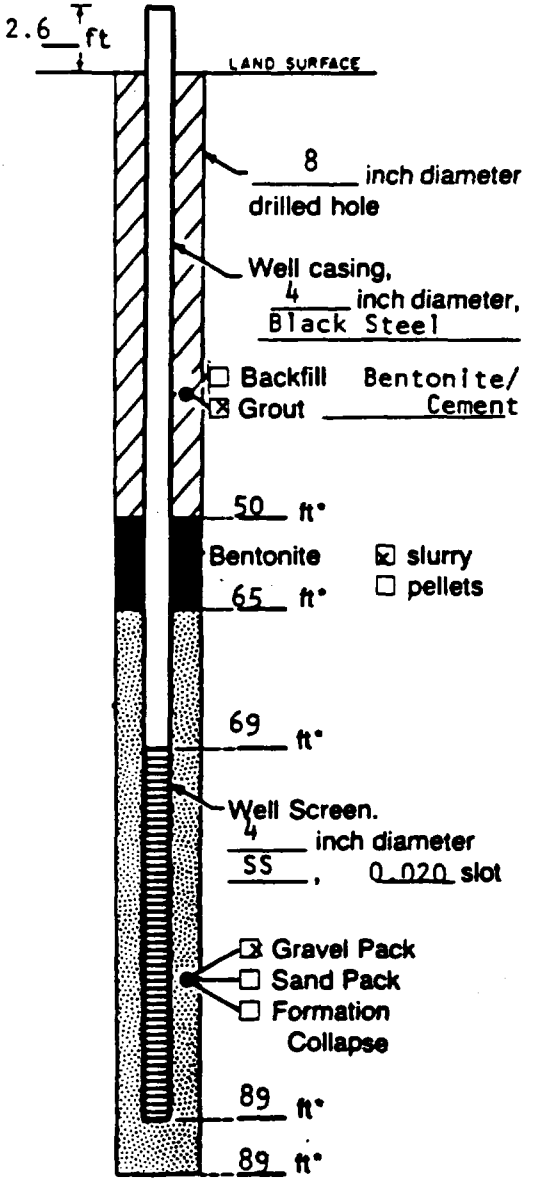


Measuring Point is Top of Well Casing Unless Otherwise Noted.

*Depth Below Land Surface

Project: Monsanto Company  Well: GM-12B
Town/City: Sauget
County: St. Clair  State: IL
Permit No.:
Land-Surface Elevation and Datum: _____ feet  ☒ surveyed
Measuring Point 416.80 Ft (MSL)  ☐ estimated
Installation Dates(s): 8/13/84
Drilling Method: Mud Rotary
Drilling Contractor: John Mathes & Assoc.
Drilling Fluid: Bentonite

Development Techniques(s) and Date(s)
Surged with compressed air.

Fluid Loss During Drilling: _____ gallons
Water Removed During Development: 1200 gallons
Static Depth to Water: _____ feet below M.P.
Pumping Depth to Water: _____ feet below M.P.
Pumping Duration: 2 hours
Yield: 10 gpm  Date: _____
Specific Capacity: _____ gpm/ft
Well Purpose: Ground-water monitoring well

Remarks:

Prepared by: D. Colton

GERAGHTY & MILLER, INC.
Ground-Water Consultants

# WELL CONSTRUCTION LOG

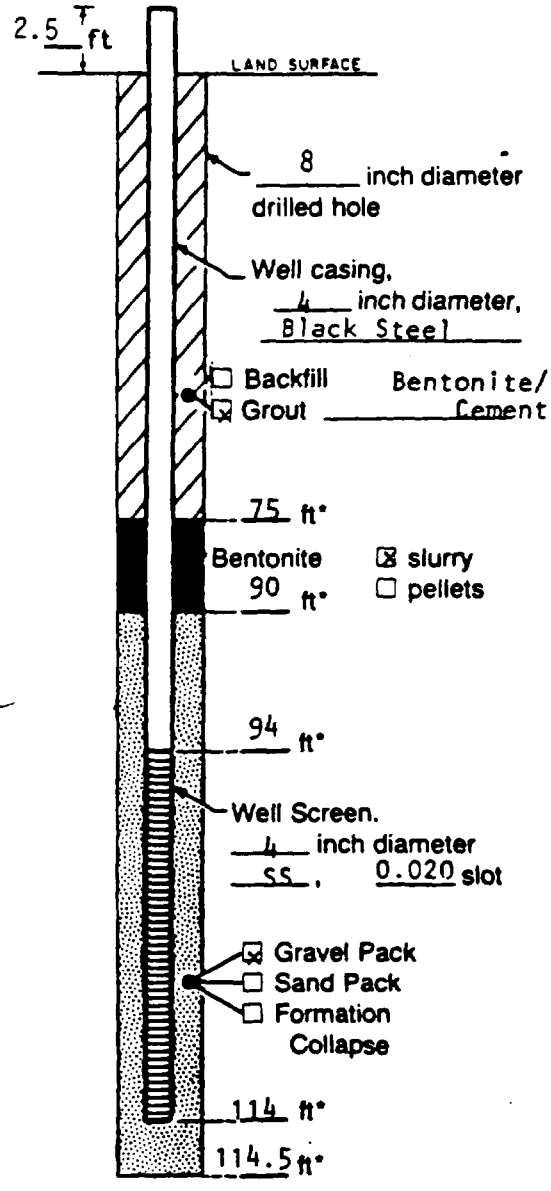


Measuring Point is Top of Well Casing Unless Otherwise Noted.

*Depth Below Land Surface

Project: Monsanto Company Sauget — Well: GM-12C
Town/City:
County: St. Clair — State: IL
Permit No.:
Land-Surface Elevation and Datum: _____ feet ☒ surveyed ☐ estimated
Measuring Point 416.79 Ft (MSL)
Installation Dates(s): 1/17/85
Drilling Method: Mud Rotary
Drilling Contractor: John Mathes & Assoc.
Drilling Fluid: Bentonite

Development Techniques(s) and Date(s)
Surged with compressed air.

Fluid Loss During Drilling: _____ gallons
Water Removed During Development: 1200 gallons
Static Depth to Water: _____ feet below M.P.
Pumping Depth to Water: _____ feet below M.P.
Pumping Duration: 2 hours
Yield: 10 gpm — Date: _____
Specific Capacity: _____ gpm/ft
Well Purpose: Ground-water monitoring well

Remarks:

Prepared by: D. Colton

GERAGHTY & MILLER, INC.
Ground-Water Consultants

# WELL CONSTRUCTION LOG

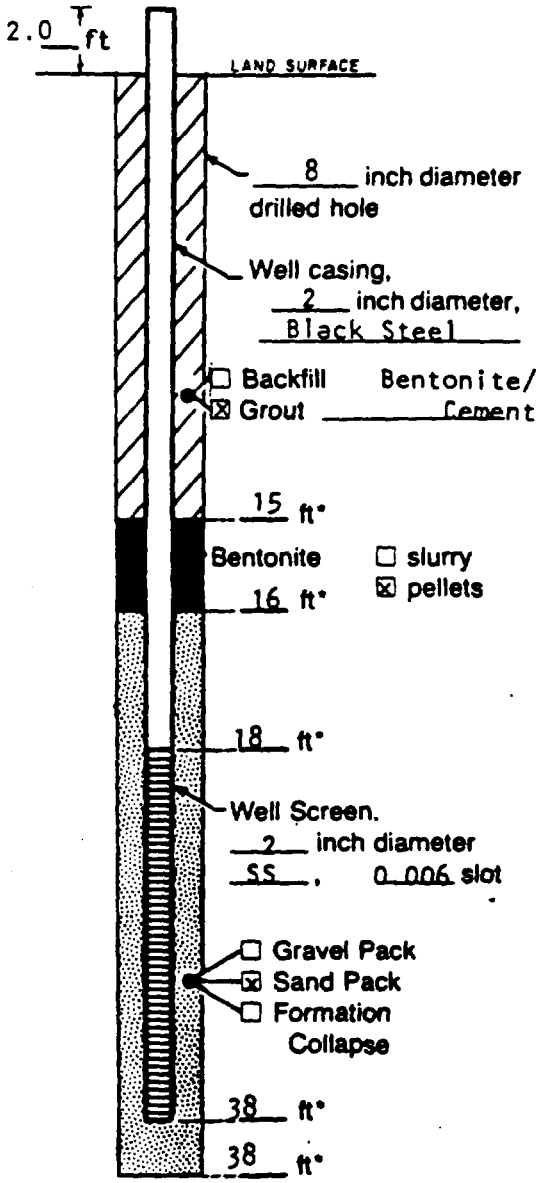


Measuring Point is Top of Well Casing Unless Otherwise Noted.

*Depth Below Land Surface

Project: Monsanto Company  Well: GM-13
Town/City: Sauget
County: St. Clair  State: IL
Permit No.:
Land-Surface Elevation and Datum: _____ feet  ☒ surveyed
Measuring Point 415.47 Ft (MSL)  ☐ estimated
Installation Dates(s): 8/15/84
Drilling Method: Hollow Stem Auger
Drilling Contractor: John Mathes & Assoc.
Drilling Fluid: Water

Development Techniques(s) and Date(s)
Surged with compressed air.

Fluid Loss During Drilling: 200 gallons
Water Removed During Development: 210 gallons
Static Depth to Water: _____ feet below M.P.
Pumping Depth to Water: _____ feet below M.P.
Pumping Duration: 3 hours
Yield: 1.5 gpm  Date: _____
Specific Capacity: _____ gpm/ft
Well Purpose: Ground-water monitoring well

Remarks:

Prepared by: D. Colton

GERAGHTY & MILLER, INC.
Ground-Water Consultants

# WELL CONSTRUCTION LOG

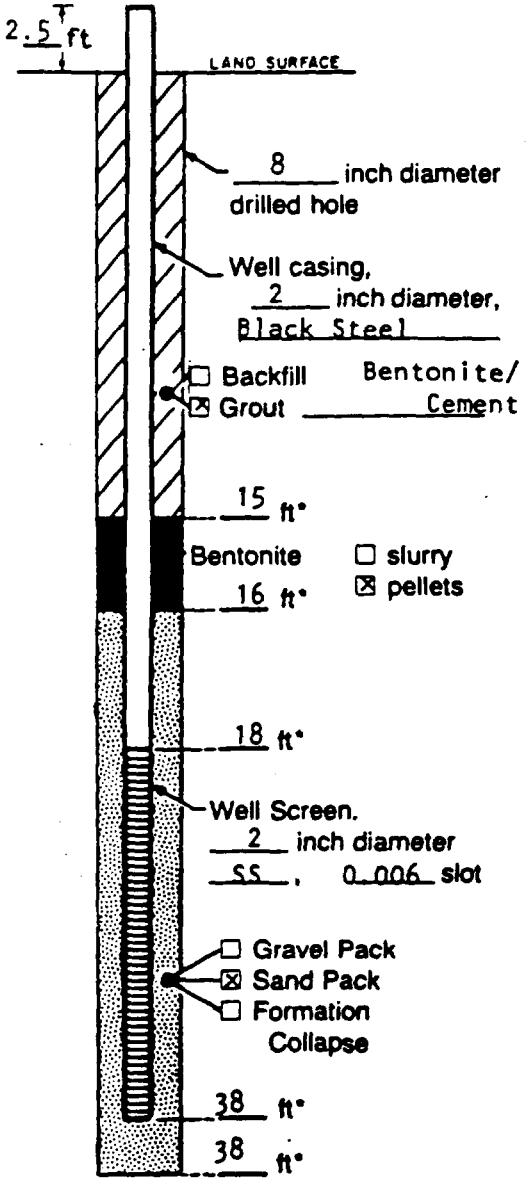


Measuring Point is Top of Well Casing Unless Otherwise Noted.

*Depth Below Land Surface

Project Monsanto Company Well GM-14
Town/City Sauget
County St. Clair State Il
Permit No.
Land-Surface Elevation
and Datum _____ feet ☒ surveyed
Measuring Point 411.26 Ft (MSL) ☐ estimated
Installation Dates(s) 8/16/84
Drilling Method Hollow Stem Auger
Drilling Contractor John Mathes & Assoc.
Drilling Fluid Water

Development Techniques(s) and Date(s)
Surged with compressed air.

Fluid Loss During Drilling 200 gallons
Water Removed During Development 210 gallons
Static Depth to Water _____ feet below M.P.
Pumping Depth to Water _____ feet below M.P.
Pumping Duration 3 hours
Yield 1.5 gpm Date _____
Specific Capacity _____ gpm/ft
Well Purpose Ground-water monitoring well

Remarks

Prepared by D. Colton

GERAGHTY & MILLER, INC.
Ground-Water Consultants

# WELL CONSTRUCTION LOG

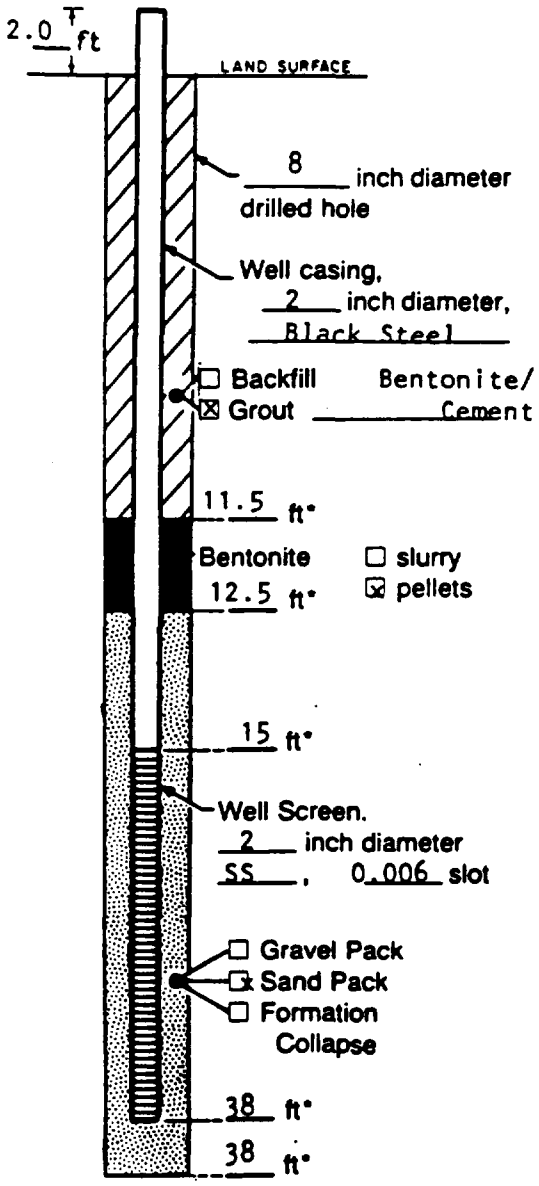


Measuring Point is Top of Well Casing Unless Otherwise Noted.

*Depth Below Land Surface

Project: Monsanto Company  Well: GM-15
Town/City: Sauget
County: St. Clair  State: IL
Permit No.:
Land-Surface Elevation and Datum: _____ feet  ☒ surveyed
measuring point 413.71 ft (msl)  ☐ estimated
Installation Date(s): 8/17/84
Drilling Method: hollow stem auger
Drilling Contractor: John Mathes & Associates, Inc.
Drilling Fluid: water

Development Techniques(s) and Date(s)
surged with compressed air

Fluid Loss During Drilling: 200 gallons
Water Removed During Development: 210 gallons
Static Depth to Water: _____ feet below M.P.
Pumping Depth to Water: _____ feet below M.P.
Pumping Duration: 3 hours
Yield: 1.5 gpm  Date: _____
Specific Capacity: _____ gpm/ft
Well Purpose: ground-water monitoring well

Remarks:

Prepared by: D. Colton

GERAGHTY & MILLER, INC.
Ground-Water Consultants

# WELL CONSTRUCTION LOG

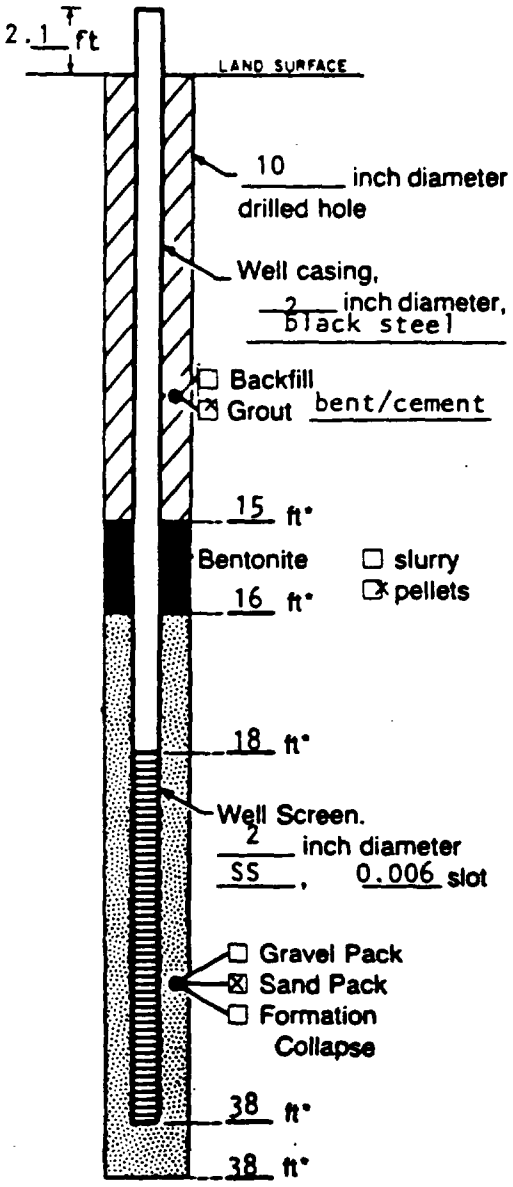


Measuring Point is Top of Well Casing Unless Otherwise Noted.

*Depth Below Land Surface

Project Monsanto Company Well GM-16A
Town/City Sauget
County St. Clair State IL
Permit No.
Land-Surface Elevation
and Datum _____ feet ☒ surveyed
Measuring point 412.03 ft (msl) ☐ estimated
Installation Dates(s) 8/14/86
Drilling Method hollow stem augers
Drilling Contractor John Mathes & Associates, Inc.
Drilling Fluid water

Development Techniques(s) and Date(s)
surged with compressed air

Fluid Loss During Drilling 300 gallons
Water Removed During Development 360 gallons
Static Depth to Water _____ feet below M.P.
Pumping Depth to Water _____ feet below M.P.
Pumping Duration 3 hours
Yield 2 gpm Date _____
Specific Capacity _____ gpm/ft
Well Purpose ground-water monitoring well

Remarks

Prepared by D. Colton

GERAGHTY & MILLER, INC.
Ground-Water Consultants

# WELL CONSTRUCTION LOG

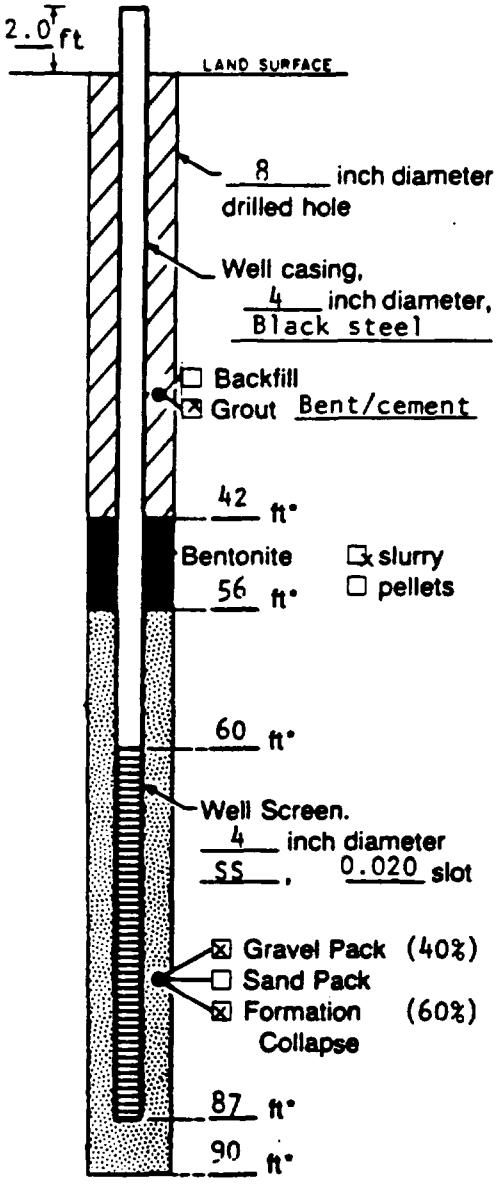


Measuring Point is Top of Well Casing Unless Otherwise Noted.

*Depth Below Land Surface

Project Monsanto Company Well GM-16B
Town/City Sauget
County St. Clair State IL
Permit No.
Land-Surface Elevation
and Datum _____ feet ☒ surveyed
measuring point 412.40 ft (msl) ☐ estimated
Installation Dates(s) 8/9/84
Drilling Method mud rotary
Drilling Contractor John Mathes & Associates, Inc.
Drilling Fluid bentonite

Development Techniques(s) and Date(s)
surged with compressed air

Fluid Loss During Drilling 1200 gallons
Water Removed During Development _____ gallons
Static Depth to Water _____ feet below M.P.
Pumping Depth to Water _____ feet below M.P.
Pumping Duration 2 hours
Yield 10 gpm Date _____
Specific Capacity _____ gpm/ft
Well Purpose ground-water monitoring well

Remarks

Prepared by D. Colton

GERAGHTY & MILLER, INC.
Ground-Water Consultants

# WELL CONSTRUCTION LOG

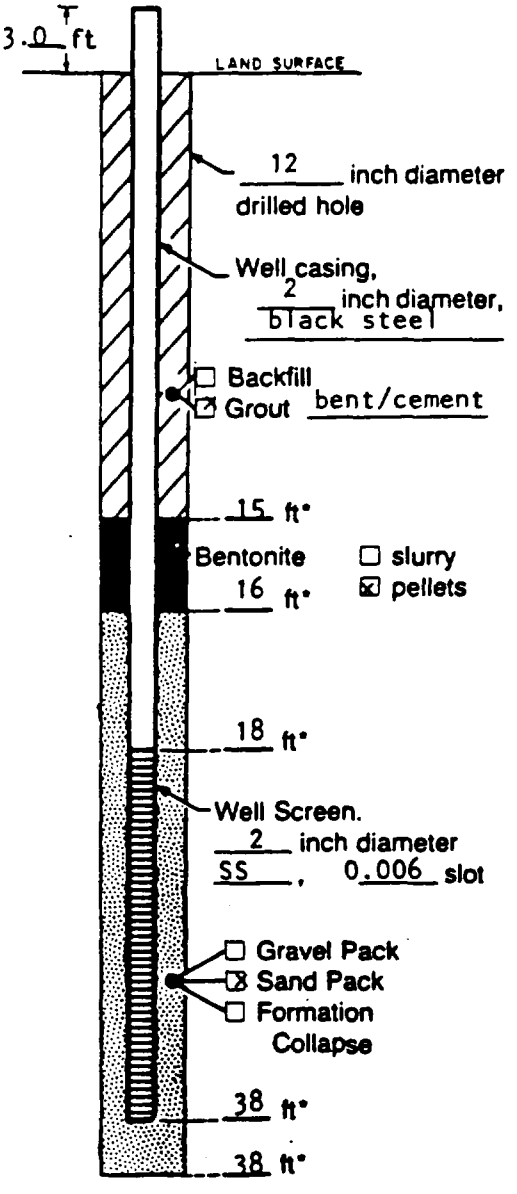


Measuring Point is Top of Well Casing Unless Otherwise Noted.

*Depth Below Land Surface

Project Monsanto Company Well GM-17A
Town/City Sauget
County St. Clair State IL
Permit No.
Land-Surface Elevation
and Datum _____ feet ☒ surveyed
measuring point 412.57 ft (msl) ☐ estimated
Installation Dates(s) 7-6-84
Drilling Method hollow stem auger
Drilling Contractor John Mathes & Associates, Inc.
Drilling Fluid water

Development Techniques(s) and Date(s)
surged with compressed air

Fluid Loss During Drilling 300 gallons
Water Removed During Development 360 gallons
Static Depth to Water _____ feet below M.P.
Pumping Depth to Water _____ feet below M.P.
Pumping Duration 3 hours
Yield 2 gpm Date _____
Specific Capacity _____ gpm/ft
Well Purpose ground-water monitoring wells

Remarks

Prepared by D. Colton

GERAGHTY & MILLER, INC.
Ground-Water Consultants

# WELL CONSTRUCTION LOG

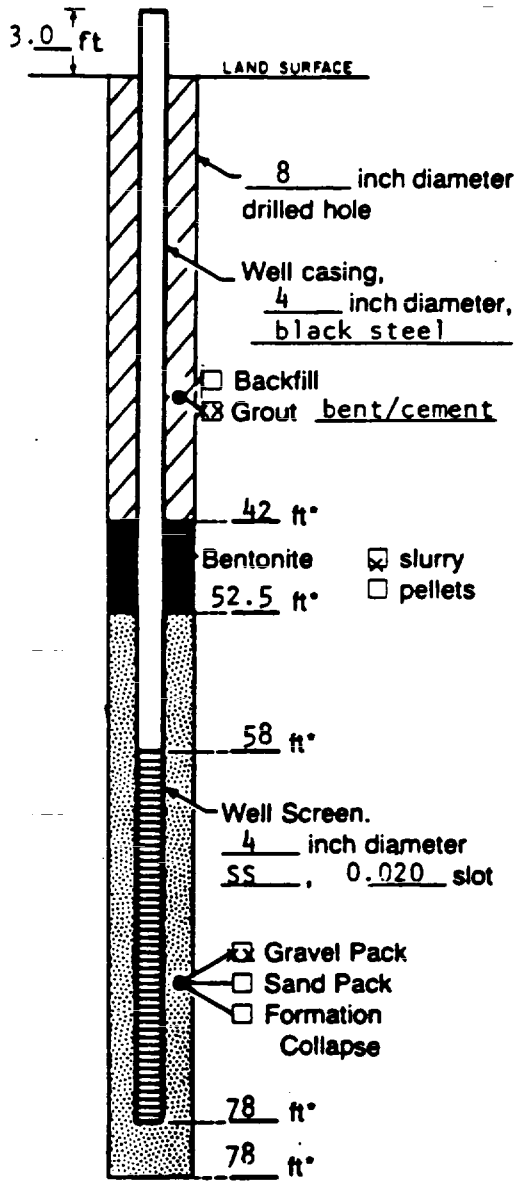


Measuring Point is Top of Well Casing Unless Otherwise Noted.

*Depth Below Land Surface

Project: Monsanto Company  Well: GM-17B
Town/City: Sauget
County: St. Clair  State: IL
Permit No.:
Land-Surface Elevation and Datum: _____ feet measuring point 412.93 ft (msl)  ☒ surveyed ☐ estimated
Installation Dates(s): 7/25/84
Drilling Method: mud rotary
Drilling Contractor: John Mathes & Associates, Inc.
Drilling Fluid: bentonite

Development Techniques(s) and Date(s): surged with compressed air

Fluid Loss During Drilling: _____ gallons
Water Removed During Development: 1200 gallons
Static Depth to Water: _____ feet below M.P.
Pumping Depth to Water: _____ feet below M.P.
Pumping Duration: 2 hours
Yield: 10 gpm  Date: _____
Specific Capacity: _____ gpm/ft
Well Purpose: ground-water monitoring well

Remarks:

Prepared by: D. Colton

GERAGHTY & MILLER, INC.
Ground-Water Consultants

# WELL CONSTRUCTION LOG

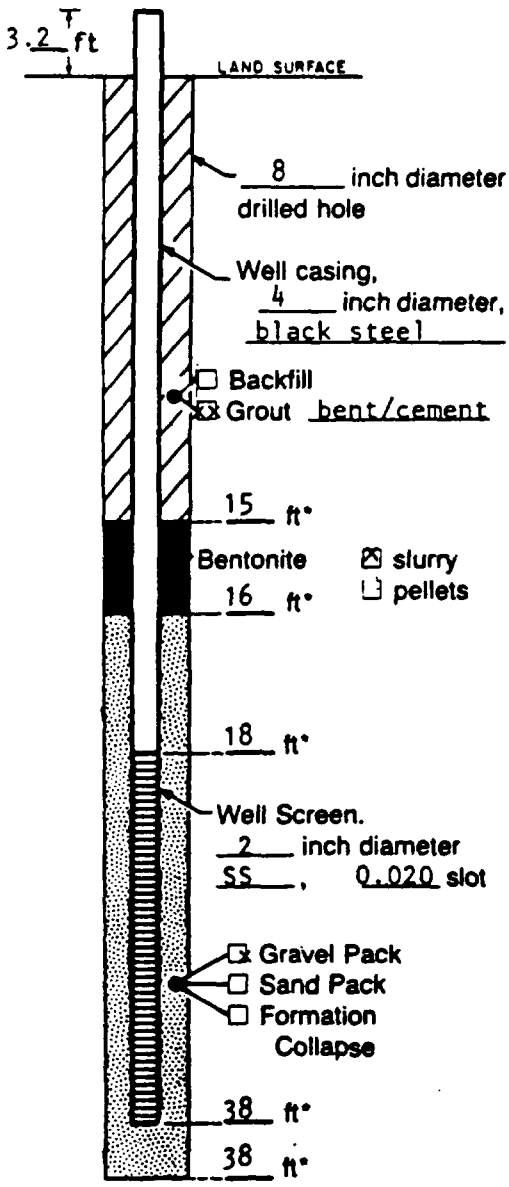


Measuring Point is Top of Well Casing Unless Otherwise Noted.

*Depth Below Land Surface

Project Monsanto Company Well GM-17C
Town/City Sauget
County St. Clair State Illinois
Permit No.
Land-Surface Elevation
and Datum _____ feet ☒ surveyed
measuring point 412.42 ft (msl) ☐ estimated
Installation Dates(s) 7/24/84
Drilling Method mud rotary
Drilling Contractor John Mathes & Associates, Inc.
Drilling Fluid Bentonite

Development Techniques(s) and Date(s)
surged with compressed air

Fluid Loss During Drilling _____ gallons
Water Removed During Development 1200 gallons
Static Depth to Water _____ feet below M.P.
Pumping Depth to Water _____ feet below M.P.
Pumping Duration 2 hours
Yield 10 gpm Date _____
Specific Capacity _____ gpm/ft
Well Purpose ground-water monitoring well

Remarks

Prepared by D. Colton

GERAGHTY & MILLER, INC.
Ground-Water Consultants

# WELL CONSTRUCTION LOG

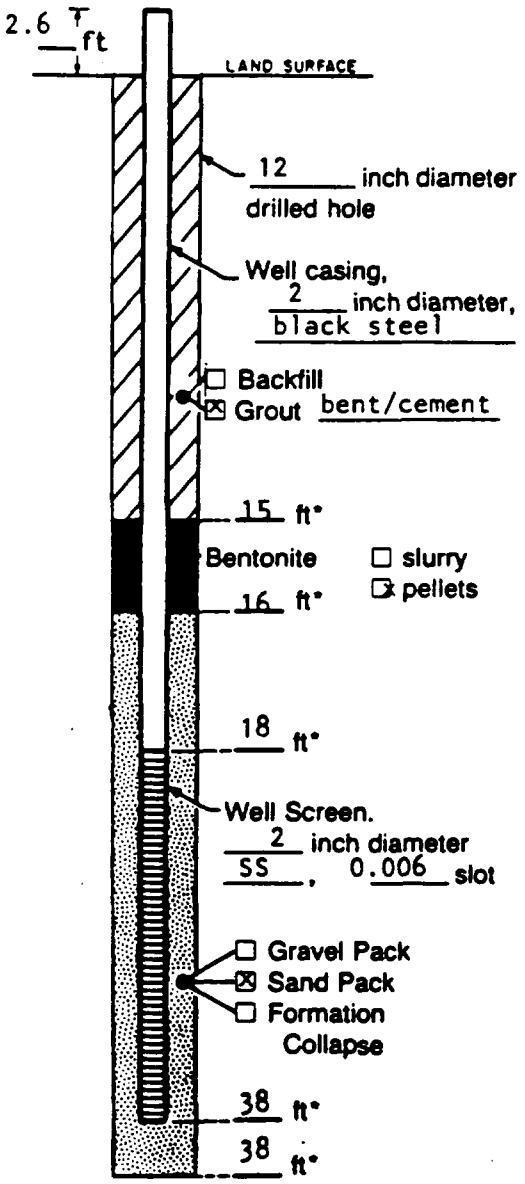


Measuring Point is Top of Well Casing Unless Otherwise Noted.

*Depth Below Land Surface

Project Monsanto Company Well GM-18A
Town/City Saguet
County St. Clair State IL
Permit No.
Land-Surface Elevation
and Datum _____ feet ☒ surveyed
measuring point 414.23 ft (msl) ☐ estimated
Installation Dates(s) 7/5/84
Drilling Method hollow stem auger
Drilling Contractor John Mathes & Associates Inc.
Drilling Fluid water

Development Techniques(s) and Date(s)
surged with compressed air

Fluid Loss During Drilling 300 gallons
Water Removed During Development 360 gallons
Static Depth to Water _____ feet below M.P.
Pumping Depth to Water _____ feet below M.P.
Pumping Duration 3 hours
Yield 2 gpm Date _____
Specific Capacity _____ gpm/ft
Well Purpose ground-water monitoring wells

Remarks

Prepared by D. Colton

GERAGHTY & MILLER, INC.
Ground-Water Consultants

# WELL CONSTRUCTION LOG

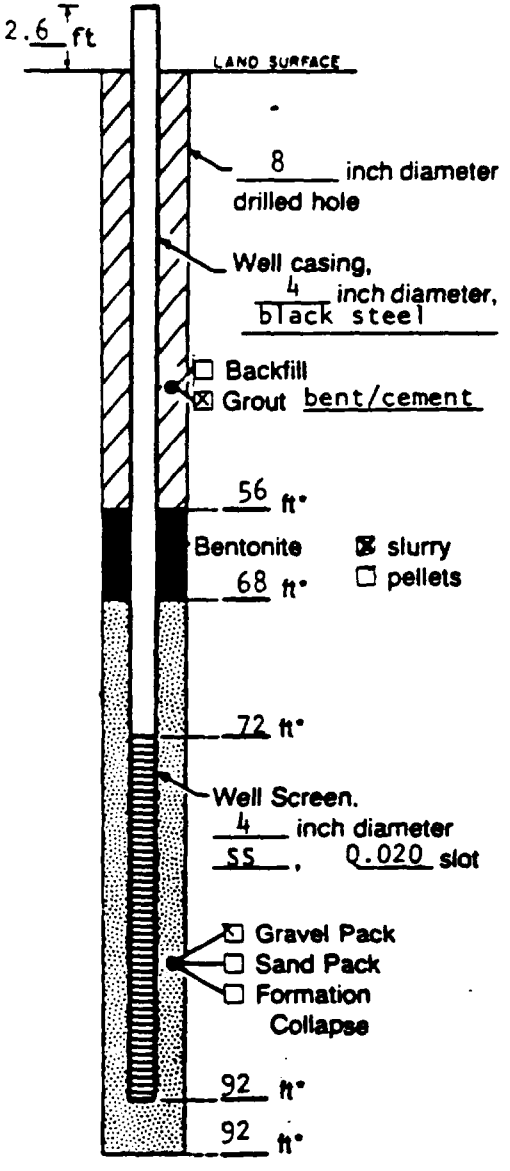


Measuring Point is Top of Well Casing Unless Otherwise Noted.

*Depth Below Land Surface

Project Monsanto Company Well GM-18B
Town/City Sauget
County St. Clair State IL
Permit No.
Land-Surface Elevation and Datum _____ feet ☒ surveyed
measuring point 414.02 ft (msl) ☐ estimated
Installation Date(s) 7/12/84
Drilling Method mud rotary
Drilling Contractor John Mathes & Associates, Inc.
Drilling Fluid bentonite

Development Techniques(s) and Date(s)
surged with compressed air

Fluid Loss During Drilling _____ gallons
Water Removed During Development 1200 gallons
Static Depth to Water _____ feet below M.P.
Pumping Depth to Water _____ feet below M.P.
Pumping Duration 2 hours
Yield 10 gpm Date _____
Specific Capacity _____ gpm/ft
Well Purpose ground-water monitoring well

Remarks

Prepared by D. Colton

GERAGHTY & MILLER, INC.
Ground-Water Consultants

# WELL CONSTRUCTION LOG

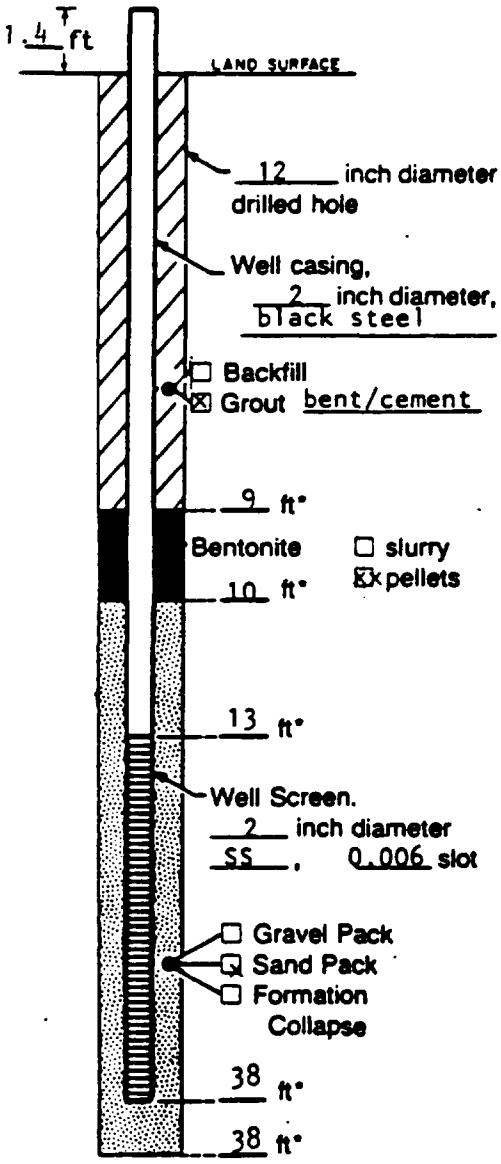


Measuring Point is Top of Well Casing Unless Otherwise Noted.

*Depth Below Land Surface

Project Monsanto Company Well GM-25A

Town/City Sauget

County St. Clair State IL

Permit No.

Land-Surface Elevation and Datum _____ feet measuring point 414.20 ft (msl) ☒ surveyed ☐ estimated

Installation Dates(s) 8/14/84

Drilling Method hollow stem auger

Drilling Contractor John Mathes & Associates, Inc.

Drilling Fluid water

Development Techniques(s) and Date(s)
surged with compressed air

Fluid Loss During Drilling 300 gallons

Water Removed During Development 360 gallons

Static Depth to Water _____ feet below M.P.

Pumping Depth to Water _____ feet below M.P.

Pumping Duration 3 hours

Yield 2 gpm Date _____

Specific Capacity _____ gpm/ft

Well Purpose ground-water monitoring well

Remarks

Prepared by D. Colton

GERAGHTY & MILLER, INC.
Ground-Water Consultants

# WELL CONSTRUCTION LOG

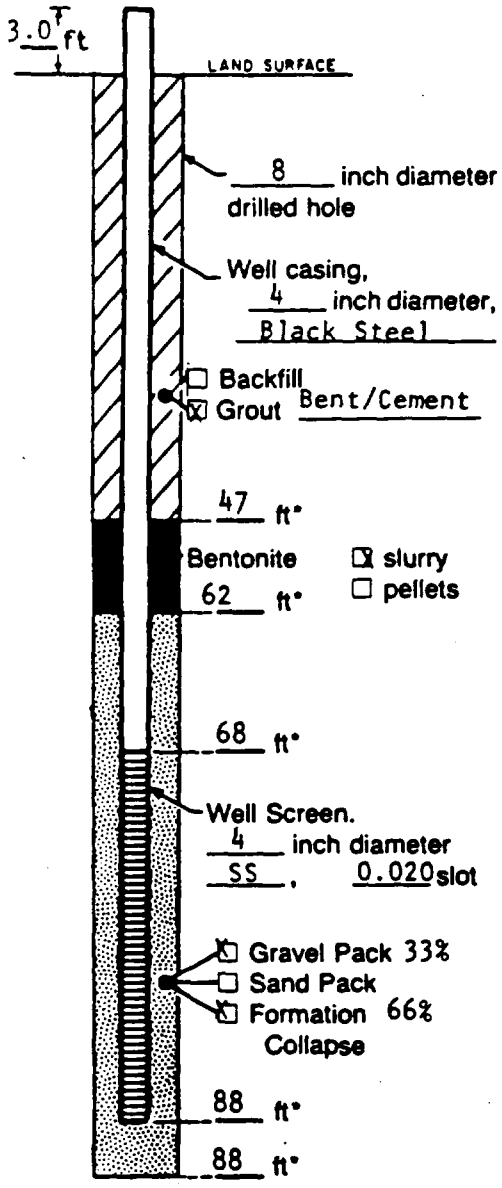


Measuring Point is Top of Well Casing Unless Otherwise Noted.

*Depth Below Land Surface

Project Monsanto Company Well GM-25B

Town/City Sauget

County St. Clair State Ill

Permit No. _____

Land-Surface Elevation and Datum _____ feet ☒ surveyed

Measuring Point 415.46 ft (MSL) ☐ estimated

Installation Dates(s) 7/27/84

Drilling Method Mud Rotary

Drilling Contractor John Mathes & Assoc., Inc.

Drilling Fluid Bentonite

Development Techniques(s) and Date(s)
Surged with Compressed Air

Fluid Loss During Drilling _____ gallons

Water Removed During Development 1200 gallons

Static Depth to Water _____ feet below M.P.

Pumping Depth to Water _____ feet below M.P.

Pumping Duration 2 hours

Yield 10 gpm Date _____

Specific Capacity _____ gpm/ft

Well Purpose Ground-water Monitoring Well

Remarks _____

Prepared by D. Colton

GERAGHTY & MILLER, INC.
Ground-Water Consultants

# WELL CONSTRUCTION LOG

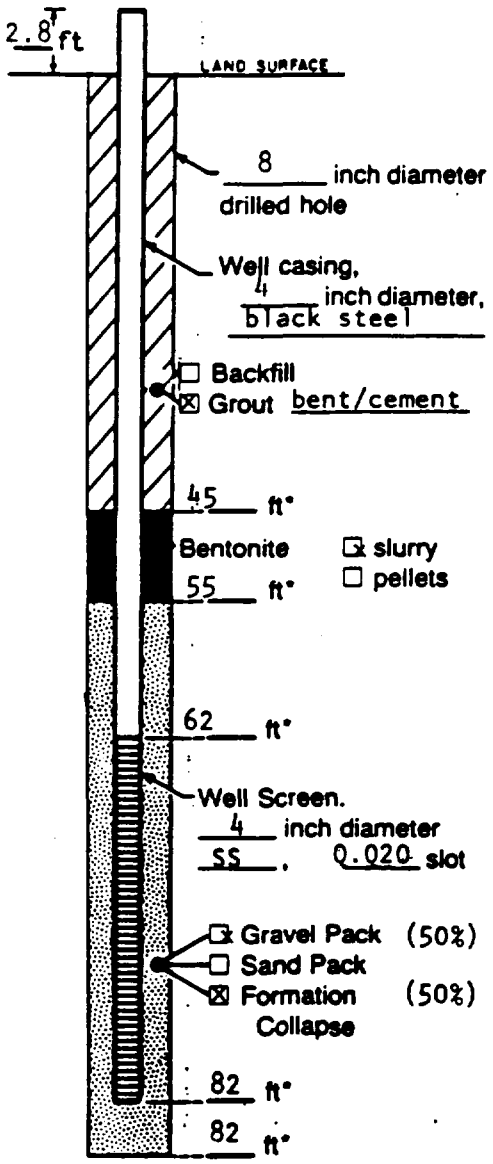


Measuring Point is Top of Well Casing Unless Otherwise Noted.

*Depth Below Land Surface

Project Monsanto Company Well GM-27B
Town/City Sauget
County St. Clair State IL
Permit No.
Land-Surface Elevation
and Datum _____ feet ☒ surveyed
Measuring Point 426.04 Ft (MSL) ☐ estimated
Installation Dates(s) 8/6/84
Drilling Method Mud Rotary
Drilling Contractor John Mathes & Associates, Inc.
Drilling Fluid Bentonite

Development Techniques(s) and Date(s)
surged with compressed air

Fluid Loss During Drilling _____ gallons
Water Removed During Development 1200 gallons
Static Depth to Water _____ feet below M.P.
Pumping Depth to Water _____ feet below M.P.
Pumping Duration 2 hours
Yield 10 gpm Date _____
Specific Capacity _____ gpm/ft
Well Purpose ground-water monitoring well

Remarks

Prepared by D. Colton

GERAGHTY & MILLER, INC.
Ground-Water Consultants

# WELL CONSTRUCTION LOG

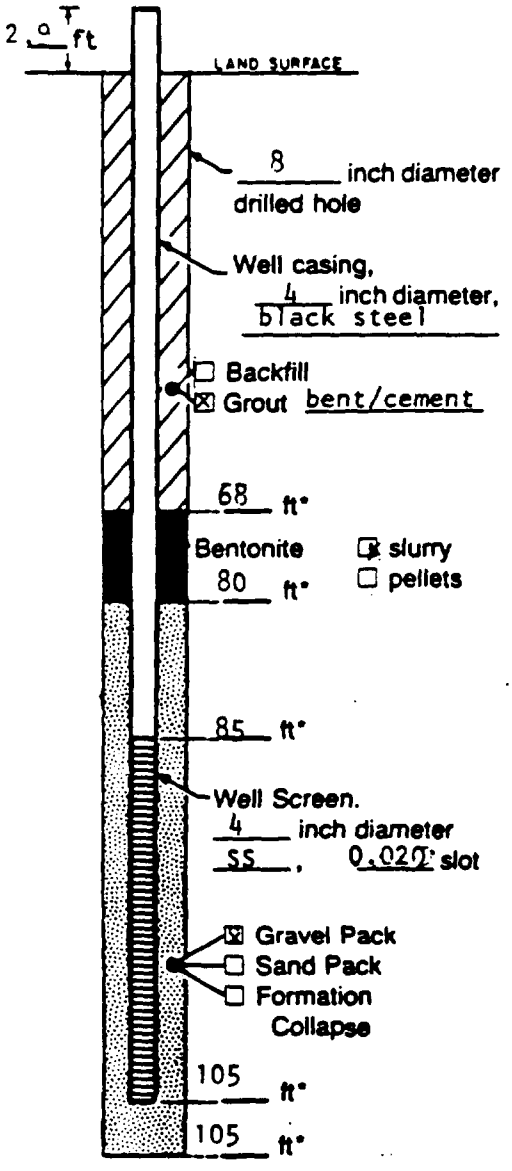


Measuring Point is Top of Well Casing Unless Otherwise Noted.

*Depth Below Land Surface

Project Monsanto Company Well GM-27C
Town/City Sauget
County St. Clair State IL
Permit No.
Land-Surface Elevation
and Datum _____ feet ☒ surveyed
Measuring Point 426.76 Ft (MSL) ☐ estimated
Installation Dates(s) 8/3/84
Drilling Method Mud Rotary
Drilling Contractor John Mathes & Associates, Inc.
Drilling Fluid Bentonite

Development Techniques(s) and Date(s)
surged with compressed air

Fluid Loss During Drilling _____ gallons
Water Removed During Development 1200 gallons
Static Depth to Water _____ feet below M.P.
Pumping Depth to Water _____ feet below M.P.
Pumping Duration 2 hours
Yield 10 gpm Date _____
Specific Capacity _____ gpm/ft
Well Purpose ground-water monitoring well

Remarks

Prepared by D. Colton

GERAGHTY & MILLER, INC.
Ground-Water Consultants

# WELL CONSTRUCTION LOG

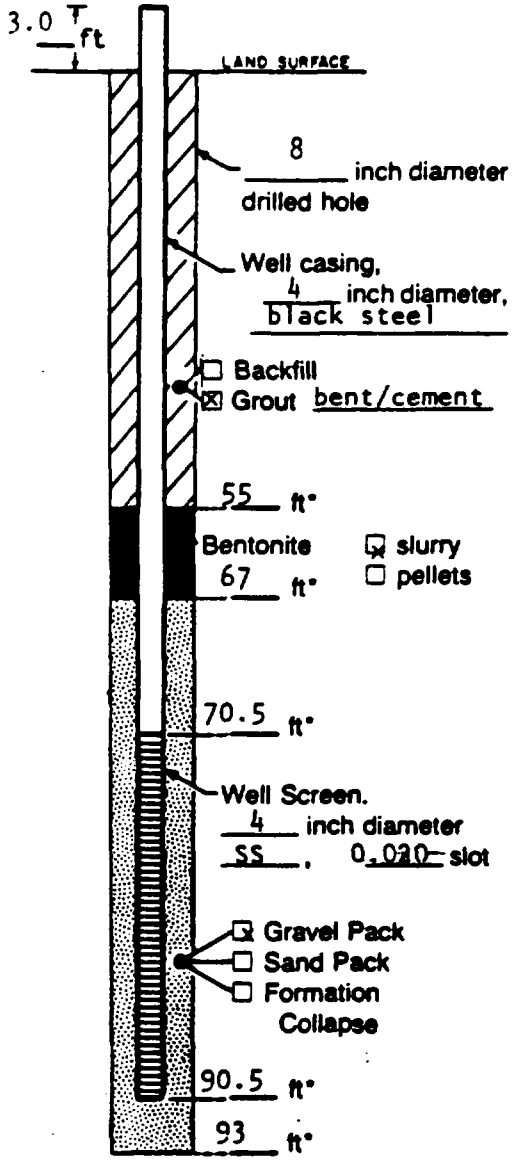


Measuring Point is Top of Well Casing Unless Otherwise Noted.

*Depth Below Land Surface

Project Monsanto Company Well GM-28B
Town/City Sauget
County St. Clair State IL
Permit No.
Land-Surface Elevation
and Datum _____ feet ☒ surveyed
Measuring Point 423.88 Ft (MSL) ☐ estimated
Installation Dates(s) 7/3/84
Drilling Method Mud Rotary
Drilling Contractor John Mathes & Associates, Inc.
Drilling Fluid Bentonite

Development Techniques(s) and Date(s)
surged with compressed air

Fluid Loss During Drilling _____ gallons
Water Removed During Development 1200 gallons
Static Depth to Water _____ feet below M.P.
Pumping Depth to Water _____ feet below M.P.
Pumping Duration 2 hours
Yield 10 gpm Date _____
Specific Capacity _____ gpm/ft
Well Purpose ground-water monitoring well

Remarks

Prepared by D. Colton

GERAGHTY & MILLER, INC.
Ground-Water Consultants

# WELL CONSTRUCTION LOG

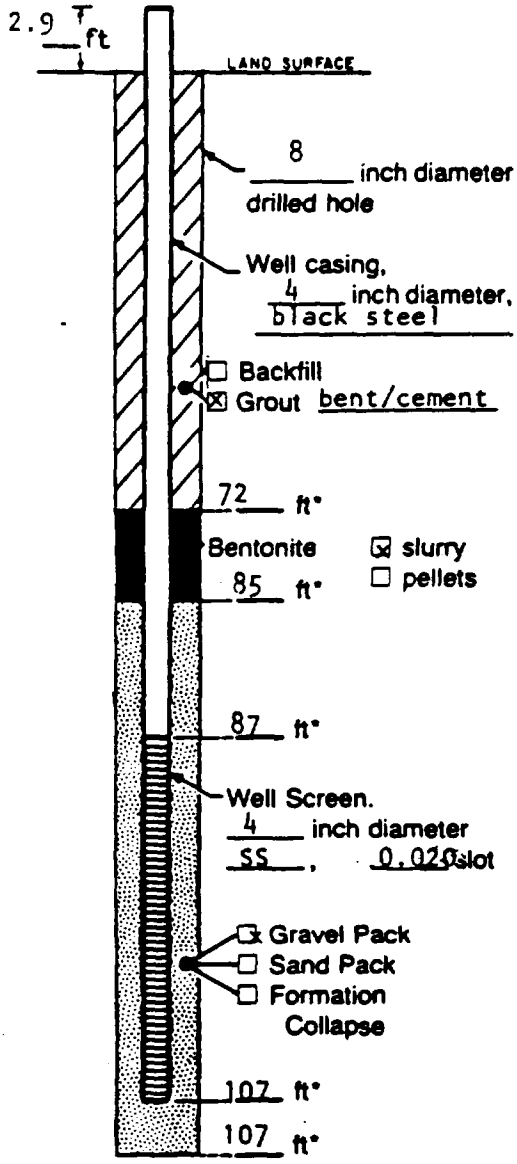


Measuring Point is Top of Well Casing Unless Otherwise Noted.

*Depth Below Land Surface

Project Monsanto Company Well GM-28C
Town/City Sauget
County St. Clair State IL
Permit No.
Land-Surface Elevation and Datum _____ feet ☒ surveyed
Measuring Point 412.78 Ft (MSL) ☐ estimated
Installation Dates(s) 7/5/84
Drilling Method Mud Rotary
Drilling Contractor John Mathes & Associates, Inc.
Drilling Fluid Bentonite

Development Techniques(s) and Date(s)
surged with compressed air

Fluid Loss During Drilling _____ gallons
Water Removed During Development 1200 gallons
Static Depth to Water _____ feet below M.P.
Pumping Depth to Water _____ feet below M.P.
Pumping Duration 2 hours
Yield 10 gpm Date _____
Specific Capacity _____ gpm/ft
Well Purpose ground-water monitoring well

Remarks

Prepared by D. Colton

GERAGHTY & MILLER, INC.
Ground-Water Consultants

# WELL CONSTRUCTION LOG

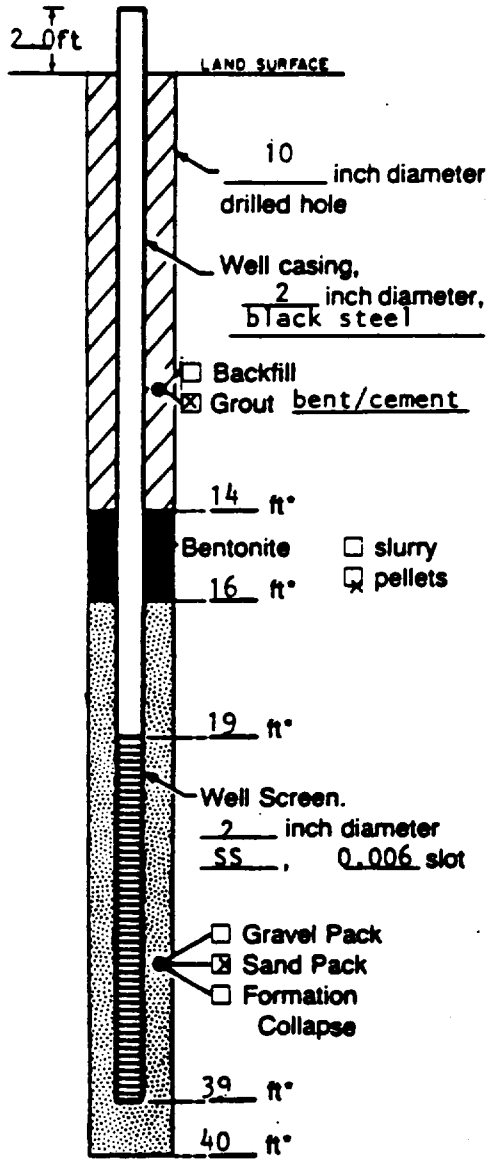


Measuring Point is Top of Well Casing Unless Otherwise Noted.

*Depth Below Land Surface

Project Monsanto Company Well GM-31A
Town/City Sauget
County St. Clair State IL
Permit No.
Land-Surface Elevation
and Datum _____ feet ☒ surveyed
Measuring Point 418.63 ☐ estimated
Installation Dates(s) 11/26/84
Drilling Method Hollow stem augers
Drilling Contractor John Mathes & Associates, Inc.
Drilling Fluid Water

Development Techniques(s) and Date(s)
surged with compressed air

Fluid Loss During Drilling 120 gallons
Water Removed During Development 120 gallons
Static Depth to Water _____ feet below M.P.
Pumping Depth to Water _____ feet below M.P.
Pumping Duration 2 hours
Yield 1 gpm Date _____
Specific Capacity _____ gpm/ft
Well Purpose ground-water monitoring well

Remarks

Prepared by D. Colton

GERAGHTY & MILLER, INC.
Ground-Water Consultants

# WELL CONSTRUCTION LOG

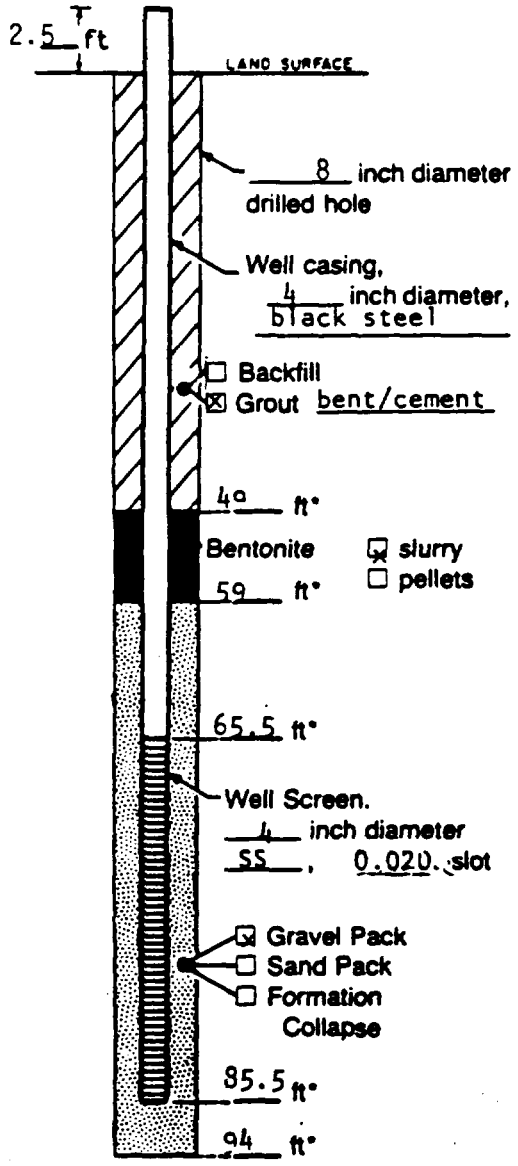


Measuring Point is Top of Well Casing Unless Otherwise Noted.

*Depth Below Land Surface

Project Monsanto Company Well GM-31B
Town/City Sauget
County St. Clair State IL
Permit No.
Land-Surface Elevation
and Datum _____ feet ☒ surveyed
Measuring Point 418.92 Ft (MSL) ☐ estimated
Installation Dates(s) 1/9/85
Drilling Method Mud Rotary
Drilling Contractor John Mathes & Associates, Inc.
Drilling Fluid Bentonite

Development Techniques(s) and Date(s)
surged with compressed air

Fluid Loss During Drilling _____ gallons
Water Removed During Development 1200 gallons
Static Depth to Water _____ feet below M.P.
Pumping Depth to Water _____ feet below M.P.
Pumping Duration 2 hours
Yield 10 gpm Date _____
Specific Capacity _____ gpm/ft
Well Purpose ground-water monitoring well

Remarks

Prepared by D. Colton

GERAGHTY & MILLER, INC.
Ground-Water Consultants

# WELL CONSTRUCTION LOG

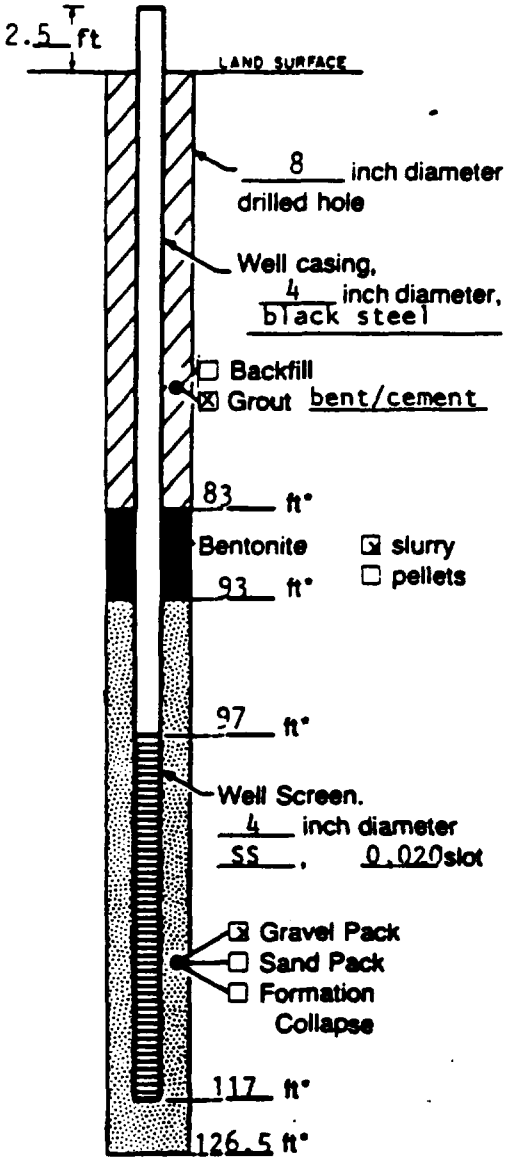


Measuring Point is Top of Well Casing Unless Otherwise Noted.

*Depth Below Land Surface

Project Monsanto Company Well GM-31C
Town/City Sauget
County St. Clair State IL
Permit No.
Land-Surface Elevation
and Datum _____ feet ☒ surveyed
Measuring Point 419.29 Ft (MSL) ☐ estimated
Installation Dates(s) 1/8/85
Drilling Method Mud Rotary
Drilling Contractor John Mathes & Associates, Inc.
Drilling Fluid Bentonite

Development Techniques(s) and Date(s)
surged with compressed air

Fluid Loss During Drilling _____ gallons
Water Removed During Development 1200 gallons
Static Depth to Water _____ feet below M.P.
Pumping Depth to Water _____ feet below M.P.
Pumping Duration 2 hours
Yield 10 gpm Date _____
Specific Capacity _____ gpm/ft
Well Purpose ground-water monitoring well

Remarks

Prepared by D. Colton

GERAGHTY & MILLER, INC.
Ground-Water Consultants

# WELL CONSTRUCTION LOG

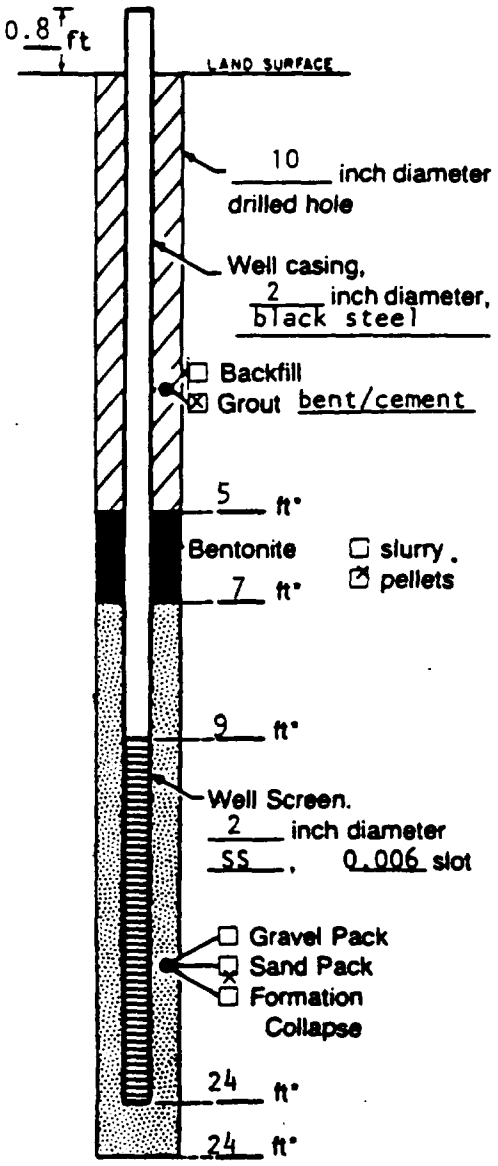


Measuring Point is Top of Well Casing Unless Otherwise Noted.

*Depth Below Land Surface

Project Monsanto Company Well GM-32
Town/City Sauget
County St. Clair State IL
Permit No.
Land-Surface Elevation
and Datum _____ feet ☒ surveyed
~~Measuring Point~~ 409.49 Ft (MSL) ☐ estimated
Installation Dates(s) 11/27/84
Drilling Method Hollow Stem Auger
Drilling Contractor John Mathes & Associates, Inc.
Drilling Fluid None

Development Techniques(s) and Date(s)
surged with compressed air

Fluid Loss During Drilling NONE gallons
Water Removed During Development 60 gallons
Static Depth to Water _____ feet below M.P.
Pumping Depth to Water _____ feet below M.P.
Pumping Duration 1 hours
Yield 1 gpm Date _____
Specific Capacity _____ gpm/ft
Well Purpose ground-water monitoring well

Remarks

Prepared by D. Colton

GERAGHTY & MILLER, INC.
Ground-Water Consultants

# WELL CONSTRUCTION LOG

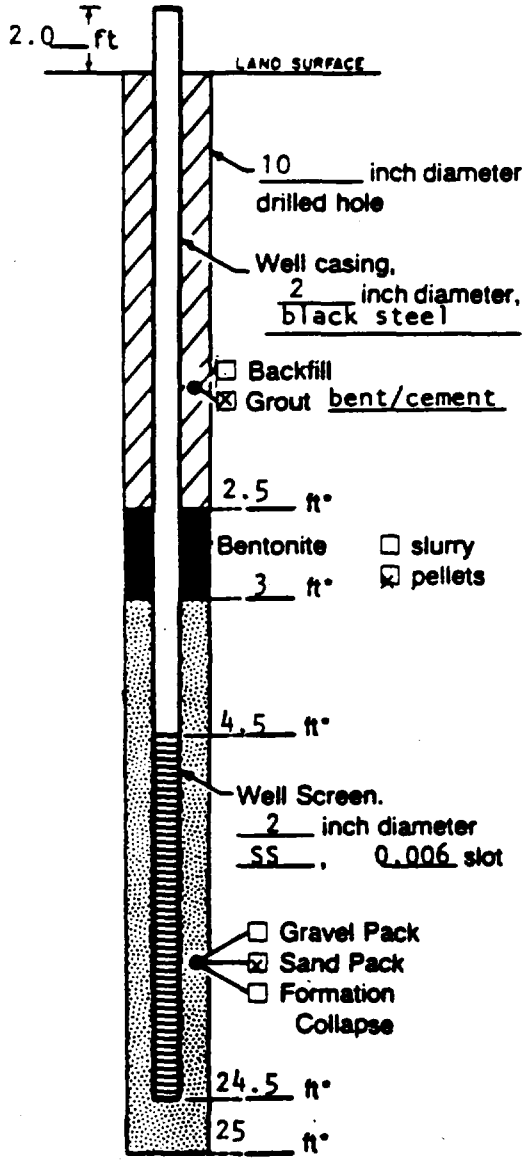


Measuring Point is Top of Well Casing Unless Otherwise Noted.

*Depth Below Land Surface

Project: Monsanto Company  Well: GM-38
Town/City: Sauget
County: St. Clair  State: IL
Permit No.:
Land-Surface Elevation and Datum: _____ feet  ☒ surveyed
Measuring Point 412.51 Ft (MSL)  ☐ estimated
Installation Dates(s): 12/3/84
Drilling Method: Hollow Stem Auger
Drilling Contractor: John Mathes & Associates, Inc.
Drilling Fluid: Bentonite

Development Techniques(s) and Date(s)
surged with compressed air

Fluid Loss During Drilling: None gallons
Water Removed During Development: 120 gallons
Static Depth to Water: _____ feet below M.P.
Pumping Depth to Water: _____ feet below M.P.
Pumping Duration: 2 hours
Yield: 1 gpm  Date: _____
Specific Capacity: _____ gpm/ft
Well Purpose: ground-water monitoring well

Remarks:

Prepared by: D. Colton

GERAGHTY & MILLER, INC.
Ground-Water Consultants

# WELL CONSTRUCTION LOG

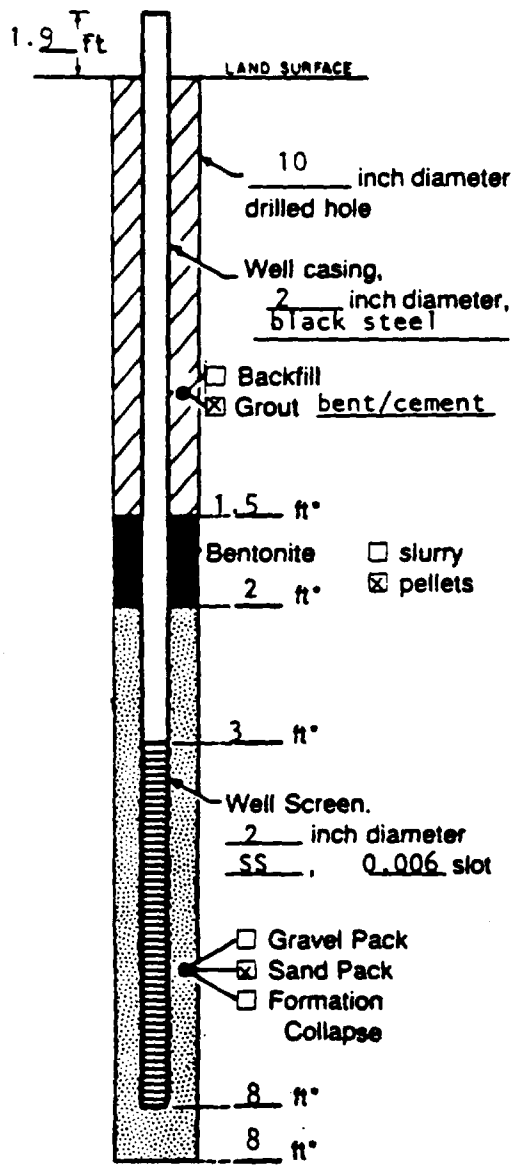


Measuring Point is Top of Well Casing Unless Otherwise Noted.

*Depth Below Land Surface

Project Monsanto Company Well GM-39
Town/City Sauget
County St. Clair State IL
Permit No.
Land-Surface Elevation
and Datum _____ feet ☒ surveyed
Measuring Point 415.59 Ft (MSL) ☐ estimated
Installation Dates(s) 12/4/84
Drilling Method Hollow Stem Auger
Drilling Contractor John Mathes & Associates, Inc.
Drilling Fluid None

Development Techniques(s) and Date(s)
surged with compressed air

Fluid Loss During Drilling None gallons
Water Removed During Development 60 gallons
Static Depth to Water _____ feet below M.P.
Pumping Depth to Water _____ feet below M.P.
Pumping Duration 1 hours
Yield 1 gpm Date _____
Specific Capacity _____ gpm/ft
Well Purpose ground-water monitoring well

Remarks

Prepared by D. Colton

GERAGHTY & MILLER, INC.
Ground-Water Consultants

# WELL CONSTRUCTION LOG

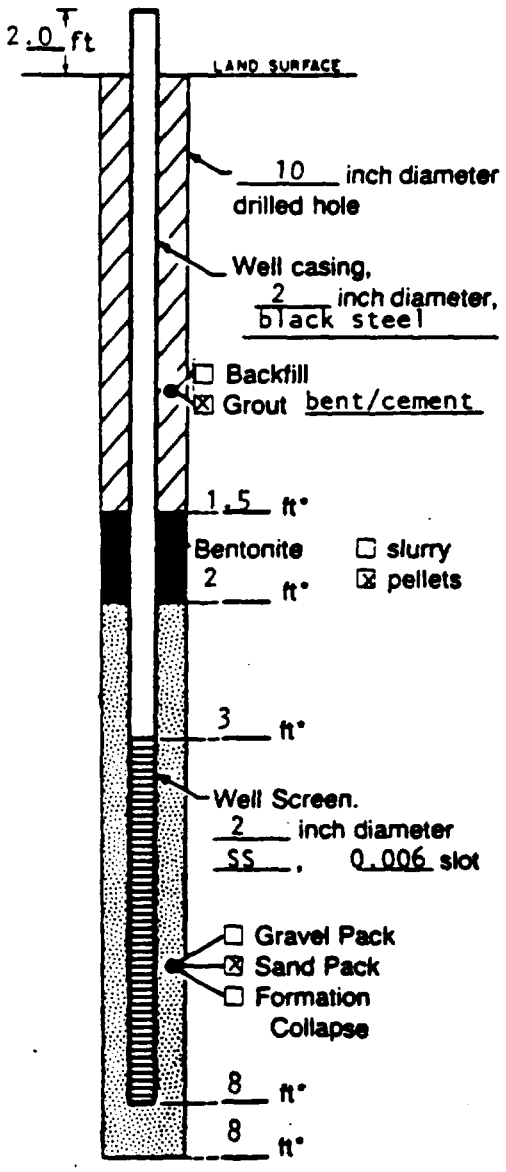


Measuring Point is Top of Well Casing Unless Otherwise Noted.

*Depth Below Land Surface

Project Monsanto Company Well GM-40
Town/City Sauget
County St. Clair State IL
Permit No.
Land-Surface Elevation
and Datum _____ feet ☒ surveyed
Measuring Point 415.75 Ft (MSL) ☐ estimated
Installation Dates(s) 12/4/84
Drilling Method Hollow Stem Auger
Drilling Contractor John Mathes & Associates, Inc.
Drilling Fluid None

Development Techniques(s) and Date(s)
surged with compressed air

Fluid Loss During Drilling None gallons
Water Removed During Development 60 gallons
Static Depth to Water _____ feet below M.P.
Pumping Depth to Water _____ feet below M.P.
Pumping Duration 1 hours
Yield 1 gpm Date _____
Specific Capacity _____ gpm/ft
Well Purpose ground-water monitoring well

Remarks

Prepared by D. Colton

GERAGHTY & MILLER, INC.
Ground-Water Consultants

# WELL CONSTRUCTION LOG

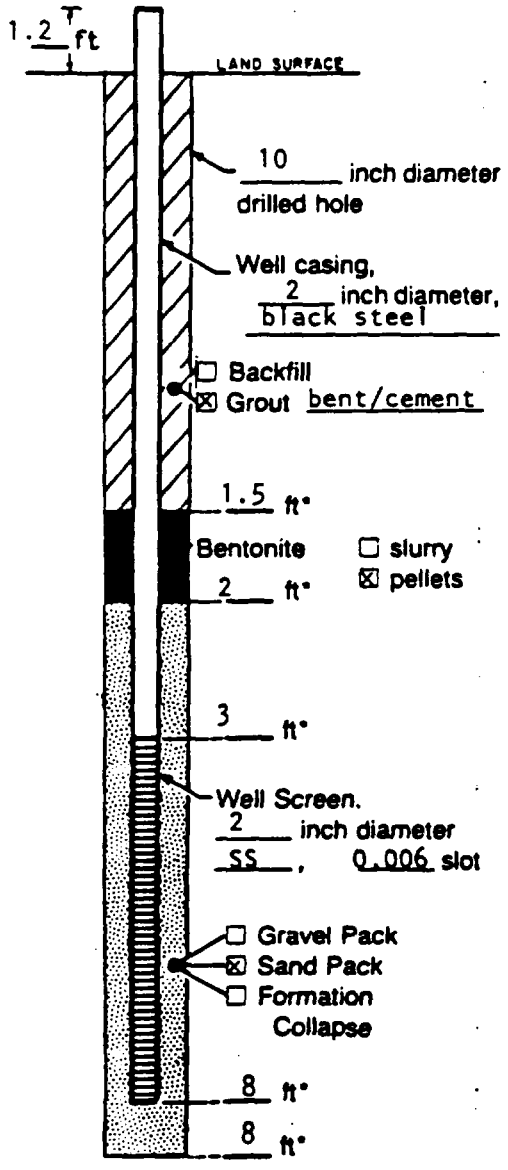


Measuring Point is Top of Well Casing Unless Otherwise Noted.

*Depth Below Land Surface

Project Monsanto Company Well GM-41
Town/City Sauget
County St. Clair State IL
Permit No.
Land-Surface Elevation and Datum _____ feet ☒ surveyed
Measuring Point 414.75 Ft (MSL) ☐ estimated
Installation Dates(s) 12/4/84
Drilling Method Hollow Stem Auger
Drilling Contractor John Mathes & Associates, Inc.
Drilling Fluid None

Development Techniques(s) and Date(s)
surged with compressed air

Fluid Loss During Drilling None gallons
Water Removed During Development 60 gallons
Static Depth to Water _____ feet below M.P.
Pumping Depth to Water _____ feet below M.P.
Pumping Duration 1 hours
Yield 1 gpm Date _____
Specific Capacity _____ gpm/ft
Well Purpose ground-water monitoring well

Remarks

Prepared by D. Colton

GERAGHTY & MILLER, INC.
Ground-Water Consultants

# WELL CONSTRUCTION LOG

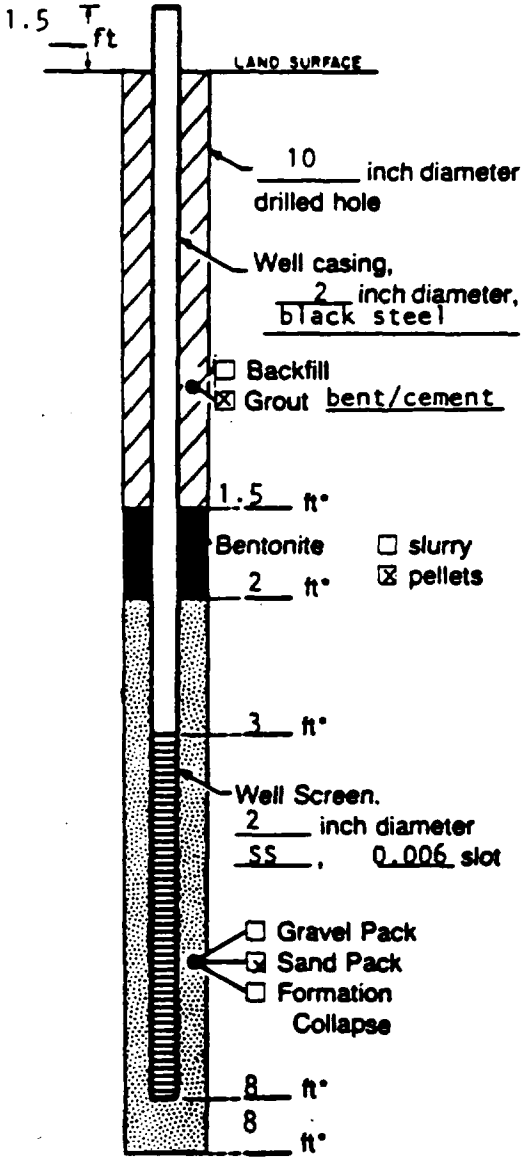


Measuring Point is Top of Well Casing Unless Otherwise Noted.

*Depth Below Land Surface

Project Monsanto Company Well GM-42
Town/City Sauget
County St. Clair State IL
Permit No.
Land-Surface Elevation
and Datum _____ feet ☒ surveyed
~~Measuring Point 414.48~~ Ft (MSL) ☐ estimated
Installation Dates(s) 12/5/84
Drilling Method Hollow Stem Auger
Drilling Contractor John Mathes & Associates, Inc.
Drilling Fluid None

Development Techniques(s) and Date(s)
surged with compressed air

Fluid Loss During Drilling None gallons
Water Removed During Development 60 gallons
Static Depth to Water _____ feet below M.P.
Pumping Depth to Water _____ feet below M.P.
Pumping Duration 1 hours
Yield 1 gpm Date _____
Specific Capacity _____ gpm/ft
Well Purpose ground-water monitoring well

Remarks

Prepared by D. Colton

GERAGHTY & MILLER, INC.
Ground-Water Consultants

# WELL CONSTRUCTION LOG

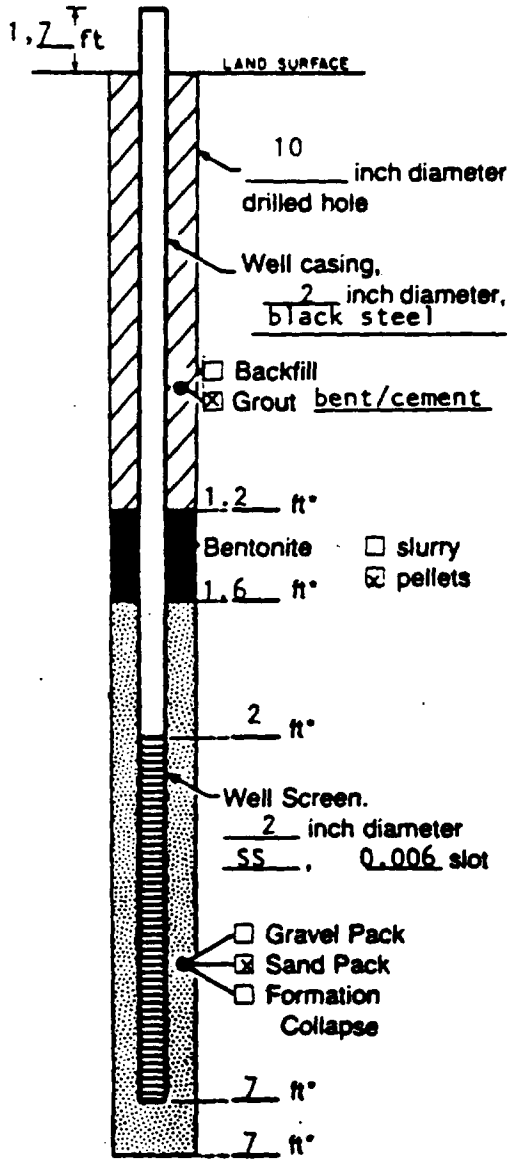


Measuring Point is Top of Well Casing Unless Otherwise Noted.

*Depth Below Land Surface

Project Monsanto Company Well GM-43
Town/City Sauget
County St. Clair State IL
Permit No.
Land-Surface Elevation and Datum _____ feet ☒ surveyed
Measuring Point 414.38 Ft (MSL) ☐ estimated
Installation Dates(s) 12/5/84
Drilling Method Hollow Stem Auger
Drilling Contractor John Mathes & Associates, Inc.
Drilling Fluid None

Development Techniques(s) and Date(s)
surged with compressed air

Fluid Loss During Drilling None gallons
Water Removed During Development 60 gallons
Static Depth to Water _____ feet below M.P.
Pumping Depth to Water _____ feet below M.P.
Pumping Duration 1 hours
Yield 1 gpm Date _____
Specific Capacity _____ gpm/ft
Well Purpose ground-water monitoring well

Remarks

Prepared by D. Colton

GERAGHTY & MILLER, INC.
Ground-Water Consultants

# WELL CONSTRUCTION LOG

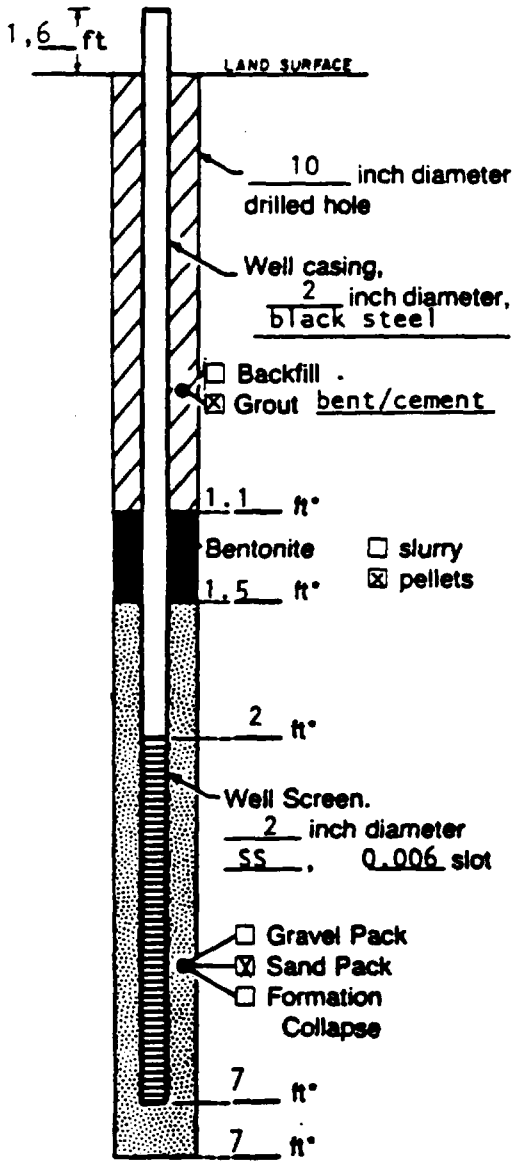


Measuring Point is Top of Well Casing Unless Otherwise Noted.

*Depth Below Land Surface

Project Monsanto Company Well GM-44
Town/City Sauget
County St. Clair State IL
Permit No.
Land-Surface Elevation
and Datum _____ feet ☒ surveyed
~~Measuring Point 414.44~~ Ft (MSL) ☐ estimated
Installation Dates(s) 12/5/86
Drilling Method Hollow Stem Auger
Drilling Contractor John Mathes & Associates, Inc.
Drilling Fluid None

Development Techniques(s) and Date(s)
surged with compressed air

Fluid Loss During Drilling None gallons
Water Removed During Development 60 gallons
Static Depth to Water _____ feet below M.P.
Pumping Depth to Water _____ feet below M.P.
Pumping Duration 1 hours
Yield 1 gpm Date _____
Specific Capacity _____ gpm/ft
Well Purpose ground-water monitoring well

Remarks

Prepared by D. Colton

GERAGHTY & MILLER, INC.
Ground-Water Consultants

# WELL CONSTRUCTION LOG

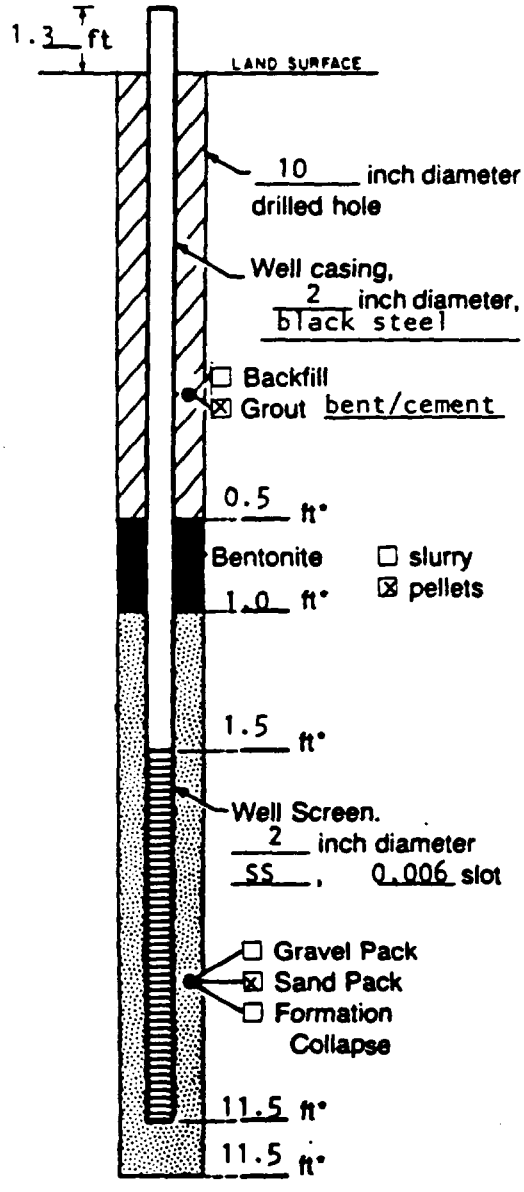


Measuring Point is Top of Well Casing Unless Otherwise Noted.

*Depth Below Land Surface

Project Monsanto Company Well GM-45
Town/City Sauget
County St. Clair State IL
Permit No.
Land-Surface Elevation
and Datum _____ feet ☒ surveyed
Measuring Point 410.10 Ft (MSL) ☐ estimated
Installation Dates(s) 12/6/84
Drilling Method Hollow Stem Auger
Drilling Contractor John Mathes & Associates, Inc.
Drilling Fluid None

Development Techniques(s) and Date(s)
surged with compressed air

Fluid Loss During Drilling None gallons
Water Removed During Development 60 gallons
Static Depth to Water _____ feet below M.P.
Pumping Depth to Water _____ feet below M.P.
Pumping Duration 1 hours
Yield 1 gpm Date _____
Specific Capacity _____ gpm/ft
Well Purpose ground-water monitoring well

Remarks

Prepared by D. Colton

GERAGHTY & MILLER, INC.
Ground-Water Consultants

# WELL CONSTRUCTION LOG

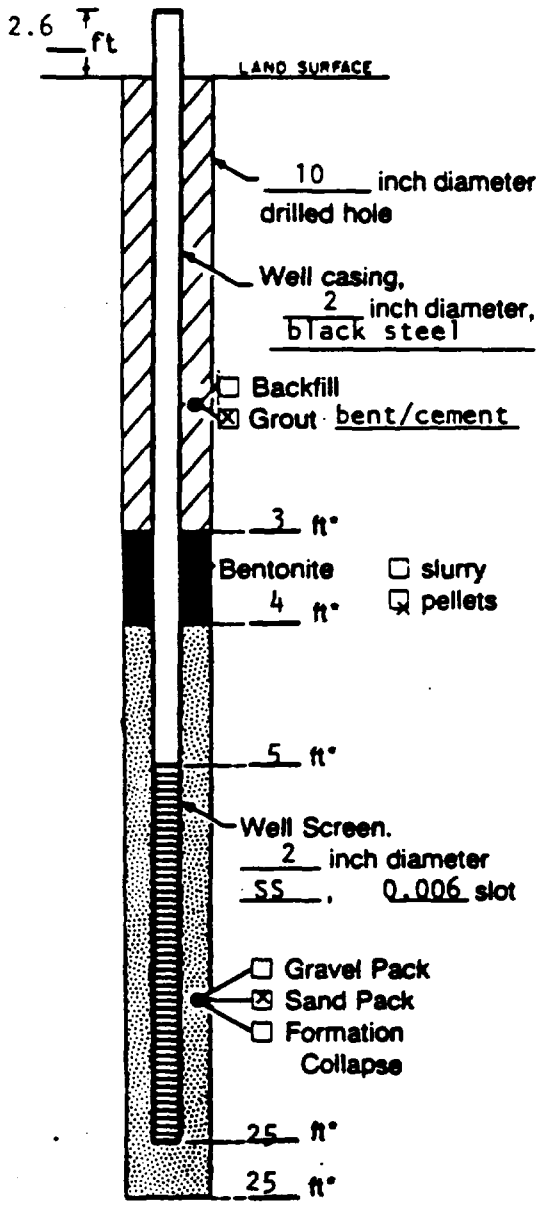


Measuring Point is Top of Well Casing Unless Otherwise Noted.

*Depth Below Land Surface

Project Monsanto Company Well GM-46
Town/City Sauget
County St. Clair State IL
Permit No.
Land-Surface Elevation
and Datum _____ feet ☒ surveyed
Measuring Point 411.60 Ft (MSL) ☐ estimated
Installation Dates(s) 12/7/84
Drilling Method Hollow Stem Auger
Drilling Contractor John Mathes & Associates, Inc.
Drilling Fluid None

Development Techniques(s) and Date(s)
surged with compressed air

Fluid Loss During Drilling None gallo
Water Removed During Development 60 gallons
Static Depth to Water _____ feet below M.P.
Pumping Depth to Water _____ feet below M.P.
Pumping Duration 1 hours
Yield 1 gpm Date _____
Specific Capacity _____ gpm/ft
Well Purpose ground-water monitoring well

Remarks

Prepared by D. Colton

GERAGHTY & MILLER, INC.
Ground-Water Consultants

# WELL CONSTRUCTION LOG

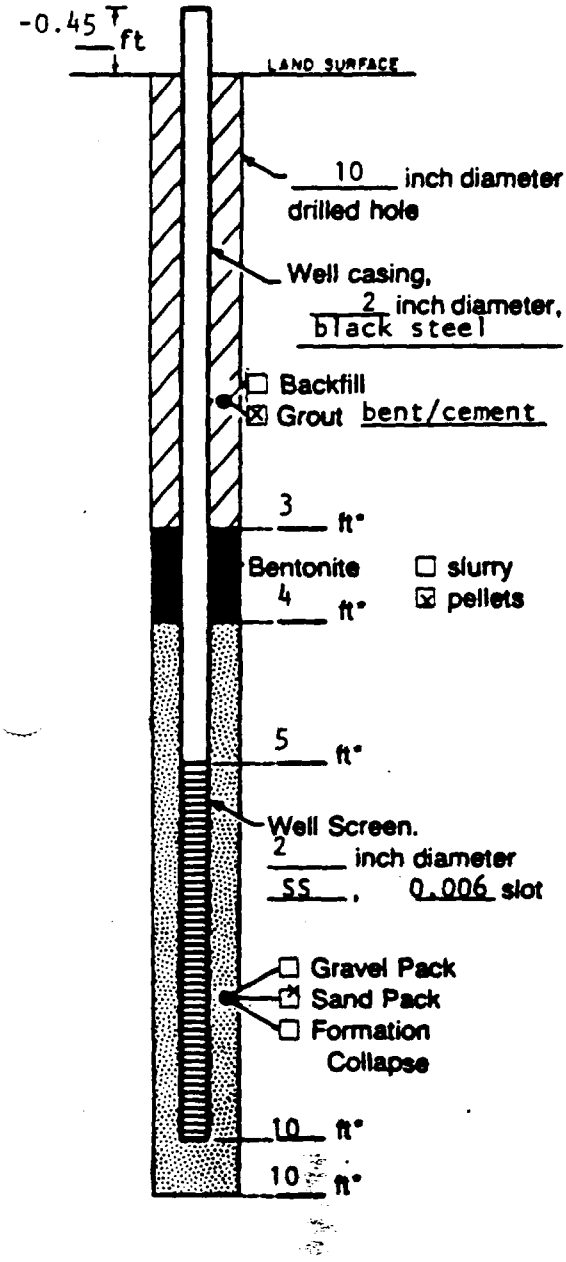


Measuring Point is Top of Well Casing Unless Otherwise Noted.

*Depth Below Land Surface

Project: Monsanto Company  Well: GM-47
Town/City: Sauget
County: St. Clair  State: IL
Permit No.:
Land-Surface Elevation and Datum: _____ feet  ☒ surveyed
Measuring Point 412.34 Ft (MSL)  ☐ estimated
Installation Dates(s): 12/10/84
Drilling Method: Hollow Stem Auger
Drilling Contractor: John Mathes & Associates, Inc.
Drilling Fluid: None

Development Techniques(s) and Date(s)
surged with compressed air

Fluid Loss During Drilling: None gallons
Water Removed During Development: 60 gallons
Static Depth to Water: _____ feet below M.P.
Pumping Depth to Water: _____ feet below M.P.
Pumping Duration: 1 hours
Yield: 1 gpm  Date: _____
Specific Capacity: _____ gpm/ft
Well Purpose: ground-water monitoring well

Remarks:

Prepared by: D. Colton

GERAGHTY & MILLER, INC.
Ground-Water Consultants

# WELL CONSTRUCTION LOG

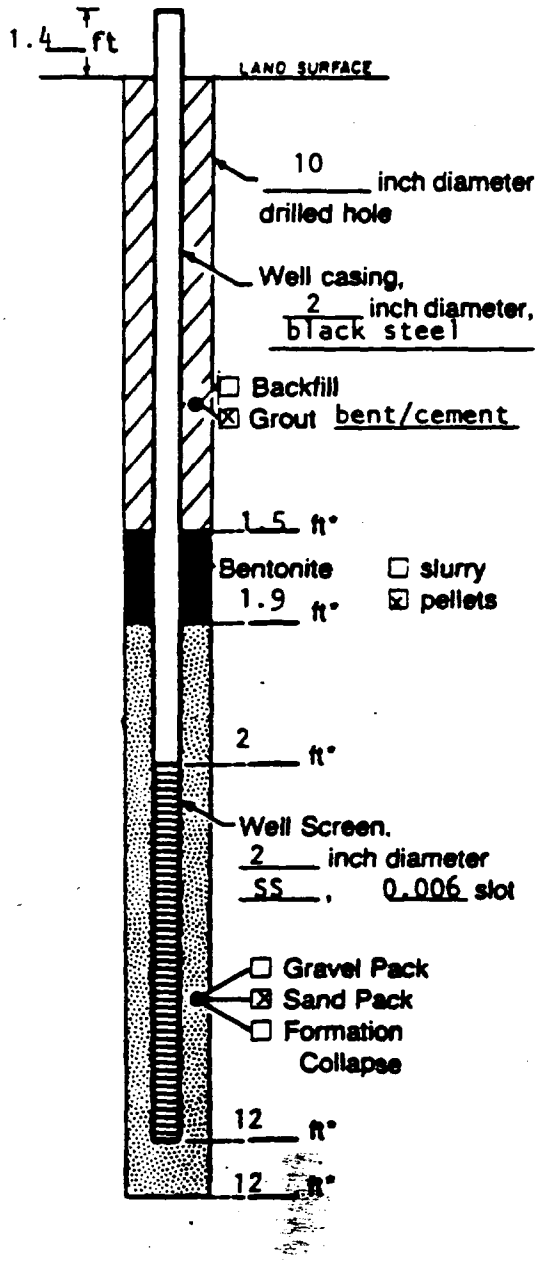


Measuring Point is Top of Well Casing Unless Otherwise Noted.

*Depth Below Land Surface

Project Monsanto Company Well GM-48
Town/City Sauget
County St. Clair State IL
Permit No.
Land-Surface Elevation
and Datum _____ feet ☒ surveyed
Measuring Point 411.00 Ft (MSL) ☐ estimated
Installation Dates(s) 12/10/84
Drilling Method Hollow Stem Auger
Drilling Contractor John Mathes & Associates, Inc.
Drilling Fluid None

Development Techniques(s) and Date(s)
surged with compressed air

Fluid Loss During Drilling None gallo
Water Removed During Development 60 gallons
Static Depth to Water _____ feet below M.P.
Pumping Depth to Water _____ feet below M.P.
Pumping Duration 1 hours
Yield 1 gpm Date _____
Specific Capacity _____ gpm/ft
Well Purpose ground-water monitoring well

Remarks

Prepared by D. Colton

GERAGHTY & MILLER, INC.
Ground-Water Consultants

# WELL CONSTRUCTION LOG

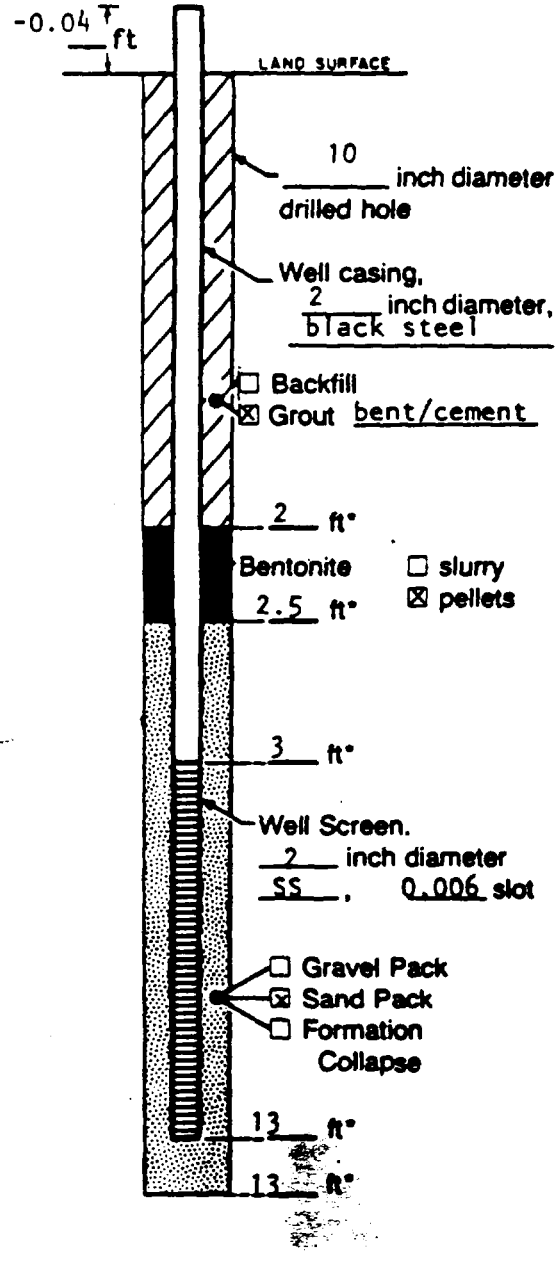


Measuring Point is Top of Well Casing Unless Otherwise Noted.

*Depth Below Land Surface

Project Monsanto Company Well GM-49

Town/City Sauget

County St. Clair State IL

Permit No.

Land-Surface Elevation and Datum feet ☒ surveyed

Measuring Point 408.43 Ft (MSL) ☐ estimated

Installation Dates(s) 12/10/84

Drilling Method Hollow Stem Auger

Drilling Contractor John Mathes & Associates, Inc.

Drilling Fluid None

Development Techniques(s) and Date(s)
surged with compressed air

Fluid Loss During Drilling None gallons

Water Removed During Development 60 gallons

Static Depth to Water feet below M.P.

Pumping Depth to Water feet below M.P.

Pumping Duration 1 hours

Yield 1 gpm Date

Specific Capacity gpm/ft

Well Purpose ground-water monitoring well

Remarks

Prepared by D. Colton

GERAGHTY & MILLER, INC.
Ground-Water Consultants

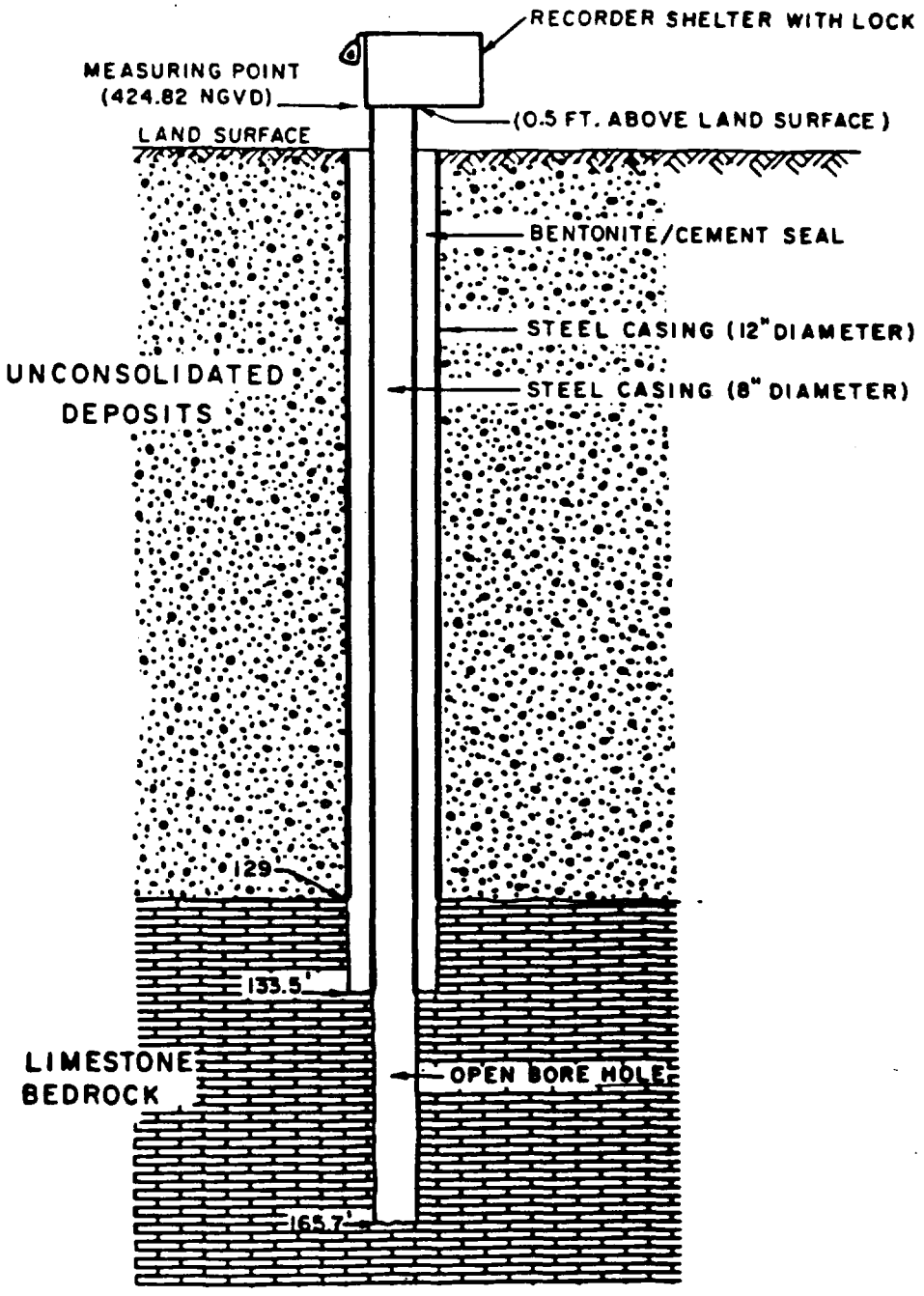


**CONSTRUCTION DETAILS FOR WELL GM-108**

**MONSANTO COMPANY**
**Sauget, Illinois**

# Appendix 19C

# 1993 Geraghty & Miller Report

GERAGHTY & MILLER, INC.
*Environmental Services*

# WELL CONSTRUCTION LOG
(UNCONSOLIDATED)

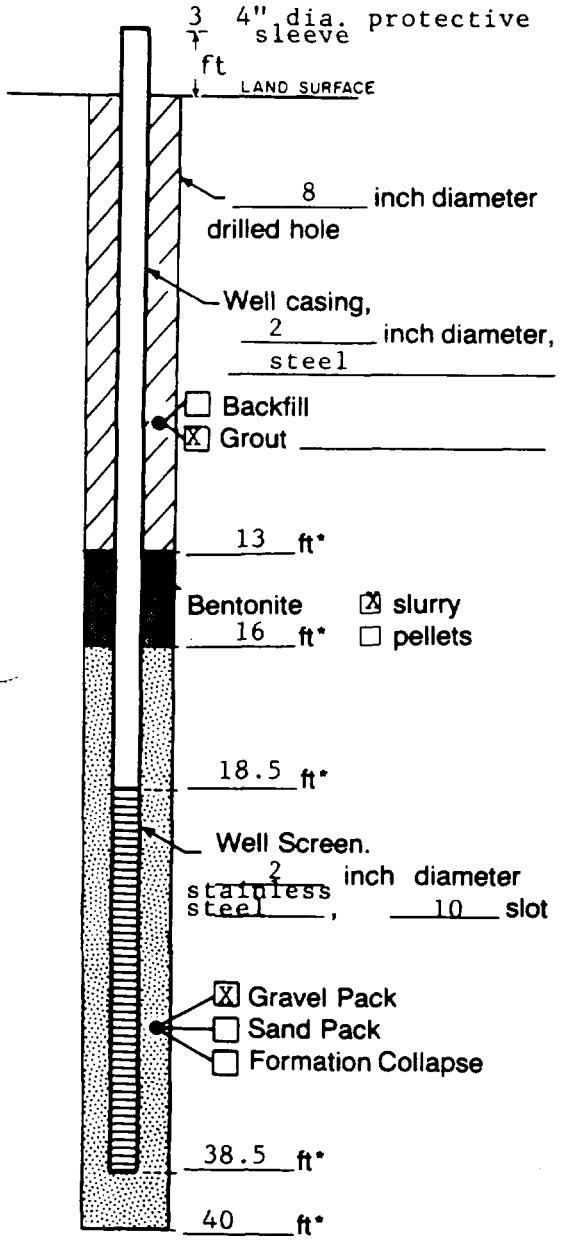


Measuring Point is
Top of Well Casing
Unless Otherwise Noted.

*Depth Below Land Surface

Project Monsanto/N0308SG3 Well GM-54A
Town/City Sauget
County St. Clair State Illinois
Permit No.
Land-Surface Elevation
and Datum _____ feet ☐ Surveyed
☐ Estimated
Installation Date(s) 10-6-87
Drilling Method hollow stem auger
Drilling Contractor
Drilling Fluid none

Development Technique(s) and Date(s)

10-13-87

Fluid Loss During Drilling 50 gallons
Water Removed During Development 100 gallons
Static Depth to Water 15 feet below M.P.
Pumping Depth to Water _____ feet below M.P.
Pumping Duration _____ hours
Yield 1-2 gpm Date _____
Specific Capacity _____ gpm/ft
Well Purpose Ground water monitoring in the "shallow" zone

Remarks

Prepared by Brian A. Blum

GERAGHTY & MILLER, INC.
*Environmental Services*

# WELL CONSTRUCTION LOG
(UNCONSOLIDATED)

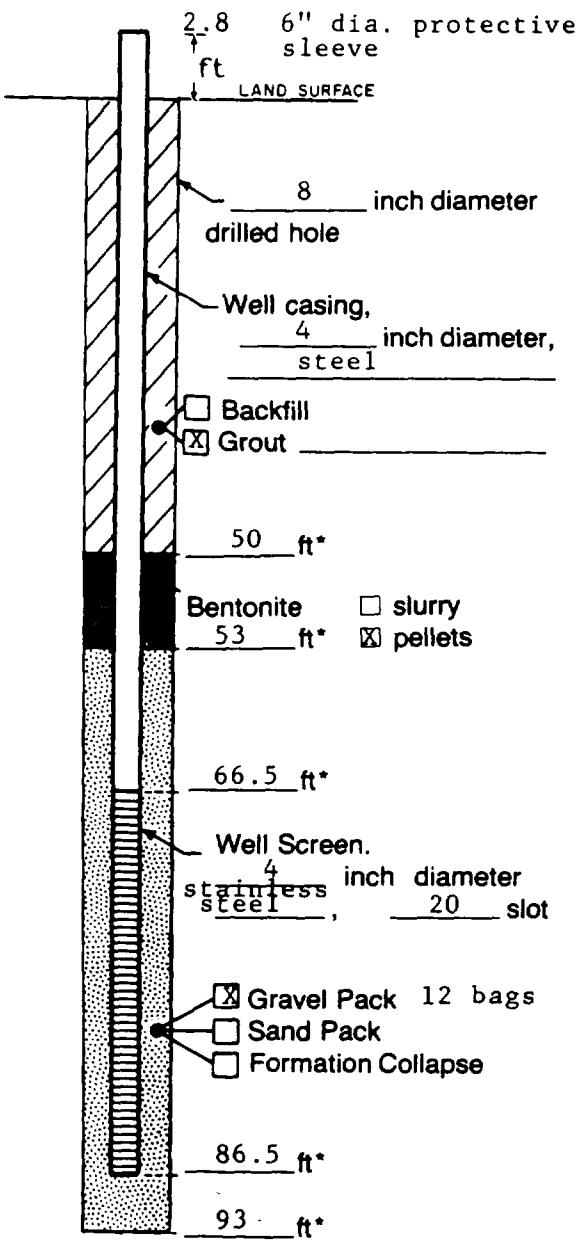


Measuring Point is
Top of Well Casing
Unless Otherwise Noted.

*Depth Below Land Surface

Project: Monsanto/ N0308SG3 Well: GM-54B
Town/City: Sauget
County: St. Clair State: Illinois
Permit No.:
Land-Surface Elevation and Datum: _____ feet ☐ Surveyed ☐ Estimated
Installation Date(s): 9-29-87/9-30-87
Drilling Method: hydraulic (mud) rotary
Drilling Contractor: John Mathes and Associates, Inc.
Drilling Fluid: Polymer free bentonite and hydrant water

Development Technique(s) and Date(s)
surging with compressed air
10-13-87

Fluid Loss During Drilling: 500 gallons
Water Removed During Development: 1,000 gallons
Static Depth to Water: 15 feet below M.P.
Pumping Depth to Water: _____ feet below M.P.
Pumping Duration: _____ hours
Yield: >10 gpm Date: _____
Specific Capacity: _____ gpm/ft
Well Purpose: Ground water monitoring in the "intermediate" zone.

Remarks: Relatively high yielding well

Prepared by: Brian A. Blum

GERAGHTY & MILLER, INC.
*Environmental Services*

# WELL CONSTRUCTION LOG
(UNCONSOLIDATED)

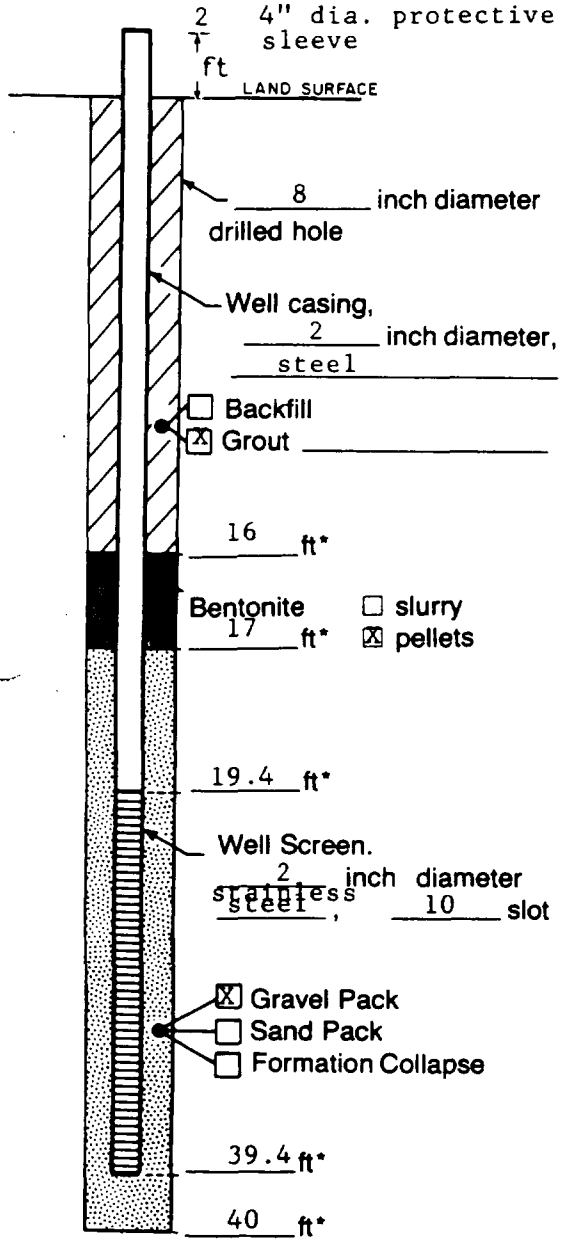


Measuring Point is
Top of Well Casing
Unless Otherwise Noted.

*Depth Below Land Surface

Project Monsanto/N0308SG3 Well MW-58A

Town/City Sauget

County St. Clair State Illinois

Permit No.

Land-Surface Elevation

and Datum _____ feet ☐ Surveyed

☐ Estimated

Installation Date(s) 10-7-87

Drilling Method

Drilling Contractor

Drilling Fluid

Development Technique(s) and Date(s)

10-15-87

Fluid Loss During Drilling _____ gallons

Water Removed During Development _____ gallons

Static Depth to Water 20 feet below M.P.

Pumping Depth to Water _____ feet below M.P.

Pumping Duration _____ hours

Yield 1-2 gpm Date

Specific Capacity _____ gpm/ft

Well Purpose

Remarks Ground water monitoring in the "shallow" zone.

Prepared by Brian A. Blum

GERAGHTY & MILLER, INC.
*Environmental Services*

# WELL CONSTRUCTION LOG
(UNCONSOLIDATED)

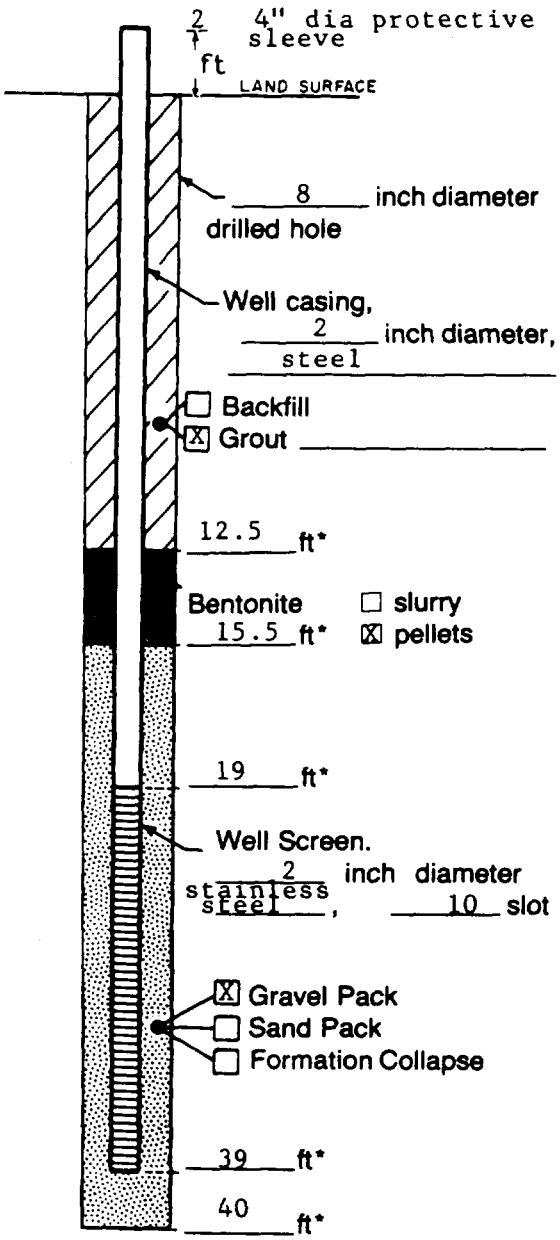


Measuring Point is
Top of Well Casing
Unless Otherwise Noted.

*Depth Below Land Surface

Project Monsanto/.N0308SG3 Well GM-59A
Town/City Sauget
County St. Clair State Illinois
Permit No. _____
Land-Surface Elevation
and Datum _____ feet ☐ Surveyed
☐ Estimated
Installation Date(s) 10-8-87
Drilling Method hollow stem auget
Drilling Contractor _____
Drilling Fluid _____

Development Technique(s) and Date(s)

10-15-87

Fluid Loss During Drilling _____ gallons
Water Removed During Development _____ gallons
Static Depth to Water 20 feet below M.P.
Pumping Depth to Water _____ feet below M.P.
Pumping Duration _____ hours
Yield 1-2 gpm Date _____
Specific Capacity _____ gpm/ft
Well Purpose Ground water monitoring in the "shallow" zone.

Remarks _____

Prepared by Brian A. Blum

GERAGHTY & MILLER, INC.

# WELL CONSTRUCTION LOG

(UNCONSOLIDATED)

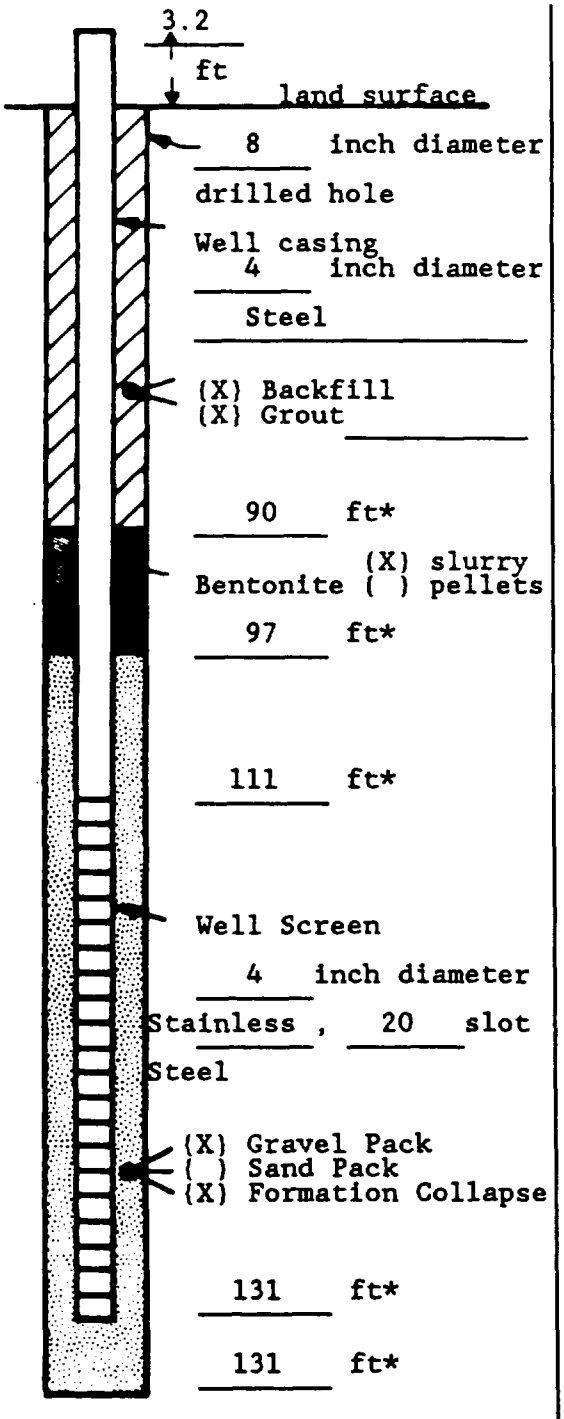


Measuring Point is Top of Well Casing Unless Otherwise Noted.

* Depth Below Land Surface

Project NY0896WG01 Kirkland & Ellis Well GM-55C

Town/City Sauget

County St. Clair State Illinois

Permit No.

Land-Surface Elevation and Datum 422.88 feet (X) Surveyed ( ) Estimated

Installation Date(s) 10/1, 10/2, 10/5/87

Drilling Method Mud Rotary

Drilling Contractor John Mathes & Associates, Inc.

Drilling Fluid Bentonite

Development Technique(s) and Date(s)
Surged with compressed air on 10/8, 10/9/87

Fluid Loss During Drilling gallons

Water Removed During Development gallons

Static Depth to Water 36 feet below M.P.

Pumping Depth to Water feet below M.P.

Pumping Duration hours

Yield ~10 gpm Date

Specific Capacity gpm/ft

Well Purpose Ground-water monitoring well

Fracture Zones

Remarks

Prepared by B. Blum

GERAGHTY & MILLER, INC.

# WELL CONSTRUCTION LOG

(UNCONSOLIDATED)

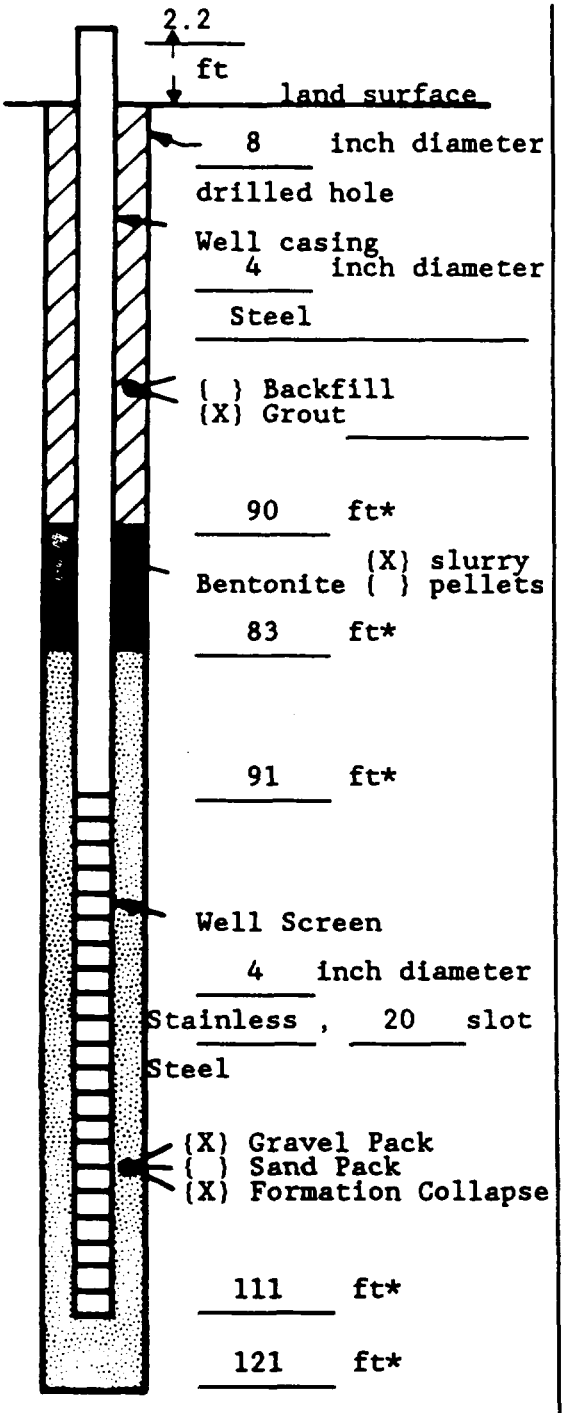


Measuring Point is Top of Well Casing Unless Otherwise Noted.

* Depth Below Land Surface

Project NY0896WG01 Kirkland & Ellis Well GM-56C

Town/City Sauget

County St. Clair State Illinois

Permit No.

Land-Surface Elevation and Datum 422.16 feet (X) Surveyed ( ) Estimated

Installation Date(s) 10/6, 10/7/87

Drilling Method Mud Rotary

Drilling Contractor John Mathes & Associates, Inc.

Drilling Fluid Bentonite

Development Technique(s) and Date(s)
Surged with compressed air on 10/13, 10/14/87

Fluid Loss During Drilling gallons

Water Removed During Development gallons

Static Depth to Water 36 feet below M.P.

Pumping Depth to Water feet below M.P.

Pumping Duration hours

Yield ~10 gpm Date

Specific Capacity gpm/ft

Well Purpose Ground-water monitoring well

Fracture Zones

Remarks

Prepared by B. Blum

GERAGHTY & MILLER, INC.

# WELL CONSTRUCTION LOG

(UNCONSOLIDATED)

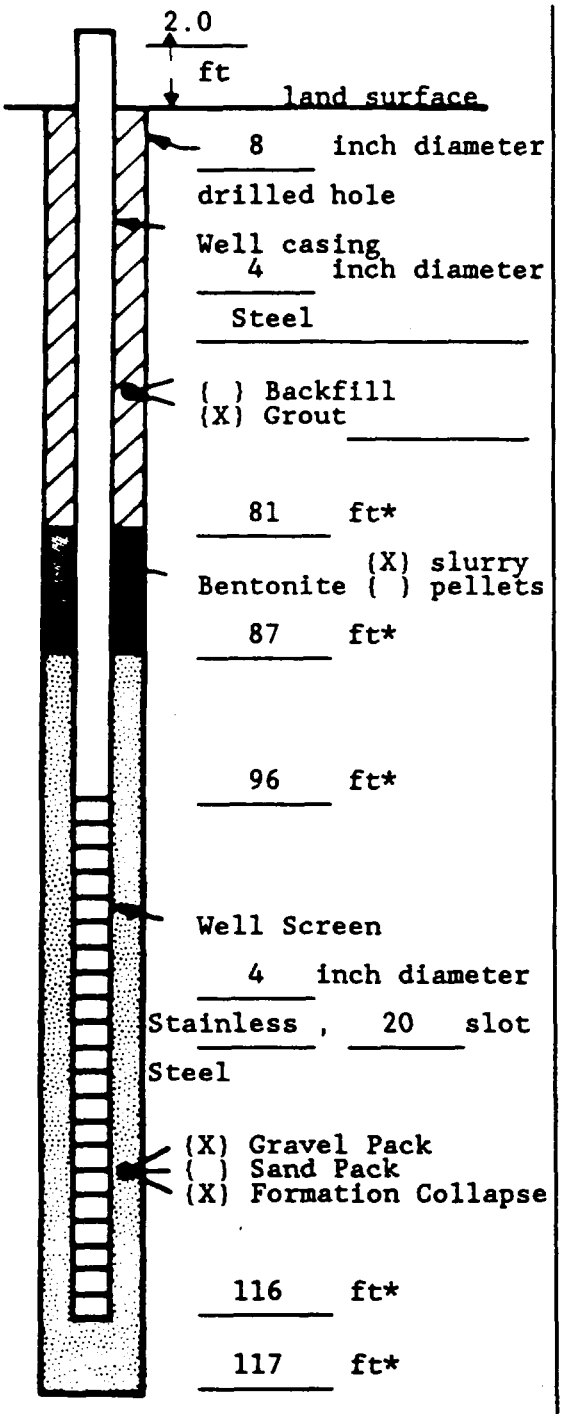


Measuring Point is Top of Well Casing Unless Otherwise Noted.

* Depth Below Land Surface

Project NY0896WG01 Kirkland & Ellis Well GM-57C

Town/City Sauget

County St. Clair State Illinois

Permit No.

Land-Surface Elevation and Datum 424.02 feet (X) Surveyed ( ) Estimated

Installation Date(s) 10/9/87

Drilling Method Mud Rotary

Drilling Contractor John Mathes & Associates, Inc.

Drilling Fluid Bentonite

Development Technique(s) and Date(s)
Surged with compressed air on 10/13/87

Fluid Loss During Drilling gallons

Water Removed During Development gallons

Static Depth to Water 38 feet below M.P.

Pumping Depth to Water feet below M.P.

Pumping Duration hours

Yield ~10 gpm Date

Specific Capacity gpm/ft

Well Purpose Ground-water monitoring well

Fracture Zones

Remarks

Prepared by B. Blum

# Appendix 19D

# 1997 Roux Report

# Volume II

# APPENDIX C

Geologic Logs and Well Construction Details

# GEOLOGIC LOGS FOR MONITORING WELLS

## INSTALLED UNDER THE DIRECTION OF GERAGHTY & MILLER, INC.

## MONSANTO COMPANY, W.G. KRUMMRICH PLANT, SAUGET, ILLINOIS

| Description | Depth (feet) |
|---|---|
| **Well GM-1** | |
| Silt, clayey, brown | 0 - 3.5 |
| Sand, very fine, silty, tan | 3.5- 6 |
| Silt, clayey, gray and brown | 6 - 12 |
| Sand, very fine, very silty, gray | 12 - 22 |
| Sand, fine, silty, gray | 22 - 32 |
| Sand, fine to medium, gray; trace of coarse sand | 32 - 36 |
| **Well GM-2** | |
| Gravel (fill) | 0 - 2 |
| Sand, very fine to fine, silty, gray and yellowish-brown | 2 - 7 |
| Clay, silty, gray | 7 - 12 |
| Sand, very fine to fine, tan | 12 - 18 |
| Silt, sandy, gray | 18 - 20 |
| Sand, very fine to fine, silty, gray | 20 - 21 |
| Sand, very fine to fine, brown; some silt | 21 - 35 |
| Sand, fine to medium, gray | 35 - 44 |
| **Well GM-3** | |
| Sand, very fine to fine, brown; some silt | 0 - 2 |
| Sand, very fine to fine, tan | 2 - 10 |
| Silt, sandy, brown | 10 - 12 |
| Sand, very fine to fine, very silty, brown | 12 - 15 |
| Sand, very fine to fine, tan; trace silt | 15 - 22 |
| Sand, fine to medium, brown and gray | 22 - 32 |
| Sand, fine to medium, brown; some coarse sand and fine gravel | 32 - 36 |
| **Wells GM-4ABC** | |
| Clay, dark brown | 0 - 3 |
| Sand, very fine, very silty, tan | 3 - 7 |
| Sand, fine, tan | 7 - 17 |
| Sand, fine, brown; some silt | 17 - 22 |
| Sand, fine to medium, brown; trace coarse sand | 22 - 70 |
| Sand, fine to coarse, gray; with gravel | 70 - 88 |
| **Well GM-5** | |
| Sand, very fine to fine, brown; some silt | 0 - 2 |
| Sand, very fine to fine, tan | 2 - 27 |
| Sand, very fine to fine, tan; some medium sand | 27 - 36 |

| Description | Depth (feet) |
|---|---|
| **Well GM-6AB** | |
| Sand, very fine, silty, dark gray | 0 - 3 |
| Sand, very fine, silty, tan | 3 - 8 |
| Clay, gray; some silt | 8 - 13 |
| Sand, very fine, tan | 13 - 21 |
| Sand, very fine, tan; some silt | 21 - 27 |
| Sand, fine, silty; trace of medium and coarse sand | 27 - 32 |
| Sand, fine to medium, gray; trace of coarse sand | 32 - 70 |
| Sand, fine to coarse, gray; with fine to medium gravel | 70 - 88 |
| **Well GM-7** | |
| Silt, sandy, brown | 0 - 1 |
| Sand, very fine, brown; some silt | 1 - 4 |
| Silt, gray | 4 - 5 |
| Sand, very fine, gray; some silt | 5 - 12 |
| Sand, very fine, tan | 12 - 22 |
| Sand, very fine, brown; some silt | 22 - 27 |
| Sand, very fine to fine, brown; some medium sand | 27 - 36 |
| **Well GM-8** | |
| Sand, very fine, silty, brown | 0 - 2 |
| Sand, very fine, tan | 2 - 14 |
| Silt, gray and brown | 14 - 14.5 |
| Sand, very fine, tan | 14.5- 22 |
| Sand, very fine, brownish-gray; some silt | 22 - 27 |
| Sand, very fine to fine, gray; some silt and medium sand | 27 - 36 |
| **Wells GM-9ABC** | |
| Gravel (fill) | 0 - 2 |
| Cinders, black (fill) | 2 - 3 |
| Sand, very fine to fine, silty, brown | 3 - 12 |
| Clay, silty, gray | 12 - 14 |
| Sand, very fine to fine, silty, brown | 14 - 22 |
| Sand, very fine to fine, silty, gray | 22 - 50 |
| Sand, fine to medium, gray; trace of gravel | 50 - 80 |
| Sand, fine to coarse, gray; with fine to medium gravel | 80 -108 |

| Description | Depth (feet) |
|---|---|
| **Wells GM-10ABC** | |
| Topsoil | 0 - 1 |
| Silt, sandy, brown | 1 - 6 |
| Sand, very fine to fine, very silty, brown | 6 - 40 |
| Sand, fine to medium, gray; little gravel | 40 - 72 |
| Gravel, fine to medium; with fine to coarse sand | 72 - 80 |
| Sand, fine to coarse, brown; little gravel | 80 - 84 |
| Gravel, fine to medium; with fine to coarse sand | 84 -104 |
| Gravel, fine to medium with fine to coarse sand; some cobbles | 104 -111 |
| **Well GM-11** | |
| Silt, sandy, brown | 0 - 2 |
| Gravel, coarse (fill) | 2 - 3 |
| Silt, clayey, gray; trace gravel | 3 - 9.5 |
| Sand, silty, fine, tan | 9.5- 17 |
| Sand, very silt, very fine, gray | 17 - 26 |
| **Wells GM-12ABC** | |
| Cinders and gravel, black (fill) | 0 - 8.5 |
| ay, gray | 8.5- 17 |
| ilt, clayey, gray | 17 - 18.5 |
| Sand, very fine to fine, very silty, gray | 18.5- 22 |
| Sand, very fine to fine, gray; some silt | 22 - 35.5 |
| Sand, fine, gray; some silt | 35.5- 50 |
| Sand, fine to medium; brownish-gray | 50 - 70 |
| Sand, fine to coarse, brownish-gray; with fine to medium gravel | 70 - 114.5 |
| **Well GM-13** | |
| Gravel (fill) | 0 - 2 |
| Sand, very fine to fine, silty, brown | 2 - 11 |
| Silt, clayey, gray | 11 - 13 |
| Sand, very fine to fine, silty, brown | 13 - 21 |
| Sand, fine, silty, gray | 21 - 38 |
| **Well GM-14** | |
| Gravel (fill) | 0 - 2 |
| Silt, clayey, brown; some sand | 2 - 5 |
| Sand, very fine to fine, silty, brown | 5 - 29 |
| Sand, fine, silty, gray | 29 - 38 |
| **Well GM-15** | |
| avel (fill) | 0 - 2 |
| Silt, clayey, gray and brown; some sand | 2 - 9 |
| Sand, very fine to fine, silty, gray | 9 - 38 |

| Description | Depth (feet) |
|---|---|
| **Wells GM-16AB** | |
| Silt, sandy, brown | 1 - 6 |
| Sand, very fine to fine, very silty, brown | 6 - 29 |
| Sand, fine, gray; some silt | 29 - 40 |
| Sand, fine, gray | 40 - 50 |
| Sand, fine to medium, gray; some gravel | 50 - 70 |
| Sand, fine to coarse, gray; with gravel | 70 - 90 |
| **Wells GM-17ABC** | |
| Sand, very fine, silty, brown | 0 - 4 |
| Clay, gray; some silt and fine sand | 4 - 11 |
| Sand, very fine, tan; some silt | 11 - 23 |
| Sand, very fine, brown; trace of medium sand and silt | 23 - 50 |
| Sand, fine to medium, gray; some fine gravel | 50 - 70 |
| Sand, fine to coarse, gray; with fine to medium gravel | 70 -107 |
| **Wells GM-18AB** | |
| Silt, clayey, brown; trace of fine sand and gravel | 0 - 6 |
| Sand, fine, grayish-brown; some silt | 6 - 38 |
| Sand, fine, grayish-brown | 38 - 50 |
| Sand, fine to medium, grayish-brown; some fine gravel and coal fragments | 50 - 80 |
| Sand, fine to coarse, gray; with fine to medium gravel | 80 - 92 |
| **Wells GM-25AB** | |
| Sand, very fine, silty, brown | 0 - 14 |
| Sand, fine, brown; some silt | 14 - 33 |
| Sand, fine, gray | 33 - 50 |
| Sand, fine to medium, gray; some silt and coarse sand | 50 - 70 |
| Sand, fine to coarse, gray; some fine to medium gravel | 70 - 88 |
| **Wells GM-27BC** | |
| Sand, fine, silty, brown and black | 0 - 13 |
| Silt, sandy, gray; some fine sand | 13 - 22 |
| Sand, fine, gray; some silt | 22 - 33 |
| Clay, silty, gray; some fine sand | 33 - 36 |
| Sand, fine, silty, gray | 36 - 48 |
| Sand, fine to medium, gray; little silt | 48 - 75 |
| Sand, fine to coarse, gray; some fine to medium gravel | 75 -105 |

| Description | Depth (feet) |
|---|---|
| **Wells GM-28BC** | |
| Sand, fine, gray; some silt | 0 - 18 |
| Clay, silty, gray | 18 - 20 |
| Sand, fine, gray; some silt | 20 - 29 |
| Clay, silty, gray | 29 - 32 |
| Silt, gray; trace of fine gravel, with intermittent sand seams | 32 - 58 |
| Sand, fine to coarse, gray; some fine gravel | 58 - 95 |
| **Well GM-29** | |
| Gravel (fill) | 0 - 2 |
| Sand, fine, silty, gray | 2 - 3 |
| Silt, clayey, gray; with green stains | 3 - 4 |
| Clay, silty, gray | 4 - 5.5 |
| Sand, fine, silty, gray; some clay | 5.5- 8 |
| Silt, sandy, black | 8 - 10 |
| Silt, sandy, gray | 10 - 21 |
| Sand, fine, gray; some silt | 21 - 25 |
| **Well GM-30** | |
| Gravel, with cinders, some red brick (fill) | 0 - 6 |
| Clay, silty, grayish-green | 6 - 10 |
| Silt, clayey, gray; trace of fine sand | 10 - 15 |
| Sand, very fine to fine, gray; some silt | 15 - 20 |
| **Wells GM-31ABC** | |
| Sand, very fine, silty, brown | 0 - 10.5 |
| Sand, fine, brown | 10.5- 12 |
| Sand, very fine, silty, brown | 12 - 17 |
| Sand, fine to medium brown | 17 - 23 |
| Sand, medium, brown | 23 - 40 |
| Sand, coarse, little gravel, brown | 40 - 41.5 |
| Sand, fine to medium, brown | 41.5- 70 |
| Sand, fine to coarse, brown | 70 - 80 |
| Sand, fine to coarse, brown; some fine gravel | 80 -126.5 |
| **Well GM-32** | |
| Gravel, cinders, brown and gray (fill) | 0 - 2 |
| Sand, fine, silty, brown | 2 - 7 |
| Sand, fine to medium, brown | 7 - 25 |

GERAGHTY & MILLER, INC.
Ground-Water Consultants

# WELL CONSTRUCTION LOG

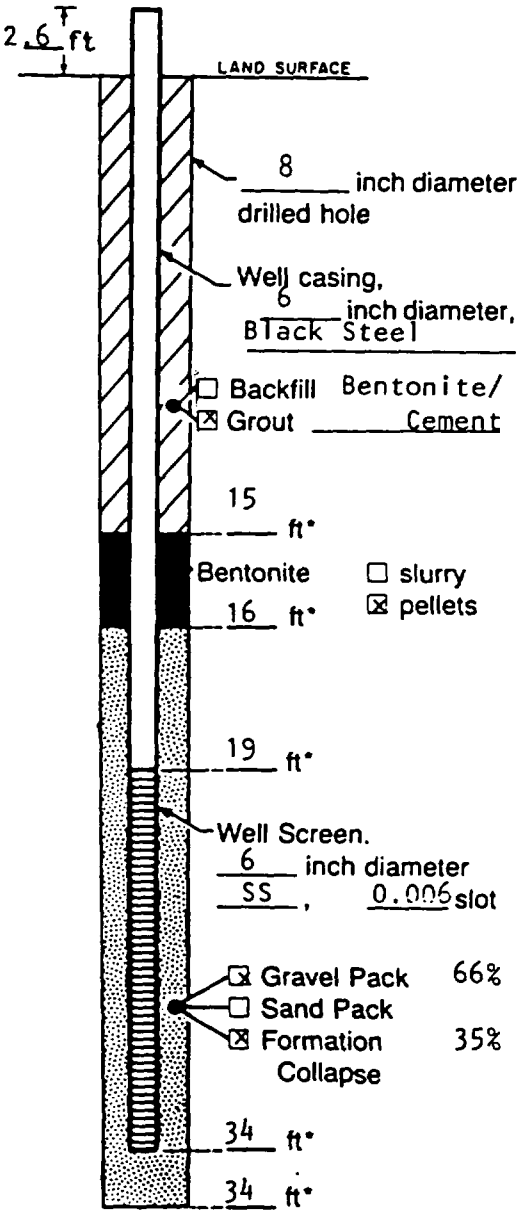


Measuring Point is Top of Well Casing Unless Otherwise Noted.

*Depth Below Land Surface

Project: Monsanto Company  Well: GM-1
Town/City: Sauget
County: St. Clair  State: IL
Permit No.:
Land-Surface Elevation and Datum: _____ feet  ☒ surveyed ☐ estimated
Measuring Point 413.65 Ft (MSL)
Installation Dates(s): 11/1/83
Drilling Method: Mud Rotary
Drilling Contractor: John Mathes & Assoc.
Drilling Fluid:

Development Techniques(s) and Date(s)
Pumped with bladder pump; surged with compressed air.

Fluid Loss During Drilling: _____ gallons
Water Removed During Development: 480 gallons
Static Depth to Water: _____ feet below M.P.
Pumping Depth to Water: _____ feet below M.P.
Pumping Duration: 4 hours
Yield: 2 gpm  Date:
Specific Capacity: _____ gpm/ft
Well Purpose: Ground-water monitoring well

Remarks:

Prepared by: D. Colton

GERAGHTY & MILLER, INC.
Ground-Water Consultants

# WELL CONSTRUCTION LOG

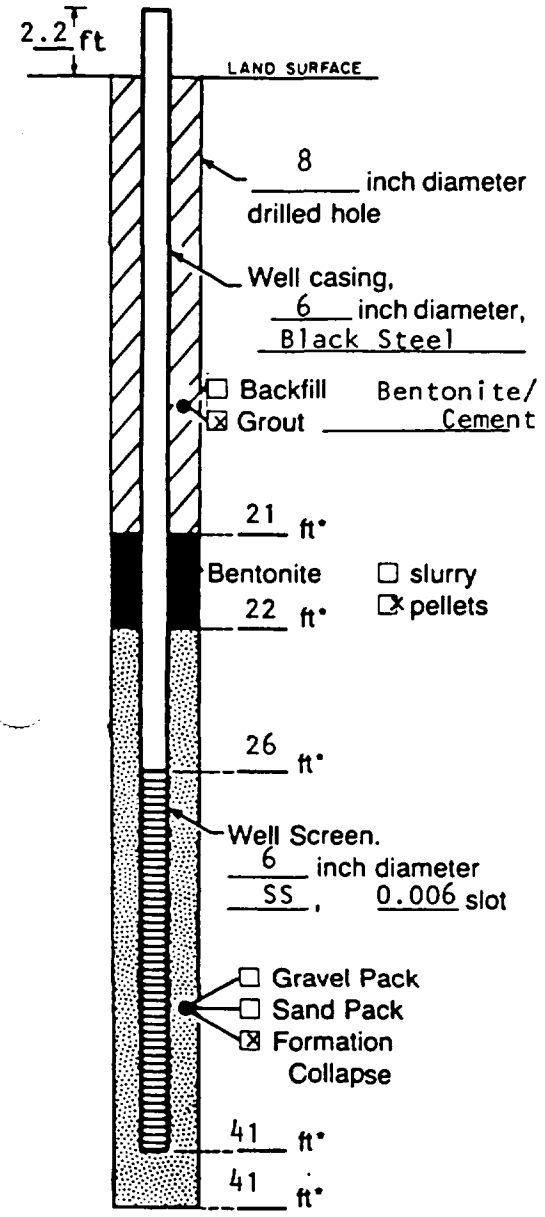


Measuring Point is Top of Well Casing Unless Otherwise Noted.

*Depth Below Land Surface

Project: Monsanto Company  Well: GM-2
Town/City: Sauget
County: St. Clair  State: IL
Permit No.:
Land-Surface Elevation and Datum: _____ feet  ☒ surveyed  ☐ estimated
Measuring Point 417.37 Ft (MSL)
Installation Dates(s): 11/8/83
Drilling Method: Mud Rotary
Drilling Contractor: John Mathes & Assoc.
Drilling Fluid: Bentonite

Development Techniques(s) and Date(s)
Surged with compressed air.

Fluid Loss During Drilling: _____ gallons
Water Removed During Development: 480 gallons
Static Depth to Water: _____ feet below M.P.
Pumping Depth to Water: _____ feet below M.P.
Pumping Duration: 4 hours
Yield: 2 gpm  Date: _____
Specific Capacity: _____ gpm/ft
Well Purpose: Ground-water monitoring well

Remarks:

Prepared by: D. Colton

GERAGHTY & MILLER, INC.
*Ground-Water Consultants*

# WELL CONSTRUCTION LOG

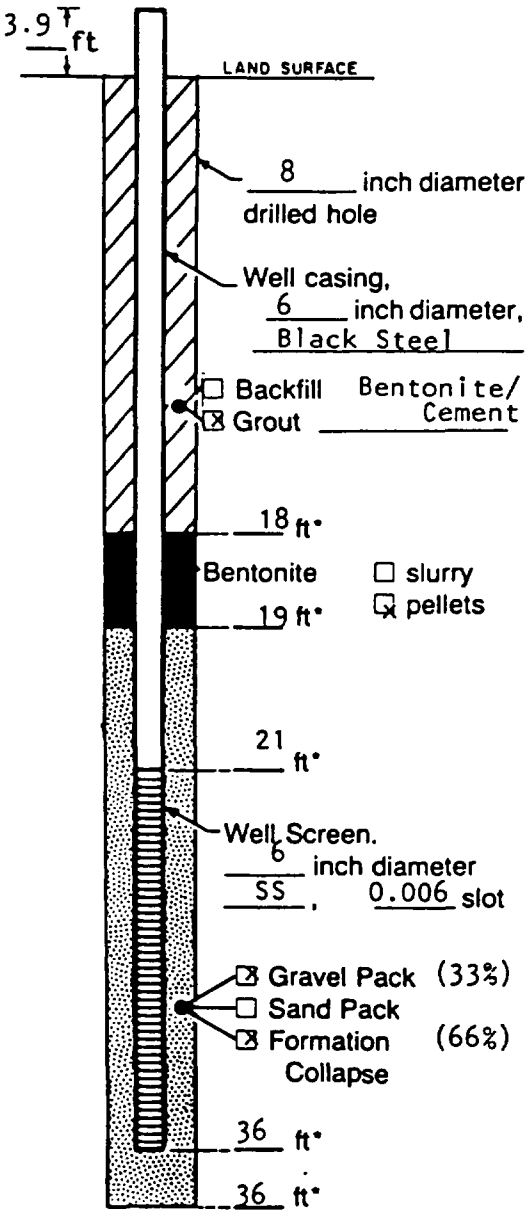


Measuring Point is Top of Well Casing Unless Otherwise Noted.

*Depth Below Land Surface

Project: Monsanto Company  Well: GM-3
Town/City: Sauget
County: St. Clair  State: IL
Permit No.:
Land-Surface Elevation and Datum: _____ feet  ☒ surveyed
Monitoring Point 416.31 Ft (MSL)  ☐ estimated
Installation Dates(s): 11/7/83
Drilling Method: Mud Rotary
Drilling Contractor: John Mathes & Assoc.
Drilling Fluid: Bentonite

Development Techniques(s) and Date(s)
Surged with compressed air.

Fluid Loss During Drilling: _____ gallons
Water Removed During Development: 480 gallons
Static Depth to Water: _____ feet below M.P.
Pumping Depth to Water: _____ feet below M.P.
Pumping Duration: 4 hours
Yield: 2 gpm  Date: _____
Specific Capacity: _____ gpm/ft
Well Purpose: Ground-water monitoring well

Remarks:

Prepared by: D. Colton

GERAGHTY & MILLER, INC.
*Ground-Water Consultants*

# WELL CONSTRUCTION LOG

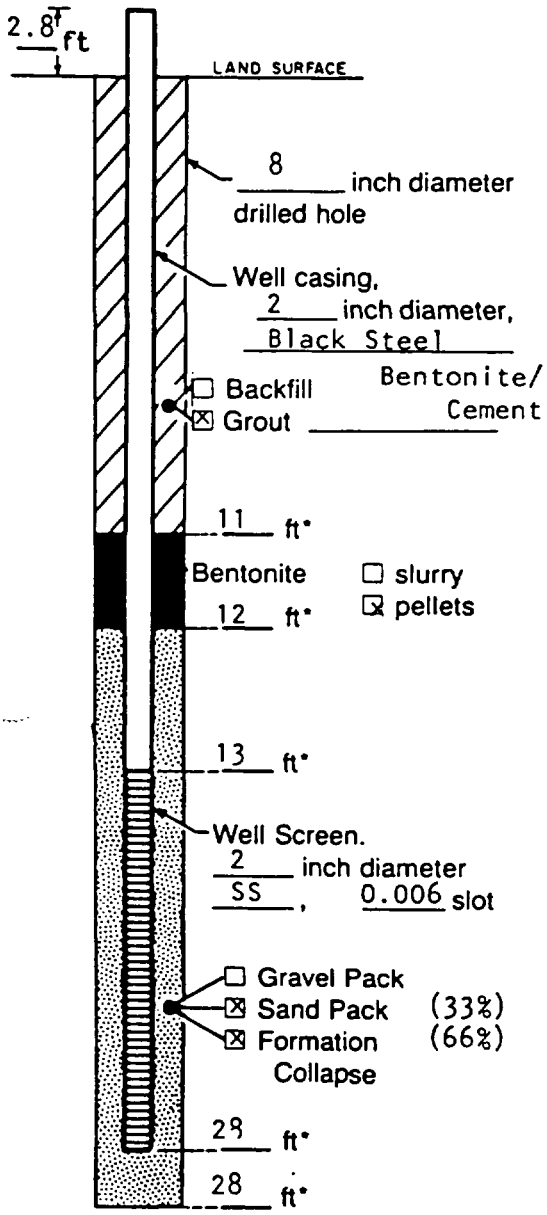


Measuring Point is Top of Well Casing Unless Otherwise Noted.

*Depth Below Land Surface

Project: Monsanto Company — Well: GM-4A
Town/City: Sauget
County: St. Clair — State: Illinois
Permit No.:
Land-Surface Elevation and Datum: _____ feet ☒ surveyed ☐ estimated
Measuring Point 406.43 Ft (MSL)
Installation Dates(s): 11/2/83
Drilling Method: Hollow Stem Auger
Drilling Contractor: John Mathes & Assoc.
Drilling Fluid: Water

Development Techniques(s) and Date(s)
Surged with compressed air; pumped with bladder pump.

Fluid Loss During Drilling: 150 gallons
Water Removed During Development: 240 gallons
Static Depth to Water: _____ feet below M.P.
Pumping Depth to Water: _____ feet below M.P.
Pumping Duration: 4 hours
Yield: 1 gpm — Date: _____
Specific Capacity: _____ gpm/ft
Well Purpose: Ground-water monitoring well

Remarks:

Prepared by: D. Colton

GERAGHTY & MILLER, INC.
Ground-Water Consultants

# WELL CONSTRUCTION LOG

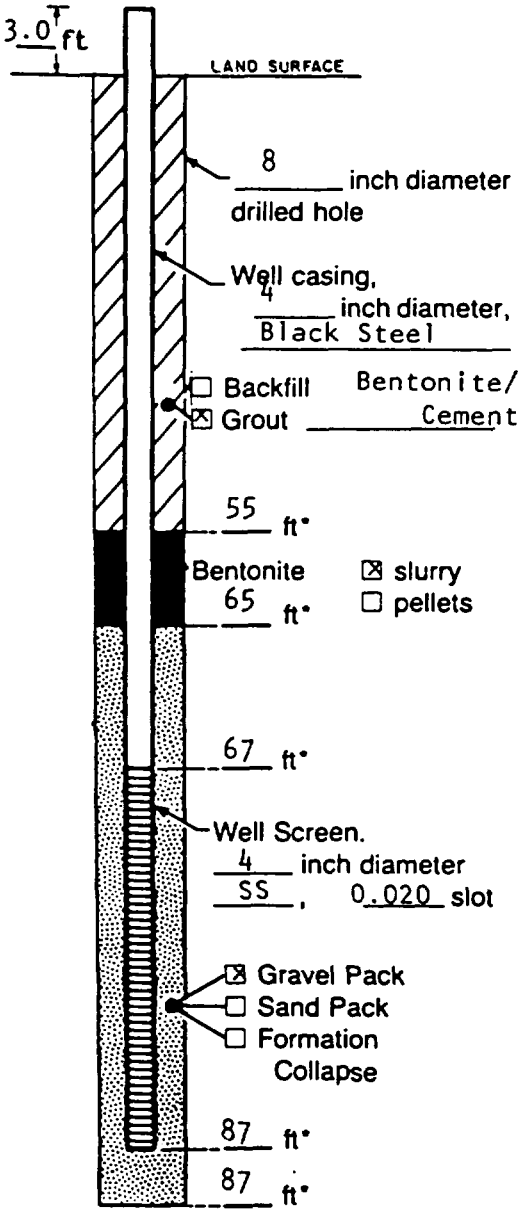


Measuring Point is Top of Well Casing Unless Otherwise Noted.

*Depth Below Land Surface

Project: Monsanto Company  Well: GM-4B
Town/City: Sauget
County: St. Clair  State: IL
Permit No.:
Land-Surface Elevation and Datum: _____ feet  ☒ surveyed
Measuring Point 406.70 Ft (MSL)  ☐ estimated
Installation Dates(s): 7/17/84
Drilling Method: Mud Rotary
Drilling Contractor: John Mathes & Assoc.
Drilling Fluid: Bentonite

Development Techniques(s) and Date(s)
Surged with compressed air.

Fluid Loss During Drilling: _____ gallons
Water Removed During Development: 1200 gallons
Static Depth to Water: _____ feet below M.P.
Pumping Depth to Water: _____ feet below M.P.
Pumping Duration: 2 hours
Yield: 10 gpm  Date: _____
Specific Capacity: _____ gpm/ft
Well Purpose: Ground-water monitoring well

Remarks:

Prepared by: D. Colton

GERAGHTY & MILLER, INC.
Ground-Water Consultants

# WELL CONSTRUCTION LOG

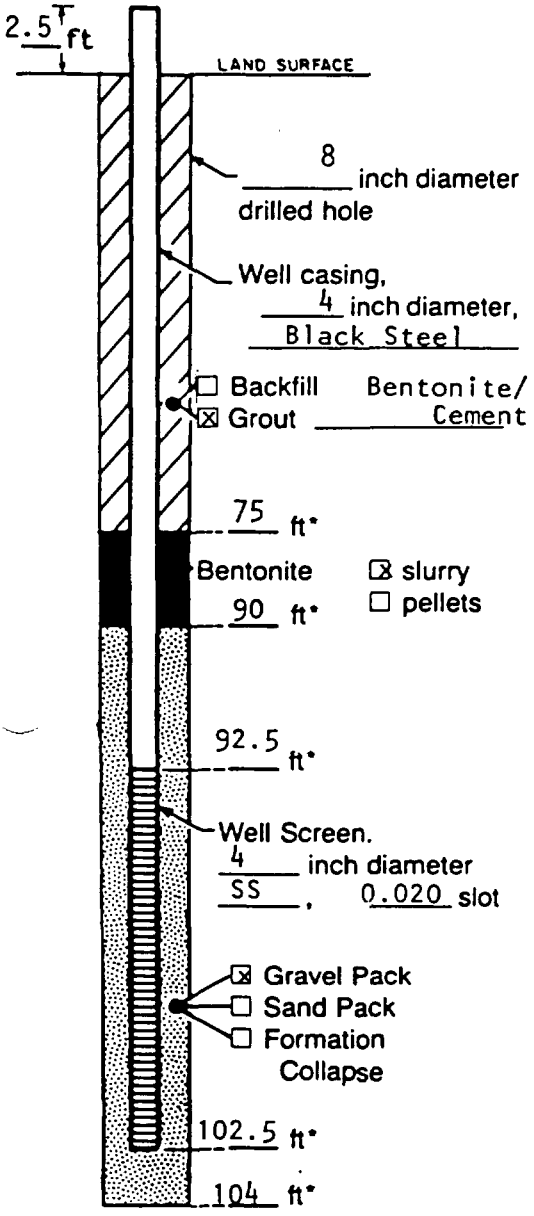


Measuring Point is Top of Well Casing Unless Otherwise Noted.

*Depth Below Land Surface

Project: Monsanto Company  Well: GM-4C
Town/City: Sauget
County: St. Clair  State: IL
Permit No.:
Land-Surface Elevation and Datum: _____ feet  ☒ surveyed ☐ estimated
Measuring Point 406.51 Ft (MSL)
Installation Dates(s): 1/11/84
Drilling Method: Mud Rotary
Drilling Contractor: John Mathes & Assoc.
Drilling Fluid: Bentonite

Development Techniques(s) and Date(s)
Surged with compressed air.

Fluid Loss During Drilling: _____ gallons
Water Removed During Development: 1200 gallons
Static Depth to Water: _____ feet below M.P.
Pumping Depth to Water: _____ feet below M.P.
Pumping Duration: 2 hours
Yield: 10 gpm  Date: _____
Specific Capacity: _____ gpm/ft
Well Purpose: Ground-water monitoring well

Remarks:

Prepared by: D. Colton

GERAGHTY & MILLER, INC.
Ground-Water Consultants

# WELL CONSTRUCTION LOG

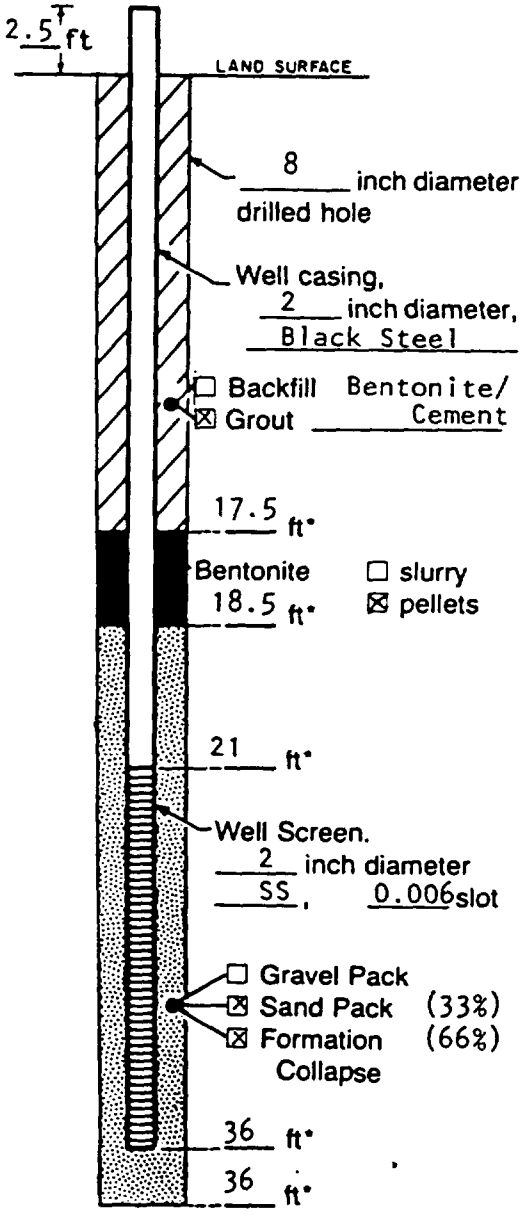


Measuring Point is Top of Well Casing Unless Otherwise Noted.

*Depth Below Land Surface

Project: Monsanto Company Well: GM-5
Town/City: Sauget
County: St. Clair State: IL
Permit No.:
Land-Surface Elevation and Datum: _____ feet ☒ surveyed
Measuring Point 414.94 Ft (MSL) ☐ estimated
Installation Dates(s): 11/3/83
Drilling Method: Hollow Stem Auger
Drilling Contractor: John Mathes & Assoc.
Drilling Fluid: Water

Development Techniques(s) and Date(s)
Pumped with bladder pump; surged with compressed air.

Fluid Loss During Drilling: 200 gallons
Water Removed During Development: 240 gallons
Static Depth to Water: _____ feet below M.P.
Pumping Depth to Water: _____ feet below M.P.
Pumping Duration: 4 hours
Yield: 1 gpm Date: _____
Specific Capacity: _____ gpm/ft
Well Purpose: Ground-Water Monitoring well

Remarks:

Prepared by: D. Colton

GERAGHTY & MILLER, INC.
*Ground-Water Consultants*

# WELL CONSTRUCTION LOG

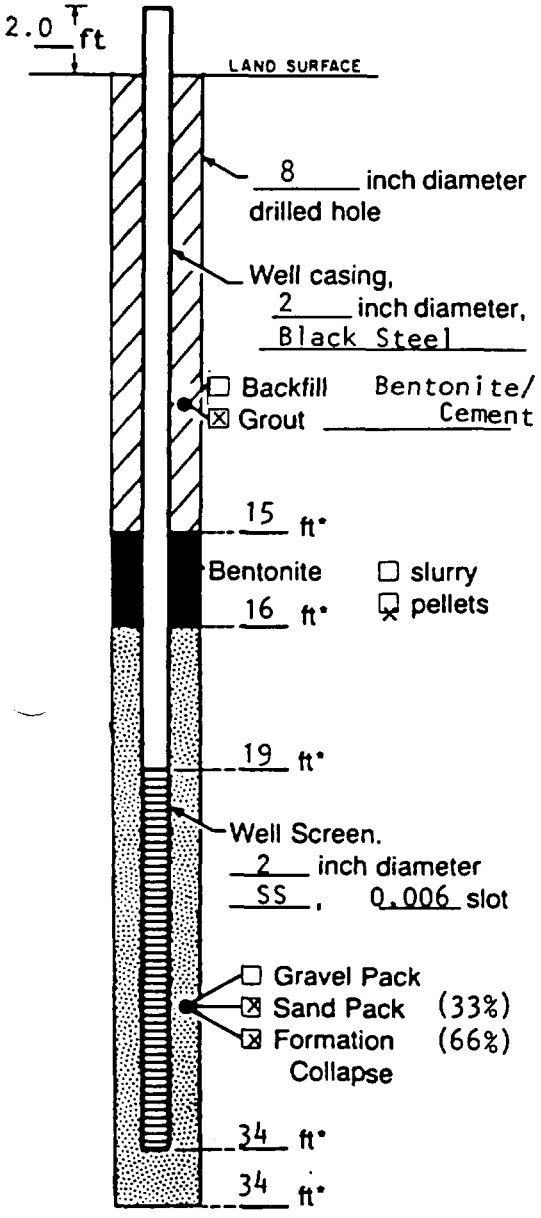


Measuring Point is Top of Well Casing Unless Otherwise Noted.

*Depth Below Land Surface

Project: Monsanto Company  Well: GM-6A
Town/City: Sauget
County: St. Clair  State: IL
Permit No.:
Land-Surface Elevation and Datum: _____ feet  ☒ surveyed
Measuring Point 414.59 Ft (MSL)  ☐ estimated
Installation Dates(s): 11/2/83
Drilling Method: Hollow Stem Auger
Drilling Contractor: John Mathes & Assoc.
Drilling Fluid: Water

Development Techniques(s) and Date(s)
Pumped with bladder pump; surged with compressed air.

Fluid Loss During Drilling: 200 gallons
Water Removed During Development: 240 gallons
Static Depth to Water: _____ feet below M.P.
Pumping Depth to Water: _____ feet below M.P.
Pumping Duration: 4 hours
Yield: 1 gpm  Date: _____
Specific Capacity: _____ gpm/ft
Well Purpose: Ground-water monitoring well

Remarks:

Prepared by: D. Colton

GERAGHTY & MILLER, INC.
Ground-Water Consultants

# WELL CONSTRUCTION LOG

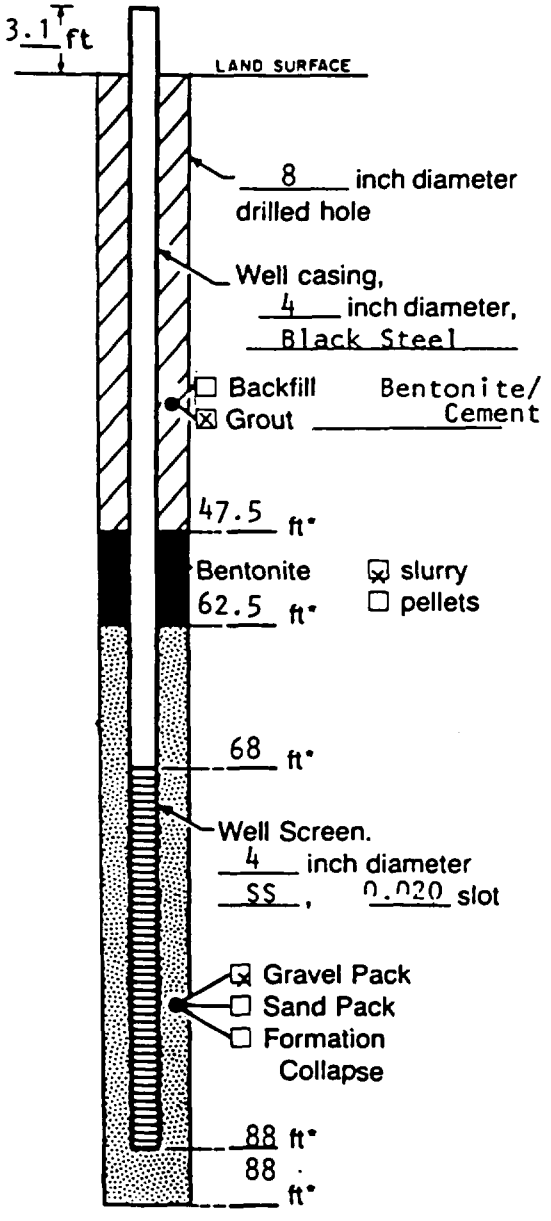


Measuring Point is Top of Well Casing Unless Otherwise Noted.

*Depth Below Land Surface

Project: Monsanto Company  Well: GM-6B
Town/City: Sauget
County: St. Clair  State: IL
Permit No.:
Land-Surface Elevation and Datum: _____ feet  ☒ surveyed
Measuring Point 416.04 Ft (MSL)  ☐ estimated
Installation Dates(s): 7/26/84
Drilling Method: Mud Rotary
Drilling Contractor: John Mathes & Assoc.
Drilling Fluid: Bentonite

Development Techniques(s) and Date(s)
Surged with compressed air.

Fluid Loss During Drilling: _____ gallons
Water Removed During Development: 1200 gallons
Static Depth to Water: _____ feet below M.P.
Pumping Depth to Water: _____ feet below M.P.
Pumping Duration: 2 hours
Yield: 10 gpm  Date: _____
Specific Capacity: _____ gpm/ft
Well Purpose: Ground-water monitoring well

Remarks:

Prepared by: D. Colton

GERAGHTY & MILLER, INC.
Ground-Water Consultants

# WELL CONSTRUCTION LOG

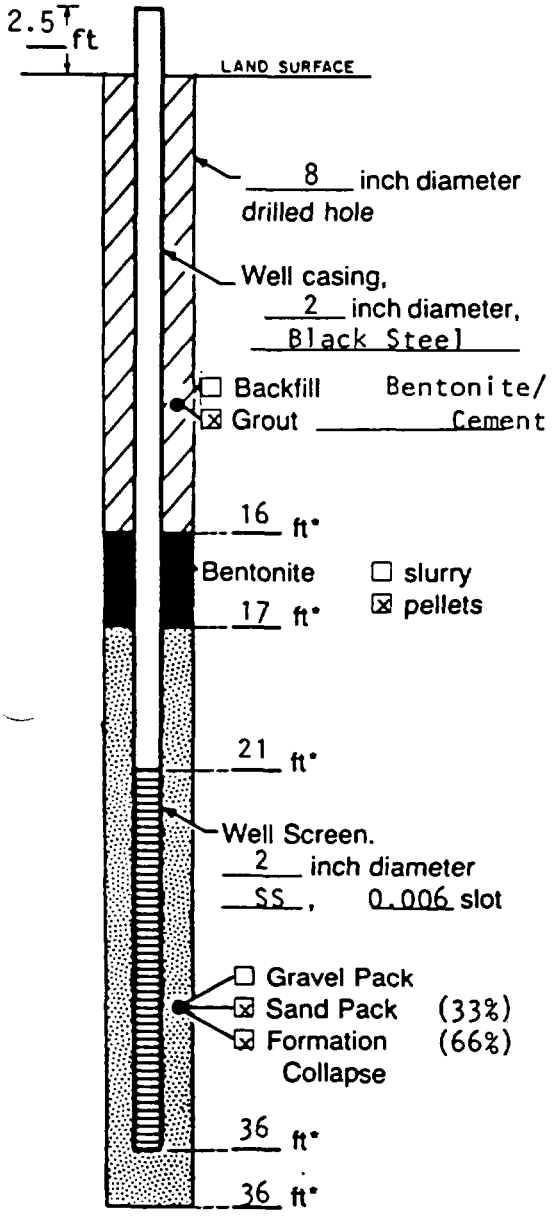


Measuring Point is Top of Well Casing Unless Otherwise Noted.

*Depth Below Land Surface

Project Monsanto Company Well GM-7

Town/City Sauget

County St. Clair State IL

Permit No.

Land-Surface Elevation and Datum _____ feet ☒ surveyed ☐ estimated

Measuring Point 414.95 Ft (MSL)

Installation Dates(s) 11/3/83

Drilling Method Hollow Stem Auger

Drilling Contractor John Mathes & Assoc.

Drilling Fluid Water

Development Techniques(s) and Date(s)
Pumped with bladder pump; surged with compressed air.

Fluid Loss During Drilling _____ gallons

Water Removed During Development 200 gallons

Static Depth to Water 240 feet below M.P.

Pumping Depth to Water _____ feet below M.P.

Pumping Duration 4 hours

Yield 1 gpm Date _____

Specific Capacity _____ gpm/ft

Well Purpose Ground-water monitoring well

Remarks

Prepared by D. Colton

GERAGHTY & MILLER, INC.
Ground-Water Consultants

# WELL CONSTRUCTION LOG

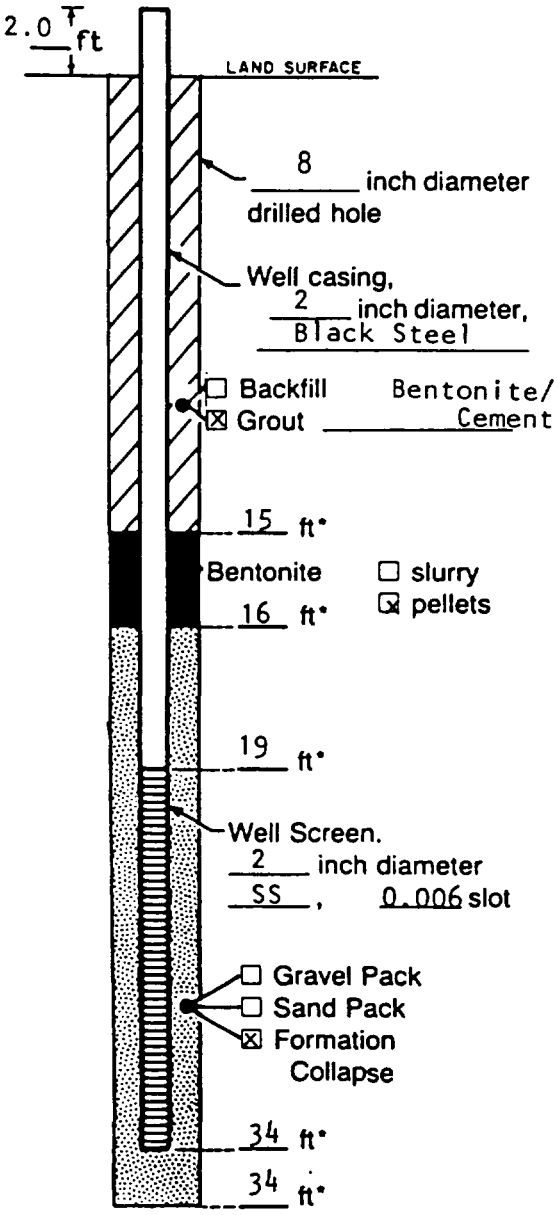


Measuring Point is Top of Well Casing Unless Otherwise Noted.

*Depth Below Land Surface

Project: Monsanto Company Well: GM-8
Town/City: Sauget
County: St. Clair State: IL
Permit No.:
Land-Surface Elevation and Datum: _____ feet ☒ surveyed
Measuring Point 418.49 Ft (MSL) ☐ estimated
Installation Dates(s): 11/2/83
Drilling Method: Hollow Stem Auger
Drilling Contractor: John Mathes & Assoc.
Drilling Fluid: Water

Development Techniques(s) and Date(s)
Pumped with bladder pump; surged with compressed air.

Fluid Loss During Drilling: 250 gallons
Water Removed During Development: 270 gallons
Static Depth to Water: _____ feet below M.P.
Pumping Depth to Water: _____ feet below M.P.
Pumping Duration: 4.5 hours
Yield: 1 gpm Date: _____
Specific Capacity: _____ gpm/ft
Well Purpose: Ground-water monitoring well

Remarks:

Prepared by: D. Colton

GERAGHTY & MILLER, INC.
Ground-Water Consultants

# WELL CONSTRUCTION LOG

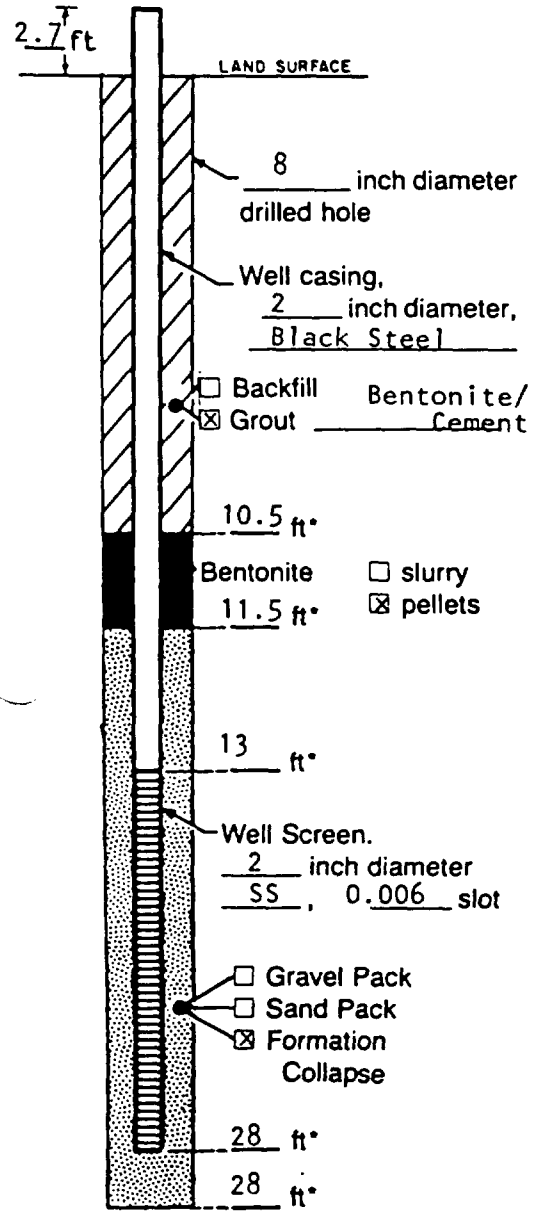


Measuring Point is Top of Well Casing Unless Otherwise Noted.

*Depth Below Land Surface

Project: Monsanto Company  Well: GM-9A
Town/City: Sauget
County: St. Clair  State: IL
Permit No.:
Land-Surface Elevation and Datum: _____ feet  ☒ surveyed
Measuring Point 414.47 Ft (MSL)  ☐ estimated
Installation Dates(s): 11/10/83
Drilling Method: Hollow Stem Auger
Drilling Contractor: John Mathes & Assoc.
Drilling Fluid: Water

Development Techniques(s) and Date(s)
Pumped with bladder pump; surged with compressed air

Fluid Loss During Drilling: 200 gallons
Water Removed During Development: 240 gallons
Static Depth to Water: _____ feet below M.P.
Pumping Depth to Water: _____ feet below M.P.
Pumping Duration: 4 hours
Yield: 1 gpm  Date: _____
Specific Capacity: _____ gpm/ft
Well Purpose: Ground-water monitoring well

Remarks:

Prepared by: D. Colton

GERAGHTY & MILLER, INC.
Ground-Water Consultants

# WELL CONSTRUCTION LOG

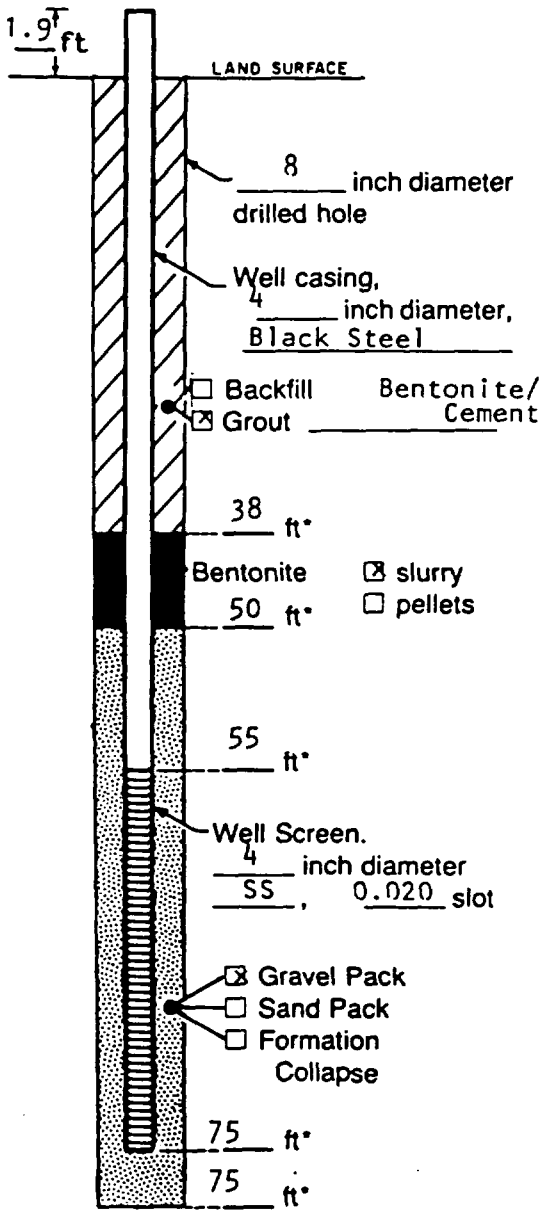


Measuring Point is Top of Well Casing Unless Otherwise Noted.

*Depth Below Land Surface

Project: Monsanto Company  Well: GM-9B
Town/City: Sauget
County: St. Clair  State: Il
Permit No.:
Land-Surface Elevation and Datum: _____ feet  ☒ surveyed  ☐ estimated
Measuring Point 412.36 Ft (MSL)
Installation Dates(s): 8/17/84
Drilling Method: Mud Rotary
Drilling Contractor: John Mathes & Assoc.
Drilling Fluid: Bentonite

Development Techniques(s) and Date(s)
Surged with compressed air.

Fluid Loss During Drilling: _____ gallons
Water Removed During Development: 1200 gallons
Static Depth to Water: _____ feet below M.P.
Pumping Depth to Water: _____ feet below M.P.
Pumping Duration: 2 hours
Yield: 10 gpm  Date: _____
Specific Capacity: _____ gpm/ft
Well Purpose: Ground-water monitoring well

Remarks:

Prepared by: D. Colton

GERAGHTY & MILLER, INC.
Ground-Water Consultants

# WELL CONSTRUCTION LOG

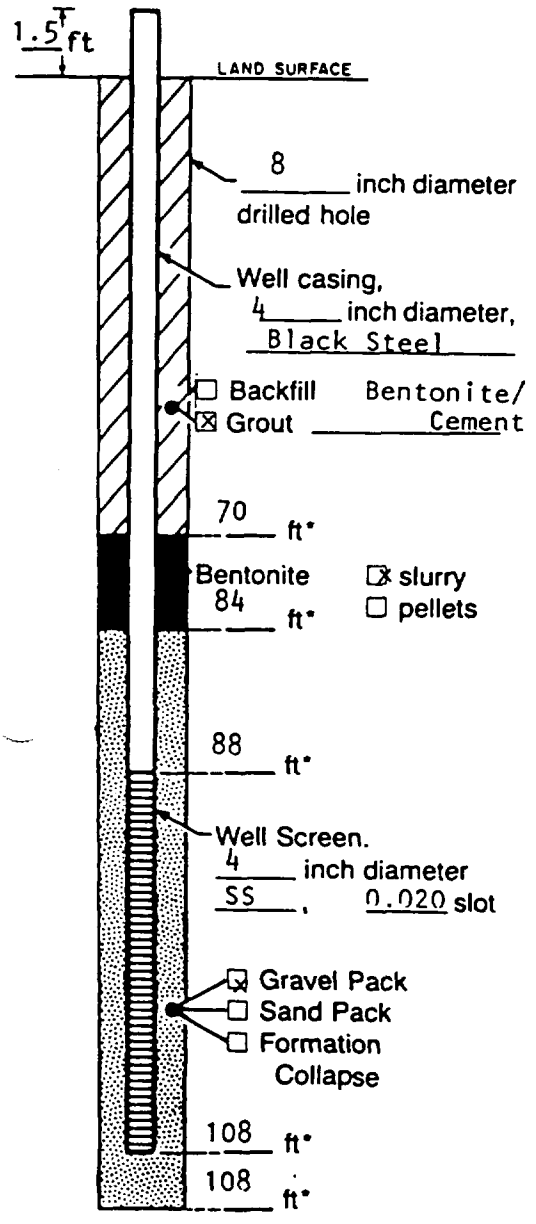


Measuring Point is Top of Well Casing Unless Otherwise Noted.

*Depth Below Land Surface

Project: Monsanto Company  Well: GM-9C
Town/City: Sauget
County: St. Clair  State: IL
Permit No.:
Land-Surface Elevation and Datum: _____ feet  ☒ surveyed
Measuring Point 416.97 Ft (MSL)  ☐ estimated
Installation Dates(s): 8/15/84
Drilling Method: Mud Rotary
Drilling Contractor: John Mathes & Assoc.
Drilling Fluid: Bentonite

Development Techniques(s) and Date(s)
Surged with compressed air.

Fluid Loss During Drilling: _____ gallons
Water Removed During Development: 1200 gallons
Static Depth to Water: _____ feet below M.P.
Pumping Depth to Water: _____ feet below M.P.
Pumping Duration: 2 hours
Yield: 10 gpm  Date: _____
Specific Capacity: _____ gpm/ft
Well Purpose: Ground-water monitoring well

Remarks:

Prepared by: D. Colton

GERAGHTY & MILLER, INC.
Ground-Water Consultants

# WELL CONSTRUCTION LOG

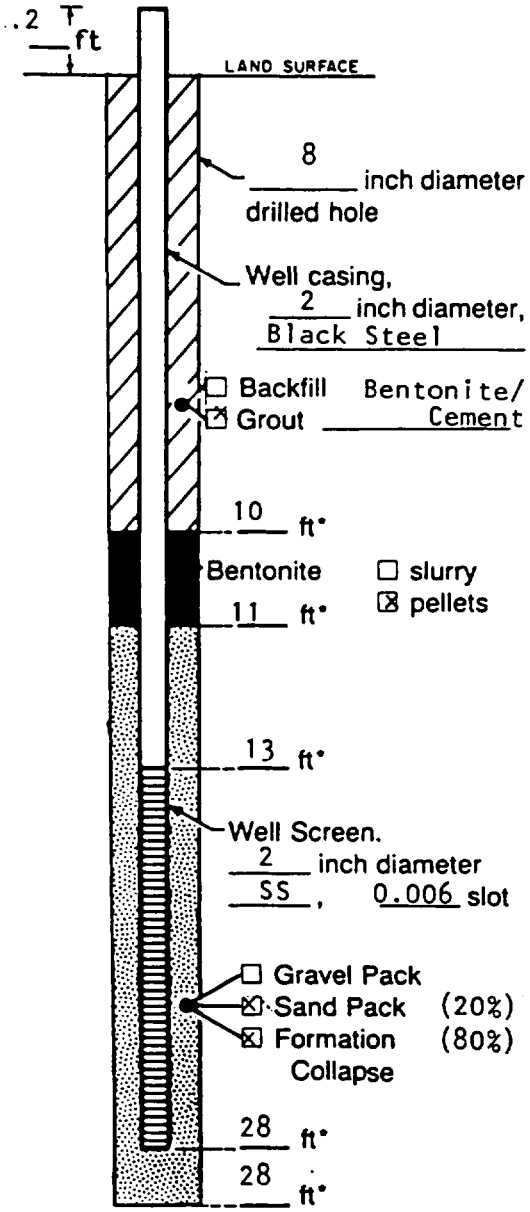


Measuring Point is Top of Well Casing Unless Otherwise Noted.

*Depth Below Land Surface

Project: Monsanto Company  Well: GM-10A
Town/City: Sauget
County: St. Clair  State: IL
Permit No.:
Land-Surface Elevation and Datum: _____ feet  ☒ surveyed
Measuring Point 412.97 Ft (MSL)  ☐ estimated
Installation Dates(s): 11/9/83
Drilling Method: Hollow Stem Auger
Drilling Contractor: John Mathes & Assoc.
Drilling Fluid: Water

Development Techniques(s) and Date(s)
Pumped with bladder pump; surged with compressed air.

Fluid Loss During Drilling: 200 gallons
Water Removed During Development: 240 gallons
Static Depth to Water: _____ feet below M.P.
Pumping Depth to Water: _____ feet below M.P.
Pumping Duration: 4 hours
Yield: 1 gpm  Date: _____
Specific Capacity: _____ gpm/ft
Well Purpose: Ground-water monitoring well

Remarks:

Prepared by: D. Colton

GERAGHTY & MILLER, INC.
*Ground-Water Consultants*

# WELL CONSTRUCTION LOG

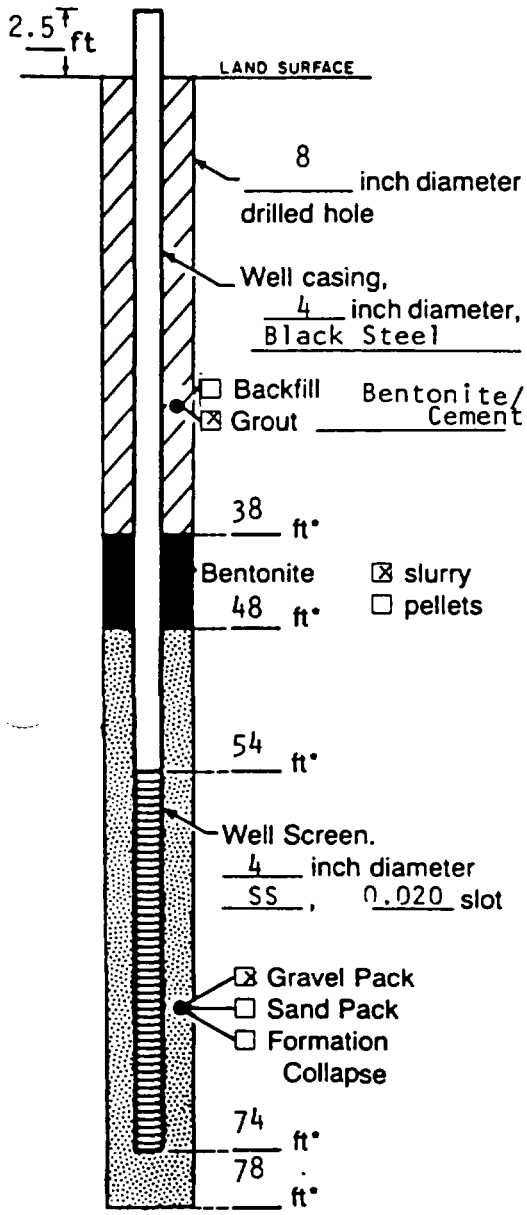


Measuring Point is Top of Well Casing Unless Otherwise Noted.

*Depth Below Land Surface

Project: Monsanto Company  Well: GM-10B
Town/City: Sauget
County: St. Clair  State: IL
Permit No.:
Land-Surface Elevation and Datum: _____ feet  ☒ surveyed  ☐ estimated
Measuring Point 413.90 Ft (MSL)
Installation Dates(s): 1/22/85
Drilling Method: Mud Rotary
Drilling Contractor: John Mathes & Assoc.
Drilling Fluid: Bentonite

Development Techniques(s) and Date(s)
Surged with compressed air.

Fluid Loss During Drilling: _____ gallons
Water Removed During Development: 1200 gallons
Static Depth to Water: _____ feet below M.P.
Pumping Depth to Water: _____ feet below M.P.
Pumping Duration: 2 hours
Yield: 10 gpm  Date: _____
Specific Capacity: _____ gpm/ft
Well Purpose: Ground-water monitoring well

Remarks:

Prepared by: D. Colton

GERAGHTY & MILLER, INC.
Ground-Water Consultants

# WELL CONSTRUCTION LOG

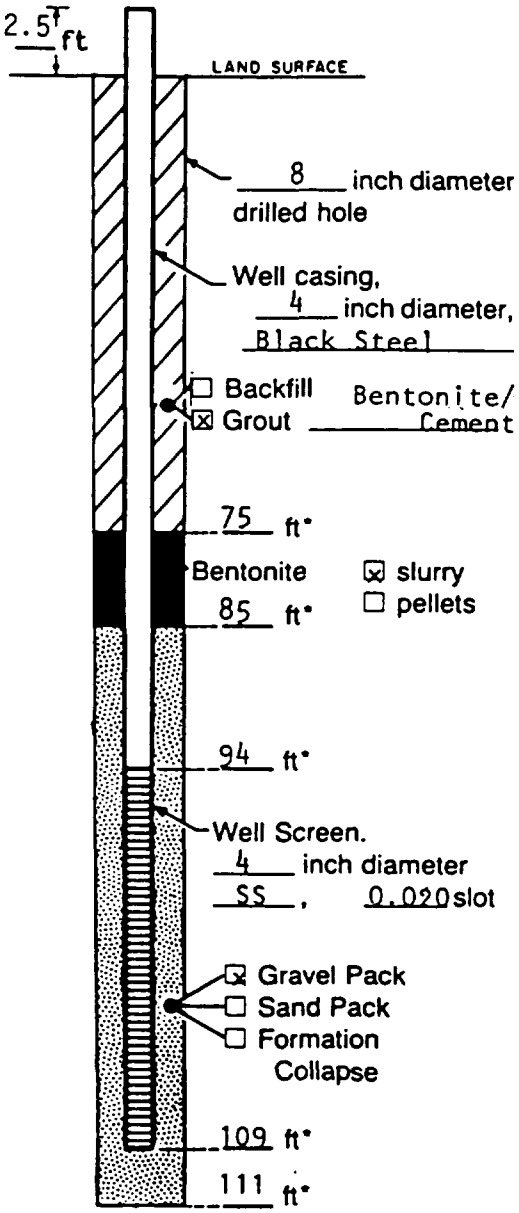


Measuring Point is Top of Well Casing Unless Otherwise Noted.

*Depth Below Land Surface

Project: Monsanto Company Well: GM-10C
Town/City: Sauget
County: St. Clair State: Il
Permit No.:
Land-Surface Elevation and Datum: _____ feet ☒ surveyed ☐ estimated
Measuring Point 413.78 Ft (MSL)
Installation Dates(s): 1/18/85
Drilling Method: Mud Rotary
Drilling Contractor: John Mathes & Assoc.
Drilling Fluid: Bentonite

Development Techniques(s) and Date(s)
Surged with compressed air.

Fluid Loss During Drilling: _____ gallons
Water Removed During Development: 1200 gallons
Static Depth to Water: _____ feet below M.P.
Pumping Depth to Water: _____ feet below M.P.
Pumping Duration: 2 hours
Yield: 10 gpm Date: _____
Specific Capacity: _____ gpm/ft
Well Purpose: Ground-water monitoring well

Remarks:

Prepared by: D. Colton

GERAGHTY & MILLER, INC.
*Ground-Water Consultants*

# WELL CONSTRUCTION LOG

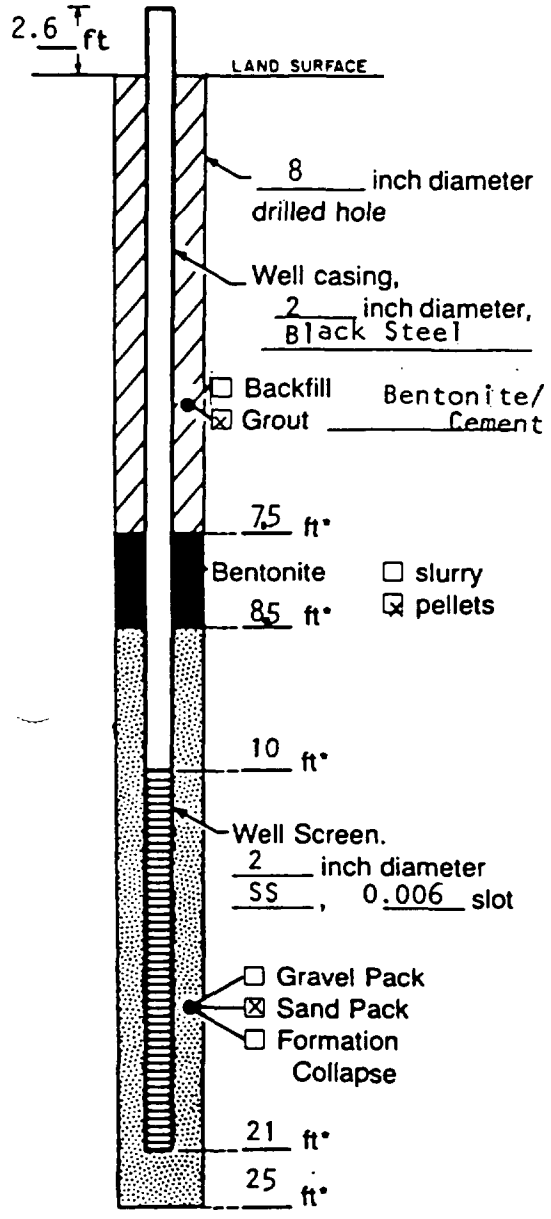


Measuring Point is Top of Well Casing Unless Otherwise Noted.

*Depth Below Land Surface

Project: Monsanto Company  Well: GM-11
Town/City: Sauget
County: St. Clair  State: IL
Permit No.:
Land-Surface Elevation and Datum: _____ feet  ☒ surveyed
Measuring Point 412.95 Ft (MSL)  ☐ estimated
Installation Dates(s): 10/31/83
Drilling Method: Hollow Stem Auger
Drilling Contractor: John Mathes & Assoc.
Drilling Fluid: Water

Development Techniques(s) and Date(s)
Pumped with bladder pump; surged with compressed air.

Fluid Loss During Drilling: 200 gallons
Water Removed During Development: 240 gallons
Static Depth to Water: _____ feet below M.P.
Pumping Depth to Water: _____ feet below M.P.
Pumping Duration: 4 hours
Yield: 1 gpm  Date: _____
Specific Capacity: _____ gpm/ft
Well Purpose: Ground-water monitoring well

Remarks:

Prepared by: D. Colton

GERAGHTY & MILLER, INC.
Ground-Water Consultants

# WELL CONSTRUCTION LOG

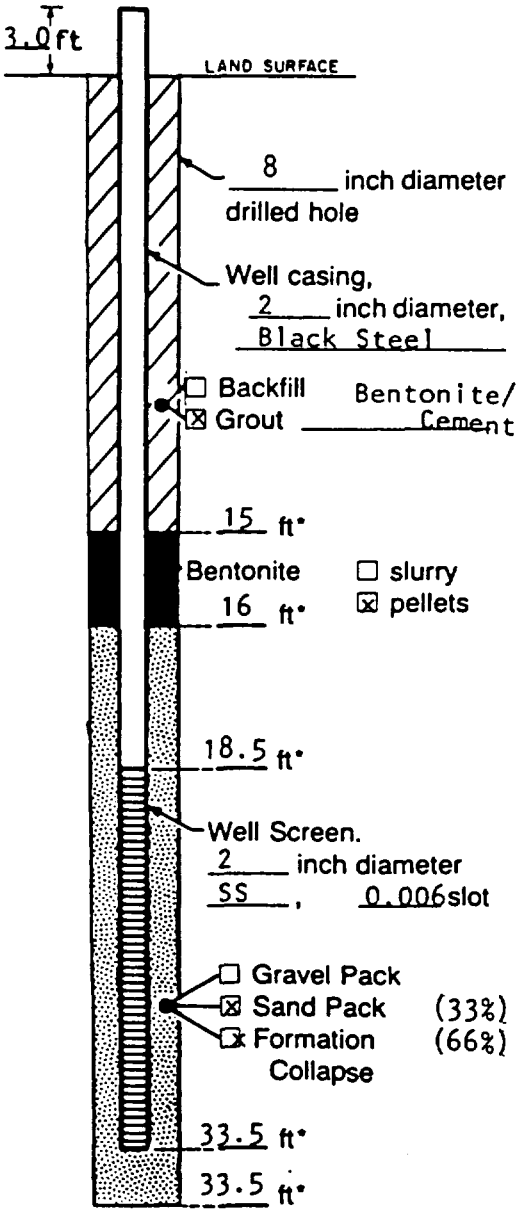


Measuring Point is Top of Well Casing Unless Otherwise Noted.

*Depth Below Land Surface

Project Monsanto Company Well GM-12A
Town/City Sauget
County St. Clair State IL
Permit No.
Land-Surface Elevation
and Datum _____ feet ☒ surveyed
Measuring Point 416.47 Ft (MSL) ☐ estimated
Installation Dates(s) 11/9/83
Drilling Method Hollow Stem Auger
Drilling Contractor John Mathes & Assoc.
Drilling Fluid Water

Development Techniques(s) and Date(s)
Pumped with bladder pump; surged with compressed air.

Fluid Loss During Drilling 200 gallons
Water Removed During Development 240 gallons
Static Depth to Water _____ feet below M.P.
Pumping Depth to Water _____ feet below M.P.
Pumping Duration 4 hours
Yield 1 gpm Date _____
Specific Capacity _____ gpm/ft
Well Purpose Ground-water monitoring well

Remarks

Prepared by D. Colton

GERAGHTY & MILLER, INC.
Ground-Water Consultants

# WELL CONSTRUCTION LOG

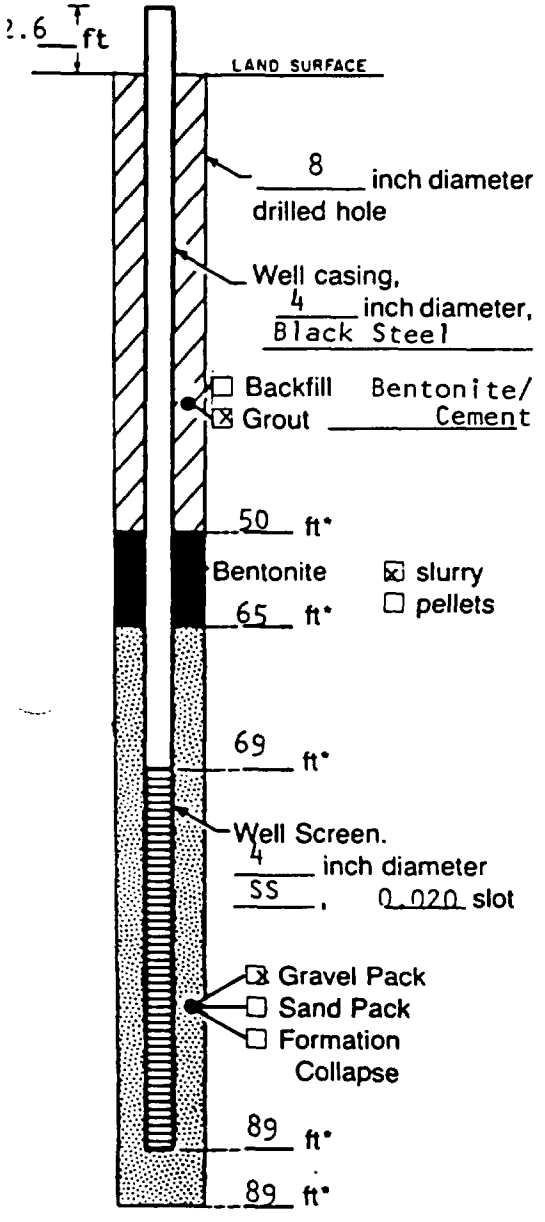


Measuring Point is Top of Well Casing Unless Otherwise Noted.

*Depth Below Land Surface

Project Monsanto Company Well GM-12B

Town/City Sauget

County St. Clair State IL

Permit No.

Land-Surface Elevation and Datum _____ feet ☒ surveyed

Measuring Point 416.80 Ft (MSL) ☐ estimated

Installation Dates(s) 8/13/84

Drilling Method Mud Rotary

Drilling Contractor John Mathes & Assoc.

Drilling Fluid Bentonite

Development Techniques(s) and Date(s)
Surged with compressed air.

Fluid Loss During Drilling _____ gallons

Water Removed During Development 1200 gallons

Static Depth to Water _____ feet below M.P.

Pumping Depth to Water _____ feet below M.P.

Pumping Duration 2 hours

Yield 10 gpm Date _____

Specific Capacity _____ gpm/ft

Well Purpose Ground-water monitoring well

Remarks

Prepared by D. Colton

GERAGHTY & MILLER, INC.
Ground-Water Consultants

# WELL CONSTRUCTION LOG

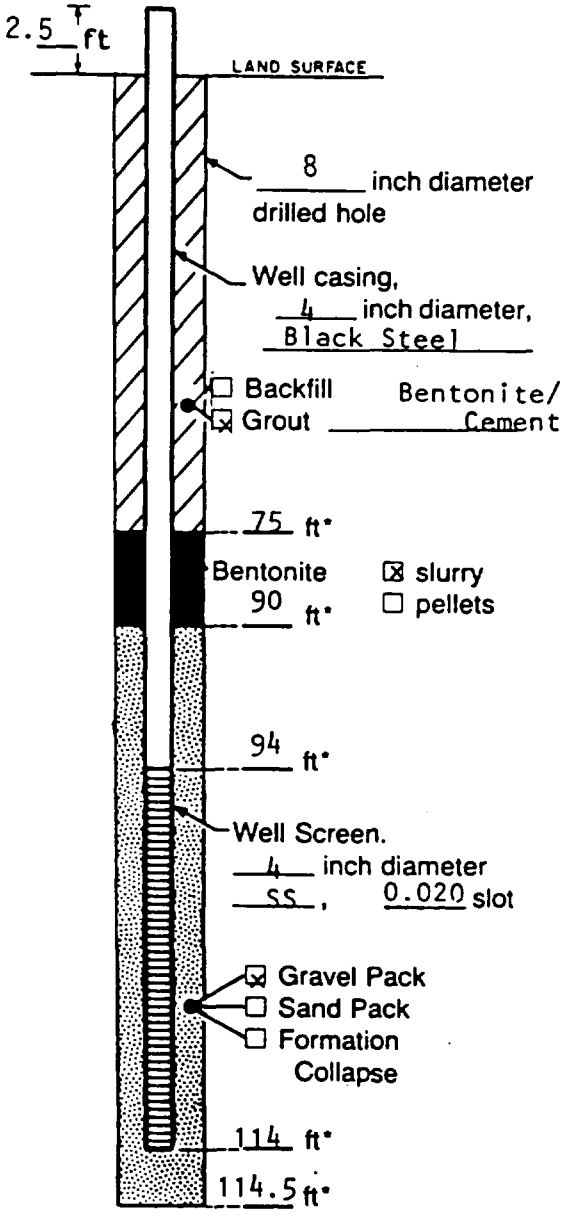


Measuring Point is Top of Well Casing Unless Otherwise Noted.

*Depth Below Land Surface

Project: Monsanto Company Sauget — Well: GM-12C
Town/City:
County: St. Clair — State: IL
Permit No.:
Land-Surface Elevation and Datum: _____ feet ☒ surveyed ☐ estimated
Measuring Point 416.79 Ft (MSL)
Installation Dates(s): 1/17/85
Drilling Method: Mud Rotary
Drilling Contractor: John Mathes & Assoc.
Drilling Fluid: Bentonite

Development Techniques(s) and Date(s)
Surged with compressed air.

Fluid Loss During Drilling: _____ gallons
Water Removed During Development: 1200 gallons
Static Depth to Water: _____ feet below M.P.
Pumping Depth to Water: _____ feet below M.P.
Pumping Duration: 2 hours
Yield: 10 gpm — Date: _____
Specific Capacity: _____ gpm/ft
Well Purpose: Ground-water monitoring well

Remarks:

Prepared by: D. Colton

GERAGHTY & MILLER, INC.
Ground-Water Consultants

# WELL CONSTRUCTION LOG

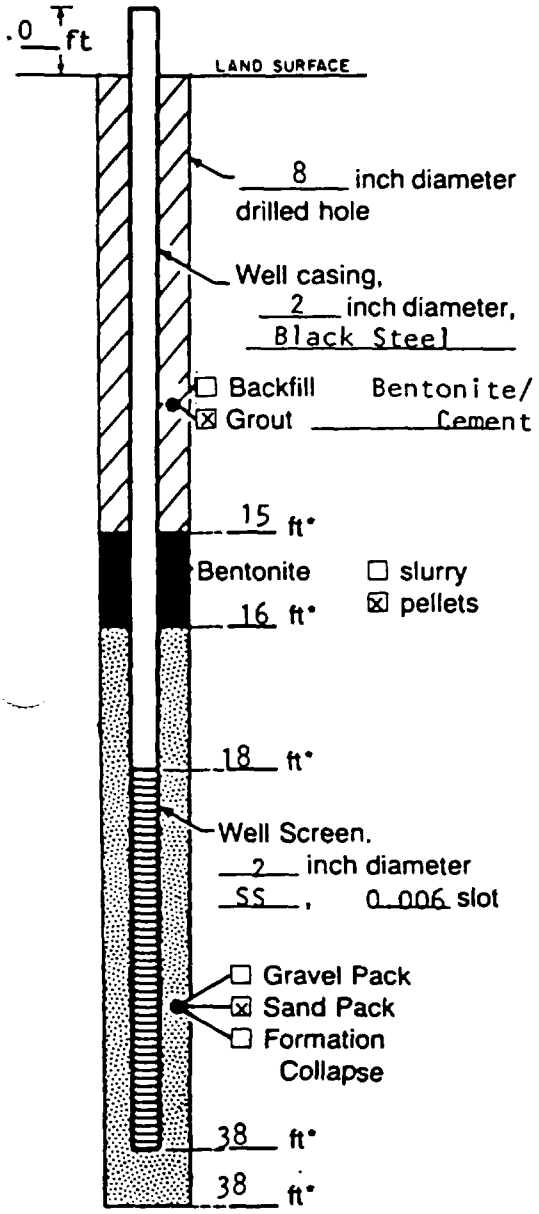


Measuring Point is Top of Well Casing Unless Otherwise Noted.

*Depth Below Land Surface

Project Monsanto Company Well GM-13
Town/City Sauget
County St. Clair State Il
Permit No.
Land-Surface Elevation
and Datum _____ feet ☒ surveyed
Measuring Point 415.47 Ft (MSL) ☐ estimated
Installation Dates(s) 8/15/84
Drilling Method Hollow Stem Auger
Drilling Contractor John Mathes & Assoc.
Drilling Fluid Water

Development Techniques(s) and Date(s)
Surged with compressed air.

Fluid Loss During Drilling 200 gallons
Water Removed During Development 210 gallons
Static Depth to Water _____ feet below M.P.
Pumping Depth to Water _____ feet below M.P.
Pumping Duration 3 hours
Yield 1.5 gpm Date _____
Specific Capacity _____ gpm/ft
Well Purpose Ground-water monitoring well

Remarks

Prepared by D. Colton

GERAGHTY & MILLER, INC.
Ground-Water Consultants

# WELL CONSTRUCTION LOG

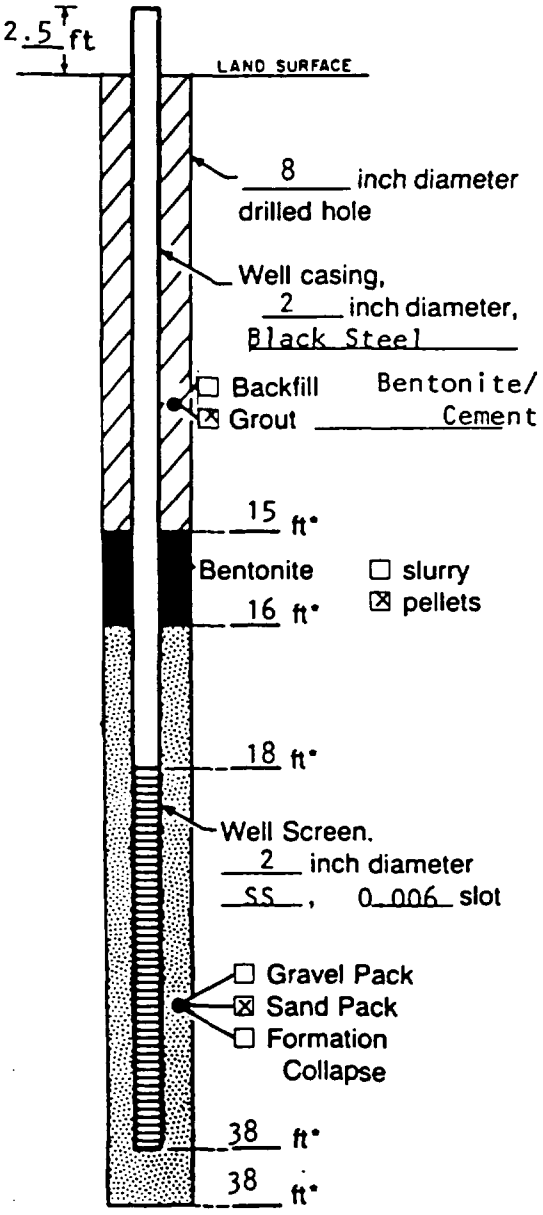


Measuring Point is Top of Well Casing Unless Otherwise Noted.

*Depth Below Land Surface

Project: Monsanto Company  Well: GM-14
Town/City: Sauget
County: St. Clair  State: Il
Permit No.:
Land-Surface Elevation and Datum: _____ feet  ☒ surveyed
Measuring Point 411.26 Ft (MSL)  ☐ estimated
Installation Dates(s): 8/16/84
Drilling Method: Hollow Stem Auger
Drilling Contractor: John Mathes & Assoc.
Drilling Fluid: Water

Development Techniques(s) and Date(s)
Surged with compressed air.

Fluid Loss During Drilling: 200 gallons
Water Removed During Development: 210 gallons
Static Depth to Water: _____ feet below M.P.
Pumping Depth to Water: _____ feet below M.P.
Pumping Duration: 3 hours
Yield: 1.5 gpm  Date: _____
Specific Capacity: _____ gpm/ft
Well Purpose: Ground-water monitoring well

Remarks:

Prepared by: D. Colton

GERAGHTY & MILLER, INC.
Ground-Water Consultants

# WELL CONSTRUCTION LOG

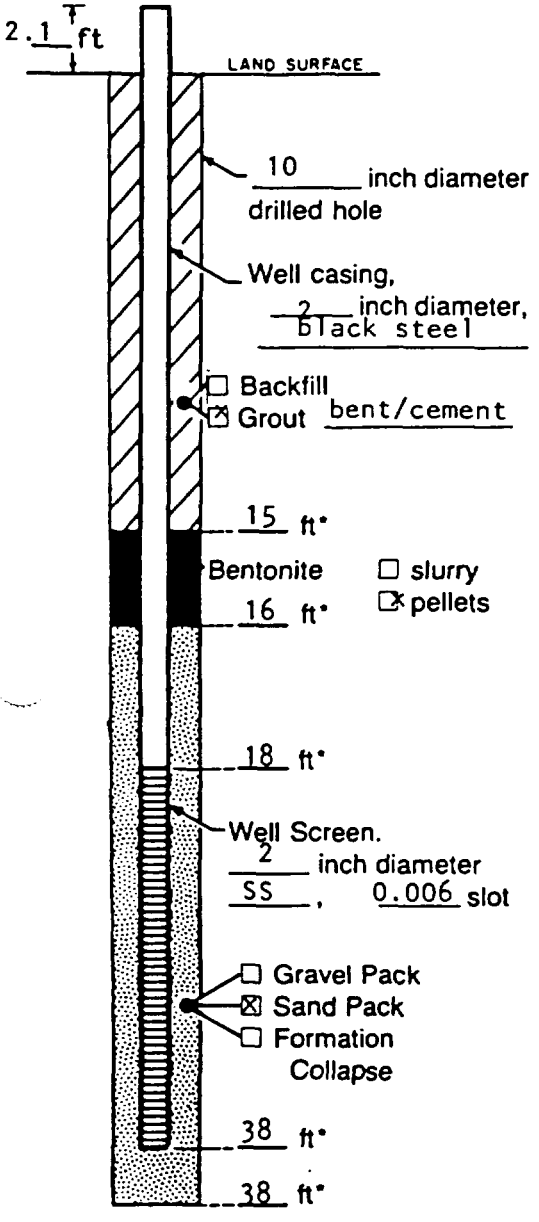


Measuring Point is Top of Well Casing Unless Otherwise Noted.

*Depth Below Land Surface

Project Monsanto Company Well GM-16A
Town/City Sauget
County St. Clair State IL
Permit No.
Land-Surface Elevation
and Datum _____ feet ☒ surveyed
Measuring point 412.03 ft (msl) ☐ estimated
Installation Dates(s) 8/14/86
Drilling Method hollow stem augers
Drilling Contractor John Mathes & Associates, Inc.
Drilling Fluid water

Development Techniques(s) and Date(s)
surged with compressed air

Fluid Loss During Drilling 300 gallons
Water Removed During Development 360 gallons
Static Depth to Water _____ feet below M.P.
Pumping Depth to Water _____ feet below M.P.
Pumping Duration 3 hours
Yield 2 gpm Date _____
Specific Capacity _____ gpm/ft
Well Purpose ground-water monitoring well

Remarks

Prepared by D. Colton

GERAGHTY & MILLER, INC.
Ground-Water Consultants

# WELL CONSTRUCTION LOG

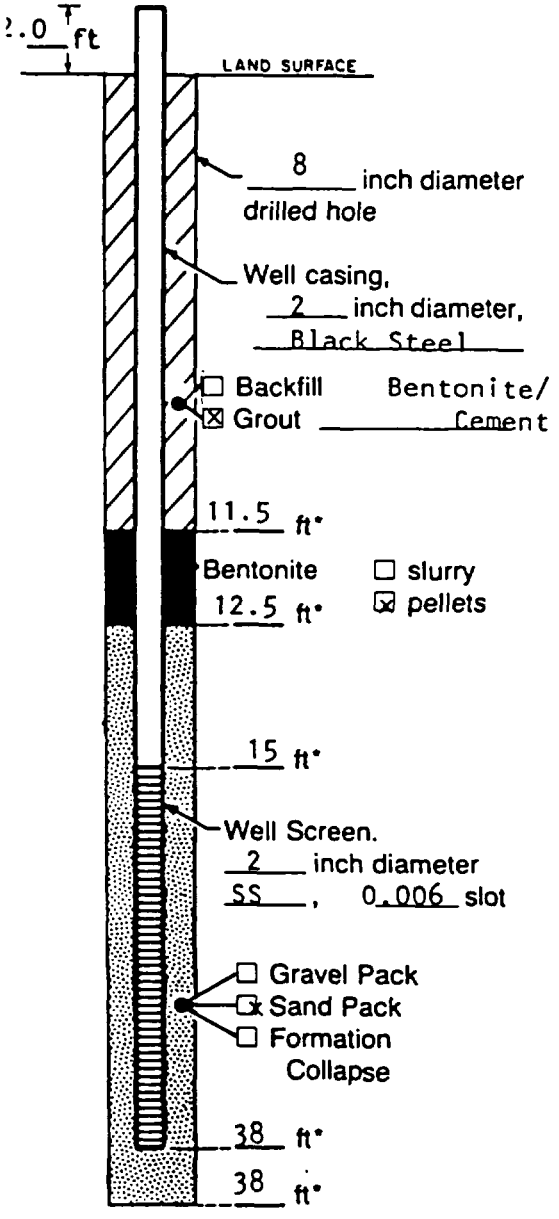


Measuring Point is Top of Well Casing Unless Otherwise Noted.

*Depth Below Land Surface

Project: Monsanto Company  Well: GM-15
Town/City: Sauget
County: St. Clair  State: IL
Permit No.:
Land-Surface Elevation and Datum: _____ feet  ☒ surveyed  ☐ estimated
measuring point 413.71 ft (msl)
Installation Dates(s): 8/17/84
Drilling Method: hollow stem auger
Drilling Contractor: John Mathes & Associates, Inc.
Drilling Fluid: water

Development Techniques(s) and Date(s)
surged with compressed air

Fluid Loss During Drilling: 200 gallons
Water Removed During Development: 210 gallons
Static Depth to Water: _____ feet below M.P.
Pumping Depth to Water: _____ feet below M.P.
Pumping Duration: 3 hours
Yield: 1.5 gpm  Date: _____
Specific Capacity: _____ gpm/ft
Well Purpose: ground-water monitoring well

Remarks:

Prepared by: D. Colton

GERAGHTY & MILLER, INC.
*Ground-Water Consultants*

# WELL CONSTRUCTION LOG

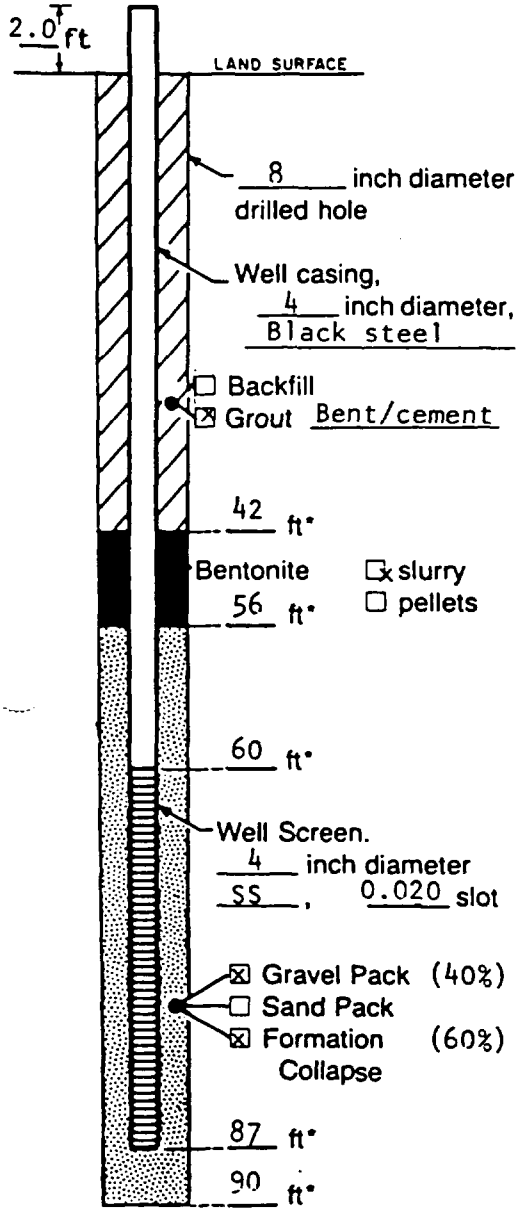


Measuring Point is Top of Well Casing Unless Otherwise Noted.

*Depth Below Land Surface

Project Monsanto Company Well GM-16B

Town/City Sauget

County St. Clair State IL

Permit No.

Land-Surface Elevation and Datum _____ feet ☒ surveyed measuring point 412.40 ft (msl) ☐ estimated

Installation Dates(s) 8/9/84

Drilling Method mud rotary

Drilling Contractor John Mathes & Associates, Inc.

Drilling Fluid bentonite

Development Techniques(s) and Date(s)
surged with compressed air

Fluid Loss During Drilling 1200 gallons

Water Removed During Development _____ gallons

Static Depth to Water _____ feet below M.P.

Pumping Depth to Water _____ feet below M.P.

Pumping Duration 2 hours

Yield 10 gpm Date _____

Specific Capacity _____ gpm/ft

Well Purpose ground-water monitoring well

Remarks

Prepared by D. Colton

GERAGHTY & MILLER, INC.
Ground-Water Consultants

# WELL CONSTRUCTION LOG

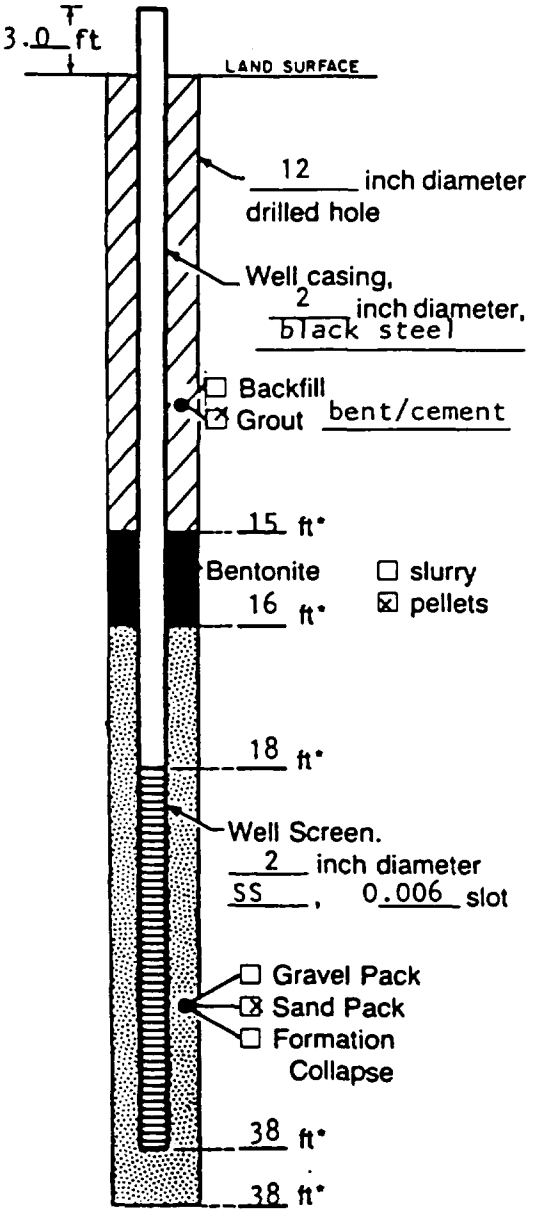


Measuring Point is Top of Well Casing Unless Otherwise Noted.

*Depth Below Land Surface

Project Monsanto Company Well GM-17A
Town/City Sauget
County St. Clair State IL
Permit No. _____
Land-Surface Elevation
and Datum _____ feet ☒ surveyed
measuring point 412.57 ft (msl) ☐ estimated
Installation Dates(s) 7-6-84
Drilling Method hollow stem auger
Drilling Contractor John Mathes & Associates, Inc.
Drilling Fluid water

Development Techniques(s) and Date(s)
surged with compressed air

Fluid Loss During Drilling 300 gallons
Water Removed During Development 360 gallons
Static Depth to Water _____ feet below M.P.
Pumping Depth to Water _____ feet below M.P.
Pumping Duration 3 hours
Yield 2 gpm Date _____
Specific Capacity _____ gpm/ft
Well Purpose ground-water monitoring wells

Remarks

Prepared by D. Colton

GERAGHTY & MILLER, INC.
Ground-Water Consultants

# WELL CONSTRUCTION LOG

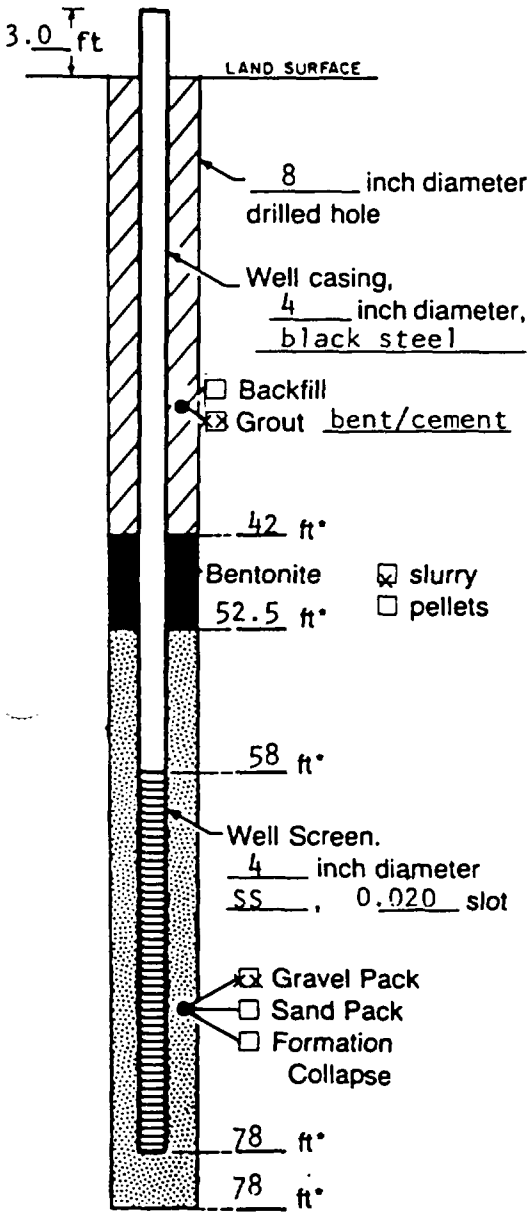


Measuring Point is Top of Well Casing Unless Otherwise Noted.

*Depth Below Land Surface

Project Monsanto Company Well GM-17B

Town/City Sauget

County St. Clair State IL

Permit No.

Land-Surface Elevation and Datum _____ feet measuring point 412.93 ft (msl) ☒ surveyed ☐ estimated

Installation Dates(s) 7/25/84

Drilling Method mud rotary

Drilling Contractor John Mathes & Associates, Inc.

Drilling Fluid bentonite

Development Techniques(s) and Date(s)
surged with compressed air

Fluid Loss During Drilling _____ gallons

Water Removed During Development 1200 gallons

Static Depth to Water _____ feet below M.P.

Pumping Depth to Water _____ feet below M.P.

Pumping Duration 2 hours

Yield 10 gpm Date _____

Specific Capacity _____ gpm/ft

Well Purpose ground-water monitoring well

Remarks

Prepared by D. Colton

GERAGHTY & MILLER, INC.
Ground-Water Consultants

# WELL CONSTRUCTION LOG

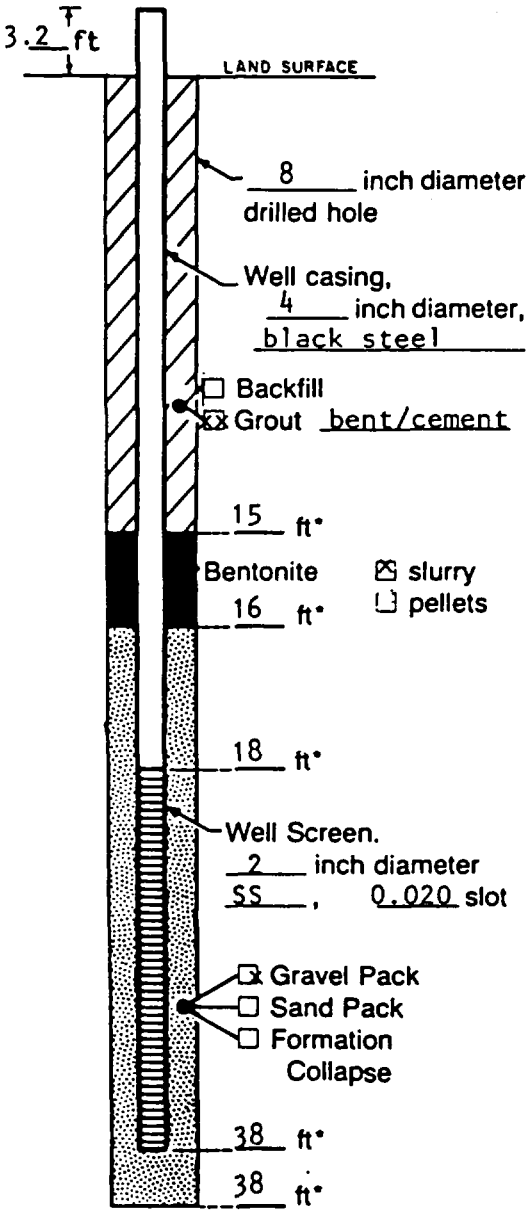


Measuring Point is Top of Well Casing Unless Otherwise Noted.

*Depth Below Land Surface

Project Monsanto Company Well GM-17C

Town/City Sauget

County St. Clair State Illinois

Permit No.

Land-Surface Elevation and Datum _____ feet ☒ surveyed measuring point 412.42 ft (msl) ☐ estimated

Installation Dates(s) 7/24/84

Drilling Method mud rotary

Drilling Contractor John Mathes & Associates, Inc.

Drilling Fluid Bentonite

Development Techniques(s) and Date(s)
surged with compressed air

Fluid Loss During Drilling _____ gallons

Water Removed During Development 1200 gallons

Static Depth to Water _____ feet below M.P.

Pumping Depth to Water _____ feet below M.P.

Pumping Duration 2 hours

Yield 10 gpm Date _____

Specific Capacity _____ gpm/ft

Well Purpose ground-water monitoring well

Remarks

Prepared by D. Colton

GERAGHTY & MILLER, INC.
*Ground-Water Consultants*

# WELL CONSTRUCTION LOG

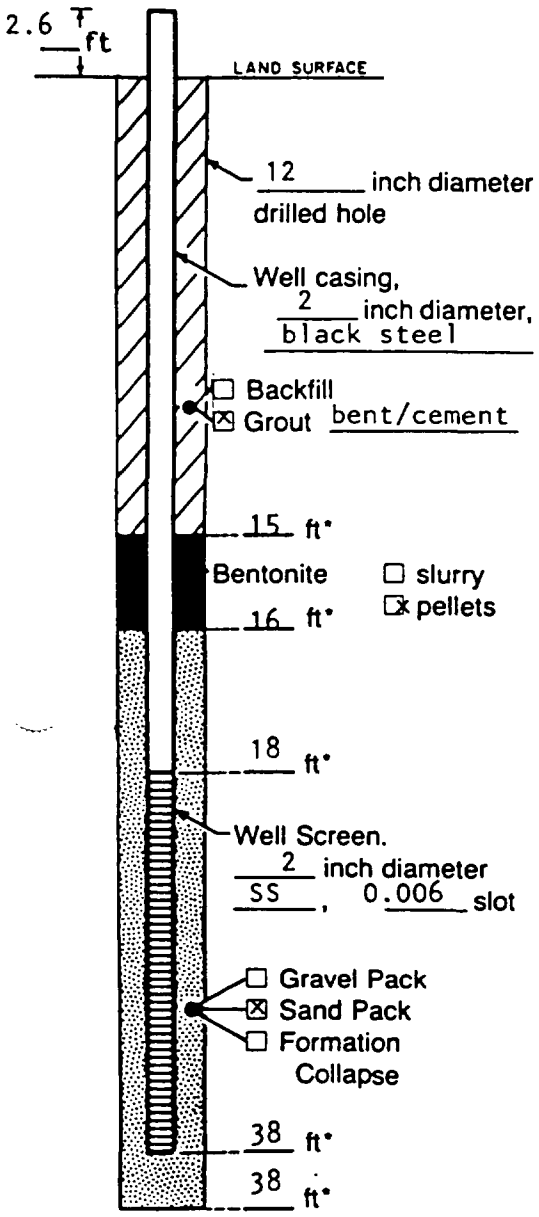


Measuring Point is Top of Well Casing Unless Otherwise Noted.

*Depth Below Land Surface

Project Monsanto Company Well GM-18A
Town/City Saguet
County St. Clair State IL
Permit No.
Land-Surface Elevation
and Datum _____ feet ☒ surveyed
measuring point 414.23 ft (msl) ☐ estimated
Installation Dates(s) 7/5/84
Drilling Method hollow stem auger
Drilling Contractor John Mathes & Associates Inc.
Drilling Fluid water

Development Techniques(s) and Date(s)
surged with compressed air

Fluid Loss During Drilling 300 gallons
Water Removed During Development 360 gallons
Static Depth to Water _____ feet below M.P.
Pumping Depth to Water _____ feet below M.P.
Pumping Duration 3 hours
Yield 2 gpm Date _____
Specific Capacity _____ gpm/ft
Well Purpose ground-water monitoring wells

Remarks

Prepared by D. Colton

GERAGHTY & MILLER, INC.
Ground-Water Consultants

# WELL CONSTRUCTION LOG

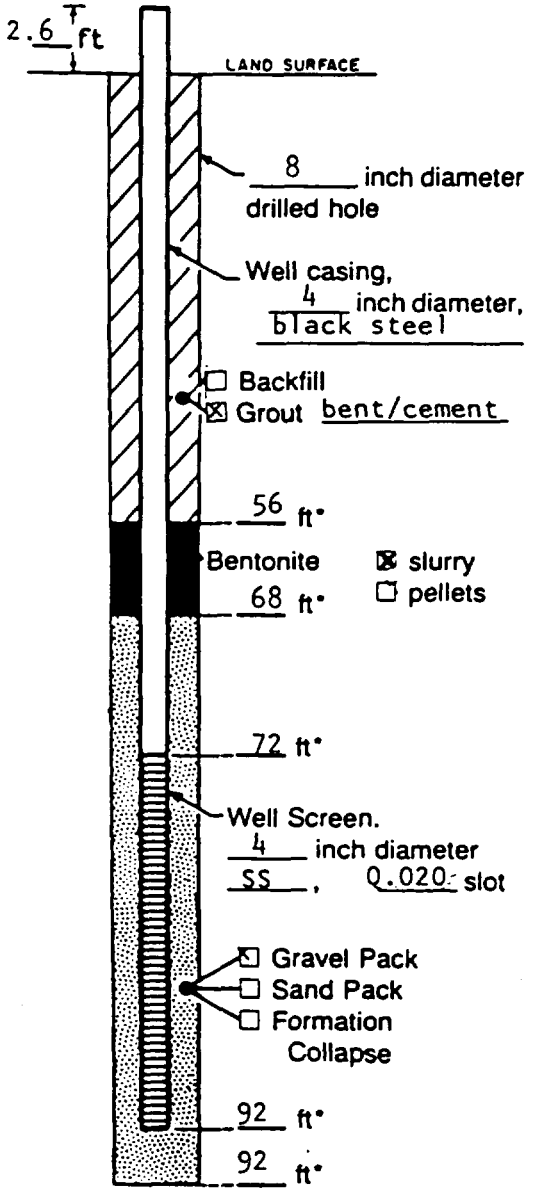


Measuring Point is Top of Well Casing Unless Otherwise Noted.

*Depth Below Land Surface

Project Monsanto Company Well GM-18B
Town/City Sauget
County St. Clair State IL
Permit No.
Land-Surface Elevation
and Datum _____ feet ☒ surveyed
measuring point 414.02 ft (msl) ☐ estimated
Installation Dates(s) 7/12/84
Drilling Method mud rotary
Drilling Contractor John Mathes & Associates, Inc.
Drilling Fluid bentonite

Development Techniques(s) and Date(s)
surged with compressed air

Fluid Loss During Drilling _____ gallons
Water Removed During Development 1200 gallons
Static Depth to Water _____ feet below M.P.
Pumping Depth to Water _____ feet below M.P.
Pumping Duration 2 hours
Yield 10 gpm Date _____
Specific Capacity _____ gpm/ft
Well Purpose ground-water monitoring well

Remarks

Prepared by D. Colton

GERAGHTY & MILLER, INC.
*Ground-Water Consultants*

# WELL CONSTRUCTION LOG

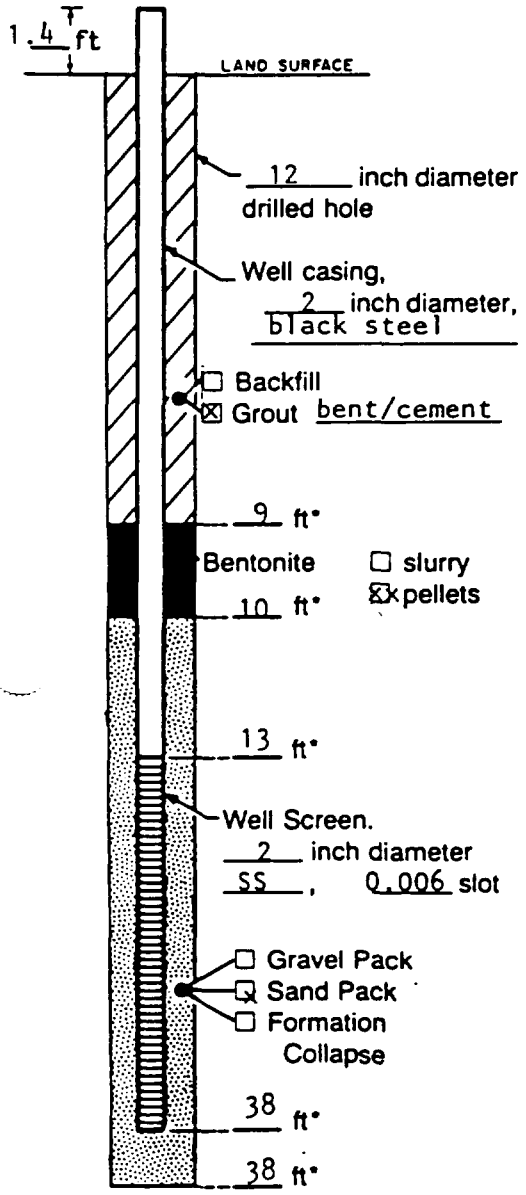


Measuring Point is Top of Well Casing Unless Otherwise Noted.

*Depth Below Land Surface

Project Monsanto Company Well GM-25A

Town/City Sauget

County St. Clair State IL

Permit No.

Land-Surface Elevation and Datum _____ feet ☒ surveyed measuring point 414.20 ft (msl) ☐ estimated

Installation Dates(s) 8/14/84

Drilling Method hollow stem auger

Drilling Contractor John Mathes & Associates, Inc.

Drilling Fluid water

Development Techniques(s) and Date(s)
surged with compressed air

Fluid Loss During Drilling 300 gallons

Water Removed During Development 360 gallons

Static Depth to Water _____ feet below M.P.

Pumping Depth to Water _____ feet below M.P.

Pumping Duration 3 hours

Yield 2 gpm Date _____

Specific Capacity _____ gpm/ft

Well Purpose ground-water monitoring well

Remarks

Prepared by D. Colton

GERAGHTY & MILLER, INC.
Ground-Water Consultants

# WELL CONSTRUCTION LOG

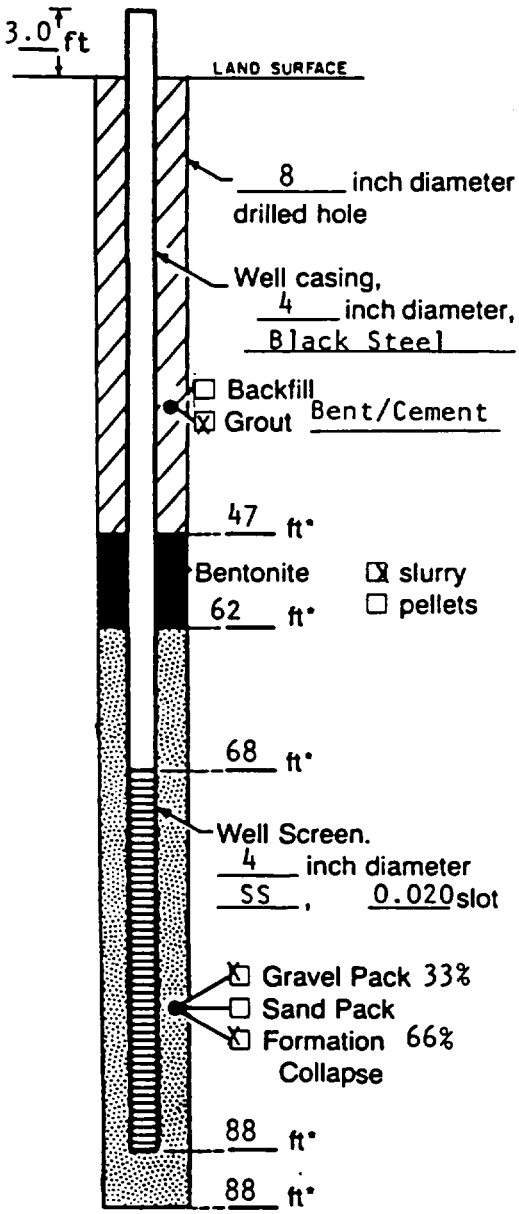


Measuring Point is Top of Well Casing Unless Otherwise Noted.

*Depth Below Land Surface

Project Monsanto Company Well GM-25B

Town/City Sauget

County St. Clair State Ill

Permit No. _____

Land-Surface Elevation and Datum _____ feet ☒ surveyed

Measuring Point 415.46 ft (MSL) ☐ estimated

Installation Dates(s) 7/27/84

Drilling Method Mud Rotary

Drilling Contractor John Mathes & Assoc., Inc.

Drilling Fluid Bentonite

Development Techniques(s) and Date(s)

Surged with Compressed Air

Fluid Loss During Drilling _____ gallons

Water Removed During Development 1200 gallons

Static Depth to Water _____ feet below M.P.

Pumping Depth to Water _____ feet below M.P.

Pumping Duration 2 hours

Yield 10 gpm Date _____

Specific Capacity _____ gpm/ft

Well Purpose Ground-water Monitoring Well

Remarks _____

Prepared by D. Colton

GERAGHTY & MILLER, INC.
Ground-Water Consultants

# WELL CONSTRUCTION LOG

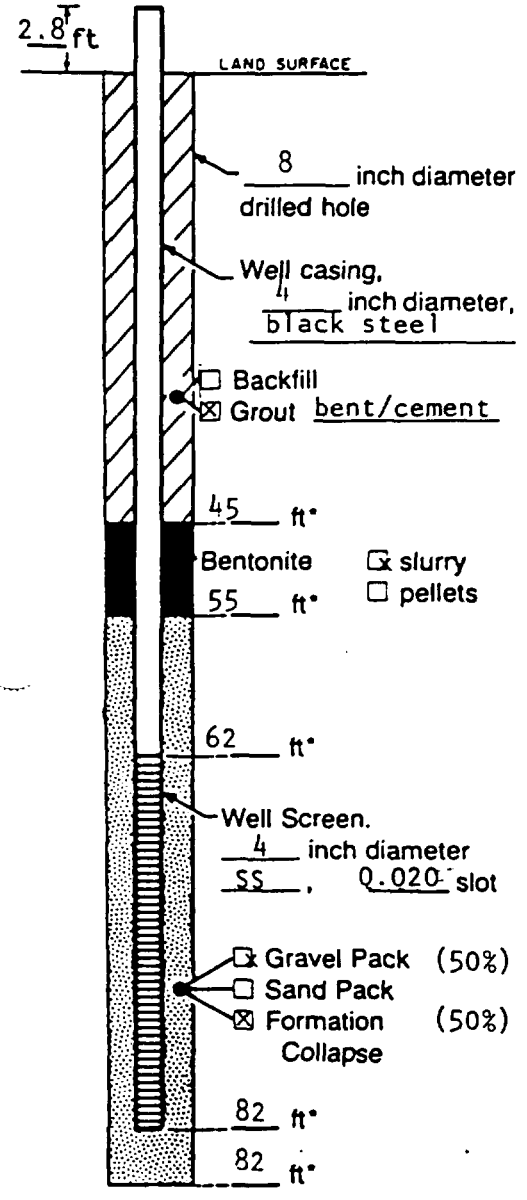


Measuring Point is Top of Well Casing Unless Otherwise Noted.

*Depth Below Land Surface

Project Monsanto Company Well GM-27B
Town/City Sauget
County St. Clair State IL
Permit No.
Land-Surface Elevation
and Datum _____ feet ☒ surveyed
Measuring Point 426.04 Ft (MSL) ☐ estimated
Installation Dates(s) 8/6/84
Drilling Method Mud Rotary
Drilling Contractor John Mathes & Associates, Inc.
Drilling Fluid Bentonite

Development Techniques(s) and Date(s)
surged with compressed air

Fluid Loss During Drilling _____ gallons
Water Removed During Development 1200 gallons
Static Depth to Water _____ feet below M.P.
Pumping Depth to Water _____ feet below M.P.
Pumping Duration 2 hours
Yield 10 gpm Date _____
Specific Capacity _____ gpm/ft
Well Purpose ground-water monitoring well

Remarks

Prepared by D. Colton

GERAGHTY & MILLER, INC.
Ground-Water Consultants

# WELL CONSTRUCTION LOG

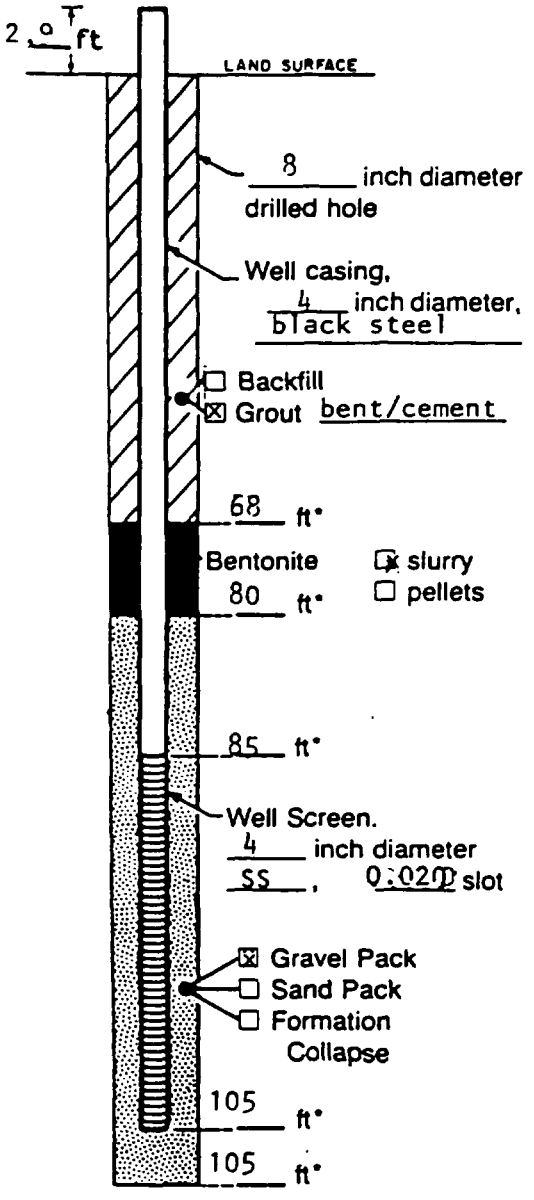


Measuring Point is Top of Well Casing Unless Otherwise Noted.

*Depth Below Land Surface

Project Monsanto Company Well GM-27C
Town/City Sauget
County St. Clair State IL
Permit No.
Land-Surface Elevation and Datum _____ feet ☒ surveyed
Measuring Point 426.76 Ft (MSL) ☐ estimated
Installation Dates(s) 8/3/84
Drilling Method Mud Rotary
Drilling Contractor John Mathes & Associates, Inc.
Drilling Fluid Bentonite

Development Techniques(s) and Date(s)
surged with compressed air

Fluid Loss During Drilling _____ gallons
Water Removed During Development 1200 gallons
Static Depth to Water _____ feet below M.P.
Pumping Depth to Water _____ feet below M.P.
Pumping Duration 2 hours
Yield 10 gpm Date _____
Specific Capacity _____ gpm/ft
Well Purpose ground-water monitoring well

Remarks

Prepared by D. Colton

GERAGHTY & MILLER, INC.
*Ground-Water Consultants*

# WELL CONSTRUCTION LOG

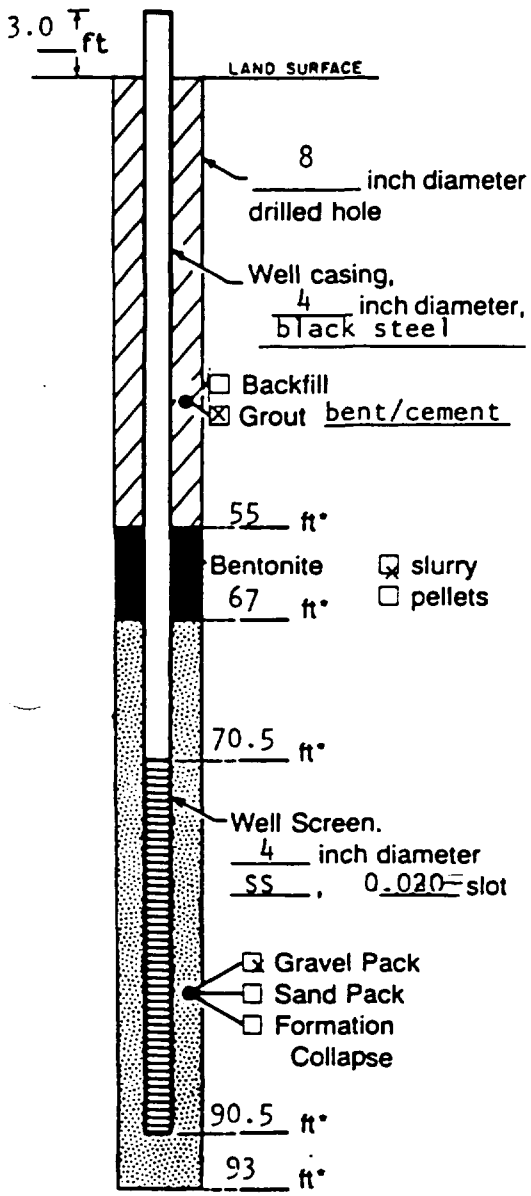


Measuring Point is Top of Well Casing Unless Otherwise Noted.

*Depth Below Land Surface

Project: Monsanto Company  Well: GM-28B
Town/City: Sauget
County: St. Clair  State: IL
Permit No.:
Land-Surface Elevation and Datum: _____ feet  ☒ surveyed
Measuring Point 423.88 Ft (MSL)  ☐ estimated
Installation Dates(s): 7/3/84
Drilling Method: Mud Rotary
Drilling Contractor: John Mathes & Associates, Inc.
Drilling Fluid: Bentonite

Development Techniques(s) and Date(s)
surged with compressed air

Fluid Loss During Drilling: _____ gallons
Water Removed During Development: 1200 gallons
Static Depth to Water: _____ feet below M.P.
Pumping Depth to Water: _____ feet below M.P.
Pumping Duration: 2 hours
Yield: 10 gpm  Date: _____
Specific Capacity: _____ gpm/ft
Well Purpose: ground-water monitoring well

Remarks:

Prepared by: D. Colton

GERAGHTY & MILLER, INC.
*Ground-Water Consultants*

# WELL CONSTRUCTION LOG

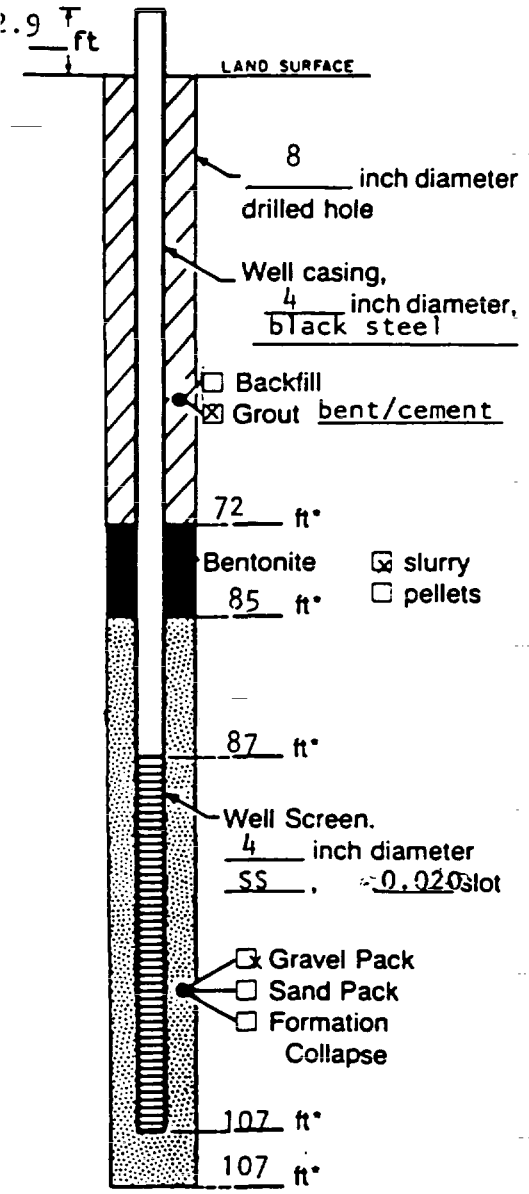


Measuring Point is Top of Well Casing Unless Otherwise Noted.

*Depth Below Land Surface

Project: Monsanto Company  Well: GM-28C
Town/City: Sauget
County: St. Clair  State: IL
Permit No.:
Land-Surface Elevation and Datum: _____ feet  ☒ surveyed
Measuring Point 412.78 Ft (MSL)  ☐ estimated
Installation Dates(s): 7/5/84
Drilling Method: Mud Rotary
Drilling Contractor: John Mathes & Associates, Inc.
Drilling Fluid: Bentonite

Development Techniques(s) and Date(s): surged with compressed air

Fluid Loss During Drilling: _____ gallons
Water Removed During Development: 1200 gallons
Static Depth to Water: _____ feet below M.P.
Pumping Depth to Water: _____ feet below M.P.
Pumping Duration: 2 hours
Yield: 10 gpm  Date: _____
Specific Capacity: _____ gpm/ft
Well Purpose: ground-water monitoring well

Remarks:

Prepared by: D. Colton

GERAGHTY & MILLER, INC.
*Ground-Water Consultants*

# WELL CONSTRUCTION LOG

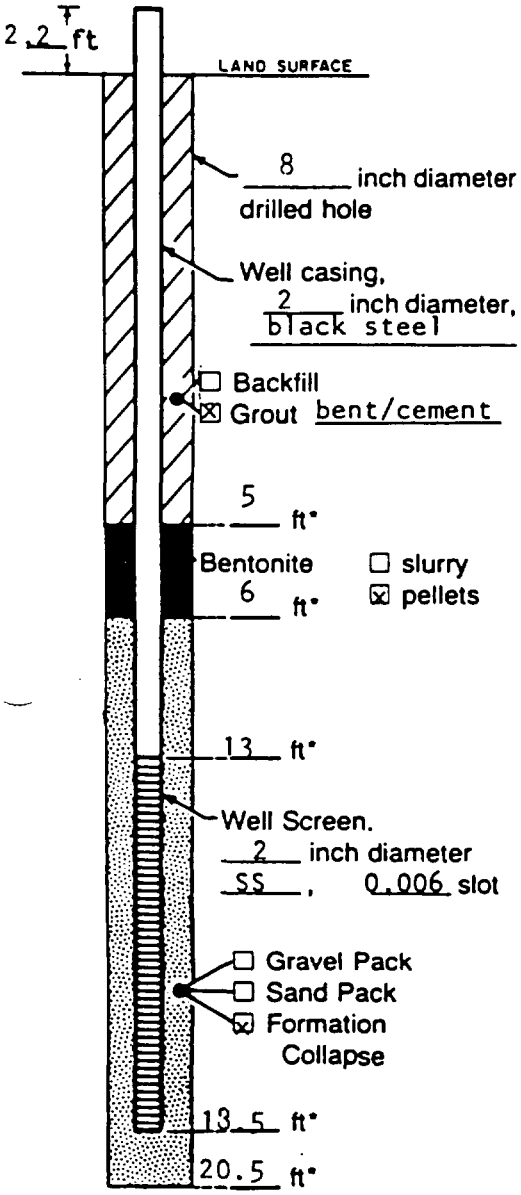


Measuring Point is Top of Well Casing Unless Otherwise Noted.

*Depth Below Land Surface

Project Monsanto Company Well GM-29
Town/City Sauget
County St. Clair State IL
Permit No.
Land-Surface Elevation
and Datum _____ feet ☒ surveyed
Measuring Point 411.06 Ft (MSL) ☐ estimated
Installation Dates(s) 8/24/84
Drilling Method Hollow Stem Auger
Drilling Contractor John Mathes & Associates, Inc.
Drilling Fluid Water

Development Techniques(s) and Date(s)
surged with compressed air

Fluid Loss During Drilling 150 gallons
Water Removed During Development 150 gallons
Static Depth to Water _____ feet below M.P.
Pumping Depth to Water _____ feet below M.P.
Pumping Duration 2.5 hours
Yield 1 gpm Date _____
Specific Capacity _____ gpm/ft
Well Purpose ground-water monitoring well

Remarks

Prepared by D. Colton

GERAGHTY & MILLER, INC.
Ground-Water Consultants

# WELL CONSTRUCTION LOG

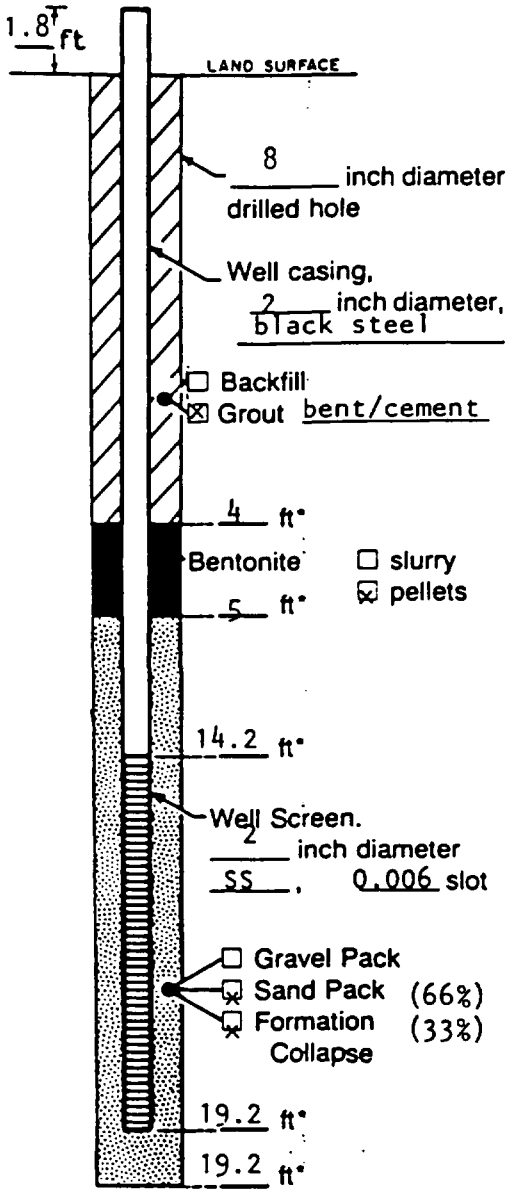


Measuring Point is Top of Well Casing Unless Otherwise Noted.

*Depth Below Land Surface

Project Monsanto Company Well GM-30
Town/City Sauget
County St. Clair State IL
Permit No.
Land-Surface Elevation
and Datum _____ feet ☒ surveyed
Measuring Point 416.09 Ft (MSL) ☐ estimated
Installation Dates(s) 8/30/84
Drilling Method Hollow Stem Auger
Drilling Contractor John Mathes & Associates, Inc.
Drilling Fluid Water

Development Techniques(s) and Date(s)
surged with compressed air

Fluid Loss During Drilling 150 gallons
Water Removed During Development 150 gallons
Static Depth to Water _____ feet below M.P.
Pumping Depth to Water _____ feet below M.P.
Pumping Duration 2.5 hours
Yield 1 gpm Date _____
Specific Capacity _____ gpm/ft
Well Purpose ground-water monitoring well

Remarks

Prepared by D. Colton

GERAGHTY & MILLER, INC.
*Ground-Water Consultants*

# WELL CONSTRUCTION LOG

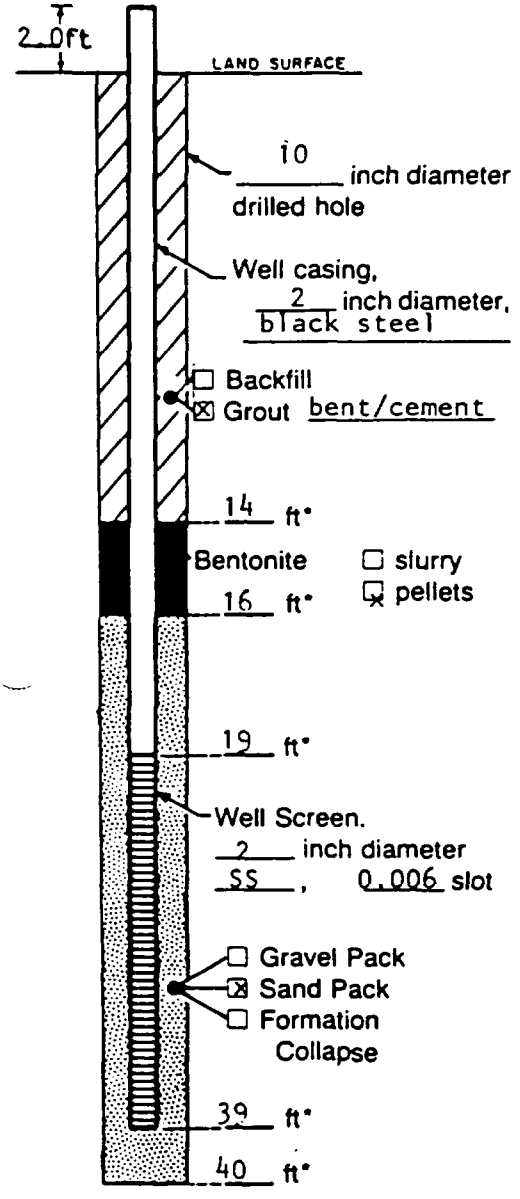


Measuring Point is Top of Well Casing Unless Otherwise Noted.

*Depth Below Land Surface

Project Monsanto Company Well GM-31A

Town/City Sauget

County St. Clair State IL

Permit No.

Land-Surface Elevation and Datum _____ feet ☒ surveyed ☐ estimated

Measuring Point 418.63

Installation Dates(s) 11/26/84

Drilling Method Hollow stem augers

Drilling Contractor John Mathes & Associates, Inc.

Drilling Fluid Water

Development Techniques(s) and Date(s)
surged with compressed air

Fluid Loss During Drilling 120 gallons

Water Removed During Development 120 gallons

Static Depth to Water _____ feet below M.P.

Pumping Depth to Water _____ feet below M.P.

Pumping Duration 2 hours

Yield 1 gpm Date _____

Specific Capacity _____ gpm/ft

Well Purpose ground-water monitoring well

Remarks

Prepared by D. Colton

GERAGHTY & MILLER, INC.
*Ground-Water Consultants*

# WELL CONSTRUCTION LOG

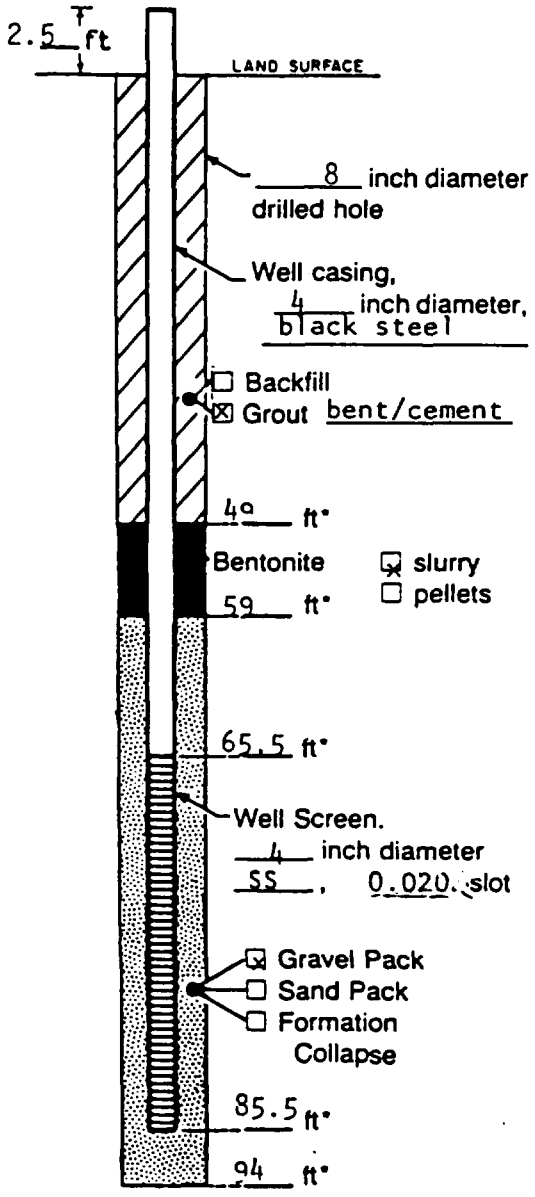


Measuring Point is Top of Well Casing Unless Otherwise Noted.

*Depth Below Land Surface

Project Monsanto Company Well GM-31B

Town/City Sauget

County St. Clair State IL

Permit No.

Land-Surface Elevation and Datum _____ feet ☒ surveyed

Measuring Point 418.92 Ft (MSL) ☐ estimated

Installation Dates(s) 1/9/85

Drilling Method Mud Rotary

Drilling Contractor John Mathes & Associates, Inc.

Drilling Fluid Bentonite

Development Techniques(s) and Date(s)
surged with compressed air

Fluid Loss During Drilling _____ gallons

Water Removed During Development 1200 gallons

Static Depth to Water _____ feet below M.P.

Pumping Depth to Water _____ feet below M.P.

Pumping Duration 2 hours

Yield 10 gpm Date _____

Specific Capacity _____ gpm/ft

Well Purpose ground-water monitoring well

Remarks

Prepared by D. Colton

GERAGHTY & MILLER, INC.
*Ground-Water Consultants*

# WELL CONSTRUCTION LOG

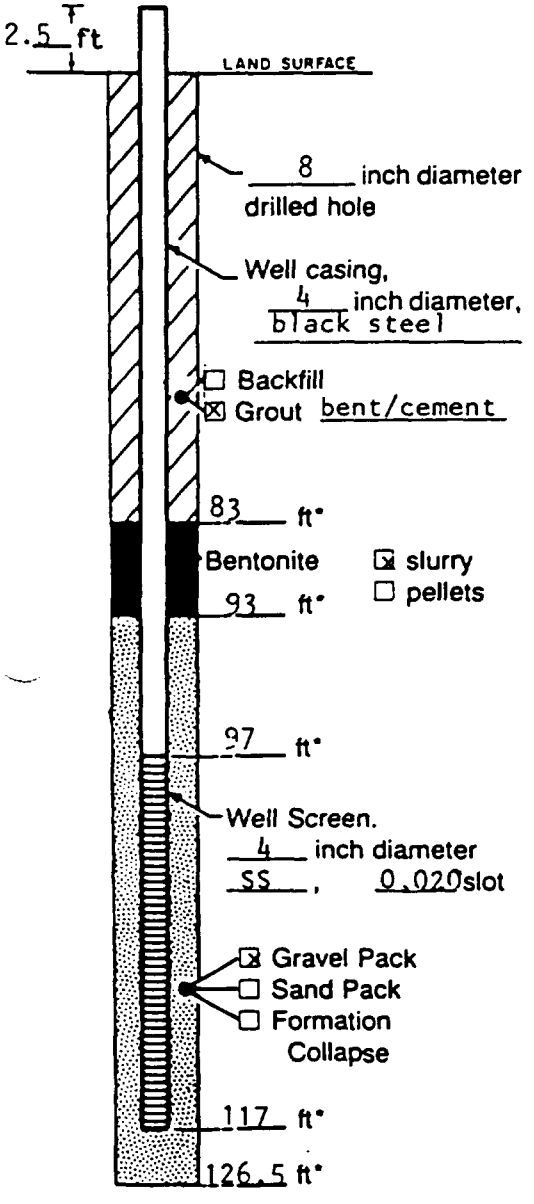


Measuring Point is Top of Well Casing Unless Otherwise Noted.

*Depth Below Land Surface

Project Monsanto Company Well GM-31C
Town/City Sauget
County St. Clair State IL
Permit No.
Land-Surface Elevation
and Datum _____ feet ☒ surveyed
Measuring Point 419.29 Ft (MSL) ☐ estimated
Installation Dates(s) 1/8/85
Drilling Method Mud Rotary
Drilling Contractor John Mathes & Associates, Inc.
Drilling Fluid Bentonite

Development Techniques(s) and Date(s)
surged with compressed air

Fluid Loss During Drilling _____ gallons
Water Removed During Development 1200 gallons
Static Depth to Water _____ feet below M.P.
Pumping Depth to Water _____ feet below M.P.
Pumping Duration 2 hours
Yield 10 gpm Date _____
Specific Capacity _____ gpm/ft
Well Purpose ground-water monitoring well

Remarks

Prepared by D. Colton

# SAMPLE/CORE LOG

BORING/WELL: GM-54A PROJECT NO: NO308SG3 PAGE: 1

SITE LOCATION: Monsanto Company Sauget, Illinois DRILLING STARTED: 10/6/87 DRILLING COMPLETED: 10/6/87

TOTAL DEPTH DRILLED: 39 ft HOLE DIAMETER: 8 in. TYPE OF SAMPLE/ CORING DEVICE: Split Spoon Core Barrel

LENGTH & DIAMETER OF CORING DEVICE: 2' x 2" SAMPLING INTERVAL: 5 ft

LAND-SURFACE ELEVATION: { } SURVEYED { } ESTIMATED DATUM:

DRILLING FLUID USED: None DRILLING METHOD: Auger (4-1/4" I.D.)

DRILLING CONTRACTOR: John Mathes & Assoc. DRILLER: Kent HELPER: Quentin

PREPARED BY: B. Blum HAMMER WEIGHT: 140 lb HAMMER DROP: 30 in.

| SAMPLE NO | SAMPLE DEPTH FROM | SAMPLE DEPTH TO | CORE RECVRY | BLOW COUNTS | SAMPLE/CORE DESCRIPTION |
|---|---|---|---|---|---|
| | 5 | 7 | 1.5 | 2-2- | Silt, brown, dry. |
| | | | | 1-2 | |
| | 10 | 12 | 1.5 | 2-4- | Silt, brown (10.0'-10.5') grading into a fine sand, |
| | | | | 3-4 | light brown with 20-25 percent silt. Dry. |
| | 15 | 17 | 2.0 | 1-3- | Sand, fine, gray-brown (15'-16') silt, brown |
| | | | | 6-6 | (16'-16.3') grading into a fine sand with 20- |
| | | | | | percent silt (16.3'-17'), wet. |
| | | | | | Note: "A-rods" show wet line at ~12'. |
| | 20 | 22 | 2.0 | 6-9- | Sand, fine, gray-brown with 10-15 percent silt |
| | | | | 15-26 | grading into a fine sand, brown with 20-25 percent |
| | | | | | silt (21'-22'), wet. Wood cuttings are coming |
| | | | | | up from auger flytes. |
| * | 25 | 27 | 0.5 | 2-2- | Sand, medium to coarse, brown with assorted colors, |
| | | | | 3-3 | wet. |
| | 30 | 32 | 2.0 | 1-2- | Same as above. |
| | | | | 2-6 | |
| | 35 | 37 | 2.0 | 3-4 | Sand, medium, light brown to gray. |
| | | | | 6-8 | |
| | | | | | |
| * | | | | | Second attempt: first core barrel at this depth was |
| | | | | | empty - however, blow counts are from first |
| | | | | | attempted sample. |
| | | | | | |
| | | | | | |

GERAGHTY & MILLER, INC.
*Environmental Services*

# WELL CONSTRUCTION LOG
(UNCONSOLIDATED)

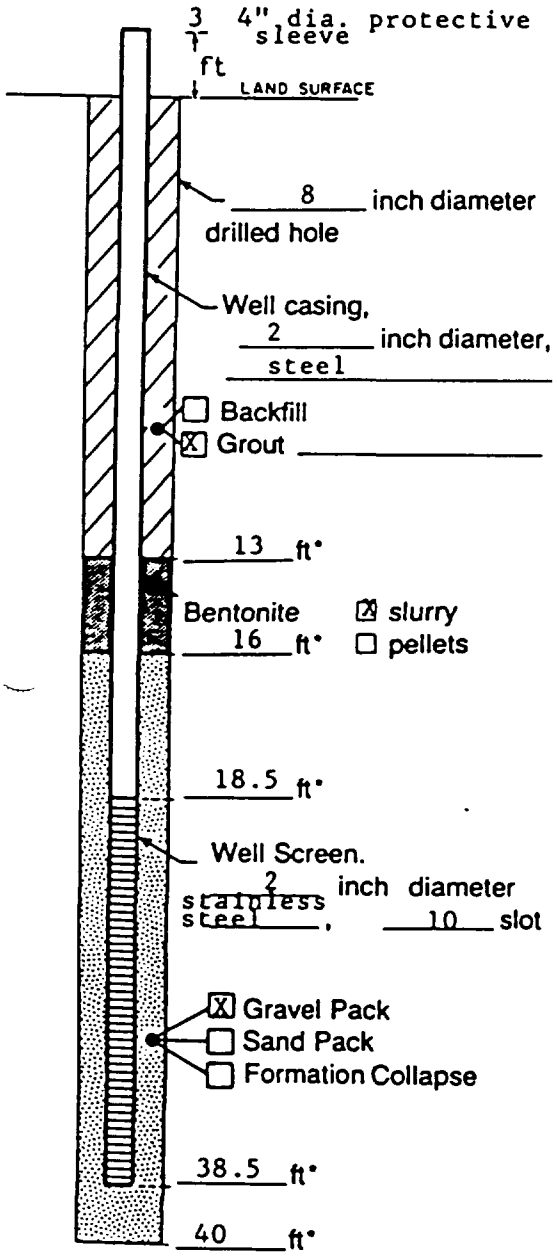


Measuring Point is
Top of Well Casing
Unless Otherwise Noted.

*Depth Below Land Surface

Project Monsanto/N0308SG3 Well GM-54A
Town/City Sauget
County St. Clair State Illinois
Permit No.
Land-Surface Elevation
and Datum _____ feet ☐ Surveyed
☐ Estimated
Installation Date(s) 10-6-87
Drilling Method hollow stem auger
Drilling Contractor
Drilling Fluid none

Development Technique(s) and Date(s)

10-13-87

Fluid Loss During Drilling 50 gallons
Water Removed During Development 100 gallons
Static Depth to Water 15 feet below M.P.
Pumping Depth to Water _____ feet below M.P.
Pumping Duration _____ hours
Yield 1-2 gpm Date _____
Specific Capacity _____ gpm/ft
Well Purpose Ground water monitoring in the "shallow" zone

Remarks

Prepared by Brian A. Blum

# SAMPLE/CORE LOG

BORING/WELL: GM-54B PROJECT NO: N0308SG3 PAGE: 1

SITE LOCATION: Monsanto Company Sauget, Illinois DRILLING STARTED: 9/28/87 DRILLING COMPLETED: 9/29/87

TOTAL DEPTH DRILLED: 93 ft HOLE DIAMETER: 8 in. TYPE OF SAMPLE/ CORING DEVICE: Flume or Split Spoon Core Barrel

LENGTH & DIAMETER OF CORING DEVICE: 2' x 2" SAMPLING INTERVAL: 10 ft

LAND-SURFACE ELEVATION: { } SURVEYED { } ESTIMATED DATUM:

DRILLING FLUID USED: Bentonite & Water DRILLING METHOD: Hydraulic (mud) Rotary

DRILLING CONTRACTOR: John Mathes & Assoc. DRILLER: Chris Hebel HELPER: Dave Ellis

PREPARED BY: B. Blum HAMMER WEIGHT: 140 lb HAMMER DROP: 30 in.

| SAMPLE NO | SAMPLE DEPTH | | CORE RECVRY | BLOW COUNTS | SAMPLE/CORE DESCRIPTION |
|---|---|---|---|---|---|
| | FROM | TO | | | |
| 9/28 | 0 | 10 | | Flume | No sample collected. |
| | 10 | 20 | | Flume | Silt, and sand, fine; brown. |
| | 20 | 30 | | Flume | |
| | 30 | 40 | | Flume | |
| | Sample | collec | ted | | |
| | 40 | 50 | | Flume | Sand, fine to medium (75%) brown; silt (25%) |
| | | | | | coarsening downwards to sand, medium to coarse. |
| 9/29 | 50 | 60 | | Flume | Sand, fine to coarse (85%) silt (15%) brown; with a |
| | | | | | lot of lignite. |
| | 60 | 70 | | Flume | At 65' wood chips were coming out of flume. Material |
| | | | | | is same as above with wood. |
| | 70 | 80 | | Flume | At 72' hit some kind of obstruction (wood) through it |
| | | | | | at 75'. Material is same as above. |
| | 80 | 90 | | | Same as above. |
| | 87 | 89 | 2 | Split | Sand, medium to coarse, gray; well sorted. Only 6" |
| | | | | Spoon | of recovery was virgin formation. The other 18" |
| | | | | | was backwash. |
| | 90 | 93 | | Flume | Same as above. |
| | | | | | |
| | | | | | |
| | | | | | |
| | | | | | |
| | | | | | |
| | | | | | |

# SAMPLE/CORE LOG

BORING/WELL: GM-58A PROJECT NO: N0308SG3 PAGE: 1

SITE LOCATION: Monsanto Company Sauget, Illinois DRILLING STARTED: 10/7/87 DRILLING COMPLETED: 10/7/87

TOTAL DEPTH DRILLED: 39 ft HOLE DIAMETER: 8 in. TYPE OF SAMPLE/ CORING DEVICE: Split Spoon Core Barrel

LENGTH & DIAMETER OF CORING DEVICE: 2' x 2" SAMPLING INTERVAL: 5 ft

LAND-SURFACE ELEVATION: { } SURVEYED { } ESTIMATED DATUM:

DRILLING FLUID USED: None DRILLING METHOD: Hollow Stem Auger

DRILLING CONTRACTOR: John Mathes & Assoc. DRILLER: Kent HELPER: Quentin

PREPARED BY: B. Blum HAMMER WEIGHT: 140 lb HAMMER DROP: 30 in.

| SAMPLE NO | SAMPLE DEPTH | | CORE RECVRY | BLOW COUNTS | SAMPLE/CORE DESCRIPTION |
|---|---|---|---|---|---|
| | FROM | TO | | | |
| | 5 | 7 | 2.0 | 2-3- | Silt, light brown, dry. |
| | | | | 3-4 | |
| | 10 | 12 | 2.0 | 4-9- | Sand, fine, light brown with 20-25 percent silt. |
| | | | | 17-26 | |
| | 15 | 17 | 2.0 | 4-4- | Same as above. |
| | | | | 5-6 | |
| | 20 | 22 | 2.0 | 5-6- | Same as above, wet. |
| | | | | 9-12 | |
| | 25 | 27 | 2.0 | 2-6- | Same as above with 10-15 percent silt. |
| | | | | 11-14 | |
| | 30 | 32 | 2.0 | 3-5- | Sand, fine, brown with 50 percent silt. |
| | | | | 7-9 | |
| | 35 | 37 | 2.0 | 3-6- | Sand, fine to medium with 5 percent silt. |
| | | | | 9-12 | |

GERAGHTY & MILLER, INC.
*Environmental Services*

# WELL CONSTRUCTION LOG
(UNCONSOLIDATED)

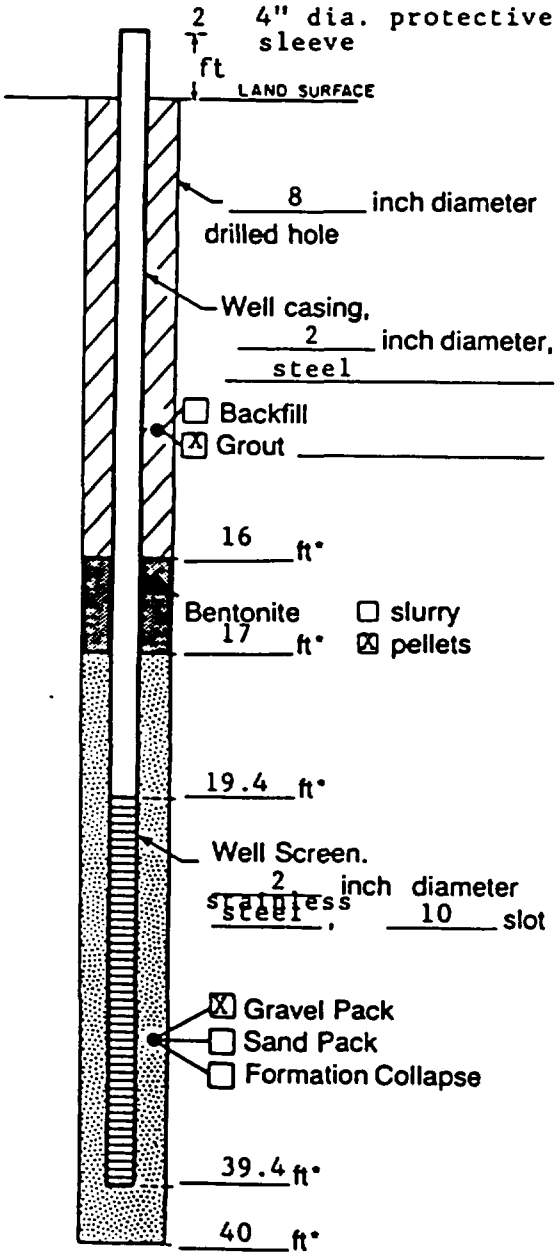


Measuring Point is
Top of Well Casing
Unless Otherwise Noted.

*Depth Below Land Surface

Project Monsanto/N0308SG3 Well MW-58A
Town/City Sauget
County St. Clair State Illinois
Permit No. _____
Land-Surface Elevation
and Datum _____ feet ☐ Surveyed
_____ ☐ Estimated
Installation Date(s) 10-7-87
Drilling Method _____
Drilling Contractor _____
Drilling Fluid _____

Development Technique(s) and Date(s)
10-15-87

Fluid Loss During Drilling _____ gallons
Water Removed During Development _____ gallons
Static Depth to Water 20 feet below M.P.
Pumping Depth to Water _____ feet below M.P.
Pumping Duration _____ hours
Yield 1-2 gpm Date _____
Specific Capacity _____ gpm/ft
Well Purpose _____

Remarks Ground water monitoring in the "shallow" zone

Prepared by Brian A. Blum

# SAMPLE/CORE LOG

BORING/WELL: GM-59A PROJECT NO: N0308SG3 PAGE: 1

SITE LOCATION: Monsanto Company Sauget, Illinois DRILLING STARTED: 10/8/87 DRILLING COMPLETED: 10/8/87

TOTAL DEPTH DRILLED: 39 ft HOLE DIAMETER: 8 in. TYPE OF SAMPLE/ CORING DEVICE: Split Spoon Core Barrel

LENGTH & DIAMETER OF CORING DEVICE: 2' x 2" SAMPLING INTERVAL: 5 ft

LAND-SURFACE ELEVATION: { } SURVEYED { } ESTIMATED DATUM:

DRILLING FLUID USED: None DRILLING METHOD: Hollow Stem Auger

DRILLING CONTRACTOR: John Mathes & Assoc. DRILLER: Kent HELPER: Quentin

PREPARED BY: B. Blum HAMMER WEIGHT: 140 lb HAMMER DROP: 30 in.

| SAMPLE NO | SAMPLE DEPTH | | CORE RECVRY | BLOW COUNTS | SAMPLE/CORE DESCRIPTION |
|---|---|---|---|---|---|
| | FROM | TO | | | |
| | 5 | 7 | 2 | 3-6- | Sand, very fine, tan; with lenses of silt, dry. |
| | | | | 9-14 | |
| | 10 | 12 | 2 | 4-8- | Silt, brown, dry. |
| | | | | 12-13 | |
| | 15 | 17 | 2 | 5-6- | Sand, very fine, tan; with lenses of silt. |
| | | | | 7-8 | |
| | 20 | 22 | 2 | 0-1- | Sand, fine, brown; with 10-15 percent silt, moist. |
| | | | | 2-4 | |
| | 25 | 27 | 2 | 1-2- | Sand, fine, brown; well sorted with a lens of silt. |
| | | | | 8-11 | |
| | 30 | 32 | 2 | 2-3- | Same as above. |
| | | | | 12-15 | |
| | 35 | 37 | 2 | 2-3- | Sand, fine, brown; with 10 to 15 percent silt. |
| | | | | 9-13 | |

GERAGHTY & MILLER, INC.
*Environmental Services*

# WELL CONSTRUCTION LOG
(UNCONSOLIDATED)

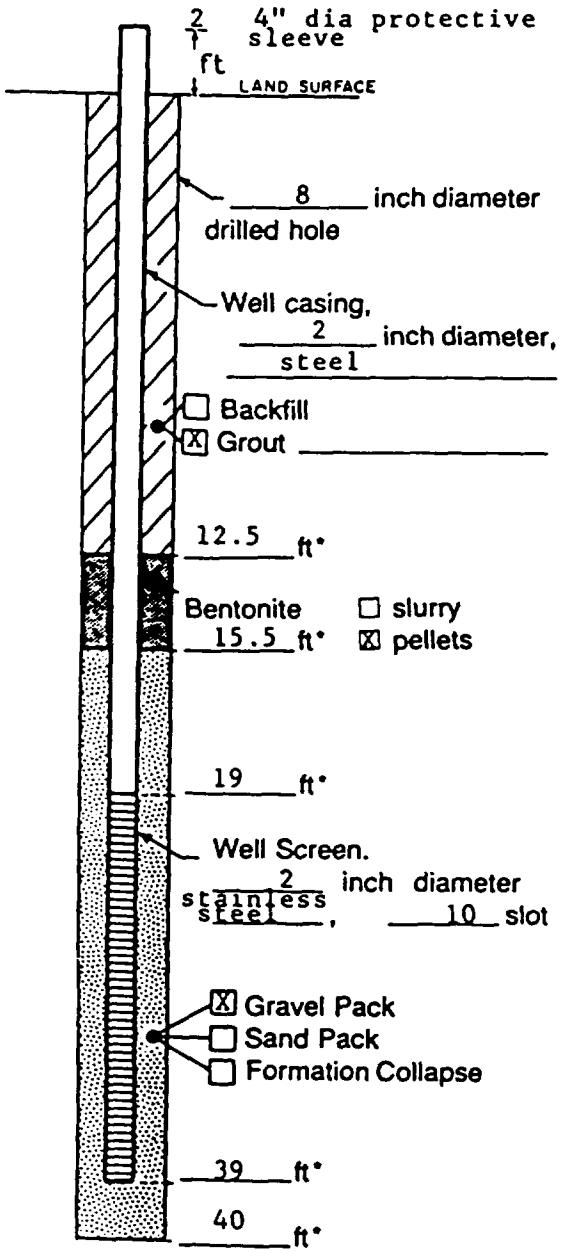


Measuring Point is
Top of Well Casing
Unless Otherwise Noted.

*Depth Below Land Surface

Project Monsanto/.N0308SG3 Well GM-59A
Town/City Sauget
County St. Clair State Illinois
Permit No.
Land-Surface Elevation
and Datum _____ feet ☐ Surveyed
☐ Estimated
Installation Date(s) 10-8-87
Drilling Method hollow stem auget
Drilling Contractor
Drilling Fluid

Development Technique(s) and Date(s)

10-15-87

Fluid Loss During Drilling _____ gallon
Water Removed During Development _____ gallon
Static Depth to Water 20 feet below M.P
Pumping Depth to Water _____ feet below M.P
Pumping Duration _____ hours
Yield 1-2 gpm Date _____
Specific Capacity _____ gpm/ft
Well Purpose Ground water monitoring in the "shallow" zone.

Remarks

Prepared by Brian A. Blum

GERAGHTY & MILLER, INC.
*Environmental Services*

# WELL CONSTRUCTION LOG
(UNCONSOLIDATED)

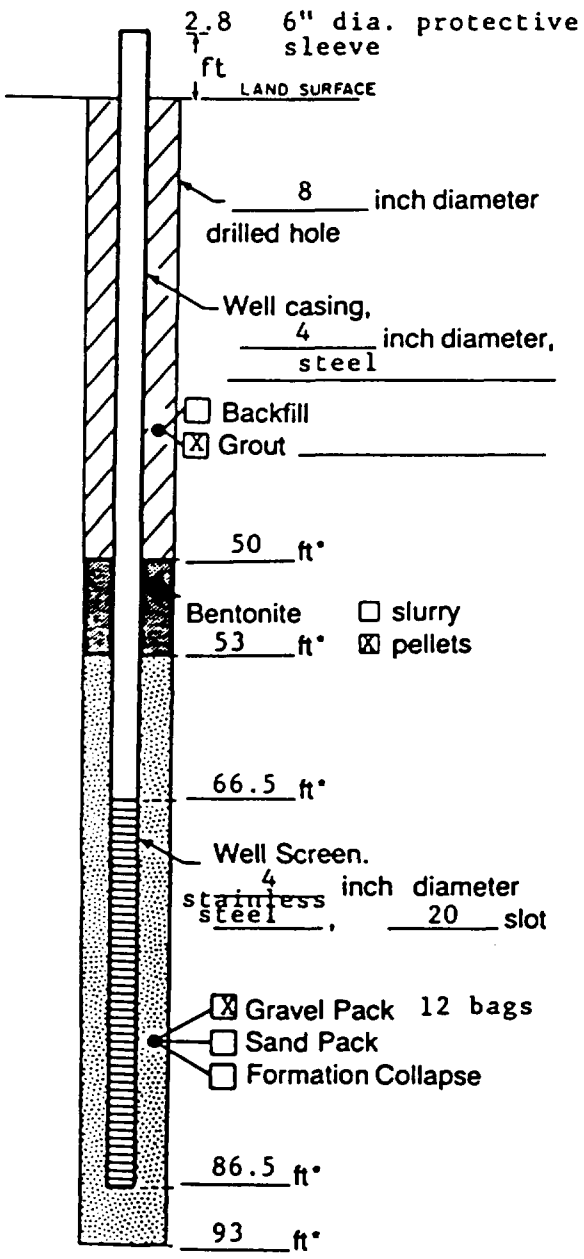


Measuring Point is
Top of Well Casing
Unless Otherwise Noted.

*Depth Below Land Surface

Project Monsanto/ N0308SG3 Well GM-54B
Town/City Sauget
County St. Clair State Illinois
Permit No.
Land-Surface Elevation
and Datum _____ feet ☐ Surveyed
☐ Estimated
Installation Date(s) 9-29-87/9-30-87
Drilling Method hydraulic (mud) rotary
Drilling Contractor John Mathes and Associates, Inc.
Drilling Fluid Polymer free bentonite and hydrant water

Development Technique(s) and Date(s)
surging with compressed air
10-13-87

Fluid Loss During Drilling 500 gallon
Water Removed During Development 1,000 gallon
Static Depth to Water 15 feet below M.F
Pumping Depth to Water _____ feet below M.F
Pumping Duration _____ hours
Yield >10 gpm Date _____
Specific Capacity _____ gpm/ft
Well Purpose Ground water monitoring in the "intermediate" zone.

Remarks Relatively high yielding well

Prepared by Brian A. Blum

# Appendix 19E

# 1998 Roux Report

# APPENDIX A

## Well Construction Log

| | |
|---|---|
| Project: Solutia - W.G. Krummrich Plant<br>Sauget, Illinois | Log of Well No. **MW-3B** |
| Date Started: 8/20/98 Completed: 8/20/98 | Measuring Point Elevation: 414.69 ft Total Depth: 80.0 ft |
| Logged By: Tom Dwyer Checked By: Rob T. | Water Level During Drilling: 13.0 ft Post-Development: 18.6 |
| Drilling Co: Roberts Drilling Driller: Jim Barker | Casing: 2 inch - PVC Drill Bit Diameter: 8.25i |
| Drilling Method: Hollow-Stem Auger | Perforation: 10 slot screen from 60 to |
| Drilling Equipment: CME 75 | Pack: #1 Morie Sand from 58 to |
| Sampler: Split Spoon | Seal: Bentonite chips from 56 to |
| | Cement/Bentonite grout from 1 to |

| Depth (feet) | LITHOLOGIC DESCRIPTION | Lithology | Monitoring Well Construction | Sampler | Blows per 6" | PID (ppm) | REMARKS |
|---|---|---|---|---|---|---|---|
| | Light Brown to Dark Brown fine SAND and Silt: dry | SM, SP | | | | | Locking, protective steel casin 2.5 feet above land surface. |
| 5 | Light Brown fine to coarse SAND, with Gravel: wet | SM | | | | | Concrete surface pad, 0 to 1 fc below land surface. |
| | Grey fine SAND: wet | | | | | | |
| 10 | | | | | | | |
| 15 | | | | | | | Water encountered at 13 feet b land surface at time of drilling |
| 20 | | | | | | | 2-inch PVC riser from 2 feet a land surface to 60 feet below land surface. |
| 25 | | | | | | | |
| 30 | | | | | | | |
| 35 | | | | | | | Cement/bentonite grout from 1 foot to 56 feet below land surf |
| 40 | | | | | | | |
| 45 | | | | | | | |
| 50 | Light Brown fine SAND, trace silt: wet | SM | | | | | |
| 55 | | | | | | | Hydrated bentonite seal from : feet to 58 feet below land surf |
| 60 | Light Olive-Brown fine SAND: wet | SM | | | | | |
| | Grey fine SAND: wet | SM | | | | | |
| 65 | | | | | 17<br>16 | 0.0 | |
| 70 | | | | | 22<br>15 | | #1 Morie sand from 58 feet tc feet below land surface. |
| 75 | | | | | | | 2-inch stainless steel, 10-slot from 60 feet to 80 feet below land surface. |
| 80 | | | | | | | |

| | |
|---|---|
| Project: Solutia - W.G. Krummrich Plant<br>Sauget, Illinois | Log of Well No. **MW-3C** |
| Date Started: 8/21/98 Completed: 8/21/98 | Measuring Point Elevation: 414.85 ft Total Depth: 105.0 ft |
| Logged By: Tom Dwyer Checked By: Rob T. | Water Level During Drilling: 13.0 ft Post-Development: 1 |
| Drilling Co: Roberts Drilling Driller: Jim Barker | Casing: 2 inch - PVC Drill Bit Diameter: 8.25 |
| Drilling Method: Hollow-Stem Auger | Perforation: 10 slot screen from 85 to |
| Drilling Equipment: CME 75 | Pack: #1 Morie Sand from 83 to |
| Sampler: Split Spoon | Seal: Bentonite chips from 81 to |
| | Cement/Bentonite grout from 1 to |

| Depth (feet) | LITHOLOGIC DESCRIPTION | Lithology | Monitoring Well Construction | Sampler | Blows per 6" | PID (ppm) | REMARKS |
|---|---|---|---|---|---|---|---|
| | Light Brown to Dark Brown fine SAND and Silt: dry | SM | | | | | Locking, protective steel casin 2.5 feet above land surface. |
| 5 | | | | | | | Concrete surface pad, 0 to 1 f below land surface. |
| 10 | | | | | | | |
| 15 | | | | | | | Water encountered at 13 feet b land surface at time of drilling |
| 20 | | | | | | | 2-inch PVC riser from 2 feet a land surface to 85 feet below land surface. |
| 25 | | | | | | | |
| 30 | | | | | | | |
| 35 | | | | | | | Cement/bentonite grout from 1 foot to 81 feet below land |
| 40 | | | | | | | |
| 45 | | | | | | | |
| 50 | | | | | | | |
| | Light Brown fine SAND, trace silt: wet | SM | | | | | |
| 55 | | | | | | | |
| 60 | | | | | | | |
| | Light Olive-Brown fine SAND: wet | SM | | | | | |
| 65 | Grey fine SAND: wet | SM | | | | | |
| 70 | | | | | | | |
| 75 | | | | | | | |
| 80 | | | | | | | |
| 85 | | | | | | | Hydrated bentonite seal from 1 feet to 83 feet below land surf |
| 90 | Grey fine SAND, trace silt: wet | SM | | | | | |
| 95 | Grey fine to coarse SAND, little fine Sand: wet | SM | | | 13<br>16<br>10<br>11 | 0.0 | #1 Morie sand from 83 feet to feet below land surface. |
| 100 | | | | | | | 2-inch stainless steel, 10-f from 85 feet to 105 feet b land surface. |
| 105 | | | | | | | |

| | |
|---|---|
| Project: Solutia - W.G. Krummrich Plant<br>Sauget, Illinois | Log of Well No. **MW-5B** |
| Date Started: 8/19/98 Completed: 8/19/98 | Measuring Point Elevation: 415.25 ft Total Depth: 80.0 ft |
| Logged By: Tom Dwyer Checked By: Rob T. | Water Level During Drilling: 13.0 ft Post-Development: 18.5 |
| Drilling Co: Roberts Drilling Driller: Jim Barker | Casing: 2 inch - PVC Drill Bit Diameter: 8.25 |
| Drilling Method: Hollow-Stem Auger | Perforation: 10 slot screen from 60 to |
| Drilling Equipment: CME 75 | Pack: #1 Morie Sand from 58 to |
| Sampler: Split Spoon | Seal: Bentonite chips from 56 to |
| | Cement/Bentonite grout from 1 to |

| Depth (feet) | LITHOLOGIC DESCRIPTION | Lithology | Monitoring Well Construction | Sampler | Blows per 6" | PID (ppm) | REMARKS |
|---|---|---|---|---|---|---|---|
| | Light Brown to Dark Brown fine SAND and Silt: dry | SM | | | | | Locking, protective steel casi 2.5 feet above land surface. |
| 5 | | | | | | | Concrete surface pad, 0 to 1 f below land surface. |
| 10 | | | | | | | |
| 15 | | | | | | | Water encountered at 13 feet l land surface at time of drilling |
| 20 | | | | | | | 2-inch PVC riser from 2 feet a land surface to 60 feet below land surface. |
| 25 | | | | | | | |
| 30 | | | | | | | |
| 35 | | | | | | | Cement/bentonite grout from foot to 56 feet below land surf |
| 40 | | | | | | | |
| 45 | | | | | | | |
| 50 | | | | | | | |
| | Light Brown fine SAND, trace silt: wet | SM | | | | | |
| 55 | | | | | | | Hydrated bentonite seal from feet to 58 feet below land surf |
| 60 | | | | | | | |
| | Light Olive-Brown fine SAND: wet | SM | | | | | |
| 65 | Grey fine SAND: wet | SM | | | | | |
| 70 | | | | | | | #1 Morie sand from 58 feet to feet below land surface. |
| 75 | | | | | | | 2-inch stainless steel, 10-slot from 60 feet to 80 feet below land surface. |
| 80 | | | | | | | |

| | |
|---|---|
| Project: Solutia - W.G. Krummrich Plant<br>Sauget, Illinois | Log of Well No. **MW-5C** |
| Date Started: 8/18/98 Completed: 8/18/98 | Measuring Point Elevation: 414.92 ft Total Depth: 105.0 ft |
| Logged By: Tom Dwyer Checked By: Rob T. | Water Level During Drilling: 13.0 ft Post-Development: 1f |
| Drilling Co: Roberts Drilling Driller: Jim Barker | Casing: 2 inch - PVC Drill Bit Diameter: 8.[illegible] |
| Drilling Method: Hollow-Stem Auger | Perforation: 10 slot screen from 85 to |
| Drilling Equipment: CME 75 | Pack: #1 Morie Sand from 83 to |
| Sampler: Split Spoon | Seal: Bentonite chips from 81 to |
| | Cement/Bentonite grout from 1 to |

| Depth (feet) | LITHOLOGIC DESCRIPTION | Lithology | Monitoring Well Construction | Sampler | Blows per 6" | PID (ppm) | REMARKS |
|---|---|---|---|---|---|---|---|
| | Light Brown to Dark Brown fine SAND and Silt: dry | SM | | | | | Locking, protective steel casin 2.5 feet above land surface. |
| 5 | | | | | | | Concrete surface pad, 0 to 1 fo below land surface. |
| 10 | | | | | | | |
| 15 | | | | | | | Water encountered at 13 feet b land surface at time of drilling. |
| 20 | | | | | | | 2-inch PVC riser from 2 feet a land surface to 85 feet below land surface. |
| 25 | | | | | | | |
| 30 | | | | | | | |
| 35 | | | | | | | Cement/bentonite grout from 1 foot to 81 feet below land r |
| 40 | | | | | | | |
| 45 | | | | | | | |
| 50 | | | | | | | |
| | Light Brown fine SAND, trace silt: wet | SM | | | | | |
| 55 | | | | | | | |
| 60 | | | | | 14 | 0.0 | |
| | Light Olive-Brown fine SAND: wet | SM | | | 18 | 420 | |
| 65 | Grey fine SAND: wet | SM | | | 20 | | |
| | | | | | 26 | | |
| | | | | | 5 | | |
| 70 | | | | | 10 | | |
| | | | | | 21 | 28 | |
| | | | | | 25 | | |
| 75 | | | | | 5 | | |
| | | | | | 15 | | |
| 80 | | | | | 25 | | |
| | | | | | 28 | | |
| 85 | | | | | | | Hydrated bentonite seal from feet to 83 feet below land surf |
| 90 | | | | | 7 | 11.5 | #1 Morie sand from 83 feet to feet below land surface. |
| | Grey fine SAND, some coarse Sand: wet | | | | 11 | | |
| 95 | | | | | 14 | | |
| | Grey fine to coarse SAND, little fine Sand: wet | SM | | | 16 | | |
| 100 | | | | | | | 2-inch stainless steel, 10-sl from 85 feet to 105 feet b land surface. |
| 105 | | | | | | | |

| | |
|---|---|
| Project: **Solutia - W.G. Krummrich Plant Sauget, Illinois** | **Log of Well No. MW-7B** |
| Date Started: **8/24/98** Completed: **8/24/98** | Measuring Point Elevation: **413.10 ft** Total Depth: **80.0 ft** |
| Logged By: **Tom Dwyer** Checked By: **Rob T.** | Water Level During Drilling: **11.0 ft** Post-Development: **16.2** |
| Drilling Co: **Roberts Drilling** Driller: **Jim Barker** | Casing: **2 inch - PVC** Drill Bit Diameter: **8.25in** |
| Drilling Method: **Hollow-Stem Auger** | Perforation: **10 slot screen** from **60** to |
| Drilling Equipment: **CME 75** | Pack: **#1 Morie Sand** from **58** to |
| Sampler: **Split Spoon** | Seal: **Bentonite chips** from **56** to |
| | **Cement/Bentonite grout** from **1** to |

| Depth (feet) | LITHOLOGIC DESCRIPTION | Lithology | Monitoring Well Construction | Sampler | Blows per 6" | PID (ppm) | REMARKS |
|---|---|---|---|---|---|---|---|
| | Light Brown to Dark Brown fine SAND and Silt: dry | SM | | | | | Locking, protective steel casing 2.5 feet above land surface. |
| 5 | | | | | | | Concrete surface pad, 0 to 1 foot below land surface. |
| 10 | | | | | | | |
| 15 | | | | | | | Water encountered at 13 feet below land surface at time of drilling. |
| 20 | | | | | | | 2-inch PVC riser from 2 feet above land surface to 60 feet below land surface. |
| 25 | | | | | | | |
| 30 | | | | | | | |
| 35 | | | | | | | Cement/bentonite grout from 1 foot to 56 feet below land surface |
| 40 | | | | | | | |
| 45 | | | | | | | |
| 50 | | | | | | | |
| | Light Brown fine SAND, trace silt: wet | SM | | | | | |
| 55 | | | | | | | Hydrated bentonite seal from 56 feet to 58 feet below land surface |
| 60 | | | | | | | |
| | Light Olive-Brown fine SAND: wet | SM | | | | | |
| 65 | Grey fine SAND: wet | SM | | | 15 | 0.0 | |
| | Fine to coarse SAND with Gravel: wet | SM | | | 27 31 47 | | |
| 70 | | | | | | | #1 Morie sand form 58 feet to 1 feet below land surface. |
| 75 | | | | | | | 2-inch stainless steel, 10-slot screen from 60 feet to 80 feet below land surface. |
| 80 | | | | | | | |

| | |
|---|---|
| Project: **Solutia - W.G. Krummrich Plant Sauget, Illinois** | **Log of Well No. MW-7C** |
| Date Started: **8/24/98** Completed: **8/24/98** | Measuring Point Elevation: **413.05 ft** Total Depth: **105.0 ft** |
| Logged By: **Tom Dwyer** Checked By: **Rob T.** | Water Level During Drilling: **11.0 ft** Post-Development: **1'** |
| Drilling Co: **Roberts Drilling** Driller: **Jim Barker** | Casing: **2 inch - PVC** Drill Bit Diameter: **8.** |
| Drilling Method: **Hollow-Stem Auger** | Perforation: **10 slot screen** from **85** to |
| Drilling Equipment: **CME 75** | Pack: **#1 Morie Sand** from **83** to |
| Sampler: **Split Spoon** | Seal: **Bentonite chips** from **81** to |
| | **Cement/Bentonite grout** from **1** to |

| Depth (feet) | LITHOLOGIC DESCRIPTION | Lithology | Monitoring Well Construction | Sampler | Blows per 6" | PID (ppm) | REMARKS |
|---|---|---|---|---|---|---|---|
| | Light Brown to Dark Brown fine SAND and Silt: dry | SM | | | | | Locking, protective steel casin 2.5 feet above land surface. Concrete surface pad, 0 to 1 fo below land surface. |
| 5 | | | | | | | |
| 10 | | | | | | | |
| 15 | | | | | | | Water encountered at 13 feet b land surface at time of drilling. |
| 20 | | | | | | | 2-inch PVC riser from 2 feet al land surface to 85 feet below land surface. |
| 25 | | | | | | | |
| 30 | | | | | | | |
| 35 | | | | | | | Cement/bentonite grout from 1 foot to 82 feet below land s |
| 40 | | | | | | | |
| 45 | | | | | | | |
| 50 | | | | | | | |
| | Light Brown fine SAND, trace silt: wet | SM | | | | | |
| 55 | | | | | | | |
| 60 | | | | | | | |
| | Light Olive-Brown fine SAND: wet | SM | | | | | |
| 65 | Grey fine SAND: wet | SM | | | | | |
| 70 | | | | | | | |
| 75 | | | | | | | |
| 80 | | | | | | | |
| 85 | | | | | | | Hydrated bentonite seal from 8 feet to 83 feet below land surfa |
| 90 | Grey fine SAND, some coarse Sand: wet | SM | | | | | #1 Morie sand form 83 feet to feet below land surface. |
| 95 | Grey fine to coarse SAND, little fine Sand: wet | SM | | | 7 | 0.0 | |
| | | SM | | | 11 | | |
| 100 | Fine to coarse SAND with Gravel: wet | | | | 14 16 | | 2-inch stainless steel, 10-slo from 85 feet to 105 feet be land surface. |
| 105 | | | | | | | |

# Appendix 20

# Groundwater Levels

# Appendix 20A

# 1986 Geraghty & Miller Report

# Volume I

Table 2. Static Water Levels for Monitoring Wells Measured During August 24-27, 1984, Monsanto Company, W.G. Krummrich Plant, Sauget, Illinois.

| Well No. | Well Depth (feet below land surface) | Elevation of the Measuring Point (feet above mean sea level) | Depth to Water (feet below measuring point) | Elevation of Water Level (feet above mean sea level) |
|---|---|---|---|---|
| Geraghty & Miller, Inc. Monitoring Wells | | | | |
| GM-1 | 34 | 413.65 | 12.93 | 400.72 |
| GM-2 | 41 | 417.37 | 19.32 | 398.05 |
| GM-3 | 36 | 411.31 | 15.15 | 396.16 |
| GM-4A | 28 | 406.43 | 9.15 | 397.28 |
| GM-4B | 87 | 406.70 | 10.10 | 396.60 |
| GM-5 | 36 | 414.94 | 18.72 | 396.22 |
| GM-6A | 34 | 414.59 | 16.96 | 397.63 |
| GM-6B | 88 | 416.04 | 19.40 | 396.64 |
| GM-7 | 36 | 414.95 | 18.05 | 396.90 |
| GM-8 | 34 | 418.49 | 21.12 | 397.37 |
| GM-9A | 28 | 414.47 | 13.26 | 401.21 |
| GM-9B | 75 | 412.36 | 12.67 | 399.69 |
| GM-9C | 108 | 411.97 | 12.76 | 399.21 |
| GM-10A | 28 | 412.97 | 11.86 | 401.11 |
| GM-11 | 25 | 412.95 | 12.80 | 400.15 |
| GM-12A | 33.5 | 416.47 | 15.99 | 400.48 |
| GM-12B | 89 | 416.80 | 16.09 | 400.71 |
| GM-13 | 38 | 415.47 | 15.25 | 400.22 |
| GM-14 | 38 | 411.26 | 9.50 | 401.76 |
| GM-15 | 38 | 413.71 | 13.53 | 400.18 |
| GM-16A | 38 | 412.03 | 12.83 | 399.20 |
| GM-16B | 90 | 412.40 | 13.22 | 399.18 |
| GM-17A | 38 | 412.57 | 14.07 | 398.50 |
| GM-17B | 78 | 412.93 | 14.77 | 398.16 |
| GM-17C | 107 | 412.42 | 14.61 | 397.81 |
| GM-18A | 38 | 414.23 | 17.22 | 397.01 |
| GM-18B | 92 | 414.02 | 17.16 | 396.86 |

Table 2. (Continued)

| Well No. | Well Depth (feet below land surface) | Elevation of the Measuring Point (feet above mean sea level) | Depth to Water (feet below measuring point) | Elevation of Water Level (feet above mean sea level) |
|---|---|---|---|---|
| **Geraghty & Miller, Inc. Monitoring Wells (Cont'd)** | | | | |
| GM-25A | 38 | 414.20 | 19.30 | 394.90 |
| GM-25B | 88 | 415.46 | 21.62 | 393.84 |
| GM-27B | 82 | 426.04 | 37.24 | 388.80 |
| GM-27C | 105 | 426.76 | 38.86 | 387.90 |
| GM-28B | 93 | 423.88 | 34.10 | 389.78 |
| GM-28C | 107 | 423.78 | 34.21 | 389.57 |
| GM-29 | 20.5 | 411.06 | -[a] | - |
| GM-30 | 21.2 | 416.09 | -[a] | - |
| **Landfill Monitoring Wells** | | | | |
| B-21A | 28 | 428.53 | 27.74 | 400.79 |
| B-21B | 49.5 | 428.37 | 39.84 | 388.53 |
| B-22A | 35 | 428.16 | 26.72 | 401.44 |
| B-22B | 55 | 428.16 | 39.90 | 388.26 |
| B-23B | 49.5 | 428.17 | 39.50 | 388.67 |
| B-24A | 27.5 | 422.49 | 20.58 | 401.91 |
| B-24B | 50 | 422.28 | 32.81 | 389.47 |
| B-24C | 69 | 422.52 | 33.16 | 389.36 |
| B-25A | 35.2 | 428.47 | 26.88 | 401.59 |
| B-25B | 49.5 | 427.35 | 36.52 | 390.83 |
| B-26A | 33.2 | 423.71 | 24.59 | 399.12 |
| B-26B | 49.8 | 423.62 | 33.69 | 389.93 |
| B-27B | 42 | 425.83 | 34.19 | 391.64 |
| B-28A | 32.5 | 423.04 | 21.50 | 401.54 |
| B-28B | 49.5 | 423.08 | 32.49 | 390.59 |
| B-29A | 33.2 | 429.03 | 28.56 | 400.47 |
| B-29B | 49.5 | 429.06 | 36.86 | 392.20 |
| B-30B | 49 | 430.52 | 38.90 | 391.62 |
| B-31B | 34.5 | 421.68 | 33.76 | 387.92 |
| B-31C | 67.3 | 421.88 | 34.87 | 387.01 |
| B-101 | 169.2 | 427.09 | 38.44 | 388.65 |
| B-102 | 162 | 423.84 | 34.45 | 389.39 |
| B-103 | 165.8 | 427.33 | -[b] | - |
| B-105 | 154 | 420.93 | -[b] | - |

Table 2. (Continued)

| Well No. | Well Depth (feet below land surface) | Elevation of the Measuring Point (feet above mean sea level) | Depth to Water (feet below measuring point) | Elevation of Water Level (feet above mean sea level) |
|---|---|---|---|---|
| **Landfill Monitoring Wells (Cont'd)** | | | | |
| P-1 | 47 | 423.11 | 32.96 | 390.15 |
| P-2 | 47 | 423.15 | 33.21 | 389.94 |
| P-3 | 47 | 423.43 | 33.56 | 389.87 |
| P-4 | 47.5 | 421.82 | 31.99 | 389.83 |
| P-5 | 54.5 | 422.12 | 32.75 | 389.37 |
| P-6 | 30.5 | 421.78 | 24.54 | 397.24 |
| P-7 | 33 | 421.82 | 22.31 | 399.51 |
| P-8 | 53.5 | 421.79 | 32.65 | 389.14 |
| P-9 | 50 | 423.14 | 34.13 | 389.01 |
| P-10 | 54 | 423.43 | 34.13 | 389.30 |
| P-11 | 51 | 422.30 | 33.76 | 388.54 |
| P-12 | 50.5 | 423.75 | 35.18 | 388.57 |
| P-13 | 53.5 | 424.32 | 36.51 | 387.81 |
| P-14 | 32.5 | 424.36 | 23.72 | 400.64 |
| **Dewatering Wells in the Plant Area** | | | | |
| DW-1 | 65 | 410.04 | 11.91 | 398.13 |
| DW-2 | 65 | 409.12 | 10.89 | 398.23 |
| DW-3 | 65 | 408.85 | 10.41 | 398.44 |
| DW-4 | 65 | 408.44 | 10.59 | 397.85 |
| DW-5 | 65 | - | -[c] | - |
| DW-6 | 65 | - | -[c] | - |
| DW-7 | 65 | - | -[c] | - |
| DW-8 | 65 | - | -[c] | - |
| DW-9 | 65 | - | -[c] | - |
| DW-10 | 65 | 409.40 | 9.91 | 399.49 |
| DW-11 | 65 | - | -[c] | - |
| DW-12 | 65 | - | -[c] | - |
| DW-13 | 65 | - | -[c] | - |
| DW-14 | 65 | - | -[c] | - |
| DW-15 | 65 | - | -[c] | - |
| DW-16 | 65 | - | -[c] | - |
| BK-1 | 66 | 408.36 | 4.11 | 404.25 |
| BK-2 | 25 | 409.67 | 8.46 | 401.21 |

Table 2. (Continued)

| Well No. | Well Depth (feet below land surface) | Elevation of the Measuring Point (feet above mean sea level) | Depth to Water (feet below measuring point) | Elevation of Water Level (feet above mean sea level) |
|---|---|---|---|---|
| **Monitoring Wells in the Plant Area for Dewatering Projects** | | | | |
| M-2 | 40 | 410.38 | 12.00 | 398.38 |
| M-4 | 29 | 409.18 | 9.85 | 399.33 |
| M-7 | 29 | 410.67 | 9.60 | 401.07 |
| BK-3 | 66 | 415.24 | 15.23 | 400.01 |
| DW-34 | 25 | 414.67 | 16.15 | 398.52 |
| **Dewatering Wells for the Treatment Plant Sewer Construction** | | | | |
| DW-17 | 80 | 422.99 | -[d] | - |
| DW-18 | 80 | - | -[d] | - |
| DW-19 | 80 | 426.88 | -[d] | - |
| DW-23 | 80 | 422.80 | 35.05 | 387.75 |
| DW-23A | 80 | 419.68 | 30.41 | 389.27 |
| DW-24 | 80 | 427.30 | 37.85 | 389.45 |
| DW-25 | 80 | 415.79 | 27.19 | 388.60 |
| **Monitoring Wells for the Treatment Plant Dewatering Projects** | | | | |
| DW-27 | 30 | 429.68 | 31.49 | 398.19 |
| DW-28 | 30 | 427.86 | 31.58 | 396.28 |
| DW-29 | 68 | 424.89 | 37.17 | 387.72 |
| DW-30 | 31 | 422.77 | 34.49 | 388.28 |
| DW-31 | 25 | 423.71 | -[e] | - |
| DW-32 | 66 | 432.57 | 43.47 | 389.10 |
| DW-33 | 30 | 416.23 | 20.78 | 395.45 |
| **U.S. Corps of Engineers Monitoring Wells** | | | | |
| P-56 | 35 | 430.98 | 38.30 | 392.68 |
| P-58 | 35 | 414.47 | -[e] | - |
| P-59 | 35 | 414.51 | -[b] | - |
| P-65 | 32 | 426.50 | -[e] | - |
| P-68 | 35 | 432.58 | -[e] | - |

Table 2. (Continued)

| Well No. | Well Depth (feet below land surface) | Elevation of the Measuring Point (feet above mean sea level) | Depth to Water (feet below measuring point) | Elevation of Water Level (feet above mean sea level) |
|---|---|---|---|---|
| Offsite Wells (East of Town Hall) | | | | |
| WB-6 | 30 | 406.49 | 5.65 | 400.84 |
| WB-7 | 80 | 406.85 | 6.05 | 400.80 |
| WB-8 | 30 | 409.52 | -[b] | - |
| WB-9 | 80 | 407.43 | 6.74 | 400.69 |

a) Well was installed after water-level measurements were made.
b) Not measured.
c) Inaccessible.
d) Well was pumping, water-level could not be determined.
e) Dry.

Table 3. Static Water Levels for Monitoring Wells Measured During November 21-22, 1985, Monsanto Company, W.G. Krummrich Plant, Sauget, Illinois.

| Well No. | Well Depth (feet below land surface) | Elevation of the Measuring Point (feet above mean sea level) | Depth to Water (feet below measuring point) | Elevation of Water Level (feet above mean sea level) |
|---|---|---|---|---|
| Geraghty & Miller, Inc. Monitoring Wells | | | | |
| GM-1 | 34 | 413.65 | 15.98 | 397.62 |
| GM-2 | 41 | 417.37 | 23.12 | 394.25 |
| GM-3 | 36 | 411.31 | 16.35 | 394.96 |
| GM-4A | 28 | 406.43 | 11.98 | 394.45 |
| GM-4B | 87 | 406.70 | 12.00 | 394.70 |
| GM-4C | 104 | 406.51 | 11.78 | 394.73 |
| GM-5 | 36 | 414.94 | 20.82 | 394.12 |
| GM-6A | 34 | 414.59 | 20.20 | 394.39 |
| GM-6B | 88 | 416.04 | 21.65 | 394.39 |
| GM-7 | 36 | 414.95 | 19.87 | 395.08 |
| GM-8 | 34 | 418.49 | 22.95 | 395.54 |
| GM-9A | 28 | 414.47 | 18.80 | 395.57 |
| GM-9B | 75 | 412.36 | 27.04 | 390.32 |
| GM-9C | 108 | 411.97 | 20.03 | 391.94 |
| GM-10A | 28 | 412.97 | 14.85 | 398.12 |
| GM-10B | 78 | 413.90 | 18.11 | 395.79 |
| GM-10C | 111 | 413.78 | 18.11 | 395.67 |
| GM-11 | 25 | 412.95 | 15.95 | 397.00 |
| GM-12A | 33.5 | 416.47 | 20.12 | 396.35 |
| GM-12B | 89 | 416.80 | 20.09 | 396.71 |
| GM-12C | 114.5 | 416.79 | 20.01 | 396.78 |
| GM-13 | 38 | 415.47 | 21.70 | 393.77 |
| GM-14 | 38 | 411.26 | -[a] | - |
| GM-15 | 38 | 413.71 | 17.18 | 396.53 |
| GM-16A | 38 | 412.03 | 15.38 | 396.65 |
| GM-16B | 90 | 412.40 | 15.73 | 396.67 |
| GM-17A | 38 | 412.57 | 17.60 | 394.97 |
| GM-17B | 78 | 412.93 | 18.01 | 394.92 |
| GM-17C | 107 | 412.42 | 17.26 | 395.16 |

Table 3. (Continued)

| Well No. | Well Depth (feet below land surface) | Elevation of the Measuring Point (feet above mean sea level) | Depth to Water (feet below measuring point) | Elevation of Water Level (feet above mean sea level) |
|---|---|---|---|---|
| Geraghty & Miller, Inc. Monitoring Wells (Cont'd.) | | | | |
| GM-18A | 38 | 414.23 | 18.77 | 395.46 |
| GM-18B | 92 | 414.02 | 18.48 | 395.54 |
| GM-25A | 38 | 414.20 | 14.35 | 399.85 |
| GM-25B | 88 | 415.46 | 15.46 | 400.00 |
| GM-27B | 82 | 426.04 | 18.68 | 407.36 |
| GM-27C | 105 | 426.76 | 20.13 | 406.63 |
| GM-28B | 93 | 423.88 | 18.60 | 405.28 |
| GM-28C | 107 | 423.78 | 18.80 | 404.98 |
| GM-29 | 20.5 | 411.06 | 12.88 | 398.18 |
| GM-30 | 21.2 | 416.09 | 18.85 | 397.24 |
| GM-31A | 40 | 418.63 | 22.99 | 395.64 |
| GM-31B | 94 | 418.92 | 23.32 | 395.60 |
| GM-31C | 126.5 | 419.29 | 23.46 | 395.83 |
| GM-32 | 25 | 409.49 | -[a] | - |
| GM-33 | 25 | 410.88 | -[a] | - |
| GM-34 | 25 | 410.82 | -[a] | - |
| GM-35 | 25 | 410.88 | -[a] | - |
| GM-36 | 25 | 409.53 | -[a] | - |
| GM-37 | 25 | 409.67 | -[a] | - |
| GM-38 | 25 | 412.51 | 17.41 | 395.10 |
| GM-39 | 8 | 415.59 | -[a] | - |
| GM-40 | 8 | 415.75 | -[a] | - |
| GM-41 | 8 | 414.75 | -[a] | - |
| GM-42 | 8 | 414.48 | -[a] | - |
| GM-43 | 8 | 414.38 | -[a] | - |
| GM-44 | 8 | 414.44 | -[a] | - |
| GM-45 | 18 | 410.10 | 2.69 | 407.41 |
| GM-46 | 25 | 411.60 | 11.26 | 400.34 |
| GM-47 | 10 | 412.34 | -[a] | - |
| GM-48 | 12 | 411.00 | 4.04 | 406.96 |
| GM-49 | 13 | 408.43 | 1.90 | 406.53 |
| GM-106 | 165.7 | 424.82 | 20.29 | 404.53 |

Table 3. (Continued)

| Well No. | Well Depth (feet below land surface) | Elevation of the Measuring Point (feet above mean sea level) | Depth to Water (feet below measuring point) | Elevation of Water Level (feet above mean sea level) |
|---|---|---|---|---|
| Landfill Monitoring Wells | | | | |
| B-21A | 28 | 428.53 | 29.42 | 399.11 |
| B-21B | 49.5 | 428.37 | 29.97 | 398.40 |
| B-22A | 35 | 428.16 | 23.38 | 404.78 |
| B-22B | 55 | 428.16 | 23.35 | 404.81 |
| B-23B | 49.5 | 428.17 | 25.19 | 402.98 |
| B-24A | 27.5 | 422.49 | 17.38 | 405.11 |
| B-24B | 50 | 422.28 | 17.32 | 404.96 |
| B-24C | 69 | 422.52 | 17.39 | 405.13 |
| B-25A | 35.2 | 428.47 | 31.13 | 397.34 |
| B-25B | 49.5 | 427.35 | 26.67 | 400.68 |
| B-26A | 33.2 | 423.71 | 20.25 | 403.46 |
| B-26B | 49.8 | 423.62 | 18.48 | 405.14 |
| B-27B | 42 | 425.83 | 22.93 | 402.90 |
| B-28A | 32.5 | 423.04 | 21.47 | 401.57 |
| B-28B | 49.5 | 423.08 | 18.38 | 404.70 |
| B-29A | 33.2 | 429.03 | 29.97 | 399.06 |
| B-29B | 49.5 | 429.06 | 27.61 | 401.45 |
| B-30B | 49 | 430.52 | 29.17 | 401.35 |
| B-31B | 34.5 | 421.68 | 22.32 | 399.36 |
| B-31C | 67.3 | 421.88 | 22.43 | 399.45 |
| B-101 | 169.2 | 427.09 | 29.14 | 397.95 |
| B-102 | 162 | 423.84 | 22.47 | 401.37 |
| B-103 | 165.8 | 427.33 | 24.82 | 402.51 |
| B-105 | 154 | 420.93 | 19.02 | 401.91 |
| P-1 | 47 | 423.11 | 17.40 | 405.71 |
| P-2 | 47 | 423.15 | 17.27 | 405.88 |
| P-3 | 47 | 423.43 | 17.57 | 405.86 |
| P-4 | 47.5 | 421.82 | 16.01 | 405.81 |
| P-5 | 54.5 | 422.12 | 15.81 | 406.31 |
| P-6 | 30.5 | 421.78 | 12.79 | 408.99 |
| P-7 | 33 | 421.82 | 13.79 | 408.03 |
| P-8 | 53.5 | 421.79 | 15.15 | 406.64 |
| P-9 | 50 | 423.14 | 16.38 | 406.76 |
| P-10 | 54 | 423.43 | 16.55 | 406.88 |

Table 3. (Continued)

| Well No. | Well Depth (feet below land surface) | Elevation of the Measuring Point (feet above mean sea level) | Depth to Water (feet below measuring point) | Elevation of Water Level (feet above mean sea level) |
|---|---|---|---|---|
| **Landfill Monitoring Wells (Cont'd.)** | | | | |
| P-11 | 51 | 422.30 | 15.14 | 407.16 |
| P-12 | 50.5 | 423.75 | 16.08 | 407.67 |
| P-13 | 53.5 | 424.32 | 16.62 | 407.70 |
| P-14 | 32.5 | 424.36 | 13.50 | 410.86 |
| **Dewatering Wells in the Plant Area** | | | | |
| DW-1 | 65 | 410.04 | 16.45 | 393.59 |
| DW-2 | 65 | 409.12 | -[b] | - |
| DW-3 | 65 | 408.85 | -[b] | - |
| DW-4 | 65 | 408.44 | -[b] | - |
| DW-5 | 65 | - | -[b] | - |
| DW-6 | 65 | - | -[b] | - |
| DW-7 | 65 | - | 18.87 | - |
| DW-8 | 65 | - | -[c] | - |
| DW-9 | 65 | - | -[c] | - |
| DW-10 | 65 | 409.40 | -[c] | - |
| DW-11 | 65 | - | -[c] | - |
| DW-12 | 65 | - | -[b] | - |
| DW-13 | 65 | - | -[b] | - |
| DW-14 | 65 | - | -[b] | - |
| DW-15 | 65 | - | -[b] | - |
| DW-16 | 65 | - | -[b] | - |
| BK-1 | 25 | 408.36 | 5.30 | 403.06 |
| BK-2 | 25 | 409.67 | 12.75 | 396.92 |
| **Monitoring Wells in the Plant Area for Dewatering Projects** | | | | |
| BK-3 | 66 | 415.24 | 19.43 | 395.81 |
| DW-34 | 25 | 414.67 | 19.45 | 395.22 |

Table 3. (Continued)

| Well No. | Well Depth (feet below land surface) | Elevation of the Measuring Point (feet above mean sea level) | Depth to Water (feet below measuring point) | Elevation of Water Level (feet above mean sea level) |
|---|---|---|---|---|
| **Dewatering Wells for the Treatment Plant Sewer Construction** | | | | |
| DW-1-85 | 80 | 414.40 | -[b] | - |
| DW-17 | 80 | 422.99 | 15.18 | 407.81 |
| DW-18 | 80 | 426.10 | 19.46 | 406.64 |
| DW-19 | 80 | 426.88 | 21.91 | 404.97 |
| **Monitoring Wells for the Treatment Plant Dewatering Projects** | | | | |
| DW-27 | 30 | 429.68 | 23.24 | 406.44 |
| DW-28 | 30 | 427.86 | -[a] | - |
| DW-29 | 68 | 424.89 | 23.51 | 401.38 |
| DW-30 | 31 | 422.77 | 23.77 | 399.00 |
| DW-31 | 25 | 423.71 | 24.82 | 398.89 |
| DW-32 | 66 | 432.57 | -[a] | - |
| DW-33 | 30 | 416.23 | -[a] | - |
| DW-1S-85 | 65 | 413.76 | 20.48 | 393.28 |
| **U.S. Corps of Engineers Monitoring Wells** | | | | |
| P-56 | 35 | 430.98 | -[a] | - |
| P-58 | 35 | 414.47 | -[a] | - |
| P-59 | 35 | 414.51 | -[a] | - |
| P-65 | 32 | 426.50 | 26.82 | 399.68 |
| P-68 | 35 | 432.58 | 33.35 | 399.23 |
| **Offsite Wells (East of Town Hall)** | | | | |
| WB-6 | 30 | 406.49 | 9.28 | 397.21 |
| WB-7 | 80 | 406.85 | 9.89 | 396.96 |
| WB-8 | 30 | 409.52 | -[a] | - |
| WB-9 | 80 | 407.43 | -[a] | - |

a) Not measured
b) Inaccessible
c) Well was pumping, water level could not be determined.

# Appendix 20B

# 1998 Roux Report

Table 1. Ground-Water Elevations, Solutia, W.G. Krummwich Plant, Sauget, Illinois, September, 1998.

| Well I.D. | Well Casing Diameter (inches) | Depth to Water (feet)[1] | Total Depth (feet)[1] | Top of Casing Elevation (feet above mean sea level) | Groundwater Elevation (feet above mean sea level) |
|---|---|---|---|---|---|
| GM- 3A | 6 | 15.10 | 40.2 | 411.31 | 396.21 |
| GM- 4A | 2 | 9.30 | 28 | 406.43 | 397.13 |
| GM- 4B | 4 | 9.05 | 87 | 406.7 | 397.65 |
| GM- 4C | 4 | 9.70 | 104 | 406.51 | 396.81 |
| GM- 5A | 2 | 18.20 | 36 | 414.94 | 396.74 |
| GM- 6A | 2 | 16.55 | 34 | 414.6 | 398.05 |
| GM- 6B | 4 | 17.95 | 88 | 415.98 | 398.03 |
| GM- 9A | 2 | 13.25 | 28 | 414.47 | 401.22 |
| GM- 9B | 4 | 12.56 | 75 | 412.36 | 399.80 |
| GM- 9C | 4 | 12.57 | 114.5 | 411.97 | 399.40 |
| GM- 10A | 2 | 11.60 | 28 | 412.97 | 401.37 |
| GM- 10B | 4 | 14.94 | 78 | 413.9 | 398.96 |
| GM- 10C | 4 | 14.91 | 111 | 413.78 | 398.87 |
| GM- 12A | 2 | 16.20 | 33.5 | 416.47 | 400.27 |
| GM- 12B | 4 | 16.20 | 89 | 416.8 | 400.60 |
| GM- 12C | 4 | 16.45 | 114.5 | 416.79 | 400.34 |
| GM- 17A | 2 | 13.95 | 38 | 412.57 | 398.62 |
| GM- 17B | 4 | 14.35 | 78 | 412.93 | 398.58 |
| GM- 17C | 4 | 14.20 | 107 | 412.42 | 398.22 |
| GM- 20A | 2 | 15.10 | 19.8 | 411.54 | 396.44 |
| GM- 20B | 4 | 16.00 | 90.75 | 411.72 | 395.72 |
| GM- 38 | 2 | 13.75 | 23.6 | 412.51 | 398.76 |
| GM- 58A | 2 | 16.62 | 39.5 | 414.24 | 397.62 |
| GM- 59A | 2 | 15.91 | 39 | 413.57 | 397.66 |
| MW- 3B | 2 | 18.55 | 87.5 | 414.69 | 396.14 |
| MW- 3C | 2 | 18.20 | 107.5 | 414.25 | 396.05 |
| MW- 5B | 2 | 18.50 | 107.3 | 415.25 | 396.75 |
| MW- 5C | 2 | 18.65 | 87.3 | 414.92 | 396.27 |
| MW- 7A | 2 | 17.55 | 41.1 | 414.95 | 397.40 |
| MW- 7B | 2 | 16.20 | 87.4 | 413.1 | 396.90 |
| MW- 7C | 2 | 16.30 | 107.4 | 413.05 | 396.75 |

**Key:**

[1] - Measured from Top of Casing

## Table 2. Groundwater Sampling Details
## Solutia, W.G. Krummrich Plant, Sauget, Illinois

| Well I.D. | Analyses | pH (su) | Temperature (oF) | Specific conductivity (uS/cm) | Purging Method | Volume Purged (gallons) |
|---|---|---|---|---|---|---|
| GM- 3A | VOCs, SVOCs | 7.28 | 66.0 | 0.93 | Pump | 34.5 |
| MW- 3B | VOCs, SVOCs | 7.36 | 72.0 | 1.25 | Pump | 44.65 |
| MW- 3C | VOCs, SVOCs | 9.1 | 69.0 | 0.81 | Pump | 120.5 |
| GM- 4A | VOCs, SVOCs | 7.72 | 68.9 | 0.66 | Bailer | 9.35 |
| GM- 4B | VOCs, SVOCs | 7.73 | 68.9 | 1.83 | Pump | 155.0 |
| GM- 4C | VOCs, SVOCs | 8.9 | 68.7 | 1.88 | Pump | 188.0 |
| GM- 5A | VOCs, SVOCs | 7.59 | 68.3 | 0.48 | Bailer | 8.9 |
| MW- 5B | VOCs, SVOCs | 8.36 | 71.0 | 0.63 | Pump | 34.4 |
| MW- 5C | VOCs, SVOCs | 10.1 | 71.4 | 1.1 | Pump | 44.4 |
| GM- 6A | VOCs, SVOCs | 7.53 | 67.2 | 1.48 | Bailer | 8.7 |
| GM- 6B | VOCs, SVOCs | 9.04 | 67.3 | 0.59 | Pump | 140.1 |
| MW- 7A | VOCs, SVOCs | 7.69 | 67.2 | 1.05 | Bailer | 11.7 |
| MW- 7B | VOCs, SVOCs | 9.4 | 68.7 | 0.92 | Pump | 35.6 |
| MW- 7C | VOCs, SVOCs | 9.69 | 68.7 | 0.92 | Pump | 45.5 |
| GM- 9A | VOCs | 7.28 | 77.5 | 2.13 | Bailer | 7.3 |
| GM- 9B | VOCs | 7.68 | 74.4 | 0.75 | Pump | 124.88 |
| GM- 9C | VOCs | 7.97 | 75.0 | 0.6 | Pump | 203.86 |
| GM- 10A | VOCs | 7.38 | 67.4 | 3.5 | Bailer | 8.05 |
| GM- 10B | VOCs | 9.58 | 68.9 | 1.6 | Pump | 126.12 |
| GM- 10C | VOCs | 8.73 | 68.4 | 1.42 | Pump | 192.18 |
| GM- 12A | VOCs | 6.6 | 71.0 | 15.0 | Bailer | 8.65 |
| GM- 12B | VOCs | 7.38 | 73.0 | 1.03 | Pump | 145.8 |
| GM- 12C | VOCs | 7.45 | 87.2 | 3.66 | Pump | 196.1 |
| GM- 17A | VOCs, SVOCs | 7.62 | 67.0 | 1.14 | Bailer | 12.0 |
| GM- 17B | VOCs, SVOCs | 9.37 | 67.0 | 1.84 | Pump | 127.3 |
| GM- 17C | VOCs, SVOCs | 9.52 | 67.0 | 8.85 | Pump | 185.6 |
| GM- 20A | VOCs, SVOCs | 7.24 | 69.2 | 1.6 | Bailer | 2.35 |
| GM- 20B | VOCs, SVOCs | 8.73 | 69.0 | 0.49 | Pump | 149.75 |
| GM- 38 | VOCs, SVOCs | 7.65 | 69.0 | 0.8 | Bailer | 5.0 |
| GM- 59A | VOCs, SVOCs | 7.16 | 68.7 | 1.22 | Bailer | 11.5 |

**Key:**

VOCs - Volatile Organic Compounds

SVOCs - Semivolatile Organic Compounds

# Appendix 21

# Groundwater Flow Patterns

# GROUND-WATER MOVEMENT

## Historical Ground-Water Flow Patterns

Ground water in the Henry Formation occurs under leaky artesian and water-table conditions. Recharge in this area occurs from (1) precipitation, (2) induced infiltration of surface water from the Mississippi River and small streams as a result of ground-water pumping, and (3) underflow from the east. Recharge by induced infiltration occurs where pumping large quantities of ground water has lowered the water table below the water level in the Mississippi River and nearby streams.

In the past, large supplies of ground water were withdrawn from permeable sand and gravel of the valley fill (Henry Formation) in the East St. Louis-Sauget-Cahokia area. The coarsest deposits (and most favorable for pumping large volumes of ground water) are located near bedrock. Most, if not all, of the wells are screened in these deposits (Ritchey, et al., 1984).

Ground-water pumpage in the Monsanto area was largely from industrial wells. Figure 4 illustrates the estimated pumpage in the East St. Louis-Sauget-Cahokia area from 1890 to 1980. Pumpage increased up to 1962 as demands required greater withdrawals. As a result of increased ground-water

conservation at one industry (1962-1965), the closing of two major ground-water-using industries (1970-1971), and the conversion to the use of the Mississippi River as a source of water (1972-1977), ground-water withdrawals decreased from 35.5 million gallons per day (mgd) in 1962 to 0.5 mgd in 1980 (Ritchey, et.al, 1984). A regional deterioration in water quality was probably the primary reason for changing from ground water to surface water.

The changes in ground-water withdrawals from 1961 to 1980, and the resultant effect on the potentiometric surface in the Henry Formation, have been illustrated in a series of figures (Figures 5 to 7). Figure 5, (based on 1961 data), clearly depicts locations of pumping centers and their associated cones of depression. Monsanto's supply wells (in the plant area) appear to be at the center of the largest cone of depression, and they drew ground water from all directions. Therefore, ground-water flow was toward the Monsanto property from adjacent properties, which include AMAX, Cerro and Mid-West Rubber. A smaller and deeper cone of depression, due to the pumping of Monsanto's Ranney Well No. 3, is evident about one mile west of the main pumping center, adjacent to the Mississippi River.

Ground-water levels in June 1973 (Figure 6) were at record high elevations, due primarily to a prolonged period of high river stage and extensive flooding in 1973. It is

also important to note that ground water beneath the W.G. Krummrich Landfill, was being drawn away from the Mississippi River toward the plant process-area production wells. In addition, ground-water on adjacent properties was still traveling toward the Monsanto wells.

In November 1980 (Figure 7), ground-water flow was toward the Mississippi River for the first time since the pre-pumping period. The re-establishment of natural flow conditions in the early 1980's represents a major ground-water flow reversal which resulted from the cessation of large ground-water withdrawals.

Current Ground-Water Flow Patterns

In order to assess current flow patterns, Geraghty & Miller, Inc. inventoried existing wells within an approximate 2-mile radius from the Monsanto property. These wells are shown on Figure 1, and available well construction details are provided in Table 1. Any supply well that could potentially influence ground-water flow patterns on the site was mapped. Well information was obtained from files of the Illinois Geological Survey, the Illinois State Water Survey and U.S. Geological Survey. Figure 4 shows the dramatic decrease in ground-water use from 1962 to 1980 for the East St. Louis - Sauget - Cahokia area. At the present time, ground water is not used for potable supplies. The

small ground-water withdrawals are limited to industrial use.

The current ground-water flow patterns have been illustrated for the three hydrogeologic zones and for a small portion of the bedrock aquifer adjacent to the Mississippi River. The configuration of the water table and the potentiometric surface for the intermediate and deep zones have been drawn for August 1984 and November 1985 to illustrate what effect rising and falling levels in the Mississippi River have on ground-water flow patterns during periods of high and low river stage.

Water-level measurements were made in all available wells between August 24 and 27, 1984 and again on November 21 and 22, 1985 (Tables 2 and 3). The construction details for these wells are provided in Tables 4, 5 and 6. Figures 8 through 10 depict water level elevations in August 1984 and Figures 11 through 14 illustrate the configuration of the water-table and potentiometric surfaces in November 1985.

- August 1984 -

The configuration of the water table in August 1984 (Figure 8) demonstrates that ground-water flow in the uppermost saturated unit (water-table zone) is toward the Mis-

sissippi River. At that time, the Mississippi River stage was 5 to 7 feet above the U.S. Corps of Engineers datum at the Market Street station in St. Louis.

A ground-water mound exists beneath a portion of the plant area. The mound appears to be caused by a combination of hydrogeologic factors and leaks in a water line, sewer and roof drains all of which were subsequently repaired. The eastern part of the property has a surficial layer of silt and/or clay. The lower permeability of these deposits compared to the surrounding area probably causes the ground-water head to build up. The leaky water line increased the head, which has declined since the line was repaired.

A ground-water mound also exists beneath the W.G. Krummrich landfill. The elevated water levels are probably the result of a combination of several hydrogeologic factors. Fine silty sand deposits, and lenses of silt and clay, exist beneath the landfill. The low permeability of these fine-grained materials and the waste materials tends to cause local perched water-table conditions, particularly when a high river stage results in a great deal of bank storage. The August 1984 water-level round was conducted approximately 50 days after flood stage which does not appear to be enough time for drainage to cause the mound to disappear.

In addition, a portion of the landfill adjacent to the Monsanto Landfill is located along the Krummrich landfill's eastern border, where runoff tends to accumulate. This property is devoid of vegetation, as is covered with sand, gravel and fly ash. This type of surface will permit a great deal of infiltration because of the relatively high permeability of these materials compared to the surrounding areas. This increased infiltration probably maintains the mound under the landfills.

It is unlikely that leakage through the cap on the Monsanto Landfill is responsible for the mound. John Mathes & Associates, Inc. (Columbia, Illinois) performed two sets of vertical permeability tests on soil collected from the upper two feet of the cap material in December 1985. Vertical permeability values ranged from $3.9 \times 10^{-7}$ to $2.4 \times 10^{-6}$ cm/sec (centimeters per second). These values are very low compared to the permeability of the material on the adjacent property which probably permits a much larger percentage of precipitation to enter the ground-water system. This localized upgradient recharge area probably contributes significantly to the elevated water-levels observed in the shallow wells in the Monsanto landfill and its immediate vicinity. Appendix D contains the Mathes report of the vertical permeability tests.

Finally, dewatering for the sewer project (north of the landfill) may be partially responsible for the mound. The water-table depression located near the northeast corner of the landfill is the result of several pumping dewatering wells in the intermediate zone. The 10-foot head difference between the water table and intermediate zones appears to have exaggerated the true head difference because of pumping.

The potentiometric surface of the intermediate zone (40 to 90 feet below land surface) in August 1984 is depicted on Figure 9. Ground-water flow in this portion of the unconsolidated deposits is toward the Mississippi River. Flow is being diverted in the area north of the landfill due to dewatering activities.

The potentiometric surface of the deep zone (90 to approximately 130 feet below land surface) in August 1984 is illustrated on Figure 10. The elevation of the water levels and the ground-water flow patterns are similar to those of the intermediate zone.

- November 1985 -

In contrast to low river stage (5 to 7 feet) in August 1984, the Mississippi River was 32 to 33 feet above the U.S. Army Corps of Engineers datum in November 1985. The effect

of high river stage on the ground-water system is clearly demonstrated in Figures 11 through 14.

The configuration of the water table in November 1985 (Figure 11) shows that the high river stage has caused a reversal in ground-water flow when compared to August 1984. Ground-water movement is away from the Mississippi River in response to a gradient which extends eastward to a ground-water divide located 3,500 feet from the river. A ground-water mound still exists under a portion of the plant area. Dewatering operations near the river were temporarily suspended due to the river level at the time of the water-level measurements.

The potentiometric surface of the intermediate zone for November 1985 is shown on Figure 12. Ground-water flow in this zone is also easterly away from the river, for a distance of approximately 4,500 feet. A cone of depression is evident in the plant area, as a result of a dewatering project.

The potentiometric surface of the deep zone for November 1985 is shown on Figure 13. The elevation of the water levels and the direction of ground-water flow are similar to those of the intermediate zone.

The water-level elevations for a small portion of the bedrock aquifer in November 1985 are depicted in Figure 14. Ground-water flow is also in an easterly direction.

- Hydrograph Records -

In November 1983, continuous Steven's water-level recorders, equipped with monthly clocks, were installed on Wells GM-1, GM-2 and GM-3, which tap the water-table zone. Wells GM-9B and GM-27B (intermediate zone) and Wells GM-9C and GM-27C (deep zone) were equipped with water-level recorders in September 1984, after their completion. The continuous water-level record for the bedrock aquifer began in November 1985 (Well GM-106). These water-level data are illustrated on Figures 15 through 22, with precipitation and Mississippi River records included for comparison.

The hydrographs provide ground-water levels over time for each of the three hydrogeologic zones, as well as for the bedrock aquifer. Precipitation records are from Lambert - St. Louis International Airport. The river stage data were measured by the U.S. Army Corps of Engineers at the Market Street station in St. Louis.

The hydrographs for the water-table wells (GM-1, GM-2, and GM-3) are similar because each well monitors the shallow zone (Figures 15 through 17). Changes in the water-table

elevation in the areas that were monitored correlate better with variations in precipitation and pumpage, rather than with river stage fluctuations. However, during flood stage, the water-level in well GM-3 can be influenced by the river level, as shown in the ground-water flow map for November 1985 (Figure 11).

Superimposed on the precipitation-dependent changes in the water level on each hydrograph is a "sawtooth" pattern which is regular and indicative of a response to pumpage, possibly on an adjacent property. In addition to the pumpage from nearby well(s), dewatering operations on adjacent properties are also likely to have had an effect.

The potentiometric surface in the intermediate zone has been continuously monitored in wells GM-9B (plant area) and GM-27B (landfill area) since September 1984 (Figures 18 and 19). Water levels in Well GM-27B respond quickly to change in river stage because the well is located adjacent to the river. In addition, its response to dewatering operations along the north side of the landfill is also quite evident. Changes due to precipitation are obscured by river stage fluctuations and local pumpage.

Figure 18 shows that the water level in well GM-9B is affected less by river stage than other wells closer to the River. However, the response of the potentiometric surface

to precipitation is also obscured due to continuous dewatering conducted in this area since 1983.

The potentiometric surface in the deep zone has also been continuously monitored since September 1984 (Figures 20 and 21). The deep zone is monitored at the same locations as the intermediate zone, in wells GM-9C and GM-27C. The changes in water levels in the deep zone are similar to those in the intermediate zone because river stage and dewatering operations have the same impact on ground-water flow direction, although the magnitude of the changes are less.

The continuous water-level record for the rock aquifer began in November 1985 after completion of a large diameter (8-inch) bedrock well (Figure 22). The hydrograph for this well is very similar to river stage fluctuations for the period of record.

# Appendix 22

# Groundwater Velocity

# Appendix 22A

# 1986 Geraghty & Miller Report

# Volume I

# AQUIFER TESTS

## Water-Table Zone

In November 1983, slug tests were conducted by Geraghty & Miller, Inc. in Wells GM-1, GM-2 and GM-3 (6-inch diameter). The purpose of these tests was to determine aquifer transmissivity, hydraulic conductivity (permeability) and the storage coefficient in the uppermost saturated unit.

A weight of a known volume was lowered below the water level in each well, displacing the water column upward. Measurements of the water-level decline were made with an electric probe at 15-second intervals. The test began as soon as the weight was lowered below the water level in the well, and the test ended when the water level in the well had declined to the original pre-test static level. Water-level measurements and elapsed times are given in Table 7.

The method used to analyze the slug test data was developed by Cooper, Bredehoeft, and Papadopulos (Lohman, 1972). The technique is applicable to wells screened across the entire thickness of a confined aquifer of rather low transmissivity. If the tested well is screened across part of the aquifer, the transmissivity values only apply to that part of the aquifer in which the well is screened or open.

Table 8 summarizes data for Wells GM-1, GM-2, and GM-3. The calculated hydraulic conductivities of the water-table zone ranged from 1.9 to 23 gallons per day per square foot (gpd/ft$^2$) and averaged 9.5 gpd/ft$^2$. The calculated transmissivity values ranged from 28.5 to 344.3 gpd/ft and averaged 141.5 gpd/ft. These values may be somewhat higher than the actual transmissivities because of the effect of the gravel pack around portions of the well screens.

In the landfill area adjacent to the Mississippi River, D'Appolonia Waste Management Services, Inc. obtained several Shelby tube samples of the fine grained material underlying the fill for the purpose of determining the permeability. In addition, field permeability tests were conducted in several of the borings by D'Appolonia during its investigation. These data are provided in Table 9 and indicate that the permeability of the fine grained material is extremely variable with a range of 0.004 to 8.7 gpd/ft$^2$ based on laboratory analyses, and a range of 3.8 to 127.2 gpd/ft$^2$ as reported from the field testing program.

Intermediate Zone

Schicht (1965) provided aquifer test data for six sites in Madison and St. Clair Counties (Table 10). Three of these tests were performed on wells which most likely tap the intermediate zone (Olin Mathieson Chemical Corporation,

City of Wood River, and Southwestern Campus of Illinois University, Edwardsville). Mean transmissivity and permeability values were determined to be 120,200 gpd/ft and 1,620 gpd/ft$^2$, respectively. The storage coefficients were representative of water-table conditions, as they ranged from 0.020 to 0.155.

John Mathes & Associates, Inc. conducted an aquifer test in September 1983 in the intermediate zone on Monsanto property. The purpose of the test was to determine well size, well spacing and discharge rates that would be required to complete the new main south trunk sewer in the plant area.

The aquifer test was carried out in an existing 18-inch diameter well, 65 feet deep, located adjacent to the ACL Building (near Well DW-5) in the plant area. The well was pumped for 48 hours at a rate which varied during the early portion of the test, but stabilized at 715 gpm during the last 24 hours of the testing period. Nine observation wells were monitored during the test.

Geraghty & Miller, Inc. evaluated the aquifer test data and determined the following aquifer characteristics of the intermediate zone: Transmissivity = 165,000 gpd/ft, hydraulic conductivity (permeability) = 3,300 gpd/ft$^2$, and storage coefficient = 0.04.

Deep Zone

Table 10 also provides hydrogeological characteristics of the deep zone specifically, transmissivity, permeability, and storage coefficient values, for sites at Shell Oil Company, Mobil Oil Company and Monsanto. The aquifer test performed in 1952 on a Monsanto test well was located near Ranney Well No. 3. The saturated thickness of the aquifer, at the time of the aquifer tests, varied from 73 feet on Mobil's property to about 100 feet at Shell Oil Company, about three miles to the northeast. Mean transmissivity and permeability values were calculated to be 211,000 gpd/ft and 2,600 gpd/ft$^2$, respectively. The coefficient of storage represents water-table conditions for the Mobil site (0.100) and at Monsanto (0.082); however, a value of 0.002, indicative of artesian conditions occurs at the Shell Oil Company site.

# GROUND-WATER VELOCITY

## Water-Table Zone

Ground-water velocity in the water-table zone was determined using the following form of Darcy's Law:

$$V = \frac{KI}{xn}$$

where:

V = velocity, in feet per day
K = hydraulic conductivity of the deposits in the direction of flow, in gallons per day per square foot
I = hydraulic gradient, in feet per foot
n = effective porosity, which is dimensionless (Walton, 1984)
x = 7.48 gallons per cubic feet

To compute the velocity value, the following data were used: the average hydraulic conductivity value obtained during Geraghty & Miller, Inc.'s aquifer testing of the shallow zone (9.5 gpd/ft$^2$); the hydraulic gradient (0.0025) which was measured in an area on the August 1984 water-table map (Figure 8) unaffected by either mounding or pumping conditions; and an assumed effective porosity of 15 percent which was estimated from the range (10-30) given for fine sand by Walton (1984). Because the water table zone consists of silty sand, a value at the low end of the range was chosen. The calculated velocity is 0.02 feet per day (7.3 feet per year) for the upper 15 feet of the saturated zone.

Intermediate Zone

Ground-water velocity in the intermediate zone of the Henry Formation was also calculated using Darcy's Law. The hydraulic conductivity (3,300 gpd/ft$^2$) was obtained by dividing the transmissivity of this zone (obtained from the John Mathes & Associates, Inc. aquifer test - 165,000 gpd/ft) by its saturated thickness (50 feet). This method should provide a minimum permeability as the pumping well is screened over only a portion of the aquifer. The data from Table 10 were not used because all three tests were conducted in Madison County. The hydraulic gradient (0.0020) was determined from the August 1984 water-level map in areas unaffected by dewatering operations (Figure 9). The effective porosity was assumed to be 20 percent (Walton, 1984). Therefore, the calculated ground-water velocity is 4.4 feet per day (1,606 feet per year).

Deep Zone

Ground-water velocity in the deep zone was determined to be 6.4 feet per day (2,350 feet per year). The hydraulic conductivity (4,200 gpd/ft$^2$) was determined by dividing the transmissivity value obtained during the 1952 aquifer test (Table 10) by the saturated thickness of 50 feet (90 to 140 feet below land surface). This value is higher than the permeability listed in Table 10 (2,800 gpd/ft$^2$) because

Schicht (1965) used 75 feet as the saturated thickness, rather than 50 feet. The hydraulic gradient (0.0023) was determined from the August 1984 water-level map in areas unaffected by dewatering operations (Figure 10). The effective porosity was assumed to be 20 percent (Walton, 1984).

# Appendix 22B

# 1997 Roux Report

# Volume I

## 5.0 GROUND-WATER VELOCITY

### 5.1 Water-Table Zone

Ground-water velocity in the water-table zone was determined using the following form of Darcy's Law

$$V = \frac{KI}{xn}$$

where:

V = velocity, in feet per day

K = hydraulic conductivity of the deposits in the direction of flow, in gallons per day per square foot

I = hydraulic gradient, in feet per foot

n = effective porosity, which is dimensionless (Walton, 1984)

x = 7.48 gallons per cubic feet

To compute the velocity value, the following data were used: the average hydraulic conductivity value obtained during Geraghty & Miller, Inc.'s aquifer testing of the shallow zone (9.5 gpd/ft$^2$); the hydraulic gradient (0.0025) which was measured in an area on the August 1984 water-table map (Figure 8, Appendix A) unaffected by either mounding or pumping conditions; and an assumed effective porosity of 15 percent which was estimated from the range (10-30) given for fine sand by Walton (1984). Because the water table zone consists of silty sand, a value at the low end of the range was chosen. The calculated velocity is 0.02 feet per day (7.3 feet per year) for the upper 15 feet of the saturated zone.

### 5.2 Intermediate Zone

Ground-water velocity in the intermediate zone of the Henry Formation was also calculated using Darcy's Law. The hydraulic conductivity (3,300 gpd/ft$^2$) was obtained by dividing the transmissivity of this zone (obtained from the John Mathes & Associates, Inc. aquifer test - 165,000 gpd/ft) by its saturated thickness (50 feet). This method should provide a minimum permeability as the pumping well is screened over only a portion of the aquifer. The data from

Table 10 (Appendix D) were not used because all three tests were conducted in Madison County. The hydraulic gradient (0.0020) was determined from the August 1984 water-level map in areas unaffected by dewatering operations (Figure 9, Appendix A). The effective porosity was assumed to be 20 percent (Walton, 1984). Therefore, the calculated ground-water velocity is 4.4 feet per day (1,606 feet per year).

### 5.3 Deep Zone

Ground-water velocity in the deep zone was determined to be 6.4 feet per day (2,350 feet per year). The hydraulic conductivity (4,200 gpd/ft$^2$) was determined by dividing the transmissivity value obtained during the 1952 aquifer test (Table 10, Appendix D) by the saturated thickness of 50 feet (90 to 140 feet below land surface). This value is higher than the permeability listed in Table 10 of Appendix D (2,800 gpd/ft$^2$) because Schicht (1965) used 75 feet as the saturated thickness, rather than 50 feet. The hydraulic gradient (0.0023) was determined from the August 1984 water-level map in areas unaffected by dewatering operations (Figure 10, Appendix A). The effective porosity was assumed to be 20 percent (Walton, 1984).

# Appendix 23

# 1986 Geraghty & Miller Report

# Volumes I, II and III

# PLANT-WIDE ASSESSMENT OF GROUND-WATER CONDITIONS AT THE W.G. KRUMMRICH PLANT MONSANTO COMPANY SAUGET, ILLINOIS VOLUME I - DATA ANALYSIS

September 1986

Prepared by:

Geraghty & Miller, Inc.
Ground-Water Consultants
125 East Bethpage Road
Plainveiw, New York 11803

## CONTENTS

## VOLUME I - DATA ANALYSIS


| | Page |
|---|---|
| INTRODUCTION | 1 |
| GEOLOGY | 3 |
| GROUND-WATER MOVEMENT | 6 |
| Historical Ground-Water Flow Patterns | 6 |
| Current Ground-Water Flow Patterns | 8 |
| August 1984 | 9 |
| November 1985 | 12 |
| Hydrograph Records | 14 |
| AQUIFER TESTS | 17 |
| Water-Table Zone | 17 |
| Intermediate Zone | 18 |
| Deep Zone | 20 |
| GROUND-WATER VELOCITY | 21 |
| Water-Table Zone | 21 |
| Intermediate Zone | 22 |
| Deep Zone | 22 |
| GROUND-WATER QUALITY | 24 |


TABLES


1. Well Inventory of Off-Site Wells Located in the East St. Louis - Sauget - Cahokia Area, Illinois
2. Static Water Levels for Monitoring Wells Measured During August 24 - 27, 1984
3. Static Water Levels for Monitoring Wells Measured During November 21 - 22, 1985
4. Summary of Construction Details for Monitoring Wells Installed Under the Direction of Geraghty & Miller, Inc.
5. Summary of Construction Details for Monitoring Wells Installed under the Direction of D'Appolonia Waste Management Services, Inc.
6. Summary of Construction Details for Monitoring Wells Installed under the Direction of Law Engineering Testing Company
7. Water-Level Measurements for Determining Aquifer Characteristics Based on Slug Tests Performed on Wells GM-1, GM-2 and GM-3

TABLES (Continued)

8. Summary of Slug Test Results For Selected Water-Table Zone Wells
9. Laboratory and Field Permeability Test Results Performed by D'Appolonia Waste Management Services, Inc.
10. Aquifer Characteristics Based on Aquifer Tests in Madison and St. Clair Counties, Illinois
11. Summary of Water-Quality Analyses for USEPA Priority Pollutant and Non-Priority Pollutant Organic Compounds
12. Summary of Volatile Organic Compounds in Ground Water in Well GM-12A
13. Mean Concentrations of Volatile Organic Compounds in Field, Trip and Laboratory Blanks
14. Analysis of Precision and Error Among Replicates from Well GM-12A

FIGURES

1. Area Wells Inventoried Prior to the Study
2. Location Map and Line of Geologic Cross-Section
3. Geologic Cross Section
4. Estimated Pumpage in the East St. Louis - Sauget - Cahokia Area 1890 - 1980
5. Approximate Elevation of the Potentiometric Surface, November 1961
6. Approximate Elevation of the Potentiometric Surface, June 1973
7. Approximate Elevation of the Potentiometric Surface, November 1980
8. Configuration of the Water Table, August 1984
9. Potentiometric Surface of the Intermediate Zone, August 1984
10. Potentiometric Surface of the Deep Zone, August 1984
11. Configuration of the Water Table, November 1985
12. Potentiometric Surface of the Intermediate Zone, November 1985
13. Potentiometric Surface of the Deep Zone, November 1985
14. Potentiometric Surface of the Rock Aquifer, November 1985
15. Hydrographs for GM-1 and the Mississippi River and Precipitation Data
16. Hydrographs for GM-2 and the Mississippi River and Precipitation Data
17. Hydrographs for GM-3 and the Mississippi River and Precipitation Data
18. Hydrographs for GM-9B and the Mississippi River and Precipitation Data
19. Hydrographs for GM-27B and the Mississippi River and Precipitation Data
20. Hydrographs for GM-9C and the Mississippi River and Precipitation Data

FIGURES (Continued)

21. Hydrographs for GM-27C and the Mississippi River and Precipitation Data
22. Hydrographs for GM-106 and the Mississippi River and Precipitation Data
23. Mean Concentrations of Priority Pollutant and Non-Priority Pollutant Compounds in the Water-Table Zone
24. Mean Concentrations of Priority Pollutant and Non-Priority Pollutant Compounds in the Intermediate Zone
25. Mean Concentrations of Priority Pollutant and Non-Priority Pollutant Compounds in the Deep Zone

## VOLUME II - CONCLUSIONS AND RECOMMENDATIONS

CONCLUSIONS..... 1

Offsite Impacts..... 1
Sources..... 4

RECOMMENDATIONS..... 7

Remedial Action..... 7
Ground-Water Monitoring..... 11

REFERENCES..... 13

TABLES

15. Estimates of Loading to the Mississippi River

16. Dilution Effects in the Mississippi River

17. Pollutant Loadings, Mississippi River-West Section, Dry Weather Event, April 15, 1982

18. Frequency of Pollutant Occurrence, Mississippi River Water, Downstream-Center and East Sections (11/24/81, 11/30/81, 4/15/82)

19. Semi-Annual Ground-Water Monitoring Program, Monsanto Company, W.G. Krummrich Plant, Sauget, Illinois

FIGURES

26. Approximate Areas Where Organic Compound Concentrations are above 100 ug/L in the Shallow Zone on the Monsanto Property

27. Approximate Areas Where Organic Compound Concentrations are above 100 ug/L in the Intermediate Zone on the Monsanto Property

## VOLUME III - APPENDICES

APPENDIX

A. Geraghty & Miller, Inc. Drilling and Sampling Protocols
B. Geologic Logs
C. Well Construction Data
D. Summary of John Mathes & Associates, Inc. Laboratory Permeability Test Results

E. Water Quality Data

Table E-1. Summary of Volatile Organic Compounds in Ground Water
Table E-2. Summary of Acid Extractable Organic Compounds in Ground Water
Table E-3. Summary of Base/Neutral Extractable Organic Compounds in Ground Water
Table E-4. Summary of Pesticide/PCB Compounds in Ground Water
Table E-5. Summary of Metals and Miscellaneous Parameters in Ground Water

# PLANT-WIDE ASSESSMENT OF GROUND-WATER CONDITIONS AT THE W.G. KRUMMRICH PLANT, MONSANTO COMPANY, SAUGET, ILLINOIS

## INTRODUCTION

Geraghty & Miller, Inc. was retained by the Monsanto Company to investigate ground-water conditions at the W.G. Krummrich Plant in Sauget, Illinois. The purpose of the study was to determine the direction and rate of ground-water flow and to characterize ground-water quality.

The field program began in October 1983 with the installation and sampling of 12 shallow wells. Since that time, additional phases of work have included a soil boring investigation, the installation of cluster monitoring wells, the determination of aquifer characteristics, and the collection of water-level and water-quality data from monitoring wells and wells associated with dewatering projects. These programs were designed to describe ground-water flow patterns, inter-aquifer flow, and the distribution of dissolved chemicals in the ground water.

This report describes the geology and hydrogeology of the study area. Ground-water velocities have been calculated and ground-water flow patterns have been mapped. The distributions of Priority Pollutant chemicals (and other

compounds) have been illustrated to show their occurrence in the study area.

Volume I contains an analysis of most of the data and a summary of water quality information. Conclusions and recommendations are presented in Volume II. The appendices (Volume III) contain basic water-quality data and a description of the protocols employed during drilling and sampling. A detailed description of the field program is provided in Appendix A. Geologic logs and well construction diagrams are included in Appendices B and C, respectively. The results of vertical permeability measurements performed on soil samples from the cap of the Monsanto Landfill are included in Appendix D. Water quality data appear in Appendix E.

## GEOLOGY

The W.G. Krummrich Plant is situated on the flood plain of the Mississippi River, south of East St. Louis, at Sauget, Illinois. Figure 1 shows the Monsanto property with respect to local landmarks. The flood plain is locally named the American Bottoms, and contains unconsolidated valley fill deposits composed of recent alluvium (Cahokia Alluvium) which overlies glacial material (Henry Formation). Published information indicates that these unconsolidated deposits are underlain by bedrock of Mississippian age which consists of limestone and dolomite with lesser amounts of sandstone and shale.

The Cahokia Alluvium (recent deposits) consists of unconsolidated, poorly sorted, fine-grained materials with some local sand and clay lenses. The material is about 40 feet thick and becomes coarser with depth. These recent alluvium deposits unconformably overlie the Henry Formation which is Wisconsinan glacial outwash in the form of valley-train deposits. The Henry Formation is about 95 feet thick at the Mississippi River and becomes thinner with increasing distance from the river. These valley-train materials are generally medium to coarse sand and gravel and also increase in grain size with depth. In some areas, till and/or boulder zones were encountered 10 to 15 feet above the bedrock.

During the various drilling programs conducted on-site, the alluvium was determined to consist of fine gray and brown silty sand up to 40 feet below land surface. A cross-section of the study area is provided for the line of section shown on Figure 2 and presented in Figure 3. The geologic data show that the unconsolidated deposits range from 140 feet thick near the river to about 110 feet in the eastern part of the Monsanto property. The geologic logs for the drilling programs conducted by Geraghty & Miller, Inc. are provided in Appendix B.

A review of well and boring logs for several drilling programs conducted by D'Appolonia Waste Management Services, Inc. (currently IT Corporation) and Law Engineering at the W.G. Krummrich Landfill indicates that directly beneath the fill are discontinuous lenses of silty/sandy clays interbedded with silty sands which range in thickness from 20 to 50 feet. The nature of this material was so variable from boring to boring that D'Appolonia believed the continuity of the silty clay was less likely than the continuity of the more permeable silty sand. This semi-confining unit overlies coarser, more permeable sand and gravel.

During the drilling program it was not possible to distinguish the contact or boundary between the Cahokia Alluvium and the Henry Formation, and for evaluating the hydrogeology of the area, it is not necessary to do so.

Aquifer properties such as transmissivity are more important than geological distinctions. Therefore, for the hydrogeologic assessment, the unconsolidated material above the bedrock was divided into 3 zones according to relative transmissivities. A fine-grained low transmissivity zone is present from the water table to about 40 feet below the surface, a more permeable intermediate zone exists between 40 and 90 feet, and a deep zone which contains the most permeable material lies between 90 feet and bedrock (approximately 130 feet).

# GROUND-WATER MOVEMENT

## Historical Ground-Water Flow Patterns

Ground water in the Henry Formation occurs under leaky artesian and water-table conditions. Recharge in this area occurs from (1) precipitation, (2) induced infiltration of surface water from the Mississippi River and small streams as a result of ground-water pumping, and (3) underflow from the east. Recharge by induced infiltration occurs where pumping large quantities of ground water has lowered the water table below the water level in the Mississippi River and nearby streams.

In the past, large supplies of ground water were withdrawn from permeable sand and gravel of the valley fill (Henry Formation) in the East St. Louis-Sauget-Cahokia area. The coarsest deposits (and most favorable for pumping large volumes of ground water) are located near bedrock. Most, if not all, of the wells are screened in these deposits (Ritchey, et al., 1984).

Ground-water pumpage in the Monsanto area was largely from industrial wells. Figure 4 illustrates the estimated pumpage in the East St. Louis-Sauget-Cahokia area from 1890 to 1980. Pumpage increased up to 1962 as demands required greater withdrawals. As a result of increased ground-water

conservation at one industry (1962-1965), the closing of two major ground-water-using industries (1970-1971), and the conversion to the use of the Mississippi River as a source of water (1972-1977), ground-water withdrawals decreased from 35.5 million gallons per day (mgd) in 1962 to 0.5 mgd in 1980 (Ritchey, et.al, 1984). A regional deterioration in water quality was probably the primary reason for changing from ground water to surface water.

The changes in ground-water withdrawals from 1961 to 1980, and the resultant effect on the potentiometric surface in the Henry Formation, have been illustrated in a series of figures (Figures 5 to 7). Figure 5, (based on 1961 data), clearly depicts locations of pumping centers and their associated cones of depression. Monsanto's supply wells (in the plant area) appear to be at the center of the largest cone of depression, and they drew ground water from all directions. Therefore, ground-water flow was toward the Monsanto property from adjacent properties, which include AMAX, Cerro and Mid-West Rubber. A smaller and deeper cone of depression, due to the pumping of Monsanto's Ranney Well No. 3, is evident about one mile west of the main pumping center, adjacent to the Mississippi River.

Ground-water levels in June 1973 (Figure 6) were at record high elevations, due primarily to a prolonged period of high river stage and extensive flooding in 1973. It is

also important to note that ground water beneath the W.G. Krummrich Landfill, was being drawn away from the Mississippi River toward the plant process-area production wells. In addition, ground-water on adjacent properties was still traveling toward the Monsanto wells.

In November 1980 (Figure 7), ground-water flow was toward the Mississippi River for the first time since the pre-pumping period. The re-establishment of natural flow conditions in the early 1980's represents a major ground-water flow reversal which resulted from the cessation of large ground-water withdrawals.

Current Ground-Water Flow Patterns

In order to assess current flow patterns, Geraghty & Miller, Inc. inventoried existing wells within an approximate 2-mile radius from the Monsanto property. These wells are shown on Figure 1, and available well construction details are provided in Table 1. Any supply well that could potentially influence ground-water flow patterns on the site was mapped. Well information was obtained from files of the Illinois Geological Survey, the Illinois State Water Survey and U.S. Geological Survey. Figure 4 shows the dramatic decrease in ground-water use from 1962 to 1980 for the East St. Louis - Sauget - Cahokia area. At the present time, ground water is not used for potable supplies. The

small ground-water withdrawals are limited to industrial use.

The current ground-water flow patterns have been illustrated for the three hydrogeologic zones and for a small portion of the bedrock aquifer adjacent to the Mississippi River. The configuration of the water table and the potentiometric surface for the intermediate and deep zones have been drawn for August 1984 and November 1985 to illustrate what effect rising and falling levels in the Mississippi River have on ground-water flow patterns during periods of high and low river stage.

Water-level measurements were made in all available wells between August 24 and 27, 1984 and again on November 21 and 22, 1985 (Tables 2 and 3). The construction details for these wells are provided in Tables 4, 5 and 6. Figures 8 through 10 depict water level elevations in August 1984 and Figures 11 through 14 illustrate the configuration of the water-table and potentiometric surfaces in November 1985.

- August 1984 -

The configuration of the water table in August 1984 (Figure 8) demonstrates that ground-water flow in the uppermost saturated unit (water-table zone) is toward the Mis-

sissippi River. At that time, the Mississippi River stage was 5 to 7 feet above the U.S. Corps of Engineers datum at the Market Street station in St. Louis.

A ground-water mound exists beneath a portion of the plant area. The mound appears to be caused by a combination of hydrogeologic factors and leaks in a water line, sewer and roof drains all of which were subsequently repaired. The eastern part of the property has a surficial layer of silt and/or clay. The lower permeability of these deposits compared to the surrounding area probably causes the ground-water head to build up. The leaky water line increased the head, which has declined since the line was repaired.

A ground-water mound also exists beneath the W.G. Krummrich landfill. The elevated water levels are probably the result of a combination of several hydrogeologic factors. Fine silty sand deposits, and lenses of silt and clay, exist beneath the landfill. The low permeability of these fine-grained materials and the waste materials tends to cause local perched water-table conditions, particularly when a high river stage results in a great deal of bank storage. The August 1984 water-level round was conducted approximately 50 days after flood stage which does not appear to be enough time for drainage to cause the mound to disappear.

In addition, a portion of the landfill adjacent to the Monsanto Landfill is located along the Krummrich landfill's eastern border, where runoff tends to accumulate. This property is devoid of vegetation, as is covered with sand, gravel and fly ash. This type of surface will permit a great deal of infiltration because of the relatively high permeability of these materials compared to the surrounding areas. This increased infiltration probably maintains the mound under the landfills.

It is unlikely that leakage through the cap on the Monsanto Landfill is responsible for the mound. John Mathes & Associates, Inc. (Columbia, Illinois) performed two sets of vertical permeability tests on soil collected from the upper two feet of the cap material in December 1985. Vertical permeability values ranged from $3.9 \times 10^{-7}$ to $2.4 \times 10^{-6}$ cm/sec (centimeters per second). These values are very low compared to the permeability of the material on the adjacent property which probably permits a much larger percentage of precipitation to enter the ground-water system. This localized upgradient recharge area probably contributes significantly to the elevated water-levels observed in the shallow wells in the Monsanto landfill and its immediate vicinity. Appendix D contains the Mathes report of the vertical permeability tests.

Finally, dewatering for the sewer project (north of the landfill) may be partially responsible for the mound. The water-table depression located near the northeast corner of the landfill is the result of several pumping dewatering wells in the intermediate zone. The 10-foot head difference between the water table and intermediate zones appears to have exaggerated the true head difference because of pumping.

The potentiometric surface of the intermediate zone (40 to 90 feet below land surface) in August 1984 is depicted on Figure 9. Ground-water flow in this portion of the unconsolidated deposits is toward the Mississippi River. Flow is being diverted in the area north of the landfill due to dewatering activities.

The potentiometric surface of the deep zone (90 to approximately 130 feet below land surface) in August 1984 is illustrated on Figure 10. The elevation of the water levels and the ground-water flow patterns are similar to those of the intermediate zone.

- November 1985 -

In contrast to low river stage (5 to 7 feet) in August 1984, the Mississippi River was 32 to 33 feet above the U.S. Army Corps of Engineers datum in November 1985. The effect

of high river stage on the ground-water system is clearly demonstrated in Figures 11 through 14.

The configuration of the water table in November 1985 (Figure 11) shows that the high river stage has caused a reversal in ground-water flow when compared to August 1984. Ground-water movement is away from the Mississippi River in response to a gradient which extends eastward to a ground-water divide located 3,500 feet from the river. A ground-water mound still exists under a portion of the plant area. Dewatering operations near the river were temporarily suspended due to the river level at the time of the water-level measurements.

The potentiometric surface of the intermediate zone for November 1985 is shown on Figure 12. Ground-water flow in this zone is also easterly away from the river, for a distance of approximately 4,500 feet. A cone of depression is evident in the plant area, as a result of a dewatering project.

The potentiometric surface of the deep zone for November 1985 is shown on Figure 13. The elevation of the water levels and the direction of ground-water flow are similar to those of the intermediate zone.

The water-level elevations for a small portion of the bedrock aquifer in November 1985 are depicted in Figure 14. Ground-water flow is also in an easterly direction.

- Hydrograph Records -

In November 1983, continuous Steven's water-level recorders, equipped with monthly clocks, were installed on Wells GM-1, GM-2 and GM-3, which tap the water-table zone. Wells GM-9B and GM-27B (intermediate zone) and Wells GM-9C and GM-27C (deep zone) were equipped with water-level recorders in September 1984, after their completion. The continuous water-level record for the bedrock aquifer began in November 1985 (Well GM-106). These water-level data are illustrated on Figures 15 through 22, with precipitation and Mississippi River records included for comparison.

The hydrographs provide ground-water levels over time for each of the three hydrogeologic zones, as well as for the bedrock aquifer. Precipitation records are from Lambert - St. Louis International Airport. The river stage data were measured by the U.S. Army Corps of Engineers at the Market Street station in St. Louis.

The hydrographs for the water-table wells (GM-1, GM-2, and GM-3) are similar because each well monitors the shallow zone (Figures 15 through 17). Changes in the water-table

elevation in the areas that were monitored correlate better with variations in precipitation and pumpage, rather than with river stage fluctuations. However, during flood stage, the water-level in well GM-3 can be influenced by the river level, as shown in the ground-water flow map for November 1985 (Figure 11).

Superimposed on the precipitation-dependent changes in the water level on each hydrograph is a "sawtooth" pattern which is regular and indicative of a response to pumpage, possibly on an adjacent property. In addition to the pumpage from nearby well(s), dewatering operations on adjacent properties are also likely to have had an effect.

The potentiometric surface in the intermediate zone has been continuously monitored in wells GM-9B (plant area) and GM-27B (landfill area) since September 1984 (Figures 18 and 19). Water levels in Well GM-27B respond quickly to change in river stage because the well is located adjacent to the river. In addition, its response to dewatering operations along the north side of the landfill is also quite evident. Changes due to precipitation are obscured by river stage fluctuations and local pumpage.

Figure 18 shows that the water level in well GM-9B is affected less by river stage than other wells closer to the River. However, the response of the potentiometric surface

to precipitation is also obscured due to continuous dewatering conducted in this area since 1983.

The potentiometric surface in the deep zone has also been continuously monitored since September 1984 (Figures 20 and 21). The deep zone is monitored at the same locations as the intermediate zone, in wells GM-9C and GM-27C. The changes in water levels in the deep zone are similar to those in the intermediate zone because river stage and dewatering operations have the same impact on ground-water flow direction, although the magnitude of the changes are less.

The continuous water-level record for the rock aquifer began in November 1985 after completion of a large diameter (8-inch) bedrock well (Figure 22). The hydrograph for this well is very similar to river stage fluctuations for the period of record.

# AQUIFER TESTS

## Water-Table Zone

In November 1983, slug tests were conducted by Geraghty & Miller, Inc. in Wells GM-1, GM-2 and GM-3 (6-inch diameter). The purpose of these tests was to determine aquifer transmissivity, hydraulic conductivity (permeability) and the storage coefficient in the uppermost saturated unit.

A weight of a known volume was lowered below the water level in each well, displacing the water column upward. Measurements of the water-level decline were made with an electric probe at 15-second intervals. The test began as soon as the weight was lowered below the water level in the well, and the test ended when the water level in the well had declined to the original pre-test static level. Water-level measurements and elapsed times are given in Table 7.

The method used to analyze the slug test data was developed by Cooper, Bredehoeft, and Papadopulos (Lohman, 1972). The technique is applicable to wells screened across the entire thickness of a confined aquifer of rather low transmissivity. If the tested well is screened across part of the aquifer, the transmissivity values only apply to that part of the aquifer in which the well is screened or open.

Table 8 summarizes data for Wells GM-1, GM-2, and GM-3. The calculated hydraulic conductivities of the water-table zone ranged from 1.9 to 23 gallons per day per square foot (gpd/ft$^2$) and averaged 9.5 gpd/ft$^2$. The calculated transmissivity values ranged from 28.5 to 344.3 gpd/ft and averaged 141.5 gpd/ft. These values may be somewhat higher than the actual transmissivities because of the effect of the gravel pack around portions of the well screens.

In the landfill area adjacent to the Mississippi River, D'Appolonia Waste Management Services, Inc. obtained several Shelby tube samples of the fine grained material underlying the fill for the purpose of determining the permeability. In addition, field permeability tests were conducted in several of the borings by D'Appolonia during its investigation. These data are provided in Table 9 and indicate that the permeability of the fine grained material is extremely variable with a range of 0.004 to 8.7 gpd/ft$^2$ based on laboratory analyses, and a range of 3.8 to 127.2 gpd/ft$^2$ as reported from the field testing program.

Intermediate Zone

Schicht (1965) provided aquifer test data for six sites in Madison and St. Clair Counties (Table 10). Three of these tests were performed on wells which most likely tap the intermediate zone (Olin Mathieson Chemical Corporation,

City of Wood River, and Southwestern Campus of Illinois University, Edwardsville). Mean transmissivity and permeability values were determined to be 120,200 gpd/ft and 1,620 gpd/ft$^2$, respectively. The storage coefficients were representative of water-table conditions, as they ranged from 0.020 to 0.155.

John Mathes & Associates, Inc. conducted an aquifer test in September 1983 in the intermediate zone on Monsanto property. The purpose of the test was to determine well size, well spacing and discharge rates that would be required to complete the new main south trunk sewer in the plant area.

The aquifer test was carried out in an existing 18-inch diameter well, 65 feet deep, located adjacent to the ACL Building (near Well DW-5) in the plant area. The well was pumped for 48 hours at a rate which varied during the early portion of the test, but stabilized at 715 gpm during the last 24 hours of the testing period. Nine observation wells were monitored during the test.

Geraghty & Miller, Inc. evaluated the aquifer test data and determined the following aquifer characteristics of the intermediate zone: Transmissivity = 165,000 gpd/ft, hydraulic conductivity (permeability) = 3,300 gpd/ft$^2$, and storage coefficient = 0.04.

Deep Zone

Table 10 also provides hydrogeological characteristics of the deep zone specifically, transmissivity, permeability, and storage coefficient values, for sites at Shell Oil Company, Mobil Oil Company and Monsanto. The aquifer test performed in 1952 on a Monsanto test well was located near Ranney Well No. 3. The saturated thickness of the aquifer, at the time of the aquifer tests, varied from 73 feet on Mobil's property to about 100 feet at Shell Oil Company, about three miles to the northeast. Mean transmissivity and permeability values were calculated to be 211,000 gpd/ft and 2,600 gpd/ft$^2$, respectively. The coefficient of storage represents water-table conditions for the Mobil site (0.100) and at Monsanto (0.082); however, a value of 0.002, indicative of artesian conditions occurs at the Shell Oil Company site.

# GROUND-WATER VELOCITY

## Water-Table Zone

Ground-water velocity in the water-table zone was determined using the following form of Darcy's Law:

$$V = \frac{KI}{xn}$$

where:

V = velocity, in feet per day
K = hydraulic conductivity of the deposits in the direction of flow, in gallons per day per square foot
I = hydraulic gradient, in feet per foot
n = effective porosity, which is dimensionless (Walton, 1984)
x = 7.48 gallons per cubic feet

To compute the velocity value, the following data were used: the average hydraulic conductivity value obtained during Geraghty & Miller, Inc.'s aquifer testing of the shallow zone (9.5 gpd/ft$^2$); the hydraulic gradient (0.0025) which was measured in an area on the August 1984 water-table map (Figure 8) unaffected by either mounding or pumping conditions; and an assumed effective porosity of 15 percent which was estimated from the range (10-30) given for fine sand by Walton (1984). Because the water table zone consists of silty sand, a value at the low end of the range was chosen. The calculated velocity is 0.02 feet per day (7.3 feet per year) for the upper 15 feet of the saturated zone.

Intermediate Zone

Ground-water velocity in the intermediate zone of the Henry Formation was also calculated using Darcy's Law. The hydraulic conductivity (3,300 gpd/ft$^2$) was obtained by dividing the transmissivity of this zone (obtained from the John Mathes & Associates, Inc. aquifer test - 165,000 gpd/ft) by its saturated thickness (50 feet). This method should provide a minimum permeability as the pumping well is screened over only a portion of the aquifer. The data from Table 10 were not used because all three tests were conducted in Madison County. The hydraulic gradient (0.0020) was determined from the August 1984 water-level map in areas unaffected by dewatering operations (Figure 9). The effective porosity was assumed to be 20 percent (Walton, 1984). Therefore, the calculated ground-water velocity is 4.4 feet per day (1,606 feet per year).

Deep Zone

Ground-water velocity in the deep zone was determined to be 6.4 feet per day (2,350 feet per year). The hydraulic conductivity (4,200 gpd/ft$^2$) was determined by dividing the transmissivity value obtained during the 1952 aquifer test (Table 10) by the saturated thickness of 50 feet (90 to 140 feet below land surface). This value is higher than the permeability listed in Table 10 (2,800 gpd/ft$^2$) because

Schicht (1965) used 75 feet as the saturated thickness, rather than 50 feet. The hydraulic gradient (0.0023) was determined from the August 1984 water-level map in areas unaffected by dewatering operations (Figure 10). The effective porosity was assumed to be 20 percent (Walton, 1984).

## GROUND-WATER QUALITY

Ground-water sampling programs have been conducted at the Monsanto facility since November 1983 (Tables E-1 through E-5 in Appendix E). The overall objective of the monitoring programs was to characterize plant-wide ground-water quality. A minimum of two samples were collected from wells in critical areas. However, some wells have been sampled only once while others, such as GM-12A, were sampled frequently for quality assurance/quality control purposes.

Between November 1983 and May 1984, three rounds of samples were collected from the first 12 wells installed by Geraghty & Miller, Inc. The fourth sampling round was conducted in June, 1984 when ten wells in the landfill area were sampled. Each ground-water sample collected during the four sampling rounds was analyzed for USEPA priority pollutant compounds, with the exception of February 1984. Only total organic carbon (TOC), total organic halogens (TOX), total phenols and chloride were scheduled for this round. In addition to the priority pollutant analyses, TOC and TOX were determined in November 1983 and May 1984, and chloride was analyzed in the May 1984 program. Temperature, pH, and specific conductance (field parameters) were measured in the field during each round. Envirodyne Engineers (St. Louis, Missouri) provided the laboratory services for each of these sampling programs.

During the same period, D'Appolonia Waste Management Services, Inc. collected samples from the Monsanto Landfill monitoring wells in January, February, March, and May, 1984. Analyses were limited to TOC, TOX, total phenols, pH, temperature, and specific conductance. The analytical services were provided by D'Appolonia's laboratory in Pittsburgh, Pennsylvania.

In August 1984, a plant-wide sampling program was initiated by Geraghty & Miller, Inc. after additional wells were installed between June and August, 1984. The analytical program included a library search for non-priority pollutant compounds in addition to the USEPA Priority Pollutants. Miscellaneous constituents, such as TOC, chloride, and total dissolved solids (TDS), were also included in the program, as well as the three routine field parameters. In addition, three wells were selected for dioxin analysis (GM-16A, GM-27B and GM-28B). Envirodyne Engineers, Inc. also provided the laboratory services for this sampling program.

The analytical data for many samples collected during the August 1984 sampling round may be invalid because samples were held beyond the method holding times prior to analysis. Where there were questions regarding the integrity of the analytical data, wells were resampled in

November 1985. The questionable data are reported but are footnoted in the data tables.

Based on the results of the September 1984 library search and Monsanto's knowledge of past chemical usage in the plant, a list of non-priority pollutant compounds was developed for addition to the priority pollutant list. These compounds could theoretically be present in the ground water and were analyzed for in sampling rounds after September 1984. The chemicals are listed below:

Volatile Organic Compounds

Methyl-iso-butyl ketone
Methyl-isoamyl ketone
m-Xylene
o-Xylene
p-Xylene

Acid Extractable Organic Compounds

4-Chlorophenol

Base/Neutral Extractable Organic Compounds

2-Nitroaniline
4-Nitroaniline
2-Nitrochlorobenzene
4-Nitrochlorobenzene
2,4-Dinitrochlorobenzene
3,4-Dinitrochlorobenzene
4-Nitrodiphenylamine
Triphenyl phosphate
2-Nitrobiphenyl (Wells GM-8 and GM-31ABC only)
4-Nitrobiphenyl (Wells GM-8 and GM-31ABC only)

Five sampling rounds were conducted between November 1984 and February 1986 for the USEPA priority pollutant compounds and the site specific list of non-priority pollu-

tants. Environmental Testing and Certification (ETC) in Edison, New Jersey provided the laboratory services for each of these programs and their results are presented in Tables E-1 through E-5 (Appendix E).

The chemical data base is extensive and would prove cumbersome to those not familiar with it. In order to present these data in a manner that will easily demonstrate where chemical constituents have and have not been detected, mean concentrations of total priority pollutants and identified non-priority pollutants have been calculated for each well. The organic fractions of the chemical analysis (i.e. volatile, base/neutral, acid, and pesticide/PCB compounds) were averaged individually and the mean value for each organic fraction was added together (Table 11). The results of the data reduction are presented for each of the three hydrogeologic zones, and are shown on Figures 23 through 25.

Laboratory results that are reported with a less than symbol (<) indicate that the chemical constituent was not detected above its detection limit (the value to the right of the symbol) at the time the analysis was performed. These results were assigned a value of zero for computations of means or averages. The detection limits for the same compounds vary between Envirodyne and ETC, as well as between sampling events analyzed by the same laboratory. This

is due to different analytical equipment, the volume of sample analyzed and different levels of interferences.

The results of the USEPA priority pollutant metals analysis for each sampling round are provided in Table E-5 in Appendix E. Most results are below the method detection limits, and few analyses are above USEPA drinking water standards for the metals that were detected. Therefore, these data are presented only in tabular form.

Throughout the course of the ground-water sampling programs conducted at the W.G. Krummrich Plant, 10 to 15 percent of the total number of samples were submitted as blind replicates, and trip and field blanks were also collected for QA/QC purposes. The blanks were analyzed for volatile organic compounds only. Replicates from well GM-12A were collected during each sampling round, except September 1984, to provide a continuing check on laboratory performance. There are seven data sets for well GM-12A and they are shown in Table 12.

With the exceptions of the September and November, 1984 field blanks, trip blanks collected in May and September, 1984 and five laboratory blanks collected in September, 1984 (11 out of a total of 34), total volatile organic compound concentrations were less than 50 ug/L in the blanks (see Table E-1). Benzene, chlorobenzene and methylene chloride

were compounds present in the highest concentrations in the blanks, with methylene chloride constituting more than 50% of the total in most cases. Because these compounds were found in all three types of blanks which are made up from distilled/deionized water provided by the laboratory and these compounds are used for many purposes in the laboratory (especially methylene chloride which is a solvent and extractant), the presence of contaminants in the blanks is regarded as a laboratory artifact.

Table 13 shows that low concentrations of benzene (5 ug/L or below), chlorobenzene (5 ug/L or below) and methylene chloride (20 ug/L or below) in ground-water samples must be regarded as spurious because they are present in the blanks. The numbers in parentheses are the means of the mean concentration in each type of blank (see Table 13). Total volatile organic compound concentrations below approximately 30 ug/L in ground water must also be regarded as suspect because the analytical data for blanks indicates that there is very little confidence in the concentrations below this value (see Table 13).

The quality of laboratory performance was evaluated with replicate data from Well GM-12A according to procedures in EPA Method Study 29, Method 624 -- Purgeables (1984), one of several EPA Interlaboratory Method Validation Studies (IMVS) which provides information on the expected precision

and accuracy for the method used on the Monsanto samples. This review, however, evaluated only precision as shown by the closeness of values of replicate samples. Accuracy cannot be evaluated because the samples in question are field samples and not laboratory prepared reference samples.

Table 14 shows the replicate pairs of chlorobenzene, xylenes, toluene, benzene and ethylbenzene data that were evaluated for VOC precision and relative error. For each quantified constituent, Table 14 shows the range of concentrations that the IMVS data applies and the expected precision. With two exceptions, all the results have precision which fall inside the IMVS QC acceptance criteria. Some concentrations, such as those for toluene and ethylbenzene are only marginally outside the applicable range for the method. Most of the benzene data is outside the range. The fact that some concentrations are outside the applicable range does not reflect badly on the data because they meet the IMVS criteria based on distilled water and precision can be expected to be lower for environmental samples. In addition the relative error ranges from 0.4 to 33 percent and averages 8% (the mean of the means for each compound in Table 14) which indicates very good agreement among replicates. Overall, the performance of the laboratory was very good which indicates a high degree of confidence in the rest of the analytical data.

Table 1. Well Inventory of Off-Site Wells Located in the East St. Louis - Sauget - Cahokia Area, Illinois.

| Well No. | Well Location | Date Completed | Depth (feet below land surface) | Well Diameter (inches) | Screen Setting (feet below land surface) | Status/Remarks |
|---|---|---|---|---|---|---|
| Owner: Illinois Environmental Protection Agency | | | | | | |
| G101 | 2N-10W-26 | 10- 8-80 | 28.5 | 2 | 8.5- 28.5 | IEPA Monitoring Well/Dead Creek Study |
| G102 | do | 10- 8-80 | 32.8 | 2 | 7.5- 32.8 | do |
| G103 | do | 10- 9-80 | 32.8 | 2 | 6.2- 32.8 | do |
| G104 | do | 10- 9-80 | 34.0 | 2 | 9.0- 34.9 | do |
| G105 | do | 10-10-80 | 34.5 | 2 | 9.5- 34.5 | do |
| G106 | do | 10-15-80 | 40.0 | 2 | 5.0- 40.0 | do |
| G107 | do | 10-16-80 | 33.8 | 2 | 3.8- 33.8 | do |
| G108 | do | 10-20-80 | 34.2 | 2 | 4.2- 34.2 | do |
| G109 | do | 10-21-80 | 35.0 | 2 | 8.0- 35.0 | do |
| G110 | do | 10-22-80 | 30.0 | 2 | 5.0- 30.0 | do |
| G111 | do | 10-23-80 | 34.0 | 2 | 12.0- 34.0 | do |
| G112 | do | 10-29-80 | 35.1 | 2 | 13.1- 35.1 | do |
| Owner: Private Wells | | | | | | |
| G501 | 2N-10W-256 | -[a] | - | - | - | Private Well/IEPA Creek Study |
| G502 | do | - | - | - | - | do |
| G503 | do | - | - | - | - | do |
| G504 | do | - | - | - | - | do |
| Owner: Amax Corporation[b] | | | | | | |
| 5 | 2N-10W-23.3a | - | 104 | - | - | Supply Well |

a) Data not available

b) Several monitoring wells exist on Amax's property but data is not available according to IEPA.

Table 1. (Cont'd.)

| Well No. | Well Location | Date Completed | Depth (feet below land surface) | Well Diameter (inches) | Screen Setting (feet below land surface) | Status/Remarks |
|---|---|---|---|---|---|---|
| | Owner: Cerro Corporation | | | | | |
| 4 | 2N-10W-26 | - | 100-110 | - | - | Supply Well |
| 5 | do | - | 100-110 | - | - | do |
| 6 | do | - | 97 | - | - | do |
| | Owner: Certainteed Products Co. | | | | | |
| 1 | 2N-9W-19.8f | - | 122 | - | - | do |
| 2 | do | - | 110 | - | - | do |
| 3 | do | - | 106 | - | - | do |
| | Owner: Chemtech | | | | | |
| - | 2N-9W-29.8f | - | - | - | - | do |
| | Owner: Fox Terminal | | | | | |
| - | 2N-10W-33.1f | - | 105 | - | - | do |
| | Owner: Illinois State Water Survey | | | | | |
| - | 2N-10W-35 | - | - | - | - | - |
| R-2 | 2N-10W-26.8g | - | - | - | - | - |
| No. 20 | 2N-10W-25.5d | - | - | - | - | - |
| | Owner: Lefton | | | | | |
| - | 2N-10W-25.7b | - | - | - | - | Supply well |

Table 1. (Cont'd.)

| Well No. | Well Location | Date Completed | Depth (feet below land surface) | Well Diameter (inches) | Screen Setting (feet below land surface) | Status/Remarks |
|---|---|---|---|---|---|---|
| | Owner: Midwest Rubber Co.[c) d)] | | | | | |
| 2 | 2N-10W-26 | - | 114 | - | - | Supply Well |
| 6 | do | - | 110 | - | - | do |
| 7 | do | - | 109 | - | - | do |
| 8 | do | - | 112 | - | - | do |
| 10 | do | - | 115 | - | - | do |
| 11 | do | - | 115 | - | - | do |
| | Owner: Mississippi Avenue Warehouse | | | | | |
| - | 2N-10W-23 | - | - | - | - | do |
| | Owner: Mobil-Sacony | | | | | |
| - | 2N-10W-25.6E | - | - | - | - | do |
| | Owner: Obear-Nester Glass Company | | | | | |
| - | 2N-9W-19.7d | - | - | - | - | do |
| - | do | - | - | - | - | do |
| | Owner: Phillips Petroleum | | | | | |
| - | 2N-10W-34 | - | - | - | - | do |

c) Several monitoring wells exist on Midwest Rubber's property but data is not available according to ILPA.

d) Only four wells are shown on Figure 1 because the exact locations of the other 2 are unknown.

Table 1. (Cont'd.)

| Well No. | Well Location | Date Completed | Depth (feet below land surface) | Well Diameter (inches) | Screen Setting (feet below land surface) | Status/Remarks |
|---|---|---|---|---|---|---|
| Owner: U.S. Corps of Engineers | | | | | | |
| RW-111 | 2N-10W-23 | - | - | - | - | Mississippi River Levee Relief Wells |
| RW-118 | 2N-10W-23.6f | - | - | - | - | do |
| RW-126 | 2N-10W-23 | - | - | - | - | do |
| RW-136 | do | - | - | - | - | do |
| RW-137 | 2N-10W-34.5h | - | - | - | - | do |
| RW-159 | 2N-10W-34 | - | 90 | - | - | do |
| RW-169 | do | - | 78 | - | - | do |
| RW-180 | 2N-10W-34.8b | - | 82 | - | - | do |
| RW-196 | 2N-10W-4.1g | - | - | - | - | do |
| Owner: St. Louis Grain Co. | | | | | | |
| - | 2N-9W-30 | - | - | - | - | Supply Well |
| Owner: Sterling Steel Casting Company | | | | | | |
| - | 2N-10W-26 | - | 120 | - | - | do |
| Owner: Clayton Chemical Company | | | | | | |
| 1 | 2N-10W-24 | - | 72 | - | - | Supply Well |
| 2 | do | - | 60.5 | - | - | do |
| 3 | do | - | 43.5 | - | - | do |
| 4 | do | - | 75 | - | - | do |

Table 2. Static Water Levels for Monitoring Wells Measured During August 24-27, 1984, Monsanto Company, W.G. Krummrich Plant, Sauget, Illinois.

| Well No. | Well Depth (feet below land surface) | Elevation of the Measuring Point (feet above mean sea level) | Depth to Water (feet below measuring point) | Elevation of Water Level (feet above mean sea level) |
|---|---|---|---|---|
| Geraghty & Miller, Inc. Monitoring Wells | | | | |
| GM-1 | 34 | 413.65 | 12.93 | 400.72 |
| GM-2 | 41 | 417.37 | 19.32 | 398.05 |
| GM-3 | 36 | 411.31 | 15.15 | 396.16 |
| GM-4A | 28 | 406.43 | 9.15 | 397.28 |
| GM-4B | 87 | 406.70 | 10.10 | 396.60 |
| GM-5 | 36 | 414.94 | 18.72 | 396.22 |
| GM-6A | 34 | 414.59 | 16.96 | 397.63 |
| GM-6B | 88 | 416.04 | 19.40 | 396.64 |
| GM-7 | 36 | 414.95 | 18.05 | 396.90 |
| GM-8 | 34 | 418.49 | 21.12 | 397.37 |
| GM-9A | 28 | 414.47 | 13.26 | 401.21 |
| GM-9B | 75 | 412.36 | 12.67 | 399.69 |
| GM-9C | 108 | 411.97 | 12.76 | 399.21 |
| GM-10A | 28 | 412.97 | 11.86 | 401.11 |
| GM-11 | 25 | 412.95 | 12.80 | 400.15 |
| GM-12A | 33.5 | 416.47 | 15.99 | 400.48 |
| GM-12B | 89 | 416.80 | 16.09 | 400.71 |
| GM-13 | 38 | 415.47 | 15.25 | 400.22 |
| GM-14 | 38 | 411.26 | 9.50 | 401.76 |
| GM-15 | 38 | 413.71 | 13.53 | 400.18 |
| GM-16A | 38 | 412.03 | 12.83 | 399.20 |
| GM-16B | 90 | 412.40 | 13.22 | 399.18 |
| GM-17A | 38 | 412.57 | 14.07 | 398.50 |
| GM-17B | 78 | 412.93 | 14.77 | 398.16 |
| GM-17C | 107 | 412.42 | 14.61 | 397.81 |
| GM-18A | 38 | 414.23 | 17.22 | 397.01 |
| GM-18B | 92 | 414.02 | 17.16 | 396.86 |

Table 2. (Continued)

| Well No. | Well Depth (feet below land surface) | Elevation of the Measuring Point (feet above mean sea level) | Depth to Water (feet below measuring point) | Elevation of Water Level (feet above mean sea level) |
|---|---|---|---|---|
| **Geraghty & Miller, Inc. Monitoring Wells (Cont'd)** | | | | |
| GM-25A | 38 | 414.20 | 19.30 | 394.90 |
| GM-25B | 88 | 415.46 | 21.62 | 393.84 |
| GM-27B | 82 | 426.04 | 37.24 | 388.80 |
| GM-27C | 105 | 426.76 | 38.86 | 387.90 |
| GM-28B | 93 | 423.88 | 34.10 | 389.78 |
| GM-28C | 107 | 423.78 | 34.21 | 389.57 |
| GM-29 | 20.5 | 411.06 | -[a] | - |
| GM-30 | 21.2 | 416.09 | -[a] | - |
| **Landfill Monitoring Wells** | | | | |
| B-21A | 28 | 428.53 | 27.74 | 400.79 |
| B-21B | 49.5 | 428.37 | 39.84 | 388.53 |
| B-22A | 35 | 428.16 | 26.72 | 401.44 |
| B-22B | 55 | 428.16 | 39.90 | 388.26 |
| B-23B | 49.5 | 428.17 | 39.50 | 388.67 |
| B-24A | 27.5 | 422.49 | 20.58 | 401.91 |
| B-24B | 50 | 422.28 | 32.81 | 389.47 |
| B-24C | 69 | 422.52 | 33.16 | 389.36 |
| B-25A | 35.2 | 428.47 | 26.88 | 401.59 |
| B-25B | 49.5 | 427.35 | 36.52 | 390.83 |
| B-26A | 33.2 | 423.71 | 24.59 | 399.12 |
| B-26B | 49.8 | 423.62 | 33.69 | 389.93 |
| B-27B | 42 | 425.83 | 34.19 | 391.64 |
| B-28A | 32.5 | 423.04 | 21.50 | 401.54 |
| B-28B | 49.5 | 423.08 | 32.49 | 390.59 |
| B-29A | 33.2 | 429.03 | 28.56 | 400.47 |
| B-29B | 49.5 | 429.06 | 36.86 | 392.20 |
| B-30B | 49 | 430.52 | 38.90 | 391.62 |
| B-31B | 34.5 | 421.68 | 33.76 | 387.92 |
| B-31C | 67.3 | 421.88 | 34.87 | 387.01 |
| B-101 | 169.2 | 427.09 | 38.44 | 388.65 |
| B-102 | 162 | 423.84 | 34.45 | 389.39 |
| B-103 | 165.8 | 427.33 | -[b] | - |
| B-105 | 154 | 420.93 | -[b] | - |

Table 2. (Continued)

| Well No. | Well Depth (feet below land surface) | Elevation of the Measuring Point (feet above mean sea level) | Depth to Water (feet below measuring point) | Elevation of Water Level (feet above mean sea level) |
|---|---|---|---|---|
| Landfill Monitoring Wells (Cont'd) | | | | |
| P-1 | 47 | 423.11 | 32.96 | 390.15 |
| P-2 | 47 | 423.15 | 33.21 | 389.94 |
| P-3 | 47 | 423.43 | 33.56 | 389.87 |
| P-4 | 47.5 | 421.82 | 31.99 | 389.83 |
| P-5 | 54.5 | 422.12 | 32.75 | 389.37 |
| P-6 | 30.5 | 421.78 | 24.54 | 397.24 |
| P-7 | 33 | 421.82 | 22.31 | 399.51 |
| P-8 | 53.5 | 421.79 | 32.65 | 389.14 |
| P-9 | 50 | 423.14 | 34.13 | 389.01 |
| P-10 | 54 | 423.43 | 34.13 | 389.30 |
| P-11 | 51 | 422.30 | 33.76 | 388.54 |
| P-12 | 50.5 | 423.75 | 35.18 | 388.57 |
| P-13 | 53.5 | 424.32 | 36.51 | 387.81 |
| P-14 | 32.5 | 424.36 | 23.72 | 400.64 |
| Dewatering Wells in the Plant Area | | | | |
| DW-1 | 65 | 410.04 | 11.91 | 398.13 |
| DW-2 | 65 | 409.12 | 10.89 | 398.23 |
| DW-3 | 65 | 408.85 | 10.41 | 398.44 |
| DW-4 | 65 | 408.44 | 10.59 | 397.85 |
| DW-5 | 65 | - | -[c] | - |
| DW-6 | 65 | - | -[c] | - |
| DW-7 | 65 | - | -[c] | - |
| DW-8 | 65 | - | -[c] | - |
| DW-9 | 65 | - | -[c] | - |
| DW-10 | 65 | 409.40 | 9.91 | 399.49 |
| DW-11 | 65 | - | -[c] | - |
| DW-12 | 65 | - | -[c] | - |
| DW-13 | 65 | - | -[c] | - |
| DW-14 | 65 | - | -[c] | - |
| DW-15 | 65 | - | -[c] | - |
| DW-16 | 65 | - | -[c] | - |
| BK-1 | 66 | 408.36 | 4.11 | 404.25 |
| BK-2 | 25 | 409.67 | 8.46 | 401.21 |

Table 2. (Continued)

| Well No. | Well Depth (feet below land surface) | Elevation of the Measuring Point (feet above mean sea level) | Depth to Water (feet below measuring point) | Elevation of Water Level (feet above mean sea level) |
|---|---|---|---|---|
| **Monitoring Wells in the Plant Area for Dewatering Projects** | | | | |
| M-2 | 40 | 410.38 | 12.00 | 398.38 |
| M-4 | 29 | 409.18 | 9.85 | 399.33 |
| M-7 | 29 | 410.67 | 9.60 | 401.07 |
| BK-3 | 66 | 415.24 | 15.23 | 400.01 |
| DW-34 | 25 | 414.67 | 16.15 | 398.52 |
| **Dewatering Wells for the Treatment Plant Sewer Construction** | | | | |
| DW-17 | 80 | 422.99 | -[d] | - |
| DW-18 | 80 | - | -[d] | - |
| DW-19 | 80 | 426.88 | -[d] | - |
| DW-23 | 80 | 422.80 | 35.05 | 387.75 |
| DW-23A | 80 | 419.68 | 30.41 | 389.27 |
| DW-24 | 80 | 427.30 | 37.85 | 389.45 |
| DW-25 | 80 | 415.79 | 27.19 | 388.60 |
| **Monitoring Wells for the Treatment Plant Dewatering Projects** | | | | |
| DW-27 | 30 | 429.68 | 31.49 | 398.19 |
| DW-28 | 30 | 427.86 | 31.58 | 396.28 |
| DW-29 | 68 | 424.89 | 37.17 | 387.72 |
| DW-30 | 31 | 422.77 | 34.49 | 388.28 |
| DW-31 | 25 | 423.71 | -[e] | - |
| DW-32 | 66 | 432.57 | 43.47 | 389.10 |
| DW-33 | 30 | 416.23 | 20.78 | 395.45 |
| **U.S. Corps of Engineers Monitoring Wells** | | | | |
| P-56 | 35 | 430.98 | 38.30 | 392.68 |
| P-58 | 35 | 414.47 | -[e] | - |
| P-59 | 35 | 414.51 | -[b] | - |
| P-65 | 32 | 426.50 | -[e] | - |
| P-68 | 35 | 432.58 | -[e] | - |

Table 2. (Continued)

| Well No. | Well Depth (feet below land surface) | Elevation of the Measuring Point (feet above mean sea level) | Depth to Water (feet below measuring point) | Elevation of Water Level (feet above mean sea level) |
|---|---|---|---|---|
| Offsite Wells (East of Town Hall) | | | | |
| WB-6 | 30 | 406.49 | 5.65 | 400.84 |
| WB-7 | 80 | 406.85 | 6.05 | 400.80 |
| WB-8 | 30 | 409.52 | -[b] | - |
| WB-9 | 80 | 407.43 | 6.74 | 400.69 |

a) Well was installed after water-level measurements were made.
b) Not measured.
c) Inaccessible.
d) Well was pumping, water-level could not be determined.
e) Dry.

Table 3. Static Water Levels for Monitoring Wells Measured During November 21-22, 1985, Monsanto Company, W.G. Krummrich Plant, Sauget, Illinois.

| Well No. | Well Depth (feet below land surface) | Elevation of the Measuring Point (feet above mean sea level) | Depth to Water (feet below measuring point) | Elevation of Water Level (feet above mean sea level) |
|---|---|---|---|---|
| Geraghty & Miller, Inc. Monitoring Wells | | | | |
| GM-1 | 34 | 413.65 | 15.98 | 397.62 |
| GM-2 | 41 | 417.37 | 23.12 | 394.25 |
| GM-3 | 36 | 411.31 | 16.35 | 394.96 |
| GM-4A | 28 | 406.43 | 11.98 | 394.45 |
| GM-4B | 87 | 406.70 | 12.00 | 394.70 |
| GM-4C | 104 | 406.51 | 11.78 | 394.73 |
| GM-5 | 36 | 414.94 | 20.82 | 394.12 |
| GM-6A | 34 | 414.59 | 20.20 | 394.39 |
| GM-6B | 88 | 416.04 | 21.65 | 394.39 |
| GM-7 | 36 | 414.95 | 19.87 | 395.08 |
| GM-8 | 34 | 418.49 | 22.95 | 395.54 |
| GM-9A | 28 | 414.47 | 18.80 | 395.57 |
| GM-9B | 75 | 412.36 | 27.04 | 390.32 |
| GM-9C | 108 | 411.97 | 20.03 | 391.94 |
| GM-10A | 28 | 412.97 | 14.85 | 398.12 |
| GM-10B | 78 | 413.90 | 18.11 | 395.79 |
| GM-10C | 111 | 413.78 | 18.11 | 395.67 |
| GM-11 | 25 | 412.95 | 15.95 | 397.00 |
| GM-12A | 33.5 | 416.47 | 20.12 | 396.35 |
| GM-12B | 89 | 416.80 | 20.09 | 396.71 |
| GM-12C | 114.5 | 416.79 | 20.01 | 396.78 |
| GM-13 | 38 | 415.47 | 21.70 | 393.77 |
| GM-14 | 38 | 411.26 | -[a] | - |
| GM-15 | 38 | 413.71 | 17.18 | 396.53 |
| GM-16A | 38 | 412.03 | 15.38 | 396.65 |
| GM-16B | 90 | 412.40 | 15.73 | 396.67 |
| GM-17A | 38 | 412.57 | 17.60 | 394.97 |
| GM-17B | 78 | 412.93 | 18.01 | 394.92 |
| GM-17C | 107 | 412.42 | 17.26 | 395.16 |

Table 3. (Continued)

| Well No. | Well Depth (feet below land surface) | Elevation of the Measuring Point (feet above mean sea level) | Depth to Water (feet below measuring point) | Elevation of Water Level (feet above mean sea level) |
|---|---|---|---|---|
| Geraghty & Miller, Inc. Monitoring Wells (Cont'd.) | | | | |
| GM-18A | 38 | 414.23 | 18.77 | 395.46 |
| GM-18B | 92 | 414.02 | 18.48 | 395.54 |
| GM-25A | 38 | 414.20 | 14.35 | 399.85 |
| GM-25B | 88 | 415.46 | 15.46 | 400.00 |
| GM-27B | 82 | 426.04 | 18.68 | 407.36 |
| GM-27C | 105 | 426.76 | 20.13 | 406.63 |
| GM-28B | 93 | 423.88 | 18.60 | 405.28 |
| GM-28C | 107 | 423.78 | 18.80 | 404.98 |
| GM-29 | 20.5 | 411.06 | 12.88 | 398.18 |
| GM-30 | 21.2 | 416.09 | 18.85 | 397.24 |
| GM-31A | 40 | 418.63 | 22.99 | 395.64 |
| GM-31B | 94 | 418.92 | 23.32 | 395.60 |
| GM-31C | 126.5 | 419.29 | 23.46 | 395.83 |
| GM-32 | 25 | 409.49 | -[a] | - |
| GM-33 | 25 | 410.88 | -[a] | - |
| GM-34 | 25 | 410.82 | -[a] | - |
| GM-35 | 25 | 410.88 | -[a] | - |
| GM-36 | 25 | 409.53 | -[a] | - |
| GM-37 | 25 | 409.67 | -[a] | - |
| GM-38 | 25 | 412.51 | 17.41 | 395.10 |
| GM-39 | 8 | 415.59 | -[a] | - |
| GM-40 | 8 | 415.75 | -[a] | - |
| GM-41 | 8 | 414.75 | -[a] | - |
| GM-42 | 8 | 414.48 | -[a] | - |
| GM-43 | 8 | 414.38 | -[a] | - |
| GM-44 | 8 | 414.44 | -[a] | - |
| GM-45 | 18 | 410.10 | 2.69 | 407.41 |
| GM-46 | 25 | 411.60 | 11.26 | 400.34 |
| GM-47 | 10 | 412.34 | -[a] | - |
| GM-48 | 12 | 411.00 | 4.04 | 406.96 |
| GM-49 | 13 | 408.43 | 1.90 | 406.53 |
| GM-106 | 165.7 | 424.82 | 20.29 | 404.53 |

Table 3. (Continued)

| Well No. | Well Depth (feet below land surface) | Elevation of the Measuring Point (feet above mean sea level) | Depth to Water (feet below measuring point) | Elevation of Water Level (feet above mean sea level) |
|---|---|---|---|---|
| Landfill Monitoring Wells | | | | |
| B-21A | 28 | 428.53 | 29.42 | 399.11 |
| B-21B | 49.5 | 428.37 | 29.97 | 398.40 |
| B-22A | 35 | 428.16 | 23.38 | 404.78 |
| B-22B | 55 | 428.16 | 23.35 | 404.81 |
| B-23B | 49.5 | 428.17 | 25.19 | 402.98 |
| B-24A | 27.5 | 422.49 | 17.38 | 405.11 |
| B-24B | 50 | 422.28 | 17.32 | 404.96 |
| B-24C | 69 | 422.52 | 17.39 | 405.13 |
| B-25A | 35.2 | 428.47 | 31.13 | 397.34 |
| B-25B | 49.5 | 427.35 | 26.67 | 400.68 |
| B-26A | 33.2 | 423.71 | 20.25 | 403.46 |
| B-26B | 49.8 | 423.62 | 18.48 | 405.14 |
| B-27B | 42 | 425.83 | 22.93 | 402.90 |
| B-28A | 32.5 | 423.04 | 21.47 | 401.57 |
| B-28B | 49.5 | 423.08 | 18.38 | 404.70 |
| B-29A | 33.2 | 429.03 | 29.97 | 399.06 |
| B-29B | 49.5 | 429.06 | 27.61 | 401.45 |
| B-30B | 49 | 430.52 | 29.17 | 401.35 |
| B-31B | 34.5 | 421.68 | 22.32 | 399.36 |
| B-31C | 67.3 | 421.88 | 22.43 | 399.45 |
| B-101 | 169.2 | 427.09 | 29.14 | 397.95 |
| B-102 | 162 | 423.84 | 22.47 | 401.37 |
| B-103 | 165.8 | 427.33 | 24.82 | 402.51 |
| B-105 | 154 | 420.93 | 19.02 | 401.91 |
| P-1 | 47 | 423.11 | 17.40 | 405.71 |
| P-2 | 47 | 423.15 | 17.27 | 405.88 |
| P-3 | 47 | 423.43 | 17.57 | 405.86 |
| P-4 | 47.5 | 421.82 | 16.01 | 405.81 |
| P-5 | 54.5 | 422.12 | 15.81 | 406.31 |
| P-6 | 30.5 | 421.78 | 12.79 | 408.99 |
| P-7 | 33 | 421.82 | 13.79 | 408.03 |
| P-8 | 53.5 | 421.79 | 15.15 | 406.64 |
| P-9 | 50 | 423.14 | 16.38 | 406.76 |
| P-10 | 54 | 423.43 | 16.55 | 406.88 |

Table 3. (Continued)

| Well No. | Well Depth (feet below land surface) | Elevation of the Measuring Point (feet above mean sea level) | Depth to Water (feet below measuring point) | Elevation of Water Level (feet above mean sea level) |
|---|---|---|---|---|
| **Landfill Monitoring Wells (Cont'd.)** | | | | |
| P-11 | 51 | 422.30 | 15.14 | 407.16 |
| P-12 | 50.5 | 423.75 | 16.08 | 407.67 |
| P-13 | 53.5 | 424.32 | 16.62 | 407.70 |
| P-14 | 32.5 | 424.36 | 13.50 | 410.86 |
| **Dewatering Wells in the Plant Area** | | | | |
| DW-1 | 65 | 410.04 | 16.45 | 393.59 |
| DW-2 | 65 | 409.12 | -[b] | - |
| DW-3 | 65 | 408.85 | -[b] | - |
| DW-4 | 65 | 408.44 | -[b] | - |
| DW-5 | 65 | - | -[b] | - |
| DW-6 | 65 | - | -[b] | - |
| DW-7 | 65 | - | 18.87 | - |
| DW-8 | 65 | - | -[c] | - |
| DW-9 | 65 | - | -[c] | - |
| DW-10 | 65 | 409.40 | -[c] | - |
| DW-11 | 65 | - | -[c] | - |
| DW-12 | 65 | - | -[b] | - |
| DW-13 | 65 | - | -[b] | - |
| DW-14 | 65 | - | -[b] | - |
| DW-15 | 65 | - | -[b] | - |
| DW-16 | 65 | - | -[b] | - |
| BK-1 | 25 | 408.36 | 5.30 | 403.06 |
| BK-2 | 25 | 409.67 | 12.75 | 396.92 |
| **Monitoring Wells in the Plant Area for Dewatering Projects** | | | | |
| BK-3 | 66 | 415.24 | 19.43 | 395.81 |
| DW-34 | 25 | 414.67 | 19.45 | 395.22 |

Table 3. (Continued)

| Well No. | Well Depth (feet below land surface) | Elevation of the Measuring Point (feet above mean sea level) | Depth to Water (feet below measuring point) | Elevation of Water Level (feet above mean sea level) |
|---|---|---|---|---|
| **Dewatering Wells for the Treatment Plant Sewer Construction** | | | | |
| DW-1-85 | 80 | 414.40 | -[b] | - |
| DW-17 | 80 | 422.99 | 15.18 | 407.81 |
| DW-18 | 80 | 426.10 | 19.46 | 406.64 |
| DW-19 | 80 | 426.88 | 21.91 | 404.97 |
| **Monitoring Wells for the Treatment Plant Dewatering Projects** | | | | |
| DW-27 | 30 | 429.68 | 23.24 | 406.44 |
| DW-28 | 30 | 427.86 | -[a] | - |
| DW-29 | 68 | 424.89 | 23.51 | 401.38 |
| DW-30 | 31 | 422.77 | 23.77 | 399.00 |
| DW-31 | 25 | 423.71 | 24.82 | 398.89 |
| DW-32 | 66 | 432.57 | -[a] | - |
| DW-33 | 30 | 416.23 | -[a] | - |
| DW-1S-85 | 65 | 413.76 | 20.48 | 393.28 |
| **U.S. Corps of Engineers Monitoring Wells** | | | | |
| P-56 | 35 | 430.98 | -[a] | - |
| P-58 | 35 | 414.47 | -[a] | - |
| P-59 | 35 | 414.51 | -[a] | - |
| P-65 | 32 | 426.50 | 26.82 | 399.68 |
| P-68 | 35 | 432.58 | 33.35 | 399.23 |
| **Offsite Wells (East of Town Hall)** | | | | |
| WB-6 | 30 | 406.49 | 9.28 | 397.21 |
| WB-7 | 80 | 406.85 | 9.89 | 396.96 |
| WB-8 | 30 | 409.52 | -[a] | - |
| WB-9 | 80 | 407.43 | -[a] | - |

a) Not measured
b) Inaccessible
c) Well was pumping, water level could not be determined.

Table 4. Summary of Construction Details for Monitoring Wells Installed Under the Direction of Geraghty & Miller, Inc., Monsanto Company, W.G. Krummrich Plant, Sauget, Illinois.

| Well No. | Date Completed | Well Diameter (inches) | Depth (feet below land surface) | Screen Setting (feet below land surface) | Interval Gravel Packed (feet below land surface)[1] | Interval Sealed With Bentonite (feet below land surface) | Interval Sealed with Grout (feet below land surface)[2] | Height of Measuring Point (feet above land surface)[3] | Elevation of Measuring Point (feet above mean sea level)[4] |
|---|---|---|---|---|---|---|---|---|---|
| GM-1 | 11- 1-83 | 6 | 34 | 19 - 34 | 16 - 28 | 15 - 16 | 2 - 15 | 2.6 (2.3)[5] | 413.65 |
| GM-2 | 11- 8-83 | 6 | 41 | 26 - 41 | None | 21 - 22 | 2 - 21 | 2.2 (2.0)[5] | 417.37 |
| GM-3 | 11- 7-83 | 6 | 36 | 21 - 36 | 19 - 24 | 18 - 19 | 2 - 18 | 3.9 (3.7)[5] | 411.31 |
| GM-4A | 11- 2-83 | 2 | 28 | 13 - 28 | 12 - 14 | 11 - 12 | 2 - 11 | 2.8 | 406.43 |
| GM-4B | 7-17-84 | 4 | 87 | 67 - 87 | 65 - 87 | 55 - 65 | 2 - 65 | 3.0 | 406.70 |
| GM-4C | 1-11-84 | 4 | 104 | 92.5-102.5 | 90 -102.5 | 75 - 90 | 2 - 75 | 2.5 | 406.51 |
| GM-5 | 11- 3-83 | 2 | 36 | 21 - 36 | 18.5- 24 | 17.5- 18.5 | 2 - 17.5 | 2.5 | 414.94 |
| GM-6A | 11- 2-83 | 2 | 34 | 19 - 34 | 16 - 22 | 15 - 16 | 2 - 15 | 2.0 | 414.59 |
| GM-6B | 7-26-84 | 4 | 88 | 68 - 88 | 62.5- 88 | 47.5-62.5 | 6 - 47.5 | 3.1 | 416.04 |
| GM-7 | 11- 3-83 | 2 | 36 | 21 - 36 | 17 - 23 | 16 - 17 | 2 - 16 | 2.5 | 414.95 |
| GM-8 | 11- 2-83 | 2 | 34 | 19 - 34 | None | 15 - 16 | 2 - 15 | 2.0 | 418.49 |
| GM-9A | 11-10-83 | 2 | 28 | 13 - 28 | 11.5- 15.5 | 10.5- 11.5 | 2 - 10.5 | 2.7 | 414.47 |
| GM-9B | 8-17-84 | 4 | 75 | 55 - 75 | 50 - 75 | 38 - 50 | 2 - 38 | 1.9 | 412.36 |
| GM-9C | 8-15-84 | 4 | 108 | 88 -108 | 84 -108 | 70 - 84 | 2 - 70 | 1.5 | 411.97 |
| GM-10A | 11- 9-83 | 2 | 28 | 13 - 28 | 11 - 12.5 | 10 - 11 | 2 - 10 | 2.2 | 412.97 |
| GM-10B | 1-22-85 | 4 | 78 | 54 - 74 | 48 - 74 | 38 - 48 | 2 - 38 | 2.5 | 413.90 |
| GM-10C | 1-18-85 | 4 | 111 | 94 -109 | 85 -109 | 75 - 85 | 2 - 75 | 2.5 | 413.78 |

Table 4. (Cont'd.)

| Well No. | Date Completed | Well Diameter (inches) | Depth (feet below land surface) | Screen Setting (feet below land surface) | Interval Gravel Packed (feet below land surface)[1] | Interval Sealed With Bentonite (feet below land surface) | Interval Sealed with Grout (feet below land surface)[2] | Height of Measuring Point (feet above land surface)[3] | Elevation of Measuring Point (feet above mean sea level)[4] |
|---|---|---|---|---|---|---|---|---|---|
| GM-11 | 10-31-83 | 2 | 25 | 10 - 25 | 8.5- 21 | 7.5- 8.5 | 2 - 7.5 | 2.6 | 412.95 |
| GM-12A | 11- 9-83 | 2 | 33.5 | 18.5- 33.5 | 16 - 23 | 15 - 16 | 2 - 15 | 3.0 | 416.47 |
| GM-12B | 8-13-84 | 4 | 89 | 69 - 89 | 65 - 89 | 50 - 65 | 2 - 50 | 2.6 | 416.80 |
| GM-12C | 1-17-85 | 4 | 114.5 | 94 -114.5 | 90 -114 | 75 - 90 | 2 - 75 | 2.5 | 416.79 |
| GM-13 | 8-15-84 | 2 | 38 | 18 - 38 | 16 - 38 | 15 - 16 | 2 - 15 | 2.0 | 415.47 |
| GM-14 | 8-16-84 | 2 | 38 | 18 - 38 | 16 - 38 | 15 - 16 | 2 - 15 | 2.5 | 411.26 |
| GM-15 | 8-17-84 | 2 | 38 | 15 - 38 | 12.5- 38 | 11.5- 12.5 | 2 - 11.5 | 2.0 | 413.71 |
| GM-16A | 8-14-84 | 2 | 38 | 18 - 38 | 16 - 38 | 15 - 16 | 2 - 15 | 2.1 | 412.03 |
| GM-16B | 8- 9-84 | 4 | 90 | 60 - 87 | 56 - 68 | 42 - 46 | 2 - 42 | 2.0 | 412.40 |
| GM-17A | 7- 6-84 | 2 | 38 | 18 - 38 | 16 - 38 | 15 - 16 | 2 - 15 | 3.0 | 412.57 |
| GM-17B | 7-25-84 | 4 | 78 | 58 - 78 | 52.5- 78 | 42 - 52.5 | 2 - 42 | 3.0 | 412.93 |
| GM-17C | 7-24-84 | 4 | 107 | 87 -107 | 80 -107 | 70 - 80 | 2 - 70 | 3.2 | 412.42 |
| GM-18A | 7- 5-84 | 2 | 38 | 18 - 38 | 16 - 38 | 15 - 16 | 2 - 15 | 2.6 | 414.23 |
| GM-18B | 7-12-84 | 2 | 92 | 72 - 92 | 68 - 92 | 56 - 68 | 2 - 56 | 2.8 | 414.02 |
| GM-25A | 8-14-84 | 2 | 38 | 13 - 38 | 10 - 38 | 9 - 10 | 2 - 9 | 1.4 | 414.20 |
| GM-25B | 7-27-84 | 4 | 88 | 68 - 88 | 62 - 88 | 47 - 62 | 2 - 47 | 3.0 | 415.46 |
| GM-27B | 8- 6-84 | 4 | 82 | 62 - 82 | 55 - 72 | 45 - 55 | 2 - 45 | 2.8 | 426.04 (425.61)[6] |
| GM-27C | 8- 3-84 | 4 | 105 | 85 -105 | 80 -115 | 68 - 80 | 2 - 80 | 2.9 | 426.76 (426.39)[6] |

Table 4. (Cont'd.)

| Well No. | Date Completed | Well Diameter (inches) | Depth (feet below land surface) | Screen Setting (feet below land surface) | Interval Gravel Packed (feet below land surface)[1] | Interval Sealed With Bentonite (feet below land surface) | Interval Sealed with Grout (feet below land surface)[2] | Height of Measuring Point (feet above land surface)[3] | Elevation of Measuring Point (feet above mean sea level)[4] |
|---|---|---|---|---|---|---|---|---|---|
| GM-28B | 7- 3-84 | 4 | 93 | 70.5- 90.5 | 67 - 93 | 55 - 67 | 2 - 55 | 3.0 | 423.88 |
| GM-28C | 7- 5-84 | 4 | 107 | 87 -107 | 85 -107 | 72 - 85 | 2 - 72 | 2.9 | 423.78 |
| GM-29 | 8-24-84 | 2 | 20.5 | 13 - 18.5 | 6 - 18 | 5 - 6 | 2 - 5 | 2.2 | 411.06 |
| GM-30 | 8-30-84 | 2 | 21.2 | 14.2- 19.2 | 5 - 16 | 4 - 5 | 2 - 4 | 1.8 | 416.09 |
| GM-31A | 11-26-84 | 2 | 40 | 19 - 39 | 16 - 39 | 14 - 16 | 2 - 14 | 2.0 | 418.63 |
| GM-31B | 1- 9-85 | 4 | 94 | 65.5- 85.5 | 59 - 85.5 | 49 - 59 | 2 - 49 | 2.5 | 418.92 |
| GM-31C | 1- 8-85 | 4 | 126.5 | 97 -117 | 93 -117 | 83 - 93 | 2 - 83 | 2.5 | 419.29 |
| GM-32 | 11-27-84 | 2 | 25 | 9 - 24 | 7 - 24 | 5 - 7 | 2 - 5 | 0.8 | 409.49 |
| GM-33 | 11-28-84 | 2 | 25 | 5 - 25 | 4 - 25 | 3 - 4 | 2 - 3 | 2.0 | 410.86 |
| GM-34 | 11-29-84 | 2 | 25 | 5 - 25 | 3.5- 25 | 2.5- 3.5 | 2 - 2.5 | 2.1 | 410.82 |
| GM-35 | 11-29-84 | 2 | 25 | 5 - 25 | 4 - 25 | 3 - 4 | 2 - 3 | 2.0 | 410.88 |
| GM-36 | 11-30-84 | 2 | 25 | 5 - 25 | 4 - 25 | 3 - 4 | 2 - 3 | 1.4 | 409.53 |
| GM-37 | 11-30-84 | 2 | 25 | 4.3- 24.3 | 3 - 24.3 | 2.5- 3 | 2 - 2.5 | 2.3 | 409.67 |
| GM-38 | 12- 3-84 | 2 | 25 | 4.5- 24.5 | 3 - 24.5 | 2.5- 3 | 2 - 2.5 | 2.0 | 412.51 |
| GM-39 | 12- 4-84 | 2 | 8 | 3 - 8 | 2 - 8 | 1.5- 2 | 1 - 1.5 | 1.9 | 415.59 |
| GM-40 | 12- 4-84 | 2 | 8 | 3 - 8 | 2 - 8 | 1.5- 2 | 1 - 1.5 | 2.0 | 415.75 |
| GM-41 | 12- 4-84 | 2 | 8 | 3 - 8 | 2 - 8 | 1.5- 2 | 1 - 1.5 | 1.2 | 414.75 |
| GM-42 | 12- 5-84 | 2 | 8 | 3 - 8 | 2 - 8 | 1.5- 2 | 1 - 1.5 | 1.5 | 414.48 |
| GM-43 | 12- 5-84 | 2 | 8 | 2 - 7 | 1.6- 7 | 1.2- 1.6 | 0.5- 1.2 | 1.7 | 414.38 |
| GM-44 | 12- 5-84 | 2 | 8 | 2 - 7 | 1.5- 7 | 1.1- 1.5 | 0.5- 1.1 | 1.6 | 414.44 |
| GM-45 | 12- 6-84 | 2 | 18 | 1.5-11.5 | 1 - 11.5 | 0.5- 1 | 0 - 0.5 | 1.3 | 410.10 |

Table 4. (Cont'd.)

| Well No. | Date Completed | Well Diameter (inches) | Depth (feet below land surface) | Screen Setting (feet below land surface) | Interval Gravel Packed (feet below land surface)[1] | Interval Sealed With Bentonite (feet below land surface) | Interval Sealed with Grout (feet below land surface)[2] | Height of Measuring Point (feet above land surface)[3] | Elevation of Measuring Point (feet above mean sea level)[4] |
|---|---|---|---|---|---|---|---|---|---|
| GM-46 | 12- 7-84 | 2 | 25 | 5 - 25 | 4 - 25 | 3 - 4 | 2 - 2.3 | 2.6 | 411.60 |
| GM-47 | 12-10-84 | 2 | 10 | 5 - 10 | 4 - 10 | 3 - 4 | 1.5- 3 | -0.45 | 412.34 |
| GM-48 | 12-10-84 | 2 | 12 | 2 - 12 | 1.9- 12 | 1.5- 9 | 0.5- 1.5 | 1.4 | 411.00 |
| GM-49 | 12-10-84 | 2 | 13 | 3 - 13 | 2.5- 13 | 2 - 2.5 | 0.5- 2 | -0.4 | 408.43 |
| GM-106 | 6-27-85 | 8 | 165.7 | None[7] | None | None | 0 -133.5 | 1.2 | 424.82[8] |

1) Gravel pack is absent in some wells and partially covers the screened interval in others due to a collapse of the natural formation around the well prior to setting the gravel pack.

2) The grout was mixed with 90 percent cement and 10 percent bentonite and each well has a cement seal at the surface.

3) The measuring point on each well is the top of the well casing and not the protective outer casing. For each well that has a water-level recorder, the measuring point is the top of the water-level recorder shelter base, except on Well B-106.

4) The elevations were determined to the top of the steel well casings for each well and to the top of the recorder shelter base for the wells installed with water-level recorders. The conversions to the W.G. Krummrich datum is 413.50 feet (NGVD) equals 101.00 feet (W.G. Krummrich datum).

5) Height of the 6-inch casing above land surface.

6) Elevation of the top of the coupling.

7) Rock was encountered at 126 feet below land surface and an open hole exists from 133.5 to 165.7 feet below land surface. The 8-inch casing was grouted 7.5 feet into the rock inside a 12-inch casing which is set at the rock surface.

8) Elevation of the top of the well casing and not the recorder shelter base.

Table 5. Summary of Construction Details for Monitoring Wells Installed Under the Direction of D'Appolonia Waste Management Services, Inc. Monsanto Company, W.G. Krummrich Plant, Sauget, Illinois

| Well No. | Date Completed | Well Diameter (inches) | Depth (feet below land surface) | Screen Setting (feet below land surface)[1] | Interval Gravel Packed (feet below land surface)[2] | Interval Sealed With Bentonite (feet below land surface) | Interval Sealed with Grout (feet below land surface)[3] | Height of Measuring Point (feet above land surface)[4] | Elevation of Measuring Point (feet above mean sea level)[5] |
|---|---|---|---|---|---|---|---|---|---|
| B-21A | 3-14-82 | 4 | 28 | 20.8- 25.8 | None | 13 - 19 | 0 - 13 | 2.0 | 428.53 |
| B-21B | 3-13-82 | 4 | 49.5 | 37.3- 47.3 | None | 28.5- 34.5 | 0 - 28.5 | 1.8 | 428.37 |
| B-22A | 3-15-82 | 4 | 35 | 27.8- 32.8 | 26 - 34 | 20 - 26 | 0 - 20 | 1.9 | 428.16 |
| B-22B | 3-13-82 | 4 | 55 | 42.8- 52.8 | None | 35 - 41 | 0 - 35 | 2.1 | 428.16 |
| B-23B | 3-16-82 | 4 | 49.5 | 42.3- 47.3 | 40.5- 48 | 34.5- 40.5 | 0 - 34.5 | 2.1 | 428.17 |
| B-24A | 3-20-82 | 4 | 27.5 | 20.3- 25.3 | None | 12 - 18 | 0 - 12 | 2.0 | 422.49 |
| B-24B | 3-19-82 | 4 | 50 | 37.8- 47.8 | None | 30.5- 36.5 | 0 - 30.5 | 1.9 | 422.28 |
| B-24C | 3-18-82 | 4 | 69 | 56.8- 66.8 | None | 31-37/52-55 | 0 - 31 | 1.7 | 422.52 |
| B-25A | 3-31-82 | 4 | 35.2 | 28 - 33 | 25.9- 34.1 | 19 - 25.9 | 0 - 19 | 1.8 | 428.47 |
| B-25B | 3-17-82 | 4 | 49.5 | 37.3- 47.3 | None | 30 - 36 | 0 - 30 | 2.0 | 427.35 |
| B-26A | 3-23-82 | 4 | 33.2 | 26 - 31 | 24 - 29 | 17 - 24 | 0 - 17 | 1.9 | 423.71 |
| B-26B | 3-22-82 | 4 | 49.8 | 37.6- 47.6 | 36 - 49.8 | 28 - 36 | 0 - 28 | 2.0 | 423.62 |
| B-27B | 3-24-82 | 4 | 42 | 29.8- 39.8 | 28 - 36 | 20 - 28 | 0 - 20 | 1.8 | 425.83 |
| B-28A | 3-26-82 | 4 | 32.5 | 25.3- 30.3 | 23.1- 31 | 16 - 23.1 | 0 - 16 | 1.6 | 423.04 |
| B-28B | 3-26-82 | 4 | 49.5 | 37.3- 47.3 | 34.8- 37 | 28 - 34.8 | 0 - 28 | 1.8 | 423.08 |

Table 5. (Cont'd.)

| Well No. | Date Completed | Well Diameter (inches) | Depth (feet below land surface) | Screen Setting (feet below land surface)[1] | Interval Gravel Packed (feet below land surface)[2] | Interval Sealed With Bentonite (feet below land surface) | Interval Sealed with Grout (feet below land surface)[3] | Height of Measuring Point (feet above land surface)[4] | Elevation of Measuring Point (feet above mean sea level)[5] |
|---|---|---|---|---|---|---|---|---|---|
| B-29A | 4- 1-82 | 4 | 33.2 | 26 - 31 | 23.4- 32 | 17 - 23.4 | 0 - 17 | 1.9 | 429.03 |
| B-29B | 3-27-82 | 4 | 49.5 | 37.3- 47.3 | None | 28 - 35 | 0 - 28 | 1.7 | 429.06 |
| B-30B | 3-29-82 | 4 | 49 | 36.8- 46.8 | 33.7- 38.6 | 27 - 33.7 | 0 - 27 | 2.2 | 430.52 |
| B-31B | 4- 2-82 | 4 | 34.5 | 27.3- 32.3 | None | 18.5- 24.7 | 0 - 18.5 | 1.5 | 421.68 |
| B-31C | 4- 6-82 | 4 | 67.3 | 60.1- 65.1 | None | 30 - 54 | 0 - 30 | 2.2 | 421.88 |
| B-101 | 12- 9-83 | 0.75 | 169.2[6] | 167.7-169.2 | 154 -169.2 | 153 -154 | 0 -153 | 2.4 | 427.09 |
| B-102 | 12- 5-83 | 0.75 | 162.0[7] | 159.5-162.0 | 147 -162 | 146 -147 | 0 -146 | 2.1 | 423.84 |
| B-103 | 11-17-83 | 0.75 | 165.8[8] | 163.0-165.5 | 149 -165.8 | 145.5-149 | 0 -145.5 | 0.7 | 427.33 |
| B-105 | 11- 2-83 | 0.75 | 154.0[9] | 151.5-154.0 | 134 -154 | 133 -134 | 0 -133 | 0.2 | 420.93 |

1) Each well has a 2.2-foot sump (well casing) below the screen setting.

2) Coarse sand was added to each annulus whenever the formation did not collapse around the well screen.

3) The grout consisted of a mixture of bentonite and cement.

4) The measuring point on each well is the top of the steel well casing and not the protective outer casing.

5) The elevations were determined to the top of the steel well casings.

6) The top of rock was encountered at 148.5 feet below land surface.

7) The top of rock was encountered at 142.5 feet below land surface.

8) The top of rock was encountered at 144.5 feet below land surface.

9) The top of rock was encountered at 131.0 feet below land surface.

Table 6. Summary of Construction Details for Monitoring Wells Installed Under the Direction of Law Engineering Testing Company, Monsanto Company, W.G. Krummrich Plant, Sauget, Illinois

| Well No. | Date Completed | Well Diameter (inches) | Depth (feet below land surface) | Screen Setting (feet below land surface)[1] | Interval Gravel Packed (feet below land surface)[2] | Interval Sealed With Bentonite (feet below land surface)[3] | Interval Sealed with Grout (feet below land surface)[4] | Height of Measuring Point (feet above land surface)[5] | Elevation of Measuring Point (feet above mean sea level)[6] |
|---|---|---|---|---|---|---|---|---|---|
| P- 1 | 1-20-82 | 2 | 47 | 40 - 45 | - | - | 0 - 40 | 1.8 | 405.71 |
| P- 2 | 1-26-82 | 2 | 47 | 40 - 45 | - | - | 0 - 40 | 1.5 | 405.88 |
| P- 3 | 2-18-82 | 2 | 47 | 40 - 45 | - | - | 0 - 40 | 1.4 | 405.86 |
| P- 4 | 3- 4-82 | 2 | 47.5 | 40.5- 45.5 | - | - | 0 - 40.5 | 1.7 | 405.81 |
| P- 5 | 3 -5-82 | 2 | 54.5 | 47.5- 52.5 | - | - | 0 - 47.5 | 2.5 | 406.31 |
| P- 6 | 3- 9-82 | 2 | 30.5 | 23.5- 28.5 | - | - | 0 - 23.5 | 1.7 | 408.99 |
| P- 7 | 3- 8-82 | 2 | 33 | 26 - 31 | - | - | 0 - 26 | 1.6 | 408.03 |
| P- 8 | 3- 2-82 | 2 | 53.5 | 46.5- 51.5 | - | - | 0 - 46.5 | 1.7 | 406.64 |
| P- 9 | 3- 1-82 | 2 | 50 | 43 - 48 | - | - | 0 - 43 | 2.1 | 406.76 |
| P-10 | 2-23-82 | 2 | 54 | 47 - 52 | - | - | 0 - 47 | 1.9 | 406.68 |
| P-11 | 3- 6-82 | 2 | 51 | 44 - 49 | - | - | 0 - 44 | 1.8 | 407.16 |
| P-12 | 2-22-82 | 2 | 50.5 | 43.5- 48.5 | - | - | 0 - 43.5 | 2.1 | 407.67 |
| P-13 | 2-21-82 | 2 | 53.5 | 46.5- 51.5 | - | - | 0 - 46.5 | 1.8 | 407.70 |
| P-14 | 3- 7-82 | 2 | 32.5 | 25.5- 30.5 | - | - | 0 - 25.5 | 2.0 | 410.86 |

1) Each well has a 2-foot sump (well casing) below the screen setting.

2) Silica sand was added to each annulus whenever the formation did not collapse around the well screen. Specific details for each well were not included in Law Engineering's well construction details.

3) Ten gallons of a thick bentonite slurry was set above the silica sand/natural formation in each well prior to sealing the wells with grout.

4) The grout was mixed with 90 percent cement and 10 percent bentonite.

5) The measuring point on each well is the top of the steel well casing and not the protective outer casing.

6) The elevations were determined to the top of the steel well casings.

Table 7. Water-Level Measurements for Determining Aquifer Characteristics Based on Slug Tests Performed on Wells GM-1, GM-2 and GM-3, Monsanto Company, W.G. Krummrich Plant, Sauget, Illinois.

| | Well GM-1 | | | Well GM-2 | | | Well GM-3 | | |
|---|---|---|---|---|---|---|---|---|---|
| Time (sec) | Depth to Water* | H[a)] | $H/H_o$ [b)] | Depth to Water* | H | $H/H_o$ | Depth to Water* | H | $H/H_o$ |
| static | 27.32 | - | - | 35.62 | - | - | 31.26 | - | - |
| 0 | 25.30[c)] | 2.02 | 1.00 | 33.60[c)] | 2.02 | 1.00 | 29.24[c)] | 2.02 | 1.00 |
| 15 | 25.83 | 1.49 | 0.74 | 33.91 | 1.71 | 0.85 | 29.62 | 1.64 | 0.82 |
| 30 | 26.03 | 1.29 | 0.64 | 33.99 | 1.63 | 0.81 | 29.72 | 1.54 | 0.76 |
| 45 | 26.18 | 1.14 | 0.56 | 34.05 | 1.57 | 0.78 | 29.78 | 1.48 | 0.73 |
| 60 | 26.29 | 1.03 | 0.51 | 34.09 | 1.53 | 0.76 | 29.84 | 1.42 | 0.70 |
| 75 | 26.38 | 0.94 | 0.47 | 34.13 | 1.49 | 0.74 | 29.89 | 1.37 | 0.68 |
| 90 | 26.46 | 0.86 | 0.43 | 34.16 | 1.46 | 0.72 | 29.94 | 1.32 | 0.65 |
| 105 | 26.53 | 0.79 | 0.39 | 34.19 | 1.43 | 0.71 | 29.98 | 1.28 | 0.63 |
| 120 | 26.60 | 0.72 | 0.36 | 34.22 | 1.40 | 0.69 | 30.02 | 1.24 | 0.61 |
| 135 | 26.66 | 0.66 | 0.33 | 34.25 | 1.37 | 0.68 | 30.06 | 1.20 | 0.59 |
| 150 | 26.72 | 0.60 | 0.30 | 34.28 | 1.34 | 0.66 | 30.10 | 1.16 | 0.57 |
| 165 | 26.77 | 0.55 | 0.27 | 34.31 | 1.31 | 0.65 | 30.13 | 1.13 | 0.56 |
| 180 | 26.82 | 0.50 | 0.25 | 34.34 | 1.28 | 0.63 | 30.17 | 1.09 | 0.54 |
| 195 | 26.86 | 0.46 | 0.23 | 34.37 | 1.25 | 0.62 | 30.21 | 1.05 | 0.52 |
| 210 | 26.89 | 0.43 | 0.21 | 34.39 | 1.23 | 0.61 | 30.24 | 1.02 | 0.50 |
| 225 | 26.91 | 0.41 | 0.20 | 34.41 | 1.21 | 0.60 | 30.27 | 0.99 | 0.49 |
| 240 | 26.93 | 0.39 | 0.19 | 34.43 | 1.19 | 0.59 | 30.30 | 0.96 | 0.48 |
| 255 | - | - | - | 34.45 | 1.17 | 0.58 | 30.32 | 0.94 | 0.47 |
| 270 | - | - | - | 34.47 | 1.15 | 0.57 | 30.35 | 0.91 | 0.45 |
| 285 | - | - | - | 34.49 | 1.13 | 0.56 | 30.38 | 0.88 | 0.44 |
| 300 | - | - | - | 34.50 | 1.12 | 0.55 | 30.40 | 0.86 | 0.43 |
| 315 | - | - | - | 34.51 | 1.11 | 0.55 | 30.43 | 0.83 | 0.41 |
| 330 | - | - | - | - | - | - | 30.46 | 0.80 | 0.40 |
| 345 | - | - | - | - | - | - | 30.48 | 0.78 | 0.39 |
| 360 | - | - | - | - | - | - | 30.50 | 0.76 | 0.38 |
| 375 | - | - | - | - | - | - | 30.52 | 0.74 | 0.37 |
| 390 | - | - | - | - | - | - | 30.54 | 0.72 | 0.36 |

Note:

* Feet below top of well casing.

a) H - head inside the well at time t after injection of the slug (steel weight) above the initial head.

b) $H_o$ - head inside the well above the initial head at instant of injection of the slug (steel weight).

c) The increase of head at the instant of lowering the slug (steel weight) into the water table is equal to 2.02 feet.

Table 8. Summary of Slug Test Results for Selected Water-Table Zone Wells, Monsanto Company, W.G. Krummrich Plant, Sauget, Illinois.

| Well | Transmissivity (gallons per day per foot) | Hydraulic Conductivity (gallons per day per square foot) | Storage Coefficient (dimensionless) | Portion of Screen that is Gravel-Packed (percent) |
|---|---|---|---|---|
| GM-1 | 344.3 | 23.0 | 0.01 | 60 |
| GM-2 | 28.5 | 1.9 | 0.1 | 0 |
| GM-3 | 51.8 | 3.5 | 0.1 | 20 |
| Average | 141.5 | 9.5 | 0.07 | -- |

Table 9. Laboratory and Field Permeability Test Results Performed by D'Appolonia Waste Management Services, Inc. Monsanto Company, W.G. Krummrich Plant, Sauget, Illinois.

| Boring No. | Depth (feet) | Permeability cm/sec | Permeability gpd/sq ft | Material |
|---|---|---|---|---|
| **Field Test Results** | | | | |
| B- 1 | 10.5 | 1.8 x 10-4 | 3.8 | Silty clay |
| B-10 | 35.5 | 6.0 x 10-3 | 127.2 | Silty clay |
| B-11 | 25.5 | 2.0 x 10-3 | 42.4 | Sandy silt |
| B-15 | 45.5 | 1.4 x 10-3 | 29.7 | Silty clay |
| **Laboratory Test Results** | | | | |
| B -2 | 23 -25.5 | 1.7 x 10-7 | 0.004 | Interbedded silty clay, silty fine sand and clayey silt |
| B-11 | 21.0-23.5 | 4.1 x 10-4 | 8.7 | Fine sand, some silt |
| B-14 | 15.5-18.0 | 1.2 x 10-6 | 0.025 | Sandy silt to silty sand, trace of clay |
| B-20 | 18.0-20.5 | 5.2 x 10-7 | 0.011 | Interbedded silty clay, clayey silt, silty sand |

Table 10. Aquifer Characteristics Based on Aquifer Tests in Madison and St. Clair Counties, Illinois[a)]

| Owner | Location of Test Site | Test Date | Well Depth (feet) | Well Diameter (inches) | Well Screen Interval (feet below land surface) | Duration of Test (days) | Pumping Rate (gpm) | Transmissivity Coefficient (gpd/ft) | Saturated Thickness (feet) | Permeability Coefficient (gpd/sq ft) | Storage Coefficient |
|---|---|---|---|---|---|---|---|---|---|---|---|
| Olin Mathieson Chemical Corp. | Madison County T5N, R9W sec 19 | May 29-June 1, 1956 | 88 | 12 | 78-88 | 3 | 760 | 95,600 | 90 | 1,060 | 0.135 |
| City of Wood River | Madison County 75N, R9W sec 28 | November 20-21, 1962 | 84 | 10 | 64-84 | 1 | 491 | 134,000 | 60 | 2,240 | 0.155 |
| Southwestern Campus of IU, Edwardsville | Madison County T4N, R8W sec 20 | December 13-17, 1960 | 95 | 10 | 75-95 | 4 | 308 | 131,000 | 84 | 1,560 | 0.020 |
| Shell Oil Company | Madison County T5N, R9W sec 33 | March 3-6, 1952 | 100 | 12 | ? | 3 | 510 | 210,000 | 100 | 2,100 | 0.002 |
| Mobil Oil Company | St. Clair County T2N, R10W sec 25 | October 25-26, 1961 | 114 | 16 | 79-114 | 1 | 630 | 212,000 | 73 | 2,900 | 0.100 |
| Monsanto Chemical Corporaton | St. Clair County T2N, R10W sec 27 | August 4-8, 1952 | 99 | 12 | 89-99 | 4 | 1,100 | 210,000 | 75 | 2,800 | 0.082 |

a) Schicht (1965)

Table 11. Summary of Water-Quality Analyses for USEPA Priority Pollutant and Non-Priority Pollutant Organic Compounds, Monsanto Company, W.G. Krummrich Plant, Sauget, Illinois (concentrations are in ug/L).

Mean Values

| Well No. | Volatile Organic Compounds | Acid Extractable Organic Compounds | Base/Neutral Extractable Organic Compounds | Pesticides/PCBs | Total Mean Concentration |
|---|---|---|---|---|---|
| Geraghty & Miller, Inc. Monitoring Wells | | | | | |
| GM-1 | 32* | ND[1)] | 3 | ND | 35 |
| GM-2 | 64* | ND | 10 | ND | 74 |
| GM-3 | 39* | ND | 3 | ND | 42 |
| GM-4A | 25* | ND | 4 | ND | 29 |
| GM-4B | 9,300 | 62 | 900 | ND | 10,300 |
| GM-4C | 6,950 | 102 | 813 | ND | 7,860 |
| GM-5 | 60* | ND | 2 | ND | 62 |
| GM-6A | 177 | ND | 3 | ND | 180 |
| GM-6B | 2,220 | 2 | 124 | ND | 2,350 |
| GM-7 | 37* | ND | 5 | ND | 42 |
| GM-8 | 44 | ND | 4 | ND | 48 |
| GM-9A | 1,400* | 106 | 82 | ND | 1,590 |
| GM-9B | 1,248 | 3 | 41 | 0.006 | 1,292 |
| GM-9C | 160 | 8 | 63 | 0.002 | 231 |
| GM-10A | 40* | ND | 5 | ND | 45 |
| GM-10B | 1,060 | 128 | 770 | ND | 1,960 |
| GM-10C | 68 | ND | 27 | ND | 95 |
| GM-11 | 38* | ND | 4 | ND | 42 |
| GM-12A | 2,410 | 104 | 357 | ND | 2,880 |
| GM-12B | 2,000 | 21 | 64 | 5 | 2,090 |
| GM-12C | 220 | 180 | 84 | ND | 484 |
| GM-13 | 88,000 | 1,400 | 4,760 | 53 | 94,000 |
| GM-14 | 155,000 | NA[2)] | NA | ND | 155,000 |
| GM-15 | 153 | 1 | 244 | 5 | 403 |

1) Not Detected.
2) Not Analyzed.

Table 11. (cont'd.)

| Well No. | Volatile Organic Compounds | Acid Extractable Organic Compounds | Base/Neutral Extractable Organic Compounds | Pesticides/PCBs | Total Mean Concentration |
|---|---|---|---|---|---|
| **Geraghty & Miller, Inc. Monitoring Wells** | | | | | |
| GM-16A | 6 | ND | 3 | ND | 9 |
| GM-16B | 23 | 2 | 12 | 19 | 56 |
| GM-17A[3)] | 105,400 | 256 | 4 | 0.112 | 105,700 |
| GM-17B | 57,000 | 220 | 64 | 0.5 | 57,000 |
| GM-17C | 13,900 | 88 | 1,340 | 0.1 | 15,400 |
| GM-18A | 25 | ND | 3 | 0.122 | 28 |
| GM-18B | 270 | 3 | 4 | 0.149 | 277 |
| GM-25A | 12 | ND | 23 | 0.004 | 35 |
| GM-25B | 2 | 1 | 21 | 0.48 | 24 |
| GM-27B | 481 | 129 | 28 | 18 | 656 |
| GM-27C | 1,660 | 150 | 130 | 18 | 1,950 |
| GM-28B | 5,720 | 2,893 | 824 | 175 | 9,610 |
| GM-28C | 5,400 | 1,695 | 1,810 | 0.262 | 8,900 |
| GM-29 | 6 | 12 | 14 | 0.129 | 32 |
| GM-30 | 333 | ND | 105 | ND | 438 |
| GM-31A | 184 | 18,800 | 318 | ND | 19,300 |
| GM-31B | 52 | 0 | 15 | ND | 67 |
| GM-31C | 591 | 60 | 32 | ND | 683 |
| GM-106 | 120 | 300 | 354 | ND | 774 |
| **Landfill Monitoring Wells** | | | | | |
| B-24A | 16,110 | 600,000 | 479,340 | ND | 1,100,000 |
| B-25A | 30,000 | 130 000 | 172,480 | ND | 330 000 |
| B-25B | 14,200 | 112,400 | 25,270 | ND | 151,900 |
| B-27B | 52,600 | NA | NA | ND | 52,600 |
| B-28A | 1,510 | ND | ND | ND | 1,510 |

3) September 1984 volatile organic analysis was omitted because the laboratory could not determine the quantitative values for benzene and chlorobenzene.

Table 11. (cont'd.)

| Well No. | Volatile Organic Compounds | Acid Extractable Organic Compounds | Base/Neutral Extractable Organic Compounds | Pesticides/PCBs | Total Mean Concentratio |
|---|---|---|---|---|---|
| **Landfill Monitoring Wells (cont'd.)** | | | | | |
| B-29A | 2,200 | 1,389,000 | 1,550 | ND | 1,393,000 |
| B-29B | 22,000 | 329,000 | 7,900 | ND | 359,000 |
| B-30B | 7,150 | NA | NA | ND | 7,150 |
| B-31B | ND | ND | 53 | ND | 53 |
| B-31C | 224 | 2 | 41 | 0.015 | 267 |
| B-101 | 16,000 | 52,800 | 94,300 | ND | 163,100 |
| B-102 | 26 | ND | 4 | ND | 30 |
| P-1 | 4 | 4 | 17 | ND | 25 |
| P-2 | 849 | 182 | 16 | ND | 1,047 |
| P-6 | 190 | 3 | ND | ND | 190 |
| P-7 | 7,080 | 97,300 | 191,000 | ND | 295,000 |
| P-8 | 1,970 | 126 | 107 | ND | 2,200 |
| P-10 | 2,000 | ND | 8 | 0.562 | 2,000 |
| P-11 | 991 | ND | 106 | 1 | 1,098 |
| P-12 | 1,340 | ND | 144 | 34 | 1,520 |
| P-13 | 33,000 | 3 | 144 | ND | 33,000 |
| P-14 | 20,000 | 53 | 33 | ND | 20,000 |
| **Dewatering Wells in the Plant Area** | | | | | |
| DW-1 | 112,400 | 225 | 531 | ND | 113,200 |
| DW-4 | 14,120 | 1,940 | 441 | 0.534 | 16,470 |
| DW-7 | 670 | 300 | 1,120 | ND | 2,100 |
| DW-10 | 18,780 | 42 | 1,007 | 0.136 | 19,830 |
| **Monitoring Wells in the Plant Area for Dewatering Projects** | | | | | |
| BK-3 | 3,670 | 13 | 300 | 0.016 | 4,000 |
| DW-34 | 201,000 | 81 | 4 | ND | 201,000 |
| **Dewatering Wells for the Treatment Plant Sewer Construction** | | | | | |
| DW-1-85 | 6,530 | 34 | 429 | ND | 6,960 |
| DW-18 | 600 | 0.3 | 55 | 0.005 | 660 |
| DW-23 | 6 | ND | 189 | 0.066 | 195 |
| DW-24 | 6 | ND | 2 | ND | 8 |

Table 11. (cont'd.)

| Well No. | Volatile Organic Compounds | Acid Extractable Organic Compounds | Base/Neutral Extractable Organic Compounds | Pesticides/PCBs | Total Mean Concentration |
|---|---|---|---|---|---|
| Monitoring Wells for the Treatment Plant Dewatering Projects | | | | | |
| DW-29 | 662 | 26 | 2 | 0.013 | 690 |
| DW-30 | 172 | 4 | 47 | ND | 223 |
| DW-33 | 9 | 4 | 4 | 0.02 | 17 |
| Offsite Wells | | | | | |
| WB-6 | 178 | 21 | 750 | ND | 950 |
| WB-7 | 80 | ND | 4 | 0.129 | 80 |

* Priority Pollutants only

Geraghty & Miller, Inc.

Table 12. Summary of Volatile Organic Compounds in Ground Water in Well GM-12A, Monsanto Company, Sauget, Illinois. ***

| Well Number: | GM-12A | GM-12A | GM-12A | GM-12A | GM-12A | GM-12A | GM-12A | GM-12A | GM-12A | GM-12A | GM-12A |
|---|---|---|---|---|---|---|---|---|---|---|---|
| Date: | 11/83 | 11/83* | 5/84 | 5/84* | 11/84 | 11/84* | 2/85 | 2/85* | 5/85 | 5/85* | 11/85 |
| USEPA Priority Pollutant Volatile Organic Compounds concentrations are in ug/L | | | | | | | | | | | |
| acrolein | <1 | <1 | <1 | <1 | <100 | <1000 | <100 | <100 | <100 | <100 | <1,000 |
| acrylonitrile | <1 | <1 | <1 | <1 | <100 | <1000 | <100 | <100 | <100 | <100 | <1,000 |
| benzene | 425 | 433 | 3,263 | 4,819 | 1,790 | 3,590 | 1,030 | 1,160 | 2,270.3 | 1,819.1 | 1,730 |
| bis (chloromethyl) ether | <1 | <1 | <1 | <1 | <10 | <100 | <10 | <10 | <10 | <10 | <100 |
| bromoform | <1 | <1 | <1 | <1 | <10 | <100 | <4.7 | <4.7 | <4.7 | <4.7 | <47 |
| carbon tetrachloride | <1 | <1 | <1 | <1 | <10 | <100 | <2.8 | <2.8 | <2.8 | <2.8 | <28 |
| chlorobenzene | 350 | 296 | 304 | 399 | 286 | 565 | 349.3 | 399.3 | 453.4 | 471.9 | 428 |
| chlorodibromomethane | <1 | <1 | <1 | <1 | <10 | <100 | <3.1 | <3.1 | <3.1 | <3.1 | <31 |
| chloroethane | <1 | <1 | <1 | <1 | <10 | <100 | <10 | <10 | <10 | <10 | <100 |
| 2-chloroethylvinyl ether | <1 | <1 | <1 | <1 | <10 | <100 | <10 | <10 | <10 | <10 | <100 |
| chloroform | 18 | 21 | <1 | <1 | <10 | <100 | <1.6 | <1.6 | <1.6 | <1.6 | <16 |
| dichlorobromomethane | <1 | <1 | <1 | <1 | <10 | <100 | <2.2 | <2.2 | <2.2 | <2.2 | <22 |
| dichlorodifluoromethane | <1 | <1 | <1 | <1 | <10 | <100 | <10 | <10 | <10 | <10 | <100 |
| 1,1-dichloroethane | <1 | <1 | <1 | <1 | <10 | <100 | <4.7 | <4.7 | <4.7 | <4.7 | <47 |
| 1,2-dichloroethane | <1 | <1 | <1 | <1 | <10 | <100 | <2.8 | <2.8 | <2.8 | <2.8 | <28 |
| 1,1-dichloroethylene | <1 | <1 | <1 | <1 | <10 | <100 | <2.8 | <2.8 | <2.8 | <2.8 | <28 |
| 1,2-dichloropropane | <1 | <1 | <1 | <1 | <10 | <100 | <6 | <6 | <6 | <6 | <60 |
| cis-1,3-dichloropropylene | <1 | <1 | <1 | <1 | <10 | <100 | <5 | <5 | <5 | <5 | <50 |
| trans-1,3-dichloropropylene | <1 | <1 | <1 | <1 | <10 | <100 | <10 | <10 | <10 | <10 | <100 |
| ethylbenzene | 4 | 4 | 17 | 17 | 17 | <100 | 20.2 | 22 | 13.9 | 14.6 | <72 |
| methyl bromide | <1 | <1 | <1 | <1 | <10 | <100 | <10 | <10 | <10 | <10 | <100 |
| methyl chloride | <1 | <1 | <1 | <1 | <10 | <100 | <10 | <10 | <10 | <10 | <100 |
| methylene chloride | 49 | 64 | 23 | 31 | <10 | <100 | <2.8 | <2.8 | <2.8 | <2.8 | 599 |
| 1,1,2,2-tetrachloroethane | <1 | <1 | <1 | <1 | <10 | <100 | <6.9 | <6.9 | <6.9 | <6.9 | <69 |
| tetrachloroethylene | <1 | <1 | <1 | <1 | <10 | <100 | <4.1 | <4.1 | <4.1 | <4.1 | <41 |
| toluene | 4 | 4 | 17 | 22 | 26 | <100 | 31.2 | 29 | 12.2 | 12.3 | <60 |
| 1,2-trans-dichloroethylene | <1 | <1 | <1 | <1 | <10 | <100 | <1.6 | <1.6 | <1.6 | <1.6 | <16 |
| 1,1,1-trichloroethane | 8 | 7 | <1 | <1 | <10 | <100 | <3.8 | <3.8 | <3.8 | <3.8 | <38 |
| 1,1,2-trichloroethane | <1 | <1 | <1 | <1 | <10 | <100 | <5 | <5 | <5 | <5 | <50 |
| trichloroethylene | <1 | <1 | <1 | <1 | <10 | <100 | <1.9 | <1.9 | <1.9 | <1.9 | <19 |
| trichlorofluoromethane | <1 | <1 | <1 | <1 | <10 | <100 | <10 | <10 | <10 | <10 | <100 |
| vinyl chloride | <1 | <1 | <1 | <1 | <10 | <100 | <10 | <10 | <10 | <10 | <100 |
| Sub Total 1 | 858 | 829 | 3624 | 5288 | 2119 | 4155 | 1430.7 | 1610.3 | 2749.8 | 2317.9 | 2757 |
| Miscellaneous Volatile Organic Compounds | | | | | | | | | | | |
| methyl-iso-butyl ketone | NA | NA | NA | NA | <10 | <100 | <10 | <10 | <10 | <10 | <100 |
| methyl isoamyl ketone | NA | NA | NA | NA | <10 | <100 | <10 | <10 | <10 | <10 | <100 |
| m-xylene | NA | NA | NA | NA | 17 | <100 | 17.1 | 18.5 | 11 | 12.6 | <100 |
| o-xylene/p-xylene | NA | NA | NA | NA | 49 | <100 | 55.3 | 59.5 | 43 | 49.7 | <100 |
| Sub Total 2 | 0 | 0 | 0 | 0 | 66 | 0 | 72.4 | 78 | 54 | 62.3 | 0 |
| Total VOC's | 858 | 829 | 3624 | 5288 | 2185 | 4155 | 1503.1 | 1688.3 | 2803.8 | 2380.2 | 2757 |

Table 12. Summary of Volatile Organic Compounds in Ground Water in Well GM-12A, Monsanto Company, Sauget, Illinois. ***

| Well Number: | GM-12A | GM-12A | GM-12A |
|---|---|---|---|
| Date: | 11/85* | 2/86 | 2/86* |
| USEPA Priority Pollutant Volatile Organic Compounds concentrations are in ug/L | | | |
| acrolein | <1,000 | <100 | <100 |
| acrylonitrile | <1,000 | <100 | <100 |
| benzene | 1,540 | 1,170 | 1,160 |
| bis (chloromethyl) ether | <100 | <10 | <10 |
| bromoform | <47 | <4.7 | <4.7 |
| carbon tetrachloride | <28 | <2.8 | <2.8 |
| chlorobenzene | 403 | 499 | 394 |
| chlorodibromomethane | <31 | <3.1 | <3.1 |
| chloroethane | <100 | <10 | <10 |
| 2-chloroethylvinyl ether | <100 | <10 | <10 |
| chloroform | <16 | <1.6 | <1.6 |
| dichlorobromomethane | <22 | <2.2 | <2.2 |
| dichlorodifluoromethane | <100 | <10 | <10 |
| 1,1-dichloroethane | <47 | <4.7 | <4.7 |
| 1,2-dichloroethane | <28 | <2.8 | <2.8 |
| 1,1-dichloroethylene | <28 | <2.8 | <2.8 |
| 1,2-dichloropropane | <60 | <6 | <6 |
| cis-1,3-dichloropropylene | <50 | <5 | <5 |
| trans-1,3-dichloropropylene | <100 | <10 | <10 |
| ethylbenzene | <72 | 11.3 | 7.9 |
| methyl bromide | <100 | <10 | <10 |
| methyl chloride | <100 | <10 | <10 |
| methylene chloride | 443 | <2.8 | 6.5 |
| 1,1,2,2-tetrachloroethane | <69 | <6.9 | <6.9 |
| tetrachloroethylene | <41 | <4.1 | <4.1 |
| toluene | <60 | <6 | <6 |
| 1,2-trans-dichloroethylene | <16 | <1.6 | <1.6 |
| 1,1,1-trichloroethane | <38 | <3.8 | <3.8 |
| 1,1,2-trichloroethane | <50 | <5 | <5 |
| trichloroethylene | <19 | <1.9 | <1.9 |
| trichlorofluoromethane | <100 | <10 | <10 |
| vinyl chloride | <100 | <10 | <10 |
| Sub Total 1 | 2386 | 1680.3 | 1568.4 |
| Miscellaneous Volatile Organic Compounds | | | |
| methyl-iso-butyl ketone | <100 | <10 | <10 |
| methyl isoamyl ketone | <100 | <10 | <10 |
| m-xylene | <100 | <10 | <10 |
| o-xylene/p-xylene | <100 | 20 | 16.9 |
| Sub Total 2 | 0 | 20 | 16.9 |
| Total VOC's | 2386 | 1700.3 | 1585.3 |

NA - Not analyzed.
* - Replicate Analyses
** - Prior to analysis, this sample was held by Envirodyne Engineers, Inc. longer than the maximum allowable USEPA holding time.
*** - Envirodyne Engineers, Inc. (St. Louis, MO.) provided the laboratory services for the sampling rounds conducted between November, 1983 and September, 1984, with the exception of the January through May, 1984 sampling rounds conducted in the W.G. Krumerich Landfill. These wells are designated as the "B" series (i.e. B-22A) and the "P" series (i.e. P-7) and D'Appolonia (currently IT Corporation), Pittsburgh, Pa., provided the chemical results. ETC (Edison, NJ) performed the analyses for the November 1984 through February 1986 sampling programs.

Table 13. Mean Concentrations of Volatile Organic Compounds in Field, Trip and Laboratory Blanks

| | Field Blanks (8)* | | | Trip Blanks (9)* | | | Laboratory Blanks (17)* | | |
|---|---|---|---|---|---|---|---|---|---|
| | Frequency of Occurence above Detection Limits | Range (ug/L) | Mean** (ug/L) | Frequency of Occurence above Detection Limits | Range (ug/L) | Mean** (ug/L) | Frequency of Occurence above Detection Limits | Range (ug/L) | Mean** (ug/L) |
| Benzene | 1 | ND-28 | 4 | 3 | ND-31 | 7 | 8 | ND-34 | 7 |
| Chlorobenzene | 3 | ND-53 | 10 | 1 | ND-2 | 0.2 | 4 | ND-53 | 3 |
| Methylene Chloride | 4 | ND-39 | 10 | 6 | ND-130 | 31 | 15 | ND-50 | 21 |
| Total Volatile Organics | 6 | ND-94 | 24 | 7 | ND-158 | 43 | 16 | ND-87 | 34 |

* Number of samples
** For calculations, ND values were regarded as 0.
ND - Not Detected.

Table 14. Analysis of Precision and Error Among Replicates from Well GM-12A

| Date | Replicate Concentrations (ug/L) | Mean (ug/L) | Precision[1] (Standard Deviation) | Measurements in both Conc. Range[2] and Within Expected Precision | Relative Error (%) |
|---|---|---|---|---|---|
| | | | CHLOROBENZENE | | |
| 11/83 | 350, 296 | 323 | 51.6 | yes | 8 |
| 5/84 | 304, 399 | 352 | 56.1 | yes | 14 |
| 11/84 | 286, 565 | 426 | 68[a] | no | 33 |
| 2/85 | 349.3, 399.3 | 374 | 59.8 | yes | 7 |
| 5/85 | 453.4, 471.9 | 463 | 73.9 | yes | 2 |
| 11/85 | 428, 403 | 416 | 66.4 | yes | 3 |
| 2/86 | 499, 394 | 447 | 71.4 | yes | 12 |
| Average | | | | | 11 |
| | | | XYLENES | | |
| 11/83 | NA | --- | --- | --- | -- |
| 5/84 | NA | --- | --- | --- | -- |
| 11/84 | 49, <100 | --- | --- | --- | -- |
| 2/85 | 55.3, 59.5 | 57.4 | 3.0* | --- | 4 |
| 5/85 | 43, 49.7 | 46.4 | 4.7* | --- | 7 |
| 11/85 | <100, <100 | --- | --- | --- | -- |
| 2/86 | 20, 16.9 | 18.4 | 2.2* | --- | 8 |
| Average | | | | | 6 |
| | | | TOLUENE | | |
| 11/83 | 4, 4 | 4 | 0.11 | no | 0 |
| 5/84 | 17, 22 | 20 | 2.2[a] | no | 15 |
| 11/84 | 26, <100 | --- | --- | --- | -- |
| 2/85 | 31.2, 29 | 30.1 | 3.8 | yes | 4 |
| 5/85 | 12.2, 12.3 | 12.3 | 1.12 | no | 0.8 |
| 11/85 | <60, <60 | --- | --- | --- | -- |
| 2/86 | <6, <6 | --- | --- | --- | -- |
| Average | | | | | 5 |

Table 14 (Continued).

| Date | Replicate Concentrations (ug/L) | Mean (ug/L) | Precision[1] (Standard Deviation) | Measurements in both Conc. Range[2] and Within Expected Precision | Relative Error (%) |
|---|---|---|---|---|---|
| | | | **BENZENE** | | |
| 11/83 | 425, 433 | 429 | 5.66 | yes | 0.9 |
| 5/84 | 3263, 4819 | 4041 | 1100 | no | 19 |
| 11/84 | 1790, 3590 | 2690 | 1273 | no | 33 |
| 2/85 | 1030, 1160 | 1095 | 92 | no | 6 |
| 5/85 | 2270.3, 1819.1 | 2044.7 | 268 | no | 11 |
| 11/85 | 1730, 1540 | 1635 | 134 | no | 6 |
| 2/86 | 1170, 1160 | 1165 | 7.1 | no | 0.4 |
| Average | | | | | 11 |
| | | | **ETHYLBENZENE** | | |
| 11/83 | 4, 4 | 4 | 1.56 | no | 0 |
| 5/84 | 17, 17 | 17 | 3.38 | yes | 0 |
| 11/84 | 17, <100 | --- | --- | --- | -- |
| 2/85 | 20.2, 22 | 21.1 | 3.9 | yes | 4 |
| 5/85 | 13.9, 14.6 | 14.2 | 3.0 | no | 2 |
| 11/85 | <72, <72 | --- | --- | --- | -- |
| 2/86 | 11.3, 7.9 | 9.6 | 2.3 | no | 18 |
| Average | | | | | 5 |

1) Expected Precision for Distilled Water Data (USEPA, 1984)

| | |
|---|---|
| Chlorobenzene | $0.16\ \bar{x} - 0.09$ |
| Xylenes | none |
| Toluene | $0.15\ \bar{x} - 0.71$ |
| Benzene | $0.26\ \bar{x} - 1.74$ |
| Ethylbenzene | $0.14\ \bar{x} + 1.00$ |

2) Method Ranges of Concentration (ug/L)

| |
|---|
| 13.5 - 600 |
| none |
| 13.5 - 600 |
| 10.8 - 480 |
| 15 - 690 |

a) Does not fall within the expected precision range.

*There are no precision criteria for xylenes.

# SDMS US EPA REGION V
# FORMAT- OVERSIZED - 5
## IMAGERY INSERT FORM

The item(s) listed below are not available in SDMS. In order to view original document or document pages, contact the Superfund Records Center.

| | | | |
|---|---|---|---|
| SITE NAME | SAUGET AREA 2 | | |
| DOC ID # | 155322 | | |
| DESCRIPTION OF ITEM(S) | MAPS | | |
| REASON WHY UNSCANNABLE | _X_OVERSIZED | OR | ___ FORMAT |
| DATE OF ITEM(S) | N.D.; 1984 thru 1986. | | |
| NO. OF ITEMS | 15 | | |
| PHASE | AR, SID | | |
| PRP | RMD - SAUGET AREA 2 | | |
| PHASE (AR DOCUMENTS ONLY) | ___ Remedial ___ Removal ___ Deletion Docket ___ AR<br>___ Original ___ Update # ___ Volume ___ of ___ | | |
| | | | |
| COMMENT(S) | | | |
| Various Figures among 1 thru 27 | | | |

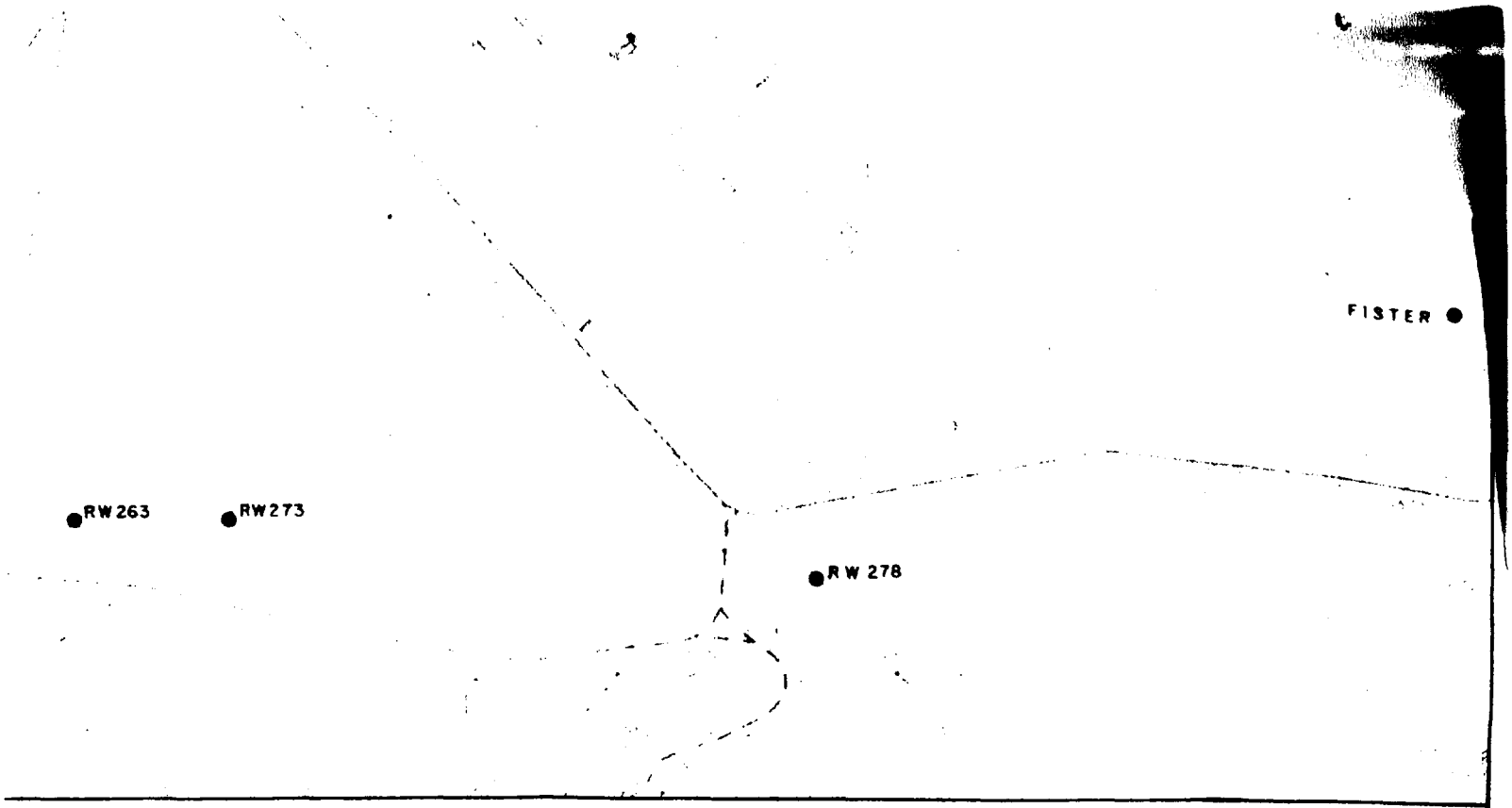


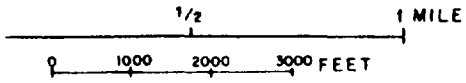


**AREA WELLS INVENTORIED PRIOR TO THE STUDY**

**MONSANTO COMPANY**
**SAUGET, ILLINOIS**

**FIGURE 1**

944

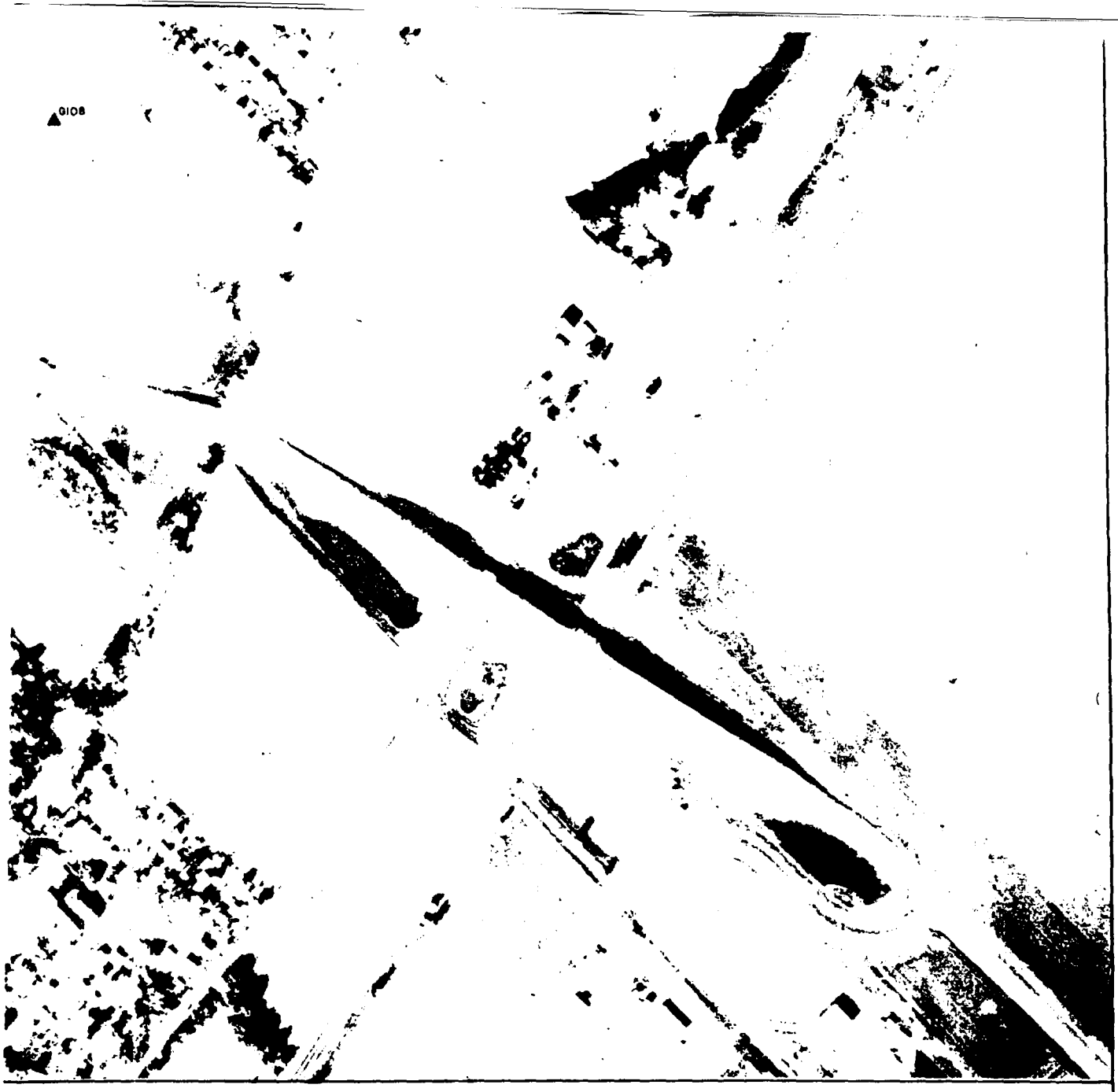


LOCATION MAP AND LINE OF
GEOLOGIC CROSS-SECTION

MONSANTO COMPANY
Sauget, Illinois

FIGURE 2

944-

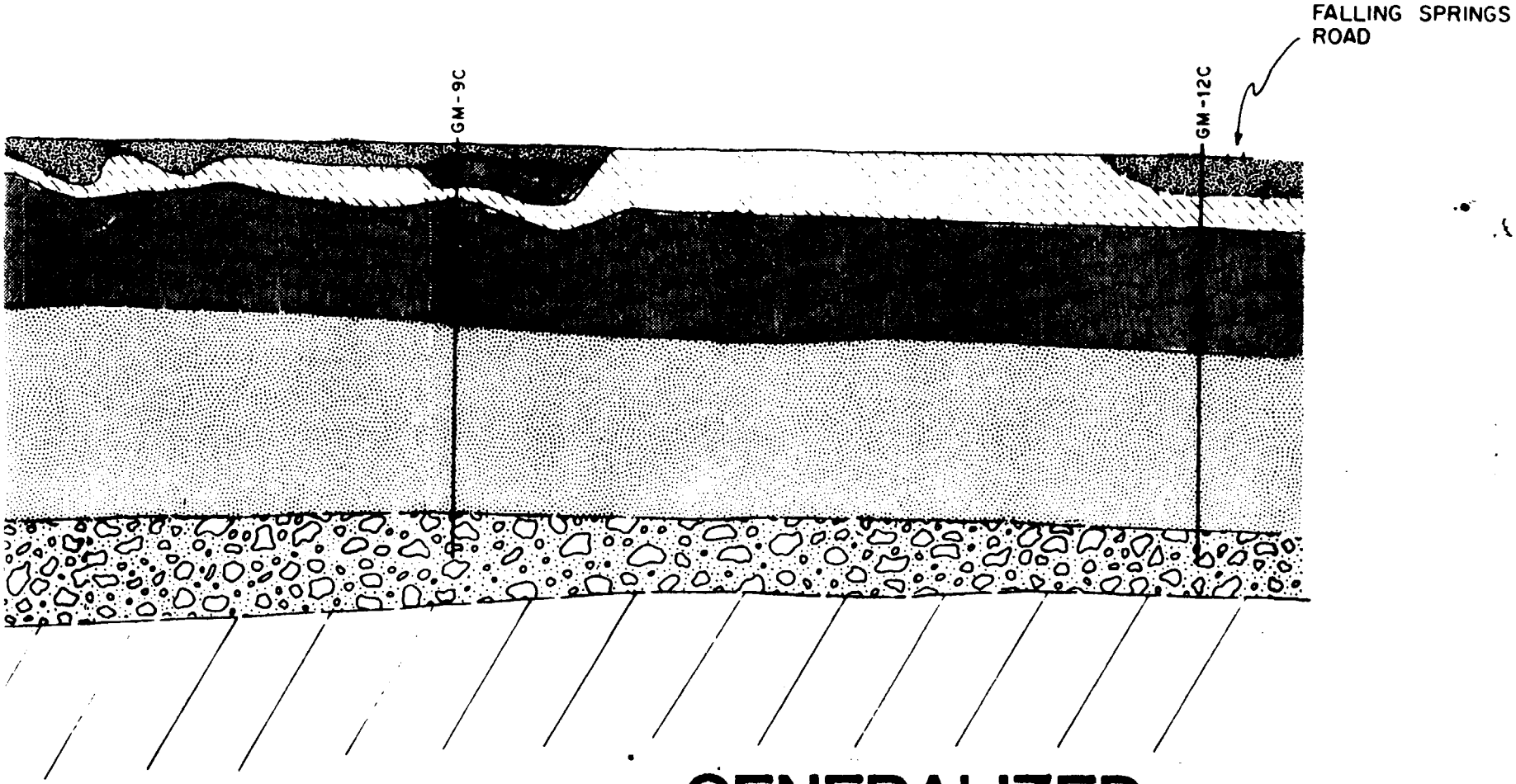


# GENERALIZED GEOLOGIC CROSS-SECTION (A-A')

**MONSANTO COMPANY**
**Sauget, Illinois**

**FIGURE 3**

GERAGHTY & MILLER, INC.
*Ground-Water Consultants*

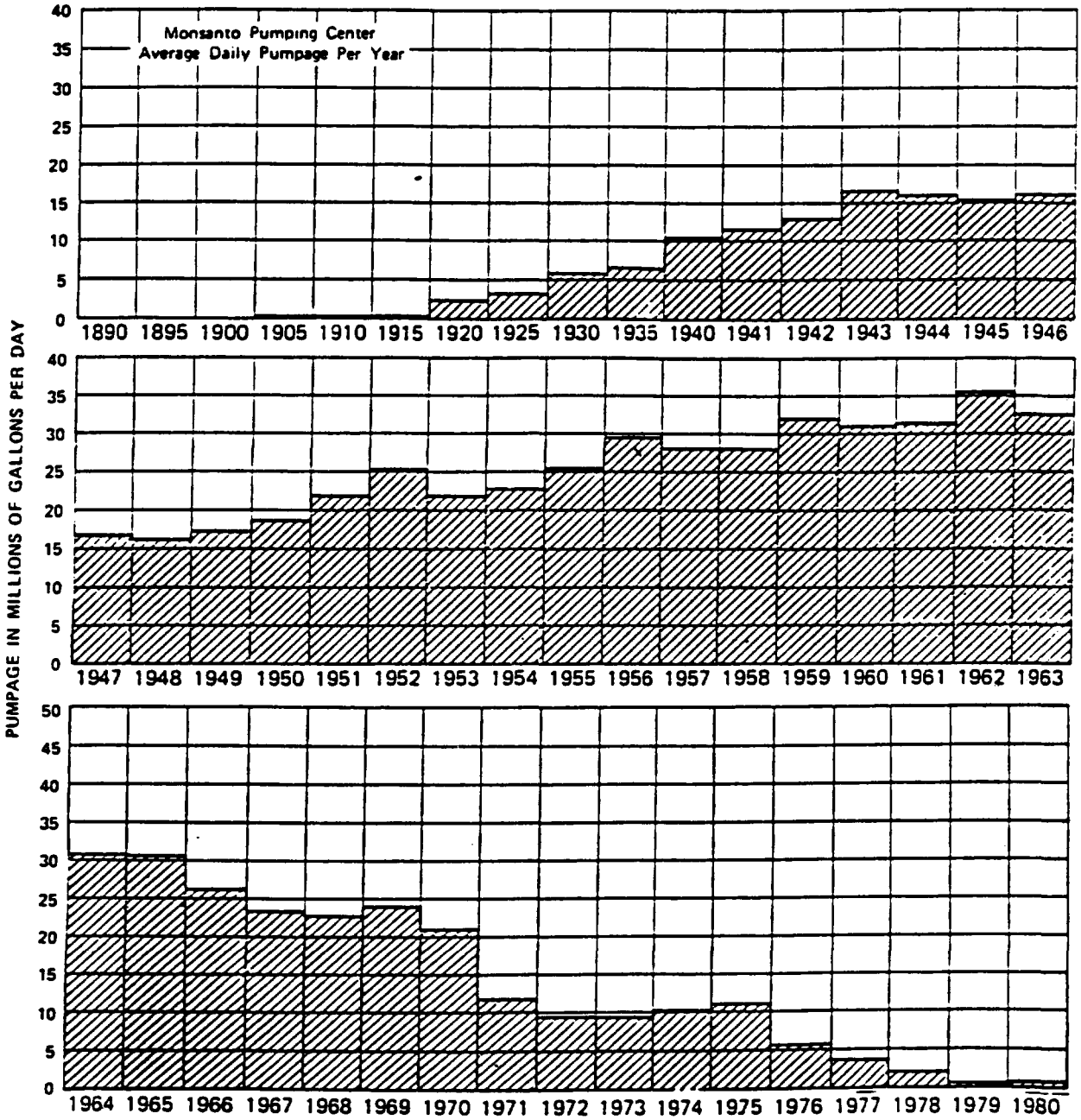


ESTIMATED PUMPAGE IN THE EAST ST. LOUIS-SAUGET-CAHOKIA AREA, 1890-1980
MONSANTO COMPANY, SAUGET, ILLINOIS

FIGURE 4

GERAGHTY & MILLER, INC.
*Ground-Water Consultants*

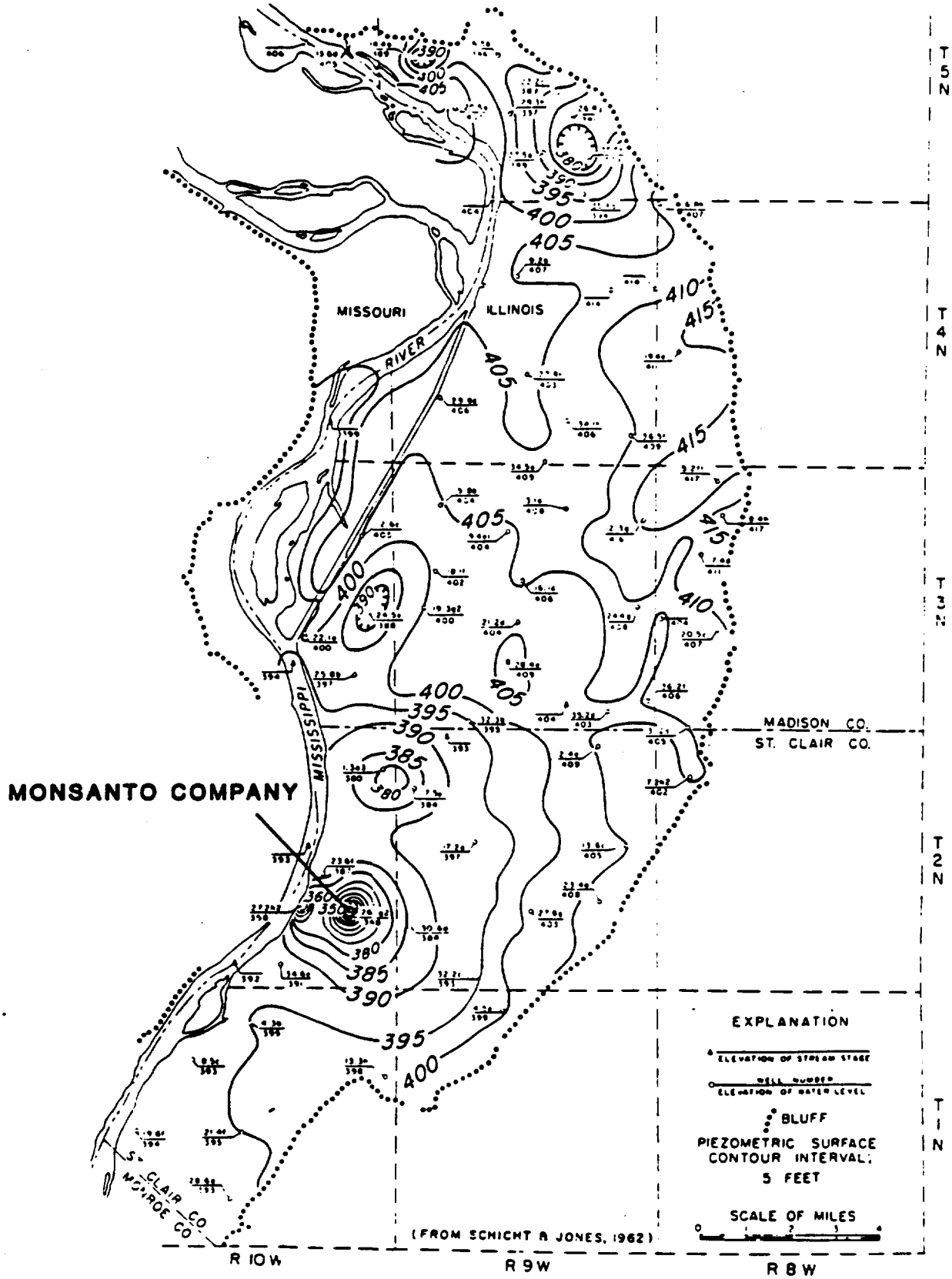


APPROXIMATE ELEVATION OF THE POTENTIOMETRIC SURFACE, NOVEMBER 1961
MONSANTO COMPANY, SAUGET, ILLINOIS

FIGURE 5

GERAGHTY & MILLER, INC.
*Ground-Water Consultants*

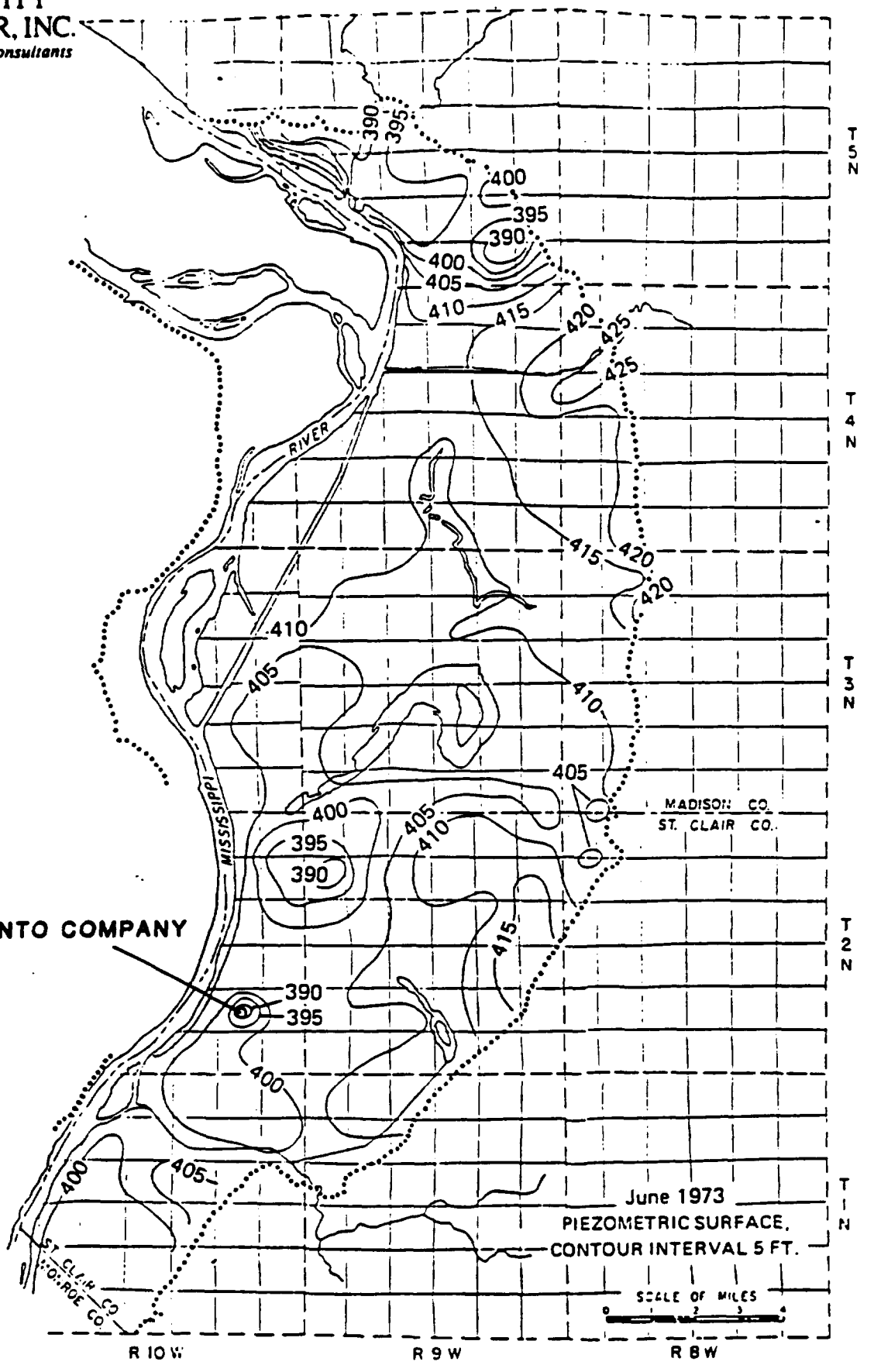


APPROXIMATE ELEVATION OF THE POTENTIOMETRIC SURFACE, JUNE 1973
MONSANTO COMPANY, SAUGET, ILLINOIS

FIGURE 6

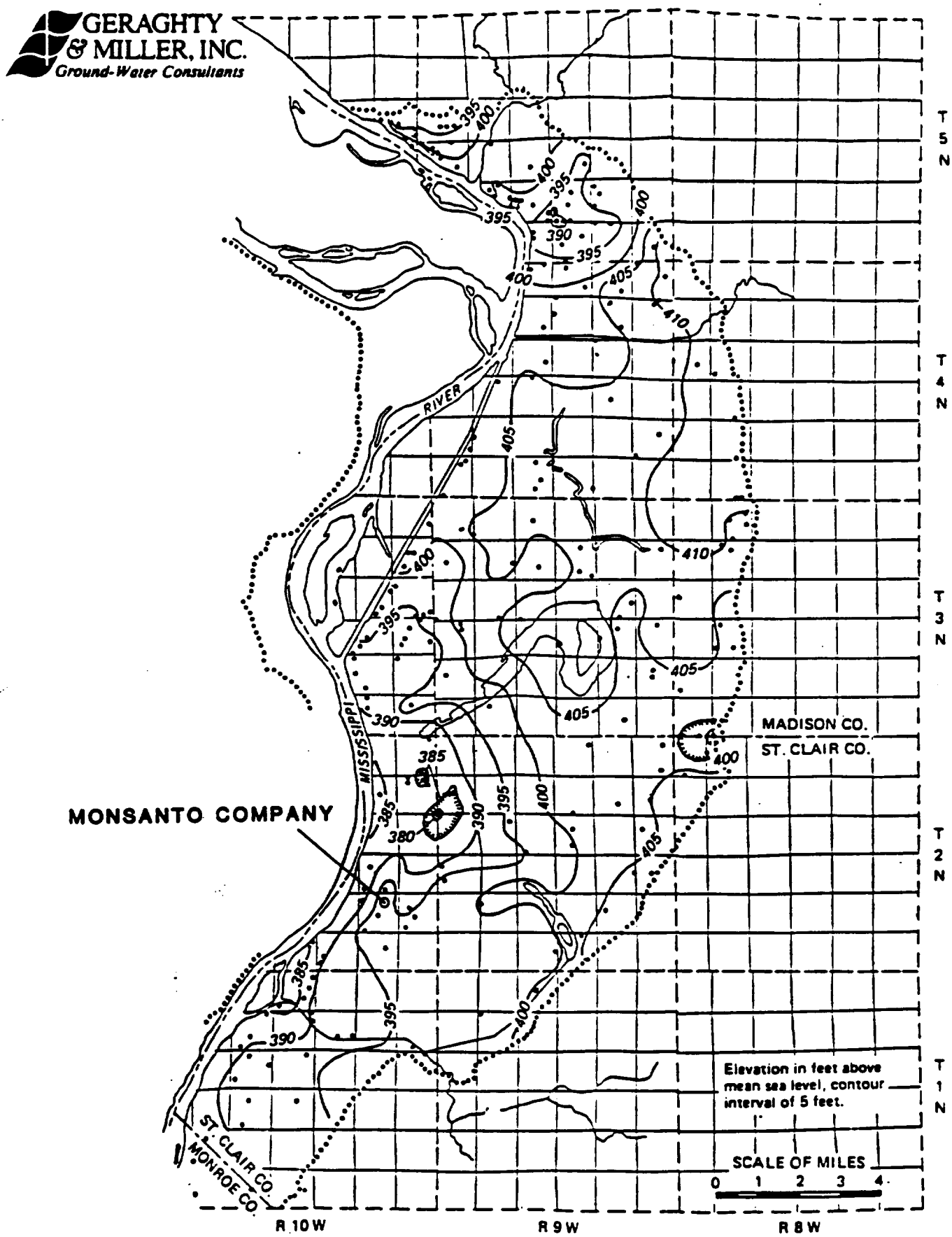


APPROXIMATE ELEVATION OF THE POTENTIOMETRIC SURFACE, NOVEMBER 1980
MONSANTO COMPANY, SAUGET, ILLINOIS

FIGURE 7

895

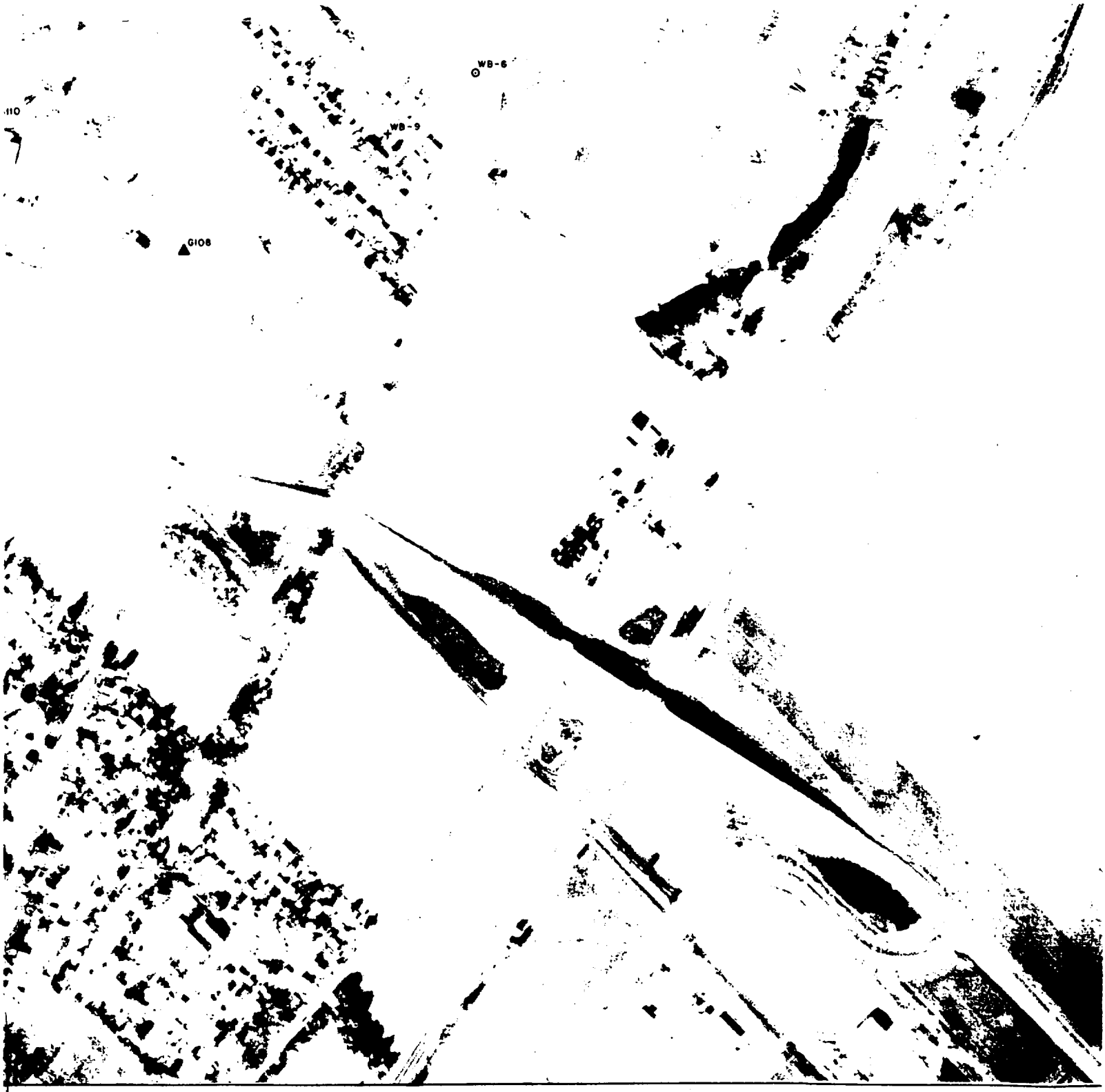


CONFIGURATION OF THE WATER TABLE

AUGUST 1984

MONSANTO COMPANY
Sauget, Illinois

Figure 8

POTENTIOMETRIC SURFACE OF
THE INTERMEDIATE ZONE
AUGUST 1984

MONSANTO COMPANY
Sauget, Illinois

FIGURE 9

POTENTIOMETRIC SURFACE
OF THE DEEP ZONE
AUGUST 1984

MONSANTO COMPANY
Sauget, Illinois

FIGURE 10

944-

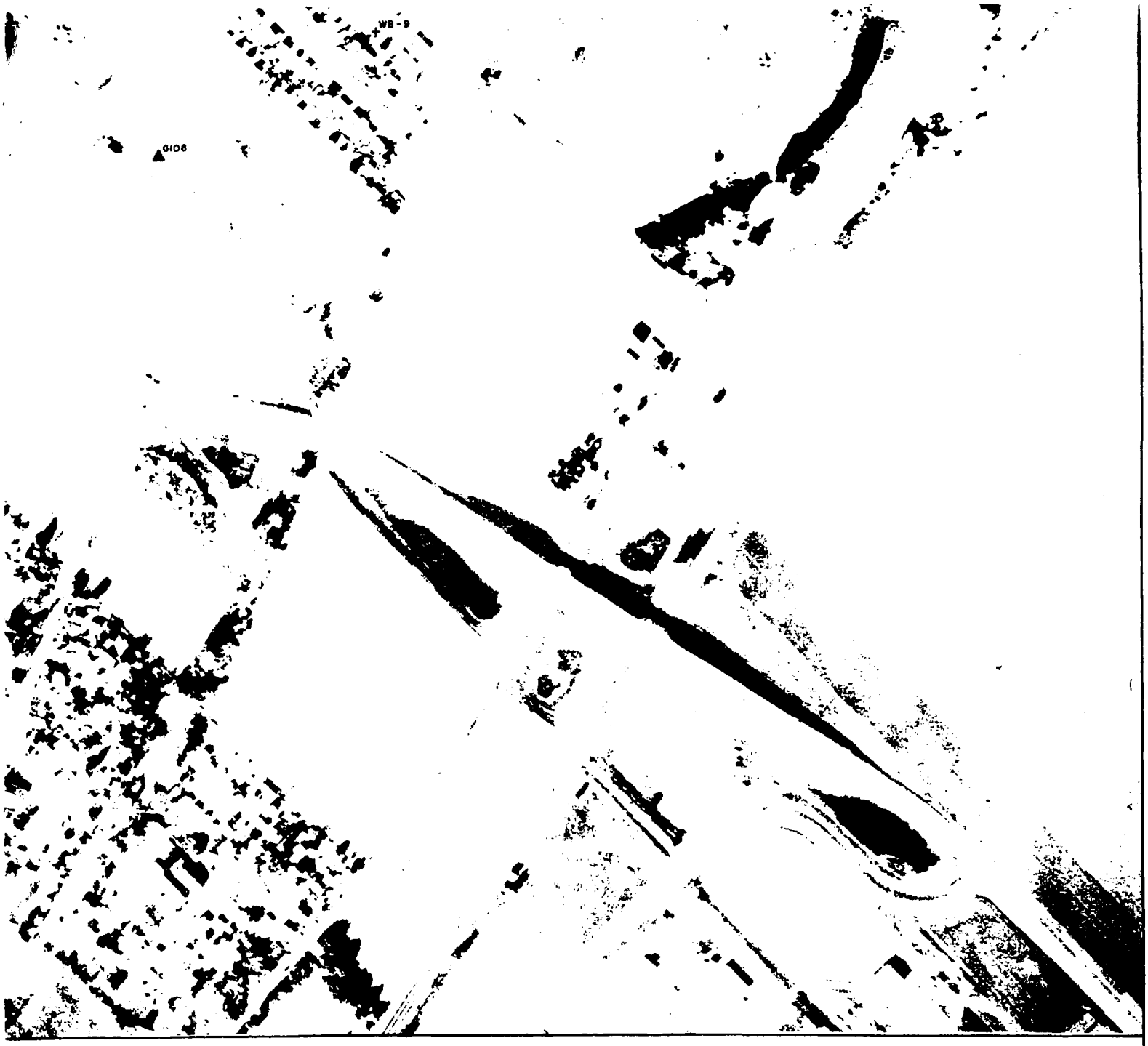


CONFIGURATION OF THE WATER TABLE

NOVEMBER 1985

**MONSANTO COMPANY**
**Sauget, Illinois**

FIGURE 11

POTENTIOMETRIC SURFACE OF THE
INTERMEDIATE ZONE
NOVEMBER 1985

MONSANTO COMPANY
Sauget, Illinois

FIGURE 12

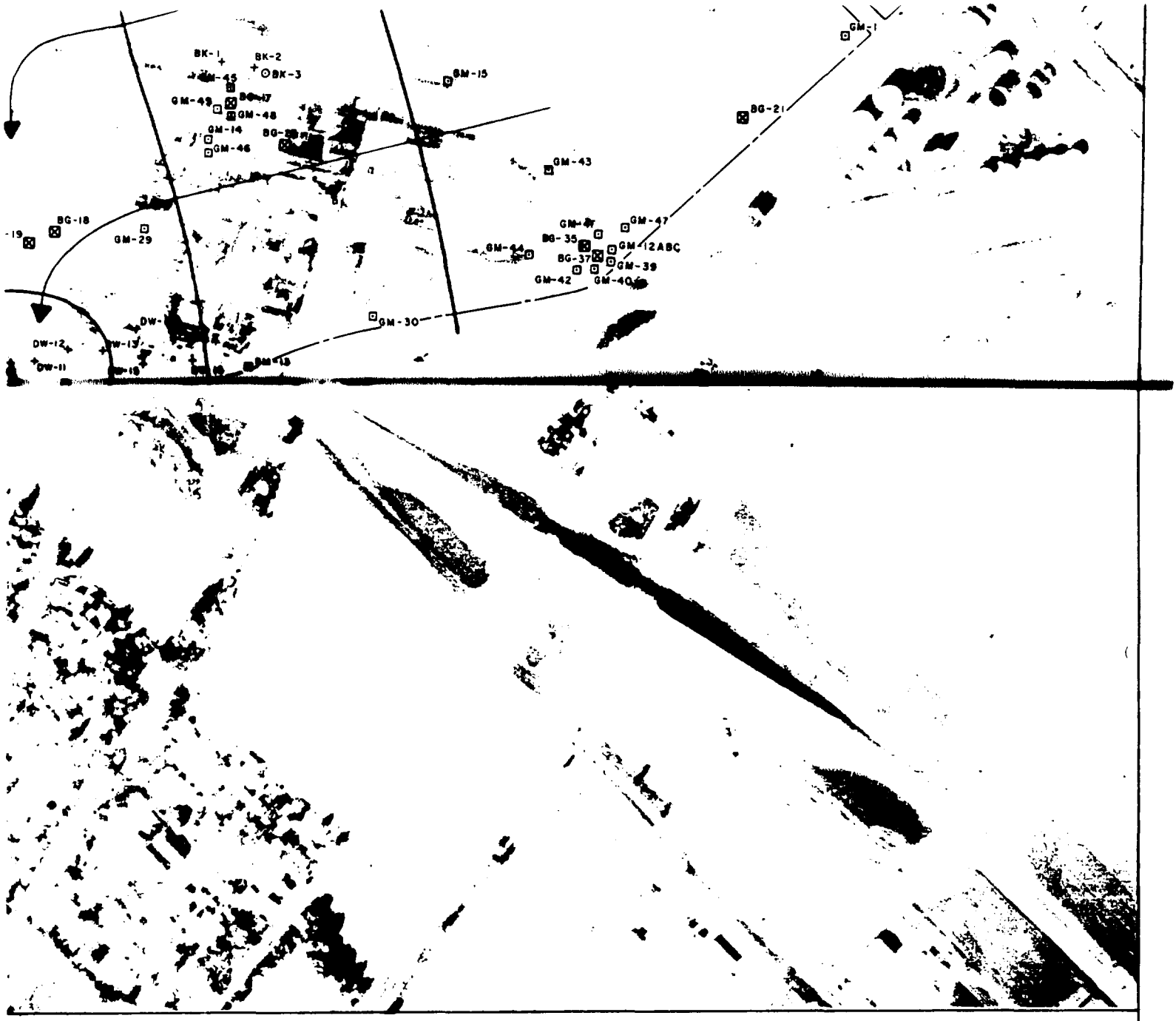


# POTENTIOMETRIC SURFACE OF THE DEEP ZONE

## NOVEMBER 1985

**MONSANTO COMPANY**
**Sauget, Illinois**

**FIGURE 13**

944-

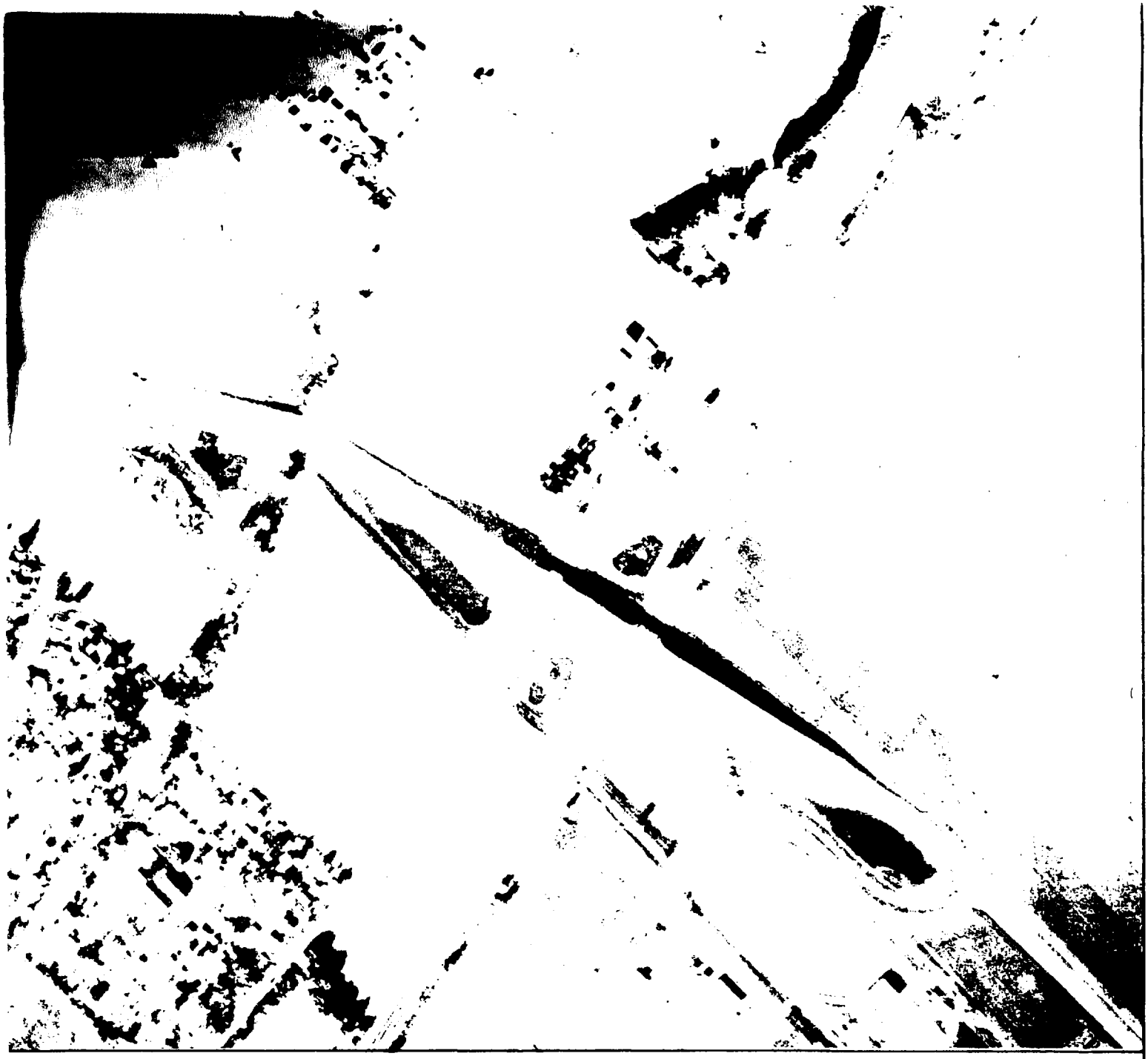

POTENTIOMETRIC SURFACE
OF THE ROCK AQUIFER
NOVEMBER 1985

MONSANTO COMPANY
Sauget, Illinois

FIGURE 14

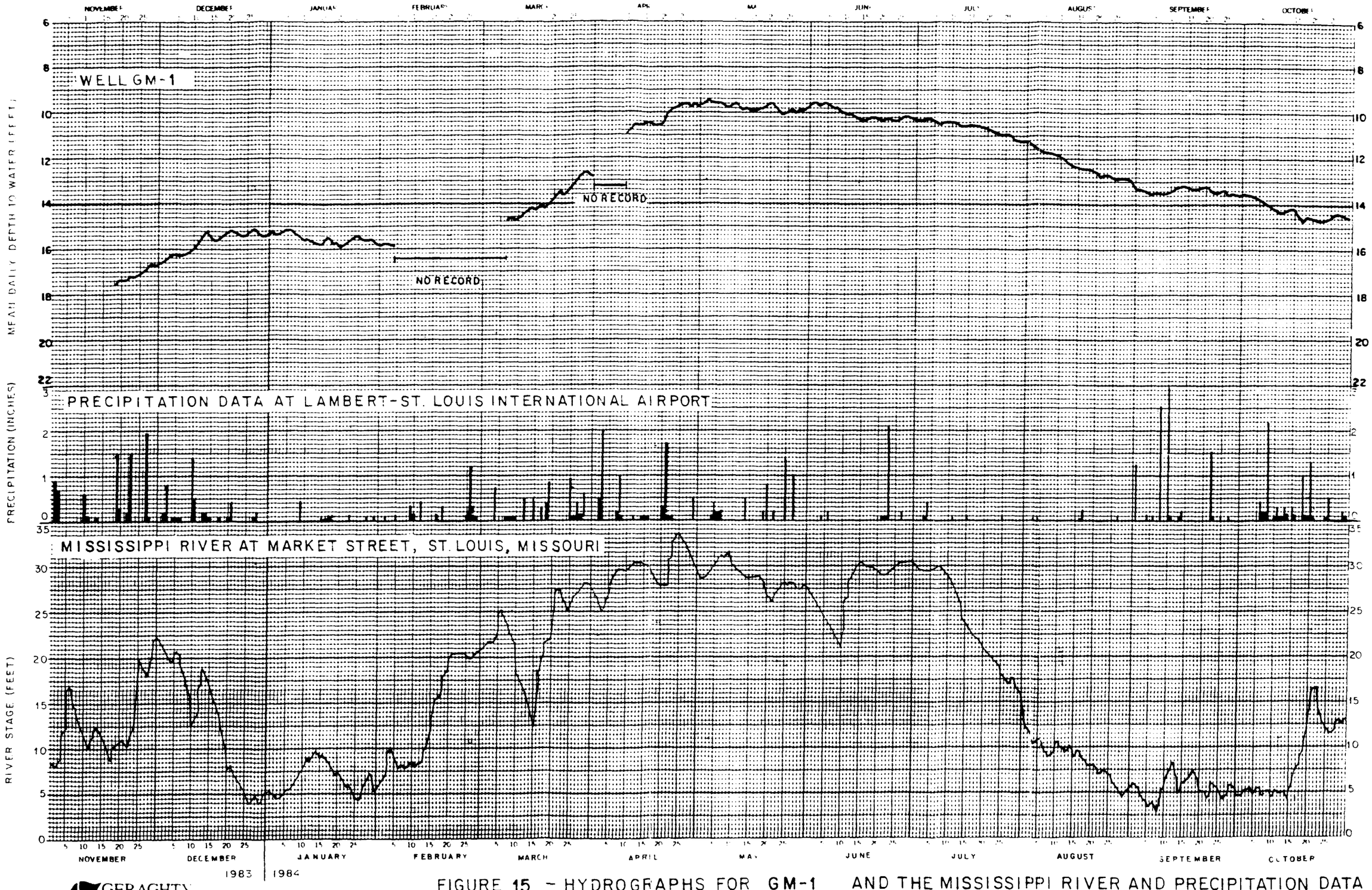


GERAGHTY & MILLER, INC
Ground-Water Consultants

FIGURE 15 – HYDROGRAPHS FOR GM-1 AND THE MISSISSIPPI RIVER AND PRECIPITATION DATA

MONSANTO COMPANY W. G. KRUMMRICH PLANT SAUGET, ILLINOIS

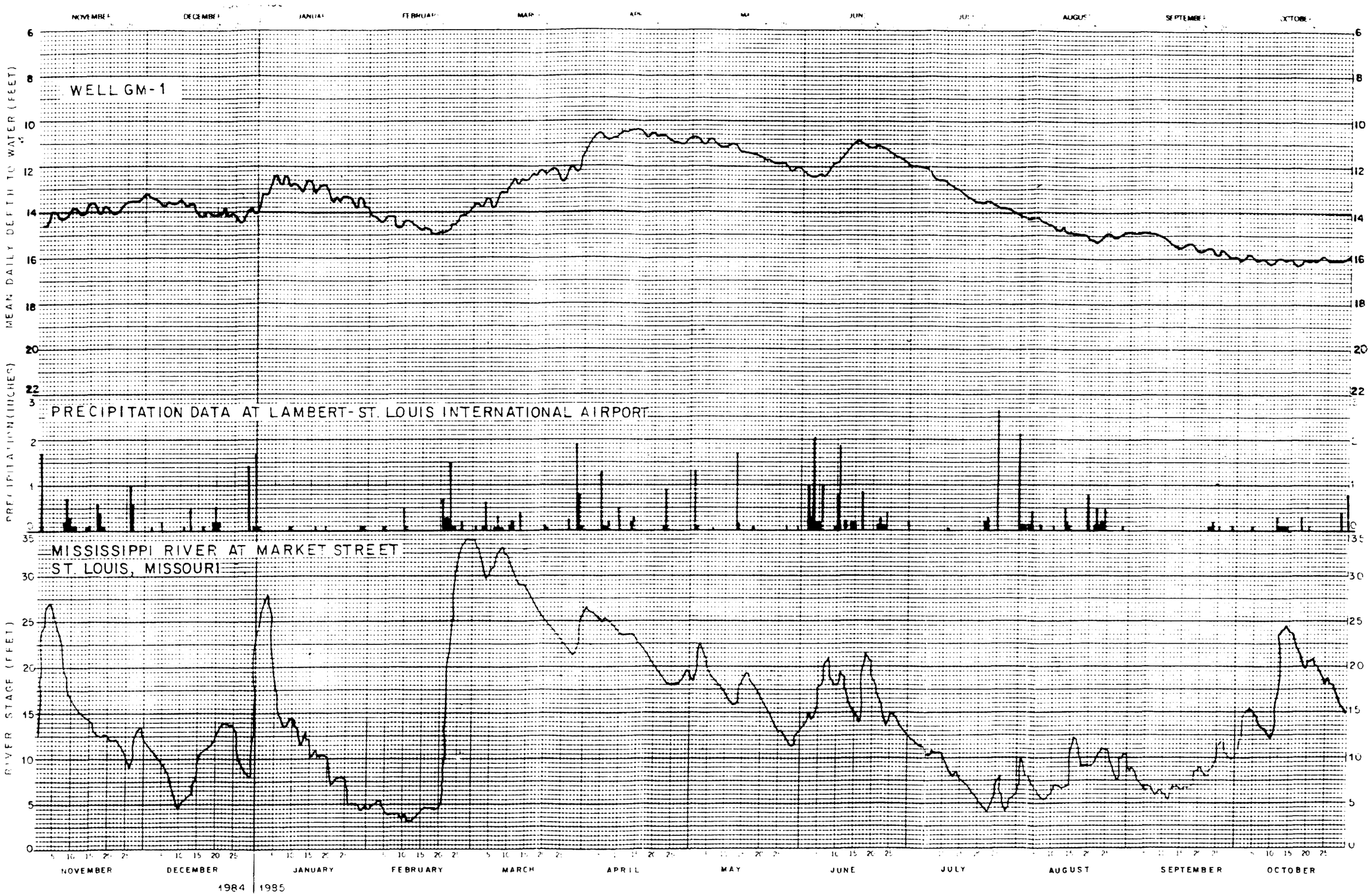


GERAGHTY & MILLER, INC.
Ground-Water Consultants

FIGURE 15 - (Continued)

MONSANTO COMPANY W. G. KRUMMRICH PLANT SAUGET, ILLINOIS

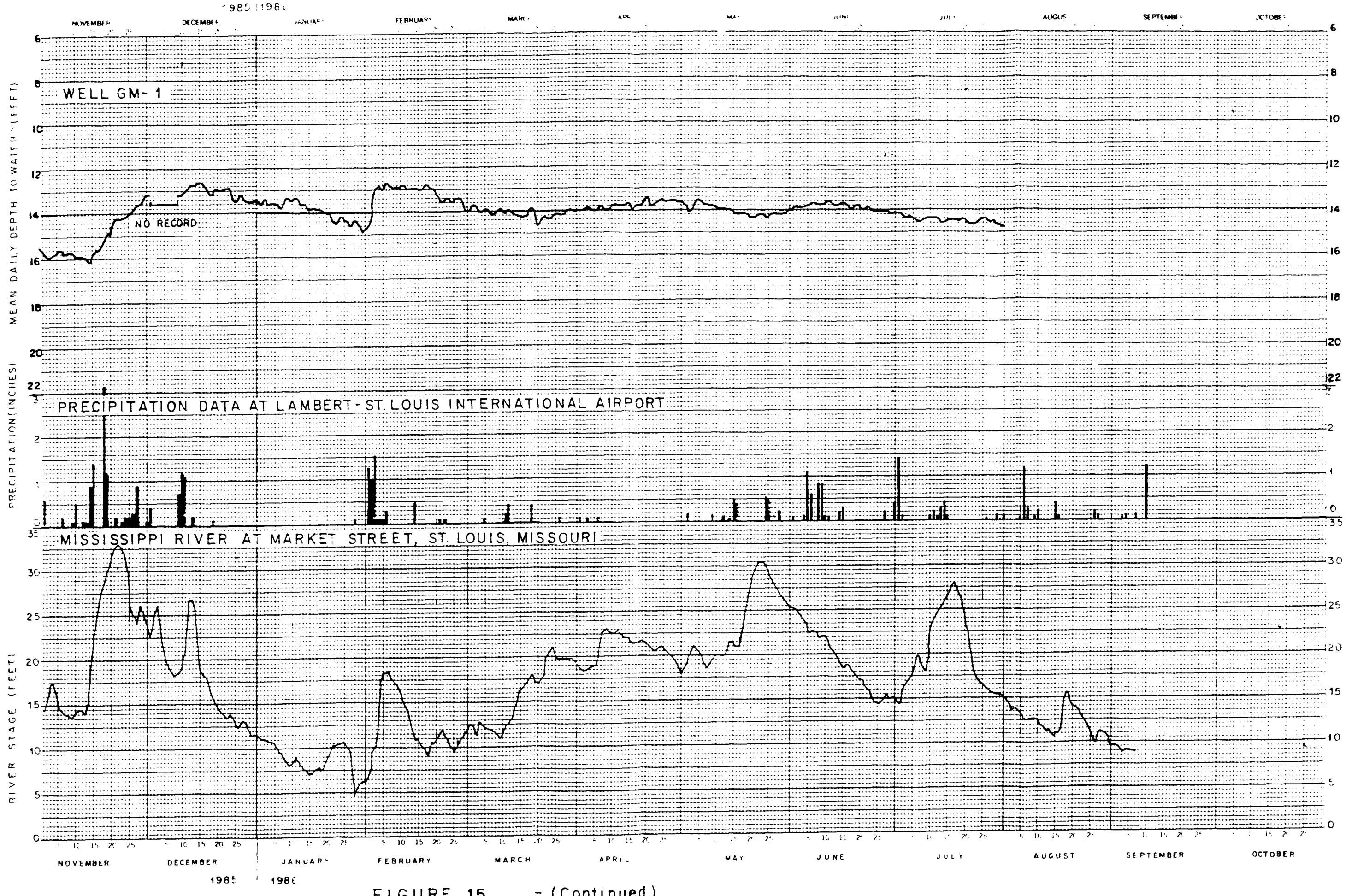


GERAGHTY & MILLER, INC.
Ground-Water Consultant

FIGURE 15 - (Continued)

MONSANTO COMPANY W.G. KRUMMRICH PLANT SAUGET, ILLINOIS

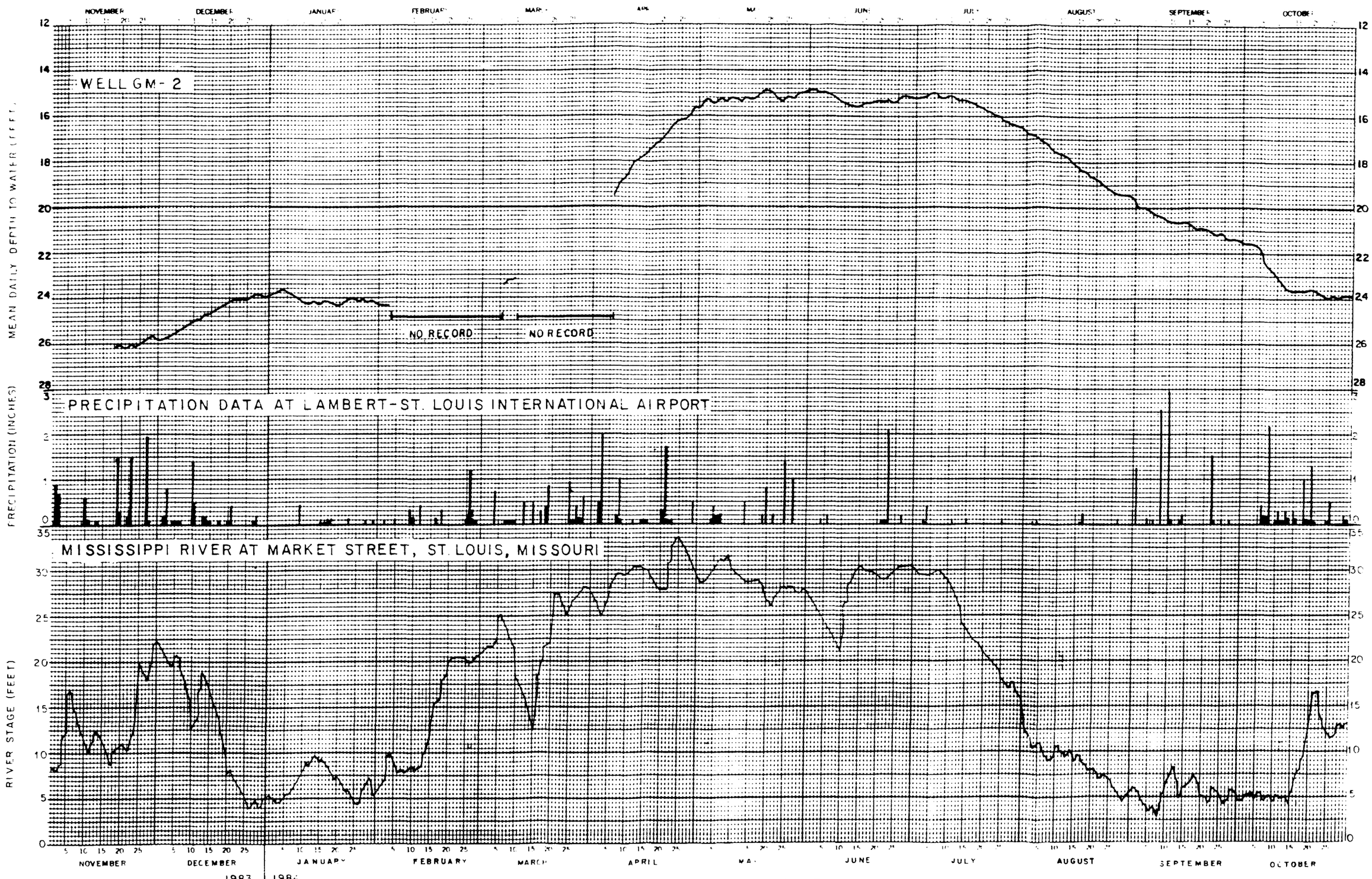


GERAGHTY & MILLER, INC.
Ground-Water Consultants

FIGURE 16 – HYDROGRAPHS FOR GM-2 AND THE MISSISSIPPI RIVER AND PRECIPITATION DATA

MONSANTO COMPANY W. G. KRUMMRICH PLANT SAUGET, ILLINOIS

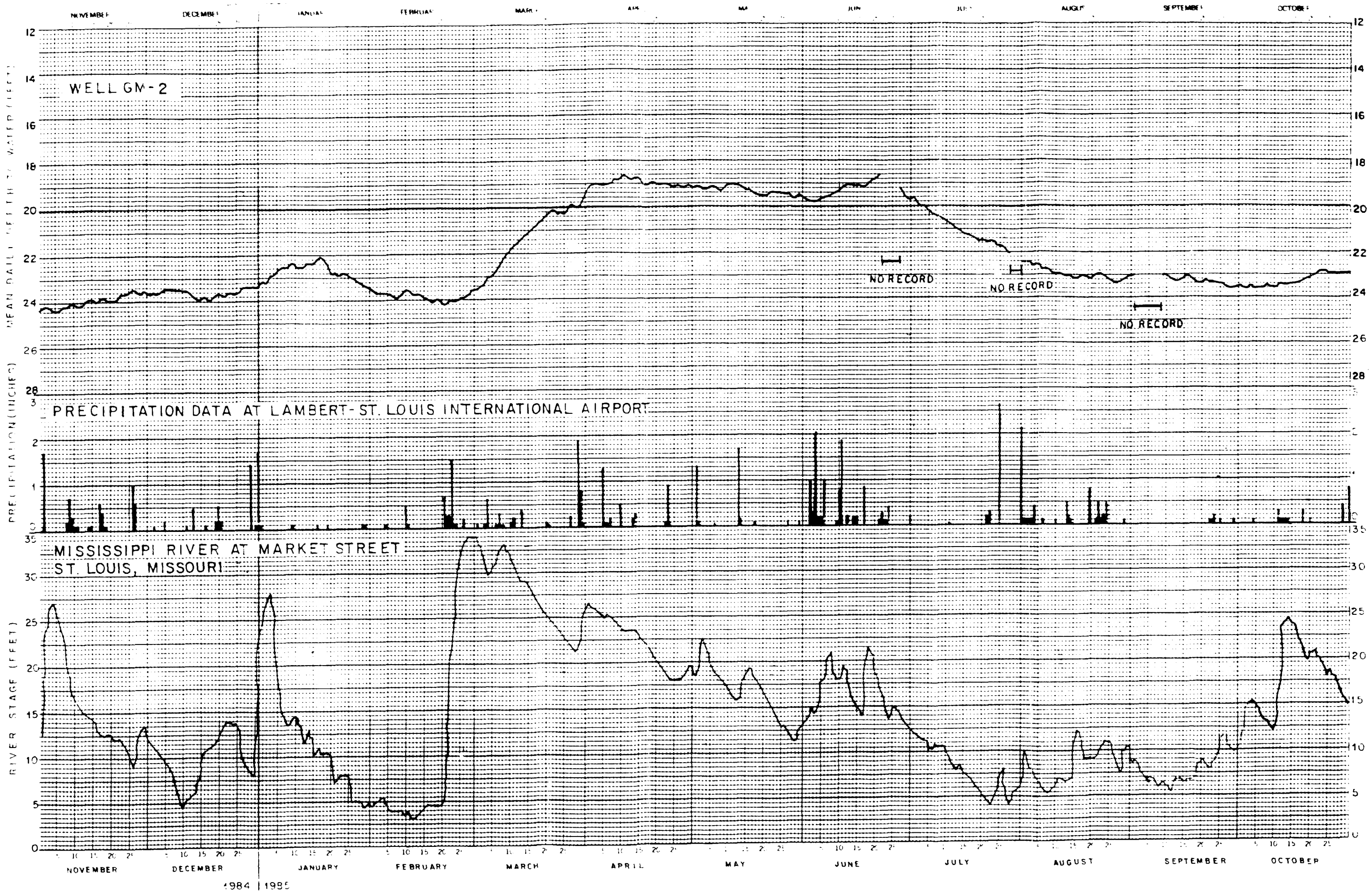


GERAGHTY & MILLER, INC.
Ground-Water Consultants

FIGURE 16 - (Continued)

MONSANTO COMPANY W.G. KRUMMRICH PLANT SAUGET, ILLINOIS

944-

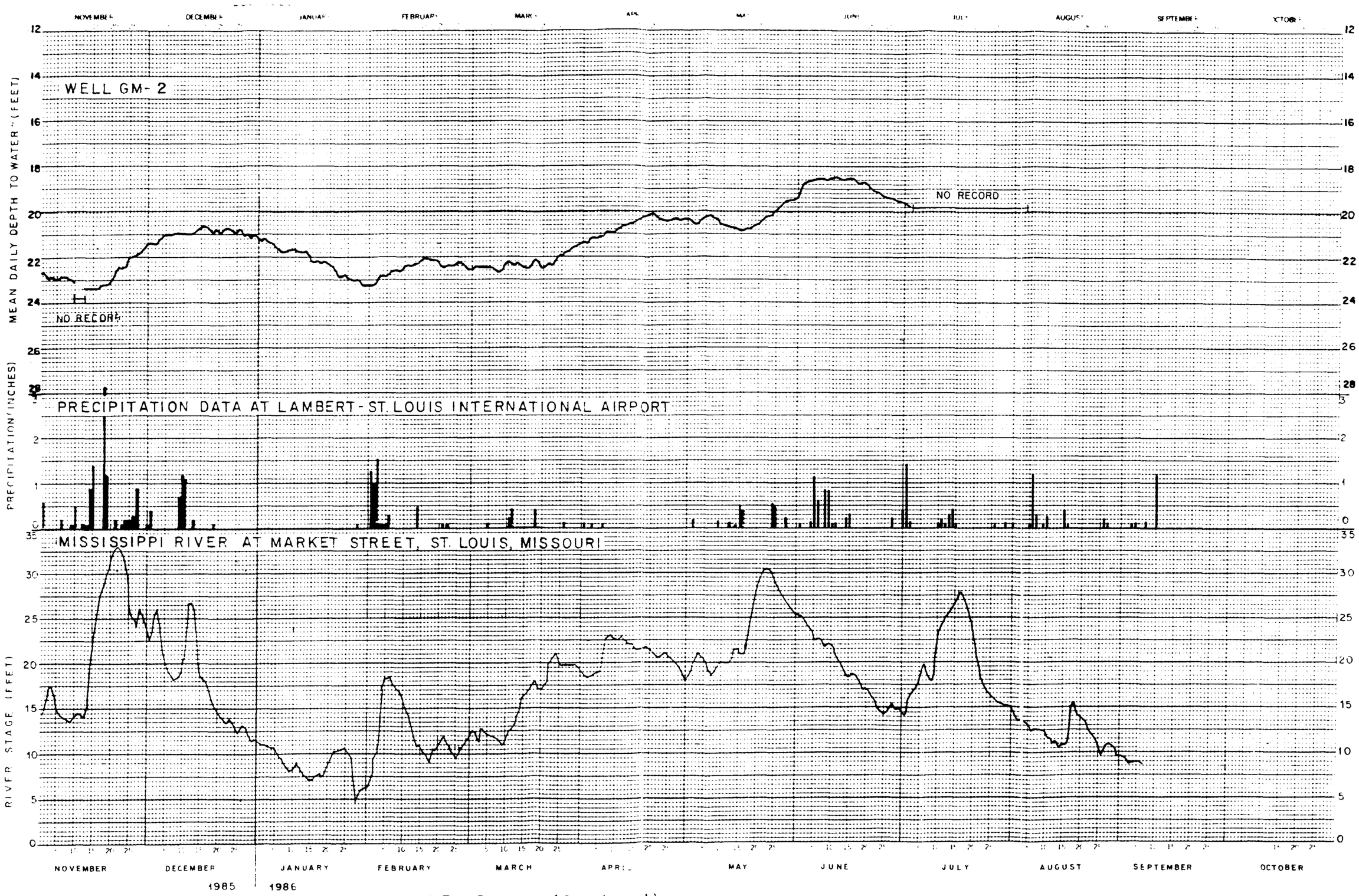


GERAGHTY & MILLER, INC.
Ground-Water Consultants

FIGURE 16 - (Continued)

MONSANTO COMPANY W.G. KRUMMRICH PLANT SAUGET, ILLINOIS

944-

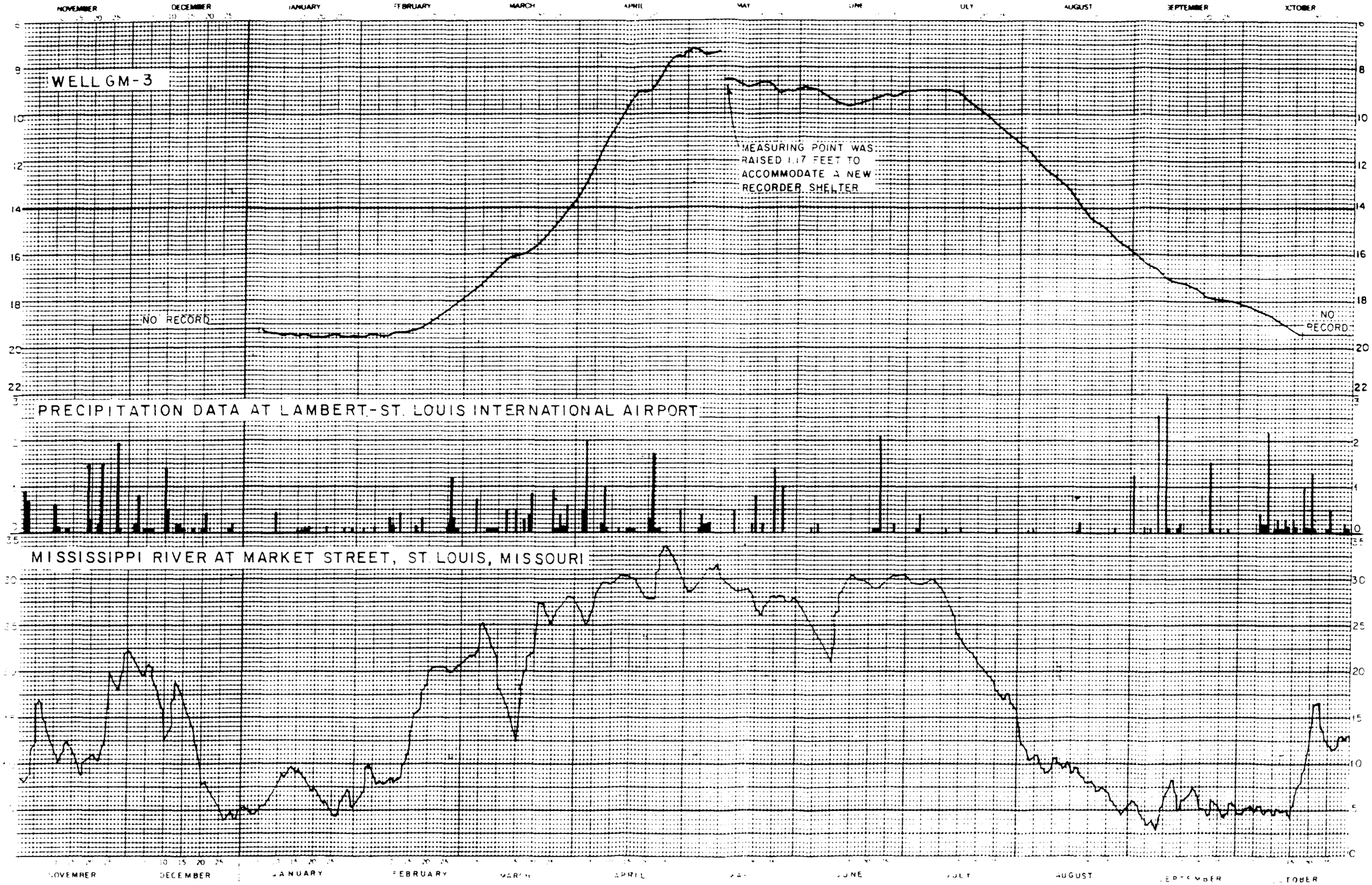


GERAGHTY & MILLER, INC
Ground-Water Consultants

FIGURE 17 - HYDROGRAPHS FOR GM-3 AND THE MISSISSIPPI RIVER AND PRECIPITATION DATA

MONSANTO COMPANY W. G. KRUMMRICH PLANT SAUGET, ILLINOIS

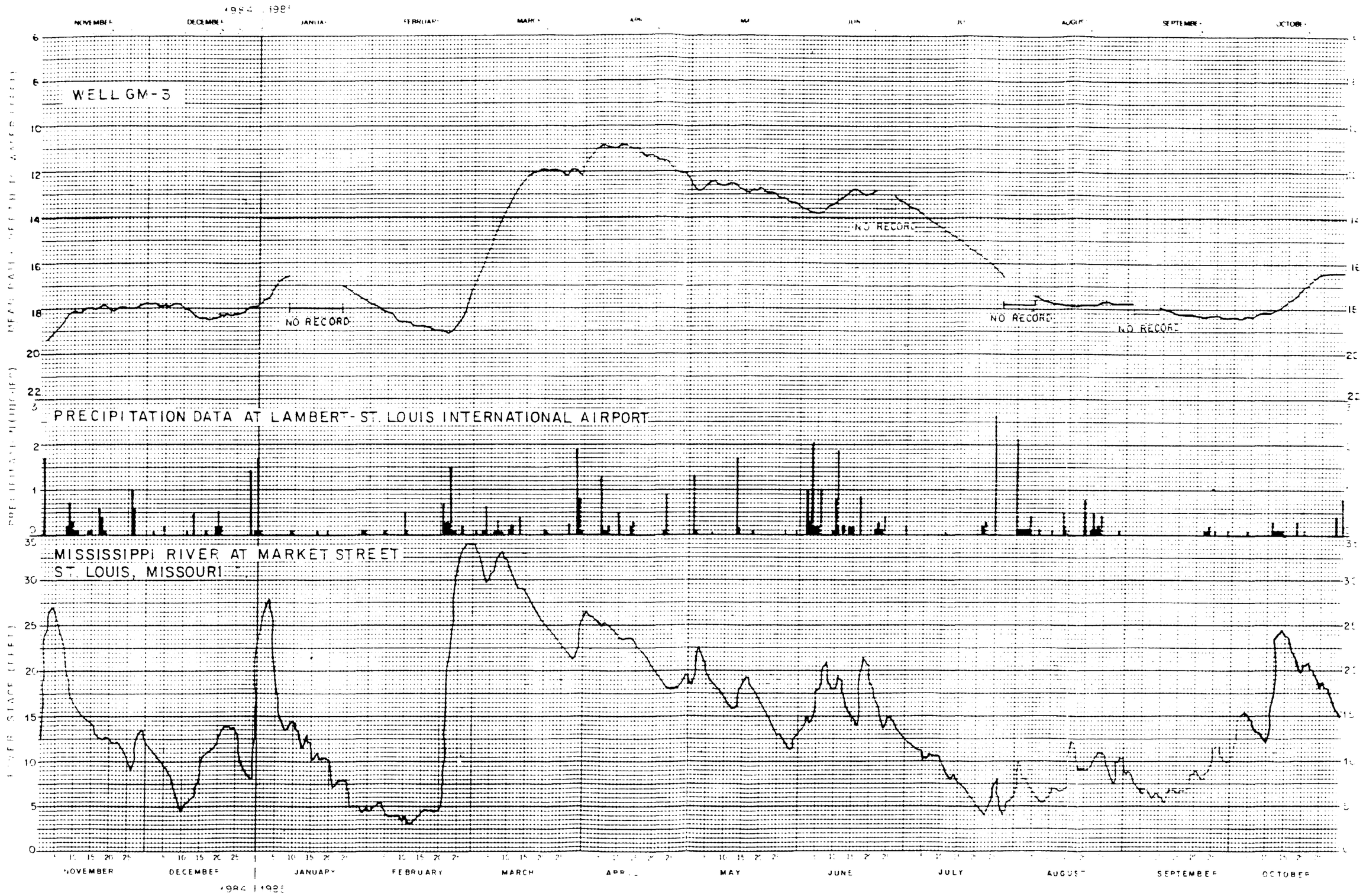


GERAGHTY & MILLER, INC.
Ground-Water Consultants

FIGURE 17 - (Continued)

MONSANTO COMPANY W. G. KRUMMRICH PLANT SAUGET, ILLINOIS

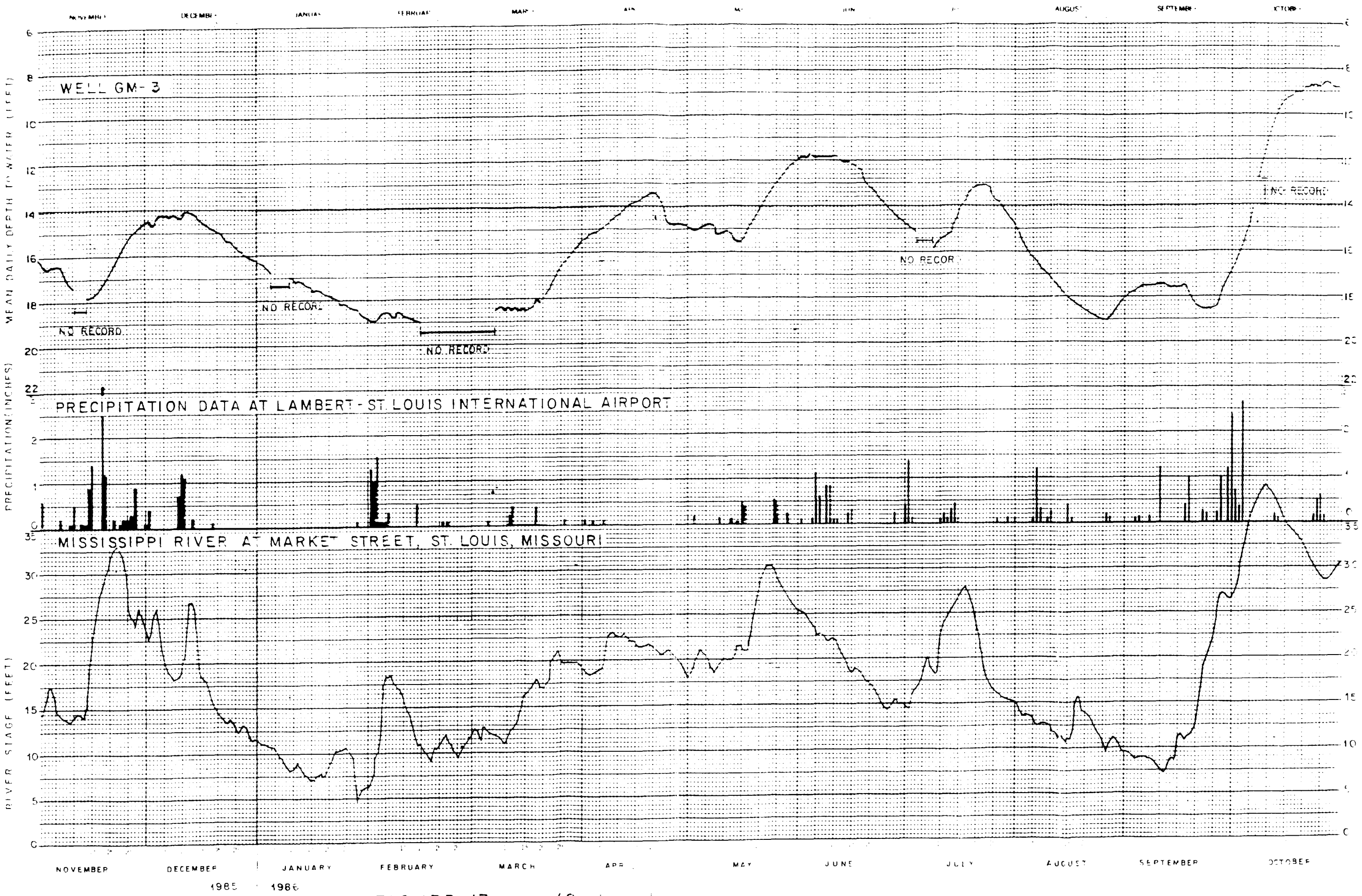


FIGURE 17 - (Continued)

GERAGHTY & MILLER, INC
Ground Water Consultants

MONSANTO COMPANY W.G. KRUMMRICH PLANT SAUGET, ILLINOIS

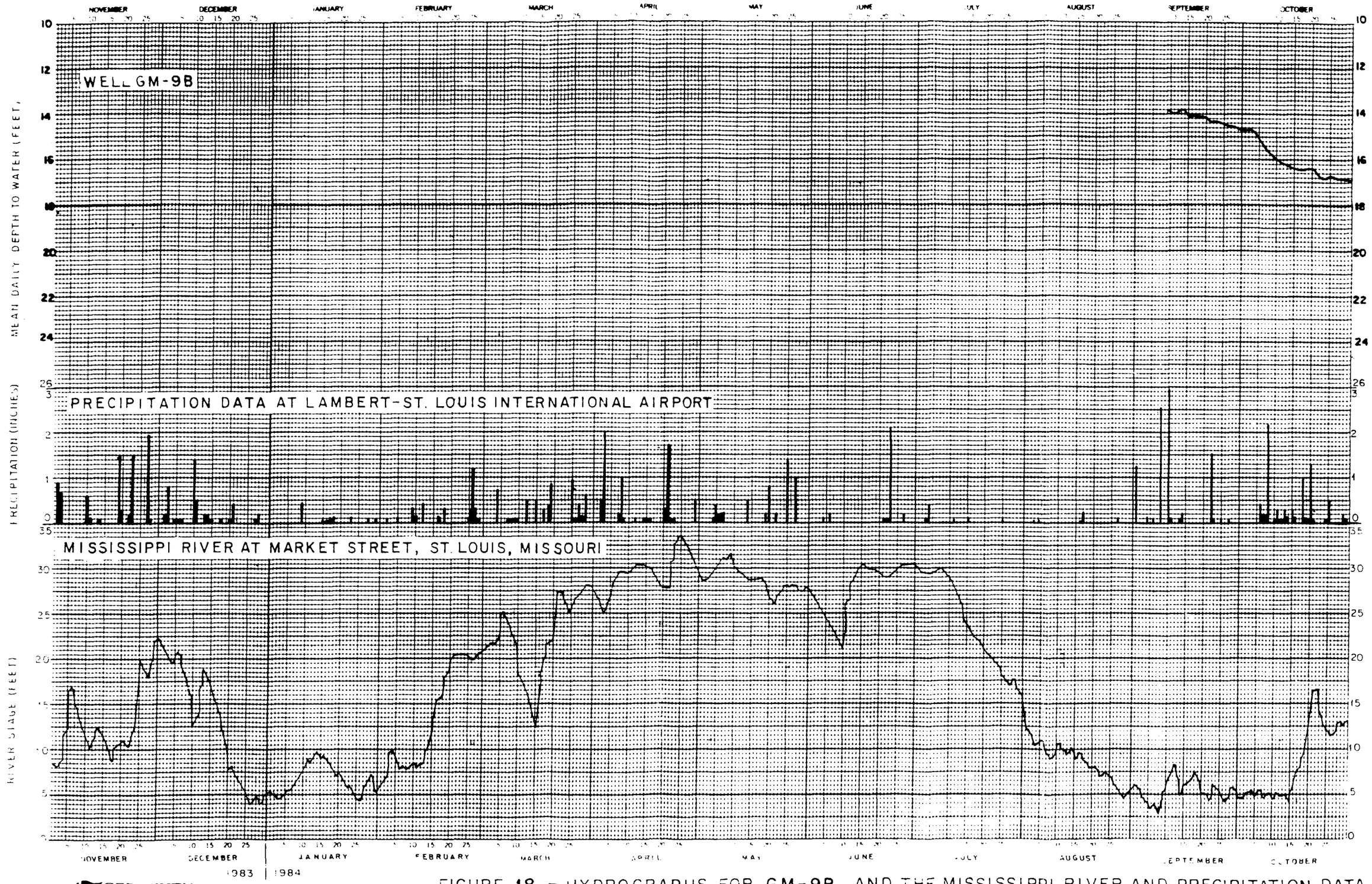


GERAGHTY & MILLER, INC.
Ground Water Consultants

FIGURE 18 - HYDROGRAPHS FOR GM-9B AND THE MISSISSIPPI RIVER AND PRECIPITATION DATA

MONSANTO COMPANY W.G. KRUMMRICH PLANT SAUGET, ILLINOIS

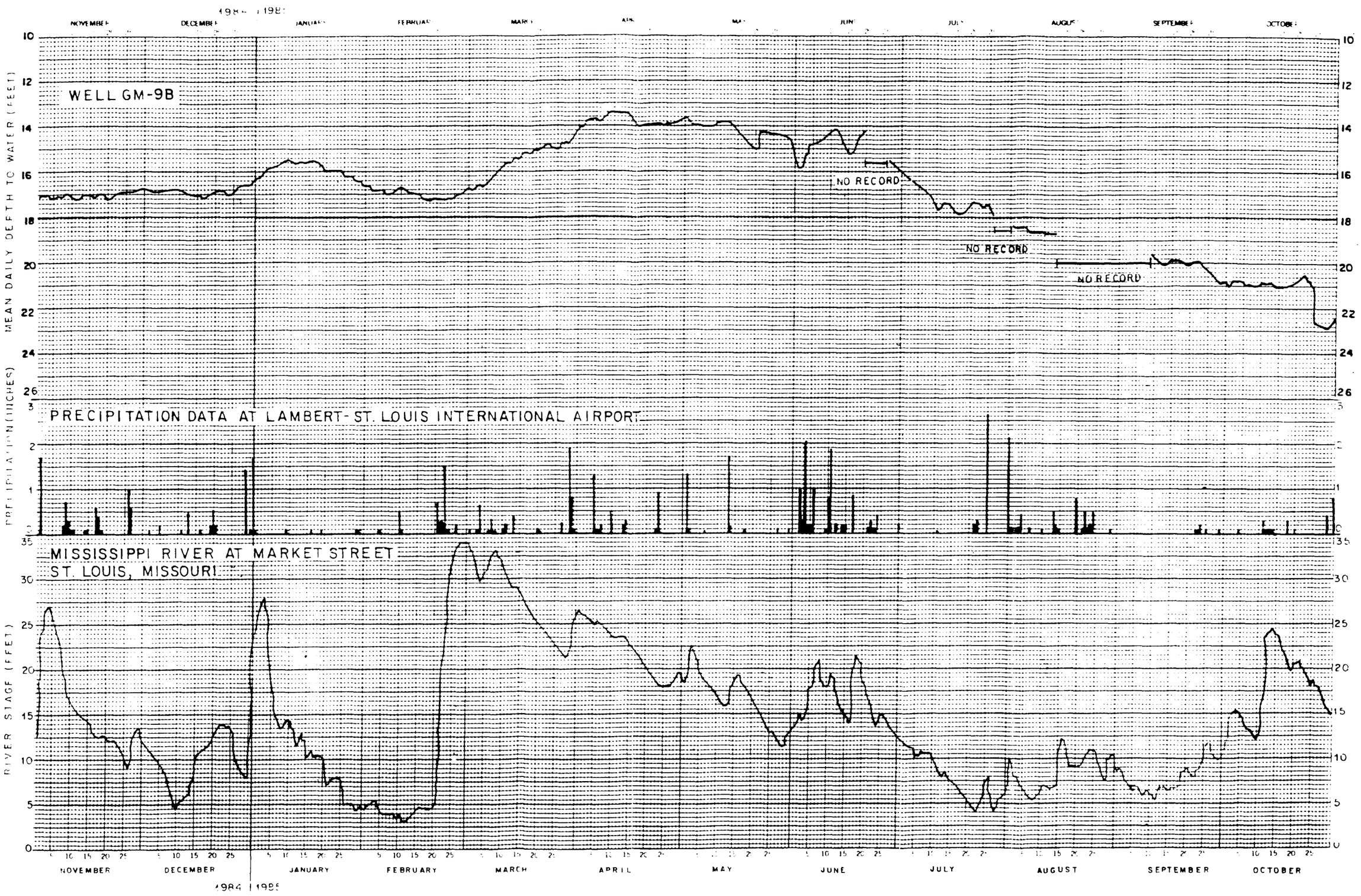


GERAGHTY & MILLER, INC.
Ground-Water Consultants

FIGURE 18 - (Continued)

MONSANTO COMPANY W. G. KRUMMRICH PLANT SAUGET, ILLINOIS

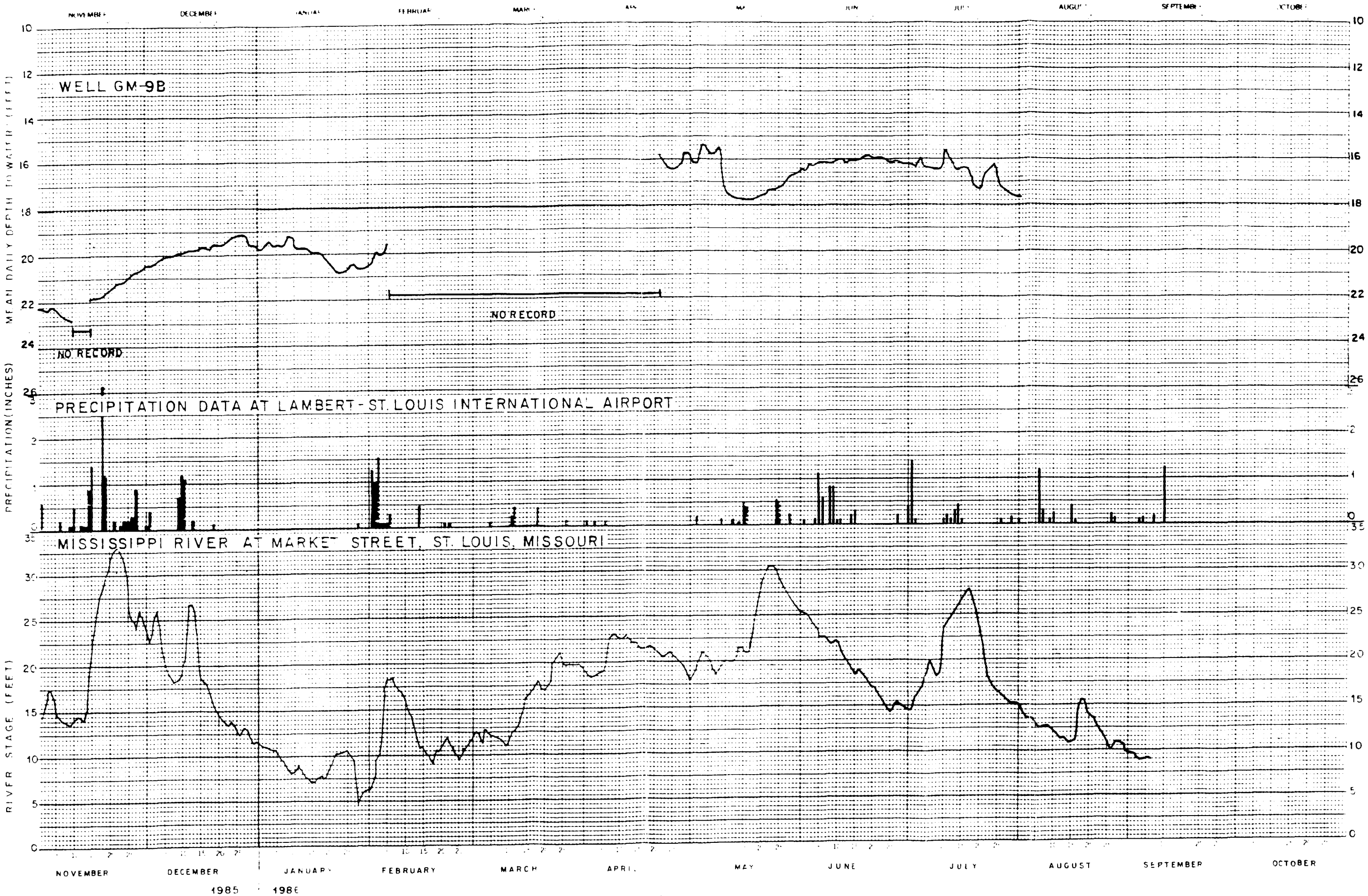


FIGURE 18 - (Continued)

GERAGHTY & MILLER, INC.
Ground Water Consultants

MONSANTO COMPANY W.G. KRUMMRICH PLANT SAUGET, ILLINOIS

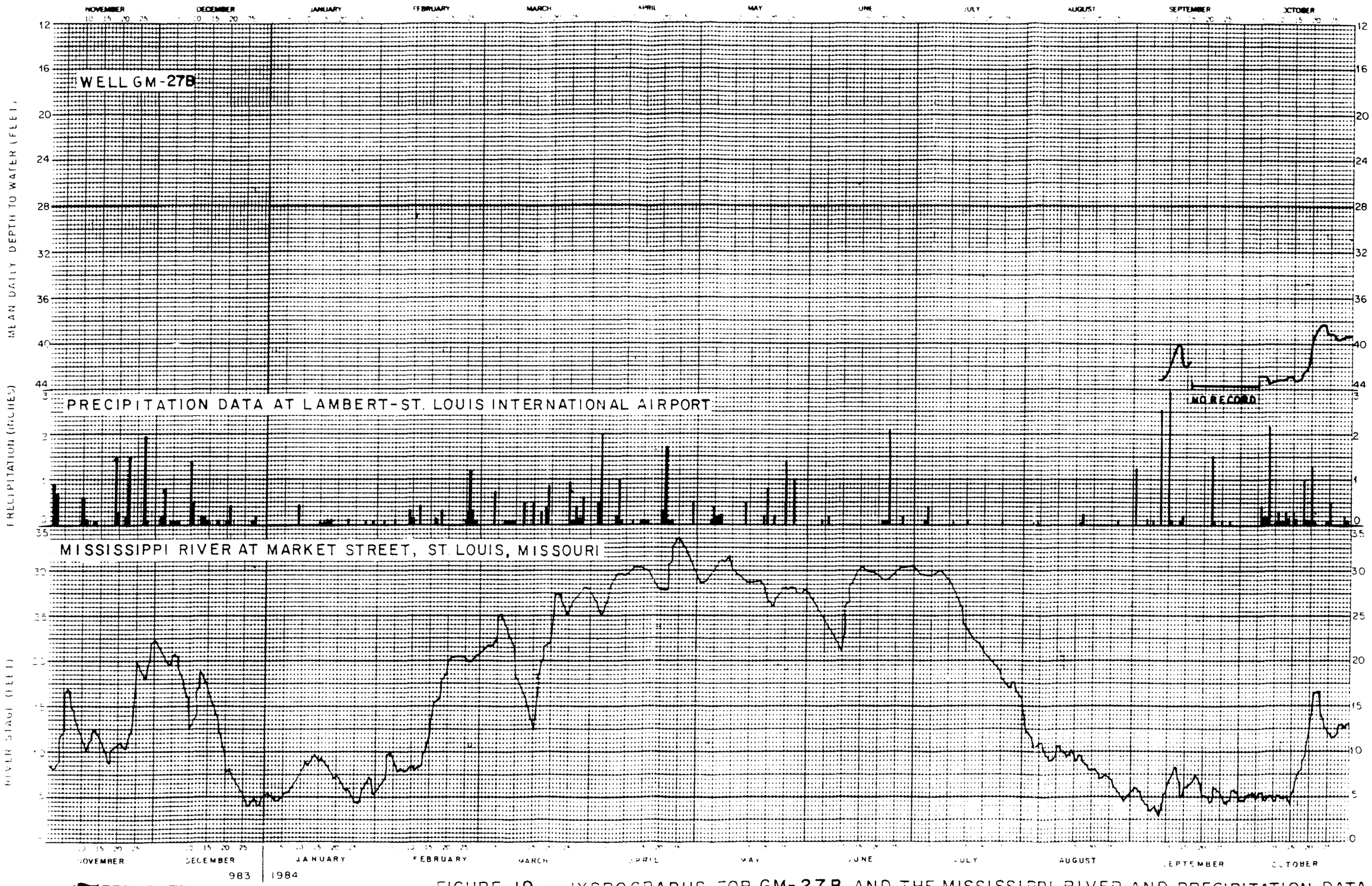


GERAGHTY & MILLER, INC.
Ground Water Consultants

FIGURE 19 - HYDROGRAPHS FOR GM-27B AND THE MISSISSIPPI RIVER AND PRECIPITATION DATA

MONSANTO COMPANY W.G KRUMMRICH PLANT SAUGET, ILLINOIS

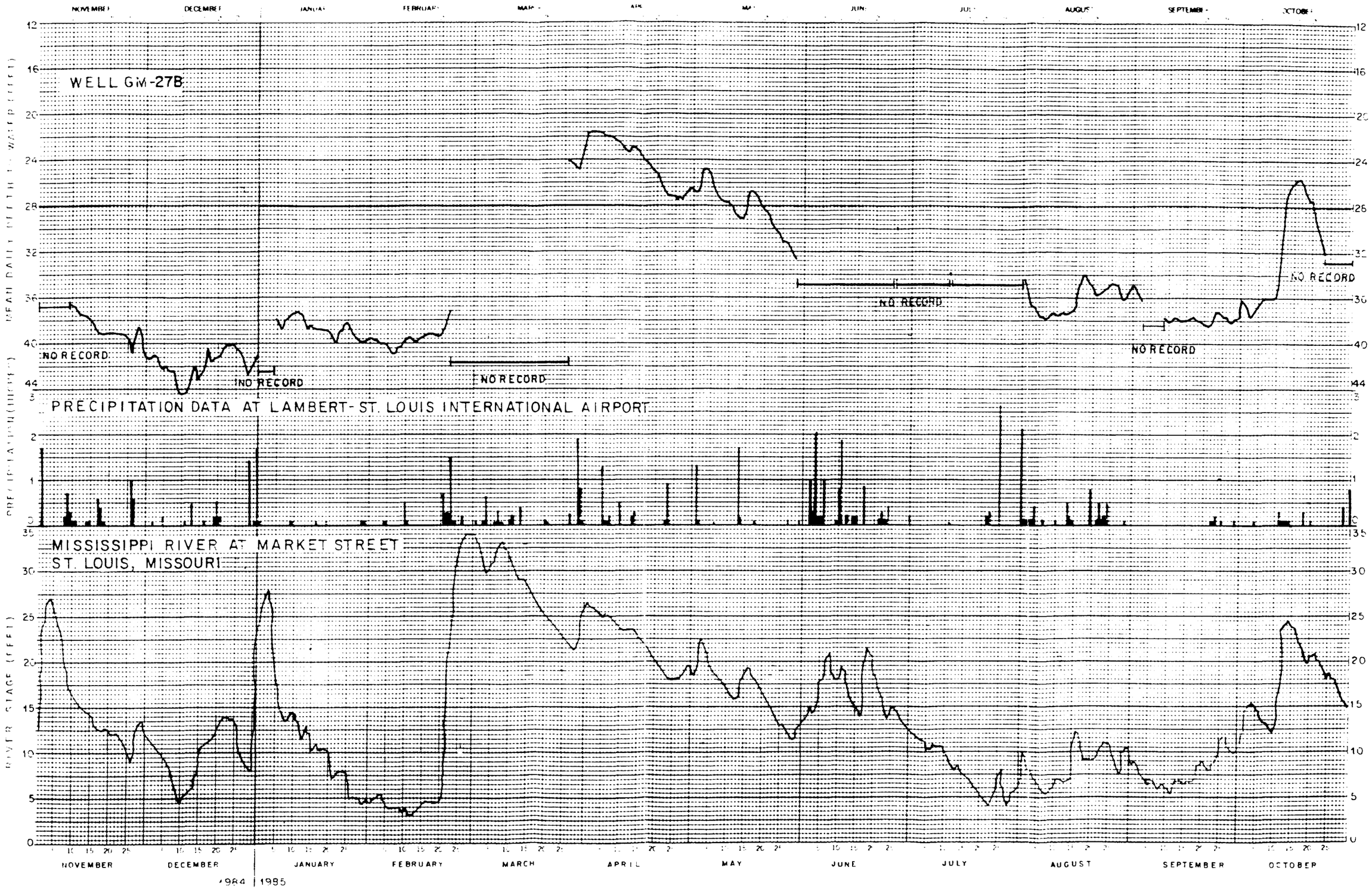


GERAGHTY & MILLER, INC.
Ground-Water Consultants

FIGURE 19 - (Continued)

MONSANTO COMPANY W. G. KRUMMRICH PLANT SAUGET, ILLINOIS

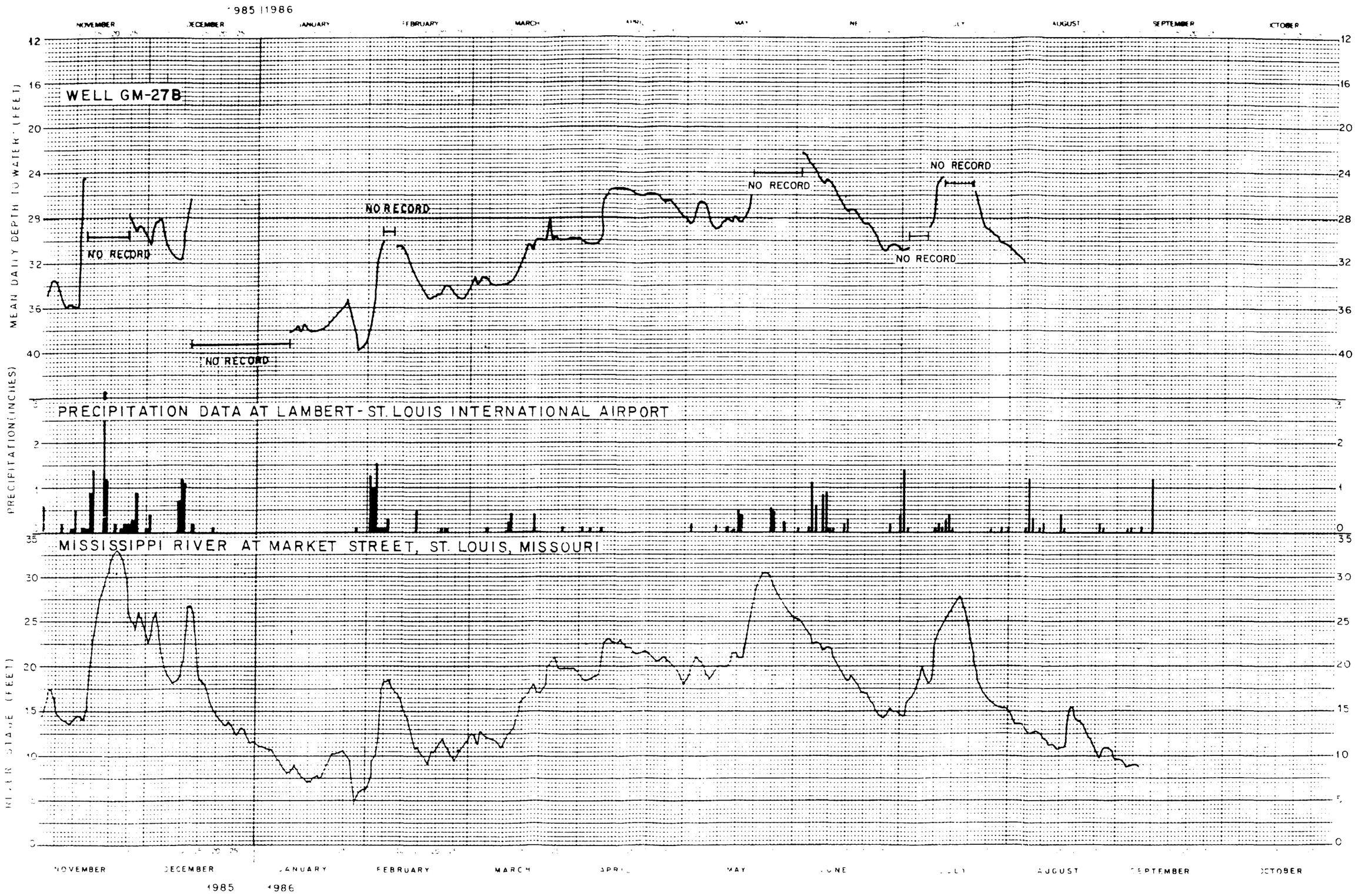


GERAGHTY & MILLER, INC.
Ground Water Consultants

FIGURE 19 - (Continued)

MONSANTO COMPANY W.G. KRUMMRICH PLANT SAUGET, ILLINOIS

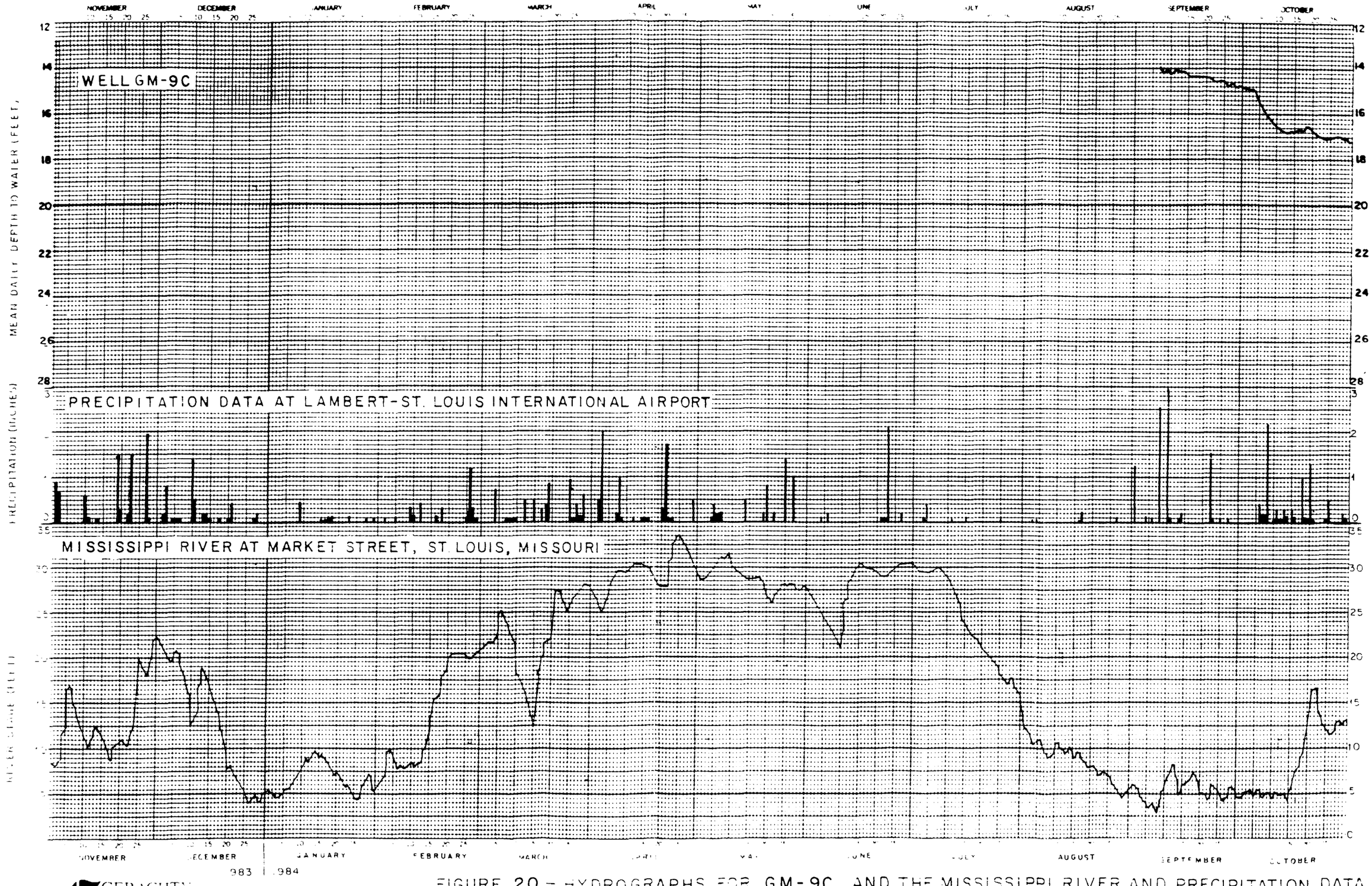


GERAGHTY & MILLER, INC.
Ground-Water Consultants

FIGURE 20 – HYDROGRAPHS FOR GM-9C AND THE MISSISSIPPI RIVER AND PRECIPITATION DATA

MONSANTO COMPANY W.G. KRUMMRICH PLANT SAUGET, ILLINOIS

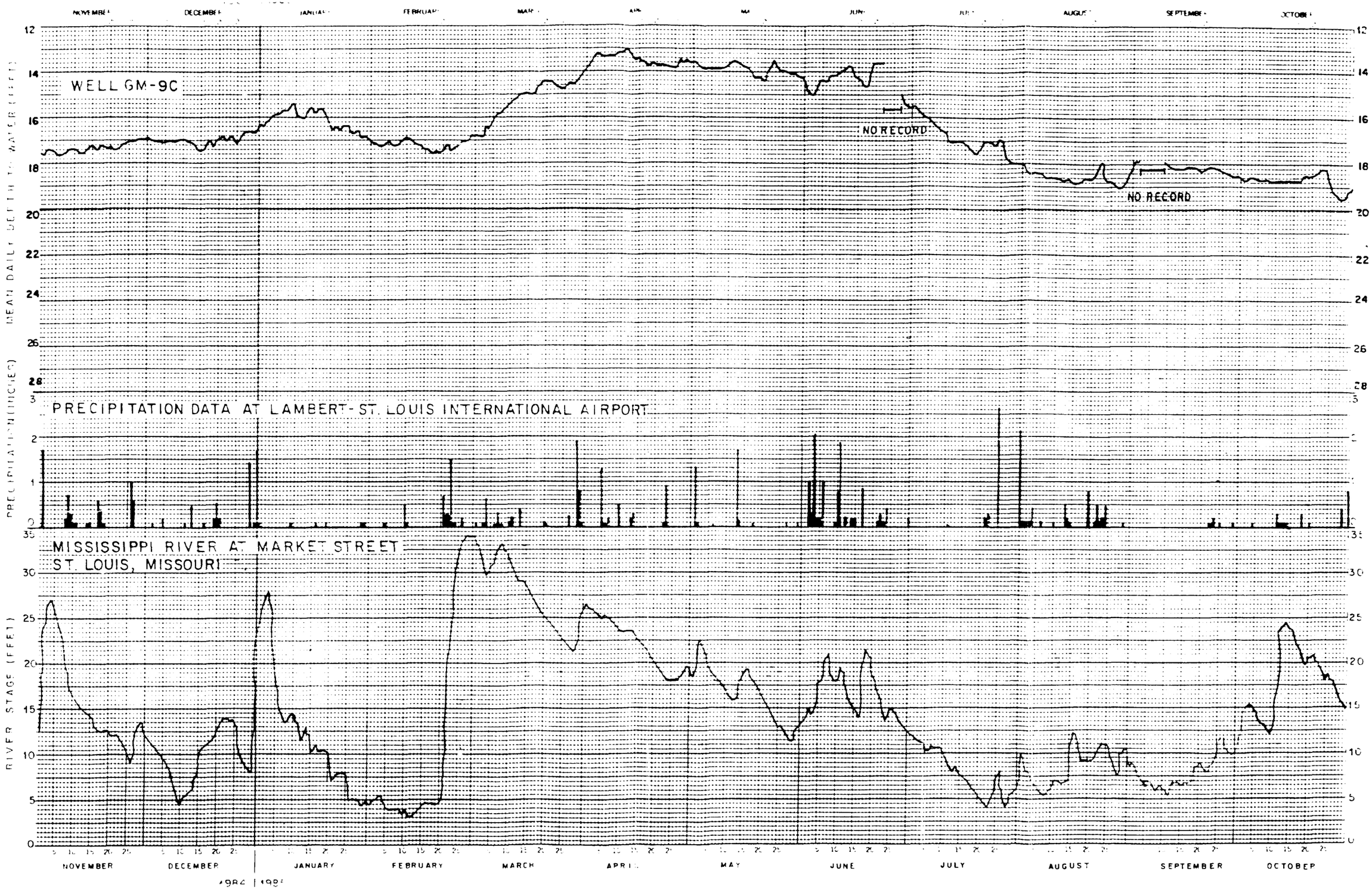


GERAGHTY & MILLER, INC
Ground Water Consultar

FIGURE 20 - (Continued)

MONSANTO COMPANY W. G. KRUMMRICH PLANT SAUGET, ILLINOIS

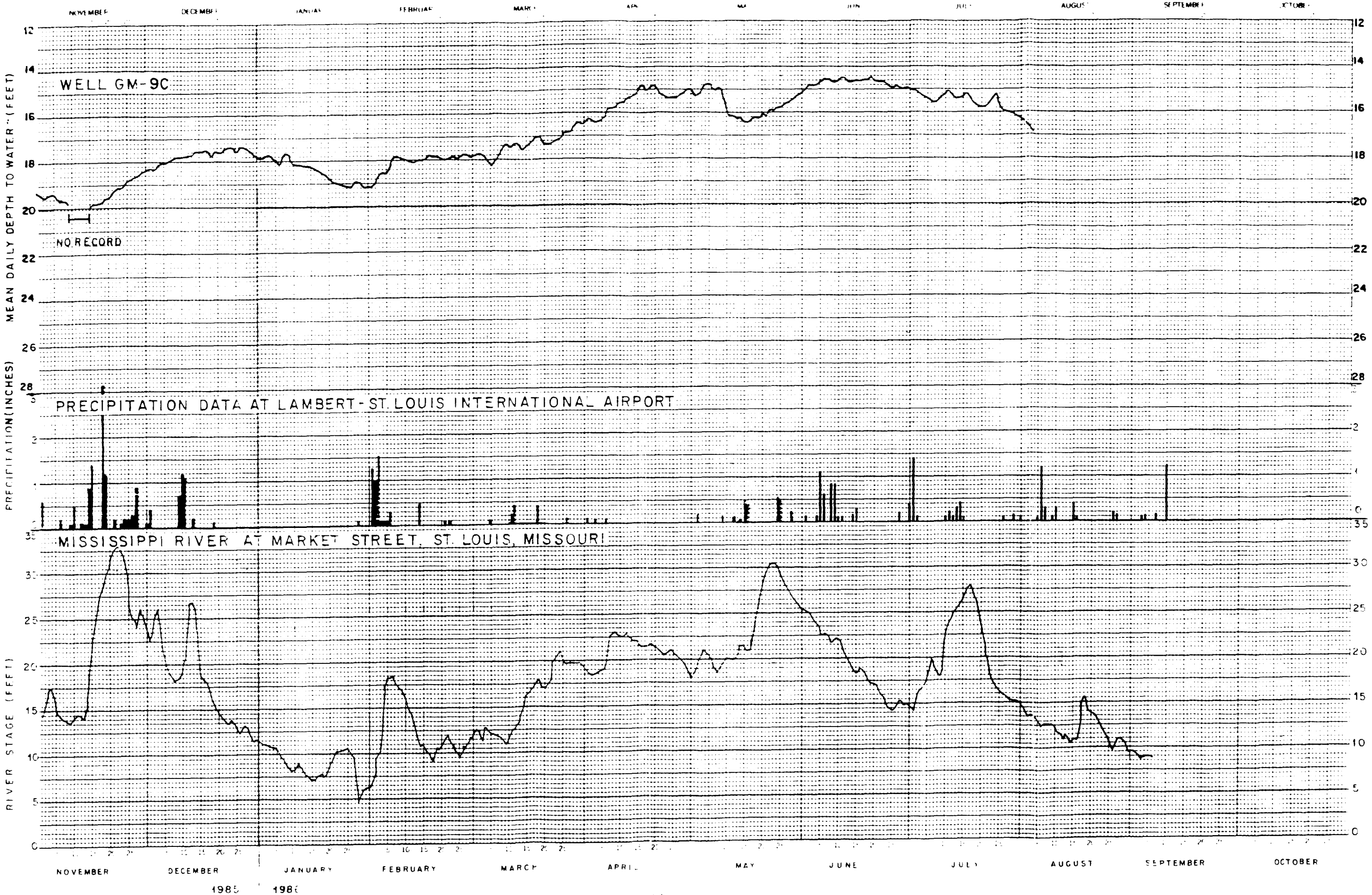


FIGURE 20 - (Continued)

GERAGHTY & MILLER, INC.
Ground-Water Consultants

MONSANTO COMPANY W.G. KRUMMRICH PLANT SAUGET, ILLINOIS

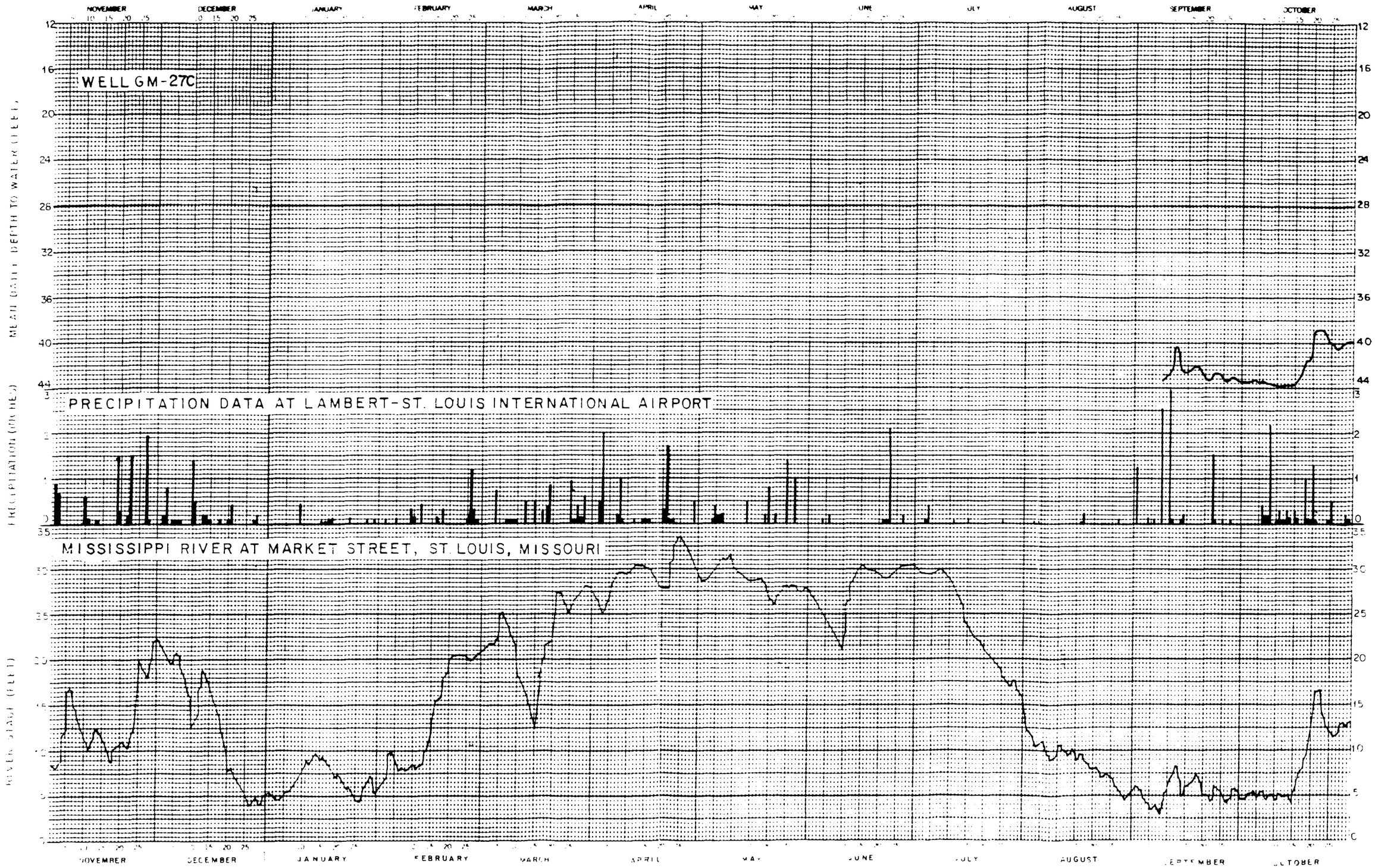


983 : 384

GERAGHTY & MILLER, INC.
Ground-Water Consultant

FIGURE 21 – HYDROGRAPHS FOR GM-27C AND THE MISSISSIPPI RIVER AND PRECIPITATION DATA

MONSANTO COMPANY W. G. KRUMMRICH PLANT SAUGET, ILLINOIS

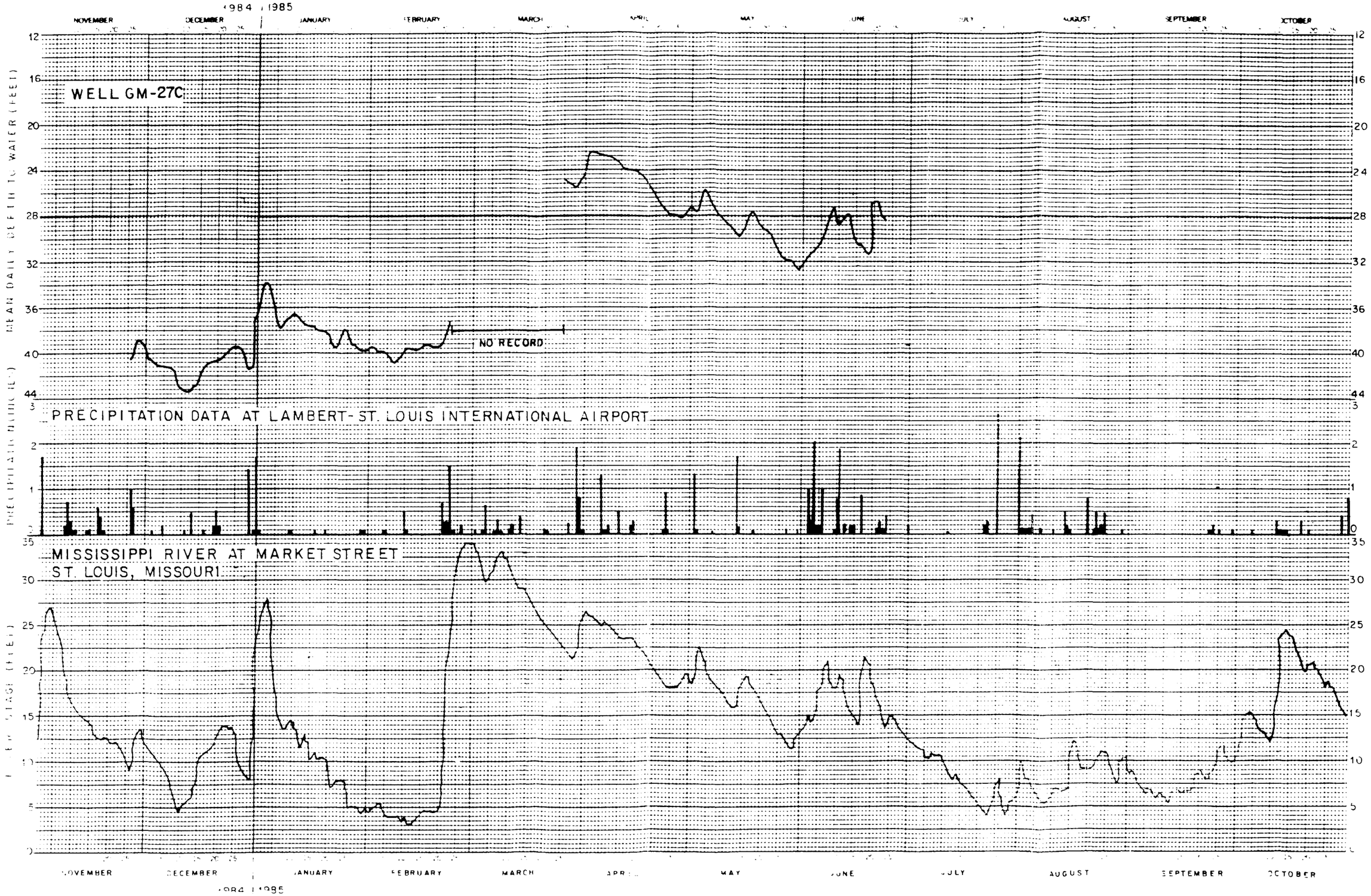


GERAGHTY & MILLER, INC.
Ground Water Consultants

FIGURE 21 - (Continued)

MONSANTO COMPANY W. G. KRUMMRICH PLANT SAUGET, ILLINOIS

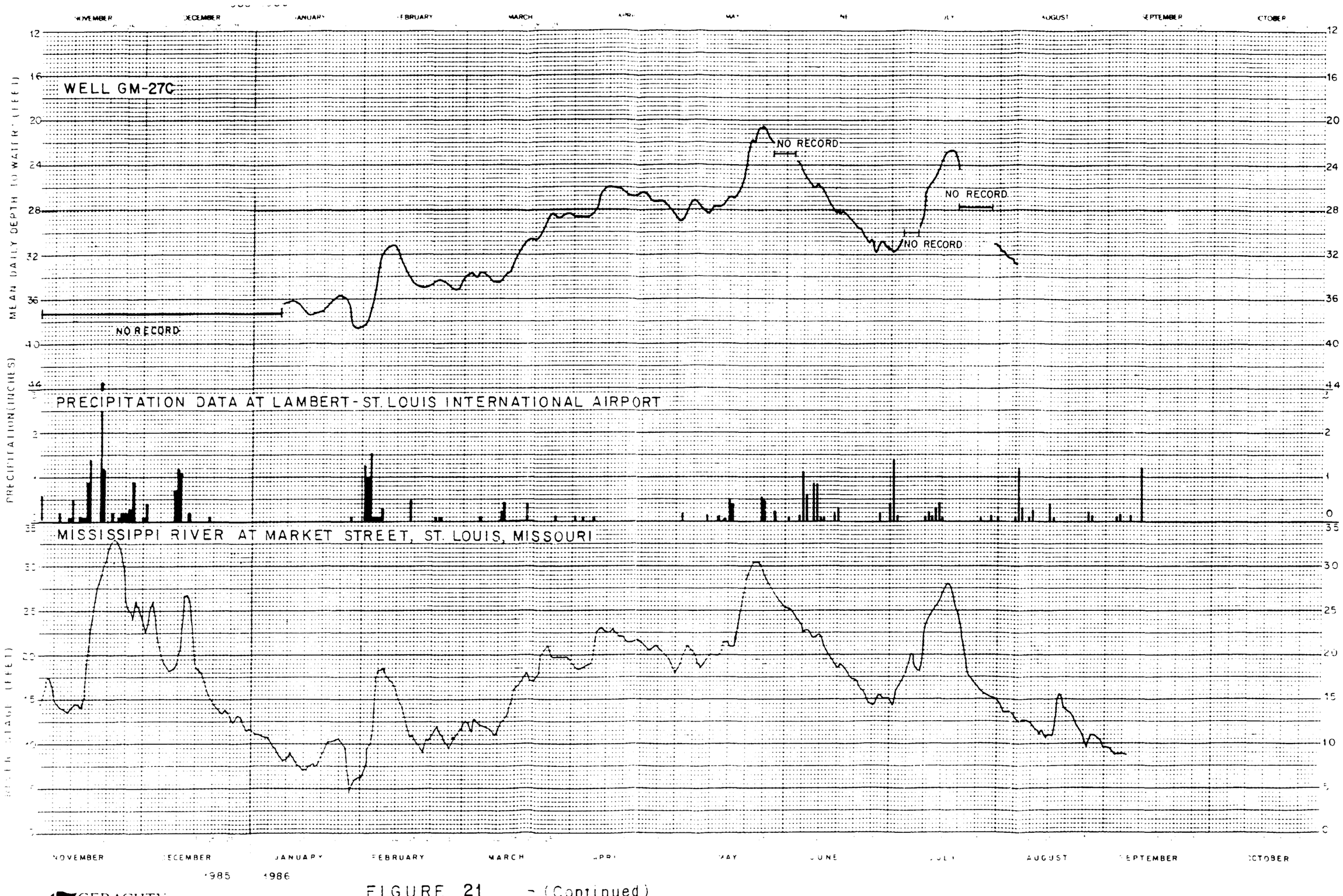


GERAGHTY & MILLER, INC.
Ground Water Consultants

FIGURE 21 - (Continued)

MONSANTO COMPANY W.G KRUMMRICH PLANT SAUGET, ILLINOIS

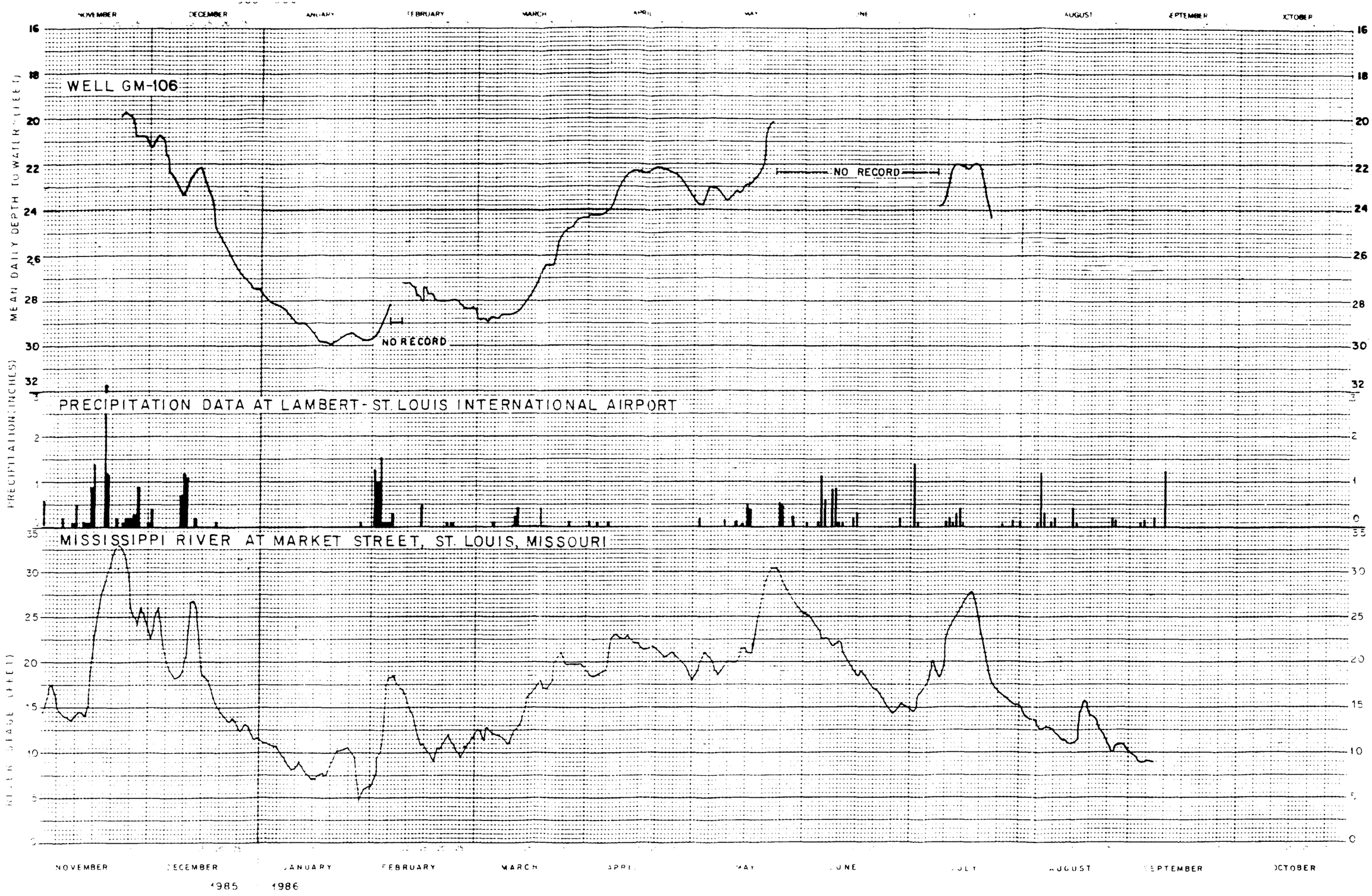


GERAGHTY & MILLER, INC.
Ground Water Consultants

FIGURE 22 HYDROGRAPHS FOR GM-106 AND THE MISSISSIPPI RIVER AND PRECIPITATION DATA

MONSANTO COMPANY W. G. KRUMMRICH PLANT SAUGET, ILLINOIS

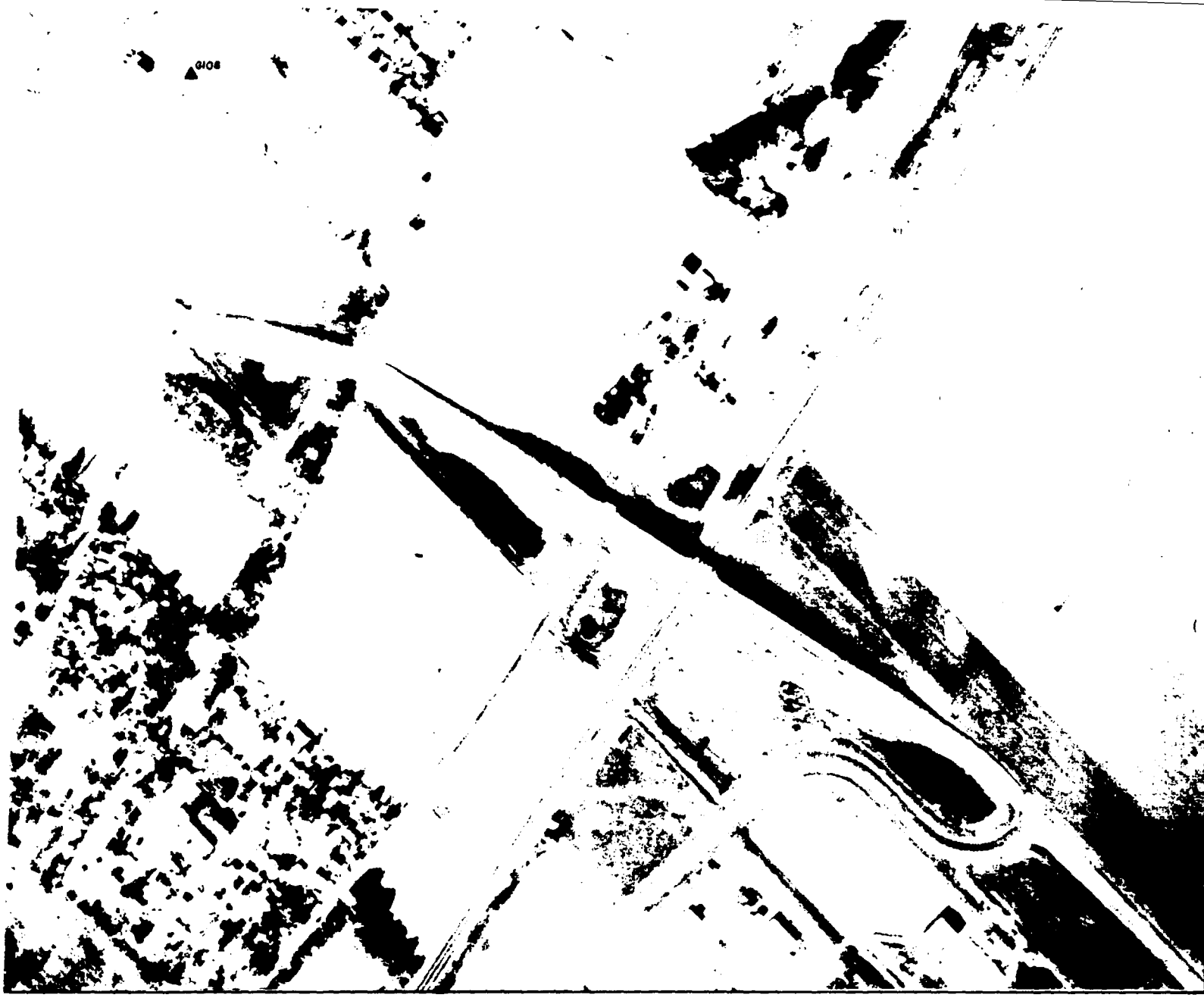


MEAN CONCENTRATIONS OF PRIORITY POLLUTANT AND NON-PRIORITY POLLUTANT ORGANIC COMPOUNDS IN THE WATER TABLE ZONE

**MONSANTO COMPANY**
**Sauget, Illinois**

**FIGURE 23**

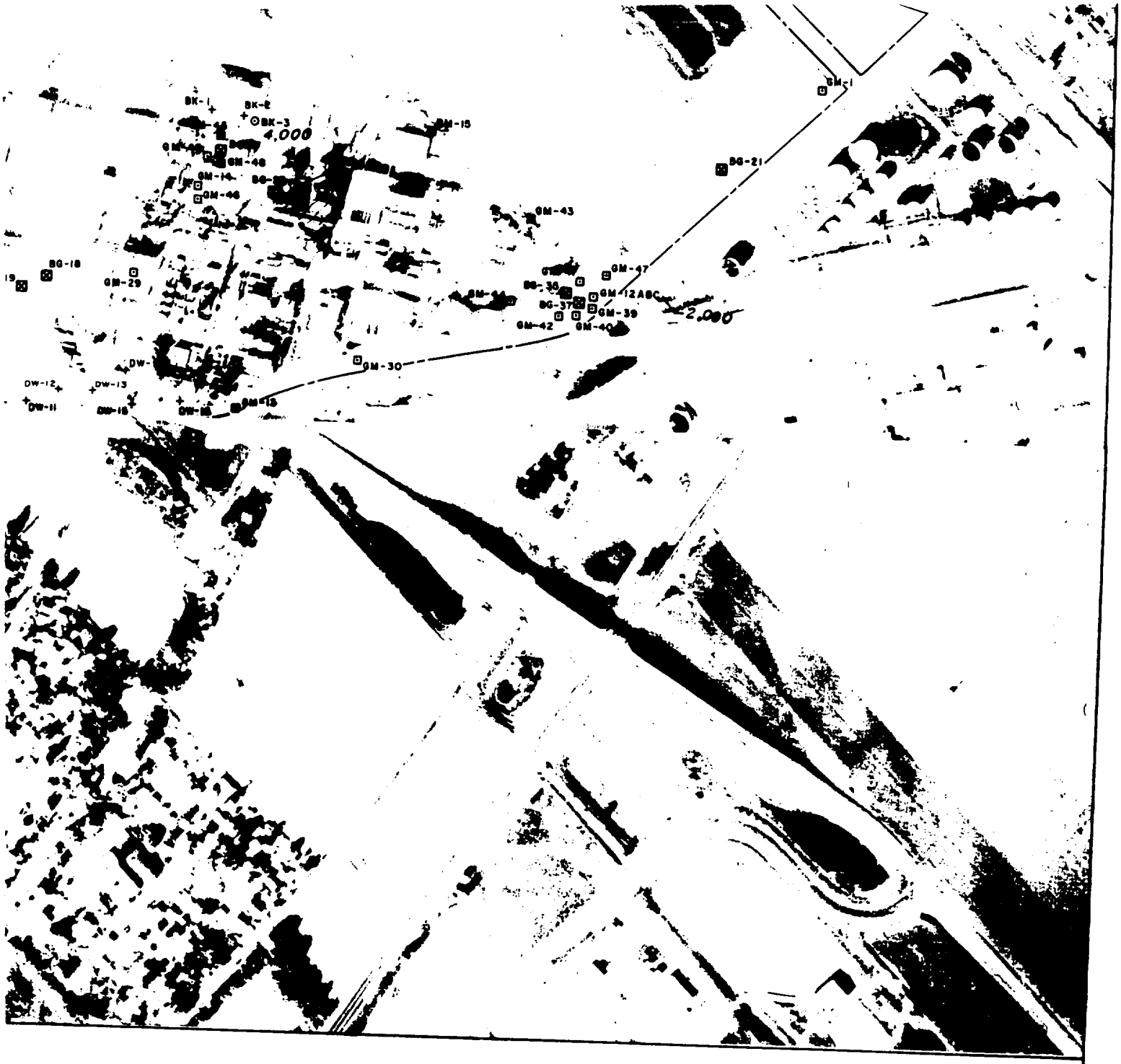


MEAN CONCENTRATIONS OF PRIORITY POLLUTANT AND NON-PRIORITY POLLUTANT ORGANIC COMPOUNDS IN THE INTERMEDIATE ZONE

**MONSANTO COMPANY**
**Sauget, Illinois**

FIGURE 24

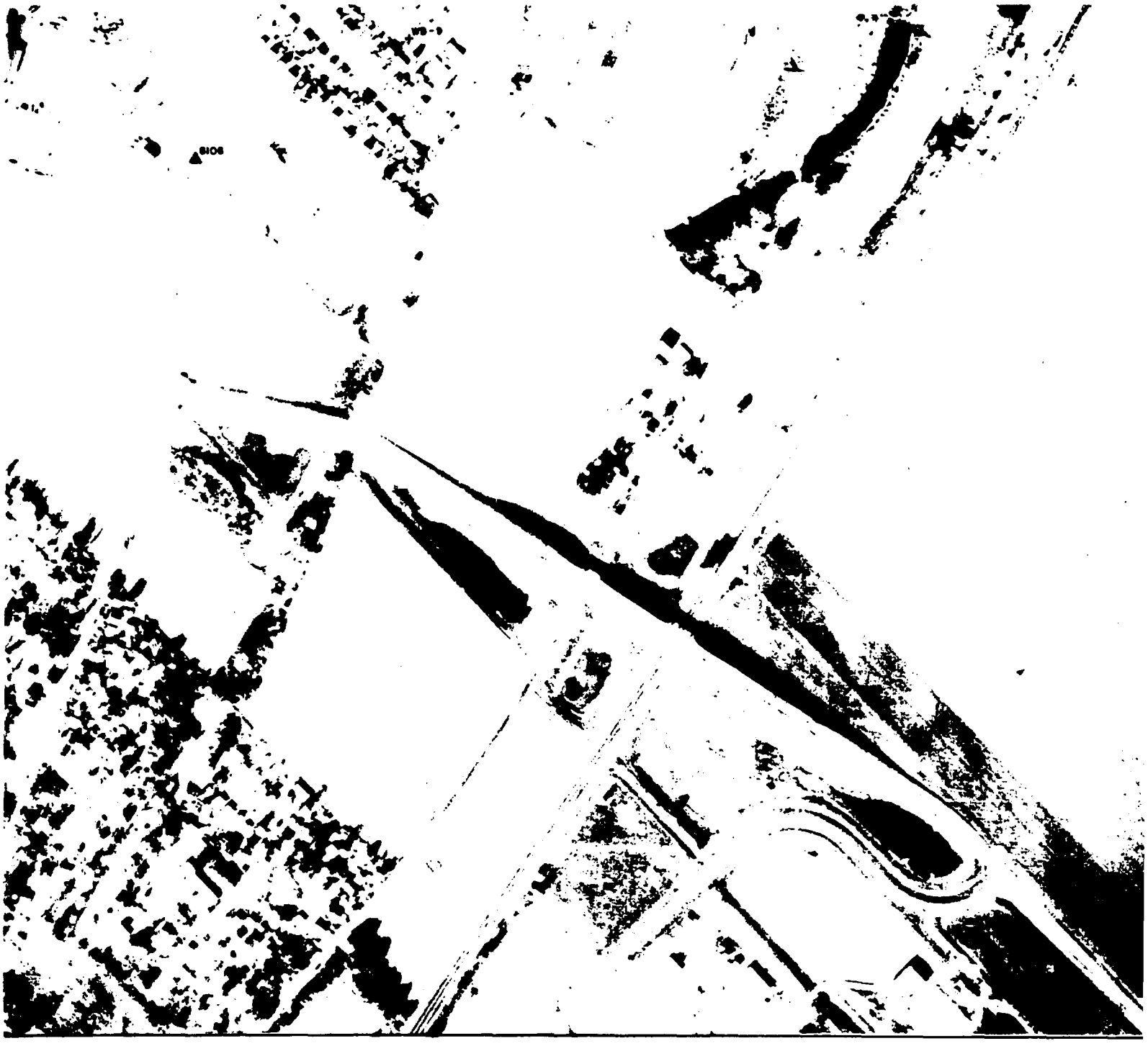

MEAN CONCENTRATIONS OF PRIORITY POLLUTANT AND NON-PRIORITY POLLUTANT ORGANIC COMPOUNDS IN THE DEEP ZONE

**MONSANTO COMPANY**
**Sauget, Illinois**

FIGURE 25

PROTECTED MATERIAL: MONSANTO INSURANCE COVERAGE LITIGATION

# PLANT-WIDE ASSESSMENT OF GROUND-WATER CONDITIONS AT THE W.G. KRUMMRICH PLANT MONSANTO COMPANY SAUGET, ILLINOIS

## VOLUME II
## CONCLUSIONS AND RECOMMENDATIONS

September 1986

Prepared by:

Geraghty & Miller, Inc.
Ground-Water Consultants
125 East Bethpage Road
Plainveiw, New York 11803

MCO 1468464

CONTENTS

VOLUME II
CONCULSIONS AND RECOMMENDATIONS

Page

CONCLUSIONS..... 1

Offsite Impacts..... 1
Sources..... 4

RECOMMENDATIONS..... 7

Remedial Action..... 7
Ground-Water Monitoring..... 11

REFERENCES..... 13

TABLES

15. Estimates of Loading to the Mississippi River

16. Dilution Effects in the Mississippi River

17. Pollutant Loadings, Mississippi River-West Section, Dry Weather Event, April 15, 1982

18. Frequency of Pollutant Occurrence, Mississippi River Water, Downstream-Center and East Sections (11/24/81, 11/30/81, 4/15/82)

19. Semi-Annual Ground-Water Monitoring Program, Monsanto Company, W.G. Krummrich Plant, Sauget, Illinois

FIGURES

26. Approximate Areas Where Organic Compound Concentrations are above 100 ug/L in the Shallow Zone on the Monsanto Property

27. Approximate Areas Where Organic Compound Concentrations are above 100 ug/L in the Intermediate Zone on the Monsanto Property

# PLANT-WIDE ASSESSMENT OF GROUND-WATER CONDITIONS AT THE W.G. KRUMMRICH PLANT MONSANTO COMPANY, SAUGET, ILLINOIS

## VOLUME II
## CONCLUSIONS AND RECOMMENDATIONS

The following sections discuss the water-quality and water-level information provided in Volume I. This volume also includes an assessment of onsite and offsite impacts on the ground-water system and discussions about remedial action. The interpretive tables and figures at the back of this volume were prepared from the basic data in Volume III and data summaries in Volume I.

## CONCLUSIONS

### Offsite Impacts

Figures 26 and 27 show the areas in the shallow and intermediate zones where organic compound concentrations in ground water are above 100 ug/L. The contaminated area in the deep zone has not been mapped because of insufficient data. However, 7 out of 8 deep wells had concentrations over 100 ug/L (see Volume I).

Despite the fact that plant operations have affected ground-water quality, the offsite impact is minimal. The prevailing ground-water flow direction in all three hydrogeologic zones is westward toward the Mississippi River which is the ultimate point of discharge. Once in the Mississippi

River, the concentrations of the constituents are diluted below detectable limits.

Geraghty & Miller, Inc.'s inventory of offsite wells and analysis of the water-table and potentiometric surface maps indicate that there are no offsite potable supply wells in the area. The only wells presently being pumped in the vicinity of the Monsanto property are being used for industrial or dewatering purposes and not for drinking water supplies. Water-level maps show that flow is toward the river and no cones of depression, which would be manifested by a circular pattern of equi-potential lines, can be seen within Monsanto's property boundaries. In all likelihood, constituents that may have originated from sources on the Monsanto property never migrated offsite in any direction other than to the west. Prior to 1973 constituents were probably captured in the cones of depression created by the onsite pumping. Between 1973 and 1980 the flow direction shifted toward the west and all ground water now migrates toward the Mississippi River.

The contaminant loading to the Mississippi River is estimated at an average rate of 77 lbs/day of organics (see Table 15). The estimates of loading were derived utilizing the water-quality data from wells along the river's edge at the Monsanto landfill, the August 1984 hydraulic gradients in all three zones, and the permeability data given in Vol-

ume I. Each data point (or well) was assumed to represent a zone of discharge which extends to a point halfway between it and the adjacent well on either side (see Table 15). In addition, the reversal of flow must also be taken into consideration because river stage and water-level data from Well GM-27B indicate that discharge to the river is blocked approximately 45 days per year (or 12 percent of the time) which reduces the annual loading.

Table 16 shows that the flow in the river reduces the concentration of priority pollutants below the detectable limits at both a low flow, which is equaled or exceeded 70 percent of the time (Black and Veatch, 1982), and the lowest flow ever recorded. The report by Black and Veatch (1982), which assesses the impact on the Mississippi River of priority pollutant contributions from St. Louis, supports the theoretical calculations that indicate constituents in discharges from the aquifer are diluted below detection limits.

Tables 17 and 18, which were abstracted from Black and Veatch (1982), illustrate the dilution effects in the river. Even though substantial loadings occur in the St. Louis area, especially from the Bissell Point Treatment Plant, only very low concentrations could be found at River Mile 167.0, which is downstream from the Monsanto property. According to the report, only phenol and methylene chloride showed increased loadings from upstream to downstream.

Methylene chloride may have been a laboratory artifact in the water samples. In any event, large concentrations of methylene chloride were not found in wells at the Monsanto landfill.

Sources

The source of the contaminants discharging to the Mississippi River appears to be almost exclusively from the Monsanto landfill itself. Figure 26 shows that the zone in the shallow aquifer where organic compound concentration are above 100 ug/L in the eastern part of the Monsanto property does not extend offsite to the west, because the constituents are traveling at such a slow rate (7 feet per year). The migration rate was calculated from the August 1984 water-table map and is probably representative of flow conditions most of the time, although the rate does change with changes in river stage.

Compounds in the intermediate zone (see Figure 27), originating in the eastern plant area, have traveled further because of higher ground-water flow velocities. The concentrations of contaminants decline with distance to the west, and if they reach the landfill area at all, arrive in low concentrations. The same condition occurs in the deep zone. This means that sources of constituents in the eastern plant area do not contribute to the loading to the river.

The sources of organic compounds in the eastern and central affected zones are primarily in the manufacturing area itself. It is impossible, however, to attribute the presence of specific compounds (or concentrations) to individual sources because of the potentially diverse number of points of origin. Leaky sewers, leaky underground storage tanks, old spills and other discharges to the ground are all potential sources of ground-water contaminants. Changes in ground-water flow direction as a result of changes in pumpage over the years, temporary reversals of gradient at high river stage, and the recent dewatering operations for the sewer system have mixed plumes from the various sources.

It is possible that some compounds are originating on adjacent properties and could contribute to the overall problem. The occurrence of benzene, toluene and xylene in wells of cluster GM-12, for instance, may indicate contamination which originates from the east.

The origin of organic compounds in the small zone in the southwest corner of the property is probably the Route 3 drum area, where 5,000 drums were disposed during the middle 1940's. Organic compounds are present in well GM-31A which is downgradient of the drum area. Wells GM-8 is upgradient and shows a low volatile organic compound concentration of 44 ug/L. Organic compound concentrations are below 100

micrograms per liter in the intermediate zone and only average 683 ug/L in the deep zone (well GM-31C).

The ground-water impact of the Route 3 drum area appears to be limited because the shallow zone is the only zone that has been affected. Organic compounds in the shallow zone have probably not traveled westward (downgradient) more than about 300 feet, even if the conservative movement (at the same rate as the average ground-water flow velocity), is assumed. The estimate of the migration distance is based on the fact that the drum area has been in existence approximately 40 years and that ground water in the shallow zone moves at about 7 feet per year (see Volume I).

The intermediate zone in the vicinity of the Route 3 drum area does not appear to have been affected and this is consistent with the head data for well cluster GM-31. These data indicates that there is a very small downward hydraulic gradient which could drive constituents in the shallow zone into the deeper zones.

## RECOMMENDATIONS

### Remedial Action

Remedial action with respect to ground-water contamination itself appears to be unnecessary. Creating a hydraulic barrier to prevent the offsite ground-water migration of contaminants, for instance, is unjustifiable because there is no public health or environmental impact offsite. Discharges to the Mississippi River have a small effect because of dilution. The potential for exposure to contaminated ground water should lessen with time because the use of the aquifer in the Sauget area will continue to decline in favor of river water use.

Another important reason for not recommending a ground-water cleanup program is that the reduction of concentrations of organic compounds to low levels is impractical. The area affected by organic compounds is quite large and ground-water contamination therefore must be regarded on a regional scale. Cleanup would require pumpage of large quantities of water from the intermediate and perhaps the deep zones. The permeability of the shallow zone is so low that a tubular well pumping system is not feasible.

Given the large volumes of ground water to be recovered, it would be necessary to essentially operate the pumping system for an indefinite period of time. For instance, the volume of contaminated water in the zones where organic compound concentrations are above 100 ug/L beneath the plant and in the central area of the property is estimated at $8 \times 10^8$ gallons, assuming the effective porosities for each zone given in Volume I. In order to reduce the contaminant concentrations to 20 to 30 percent of their original concentrations, the aquifer pore volume would probably have to be exchanged about 150 times (Gillham, 1982). This represents a total volume of approximately $1.2 \times 10^{11}$ gallons. A recovery system pumping at 1,000 gallons per minute would require approximately 200 years to accomplish this task. Establishing such a pumping system would be neither feasible or cost effective.

Because the shallow zone cannot be pumped with wells, a passive system, such as a collector trench, would be required. The most likely position for a trench is immediately west of Route 3. Even if the collector system could double the hydraulic gradient, which is unlikely, and, in turn, reduce the constituent travel time by half, organic compounds which are now in the central plant area would take approximately 100 years to arrive at the collector system.

In order to alleviate ground-water contamination in the most cost-effective manner, Monsanto should continue with its policy of eliminating potential sources. The projects that have already been completed, are now underway, and those anticipated in the near future should significantly reduce the contaminant loading to the ground-water system.

Projects that have been completed to date at a total cost of about $2 million consist of the following:

1. Powerhouse Sewer Main: The powerhouse sewer main was repaired and replaced in 1985.

2. Building BK Projects: Sewer, roof drain, and process water leak repairs to underground piping were completed in the vicinity of the BK office building. These were indicated by a ground-water mound in the BK building area during ground-water mapping. The projects were completed in 1985.

3. Riverbank Erosion Control: Project work for erosion control of the riverbank property, which is adjacent to the Monsanto's landfill, commenced in 1983. The project was completed in early 1986 after approximately 90,000 tons of rock and sand was placed on the 2,300 linear footage of the riverbank.

4. South Lot Drum Site: Thirty drums of chemical waste, which were exhumed during a recent construction project, were removed from the ground in July 1986.

A major project to repair the sewer system in the community is underway and is expected to be completed in about 3 years. Two thousand linear feet of sewer piping is being replaced on the Monsanto property and the project is estimated to be completed in 1987 at a cost of $7 million. The

sewer system in the Village of Sauget is being repaired and upgraded, and upon completion in 1989, will have cost about $21 million. Replacement and repair of the sewer should result in an improvement in ground-water quality because the old system is suspected of being a major source of contaminant loading to the ground water.

Geraghty & Miller, Inc., in a recent report, has recommended a clay cap for the Route 3 drum site. This report describes a boring program that was undertaken at the Route 3 drum site, characterizes the geology and reviews the remedial alternatives that were considered for the site. The report also contains the data upon which the recommendation for the cap is based.

Remedial action alternatives for the landfill are currently under review. Options under consideration are minimal action (to restrict access), an improved cap and a slurry wall. Incineration (onsite and offsite) was ruled out in the initial selection process because of the large volumes of material (mostly soil). Bioreclamation would be extremely difficult because it would be virtually impossible to deliver nutrients evenly and efficiently and the halogenated compounds are difficult to degrade.

In addition to the Monsanto landfill, Geraghty & Miller, Inc.'s investigation indicates that there are no other sites which require remedial action.

Ground-Water Monitoring

Geraghty & Miller, Inc. has formulated a ground-water monitoring program for the Monsanto Company property to determine whether water quality is changing significantly over time. In order to maximize the reliability of the data, Geraghty & Miller, Inc. believes it is necessary to include only those wells that have documented well construction details. In addition, the wells selected for this program should be limited to those near property boundaries, wells downgradient of the landfill, and in the vicinity of the Route 3 drum site which is located between well cluster GM-31 and Well GM-8. The monitoring wells that have been selected for this program are included in Table 19 and shown on Figure 23.

At present there is insufficient data to determine concentration trends. Geraghty & Miller, Inc.'s experience indicates that at least 10 to 12 samples over 3 to 5 years are needed to obtain a trend significant at the 95 percent confidence level. Monsanto should establish a program to obtain the required data. Semi-annual samples should be suf-

ficient because, in 1989, after 5 years of monitoring, 11 sets of data will be available for a trend analysis.

The list of chemical parameters that should be evaluated for each well will vary because the distribution of specific groups of compounds (e.g. volatile organic compounds) varies from one area of the plant property to another (Table 13). For example, for each well in the plant process area where VOCs have been detected, the occurrence of USEPA extractable organic compounds is usually less common, and pesticides/PCBs are rarely found. In the landfill area, there are a few wells where extractable organic compounds are generally found at higher concentrations than the VOCs. Therefore, for the purpose of monitoring ground-water quality over time, it is not necessary to analyze for some fractions of USEPA priority pollutants and nonpriority pollutant organic constituents.

Respectfully submitted,

GERAGHTY & MILLER, INC.

Dennis Colton
Senior Scientist

Nicholas Valkenburg
Associate

David W. Miller
Principal

September 29, 1986

## REFERENCES

Gillham, R.W., 1982, Applicability of Solute Transport Model to Problems of Aquifer Rehabilitation. Proceedings of the Second National Symposium on Aquifer Restoration and Ground-Water Monitoring. May 26-28. National Water Well Association, Worthington, Ohio.

Lohman, S.W., 1972, Ground-Water Hydraulics, U.S. Geological Survey, Professional Paper 708, 70 p.

Richey, J.D., Schicht, R.J. and Weiss, L.S., 1984, Ground-Water Level Analysis By Computer Modeling - American Bottoms Groundwater Study, Illinois State Water Survey, 93 p.

Schicht, R.J., 1965, Ground-Water Development in East St. Louis Area, Illinois, Illinois State Water Survey, Report of Investigation 51, 70 p.

USEPA, 1984, EPA Method Study 29, Method 624-Purgeables.

Walton, W.C., 1984, Practical Aspects of Groundwater Modeling, National Water Well Association, 566 p.

PROTECTED MATERIAL: MONSANTO INSURANCE COVERAGE LITIGATION

TABLES

MCO 1468479

Geraghty & Miller, Inc.

## TABLE 15. ESTIMATES OF LOADING TO THE MISSISSIPPI RIVER

### TOTAL PRIORITY POLLUTANTS PLUS MISCELLANEOUS COMPOUNDS

| Well | Flow* (gpd) | Average Concentration (ug/L) | Conversion** Factor | Loading (lbs/day) |
|---|---|---|---|---|
| **Shallow Zone** | | | | |
| P-14 | 800 | 20,000 | $8.344 \times 10^{-9}$ | 0.13 |
| P-7 | 1,900 | 484,000 | $8.344 \times 10^{-9}$ | 7.67 |
| P-6 | 1,400 | 200 | $8.344 \times 10^{-9}$ | 0.002 |
| **Intermediate Zone** | | | | |
| P-13 | 155,000 | 400 | $8.344 \times 10^{-9}$ | 0.52 |
| P-12 | 189,000 | 1,490 | $8.344 \times 10^{-9}$ | 2.35 |
| P-11 | 138,000 | 1,098 | $8.344 \times 10^{-9}$ | 1.26 |
| P-10 | 120,000 | 2,000 | $8.344 \times 10^{-9}$ | 2.00 |
| P-8 | 292,000 | 2,300 | $8.344 \times 10^{-9}$ | 5.60 |
| P-2 | 292,000 | 1,047 | $8.344 \times 10^{-9}$ | 2.55 |
| P-1 | 189,000 | 25 | $8.344 \times 10^{-9}$ | 0.04 |
| **Deep Zone** | | | | |
| GM27 B and C | 469,000 | 1,286 | $8.344 \times 10^{-9}$ | 5.03 |
| GM28 B and C | 781,000 | 9,150 | $8.344 \times 10^{-9}$ | 59.63 |
| Total | | | | 86.78 |
| Say | | | | 87 |
| Reduced loading because discharge to river is blocked 12% of the time | | | | 77 |

* Based of August 1984 flow maps
** from gpd x ug/L to lbs/day

PROTECTED MATERIAL: MONSANTO INSURANCE COVERAGE LITIGATION

Geraghty & Miller, Inc.

TABLE 15 (CONTINUED).

NITROCHLOROBENZENE, BENZENE, MONOCHLOROBENZENE, AND PRIORITY POLLUTANT PHENOLS

| | Nitrochlorobenzene | | Benzene | | Monochlorobenzene | | Priority Pollutant Phenols | |
|---|---|---|---|---|---|---|---|---|
| Well | Average Conc. (ug/L) | Loading (lbs/day) | Average Conc. (ug/L) | Loading (lbs/day) | Average Conc. (ug/L) | Loading (lbs/day) | Average Conc. (ug/L) | Loading (lbs/day) |
| **Shallow Zone** | | | | | | | | |
| P-14 | ND | 0 | 135 | 0.001 | 19,740 | 0.13 | 53* | 0.000 |
| P-7 | 378,000 | 5.99 | 1,945 | 0.03 | 4,575 | 0.07 | 97,000* | 1.54 |
| P-6 | ND | 0 | 28 | 0.000 | 114 | .001 | 3 | 0.000 |
| **Intermediate Zone** | | | | | | | | |
| P-13 | ND | 0 | 75 | 0.10 | 172 | 0.22 | 3 | 0.004 |
| P-12 | ND | 0 | 560 | 0.88 | 690 | 1.09 | ND | 0 |
| P-11 | ND | 0 | 113 | 0.13 | 842 | 0.97 | ND | 0 |
| P-10 | ND | 0 | 132 | 0.13 | 2,000 | 2.00 | ND | 0 |
| P-8 | ND | 0 | 347 | 0.85 | 1,538 | 3.75 | 126* | 0.31 |
| P-2 | ND | 0 | 80 | 0.19 | 726 | 1.77 | 182 | 0.44 |
| P-1 | 16 | 0.03 | ND | 0 | ND | 0 | 4 | 0.006 |
| **Deep Zone** | | | | | | | | |
| GM27 B and C | NL | 0 | 360 | 1.41 | 690 | 1.68 | 139* | 0.54 |
| GM28 B and C | 110 | 0.72 | 700 | 4.56 | 4,800 | 31.27 | 2,294 | 14.9 |
| Total | | 6.74 | | 8.281 | | 42.951 | | 17.74 |
| Reduced loading because discharge to river is blocked 12% of the time | | 6 | | 7 | | 38 | | 16 |

Geraghty & Miller, Inc.

TABLE 16. DILUTION EFFECTS IN THE MISSISSIPPI RIVER

| PARAMETER | GROUND-WATER DISCHARGE (lbs/day) | THEORETICAL CONCENTRATION (ug/L) IN RIVER AT STAGE | |
|---|---|---|---|
| | | 7.1 feet[1)] | -6.2 feet[2)] |
| ORGANICS[3)] | 77 | 0.12 | 0.42 |
| 2-NITROCHLOROBENZENE | 6 | 0.01 | 0.03 |
| BENZENE | 7 | 0.01 | 0.04 |
| CHLOROBENZENE | 38 | 0.06 | 0.21 |
| PRIORITY POLLUTANT PHENOLS | 16 | 0.02 | 0.09 |

1) 7.1 feet corresponds to 120,000 cubic feet per second.

2) -6.2 feet corresponds to 34,000 cubic feet per second, the lowest ever recorded.

3) Priority Pollutants plus "indicator" compounds. The total includes nitrochlorobenzene, benzene, chlorobenzene and total phenols.

Example Calculation:

$$\frac{77\ \text{lbs}}{\text{day}} \times \frac{4.54 \times 10^{8}\text{ug}}{\text{lb}} \times \frac{1\ \text{sec}}{34{,}000\ \text{ft}^3} \times \frac{1\ \text{day}}{86{,}400\ \text{sec}} \times \frac{1\ \text{ft}^3}{7.48\ \text{gal}} \times \frac{1\ \text{gal}}{3.785\ \text{L}} = 0.42\ \text{ug/L}$$

Table 17

POLLUTANT LOADINGS
MISSISSIPPI RIVER - WEST SECTION
DRY WEATHER EVENT
APRIL 15, 1982
(in lb/day)

| COMPOUND | Upstream Transect River Mile-195.0 | Bissell Point WWTP River Mile-183.2 | Lemay WWTP River Mile-171.5 | Downstream Transect River Mile-167.0 Theoretical | Downstream Transect River Mile-167.0 Measured |
|---|---|---|---|---|---|
| phenols | 2,000 | 1,200 | 35 | 3,200 | 6,100 |
| cyanide | 0 | 12 | 25 | 37-1,200 | 0 |
| VOLATILES: | | | | | |
| benzene | L4,000 | L3 | L11 | L4,000 | L4,000 |
| carbon tetrachloride | 0 | 0 | L11 | L11 | 0 |
| chlorobenzene | 0 | 490 | L11 | 490-4,500 | 0 |
| chloroform | 0 | 4 | L11 | 4-4,000 | 0 |
| 1,2-dichloroethane | 0 | 77 | L11 | 77-88 | 0 |
| 1,3-dichloro-propylene | 0 | L3 | 0 | L11 | 0 |
| ethylbenzene | 0 | 44 | L11 | 44-55 | 0 |
| methylene chloride | 1,279,400 | 18 | L11 | 1,279,400 | 12,500 |
| tetrachloroethylene | 0 | 46 | 0 | 46-4,100 | 0 |
| toluene | 0 | 146 | 19 | 170-4,200 | L4,000 |
| 1,2-transdichloro-ethylene | 0 | L3 | L11 | L14 | 0 |
| 1,1,1-trichloroethane | L4,000 | L3 | L11 | L4,000 | L4,000 |
| trichloroethylene | 0 | 11 | 22 | 33 | 0 |
| ACIDS: | | | | | |
| 4-nitrophenol | 0 | 750 | L11 | 750-4,800 | 0 |
| phenol | 0 | 470 | L11 | 467-4,500 | 0 |
| BASE/NEUTRALS: | | | | | |
| bis (2-ethylhexyl) phthalate | L4,000 | L3 | 0 | L4,000 | L4,000 |
| butyl benzyl phthalate | 0 | 0 | L11 | 0 | 0 |
| diethyl phthalate | L4,000 | L3 | L11 | L4,000 | L4,000 |
| di-n-butyl phthalate | L4,000 | 6 | L11 | 6-4,000 | L4,000 |
| di-n-octyl phthalate | 0 | 0 | L11 | 0 | 0 |
| 1,2,4-trichlorobenzene | 0 | 0 | L11 | L4,000 | 0 |
| METALS: | | | | | |
| antimony | L20,000 | L17 | L53 | L20,000 | L20,000 |
| arsenic | L20,000 | L17 | L53 | L20,000 | L20,000 |
| beryllium | L800 | L1 | L3 | L800 | L800 |
| cadmium | L810 | 1 | 6 | 7-820 | L810 |
| chromium | 2,800 | 25 | 130 | 3,000 | 14,000 |
| copper | L8,100 | 19 | 76 | 95-8,200 | L8,100 |
| lead | L20,000 | L17 | L53 | L20,000 | L20,000 |
| nickel | 5,200 | 23 | 110 | 5,300 | 13,000 |
| selenium | L20,000 | L17 | L53 | L20,000 | L20,000 |
| silver | L2,000 | L2 | L5 | L2,000 | L2,000 |
| thallium | L40,000 | L33 | L110 | L40,000 | L40,000 |
| zinc | 16,500 | 58 | 98 | 16,700 | 45,200 |
| PESTICIDES: | | | | | |
| gamma-BHC | 0 | 0 | L5 | 0 | 0 |

L - Less than value stated
(detection limit
(concentration used)

Sampling Conditions
1. River stage = 20.5 feet
2. River flow - west section = 48,000 mgd
3. Raw sewage discharges = 123 mgd
4. Bissell Point WWTP flow = 40 mgd
5. Lemay WWTP flow = 126 mgd
6. Dry weather prior to and during sampling

Abstracted from Black & Veatch (1982)

Table 18

FREQUENCY OF POLLUTANT OCCURRENCE
MISSISSIPPI RIVER WATER
DOWNSTREAM - CENTER & EAST SECTIONS
(11/24/81, 11/30/81, 4/15/82)

| Compound | No. of Occurrences (out of 5) | Concentration Min. ug/l | Concentration Max. ug/l | EPA Detection Limit ug/l |
|---|---|---|---|---|
| phenols (4AAP) | 5 | * | 10 | 2 |
| cyanide | 5 | * | 19 | 5** |
| VOLATILES: | | | | |
| benzene | 5 | * | * | 10 |
| chloroform | 1 | * | * | 10 |
| dichlordifluoromethane | 2 | * | * | 10 |
| methylene chloride | 5 | 14 | 55 | 10 |
| toluene | 4 | * | * | 10 |
| 1,1,1-trichloroethane | 5 | * | * | 10 |
| trichlorofluoromethane | 1 | * | * | 10 |
| ACID: | | | | |
| phenol | 2 | * | * | 10 |
| BASE/NEUTRAL: | | | | |
| bis (2 ethylhexyl) phthalate | 5 | * | * | 10 |
| 2-chloronaphthalene | 2 | * | * | 10 |
| diethyl phthalate | 1 | * | * | 10 |
| METALS: | | | | |
| antimony | 1 | * | * | 50 |
| arsenic | 5 | * | * | 50 |
| beryllium | 5 | * | 6 | 5** |
| cadmium | 5 | * | 26 | 10** |
| chromium | 5 | * | 51 | 40** |
| copper | 5 | * | 31 | 20 |
| lead | 5 | * | * | 50 |
| mercury | 4 | * | * | 0.2** |
| nickel | 5 | * | 105 | 40** |
| selenium | 5 | * | * | 50 |
| silver | 5 | * | * | 5 |
| thallium | 1 | * | * | 100 |
| zinc | 5 | * | 264 | 20 |
| PESTICIDES: | | | | |
| alpha BHC | 2 | * | * | 5 |
| gamma BHC | 2 | * | * | 5 |

*Denotes compound was detected but concentration was below EPA detection limit.
**Contract laboratory detection limit.

Abstracted from Black & Veatch (1982)

Table 19. Semi-Annual Ground-Water Monitoring Program, Monsanto Company, W.G. Krummrich Plant, Sauget, Illinois.

| | | USEPA Priority Pollutants | | | Non-Priority Pollutants | | |
|---|---|---|---|---|---|---|---|
| Well No. | Well Depth (feet below land surface) | Volatile Organic Compounds | Acid Extractable Organic Compounds | Base/Neutral Extractable Organic Compounds | Volatile Organic Compounds | Acid Extractable Organic Compounds | Base/Neutral Extractable Organic Compounds |
| Plant Area | | | | | | | |
| GM-4A | 28 | X | | | | X | |
| GM-4B | 87 | X | | | | X | |
| GM-4C | 104 | X | | | | X | |
| GM-9A | 28 | X | | | | | |
| GM-9B | 75 | X | | | | | |
| GM-9C | 108 | X | | | | | |
| GM-10A | 28 | X | | | | | |
| GM-10B | 78 | X | | | | | |
| GM-10C | 111 | X | | | | | |
| GM-12A | 33.5 | X | | | X | | |
| GM-12B | 89 | X | | | X | | |
| GM-12C | 114.5 | X | | | X | | |
| GM-17A | 38 | X | X | | | | |
| GM-17B | 78 | X | X | X | | | |
| GM-17C | 107 | X | X | X | | | |
| GM-31A | 40 | X | X | X | X | | X |
| GM-31B | 94 | X | | | | | |
| GM-31C | 126.5 | X | | | | | |
| Landfill Area | | | | | | | |
| GM-27B | 82 | X | | | | | |
| GM-27C | 105 | X | | | | X | |
| GM-28B | 93 | X | | | | X | X |
| GM-28C | 107 | X | | | | X | X |
| P-2 | 47 | X | | | | | |
| P-6 | 30.5 | X | | | | | |
| P-7 | 33 | X | X | X | | X | X |
| P-8 | 53.5 | X | | | | X | |
| P-13 | 53.5 | X | | | | | |
| P-14 | 32.5 | X | | | | | |
| GM-106 | 165.7 | X | X | X | | | X |

FIGURES

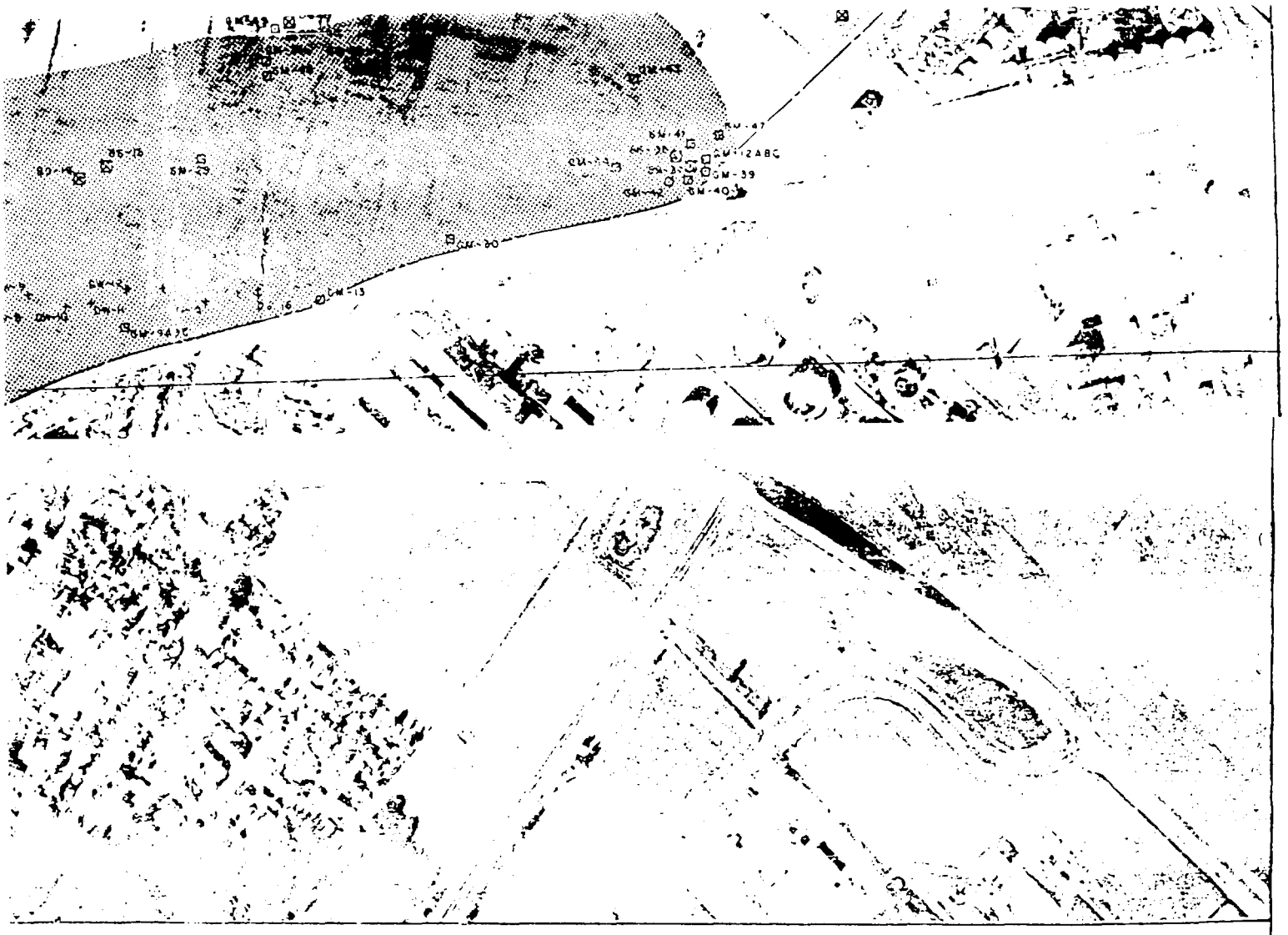


APPROXIMATE AREAS
WHERE ORGANIC COMPOUND *
CONCENTRATIONS ARE ABOVE 100 ug/L
IN THE SHALLOW ZONE
ON THE MONSANTO PROPERTY

MONSANTO COMPANY
Sauget, Illinois

MCO 1468487

* PRIORITY POLLUTANTS PLUS INDICATORS, 9/86

FIGURE 26

944-

APPROXIMATE AREAS
WHERE ORGANIC COMPOUND *
CONCENTRATIONS ARE ABOVE 100 ug/L
IN THE INTERMEDIATE ZONE
ON THE MONSANTO PROPERTY

MONSANTO COMPANY
Sauget, Illinois

MCO 1468488

PRIORITY POLLUTANTS PLUS INDICATORS 9/86

FIGURE 27

# PLANT-WIDE ASSESSMENT OF GROUND-WATER CONDITIONS AT THE W.G. KRUMMRICH PLANT MONSANTO COMPANY SAUGET, ILLINOIS VOLUME III - APPENDICES

September 1986

Prepared by:

Geraghty & Miller, Inc.
Ground-Water Consultants
125 East Bethpage Road
Plainveiw, New York 11803

## CONTENTS

## VOLUME III - APPENDICES

APPENDIX

A. Geraghty & Miller, Inc. Drilling and Sampling Protocols
B. Geologic Logs
C. Well Construction Data
D. Summary of John Mathes & Associates, Inc. Laboratory Permeability Test Results

E. Water Quality Data

Table E-1. Summary of Volatile Organic Compounds in Ground Water
Table E-2. Summary of Acid Extractable Organic Compounds in Ground Water
Table E-3. Summary of Base/Neutral Extractable Organic Compounds in Ground Water
Table E-4. Summary of Pesticide/PCB Compounds in Ground Water
Table E-5. Summary of Metals and Miscellaneous Parameters in Ground Water

# GERAGHTY & MILLER, INC.
# DRILLING AND SAMPLING PROTOCOLS

## Monitoring Well Installation

The monitoring wells were installed by John Mathes and Associates, Inc., Columbia, Illinois under the direction of Geraghty & Miller, Inc. during several phases of study between October 1983 and January 1985. Single monitoring wells were installed at some locations but, at other locations, clusters of two or three wells were drilled in order to obtain water-level and water-quality information from specific depth intervals in the aquifer. Wells in the clusters were installed in separate boreholes, rather than in a single large diameter borehole. The suffixes "A", "B" and "C" indicate shallow, intermediate, and deep wells, respectively. A number without a suffix indicates a shallow well.

At all shallow well locations, an 8-inch or 12-inch diameter hole was drilled with a hollow stem auger to 15 to 20 feet below the water table. Split-spoon samples were collected at 5-foot intervals, described and stored in jars. At several locations water was added to the borehole during drilling to prevent very fine sand from heaving up inside the augers. A 2-inch diameter, 6- or 10-slot, stainless steel well screen coupled to new 2-inch black steel casing was installed through the hollow-stem auger to approximately 15 feet below the water table. Gravel was added to the an-

nular space adjacent to the well screen prior to removing the augers to ensure that the entire annular space (to 3 feet above the top of the well screen) was properly gravel packed. The remainder of the annular space was filled with a bentonite/cement slurry which was pumped down a tremie pipe to within two feet of land surface. Pre-mixed cement was poured into the remaining annulus and a steel protective pipe with a locking cap was set over the well into the cement. Finally, three 4-inch steel protective posts were installed in a triangular array to protect the wells from being damaged.

Each well was developed with a bladder pump and/or compressed air to ensure that the well screen was open to the aquifer, that the well water was reasonably clear, and that all water added to each borehole during drilling had been removed. All drilling equipment and tools were steam cleaned prior to their arrival onsite, between drilling sites and prior to leaving the site to prevent cross-contamination of wells. The well screen and casing were steam cleaned prior to delivery to the site and again immediately before installation. In addition, at each drilling site all drill cuttings and development water were drummed and removed from the site for disposal in accordance with federal, state, and local laws and regulations.

At all intermediate and deep well locations, an 8-inch diameter hole was drilled with the conventional rotary method and sampled (split spoon) to depths of 80 to 90 feet (intermediate wells) and to about 105 to 115 feet (deep wells). After the screen zone was selected, a 4-inch diameter, 20-slot, threaded stainless steel well screen was coupled to black steel casing and installed in the hole. Clean gravel was poured into the annulus next to the screen as the drilling fluid was being removed. The gravel pack extends approximately 5 feet above the screen. Bentonite slurry was pumped down a tremie pipe into the annular space to form a 15 foot thick seal above the screened zone. The remainder of the annulus was filled with a bentonite/cement slurry which was also pumped down a tremie pipe to fill the remaining annulus and ensure that the well was properly sealed. A locking cap was added to the top of the well and three 4-inch steel protective posts were installed around each well in the same manner as those around the 2-inch monitoring wells.

All well development and decontamination procedures followed for the shallow monitoring wells were also used for the deeper monitoring wells. However, it was necessary to add sodium hexametaphosphate (a dispersing agent) to Well GM-28C in order to remove all of the drilling fluid.

Water Sample Collection

All wells were sampled for USEPA Priority Pollutants, and selected wells were sampled for total organic carbon (TOC), total organic halogens (TOX), miscellaneous inorganic constituents, total dissolved solids (TDS), and dioxin (TCDD). Replicate samples were collected at approximately 10-15 percent of the sampling locations. Field blanks and trip blanks were usually analyzed for volatile organic priority pollutants; however, TDS, TOC and chloride and the remainder of the USEPA priority pollutant compounds were occasionally determined. Specific conductance, pH, and temperature were measured in the field at each location at the time of sample collection.

During sample collection, each of the 2-inch wells was evacuated with a centrifugal pump or a stainless steel or teflon bailer. All 4-inch wells were evacuated with a submersible pump. Three to five equivalent casing volumes of water were removed from each monitoring well prior to sampling. All sampling was carried out according to a protocol that minimizes the possibility of cross-contamination of samples. Tubing attached to the pumps was dedicated to each well; no tubing was reused. Pumps were cleaned with Micro™ detergent solution and rinsed with distilled/deinonized water. Each well was sampled with either a stainless steel or teflon bailer which was cleaned with Micro™ detergent

solution, hexane and distilled water rinses after the sampling of each well.

Blind replicate samples (except the sample for volatile organic compounds) were collected in a common container before splitting the sample. Well water collected for priority pollutant metal analysis was filtered in the field according to the USEPA protocol. All other samples were stored and preserved in accordance with USEPA protocols and instructions provided by the analyzing laboratory. Samples were delivered to the laboratory within 24 hours of collection, following Geraghty & Miller, Inc.'s daily sampling activities.

# GEOLOGIC LOGS FOR MONITORING WELLS

## INSTALLED UNDER THE DIRECTION OF GERAGHTY & MILLER, INC.

## MONSANTO COMPANY, W.G. KRUMMRICH PLANT, SAUGET, ILLINOIS

| Description | Depth (feet) |
|---|---|
| **Well GM-1** | |
| Silt, clayey, brown | 0 - 3.5 |
| Sand, very fine, silty, tan | 3.5- 6 |
| Silt, clayey, gray and brown | 6 - 12 |
| Sand, very fine, very silty, gray | 12 - 22 |
| Sand, fine, silty, gray | 22 - 32 |
| Sand, fine to medium, gray; trace of coarse sand | 32 - 36 |
| **Well GM-2** | |
| Gravel (fill) | 0 - 2 |
| Sand, very fine to fine, silty, gray and yellowish-brown | 2 - 7 |
| Clay, silty, gray | 7 - 12 |
| Sand, very fine to fine, tan | 12 - 18 |
| Silt, sandy, gray | 18 - 20 |
| Sand, very fine to fine, silty, gray | 20 - 21 |
| Sand, very fine to fine, brown; some silt | 21 - 35 |
| Sand, fine to medium, gray | 35 - 44 |
| **Well GM-3** | |
| Sand, very fine to fine, brown; some silt | 0 - 2 |
| Sand, very fine to fine, tan | 2 - 10 |
| Silt, sandy, brown | 10 - 12 |
| Sand, very fine to fine, very silty, brown | 12 - 15 |
| Sand, very fine to fine, tan; trace silt | 15 - 22 |
| Sand, fine to medium, brown and gray | 22 - 32 |
| Sand, fine to medium, brown; some coarse sand and fine gravel | 32 - 36 |
| **Wells GM-4ABC** | |
| Clay, dark brown | 0 - 3 |
| Sand, very fine, very silty, tan | 3 - 7 |
| Sand, fine, tan | 7 - 17 |
| Sand, fine, brown; some silt | 17 - 22 |
| Sand, fine to medium, brown; trace coarse sand | 22 - 70 |
| Sand, fine to coarse, gray; with gravel | 70 - 88 |
| **Well GM-5** | |
| Sand, very fine to fine, brown; some silt | 0 - 2 |
| Sand, very fine to fine, tan | 2 - 27 |
| Sand, very fine to fine, tan; some medium sand | 27 - 36 |

| Description | Depth (feet) |
|---|---|
| **Well GM-6AB** | |
| Sand, very fine, silty, dark gray | 0 - 3 |
| Sand, very fine, silty, tan | 3 - 8 |
| Clay, gray; some silt | 8 - 13 |
| Sand, very fine, tan | 13 - 21 |
| Sand, very fine, tan; some silt | 21 - 27 |
| Sand, fine, silty; trace of medium and coarse sand | 27 - 32 |
| Sand, fine to medium, gray; trace of coarse sand | 32 - 70 |
| Sand, fine to coarse, gray; with fine to medium gravel | 70 - 88 |
| **Well GM-7** | |
| Silt, sandy, brown | 0 - 1 |
| Sand, very fine, brown; some silt | 1 - 4 |
| Silt, gray | 4 - 5 |
| Sand, very fine, gray; some silt | 5 - 12 |
| Sand, very fine, tan | 12 - 22 |
| Sand, very fine, brown; some silt | 22 - 27 |
| Sand, very fine to fine, brown; some medium sand | 27 - 36 |
| **Well GM-8** | |
| Sand, very fine, silty, brown | 0 - 2 |
| Sand, very fine, tan | 2 - 14 |
| Silt, gray and brown | 14 - 14.5 |
| Sand, very fine, tan | 14.5- 22 |
| Sand, very fine, brownish-gray; some silt | 22 - 27 |
| Sand, very fine to fine, gray; some silt and medium sand | 27 - 36 |
| **Wells GM-9ABC** | |
| Gravel (fill) | 0 - 2 |
| Cinders, black (fill) | 2 - 3 |
| Sand, very fine to fine, silty, brown | 3 - 12 |
| Clay, silty, gray | 12 - 14 |
| Sand, very fine to fine, silty, brown | 14 - 22 |
| Sand, very fine to fine, silty, gray | 22 - 50 |
| Sand, fine to medium, gray; trace of gravel | 50 - 80 |
| Sand, fine to coarse, gray; with fine to medium gravel | 80 -108 |

| Description | Depth (feet) |
|---|---|
| **Wells GM-10ABC** | |
| Topsoil | 0 - 1 |
| Silt, sandy, brown | 1 - 6 |
| Sand, very fine to fine, very silty, brown | 6 - 40 |
| Sand, fine to medium, gray; little gravel | 40 - 72 |
| Gravel, fine to medium; with fine to coarse sand | 72 - 80 |
| Sand, fine to coarse, brown; little gravel | 80 - 84 |
| Gravel, fine to medium; with fine to coarse sand | 84 -104 |
| Gravel, fine to medium with fine to coarse sand; some cobbles | 104 -111 |
| **Well GM-11** | |
| Silt, sandy, brown | 0 - 2 |
| Gravel, coarse (fill) | 2 - 3 |
| Silt, clayey, gray; trace gravel | 3 - 9.5 |
| Sand, silty, fine, tan | 9.5- 17 |
| Sand, very silt, very fine, gray | 17 - 26 |
| **Wells GM-12ABC** | |
| Cinders and gravel, black (fill) | 0 - 8.5 |
| Clay, gray | 8.5- 17 |
| Silt, clayey, gray | 17 - 18.5 |
| Sand, very fine to fine, very silty, gray | 18.5- 22 |
| Sand, very fine to fine, gray; some silt | 22 - 35.5 |
| Sand, fine, gray; some silt | 35.5- 50 |
| Sand, fine to medium; brownish-gray | 50 - 70 |
| Sand, fine to coarse, brownish-gray; with fine to medium gravel | 70 - 114.5 |
| **Well GM-13** | |
| Gravel (fill) | 0 - 2 |
| Sand, very fine to fine, silty, brown | 2 - 11 |
| Silt, clayey, gray | 11 - 13 |
| Sand, very fine to fine, silty, brown | 13 - 21 |
| Sand, fine, silty, gray | 21 - 38 |
| **Well GM-14** | |
| Gravel (fill) | 0 - 2 |
| Silt, clayey, brown; some sand | 2 - 5 |
| Sand, very fine to fine, silty, brown | 5 - 29 |
| Sand, fine, silty, gray | 29 - 38 |
| **Well GM-15** | |
| Gravel (fill) | 0 - 2 |
| Silt, clayey, gray and brown; some sand | 2 - 9 |
| Sand, very fine to fine, silty, gray | 9 - 38 |

| Description | Depth (feet) |
|---|---|
| **Wells GM-16AB** | |
| Silt, sandy, brown | 1 - 6 |
| Sand, very fine to fine, very silty, brown | 6 - 29 |
| Sand, fine, gray; some silt | 29 - 40 |
| Sand, fine, gray | 40 - 50 |
| Sand, fine to medium, gray; some gravel | 50 - 70 |
| Sand, fine to coarse, gray; with gravel | 70 - 90 |
| **Wells GM-17ABC** | |
| Sand, very fine, silty, brown | 0 - 4 |
| Clay, gray; some silt and fine sand | 4 - 11 |
| Sand, very fine, tan; some silt | 11 - 23 |
| Sand, very fine, brown; trace of medium sand and silt | 23 - 50 |
| Sand, fine to medium, gray; some fine gravel | 50 - 70 |
| Sand, fine to coarse, gray; with fine to medium gravel | 70 -107 |
| **Wells GM-18AB** | |
| Silt, clayey, brown; trace of fine sand and gravel | 0 - 6 |
| Sand, fine, grayish-brown; some silt | 6 - 38 |
| Sand, fine, grayish-brown | 38 - 50 |
| Sand, fine to medium, grayish-brown; some fine gravel and coal fragments | 50 - 80 |
| Sand, fine to coarse, gray; with fine to medium gravel | 80 - 92 |
| **Wells GM-25AB** | |
| Sand, very fine, silty, brown | 0 - 14 |
| Sand, fine, brown; some silt | 14 - 33 |
| Sand, fine, gray | 33 - 50 |
| Sand, fine to medium, gray; some silt and coarse sand | 50 - 70 |
| Sand, fine to coarse, gray; some fine to medium gravel | 70 - 88 |
| **Wells GM-27BC** | |
| Sand, fine, silty, brown and black | 0 - 13 |
| Silt, sandy, gray; some fine sand | 13 - 22 |
| Sand, fine, gray; some silt | 22 - 33 |
| Clay, silty, gray; some fine sand | 33 - 36 |
| Sand, fine, silty, gray | 36 - 48 |
| Sand, fine to medium, gray; little silt | 48 - 75 |
| Sand, fine to coarse, gray; some fine to medium gravel | 75 -105 |

| Description | Depth (feet) |
|---|---|
| **Wells GM-28BC** | |
| Sand, fine, gray; some silt | 0 - 18 |
| Clay, silty, gray | 18 - 20 |
| Sand, fine, gray; some silt | 20 - 29 |
| Clay, silty, gray | 29 - 32 |
| Silt, gray; trace of fine gravel, with intermittent sand seams | 32 - 58 |
| Sand, fine to coarse, gray; some fine gravel | 58 - 95 |
| **Well GM-29** | |
| Gravel (fill) | 0 - 2 |
| Sand, fine, silty, gray | 2 - 3 |
| Silt, clayey, gray; with green stains | 3 - 4 |
| Clay, silty, gray | 4 - 5.5 |
| Sand, fine, silty, gray; some clay | 5.5- 8 |
| Silt, sandy, black | 8 - 10 |
| Silt, sandy, gray | 10 - 21 |
| Sand, fine, gray; some silt | 21 - 25 |
| **Well GM-30** | |
| Gravel, with cinders, some red brick (fill) | 0 - 6 |
| Clay, silty, grayish-green | 6 - 10 |
| Silt, clayey, gray; trace of fine sand | 10 - 15 |
| Sand, very fine to fine, gray; some silt | 15 - 20 |
| **Wells GM-31ABC** | |
| Sand, very fine, silty, brown | 0 - 10.5 |
| Sand, fine, brown | 10.5- 12 |
| Sand, very fine, silty, brown | 12 - 17 |
| Sand, fine to medium brown | 17 - 23 |
| Sand, medium, brown | 23 - 40 |
| Sand, coarse, little gravel, brown | 40 - 41.5 |
| Sand, fine to medium, brown | 41.5- 70 |
| Sand, fine to coarse, brown | 70 - 80 |
| Sand, fine to coarse, brown; some fine gravel | 80 -126.5 |
| **Well GM-32** | |
| Gravel, cinders, brown and gray (fill) | 0 - 2 |
| Sand, fine, silty, brown | 2 - 7 |
| Sand, fine to medium, brown | 7 - 25 |

| Description | Depth (feet) |
|---|---|
| **Well GM-33** | |
| Clay, dark gray, wood, cinders (fill) | 0 - 6.5 |
| Clay, dark gray, silt | 6.5- 9 |
| Sand, fine, gray | 9 - 11 |
| Sand, very fine, silty, gray | 11 - 13 |
| Sand, fine, gray | 13 - 16.5 |
| Sand, fine to medium, gray | 16.5- 25 |
| **Well GM-34** | |
| Clay, dark gray, cinders (fill) | 0 - 6.5 |
| Clay, dark gray, silty | 6.5- 9 |
| Sand, fine, dark gray (oil sheen on augers and spoons) | 9 - 25 |
| **Well GM-35** | |
| Sand, fine, gray, some gravel, cinders (fill) | 0 - 4 |
| Sand, fine, silty, dark gray | 4 - 10.8 |
| Clay, gray | 10.8- 12 |
| Sand, very fine, silty, little clay, gray | 12 - 16 |
| Sand, fine to medium, gray to brown | 16 - 19.5 |
| Silt, some clay, gray | 19.5- 20 |
| Sand, fine, silty, gray | 20 - 21.5 |
| Clay, silty, gray | 21.5- 25 |
| **Well GM-36** | |
| Gravel, sand, brown (fill) | 0 - 2.5 |
| Clay, silty, brown | 2.5- 8 |
| Sand, fine to medium, brown | 8 - 25 |
| **Well GM-37** | |
| Gravel, sand, some clay, dark brown (fill) | 0 - 2 |
| Clay, silty, brown | 2 - 10.5 |
| Sand, fine, trace of silt, gray | 10.5- 14.5 |
| Sand, fine to medium, gray | 14.5- 25 |
| **Well GM-38** | |
| Topsoil | 0 - 1 |
| Sand, very fine, silty, brown | 1 - 18 |
| Sand, very fine, silty, gray | 18 - 19 |
| Sand, fine to medium, gray | 19 - 26.5 |

| Description | Depth (feet) |
|---|---|
| Well GM-39 | |
| Cinders, gravel, black (fill) | 0 - 1.5 |
| Cinders, black (fill) | 1.5- 8 |
| Clay, silty, gray | 8 - 9 |
| Well GM-40 | |
| Cinders, gravel, black (fill) | 0 - 1 |
| Cinders, black (fill) | 1 - 7.5 |
| Clay, silty, gray | 7.5- 8 |
| Well GM-41 | |
| Cinders, gravel, medium sand (fill) | 0 - 2 |
| Cinders, medium sand (fill) | 2 - 7.9 |
| Clay, silty, brown-gray | 7.9- 8 |
| Well GM-42 | |
| Gravel, cinders, white and black (fill) | 0 - 2 |
| Cinders, black (fill) | 2 - 7 |
| Clay, silty, gray | 7 - 8 |
| Well GM-43 | |
| Cinders, black (fill) | 0 - 5 |
| Clay, silty, gray | 5 - 6 |
| Well GM-44 | |
| Cinders, gravel, black (fill) | 0 - 1 |
| Cinders, black (fill) | 1 - 5 |
| Clay, gray | 5 - 6 |
| Well GM-45 | |
| Cinders, black | 0 - 5.5 |
| Gravel, brown | 5.5- 7 |
| Gravel, wood chips, brown | 5.5- 7.5 |
| Gravel, brown to black | 7.5- 9 |
| Cinders, gravel, black | 9 - 12 |
| Clay, silty, gray | 12 - 12.5 |
| Silt, clayey, trace of sand | 17 - 17.5 |
| Clay, gray | 17 - 17.8 |
| Silt, clayey, gray | 17.8- 18 |

| Description | Depth (feet) |
|---|---|
| **Well GM-46** | |
| Gravel, sandy, gray | 0 - 3.5 |
| Silt, some very fine sand, little clay, brown | 3.5- 10 |
| Sand, very fine, silty, gray | 10 - 18 |
| Sand, fine to medium, gray | 18 - 27 |
| **Well GM-47** | |
| Pavement, gravel, gray to dark brown | 0 - 1 |
| Sand, fine, silty, gray | 1 - 7 |
| Cinders, coarse sand, black | 7 - 7.5 |
| Clay, gray, silty | 7.5- 11 |
| **Well GM-48** | |
| Sand, fine, silty, gray | 0 - 2 |
| Gravel, brick, medium sand, cinders, brown | 2 - 3.5 |
| Cinders, black | 3.5- 7 |
| Sand, medium, cinders, black | 7 - 10 |
| Silt, some fine sand, trace of clay, gray | 10 - 12.5 |
| **Well GM-49** | |
| Gravel, medium sand, white and brown | 0 - 2 |
| Sand, fine, silty, brown | 2 - 7.5 |
| Sand, very fine to fine, silty, brown | 7.5- 13 |
| Silt, clayey, brown | 13 - 13.5 |
| **Well GM-106** | |
| Sand, fine to medium, brownish-gray; some fine gravel | 0 - 15 |
| Sand, fine to coarse, brown; some fine to coarse gravel, little silt and clay | 15 - 20 |
| Sand, very fine to fine, brown; some silt, trace of fine gravel | 20 - 25 |
| Silt and clay, brown; little fine sand | 25 - 40 |
| Sand, very fine to fine, gray; some silt | 40 - 50 |
| Sand, fine to medium, brownish-gray and medium to coarse gravel | 50 - 55 |
| Sand, fine to medium, gray; some medium to coarse gravel, trace of silt | 55 - 67 |
| Clay, gray; some silt | 67 - 68 |
| Sand, fine to coarse, gray some fine to coarse gravel and cobbles | 68 -113 |
| Gravel, fine to coarse and medium to coarse sand, gray; few cobbles and boulders | 113 -116 |
| Sand, fine to coarse, gray and fine to coarse gravel; some cobbles and thin layers (6") of silty clay | 116 -126 |
| Limestone, gray | 126 -165.7 |

# GEOLOGIC LOGS FOR SOIL BORINGS

## INSTALLED UNDER THE DIRECTION OF GERAGHTY & MILLER, INC.

## MONSANTO COMPANY, W.G. KRUMMRICH PLANT, SAUGET, ILLINOIS

| Description | Depth (feet) |
|---|---|
| **Site BG-13** | |
| Gravel (fill for parking lot) | 0 - 1 |
| Sand, fine, silty, brown; with black stains from 7 to 8.5 feet | 1 - 8.5 |
| Sand, fine, silty, black | 8.5- 10 |
| Sand, fine, silty, gray | 10 - 11.5 |
| **Site BG-14** | |
| Gravel (fill for parking lot) | 0 - 2 |
| Sand, fine, silty, gray | 2 - 4 |
| Clay, silty, brown, trace sand | 4 - 7 |
| Silt, clayey, sandy, brown | 7 - 8.5 |
| Silt, sandy, dark gray | 8.5- 11 |
| Sand, fine, silty, gray | 11 - 11.5 |
| **Site BG-15** | |
| Gravel (fill in lot) | 0 - 1 |
| Clay, silty, gray; trace gravel (fill) | 1 - 2.5 |
| Sand, fine to medium, black, with gravel (fill) | 2.5- 4 |
| Silt, gravel, rock fragments, bricks, gray, brown and black; some black stains (fill) | 4 - 5.5 |
| Silt, gray and black; trace fine sand | 5.5- 7 |
| Clay, silty, gray | 7 - 8.5 |
| Sand, fine, brown; some silt (organic liquid present on drilling tools) | 8.5- 11.5 |
| **Site BG-16** | |
| Gravel (fill in lot) | 0 - 1 |
| Sand, fine, clayey, silty, brown and gray | 1 - 4 |
| Sand, fine, silty, gray with black stains | 4 - 7 |
| Silt, sandy, gray | 7 - 8.5 |
| Sand, silty, fine, gray | 8.5- 10 |

| Description | Depth (fe |
|---|---|
| **Site BG-17** | |
| Gravel (fill in lot) | 0 - 1 |
| Silt, black; with gravel | 1 - 4 |
| Sand, silty, black; with gravel | 4 - 10 |
| **Site BG-18** | |
| Gravel (fill in lot) | 0 - 1 |
| Gravel and sand (fill) | 1 - 2.5 |
| Sand, fine, black | 2.5- 4 |
| Silt, clayey, greenish-gray; some fine snand | 4 - 6 |
| Sand, fine, gray; some silt | 6 - 10 |
| **Site BG-19** | |
| Gravel (fill in lot) | 0 - 2 |
| Silt, clayey, black | 2 - 4 |
| Sand, fine, silty, grayish-green and gray | 4 - 11 |
| **Site BG-21** | |
| Silt, clayey, brown (fill) | 0 - 1.5 |
| Silt, clayey, gray; some sand | 1.5- 5 |
| Sand, fine, silty, gray | 5 - 10.5 |
| **Site BG-23** | |
| Asphalt, gravel and red brick (fill) | 0 - 1.5 |
| Sand, fine, brown | 1.5- 2 |
| Clay, silty, gray and brown | 2 - 5 |
| Sand, fine, brown, some silt | 5 - 9.5 |
| **Site BG-24** | |
| Sand, medium, some gravel and cinders, gray (fill) | 0 - 5.0 |
| Sand, very fine, silty, brown | 5.0- 7.0 |
| Sand, fine, brown | 7.0- 16.0 |
| Clay, gray | 16.0- 17.0 |
| Sand, fine, silty, brown | 17.0- 17.5 |
| Sand, medium to fine, dark gray | 17.5- 18.5 |
| Sand, medium, brown | 18.5- 25.0 |

| Description | Depth (feet) |
|---|---|
| **Site BG-31** | |
| Gravel, cinders, brown and gray (fill) | 0 - 2.0 |
| Sand, fine, silty, gray | 2.0 - 21.0 |
| **Site BG-35** | |
| Cinders, gravel, black (fill) | 0 - 2.0 |
| Sand, fine to medium, black (from 4.0 to 11.0) | 2.0 - 11.0 |
| Clay, silty, black | 11.0 - 12.0 |
| **Site BG-37** | |
| Cinders, gravel, white and black (fill) | 0 - 2.0 |
| Cinders, black (fill) | 2.0 - 3.0 |
| Clay, silty, cinders, black (fill) | 3.0 - 7.5 |
| Clay, dark gray | 7.5 - 8.0 |
| **Site BG-38 (Well 42)** | |
| Gravel, cinders, white and black (fill) | 0 - 2.0 |
| Cinders, black (fill) | 2.0 - 7.0 |
| Clay, silty, gray | 7.0 - 8.0 |
| **Site BG-39** | |
| Cinders, black (fill) | 0 - 6.0 |
| Clay, gray, silt | 6.0 - 6.1 |

GERAGHTY & MILLER, INC.
Ground-Water Consultants

# WELL CONSTRUCTION LOG

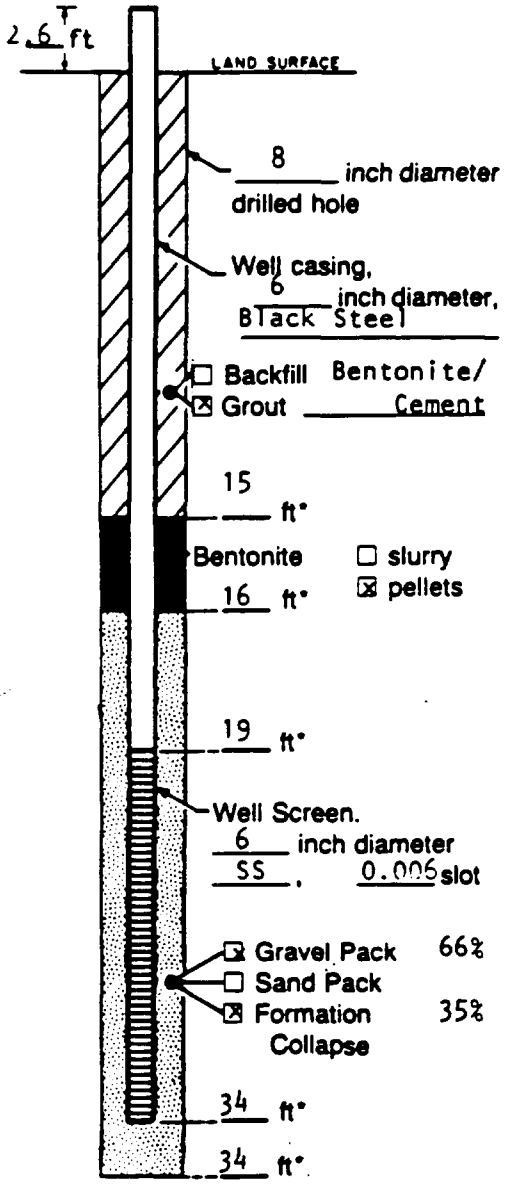


Measuring Point is Top of Well Casing Unless Otherwise Noted.

*Depth Below Land Surface

Project: Monsanto Company  Well: GM-1
Town/City: Sauget
County: St. Clair  State: IL
Permit No.:
Land-Surface Elevation and Datum: _____ feet  ☒ surveyed ☐ estimated
Measuring Point 413.65 Ft (MSL)
Installation Dates(s): 11/1/83
Drilling Method: Mud Rotary
Drilling Contractor: John Mathes & Assoc.
Drilling Fluid:

Development Techniques(s) and Date(s)
Pumped with bladder pump; surged with compressed air.

Fluid Loss During Drilling: _____ gallons
Water Removed During Development: 480 gallons
Static Depth to Water: _____ feet below M.P.
Pumping Depth to Water: _____ feet below M.P.
Pumping Duration: 4 hours
Yield: 2 gpm  Date:
Specific Capacity: _____ gpm/ft
Well Purpose: Ground-water monitoring well

Remarks:

Prepared by: D. Colton

GERAGHTY & MILLER, INC.
Ground-Water Consultants

# WELL CONSTRUCTION LOG

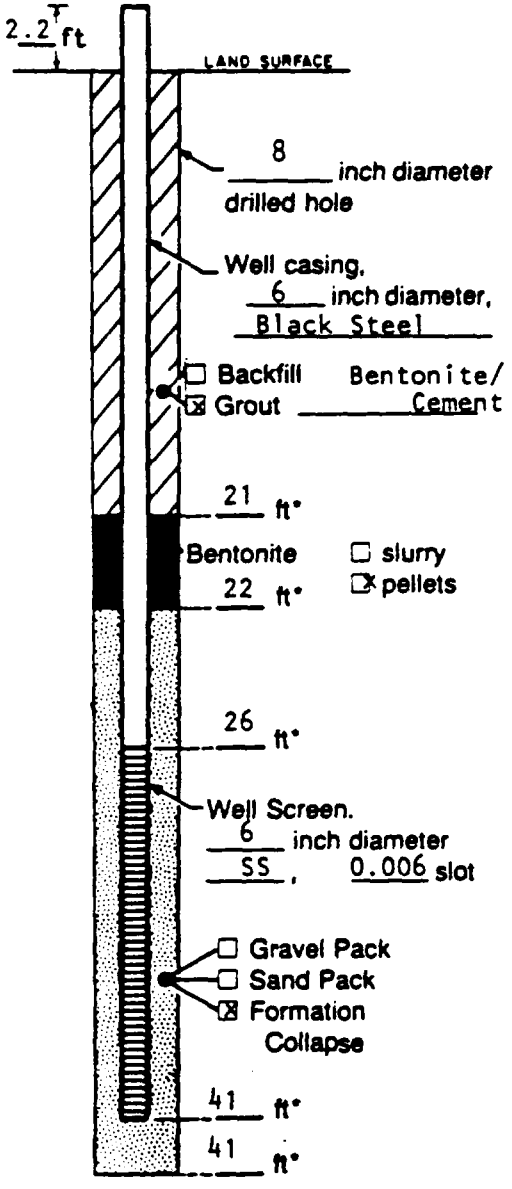


Measuring Point is Top of Well Casing Unless Otherwise Noted.

*Depth Below Land Surface

Project: Monsanto Company  Well: GM-2
Town/City: Sauget
County: St. Clair  State: IL
Permit No.:
Land-Surface Elevation and Datum: _____ feet  ☒ surveyed  ☐ estimated
Measuring Point 417.37 Ft (MSL)
Installation Dates(s): 11/8/83
Drilling Method: Mud Rotary
Drilling Contractor: John Mathes & Assoc.
Drilling Fluid: Bentonite

Development Techniques(s) and Date(s)
Surged with compressed air.

Fluid Loss During Drilling: _____ gallons
Water Removed During Development: 480 gallons
Static Depth to Water: _____ feet below M.P.
Pumping Depth to Water: _____ feet below M.P.
Pumping Duration: 4 hours
Yield: 2 gpm  Date: _____
Specific Capacity: _____ gpm/ft
Well Purpose: Ground-water monitoring well

Remarks:

Prepared by: D. Colton

GERAGHTY & MILLER, INC.
Ground-Water Consultants

# WELL CONSTRUCTION LOG

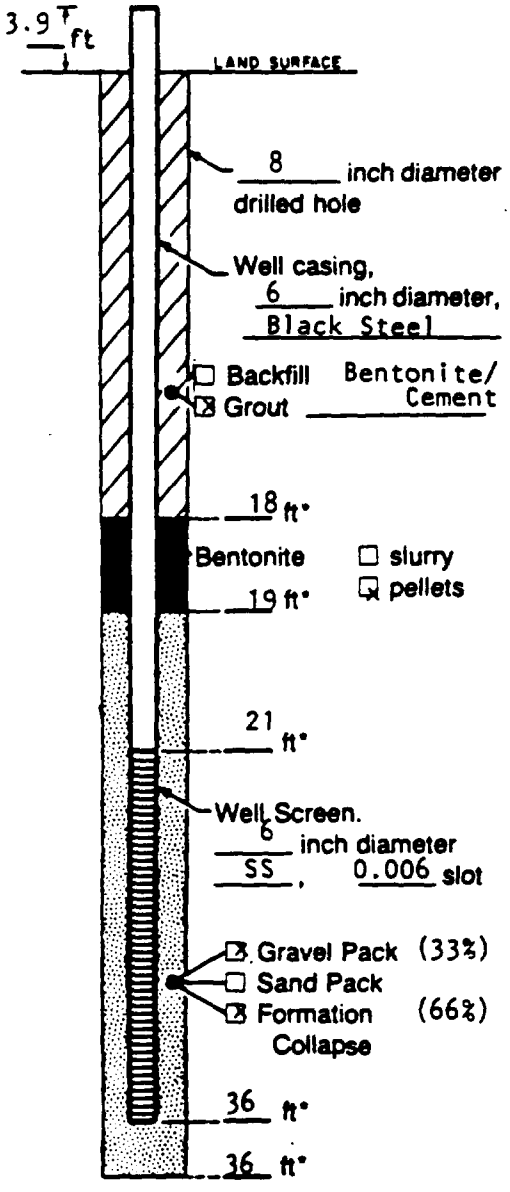


Measuring Point is Top of Well Casing Unless Otherwise Noted.

*Depth Below Land Surface

Project: Monsanto Company  Well: GM-3
Town/City: Sauget
County: St. Clair  State: IL
Permit No.:
Land-Surface Elevation and Datum: _____ feet ☒ surveyed
Monitoring Point 416.31 Ft (MSL) ☐ estimated
Installation Dates(s): 11/7/83
Drilling Method: Mud Rotary
Drilling Contractor: John Mathes & Assoc.
Drilling Fluid: Bentonite

Development Techniques(s) and Date(s)
Surged with compressed air.

Fluid Loss During Drilling: _____ gallons
Water Removed During Development: 480 gallons
Static Depth to Water: _____ feet below M.P.
Pumping Depth to Water: _____ feet below M.P.
Pumping Duration: 4 hours
Yield: 2 gpm  Date: _____
Specific Capacity: _____ gpm/ft
Well Purpose: Ground-water monitoring well

Remarks:

Prepared by: D. Colton

GERAGHTY & MILLER, INC.
Ground-Water Consultants

# WELL CONSTRUCTION LOG

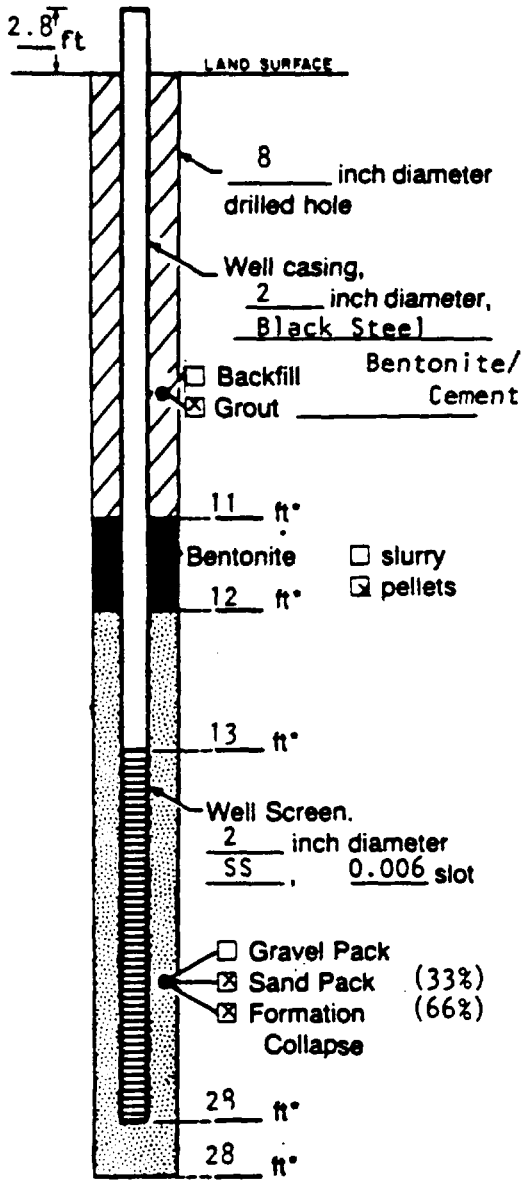


Measuring Point is Top of Well Casing Unless Otherwise Noted.

*Depth Below Land Surface

Project: Monsanto Company Well: GM-4A
Town/City: Sauget
County: St. Clair State: Illinois
Permit No.:
Land-Surface Elevation and Datum: _____ feet ☒ surveyed ☐ estimated
Measuring Point 406.43 Ft (MSL)
Installation Dates(s): 11/2/83
Drilling Method: Hollow Stem Auger
Drilling Contractor: John Mathes & Assoc.
Drilling Fluid: Water

Development Techniques(s) and Date(s)
Surged with compressed air; pumped with bladder pump.

Fluid Loss During Drilling: 150 gallons
Water Removed During Development: 240 gallons
Static Depth to Water: _____ feet below M.P.
Pumping Depth to Water: _____ feet below M.P.
Pumping Duration: 4 hours
Yield: 1 gpm Date: _____
Specific Capacity: _____ gpm/ft
Well Purpose: Ground-water monitoring well

Remarks:

Prepared by: D. Colton

GERAGHTY & MILLER, INC.
Ground-Water Consultants

# WELL CONSTRUCTION LOG

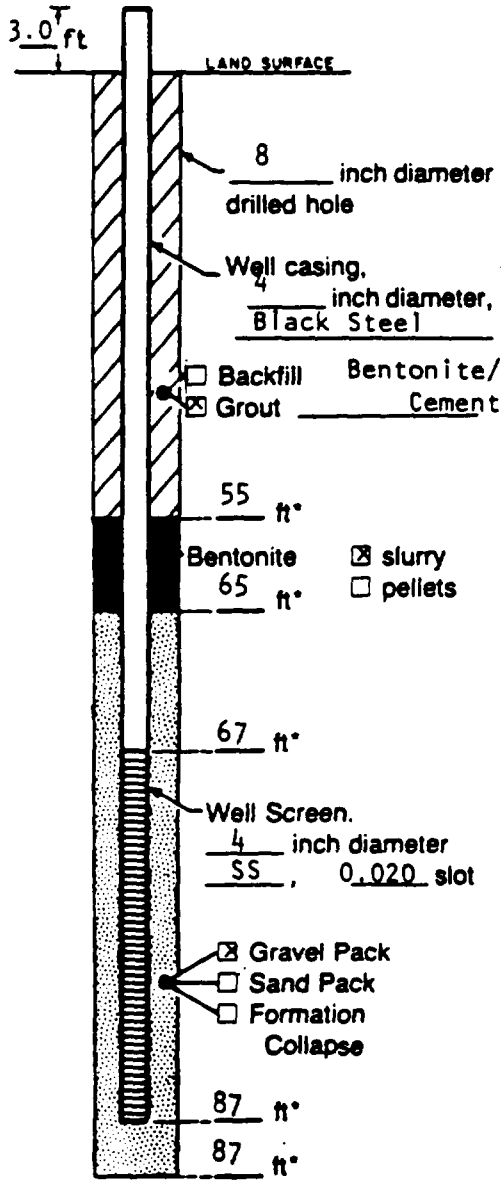


Measuring Point is Top of Well Casing Unless Otherwise Noted.

*Depth Below Land Surface

Project: Monsanto Company  Well: GM-4B
Town/City: Sauget
County: St. Clair  State: IL
Permit No.:
Land-Surface Elevation and Datum: _____ feet  ☒ surveyed
Measuring Point 406.70 Ft (MSL)  ☐ estimated
Installation Dates(s): 7/17/84
Drilling Method: Mud Rotary
Drilling Contractor: John Mathes & Assoc.
Drilling Fluid: Bentonite

Development Techniques(s) and Date(s)
Surged with compressed air.

Fluid Loss During Drilling: _____ gallons
Water Removed During Development: 1200 gallons
Static Depth to Water: _____ feet below M.P.
Pumping Depth to Water: _____ feet below M.P.
Pumping Duration: 2 hours
Yield: 10 gpm  Date: _____
Specific Capacity: _____ gpm/ft
Well Purpose: Ground-water monitoring well

Remarks:

Prepared by: D. Colton

GERAGHTY & MILLER, INC.
Ground-Water Consultants

# WELL CONSTRUCTION LOG

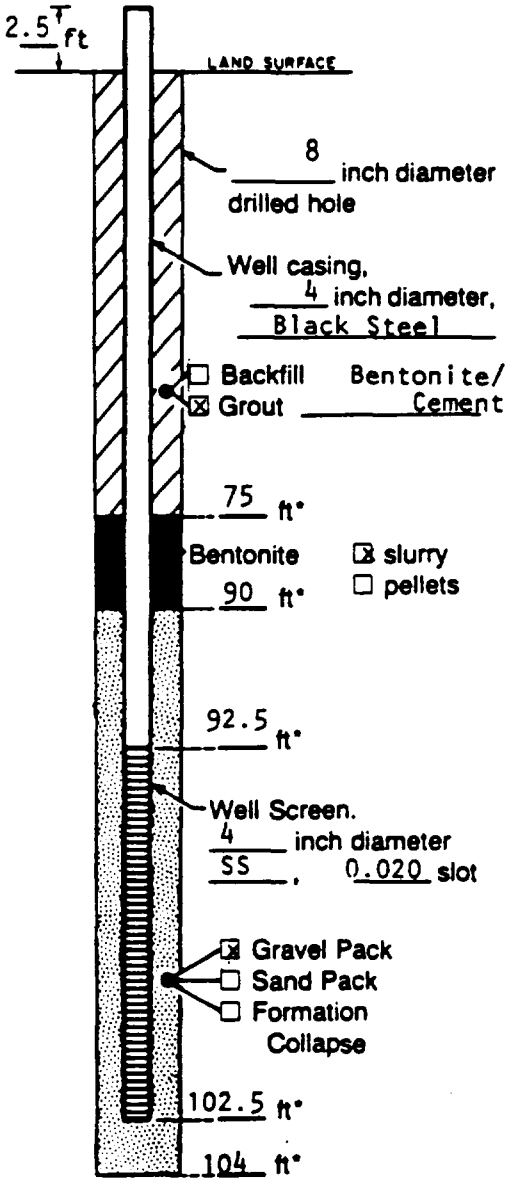


Measuring Point is Top of Well Casing Unless Otherwise Noted.

*Depth Below Land Surface

Project: Monsanto Company  Well: GM-4C
Town/City: Sauget
County: St. Clair  State: Il
Permit No.:
Land-Surface Elevation and Datum: _____ feet  ☒ surveyed
Measuring Point 406.51 Ft (MSL)  ☐ estimated
Installation Date(s): 1/11/84
Drilling Method: Mud Rotary
Drilling Contractor: John Mathes & Assoc.
Drilling Fluid: Bentonite

Development Techniques(s) and Date(s)
Surged with compressed air.

Fluid Loss During Drilling: _____ gallons
Water Removed During Development: 1200 gallons
Static Depth to Water: _____ feet below M.P.
Pumping Depth to Water: _____ feet below M.P.
Pumping Duration: 2 hours
Yield: 10 gpm  Date: _____
Specific Capacity: _____ gpm/ft
Well Purpose: Ground-water monitoring well

Remarks:

Prepared by: D. Colton

GERAGHTY & MILLER, INC.
Ground-Water Consultants

# WELL CONSTRUCTION LOG

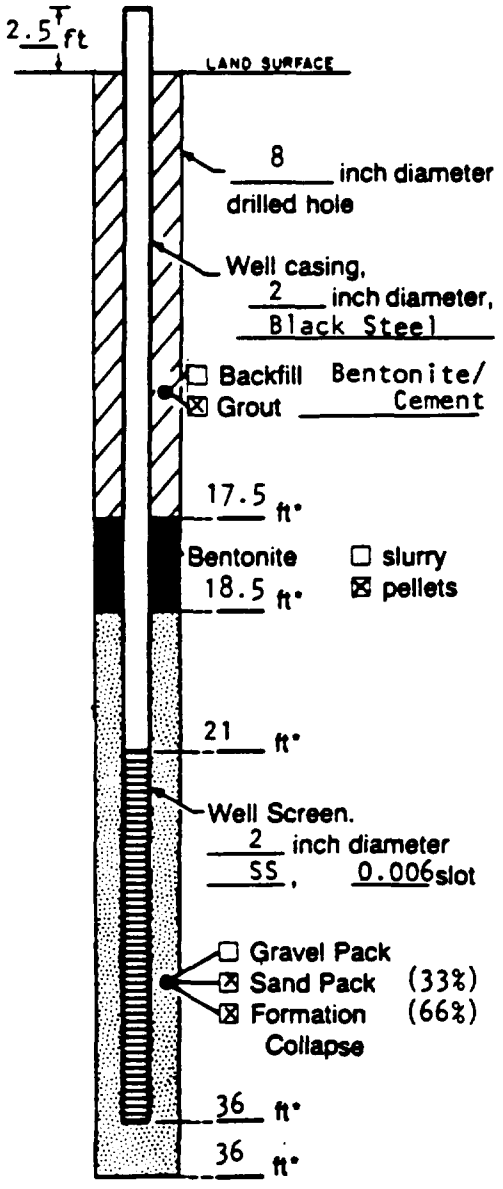


Measuring Point is Top of Well Casing Unless Otherwise Noted.

*Depth Below Land Surface

Project: Monsanto Company  Well: GM-5
Town/City: Sauget
County: St. Clair  State: IL
Permit No.:
Land-Surface Elevation and Datum: _____ feet  ☒ surveyed
Measuring Point 414.94 Ft (MSL)  ☐ estimated
Installation Dates(s): 11/3/83
Drilling Method: Hollow Stem Auger
Drilling Contractor: John Mathes & Assoc.
Drilling Fluid: Water

Development Techniques(s) and Date(s)
Pumped with bladder pump; surged with compressed air.

Fluid Loss During Drilling: 200 gallons
Water Removed During Development: 240 gallons
Static Depth to Water: _____ feet below M.P.
Pumping Depth to Water: _____ feet below M.P.
Pumping Duration: 4 hours
Yield: 1 gpm  Date: _____
Specific Capacity: _____ gpm/ft
Well Purpose: Ground-Water Monitoring well

Remarks:

Prepared by: D. Colton

GERAGHTY & MILLER, INC.
Ground-Water Consultants

# WELL CONSTRUCTION LOG

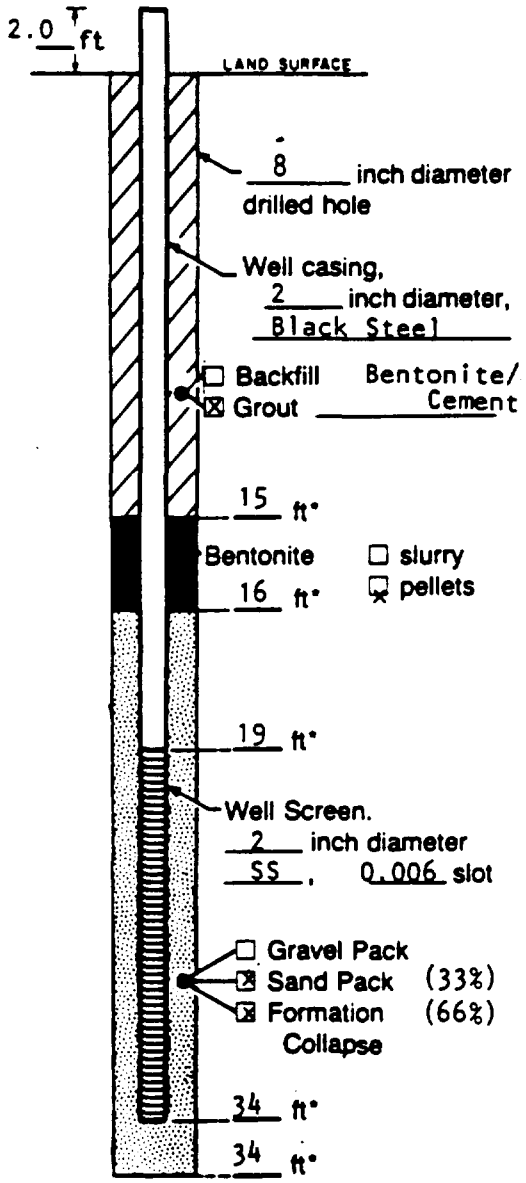


Measuring Point is Top of Well Casing Unless Otherwise Noted.

*Depth Below Land Surface

Project: Monsanto Company  Well: GM-6A
Town/City: Sauget
County: St. Clair  State: IL
Permit No.:
Land-Surface Elevation and Datum: _____ feet  ☒ surveyed
Measuring Point 414.59 Ft (MSL)  ☐ estimated
Installation Dates(s): 11/2/83
Drilling Method: Hollow Stem Auger
Drilling Contractor: John Mathes & Assoc.
Drilling Fluid: Water

Development Techniques(s) and Date(s)
Pumped with bladder pump; surged with compressed air.

Fluid Loss During Drilling: 200 gallons
Water Removed During Development: 240 gallons
Static Depth to Water: _____ feet below M.P.
Pumping Depth to Water: _____ feet below M.P.
Pumping Duration: 4 hours
Yield: 1 gpm  Date: _____
Specific Capacity: _____ gpm/ft
Well Purpose: Ground-water monitoring well

Remarks:

Prepared by: D. Colton

GERAGHTY & MILLER, INC.
Ground-Water Consultants

# WELL CONSTRUCTION LOG

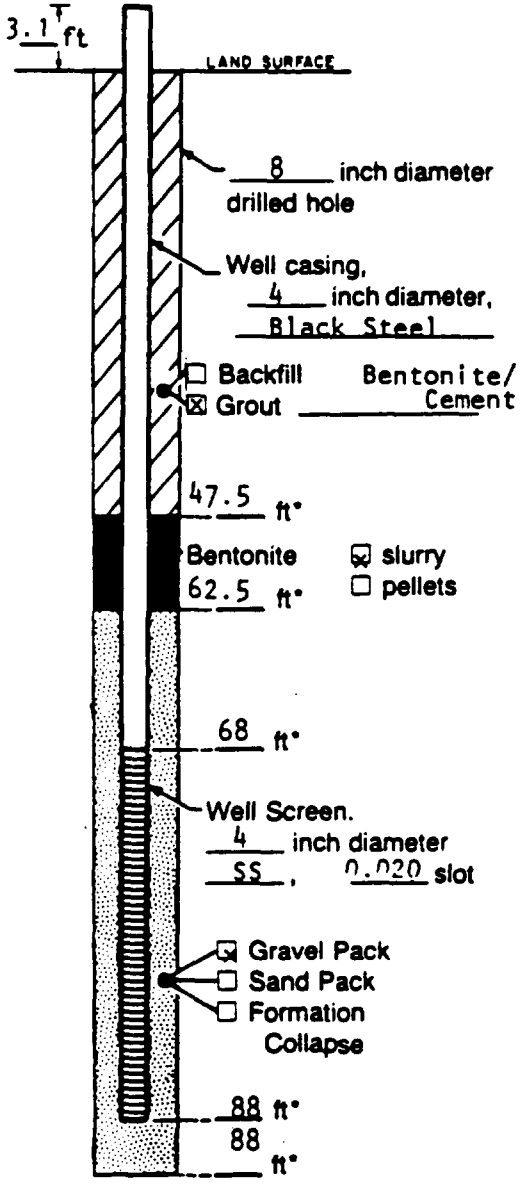


Measuring Point is Top of Well Casing Unless Otherwise Noted.

*Depth Below Land Surface

Project: Monsanto Company  Well: GM-6B
Town/City: Sauget
County: St. Clair  State: IL
Permit No.:
Land-Surface Elevation and Datum: _____ feet  ☒ surveyed
Measuring Point 416.04 Ft (MSL)  ☐ estimated
Installation Dates(s): 7/26/84
Drilling Method: Mud Rotary
Drilling Contractor: John Mathes & Assoc.
Drilling Fluid: Bentonite

Development Techniques(s) and Date(s)
Surged with compressed air.

Fluid Loss During Drilling: _____ gallons
Water Removed During Development: 1200 gallons
Static Depth to Water: _____ feet below M.P.
Pumping Depth to Water: _____ feet below M.P.
Pumping Duration: 2 hours
Yield: 10 gpm  Date: _____
Specific Capacity: _____ gpm/ft
Well Purpose: Ground-water monitoring well

Remarks:

Prepared by: D. Colton

GERAGHTY & MILLER, INC.
Ground-Water Consultants

# WELL CONSTRUCTION LOG

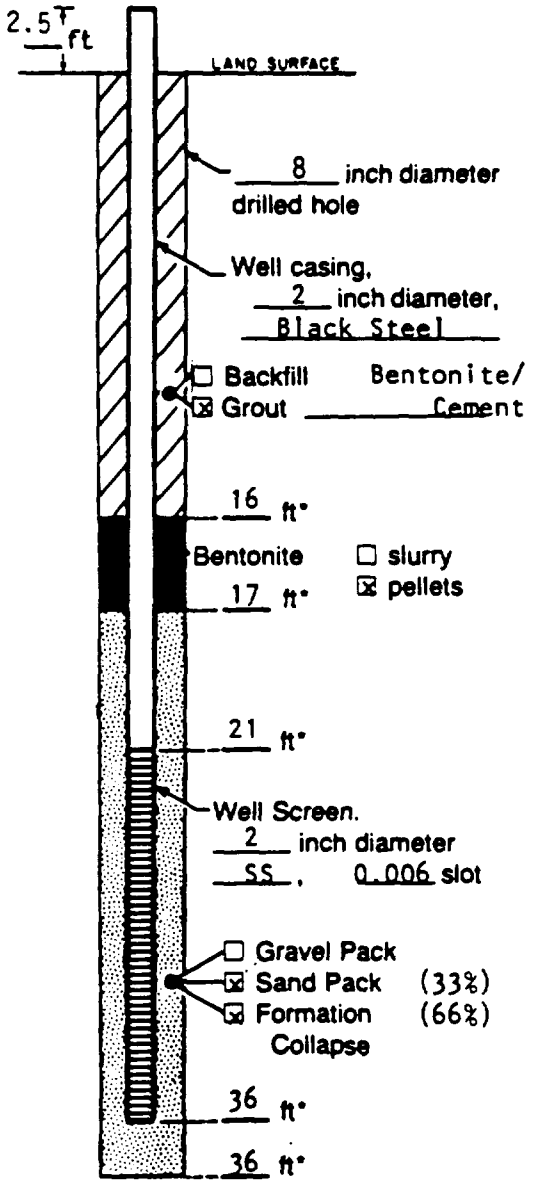


Measuring Point is Top of Well Casing Unless Otherwise Noted.

*Depth Below Land Surface

Project: Monsanto Company  Well: GM-7
Town/City: Sauget
County: St. Clair  State: IL
Permit No.:
Land-Surface Elevation and Datum: _____ feet  ☒ surveyed  ☐ estimated
Measuring Point 414.95 Ft (MSL)
Installation Dates(s): 11/3/83
Drilling Method: Hollow Stem Auger
Drilling Contractor: John Mathes & Assoc.
Drilling Fluid: Water

Development Techniques(s) and Date(s)
Pumped with bladder pump; surged with compressed air.

Fluid Loss During Drilling: _____ gallons
Water Removed During Development: 200 gallons
Static Depth to Water: 240 feet below M.P.
Pumping Depth to Water: _____ feet below M.P.
Pumping Duration: 4 hours
Yield: 1 gpm  Date: _____
Specific Capacity: _____ gpm/ft
Well Purpose: Ground-water monitoring well

Remarks:

Prepared by: D. Colton

GERAGHTY & MILLER, INC.
Ground-Water Consultants

# WELL CONSTRUCTION LOG

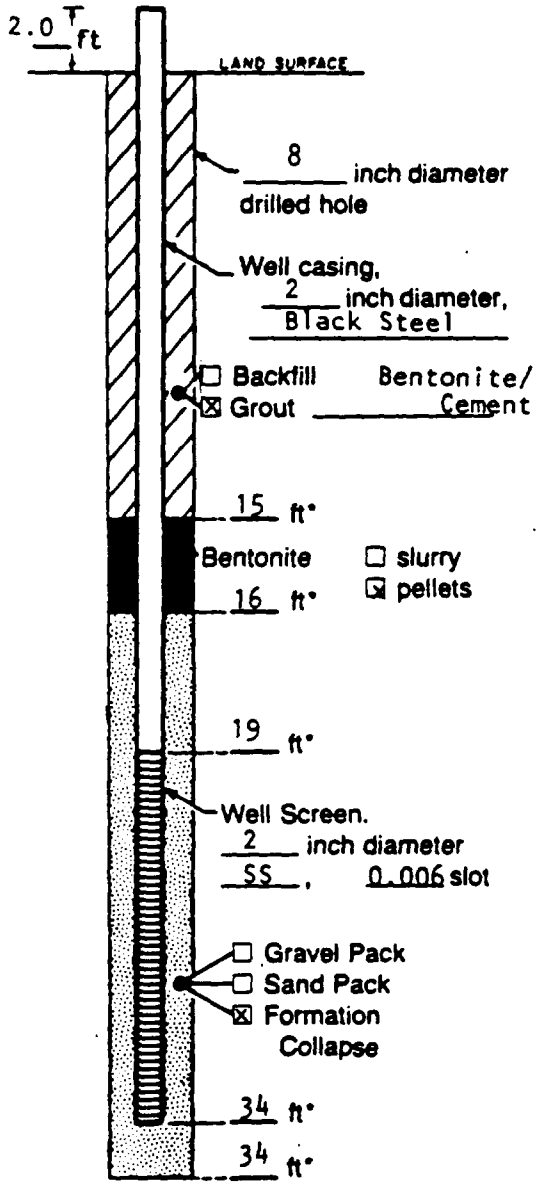


Measuring Point is Top of Well Casing Unless Otherwise Noted.

*Depth Below Land Surface

Project: Monsanto Company  Well: GM-8
Town/City: Sauget
County: St. Clair  State: IL
Permit No.:
Land-Surface Elevation and Datum: _____ feet  ☒ surveyed
Measuring Point 418.49 Ft (MSL)  ☐ estimated
Installation Dates(s): 11/2/83
Drilling Method: Hollow Stem Auger
Drilling Contractor: John Mathes & Assoc.
Drilling Fluid: Water

Development Techniques(s) and Date(s)
Pumped with bladder pump; surged with compressed air.

Fluid Loss During Drilling: 250 gallons
Water Removed During Development: 270 gallons
Static Depth to Water: _____ feet below M.P.
Pumping Depth to Water: _____ feet below M.P.
Pumping Duration: 4.5 hours
Yield: 1 gpm  Date: _____
Specific Capacity: _____ gpm/ft
Well Purpose: Ground-water monitoring well

Remarks:

Prepared by: D. Colton

GERAGHTY & MILLER, INC.
Ground-Water Consultants

# WELL CONSTRUCTION LOG

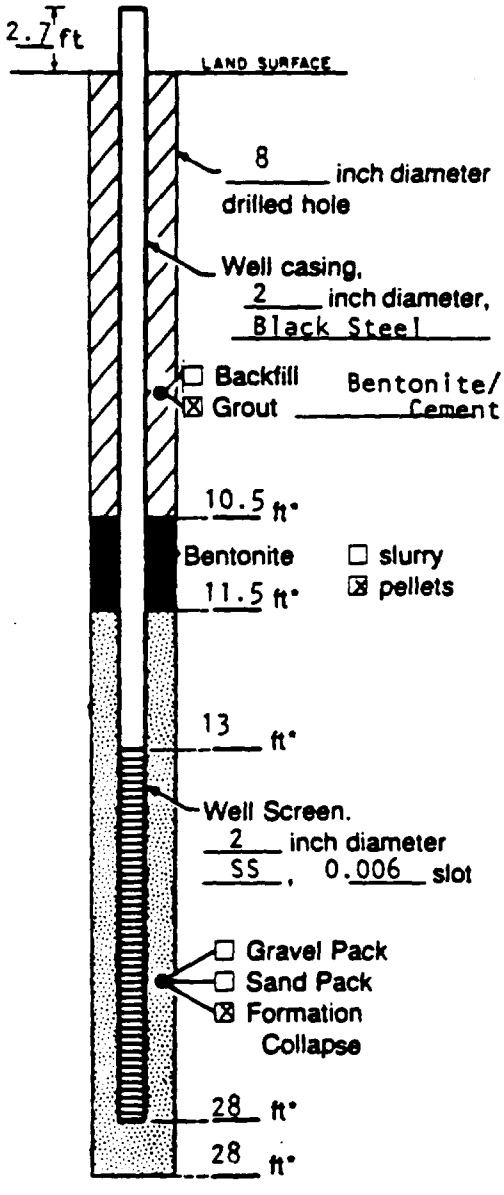


Measuring Point is Top of Well Casing Unless Otherwise Noted.

*Depth Below Land Surface

Project: Monsanto Company  Well: GM-9A
Town/City: Sauget
County: St. Clair  State: IL
Permit No.:
Land-Surface Elevation and Datum: _____ feet  ☒ surveyed
Measuring Point 414.47 Ft (MSL)  ☐ estimated
Installation Date(s): 11/10/83
Drilling Method: Hollow Stem Auger
Drilling Contractor: John Mathes & Assoc.
Drilling Fluid: Water

Development Techniques(s) and Date(s)
Pumped with bladder pump; surged with compressed air.

Fluid Loss During Drilling: 200 gallons
Water Removed During Development: 240 gallons
Static Depth to Water: _____ feet below M.P.
Pumping Depth to Water: _____ feet below M.P.
Pumping Duration: 4 hours
Yield: 1 gpm  Date: _____
Specific Capacity: _____ gpm/ft
Well Purpose: Ground-water monitoring well

Remarks:

Prepared by: D. Colton

GERAGHTY & MILLER, INC.
Ground-Water Consultants

# WELL CONSTRUCTION LOG

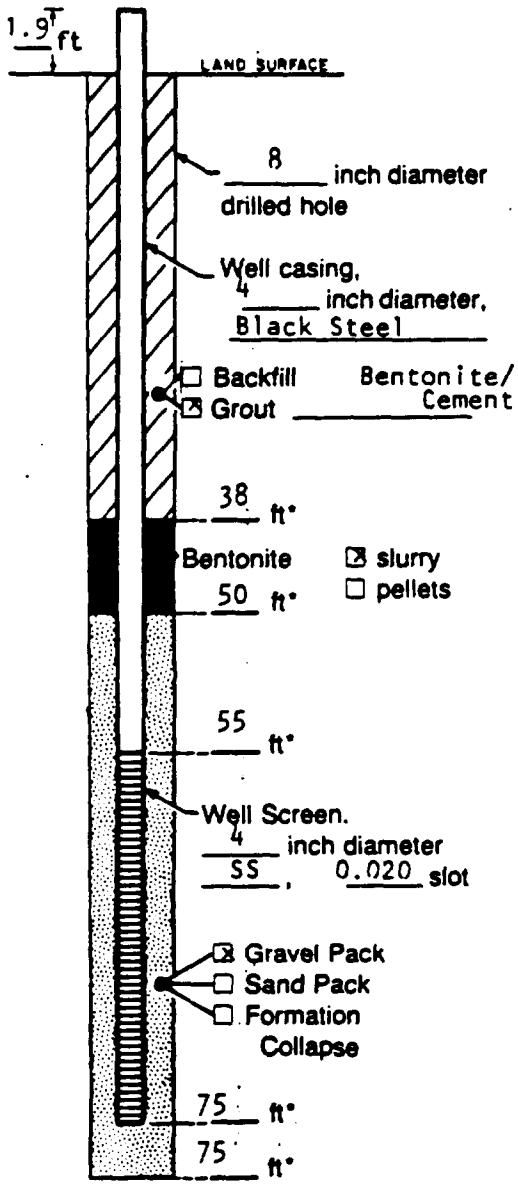


Measuring Point is Top of Well Casing Unless Otherwise Noted.

*Depth Below Land Surface

Project: Monsanto Company  Well: GM-9B
Town/City: Sauget
County: St. Clair  State: Il
Permit No.:
Land-Surface Elevation and Datum: _____ feet  ☒ surveyed
Measuring Point 412.36 Ft (MSL)  ☐ estimated
Installation Dates(s): 8/17/84
Drilling Method: Mud Rotary
Drilling Contractor: John Mathes & Assoc.
Drilling Fluid: Bentonite

Development Techniques(s) and Date(s)
Surged with compressed air.

Fluid Loss During Drilling: _____ gallons
Water Removed During Development: 1200 gallons
Static Depth to Water: _____ feet below M.P.
Pumping Depth to Water: _____ feet below M.P.
Pumping Duration: 2 hours
Yield: 10 gpm  Date: _____
Specific Capacity: _____ gpm/ft
Well Purpose: Ground-water monitoring well

Remarks:

Prepared by: D. Colton

GERAGHTY & MILLER, INC.
Ground-Water Consultants

# WELL CONSTRUCTION LOG

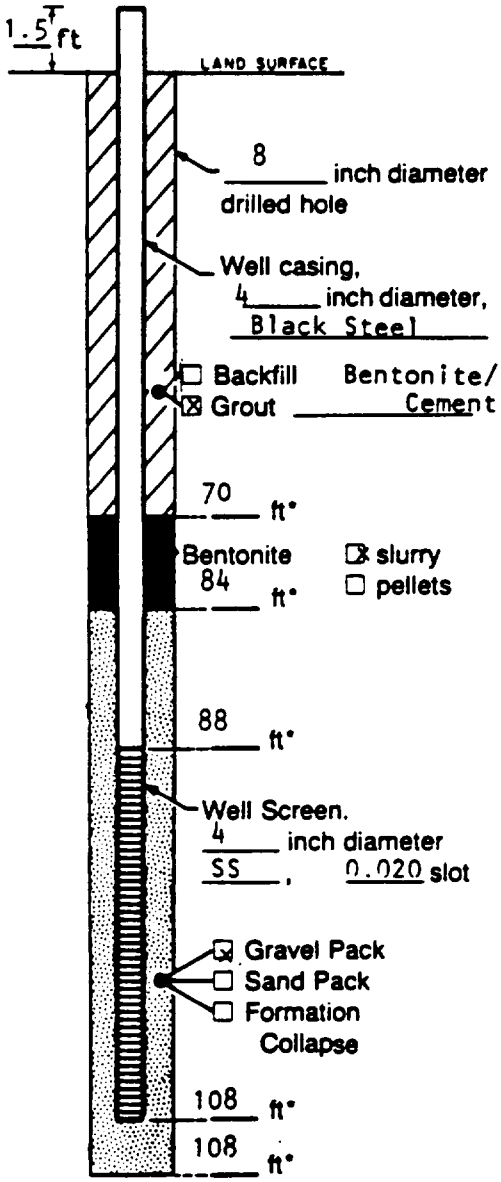


Measuring Point is Top of Well Casing Unless Otherwise Noted.

*Depth Below Land Surface

Project: Monsanto Company  Well: GM-9C
Town/City: Sauget
County: St. Clair  State: IL
Permit No.:
Land-Surface Elevation and Datum: _____ feet  ☒ surveyed
Measuring Point 416.97 Ft (MSL)  ☐ estimated
Installation Dates(s): 8/15/84
Drilling Method: Mud Rotary
Drilling Contractor: John Mathes & Assoc.
Drilling Fluid: Bentonite

Development Techniques(s) and Date(s)
Surged with compressed air.

Fluid Loss During Drilling: _____ gallons
Water Removed During Development: 1200 gallons
Static Depth to Water: _____ feet below M.P.
Pumping Depth to Water: _____ feet below M.P.
Pumping Duration: 2 hours
Yield: 10 gpm  Date: _____
Specific Capacity: _____ gpm/ft
Well Purpose: Ground-water monitoring well

Remarks:

Prepared by: D. Colton

GERAGHTY & MILLER, INC.
Ground-Water Consultants

# WELL CONSTRUCTION LOG

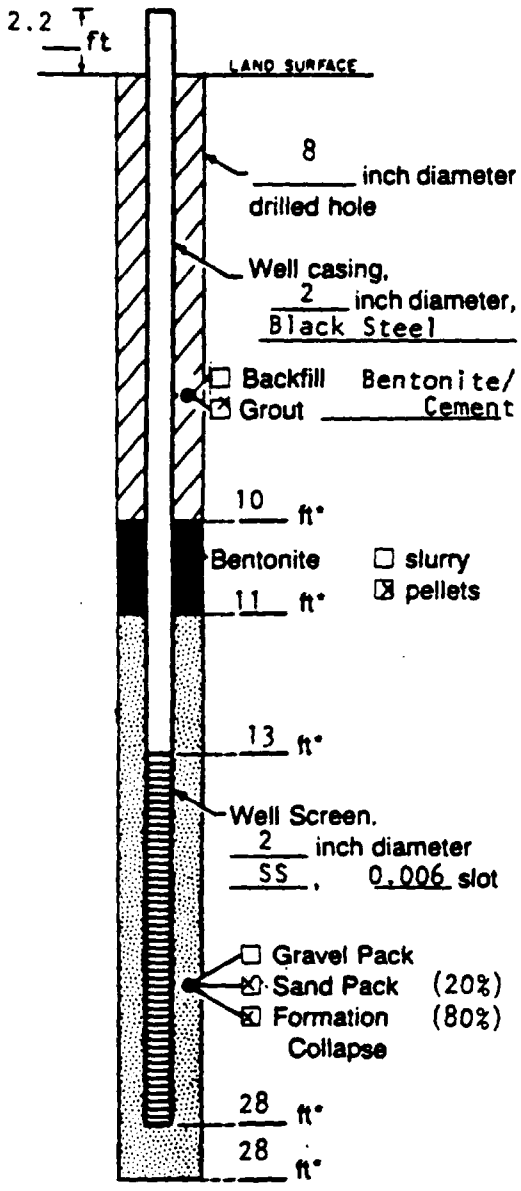


Measuring Point is Top of Well Casing Unless Otherwise Noted.

*Depth Below Land Surface

Project: Monsanto Company  Well: GM-10A
Town/City: Sauget
County: St. Clair  State: IL
Permit No.:
Land-Surface Elevation and Datum: _____ feet  ☒ surveyed
Measuring Point 412.97 Ft (MSL)  ☐ estimated
Installation Dates(s): 11/9/83
Drilling Method: Hollow Stem Auger
Drilling Contractor: John Mathes & Assoc.
Drilling Fluid: Water

Development Techniques(s) and Date(s)
Pumped with bladder pump; surged with compressed air.

Fluid Loss During Drilling: 200 gallons
Water Removed During Development: 240 gallons
Static Depth to Water: _____ feet below M.P.
Pumping Depth to Water: _____ feet below M.P.
Pumping Duration: 4 hours
Yield: 1 gpm  Date: _____
Specific Capacity: _____ gpm/ft
Well Purpose: Ground-water monitoring well

Remarks:

Prepared by: D. Colton

GERAGHTY & MILLER, INC.
Ground-Water Consultants

# WELL CONSTRUCTION LOG

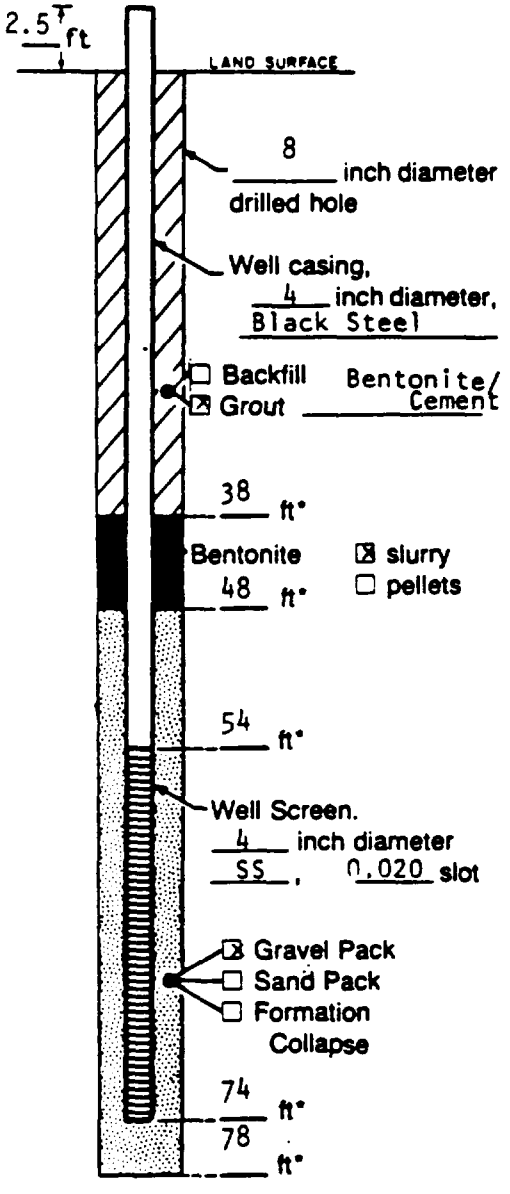


Measuring Point is Top of Well Casing Unless Otherwise Noted.

*Depth Below Land Surface

Project: Monsanto Company  Well: GM-10B
Town/City: Sauget
County: St. Clair  State: IL
Permit No.:
Land-Surface Elevation and Datum: _____ feet  ☒ surveyed ☐ estimated
Measuring Point 413.90 Ft (MSL)
Installation Dates(s): 1/22/85
Drilling Method: Mud Rotary
Drilling Contractor: John Mathes & Assoc.
Drilling Fluid: Bentonite

Development Techniques(s) and Date(s)
Surged with compressed air.

Fluid Loss During Drilling: _____ gallons
Water Removed During Development: 1200 gallons
Static Depth to Water: _____ feet below M.P.
Pumping Depth to Water: _____ feet below M.P.
Pumping Duration: 2 hours
Yield: 10 gpm  Date: _____
Specific Capacity: _____ gpm/ft
Well Purpose: Ground-water monitoring well

Remarks:

Prepared by: D. Colton

GERAGHTY & MILLER, INC.
Ground-Water Consultants

# WELL CONSTRUCTION LOG

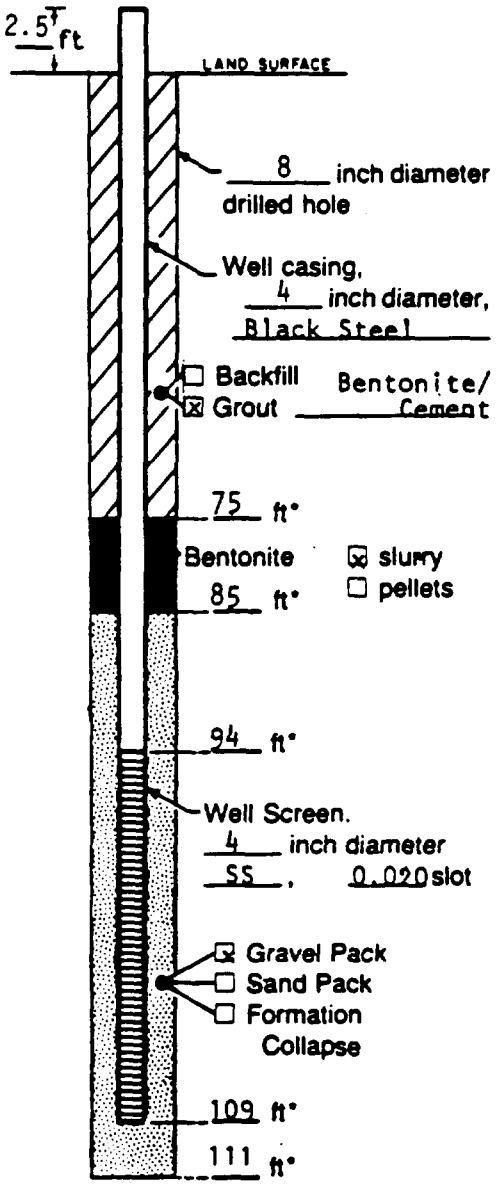


Measuring Point is Top of Well Casing Unless Otherwise Noted.

*Depth Below Land Surface

Project: Monsanto Company Well: GM-10C
Town/City: Sauget
County: St. Clair State: Il
Permit No.:
Land-Surface Elevation and Datum: _____ feet ☒ surveyed
Measuring Point 413.78 Ft (MSL) ☐ estimated
Installation Dates(s): 1/18/85
Drilling Method: Mud Rotary
Drilling Contractor: John Mathes & Assoc.
Drilling Fluid: Bentonite

Development Techniques(s) and Date(s)
Surged with compressed air.

Fluid Loss During Drilling: _____ gallons
Water Removed During Development: 1200 gallons
Static Depth to Water: _____ feet below M.P.
Pumping Depth to Water: _____ feet below M.P.
Pumping Duration: 2 hours
Yield: 10 gpm Date: _____
Specific Capacity: _____ gpm/ft
Well Purpose: Ground-water monitoring well

Remarks:

Prepared by: D. Colton

GERAGHTY & MILLER, INC.
Ground-Water Consultants

# WELL CONSTRUCTION LOG

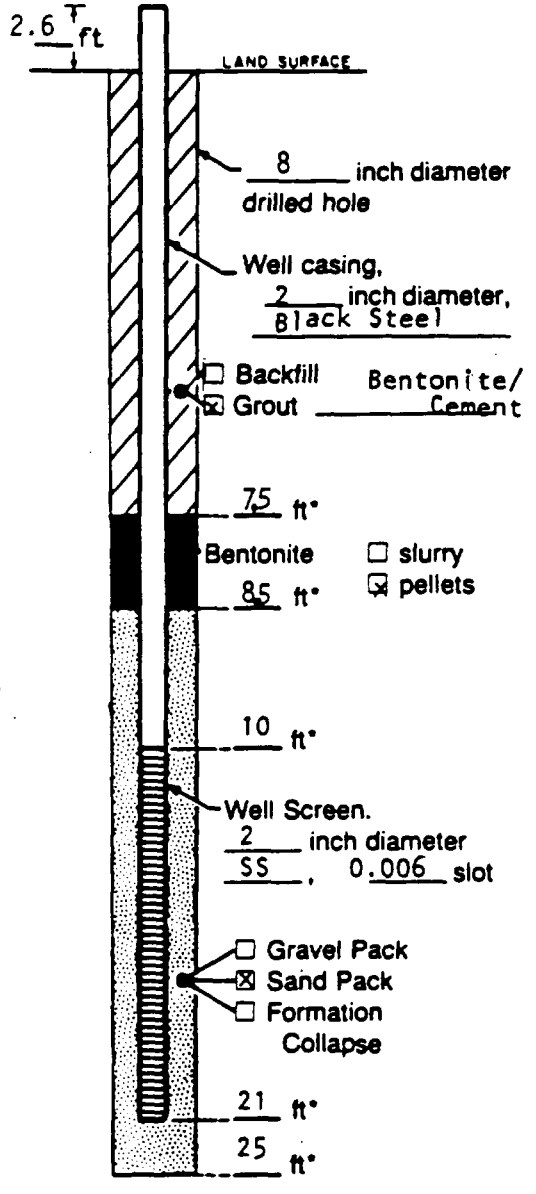


Measuring Point is Top of Well Casing Unless Otherwise Noted.

*Depth Below Land Surface

Project Monsanto Company Well GM-11
Town/City Sauget
County St. Clair State IL
Permit No.
Land-Surface Elevation
and Datum _____ feet ☒ surveyed
Measuring Point 412.95 Ft (MSL) ☐ estimated
Installation Dates(s) 10/31/83
Drilling Method Hollow Stem Auger
Drilling Contractor John Mathes & Assoc.
Drilling Fluid Water

Development Techniques(s) and Date(s)
Pumped with bladder pump; surged with compressed air.

Fluid Loss During Drilling 200 gallons
Water Removed During Development 240 gallons
Static Depth to Water _____ feet below M.P.
Pumping Depth to Water _____ feet below M.P.
Pumping Duration 4 hours
Yield 1 gpm Date _____
Specific Capacity _____ gpm/ft
Well Purpose Ground-water monitoring well

Remarks

Prepared by D. Colton

GERAGHTY & MILLER, INC.
Ground-Water Consultants

# WELL CONSTRUCTION LOG

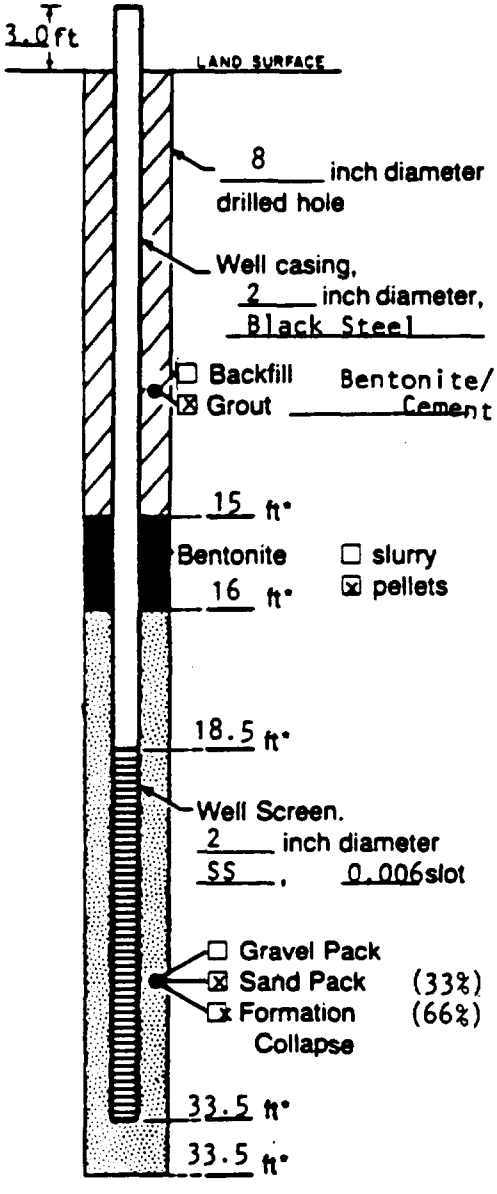


Measuring Point is Top of Well Casing Unless Otherwise Noted.

*Depth Below Land Surface

Project: Monsanto Company  Well: GM-12A
Town/City: Sauget
County: St. Clair  State: IL
Permit No.:
Land-Surface Elevation and Datum: _____ feet  ☒ surveyed
Measuring Point 416.47 Ft (MSL)  ☐ estimated
Installation Dates(s): 11/9/83
Drilling Method: Hollow Stem Auger
Drilling Contractor: John Mathes & Assoc.
Drilling Fluid: Water

Development Techniques(s) and Date(s)
Pumped with bladder pump; surged with compressed air.

Fluid Loss During Drilling: 200 gallons
Water Removed During Development: 240 gallons
Static Depth to Water: _____ feet below M.P.
Pumping Depth to Water: _____ feet below M.P.
Pumping Duration: 4 hours
Yield: 1 gpm  Date: _____
Specific Capacity: _____ gpm/ft
Well Purpose: Ground-water monitoring well

Remarks:

Prepared by: D. Colton

GERAGHTY & MILLER, INC.
Ground-Water Consultants

# WELL CONSTRUCTION LOG

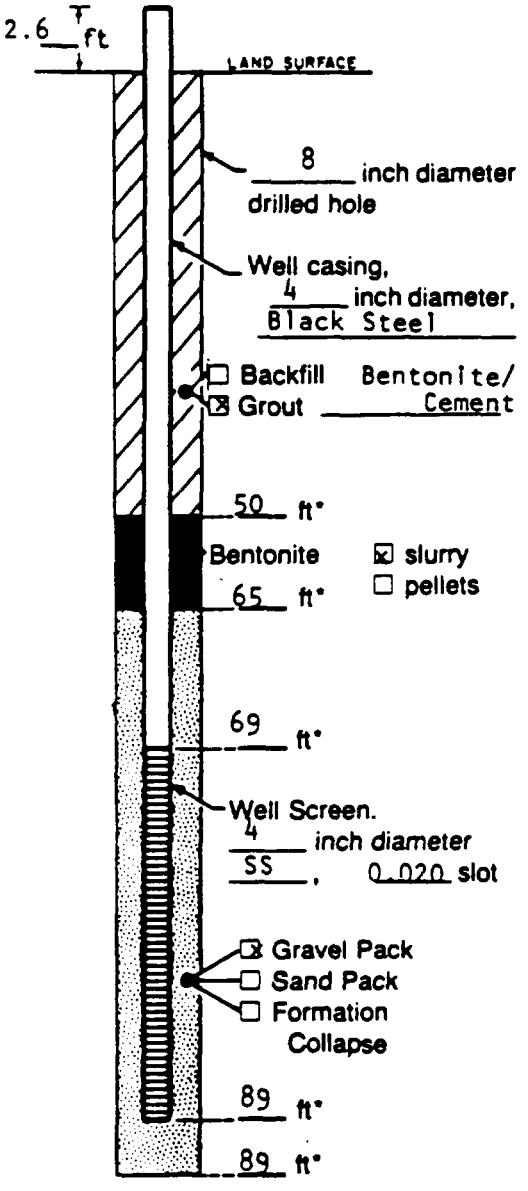


Measuring Point is Top of Well Casing Unless Otherwise Noted.

*Depth Below Land Surface

Project: Monsanto Company  Well: GM-12B
Town/City: Sauget
County: St. Clair  State: IL
Permit No.:
Land-Surface Elevation and Datum: _____ feet  ☒ surveyed
Measuring Point 416.80 Ft (MSL)  ☐ estimated
Installation Dates(s): 8/13/84
Drilling Method: Mud Rotary
Drilling Contractor: John Mathes & Assoc.
Drilling Fluid: Bentonite

Development Techniques(s) and Date(s)
Surged with compressed air.

Fluid Loss During Drilling: _____ gallons
Water Removed During Development: 1200 gallons
Static Depth to Water: _____ feet below M.P.
Pumping Depth to Water: _____ feet below M.P.
Pumping Duration: 2 hours
Yield: 10 gpm  Date: _____
Specific Capacity: _____ gpm/ft
Well Purpose: Ground-water monitoring well

Remarks:

Prepared by: D. Colton

GERAGHTY & MILLER, INC.
Ground-Water Consultants

# WELL CONSTRUCTION LOG

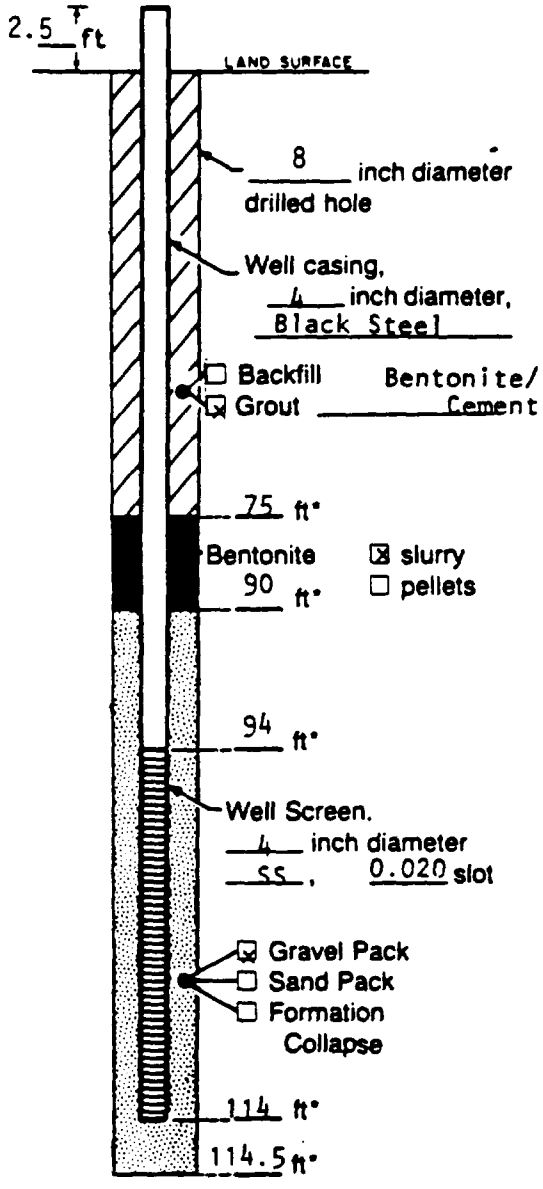


Measuring Point is Top of Well Casing Unless Otherwise Noted.

*Depth Below Land Surface

Project: Monsanto Company — Well: GM-12C
Town/City: Sauget
County: St. Clair — State: IL
Permit No.:
Land-Surface Elevation and Datum: _____ feet ☒ surveyed ☐ estimated
Measuring Point 416.79 Ft (MSL)
Installation Dates(s): 1/17/85
Drilling Method: Mud Rotary
Drilling Contractor: John Mathes & Assoc.
Drilling Fluid: Bentonite

Development Techniques(s) and Date(s)
Surged with compressed air.

Fluid Loss During Drilling: _____ gallons
Water Removed During Development: 1200 gallons
Static Depth to Water: _____ feet below M.P.
Pumping Depth to Water: _____ feet below M.P.
Pumping Duration: 2 hours
Yield: 10 gpm — Date: _____
Specific Capacity: _____ gpm/ft
Well Purpose: Ground-water monitoring well

Remarks:

Prepared by: D. Colton

GERAGHTY & MILLER, INC.
Ground-Water Consultants

# WELL CONSTRUCTION LOG

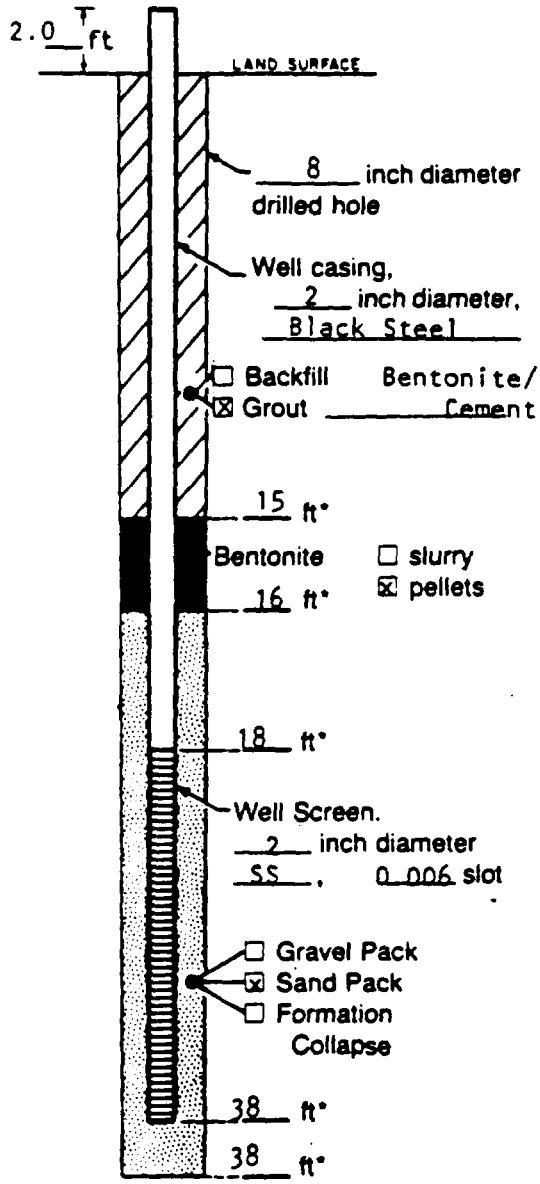


Measuring Point is Top of Well Casing Unless Otherwise Noted.

*Depth Below Land Surface

Project Monsanto Company Well GM-13
Town/City Sauget
County St. Clair State Il
Permit No.
Land-Surface Elevation
and Datum _____ feet ☒ surveyed
Measuring Point 415.47 Ft (MSL) ☐ estimated
Installation Dates(s) 8/15/84
Drilling Method Hollow Stem Auger
Drilling Contractor John Mathes & Assoc.
Drilling Fluid Water

Development Techniques(s) and Date(s)
Surged with compressed air.

Fluid Loss During Drilling 200 gallons
Water Removed During Development 210 gallons
Static Depth to Water _____ feet below M.P.
Pumping Depth to Water _____ feet below M.P.
Pumping Duration 3 hours
Yield 1.5 gpm Date _____
Specific Capacity _____ gpm/ft
Well Purpose Ground-water monitoring well

Remarks

Prepared by D. Colton

GERAGHTY & MILLER, INC.
Ground-Water Consultants

# WELL CONSTRUCTION LOG

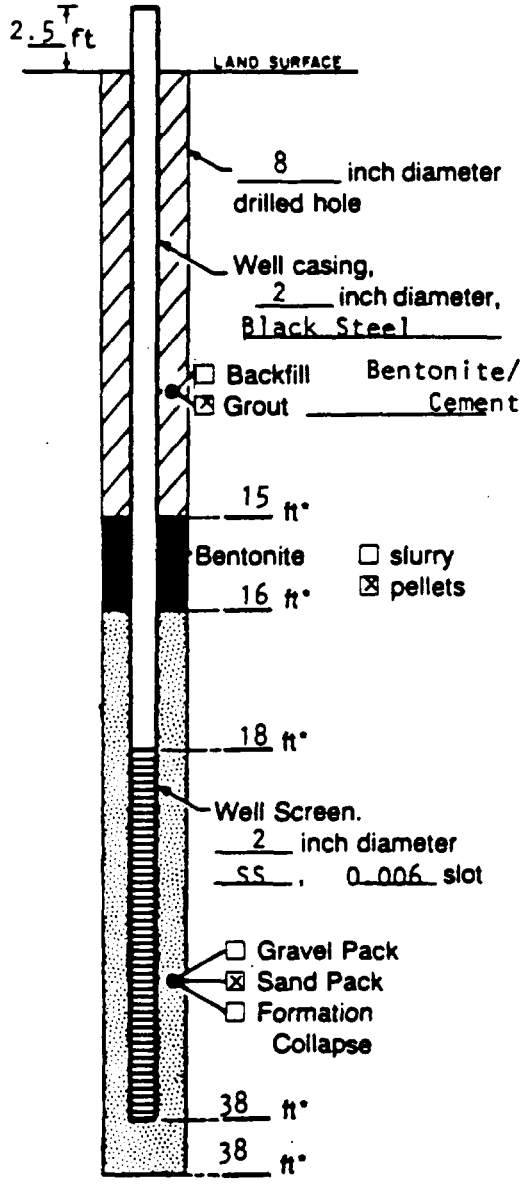


Measuring Point is Top of Well Casing Unless Otherwise Noted.

*Depth Below Land Surface

Project: Monsanto Company  Well: GM-14
Town/City: Sauget
County: St. Clair  State: Il
Permit No.:
Land-Surface Elevation and Datum: _____ feet  ☒ surveyed
Measuring Point 411.26 Ft (MSL)  ☐ estimated
Installation Dates(s): 8/16/84
Drilling Method: Hollow Stem Auger
Drilling Contractor: John Mathes & Assoc.
Drilling Fluid: Water

Development Techniques(s) and Date(s)
Surged with compressed air.

Fluid Loss During Drilling: 200 gallons
Water Removed During Development: 210 gallons
Static Depth to Water: _____ feet below M.P.
Pumping Depth to Water: _____ feet below M.P.
Pumping Duration: 3 hours
Yield: 1.5 gpm  Date: _____
Specific Capacity: _____ gpm/ft
Well Purpose: Ground-water monitoring well

Remarks:

Prepared by: D. Colton

GERAGHTY & MILLER, INC.
Ground-Water Consultants

# WELL CONSTRUCTION LOG

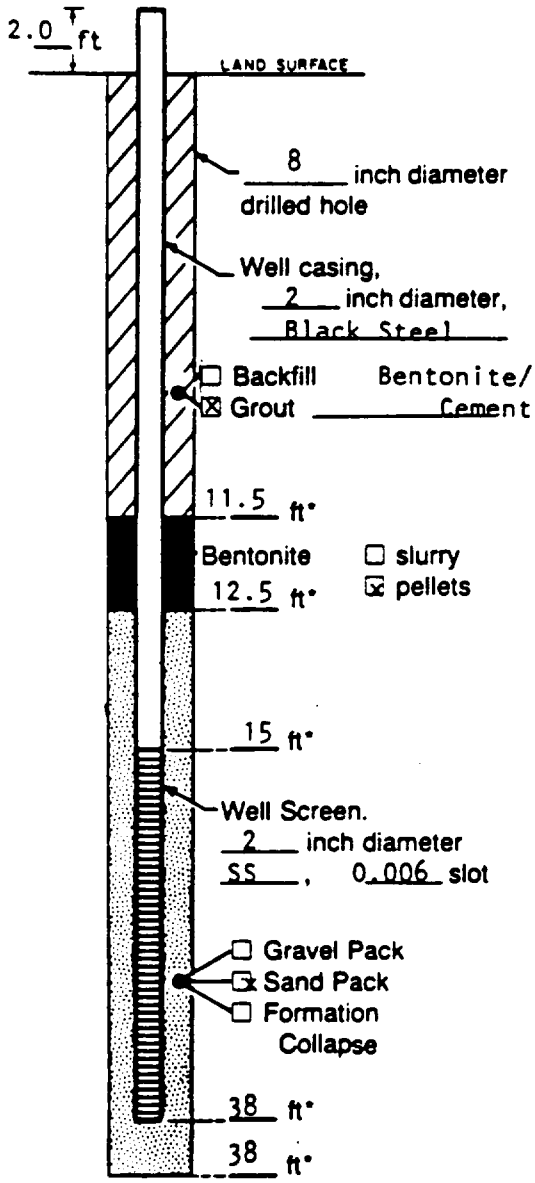


Measuring Point is Top of Well Casing Unless Otherwise Noted.

*Depth Below Land Surface

Project Monsanto Company Well GM-15
Town/City Sauget
County St. Clair State IL
Permit No.
Land-Surface Elevation
and Datum _____ feet ☒ surveyed
measuring point 413.71 ft (msl) ☐ estimated
Installation Dates(s) 8/17/84
Drilling Method hollow stem auger
Drilling Contractor John Mathes & Associates, Inc.
Drilling Fluid water

Development Techniques(s) and Date(s)
surged with compressed air

Fluid Loss During Drilling 200 gallons
Water Removed During Development 210 gallons
Static Depth to Water _____ feet below M.P.
Pumping Depth to Water _____ feet below M.P.
Pumping Duration 3 hours
Yield 1.5 gpm Date _____
Specific Capacity _____ gpm/ft
Well Purpose ground-water monitoring well

Remarks

Prepared by D. Colton

GERAGHTY & MILLER, INC.
Ground-Water Consultants

# WELL CONSTRUCTION LOG

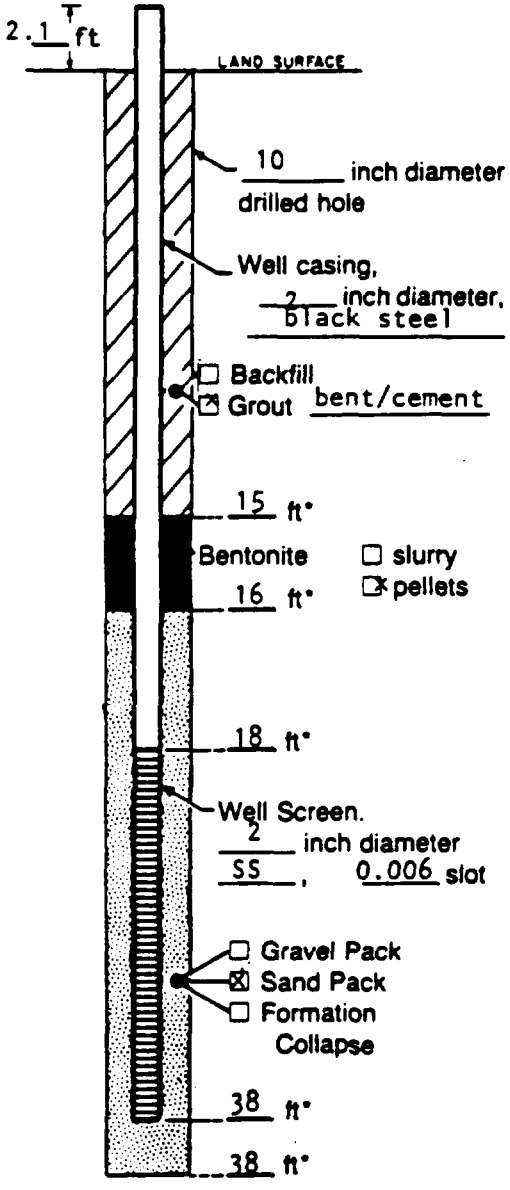


Measuring Point is Top of Well Casing Unless Otherwise Noted.

*Depth Below Land Surface

Project Monsanto Company Well GM-16A
Town/City Sauget
County St. Clair State IL
Permit No.
Land-Surface Elevation
and Datum _____ feet ☒ surveyed
Measuring point 412.03 ft (msl) ☐ estimated
Installation Dates(s) 8/14/86
Drilling Method hollow stem augers
Drilling Contractor John Mathes & Associates, Inc.
Drilling Fluid water

Development Techniques(s) and Date(s)
surged with compressed air

Fluid Loss During Drilling 300 gallons
Water Removed During Development 360 gallons
Static Depth to Water _____ feet below M.P.
Pumping Depth to Water _____ feet below M.P.
Pumping Duration 3 hours
Yield 2 gpm Date _____
Specific Capacity _____ gpm/ft
Well Purpose ground-water monitoring well

Remarks

Prepared by D. Colton

GERAGHTY & MILLER, INC.
Ground-Water Consultants

# WELL CONSTRUCTION LOG

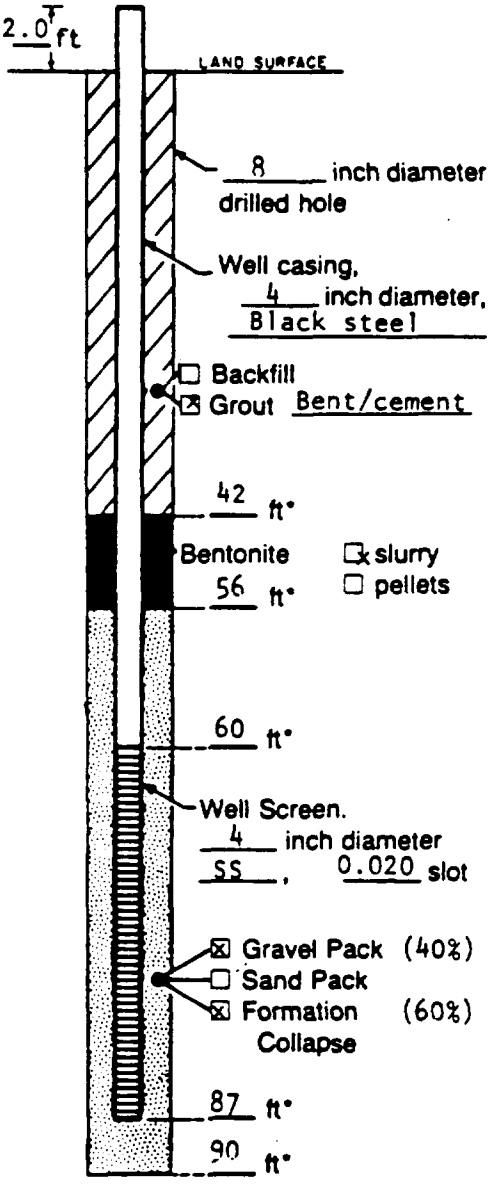


Measuring Point is Top of Well Casing Unless Otherwise Noted.

*Depth Below Land Surface

Project Monsanto Company Well GM-16B
Town/City Sauget
County St. Clair State IL
Permit No.
Land-Surface Elevation
and Datum _____ feet ☒ surveyed
measuring point 412.40 ft (msl) ☐ estimated
Installation Dates(s) 8/9/84
Drilling Method mud rotary
Drilling Contractor John Mathes & Associates, Inc.
Drilling Fluid bentonite

Development Techniques(s) and Date(s)
surged with compressed air

Fluid Loss During Drilling 1200 gallons
Water Removed During Development _____ gallons
Static Depth to Water _____ feet below M.P.
Pumping Depth to Water _____ feet below M.P.
Pumping Duration 2 hours
Yield 10 gpm Date _____
Specific Capacity _____ gpm/ft
Well Purpose ground-water monitoring well

Remarks

Prepared by D. Colton

GERAGHTY & MILLER, INC.
Ground-Water Consultants

# WELL CONSTRUCTION LOG

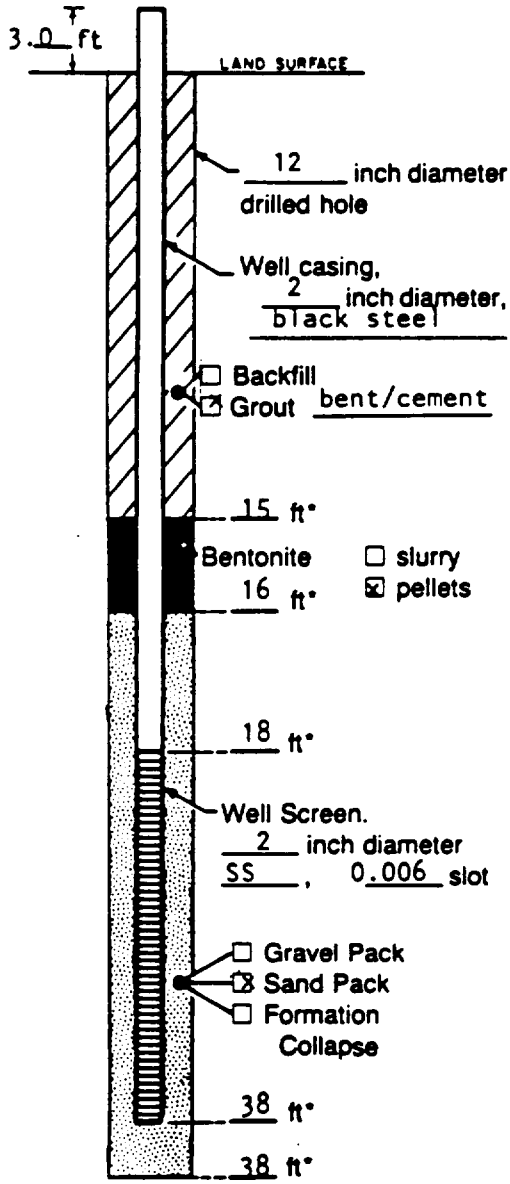


Measuring Point is Top of Well Casing Unless Otherwise Noted.

*Depth Below Land Surface

Project Monsanto Company Well GM-17A
Town/City Sauget
County St. Clair State IL
Permit No.
Land-Surface Elevation
and Datum _____ feet ☒ surveyed
measuring point 412.57 ft (msl) ☐ estimated
Installation Dates(s) 7-6-84
Drilling Method hollow stem auger
Drilling Contractor John Mathes & Associates, Inc.
Drilling Fluid water

Development Techniques(s) and Date(s)
surged with compressed air

Fluid Loss During Drilling 300 gallons
Water Removed During Development 360 gallons
Static Depth to Water _____ feet below M.P.
Pumping Depth to Water _____ feet below M.P.
Pumping Duration 3 hours
Yield 2 gpm Date _____
Specific Capacity _____ gpm/ft
Well Purpose ground-water monitoring wells

Remarks

Prepared by D. Colton

GERAGHTY & MILLER, INC.
Ground-Water Consultants

# WELL CONSTRUCTION LOG

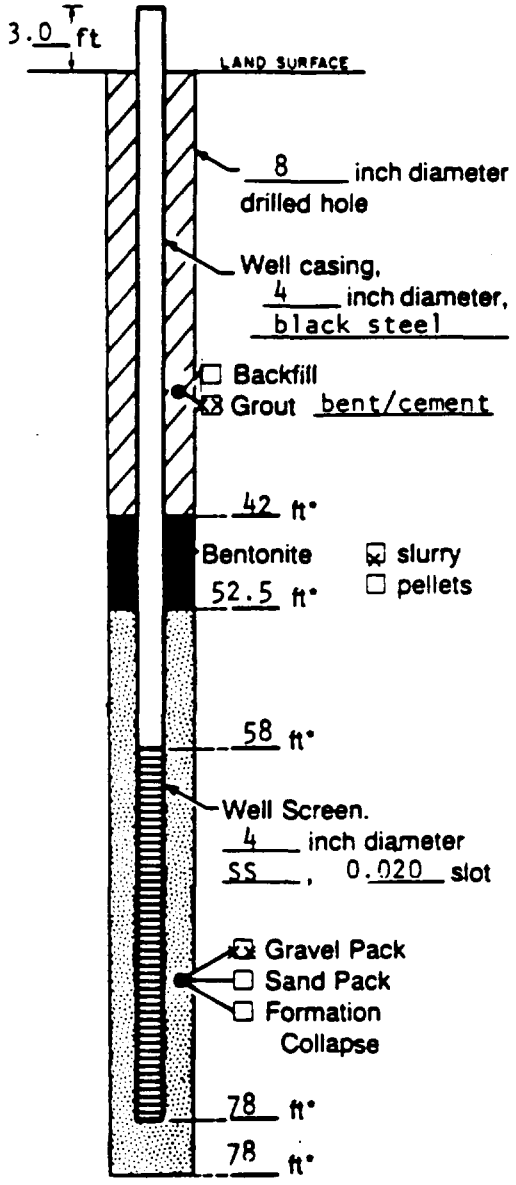


Measuring Point is Top of Well Casing Unless Otherwise Noted.

*Depth Below Land Surface

Project Monsanto Company Well GM-17B

Town/City Sauget

County St. Clair State IL

Permit No.

Land-Surface Elevation and Datum _____ feet measuring point 412.93 ft (msl) ☒ surveyed ☐ estimated

Installation Dates(s) 7/25/84

Drilling Method mud rotary

Drilling Contractor John Mathes & Associates, Inc.

Drilling Fluid bentonite

Development Techniques(s) and Date(s)
surged with compressed air

Fluid Loss During Drilling _____ gallons

Water Removed During Development 1200 gallons

Static Depth to Water _____ feet below M.P.

Pumping Depth to Water _____ feet below M.P.

Pumping Duration 2 hours

Yield 10 gpm Date _____

Specific Capacity _____ gpm/ft

Well Purpose ground-water monitoring well

Remarks

Prepared by D. Colton

GERAGHTY & MILLER, INC.
Ground-Water Consultants

# WELL CONSTRUCTION LOG

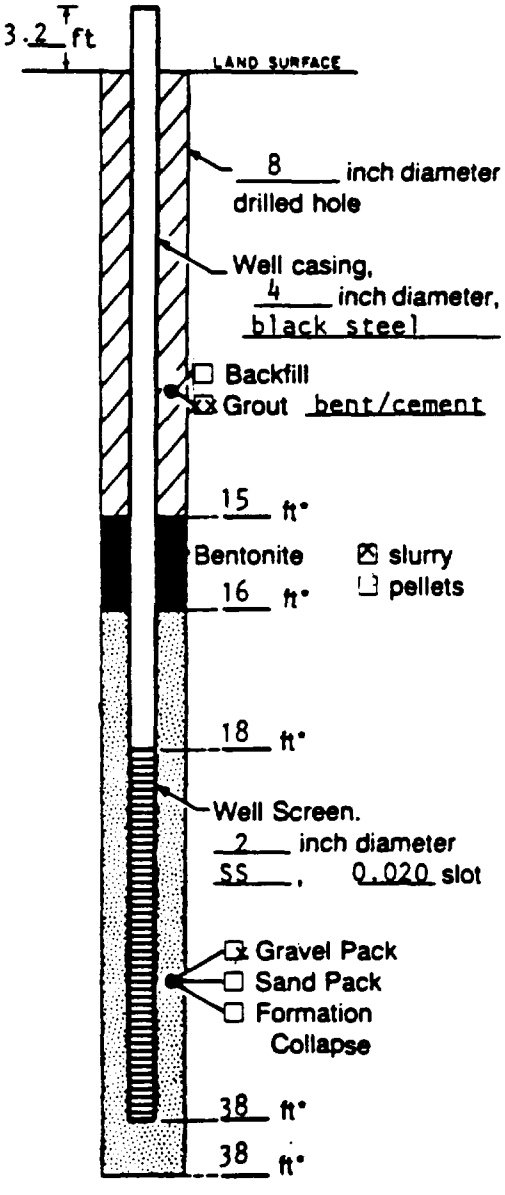


Measuring Point is Top of Well Casing Unless Otherwise Noted.

*Depth Below Land Surface

Project Monsanto Company Well GM-17C
Town/City Sauget
County St. Clair State Illinois
Permit No.
Land-Surface Elevation
and Datum _____ feet ☒ surveyed
measuring point 412.42 ft (msl) ☐ estimated
Installation Dates(s) 7/24/84
Drilling Method mud rotary
Drilling Contractor John Mathes & Associates, Inc.
Drilling Fluid Bentonite

Development Techniques(s) and Date(s)
surged with compressed air

Fluid Loss During Drilling _____ gallons
Water Removed During Development 1200 gallons
Static Depth to Water _____ feet below M.P.
Pumping Depth to Water _____ feet below M.P.
Pumping Duration 2 hours
Yield 10 gpm Date _____
Specific Capacity _____ gpm/ft
Well Purpose ground-water monitoring well

Remarks

Prepared by D. Colton

GERAGHTY & MILLER, INC.
Ground-Water Consultants

# WELL CONSTRUCTION LOG

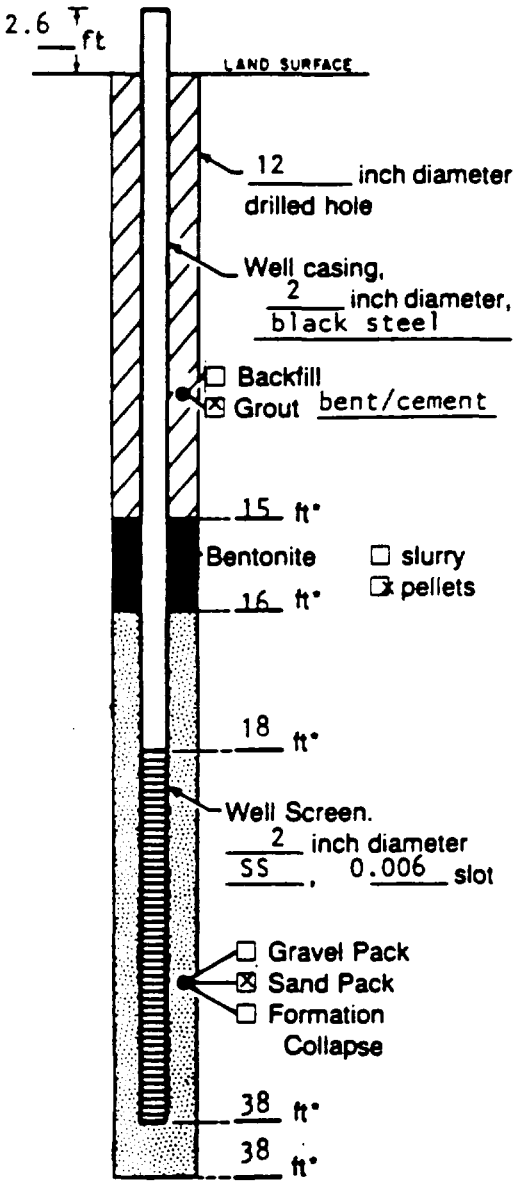


Measuring Point is Top of Well Casing Unless Otherwise Noted.

*Depth Below Land Surface

Project Monsanto Company Well GM-18A
Town/City Saguet
County St. Clair State IL
Permit No. _____
Land-Surface Elevation
and Datum _____ feet ☒ surveyed
measuring point 414.23 ft (msl) ☐ estimated
Installation Dates(s) 7/5/84
Drilling Method hollow stem auger
Drilling Contractor John Mathes & Associates Inc.
Drilling Fluid water

Development Techniques(s) and Date(s)
surged with compressed air

Fluid Loss During Drilling 300 gallons
Water Removed During Development 360 gallons
Static Depth to Water _____ feet below M.P.
Pumping Depth to Water _____ feet below M.P.
Pumping Duration 3 hours
Yield 2 gpm Date _____
Specific Capacity _____ gpm/ft
Well Purpose ground-water monitoring wells

Remarks

Prepared by D. Colton

GERAGHTY & MILLER, INC.
Ground-Water Consultants

# WELL CONSTRUCTION LOG

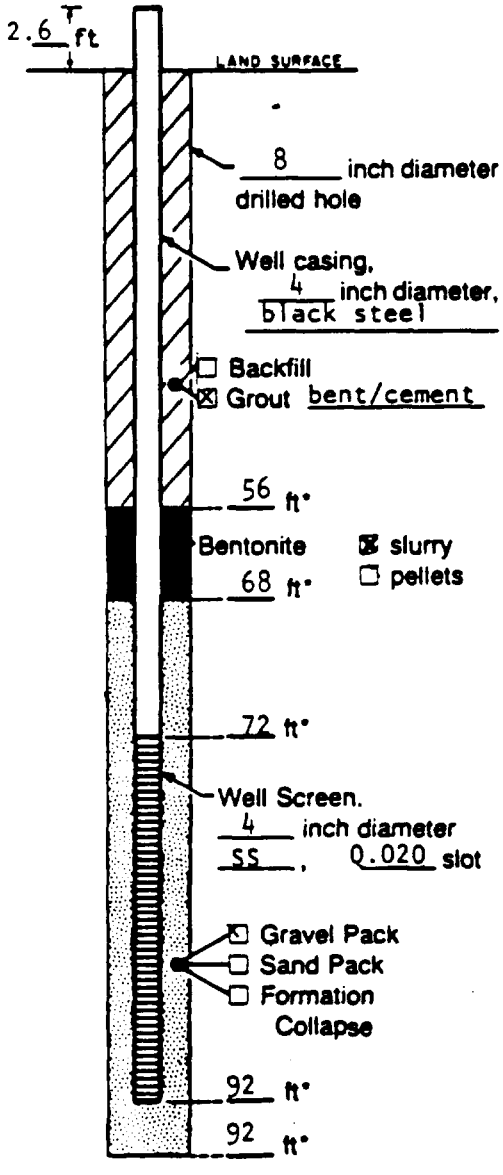


Measuring Point is Top of Well Casing Unless Otherwise Noted.

*Depth Below Land Surface

Project Monsanto Company Well GM-18B

Town/City Sauget

County St. Clair State IL

Permit No.

Land-Surface Elevation and Datum _____ feet ☒ surveyed

measuring point 414.02 ft (msl) ☐ estimated

Installation Dates(s) 7/12/84

Drilling Method mud rotary

Drilling Contractor John Mathes & Associates, Inc.

Drilling Fluid bentonite

Development Techniques(s) and Date(s)
surged with compressed air

Fluid Loss During Drilling _____ gallons

Water Removed During Development 1200 gallons

Static Depth to Water _____ feet below M.P.

Pumping Depth to Water _____ feet below M.P.

Pumping Duration 2 hours

Yield 10 gpm Date _____

Specific Capacity _____ gpm/ft

Well Purpose ground-water monitoring well

Remarks

Prepared by D. Colton

GERAGHTY & MILLER, INC.
Ground-Water Consultants

# WELL CONSTRUCTION LOG

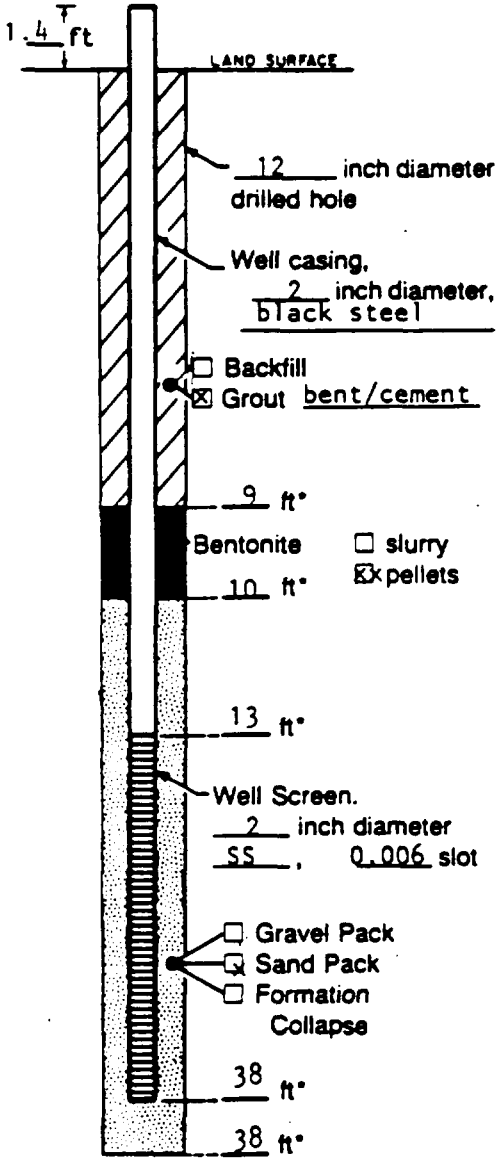


Measuring Point is Top of Well Casing Unless Otherwise Noted.

*Depth Below Land Surface

Project Monsanto Company Well GM-25A
Town/City Sauget
County St. Clair State IL
Permit No.
Land-Surface Elevation
and Datum _____ feet ☒ surveyed
measuring point 414.20 ft (msl) ☐ estimated
Installation Date(s) 8/14/84
Drilling Method hollow stem auger
Drilling Contractor John Mathes & Associates, Inc.
Drilling Fluid water

Development Techniques(s) and Date(s)
surged with compressed air

Fluid Loss During Drilling 300 gallons
Water Removed During Development 360 gallons
Static Depth to Water _____ feet below M.P.
Pumping Depth to Water _____ feet below M.P.
Pumping Duration 3 hours
Yield 2 gpm Date _____
Specific Capacity _____ gpm/ft
Well Purpose ground-water monitoring well

Remarks

Prepared by D. Colton

GERAGHTY & MILLER, INC.
Ground-Water Consultants

# WELL CONSTRUCTION LOG

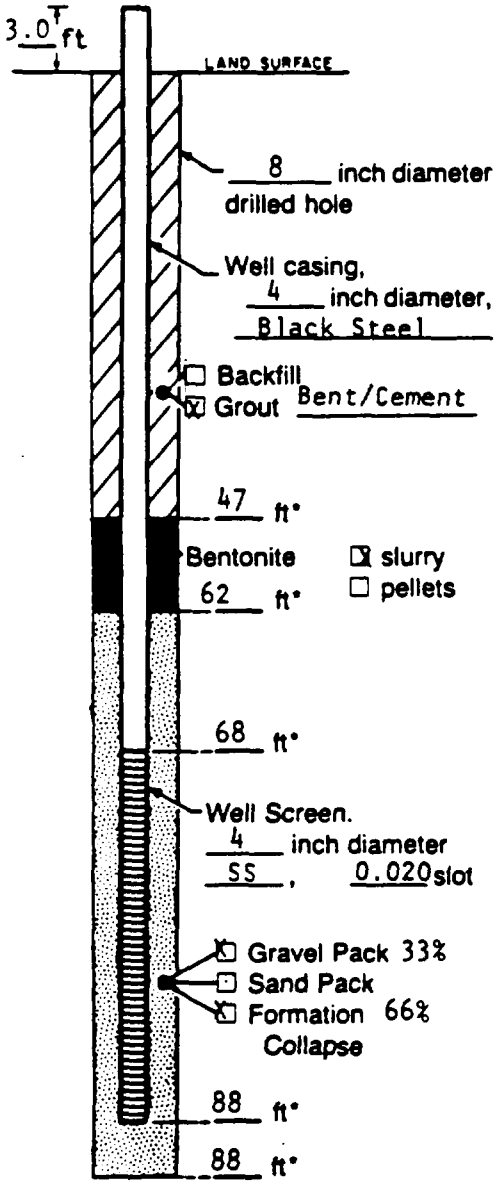


Measuring Point is Top of Well Casing Unless Otherwise Noted.

*Depth Below Land Surface

Project Monsanto Company Well GM-25B

Town/City Sauget

County St. Clair State Ill

Permit No. _____

Land-Surface Elevation and Datum _____ feet ☒ surveyed

Measuring Point 415.46 ft (MSL) ☐ estimated

Installation Dates(s) 7/27/84

Drilling Method Mud Rotary

Drilling Contractor John Mathes & Assoc., Inc.

Drilling Fluid Bentonite

Development Techniques(s) and Date(s)
Surged with Compressed Air

Fluid Loss During Drilling _____ gallons

Water Removed During Development 1200 gallons

Static Depth to Water _____ feet below M.P.

Pumping Depth to Water _____ feet below M.P.

Pumping Duration 2 hours

Yield 10 gpm Date _____

Specific Capacity _____ gpm/ft

Well Purpose Ground-water Monitoring Well

Remarks _____

Prepared by D. Colton

GERAGHTY & MILLER, INC.
Ground-Water Consultants

# WELL CONSTRUCTION LOG

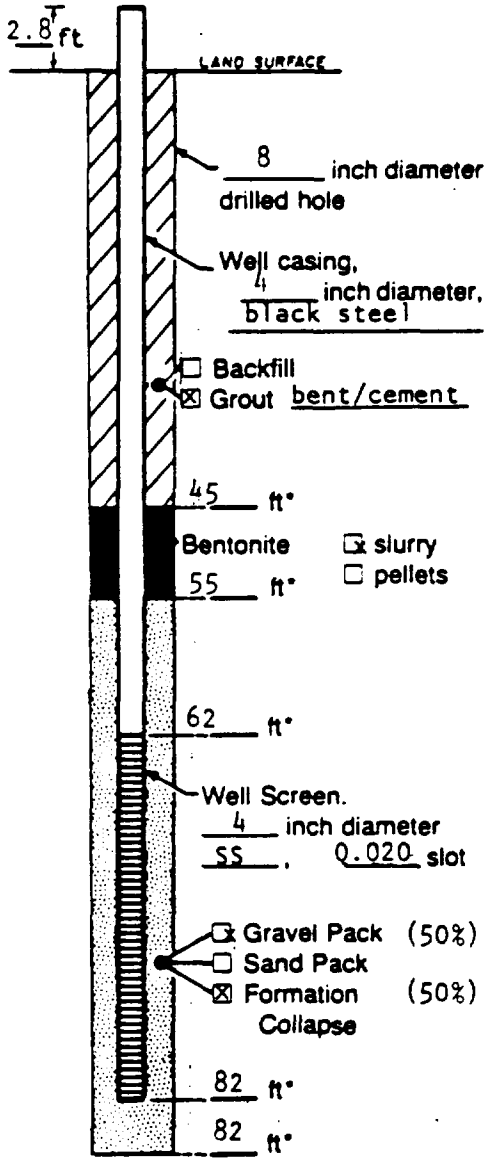


Measuring Point is Top of Well Casing Unless Otherwise Noted.

*Depth Below Land Surface

Project Monsanto Company Well GM-27B
Town/City Sauget
County St. Clair State IL
Permit No.
Land-Surface Elevation
and Datum _____ feet ☒ surveyed
Measurinn Point 426.04 Ft (MSL) ☐ estimated
Installation Dates(s) 8/6/84
Drilling Method Mud Rotary
Drilling Contractor John Mathes & Associates, Inc.
Drilling Fluid Bentonite

Development Techniques(s) and Date(s)
surged with compressed air

Fluid Loss During Drilling _____ gallons
Water Removed During Development 1200 gallons
Static Depth to Water _____ feet below M.P.
Pumping Depth to Water _____ feet below M.P.
Pumping Duration 2 hours
Yield 10 gpm Date _____
Specific Capacity _____ gpm/ft
Well Purpose ground-water monitoring well

Remarks

Prepared by D. Colton

GERAGHTY & MILLER, INC.
Ground-Water Consultants

# WELL CONSTRUCTION LOG

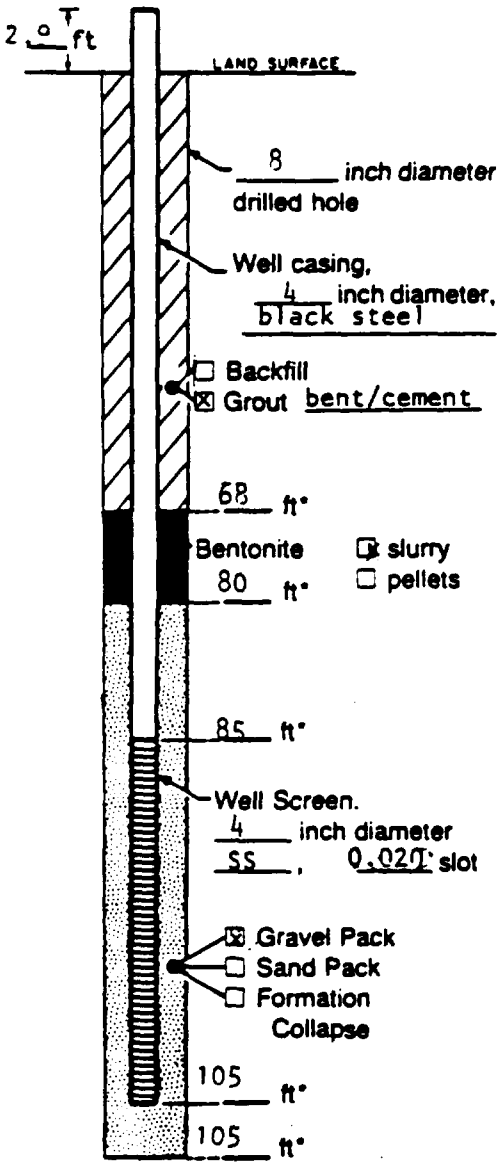


Measuring Point is Top of Well Casing Unless Otherwise Noted.

*Depth Below Land Surface

Project Monsanto Company Well GM-27C
Town/City Sauget
County St. Clair State IL
Permit No.
Land-Surface Elevation and Datum _____ feet ☒ surveyed
Measuring Point 426.76 Ft (MSL) ☐ estimated
Installation Dates(s) 8/3/84
Drilling Method Mud Rotary
Drilling Contractor John Mathes & Associates, Inc.
Drilling Fluid Bentonite

Development Techniques(s) and Date(s)
surged with compressed air

Fluid Loss During Drilling _____ gallons
Water Removed During Development 1200 gallons
Static Depth to Water _____ feet below M.P.
Pumping Depth to Water _____ feet below M.P.
Pumping Duration 2 hours
Yield 10 gpm Date _____
Specific Capacity _____ gpm/ft
Well Purpose ground-water monitoring well

Remarks

Prepared by D. Colton

GERAGHTY & MILLER, INC.
Ground-Water Consultants

# WELL CONSTRUCTION LOG

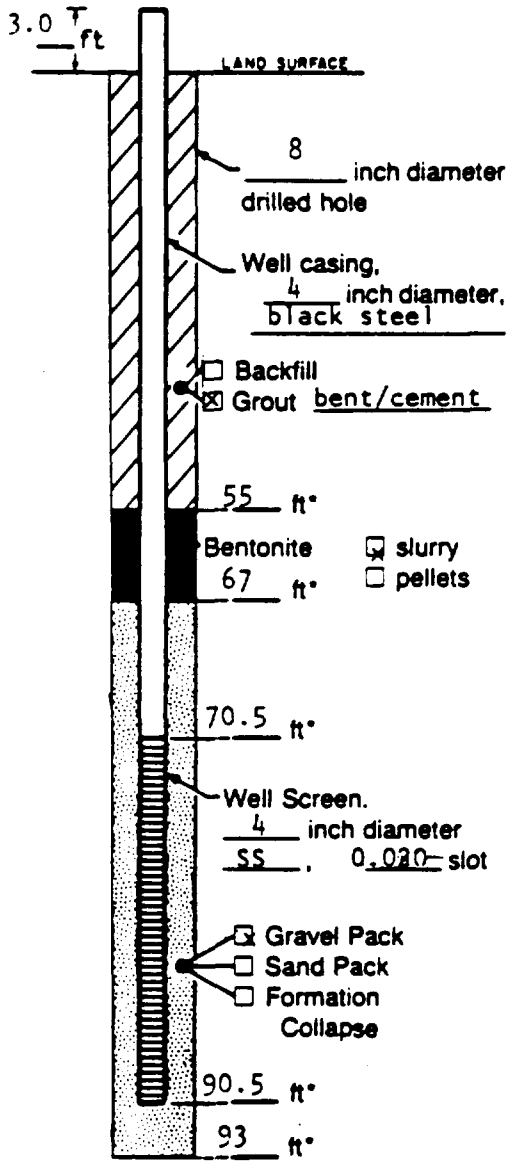


Measuring Point is Top of Well Casing Unless Otherwise Noted.

*Depth Below Land Surface

Project Monsanto Company Well GM-28B
Town/City Sauget
County St. Clair State IL
Permit No.
Land-Surface Elevation
and Datum _____ feet ☒ surveyed
Measuring Point 423.88 Ft (MSL) ☐ estimated
Installation Dates(s) 7/3/84
Drilling Method Mud Rotary
Drilling Contractor John Mathes & Associates, Inc.
Drilling Fluid Bentonite

Development Techniques(s) and Date(s)
surged with compressed air

Fluid Loss During Drilling _____ gallons
Water Removed During Development 1200 gallons
Static Depth to Water _____ feet below M.P.
Pumping Depth to Water _____ feet below M.P.
Pumping Duration 2 hours
Yield 10 gpm Date _____
Specific Capacity _____ gpm/ft
Well Purpose ground-water monitoring well

Remarks

Prepared by D. Colton

GERAGHTY & MILLER, INC.
Ground-Water Consultants

# WELL CONSTRUCTION LOG

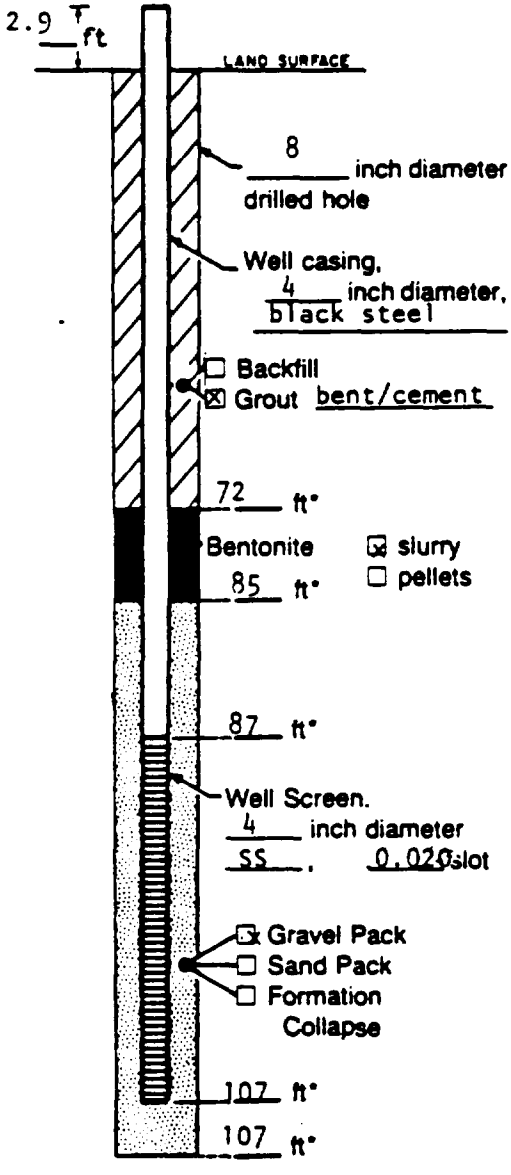


Measuring Point is Top of Well Casing Unless Otherwise Noted.

*Depth Below Land Surface

Project: Monsanto Company  Well: GM-28C
Town/City: Sauget
County: St. Clair  State: IL
Permit No.:
Land-Surface Elevation and Datum: _____ feet  ☒ surveyed
Measuring Point 412.78 Ft (MSL)  ☐ estimated
Installation Dates(s): 7/5/84
Drilling Method: Mud Rotary
Drilling Contractor: John Mathes & Associates, Inc.
Drilling Fluid: Bentonite

Development Techniques(s) and Date(s)
surged with compressed air

Fluid Loss During Drilling: _____ gallons
Water Removed During Development: 1200 gallons
Static Depth to Water: _____ feet below M.P.
Pumping Depth to Water: _____ feet below M.P.
Pumping Duration: 2 hours
Yield: 10 gpm  Date: _____
Specific Capacity: _____ gpm/ft
Well Purpose: ground-water monitoring well

Remarks:

Prepared by: D. Colton

GERAGHTY & MILLER, INC.
Ground-Water Consultants

# WELL CONSTRUCTION LOG

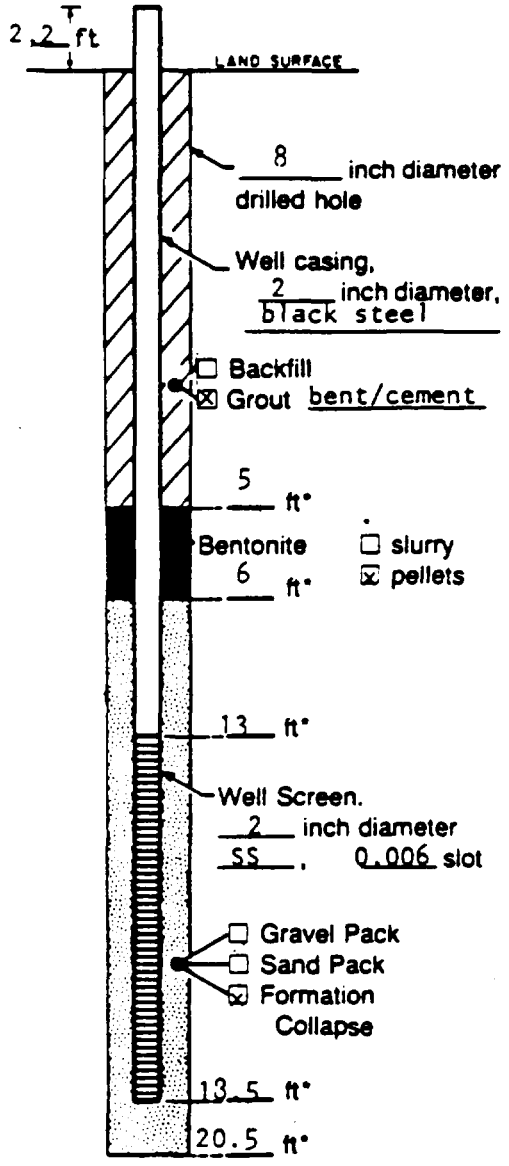


Measuring Point is Top of Well Casing Unless Otherwise Noted.

*Depth Below Land Surface

Project Monsanto Company Well GM-29
Town/City Sauget
County St. Clair State IL
Permit No.
Land-Surface Elevation
and Datum _____ feet ☒ surveyed
Measuring Point 411.06 Ft (MSL) ☐ estimated
Installation Dates(s) 8/24/84
Drilling Method Hollow Stem Auger
Drilling Contractor John Mathes & Associates, Inc.
Drilling Fluid Water

Development Techniques(s) and Date(s)
surged with compressed air

Fluid Loss During Drilling 150 gallons
Water Removed During Development 150 gallons
Static Depth to Water _____ feet below M.P.
Pumping Depth to Water _____ feet below M.P.
Pumping Duration 2.5 hours
Yield 1 gpm Date _____
Specific Capacity _____ gpm/ft
Well Purpose ground-water monitoring well

Remarks

Prepared by D. Colton

GERAGHTY & MILLER, INC.
Ground-Water Consultants

# WELL CONSTRUCTION LOG

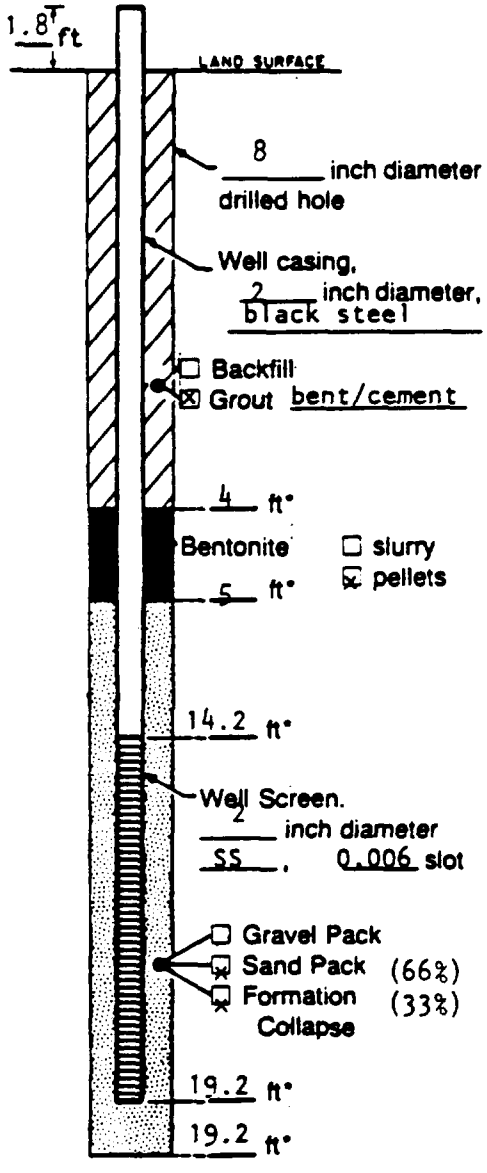


Measuring Point is Top of Well Casing Unless Otherwise Noted.

*Depth Below Land Surface

Project Monsanto Company Well GM-30
Town/City Sauget
County St. Clair State IL
Permit No.
Land-Surface Elevation
and Datum _____ feet ☐ surveyed
Measuring Point 416.09 Ft (MSL) ☐ estimated
Installation Dates(s) 8/30/84
Drilling Method Hollow Stem Auger
Drilling Contractor John Mathes & Associates, Inc.
Drilling Fluid Water

Development Techniques(s) and Date(s)
surged with compressed air

Fluid Loss During Drilling 150 gallons
Water Removed During Development 150 gallons
Static Depth to Water _____ feet below M.P.
Pumping Depth to Water _____ feet below M.P.
Pumping Duration 2.5 hours
Yield 1 gpm Date _____
Specific Capacity _____ gpm/ft
Well Purpose ground-water monitoring well

Remarks

Prepared by D. Colton

GERAGHTY & MILLER, INC.
Ground-Water Consultants

# WELL CONSTRUCTION LOG

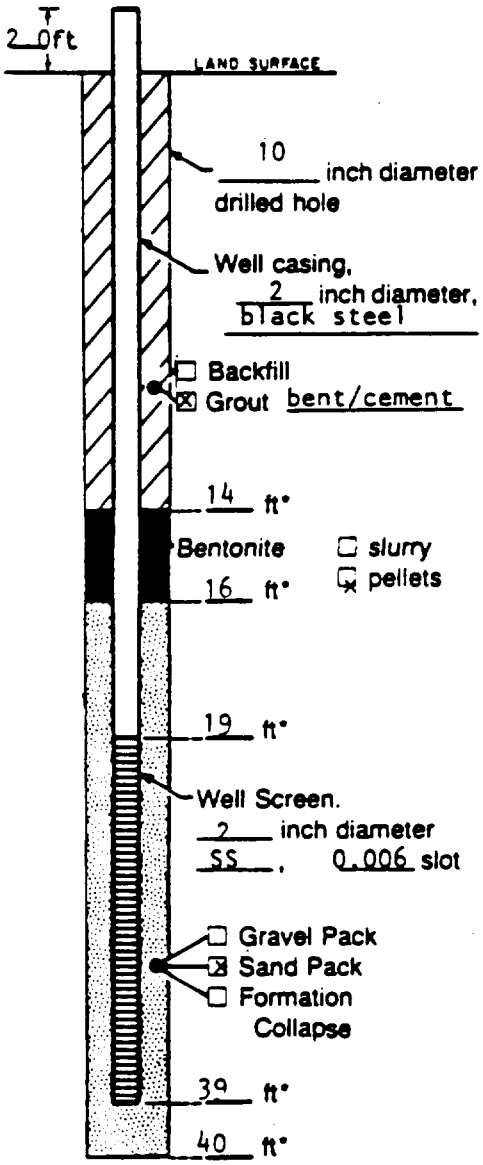


Measuring Point is Top of Well Casing Unless Otherwise Noted.

*Depth Below Land Surface

Project Monsanto Company Well GM-31A
Town/City Sauget
County St. Clair State IL
Permit No.
Land-Surface Elevation
and Datum _____ feet ☒ surveyed
Measuring Point 418.63 ☐ estimated
Installation Dates(s) 11/26/84
Drilling Method Hollow stem augers
Drilling Contractor John Mathes & Associates, Inc.
Drilling Fluid Water

Development Techniques(s) and Date(s)
surged with compressed air

Fluid Loss During Drilling 120 gallons
Water Removed During Development 120 gallons
Static Depth to Water _____ feet below M.P.
Pumping Depth to Water _____ feet below M.P.
Pumping Duration 2 hours
Yield 1 gpm Date _____
Specific Capacity _____ gpm/ft
Well Purpose ground-water monitoring well

Remarks

Prepared by D. Colton

GERAGHTY & MILLER, INC.
Ground-Water Consultants

# WELL CONSTRUCTION LOG

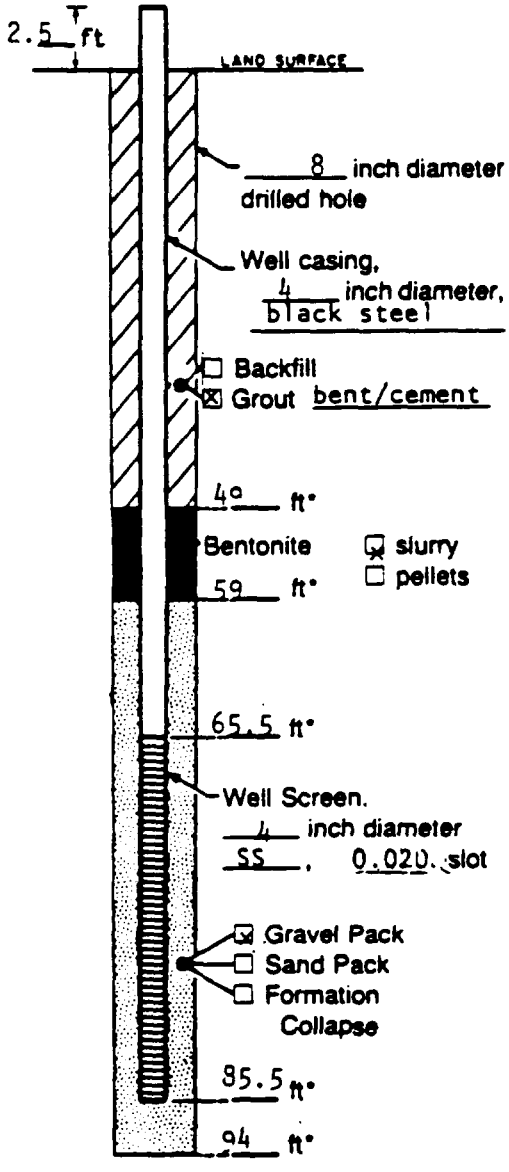


Measuring Point is Top of Well Casing Unless Otherwise Noted.

*Depth Below Land Surface

Project Monsanto Company Well GM-31B

Town/City Sauget

County St. Clair State IL

Permit No.

Land-Surface Elevation and Datum _____ feet ☒ surveyed

Measuring Point 418.92 Ft (MSL) ☐ estimated

Installation Dates(s) 1/9/85

Drilling Method Mud Rotary

Drilling Contractor John Mathes & Associates, Inc.

Drilling Fluid Bentonite

Development Techniques(s) and Date(s)
surged with compressed air

Fluid Loss During Drilling _____ gallons

Water Removed During Development 1200 gallons

Static Depth to Water _____ feet below M.P.

Pumping Depth to Water _____ feet below M.P.

Pumping Duration 2 hours

Yield 10 gpm Date _____

Specific Capacity _____ gpm/ft

Well Purpose ground-water monitoring well

Remarks

Prepared by D. Colton

GERAGHTY & MILLER, INC.
Ground-Water Consultants

# WELL CONSTRUCTION LOG

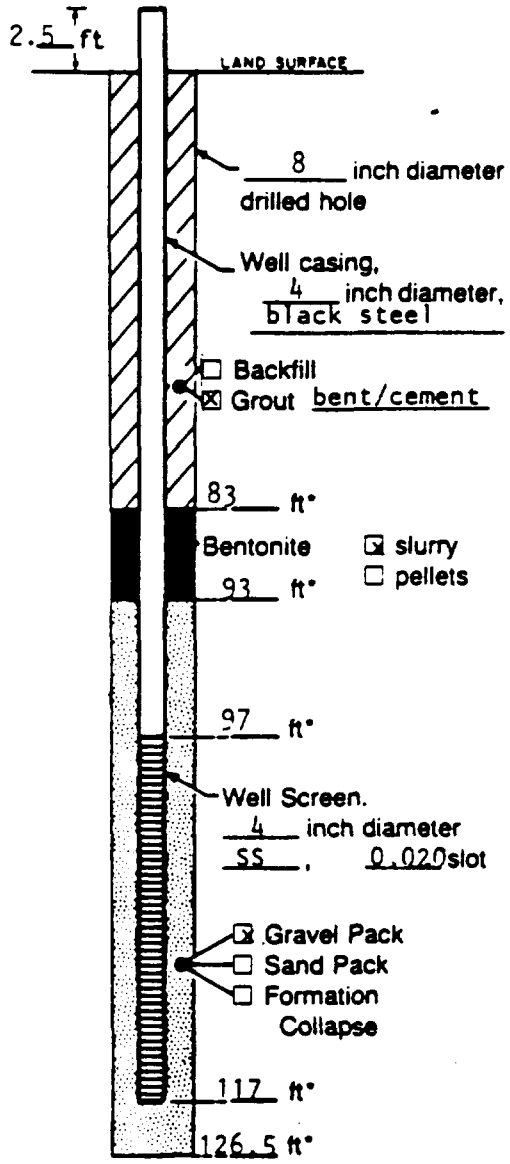


Measuring Point is Top of Well Casing Unless Otherwise Noted.

*Depth Below Land Surface

Project Monsanto Company Well GM-31C
Town/City Sauget
County St. Clair State IL
Permit No.
Land-Surface Elevation
and Datum _____ feet ☒ surveyed
Measuring Point 419.29 Ft (MSL) ☐ estimated
Installation Dates(s) 1/8/85
Drilling Method Mud Rotary
Drilling Contractor John Mathes & Associates, Inc.
Drilling Fluid Bentonite

Development Techniques(s) and Date(s)
surged with compressed air

Fluid Loss During Drilling _____ gallons
Water Removed During Development 1200 gallons
Static Depth to Water _____ feet below M.P.
Pumping Depth to Water _____ feet below M.P.
Pumping Duration 2 hours
Yield 10 gpm Date _____
Specific Capacity _____ gpm/ft
Well Purpose ground-water monitoring well

Remarks

Prepared by D. Colton

GERAGHTY & MILLER, INC.
Ground-Water Consultants

# WELL CONSTRUCTION LOG

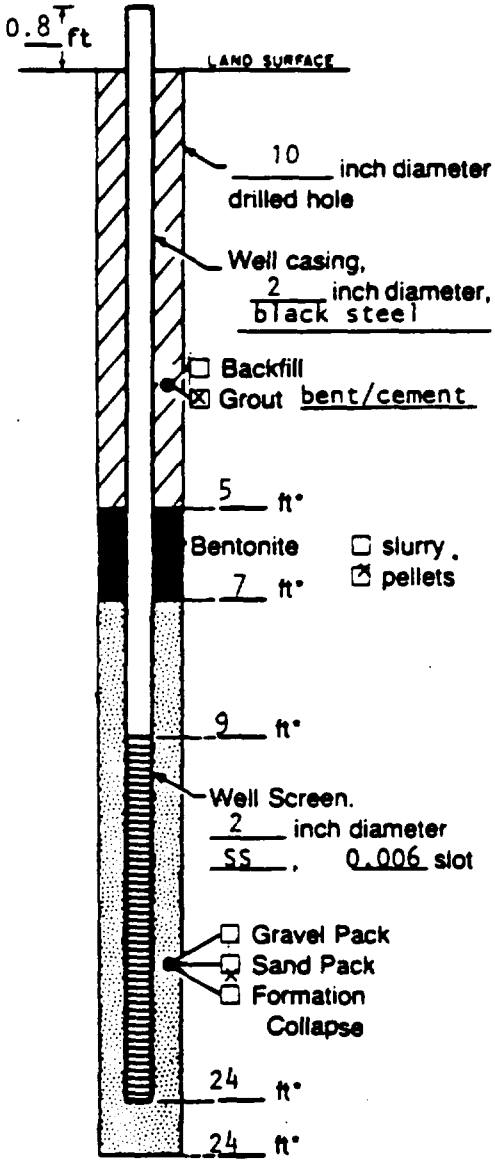


Measuring Point is Top of Well Casing Unless Otherwise Noted.

*Depth Below Land Surface

Project Monsanto Company Well GM-32
Town/City Sauget
County St. Clair State IL
Permit No.
Land-Surface Elevation
and Datum _____ feet ☒ surveyed
Measuring Point 409.49 Ft (MSL) ☐ estimated
Installation Dates(s) 11/27/84
Drilling Method Hollow Stem Auger
Drilling Contractor John Mathes & Associates, Inc.
Drilling Fluid None

Development Techniques(s) and Date(s)
surged with compressed air

Fluid Loss During Drilling NONE gallons
Water Removed During Development 60 gallons
Static Depth to Water _____ feet below M.P.
Pumping Depth to Water _____ feet below M.P.
Pumping Duration 1 hours
Yield 1 gpm Date _____
Specific Capacity _____ gpm/ft
Well Purpose ground-water monitoring well

Remarks

Prepared by D. Colton

GERAGHTY & MILLER, INC.
Ground-Water Consultants

# WELL CONSTRUCTION LOG

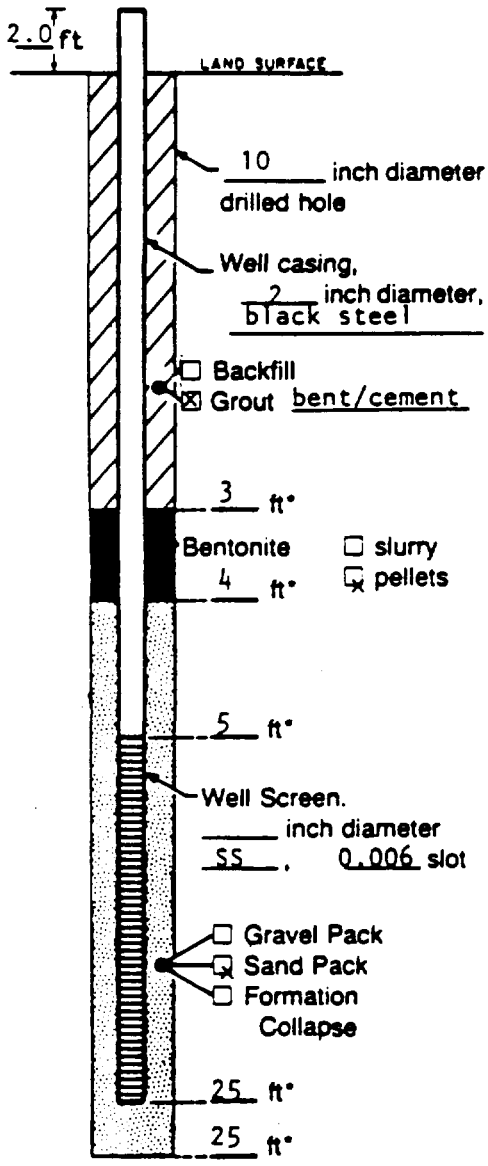


Measuring Point is Top of Well Casing Unless Otherwise Noted.

*Depth Below Land Surface

Project: Monsanto Company  Well: GM-33
Town/City: Sauget
County: St. Clair  State: IL
Permit No.:
Land-Surface Elevation and Datum: ____ feet  ☒ surveyed
Measuring Point 410.88 Ft (MSL)  ☐ estimated
Installation Dates(s): 11/28/84
Drilling Method: Hollow Stem Auger
Drilling Contractor: John Mathes & Associates, Inc.
Drilling Fluid: None

Development Techniques(s) and Date(s)
surged with compressed air

Fluid Loss During Drilling: None gallons
Water Removed During Development: 60 gallons
Static Depth to Water: ____ feet below M.P.
Pumping Depth to Water: ____ feet below M.P.
Pumping Duration: 1 hours
Yield: 1 gpm  Date: ____
Specific Capacity: ____ gpm/ft
Well Purpose: ground-water monitoring well

Remarks:

Prepared by: D. Colton

GERAGHTY & MILLER, INC.
Ground-Water Consultants

# WELL CONSTRUCTION LOG

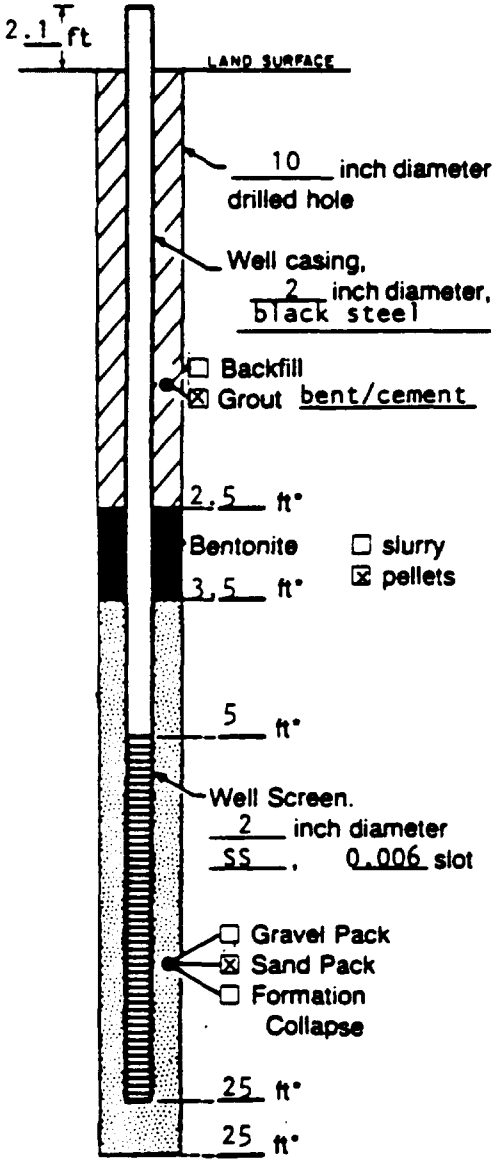


Measuring Point is Top of Well Casing Unless Otherwise Noted.

*Depth Below Land Surface

Project Monsanto Company Well GM-34
Town/City Sauget
County St. Clair State IL
Permit No.
Land-Surface Elevation
and Datum _____ feet ☒ surveyed
Measuring Point 410.82 Ft (MSL) ☐ estimated
Installation Dates(s) 11/29/84
Drilling Method Hollow Stem Auger
Drilling Contractor John Mathes & Associates, Inc.
Drilling Fluid None

Development Techniques(s) and Date(s)
surged with compressed air

Fluid Loss During Drilling None gallons
Water Removed During Development 60 gallons
Static Depth to Water _____ feet below M.P.
Pumping Depth to Water _____ feet below M.P.
Pumping Duration 1 hours
Yield 1 gpm Date _____
Specific Capacity _____ gpm/ft
Well Purpose ground-water monitoring well

Remarks

Prepared by D. Colton

GERAGHTY & MILLER, INC.
Ground-Water Consultants

# WELL CONSTRUCTION LOG

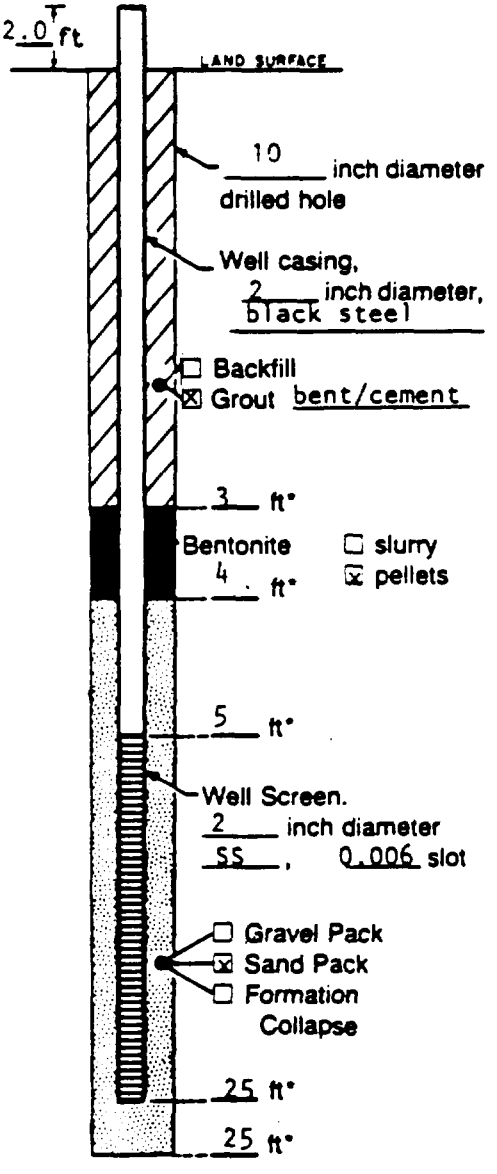


Measuring Point is Top of Well Casing Unless Otherwise Noted.

*Depth Below Land Surface

Project Monsanto Company Well GM-35
Town/City Sauget
County St. Clair State IL
Permit No.
Land-Surface Elevation
and Datum _____ feet ☒ surveyed
Measuring Point 410.88 Ft (MSL) ☐ estimated
Installation Dates(s) 11/29/84
Drilling Method Hollow Stem Auger
Drilling Contractor John Mathes & Associates, Inc.
Drilling Fluid None

Development Techniques(s) and Date(s)
surged with compressed air

Fluid Loss During Drilling None gallons
Water Removed During Development 60 gallons
Static Depth to Water _____ feet below M.P.
Pumping Depth to Water _____ feet below M.P.
Pumping Duration 1 hours
Yield 1 gpm Date _____
Specific Capacity _____ gpm/ft
Well Purpose ground-water monitoring well

Remarks

Prepared by D. Colton

GERAGHTY & MILLER, INC.
Ground-Water Consultants

# WELL CONSTRUCTION LOG

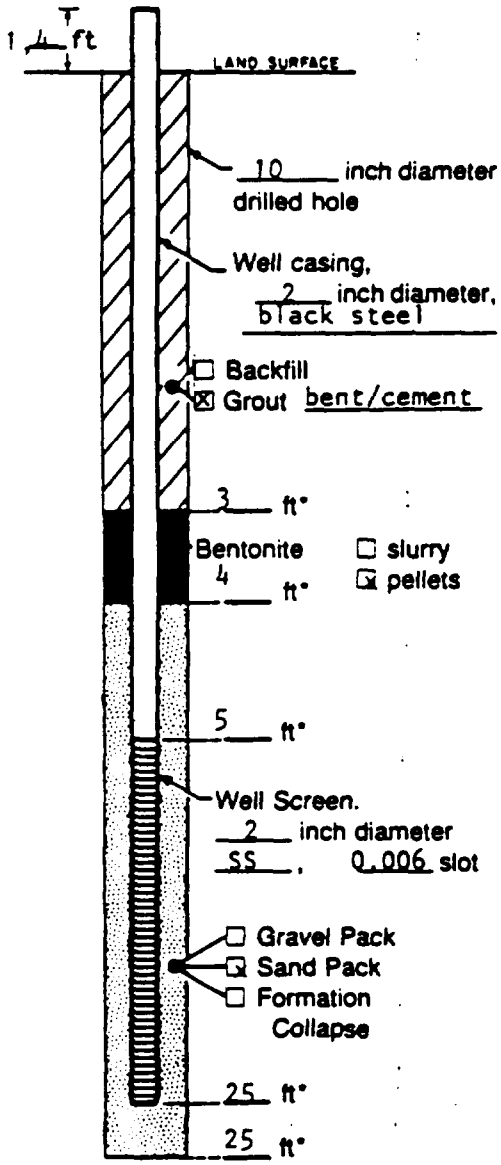


*Measuring Point is Top of Well Casing Unless Otherwise Noted.

*Depth Below Land Surface

Project Monsanto Company Well GM-36
Town/City Sauget
County St. Clair State IL
Permit No.
Land-Surface Elevation
and Datum _____ feet ☒ surveyed
Measuring Point 409.53 Ft (MSL) ☐ estimated
Installation Dates(s) 11/30/84
Drilling Method Hollow Stem Auger
Drilling Contractor John Mathes & Associates, Inc.
Drilling Fluid None

Development Techniques(s) and Date(s)
surged with compressed air

Fluid Loss During Drilling None gallons
Water Removed During Development 60 gallons
Static Depth to Water _____ feet below M.P.
Pumping Depth to Water _____ feet below M.P.
Pumping Duration 1 hours
Yield 1 gpm Date _____
Specific Capacity _____ gpm/ft
Well Purpose ground-water monitoring well

Remarks

Prepared by D. Colton

GERAGHTY & MILLER, INC.
Ground-Water Consultants

# WELL CONSTRUCTION LOG

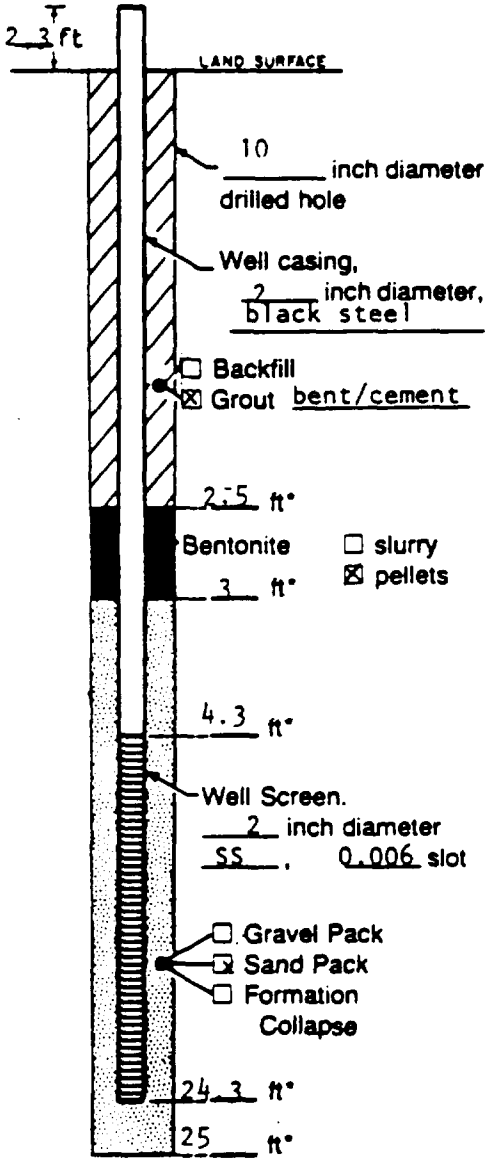


Measuring Point is Top of Well Casing Unless Otherwise Noted.

*Depth Below Land Surface

Project Monsanto Company Well GM-37
Town/City Sauget
County St. Clair State IL
Permit No.
Land-Surface Elevation
and Datum _____ feet ☒ surveyed
Measuring Point 409.67 Ft (MSL) ☐ estimated
Installation Dates(s) 11/30/84
Drilling Method Hollow Stem Auger
Drilling Contractor John Mathes & Associates, Inc.
Drilling Fluid None

Development Techniques(s) and Date(s)
surged with compressed air

Fluid Loss During Drilling None gallons
Water Removed During Development 60 gallons
Static Depth to Water _____ feet below M.P.
Pumping Depth to Water _____ feet below M.P.
Pumping Duration 1 hours
Yield 1 gpm Date _____
Specific Capacity _____ gpm/ft
Well Purpose ground-water monitoring well

Remarks

Prepared by D. Colton

GERAGHTY & MILLER, INC.
Ground-Water Consultants

# WELL CONSTRUCTION LOG

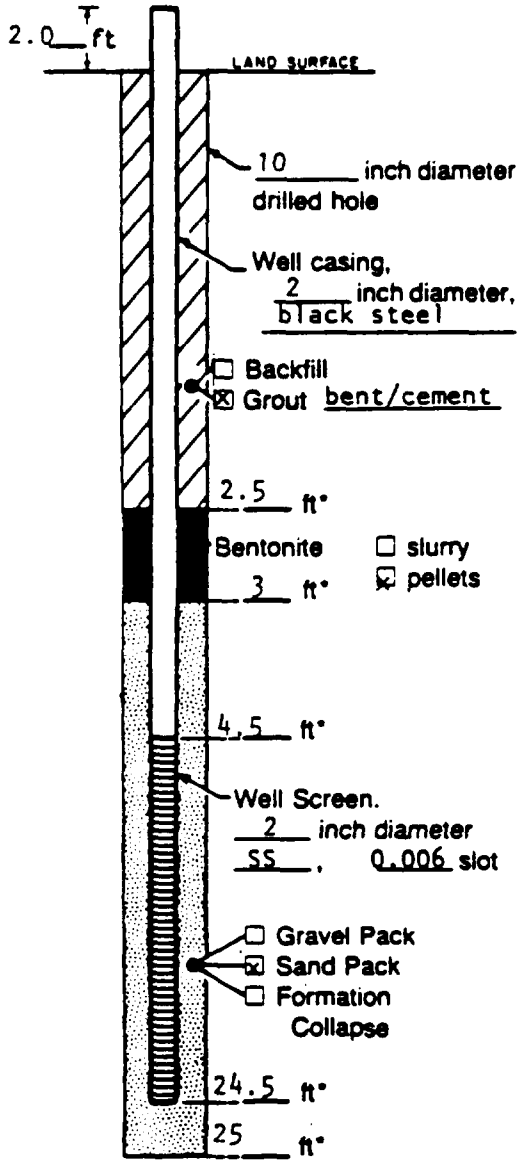


Measuring Point is Top of Well Casing Unless Otherwise Noted.

*Depth Below Land Surface

Project Monsanto Company Well GM-38
Town/City Sauget
County St. Clair State IL
Permit No.
Land-Surface Elevation
and Datum _____ feet ☒ surveyed
Measuring Point 412.51 Ft (MSL) ☐ estimated
Installation Dates(s) 12/3/84
Drilling Method Hollow Stem Auger
Drilling Contractor John Mathes & Associates, Inc.
Drilling Fluid Bentonite

Development Techniques(s) and Date(s)
surged with compressed air

Fluid Loss During Drilling None gallons
Water Removed During Development 120 gallons
Static Depth to Water _____ feet below M.P.
Pumping Depth to Water _____ feet below M.P.
Pumping Duration 2 hours
Yield 1 gpm Date _____
Specific Capacity _____ gpm/ft
Well Purpose ground-water monitoring well

Remarks

Prepared by D. Colton

GERAGHTY & MILLER, INC.
Ground-Water Consultants

# WELL CONSTRUCTION LOG

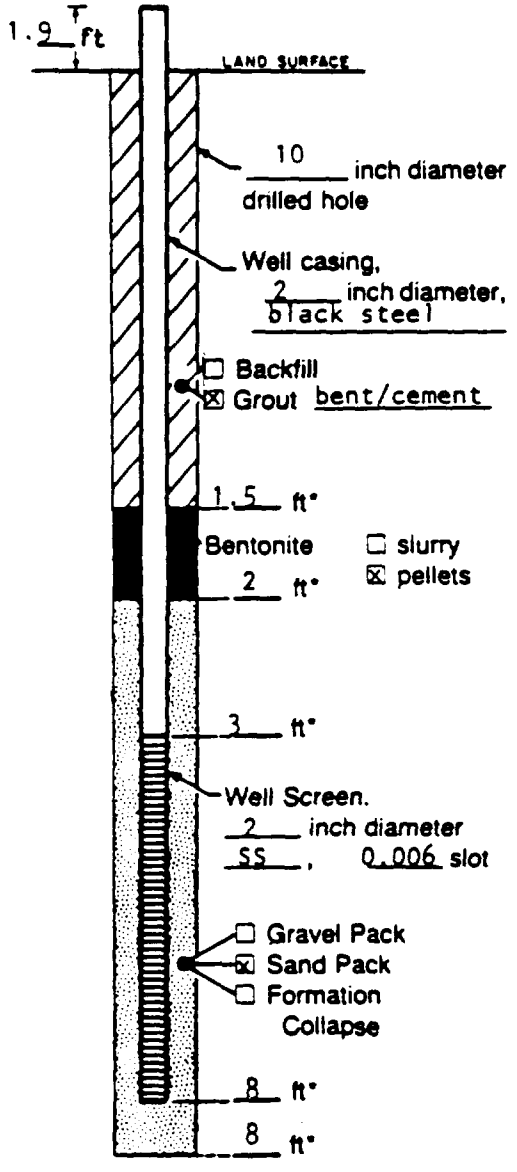


Measuring Point is Top of Well Casing Unless Otherwise Noted.

*Depth Below Land Surface

Project Monsanto Company Well GM-39
Town/City Sauget
County St. Clair State IL
Permit No.
Land-Surface Elevation
and Datum _____ feet ☒ surveyed
Measuring Point 415.59 Ft (MSL) ☐ estimated
Installation Dates(s) 12/4/84
Drilling Method Hollow Stem Auger
Drilling Contractor John Mathes & Associates, Inc.
Drilling Fluid None

Development Techniques(s) and Date(s)
surged with compressed air

Fluid Loss During Drilling None gallons
Water Removed During Development 60 gallons
Static Depth to Water _____ feet below M.P.
Pumping Depth to Water _____ feet below M.P.
Pumping Duration 1 hours
Yield 1 gpm Date _____
Specific Capacity _____ gpm/ft
Well Purpose ground-water monitoring well

Remarks

Prepared by D. Colton

GERAGHTY & MILLER, INC.
Ground-Water Consultants

# WELL CONSTRUCTION LOG

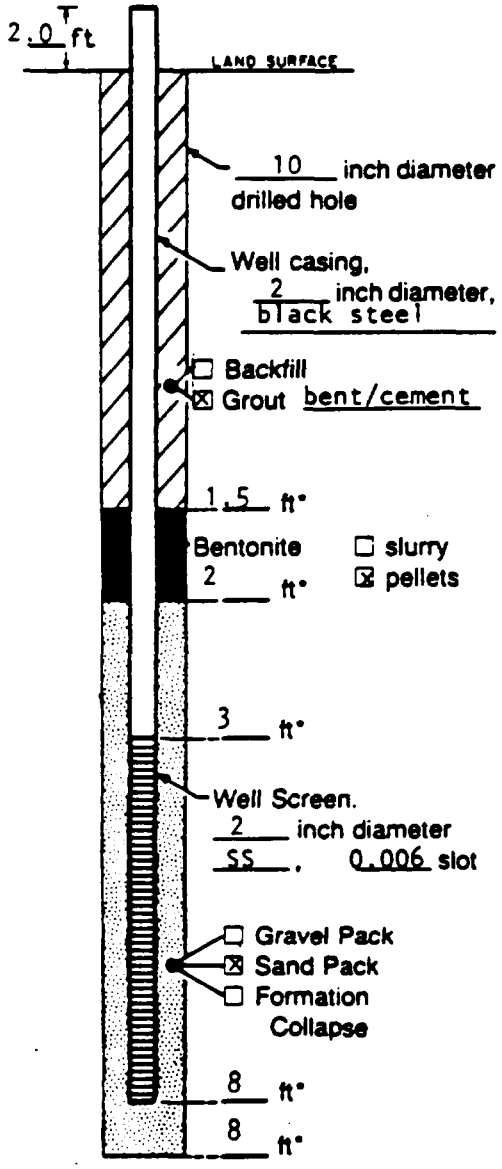


Measuring Point is Top of Well Casing Unless Otherwise Noted.

*Depth Below Land Surface

Project Monsanto Company Well GM-40
Town/City Sauget
County St. Clair State IL
Permit No.
Land-Surface Elevation
and Datum _____ feet ☒ surveyed
Measuring Point 415.75 Ft (MSL) ☐ estimated
Installation Dates(s) 12/4/84
Drilling Method Hollow Stem Auger
Drilling Contractor John Mathes & Associates, Inc.
Drilling Fluid None

Development Techniques(s) and Date(s)
surged with compressed air

Fluid Loss During Drilling None gallons
Water Removed During Development 60 gallons
Static Depth to Water _____ feet below M.P.
Pumping Depth to Water _____ feet below M.P.
Pumping Duration 1 hours
Yield 1 gpm Date _____
Specific Capacity _____ gpm/ft
Well Purpose ground-water monitoring well

Remarks

Prepared by D. Colton

GERAGHTY & MILLER, INC.
Ground-Water Consultants

# WELL CONSTRUCTION LOG

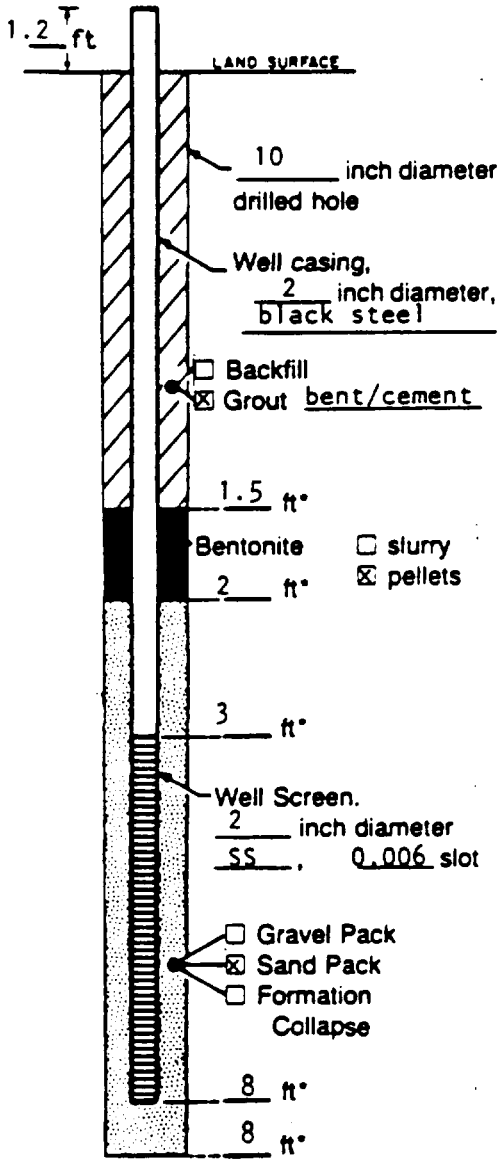


Measuring Point is Top of Well Casing Unless Otherwise Noted.

*Depth Below Land Surface

Project Monsanto Company Well GM-41
Town/City Sauget
County St. Clair State IL
Permit No.
Land-Surface Elevation
and Datum _____ feet ☒ surveyed
Measuring Point 414.75 Ft (MSL) ☐ estimated
Installation Dates(s) 12/4/84
Drilling Method Hollow Stem Auger
Drilling Contractor John Mathes & Associates, Inc.
Drilling Fluid None

Development Techniques(s) and Date(s)
surged with compressed air

Fluid Loss During Drilling None gallons
Water Removed During Development 60 gallons
Static Depth to Water _____ feet below M.P.
Pumping Depth to Water _____ feet below M.P.
Pumping Duration 1 hours
Yield 1 gpm Date _____
Specific Capacity _____ gpm/ft
Well Purpose ground-water monitoring well

Remarks

Prepared by D. Colton

GERAGHTY & MILLER, INC.
Ground-Water Consultants

# WELL CONSTRUCTION LOG

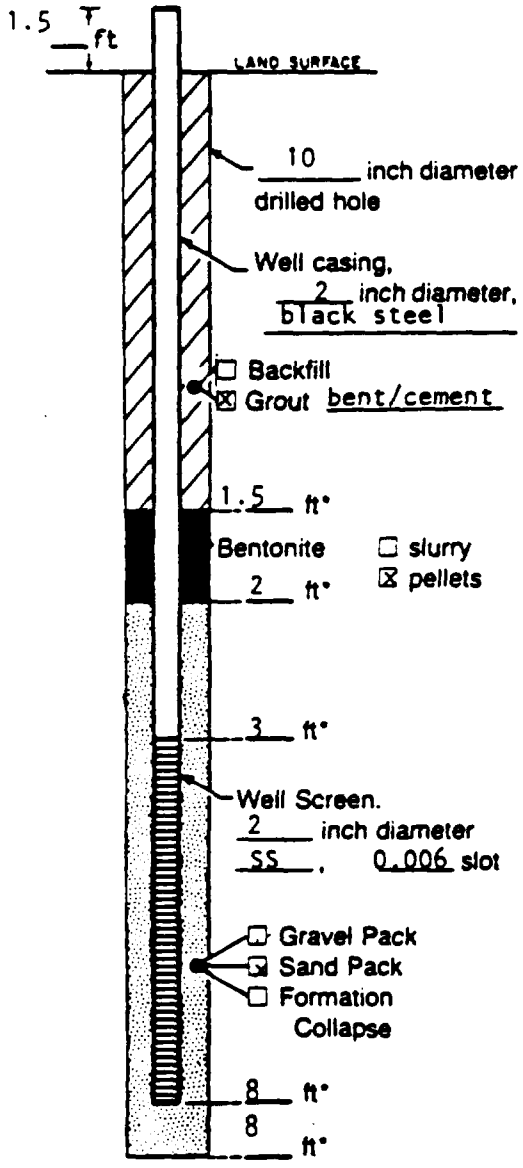


Measuring Point is Top of Well Casing Unless Otherwise Noted.

*Depth Below Land Surface

Project Monsanto Company Well GM-42
Town/City Sauget
County St. Clair State IL
Permit No.
Land-Surface Elevation
and Datum _____ feet ☒ surveyed
Measuring Point 414.48 Ft (MSL) ☐ estimated
Installation Dates(s) 12/5/84
Drilling Method Hollow Stem Auger
Drilling Contractor John Mathes & Associates, Inc.
Drilling Fluid None

Development Techniques(s) and Date(s)
surged with compressed air

Fluid Loss During Drilling None gallons
Water Removed During Development 60 gallons
Static Depth to Water _____ feet below M.P.
Pumping Depth to Water _____ feet below M.P.
Pumping Duration 1 hours
Yield 1 gpm Date _____
Specific Capacity _____ gpm/ft
Well Purpose ground-water monitoring well

Remarks

Prepared by D. Colton

GERAGHTY & MILLER, INC.
Ground-Water Consultants

# WELL CONSTRUCTION LOG

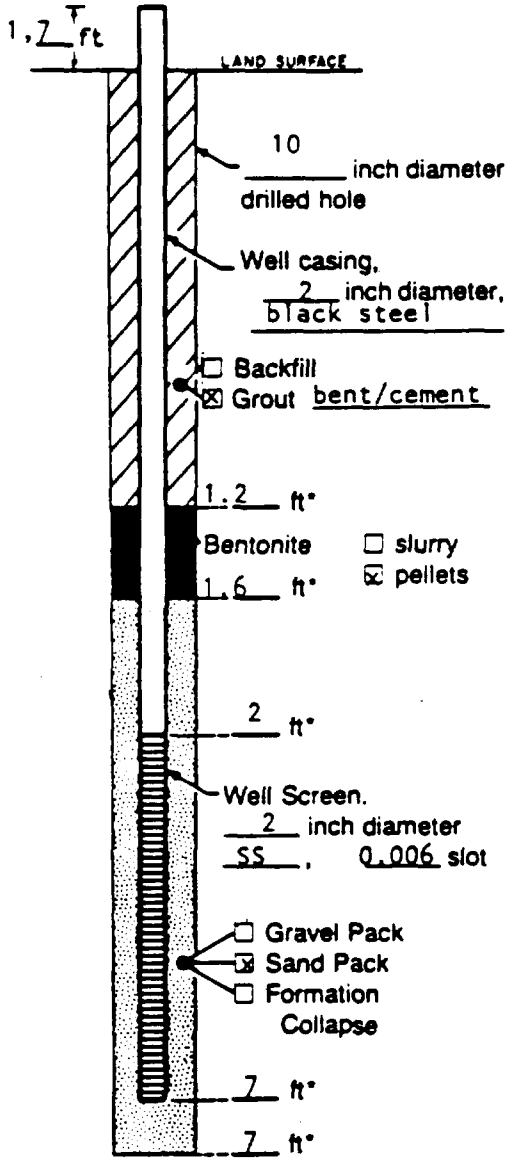


Measuring Point is Top of Well Casing Unless Otherwise Noted.

*Depth Below Land Surface

Project Monsanto Company Well GM-43
Town/City Sauget
County St. Clair State IL
Permit No.
Land-Surface Elevation
and Datum _____ feet ☒ surveyed
Measuring Point 414.38 Ft (MSL) ☐ estimated
Installation Dates(s) 12/5/84
Drilling Method Hollow Stem Auger
Drilling Contractor John Mathes & Associates, Inc.
Drilling Fluid None

Development Techniques(s) and Date(s)
surged with compressed air

Fluid Loss During Drilling None gallons
Water Removed During Development 60 gallons
Static Depth to Water _____ feet below M.P.
Pumping Depth to Water _____ feet below M.P.
Pumping Duration 1 hours
Yield 1 gpm Date _____
Specific Capacity _____ gpm/ft
Well Purpose ground-water monitoring well

Remarks

Prepared by D. Colton

GERAGHTY & MILLER, INC.
Ground-Water Consultants

# WELL CONSTRUCTION LOG

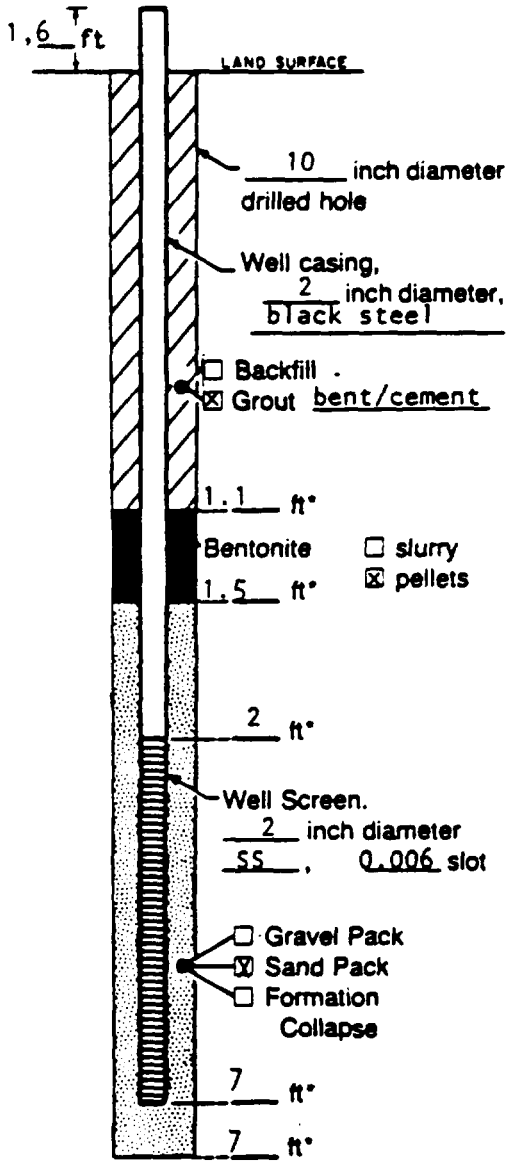


Measuring Point is Top of Well Casing Unless Otherwise Noted.

*Depth Below Land Surface

Project Monsanto Company Well GM-44
Town/City Sauget
County St. Clair State IL
Permit No.
Land-Surface Elevation
and Datum _____ feet ☒ surveyed
~~Measuring Point 414.44~~ Ft (MSL) ☐ estimated
Installation Dates(s) 12/5/86
Drilling Method Hollow Stem Auger
Drilling Contractor John Mathes & Associates, Inc.
Drilling Fluid None

Development Techniques(s) and Date(s)
surged with compressed air

Fluid Loss During Drilling None gallons
Water Removed During Development 60 gallons
Static Depth to Water _____ feet below M.P.
Pumping Depth to Water _____ feet below M.P.
Pumping Duration 1 hours
Yield 1 gpm Date _____
Specific Capacity _____ gpm/ft
Well Purpose ground-water monitoring well

Remarks

Prepared by D. Colton

GERAGHTY & MILLER, INC.
Ground-Water Consultants

# WELL CONSTRUCTION LOG

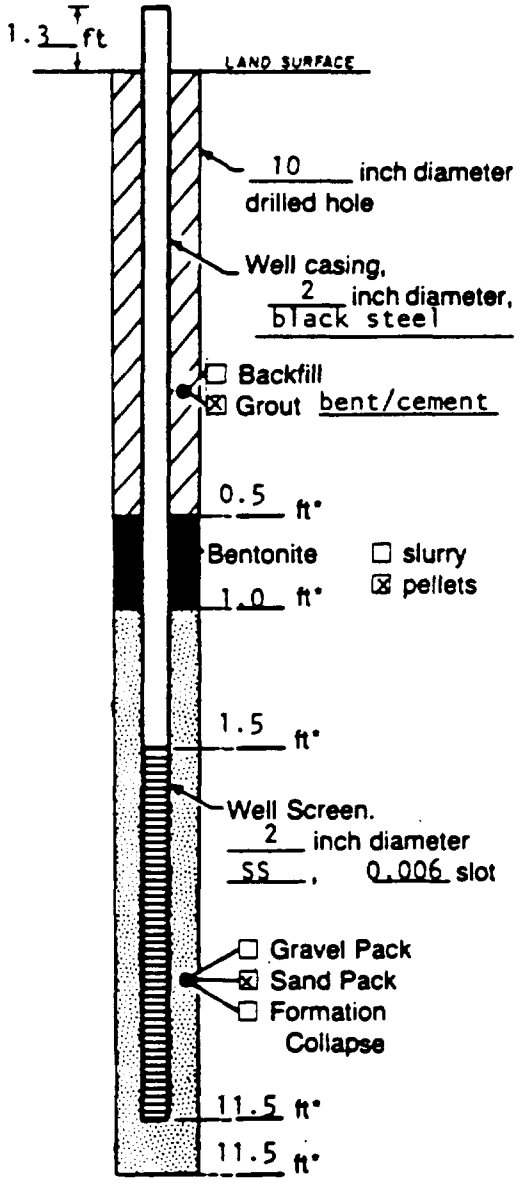


Measuring Point is Top of Well Casing Unless Otherwise Noted.

*Depth Below Land Surface

Project Monsanto Company Well GM-45

Town/City Sauget

County St. Clair State IL

Permit No.

Land-Surface Elevation and Datum _____ feet ☒ surveyed
Measuring Point 410.10 Ft (MSL) ☐ estimated

Installation Dates(s) 12/6/84

Drilling Method Hollow Stem Auger

Drilling Contractor John Mathes & Associates, Inc.

Drilling Fluid None

Development Techniques(s) and Date(s)
surged with compressed air

Fluid Loss During Drilling None gallons

Water Removed During Development 60 gallons

Static Depth to Water _____ feet below M.P.

Pumping Depth to Water _____ feet below M.P.

Pumping Duration 1 hours

Yield 1 gpm Date _____

Specific Capacity _____ gpm/ft

Well Purpose ground-water monitoring well

Remarks

Prepared by D. Colton

GERAGHTY & MILLER, INC.
Ground-Water Consultants

# WELL CONSTRUCTION LOG

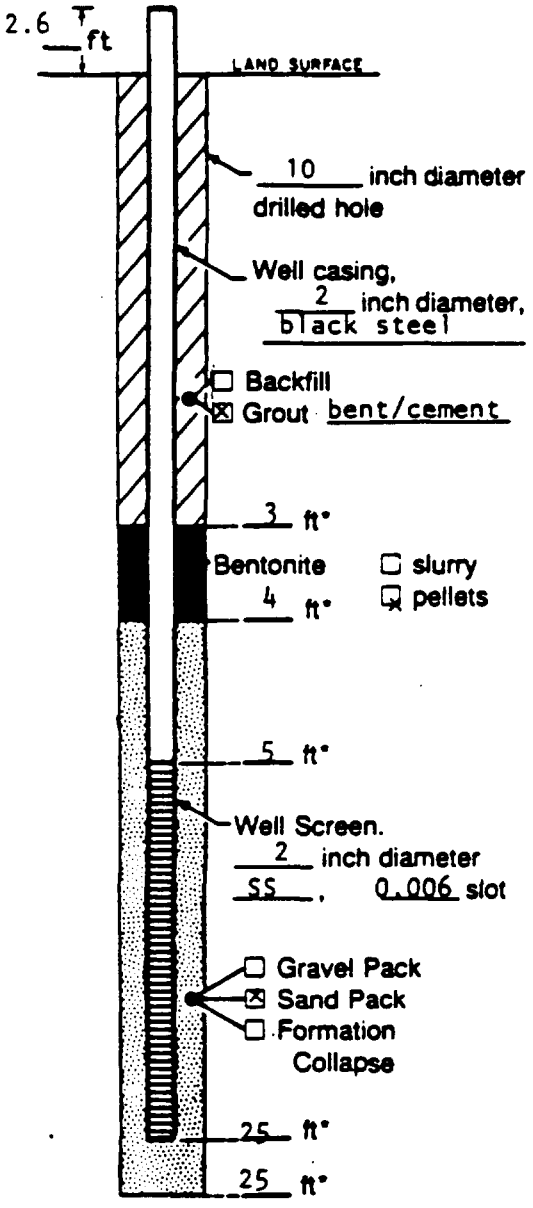


Measuring Point is Top of Well Casing Unless Otherwise Noted.

*Depth Below Land Surface

Project Monsanto Company Well GM-46
Town/City Sauget
County St. Clair State IL
Permit No.
Land-Surface Elevation
and Datum _____ feet ☒ surveyed
Measuring Point 411.60 Ft (MSL) ☐ estimated
Installation Dates(s) 12/7/84
Drilling Method Hollow Stem Auger
Drilling Contractor John Mathes & Associates, Inc.
Drilling Fluid None

Development Techniques(s) and Date(s)
surged with compressed air

Fluid Loss During Drilling None gallons
Water Removed During Development 60 gallons
Static Depth to Water _____ feet below M.P.
Pumping Depth to Water _____ feet below M.P.
Pumping Duration 1 hours
Yield 1 gpm Date _____
Specific Capacity _____ gpm/ft
Well Purpose ground-water monitoring well

Remarks

Prepared by D. Colton

GERAGHTY & MILLER, INC.
Ground-Water Consultants

# WELL CONSTRUCTION LOG

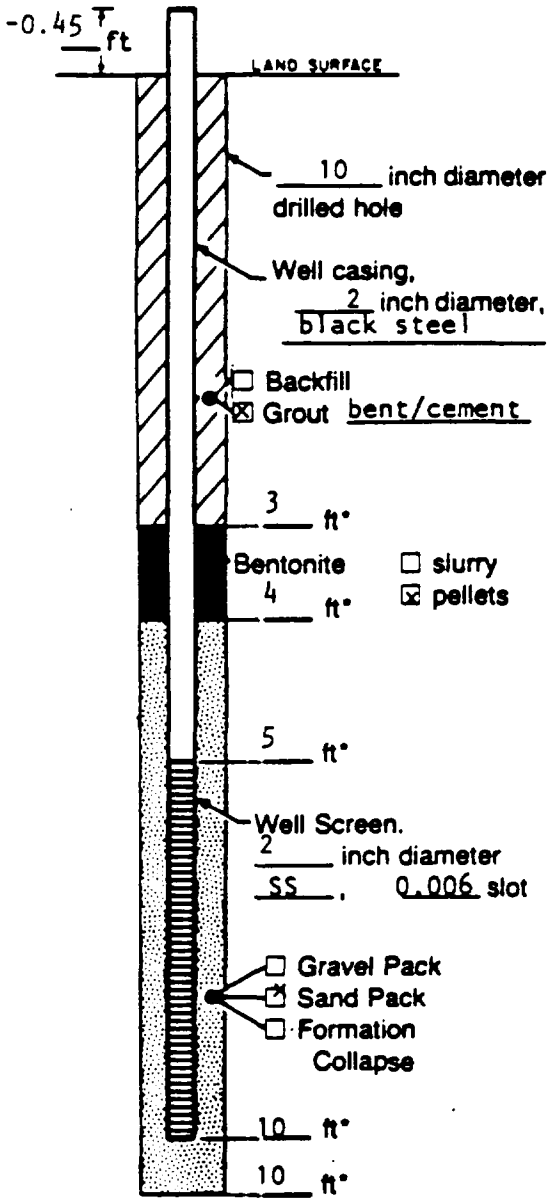


Measuring Point is Top of Well Casing Unless Otherwise Noted.

*Depth Below Land Surface

Project Monsanto Company Well GM-47
Town/City Sauget
County St. Clair State IL
Permit No.
Land-Surface Elevation
and Datum _____ feet ☒ surveyed
Measuring Point 412.34 Ft (MSL) ☐ estimated
Installation Dates(s) 12/10/84
Drilling Method Hollow Stem Auger
Drilling Contractor John Mathes & Associates, Inc.
Drilling Fluid None

Development Techniques(s) and Date(s)
surged with compressed air

Fluid Loss During Drilling None gal.
Water Removed During Development 60 gallons
Static Depth to Water _____ feet below M.P.
Pumping Depth to Water _____ feet below M.P.
Pumping Duration 1 hours
Yield 1 gpm Date _____
Specific Capacity _____ gpm/ft
Well Purpose ground-water monitoring well

Remarks

Prepared by D. Colton

GERAGHTY & MILLER, INC.
Ground-Water Consultants

# WELL CONSTRUCTION LOG

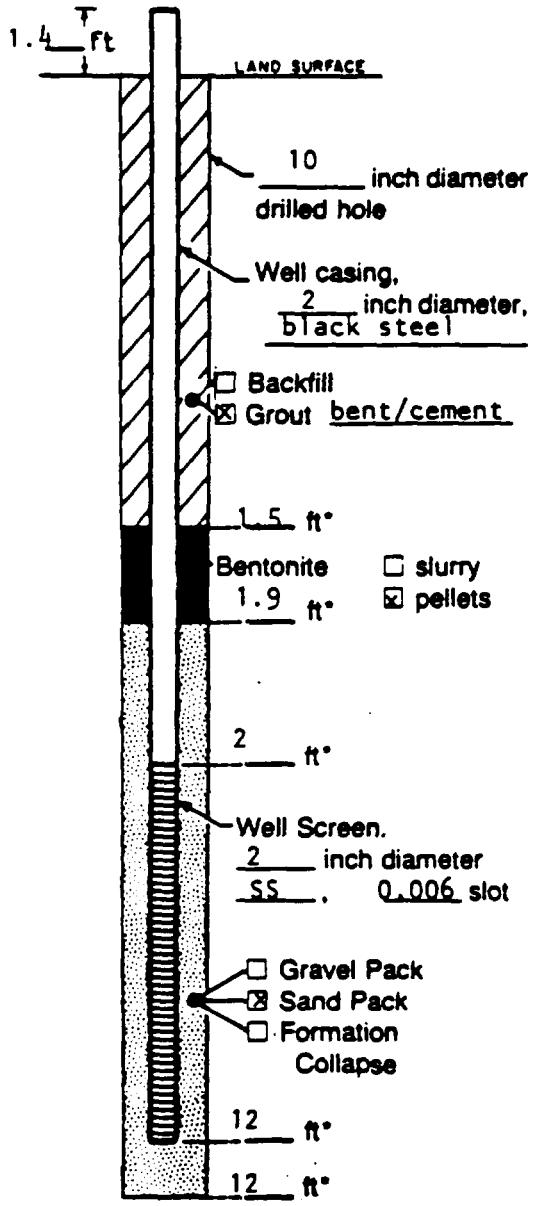


Measuring Point is Top of Well Casing Unless Otherwise Noted.

*Depth Below Land Surface

Project Monsanto Company Well GM-48
Town/City Sauget
County St. Clair State IL
Permit No.
Land-Surface Elevation
and Datum _____ feet ☒ surveyed
Measuring Point 411.00 Ft (MSL) ☐ estimated
Installation Dates(s) 12/10/84
Drilling Method Hollow Stem Auger
Drilling Contractor John Mathes & Associates, Inc.
Drilling Fluid None

Development Techniques(s) and Date(s)
surged with compressed air

Fluid Loss During Drilling None gallons
Water Removed During Development 60 gallons
Static Depth to Water _____ feet below M.P.
Pumping Depth to Water _____ feet below M.P.
Pumping Duration 1 hours
Yield 1 gpm Date _____
Specific Capacity _____ gpm/ft
Well Purpose ground-water monitoring well

Remarks

Prepared by D. Colton

GERAGHTY & MILLER, INC.
Ground-Water Consultants

# WELL CONSTRUCTION LOG

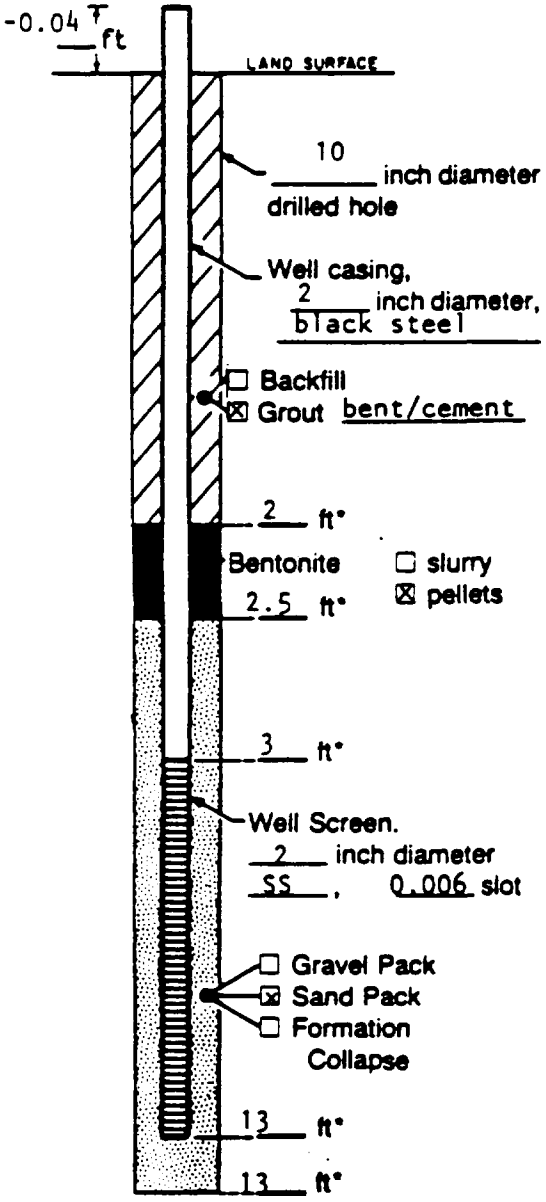


Measuring Point is Top of Well Casing Unless Otherwise Noted.

*Depth Below Land Surface

Project Monsanto Company Well GM-49
Town/City Sauget
County St. Clair State IL
Permit No.
Land-Surface Elevation and Datum _____ feet ☒ surveyed
Measuring Point 408.43 Ft (MSL) ☐ estimated
Installation Dates(s) 12/10/84
Drilling Method Hollow Stem Auger
Drilling Contractor John Mathes & Associates, Inc.
Drilling Fluid None

Development Techniques(s) and Date(s)
surged with compressed air

Fluid Loss During Drilling None gallons
Water Removed During Development 60 gallons
Static Depth to Water _____ feet below M.P.
Pumping Depth to Water _____ feet below M.P.
Pumping Duration 1 hours
Yield 1 gpm Date _____
Specific Capacity _____ gpm/ft
Well Purpose ground-water monitoring well

Remarks

Prepared by D. Colton

GERAGHTY & MILLER, INC.
Ground-Water Consultants

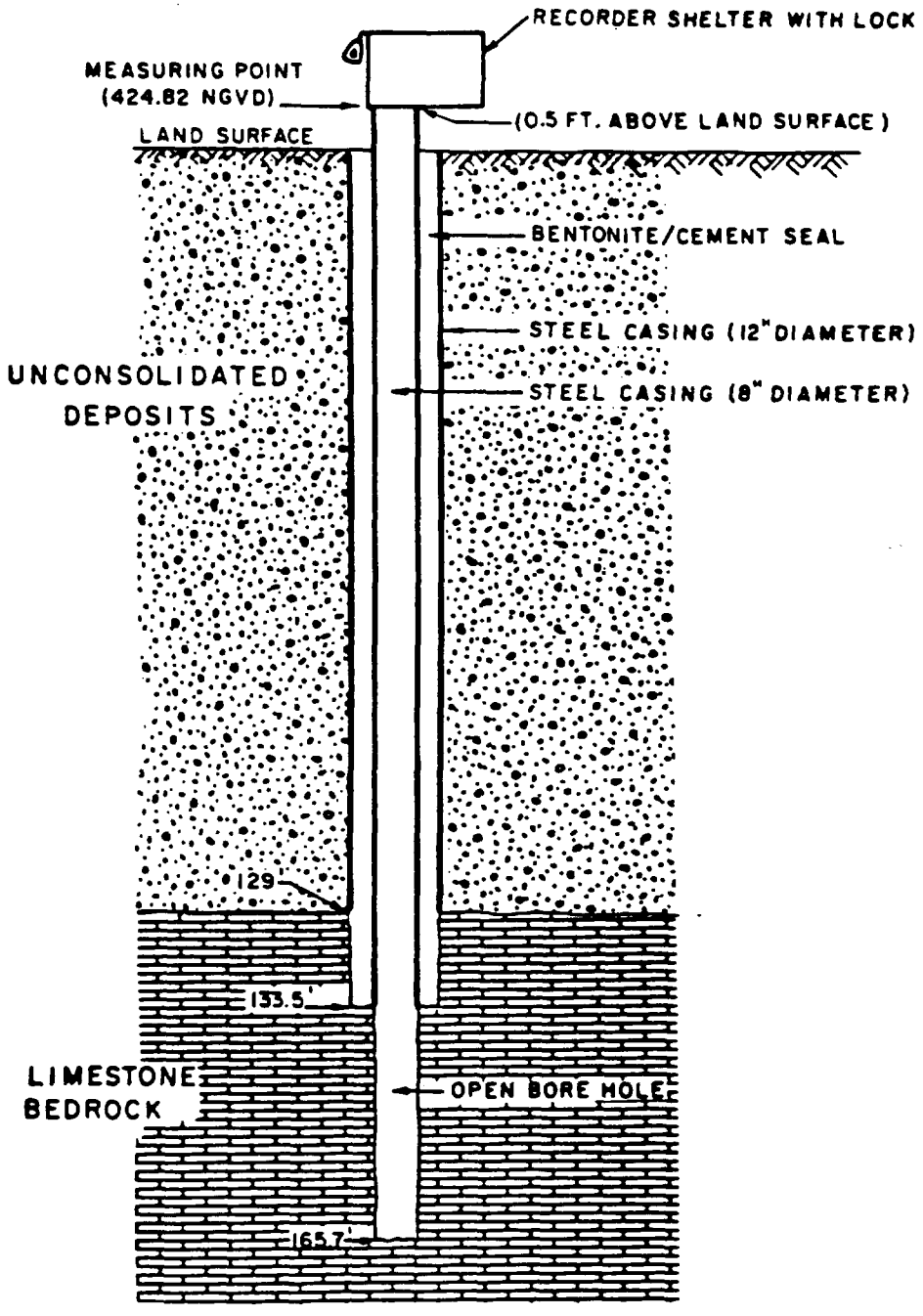


**CONSTRUCTION DETAILS FOR WELL GM-106**

**MONSANTO COMPANY**
**Sauget, Illinois**

SUMMARY OF LABORATORY
TEST RESULTS

GERAGHTY & MILLER
PERMEABILITY TESTING
SAUGET, ILLINOIS

BACK PRESSURE SATURATION FALLING HEAD "K" RESULTS

| Boring Number | Sample Number | Sample Depth (ft.) | Natural Moisture Content (%) | Dry Unit Weight (lbs/ft$^3$) | k (cm/sec) | Description |
|---|---|---|---|---|---|---|
| BS-A | 1-3 | 1.0-1.5 | 15 | 111 | $3.9 \times 10^{-7}$ | Brown Silty CLAY, CL |
| BS-B | 1-3 | 1.0-1.5 | 17 | 111 | $4.9 \times 10^{-7}$ | Brown Silty CLAY, CL |

NORMAL FALLING HEAD (k-620) "K" RESULTS

| Boring Number | Sample Number | Sample Depth (ft.) | Natural Moisture Content (%) | Dry Unit Weight (lbs/ft$^3$) | k (cm/sec) | Description |
|---|---|---|---|---|---|---|
| BS-A | 1-2 | 0.5-1.0 | 20 | 102 | $2.4 \times 10^{-6}$ | Brown Silty CLAY, CL |
| BS-B | 1-2 | 0.5-1.0 | 18 | 103 | $9.8 \times 10^{-7}$ | Brown Silty CLAY, CL |

Table E-1. Summary of Volatile Organic Compounds in Ground Water, W.G. Krummrich Plant, Monsanto Company, Sauget, Il. ***

| Well Number: | GM-1 | GM-1 | GM-2 | GM-2 | GM-3 | GM-3 | GM-3 | GM-4A | GM-4A | GM-4B |
|---|---|---|---|---|---|---|---|---|---|---|
| Date: | 11/83 | 5/84 | 11/83 | 5/84 | 11/83 | 5/84 | 5/84* | 11/83 | 5/84 | 9/84 |
| USEPA Priority Pollutant Volatile Organic Compounds concentrations are in ug/L | | | | | | | | | | |
| acrolein | <1 | <1 | <1 | <1 | <1 | <1 | <1 | <1 | <1 | NA |
| acrylonitrile | <1 | <1 | <1 | <1 | <1 | <1 | <1 | <1 | <1 | NA |
| benzene | <1 | <1 | <1 | <1 | <1 | <1 | <1 | <1 | <1 | 176 |
| bis (chloromethyl) ether | <1 | <1 | <1 | <1 | <1 | <1 | <1 | <1 | <1 | <1.5 |
| bromoform | <1 | <1 | <1 | <1 | <1 | <1 | <1 | <1 | <1 | <3.2 |
| carbon tetrachloride | <1 | <1 | <1 | <1 | <1 | <1 | <1 | <1 | <1 | <1.5 |
| chlorobenzene | <1 | <1 | <1 | <1 | <1 | <1 | <1 | <1 | <1 | 2,340 |
| chlorodibromomethane | <1 | <1 | <1 | <1 | <1 | <1 | <1 | <1 | <1 | <2.0 |
| chloroethane | <1 | <1 | <1 | <1 | <1 | <1 | <1 | <1 | <1 | <2.4 |
| 2-chloroethylvinyl ether | <1 | <1 | <1 | <1 | <1 | <1 | <1 | <1 | <1 | <5.9 |
| chloroform | 2 | <1 | 28 | <1 | 11 | <1 | <1 | <1 | <1 | 23 |
| dichlorobromomethane | <1 | <1 | <1 | <1 | <1 | <1 | <1 | <1 | <1 | <1.1 |
| dichlorodifluoromethane | <1 | <1 | <1 | <1 | <1 | <1 | <1 | <1 | <1 | NA |
| 1,1-dichloroethane | <1 | <1 | <1 | <1 | <1 | <1 | <1 | <1 | <1 | <0.8 |
| 1,2-dichloroethane | <1 | <1 | <1 | <1 | <1 | <1 | <1 | <1 | <1 | <1.5 |
| 1,1-dichloroethylene | <1 | <1 | <1 | <1 | <1 | <1 | <1 | <1 | <1 | <1.9 |
| 1,2-dichloropropane | <1 | <1 | <1 | <1 | <1 | <1 | <1 | <1 | <1 | <1.5 |
| cis-1,3-dichloropropylene | <1 | <1 | <1 | <1 | <1 | <1 | <1 | <1 | <1 | <1.5 |
| trans-1,3-dichloropropylene | <1 | <1 | <1 | <1 | <1 | <1 | <1 | <1 | <1 | <1.5 |
| ethylbenzene | <1 | <1 | <1 | <1 | <1 | <1 | <1 | <1 | <1 | 8 |
| methyl bromide | <1 | <1 | <1 | <1 | <1 | <1 | <1 | <1 | <1 | <1.5 |
| methyl chloride | <1 | <1 | <1 | <1 | <1 | <1 | <1 | <1 | <1 | <1.6 |
| methylene chloride | 18 | 32 | 12 | 74 | 12 | 51 | 53 | 9 | 38 | <1.1 |
| 1,1,2,2-tetrachloroethane | <1 | <1 | <1 | <1 | <1 | <1 | <1 | <1 | <1 | 4 |
| tetrachloroethylene | <1 | <1 | <1 | <1 | <1 | <1 | <1 | <1 | <1 | <1.5 |
| toluene | <1 | 1 | <1 | 1 | <1 | 1 | 2 | <1 | 2 | 2 |
| 1,2-trans-dichloroethylene | <1 | <1 | <1 | 4 | <1 | <1 | <1 | <1 | <1 | 2 |
| 1,1,1-trichloroethane | 5 | <1 | <1 | <1 | <1 | 3 | <1 | <1 | <1 | <1.2 |
| 1,1,2-trichloroethane | <1 | <1 | <1 | <1 | <1 | <1 | <1 | <1 | <1 | <1.6 |
| trichloroethylene | 6 | <1 | 6 | 3 | <1 | <1 | <1 | <1 | <1 | <1.3 |
| trichlorofluoromethane | <1 | <1 | <1 | <1 | <1 | <1 | <1 | <1 | <1 | <1.2 |
| vinyl chloride | <1 | <1 | <1 | <1 | <1 | <1 | <1 | <1 | <1 | <1.2 |
| Sub Total 1 | 31 | 33 | 46 | 82 | 23 | 55 | 55 | 9 | 40 | 2555 |
| Miscellaneous Volatile Organic Compounds | | | | | | | | | | |
| methyl-iso-butyl ketone | NA | NA | NA | NA | NA | NA | NA | NA | NA | <5 |
| methyl isoamyl ketone | NA | NA | NA | NA | NA | NA | NA | NA | NA | <5 |
| m-xylene | NA | NA | NA | NA | NA | NA | NA | NA | NA | <5 |
| o-xylene/p-xylene | NA | NA | NA | NA | NA | NA | NA | NA | NA | <5 |
| Sub Total 2 | NA | NA | NA | NA | NA | NA | NA | NA | NA | 0 |
| Total VOC's Analyzed | 31 | 33 | 46 | 82 | 23 | 55 | 55 | 9 | 40 | 2555 |

Table E-1. Summary of Volatile Organic Compounds in Ground Water, W.G. Krummrich Plant, Monsanto Company, Sauget, Il. ***

| Well Number: | GM-4B | GM-4B | GM-4B | GM-4B | GM-4B | GM-4C | GM-4C | GM-5 | GM-5 | GM-6A |
|---|---|---|---|---|---|---|---|---|---|---|
| Date: | 11/84 | 11/84* | 2/85 | 11/85 | 11/85* | 2/85 | 5/85 | 11/83 | 5/84 | 11/83 |
| USEPA Priority Pollutant Volatile Organic Compounds concentrations are in ug/L | | | | | | | | | | |
| acrolein | <5,000 | <5,000 | <100 | <1,000 | <100 | <100 | <1,000 | <1 | <1 | <1 |
| acrylonitrile | <5,000 | <5,000 | <100 | <1,000 | <100 | <100 | <1,000 | <1 | <1 | <1 |
| benzene | 500 | <500 | 142 | <44 | 28.3 | 97.7 | <44 | <1 | 2 | <1 |
| bis (chloromethyl) ether | <500 | <500 | <10 | <100 | <10 | <10 | <100 | <1 | <1 | <1 |
| bromoform | <500 | <500 | <4.7 | <47 | <4.7 | <4.7 | <47 | <1 | <1 | <1 |
| carbon tetrachloride | <500 | <500 | <2.8 | <28 | <2.8 | <2.8 | <28 | <1 | <1 | <1 |
| chlorobenzene | 15,900 | 15,900 | 13,600 | 4,360 | 5,400 | 9,210 | 4,515.3 | <1 | <1 | <1 |
| chlorodibromomethane | <500 | <500 | <3.1 | <31 | <3.1 | <3.1 | <31 | <1 | <1 | <1 |
| chloroethane | <500 | <500 | <10 | <100 | <10 | <10 | <100 | <1 | <1 | <1 |
| 2-chloroethylvinyl ether | <500 | <500 | <10 | <100 | <10 | <10 | <100 | <1 | <1 | <1 |
| chloroform | <500 | <500 | <1.6 | <16 | <1.6 | <1.6 | <16 | 1 | <1 | 3 |
| dichlorobromomethane | <500 | <500 | <2.2 | <22 | <2.2 | <2.2 | <22 | <1 | <1 | <1 |
| dichlorodifluoromethane | <500 | <500 | <10 | <100 | <10 | <10 | <100 | <1 | <1 | <1 |
| 1,1-dichloroethane | <500 | <500 | <4.7 | <47 | <4.7 | <4.7 | <47 | <1 | <1 | 29 |
| 1,2-dichloroethane | <500 | <500 | <2.8 | <28 | <2.8 | <2.8 | <28 | <1 | <1 | <1 |
| 1,1-dichloroethylene | <500 | <500 | <2.8 | <28 | <2.8 | <2.8 | <28 | <1 | <1 | <1 |
| 1,2-dichloropropane | <500 | <500 | <6 | <60 | <6 | <6 | <60 | <1 | <1 | <1 |
| cis-1,3-dichloropropylene | <500 | <500 | <5 | <50 | <5 | <5 | <50 | <1 | <1 | <1 |
| trans-1,3-dichloropropylene | <500 | <500 | <10 | <100 | <10 | <10 | <100 | <1 | <1 | <1 |
| ethylbenzene | <500 | <500 | <7.2 | <72 | <7.2 | <7.2 | <72 | <1 | <1 | <1 |
| methyl bromide | <500 | <500 | <10 | <100 | <10 | <10 | <100 | <1 | <1 | <1 |
| methyl chloride | <500 | <500 | <10 | <100 | <10 | <10 | <100 | <1 | <1 | <1 |
| methylene chloride | <500 | <500 | <2.8 | <28 | <2.8 | <2.8 | <28 | 10 | 102 | 18 |
| 1,1,2,2-tetrachloroethane | <500 | <500 | <6.9 | <69 | <6.9 | <6.9 | <69 | <1 | <1 | <1 |
| tetrachloroethylene | <500 | <500 | <4.1 | <41 | <4.1 | <4.1 | <41 | <1 | <1 | <1 |
| toluene | <500 | <500 | <6 | <60 | <6 | <6 | <60 | 2 | 2 | 1 |
| 1,2-trans-dichloroethylene | <500 | <500 | <3.1 | <16 | <1.6 | <1.6 | <16 | <1 | <1 | <1 |
| 1,1,1-trichloroethane | <500 | <500 | <3.8 | <38 | <3.8 | <3.8 | 66 | <1 | <1 | 2 |
| 1,1,2-trichloroethane | <500 | <500 | <5 | <50 | <5 | <5 | <50 | <1 | <1 | <1 |
| trichloroethylene | <500 | <500 | <1.9 | <19 | <1.9 | <1.9 | <19 | <1 | <1 | 2 |
| trichlorofluoromethane | <500 | <500 | <10 | <100 | <10 | <10 | <100 | <1 | <1 | <1 |
| vinyl chloride | <500 | <500 | <10 | <100 | <10 | <10 | <100 | <1 | <1 | <1 |
| Sub Total 1 | 16400 | 15900 | 13742 | 4360 | 5428.3 | 9307.7 | 4581.3 | 13 | 106 | 55 |
| Miscellaneous Volatile Organic Compounds | | | | | | | | | | |
| methyl-iso-butyl ketone | <500 | <500 | <10 | <100 | <10 | <10 | <100 | NA | NA | NA |
| methyl isoamyl ketone | <500 | <500 | <10 | <100 | <10 | <10 | <100 | NA | NA | NA |
| m-xylene | <500 | <500 | <10 | <100 | <10 | <10 | <100 | NA | NA | NA |
| o-xylene/p-xylene | <500 | <500 | <10 | <100 | <10 | <10 | <100 | NA | NA | NA |
| Sub Total 2 | 0 | 0 | 0 | 0 | 0 | 0 | 0 | NA | NA | NA |
| Total VOC's Analyzed | 16400 | 15900 | 13742 | 4360 | 5428.3 | 9307.7 | 4581.3 | 13 | 106 | 55 |

Table E-1. Summary of Volatile Organic Compounds in Ground Water, W.G. Krummrich Plant, Monsanto Company, Sauget, Il. +++

| Well Number: | GM-6A | GM-6A | GM-6B | GM-6B | GM-6B | GM-7 | GM-7 | GM-8 | GM-8 | GM-8 |
|---|---|---|---|---|---|---|---|---|---|---|
| Date: | 5/84 | 11/84 | 9/84++ | 11/84 | 11/85 | 11/83 | 5/84 | 11/83 | 5/84 | 11/84 |
| USEPA Priority Pollutant Volatile Organic Compounds concentrations are in ug/L | | | | | | | | | | |
| acrolein | <1 | <100 | NA | <100 | <1,000 | <1 | <1 | <1 | <1 | <100 |
| acrylonitrile | <1 | <100 | NA | <100 | <1,000 | <1 | <1 | <1 | <1 | <100 |
| benzene | 1 | <10 | 28 | 71 | 71.8 | 1 | <1 | 3 | .2 | <10 |
| bis (chloromethyl) ether | <1 | <10 | <1.5 | <10 | <100 | <1 | <1 | <1 | <1 | <10 |
| bromoform | <1 | <10 | <3.2 | <10 | <47 | <1 | <1 | <1 | <1 | <10 |
| carbon tetrachloride | <1 | <10 | <1.5 | <10 | <28 | <1 | <1 | <1 | <1 | <10 |
| chlorobenzene | <1 | <10 | 2,620 | 326 | 379.0 | <1 | <1 | <1 | <1 | <10 |
| chlorodibromomethane | <1 | <10 | <2.0 | <10 | <31 | <1 | <1 | <1 | <1 | <10 |
| chloroethane | <1 | <10 | 437 | <10 | <100 | <1 | <1 | <1 | <1 | <10 |
| 2-chloroethylvinyl ether | <1 | <10 | <5.9 | <10 | <100 | <1 | <1 | <1 | <1 | <10 |
| chloroform | <1 | <10 | <0.8 | <10 | <16 | <1 | <1 | 8 | <1 | <10 |
| dichlorobromomethane | <1 | <10 | <1.1 | <10 | <22 | <1 | <1 | <1 | <1 | <10 |
| dichlorodifluoromethane | <1 | <10 | NA | <10 | <100 | <1 | <1 | <1 | <1 | <10 |
| 1,1-dichloroethane | <1 | 13 | 224 | 184 | 75.7 | <1 | <1 | <1 | <1 | <10 |
| 1,2-dichloroethane | <1 | <10 | <1.5 | <10 | <28 | <1 | <1 | <1 | <1 | <10 |
| 1,1-dichloroethylene | <1 | <10 | 24 | 15 | <28 | <1 | <1 | <1 | <1 | <10 |
| 1,2-dichloropropane | <1 | <10 | <1.5 | <10 | <60 | <1 | <1 | <1 | <1 | <10 |
| cis-1,3-dichloropropylene | <1 | <10 | <1.5 | <10 | <50 | <1 | <1 | <1 | <1 | <10 |
| trans-1,3-dichloropropylene | <1 | <10 | <1.5 | <10 | <100 | <1 | <1 | <1 | <1 | <10 |
| ethylbenzene | <1 | <10 | 5 | <10 | <72 | <1 | <1 | <1 | <1 | <10 |
| methyl bromide | <1 | <10 | <1.5 | <10 | <100 | <1 | <1 | <1 | <1 | <10 |
| methyl chloride | <1 | <10 | <1.6 | <10 | <100 | <1 | <1 | <1 | <1 | <10 |
| methylene chloride | 451 | <10 | 326 | <10 | <28 | 11 | 53 | 16 | 161 | <10 |
| 1,1,2,2-tetrachloroethane | <1 | <10 | <1.4 | <10 | <69 | <1 | <1 | <1 | <1 | <10 |
| tetrachloroethylene | <1 | <10 | <1.5 | <10 | <41 | <1 | <1 | <1 | <1 | <10 |
| toluene | 2 | <10 | 15 | <10 | <60 | <1 | 2 | <1 | 2 | <10 |
| 1,2-trans-dichloroethylene | <1 | <10 | 750 | 537 | 201 | <1 | <1 | <1 | <1 | <10 |
| 1,1,1-trichloroethane | 7 | <10 | <1.2 | <10 | <38 | <1 | 6 | 6 | 4 | 19 |
| 1,1,2-trichloroethane | <1 | <10 | <1.6 | <10 | <50 | <1 | <1 | <1 | <1 | <10 |
| trichloroethylene | 1 | <10 | 3 | <10 | <19 | <1 | <1 | <1 | <1 | <10 |
| trichlorofluoromethane | <1 | <10 | <1.2 | <10 | <100 | <1 | <1 | <1 | <1 | <10 |
| vinyl chloride | <1 | <10 | <1.2 | 258 | 116 | <1 | <1 | <1 | <1 | <10 |
| Sub Total 1 | 462 | 13 | 4432 | 1391 | 843.5 | 12 | 61 | 33 | 169 | 19 |
| Miscellaneous Volatile Organic Compounds | | | | | | | | | | |
| methyl-iso-butyl ketone | NA | <10 | <5 | <10 | <100 | NA | NA | NA | NA | <100 |
| methyl isoamyl ketone | NA | <10 | <5 | <10 | <100 | NA | NA | NA | NA | <100 |
| m-xylene | NA | <10 | <5 | <10 | <100 | NA | NA | NA | NA | <10 |
| o-xylene/p-xylene | NA | <10 | <5 | <10 | <100 | NA | NA | NA | NA | <10 |
| Sub Total 2 | NA | 0 | 0 | 0 | 0 | NA | NA | NA | NA | 0 |
| Total VOC's Analyzed | 462 | 13 | 4432 | 1391 | 843.5 | 12 | 61 | 33 | 169 | 19 |

Table E-1. Summary of Volatile Organic Compounds in Ground Water, W.G. Krummrich Plant, Monsanto Company, Sauget, Il. ***

| Well Number: | GM-8 | GM-8 | GM-9A | GM-9A | GM-9B | GM-9B | GM-9B | GM-9C | GM-9C | GM-9C |
|---|---|---|---|---|---|---|---|---|---|---|
| Date: | 2/85 | 11/85 | 11/83 | 5/84 | 9/84** | 5/85 | 11/85 | 9/84** | 5/85 | 11/85 |
| USEPA Priority Pollutant Volatile Organic Compounds concentrations are in ug/L | | | | | | | | | | |
| acrolein | <100 | <100 | <1 | <1 | NA | <100 | <1,000 | NA | <100 | <100 |
| acrylonitrile | <100 | <100 | <1 | <1 | NA | <100 | <1,000 | NA | <100 | <100 |
| benzene | <4.4 | <4.4 | 331 | 449 | 276 | 378.4 | <44 | 35 | <4.4 | <4.4 |
| bis (chloromethyl) ether | <10 | <10 | <1 | <1 | <1.5 | <10 | <100 | <1.5 | <10 | <10 |
| bromoform | <4.7 | <4.7 | <1 | <1 | <3.2 | <4.7 | <47 | <3.2 | <4.7 | <4.7 |
| carbon tetrachloride | <2.8 | <2.8 | <1 | <1 | <1.5 | <2.8 | <28 | <1.5 | <2.8 | <2.8 |
| chlorobenzene | <6 | <6 | 1,270 | 701 | 272 | 1,780.5 | 229 | 216 | 34.7 | 99.6 |
| chlorodibromomethane | <3.1 | <3.1 | <1 | <1 | <2.0 | <3.1 | <31 | <2.0 | <3.1 | <3.1 |
| chloroethane | <10 | <10 | <1 | <1 | <2.4 | <10 | <100 | <2.4 | <10 | <10 |
| 2-chloroethylvinyl ether | <10 | <10 | <1 | <1 | <5.9 | <10 | <100 | <5.9 | <10 | <10 |
| chloroform | <1.6 | <1.6 | 3 | 2 | <0.8 | <1.6 | <16 | 1 | <1.6 | <1.6 |
| dichlorobromomethane | <2.2 | <2.2 | <1 | <1 | <1.1 | <2.2 | <22 | <1.1 | <2.2 | <2.2 |
| dichlorodifluoromethane | <10 | <10 | <1 | <1 | NA | <10 | <100 | NA | <10 | <10 |
| 1,1-dichloroethane | <4.7 | <4.7 | <1 | <1 | <0.8 | <4.7 | <47 | <0.8 | <4.7 | <4.7 |
| 1,2-dichloroethane | <2.8 | <2.8 | <1 | <1 | <1.5 | <2.8 | <28 | <1.5 | <2.8 | <2.8 |
| 1,1-dichloroethylene | <2.8 | <2.8 | <1 | <1 | 7 | <2.8 | <28 | 1 | <2.8 | <2.8 |
| 1,2-dichloropropane | <6 | <6 | <1 | <1 | <1.5 | <6 | <60 | <1.5 | <6 | <6 |
| cis-1,3-dichloropropylene | <5 | <5 | <1 | <1 | <1.5 | <5 | <50 | <1.5 | <5 | <5 |
| trans-1,3-dichloropropylene | <10 | <10 | <1 | <1 | <1.5 | <10 | <100 | <1.5 | <10 | <10 |
| ethylbenzene | <7.2 | <7.2 | <1 | 3 | <0.4 | <7.2 | <72 | 1 | <7.2 | <7.2 |
| methyl bromide | <10 | <10 | <1 | <1 | <1.5 | <10 | <100 | <1.5 | <10 | <10 |
| methyl chloride | <10 | <10 | <1 | <1 | <1.6 | <10 | <100 | <1.6 | <10 | <10 |
| methylene chloride | <2.8 | <2.8 | 10 | 22 | 211 | <2.8 | 584 | 35 | <2.8 | 53.8 |
| 1,1,2,2-tetrachloroethane | <6.9 | <6.9 | <1 | <1 | <1.4 | <6.9 | <69 | <1.4 | <6.9 | <6.9 |
| tetrachloroethylene | <4.1 | <4.1 | 3 | 2 | <1.5 | <4.1 | <41 | <1.5 | <4.1 | <4.1 |
| toluene | <6 | <6 | 2 | 2 | 6 | <6 | <60 | 1.5 | <6 | <6 |
| 1,2-trans-dichloroethylene | <1.6 | <1.6 | <1 | <1 | <1.5 | <1.6 | <16 | <1.5 | <1.6 | <1.6 |
| 1,1,1-trichloroethane | <3.8 | <3.8 | 3 | 4 | <1.2 | <3.8 | <38 | <1.2 | <3.8 | <3.8 |
| 1,1,2-trichloroethane | <5 | <5 | <1 | <1 | <1.6 | <5 | <50 | <1.6 | <5 | <5 |
| trichloroethylene | <1.9 | <1.9 | <1 | <1 | <1.3 | <1.9 | <19 | <1.3 | <1.9 | <1.9 |
| trichlorofluoromethane | <10 | <10 | <1 | <1 | <1.2 | <10 | <100 | <1.2 | <10 | <10 |
| vinyl chloride | <10 | <10 | <1 | <1 | <1.2 | <10 | <100 | <1.2 | <10 | <10 |
| Sub Total 1 | 0 | 0 | 1622 | 1185 | 772 | 2158.9 | 813 | 290.5 | 34.7 | 153.4 |
| Miscellaneous Volatile Organic Compounds | | | | | | | | | | |
| methyl-iso-butyl ketone | <10 | <10 | NA | NA | <5 | <10 | <100 | <5 | <10 | <10 |
| methyl isoamyl ketone | <10 | <10 | NA | NA | <5 | <10 | <100 | <5 | <10 | <10 |
| m-xylene | <10 | <10 | NA | NA | <5 | <10 | <100 | <5 | <10 | <10 |
| o-xylene/p-xylene | <10 | <10 | NA | NA | <5 | <10 | <100 | <5 | <10 | <10 |
| Sub Total 2 | 0 | 0 | NA | NA | 0 | 0 | 0 | 0 | 0 | 0 |
| Total VOC's Analyzed | 0 | 0 | 1622 | 1185 | 772 | 2158.9 | 813 | 290.5 | 34.7 | 153.4 |

Table E-1. Summary of Volatile Organic Compounds in Ground Water, W.G. Krummrich Plant, Monsanto Company, Sauget, Il. ***

| Well Number: | GM-10A | GM-10A | GM-10B | GM-10B | GM-10C | GM-10C | GM-11 | GM-11 | GM-12A | GM-12A |
|---|---|---|---|---|---|---|---|---|---|---|
| Date: | 11/83 | 5/84 | 2/85 | 5/85 | 2/85 | 5/85 | 11/83 | 5/84 | 11/83 | 11/83+ |
| USEPA Priority Pollutant Volatile Organic Compounds concentrations are in ug/L | | | | | | | | | | |
| acrolein | <1 | <1 | <100 | <100 | <100 | <100 | <1 | <1 | <1 | <1 |
| acrylonitrile | <1 | <1 | <100 | <100 | <100 | <100 | <1 | <1 | <1 | <1 |
| benzene | 2 | <1 | 317 | 143.9 | <4.4 | <4.4 | <1 | <1 | 425 | 433 |
| bis (chloromethyl) ether | <1 | <1 | <10 | <10 | <10 | <10 | <1 | <1 | <1 | <1 |
| bromoform | <1 | <1 | <4.7 | <4.7 | <4.7 | <4.7 | <1 | <1 | <1 | <1 |
| carbon tetrachloride | <1 | <1 | <2.8 | <2.8 | <2.8 | <2.8 | <1 | <1 | <1 | <1 |
| chlorobenzene | <1 | <1 | 1,540 | 119 | 107 | 29.6 | <1 | <1 | 350 | 296 |
| chlorodibromomethane | <1 | <1 | <3.1 | <3.1 | <3.1 | <3.1 | <1 | <1 | <1 | <1 |
| chloroethane | <1 | <1 | <10 | <10 | <10 | <10 | <1 | <1 | <1 | <1 |
| 2-chloroethylvinyl ether | <1 | <1 | <10 | <10 | <10 | <10 | <1 | <1 | <1 | <1 |
| chloroform | <1 | <1 | <1.6 | <1.6 | <1.6 | <1.6 | 5 | <1 | 18 | 21 |
| dichlorobromomethane | <1 | <1 | <2.2 | <2.2 | <2.2 | <2.2 | <1 | <1 | <1 | <1 |
| dichlorodifluoromethane | <1 | <1 | <10 | <10 | <10 | <10 | <1 | <1 | <1 | <1 |
| 1,1-dichloroethane | <1 | <1 | <4.7 | <4.7 | <4.7 | <4.7 | <1 | <1 | <1 | <1 |
| 1,2-dichloroethane | <1 | <1 | <2.8 | <2.8 | <2.8 | <2.8 | <1 | <1 | <1 | <1 |
| 1,1-dichloroethylene | <1 | <1 | <2.8 | <2.8 | <2.8 | <2.8 | <1 | <1 | <1 | <1 |
| 1,2-dichloropropane | <1 | <1 | <6 | <6 | <6 | <6 | <1 | <1 | <1 | <1 |
| cis-1,3-dichloropropylene | <1 | <1 | <5 | <5 | <5 | <5 | <1 | <1 | <1 | <1 |
| trans-1,3-dichloropropylene | <1 | <1 | <10 | <10 | <10 | <10 | <1 | <1 | <1 | <1 |
| ethylbenzene | <1 | <1 | <7.2 | <7.2 | <7.2 | <7.2 | <1 | <1 | 4 | 4 |
| methyl bromide | <1 | <1 | <10 | <10 | <10 | <10 | <1 | <1 | <1 | <1 |
| methyl chloride | <1 | <1 | <10 | <10 | <10 | <10 | <1 | <1 | <1 | <1 |
| methylene chloride | 21 | 53 | <2.8 | <2.8 | <2.8 | <2.8 | 16 | 53 | 49 | 64 |
| 1,1,2,2-tetrachloroethane | <1 | <1 | <6.9 | <6.9 | <6.9 | <6.9 | <1 | <1 | <1 | <1 |
| tetrachloroethylene | <1 | <1 | <4.1 | <4.1 | <4.1 | <4.1 | <1 | <1 | <1 | <1 |
| toluene | <1 | 2 | <6 | <6 | <6 | <6 | <1 | 2 | 4 | 4 |
| 1,2-trans-dichloroethylene | <1 | <1 | <1.6 | 1.9 | <1.6 | <1.6 | <1 | <1 | <1 | <1 |
| 1,1,1-trichloroethane | 1 | <1 | <3.8 | <3.8 | <3.8 | <3.8 | <1 | <1 | 8 | 7 |
| 1,1,2-trichloroethane | <1 | <1 | <5 | <5 | <5 | <5 | <1 | <1 | <1 | <1 |
| trichloroethylene | <1 | <1 | <1.9 | <1.9 | <1.9 | <1.9 | <1 | <1 | <1 | <1 |
| trichlorofluoromethane | <1 | <1 | <10 | <10 | <10 | <10 | <1 | <1 | <1 | <1 |
| vinyl chloride | <1 | <1 | <10 | <10 | <10 | <10 | <1 | <1 | <1 | <1 |
| Sub Total 1 | 24 | 55 | 1857 | 264.7 | 107 | 29.6 | 21 | 55 | 858 | 829 |
| Miscellaneous Volatile Organic Compounds | | | | | | | | | | |
| methyl-iso-butyl ketone | NA | NA | <10 | <10 | <10 | <10 | NA | NA | NA | NA |
| methyl isoamyl ketone | NA | NA | <10 | <10 | <10 | <10 | NA | NA | NA | NA |
| m-xylene | NA | NA | <10 | <10 | <10 | <10 | NA | NA | NA | NA |
| o-xylene/p-xylene | NA | NA | <10 | <10 | <10 | <10 | NA | NA | NA | NA |
| Sub Total 2 | NA | NA | 0 | 0 | 0 | 0 | NA | NA | NA | NA |
| Total VOC's Analyzed | 24 | 55 | 1857 | 264.7 | 107 | 29.6 | 21 | 55 | 858 | 829 |

Table E-1. Summary of Volatile Organic Compounds in Ground Water, W.G. Krummrich Plant, Monsanto Company, Sauget, Il. ***

| Well Number: | GM-12A | GM-12A | GM-12A | GM-12A | GM-12A | GM-12A | GM-12A | GM-12A | GM-12A | GM-12A |
|---|---|---|---|---|---|---|---|---|---|---|
| Date: | 5/84 | 5/84* | 11/84 | 11/84* | 2/85 | 2/85* | 5/85 | 5/85* | 11/85 | 11/85* |
| USEPA Priority Pollutant Volatile Organic Compounds concentrations are in ug/L | | | | | | | | | | |
| acrolein | <1 | <1 | <100 | <1000 | <100 | <100 | <100 | <100 | <1,000 | <1,000 |
| acrylonitrile | <1 | <1 | <100 | <1000 | <100 | <100 | <100 | <100 | <1,000 | <1,000 |
| benzene | 3,263 | 4,819 | 1,790 | 3,590 | 1,030 | 1,160 | 2,270.3 | 1,819.1 | 1,730 | 1,540 |
| bis (chloromethyl) ether | <1 | <1 | <10 | <100 | <10 | <10 | <10 | <10 | <100 | <100 |
| bromoform | <1 | <1 | <10 | <100 | <4.7 | <4.7 | <4.7 | <4.7 | <47 | <47 |
| carbon tetrachloride | <1 | <1 | <10 | <100 | <2.8 | <2.8 | <2.8 | <2.8 | <28 | <28 |
| chlorobenzene | 304 | 399 | 286 | 565 | 349.3 | 399.3 | 453.4 | 471.9 | 428 | 403 |
| chlorodibromomethane | <1 | <1 | <10 | <100 | <3.1 | <3.1 | <3.1 | <3.1 | <31 | <31 |
| chloroethane | <1 | <1 | <10 | <100 | <10 | <10 | <10 | <10 | <100 | <100 |
| 2-chloroethylvinyl ether | <1 | <1 | <10 | <100 | <10 | <10 | <10 | <10 | <100 | <100 |
| chloroform | <1 | <1 | <10 | <100 | <1.6 | <1.6 | <1.6 | <1.6 | <16 | <16 |
| dichlorobromomethane | <1 | <1 | <10 | <100 | <2.2 | <2.2 | <2.2 | <2.2 | <22 | <22 |
| dichlorodifluoromethane | <1 | <1 | <10 | <100 | <10 | <10 | <10 | <10 | <100 | <100 |
| 1,1-dichloroethane | <1 | <1 | <10 | <100 | <4.7 | <4.7 | <4.7 | <4.7 | <47 | <47 |
| 1,2-dichloroethane | <1 | <1 | <10 | <100 | <2.8 | <2.8 | <2.8 | <2.8 | <28 | <28 |
| 1,1-dichloroethylene | <1 | <1 | <10 | <100 | <2.8 | <2.8 | <2.8 | <2.8 | <28 | <28 |
| 1,2-dichloropropane | <1 | <1 | <10 | <100 | <6 | <6 | <6 | <6 | <60 | <60 |
| cis-1,3-dichloropropylene | <1 | <1 | <10 | <100 | <5 | <5 | <5 | <5 | <50 | <50 |
| trans-1,3-dichloropropylene | <1 | <1 | <10 | <100 | <10 | <10 | <10 | <10 | <100 | <100 |
| ethylbenzene | 17 | 17 | 17 | <100 | 20.2 | 22 | 13.9 | 14.6 | <72 | <72 |
| methyl bromide | <1 | <1 | <10 | <100 | <10 | <10 | <10 | <10 | <100 | <100 |
| methyl chloride | <1 | <1 | <10 | <100 | <10 | <10 | <10 | <10 | <100 | <100 |
| methylene chloride | 23 | 31 | <10 | <100 | <2.8 | <2.8 | <2.8 | <2.8 | 599 | 443 |
| 1,1,2,2-tetrachloroethane | <1 | <1 | <10 | <100 | <6.9 | <6.9 | <6.9 | <6.9 | <69 | <69 |
| tetrachloroethylene | <1 | <1 | <10 | <100 | <4.1 | <4.1 | <4.1 | <4.1 | <41 | <41 |
| toluene | 17 | 22 | 26 | <100 | 31.2 | 29 | 12.2 | 12.3 | <60 | <60 |
| 1,2-trans-dichloroethylene | <1 | <1 | <10 | <100 | <1.6 | <1.6 | <1.6 | <1.6 | <16 | <16 |
| 1,1,1-trichloroethane | <1 | <1 | <10 | <100 | <3.8 | <3.8 | <3.8 | <3.8 | <38 | <38 |
| 1,1,2-trichloroethane | <1 | <1 | <10 | <100 | <5 | <5 | <5 | <5 | <50 | <50 |
| trichloroethylene | <1 | <1 | <10 | <100 | <1.9 | <1.9 | <1.9 | <1.9 | <19 | <19 |
| trichlorofluoromethane | <1 | <1 | <10 | <100 | <10 | <10 | <10 | <10 | <100 | <100 |
| vinyl chloride | <1 | <1 | <10 | <100 | <10 | <10 | <10 | <10 | <100 | <100 |
| Sub Total 1 | 3624 | 5288 | 2119 | 4155 | 1430.7 | 1610.3 | 2749.8 | 2317.9 | 2757 | 2386 |
| Miscellaneous Volatile Organic Compounds | | | | | | | | | | |
| methyl-iso-butyl ketone | NA | NA | <10 | <100 | <10 | <10 | <10 | <10 | <100 | <100 |
| methyl isoamyl ketone | NA | NA | <10 | <100 | <10 | <10 | <10 | <10 | <100 | <100 |
| m-xylene | NA | NA | 17 | <100 | 17.1 | 18.5 | 11 | 12.6 | <100 | <100 |
| o-xylene/p-xylene | NA | NA | 49 | <100 | 55.3 | 59.5 | 43 | 49.7 | <100 | <100 |
| Sub Total 2 | NA | NA | 66 | 0 | 72.4 | 78 | 54 | 62.3 | 0 | 0 |
| Total VOC's Analyzed | 3624 | 5288 | 2185 | 4155 | 1503.1 | 1688.3 | 2803.8 | 2380.2 | 2757 | 2386 |

Table E-1. Summary of Volatile Organic Compounds in Ground Water, W.G. Krummrich Plant, Monsanto Company. Sauget, Il. ***

| Well Number: | GM-12A | GM-12A | GM-12B | GM-12B | GM-12B | GM-12C | GM-12C | GM-12C | GM-12C | GM-13 |
|---|---|---|---|---|---|---|---|---|---|---|
| Date: | 2/86 | 2/86* | 9/84** | 11/84 | 11/85 | 2/85 | 2/85* | 5/85 | 5/85* | 9/84** |
| USEPA Priority Pollutant Volatile Organic Compounds concentrations are in ug/L | | | | | | | | | | |
| acrolein | <100 | <100 | NA | <1,000 | <1,000 | <100 | <100 | <100 | <100 | NA |
| acrylonitrile | <100 | <100 | NA | <1,000 | <1,000 | <100 | <100 | <100 | <100 | NA |
| benzene | 1,170 | 1,160 | 700 | 2,090 | 2,100 | 66.7 | 54.7 | 27.4 | 26 | 1,400 |
| bis (chloromethyl) ether | <10 | <10 | <150 | <100 | <100 | <10 | <10 | <10 | <10 | <300 |
| bromoform | <4.7 | <4.7 | <320 | <100 | <47 | <4.7 | <4.7 | <4.7 | <4.7 | <640 |
| carbon tetrachloride | <2.8 | <2.8 | <150 | <100 | <28 | <2.8 | <2.8 | <2.8 | <2.8 | <300 |
| chlorobenzene | 499 | 394 | <60 | <100 | <60 | <6 | 10.4 | <6 | <6 | 850 |
| chlorodibromomethane | <3.1 | <3.1 | <200 | <100 | <31 | <3.1 | <3.1 | <3.1 | <3.1 | <400 |
| chloroethane | <10 | <10 | <240 | <100 | <100 | <10 | <10 | <10 | <10 | <480 |
| 2-chloroethylvinyl ether | <10 | <10 | <590 | <100 | <100 | <10 | <10 | <10 | <10 | <1,180 |
| chloroform | <1.6 | <1.6 | <80 | <100 | <16 | <1.6 | <1.6 | <1.6 | <1.6 | <160 |
| dichlorobromomethane | <2.2 | <2.2 | <110 | <100 | <22 | <2.2 | <2.2 | <2.2 | <2.2 | <220 |
| dichlorodifluoromethane | <10 | <10 | NA | <100 | <100 | <10 | <10 | <10 | <10 | NA |
| 1,1-dichloroethane | <4.7 | <4.7 | <80 | <100 | <47 | <4.7 | <4.7 | <4.7 | <4.7 | <160 |
| 1,2-dichloroethane | <2.8 | <2.8 | <150 | <100 | <28 | <2.8 | <2.8 | <2.8 | <2.8 | <300 |
| 1,1-dichloroethylene | <2.8 | <2.8 | <190 | <100 | <28 | <2.8 | <2.8 | <2.8 | <2.8 | <380 |
| 1,2-dichloropropane | <6 | <6 | <150 | <100 | <60 | <6 | <6 | <6 | <6 | <300 |
| cis-1,3-dichloropropylene | <5 | <5 | <150 | <100 | <50 | <5 | <5 | <5 | <5 | <300 |
| trans-1,3-dichloropropylene | <10 | <10 | <150 | <100 | <100 | <10 | <10 | <10 | <10 | <300 |
| ethylbenzene | 11.3 | 7.9 | 230 | <100 | <72 | 40 | 37.4 | <7.2 | <7.2 | 25,000 |
| methyl bromide | <10 | <10 | <150 | <100 | <100 | <10 | <10 | <10 | <10 | <300 |
| methyl chloride | <10 | <10 | <160 | <100 | <100 | <10 | <10 | <10 | <10 | <320 |
| methylene chloride | <2.8 | 6.5 | 200 | <100 | 410 | <2.8 | <2.8 | <2.8 | <2.8 | 360 |
| 1,1,2,2-tetrachloroethane | <6.9 | <6.9 | <140 | <100 | <69 | <6.9 | <6.9 | <6.9 | <6.9 | <280 |
| tetrachloroethylene | <4.1 | <4.1 | <150 | <100 | <41 | <4.1 | <4.1 | <4.1 | <4.1 | <300 |
| toluene | <6 | <6 | 100 | 112 | 63.3 | 125 | 113 | 16.2 | 14.4 | 1,200 |
| 1,2-trans-dichloroethylene | <1.6 | <1.6 | <150 | <100 | <16 | <1.6 | <1.6 | <1.6 | <1.6 | <300 |
| 1,1,1-trichloroethane | <3.8 | <3.8 | <120 | <100 | <38 | <3.8 | <3.8 | <3.8 | <3.8 | <240 |
| 1,1,2-trichloroethane | <5 | <5 | <160 | <100 | <50 | <5 | <5 | <5 | <5 | <320 |
| trichloroethylene | <1.9 | <1.9 | <130 | <100 | <19 | <1.9 | <1.9 | <1.9 | <1.9 | <260 |
| trichlorofluoromethane | <10 | <10 | <120 | <100 | <100 | <10 | <10 | <10 | <10 | <240 |
| vinyl chloride | <10 | <10 | <120 | <100 | <100 | <10 | <10 | <10 | <10 | <240 |
| Sub Total 1 | 1680.3 | 1568.4 | 1230 | 2202 | 2573.3 | 231.7 | 215.5 | 43.6 | 40.4 | 28810 |
| Miscellaneous Volatile Organic Compounds | | | | | | | | | | |
| methyl-iso-butyl ketone | <10 | <10 | <500 | <100 | <100 | <10 | <10 | <10 | <10 | <1,000 |
| methyl isoamyl ketone | <10 | <10 | <500 | <100 | <100 | <10 | <10 | <10 | <10 | <1,000 |
| m-xylene | <10 | <10 | <500 | <100 | <100 | 75.8 | 70.9 | 19 | <10 | <1,000 |
| o-xylene/p-xylene | 20 | 16.9 | <500 | <100 | <100 | 74 | 68.2 | 21.9 | 17.3 | <1,000 |
| Sub Total 2 | 20 | 16.9 | 0 | 0 | 0 | 149.8 | 139.1 | 40.9 | 17.3 | 0 |
| Total VOC's Analyzed | 1700.3 | 1585.3 | 1230 | 2202 | 2573.3 | 381.5 | 354.6 | 84.5 | 57.7 | 28810 |

Table E-1. Summary of Volatile Organic Compounds in Ground Water, W.G. Krummrich Plant, Monsanto Company, Sauget, Il. ***

| Well Number: | GM-13 | GM-13 | GM-14 | GM-15 | GM-16A | GM-16A | GM-16A | GM-16B | GM-16B | GM-16B |
|---|---|---|---|---|---|---|---|---|---|---|
| Date: | 11/85 | 2/86 | 9/84** | 9/84** | 9/84** | 5/85 | 11/85 | 9/84** | 5/85 | 11/85 |
| USEPA Priority Pollutant Volatile Organic Compounds concentrations are in ug/L | | | | | | | | | | |
| acrolein | <2,000 | <5,000 | NA | NA | NA | <100 | <100 | NA | <100 | <100 |
| acrylonitrile | <2,000 | <5,000 | NA | NA | NA | <100 | <100 | NA | <100 | <100 |
| benzene | 1,180 | 925 | 1,400 | 8 | <0.5 | <4.4 | <4.4 | <0.5 | <4.4 | <4.4 |
| bis (chloromethyl) ether | <200 | <500 | <300 | <1.5 | <1.5 | <10 | <10 | <1.5 | <10 | <10 |
| bromoform | <94 | <240 | <640 | <3.2 | <3.2 | <4.7 | <4.7 | <3.2 | <4.7 | <4.7 |
| carbon tetrachloride | <56 | <140 | <300 | <1.5 | <1.5 | <2.8 | <2.8 | <1.5 | 4.5 | <2.8 |
| chlorobenzene | 3,900 | 18,600 | 152,000 | 103 | <0.6 | <6 | <6 | 2 | <6 | <6 |
| chlorodibromomethane | <62 | <160 | <400 | <2.0 | <2.0 | <3.1 | <3.1 | <2.0 | <3.1 | <3.1 |
| chloroethane | <200 | <500 | <480 | <2.4 | <2.4 | <10 | <10 | <2.4 | <10 | <10 |
| 2-chloroethylvinyl ether | <200 | <500 | <1,180 | <5.9 | <5.9 | <10 | <10 | <5.9 | <10 | <10 |
| chloroform | <32 | <80 | <160 | <0.8 | 2 | <1.6 | <1.6 | 58 | <1.6 | <1.6 |
| dichlorobromomethane | <44 | <110 | <220 | <1.1 | <1.1 | <2.2 | <2.2 | <1.1 | <2.2 | <2.2 |
| dichlorodifluoromethane | <200 | <500 | NA | NA | NA | <10 | <10 | NA | <10 | <10 |
| 1,1-dichloroethane | <94 | <240 | <160 | <0.8 | <0.8 | <4.7 | <4.7 | <0.8 | <4.7 | <4.7 |
| 1,2-dichloroethane | <56 | <140 | <300 | <1.5 | <1.5 | <2.8 | <2.8 | <1.5 | <2.8 | <2.8 |
| 1,1-dichloroethylene | <56 | <140 | <380 | <1.9 | <1.9 | <2.8 | <2.8 | <1.9 | <2.8 | <2.8 |
| 1,2-dichloropropane | <120 | <300 | <300 | <1.5 | <1.5 | <6 | <6 | <1.5 | <6 | <6 |
| cis-1,3-dichloropropylene | <100 | <250 | <300 | <1.5 | <1.5 | <5 | <5 | <1.5 | <5 | <5 |
| trans-1,3-dichloropropylene | <200 | <500 | <300 | <1.5 | <1.5 | <10 | <10 | <1.5 | <10 | <10 |
| ethylbenzene | 20,000 | 18,900 | 480 | 9 | <0.4 | <7.2 | <7.2 | <0.4 | <7.2 | <7.2 |
| methyl bromide | <200 | <500 | <300 | <1.5 | <1.5 | <10 | <10 | <1.5 | <10 | <10 |
| methyl chloride | <200 | <500 | <320 | <1.6 | <1.6 | <10 | <10 | <1.6 | <10 | <10 |
| methylene chloride | 1,310 | <140 | 800 | 24 | 10 | 5.4 | <2.8 | 5 | <2.8 | <2.8 |
| 1,1,2,2-tetrachloroethane | <140 | <350 | <280 | <1.4 | <1.4 | <6.9 | <6.9 | <1.4 | <6.9 | <6.9 |
| tetrachloroethylene | <82 | <210 | <300 | <1.5 | <1.5 | <4.1 | <4.1 | <1.5 | <4.1 | <4.1 |
| toluene | 1,120 | 845 | 204 | 9 | 2 | <6 | <6 | <0.4 | <6 | <6 |
| 1,2-trans-dichloroethylene | <32 | <80 | <300 | <1.5 | <1.5 | <1.6 | <1.6 | <1.5 | <1.6 | <1.6 |
| 1,1,1-trichloroethane | <76 | <190 | <240 | <1.2 | <1.2 | <3.8 | <3.8 | <1.2 | <3.8 | <3.8 |
| 1,1,2-trichloroethane | <100 | <250 | <320 | <1.6 | <1.6 | <5 | <5 | <1.6 | <5 | <5 |
| trichloroethylene | <38 | <95 | <260 | <1.3 | <1.3 | <1.9 | <1.9 | <1.3 | <1.9 | <1.9 |
| trichlorofluoromethane | <200 | <500 | <240 | <1.2 | <1.2 | <10 | <10 | <1.2 | <10 | <10 |
| vinyl chloride | <200 | <500 | <240 | <1.2 | <1.2 | <10 | <10 | <1.2 | <10 | <10 |
| Sub Total 1 | 27510 | 39270 | 154884 | 153 | 14 | 5.4 | 0 | 65 | 4.5 | 0 |
| Miscellaneous Volatile Organic Compounds | | | | | | | | | | |
| methyl-iso-butyl ketone | <200 | 7,470 | <1,000 | <5 | <5 | <10 | <10 | <5 | <10 | <10 |
| methyl isoamyl ketone | <200 | 5,130 | <1,000 | <5 | <5 | <10 | <10 | <5 | <10 | <10 |
| m-xylene | 50,900 | 39,100 | <1,000 | <5 | a) | <10 | <10 | a) | <10 | <10 |
| o-xylene/p-xylene | 35,800 | 30,400 | <1,000 | <5 | a) | <10 | <10 | a) | <10 | <10 |
| Sub Total 2 | 86700 | 82100 | 0 | 0 | 0 | 0 | 0 | 0 | 0 | 0 |
| Total VOC's Analyzed | 114210 | 121370 | 154884 | 153 | 14 | 5.4 | 0 | 65 | 4.5 | 0 |

Table E-1. Summary of Volatile Organic Compounds in Ground Water, W.G. Krummrich Plant, Monsanto Company, Sauget, Il. ***

| Well Number: | GM-17A | GM-17A | GM-17A | GM-17B | GM-17B | GM-17B | GM-17C | GM-17C | GM-17C | GM-18A |
|---|---|---|---|---|---|---|---|---|---|---|
| Date: | 9/84** | 11/84 | 11/85 | 9/84** | 11/84 | 11/85 | 9/84** | 11/84 | 11/85 | 9/84** |
| USEPA Priority Pollutant Volatile Organic Compounds concentrations are in ug/L | | | | | | | | | | |
| acrolein | NA | <10,000 | <10,000 | NA | <10,000 | <100 | NA | <100 | <1,000 | NA |
| acrylonitrile | NA | <10,000 | <10,000 | NA | <10,000 | <100 | NA | <100 | <1,000 | NA |
| benzene | NA | 41,900 | 51,900 | 26,000 | 69,200 | 47,400 | 4,940 | 1,880 | 552 | 34 |
| bis (chloromethyl) ether | <1.5 | <1,000 | <1,000 | <300 | <1,000 | <10 | <300 | <10 | <100 | <1.5 |
| bromoform | <3.2 | <1,000 | <470 | <640 | <1,000 | <4.7 | <640 | <10 | <47 | <3.2 |
| carbon tetrachloride | <1.5 | <1,000 | <280 | <300 | <1,000 | <2.8 | <300 | <10 | <28 | <1.5 |
| chlorobenzene | NA | 57,500 | 56,500 | 5,300 | 17,600 | 376 | 13,900 | 9,510 | 3,500 | <0.6 |
| chlorodibromomethane | <2.0 | <1,000 | <310 | <400 | <1,000 | <3.1 | <400 | <10 | <31 | <2.0 |
| chloroethane | <2.4 | <1,000 | <1,000 | <480 | <1,000 | <10 | <480 | <10 | <100 | <2.5 |
| 2-chloroethylvinyl ether | <5.9 | <1,000 | <1,000 | <1,180 | <1,000 | <10 | <1,180 | <10 | <100 | <5.9 |
| chloroform | <0.8 | <1,000 | <160 | <160 | <1,000 | <1.6 | <160 | <10 | <16 | 2 |
| dichlorobromomethane | <1.1 | <1,000 | <220 | <220 | <1,000 | <2.2 | <220 | <10 | <22 | <1.1 |
| dichlorodifluoromethane | NA | <1,000 | <1,000 | NA | <1,000 | <10 | NA | <10 | <100 | NA |
| 1,1-dichloroethane | <0.8 | <1,000 | <470 | 170 | <1,000 | <4.7 | <160 | <10 | <47 | <0.8 |
| 1,2-dichloroethane | <1.5 | <1,000 | <280 | <300 | <1,000 | <2.8 | <300 | <10 | <28 | <1.5 |
| 1,1-dichloroethylene | <1.9 | <1,000 | <280 | <380 | <1,000 | <2.8 | 205 | <10 | <28 | 1 |
| 1,2-dichloropropane | <1.5 | <1,000 | <600 | <300 | <1,000 | <6 | <300 | <10 | <60 | <1.5 |
| cis-1,3-dichloropropylene | <1.5 | <1,000 | <500 | <300 | <1,000 | <5 | <300 | <10 | <50 | <1.5 |
| trans-1,3-dichloropropylene | <1.5 | <1,000 | <1,000 | <300 | <1,000 | <10 | <300 | <10 | <100 | <1.5 |
| ethylbenzene | <0.4 | <1,000 | <720 | 250 | <1,000 | 11 | <80 | <10 | <72 | <0.4 |
| methyl bromide | <1.5 | <1,000 | <1,000 | 120 | <1,000 | <10 | <300 | <10 | <100 | <1.5 |
| methyl chloride | <1.6 | <1,000 | <1,000 | 120 | <1,000 | <10 | <320 | <10 | <100 | <1.6 |
| methylene chloride | 3 | 3,060 | <280 | 540 | 3,740 | <2.8 | 7,140 | <10 | <28 | 39 |
| 1,1,2,2-tetrachloroethane | <1.4 | <1,000 | <690 | <280 | <1,000 | <6.9 | <280 | <10 | <69 | <1.4 |
| tetrachloroethylene | <1.5 | <1,000 | <410 | <300 | <1,000 | <4.1 | <300 | <10 | <41 | <1.5 |
| toluene | 6 | <1,000 | <600 | 220 | <1,000 | 9.1 | 194 | <10 | <60 | <0.4 |
| 1,2-trans-dichloroethylene | <1.5 | <1,000 | <160 | <300 | <1,000 | <1.6 | <300 | <10 | <16 | <1.5 |
| 1,1,1-trichloroethane | <1.2 | <1,000 | <380 | <240 | <1,000 | <3.8 | <240 | <10 | <38 | <1.2 |
| 1,1,2-trichloroethane | <1.6 | <1,000 | <500 | <320 | <1,000 | <5 | <320 | <10 | <50 | <1.6 |
| trichloroethylene | <1.3 | <1,000 | <190 | <260 | <1,000 | <1.9 | <260 | <10 | <19 | <1.3 |
| trichlorofluoromethane | <1.2 | <1,000 | <1,000 | <240 | <1,000 | <10 | <240 | <10 | <100 | <1.2 |
| vinyl chloride | <1.2 | <1,000 | <1,000 | 130 | <1,000 | <10 | <240 | <10 | <100 | <1.2 |
| Sub Total 1 | 9 | 102460 | 108400 | 32850 | 90540 | 47796.1 | 26379 | 11390 | 4052 | 76 |
| Miscellaneous Volatile Organic Compounds | | | | | | | | | | |
| methyl-iso-butyl ketone | <5 | <10,000 | <1,000 | <1,000 | <10,000 | <10 | <1,000 | <100 | <100 | <5 |
| methyl isoamyl ketone | <5 | <10,000 | <1,000 | <1,000 | <10,000 | <10 | <1,000 | <100 | <100 | <5 |
| m-xylene | <5 | <1,000 | <1,000 | <1,000 | <1,000 | <10 | <1,000 | <10 | <100 | <5 |
| o-xylene/p-xylene | <5 | <1,000 | <1,000 | <1,000 | <1,000 | <10 | <1,000 | <10 | <100 | <5 |
| Sub Total 2 | 0 | 0 | 0 | 0 | 0 | 0 | 0 | 0 | 0 | 0 |
| Total VOC's Analyzed | 9 | 102460 | 108400 | 32850 | 90540 | 47796.1 | 26379 | 11390 | 4052 | 76 |

Table E-1. Summary of Volatile Organic Compounds in Ground Water, W.G. Krummrich Plant, Monsanto Company, Sauget, Il. ***

| Well Number: | GM-18A | GM-18A | GM-18B | GM-18B | GM-18B | GM-25A | GM-25A | GM-25B** | GM-25B | GM-25B |
|---|---|---|---|---|---|---|---|---|---|---|
| Date: | 5/85 | 11/85 | 9/84** | 5/85 | 11/85 | 9/84 | 11/84 | 9/84 | 11/84 | 11/85 |
| USEPA Priority Pollutant Volatile Organic Compounds concentrations are in ug/L | | | | | | | | | | |
| acrolein | <100 | <100 | NA | <100 | <100 | NA | <100 | NA | <100 | <100 |
| acrylonitrile | <100 | <100 | NA | <100 | <100 | NA | <100 | NA | <100 | <100 |
| benzene | <4.4 | <4.4 | 35 | 63.3 | 24.1 | 1 | <10 | <0.5 | <10 | <4.4 |
| bis (chloromethyl) ether | <10 | <10 | <1.5 | <10 | <10 | <1.5 | <10 | <1.5 | <10 | <10 |
| bromoform | <4.7 | <4.7 | <3.2 | <4.7 | <4.7 | <3.2 | <10 | <3.2 | <10 | <4.7 |
| carbon tetrachloride | <2.8 | <2.8 | <1.5 | <2.8 | <2.8 | <1.5 | <10 | <1.5 | <10 | <2.8 |
| chlorobenzene | <6 | <6 | 100 | 285.1 | 174 | 14 | <10 | <0.6 | <10 | <6 |
| chlorodibromomethane | <3.1 | <3.1 | <2.0 | <3.1 | <3.1 | <2.0 | <10 | <2.0 | <10 | <3.1 |
| chloroethane | <10 | <10 | 22 | <10 | <10 | <2.4 | <10 | <2.4 | <10 | <10 |
| 2-chloroethylvinyl ether | <10 | <10 | <5.9 | <10 | <10 | <5.9 | <10 | <5.9 | <10 | <10 |
| chloroform | <1.6 | <1.6 | <0.8 | <1.6 | <1.6 | 3 | <10 | 3 | <10 | <1.6 |
| dichlorobromomethane | <2.2 | <2.2 | <1.1 | <2.2 | <2.2 | <1.1 | <10 | <1.1 | <10 | <2.2 |
| dichlorodifluoromethane | <10 | <10 | NA | <10 | <10 | NA | <10 | NA | <10 | <10 |
| 1,1-dichloroethane | <4.7 | <4.7 | <0.8 | <4.7 | <4.7 | <0.8 | <10 | <0.8 | <10 | <4.7 |
| 1,2-dichloroethane | <2.8 | <2.8 | <1.5 | <2.8 | <2.8 | <1.5 | <10 | <1.5 | <10 | <2.8 |
| 1,1-dichloroethylene | <2.8 | <2.8 | 1 | <2.8 | <2.8 | <1.9 | <10 | <1.9 | <10 | <2.8 |
| 1,2-dichloropropane | <6 | <6 | <1.5 | <6 | <6 | <1.5 | <10 | <1.5 | <10 | <6 |
| cis-1,3-dichloropropylene | <5 | <5 | <1.5 | <5 | <5 | <1.5 | <10 | <1.5 | <10 | <5 |
| trans-1,3-dichloropropylene | <10 | <10 | <1.5 | <10 | <10 | <1.5 | <10 | <1.5 | <10 | <10 |
| ethylbenzene | <7.2 | <7.2 | <0.4 | <7.2 | <7.2 | <0.4 | <10 | <0.4 | <10 | <7.2 |
| methyl bromide | <10 | <10 | <1.5 | <10 | <10 | <1.5 | <10 | <1.5 | <10 | <10 |
| methyl chloride | <10 | <10 | <1.6 | <10 | <10 | <1.6 | <10 | <1.6 | <10 | <10 |
| methylene chloride | <2.8 | <2.8 | 37 | <2.8 | <2.8 | 5 | <10 | 2 | <10 | <2.8 |
| 1,1,2,2-tetrachloroethane | <6.9 | <6.9 | <1.4 | <6.9 | <6.9 | <1.4 | <10 | <1.4 | <10 | <6.9 |
| tetrachloroethylene | <4.1 | <4.1 | <1.5 | <4.1 | <4.1 | <1.5 | <10 | <1.5 | <10 | <4.1 |
| toluene | <6 | <6 | 1 | <6 | <6 | 1 | <10 | <0.4 | <10 | <6 |
| 1,2-trans-dichloroethylene | <1.6 | <1.6 | 1 | 1.7 | <1.6 | <1.5 | <10 | <1.5 | <10 | <1.6 |
| 1,1,1-trichloroethane | <3.8 | <3.8 | <1.2 | <3.8 | <3.8 | <1.2 | <10 | <1.2 | <10 | <3.8 |
| 1,1,2-trichloroethane | <5 | <5 | <1.6 | <5 | <5 | <1.6 | <10 | <1.6 | <10 | <5 |
| trichloroethylene | <1.9 | <1.9 | <1.3 | <1.9 | <1.9 | <1.3 | <10 | <1.3 | <10 | <1.9 |
| trichlorofluoromethane | <10 | <10 | <1.2 | <10 | <10 | <1.2 | <10 | <1.2 | <10 | <10 |
| vinyl chloride | <10 | <10 | <1.2 | 34.3 | 31.4 | <1.2 | <10 | <1.2 | <10 | <10 |
| Sub Total 1 | 0 | 0 | 197 | 384.4 | 229.5 | 24 | 0 | 5 | 0 | 0 |
| Miscellaneous Volatile Organic Compounds | | | | | | | | | | |
| methyl-iso-butyl ketone | <10 | <10 | <5 | <10 | <10 | <5 | <100 | <5 | <10 | <10 |
| methyl isoamyl ketone | <10 | <10 | <5 | <10 | <10 | <5 | <100 | <5 | <10 | <10 |
| m-xylene | <10 | <10 | <5 | <10 | <10 | <5 | <10 | b) | <10 | <10 |
| o-xylene/p-xylene | <10 | <10 | <5 | <10 | <10 | <5 | <10 | b) | <10 | <10 |
| Sub Total 2 | 0 | 0 | 0 | 0 | 0 | 0 | 0 | 0 | 0 | 0 |
| Total VOC's Analyzed | 0 | 0 | 197 | 384.4 | 229.5 | 24 | 0 | 5 | 0 | 0 |

Table E-1. Summary of Volatile Organic Compounds in Ground Water, W.G. Krummrich Plant, Monsanto Company, Sauget, Il. ***

| Well Number: | GM-27B | GM-27B | GM-27B | GM-27C | GM-27C | GM-27C | GM-28B | GM-28B | GM-28B | GM-28C |
|---|---|---|---|---|---|---|---|---|---|---|
| Date: | 9/84** | 11/85 | 2/86 | 9/84** | 11/85 | 2/86 | 9/84** | 11/85 | 2/86 | 9/84** |
| USEPA Priority Pollutant Volatile Organic Compounds concentrations are in ug/L | | | | | | | | | | |
| acrolein | NA | <100 | <100 | NA | <1,000 | <1,000 | NA | <5,000 | <1,000 | NA |
| acrylonitrile | NA | <100 | <100 | NA | <1,000 | <1,000 | NA | <5,000 | <1,000 | NA |
| benzene | 36 | 35.6 | 619 | 160 | 554 | 765 | 410 | 934 | 644 | 1,000 |
| bis (chloromethyl) ether | <1.5 | <10 | <10 | <1.5 | <100 | <100 | <1.5 | <500 | <100 | <1.5 |
| bromoform | <3.2 | <4.7 | <4.7 | <3.2 | <47 | <47 | <3.2 | <240 | <47 | <3.2 |
| carbon tetrachloride | <1.5 | <2.8 | <2.8 | <1.5 | <28 | <28 | <1.5 | <140 | <28 | <1.5 |
| chlorobenzene | 80 | 143 | 459 | 275 | 1,220 | 1,950 | 2,804 | 6,120 | 6,130 | 3,800 |
| chlorodibromomethane | <2.0 | <3.1 | <3.1 | <2.0 | <31 | <31 | <2.0 | <160 | <31 | <2.0 |
| chloroethane | <2.4 | <10 | <10 | <2.4 | <100 | <100 | <2.4 | <500 | <100 | <2.4 |
| 2-chloroethylvinyl ether | <5.9 | <10 | <10 | <5.9 | <100 | <100 | <5.9 | <500 | <100 | <5.9 |
| chloroform | <0.8 | <1.6 | <1.6 | <0.8 | <16 | <16 | <0.8 | <80 | <16 | <0.8 |
| dichlorobromomethane | <1.1 | <2.2 | <2.2 | <1.1 | <22 | <22 | <1.1 | <110 | <22 | <1.1 |
| dichlorodifluoromethane | NA | <10 | <10 | NA | <100 | <100 | NA | <500 | <100 | NA |
| 1,1-dichloroethane | <0.8 | <4.7 | <4.7 | <0.8 | <47 | <47 | <0.8 | <240 | <47 | <0.8 |
| 1,2-dichloroethane | <1.5 | <2.8 | <2.8 | <1.5 | <28 | <28 | <1.5 | <140 | <28 | <1.5 |
| 1,1-dichloroethylene | <1.9 | <2.8 | <2.8 | 1 | <28 | <28 | 1 | <140 | <28 | 2 |
| 1,2-dichloropropane | <1.5 | <6 | <6 | <1.5 | <60 | <60 | <1.5 | <300 | <60 | <1.5 |
| cis-1,3-dichloropropylene | <1.5 | <5 | <5 | <1.5 | <50 | <50 | <1.5 | <250 | <50 | <1.5 |
| trans-1,3-dichloropropylene | <1.5 | <10 | <10 | <1.5 | <100 | <100 | <1.5 | <500 | <100 | <1.5 |
| ethylbenzene | 6 | <7.2 | <7.2 | 1 | <72 | <72 | 12 | <360 | <72 | 18 |
| methyl bromide | <1.5 | <10 | <10 | <1.5 | <100 | <100 | <1.5 | <500 | <100 | <1.5 |
| methyl chloride | <1.6 | <10 | <10 | <1.6 | <100 | <100 | <1.6 | <500 | <100 | <1.6 |
| methylene chloride | 40 | <2.8 | 13 | 38 | <28 | <28 | 71 | <140 | <28 | 45 |
| 1,1,2,2-tetrachloroethane | <1.4 | <6.9 | <6.9 | <1.4 | <69 | <69 | <1.4 | <350 | <69 | <1.4 |
| tetrachloroethylene | <1.5 | <4.1 | <4.1 | <1.5 | <41 | <41 | <1.5 | <210 | <41 | <1.5 |
| toluene | 4 | <6 | 6 | 2 | <60 | <60 | 18 | <300 | <60 | 35 |
| 1,2-trans-dichloroethylene | <1.5 | <1.6 | <1.6 | <1.5 | <16 | <16 | <1.5 | <80 | <16 | 2 |
| 1,1,1-trichloroethane | <1.2 | <3.8 | <3.8 | <1.2 | <38 | <38 | <1.2 | <190 | <38 | <1.2 |
| 1,1,2-trichloroethane | <1.6 | <5 | <5 | <1.6 | <50 | <50 | <1.6 | <250 | <50 | <1.6 |
| trichloroethylene | <1.3 | <1.9 | <1.9 | <1.3 | <19 | <19 | <1.3 | <95 | <19 | <1.3 |
| trichlorofluoromethane | <1.2 | <10 | <10 | <1.2 | <100 | <100 | <1.2 | <500 | <100 | <1.2 |
| vinyl chloride | <1.2 | <10 | <10 | <1.2 | <100 | <100 | <1.2 | <500 | <100 | <1.2 |
| Sub Total 1 | 166 | 178.6 | 1097 | 477 | 1774 | 2715 | 3316 | 7054 | 6774 | 4902 |
| Miscellaneous Volatile Organic Compounds | | | | | | | | | | |
| methyl-iso-butyl ketone | <5 | <10 | <10 | <5 | <100 | <100 | 2 | <500 | <100 | <5 |
| methyl isoamyl ketone | <5 | <10 | <10 | <5 | <100 | <100 | <5 | <500 | <100 | <5 |
| m-xylene | b) | <10 | <10 | b) | <100 | <100 | c) | <500 | <100 | c) |
| o-xylene/p-xylene | b) | <10 | <10 | b) | <100 | <100 | c) | <500 | <100 | c) |
| Sub Total 2 | 0 | 0 | 0 | 0 | 0 | 0 | 2 | 0 | 0 | 0 |
| Total VOC's Analyzed | 166 | 178.6 | 1097 | 477 | 1774 | 2715 | 3318 | 7054 | 6774 | 4902 |

Table E-1. Summary of Volatile Organic Compounds in Ground Water, W.G. Krummrich Plant, Monsanto Company, Sauget, Il. ***

| Well Number: | GM-28C | GM-28C | GM-29 | GM-29 | GM-30 | GM-30 | GM-30 | GM-31A | GM-31A | GM-31A |
|---|---|---|---|---|---|---|---|---|---|---|
| Date: | 11/85 | 2/86 | 9/84** | 11/85 | 9/84** | 11/85 | 2/86 | 2/85 | 5/85 | 11/85 |
| USEPA Priority Pollutant Volatile Organic Compounds concentrations are in ug/L | | | | | | | | | | |
| acrolein | <5,000 | <1,000 | NA | <100 | NA | <100 | <100 | <100 | <100 | <100 |
| acrylonitrile | <5,000 | <1,000 | NA | <100 | NA | <100 | <100 | <100 | <100 | <100 |
| benzene | 516 | 470 | <0.5 | <4.4 | 735 | <4.4 | <4.4 | 20.9 | 461.8 | 36 |
| bis (chloromethyl) ether | <500 | <100 | <1.5 | <10 | <1.5 | <10 | <10 | <10 | <10 | <10 |
| bromoform | <240 | <47 | <3.2 | <4.7 | <3.2 | <4.7 | <4.7 | <4.7 | <4.7 | <4.7 |
| carbon tetrachloride | <140 | <28 | <1.5 | <2.8 | <1.5 | <2.8 | <2.8 | <2.8 | <2.8 | <2.8 |
| chlorobenzene | 5,130 | 4,890 | <0.6 | <6 | <0.6 | <6 | 7.14 | 8.4 | 6.4 | 15.1 |
| chlorodibromomethane | <160 | <31 | <2.0 | <3.1 | <2.0 | <3.1 | <3.1 | <3.1 | <3.1 | <3.1 |
| chloroethane | <500 | <100 | <2.4 | <10 | <2.4 | <10 | <10 | <10 | <10 | <10 |
| 2-chloroethylvinyl ether | <500 | <100 | <5.9 | <10 | <5.9 | <10 | <10 | <10 | <10 | <10 |
| chloroform | <80 | <16 | 2 | <1.6 | 12 | 11.2 | 9.24 | <1.6 | <1.6 | <1.6 |
| dichlorobromomethane | <110 | <22 | <1.1 | <2.2 | <1.1 | <2.2 | <2.2 | <2.2 | <2.2 | <2.2 |
| dichlorodifluoromethane | <500 | <100 | NA | <10 | NA | <10 | <10 | <10 | <10 | <10 |
| 1,1-dichloroethane | <240 | <47 | <0.8 | <4.7 | <0.8 | <4.7 | <4.7 | <4.7 | <4.7 | <4.7 |
| 1,2-dichloroethane | <140 | <28 | <1.5 | <2.8 | <1.5 | <2.8 | <2.8 | <2.8 | <2.8 | <2.8 |
| 1,1-dichloroethylene | <140 | <28 | <1.9 | <2.8 | <1.9 | <2.8 | <2.8 | <2.8 | <2.8 | <2.8 |
| 1,2-dichloropropane | <300 | <60 | <1.5 | <6 | <1.5 | <6 | <6 | <6 | <6 | <6 |
| cis-1,3-dichloropropylene | <250 | <50 | <1.5 | <5 | <1.5 | <5 | <5 | <5 | <5 | <5 |
| trans-1,3-dichloropropylene | <500 | <100 | <1.5 | <10 | <1.5 | <10 | <10 | <10 | <10 | <10 |
| ethylbenzene | <360 | <72 | <0.4 | <7.2 | <0.4 | <7.2 | <7.2 | <7.2 | <7.2 | <7.2 |
| methyl bromide | <500 | <100 | <1.5 | <10 | <1.5 | <10 | <10 | <10 | <10 | <10 |
| methyl chloride | <500 | <100 | 8 | <10 | <1.6 | <10 | <10 | <10 | <10 | <10 |
| methylene chloride | 178 | <28 | <1.1 | <2.8 | 185 | <2.8 | <2.8 | <2.8 | <2.8 | 5.3 |
| 1,1,2,2-tetrachloroethane | <350 | <69 | <1.4 | <6.9 | <1.4 | <6.9 | <6.9 | <6.9 | <6.9 | <6.9 |
| tetrachloroethylene | <210 | <41 | <1.5 | <4.1 | <1.5 | 4.31 | <4.1 | <4.1 | <4.1 | <4.1 |
| toluene | <300 | <60 | <0.4 | <6 | <0.4 | <6 | <6 | <6 | <6 | <6 |
| 1,2-trans-dichloroethylene | <80 | <16 | <1.5 | <1.6 | <1.5 | <1.6 | <1.6 | <1.6 | <1.6 | <1.6 |
| 1,1,1-trichloroethane | <190 | <38 | <1.2 | <3.8 | <1.2 | <3.8 | <3.8 | <3.8 | <3.8 | <3.8 |
| 1,1,2-trichloroethane | <250 | <50 | <1.6 | <5 | <1.6 | <5 | <5 | <5 | <5 | <5 |
| trichloroethylene | <95 | <19 | 2 | <1.9 | <1.3 | 3.99 | <1.9 | <1.9 | <1.9 | <1.9 |
| trichlorofluoromethane | <500 | <100 | <1.2 | <10 | <1.2 | <10 | <10 | <10 | <10 | <10 |
| vinyl chloride | <500 | <100 | <1.2 | <10 | <1.2 | <10 | <10 | <10 | <10 | <10 |
| Sub Total 1 | 5824 | 5360 | 12 | 0 | 932 | 19.5 | 16.38 | 29.3 | 468.2 | 56.4 |
| Miscellaneous Volatile Organic Compounds | | | | | | | | | | |
| methyl-iso-butyl ketone | <500 | <100 | <5 | <10 | <5 | 18 | <10 | <10 | <10 | <10 |
| methyl isoamyl ketone | <500 | <100 | <5 | <10 | <5 | 14.6 | <10 | <10 | <10 | <10 |
| m-xylene | <500 | <100 | <5 | <10 | c) | <10 | <10 | <10 | <10 | <10 |
| o-xylene/p-xylene | <500 | <100 | <5 | <10 | c) | <10 | <10 | <10 | <10 | <10 |
| Sub Total 2 | 0 | 0 | 0 | 0 | 0 | 32.6 | 0 | 0 | 0 | 0 |
| Total VOC's Analyzed | 5824 | 5360 | 12 | 0 | 932 | 52.1 | 16.38 | 29.3 | 468.2 | 56.4 |

Table E-1. Summary of Volatile Organic Compounds in Ground Water, W.G. Krummrich Plant, Monsanto Company, Sauget, Il. ***

| Well Number: | GM-31A | GM-31B | GM-31B | GM-31B | GM-31B | GM-31C | GM-31C | GM-31C | GM-31C | B-24A |
|---|---|---|---|---|---|---|---|---|---|---|
| Date: | 11/85* | 2/85 | 5/85 | 11/85 | 11/85* | 2/85 | 5/85 | 11/85 | 11/85* | 2/86 |
| USEPA Priority Pollutant Volatile Organic Compounds concentrations are in ug/L | | | | | | | | | | |
| acrolein | <100 | <100 | <100 | <100 | <100 | <100 | <100 | <100 | <100 | <10,000 |
| acrylonitrile | <100 | <100 | <100 | <100 | <100 | <100 | <100 | <100 | <100 | <10,000 |
| benzene | 36.5 | <4.4 | 15 | <4.4 | <4.4 | 79.4 | 75.2 | 25.9 | 27.1 | 2,360 |
| bis (chloromethyl) ether | <10 | <10 | <10 | <10 | <10 | <10 | <10 | <10 | <10 | <1,000 |
| bromoform | <4.7 | <4.7 | <4.7 | <4.7 | <4.7 | <4.7 | <4.7 | <4.7 | <4.7 | <470 |
| carbon tetrachloride | <2.8 | <2.8 | <2.8 | <2.8 | <2.8 | <2.8 | <2.8 | <2.8 | <2.8 | <280 |
| chlorobenzene | 12.5 | 8.2 | 132.6 | <6 | <6 | 437 | 487.6 | 495 | 511 | 6,180 |
| chlorodibromomethane | <3.1 | <3.1 | <3.1 | <3.1 | <3.1 | <3.1 | <3.1 | <3.1 | <3.1 | <310 |
| chloroethane | <10 | <10 | <10 | <10 | <10 | 20.6 | <10 | <10 | <10 | <1,000 |
| 2-chloroethylvinyl ether | <10 | <10 | <10 | <10 | <10 | <10 | <10 | <10 | <10 | <1,000 |
| chloroform | <1.6 | <1.6 | <1.6 | <1.6 | <1.6 | 12.9 | <1.6 | <1.6 | <1.6 | <160 |
| dichlorobromomethane | <2.2 | <2.2 | <2.2 | <2.2 | <2.2 | <2.2 | <2.2 | <2.2 | <2.2 | <220 |
| dichlorodifluoromethane | <10 | <10 | <10 | <10 | <10 | <10 | <10 | <10 | <10 | <1,000 |
| 1,1-dichloroethane | <4.7 | <4.7 | <4.7 | <4.7 | <4.7 | <4.7 | <4.7 | <4.7 | <4.7 | <470 |
| 1,2-dichloroethane | <2.8 | <2.8 | <2.8 | <2.8 | <2.8 | <2.8 | <2.8 | <2.8 | <2.8 | 2,100 |
| 1,1-dichloroethylene | <2.8 | <2.8 | <2.8 | <2.8 | <2.8 | <2.8 | <2.8 | <2.8 | <2.8 | <280 |
| 1,2-dichloropropane | <6 | <6 | <6 | <6 | <6 | <6 | <6 | <6 | <6 | <600 |
| cis-1,3-dichloropropylene | <5 | <5 | <5 | <5 | <5 | <5 | <5 | <5 | <5 | <500 |
| trans-1,3-dichloropropylene | <10 | <10 | <10 | <10 | <10 | <10 | <10 | <10 | <10 | <1,000 |
| ethylbenzene | <7.2 | <7.2 | <7.2 | <7.2 | <7.2 | <7.2 | <7.2 | <7.2 | <7.2 | <720 |
| methyl bromide | <10 | <10 | <10 | <10 | <10 | <10 | <10 | <10 | <10 | <1,000 |
| methyl chloride | <10 | <10 | <10 | <10 | <10 | <10 | <10 | <10 | <10 | <1,000 |
| methylene chloride | <2.8 | <2.8 | <2.8 | <2.8 | <2.8 | <2.8 | <2.8 | <2.8 | <2.8 | 1,160 |
| 1,1,2,2-tetrachloroethane | <6.9 | <6.9 | <6.9 | <6.9 | <6.9 | <6.9 | <6.9 | <6.9 | <6.9 | <690 |
| tetrachloroethylene | <4.1 | <4.1 | <4.1 | <4.1 | <4.1 | <4.1 | 4.2 | <4.1 | <4.1 | <410 |
| toluene | <6 | <6 | <6 | <6 | <6 | <6 | <6 | <6 | <6 | 1,140 |
| 1,2-trans-dichloroethylene | <1.6 | <1.6 | <1.6 | <1.6 | <1.6 | <1.6 | 2.7 | <1.6 | <1.6 | <160 |
| 1,1,1-trichloroethane | <3.8 | <3.8 | <3.8 | <3.8 | <3.8 | <3.8 | <3.8 | <3.8 | <3.8 | <380 |
| 1,1,2-trichloroethane | <5 | <5 | <5 | <5 | <5 | <5 | <5 | <5 | <5 | <500 |
| trichloroethylene | <1.9 | <1.9 | <1.9 | <1.9 | <1.9 | <1.9 | <1.9 | <1.9 | <1.9 | <190 |
| trichlorofluoromethane | <10 | <10 | <10 | <10 | <10 | <10 | <10 | <10 | <10 | <1,000 |
| vinyl chloride | <10 | <10 | <10 | <10 | <10 | 32.2 | 47.2 | 42.6 | 45.2 | <1,000 |
| Sub Total 1 | 49 | 8.2 | 147.6 | 0 | 0 | 582.1 | 616.9 | 563.5 | 583.3 | 12940 |
| Miscellaneous Volatile Organic Compounds | | | | | | | | | | |
| methyl-iso-butyl ketone | <10 | <10 | <10 | <10 | <10 | <10 | <10 | <10 | <10 | 3,170 |
| methyl isoamyl ketone | <10 | <10 | <10 | <10 | <10 | <10 | <10 | <10 | <10 | <1,000 |
| m-xylene | <10 | <10 | <10 | <10 | <10 | <10 | <10 | <10 | <10 | <1,000 |
| o-xylene/p-xylene | <10 | <10 | <10 | <10 | <10 | <10 | <10 | <10 | <10 | <1,000 |
| Sub Total 2 | 0 | 0 | 0 | 0 | 0 | 0 | 0 | 0 | 0 | 3170 |
| Total VOC's Analyzed | 49 | 8.2 | 147.6 | 0 | 0 | 582.1 | 616.9 | 563.5 | 583.3 | 16110 |

Table E-1. Summary of Volatile Organic Compounds in Ground Water, W.G. Krummrich Plant, Monsanto Company, Sauget, Il. ***

| Well Number: | B-25A | B-25A | B-25B | B-25B | B-27B | B-27B | B-28A | B-29A | B-29A | B-29B |
|---|---|---|---|---|---|---|---|---|---|---|
| Date: | 6/84 | 11/85 | 6/84 | 11/85 | 9/84** | 9/84* | 2/86 | 6/84 | 11/85 | 6/84 |
| USEPA Priority Pollutant Volatile Organic Compounds concentrations are in ug/L | | | | | | | | | | |
| acrolein | <1 | <10,000 | <1 | <10,000 | NA | NA | <1,000 | <1 | <1,000 | <1 |
| acrylonitrile | <1 | <10,000 | <1 | <10,000 | NA | NA | <1,000 | <1 | <1,000 | <1 |
| benzene | <1 | <440 | 51 | <440 | 3,420 | 7,058 | <44 | 18 | <44 | 20 |
| bis (chloromethyl) ether | <1 | <1,000 | <1 | <1,000 | <1.5 | <300 | <100 | <1 | <100 | <1 |
| bromoform | <1 | <470 | <1 | <470 | <3.2 | <640 | <47 | <1 | <47 | <1 |
| carbon tetrachloride | <1 | <280 | <1 | <280 | <1.5 | <300 | <28 | <1 | <28 | <1 |
| chlorobenzene | 8,520 | 18,900 | 9,930 | 13,100 | 4,160 | 5,320 | 1,510 | 1,970 | 1,280 | 769 |
| chlorodibromomethane | <1 | <310 | <1 | <310 | <2.0 | <400 | <31 | <1 | <31 | <1 |
| chloroethane | 309 | <1,000 | 42 | <1,000 | <2.4 | <480 | <100 | <1 | <100 | <1 |
| 2-chloroethylvinyl ether | <1 | <1,000 | <1 | <1,000 | <5.9 | <1,180 | <100 | <1 | <100 | <1 |
| chloroform | 77 | <160 | 9 | <160 | <0.8 | <160 | <16 | 18 | 28.9 | 39 |
| dichlorobromomethane | <1 | <220 | <1 | <220 | <1.1 | <220 | <22 | <1 | <22 | <1 |
| dichlorodifluoromethane | <1 | <1,000 | <1 | <1,000 | NA | NA | <100 | <1 | <100 | <1 |
| 1,1-dichloroethane | <1 | <470 | <1 | <470 | <0.8 | <160 | <47 | <1 | <47 | <1 |
| 1,2-dichloroethane | 10,000 | 18,500 | 1,430 | 3,510 | <1.5 | <300 | <28 | <1 | <28 | <1 |
| 1,1-dichloroethylene | <1 | <280 | <1 | <280 | <1.9 | 260 | <28 | <1 | <28 | <1 |
| 1,2-dichloropropane | <1 | <600 | <1 | <600 | <1.5 | <300 | <60 | <1 | <60 | <1 |
| cis-1,3-dichloropropylene | <1 | <500 | <1 | <500 | <1.5 | <300 | <50 | <1 | <50 | <1 |
| trans-1,3-dichloropropylene | <1 | <1,000 | <1 | <1,000 | <1.5 | <300 | <100 | <1 | <100 | <1 |
| ethylbenzene | 11 | <720 | 4 | <720 | <0.4 | <80 | <72 | 14 | <72 | 33 |
| methyl bromide | <1 | <1,000 | <1 | <1,000 | <1.5 | <300 | <100 | <1 | <100 | <1 |
| methyl chloride | 30 | <1,000 | 29 | <1,000 | <1.6 | <320 | <100 | <1 | <100 | <1 |
| methylene chloride | 204 | <280 | <1 | <280 | 1,740 | 8,100 | <28 | 50 | <28 | 19 |
| 1,1,2,2-tetrachloroethane | <1 | <690 | <1 | <690 | <1.4 | <280 | <69 | <1 | <69 | <1 |
| tetrachloroethylene | 19 | <410 | 15 | <410 | <1.5 | <300 | <41 | <1 | <41 | <1 |
| toluene | 316 | 736 | 269 | <600 | 16,200 | 18,500 | <60 | 195 | 532 | 225 |
| 1,2-trans-dichloroethylene | <1 | <160 | 2 | <160 | <1.5 | <300 | <16 | <1 | <16 | <1 |
| 1,1,1-trichloroethane | <1 | <380 | <1 | <380 | <1.2 | <240 | <38 | <1 | <38 | <1 |
| 1,1,2-trichloroethane | <1 | <500 | <1 | <500 | <1.6 | <320 | <50 | <1 | <50 | <1 |
| trichloroethylene | 7 | <190 | 4 | <190 | <1.3 | <260 | <19 | 2 | 40.2 | <1 |
| trichlorofluoromethane | <1 | <1,000 | <1 | <1,000 | <1.2 | <240 | <100 | <1 | <100 | <1 |
| vinyl chloride | 4 | <1,000 | 7 | <1,000 | <1.2 | <240 | <100 | <1 | <100 | <1 |
| Sub Total 1 | 19497 | 38136 | 11792 | 16610 | 25520 | 39238 | 1510 | 2267 | 1881.1 | 1105 |
| Miscellaneous Volatile Organic Compounds | | | | | | | | | | |
| methyl-iso-butyl ketone | NA | <1,000 | NA | <1,000 | <5 | 40,400 | <100 | NA | 248 | NA |
| methyl isoamyl ketone | NA | <1,000 | NA | <1,000 | <5 | <1,000 | <100 | NA | <100 | NA |
| m-xylene | NA | <1,000 | NA | <1,000 | <5 | <1,000 | <100 | NA | <100 | NA |
| o-xylene/p-xylene | NA | <1,000 | NA | <1,000 | <5 | <1,000 | <100 | NA | <100 | NA |
| Sub Total 2 | NA | 0 | NA | 0 | 0 | 40400 | 0 | NA | 248 | NA |
| Total VOC's Analyzed | 19497 | 38136 | 11792 | 16610 | 25520 | 79638 | 1510 | 2267 | 2129.1 | 1105 |

Table E-1. Summary of Volatile Organic Compounds in Ground Water, W.G. Krummrich Plant, Monsanto Company, Sauget, Il. ***

| Well Number: | B-29B | B-29B | B-29B | B-29B | B-30B | B-31B | B-31B | B-31C | B-31C | B-31C |
|---|---|---|---|---|---|---|---|---|---|---|
| Date: | 6/84* | 6/84* | 11/84 | 11/85 | 9/84** | 11/85 | 2/86 | 9/84** | 11/85 | 2/86 |
| USEPA Priority Pollutant Volatile Organic Compounds concentrations are in ug/L | | | | | | | | | | |
| acrolein | <1 | <50,000 | <10,000 | <1,000 | NA | <100 | <100 | NA | <100 | <100 |
| acrylonitrile | <1 | <50,000 | <10,000 | <1,000 | NA | <100 | <100 | NA | <100 | <100 |
| benzene | 16 | <5,000 | <1,000 | <44 | 176 | <4.4 | <4.4 | <0.5 | 10.7 | 62.9 |
| bis (chloromethyl) ether | <1 | <5,000 | <1,000 | <100 | <1.5 | <10 | <10 | <1.5 | <10 | <10 |
| bromoform | <1 | <5,000 | <1,000 | <47 | <3.2 | <4.7 | <4.7 | <3.2 | <4.7 | <4.7 |
| carbon tetrachloride | <1 | <5,000 | <1,000 | <28 | <1.5 | <2.8 | <2.8 | <1.5 | <2.8 | <2.8 |
| chlorobenzene | 828 | <5,000 | 1,500 | 1,710 | 2,350 | <6 | <6 | <0.6 | 104 | 482 |
| chlorodibromomethane | <1 | <5,000 | <1,000 | <31 | <2.0 | <3.1 | <3.1 | <2.0 | <3.1 | <3.1 |
| chloroethane | <1 | <5,000 | <1,000 | <100 | <2.4 | <10 | <10 | <2.4 | <10 | <10 |
| 2-chloroethylvinyl ether | <1 | <5,000 | <1,000 | <100 | <5.9 | <10 | <10 | <5.9 | <10 | <10 |
| chloroform | 38 | <5,000 | <1,000 | 48.7 | 64 | <1.6 | <1.6 | 3 | <1.6 | <1.6 |
| dichlorobromomethane | <1 | <5,000 | <1,000 | <22 | <1.1 | <2.2 | <2.2 | <1.1 | <2.2 | <2.2 |
| dichlorodifluoromethane | <1 | <5,000 | <1,000 | <100 | NA | <10 | <10 | NA | <10 | <10 |
| 1,1-dichloroethane | <1 | <5,000 | <1,000 | <47 | 3 | <4.7 | <4.7 | <0.8 | <4.7 | <4.7 |
| 1,2-dichloroethane | <1 | <5,000 | <1,000 | <28 | 142 | <2.8 | <2.8 | <1.5 | <2.8 | <2.8 |
| 1,1-dichloroethylene | <1 | <5,000 | <1,000 | <28 | <1.9 | <2.8 | <2.8 | <1.9 | <2.8 | <2.8 |
| 1,2-dichloropropane | <1 | <5,000 | <1,000 | <60 | <1.5 | <6 | <6 | <1.5 | <6 | <6 |
| cis-1,3-dichloropropylene | <1 | <5,000 | <1,000 | <50 | <1.5 | <5 | <5 | <1.5 | <5 | <5 |
| trans-1,3-dichloropropylene | <1 | <5,000 | <1,000 | <100 | <1.5 | <10 | <10 | <1.5 | <10 | <10 |
| ethylbenzene | 30 | <5,000 | <1,000 | <72 | 359 | <7.2 | <7.2 | <0.4 | <7.2 | <7.2 |
| methyl bromide | <1 | <5,000 | <1,000 | <100 | <1.5 | <10 | <10 | <1.5 | <10 | <10 |
| methyl chloride | <1 | 57,000 | <1,000 | <100 | <1.6 | <10 | <10 | <1.6 | <10 | <10 |
| methylene chloride | 17 | 127,000 | <1,000 | <28 | 48 | <2.8 | <2.8 | 6 | <2.8 | <2.8 |
| 1,1,2,2-tetrachloroethane | <1 | <5,000 | <1,000 | <69 | <1.4 | <6.9 | <6.9 | <1.4 | <6.9 | <6.9 |
| tetrachloroethylene | <1 | <5,000 | <1,000 | <41 | 940 | <4.1 | <4.1 | <1.5 | <4.1 | <4.1 |
| toluene | 227 | <5,000 | <1,000 | 491 | 228 | <6 | <6 | 1 | <6 | <6 |
| 1,2-trans-dichloroethylene | <1 | <5,000 | <1,000 | <16 | 163 | <1.6 | <1.6 | <1.5 | <1.6 | <1.6 |
| 1,1,1-trichloroethane | <1 | <5,000 | <1,000 | <38 | <1.2 | <3.8 | <3.8 | <1.2 | <3.8 | <3.8 |
| 1,1,2-trichloroethane | <1 | <5,000 | <1,000 | <50 | <1.6 | <5 | <5 | <1.6 | <5 | <5 |
| trichloroethylene | <1 | <5,000 | <1,000 | <19 | 36 | <1.9 | <1.9 | <1.3 | <1.9 | <1.9 |
| trichlorofluoromethane | <1 | <5,000 | <1,000 | <100 | <1.2 | <10 | <10 | <1.2 | <10 | <10 |
| vinyl chloride | <1 | <5,000 | <1,000 | <100 | <1.2 | <10 | <10 | <1.2 | <10 | <10 |
| Sub Total 1 | 1156 | 184000 | 1500 | 2249.7 | 4509 | 0 | 0 | 10 | 114.7 | 545.9 |
| Miscellaneous Volatile Organic Compounds | | | | | | | | | | |
| methyl-iso-butyl ketone | NA | NA | <1,000 | 177 | 2,640 | <10 | <10 | <5 | <10 | <10 |
| methyl isoamyl ketone | NA | NA | <1,000 | <100 | <5 | <10 | <10 | <5 | <10 | <10 |
| m-xylene | NA | NA | <1,000 | 218 | d) | <10 | <10 | d) | <10 | <10 |
| o-xylene/p-xylene | NA | NA | <1,000 | 146 | d) | <10 | <10 | d) | <10 | <10 |
| Sub Total 2 | NA | NA | 0 | 541 | 2640 | 0 | 0 | 0 | 0 | 0 |
| Total VOC's Analyzed | 1156 | 184000 | 1500 | 2790.7 | 7149 | 0 | 0 | 10 | 114.7 | 545.9 |

Table E-1. Summary of Volatile Organic Compounds in Ground Water, W.G. Krummrich Plant, Monsanto Company, Sauget, Il. ***

| Well Number: | B-101 | B-102 | GM-106 | GM-106 | GM-106 | P-1 | P-2 | P-2 | P-6 | P-6 |
|---|---|---|---|---|---|---|---|---|---|---|
| Date: | 9/84** | 9/84** | 11/85 | 2/86 | 2/86* | 9/84** | 6/84 | 11/85 | 6/84 | 11/85 |
| USEPA Priority Pollutant Volatile Organic Compounds concentrations are in ug/L | | | | | | | | | | |
| acrolein | NA | NA | <100 | <1,000 | <1,000 | NA | <1 | <1,000 | <1 | <100 |
| acrylonitrile | NA | NA | <100 | <1,000 | <1,000 | NA | <1 | <1,000 | <1 | <100 |
| benzene | <50 | 23 | <4.4 | <44 | <44 | <0.5 | 54 | 106 | 31 | 24.3 |
| bis (chloromethyl) ether | <150 | <1.5 | <10 | <100 | <100 | <1.5 | <1 | <100 | <1 | <10 |
| bromoform | <320 | <3.2 | <4.7 | <47 | <47 | <3.2 | <1 | <47 | <1 | <4.7 |
| carbon tetrachloride | <150 | <1.5 | <2.8 | <28 | <28 | <1.5 | <1 | <28 | <1 | <2.8 |
| chlorobenzene | 14,400 | <0.6 | 21.4 | 201 | <60 | <0.6 | 687 | 764 | 130 | 98.1 |
| chlorodibromomethane | <200 | <2.0 | <3.1 | <31 | <31 | <2.0 | <1 | <31 | <1 | <3.1 |
| chloroethane | <240 | <2.4 | <10 | <100 | <100 | <2.4 | <1 | <100 | <1 | <10 |
| 2-chloroethylvinyl ether | <590 | <5.9 | <10 | <100 | <100 | <5.9 | <1 | <100 | <1 | <10 |
| chloroform | <80 | 0.8 | <1.6 | <16 | <16 | <0.8 | <1 | <16 | <1 | <1.6 |
| dichlorobromomethane | <110 | <1.1 | <2.2 | <22 | <22 | <1.1 | <1 | <22 | <1 | <2.2 |
| dichlorodifluoromethane | NA | NA | <10 | <100 | <100 | NA | <1 | <100 | <1 | <10 |
| 1,1-dichloroethane | <80 | <0.8 | <4.7 | <47 | <47 | <0.8 | <1 | <47 | <1 | <4.7 |
| 1,2-dichloroethane | <150 | <1.5 | <2.8 | <28 | <28 | <1.5 | <1 | <28 | <1 | <2.8 |
| 1,1-dichloroethylene | <190 | <1.9 | <2.8 | <28 | <28 | <1.9 | <1 | <28 | <1 | <2.8 |
| 1,2-dichloropropane | <150 | <1.5 | <6 | <60 | <60 | <1.5 | <1 | <60 | <1 | <6 |
| cis-1,3-dichloropropylene | <150 | <1.5 | <5 | <50 | <50 | <1.5 | <1 | <50 | <1 | <5 |
| trans-1,3-dichloropropylene | <150 | <1.5 | <10 | <100 | <100 | <1.5 | <1 | <100 | <1 | <10 |
| ethylbenzene | <40 | <0.4 | <7.2 | <72 | <72 | <0.4 | 1 | <72 | 1 | <7.2 |
| methyl bromide | <150 | <1.5 | <10 | <100 | <100 | <1.5 | <1 | <100 | <1 | <10 |
| methyl chloride | <160 | <1.6 | <10 | <100 | <100 | <1.6 | <1 | <100 | <1 | <10 |
| methylene chloride | 400 | 2 | <2.8 | <28 | <28 | 4 | 81 | <28 | 99 | <2.8 |
| 1,1,2,2-tetrachloroethane | <140 | <1.4 | <6.9 | <69 | <69 | <1.4 | <1 | <69 | <1 | <6.9 |
| tetrachloroethylene | <150 | <1.5 | <4.1 | <41 | <41 | <1.5 | <1 | <41 | <1 | <4.1 |
| toluene | 1,180 | 1 | 15 | 104 | <60 | <0.4 | 4 | <60 | 5 | <6 |
| 1,2-trans-dichloroethylene | <150 | <1.5 | <1.6 | <16 | <16 | <1.5 | <1 | <16 | <1 | <1.6 |
| 1,1,1-trichloroethane | <120 | <1.2 | <3.8 | <38 | <38 | <1.2 | <1 | <38 | <1 | <3.8 |
| 1,1,2-trichloroethane | <160 | <1.6 | <5 | <50 | <50 | <1.6 | <1 | <50 | <1 | <5 |
| trichloroethylene | <130 | <1.3 | <1.9 | <19 | <19 | <1.3 | <1 | <19 | <1 | <1.9 |
| trichlorofluoromethane | <120 | <1.2 | <10 | <100 | <100 | <1.2 | <1 | <100 | <1 | <10 |
| vinyl chloride | <120 | <1.2 | <10 | <100 | <100 | <1.2 | <1 | <100 | <1 | <10 |
| Sub Total 1 | 15980 | 26.8 | 36.4 | 305 | 0 | 4 | 827 | 870 | 266 | 122.4 |
| Miscellaneous Volatile Organic Compounds | | | | | | | | | | |
| methyl-iso-butyl ketone | <500 | <5 | <10 | <100 | <100 | <5 | NA | <100 | NA | <10 |
| methyl isoamyl ketone | <500 | <5 | <10 | <100 | <100 | <5 | NA | <100 | NA | <10 |
| m-xylene | <500 | <5 | <10 | 100 | <100 | <5 | NA | <100 | NA | <10 |
| o-xylene/p-xylene | <500 | <5 | <10 | <100 | <100 | <5 | NA | <100 | NA | <10 |
| Sub Total 2 | 0 | 0 | 0 | 100 | 0 | 0 | NA | 0 | NA | 0 |
| Total VOC's Analyzed | 15980 | 26.8 | 36.4 | 405 | 0 | 4 | 827 | 870 | 266 | 122.4 |

Table E-1. Summary of Volatile Organic Compounds in Ground Water, W.G. Krummrich Plant, Monsanto Company, Sauget, Il. ***

| Well Number: | P-7 | P-7 | P-8 | P-8 | P-10 | P-11 | P-12 | P-13 | P-13 | P-13 |
|---|---|---|---|---|---|---|---|---|---|---|
| Date: | 6/84 | 11/85 | 6/84 | 11/85 | 9/84** | 9/84** | 9/84** | 6/84 | 6/84* | 6/84* |
| USEPA Priority Pollutant Volatile Organic Compounds concentrations are in ug/L | | | | | | | | | | |
| acrolein | <1 | <25,000 | <1 | <1,000 | NA | NA | NA | <1 | <1 | <50,000 |
| acrylonitrile | <1 | <25,000 | <1 | <1,000 | NA | NA | NA | <1 | <1 | <50,000 |
| benzene | 2,080 | 1,810 | 162 | 531 | 132 | 113 | 560 | 61 | 60 | <5,000 |
| bis (chloromethyl) ether | <1 | <2,500 | <1 | <100 | <1.5 | <1.5 | <1.5 | <1 | <1 | <5,000 |
| bromoform | <1 | <1,200 | <1 | <47 | <3.2 | <3.2 | <3.2 | <1 | <1 | <5,000 |
| carbon tetrachloride | <1 | <700 | <1 | <28 | <1.5 | <1.5 | <1.5 | <1 | <1 | <5,000 |
| chlorobenzene | 4,040 | 5,110 | 585 | 2,490 | 2,000 | 842 | 690 | 81 | 75 | <5,000 |
| chlorodibromomethane | <1 | <780 | <1 | <31 | <2.0 | <2.0 | <2.0 | <1 | <1 | <5,000 |
| chloroethane | <1 | <2,500 | <1 | <100 | <2.4 | <2.4 | <2.4 | <1 | <1 | <5,000 |
| 2-chloroethylvinyl ether | <1 | <2,500 | <1 | <100 | <5.9 | <5.9 | <5.9 | <1 | <1 | <5,000 |
| chloroform | 7 | <400 | <1 | <16 | <0.8 | <0.8 | <0.8 | <1 | <1 | <5,000 |
| dichlorobromomethane | <1 | <550 | <1 | <22 | <1.1 | <1.1 | <1.1 | <1 | <1 | <5,000 |
| dichlorodifluoromethane | <1 | <2,500 | <1 | <100 | NA | NA | NA | <1 | <1 | <5,000 |
| 1,1-dichloroethane | <1 | <1,200 | <1 | <47 | <0.8 | <0.8 | <0.8 | <1 | <1 | <5,000 |
| 1,2-dichloroethane | <1 | 700 | <1 | <28 | <1.5 | <1.5 | <1.5 | <1 | <1 | <5,000 |
| 1,1-dichloroethylene | <1 | <700 | <1 | <28 | 2 | <1.9 | <1.9 | <1 | <1 | <5,000 |
| 1,2-dichloropropane | <1 | <1,500 | <1 | <60 | <1.5 | <1.5 | <1.5 | <1 | <1 | <5,000 |
| cis-1,3-dichloropropylene | <1 | <1,300 | <1 | <50 | <1.5 | <1.5 | <1.5 | <1 | <1 | <5,000 |
| trans-1,3-dichloropropylene | <1 | <2,500 | <1 | <100 | <1.5 | <1.5 | <1.5 | <1 | <1 | <5,000 |
| ethylbenzene | 12 | <1,800 | 13 | 74.6 | <0.4 | 5 | 32 | 16 | <1 | <5,000 |
| methyl bromide | <1 | <2,500 | <1 | <100 | <1.5 | <1.5 | <1.5 | <1 | <1 | <5,000 |
| methyl chloride | <1 | <2,500 | <1 | <100 | <1.6 | <1.6 | <1.6 | <1 | <1 | 138,000 |
| methylene chloride | 68 | <700 | 19 | <28 | 41 | 21 | 42 | 33 | 26 | 37,100 |
| 1,1,2,2-tetrachloroethane | <1 | <1,700 | <1 | <69 | <1.4 | <1.4 | <1.4 | <1 | <1 | <5,000 |
| tetrachloroethylene | <1 | <1,000 | <1 | <41 | <1.5 | <1.5 | <1.5 | <1 | <1 | <5,000 |
| toluene | 322 | <1,500 | 56 | <60 | 24 | 10 | 19 | 5 | 4 | 19,200 |
| 1,2-trans-dichloroethylene | <1 | <400 | <1 | <16 | <1.5 | <1.5 | <1.5 | <1 | <1 | <5,000 |
| 1,1,1-trichloroethane | <1 | <950 | <1 | <38 | <1.2 | <1.2 | <1.2 | <1 | <1 | <5,000 |
| 1,1,2-trichloroethane | <1 | <1,300 | <1 | <50 | <1.6 | <1.6 | <1.6 | <1 | <1 | <5,000 |
| trichloroethylene | <1 | <480 | <1 | <19 | <1.3 | <1.3 | <1.3 | <1 | <1 | <5,000 |
| trichlorofluoromethane | <1 | <2,500 | <1 | <100 | <1.2 | <1.2 | <1.2 | <1 | <1 | <5,000 |
| vinyl chloride | <1 | <2,500 | <1 | <100 | <1.2 | <1.2 | <1.2 | <1 | <1 | <5,000 |
| Sub Total 1 | 6529 | 7620 | 835 | 3095.6 | 2199 | 991 | 1343 | 196 | 165 | 194300 |
| Miscellaneous Volatile Organic Compounds | | | | | | | | | | |
| methyl-iso-butyl ketone | NA | <2,500 | NA | <100 | <5 | <5 | <5 | NA | NA | NA |
| methyl isoamyl ketone | NA | <2,500 | NA | <100 | <5 | <5 | <5 | NA | NA | NA |
| m-xylene | NA | <2,500 | NA | <100 | <5 | <5 | <5 | NA | NA | NA |
| o-xylene/p-xylene | NA | <2,500 | NA | <100 | <5 | <5 | <5 | NA | NA | NA |
| Sub Total 2 | NA | 0 | NA | 0 | 0 | 0 | 0 | NA | NA | NA |
| Total VOC's Analyzed | 6529 | 7620 | 835 | 3095.6 | 2199 | 991 | 1343 | 196 | 165 | 194300 |

Table E-1. Summary of Volatile Organic Compounds in Ground Water, W.G. Krummrich Plant, Monsanto Company, Sauget, Il. ***

| Well Number: | P-13 | P-14 | P-14 | DW-1 | DW-1 | DW-4 | DW-7 | DW-7 | DW-10 | DW-18 |
|---|---|---|---|---|---|---|---|---|---|---|
| Date: | 11/85 | 6/84 | 11/85 | 9/84** | 11/85 | 9/84** | 11/85 | 2/86 | 9/84** | 9/84** |
| USEPA Priority Pollutant Volatile Organic Compounds concentrations are in ug/L | | | | | | | | | | |
| acrolein | <1,000 | <1 | <10,000 | NA | <10,000 | NA | <100 | <5,000 | NA | NA |
| acrylonitrile | <1,000 | <1 | <10,000 | NA | <10,000 | NA | <100 | <5,000 | NA | NA |
| benzene | 89.4 | 269 | <440 | 23,400 | 157,000 | 940 | 6.9 | <220 | 6,240 | <0.5 |
| bis (chloromethyl) ether | <100 | <1 | <1,000 | <300 | <1,000 | <300 | <10 | <500 | <300 | <1.5 |
| bromoform | <47 | <1 | <470 | <640 | <470 | <640 | <4.7 | <240 | <640 | <3.2 |
| carbon tetrachloride | <28 | <1 | <280 | <300 | <280 | <300 | <2.8 | <140 | <300 | <1.5 |
| chlorobenzene | 265 | 23,480 | 16,000 | 6,600 | 35,700 | 11,040 | 183 | 1,080 | 9,960 | <0.6 |
| chlorodibromomethane | <31 | <1 | <310 | <400 | <310 | <400 | <3.1 | <160 | <400 | <2.0 |
| chloroethane | <100 | <1 | <1,000 | <480 | <1,000 | <480 | <10 | <500 | <480 | <2.4 |
| 2-chloroethylvinyl ether | <100 | <1 | <1,000 | <1,180 | <1,000 | <1,180 | <10 | <500 | <1,180 | <5.9 |
| chloroform | <16 | <1 | <160 | <160 | <160 | <160 | 2.3 | <80 | <160 | <0.8 |
| dichlorobromomethane | <22 | <1 | <220 | <220 | <220 | <220 | <2.2 | <110 | <220 | <1.1 |
| dichlorodifluoromethane | <100 | <1 | <1,000 | NA | <1,000 | NA | <10 | <500 | NA | NA |
| 1,1-dichloroethane | <47 | <1 | <470 | <160 | <470 | <160 | <4.7 | <240 | <160 | <0.8 |
| 1,2-dichloroethane | <28 | <1 | <280 | <300 | <280 | <300 | <2.8 | <140 | <300 | <1.5 |
| 1,1-dichloroethylene | <28 | <1 | <280 | <380 | <280 | <380 | <2.8 | <140 | <380 | <1.9 |
| 1,2-dichloropropane | <60 | <1 | <600 | <300 | <600 | <300 | <6 | <300 | <300 | <1.5 |
| cis-1,3-dichloropropylene | <50 | <1 | <500 | <300 | <500 | <300 | <5 | <250 | <300 | <1.5 |
| trans-1,3-dichloropropylene | <100 | <1 | <1,000 | <300 | <1,000 | <300 | <10 | <500 | <300 | <1.5 |
| ethylbenzene | <72 | 4 | <720 | <80 | <720 | <80 | <7.2 | <360 | 200 | <0.4 |
| methyl bromide | <100 | <1 | <1,000 | <300 | <1,000 | <300 | <10 | <500 | <300 | <1.5 |
| methyl chloride | <100 | <1 | <1,000 | <320 | <1,000 | <320 | <10 | <500 | <320 | <1.6 |
| methylene chloride | <28 | 53 | <280 | 2,020 | <280 | 2,140 | 5 | <140 | 2,380 | 5 |
| 1,1,2,2-tetrachloroethane | <69 | <1 | <690 | <280 | <690 | <280 | <6.9 | <350 | <280 | <1.4 |
| tetrachloroethylene | <41 | <1 | <410 | <300 | <410 | <300 | <4.1 | <210 | <300 | <1.5 |
| toluene | <60 | 6 | <600 | <80 | <600 | <80 | 8.5 | <300 | <80 | <0.4 |
| 1,2-trans-dichloroethylene | <16 | <1 | <160 | <300 | <160 | <300 | 7.4 | <80 | <300 | <1.5 |
| 1,1,1-trichloroethane | <38 | <1 | <380 | <240 | <380 | <240 | <3.8 | <190 | <240 | <1.2 |
| 1,1,2-trichloroethane | <50 | <1 | <500 | <320 | <500 | <320 | <5 | <250 | <320 | <1.6 |
| trichloroethylene | <19 | <1 | <190 | <260 | <190 | <260 | <1.9 | <95 | <260 | <1.3 |
| trichlorofluoromethane | <100 | <1 | <1,000 | <240 | <1,000 | <240 | <10 | <500 | <240 | <1.2 |
| vinyl chloride | <100 | <1 | <1,000 | <240 | <1,000 | <240 | <10 | <500 | <240 | <1.2 |
| Sub Total 1 | 354.4 | 23812 | 16000 | 32020 | 192700 | 14120 | 213.1 | 1080 | 18780 | 5 |
| Miscellaneous Volatile Organic Compounds | | | | | | | | | | |
| methyl-iso-butyl ketone | <100 | NA | <1,000 | <1,000 | <1,000 | <1,000 | <10 | <500 | <1,000 | <5 |
| methyl isoamyl ketone | <100 | NA | <1,000 | <1,000 | <1,000 | <1,000 | 42.4 | <500 | <1,000 | <5 |
| m-xylene | <100 | NA | <1,000 | <1,000 | <1,000 | <1,000 | <10 | <500 | <1,000 | <5 |
| o-xylene/p-xylene | <100 | NA | <1,000 | <1,000 | <1,000 | <1,000 | <10 | <500 | <1,000 | <5 |
| Sub Total 2 | 0 | NA | 0 | 0 | 0 | 0 | 42.4 | 0 | 0 | 0 |
| Total VOC's Analyzed | 354.4 | 23812 | 16000 | 32020 | 192700 | 14120 | 255.5 | 1080 | 18780 | 5 |

Table E-1. Summary of Volatile Organic Compounds in Ground Water, W.G. Krummrich Plant, Monsanto Company, Sauget, Il. ***

| Well Number: | DW-18 | DW-18 | DW-23 | DW-24 | DW-29 | DW-29 | DW-30 | DW-33 | DW-34 | DW-34 |
|---|---|---|---|---|---|---|---|---|---|---|
| Date: | 9/84* | 11/85 | 9/84** | 9/84** | 9/84** | 9/84* | 11/85 | 9/84** | 9/84** | 11/85 |
| USEPA Priority Pollutant Volatile Organic Compounds concentrations are in ug/L | | | | | | | | | | |
| acrolein | NA | <100 | NA | NA | NA | NA | <100 | NA | NA | <100 |
| acrylonitrile | NA | <100 | NA | NA | NA | NA | <100 | NA | NA | <100 |
| benzene | <0.5 | 184 | <0.5 | <0.5 | <0.5 | <25 | 22.7 | <0.5 | 596,000 | 867 |
| bis (chloromethyl) ether | <1.5 | <10 | <1.5 | <1.5 | <1.5 | <75 | <10 | <1.5 | <1,500 | <10 |
| bromoform | <3.2 | <4.7 | <3.2 | <3.2 | <3.2 | <160 | <4.7 | <3.2 | <3,200 | <4.7 |
| carbon tetrachloride | <1.5 | <2.8 | <1.5 | <1.5 | <1.5 | <75 | <2.8 | <1.5 | <1,500 | <2.8 |
| chlorobenzene | <0.6 | 980 | <0.6 | <0.6 | 32 | 760 | 149 | <0.6 | 366 | 18 |
| chlorodibromomethane | <2.0 | <3.1 | <2.0 | <2.0 | <2.0 | <100 | <3.1 | <2.0 | <2,000 | <3.1 |
| chloroethane | <2.4 | <10 | <2.4 | <2.4 | <2.4 | <120 | <10 | <2.4 | <2,400 | <10 |
| 2-chloroethylvinyl ether | <5.9 | <10 | <5.9 | <5.9 | <5.9 | <295 | <10 | <5.9 | <5,900 | <10 |
| chloroform | <0.8 | <1.6 | <0.8 | <0.8 | <0.8 | <40 | <1.6 | <0.8 | <800 | <1.6 |
| dichlorobromomethane | <1.1 | <2.2 | <1.1 | <1.1 | <1.1 | <55 | <2.2 | <1.1 | <1,100 | <2.2 |
| dichlorodifluoromethane | NA | <10 | NA | NA | NA | NA | <10 | NA | NA | <10 |
| 1,1-dichloroethane | <0.8 | <4.7 | <0.8 | <0.8 | <0.8 | <40 | <4.7 | <0.8 | <800 | <4.7 |
| 1,2-dichloroethane | <1.5 | <2.8 | 2 | <1.5 | 3 | <75 | <2.8 | <1.5 | <1,500 | <2.8 |
| 1,1-dichloroethylene | <1.9 | <2.8 | <1.9 | <1.9 | <1.9 | <95 | <2.8 | <1.9 | <1,900 | <2.8 |
| 1,2-dichloropropane | <1.5 | <6 | <1.5 | <1.5 | <1.5 | <75 | <6 | <1.5 | <1,500 | <6 |
| cis-1,3-dichloropropylene | <1.5 | <5 | <1.5 | <1.5 | <1.5 | <75 | <5 | <1.5 | <1,500 | <5 |
| trans-1,3-dichloropropylene | <1.5 | <10 | <1.5 | <1.5 | <1.5 | <75 | <10 | <1.5 | <1,500 | <10 |
| ethylbenzene | <0.4 | 15.5 | <0.4 | <0.4 | <0.4 | <20 | <7.2 | <0.4 | <400 | <7.2 |
| methyl bromide | <1.5 | <10 | <1.5 | <1.5 | <1.5 | <75 | <10 | <1.5 | <1,500 | <10 |
| methyl chloride | <1.6 | <10 | <1.6 | <1.6 | <1.6 | <80 | <10 | <1.6 | 4,060 | <10 |
| methylene chloride | 4 | <2.8 | 3 | 6 | 3 | 525 | <2.8 | 9 | <1,100 | <2.8 |
| 1,1,2,2-tetrachloroethane | <1.4 | <6.9 | <1.4 | <1.4 | <1.4 | <70 | <6.9 | <1.4 | <1,400 | <6.9 |
| tetrachloroethylene | <1.5 | <4.1 | <1.5 | <1.5 | <1.5 | <75 | <4.1 | <1.5 | <1,500 | <4.1 |
| toluene | 2 | 16.4 | 1 | <0.4 | <0.4 | <20 | <6 | <0.4 | 1,280 | <6 |
| 1,2-trans-dichloroethylene | <1.5 | 4 | <1.5 | <1.5 | <1.5 | <75 | <1.6 | <1.5 | 129 | <1.6 |
| 1,1,1-trichloroethane | <1.2 | <3.8 | <1.2 | <1.2 | <1.2 | <60 | <3.8 | <1.2 | <1,200 | <3.8 |
| 1,1,2-trichloroethane | <1.6 | <5 | <1.6 | <1.6 | <1.6 | <80 | <5 | <1.6 | <1,600 | <5 |
| trichloroethylene | <1.3 | <1.9 | <1.3 | <1.3 | <1.3 | <65 | <1.9 | <1.3 | <1,300 | <1.9 |
| trichlorofluoromethane | <1.2 | <10 | <1.2 | <1.2 | <1.2 | <60 | <10 | <1.2 | <1,200 | <10 |
| vinyl chloride | <1.2 | <10 | <1.2 | <1.2 | <1.2 | <60 | <10 | <1.2 | <1,200 | <10 |
| Sub Total 1 | 6 | 1199.9 | 6 | 6 | 38 | 1285 | 171.7 | 9 | 601835 | 885 |
| Miscellaneous Volatile Organic Compounds | | | | | | | | | | |
| methyl-iso-butyl ketone | NA | <10 | <5 | <5 | <5 | NA | <10 | <5 | <5,000 | <10 |
| methyl isoamyl ketone | NA | <10 | <5 | <5 | <5 | NA | <10 | <5 | <5,000 | <10 |
| m-xylene | NA | <10 | e) | <5 | <5 | NA | <10 | <5 | <5,000 | <10 |
| o-xylene/p-xylene | NA | <10 | e) | <5 | <5 | NA | <10 | <5 | <5,000 | <10 |
| Sub Total 2 | NA | 0 | 0 | 0 | 0 | NA | 0 | 0 | 0 | 0 |
| Total VOC's Analyzed | 6 | 1199.9 | 6 | 6 | 38 | 1285 | 171.7 | 9 | 601835 | 885 |

Table E-1. Summary of Volatile Organic Compounds in Ground Water, W.G. Krummrich Plant, Monsanto Company, Sauget, Il. ***

| Well Number: | DW-34 | DW-1-85 | DW-1-85 | BK-3 | BK-3 | BK-3 | WB-6 | WB-6 | WB-6 | WB-7 |
|---|---|---|---|---|---|---|---|---|---|---|
| Date: | 2/86 | 11/85 | 2/86 | 9/84** | 11/85 | 2/86 | 9/84** | 11/85 | 2/86 | 9/84 |
| USEPA Priority Pollutant Volatile Organic Compounds concentrations are in ug/L | | | | | | | | | | |
| acrolein | <100 | <100 | <500 | NA | <1,000 | <10,000 | NA | <100 | <1,000 | NA |
| acrylonitrile | <100 | <100 | <500 | NA | <1,000 | <10,000 | NA | <100 | <1,000 | NA |
| benzene | 623 | 1,700 | 472 | 208 | 3,980 | <440 | <0.5 | 31.1 | <44 | 0.5 |
| bis (chloromethyl) ether | <10 | <10 | <50 | <1.5 | <100 | <1,000 | <1.5 | <10 | <100 | <1.5 |
| bromoform | <4.7 | <4.7 | <24 | <3.2 | <47 | <470 | <3.2 | <4.7 | <47 | <3.2 |
| carbon tetrachloride | <2.8 | <2.8 | <14 | <1.5 | <28 | <280 | <1.5 | <2.8 | <28 | <1.5 |
| chlorobenzene | 6.6 | 6,680 | 3,650 | 1,172 | 4,610 | 972 | <0.6 | <6 | 210 | 150 |
| chlorodibromomethane | <3.1 | <3.1 | <16 | <2.0 | <31 | <310 | <2.0 | <3.1 | <31 | <2.0 |
| chloroethane | <10 | <10 | <50 | <2.4 | <100 | <1,000 | <2.4 | <10 | <100 | <2.4 |
| 2-chloroethylvinyl ether | <10 | <10 | <50 | <5.9 | <100 | <1,000 | <5.9 | <10 | <100 | <5.9 |
| chloroform | <1.6 | <1.6 | <8 | <0.8 | <16 | <160 | <0.8 | <1.6 | <16 | <0.8 |
| dichlorobromomethane | <2.2 | <2.2 | <11 | <1.1 | <22 | <220 | <1.1 | <2.2 | <22 | <1.1 |
| dichlorodifluoromethane | <10 | <10 | <50 | NA | <100 | <1,000 | NA | <10 | <100 | NA |
| 1,1-dichloroethane | <4.7 | <4.7 | 50.6 | <0.8 | <47 | <470 | <0.8 | <4.7 | <47 | <0.8 |
| 1,2-dichloroethane | <2.8 | <2.8 | <14 | <1.5 | <28 | <280 | <1.5 | <2.8 | <28 | <1.5 |
| 1,1-dichloroethylene | <2.8 | <2.8 | 192 | <1.9 | <28 | <280 | <1.9 | <2.8 | <28 | <1.9 |
| 1,2-dichloropropane | <6 | <6 | <30 | <1.5 | <60 | <600 | <1.5 | <6 | <60 | <1.5 |
| cis-1,3-dichloropropylene | <5 | <5 | <25 | <1.5 | <50 | <500 | <1.5 | <5 | <50 | <1.5 |
| trans-1,3-dichloropropylene | <10 | <10 | <50 | <1.5 | <100 | <1,000 | <1.5 | <10 | <100 | <1.5 |
| ethylbenzene | <7.2 | <7.2 | <36 | 7 | <72 | <720 | <0.4 | 15 | <72 | <0.4 |
| methyl bromide | <10 | <10 | <50 | 8 | <100 | <1,000 | <1.5 | <10 | <100 | <1.5 |
| methyl chloride | <10 | <10 | <50 | <1.6 | <100 | <1,000 | <1.6 | <10 | <100 | <1.6 |
| methylene chloride | <2.8 | 8.3 | <14 | <1.1 | 55 | <280 | 5 | <2.8 | 29 | <1.1 |
| 1,1,2,2-tetrachloroethane | <6.9 | <6.9 | <35 | <1.4 | <69 | <690 | <1.4 | <6.9 | <69 | <1.4 |
| tetrachloroethylene | <4.1 | <4.1 | <21 | <1.5 | <41 | <410 | <1.5 | <4.1 | <41 | <1.5 |
| toluene | <6 | <6 | <30 | 2 | <60 | <600 | <0.4 | <6 | 107 | <0.4 |
| 1,2-trans-dichloroethylene | <1.6 | <1.6 | 202 | <1.5 | <16 | <160 | <1.5 | <1.6 | <16 | <1.5 |
| 1,1,1-trichloroethane | <3.8 | <3.8 | <19 | <1.2 | <38 | <380 | <1.2 | <3.8 | <38 | <1.2 |
| 1,1,2-trichloroethane | <5 | <5 | <25 | <1.6 | <50 | <500 | <1.6 | <5 | <50 | <1.6 |
| trichloroethylene | <1.9 | <1.9 | <9.5 | <1.3 | <19 | <190 | <1.3 | <1.9 | <19 | <1.3 |
| trichlorofluoromethane | <10 | <10 | <50 | <1.2 | <100 | <1,000 | <1.2 | <10 | <100 | <1.2 |
| vinyl chloride | <10 | <10 | 96.2 | <1.2 | <100 | <1,000 | <1.2 | <10 | <100 | <1.2 |
| Sub Total 1 | 629.6 | 8388.3 | 4662.8 | 1397 | 8645 | 972 | 5 | 46.1 | 346 | 150.5 |
| Miscellaneous Volatile Organic Compounds | | | | | | | | | | |
| methyl-iso-butyl ketone | <10 | <10 | <50 | <5 | <100 | <1,000 | <5 | <10 | <100 | <5 |
| methyl isoamyl ketone | <10 | <10 | <50 | <5 | <100 | <1,000 | <5 | <10 | <100 | <5 |
| m-xylene | <10 | <10 | <50 | <5 | <100 | <1,000 | <5 | 12.3 | 105 | <5 |
| o-xylene/p-xylene | <10 | <10 | <50 | <5 | <100 | <1,000 | <5 | 19.5 | <100 | <5 |
| Sub Total 2 | 0 | 0 | 0 | 0 | 0 | 0 | 0 | 31.8 | 105 | 0 |
| Total VOC's Analyzed | 629.6 | 8388.3 | 4662.8 | 1397 | 8645 | 972 | 5 | 77.9 | 451 | 150.5 |

Table E-1. Summary of Volatile Organic Compounds in Ground Water, W.G. Krummrich Plant, Monsanto Company, Sauget, Il. ***

| Well Number: | WB-7 | Field Blank | Field Blank | Field Blank | Field Blank | Field Blank | Field Blank | Field Blank | Field Blank | Trip Blank |
|---|---|---|---|---|---|---|---|---|---|---|
| Date: | 11/85 | 6/84 | 9/84 | 9/84 | 11/84 | 2/85 | 5/85 | 11/85 | 2/86 | 5/84 |
| USEPA Priority Pollutant Volatile Organic Compounds concentrations are in ug/L | | | | | | | | | | |
| acrolein | <100 | NA | NA | NA | <100 | <100 | <100 | <100 | <100 | <1 |
| acrylonitrile | <100 | NA | NA | NA | <100 | <100 | <100 | <100 | <100 | <1 |
| benzene | <4.4 | <0.5 | <0.5 | <0.5 | 28 | <4.4 | <4.4 | <4.4 | <4.4 | <1 |
| bis (chloromethyl) ether | <10 | <1.5 | <1.5 | <1.5 | <10 | <10 | <10 | <10 | <10 | <1 |
| bromoform | <4.7 | <3.2 | <3.2 | <3.2 | <10 | <4.7 | <4.7 | <4.7 | <4.7 | <1 |
| carbon tetrachloride | <2.8 | <1.5 | <1.5 | <1.5 | <10 | <2.8 | <2.8 | <2.8 | <2.8 | <1 |
| chlorobenzene | <6 | <0.6 | 53 | 1 | 24 | <6 | <6 | <6 | <6 | <1 |
| chlorodibromomethane | <3.1 | <2.0 | <2.0 | <2.0 | <10 | <3.1 | <3.1 | <3.1 | <3.1 | <1 |
| chloroethane | <10 | <2.4 | <2.4 | <2.4 | <10 | <10 | <10 | <10 | <10 | <1 |
| 2-chloroethylvinyl ether | <10 | <5.9 | <5.9 | <5.9 | <10 | <10 | <10 | <10 | <10 | <1 |
| chloroform | <1.6 | <0.8 | <0.8 | <0.8 | <10 | <1.6 | <1.6 | <1.6 | <1.6 | <1 |
| dichlorobromomethane | <2.2 | <1.1 | <1.1 | <1.1 | <10 | <2.2 | <2.2 | <2.2 | <2.2 | <1 |
| dichlorodifluoromethane | <10 | NA | NA | NA | <10 | <10 | <10 | <10 | <10 | <1 |
| 1,1-dichloroethane | <4.7 | <0.8 | <0.8 | <0.8 | <10 | <4.7 | <4.7 | <4.7 | <4.7 | <1 |
| 1,2-dichloroethane | <2.8 | <1.5 | <1.5 | <1.5 | <10 | <2.8 | <2.8 | <2.8 | <2.8 | <1 |
| 1,1-dichloroethylene | <2.8 | <1.9 | <1.9 | <1.9 | <10 | <2.8 | <2.8 | <2.8 | <2.8 | <1 |
| 1,2-dichloropropane | <6 | <1.5 | <1.5 | <1.5 | <10 | <6 | <6 | <6 | <6 | <1 |
| cis-1,3-dichloropropylene | <5 | <1.5 | <1.5 | <1.5 | <10 | <5 | <5 | <5 | <5 | <1 |
| trans-1,3-dichloropropylene | <10 | <1.5 | <1.5 | <1.5 | <10 | <10 | <10 | <10 | <10 | <1 |
| ethylbenzene | <7.2 | <0.4 | 1 | <0.4 | <10 | <7.2 | <7.2 | <7.2 | <7.2 | <1 |
| methyl bromide | <10 | <1.5 | <1.5 | <1.5 | <10 | <10 | <10 | <10 | <10 | <1 |
| methyl chloride | <10 | <1.6 | <1.6 | <1.6 | <10 | <10 | <10 | <10 | <10 | <1 |
| methylene chloride | <2.8 | 20 | 39 | 15 | <10 | <2.8 | 3.8 | <2.8 | 6.5 | 53 |
| 1,1,2,2-tetrachloroethane | <6.9 | <1.4 | <1.4 | <1.4 | <10 | <6.9 | <6.9 | <6.9 | <6.9 | <1 |
| tetrachloroethylene | <4.1 | <1.5 | <1.5 | <1.5 | <10 | <4.1 | <4.1 | <4.1 | <4.1 | <1 |
| toluene | <6 | 3 | 1 | <0.4 | <10 | <6 | <6 | <6 | <6 | 2 |
| 1,2-trans-dichloroethylene | <1.6 | <1.5 | <1.5 | <1.5 | <10 | <1.6 | <1.6 | <1.6 | <1.6 | <1 |
| 1,1,1-trichloroethane | <3.8 | <1.2 | <1.2 | <1.2 | <10 | <3.8 | <3.8 | <3.8 | <3.8 | <1 |
| 1,1,2-trichloroethane | <5 | <1.6 | <1.6 | <1.6 | <10 | <5 | <5 | <5 | <5 | <1 |
| trichloroethylene | <1.9 | <1.3 | <1.3 | <1.3 | <10 | <1.9 | <1.9 | <1.9 | <1.9 | <1 |
| trichlorofluoromethane | <10 | <1.2 | <1.2 | <1.2 | <10 | <10 | <10 | <10 | <10 | <1 |
| vinyl chloride | <10 | <1.2 | <1.2 | <1.2 | <10 | <10 | <10 | <10 | <10 | <1 |
| Sub Total 1 | 0 | 23 | 94 | 16 | 52 | 0 | 3.8 | 0 | 6.5 | 55 |
| Miscellaneous Volatile Organic Compounds | | | | | | | | | | |
| methyl-iso-butyl ketone | <10 | NA | NA | NA | NA | NA | NA | NA | NA | NA |
| methyl isoamyl ketone | <10 | NA | NA | NA | NA | NA | NA | NA | NA | NA |
| m-xylene | <10 | NA | NA | NA | NA | NA | NA | NA | NA | NA |
| o-xylene/p-xylene | <10 | NA | NA | NA | NA | NA | NA | NA | NA | NA |
| Sub Total 2 | 0 | NA | NA | NA | NA | NA | NA | NA | NA | NA |
| Total VOC's Analyzed | 0 | 23 | 94 | 16 | 52 | 0 | 3.8 | 0 | 6.5 | 55 |

Table E-1. Summary of Volatile Organic Compounds in Ground Water, W.G. Krummrich Plant, Monsanto Company, Sauget, Il. ***

| Well Number: | Trip Blank | Trip Blank | Trip Blank | Trip Blank | Trip Blank | Trip Blank | Trip Blank | Trip Blank | Trip Blank | Lab Blank |
|---|---|---|---|---|---|---|---|---|---|---|
| Date: | 6/84 | 9/84 | 9/84 | 9/84 | 11/84 | 2/85 | 5/85 | 11/85 | 2/86 | 11/83 |
| USEPA Priority Pollutant Volatile Organic Compounds concentrations are in ug/L | | | | | | | | | | |
| acrolein | NA | NA | NA | NA | <100 | <100 | <100 | <100 | NA | <1 |
| acrylonitrile | NA | NA | NA | NA | <100 | <100 | <100 | <100 | NA | <1 |
| benzene | <0.5 | 1 | 31 | 30 | <10 | <4.4 | <4.4 | <4.4 | NA | <1 |
| bis (chloromethyl) ether | <1.5 | <1.5 | <1.5 | <1.5 | <10 | <10 | <10 | <10 | NA | <1 |
| bromoform | <3.2 | <3.2 | <3.2 | <3.2 | <10 | <4.7 | <4.7 | <4.7 | NA | <1 |
| carbon tetrachloride | <1.5 | <1.5 | <1.5 | <1.5 | <10 | <2.8 | <2.8 | <2.8 | NA | <1 |
| chlorobenzene | 2 | <0.6 | <0.6 | <0.6 | <10 | <6 | <6 | <6 | NA | <1 |
| chlorodibromomethane | <2.0 | <2.0 | <2.0 | <2.0 | <10 | <3.1 | <3.1 | <3.1 | NA | <1 |
| chloroethane | <2.4 | 4 | <2.4 | <2.4 | <10 | <10 | <10 | <10 | NA | <1 |
| 2-chloroethylvinyl ether | <5.9 | <5.9 | <5.9 | <5.9 | <10 | <10 | <10 | <10 | NA | <1 |
| chloroform | <0.8 | 2 | <0.8 | <0.8 | <10 | <1.6 | <1.6 | <1.6 | NA | <1 |
| dichlorobromomethane | <1.1 | <1.1 | <1.1 | <1.1 | <10 | <2.2 | <2.2 | <2.2 | NA | <1 |
| dichlorodifluoromethane | NA | NA | NA | NA | <10 | <10 | <10 | <10 | NA | <1 |
| 1,1-dichloroethane | <0.8 | <0.8 | <0.8 | <0.8 | <10 | <4.7 | <4.7 | <4.7 | NA | <1 |
| 1,2-dichloroethane | <1.5 | <1.5 | <1.5 | <1.5 | <10 | <2.8 | <2.8 | <2.8 | NA | <1 |
| 1,1-dichloroethylene | <1.9 | 4 | 2 | 2 | <10 | <2.8 | <2.8 | <2.8 | NA | <1 |
| 1,2-dichloropropane | <1.5 | <1.5 | <1.5 | <1.5 | <10 | <6 | <6 | <6 | NA | <1 |
| cis-1,3-dichloropropylene | <1.5 | <1.5 | <1.5 | <1.5 | <10 | <5 | <5 | <5 | NA | <1 |
| trans-1,3-dichloropropylene | <1.5 | <1.5 | <1.5 | <1.5 | <10 | <10 | <10 | <10 | NA | <1 |
| ethylbenzene | <0.4 | <0.4 | <0.4 | <0.4 | <10 | <7.2 | <7.2 | <7.2 | NA | <1 |
| methyl bromide | <1.5 | 3 | <1.5 | <1.5 | <10 | <10 | <10 | <10 | NA | <1 |
| methyl chloride | <1.6 | 5 | <1.6 | <1.6 | <10 | <10 | <10 | <10 | NA | <1 |
| methylene chloride | 18 | 130 | 44 | 32 | <10 | 4 | 3.4 | <2.8 | NA | 34 |
| 1,1,2,2-tetrachloroethane | <1.4 | <1.4 | <1.4 | <1.4 | <10 | <6.9 | <6.9 | <6.9 | NA | <1 |
| tetrachloroethylene | <1.5 | <1.5 | <1.5 | <1.5 | <10 | <4.1 | <4.1 | <4.1 | NA | <1 |
| toluene | 3 | 1 | 1 | 1 | <10 | <6 | <6 | <6 | NA | <1 |
| 1,2-trans-dichloroethylene | <1.5 | 2 | <1.5 | <1.5 | <10 | <1.6 | <1.6 | <1.6 | NA | <1 |
| 1,1,1-trichloroethane | <1.2 | <1.2 | <1.2 | <1.2 | <10 | <3.8 | <3.8 | <3.8 | NA | <1 |
| 1,1,2-trichloroethane | <1.6 | <1.6 | <1.6 | <1.6 | <10 | <5 | <5 | <5 | NA | <1 |
| trichloroethylene | <1.3 | <1.3 | <1.3 | <1.3 | <10 | <1.9 | <1.9 | <1.9 | NA | <1 |
| trichlorofluoromethane | <1.2 | <1.2 | <1.2 | <1.2 | <10 | <10 | <10 | <10 | NA | <1 |
| vinyl chloride | <1.2 | 6 | <1.2 | <1.2 | <10 | <10 | <10 | <10 | NA | <1 |
| Sub Total 1 | 23 | 158 | 78 | 65 | 0 | 4 | 3.4 | 0 | NA | 34 |
| Miscellaneous Volatile Organic Compounds | | | | | | | | | | |
| methyl-iso-butyl ketone | NA | NA | NA | NA | NA | NA | NA | NA | NA | NA |
| methyl isoamyl ketone | NA | NA | NA | NA | NA | NA | NA | NA | NA | NA |
| m-xylene | NA | NA | NA | NA | NA | NA | NA | NA | NA | NA |
| o-xylene/p-xylene | NA | NA | NA | NA | NA | NA | NA | NA | NA | NA |
| Sub Total 2 | NA | NA | NA | NA | NA | NA | NA | NA | NA | NA |
| Total VOC's Analyzed | 23 | 158 | 78 | 65 | 0 | 4 | 3.4 | 0 | 0 | 34 |

Table E-1. Summary of Volatile Organic Compounds in Ground Water, W.G. Krummrich Plant, Monsanto Company, Sauget, Il. ***

| Well Number: | Lab Blank | Lab Blank | Lab Blank | Lab Blank | Lab Blank | Lab Blank | Lab Blank | Lab Blank | Lab Blank | Lab Blank |
|---|---|---|---|---|---|---|---|---|---|---|
| Date: | 11/83 | 5/84 | 5/84 | 9/84 | 9/84 | 9/84 | 9/84 | 9/84 | 9/84 | 9/84 |
| USEPA Priority Pollutant Volatile Organic Compounds concentrations are in ug/L | | | | | | | | | | |
| acrolein | <1 | <1 | <1 | NA | NA | NA | NA | NA | NA | NA |
| acrylonitrile | <1 | <1 | <1 | NA | NA | NA | NA | NA | NA | NA |
| benzene | <1 | .2 | <1 | <0.5 | 29 | 21 | 19 | <0.5 | <0.5 | <0.5 |
| bis (chloromethyl) ether | <1 | <1 | <1 | <1.5 | <1.5 | <1.5 | <1.5 | <1.5 | <1.5 | <1.5 |
| bromoform | <1 | <1 | <1 | <3.2 | <3.2 | <3.2 | <3.2 | <3.2 | <3.2 | <3.2 |
| carbon tetrachloride | <1 | <1 | <1 | <1.5 | <1.5 | <1.5 | <1.5 | <1.5 | <1.5 | <1.5 |
| chlorobenzene | <1 | <1 | <1 | <0.6 | <0.6 | 1 | 1 | <0.6 | <0.6 | 1 |
| chlorodibromomethane | <1 | <1 | <1 | <2.0 | <2.0 | <2.0 | <2.0 | <2.0 | <2.0 | <2.0 |
| chloroethane | <1 | <1 | <1 | <2.4 | <2.4 | <2.4 | <2.4 | <2.4 | <2.4 | <2.4 |
| 2-chloroethylvinyl ether | <1 | <1 | <1 | <5.9 | <5.9 | <5.9 | <5.9 | <5.9 | <5.9 | <5.9 |
| chloroform | 1 | <1 | <1 | <0.8 | <0.8 | <0.8 | <0.8 | <0.8 | <0.8 | <0.8 |
| dichlorobromomethane | <1 | <1 | <1 | <1.1 | <1.1 | <1.1 | <1.1 | <1.1 | <1.1 | <1.1 |
| dichlorodifluoromethane | <1 | <1 | <1 | NA | NA | NA | NA | NA | NA | NA |
| 1,1-dichloroethane | <1 | <1 | <1 | <0.8 | <0.8 | <0.8 | <0.8 | <0.8 | <0.8 | <0.8 |
| 1,2-dichloroethane | <1 | <1 | <1 | <1.5 | <1.5 | <1.5 | <1.5 | <1.5 | <1.5 | <1.5 |
| 1,1-dichloroethylene | <1 | <1 | <1 | <1.9 | 1 | 1 | 1 | <1.9 | <1.9 | <1.9 |
| 1,2-dichloropropane | <1 | <1 | <1 | <1.5 | <1.5 | <1.5 | <1.5 | <1.5 | <1.5 | <1.5 |
| cis-1,3-dichloropropylene | <1 | <1 | <1 | <1.5 | <1.5 | <1.5 | <1.5 | <1.5 | <1.5 | <1.5 |
| trans-1,3-dichloropropylene | <1 | <1 | <1 | <1.5 | <1.5 | <1.5 | <1.5 | <1.5 | <1.5 | <1.5 |
| ethylbenzene | <1 | <1 | <1 | <0.4 | <0.4 | <0.4 | <0.4 | <0.4 | <0.4 | <0.4 |
| methyl bromide | <1 | <1 | <1 | <1.5 | <1.5 | <1.5 | <1.5 | <1.5 | <1.5 | <1.5 |
| methyl chloride | <1 | <1 | <1 | <1.6 | <1.6 | <1.6 | <1.6 | <1.6 | <1.6 | <1.6 |
| methylene chloride | 26 | 27 | 14 | <1.1 | 33 | 42 | 35 | 2 | 3 | 15 |
| 1,1,2,2-tetrachloroethane | <1 | <1 | <1 | <1.4 | <1.4 | <1.4 | <1.4 | <1.4 | <1.4 | <1.4 |
| tetrachloroethylene | <1 | <1 | <1 | <1.5 | <1.5 | <1.5 | <1.5 | <1.5 | <1.5 | <1.5 |
| toluene | <1 | 2 | 2 | <0.4 | 1 | 1 | 1 | <0.4 | <0.4 | <0.4 |
| 1,2-trans-dichloroethylene | <1 | <1 | <1 | <1.5 | <1.5 | <1.5 | <1.5 | <1.5 | <1.5 | <1.5 |
| 1,1,1-trichloroethane | <1 | 5 | <1 | <1.2 | <1.2 | <1.2 | <1.2 | <1.2 | <1.2 | <1.2 |
| 1,1,2-trichloroethane | <1 | <1 | <1 | <1.6 | <1.6 | <1.6 | <1.6 | <1.6 | <1.6 | <1.6 |
| trichloroethylene | <1 | 2 | 1 | <1.3 | <1.3 | <1.3 | <1.3 | <1.3 | <1.3 | <1.3 |
| trichlorofluoromethane | <1 | <1 | <1 | <1.2 | <1.2 | <1.2 | <1.2 | <1.2 | <1.2 | <1.2 |
| vinyl chloride | <1 | <1 | <1 | <1.2 | <1.2 | <1.2 | <1.2 | <1.2 | <1.2 | <1.2 |
| Sub Total 1 | 27 | 38 | 17 | 0 | 64 | 66 | 57 | 2 | 3 | 16 |
| Miscellaneous Volatile Organic Compounds | | | | | | | | | | |
| methyl-iso-butyl ketone | NA | NA | NA | NA | NA | NA | NA | NA | NA | NA |
| methyl isoamyl ketone | NA | NA | NA | NA | NA | NA | NA | NA | NA | NA |
| m-xylene | NA | NA | NA | NA | NA | NA | NA | NA | NA | NA |
| o-xylene/p-xylene | NA | NA | NA | NA | NA | NA | NA | NA | NA | NA |
| Sub Total 2 | NA | NA | NA | NA | NA | NA | NA | NA | NA | NA |
| Total VOC's Analyzed | 27 | 38 | 17 | 0 | 64 | 66 | 57 | 2 | 3 | 16 |

Table E-1. Summary of Volatile Organic Compounds in Ground Water, W.G. Krummrich Plant, Monsanto Company, Sauget, Il. ***

| Well Number: | Lab Blank | Lab Blank | Lab Blank | Lab Blank | Lab Blank | Lab Blank |
|---|---|---|---|---|---|---|
| Date: | 9/84 | 9/84 | 9/84 | 9/84 | 9/84 | 9/84 |
| USEPA Priority Pollutant Volatile Organic Compounds concentrations are in ug/L | | | | | | |
| acrolein | NA | NA | NA | NA | NA | NA |
| acrylonitrile | NA | NA | NA | NA | NA | NA |
| benzene | 4 | 3 | 8 | <0.5 | <0.5 | 34 |
| bis (chloromethyl) ether | <1.5 | <1.5 | <1.5 | <1.5 | <1.5 | <1.5 |
| bromoform | <3.2 | <3.2 | <3.2 | <3.2 | <3.2 | <3.2 |
| carbon tetrachloride | <1.5 | <1.5 | <1.5 | <1.5 | <1.5 | <1.5 |
| chlorobenzene | <0.6 | <0.6 | <0.6 | 53 | <0.6 | <0.6 |
| chlorodibromomethane | <2.0 | <2.0 | <2.0 | <2.0 | <2.0 | <2.0 |
| chloroethane | <2.4 | <2.4 | <2.4 | <2.4 | <2.4 | <2.4 |
| 2-chloroethylvinyl ether | <5.9 | <5.9 | <5.9 | <5.9 | <5.9 | <5.9 |
| chloroform | <0.8 | <0.8 | <0.8 | <0.8 | <0.8 | <0.8 |
| dichlorobromomethane | <1.1 | <1.1 | <1.1 | <1.1 | <1.1 | <1.1 |
| dichlorodifluoromethane | NA | NA | NA | NA | NA | NA |
| 1,1-dichloroethane | <0.8 | <0.8 | <0.8 | <0.8 | <0.8 | <0.8 |
| 1,2-dichloroethane | <1.5 | <1.5 | <1.5 | <1.5 | <1.5 | <1.5 |
| 1,1-dichloroethylene | <1.9 | <1.9 | <1.9 | <1.9 | <1.9 | 2 |
| 1,2-dichloropropane | 15 | <1.5 | <1.5 | <1.5 | <1.5 | <1.5 |
| cis-1,3-dichloropropylene | <1.5 | <1.5 | <1.5 | <1.5 | <1.5 | <1.5 |
| trans-1,3-dichloropropylene | <1.5 | <1.5 | <1.5 | <1.5 | <1.5 | <1.5 |
| ethylbenzene | <0.4 | <0.4 | <0.4 | <0.4 | <0.4 | <0.4 |
| methyl bromide | <1.5 | <1.5 | <1.5 | <1.5 | <1.5 | <1.5 |
| methyl chloride | <1.6 | <1.6 | <1.6 | <1.6 | <1.6 | <1.6 |
| methylene chloride | 15 | <1.1 | 24 | 39 | 6 | 50 |
| 1,1,2,2-tetrachloroethane | <1.4 | <1.4 | <1.4 | <1.4 | <1.4 | <1.4 |
| tetrachloroethylene | <1.5 | <1.5 | <1.5 | <1.5 | <1.5 | <1.5 |
| toluene | 1 | 1 | 1 | 1 | <0.4 | 1 |
| 1,2-trans-dichloroethylene | <1.5 | <1.5 | <1.5 | <1.5 | <1.5 | <1.5 |
| 1,1,1-trichloroethane | <1.2 | <1.2 | <1.2 | <1.2 | <1.2 | <1.2 |
| 1,1,2-trichloroethane | <1.6 | <1.6 | <1.6 | <1.6 | <1.6 | <1.6 |
| trichloroethylene | <1.3 | <1.3 | 1 | <1.3 | <1.3 | <1.3 |
| trichlorofluoromethane | <1.2 | <1.2 | <1.2 | <1.2 | <1.2 | <1.2 |
| vinyl chloride | <1.2 | <1.2 | <1.2 | <1.2 | <1.2 | <1.2 |
| Sub Total 1 | 35 | 4 | 34 | 93 | 6 | 87 |
| Miscellaneous Volatile Organic Compounds | | | | | | |
| methyl-iso-butyl ketone | NA | NA | NA | NA | NA | NA |
| methyl isoamyl ketone | NA | NA | NA | NA | NA | NA |
| m-xylene | NA | NA | NA | NA | NA | NA |
| o-xylene/p-xylene | NA | NA | NA | NA | NA | NA |
| Sub Total 2 | NA | NA | NA | NA | NA | NA |
| Total VOC's Analyzed | 35 | 4 | 34 | 93 | 6 | 87 |

Table E-1. Summary of Volatile Organic Compounds in Ground Water, W.G. Krummrich Plant, Monsanto Company, Sauget, Il. ***

NA - Not analyzed.

* - Replicate Analyses

** - Prior to analysis, this sample was held by Envirodyne Engineers, Inc. longer than the maximum allowable USEPA holding time.

*** - Envirodyne Engineers, Inc. (St. Louis, MO.) provided the laboratory services for the sampling rounds conducted between November, 1983 and September, 1984, with the exception of the January through May, 1984 sampling rounds conducted in the W.G. Krummrich Landfill. These wells are designated as the "B" series (i.e. B-22A) and the "P" series (i.e. P-7) and D'Appolonia (currently IT Corporation), Pittsburgh, Pa., provided the chemical results. ETC (Edison, NJ) performed the analyses for the November 1984 through February 1986 sampling programs.

\# - Replicate analysis was performed by ETC.

a) - Envirodyne Engineers, Inc. reported 10 ug/L and 2 ug/L for wells GM-16A and GM-16B, respectively. Their results did not differentiate between the xylene compounds.

b) - Envirodyne Engineers, Inc. reported 4 ug/L, 18 ug/L and 10 ug/L for wells GM-25B, GM-27B and GM-27C, respectively. Their results did not differentiate between the xylene compounds.

c) - Envirodyne Engineers, Inc. reported 66 ug/L, greater than 119 ug/L and 1 ug/L for wells GM-28B, GM-28C and GM-30, respectively. Their results did not differentiate between the xylene compounds.

d) - Envirodyne Engineers, Inc. reported 1,630 ug/L and 12 ug/L for wells B-30B and B-31C, respectively. Their results did not differentiate between the xylene compounds.

e) - Envirodyne Engineers, Inc. reported 8 ug/L for well GM-23. The result did not differentiate between the xylene compounds.

< - Indicates that the compound was not detected at the detection limit which is the value shown next to the symbol.

Table E-2. Summary of Acid Extractable Compounds in Ground Water, Monsanto Company, W.G. Krummrich Plant, Sauget, Il. ***

| Well Number: | GM-1 | GM-1 | GM-2 | GM-2 | GM-3 | GM-3 | GM-3 | GM-4A | GM-4A | GM-4B |
|---|---|---|---|---|---|---|---|---|---|---|
| Date: | 11/83 | 5/84 | 11/83 | 5/84 | 11/83 | 5/84 | 5/84* | 11/83 | 5/84 | 9/84 |
| USEPA Priority Pollutant Acid Extractable Organic Compounds concentrations are in ug/L | | | | | | | | | | |
| 2-chlorophenol | <1 | <1 | <1 | <1 | <1 | <1 | <1 | <1 | <1 | 31 |
| 2,4-dichlorophenol | <1 | <1 | <1 | <1 | <1 | <1 | <1 | <1 | <1 | <8 |
| 2,4-dimethylphenol | <1 | <1 | <1 | <1 | <1 | <1 | <1 | <1 | <1 | <10 |
| 4,6-dinitro-o-cresol | <1 | <1 | <1 | <1 | <1 | <1 | <1 | <1 | <1 | <38 |
| 2,4-dinitrophenol | <1 | <1 | <1 | <1 | <1 | <1 | <1 | <1 | <1 | <52 |
| 2-nitrophenol | <1 | <1 | <1 | <1 | <1 | <1 | <1 | <1 | <1 | <11 |
| 4-nitrophenol | <1 | <1 | <1 | <1 | <1 | <1 | <1 | <1 | <1 | <35 |
| p-chloro-m-cresol | <1 | <1 | <1 | <1 | <1 | <1 | <1 | <1 | <1 | <8 |
| pentachlorophenol | <1 | <1 | <1 | <1 | <1 | <1 | <1 | <1 | <1 | 7 |
| phenol | <1 | <1 | <1 | <1 | <1 | <1 | <1 | <1 | <1 | 9 |
| 2,4,6-trichlorophenol | <1 | <1 | <1 | <1 | <1 | <1 | <1 | <1 | <1 | <12 |
| Sub Total 1 | 0 | 0 | 0 | 0 | 0 | 0 | 0 | 0 | 0 | 47 |
| Miscellaneous Acid Extractable Organic Compounds | | | | | | | | | | |
| 4-chlorophenol | NA | NA | NA | NA | NA | NA | NA | NA | NA | <10 |
| Sub Total 2 | NA | NA | NA | NA | NA | NA | NA | NA | NA | 0 |
| Total Acid Compounds Analyzed | 0 | 0 | 0 | 0 | 0 | 0 | 0 | 0 | 0 | 47 |

Table E-2. Summary of Acid Extractable Compounds in Ground Water, Monsanto Company, W.G. Krummrich Plant, Sauget, Il. ***

| Well Number: | GM-4B | GM-4B | GM-4B | GM-4B | GM-4B | GM-4C | GM-4C | GM-5 | GM-5 | GM-6A |
|---|---|---|---|---|---|---|---|---|---|---|
| Date: | 11/84 | 11/84* | 2/85 | 11/85 | 11/85* | 2/85 | 5/85 | 11/83 | 5/84 | 11/83 |
| USEPA Priority Pollutant Acid Extractable Organic Compounds concentrations are in ug/L | | | | | | | | | | |
| 2-chlorophenol | 60 | 51 | 14.8 | 19.6 | 24 | <3.3 | 67 | <1 | <1 | <1 |
| 2,4-dichlorophenol | <25 | <25 | <2.7 | <2.7 | <2.7 | 4.7 | 16.7 | <1 | <1 | <1 |
| 2,4-dimethylphenol | <25 | <25 | <2.7 | <2.7 | <2.7 | <2.7 | <2.7 | <1 | <1 | <1 |
| 4,6-dinitro-o-cresol | <250 | <250 | <24 | <24 | <24 | <24 | <24 | <1 | <1 | <1 |
| 2,4-dinitrophenol | <250 | <250 | <42 | <42 | <42 | <42 | <42 | <1 | <1 | <1 |
| 2-nitrophenol | <25 | <25 | <3.6 | <3.6 | <3.6 | <3.6 | <3.6 | <1 | <1 | <1 |
| 4-nitrophenol | <25 | <25 | <2.4 | <2.4 | <2.4 | <2.4 | <2.4 | <1 | <1 | <1 |
| p-chloro-m-cresol | <25 | <25 | <3 | <3 | <3 | <3 | <3 | <1 | <1 | <1 |
| pentachlorophenol | <25 | <25 | <3.6 | <3.6 | <3.6 | <3.6 | <3.6 | <1 | <1 | <1 |
| phenol | <25 | <25 | 6 | <1.5 | <1.5 | <1.5 | <1.5 | <1 | <1 | <1 |
| 2,4,6-trichlorophenol | <25 | <25 | <2.7 | <2.7 | <2.7 | <2.7 | <2.7 | <1 | <1 | <1 |
| Sub Total 1 | 60 | 51 | 20.8 | 19.6 | 24 | 4.7 | 83.7 | 0 | 0 | 0 |
| Miscellaneous Acid Extractable Organic Compounds | | | | | | | | | | |
| 4-chlorophenol | 77 | 40 | 22 | <10 | 44.6 | <3.3 | 115 | NA | NA | NA |
| Sub Total 2 | 77 | 40 | 22 | 0 | 44.6 | 0 | 115 | NA | NA | NA |
| Total Acid Compounds Analyzed | 137 | 91 | 42.8 | 19.6 | 68.6 | 4.7 | 198.7 | 0 | 0 | 0 |

Table E-2. Summary of Acid Extractable Compounds in Ground Water, Monsanto Company, W.G. Krummrich Plant, Sauget, Il. ***

| Well Number: | GM-6A | GM-6A | GM-6B | GM-6B | GM-6B | GM-7 | GM-7 | GM-8 | GM-8 | GM-8 |
|---|---|---|---|---|---|---|---|---|---|---|
| Date: | 5/84 | 11/84 | 9/84** | 11/84 | 11/85 | 11/83 | 5/84 | 11/83 | 5/84 | 11/84 |
| USEPA Priority Pollutant Acid Extractable Organic Compounds concentrations are in ug/L | | | | | | | | | | |
| 2-chlorophenol | <1 | <25 | <6 | <25 | <3.3 | <1 | <1 | <1 | <1 | <25 |
| 2,4-dichlorophenol | <1 | <25 | <8 | <25 | 4.6 | <1 | <1 | <1 | <1 | <25 |
| 2,4-dimethylphenol | <1 | <25 | <10 | <25 | <2.7 | <1 | <1 | <1 | <1 | <25 |
| 4,6-dinitro-o-cresol | <1 | <250 | <38 | <250 | <24 | <1 | <1 | <1 | <1 | <250 |
| 2,4-dinitrophenol | <1 | <250 | <52 | <250 | <42 | <1 | <1 | <1 | <1 | <250 |
| 2-nitrophenol | <1 | <25 | <11 | <25 | <3.6 | <1 | <1 | <1 | <1 | <25 |
| 4-nitrophenol | <1 | <25 | <35 | <25 | <2.4 | <1 | <1 | <1 | <1 | <25 |
| p-chloro-m-cresol | <1 | <25 | <8 | <25 | <3 | <1 | <1 | <1 | <1 | <25 |
| pentachlorophenol | <1 | <25 | <34 | <25 | <3.6 | <1 | <1 | <1 | <1 | <25 |
| phenol | <1 | <25 | <4 | <25 | <1.5 | <1 | <1 | <1 | <1 | <25 |
| 2,4,6-trichlorophenol | <1 | <25 | <12 | <25 | <2.7 | <1 | <1 | <1 | <1 | <25 |
| Sub Total 1 | 0 | 0 | 0 | 0 | 4.6 | 0 | 0 | 0 | 0 | 0 |
| Miscellaneous Acid Extractable Organic Compounds | | | | | | | | | | |
| 4-chlorophenol | NA | <25 | <10 | <25 | <10 | NA | NA | NA | NA | <25 |
| Sub Total 2 | NA | 0 | 0 | 0 | 0 | NA | NA | NA | NA | 0 |
| Total Acid Compounds Analyzed | 0 | 0 | 0 | 0 | 4.6 | 0 | 0 | 0 | 0 | 0 |

Table E-2. Summary of Acid Extractable Compounds in Ground Water, Monsanto Company, W.G. Krummrich Plant, Sauget, IL. ***

| Well Number: | GM-8 | GM-8 | GM-9A | GM-9A | GM-9B | GM-9B | GM-9B | GM-9C | GM-9C | GM-9C |
|---|---|---|---|---|---|---|---|---|---|---|
| Date: | 2/85 | 11/85 | 11/83 | 5/84 | 9/84** | 5/85 | 11/85 | 9/84** | 5/85 | 11/85 |
| USEPA Priority Pollutant Acid Extractable Organic Compounds concentrations are in ug/L | | | | | | | | | | |
| 2-chlorophenol | <3.7 | <3.4 | 55 | 58 | <6 | <3.3 | 3.7 | 1 | <3.3 | <3.6 |
| 2,4-dichlorophenol | <3 | <2.8 | 21 | 7 | <8 | <2.7 | <2.7 | <8 | <2.7 | <2.9 |
| 2,4-dimethylphenol | <3 | <2.8 | <1 | <1 | <10 | <2.7 | <2.7 | <10 | <2.7 | <2.9 |
| 4,6-dinitro-o-cresol | <27 | <25 | <1 | <1 | <38 | <24 | <24 | <38 | <24 | <26 |
| 2,4-dinitrophenol | <47.2 | <43 | <1 | <1 | <52 | <42 | <42 | <52 | <42 | <45 |
| 2-nitrophenol | <4 | <3.7 | <1 | <1 | <11 | <3.6 | <3.6 | <11 | <3.6 | <3.9 |
| 4-nitrophenol | <2.2 | <2.5 | <1 | <1 | <35 | <2.4 | <2.4 | <35 | <2.4 | <2.6 |
| p-chloro-m-cresol | <3.4 | <3.1 | <1 | <1 | <8 | <3 | <3 | <8 | <3 | <3.2 |
| pentachlorophenol | <4 | <3.7 | 58 | 12 | 2 | <3.6 | <3.6 | 4 | <3.6 | <3.9 |
| phenol | <1.7 | <1.5 | <1 | <1 | <4 | <1.5 | <1.5 | <4 | <1.5 | <1.6 |
| 2,4,6-trichlorophenol | <3 | <2.8 | <1 | <1 | <12 | <2.7 | <2.7 | <12 | <2.7 | <2.9 |
| Sub Total 1 | 0 | 0 | 134 | 77 | 2 | 0 | 3.7 | 5 | 0 | 0 |
| Miscellaneous Acid Extractable Organic Compounds | | | | | | | | | | |
| 4-chlorophenol | <3.7 | <10 | NA | NA | <10 | <25 | <25 | <10 | <10 | 11 |
| Sub Total 2 | 0 | 0 | NA | NA | 0 | 0 | 0 | 0 | 0 | 11 |
| Total Acid Compounds Analyzed | 0 | 0 | 134 | 77 | 2 | 0 | 3.7 | 5 | 0 | 11 |

Table E-2. Summary of Acid Extractable Compounds in Ground Water, Monsanto Company, W.G. Krummrich Plant, Sauget, Il. ***

| Well Number: | GM-10A | GM-10A | GM-10B | GM-10B | GM-10C | GM-10C | GM-11 | GM-11 | GM-12A | GM-12A |
|---|---|---|---|---|---|---|---|---|---|---|
| Date: | 11/83 | 5/84 | 2/85 | 5/85 | 2/85 | 5/85 | 11/83 | 5/84 | 11/83 | 11/83* |
| USEPA Priority Pollutant Acid Extractable Organic Compounds concentrations are in ug/L | | | | | | | | | | |
| 2-chlorophenol | <1 | <1 | <3.6 | 29.5 | <3.7 | <3.3 | <1 | <1 | 182 | 160 |
| 2,4-dichlorophenol | <1 | <1 | 8.9 | 154.2 | <3 | <2.7 | <1 | <1 | <1 | <1 |
| 2,4-dimethylphenol | <1 | <1 | <2.9 | <2.7 | <3 | <2.7 | <1 | <1 | <1 | <1 |
| 4,6-dinitro-o-cresol | <1 | <1 | <26 | <24 | <26.7 | <24 | <1 | <1 | <1 | <1 |
| 2,4-dinitrophenol | <1 | <1 | <45.7 | <42 | <46.7 | <42 | <1 | <1 | <1 | <1 |
| 2-nitrophenol | <1 | <1 | <3.9 | <3.6 | <4 | <3.6 | <1 | <1 | <1 | <1 |
| 4-nitrophenol | <1 | <1 | <2.6 | <2.4 | <2.7 | <2.4 | <1 | <1 | <1 | <1 |
| p-chloro-m-cresol | <1 | <1 | <3.3 | <3 | <3.3 | <3 | <1 | <1 | <1 | <1 |
| pentachlorophenol | <1 | <1 | <3.9 | <3.6 | <4 | <3.6 | <1 | <1 | 147 | 115 |
| phenol | <1 | <1 | <1.6 | 18.9 | <1.7 | <1.5 | <1 | <1 | 40 | 38 |
| 2,4,6-trichlorophenol | <1 | <1 | <2.9 | <2.7 | <3 | <2.7 | <1 | <1 | <1 | <1 |
| Sub Total 1 | 0 | 0 | 8.9 | 202.6 | 0 | 0 | 0 | 0 | 369 | 313 |
| Miscellaneous Acid Extractable Organic Compounds | | | | | | | | | | |
| 4-chlorophenol | NA | NA | 18.7 | 26 | <3.7 | <25 | NA | NA | NA | NA |
| Sub Total 2 | NA | NA | 18.7 | 26 | 0 | 0 | NA | NA | NA | NA |
| Total Acid Compounds Analyzed | 0 | 0 | 27.6 | 228.6 | 0 | 0 | 0 | 0 | 369 | 313 |

Table E-2. Summary of Acid Extractable Compounds in Ground Water, Monsanto Company, W.G. Krummrich Plant, Sauget, Il. ***

| Well Number: | GM-12A | GM-12A | GM-12A | GM-12A | GM-12A | GM-12A | GM-12A | GM-12A | GM-12A | GM-12A |
|---|---|---|---|---|---|---|---|---|---|---|
| Date: | 5/84 | 5/84* | 11/84 | 11/84* | 2/85 | 2/85* | 5/85 | 5/85* | 11/85 | 11/85* |
| USEPA Priority Pollutant Acid Extractable Organic Compounds concentrations are in ug/L | | | | | | | | | | |
| 2-chlorophenol | 29 | 31 | 34 | <25 | 30.8 | 30.3 | 19 | 17.3 | 17 | 20.9 |
| 2,4-dichlorophenol | <1 | <1 | <25 | <25 | <2.7 | <2.7 | <2.7 | <2.7 | <2.8 | <2.8 |
| 2,4-dimethylphenol | <1 | <1 | <25 | <25 | <2.7 | <2.7 | <2.7 | <2.7 | <2.8 | <2.8 |
| 4,6-dinitro-o-cresol | <1 | <1 | <250 | <250 | <24 | <24 | <24 | <24 | <25 | <25 |
| 2,4-dinitrophenol | <1 | <1 | <250 | <250 | <42 | <42 | <42 | <42 | <44 | <44 |
| 2-nitrophenol | <1 | <1 | <25 | <25 | <3.6 | <3.6 | <3.6 | <3.6 | <3.8 | <3.8 |
| 4-nitrophenol | <1 | <1 | <25 | <25 | <2.4 | <2.4 | <2.4 | <2.4 | <2.5 | <2.5 |
| p-chloro-m-cresol | <1 | <1 | <25 | <25 | <3 | <3 | <3 | <3 | <3.2 | <3.2 |
| pentachlorophenol | <1 | <1 | <25 | <25 | <3.6 | <3.6 | <3.6 | <3.6 | <3.8 | <3.8 |
| phenol | 18 | 15 | 43 | 27 | 90.4 | 93.6 | 54 | 46 | 15.9 | 19.9 |
| 2,4,6-trichlorophenol | <1 | <1 | <25 | <25 | <2.7 | <2.7 | <2.7 | <2.7 | <2.8 | <2.8 |
| Sub Total 1 | 47 | 46 | 77 | 27 | 121.2 | 123.9 | 73 | 63.3 | 32.9 | 40.8 |
| Miscellaneous Acid Extractable Organic Compounds | | | | | | | | | | |
| 4-chlorophenol | NA | NA | <25 | <25 | 6 | 7 | <10 | <10 | <11 | <11 |
| Sub Total 2 | NA | NA | 0 | 0 | 6 | 7 | 0 | 0 | 0 | 0 |
| Total Acid Compounds Analyzed | 47 | 46 | 77 | 27 | 127.2 | 130.9 | 73 | 63.3 | 32.9 | 40.8 |

Table E-2. Summary of Acid Extractable Compounds in Ground Water, Monsanto Company, W.G. Krummrich Plant, Sauget, Il. ***

| Well Number: | GM-12A | GM-12A | GM-12B | GM-12B | GM-12B | GM-12C | GM-12C | GM-12C | GM-12C | GM-13 |
|---|---|---|---|---|---|---|---|---|---|---|
| Date: | 2/86 | 2/86* | 9/84** | 11/84 | 11/85 | 2/85 | 2/85* | 5/85 | 5/85* | 9/84** |
| USEPA Priority Pollutant Acid Extractable Organic Compounds concentrations are in ug/L | | | | | | | | | | |
| 2-chlorophenol | 42 | 24 | 2 | <25 | <3.5 | 108 | 114 | <3.3 | <3.3 | <6 |
| 2,4-dichlorophenol | <2.9 | <2.7 | 1 | <25 | <2.8 | <2.7 | <2.7 | <2.7 | <2.7 | <8 |
| 2,4-dimethylphenol | <2.9 | <2.7 | <10 | <25 | <2.8 | <2.7 | <2.7 | <2.7 | <2.7 | <10 |
| 4,6-dinitro-o-cresol | <26 | <24 | <38 | <250 | <25 | <24 | <24 | <24 | <24 | <38 |
| 2,4-dinitrophenol | <45 | <42 | <52 | <250 | <44 | <42 | <42 | <42 | <42 | <52 |
| 2-nitrophenol | <3.8 | <3.6 | <11 | <25 | <3.8 | 33.4 | 55 | <3.6 | <3.6 | <11 |
| 4-nitrophenol | <2.6 | <2.4 | <35 | <25 | <2.5 | 33.3 | 372 | <2.4 | <2.4 | <35 |
| p-chloro-m-cresol | <3.2 | <3 | <8 | <25 | <3.2 | <3 | <3 | <3 | <3 | <8 |
| pentachlorophenol | <3.8 | <3.6 | 4 | <25 | <3.8 | <3.6 | <3.6 | <3.6 | <3.6 | 25 |
| phenol | 28.6 | 16.3 | 7 | 33 | 17.3 | <1.5 | 2.9 | <1.5 | <1.5 | 230 |
| 2,4,6-trichlorophenol | <2.9 | <2.7 | <12 | <25 | <2.8 | <2.7 | <2.7 | <2.7 | <2.7 | <12 |
| Sub Total 1 | 70.6 | 40.3 | 14 | 33 | 17.3 | 174.7 | 543.9 | 0 | 0 | 255 |
| Miscellaneous Acid Extractable Organic Compounds | | | | | | | | | | |
| 4-chlorophenol | <11 | <10 | <10 | <25 | <11 | <3.3 | <3.3 | <10 | <10 | <10 |
| Sub Total 2 | 0 | 0 | 0 | 0 | 0 | 0 | 0 | 0 | 0 | 0 |
| Total Acid Compounds Analyzed | 70.6 | 40.3 | 14 | 33 | 17.3 | 174.7 | 543.9 | 0 | 0 | 255 |

Table E-2. Summary of Acid Extractable Compounds in Ground Water, Monsanto Company, W.G. Krummrich Plant, Sauget, Il. ***

| Well Number: | GM-13 | GM-13 | GM-14 | GM-15 | GM-16A | GM-16A | GM-16A | GM-16B | GM-16B | GM-16B |
|---|---|---|---|---|---|---|---|---|---|---|
| Date: | 11/85 | 2/86 | 9/84** | 9/84** | 9/84** | 5/85 | 11/85 | 9/84** | 5/85 | 11/85 |
| USEPA Priority Pollutant Acid Extractable Organic Compounds concentrations are in ug/L | | | | | | | | | | |
| 2-chlorophenol | 134 | 75.3 | NA | <6 | <6 | <3.3 | <3.5 | <6 | <3.3 | <6.6 |
| 2,4-dichlorophenol | 141 | 18 | NA | <8 | <8 | <2.7 | <2.8 | <8 | <2.7 | <5.4 |
| 2,4-dimethylphenol | 210 | 210 | NA | <10 | <10 | <3 | <2.8 | <10 | <2.7 | <5.4 |
| 4,6-dinitro-o-cresol | <26 | <25 | NA | <38 | <38 | <24 | <25 | <38 | <24 | <48 |
| 2,4-dinitrophenol | <46 | <44 | NA | <52 | <52 | <42 | <44 | <52 | <42 | <84 |
| 2-nitrophenol | <4 | <3.8 | NA | <11 | <11 | <3.6 | <3.8 | <11 | <3.6 | <7.2 |
| 4-nitrophenol | 53 | <2.5 | NA | <35 | <35 | <2.4 | <2.5 | <35 | <2.4 | <4.8 |
| p-chloro-m-cresol | <3.3 | 7.1 | NA | <8 | <8 | <3 | <3.2 | <8 | <3 | <6 |
| pentachlorophenol | 31 | 3.9 | NA | 1 | <1 | <3.6 | <3.8 | 6 | <3.6 | <7.2 |
| phenol | 1,950 | 319 | NA | <4 | <4 | <1.5 | <1.6 | <4 | <1.5 | <3 |
| 2,4,6-trichlorophenol | 32.3 | 3.7 | NA | <12 | <12 | <2.7 | <2.8 | <12 | <2.7 | <5.4 |
| Sub Total 1 | 2551.3 | 637 | NA | 1 | 0 | 0 | 0 | 6 | 0 | 0 |
| Miscellaneous Acid Extractable Organic Compounds | | | | | | | | | | |
| 4-chlorophenol | 619 | 150 | NA | <10 | <10 | <10 | <11 | <10 | <10 | <20 |
| Sub Total 2 | 619 | 150 | NA | 0 | 0 | 0 | 0 | 0 | 0 | 0 |
| Total Acid Compounds Analyzed | 3170.3 | 787 | NA | 1 | 0 | 0 | 0 | 6 | 0 | 0 |

Table E-2. Summary of Acid Extractable Compounds in Ground Water, Monsanto Company, W.G. Krummrich Plant, Sauget, Il. ***

| Well Number: | GM-17A | GM-17A | GM-17A | GM-17B | GM-17B | GM-17B | GM-17C | GM-17C | GM-17C | GM-18A |
|---|---|---|---|---|---|---|---|---|---|---|
| Date: | 9/84 | 11/84 | 11/85 | 9/84** | 11/84 | 11/85 | 9/84** | 11/84 | 11/85 | 9/84** |
| USEPA Priority Pollutant Acid Extractable Organic Compounds concentrations are in ug/L | | | | | | | | | | |
| 2-chlorophenol | 38 | 27 | <3.3 | <6 | <25 | 31.6 | 37 | 86 | 15 | <6 |
| 2,4-dichlorophenol | <8 | <25 | <2.7 | <8 | <25 | <5.4 | <8 | <25 | <2.7 | <8 |
| 2,4-dimethylphenol | <10 | <25 | <2.7 | <10 | <25 | <5.4 | <10 | <25 | <2.7 | <10 |
| 4,6-dinitro-o-cresol | <38 | <250 | <24 | <38 | <250 | <48 | <38 | <250 | <24 | <38 |
| 2,4-dinitrophenol | <52 | <250 | <42 | <52 | <250 | <84 | <52 | <250 | <42 | <52 |
| 2-nitrophenol | <11 | <25 | <3.6 | <11 | <25 | <7.2 | <11 | <25 | <3.6 | <11 |
| 4-nitrophenol | 184 | <25 | <2.4 | <35 | <25 | <4.8 | <35 | <25 | <2.4 | <35 |
| p-chloro-m-cresol | <8 | <25 | <3 | <8 | <25 | <6 | <8 | <25 | <3 | <8 |
| pentachlorophenol | <34 | <25 | <3.6 | 2 | <25 | <7.2 | 2 | <25 | <3.6 | <34 |
| phenol | 472 | 43 | 3.3 | 131 | 208 | 234 | 7 | 38 | <1.5 | <4 |
| 2,4,6-trichlorophenol | <12 | <25 | <2.7 | <12 | <25 | <5.4 | <12 | <25 | <2.7 | <12 |
| Sub Total 1 | 694 | 70 | 3.3 | 133 | 208 | 265.6 | 46 | 124 | 15 | 0 |
| Miscellaneous Acid Extractable Organic Compounds | | | | | | | | | | |
| 4-chlorophenol | <10 | <25 | <10 | <10 | 53 | <20 | <10 | 78 | <10 | <10 |
| Sub Total 2 | 0 | 0 | 0 | 0 | 53 | 0 | 0 | 78 | 0 | 0 |
| Total Acid Compounds Analyzed | 694 | 70 | 3.3 | 133 | 261 | 265.6 | 46 | 202 | 15 | 0 |

Table E-2. Summary of Acid Extractable Compounds in Ground Water, Monsanto Company, W.G. Krummrich Plant, Sauget, Il. ***

| Well Number: | GM-18A | GM-18A | GM-18B | GM-18B | GM-18B | GM-25A | GM-25A | GM-25B | GM-25B | GM-25B |
|---|---|---|---|---|---|---|---|---|---|---|
| Date: | 5/85 | 11/85 | 9/84** | 5/85 | 11/85 | 9/84 | 11/84 | 9/84 | 11/84 | 11/85 |
| USEPA Priority Pollutant Acid Extractable Organic Compounds concentrations are in ug/L | | | | | | | | | | |
| 2-chlorophenol | <3.3 | <3.4 | <6 | <3.3 | 7.44 | <6 | <25 | <6 | <25 | <6.5 |
| 2,4-dichlorophenol | <2.7 | <2.8 | <8 | <2.7 | <5.4 | <8 | <25 | <8 | <25 | <5.3 |
| 2,4-dimethylphenol | <2.7 | <2.8 | <10 | <3.0 | <5.4 | <10 | <25 | <10 | <25 | <5.3 |
| 4,6-dinitro-o-cresol | <24 | <25 | <38 | <24 | <48 | <38 | <250 | <38 | <250 | <47 |
| 2,4-dinitrophenol | <42 | <44 | <52 | <42 | <84 | <52 | <250 | <52 | <250 | <82 |
| 2-nitrophenol | <3.6 | <3.8 | <11 | <3.6 | <7.2 | <11 | <25 | <11 | <25 | <7.1 |
| 4-nitrophenol | <2.4 | <2.5 | <35 | <2.4 | <4.8 | <35 | <25 | <35 | <25 | <4.7 |
| p-chloro-m-cresol | <3 | <3.1 | <8 | <3 | <6 | <8 | <25 | <8 | <25 | <5.9 |
| pentachlorophenol | <3.6 | <3.8 | <34 | <3.6 | <7.2 | <34 | <25 | <34 | <25 | <7.1 |
| phenol | <1.5 | <1.6 | <4 | <1.5 | <3 | <4 | <25 | 2 | <25 | <2.9 |
| 2,4,6-trichlorophenol | <2.7 | <2.8 | <12 | <2.7 | <5.4 | <12 | <25 | <12 | <25 | <5.3 |
| Sub Total 1 | 0 | 0 | 0 | 0 | 7.44 | 0 | 0 | 2 | 0 | 0 |
| Miscellaneous Acid Extractable Organic Compounds | | | | | | | | | | |
| 4-chlorophenol | <10 | <10 | <10 | <10 | <20 | <10 | <25 | <10 | <25 | <20 |
| Sub Total 2 | 0 | 0 | 0 | 0 | 0 | 0 | 0 | 0 | 0 | 0 |
| Total Acid Compounds Analyzed | 0 | 0 | 0 | 0 | 7.44 | 0 | 0 | 2 | 0 | 0 |

Table E-2. Summary of Acid Extractable Compounds in Ground Water, Monsanto Company, W.G. Krummrich Plant, Sauget, Il. ***

| Well Number: | GM-27B | GM-27B | GM-27B | GM-27C | GM-27C | GM-27C | GM-28B | GM-28B | GM-28B | GM-28C |
|---|---|---|---|---|---|---|---|---|---|---|
| Date: | 9/84** | 11/85 | 2/86 | 9/84** | 11/85 | 2/86 | 9/84** | 11/85 | 2/86 | 9/84** |
| USEPA Priority Pollutant Acid Extractable Organic Compounds concentrations are in ug/L | | | | | | | | | | |
| 2-chlorophenol | 12 | <3.3 | <3.4 | <6 | 9.8 | 6.9 | 24 | 256 | 481 | NA |
| 2,4-dichlorophenol | 115 | 3.3 | <2.8 | <8 | <2.7 | <2.8 | <8 | 13.3 | 767 | NA |
| 2,4-dimethylphenol | <10 | <2.7 | <2.8 | <10 | <2.7 | <2.8 | <10 | 134 | 224 | NA |
| 4,6-dinitro-o-cresol | <38 | <24 | <25 | <38 | <24 | <24 | <38 | <26 | <25 | NA |
| 2,4-dinitrophenol | <52 | <42 | <43 | <52 | <42 | <43 | <52 | <45 | <43 | NA |
| 2-nitrophenol | <11 | <3.6 | <3.7 | <11 | <3.6 | <3.7 | <11 | <3.9 | <3.7 | NA |
| 4-nitrophenol | <35 | <2.4 | <2.5 | <35 | <2.4 | <2.4 | <35 | <2.6 | <2.5 | NA |
| p-chloro-m-cresol | <8 | <3 | <3.1 | <8 | <3 | <3.1 | <8 | <3.2 | <3.1 | NA |
| pentachlorophenol | 170 | <3.6 | <3.7 | <34 | <3.6 | <3.7 | 9 | <3.9 | 33.1 | NA |
| phenol | 6 | <1.5 | 2.2 | <4 | 158 | <1.5 | <4 | 264 | 224 | NA |
| 2,4,6-trichlorophenol | 77 | <2.7 | <2.8 | <12 | <2.7 | <2.8 | 8 | <2.9 | 310 | NA |
| Sub Total 1 | 380 | 3.3 | 2.2 | 0 | 167.8 | 6.9 | 41 | 667.3 | 2039.1 | NA |
| Miscellaneous Acid Extractable Organic Compounds | | | | | | | | | | |
| 4-chlorophenol | <10 | <10 | <10 | <10 | 164 | 111 | <10 | 2,490 | 3,440 | NA |
| Sub Total 2 | 0 | 0 | 0 | 0 | 164 | 111 | 0 | 2,490 | 3,440 | NA |
| Total Acid Compounds Analyzed | 380 | 3.3 | 2.2 | 0 | 331.8 | 117.9 | 41 | 3157.3 | 5479.1 | NA |

Table E-2. Summary of Acid Extractable Compounds in Ground Water, Monsanto Company, W.G. Krummrich Plant, Sauget, Il. ***

| Well Number: | GM-28C | GM-28C | GM-29 | GM-29 | GM-30 | GM-30 | GM-30 | GM-31A | GM-31A | GM-31A |
|---|---|---|---|---|---|---|---|---|---|---|
| Date: | 11/85 | 2/86 | 9/84** | 11/85 | 9/84** | 11/85 | 2/86 | 2/85 | 5/85 | 11/85 |
| USEPA Priority Pollutant Acid Extractable Organic Compounds concentrations are in ug/L | | | | | | | | | | |
| 2-chlorophenol | 107 | 237 | <6 | 10.2 | <6 | <3.3 | <3.6 | <3.3 | <3.3 | <3.5 |
| 2,4-dichlorophenol | 153 | 818 | <8 | <3.1 | <8 | <2.7 | <2.9 | <2.7 | 4.5 | 12.9 |
| 2,4-dimethylphenol | 150 | 186 | <10 | <3.1 | <10 | <2.7 | <2.9 | <2.7 | <2.7 | <2.9 |
| 4,6-dinitro-o-cresol | <24 | <24 | <38 | <28 | <38 | <24 | <26 | <24 | <24 | <26 |
| 2,4-dinitrophenol | <42 | <42 | <52 | <49 | <52 | <42 | <46 | 44.6 | 1,299.9 | 158 |
| 2-nitrophenol | <3.6 | <3.6 | <11 | <4.2 | <11 | <3.6 | <3.9 | 134 | 269.7 | 686 |
| 4-nitrophenol | <2.4 | <2.4 | <35 | <2.8 | <35 | <2.4 | <2.6 | <2.4 | 201.3 | 175 |
| p-chloro-m-cresol | <3 | <3 | <8 | <3.5 | <8 | <3 | <3.3 | <3 | <3 | <3.2 |
| pentachlorophenol | <3.6 | 26.4 | <34 | <4.2 | <34 | <3.6 | <3.9 | <3.6 | <3.6 | <3.8 |
| phenol | 16.6 | 67.9 | <4 | <1.7 | <4 | <1.5 | <1.6 | 43,600 | 3,530 | 2,980 |
| 2,4,6-trichlorophenol | 14.6 | 149 | <12 | <3.1 | <12 | <2.7 | <2.9 | 23.7 | 51.9 | 136 |
| Sub Total 1 | 441.2 | 1484.3 | 0 | 10.2 | 0 | 0 | 0 | 43802.3 | 5357.3 | 4147.9 |
| Miscellaneous Acid Extractable Organic Compounds | | | | | | | | | | |
| 4-chlorophenol | 1,240 | 1,920 | <10 | 12.8 | <10 | <10 | <11 | 80.2 | <25 | 10.6 |
| Sub Total 2 | 1,240 | 1,920 | 0 | 12.8 | 0 | 0 | 0 | 80.2 | 0 | 10.6 |
| Total Acid Compounds Analyzed | 1681.2 | 3404.3 | 0 | 23 | 0 | 0 | 0 | 43882.5 | 5357.3 | 4158.5 |

Table E-2. Summary of Acid Extractable Compounds in Ground Water, Monsanto Company, W.G. Krummrich Plant, Sauget, Il. ***

| Well Number: | GM-31A | GM-31B | GM-31B | GM-31B | GM-31B | GM-31C | GM-31C | GM-31C | GM-31C | B-24A |
|---|---|---|---|---|---|---|---|---|---|---|
| Date: | 11/85* | 2/85 | 5/85 | 11/85 | 11/85* | 2/85 | 5/85 | 11/85 | 11/85* | 2/86 |
| USEPA Priority Pollutant Acid Extractable Organic Compounds concentrations are in ug/L | | | | | | | | | | |
| 2-chlorophenol | <3.5 | <3.3 | <3.3 | <3.3 | <3.3 | <3.7 | <3.3 | 6.8 | 5.6 | 202,000 |
| 2,4-dichlorophenol | 13.2 | <2.7 | <2.7 | <2.7 | <2.7 | <3 | <2.7 | <2.7 | <2.7 | 62,400 |
| 2,4-dimethylphenol | <2.8 | <2.7 | <2.7 | <2.7 | <2.7 | <3 | <2.7 | <2.7 | <2.7 | <1,100 |
| 4,6-dinitro-o-cresol | <25 | <24 | <24 | <24 | <24 | <26.7 | <24 | <24 | <24 | <10,000 |
| 2,4-dinitrophenol | 396 | <42 | <42 | <42 | <42 | <46.7 | <42 | <42 | <42 | <18,000 |
| 2-nitrophenol | 729 | <3.6 | <3.6 | <3.6 | <3.6 | <4 | <3.6 | <3.6 | <3.6 | <1,500 |
| 4-nitrophenol | 186 | <2.4 | <2.4 | <2.4 | <2.4 | <2.7 | <2.4 | <2.4 | <2.4 | <1,000 |
| p-chloro-m-cresol | <3.2 | <3 | <3 | <3 | <3 | <3.3 | <3 | <3 | <3 | <1,300 |
| pentachlorophenol | <3.8 | <3.6 | <3.6 | <3.6 | <3.6 | <4 | <3.6 | <3.6 | <3.6 | <1,500 |
| phenol | 8,410 | <1.5 | <1.5 | <1.5 | <1.5 | <1.7 | 153.4 | <1.5 | <1.5 | 280,000 |
| 2,4,6-trichlorophenol | 184 | <2.7 | <2.7 | <2.7 | <2.7 | <3 | <2.7 | <2.7 | <2.7 | 21,900 |
| Sub Total 1 | 9918.2 | 0 | 0 | 0 | 0 | 0 | 153.4 | 6.8 | 5.6 | 566300 |
| Miscellaneous Acid Extractable Organic Compounds | | | | | | | | | | |
| 4-chlorophenol | <10.5 | <3.3 | <25 | <10 | <10 | <3.7 | 19 | <10 | <10 | 37,200 |
| Sub Total 2 | 0 | 0 | 0 | 0 | 0 | 0 | 19 | 0 | 0 | 37,200 |
| Total Acid Compounds Analyzed | 9918.2 | 0 | 0 | 0 | 0 | 0 | 172.4 | 6.8 | 5.6 | 603500 |

Table E-2. Summary of Acid Extractable Compounds in Ground Water, Monsanto Company, W.G. Krummrich Plant, Sauget, Il. ***

| Well Number: | B-25A | B-25A | B-25B | B-25B | B-27B | B-27B | B-28A | B-29A | B-29A | B-29B |
|---|---|---|---|---|---|---|---|---|---|---|
| Date: | 6/84 | 11/85 | 6/84 | 11/85 | 9/84** | 9/84* | 2/86 | 6/84 | 11/85 | 6/84 |
| USEPA Priority Pollutant Acid Extractable Organic Compounds concentrations are in ug/L | | | | | | | | | | |
| 2-chlorophenol | 14,900 | 89,200 | 10,200 | 23,300 | NA | NA | <3.5 | 176,000 | 718,000 | 103,000 |
| 2,4-dichlorophenol | 13,300 | 1,520,000 | 34,800 | 52,100 | NA | NA | <2.9 | 12,900 | 44,700 | 33,800 |
| 2,4-dimethylphenol | <200 | <26 | <200 | 48.6 | NA | NA | <2.9 | 7,740 | 44,500 | 38,300 |
| 4,6-dinitro-o-cresol | <760 | <240 | <760 | <240 | NA | NA | <26 | <760 | <2,400 | <7,600 |
| 2,4-dinitrophenol | <1,040 | <410 | <1,040 | <420 | NA | NA | <45 | <1,040 | <4,200 | <10,400 |
| 2-nitrophenol | <220 | <35 | <220 | <36 | NA | NA | <3.8 | <220 | <360 | <2,200 |
| 4-nitrophenol | <700 | 167 | 497 | 2,320 | NA | NA | <2.6 | <700 | <240 | 7,590 |
| p-chloro-m-cresol | <160 | <29 | <160 | <30 | NA | NA | <3.2 | <160 | <300 | <1,600 |
| pentachlorophenol | <680 | 546 | <680 | <36 | NA | NA | <3.8 | 9,280 | 10,600 | 1,700 |
| phenol | 34,900 | 965,000 | 39,400 | 32,700 | NA | NA | <1.6 | 657,000 | 771,000 | 609,000 |
| 2,4,6-trichlorophenol | 5,160 | 13,900 | <240 | 6,870 | NA | NA | <2.9 | 11,300 | 15,300 | 31,200 |
| Sub Total 1 | 68260 | 2588813 | 84897 | 117338.6 | NA | NA | 0 | 874220 | 1604100 | 824590 |
| Miscellaneous Acid Extractable Organic Compounds | | | | | | | | | | |
| 4-chlorophenol | NA | 42,500 | NA | 22,600 | NA | NA | <11 | NA | 299,000 | NA |
| Sub Total 2 | NA | 42,500 | NA | 22,600 | NA | NA | 0 | NA | 299,000 | NA |
| Total Acid Compounds Analyzed | 68260 | 2631313 | 84897 | 139938.6 | NA | NA | 0 | 874220 | 1903100 | 824590 |

Table E-2. Summary of Acid Extractable Compounds in Ground Water, Monsanto Company, W.G. Krummrich Plant, Sauget, Il. ***

| Well Number: | B-29B | B-29B | B-29B | B-29B | B-30B | B-31B | B-31B | B-31C | B-31C | B-31C |
|---|---|---|---|---|---|---|---|---|---|---|
| Date: | 6/84* | 6/84# | 11/84 | 11/85 | 9/84** | 11/85 | 2/86 | 9/84*** | 9/84* | 11/85 |
| USEPA Priority Pollutant Acid Extractable Organic Compounds concentrations are in ug/L | | | | | | | | | | |
| 2-chlorophenol | 116,000 | 27,400 | 953 | 70,900 | NA | <3.3 | <3.3 | <6 | <6 | <3.4 |
| 2,4-dichlorophenol | 97,400 | 68,100 | <250 | 37,500 | NA | <2.7 | <2.7 | <8 | <8 | <2.8 |
| 2,4-dimethylphenol | 13,500 | 18,700 | <250 | 21,200 | NA | <2.7 | <2.7 | <10 | <10 | <2.8 |
| 4,6-dinitro-o-cresol | <760 | <25,000 | <2500 | <480 | NA | <24 | <24 | <38 | <38 | <24 |
| 2,4-dinitrophenol | <1,040 | <25,000 | <2500 | <840 | NA | <42 | <42 | <52 | <52 | <43 |
| 2-nitrophenol | <220 | <2,500 | <250 | <72 | NA | <3.6 | <3.6 | <11 | <11 | <3.7 |
| 4-nitrophenol | <700 | 3,690 | <250 | 1,860 | NA | <2.4 | <2.4 | <35 | <35 | <2.4 |
| p-chloro-m-cresol | <160 | <2,500 | <250 | <60 | NA | <3 | <3 | <8 | <8 | <3.1 |
| pentachlorophenol | <680 | 3,690 | <250 | 3,090 | NA | <3.6 | <3.6 | <34 | <34 | <3.7 |
| phenol | 1,070,000 | 19,800 | 5,010 | 133,000 | NA | <1.5 | <1.5 | <4 | <4 | <1.5 |
| 2,4,6-trichlorophenol | 16,000 | 16,000 | <250 | 11,800 | NA | <2.7 | <2.7 | <12 | <12 | <2.8 |
| Sub Total 1 | 1312900 | 157380 | 5963 | 279350 | NA | 0 | 0 | 0 | 0 | 0 |
| Miscellaneous Acid Extractable Organic Compounds | | | | | | | | | | |
| 4-chlorophenol | NA | NA | <250 | 49,900 | NA | <10 | <10 | <10 | <10 | <10 |
| Sub Total 2 | NA | NA | 0 | 49,900 | NA | 0 | 0 | 0 | 0 | 0 |
| Total Acid Compounds Analyzed | 1312900 | 157380 | 5963 | 329250 | NA | 0 | 0 | 0 | 0 | 0 |

Table E-2. Summary of Acid Extractable Compounds in Ground Water, Monsanto Company, W.G. Krummrich Plant, Sauget, Il. ***

| Well Number: | B-31C | B-101 | B-102 | GM-106 | GM-106 | GM-106 | P-1 | P-2 | P-2 | P-6 |
|---|---|---|---|---|---|---|---|---|---|---|
| Date: | 2/86 | 9/84** | 9/84** | 11/85 | 2/86 | 2/86* | 9/84** | 6/84 | 11/85 | 6/84 |
| USEPA Priority Pollutant Acid Extractable Organic Compounds concentrations are in ug/L | | | | | | | | | | |
| 2-chlorophenol | 6.2 | 5,630 | <6 | 15.7 | 52.1 | 40.9 | <6 | 16 | 8.5 | <1 |
| 2,4-dichlorophenol | <2.8 | 31,200 | <8 | 22 | 133 | 128 | 2 | 40 | <2.7 | <1 |
| 2,4-dimethylphenol | <2.8 | <10 | <10 | <2.7 | 4.8 | 4.5 | <10 | <1 | <2.7 | <1 |
| 4,6-dinitro-o-cresol | <25 | <38 | <38 | <24 | <25 | <24 | <38 | <1 | <24 | <1 |
| 2,4-dinitrophenol | <44 | <52 | <52 | <42 | <43 | <43 | <52 | <1 | <42 | <1 |
| 2-nitrophenol | <3.9 | <11 | <11 | <3.6 | <3.7 | <3.7 | <11 | <1 | <3.6 | <1 |
| 4-nitrophenol | <2.5 | <35 | <35 | <2.4 | <2.5 | 3 | <35 | <1 | <2.4 | <1 |
| p-chloro-m-cresol | <3.2 | <8 | <8 | <3 | <3.1 | <3.1 | <8 | <1 | <3 | <1 |
| pentachlorophenol | <3.8 | 1,360 | <34 | <3.6 | <3.7 | <3.7 | 1 | 1 | <3.6 | <1 |
| phenol | <1.6 | <4 | <4 | 35.9 | 65.2 | 53.5 | <4 | 291 | <1.5 | 6 |
| 2,4,6-trichlorophenol | <2.8 | 14,600 | <12 | 52.9 | 207 | 181 | 1 | 7 | <2.7 | <1 |
| Sub Total 1 | 6.2 | 52790 | 0 | 126.5 | 462.1 | 410.9 | 4 | 355 | 8.5 | 6 |
| Miscellaneous Acid Extractable Organic Compounds | | | | | | | | | | |
| 4-chlorophenol | <11 | <10 | <10 | <10 | 37.1 | 36.3 | <10 | NA | <10 | NA |
| Sub Total 2 | 0 | 0 | 0 | 0 | 37.1 | 36.3 | 0 | NA | 0 | NA |
| Total Acid Compounds Analyzed | 6.2 | 52790 | 0 | 126.5 | 499.2 | 447.2 | 4 | 355 | 8.5 | 6 |

Table E-2. Summary of Acid Extractable Compounds in Ground Water, Monsanto Company, W.G. Krummrich Plant, Sauget, Il. ***

| Well Number: | P-6 | P-7 | P-7 | P-8 | P-8 | P-10 | P-11 | P-12 | P-13 | P-13 |
|---|---|---|---|---|---|---|---|---|---|---|
| Date: | 11/85 | 6/84 | 11/85 | 6/84 | 11/85 | 9/84** | 9/84** | 9/84** | 6/84 | 6/84* |
| USEPA Priority Pollutant Acid Extractable Organic Compounds concentrations are in ug/L | | | | | | | | | | |
| 2-chlorophenol | <3.7 | 10,200 | 2,660 | 1 | 27.2 | <6 | <6 | <6 | <1 | <1 |
| 2,4-dichlorophenol | <3.1 | 8,180 | 7,790 | <1 | <2.7 | <8 | <8 | <8 | <1 | <1 |
| 2,4-dimethylphenol | <3.1 | 1,930 | <5.5 | 1 | 32.1 | <10 | <10 | <10 | <1 | <1 |
| 4,6-dinitro-o-cresol | <27 | <760 | <48 | <1 | <24 | <38 | <38 | <38 | <1 | <1 |
| 2,4-dinitrophenol | <47 | <1,040 | <85 | <1 | <42 | <52 | <52 | <52 | <1 | <1 |
| 2-nitrophenol | <4.1 | <220 | <7.3 | <1 | <3.6 | <11 | <11 | <11 | <1 | <1 |
| 4-nitrophenol | <2.7 | <700 | 133 | <1 | <2.4 | <35 | <35 | <35 | <1 | <1 |
| p-chloro-m-cresol | <3.4 | <160 | <6.1 | <1 | <3 | <8 | <8 | <8 | <1 | <1 |
| pentachlorophenol | <4.1 | <680 | <7.3 | <1 | <3.6 | <34 | <34 | <34 | <1 | <1 |
| phenol | <1.7 | 123,000 | 22,300 | 9 | <1.5 | <4 | <4 | <4 | <1 | 4 |
| 2,4,6-trichlorophenol | <3.1 | 1,920 | 3,430 | <1 | <2.7 | <12 | <12 | <12 | <1 | <1 |
| Sub Total 1 | 0 | 145230 | 36313 | 11 | 59.3 | 0 | 0 | 0 | 0 | 4 |
| Miscellaneous Acid Extractable Organic Compounds | | | | | | | | | | |
| 4-chlorophenol | <11 | NA | 13,100 | NA | 182 | <10 | <10 | <10 | NA | NA |
| Sub Total 2 | 0 | NA | 13,100 | NA | 182 | 0 | 0 | 0 | NA | NA |
| Total Acid Compounds Analyzed | 0 | 145230 | 49413 | 11 | 241.3 | 0 | 0 | 0 | 0 | 4 |

Table E-2. Summary of Acid Extractable Compounds in Ground Water, Monsanto Company, W.G. Krummrich Plant, Sauget, Il. ***

| Well Number: | P-13 | P-13 | P-14 | P-14 | DW-1 | DW-1 | DW-4 | DW-7 | DW-7 | DW-10 |
|---|---|---|---|---|---|---|---|---|---|---|
| Date: | 6/84# | 11/85 | 6/84 | 11/85 | 9/84** | 11/85 | 9/84** | 11/85 | 2/86 | 9/84** |
| USEPA Priority Pollutant Acid Extractable Organic Compounds concentrations are in ug/L | | | | | | | | | | |
| 2-chlorophenol | <25 | <3.3 | <1 | 74.5 | <6 | 22.1 | 42 | 19.3 | 36.4 | <6 |
| 2,4-dichlorophenol | <25 | <2.7 | <1 | <2.8 | <8 | <5.2 | 24 | 23.6 | 12.6 | <8 |
| 2,4-dimethylphenol | <25 | <2.7 | <1 | <2.8 | <10 | <5.2 | <10 | <5.4 | <2.8 | <10 |
| 4,6-dinitro-o-cresol | <250 | <24 | <1 | <25 | <38 | <46 | <38 | <48 | <24 | <38 |
| 2,4-dinitrophenol | <250 | <42 | <1 | <43 | <52 | <81 | <52 | <84 | <43 | <52 |
| 2-nitrophenol | <25 | <3.6 | <1 | <3.7 | <11 | <6.9 | <11 | <7.2 | <3.7 | <11 |
| 4-nitrophenol | <25 | <2.4 | <1 | <2.5 | <35 | <4.6 | <35 | <4.8 | <2.4 | <35 |
| p-chloro-m-cresol | <25 | <3 | <1 | <3.1 | <8 | <5.8 | <8 | <6.0 | <3.1 | <8 |
| pentachlorophenol | <25 | <3.6 | <1 | <3.7 | <34 | <6.9 | 1,340 | 80.5 | <3.7 | 39 |
| phenol | <25 | 4.3 | 1 | <1.5 | 29 | 210 | <4 | <3 | 25.9 | <4 |
| 2,4,6-trichlorophenol | <25 | <2.7 | <1 | <2.8 | <12 | <5.2 | 529 | 44.8 | 117 | 3 |
| Sub Total 1 | 0 | 4.3 | 1 | 74.5 | 29 | 232.1 | 1935 | 168.2 | 191.9 | 42 |
| Miscellaneous Acid Extractable Organic Compounds | | | | | | | | | | |
| 4-chlorophenol | NA | <10 | NA | 29.4 | <10 | 189 | <10 | 58.6 | 200 | <10 |
| Sub Total 2 | NA | 0 | NA | 29.4 | 0 | 189 | 0 | 58.6 | 200 | 0 |
| Total Acid Compounds Analyzed | 0 | 4.3 | 1 | 103.9 | 29 | 421.1 | 1935 | 226.8 | 391.9 | 42 |

Table E-2. Summary of Acid Extractable Compounds in Ground Water, Monsanto Company, W.G. Krummrich Plant, Sauget, Il. ***

| Well Number: | DW-18 | DW-18 | DW-18 | DW-23 | DW-24 | DW-24 | DW-29 | DW-29 | DW-30 | DW-33 |
|---|---|---|---|---|---|---|---|---|---|---|
| Date: | 9/84** | 9/84* | 11/85 | 9/84** | 9/84** | 9/84* | 9/84** | 9/84* | 11/85 | 9/84** |
| USEPA Priority Pollutant Acid Extractable Organic Compounds concentrations are in ug/L | | | | | | | | | | |
| 2-chlorophenol | <6 | NA | <3.5 | <6 | <6 | <6 | <6 | NA | 4.2 | <6 |
| 2,4-dichlorophenol | <8 | NA | <2.8 | <8 | <8 | <8 | 52 | NA | <2.8 | <8 |
| 2,4-dimethylphenol | <10 | NA | <2.8 | <10 | <10 | <10 | <10 | NA | <2.8 | <10 |
| 4,6-dinitro-o-cresol | <38 | NA | <25 | <38 | <38 | <38 | <38 | NA | <25 | <38 |
| 2,4-dinitrophenol | <52 | NA | <44 | <52 | <52 | <52 | <52 | NA | <43 | <52 |
| 2-nitrophenol | <11 | NA | <3.8 | <11 | <11 | <11 | <11 | NA | <3.7 | <11 |
| 4-nitrophenol | <35 | NA | <2.5 | <35 | <35 | <35 | <35 | NA | <2.5 | <35 |
| p-chloro-m-cresol | <8 | NA | <3.2 | <8 | <8 | <8 | <8 | NA | <3.1 | <8 |
| pentachlorophenol | <34 | NA | <3.8 | <34 | <34 | <34 | <34 | NA | <3.7 | 4 |
| phenol | 1 | NA | <1.6 | <4 | <4 | <4 | <4 | NA | <1.5 | <4 |
| 2,4,6-trichlorophenol | <12 | NA | <2.8 | <12 | <12 | <12 | <12 | NA | <2.8 | <12 |
| Sub Total 1 | 1 | NA | 0 | 0 | 0 | 0 | 52 | NA | 4.2 | 4 |
| Miscellaneous Acid Extractable Organic Compounds | | | | | | | | | | |
| 4-chlorophenol | <10 | NA | <11 | <10 | <10 | <10 | <10 | NA | <10 | <10 |
| Sub Total 2 | 0 | NA | 0 | 0 | 0 | 0 | 0 | NA | 0 | 0 |
| Total Acid Compounds Analyzed | 1 | NA | 0 | 0 | 0 | 0 | 52 | NA | 4.2 | 4 |

Table E-2. Summary of Acid Extractable Compounds in Ground Water, Monsanto Company, W.G. Krummrich Plant, Sauget, Il. ***

| Well Number: | DW-34 | DW-34 | DW-34 | DW-1-85 | DW-1-85 | BK-3 | BK-3 | BK-3 | WB-6 | WB-6 |
|---|---|---|---|---|---|---|---|---|---|---|
| Date: | 9/84** | 11/85 | 2/86 | 11/85 | 2/86 | 9/84** | 11/85 | 2/86 | 9/84** | 11/85 |
| USEPA Priority Pollutant Acid Extractable Organic Compounds concentrations are in ug/L | | | | | | | | | | |
| 2-chlorophenol | <6 | <6.6 | <3.5 | 36.2 | 15.2 | <6 | <3.3 | 13.2 | <6 | <3.3 |
| 2,4-dichlorophenol | <8 | <5.4 | <2.9 | <5.4 | <2.9 | 6 | <2.7 | <2.8 | <8 | <2.7 |
| 2,4-dimethylphenol | <10 | <5.4 | <2.9 | <5.4 | <2.9 | <10 | <2.7 | <2.8 | <10 | 3.7 |
| 4,6-dinitro-o-cresol | <38 | <48 | <26 | <48 | <26 | <38 | <24 | <24 | <38 | <24 |
| 2,4-dinitrophenol | <52 | <84 | <45 | <84 | <45 | <52 | <42 | <43 | <52 | <42 |
| 2-nitrophenol | <11 | <7.2 | <3.9 | <7.2 | <3.8 | <11 | <3.6 | <3.7 | <11 | <3.6 |
| 4-nitrophenol | <35 | <4.8 | <2.6 | <4.8 | <2.6 | <35 | <2.4 | <2.4 | <35 | <2.4 |
| p-chloro-m-cresol | <8 | <6.0 | <3.2 | <6.0 | <3.2 | <8 | <3 | <3.1 | <8 | <3 |
| pentachlorophenol | <34 | <7.2 | <3.9 | <7.9 | <3.8 | <34 | <3.6 | <3.7 | <34 | <3.6 |
| phenol | 158 | 15.6 | 70.2 | 16.9 | <1.6 | <4 | <1.5 | 6 | <4 | <1.5 |
| 2,4,6-trichlorophenol | <12 | <5.4 | <2.9 | <5.4 | <2.9 | <12 | <2.7 | <2.8 | <12 | <2.7 |
| Sub Total 1 | 158 | 15.6 | 70.2 | 53.1 | 15.2 | 6 | 0 | 19.2 | 0 | 3.7 |
| Miscellaneous Acid Extractable Organic Compounds | | | | | | | | | | |
| 4-chlorophenol | <10 | <20 | <11 | <20 | <11 | <10 | <10 | 13.4 | <10 | <10 |
| Sub Total 2 | 0 | 0 | 0 | 0 | 0 | 0 | 0 | 13.4 | 0 | 0 |
| Total Acid Compounds Analyzed | 158 | 15.6 | 70.2 | 53.1 | 15.2 | 6 | 0 | 32.6 | 0 | 3.7 |

Table E-2. Summary of Acid Extractable Compounds in Ground Water, Monsanto Company, W.G. Krummrich Plant, Sauget, Il. ***

| Well Number: | WB-6 | WB-7 | WB-7 | Field Blank | Trip Blank | Trip Blank | Trip Blank | Lab Blank | Lab Blank | Lab Blank |
|---|---|---|---|---|---|---|---|---|---|---|
| Date: | 2/86 | 9/84 | 11/85 | 6/84 | 5/84 | 6/84 | 9/84 | 11/83 | 11/83 | 9/84 |
| USEPA Priority Pollutant Acid Extractable Organic Compounds concentrations are in ug/L | | | | | | | | | | |
| 2-chlorophenol | <3.4 | <6 | <3.8 | <6 | <1 | <6 | <6 | <1 | <1 | <6 |
| 2,4-dichlorophenol | <2.8 | <8 | <2.8 | <8 | <1 | <8 | <8 | <1 | <1 | <8 |
| 2,4-dimethylphenol | 59.5 | <10 | <2.8 | <10 | <1 | <10 | <10 | <1 | <1 | <10 |
| 4,6-dinitro-o-cresol | <25 | <38 | <24 | <38 | <1 | <38 | <38 | <1 | <1 | <38 |
| 2,4-dinitrophenol | <43 | <52 | <43 | <52 | <1 | <52 | <52 | <1 | <1 | <52 |
| 2-nitrophenol | <3.7 | <11 | <3.7 | <11 | <1 | <11 | <11 | <1 | <1 | <11 |
| 4-nitrophenol | <2.5 | <35 | <2.4 | <35 | <1 | <35 | <35 | <1 | <1 | <35 |
| p-chloro-m-cresol | <3.1 | <8 | <3.1 | <8 | <1 | <8 | <8 | <1 | <1 | <8 |
| pentachlorophenol | <3.7 | <34 | <3.7 | <34 | <1 | <34 | <34 | <1 | <1 | 9 |
| phenol | <1.5 | <4 | <1.5 | <4 | <1 | <4 | <4 | <1 | <1 | <4 |
| 2,4,6-trichlorophenol | <2.8 | <12 | <2.8 | <12 | <1 | <12 | <12 | <1 | <1 | <12 |
| Sub Total 1 | 59.5 | 0 | 0 | 0 | 0 | 0 | 0 | 0 | 0 | 9 |
| Miscellaneous Acid Extractable Organic Compounds | | | | | | | | | | |
| 4-chlorophenol | <10 | <10 | <10 | NA | NA | NA | NA | NA | NA | NA |
| Sub Total 2 | 0 | 0 | 0 | NA | NA | NA | NA | NA | NA | NA |
| Total Acid Compounds Analyzed | 59.5 | 0 | 0 | 0 | 0 | 0 | 0 | 0 | 0 | 9 |

Table E-2. Summary of Acid Extractable Compounds in Ground Water, Monsanto Company, W.G. Krummrich Plant, Sauget, Il. ***

| Well Number: | Lab Blank | Lab Blank | Lab Blank |
|---|---|---|---|
| Date: | 9/84 | 9/84 | 9/84 |
| USEPA Priority Pollutant Acid Extractable Organic Compounds concentrations are in ug/L | | | |
| 2-chlorophenol | <6 | <6 | <6 |
| 2,4-dichlorophenol | <8 | <8 | <8 |
| 2,4-dimethylphenol | <10 | <10 | <10 |
| 4,6-dinitro-o-cresol | <38 | <38 | <38 |
| 2,4-dinitrophenol | <52 | <52 | <52 |
| 2-nitrophenol | <11 | <11 | <11 |
| 4-nitrophenol | <35 | <35 | <35 |
| p-chloro-m-cresol | <8 | <8 | <8 |
| pentachlorophenol | <34 | <34 | 19 |
| phenol | <4 | <4 | <4 |
| 2,4,6-trichlorophenol | <12 | <12 | <12 |
| Sub Total 1 | 0 | 0 | 19 |
| Miscellaneous Acid Extractable Organic Compounds | | | |
| 4-chlorophenol | NA | NA | NA |
| Sub Total 2 | NA | NA | NA |
| Total Acid Compounds Analyzed | 0 | 0 | 19 |

NA - Not Analyzed.
* - Replicate Analyses
** - Prior to analysis, this sample was held by Envirodyne Engineers, Inc. longer than the maximum allowable USEPA holding time.
*** - Envirodyne Engineers, Inc. (St. Louis, MO.) provided the laboratory services for the September 1984 sampling round. ETC (Edison, New Jersey) performed the analyses for the November 1984 through February 1986 sampling programs.
< - Indicates that the compound was not detected at the detection limit which is the value shown next to the symbol.

Table E-3. Summary of Base/Neutral Extractable Compounds in Ground Water, Monsanto Company, W.G. Krummrich Plant, Sauget, Il

| Well Number: | GM-1 | GM-1 | GM-2 | GM-2 | GM-3 | GM-3 | GM-3 | GM-4A | GM-4A |
|---|---|---|---|---|---|---|---|---|---|
| Date: | 11/83 | 5/84 | 11/83 | 5/84 | 11/83 | 5/84 | 5/84* | 11/83 | 5/84 |
| USEPA Priority Pollutant Base/Neutral Extractable Organic Compounds concentrations are in ug/L | | | | | | | | | |
| acenaphthene | <1 | <1 | <1 | <1 | <1 | <1 | <1 | <1 | <1 |
| acenapthylene | <1 | <1 | <1 | <1 | <1 | <1 | <1 | <1 | <1 |
| anthracene | <1 | <1 | <1 | <1 | <1 | <1 | <1 | <1 | <1 |
| benzidine | <1 | <1 | <1 | <1 | <1 | <1 | <1 | <1 | <1 |
| benzo (a) anthracene | <1 | <1 | <1 | <1 | <1 | <1 | <1 | <1 | <1 |
| benzo (a) pyrene | <1 | <1 | <1 | <1 | <1 | <1 | <1 | <1 | <1 |
| benzo (b) fluoroanthene | <1 | <1 | <1 | <1 | <1 | <1 | <1 | <1 | <1 |
| benzo (ghi) perylene | <1 | <1 | <1 | <1 | <1 | <1 | <1 | <1 | <1 |
| benzo (k) fluoranthene | <1 | <1 | <1 | <1 | <1 | <1 | <1 | <1 | <1 |
| bis (2-chloroethoxy) methane | <1 | <1 | <1 | <1 | <1 | <1 | <1 | <1 | <1 |
| bis (2-chloroethyl) ether | <1 | <1 | <1 | <1 | <1 | <1 | <1 | <1 | <1 |
| bis (2-chloroisopropyl) ether | <1 | <1 | <1 | <1 | <1 | <1 | <1 | <1 | <1 |
| bis (2-ethylhexyl) phthalate | <1 | <1 | 13 | <1 | 1 | <1 | <1 | <1 | 2 |
| 4-bromophenyl phenyl ether | <1 | <1 | <1 | <1 | <1 | <1 | <1 | <1 | <1 |
| butyl benzyl phthalate | <1 | <1 | <1 | <1 | <1 | <1 | <1 | <1 | <1 |
| 2-chloronaphthalene | <1 | <1 | <1 | <1 | <1 | <1 | <1 | <1 | <1 |
| 4-chlorophenyl phenyl ether | <1 | <1 | <1 | <1 | <1 | <1 | <1 | <1 | <1 |
| chrysene | <1 | <1 | <1 | <1 | <1 | <1 | <1 | <1 | <1 |
| dibenzo (a,h) anthracene | <1 | <1 | <1 | <1 | <1 | <1 | <1 | <1 | <1 |
| 1,2-dichlorobenzene | <1 | <1 | <1 | <1 | <1 | <1 | <1 | <1 | <1 |
| 1,3-dichlorobenzene | <1 | <1 | <1 | <1 | <1 | <1 | <1 | <1 | <1 |
| 1,4-dichlorobenzene | <1 | <1 | <1 | <1 | <1 | <1 | <1 | <1 | <1 |
| 3,3-dichlorobenzidine | <1 | <1 | <1 | <1 | <1 | <1 | <1 | <1 | <1 |
| diethyl phthalate | <1 | 3 | <1 | 2 | <1 | 1 | 1 | <1 | 1 |
| dimethyl phthalate | <1 | <1 | <1 | <1 | <1 | <1 | <1 | <1 | <1 |
| di-n-butyl phthalate | 1 | 2 | 2 | 3 | 2 | 3 | 2 | 2 | <1 |
| 2,4-dinitrotoluene | <1 | <1 | <1 | <1 | <1 | <1 | <1 | <1 | <1 |
| 2,6-dinitrotoluene | <1 | <1 | <1 | <1 | <1 | <1 | <1 | <1 | <1 |
| di-n-octyl phthalate | <1 | <1 | <1 | <1 | <1 | <1 | <1 | <1 | <1 |
| 1,2-diphenylhydrazine | <1 | <1 | <1 | <1 | <1 | <1 | <1 | <1 | <1 |
| fluoranthene | <1 | <1 | <1 | <1 | <1 | <1 | <1 | <1 | <1 |
| fluorene | <1 | <1 | <1 | <1 | <1 | <1 | <1 | <1 | <1 |
| hexachlorobenzene | <1 | <1 | <1 | <1 | <1 | <1 | <1 | <1 | <1 |
| hexachlorobutadiene | <1 | <1 | <1 | <1 | <1 | <1 | <1 | <1 | <1 |
| hexachlorocyclopentadiene | <1 | <1 | <1 | <1 | <1 | <1 | <1 | <1 | <1 |
| hexachloroethane | <1 | <1 | <1 | <1 | <1 | <1 | <1 | <1 | <1 |
| indeno (1,2,3-c,d) pyrene | <1 | <1 | <1 | <1 | <1 | <1 | <1 | <1 | <1 |
| isophorone | <1 | <1 | <1 | <1 | <1 | <1 | <1 | <1 | <1 |
| naphthalene | <1 | <1 | <1 | <1 | <1 | <1 | <1 | <1 | <1 |
| nitrobenzene | <1 | <1 | <1 | <1 | <1 | <1 | <1 | <1 | <1 |
| n-nitrosodimethylamine | <1 | <1 | <1 | <1 | <1 | <1 | <1 | <1 | <1 |
| n-nitrosodi-n-propylamine | <1 | <1 | <1 | <1 | <1 | <1 | <1 | <1 | <1 |
| n-nitrosodiphenylamine | <1 | <1 | <1 | <1 | <1 | <1 | <1 | <1 | <1 |
| phenanthrene | <1 | <1 | <1 | <1 | <1 | <1 | <1 | <1 | <1 |
| pyrene | <1 | <1 | <1 | <1 | <1 | <1 | <1 | <1 | <1 |
| 1,2,4-trichlorobenzene | <1 | <1 | <1 | <1 | <1 | <1 | <1 | <1 | <1 |
| Sub Total 1 | 1 | 5 | 15 | 5 | 3 | 4 | 3 | 2 | 3 |

Table E-3. Summary of Base/Neutral Extractable Compounds in Ground Water, Monsanto Company, W.G. Krummrich Plant, Sauget, Il

| Well Number: | GM-1 | GM-1 | GM-2 | GM-2 | GM-3 | GM-3 | GM-3 | GM-4A | GM-4A |
|---|---|---|---|---|---|---|---|---|---|
| Date: | 11/83 | 5/84 | 11/83 | 5/84 | 11/83 | 5/84 | 5/84* | 11/83 | 5/84 |
| Miscellaneous Base/Neutral Extractable Organic Compounds concentrations are in ug/L | | | | | | | | | |
| 2-nitroaniline | NA | NA | NA | NA | NA | NA | NA | NA | NA |
| 4-nitroaniline | NA | NA | NA | NA | NA | NA | NA | NA | NA |
| 2-nitrochlorobenzene | NA | NA | NA | NA | NA | NA | NA | NA | NA |
| 4-nitrochlorobenzene | NA | NA | NA | NA | NA | NA | NA | NA | NA |
| 2,4-and 3,4-dinitrochlorobenzene | NA | NA | NA | NA | NA | NA | NA | NA | NA |
| 4-nitrodiphenylamine | NA | NA | NA | NA | NA | NA | NA | NA | NA |
| triphenyl phosphate | NA | NA | NA | NA | NA | NA | NA | NA | NA |
| 2,3,7,8-tetrachloro-dibenzo-p-dioxin | NA | NA | NA | NA | NA | NA | NA | NA | NA |
| 2-nitrobiphenyl | NA | NA | NA | NA | NA | NA | NA | NA | NA |
| 4-nitrobiphenyl | NA | NA | NA | NA | NA | NA | NA | NA | NA |
| Sub Total 2 | NA | NA | NA | NA | NA | NA | NA | NA | NA |
| Total Base/Neutral Compounds Analyzed | 1 | 5 | 15 | 5 | 3 | 4 | 3 | 2 | 3 |

Table E-3. Summary of Base/Neutral Extractable Compounds in Ground Water, Monsanto Company, W.G. Krummrich Plant, Sauget, Il

| Well Number: | GM-4B | GM-4B | GM-4B | GM-4B | GM-4B | GM-4B | GM-4C | GM-4C | GM-5 |
|---|---|---|---|---|---|---|---|---|---|
| Date: | 9/84 | 11/84 | 11/84* | 2/85 | 11/85 | 11/85* | 2/85 | 5/85 | 11/83 |
| USEPA Priority Pollutant Base/Neutral Extractable Organic Compounds concentrations are in ug/L | | | | | | | | | |
| acenaphthene | <4 | <10 | <10 | <1.9 | <1.9 | <1.9 | <1.9 | <1.9 | <1 |
| acenapthylene | <3 | <10 | <10 | <3.5 | <3.5 | <3.5 | <3.5 | <3.5 | <1 |
| anthracene | <4 | <10 | <10 | <1.9 | <1.9 | 10.6 | <1.9 | <1.9 | <1 |
| benzidine | <60 | <10 | <10 | <44 | <44 | <44 | <44 | <44 | <1 |
| benzo (a) anthracene | <9 | <10 | <10 | <7.8 | <7.9 | <7.8 | <7.8 | <7.8 | <1 |
| benzo (a) pyrene | <12 | <10 | <10 | <2.5 | <2.5 | <2.5 | <2.5 | <2.5 | <1 |
| benzo (b) fluoroanthene | <11 | <10 | <10 | <4.8 | <4.8 | <4.8 | <4.8 | <4.8 | <1 |
| benzo (ghi) perylene | <14 | <10 | <10 | <4.1 | <4.1 | <4.1 | <4.1 | <4.1 | <1 |
| benzo (k) fluoranthene | <11 | <10 | <10 | <2.5 | <3.5 | <3.5 | <2.5 | <2.5 | <1 |
| bis (2-chloroethoxy) methane | <4 | <10 | <10 | <5.3 | <5.4 | <5.3 | <5.3 | <5.3 | <1 |
| bis (2-chloroethyl) ether | <4 | <10 | <10 | <5.7 | <5.8 | <5.7 | <5.7 | <5.7 | <1 |
| bis (2-chloroisopropyl) ether | <3 | <10 | <10 | <5.7 | <5.8 | <5.7 | <10 | <6 | <1 |
| bis (2-ethylhexyl) phthalate | 24 | <10 | <10 | <10 | <10 | 10.9 | <1.9 | <10 | <1 |
| 4-bromophenyl phenyl ether | <16 | <10 | <10 | <1.9 | <1.9 | <1.9 | <10 | <1.9 | <1 |
| butyl benzyl phthalate | 8 | <10 | <10 | <10 | <10 | <10 | <1.9 | <10 | <1 |
| 2-chloronaphthalene | <4 | <10 | <10 | <1.9 | <1.9 | <1.9 | <1.9 | <1.9 | <1 |
| 4-chlorophenyl phenyl ether | <9 | <10 | <10 | <4.2 | <4.2 | <4.2 | <4.2 | <4.2 | <1 |
| chrysene | <9 | <10 | <10 | <2.5 | <2.5 | <2.5 | <2.5 | <2.5 | <1 |
| dibenzo (a,h) anthracene | <16 | <10 | <10 | <2.5 | <10 | <10 | <2.5 | <2.5 | <1 |
| 1,2-dichlorobenzene | 159 | 258 | 123 | 105 | 85.6 | 99.2 | 91.7 | 40 | <1 |
| 1,3-dichlorobenzene | 12 | 56 | 37 | 31.6 | 82.8 | 42.4 | 73.3 | 24 | <1 |
| 1,4-dichlorobenzene | 681 | 1220 | 333 | 963 | 336 | 463 | 1,030 | 295 | <1 |
| 3,3-dichlorobenzidine | <161 | <10 | <10 | <16.5 | <17 | <17 | <16.5 | <16.5 | <1 |
| diethyl phthalate | <4 | <10 | <10 | <10 | <10 | <10 | <10 | <10 | <1 |
| dimethyl phthalate | <4 | <10 | <10 | <10 | <10 | <10 | <10 | <10 | <1 |
| di-n-butyl phthalate | 14 | <10 | <10 | <10 | <10 | <10 | <10 | <10 | 1 |
| 2,4-dinitrotoluene | <14 | <10 | <10 | <5.7 | <5.8 | <5.7 | <5.7 | <5.7 | <1 |
| 2,6-dinitrotoluene | <16 | <10 | <10 | <1.9 | <1.9 | <1.9 | <1.9 | <1.9 | <1 |
| di-n-octyl phthalate | <6 | <10 | <10 | <10 | <10 | <10 | <10 | <10 | <1 |
| 1,2-diphenylhydrazine | <10 | <10 | <10 | <10 | <10 | <10 | <10 | <10 | <1 |
| fluoranthene | <5 | <10 | <10 | <2.2 | <2.2 | <2.2 | <2.2 | <2.2 | <1 |
| fluorene | <4 | <10 | <10 | <1.9 | <1.9 | <1.9 | <1.9 | <1.9 | <1 |
| hexachlorobenzene | <15 | <10 | <10 | <1.9 | <1.9 | <1.9 | <1.9 | <1.9 | <1 |
| hexachlorobutadiene | <13 | <10 | <10 | <0.9 | <0.9 | <0.9 | <0.9 | <0.9 | <1 |
| hexachlorocyclopentadiene | <12 | <10 | <10 | <10 | <10 | <10 | <10 | <10 | <1 |
| hexachloroethane | <10 | <10 | <10 | <1.6 | <1.6 | <1.6 | <1.6 | <1.6 | <1 |
| indeno (1,2,3-c,d) pyrene | <7 | <10 | <10 | <3.7 | <4.7 | <4.7 | <3.7 | <3.7 | <1 |
| isophorone | <2 | <10 | <10 | <2.2 | <2.2 | <2.2 | <2.2 | <2.2 | <1 |
| naphthalene | <2 | <10 | <10 | <1.6 | <1.6 | <1.6 | <1.6 | <1.6 | <1 |
| nitrobenzene | <5 | <10 | <10 | <1.9 | <1.9 | <1.9 | <1.9 | <1.9 | <1 |
| n-nitrosodimethylamine | <10 | <10 | <10 | <10 | <10 | <10 | <10 | <10 | <1 |
| n-nitrosodi-n-propylamine | <6 | <10 | <10 | <10 | <10 | <10 | <10 | <10 | <1 |
| n-nitrosodiphenylamine | 25 | <10 | <10 | <1.9 | <1.9 | <1.9 | 72.4 | <1.9 | <1 |
| phenanthrene | <4 | <10 | <10 | <5.4 | <5.5 | <5.4 | <5.4 | <5.4 | <1 |
| pyrene | <5 | <10 | <10 | <1.9 | <1.9 | <1.9 | <1.9 | <1.9 | <1 |
| 1,2,4-trichlorobenzene | <7 | <10 | <10 | <1.9 | <1.9 | <1.9 | <1.9 | <1.9 | <1 |
| Sub Total 1 | 923 | 1534 | 493 | 1099.6 | 504.4 | 626.1 | 1267.4 | 359 | 1 |

Table E-3. Summary of Base/Neutral Extractable Compounds in Ground Water, Monsanto Company, W.G. Krummrich Plant, Sauget, Il

| Well Number: | GM-4B | GM-4B | GM-4B | GM-4B | GM-4B | GM-4B | GM-4C | GM-4C | GM-5 |
|---|---|---|---|---|---|---|---|---|---|
| Date: | 9/84 | 11/84 | 11/84* | 2/85 | 11/85 | 11/85* | 2/85 | 5/85 | 11/83 |
| Miscellaneous Base/Neutral Extractable Organic Compounds concentrations are in ug/L | | | | | | | | | |
| 2-nitroaniline | <25-30 | <10 | <10 | <10 | <10 | <10 | <10 | <10 | NA |
| 4-nitroaniline | <25-30 | <10 | <10 | <10 | <10 | <10 | <10 | <10 | NA |
| 2-nitrochlorobenzene | <10 | <10 | <10 | <10 | <10 | 19.9 | <10 | <10 | NA |
| 4-nitrochlorobenzene | <10 | <10 | <10 | <10 | <10 | 23.6 | <10 | <10 | NA |
| 2,4-and 3,4-dinitrochlorobenzene | <10 | <10 | <10 | <10 | <10 | <10 | <10 | <10 | NA |
| 4-nitrodiphenylamine | <10 | <10 | <10 | <10 | <10 | <10 | <10 | <10 | NA |
| triphenyl phosphate | <10 | <10 | <30 | <10 | <10 | <10 | <10 | <10 | NA |
| 2,3,7,8-tetrachloro-dibenzo-p-dioxin | NA | NA | NA | NA | NA | NA | NA | NA | NA |
| 2-nitrobiphenyl | NA | NA | NA | NA | NA | NA | NA | NA | NA |
| 4-nitrobiphenyl | NA | NA | NA | NA | NA | NA | NA | NA | NA |
| Sub Total 2 | 0 | 0 | 0 | 0 | 0 | 43.5 | 0 | 0 | NA |
| Total Base/Neutral Compounds Analyzed | 923 | 1534 | 493 | 1099.6 | 504.4 | 669.6 | 1267.4 | 359 | 1 |

Table E-3. Summary of Base/Neutral Extractable Compounds in Ground Water, Monsanto Company, W.G. Krummrich Plant, Sauget, Il

| Well Number: | GM-5 | GM-6A | GM-6A | GM-6A | GM-6B | GM-6B | GM-6B | GM-7 | GM-7 |
|---|---|---|---|---|---|---|---|---|---|
| Date: | 5/84 | 11/83 | 5/84 | 11/84 | 9/84** | 11/84 | 11/85 | 11/83 | 5/84 |
| USEPA Priority Pollutant Base/Neutral Extractable Organic Compounds concentrations are in ug/L | | | | | | | | | |
| acenaphthene | <1 | <1 | <1 | <10 | <4 | <10 | <1.9 | <1 | <1 |
| acenapthylene | <1 | <1 | <1 | <10 | <3 | <10 | <3.5 | <1 | <1 |
| anthracene | <1 | <1 | <1 | <10 | <4 | <10 | <1.9 | <1 | <1 |
| benzidine | <1 | <1 | <1 | <10 | <60 | <10 | <44 | <1 | <1 |
| benzo (a) anthracene | <1 | <1 | <1 | <10 | <9 | <10 | <7.8 | <1 | <1 |
| benzo (a) pyrene | <1 | <1 | <1 | <10 | <12 | <10 | <2.5 | <1 | <1 |
| benzo (b) fluoroanthene | <1 | <1 | <1 | <10 | <11 | <10 | <4.8 | <1 | <1 |
| benzo (ghi) perylene | <1 | <1 | <1 | <10 | <14 | <10 | <4.1 | <1 | <1 |
| benzo (k) fluoranthene | <1 | <1 | <1 | <10 | <11 | <10 | <3.5 | <1 | <1 |
| bis (2-chloroethoxy) methane | <1 | <1 | <1 | <10 | <4 | <10 | <5.3 | <1 | <1 |
| bis (2-chloroethyl) ether | <1 | <1 | <1 | <10 | <4 | <10 | <5.7 | <1 | <1 |
| bis (2-chloroisopropyl) ether | <1 | <1 | <1 | <10 | <3 | <10 | <5.7 | <1 | <1 |
| bis (2-ethylhexyl) phthalate | <1 | <1 | 5 | <10 | 12 | <10 | <10 | 1 | 2 |
| 4-bromophenyl phenyl ether | <1 | <1 | <1 | <10 | <16 | <10 | <1.9 | <1 | <1 |
| butyl benzyl phthalate | <1 | <1 | <1 | <10 | <13 | <10 | <10 | <1 | <1 |
| 2-chloronaphthalene | <1 | <1 | <1 | <10 | <4 | <10 | <1.9 | <1 | <1 |
| 4-chlorophenyl phenyl ether | <1 | <1 | <1 | <10 | <9 | <10 | <4.2 | <1 | <1 |
| chrysene | <1 | <1 | <1 | <10 | <9 | <10 | <2.5 | <1 | <1 |
| dibenzo (a,h) anthracene | <1 | <1 | <1 | <10 | <16 | <10 | <10 | <1 | <1 |
| 1,2-dichlorobenzene | <1 | <1 | <1 | <10 | 37 | 25 | 31.5 | <1 | <1 |
| 1,3-dichlorobenzene | <1 | <1 | <1 | <10 | <6 | <10 | 10 | <1 | <1 |
| 1,4-dichlorobenzene | <1 | <1 | <1 | <10 | 55 | 24 | 161 | <1 | <1 |
| 3,3-dichlorobenzidine | <1 | <1 | <1 | <10 | <161 | <10 | <17 | <1 | <1 |
| diethyl phthalate | 1 | <1 | 1 | <10 | <4 | <10 | <10 | <1 | 2 |
| dimethyl phthalate | <1 | <1 | <1 | <10 | <4 | <10 | <10 | <1 | <1 |
| di-n-butyl phthalate | 1 | 2 | 2 | <10 | 2 | <10 | <10 | 2 | 3 |
| 2,4-dinitrotoluene | <1 | <1 | <1 | <10 | <14 | <10 | <5.7 | <1 | <1 |
| 2,6-dinitrotoluene | <1 | <1 | <1 | <10 | <16 | <10 | <1.9 | <1 | <1 |
| di-n-octyl phthalate | <1 | <1 | <1 | <10 | <6 | <10 | <10 | <1 | <1 |
| 1,2-diphenylhydrazine | <1 | <1 | <1 | <10 | <10 | <10 | <10 | <1 | <1 |
| fluoranthene | <1 | <1 | <1 | <10 | <5 | <10 | <2.2 | <1 | <1 |
| fluorene | <1 | <1 | <1 | <10 | <4 | <10 | <1.9 | <1 | <1 |
| hexachlorobenzene | <1 | <1 | <1 | <10 | <15 | <10 | <1.9 | <1 | <1 |
| hexachlorobutadiene | <1 | <1 | <1 | <10 | <13 | <10 | <0.9 | <1 | <1 |
| hexachlorocyclopentadiene | <1 | <1 | <1 | <10 | <12 | <10 | <10 | <1 | <1 |
| hexachloroethane | <1 | <1 | <1 | <10 | <10 | <10 | <1.6 | <1 | <1 |
| indeno (1,2,3-c,d) pyrene | <1 | <1 | <1 | <10 | <7 | <10 | <4.7 | <1 | <1 |
| isophorone | <1 | <1 | <1 | <10 | <2 | <10 | <2.2 | <1 | <1 |
| naphthalene | <1 | <1 | <1 | <10 | <2 | <10 | <1.6 | <1 | <1 |
| nitrobenzene | <1 | <1 | <1 | <10 | <5 | <10 | <1.9 | <1 | <1 |
| n-nitrosodimethylamine | <1 | <1 | <1 | <10 | <10 | <10 | <10 | <1 | <1 |
| n-nitrosodi-n-propylamine | <1 | <1 | <1 | <10 | <6 | <10 | <10 | <1 | <1 |
| n-nitrosodiphenylamine | <1 | <1 | <1 | <10 | 15 | <10 | <1.9 | <1 | <1 |
| phenanthrene | 1 | <1 | <1 | <10 | <4 | <10 | <5.4 | <1 | <1 |
| pyrene | <1 | <1 | <1 | <10 | <5 | <10 | <1.9 | <1 | <1 |
| 1,2,4-trichlorobenzene | <1 | <1 | <1 | <10 | <7 | <10 | <1.9 | <1 | <1 |
| Sub Total 1 | 3 | 2 | 8 | 0 | 121 | 49 | 202.5 | 3 | 7 |

Table E-3. Summary of Base/Neutral Extractable Compounds in Ground Water, Monsanto Company, W.G. Krummrich Plant, Sauget, Il

| Well Number: | GM-5 | GM-6A | GM-6A | GM-6A | GM-6B | GM-6B | GM-6B | GM-7 | GM-7 |
|---|---|---|---|---|---|---|---|---|---|
| Date: | 5/84 | 11/83 | 5/84 | 11/84 | 9/84** | 11/84 | 11/85 | 11/83 | 5/84 |
| Miscellaneous Base/Neutral Extractable Organic Compounds concentrations are in ug/L | | | | | | | | | |
| 2-nitroaniline | NA | NA | NA | <10 | <25-30 | <10 | <10 | NA | NA |
| 4-nitroaniline | NA | NA | NA | <10 | <25-30 | <10 | <10 | NA | NA |
| 2-nitrochlorobenzene | NA | NA | NA | <10 | <10 | <10 | <10 | NA | NA |
| 4-nitrochlorobenzene | NA | NA | NA | <10 | <10 | <10 | <10 | NA | NA |
| 2,4-and 3,4-dinitrochlorobenzene | NA | NA | NA | <10 | <10 | <10 | <10 | NA | NA |
| 4-nitrodiphenylamine | NA | NA | NA | <10 | <10 | <10 | <10 | NA | NA |
| triphenyl phosphate | NA | NA | NA | <10 | <10 | <10 | <10 | NA | NA |
| 2,3,7,8-tetrachloro-dibenzo-p-dioxin | NA | NA | NA | NA | NA | NA | NA | NA | NA |
| 2-nitrobiphenyl | NA | NA | NA | NA | <10 | NA | NA | NA | NA |
| 4-nitrobiphenyl | NA | NA | NA | NA | <10 | NA | NA | NA | NA |
| Sub Total 2 | NA | NA | NA | 0 | 0 | 0 | 0 | NA | NA |
| Total Base/Neutral Compounds Analyzed | 3 | 2 | 8 | 0 | 121 | 49 | 202.5 | 3 | 7 |

Table E-3. Summary of Base/Neutral Extractable Compounds in Ground Water, Monsanto Company, W.G. Krummrich Plant, Sauget, Il

| Well Number: | GM-8 | GM-8 | GM-8 | GM-8 | GM-8 | GM-9A | GM-9A | GM-9B | GM-9B |
|---|---|---|---|---|---|---|---|---|---|
| Date: | 11/83 | 5/84 | 11/84 | 2/85 | 11/85 | 11/83 | 5/84 | 9/84** | 5/85 |
| USEPA Priority Pollutant Base/Neutral Extractable Organic Compounds concentrations are in ug/L | | | | | | | | | |
| acenaphthene | <1 | <1 | <10 | <1.9 | <2.0 | <1 | <1 | <4 | <1.9 |
| acenapthylene | <1 | <1 | <10 | <3.5 | <3.7 | <1 | <1 | <3 | <3.5 |
| anthracene | <1 | <1 | <10 | <1.9 | <2.0 | <1 | <1 | <4 | <1.9 |
| benzidine | <1 | <1 | <10 | <44 | <46 | <1 | <1 | <60 | <44 |
| benzo (a) anthracene | <1 | <1 | <10 | <7.8 | <8.2 | <1 | <1 | <9 | <7.8 |
| benzo (a) pyrene | <1 | <1 | <10 | <2.5 | <2.6 | <1 | <1 | <12 | <2.5 |
| benzo (b) fluoranthene | <1 | <1 | <10 | <4.8 | <5.1 | <1 | <1 | <11 | <4.8 |
| benzo (ghi) perylene | <1 | <1 | <10 | <4.1 | <4.3 | <1 | <1 | <14 | <4.1 |
| benzo (k) fluoranthene | <1 | <1 | <10 | <2.5 | <3.7 | <1 | <1 | <11 | <2.5 |
| bis (2-chloroethoxy) methane | <1 | <1 | <10 | <5.3 | <5.6 | <1 | <1 | <4 | <5.3 |
| bis (2-chloroethyl) ether | <1 | <1 | <10 | <5.7 | <6.0 | <1 | <1 | <4 | <5.7 |
| bis (2-chloroisopropyl) ether | <1 | <1 | <10 | <5.7 | <6.0 | <1 | <1 | <3 | <6 |
| bis (2-ethylhexyl) phthalate | 1 | 3 | <10 | <10 | <11 | <1 | 3 | 89 | <10 |
| 4-bromophenyl phenyl ether | <1 | <1 | <10 | <1.9 | <2 | <1 | <1 | <16 | <1.9 |
| butyl benzyl phthalate | <1 | <1 | <10 | <10 | <11 | <1 | 14 | <13 | <10 |
| 2-chloronaphthalene | <1 | <1 | <10 | <1.9 | <2 | <1 | <1 | <4 | <1.9 |
| 4-chlorophenyl phenyl ether | <1 | <1 | <10 | <4.2 | <4.4 | <1 | <1 | <9 | <4.2 |
| chrysene | <1 | <1 | <10 | <2.5 | <2.6 | <1 | <1 | <9 | <2.5 |
| dibenzo (a,h) anthracene | <1 | <1 | <10 | <2.5 | <11 | <1 | <1 | <16 | <2.5 |
| 1,2-dichlorobenzene | <1 | <1 | <10 | <1.9 | <2 | 33 | 30 | 30 | <1.9 |
| 1,3-dichlorobenzene | <1 | <1 | <10 | <1.9 | <2 | <1 | 2 | <6 | <1.9 |
| 1,4-dichlorobenzene | <1 | <1 | <10 | <4.4 | <4.6 | 38 | 40 | <5 | 0.5 |
| 3,3-dichlorobenzidine | <1 | <1 | <10 | <16.5 | <17 | <1 | <1 | <161 | <16.5 |
| diethyl phthalate | <1 | 1 | <10 | <10 | <11 | <1 | <1 | <4 | <10 |
| dimethyl phthalate | <1 | <1 | <10 | <10 | <11 | <1 | <1 | <4 | <10 |
| di-n-butyl phthalate | 1 | 3 | <10 | <10 | <11 | 1 | 2 | 4 | <10 |
| 2,4-dinitrotoluene | <1 | <1 | <10 | <5.7 | <6.0 | <1 | <1 | <14 | <5.7 |
| 2,6-dinitrotoluene | <1 | <1 | <10 | <1.9 | <2.0 | <1 | <1 | <16 | <1.9 |
| di-n-octyl phthalate | <1 | <1 | <10 | <10 | <11 | <1 | <1 | <6 | <10 |
| 1,2-diphenylhydrazine | <1 | <1 | <10 | <10 | <11 | <1 | <1 | <10 | <10 |
| fluoranthene | <1 | <1 | <10 | <2.2 | <2.3 | <1 | <1 | <5 | <2.2 |
| fluorene | <1 | <1 | <10 | <1.9 | <2 | <1 | <1 | <4 | <1.9 |
| hexachlorobenzene | <1 | <1 | <10 | <1.9 | <2 | <1 | <1 | <15 | <1.9 |
| hexachlorobutadiene | <1 | <1 | <10 | <0.9 | <1 | <1 | <1 | <13 | <0.9 |
| hexachlorocyclopentadiene | <1 | <1 | <10 | <10 | <11 | <1 | <1 | <12 | <10 |
| hexachloroethane | <1 | <1 | <10 | <1.6 | <1.7 | <1 | <1 | <10 | <1.6 |
| indeno (1,2,3-c,d) pyrene | <1 | <1 | <10 | <3.7 | <4.9 | <1 | <1 | <7 | <3.7 |
| isophorone | <1 | <1 | <10 | <2.2 | <2.3 | <1 | <1 | <2 | <2.2 |
| naphthalene | <1 | <1 | <10 | <1.6 | <1.7 | <1 | <1 | <2 | <1.6 |
| nitrobenzene | 8 | 1 | <10 | 2.2 | <2 | <1 | <1 | <5 | <1.9 |
| n-nitrosodimethylamine | <1 | <1 | <10 | <10 | <11 | <1 | <1 | <10 | <10 |
| n-nitrosodi-n-propylamine | <1 | <1 | <10 | <10 | <11 | <1 | <1 | <6 | <10 |
| n-nitrosodiphenylamine | <1 | <1 | <10 | <1.9 | <2 | <1 | <1 | <82 | <1.9 |
| phenanthrene | <1 | <1 | <10 | <5.4 | <5.7 | <1 | <1 | <4 | <5.4 |
| pyrene | <1 | <1 | <10 | <1.9 | <2 | <1 | <1 | <5 | <1.9 |
| 1,2,4-trichlorobenzene | <1 | <1 | <10 | <1.9 | <2 | <1 | <1 | <7 | <1.9 |
| Sub Total 1 | 10 | 8 | 0 | 2.2 | 0 | 72 | 91 | 123 | 0.5 |

Table E-3. Summary of Base/Neutral Extractable Compounds in Ground Water, Monsanto Company, W.G. Krummrich Plant, Sauget, Il

| Well Number: | GM-8 | GM-8 | GM-8 | GM-8 | GM-8 | GM-9A | GM-9A | GM-9B | GM-9B |
|---|---|---|---|---|---|---|---|---|---|
| Date: | 11/83 | 5/84 | 11/84 | 2/85 | 11/85 | 11/83 | 5/84 | 9/84** | 5/85 |
| Miscellaneous Base/Neutral Extractable Organic Compounds concentrations are in ug/L | | | | | | | | | |
| 2-nitroaniline | NA | NA | <10 | <10 | <11 | NA | NA | <25-30 | <10 |
| 4-nitroaniline | NA | NA | <10 | <10 | <11 | NA | NA | <25-30 | <10 |
| 2-nitrochlorobenzene | NA | NA | <10 | <10 | <10.5 | NA | NA | <10 | <10 |
| 4-nitrochlorobenzene | NA | NA | <10 | <10 | <10.5 | NA | NA | <10 | <10 |
| 2,4-and 3,4-dinitrochlorobenzene | NA | NA | <10 | <10 | <10.5 | NA | NA | <10 | <10 |
| 4-nitrodiphenylamine | NA | NA | <10 | <10 | <10.5 | NA | NA | <10 | <10 |
| triphenyl phosphate | NA | NA | <10 | <10 | <10.5 | NA | NA | <10 | <10 |
| 2,3,7,8-tetrachloro-dibenzo-p-dioxin | NA | NA | NA | NA | NA | NA | NA | NA | NA |
| 2-nitrobiphenyl | NA | NA | <25 | <25 | <10.5 | NA | NA | <10 | NA |
| 4-nitrobiphenyl | NA | NA | <25 | <25 | <10.5 | NA | NA | <10 | NA |
| Sub Total 2 | NA | NA | 0 | 0 | 0 | NA | NA | 0 | 0 |
| Total Base/Neutral Compounds Analyzed | 10 | 8 | 0 | 2.2 | 0 | 72 | 91 | 123 | 0.5 |

Table E-3. Summary of Base/Neutral Extractable Compounds in Ground Water, Monsanto Company, W.G. Krummrich Plant, Sauget, Il

| Well Number: | GM-9B | GM-9C | GM-9C | GM-9C | GM-10A | GM-10A | GM-10B | GM-10B | GM-10C |
|---|---|---|---|---|---|---|---|---|---|
| Date: | 11/85 | 9/84** | 5/85 | 11/85 | 11/83 | 5/84 | 2/85 | 5/85 | 2/85 |
| USEPA Priority Pollutant Base/Neutral Extractable Organic Compounds concentrations are in ug/L | | | | | | | | | |
| acenaphthene | <2.0 | <4 | 2.2 | <2.1 | <1 | <1 | <2.1 | <1.9 | <1.9 |
| acenapthylene | <3.7 | <3 | <3.5 | <3.8 | <1 | <1 | <3.8 | <3.5 | <3.5 |
| anthracene | <2.0 | <4 | <1.9 | <2.1 | <1 | <1 | <2.1 | <1.9 | <1.9 |
| benzidine | <46 | <60 | <44 | <48 | <1 | <1 | <48.4 | <44 | <44 |
| benzo (a) anthracene | <8.2 | <9 | <7.8 | <8.4 | <1 | <1 | <8.6 | <7.8 | <7.8 |
| benzo (a) pyrene | <2.6 | <12 | <2.5 | <2.7 | <1 | <1 | <2.8 | <2.5 | <2.5 |
| benzo (b) fluoroanthene | <5.1 | <11 | <4.8 | <5.2 | <1 | <1 | <5.3 | <4.8 | <4.8 |
| benzo (ghi) perylene | <4.3 | <14 | <4.1 | <4.4 | <1 | <1 | <4.5 | <4.1 | <4.1 |
| benzo (k) fluoranthene | <3.7 | <11 | <2.5 | <3.8 | <1 | <1 | <2.8 | <2.5 | <2.5 |
| bis (2-chloroethoxy) methane | <5.6 | <4 | <5.3 | <5.7 | <1 | <1 | <5.8 | <5.3 | <5.3 |
| bis (2-chloroethyl) ether | <6.0 | <4 | <5.7 | <6.2 | <1 | <1 | <6.3 | <5.7 | <5.7 |
| bis (2-chloroisopropyl) ether | <6.0 | <3 | <6.0 | <6.2 | <1 | <1 | <6.3 | <6.0 | <5.7 |
| bis (2-ethylhexyl) phthalate | <11 | 8 | <10 | <11 | <1 | 4 | <11 | <10 | <10 |
| 4-bromophenyl phenyl ether | <2 | <16 | <1.9 | <2.1 | <1 | <1 | <2.1 | <1.9 | <1.9 |
| butyl benzyl phthalate | <11 | <13 | <10 | <11 | 1 | <1 | <11 | <10 | <10 |
| 2-chloronaphthalene | <2 | <4 | <1.9 | <2.1 | <1 | <1 | <2.1 | <1.9 | <1.9 |
| 4-chlorophenyl phenyl ether | <4.4 | <9 | <4.2 | <4.5 | <1 | <1 | <4.6 | <4.2 | <4.2 |
| chrysene | <2.6 | <9 | <2.5 | <2.7 | <1 | <1 | <2.8 | <2.5 | <2.5 |
| dibenzo (a,h) anthracene | <11 | <16 | <2.5 | <11 | <1 | <1 | <2.8 | <2.5 | <2.5 |
| 1,2-dichlorobenzene | <2 | <5 | 5.0 | 4.4 | <1 | <1 | 55.7 | 13.5 | 4.9 |
| 1,3-dichlorobenzene | <2 | 64 | 2.4 | <2.1 | <1 | <1 | 156 | 34 | 4 |
| 1,4-dichlorobenzene | <4.6 | <5 | 49.9 | 50 | <1 | <1 | 1,080 | 188 | 22.1 |
| 3,3-dichlorobenzidine | <17 | <161 | <16.5 | <18 | <1 | <1 | <18.2 | <16.5 | <16.5 |
| diethyl phthalate | <11 | <4 | <10 | <11 | <1 | 1 | <11 | <10 | <10 |
| dimethyl phthalate | <11 | <4 | <10 | <11 | <1 | <1 | <11 | <10 | <10 |
| di-n-butyl phthalate | <11 | 3 | <10 | <11 | 1 | 3 | <11 | <10 | <10 |
| 2,4-dinitrotoluene | <6.0 | <14 | <5.7 | <6.2 | <1 | <1 | <6.3 | <5.7 | <5.7 |
| 2,6-dinitrotoluene | <2.0 | <16 | <1.9 | <2.1 | <1 | <1 | <2.1 | <1.9 | <1.9 |
| di-n-octyl phthalate | <11 | <6 | <10 | <11 | <1 | <1 | <11 | <10 | <10 |
| 1,2-diphenylhydrazine | <11 | <10 | <10 | <11 | <1 | <1 | <11 | <10 | <10 |
| fluoranthene | <2.3 | <5 | <2.2 | <2.4 | <1 | <1 | <2.4 | <2.2 | <2.2 |
| fluorene | <2 | <4 | <1.9 | <2.1 | <1 | <1 | <2.1 | <1.9 | <1.9 |
| hexachlorobenzene | <2 | <15 | <1.9 | <2.1 | <1 | <1 | <2.1 | <1.9 | <1.9 |
| hexachlorobutadiene | <0.95 | <13 | <0.9 | <0.9 | <1 | <1 | <1 | <0.9 | <0.9 |
| hexachlorocyclopentadiene | <11 | <12 | <10 | <11 | <1 | <1 | <10 | <10 | <10 |
| hexachloroethane | <1.7 | <10 | <1.6 | <1.7 | <1 | <1 | <1.8 | <1.6 | <1.6 |
| indeno (1,2,3-c,d) pyrene | <4.9 | <7 | <3.7 | <5.1 | <1 | <1 | <4.1 | <3.7 | <3.7 |
| isophorone | <2.3 | <2 | <2.2 | <2.4 | <1 | <1 | <2.4 | <2.2 | <2.2 |
| naphthalene | <1.7 | <2 | <1.6 | <1.7 | <1 | <1 | <1.8 | <1.6 | <1.6 |
| nitrobenzene | <2 | <5 | <1.9 | <2 | <1 | <1 | <2.1 | <1.9 | <1.9 |
| n-nitrosodimethylamine | <11 | <10 | <10 | <11 | <1 | <1 | <11 | <10 | <10 |
| n-nitrosodi-n-propylamine | <11 | <6 | <10 | <11 | <1 | <1 | <11 | <10 | <10 |
| n-nitrosodiphenylamine | <2 | <82 | <2.0 | <2.1 | <1 | <1 | 3.9 | <1.9 | <1.9 |
| phenanthrene | <5.7 | <4 | <5.4 | <5.8 | <1 | <1 | <5.9 | <5.4 | <5.4 |
| pyrene | <2 | <5 | <1.9 | <2.1 | <1 | <1 | <2.1 | <1.9 | <1.9 |
| 1,2,4-trichlorobenzene | <2 | <7 | <1.9 | <2.1 | <1 | <1 | <2.1 | <1.9 | <1.9 |
| Sub Total 1 | 0 | 75 | 59.5 | 54.5 | 2 | 8 | 1295.6 | 235.5 | 31 |

Table E-3. Summary of Base/Neutral Extractable Compounds in Ground Water, Monsanto Company, W.G. Krummrich Plant, Sauget, Il

| Well Number: | GM-9B | GM-9C | GM-9C | GM-9C | GM-10A | GM-10A | GM-10B | GM-10B | GM-10C |
|---|---|---|---|---|---|---|---|---|---|
| Date: | 11/85 | 9/84** | 5/85 | 11/85 | 11/83 | 5/84 | 2/85 | 5/85 | 2/85 |
| Miscellaneous Base/Neutral Extractable Organic Compounds concentrations are in ug/L | | | | | | | | | |
| 2-nitroaniline | <11 | <25-30 | <10 | <11 | NA | NA | <10 | <10 | <10 |
| 4-nitroaniline | <11 | <25-30 | <10 | <11 | NA | NA | <10 | <10 | <10 |
| 2-nitrochlorobenzene | <10.5 | <10 | <10 | <10.8 | NA | NA | <10 | <10 | <10 |
| 4-nitrochlorobenzene | <10.5 | <10 | <10 | <10.8 | NA | NA | <10 | <10 | <10 |
| 2,4-and 3,4-dinitrochlorobenzene | <10.5 | <10 | <10 | <10.8 | NA | NA | <10 | <10 | <10 |
| 4-nitrodiphenylamine | <10.5 | <10 | <10 | <10.8 | NA | NA | <10 | <10 | <10 |
| triphenyl phosphate | <10.5 | <10 | <10 | <10.8 | NA | NA | <10 | <10 | <10 |
| 2,3,7,8-tetrachloro-dibenzo-p-dioxin | NA | NA | NA | NA | NA | NA | NA | NA | NA |
| 2-nitrobiphenyl | NA | <10 | NA | NA | NA | NA | NA | NA | NA |
| 4-nitrobiphenyl | NA | <10 | NA | NA | NA | NA | NA | NA | NA |
| Sub Total 2 | 0 | 0 | 0 | 0 | NA | NA | 0 | 0 | 0 |
| Total Base/Neutral Compounds Analyzed | 0 | 75 | 59.5 | 54.5 | 2 | 8 | 1295.6 | 235.5 | 31 |

Table E-3. Summary of Base/Neutral Extractable Compounds in Ground Water, Monsanto Company, W.G. Krummrich Plant, Sauget, Il

| Well Number: | GM-10C | GM-11 | GM-11 | GM-12A | GM-12A | GM-12A | GM-12A | GM-12A | GM-12A |
|---|---|---|---|---|---|---|---|---|---|
| Date: | 5/85 | 11/83 | 5/84 | 11/83 | 11/83* | 5/84 | 5/84* | 11/84 | 11/84* |
| USEPA Priority Pollutant Base/Neutral Extractable Organic Compounds concentrations are in ug/L | | | | | | | | | |
| acenaphthene | <1.9 | <1 | <1 | <1 | <1 | <1 | <1 | <10 | <10 |
| acenapthylene | <3.5 | <1 | <1 | <1 | <1 | <1 | <1 | <10 | <10 |
| anthracene | <1.9 | <1 | <1 | <1 | <1 | <1 | <1 | <10 | <10 |
| benzidine | <44 | <1 | <1 | <1 | <1 | <1 | <1 | <10 | <10 |
| benzo (a) anthracene | <7.8 | <1 | <1 | <1 | <1 | <1 | <1 | <10 | <10 |
| benzo (a) pyrene | <2.5 | <1 | <1 | <1 | <1 | <1 | <1 | <10 | <10 |
| benzo (b) fluoroanthene | <4.8 | <1 | <1 | <1 | <1 | <1 | <1 | <10 | <10 |
| benzo (ghi) perylene | <4.1 | <1 | <1 | <1 | <1 | <1 | <1 | <10 | <10 |
| benzo (k) fluoranthene | <2.5 | <1 | <1 | <1 | <1 | <1 | <1 | <10 | <10 |
| bis (2-chloroethoxy) methane | <5.3 | <1 | <1 | <1 | <1 | <1 | <1 | <10 | <10 |
| bis (2-chloroethyl) ether | <5.7 | <1 | <1 | <1 | <1 | <1 | <1 | <10 | <10 |
| bis (2-chloroisopropyl) ether | <6.0 | <1 | <1 | <1 | <1 | <1 | <1 | <10 | <10 |
| bis (2-ethylhexyl) phthalate | <10 | <1 | <1 | <1 | <1 | 211 | 2 | <10 | <10 |
| 4-bromophenyl phenyl ether | <1.9 | <1 | <1 | <1 | <1 | <1 | <1 | <10 | <10 |
| butyl benzyl phthalate | <10 | <1 | 3 | <1. | <1 | <1 | <1 | <10 | <10 |
| 2-chloronaphthalene | <1.9 | <1 | <1 | <1 | <1 | <1 | <1 | <10 | <10 |
| 4-chlorophenyl phenyl ether | <4.2 | <1 | <1 | <1 | <1 | <1 | <1 | <10 | <10 |
| chrysene | <2.5 | <1 | <1 | <1 | <1 | <1 | <1 | <10 | <10 |
| dibenzo (a,h) anthracene | <2.5 | <1 | <1 | <1 | <1 | <1 | <1 | <10 | <10 |
| 1,2-dichlorobenzene | 4.3 | <1 | <1 | 366 | 357 | 344 | 364 | 539 | 473 |
| 1,3-dichlorobenzene | 3 | <1 | <1 | <1 | <1 | <1 | <1 | <10 | <10 |
| 1,4-dichlorobenzene | 15.3 | <1 | <1 | <1 | <1 | <1 | 1 | <10 | <10 |
| 3,3-dichlorobenzidine | <16.5 | <1 | <1 | <1 | <1 | <1 | <1 | <10 | <10 |
| diethyl phthalate | <10 | <1 | 1 | <1 | <1 | 2 | 2 | <10 | <10 |
| dimethyl phthalate | <10 | <1 | <1 | <1 | <1 | <1 | <1 | <10 | <10 |
| di-n-butyl phthalate | <10 | 1 | 2 | 2 | 1 | 3 | 3 | <10 | <10 |
| 2,4-dinitrotoluene | <5.7 | <1 | <1 | <1 | <1 | <1 | <1 | <10 | <10 |
| 2,6-dinitrotoluene | <1.9 | <1 | <1 | <1 | <1 | <1 | <1 | <10 | <10 |
| di-n-octyl phthalate | <10 | <1 | <1 | <1 | <1 | <1 | <1 | <10 | <10 |
| 1,2-diphenylhydrazine | <10 | <1 | <1 | <1 | <1 | <1 | <1 | <10 | <10 |
| fluoranthene | <2.2 | <1 | <1 | <1 | <1 | <1 | <1 | <10 | <10 |
| fluorene | <1.9 | <1 | <1 | <1 | <1 | <1 | <1 | <10 | <10 |
| hexachlorobenzene | <1.9 | <1 | <1 | <1 | <1 | <1 | <1 | <10 | <10 |
| hexachlorobutadiene | <0.9 | <1 | <1 | <1 | <1 | <1 | <1 | <10 | <10 |
| hexachlorocyclopentadiene | <10 | <1 | <1 | <1 | <1 | <1 | <1 | <10 | <10 |
| hexachloroethane | <1.6 | <1 | <1 | <1 | <1 | <1 | <1 | <10 | <10 |
| indeno (1,2,3-c,d) pyrene | <3.7 | <1 | <1 | <1 | <1 | <1 | <1 | <10 | <10 |
| isophorone | <2.2 | <1 | <1 | <1 | <1 | <1 | <1 | <10 | <10 |
| naphthalene | <1.6 | <1 | <1 | <1 | <1 | 4 | 4 | <10 | <10 |
| nitrobenzene | <1.9 | <1 | <1 | <1 | <1 | <1 | <1 | <10 | <10 |
| n-nitrosodimethylamine | <10 | <1 | <1 | <1 | <1 | <1 | <1 | <10 | <10 |
| n-nitrosodi-n-propylamine | <10 | <1 | <1 | <1 | <1 | <1 | <1 | <10 | <10 |
| n-nitrosodiphenylamine | <1.9 | <1 | <1 | <1 | <1 | <1 | <1 | <10 | <10 |
| phenanthrene | <5.4 | <1 | <1 | <1 | <1 | <1 | <1 | <10 | <10 |
| pyrene | <1.9 | <1 | <1 | <1 | <1 | <1 | <1 | <10 | <10 |
| 1,2,4-trichlorobenzene | <1.9 | <1 | <1 | <1 | <1 | <1 | <1 | <10 | <10 |
| Sub Total 1 | 22.6 | 1 | 6 | 368 | 358 | 564 | 376 | 539 | 473 |

Table E-3. Summary of Base/Neutral Extractable Compounds in Ground Water, Monsanto Company, W.G. Krummrich Plant, Sauget, Il

| Well Number: | GM-10C | GM-11 | GM-11 | GM-12A | GM-12A | GM-12A | GM-12A | GM-12A | GM-12A |
|---|---|---|---|---|---|---|---|---|---|
| Date: | 5/85 | 11/83 | 5/84 | 11/83 | 11/83* | 5/84 | 5/84* | 11/84 | 11/84* |
| Miscellaneous Base/Neutral Extractable Organic Compounds concentrations are in ug/L | | | | | | | | | |
| 2-nitroaniline | <10 | NA | NA | NA | NA | NA | NA | <10 | <10 |
| 4-nitroaniline | <10 | NA | NA | NA | NA | NA | NA | <10 | <10 |
| 2-nitrochlorobenzene | <10 | NA | NA | NA | NA | NA | NA | <10 | <10 |
| 4-nitrochlorobenzene | <10 | NA | NA | NA | NA | NA | NA | <10 | <10 |
| 2,4-and 3,4-dinitrochlorobenzene | <10 | NA | NA | NA | NA | NA | NA | <10 | <10 |
| 4-nitrodiphenylamine | <10 | NA | NA | NA | NA | NA | NA | <10 | <10 |
| triphenyl phosphate | <10 | NA | NA | NA | NA | NA | NA | <10 | <10 |
| 2,3,7,8-tetrachloro-dibenzo-p-dioxin | NA | NA | NA | NA | NA | NA | NA | NA | NA |
| 2-nitrobiphenyl | NA | NA | NA | NA | NA | NA | NA | NA | NA |
| 4-nitrobiphenyl | NA | NA | NA | NA | NA | NA | NA | NA | NA |
| Sub Total 2 | 0 | NA | NA | NA | NA | NA | NA | 0 | 0 |
| Total Base/Neutral Compounds Analyzed | 22.6 | 1 | 6 | 368 | 358 | 564 | 376 | 539 | 473 |

Table E-3. Summary of Base/Neutral Extractable Compounds in Ground Water, Monsanto Company, W.G. Krummrich Plant, Sauget, Il

| Well Number: | GM-12A | GM-12A | GM-12A | GM-12A | GM-12A | GM-12A | GM-12A | GM-12A | GM-12B |
|---|---|---|---|---|---|---|---|---|---|
| Date: | 2/85 | 2/85* | 5/85 | 5/85* | 11/85 | 11/85* | 2/86 | 2/86* | 9/84** |
| USEPA Priority Pollutant Base/Neutral Extractable Organic Compounds concentrations are in ug/L | | | | | | | | | |
| acenaphthene | <1.9 | <1.9 | <1.9 | <1.9 | <2.0 | <2.0 | <2.0 | <1.9 | <4 |
| acenapthylene | <3.5 | <3.5 | <3.5 | <3.5 | <3.7 | <3.7 | <3.7 | <3.5 | <3 |
| anthracene | <1.9 | <1.9 | <1.9 | <1.9 | <2.0 | <2.0 | <2.0 | <1.9 | <4 |
| benzidine | <44 | <44 | <44 | <44 | <46 | <46 | <47 | <44 | <60 |
| benzo (a) anthracene | <7.8 | <7.8 | <7.8 | <7.8 | <8.2 | <8.2 | <8.3 | <7.9 | <9 |
| benzo (a) pyrene | <2.5 | <2.5 | <2.5 | <2.5 | <2.6 | <2.6 | <2.7 | <2.5 | <12 |
| benzo (b) fluoroanthene | <4.8 | <4.8 | <4.8 | <4.8 | <5.1 | <5.1 | <5.1 | <4.8 | <11 |
| benzo (ghi) perylene | <4.1 | <4.1 | <4.1 | <4.1 | <4.3 | <4.3 | <4.4 | <4.1 | <14 |
| benzo (k) fluoranthene | <2.5 | <2.5 | <2.5 | <2.5 | <3.7 | <3.7 | <3.7 | <3.5 | <11 |
| bis (2-chloroethoxy) methane | <5.3 | <5.3 | <5.3 | <5.3 | <5.6 | <5.6 | <5.6 | <5.4 | <4 |
| bis (2-chloroethyl) ether | <5.7 | <5.7 | <5.7 | <5.7 | <6.0 | <6.0 | <6.1 | <5.8 | <4 |
| bis (2-chloroisopropyl) ether | <5.7 | <5.7 | <5.7 | <5.7 | <6.0 | <6.0 | <6.1 | <5.8 | <3 |
| bis (2-ethylhexyl) phthalate | <10 | 434 | <10 | 13.8 | <11 | <11 | <11 | <10 | <10 |
| 4-bromophenyl phenyl ether | <1.9 | <1.9 | <1.9 | <1.9 | <2 | <2 | <2 | <1.9 | <16 |
| butyl benzyl phthalate | <10 | <10 | <10 | <10 | <11 | <11 | <11 | <10 | <13 |
| 2-chloronaphthalene | <1.9 | <1.9 | <1.9 | <1.9 | <2 | <2 | <2 | <1.9 | <4 |
| 4-chlorophenyl phenyl ether | <4.2 | <4.2 | <4.2 | <4.2 | <4.4 | <4.4 | <4.5 | <4.2 | <9 |
| chrysene | <2.5 | <2.5 | <2.5 | <2.5 | <2.6 | <2.6 | <2.7 | <2.5 | <9 |
| dibenzo (a,h) anthracene | <2.5 | <2.5 | <2.5 | <2.5 | <11 | <11 | <11 | <10 | <16 |
| 1,2-dichlorobenzene | 295 | 213 | 164.4 | 201 | 235 | 250 | 248 | 255 | 3 |
| 1,3-dichlorobenzene | <1.9 | <1.9 | <1.9 | <1.9 | <2 | <2 | <2 | <1.9 | <6 |
| 1,4-dichlorobenzene | <4.4 | <4.4 | <4.4 | <4.4 | <4.6 | <4.6 | <4.7 | <4.4 | <5 |
| 3,3-dichlorobenzidine | <16.5 | <16.5 | <16.5 | <16.5 | <17 | <17 | <18 | <17 | <161 |
| diethyl phthalate | <10 | <10 | <10 | <10 | <11 | <11 | <11 | <10 | 2 |
| dimethyl phthalate | <10 | <10 | <10 | <10 | <11 | <11 | <11 | <10 | <4 |
| di-n-butyl phthalate | <10 | <10 | <10 | <10 | <11 | <11 | <11 | <10 | <3 |
| 2,4-dinitrotoluene | <5.7 | <5.7 | <5.7 | <5.7 | <6.0 | <6.0 | <6.1 | <5.8 | <14 |
| 2,6-dinitrotoluene | <1.9 | <1.9 | <1.9 | <1.9 | <2.0 | <2.0 | <2.0 | <1.9 | <16 |
| di-n-octyl phthalate | <10 | <10 | <10 | <10 | <11 | <11 | <11 | <10 | <6 |
| 1,2-diphenylhydrazine | <10 | <10 | <10 | <10 | <11 | <11 | <11 | <10 | <10 |
| fluoranthene | <2.2 | <2.2 | <2.2 | <2.2 | <2.3 | <2.3 | <2.3 | <2.2 | <5 |
| fluorene | <1.9 | <1.9 | <1.9 | <1.9 | <2.0 | <2.0 | <2.0 | <1.9 | <4 |
| hexachlorobenzene | <1.9 | <1.9 | <1.9 | <1.9 | <2.0 | <2.0 | <2.0 | <1.9 | <15 |
| hexachlorobutadiene | <0.9 | <0.9 | <0.9 | <0.9 | <0.95 | <0.95 | <1 | <0.9 | <13 |
| hexachlorocyclopentadiene | <10 | <10 | <10 | <10 | <11 | <11 | <11 | <10 | <12 |
| hexachloroethane | <1.6 | <1.6 | <1.6 | <1.6 | <1.7 | <1.7 | <1.7 | <1.6 | <10 |
| indeno (1,2,3-c,d) pyrene | <3.7 | <3.7 | <3.7 | <3.7 | <4.9 | <4.9 | <5 | <4.7 | <7 |
| isophorone | <2.2 | <2.2 | <2.2 | <2.2 | <2.3 | <2.3 | <2.3 | <2.2 | <2 |
| naphthalene | 1.8 | 1.9 | 1.8 | 2.3 | <1.7 | <1.7 | <1.7 | <1.6 | <2 |
| nitrobenzene | <1.9 | <1.9 | <1.9 | <1.9 | <2.0 | <2.0 | <2.0 | <1.9 | <5 |
| n-nitrosodimethylamine | <10 | <10 | <10 | <10 | <11 | <11 | <11 | <10 | <10 |
| n-nitrosodi-n-propylamine | <10 | <10 | <10 | <10 | <11 | <11 | <11 | <10 | <6 |
| n-nitrosodiphenylamine | <1.9 | <1.9 | <1.9 | <1.9 | <2.0 | <2.0 | <2.0 | <1.9 | <82 |
| phenanthrene | <5.4 | <5.4 | <5.4 | <5.4 | <5.7 | <5.7 | <5.7 | <5.5 | <4 |
| pyrene | <1.9 | <1.9 | <1.9 | <1.9 | <2.0 | <2.0 | <2.0 | <1.9 | <5 |
| 1,2,4-trichlorobenzene | <1.9 | <1.9 | <1.9 | <1.9 | <2.0 | <2.0 | <2.0 | <1.9 | 2 |
| Sub Total 1 | 296.8 | 648.9 | 166.2 | 217.1 | 235 | 250 | 248 | 255 | 7 |

Table E-3. Summary of Base/Neutral Extractable Compounds in Ground Water, Monsanto Company, W.G. Krummrich Plant, Sauget, Il

| Well Number: | GM-12A | GM-12A | GM-12A | GM-12A | GM-12A | GM-12A | GM-12A | GM-12A | GM-12B |
|---|---|---|---|---|---|---|---|---|---|
| Date: | 2/85 | 2/85* | 5/85 | 5/85* | 11/85 | 11/85* | 2/86 | 2/86* | 9/84** |
| Miscellaneous Base/Neutral Extractable Organic Compounds concentrations are in ug/L | | | | | | | | | |
| 2-nitroaniline | <10 | <10 | <10 | <10 | <11 | <11 | <11 | <10 | <25-30 |
| 4-nitroaniline | <10 | <10 | <10 | <10 | <11 | <11 | <11 | <10 | <25-30 |
| 2-nitrochlorobenzene | <10 | <10 | <10 | <10 | <10.5 | <10.5 | <11 | <10 | <10 |
| 4-nitrochlorobenzene | <10 | <10 | <10 | <10 | <10.5 | <10.5 | <11 | <10 | <10 |
| 2,4-and 3,4-dinitrochlorobenzene | <10 | <10 | <10 | <10 | <10.5 | <10.5 | <11 | <10 | <10 |
| 4-nitrodiphenylamine | <10 | <10 | <10 | <10 | <10.5 | <10.5 | <11 | <10 | <10 |
| triphenyl phosphate | <10 | <10 | <10 | <10 | <10.5 | <10.5 | <11 | <10 | <10 |
| 2,3,7,8-tetrachloro-dibenzo-p-dioxin | NA | NA | NA | NA | NA | NA | NA | NA | NA |
| 2-nitrobiphenyl | NA | NA | NA | NA | NA | NA | NA | NA | <10 |
| 4-nitrobiphenyl | NA | NA | NA | NA | NA | NA | NA | NA | <10 |
| Sub Total 2 | 0 | 0 | 0 | 0 | 0 | 0 | 0 | 0 | 0 |
| Total Base/Neutral Compounds Analyzed | 296.8 | 648.9 | 166.2 | 217.1 | 235 | 250 | 248 | 255 | 7 |

Table E-3. Summary of Base/Neutral Extractable Compounds in Ground Water, Monsanto Company, W.G. Krummrich Plant, Sauget, Il

| Well Number: | GM-12B | GM-12B | GM-12C | GM-12C | GM-12C | GM-12C | GM-13 | GM-13 | GM-13 |
|---|---|---|---|---|---|---|---|---|---|
| Date: | 11/84 | 11/85 | 2/85 | 2/85* | 5/85 | 5/85* | 9/84** | 11/85 | 2/86 |
| USEPA Priority Pollutant Base/Neutral Extractable Organic Compounds concentrations are in ug/L | | | | | | | | | |
| acenaphthene | <10 | <2.0 | <1.9 | <1.9 | <1.9 | <1.9 | <4 | <42 | <100 |
| acenapthylene | <10 | <3.7 | <3.5 | <3.5 | <3.5 | <3.5 | <3 | <77 | <180 |
| anthracene | <10 | <2.0 | <1.9 | <1.9 | <1.9 | <1.9 | <4 | <42 | <100 |
| benzidine | <10 | <46 | <44 | <44 | <44 | <44 | <60 | <970 | <2300 |
| benzo (a) anthracene | <10 | <8.2 | <7.8 | <7.8 | <7.8 | <7.8 | <9 | <170 | <410 |
| benzo (a) pyrene | <10 | <2.6 | <2.5 | <2.5 | <2.5 | <2.5 | <12 | <55 | <130 |
| benzo (b) fluoroanthene | <10 | <5.1 | <4.8 | <4.8 | <4.8 | <4.8 | <11 | <110 | <250 |
| benzo (ghi) perylene | <10 | <4.3 | <4.1 | <4.1 | <4.1 | <4.1 | <14 | <90 | <220 |
| benzo (k) fluoranthene | <10 | <3.7 | <2.5 | <2.5 | <2.5 | <2.5 | <11 | <77 | <180 |
| bis (2-chloroethoxy) methane | <10 | <5.6 | <5.3 | <5.3 | <5.3 | <5.3 | <4 | <120 | <280 |
| bis (2-chloroethyl) ether | <10 | <6.0 | <5.7 | <5.7 | <5.7 | <5.7 | <4 | <130 | <300 |
| bis (2-chloroisopropyl) ether | <10 | <6.0 | <5.7 | <5.7 | <5.7 | <5.7 | <3 | <130 | <300 |
| bis (2-ethylhexyl) phthalate | 10 | <11 | <10 | <10 | <10 | <10 | <10 | <220 | <530 |
| 4-bromophenyl phenyl ether | <10 | <2 | <1.9 | <1.9 | <1.9 | <1.9 | <16 | <42 | <100 |
| butyl benzyl phthalate | <10 | <11 | <10 | <10 | <10 | <10 | <13 | <220 | <530 |
| 2-chloronaphthalene | <10 | <2 | <1.9 | <1.9 | <1.9 | <1.9 | <4 | <42 | <100 |
| 4-chlorophenyl phenyl ether | <10 | <4.4 | <4.2 | <4.2 | <4.2 | <4.2 | <9 | <92 | <220 |
| chrysene | <10 | <2.6 | <2.5 | <2.5 | <2.5 | <2.5 | <9 | <55 | <130 |
| dibenzo (a,h) anthracene | <10 | <11 | <2.5 | <2.5 | <2.5 | <2.5 | <16 | <220 | <530 |
| 1,2-dichlorobenzene | <10 | 74.2 | 124 | 97.4 | 54 | 49.7 | 347 | 3,630 | 4,020 |
| 1,3-dichlorobenzene | <10 | 27.8 | <2 | <1.9 | <1.9 | <1.9 | <6 | 97.3 | 126 |
| 1,4-dichlorobenzene | <10 | 27.1 | <4 | <4.4 | <4.4 | <4.4 | 31 | 1,310 | 2,260 |
| 3,3-dichlorobenzidine | <10 | <17 | <16.5 | <16.5 | <16.5 | <16.5 | <161 | <360 | <870 |
| diethyl phthalate | <10 | <11 | <10 | <10 | <10 | <10 | <4 | <220 | <530 |
| dimethyl phthalate | <10 | <11 | <10 | <10 | <10 | <10 | <4 | <220 | <530 |
| di-n-butyl phthalate | <10 | <11 | <10 | <10 | <10 | <10 | <3 | <220 | <530 |
| 2,4-dinitrotoluene | <10 | <6.0 | <5.7 | <5.7 | <5.7 | <5.7 | <14 | <130 | <300 |
| 2,6-dinitrotoluene | <10 | <2.0 | <1.9 | <1.9 | <1.9 | <1.9 | <16 | <42 | <100 |
| di-n-octyl phthalate | <10 | <11 | <10 | <10 | <10 | <10 | <6 | <220 | <530 |
| 1,2-diphenylhydrazine | <10 | <11 | <10 | <10 | <10 | <10 | <10 | <220 | <530 |
| fluoranthene | <10 | <2.3 | <2.2 | <2.2 | <2.2 | <2.2 | <5 | <48 | <120 |
| fluorene | <10 | <2.0 | <1.9 | <1.9 | <1.9 | <1.9 | <4 | <42 | <100 |
| hexachlorobenzene | <10 | <2.0 | <1.9 | <1.9 | <1.9 | <1.9 | <15 | <42 | <100 |
| hexachlorobutadiene | <10 | <1 | <0.9 | <0.9 | <0.9 | <0.9 | <13 | <20 | <47 |
| hexachlorocyclopentadiene | <10 | <11 | <10 | <10 | <10 | <10 | <12 | <220 | <530 |
| hexachloroethane | <10 | <1.7 | <1.6 | <1.6 | <1.6 | <1.6 | <10 | <35 | <84 |
| indeno (1,2,3-c,d) pyrene | <10 | <4.9 | <3.7 | <3.7 | <3.7 | <3.7 | 11 | <100 | <250 |
| isophorone | <10 | <2.3 | <2.2 | <2.2 | <2.2 | <2.2 | <2 | <48 | <120 |
| naphthalene | <10 | <1.7 | 4.1 | 3.1 | <1.6 | 1.8 | <2 | <35 | <84 |
| nitrobenzene | <10 | <2.0 | <1.9 | <1.9 | <1.9 | <1.9 | <5 | <42 | <100 |
| n-nitrosodimethylamine | <10 | <11 | <10 | <10 | <10 | <10 | <10 | <220 | <530 |
| n-nitrosodi-n-propylamine | <10 | <11 | <10 | <10 | <10 | <10 | <6 | <220 | <530 |
| n-nitrosodiphenylamine | <10 | <2.0 | <1.9 | <1.9 | <1.9 | <1.9 | 18 | <42 | <100 |
| phenanthrene | <10 | <5.7 | <5.4 | <5.4 | <5.4 | <5.4 | <4 | <120 | <280 |
| pyrene | <10 | <2.0 | <1.9 | <1.9 | <1.9 | <1.9 | <5 | <42 | <100 |
| 1,2,4-trichlorobenzene | <10 | <2.0 | <1.9 | <1.9 | <1.9 | <1.9 | 18 | <42 | <100 |
| Sub Total 1 | 10 | 129.1 | 128.1 | 100.5 | 54 | 51.5 | 425 | 5037.3 | 6406 |

Table E-3. Summary of Base/Neutral Extractable Compounds in Ground Water, Monsanto Company, W.G. Krummrich Plant, Sauget, Il

| Well Number: | GM-12B | GM-12B | GM-12C | GM-12C | GM-12C | GM-12C | GM-13 | GM-13 | GM-13 |
|---|---|---|---|---|---|---|---|---|---|
| Date: | 11/84 | 11/85 | 2/85 | 2/85* | 5/85 | 5/85* | 9/84** | 11/85 | 2/86 |
| Miscellaneous Base/Neutral Extractable Organic Compounds concentrations are in ug/L | | | | | | | | | |
| 2-nitroaniline | <10 | 21.5 | <10 | <10 | <10 | <10 | <25-30 | 771 | <530 |
| 4-nitroaniline | <10 | <11 | <10 | <10 | <10 | <10 | <25-30 | 346 | <530 |
| 2-nitrochlorobenzene | <10 | <10.5 | <10 | <10 | <10 | <10 | <10 | <220 | <530 |
| 4-nitrochlorobenzene | <10 | 23.7 | <10 | <10 | <10 | <10 | <10 | 1,290 | <530 |
| 2,4-and 3,4-dinitrochlorobenzene | <10 | <10.5 | <10 | <10 | <10 | <10 | <10 | <220 | <530 |
| 4-nitrodiphenylamine | <10 | <10.5 | <10 | <10 | <10 | <10 | <10 | <220 | <530 |
| triphenyl phosphate | <10 | <10.5 | <10 | <10 | <10 | <10 | <10 | <220 | <530 |
| 2,3,7,8-tetrachloro-dibenzo-p-dioxin | NA | NA | NA | NA | NA | NA | NA | NA | NA |
| 2-nitrobiphenyl | NA | NA | NA | NA | NA | NA | <10 | NA | NA |
| 4-nitrobiphenyl | NA | NA | NA | NA | NA | NA | <10 | NA | NA |
| Sub Total 2 | 0 | 45.2 | 0 | 0 | 0 | 0 | 0 | 2407 | 0 |
| Total Base/Neutral Compounds Analyzed | 10 | 174.3 | 128.1 | 100.5 | 54 | 51.5 | 425 | 7444.3 | 6406 |

Table E-3. Summary of Base/Neutral Extractable Compounds in Ground Water, Monsanto Company, W.G. Krummrich Plant, Sauget, Il

| Well Number: | GM-14 | GM-15 | GM-16A | GM-16A | GM-16A | GM-16B | GM-16B | GM-16B | GM-17A |
|---|---|---|---|---|---|---|---|---|---|
| Date: | 9/84** | 9/84** | 9/84** | 5/85 | 11/85 | 9/84** | 5/85 | 11/85 | 9/84 |
| USEPA Priority Pollutant Base/Neutral Extractable Organic Compounds concentrations are in ug/L | | | | | | | | | |
| acenaphthene | NA | <4 | <4 | <1.9 | <1.9 | <4 | 1.9 | <2.0 | <4 |
| acenapthylene | NA | <3 | <3 | <3.5 | <3.6 | <3 | <3.5 | <3.8 | <3 |
| anthracene | NA | <4 | <4 | <1.9 | <1.9 | <4 | <1.9 | <2.0 | <4 |
| benzidine | NA | <60 | <60 | <44 | <45 | <60 | <44 | <47 | <60 |
| benzo (a) anthracene | NA | <9 | <9 | <7.8 | <8.0 | <9 | <7.8 | <8.4 | <9 |
| benzo (a) pyrene | NA | <12 | <12 | <2.5 | <2.6 | <12 | <2.5 | <2.7 | <12 |
| benzo (b) fluoroanthene | NA | <11 | <11 | <4.8 | <4.9 | <11 | <4.8 | <5.2 | <11 |
| benzo (ghi) perylene | NA | <14 | <14 | <4.1 | <4.2 | <14 | <4.1 | <4.4 | <14 |
| benzo (k) fluoranthene | NA | <11 | <11 | <2.5 | <3.6 | <11 | <2.5 | <3.8 | <11 |
| bis (2-chloroethoxy) methane | NA | <4 | <4 | <5.3 | <5.4 | <4 | <5.3 | <5.7 | <4 |
| bis (2-chloroethyl) ether | NA | <4 | <4 | <5.7 | <5.8 | <4 | <5.7 | <6.1 | <4 |
| bis (2-chloroisopropyl) ether | NA | <3 | <3 | <6.0 | <5.8 | <3 | <5.7 | <6.1 | <3 |
| bis (2-ethylhexyl) phthalate | NA | <10 | 6 | <10 | <10 | 8 | <10 | 24.7 | 2 |
| 4-bromophenyl phenyl ether | NA | <16 | <16 | <1.9 | <1.9 | <16 | <1.9 | <2 | <16 |
| butyl benzyl phthalate | NA | <13 | <13 | <10 | <10 | <13 | <10 | <11 | <13 |
| 2-chloronaphthalene | NA | <4 | <4 | <1.9 | <1.9 | <4 | <1.9 | <2 | <4 |
| 4-chlorophenyl phenyl ether | NA | <9 | <9 | <4.2 | <4.3 | <9 | <4.2 | <4.5 | <9 |
| chrysene | NA | <9 | <9 | <2.5 | <2.6 | <9 | <2.5 | <2.7 | <9 |
| dibenzo (a,h) anthracene | NA | <16 | <16 | <2.5 | <10 | <16 | <2.5 | <11 | <16 |
| 1,2-dichlorobenzene | NA | 185 | <5 | <1.9 | <1.9 | <5 | <1.9 | <2 | <5 |
| 1,3-dichlorobenzene | NA | 35 | <6 | <1.9 | <1.9 | <6 | <1.9 | <2 | <6 |
| 1,4-dichlorobenzene | NA | <5 | <5 | <4.4 | <4.5 | <5 | <4.4 | <4.7 | 6 |
| 3,3-dichlorobenzidine | NA | <161 | <161 | <16.5 | <17 | <161 | <16.5 | <18 | <161 |
| diethyl phthalate | NA | 1 | <4 | <10 | <10 | <4 | <10 | <11 | <4 |
| dimethyl phthalate | NA | <4 | <4 | <10 | <10 | <4 | <10 | <11 | <4 |
| di-n-butyl phthalate | NA | 3 | 3 | <10 | <10 | 2 | <10 | <11 | 5 |
| 2,4-dinitrotoluene | NA | <14 | <14 | <5.7 | <5.8 | <14 | <5.7 | <6.1 | <14 |
| 2,6-dinitrotoluene | NA | <16 | <16 | <1.9 | <1.9 | <16 | <1.9 | <2.0 | <16 |
| di-n-octyl phthalate | NA | <6 | <6 | <10 | <10 | <6 | <10 | <11 | <6 |
| 1,2-diphenylhydrazine | NA | <10 | <10 | <10 | <10 | <10 | <10 | <11 | <10 |
| fluoranthene | NA | <5 | <5 | <2.2 | <2.2 | <5 | <2.2 | <2.4 | <5 |
| fluorene | NA | <4 | <4 | <1.9 | <1.9 | <4 | <1.9 | <2.0 | <4 |
| hexachlorobenzene | NA | <15 | <15 | <1.9 | <1.9 | <15 | <1.9 | <2.0 | <15 |
| hexachlorobutadiene | NA | <13 | <13 | <0.9 | <0.9 | <13 | <0.9 | <0.97 | <13 |
| hexachlorocyclopentadiene | NA | <12 | <12 | <10 | <10 | <12 | <10 | <11 | <12 |
| hexachloroethane | NA | <10 | <10 | <1.6 | <1.6 | <10 | <1.6 | <1.7 | <10 |
| indeno (1,2,3-c,d) pyrene | NA | <7 | <7 | <3.7 | <4.8 | <7 | <3.7 | <5.1 | <7 |
| isophorone | NA | <2 | <2 | <2.2 | <2.2 | <2 | <2.2 | <2.4 | <2 |
| naphthalene | NA | <2 | <2 | <1.6 | <1.6 | <2 | <1.6 | <1.7 | <2 |
| nitrobenzene | NA | 8 | <5 | <1.9 | <1.9 | <5 | <1.9 | <2.0 | <5 |
| n-nitrosodimethylamine | NA | <10 | <10 | <10 | <10 | <10 | <10 | <11 | <10 |
| n-nitrosodi-n-propylamine | NA | <6 | <6 | <10 | <10 | <6 | <10 | <11 | <6 |
| n-nitrosodiphenylamine | NA | <82 | <82 | <1.9 | <1.9 | <82 | <1.9 | <2.0 | <82 |
| phenanthrene | NA | <4 | <4 | <5.4 | <5.5 | <4 | <5.4 | <5.8 | <4 |
| pyrene | NA | <5 | <5 | <1.9 | <1.9 | <5 | <1.9 | <2.0 | <5 |
| 1,2,4-trichlorobenzene | NA | 12 | <7 | <1.9 | <1.9 | <7 | <1.9 | <2.0 | <7 |
| Sub Total 1 | NA | 244 | 9 | 0 | 0 | 10 | 1.9 | 24.7 | 13 |

Table E-3. Summary of Base/Neutral Extractable Compounds in Ground Water, Monsanto Company, W.G. Krummrich Plant, Sauget, Il

| Well Number: | GM-14 | GM-15 | GM-16A | GM-16A | GM-16A | GM-16B | GM-16B | GM-16B | GM-17A |
|---|---|---|---|---|---|---|---|---|---|
| Date: | 9/84** | 9/84** | 9/84** | 5/85 | 11/85 | 9/84** | 5/85 | 11/85 | 9/84 |
| Miscellaneous Base/Neutral Extractable Organic Compounds concentrations are in ug/L | | | | | | | | | |
| 2-nitroaniline | NA | <25-30 | <25-30 | <10 | <10 | <25-30 | <10 | <11 | <25-30 |
| 4-nitroaniline | NA | <25-30 | <25-30 | <10 | <10 | <25-30 | <10 | <11 | <25-30 |
| 2-nitrochlorobenzene | NA | <10 | <10 | <10 | <10.2 | <10 | <10 | <10.8 | <10 |
| 4-nitrochlorobenzene | NA | <10 | <10 | <10 | <10.2 | <10 | <10 | <10.8 | <10 |
| 2,4-and 3,4-dinitrochlorobenzene | NA | <10 | <10 | <10 | <10.2 | <10 | <10 | <10.8 | <10 |
| 4-nitrodiphenylamine | NA | <10 | <10 | <10 | <10.2 | <10 | <10 | <10.8 | <10 |
| triphenyl phosphate | NA | <10 | <10 | <10 | <10.2 | <10 | <10 | <10.8 | <10 |
| 2,3,7,8-tetrachloro-dibenzo-p-dioxin | NA | NA | <0.00034 | NA | NA | NA | NA | NA | NA |
| 2-nitrobiphenyl | NA | <10 | <10 | NA | NA | <10 | NA | NA | <10 |
| 4-nitrobiphenyl | NA | <10 | <10 | NA | NA | <10 | NA | NA | <10 |
| Sub Total 2 | NA | 0 | 0 | 0 | 0 | 0 | 0 | 0 | 0 |
| Total Base/Neutral Compounds Analyzed | NA | 244 | 9 | 0 | 0 | 10 | 1.9 | 24.7 | 13 |

Table E-3. Summary of Base/Neutral Extractable Compounds in Ground Water, Monsanto Company, W.G. Krummrich Plant, Sauget, Il

| Well Number: | GM-17A | GM-17A | GM-17B | GM-17B | GM-17B | GM-17C | GM-17C | GM-17C | GM-18A |
|---|---|---|---|---|---|---|---|---|---|
| Date: | 11/84 | 11/85 | 9/84** | 11/84 | 11/85 | 9/84** | 11/84 | 11/85 | 9/84** |
| USEPA Priority Pollutant Base/Neutral Extractable Organic Compounds concentrations are in ug/L | | | | | | | | | |
| acenaphthene | <10 | <1.9 | <4 | <10 | <3.8 | 1 | <10 | <1.9 | <4 |
| acenapthylene | <10 | <3.5 | <3 | <10 | <7.0 | <3 | <10 | <3.5 | <3 |
| anthracene | <10 | <1.9 | <4 | <10 | <3.8 | <4 | <10 | <1.9 | <4 |
| benzidine | <10 | <44 | <60 | <10 | <88 | <60 | <10 | <44 | <60 |
| benzo (a) anthracene | <10 | <7.8 | <9 | <10 | <16 | <9 | <10 | <7.9 | <9 |
| benzo (a) pyrene | <10 | <2.5 | <12 | <10 | <5 | <12 | <10 | <2.5 | <12 |
| benzo (b) fluoroanthene | <10 | <4.8 | <11 | <10 | <9.6 | <11 | <10 | <4.8 | <11 |
| benzo (ghi) perylene | <10 | <4.1 | <14 | <10 | <8.2 | <14 | <10 | <4.1 | <14 |
| benzo (k) fluoranthene | <10 | <3.5 | <11 | <10 | <7 | <11 | <10 | <3.5 | <11 |
| bis (2-chloroethoxy) methane | <10 | <5.3 | <4 | <10 | <11 | <4 | <10 | <5.4 | <4 |
| bis (2-chloroethyl) ether | <10 | <5.7 | <4 | <10 | <11 | <4 | <10 | <5.8 | <4 |
| bis (2-chloroisopropyl) ether | <10 | <5.7 | <3 | <10 | <11 | <3 | <10 | <5.8 | <3 |
| bis (2-ethylhexyl) phthalate | <10 | <10 | <10 | <10 | <20 | 10 | <10 | <10 | 4 |
| 4-bromophenyl phenyl ether | <10 | <1.9 | <16 | <10 | <3.8 | <16 | <10 | <1.9 | <16 |
| butyl benzyl phthalate | <10 | <10 | <13 | <10 | <20 | <13 | <10 | <10 | <13 |
| 2-chloronaphthalene | <10 | <1.9 | <4 | <10 | <3.8 | <4 | <10 | <1.9 | <4 |
| 4-chlorophenyl phenyl ether | <10 | <4.2 | <9 | <10 | <8.4 | <9 | <10 | <4.2 | <9 |
| chrysene | <10 | <2.5 | <9 | <10 | <5.0 | <9 | <10 | <2.5 | <9 |
| dibenzo (a,h) anthracene | <10 | <10 | <16 | <10 | <20 | <16 | <10 | <10 | <16 |
| 1,2-dichlorobenzene | <10 | <1.9 | <5 | <10 | 4.57 | 113 | 147 | 286 | <5 |
| 1,3-dichlorobenzene | <10 | <1.9 | 5 | <10 | <3.8 | 776 | 57 | 126 | <6 |
| 1,4-dichlorobenzene | <10 | <4.4 | 47 | 70 | 64 | <5 | 1,560 | 945 | <5 |
| 3,3-dichlorobenzidine | <10 | <17 | <161 | <10 | <33 | <161 | <10 | <17 | <161 |
| diethyl phthalate | <10 | <10 | <4 | <10 | <20 | <4 | <10 | <10 | <4 |
| dimethyl phthalate | <10 | <10 | <4 | <10 | <20 | <4 | <10 | <10 | <4 |
| di-n-butyl phthalate | <10 | <10 | <3 | <10 | <20 | 5 | <10 | <10 | 5 |
| 2,4-dinitrotoluene | <10 | <5.7 | <14 | <10 | <11 | <14 | <10 | <5.8 | <14 |
| 2,6-dinitrotoluene | <10 | <1.9 | <16 | <10 | <3.8 | <16 | <10 | <1.9 | <16 |
| di-n-octyl phthalate | <10 | <10 | <6 | <10 | <20 | <6 | <10 | <10 | <6 |
| 1,2-diphenylhydrazine | <10 | <10 | <10 | <10 | <20 | <10 | <10 | <10 | <10 |
| fluoranthene | <10 | <2.2 | <5 | <10 | <4.4 | <5 | <10 | <2.2 | <5 |
| fluorene | <10 | <1.9 | <4 | <10 | <3.8 | <4 | <10 | <1.9 | <4 |
| hexachlorobenzene | <10 | <1.9 | <15 | <10 | <3.8 | <15 | <10 | <1.9 | <15 |
| hexachlorobutadiene | <10 | <0.9 | <13 | <10 | <1.8 | <13 | <10 | <0.9 | <13 |
| hexachlorocyclopentadiene | <10 | <10 | <12 | <10 | <20 | <12 | <10 | <10 | <12 |
| hexachloroethane | <10 | <1.6 | <10 | <10 | <3.2 | <10 | <10 | <1.6 | <10 |
| indeno (1,2,3-c,d) pyrene | <10 | <4.7 | <7 | <10 | <9.4 | <7 | <10 | <4.7 | <7 |
| isophorone | <10 | <2.2 | <2 | <10 | <4.4 | <2 | <10 | <2.2 | <2 |
| naphthalene | <10 | <1.6 | <2 | <10 | <3.2 | <2 | <10 | <1.6 | <2 |
| nitrobenzene | <10 | <1.9 | <5 | <10 | <3.8 | <5 | <10 | <1.9 | <5 |
| n-nitrosodimethylamine | <10 | <10 | <10 | <10 | <20 | <10 | <10 | <10 | <10 |
| n-nitrosodi-n-propylamine | <10 | <10 | <6 | <10 | <20 | <6 | <10 | <10 | <6 |
| n-nitrosodiphenylamine | <10 | <1.9 | <82 | <10 | <3.8 | <82 | <10 | <1.9 | <82 |
| phenanthrene | <10 | <5.4 | <4 | <10 | <11 | <4 | <10 | <5.5 | <4 |
| pyrene | <10 | <1.9 | <5 | <10 | <3.8 | <5 | <10 | <1.9 | <5 |
| 1,2,4-trichlorobenzene | <10 | <1.9 | <7 | <10 | <3.8 | 10 | <10 | <1.9 | <7 |
| Sub Total 1 | 0 | 0 | 52 | 70 | 68.57 | 915 | 1764 | 1357 | 9 |

Table E-3. Summary of Base/Neutral Extractable Compounds in Ground Water, Monsanto Company, W.G. Krummrich Plant, Sauget, Il

| Well Number: | GM-17A | GM-17A | GM-17B | GM-17B | GM-17B | GM-17C | GM-17C | GM-17C | GM-18A |
|---|---|---|---|---|---|---|---|---|---|
| Date: | 11/84 | 11/85 | 9/84** | 11/84 | 11/85 | 9/84** | 11/84 | 11/85 | 9/84** |
| Miscellaneous Base/Neutral Extractable Organic Compounds concentrations are in ug/L | | | | | | | | | |
| 2-nitroaniline | <10 | <10 | <25-30 | <10 | <20 | <25-30 | <10 | <10 | <25-30 |
| 4-nitroaniline | <10 | <10 | <25-30 | <10 | <20 | <25-30 | <10 | <10 | <25-30 |
| 2-nitrochlorobenzene | <10 | <10 | <10 | <10 | <20 | <10 | <10 | <10 | <10 |
| 4-nitrochlorobenzene | <10 | <10 | <10 | <10 | <20 | <10 | <10 | <10 | <10 |
| 2,4-and 3,4-dinitrochlorobenzene | <10 | <10 | <10 | <10 | <20 | <10 | <10 | <10 | <10 |
| 4-nitrodiphenylamine | <10 | <10 | <10 | <10 | <20 | <10 | <10 | <10 | <10 |
| triphenyl phosphate | <10 | <10 | <10 | <10 | <20 | <10 | <10 | <10 | <10 |
| 2,3,7,8-tetrachloro-dibenzo-p-dioxin | NA | NA | NA | NA | NA | NA | NA | NA | NA |
| 2-nitrobiphenyl | NA | NA | <10 | NA | NA | <10 | NA | NA | <10 |
| 4-nitrobiphenyl | NA | NA | <10 | NA | NA | <10 | NA | NA | <10 |
| Sub Total 2 | 0 | 0 | 0 | 0 | 0 | 0 | 0 | 0 | 0 |
| Total Base/Neutral Compounds Analyzed | 0 | .0 | 52 | 70 | 68.57 | 915 | 1764 | 1357 | 9 |

Table E-3. Summary of Base/Neutral Extractable Compounds in Ground Water, Monsanto Company, W.G. Krummrich Plant, Sauget, Il

| Well Number: | GM-18A | GM-18A | GM-18B | GM-18B | GM-18B | GM-25A | GM-25A | GM-25B | GM-25B |
|---|---|---|---|---|---|---|---|---|---|
| Date: | 5/85 | 11/85 | 9/84** | 5/85 | 11/85 | 9/84 | 11/84 | 9/84 | 11/84 |
| USEPA Priority Pollutant Base/Neutral Extractable Organic Compounds concentrations are in ug/L | | | | | | | | | |
| acenaphthene | <1.9 | <2.0 | <4 | <1.9 | <2.1 | <4 | <10 | <4 | <10 |
| acenapthylene | <3.5 | <3.7 | <3 | <3.5 | <3.8 | <3 | <10 | <3 | <10 |
| anthracene | <1.9 | <2.0 | <4 | <1.9 | <2.1 | <4 | <10 | <4 | <10 |
| benzidine | <44 | <46 | <60 | <44 | <48 | <60 | <10 | <60 | <10 |
| benzo (a) anthracene | <7.8 | <8.2 | <9 | <7.8 | <8.5 | <9 | <10 | <9 | <10 |
| benzo (a) pyrene | <2.5 | <2.6 | <12 | <2.5 | <2.7 | <12 | <10 | <12 | <10 |
| benzo (b) fluoroanthene | <4.8 | <5.1 | <11 | <4.8 | <5.2 | <11 | <10 | <11 | <10 |
| benzo (ghi) perylene | <4.1 | <4.3 | <14 | <4.1 | <4.5 | <14 | <10 | <14 | <10 |
| benzo (k) fluoranthene | <2.5 | <3.7 | <11 | <2.5 | <3.8 | <11 | <10 | <11 | <10 |
| bis (2-chloroethoxy) methane | <5.3 | <5.6 | <4 | <5.3 | <5.8 | <4 | <10 | <4 | <10 |
| bis (2-chloroethyl) ether | <5.7 | <6.0 | <4 | <5.7 | <6.2 | <4 | <10 | <4 | <10 |
| bis (2-chloroisopropyl) ether | <6.0 | <6.0 | <3 | <5.7 | <6.2 | <3 | <10 | <3 | <10 |
| bis (2-ethylhexyl) phthalate | <10 | <11 | 3 | <10 | <11 | 19 | 22 | 14 | <10 |
| 4-bromophenyl phenyl ether | <1.9 | <2.0 | <16 | <1.9 | <2.1 | <16 | <10 | <16 | <10 |
| butyl benzyl phthalate | <10 | <11 | <13 | <10 | <11 | <13 | <10 | <13 | <10 |
| 2-chloronaphthalene | <1.9 | <2.0 | <4 | <1.9 | <2.1 | <4 | <10 | <4 | <10 |
| 4-chlorophenyl phenyl ether | <4.2 | <4.4 | <9 | <4.2 | <4.6 | <9 | <10 | <9 | <10 |
| chrysene | <2.5 | <2.6 | <9 | <2.5 | <2.7 | <9 | <10 | <9 | <10 |
| dibenzo (a,h) anthracene | <2.5 | <11 | <16 | <2.5 | <11 | <16 | <10 | <16 | <10 |
| 1,2-dichlorobenzene | <1.9 | <2.0 | <5 | <1.9 | <2.1 | <5 | <10 | <5 | <10 |
| 1,3-dichlorobenzene | <1.9 | <2.0 | <6 | <1.9 | <2.1 | <6 | <10 | <6 | <10 |
| 1,4-dichlorobenzene | <4.4 | <4.6 | <5 | <4.4 | <4.8 | <5 | <10 | <5 | <10 |
| 3,3-dichlorobenzidine | <16.5 | <17 | <161 | <16.5 | <18 | <161 | <10 | <161 | <10 |
| diethyl phthalate | <10 | <11 | 1 | <10 | <11 | <4 | <10 | 2 | <10 |
| dimethyl phthalate | <10 | <11 | <4 | <10 | <11 | <4 | <10 | <4 | <10 |
| di-n-butyl phthalate | <10 | <11 | 7 | <10 | <11 | 5 | <10 | 10 | <10 |
| 2,4-dinitrotoluene | <5.7 | <6.0 | <14 | <5.7 | <6.2 | <14 | <10 | <14 | <10 |
| 2,6-dinitrotoluene | <1.9 | <2.0 | <16 | <1.9 | <2.1 | <16 | <10 | <16 | <10 |
| di-n-octyl phthalate | <10 | <11 | <6 | <10 | <11 | <6 | <10 | <6 | <10 |
| 1,2-diphenylhydrazine | <10 | <11 | <10 | <10 | <11 | <10 | <10 | <10 | <10 |
| fluoranthene | <2.2 | <2.3 | <5 | <2.2 | <2.4 | <5 | <10 | <5 | <10 |
| fluorene | <1.9 | <2.0 | <4 | <1.9 | <2.1 | <4 | <10 | <4 | <10 |
| hexachlorobenzene | <1.9 | <2 | <15 | <1.9 | <2.1 | <15 | <10 | <15 | <10 |
| hexachlorobutadiene | <0.9 | <0.95 | <13 | <0.9 | <1 | <13 | <10 | <13 | <10 |
| hexachlorocyclopentadiene | <10 | <11 | <12 | <10 | <11 | <12 | <10 | <12 | <10 |
| hexachloroethane | <1.6 | <1.7 | <10 | <1.6 | <1.7 | <10 | <10 | <10 | <10 |
| indeno (1,2,3-c,d) pyrene | <3.7 | <4.9 | <7 | <3.7 | <5.1 | <7 | <10 | <7 | <10 |
| isophorone | <2.2 | <2.3 | <2 | <2.2 | <2.4 | <2 | <10 | <2 | <10 |
| naphthalene | <1.6 | <1.7 | <2 | <1.6 | <1.7 | <2 | <10 | <2 | <10 |
| nitrobenzene | <1.9 | <2.0 | <5 | <1.9 | <2.1 | <5 | <10 | <5 | <10 |
| n-nitrosodimethylamine | <10 | <11 | <10 | <10 | <11 | <10 | <10 | <10 | <10 |
| n-nitrosodi-n-propylamine | <10 | <11 | <6 | <10 | <11 | <6 | <10 | <6 | <10 |
| n-nitrosodiphenylamine | <1.9 | <2.0 | <82 | <1.9 | <2.1 | <82 | <10 | <82 | <10 |
| phenanthrene | <5.4 | <5.7 | <4 | <5.4 | <5.9 | <4 | <10 | <4 | <10 |
| pyrene | <1.9 | <2.0 | <5 | <1.9 | <2.1 | <5 | <10 | <5 | <10 |
| 1,2,4-trichlorobenzene | <1.9 | <2.0 | <7 | <1.9 | <2.1 | <7 | <10 | <7 | <10 |
| Sub Total 1 | 0 | 0 | 11 | 0 | 0 | 24 | 22 | 26 | 0 |

Table E-3. Summary of Base/Neutral Extractable Compounds in Ground Water, Monsanto Company, W.G. Krummrich Plant, Sauget, Il

| Well Number: | GM-18A | GM-18A | GM-18B | GM-18B | GM-18B | GM-25A | GM-25A | GM-25B | GM-25B |
|---|---|---|---|---|---|---|---|---|---|
| Date: | 5/85 | 11/85 | 9/84** | 5/85 | 11/85 | 9/84 | 11/84 | 9/84 | 11/84 |
| Miscellaneous Base/Neutral Extractable Organic Compounds concentrations are in ug/L | | | | | | | | | |
| 2-nitroaniline | <10 | <11 | <25-30 | <10 | <11 | <25-30 | <10 | <25-30 | <10 |
| 4-nitroaniline | <10 | <11 | <25-30 | <10 | <11 | <25-30 | <10 | <25-30 | <10 |
| 2-nitrochlorobenzene | <10 | <10.5 | <10 | <10 | <10.9 | <10 | <10 | <10 | <10 |
| 4-nitrochlorobenzene | <10 | <10.5 | <10 | <10 | <10.9 | <10 | <10 | <10 | <10 |
| 2,4-and 3,4-dinitrochlorobenzene | <10 | <10.5 | <10 | <10 | <10.9 | <10 | <10 | <10 | <10 |
| 4-nitrodiphenylamine | <10 | <10.5 | <10 | <10 | <10.9 | <10 | <10 | <10 | <10 |
| triphenyl phosphate | <10 | <10.5 | <10 | <10 | <10.9 | <10 | <10 | <10 | <10 |
| 2,3,7,8-tetrachloro-dibenzo-p-dioxin | NA | NA | NA | NA | NA | NA | NA | NA | NA |
| 2-nitrobiphenyl | NA | NA | <10 | NA | NA | <10 | NA | <10 | NA |
| 4-nitrobiphenyl | NA | NA | <10 | NA | NA | <10 | NA | <10 | NA |
| Sub Total 2 | 0 | 0 | 0 | 0 | 0 | 0 | 0 | 0 | 0 |
| Total Base/Neutral Compounds Analyzed | 0 | 0 | 11 | 0 | 0 | 24 | 22 | 26 | 0 |

Table E-3. Summary of Base/Neutral Extractable Compounds in Ground Water, Monsanto Company, W.G. Krummrich Plant, Sauget, Il

| Well Number: | GM-25B | GM-27B | GM-27B | GM-27B | GM-27C | GM-27C | GM-27C | GM-28B | GM-28B |
|---|---|---|---|---|---|---|---|---|---|
| Date: | 11/85 | 9/84** | 11/85 | 2/86 | 9/84** | 11/85 | 2/86 | 9/84** | 11/85 |
| USEPA Priority Pollutant Base/Neutral Extractable Organic Compounds concentrations are in ug/L | | | | | | | | | |
| acenaphthene | <3.7 | <4 | <1.9 | <2.0 | <4 | <1.9 | <1.9 | <4 | <2.0 |
| acenapthylene | <6.9 | <3 | <3.5 | <3.6 | <3 | <3.5 | <3.6 | <3 | <3.8 |
| anthracene | <3.7 | <4 | <1.9 | <2.0 | <4 | <1.9 | <1.9 | <4 | <2.0 |
| benzidine | <86 | <60 | <44 | <45 | <60 | <44 | <45 | <60 | <47 |
| benzo (a) anthracene | <15 | <9 | <7.8 | <8 | <9 | <7.8 | <8 | <9 | <8.4 |
| benzo (a) pyrene | <4.9 | <12 | <2.5 | <2.6 | <12 | <2.5 | <2.6 | <12 | <2.7 |
| benzo (b) fluoroanthene | <9.4 | <11 | <4.8 | <4.9 | <11 | <4.8 | <4.9 | <11 | <5.2 |
| benzo (ghi) perylene | <8.0 | <14 | <4.1 | <4.2 | <14 | <4.1 | <4.2 | <14 | <4.4 |
| benzo (k) fluoranthene | <6.9 | <11 | <3.5 | <3.6 | <11 | <3.5 | <3.6 | <11 | <3.8 |
| bis (2-chloroethoxy) methane | <10 | <4 | <5.3 | <5.5 | <4 | <5.3 | <5.4 | <4 | <5.7 |
| bis (2-chloroethyl) ether | <11 | <4 | <5.7 | <5.9 | <4 | <5.7 | <5.8 | <4 | <6.1 |
| bis (2-chloroisopropyl) ether | <11 | <3 | <5.7 | <5.9 | <3 | <5.7 | <5.8 | <3 | <6.1 |
| bis (2-ethylhexyl) phthalate | 36.3 | 9 | <10 | 11.7 | 4 | 54 | <10 | 11 | <11 |
| 4-bromophenyl phenyl ether | <3.7 | <16 | <1.9 | <2 | <16 | <1.9 | <1.9 | <16 | <2.0 |
| butyl benzyl phthalate | <20 | <13 | <10 | <10 | <13 | <10 | <10 | <13 | <11 |
| 2-chloronaphthalene | <3.7 | <4 | <1.9 | <2 | <4 | <1.9 | <1.9 | <4 | <2.0 |
| 4-chlorophenyl phenyl ether | <8.2 | <9 | <4.2 | <4.3 | <9 | <4.2 | <4.3 | <9 | <4.5 |
| chrysene | <4.9 | <9 | <2.5 | <2.6 | <9 | <2.5 | <2.6 | <9 | <2.7 |
| dibenzo (a,h) anthracene | <20 | <16 | <10 | <10 | <16 | <10 | <10 | <16 | <11 |
| 1,2-dichlorobenzene | <3.7 | 3 | 2.6 | <2 | 3 | 72.8 | 103 | <5 | 102 |
| 1,3-dichlorobenzene | <3.7 | <6 | <1.9 | <2 | <6 | 5.5 | 3.1 | <6 | <2.0 |
| 1,4-dichlorobenzene | <8.6 | 11 | 13.3 | 27.6 | 2 | 52 | 76.5 | 127 | 18.8 |
| 3,3-dichlorobenzidine | <32 | <161 | <17 | <17 | <161 | <17 | <17 | <161 | <18 |
| diethyl phthalate | <20 | <4 | <10 | <10 | <4 | <10 | <10 | <4 | <11 |
| dimethyl phthalate | <20 | <4 | <10 | <10 | <4 | <10 | <10 | <4 | <11 |
| di-n-butyl phthalate | <20 | 6 | <10 | <10 | 8 | <10 | <10 | 7 | <11 |
| 2,4-dinitrotoluene | <11 | <14 | <5.7 | <5.9 | <14 | <5.7 | <5.8 | <14 | <6.1 |
| 2,6-dinitrotoluene | <3.7 | <16 | <1.9 | <2.0 | <16 | <1.9 | <1.9 | <16 | <2.0 |
| di-n-octyl phthalate | <20 | <6 | <10 | <10 | <6 | <10 | <10 | <6 | <11 |
| 1,2-diphenylhydrazine | <20 | <10 | <10 | <10 | <10 | <10 | <10 | <10 | <11 |
| fluoranthene | <4.3 | <5 | <2.2 | <2.3 | <5 | <2.2 | <2.2 | <5 | <2.4 |
| fluorene | <3.7 | <4 | <1.9 | <2.0 | <4 | <1.9 | <1.9 | <4 | <2.0 |
| hexachlorobenzene | <3.7 | <15 | <1.9 | <2.0 | <15 | <1.9 | <1.9 | <15 | <2.0 |
| hexachlorobutadiene | <1.8 | <13 | <0.9 | <0.9 | <13 | <0.9 | <0.9 | <13 | <1 |
| hexachlorocyclopentadiene | <20 | <12 | <10 | <10 | <12 | <10 | <10 | <12 | <11 |
| hexachloroethane | <3.1 | <10 | <1.6 | <1.6 | <10 | <1.6 | <1.6 | <10 | <1.7 |
| indeno (1,2,3-c,d) pyrene | <9.2 | <7 | <4.7 | <4.8 | <7 | <4.7 | <4.8 | <7 | <5.1 |
| isophorone | <4.3 | <2 | <2.2 | <2.3 | <2 | <2.2 | <2.2 | <2 | <2.4 |
| naphthalene | <3.1 | <2 | <1.6 | <1.6 | <2 | 5.2 | <1.6 | <2 | 2.3 |
| nitrobenzene | <3.7 | <5 | <1.9 | <2.0 | <5 | <1.9 | <1.9 | <5 | <2.0 |
| n-nitrosodimethylamine | <20 | <10 | <10 | <10 | <10 | <10 | <10 | <10 | <11 |
| n-nitrosodi-n-propylamine | <20 | <6 | <10 | <10 | <6 | <10 | <10 | <6 | <11 |
| n-nitrosodiphenylamine | <3.7 | <82 | <1.9 | <2.0 | <82 | <1.9 | <1.9 | <82 | <2.0 |
| phenanthrene | <11 | <4 | <5.4 | <5.6 | <4 | <5.4 | <5.5 | <4 | <5.8 |
| pyrene | <3.7 | <5 | <1.9 | <2.0 | <5 | <1.9 | <1.9 | <5 | <2.0 |
| 1,2,4-trichlorobenzene | <3.7 | <7 | <1.9 | <2.0 | <7 | <1.9 | <1.9 | <7 | <10.5 |
| Sub Total 1 | 36.3 | 29 | 15.9 | 39.3 | 17 | 189.5 | 182.6 | 145 | 123.1 |

Table E-3. Summary of Base/Neutral Extractable Compounds in Ground Water, Monsanto Company, W.G. Krummrich Plant, Sauget, Il

| Well Number: | GM-25B | GM-27B | GM-27B | GM-27B | GM-27C | GM-27C | GM-27C | GM-28B | GM-29B |
|---|---|---|---|---|---|---|---|---|---|
| Date: | 11/85 | 9/84** | 11/85 | 2/86 | 9/84** | 11/85 | 2/86 | 9/84** | 11/85 |
| Miscellaneous Base/Neutral Extractable Organic Compounds concentrations are in ug/L | | | | | | | | | |
| 2-nitroaniline | <20 | <25-30 | <10 | <10 | <25-30 | <10 | <10 | <25-30 | <11 |
| 4-nitroaniline | <20 | <25-30 | <10 | <10 | <25-30 | <10 | <10 | <25-30 | <11 |
| 2-nitrochlorobenzene | <20 | <10 | <10 | <10 | <10 | <10 | <10 | <10 | <11 |
| 4-nitrochlorobenzene | <20 | <10 | <10 | <10 | <10 | <10 | <10 | <10 | <11 |
| 2,4-and 3,4-dinitrochlorobenzene | <20 | <10 | <10 | <10 | <10 | <10 | <10 | <10 | <11 |
| 4-nitrodiphenylamine | <20 | <10 | <10 | <10 | <10 | <10 | <10 | <10 | <11 |
| triphenyl phosphate | <20 | <10 | <10 | <10 | <10 | <10 | <10 | <10 | <11 |
| 2,3,7,8-tetrachloro-dibenzo-p-dioxin | NA | <0.001 | NA | NA | NA | NA | NA | <0.0016 | NA |
| 2-nitrobiphenyl | NA | <10 | NA | NA | <10 | NA | NA | <10 | NA |
| 4-nitrobiphenyl | NA | <10 | NA | NA | <10 | NA | NA | <10 | NA |
| Sub Total 2 | 0 | 0 | 0 | 0 | 0 | 0 | 0 | 0 | 0 |
| Total Base/Neutral Compounds Analyzed | 36.3 | 29 | 15.9 | 39.3 | 17 | 189.5 | 182.6 | 145 | 123.1 |

Table E-3. Summary of Base/Neutral Extractable Compounds in Ground Water, Monsanto Company, W.G. Krummrich Plant, Sauget, Il

| Well Number: | GM-28B | GM-28C | GM-28C | GM-28C | GM-29 | GM-29 | GM-30 | GM-30 | GM-30 |
|---|---|---|---|---|---|---|---|---|---|
| Date: | 2/86 | 9/84** | 11/85 | 2/86 | 9/84** | 11/85 | 9/84** | 11/85 | 2/86 |
| USEPA Priority Pollutant Base/Neutral Extractable Organic Compounds concentrations are in ug/L | | | | | | | | | |
| acenaphthene | <1.9 | NA | <1.9 | <1.9 | <4 | <2.3 | <4 | <2.1 | <2.3 |
| acenapthylene | <3.6 | NA | <3.5 | <3.5 | <3 | <4.2 | <3 | <3.9 | <4.2 |
| anthracene | <1.9 | NA | <1.9 | <1.9 | <4 | <2.3 | <4 | <2.1 | <2.3 |
| benzidine | <45 | NA | <44 | <44 | <60 | <52 | <60 | <49 | <52 |
| benzo (a) anthracene | <8 | NA | <7.8 | <7.9 | <9 | <9.3 | <9 | <8.7 | <9.3 |
| benzo (a) pyrene | <2.6 | NA | <2.5 | <2.5 | <12 | <3.0 | <12 | <2.8 | <3.0 |
| benzo (b) fluoroanthene | <4.9 | NA | <4.8 | <4.8 | <11 | <5.7 | <11 | <5.3 | <5.7 |
| benzo (ghi) perylene | <4.2 | NA | <4.1 | <4.1 | <14 | <4.9 | <14 | <4.6 | <4.9 |
| benzo (k) fluoranthene | <3.6 | NA | <3.5 | <3.5 | <11 | <4.2 | <11 | <3.9 | <4.2 |
| bis (2-chloroethoxy) methane | <5.4 | NA | <5.3 | <5.4 | <4 | <6.3 | <4 | <5.9 | <6.3 |
| bis (2-chloroethyl) ether | <5.8 | NA | <5.7 | <5.8 | <4 | <6.8 | <4 | <6.3 | <6.8 |
| bis (2-chloroisopropyl) ether | <5.8 | NA | <5.7 | <5.8 | <3 | <6.8 | <3 | <6.3 | <6.8 |
| bis (2-ethylhexyl) phthalate | <10 | NA | <10 | <10 | 17 | <12 | <10 | <11 | <12 |
| 4-bromophenyl phenyl ether | <1.9 | NA | <1.9 | <1.9 | <16 | <2.3 | <16 | <2.1 | <2.3 |
| butyl benzyl phthalate | <10 | NA | <10 | <10 | <13 | <12 | <13 | <11 | <12 |
| 2-chloronaphthalene | <1.9 | NA | <1.9 | <1.9 | <4 | <2.3 | <4 | <2.1 | <2.3 |
| 4-chlorophenyl phenyl ether | <4.3 | NA | <4.2 | <4.2 | <9 | <5.0 | <9 | <4.7 | <5.0 |
| chrysene | <2.6 | NA | <2.5 | <2.5 | <9 | <3.0 | <9 | <2.8 | <3.0 |
| dibenzo (a,h) anthracene | <10 | NA | <10 | <10 | <16 | <12 | <16 | <11 | <12 |
| 1,2-dichlorobenzene | 1,720 | NA | 38 | 3,270 | <5 | 5 | <5 | 3.7 | 4.7 |
| 1,3-dichlorobenzene | 5.4 | NA | <1.9 | 14.7 | <6 | <2.3 | <6 | <2.1 | <2.3 |
| 1,4-dichlorobenzene | 231 | NA | 10 | 103 | <5 | <5.2 | <5 | 179 | 123 |
| 3,3-dichlorobenzidine | <17 | NA | <17 | <17 | <161 | <20 | <161 | <18 | <20 |
| diethyl phthalate | <10 | NA | <10 | <10 | <4 | <12 | <4 | <11 | <12 |
| dimethyl phthalate | <10 | NA | <10 | <10 | <4 | <12 | <4 | <11 | <12 |
| di-n-butyl phthalate | <10 | NA | <10 | <10 | 3 | <12 | 3 | <11 | <12 |
| 2,4-dinitrotoluene | <5.8 | NA | <5.7 | <5.8 | <14 | <6.8 | <14 | <6.3 | <6.8 |
| 2,6-dinitrotoluene | <1.9 | NA | <1.9 | <1.9 | <16 | <2.3 | <16 | <2.1 | <2.3 |
| di-n-octyl phthalate | <10 | NA | <10 | <10 | <6 | <12 | <6 | <11 | <12 |
| 1,2-diphenylhydrazine | <10 | NA | <10 | <10 | <10 | <12 | <10 | <11 | <12 |
| fluoranthene | <2.3 | NA | <2.2 | <2.2 | <5 | <2.6 | <5 | <2.4 | <2.6 |
| fluorene | <1.9 | NA | <1.9 | <1.9 | <4 | <2.3 | <4 | <2.1 | <2.3 |
| hexachlorobenzene | <1.9 | NA | <1.9 | <1.9 | <15 | <2.3 | <15 | <2.1 | <2.3 |
| hexachlorobutadiene | <0.9 | NA | <0.9 | <0.9 | <13 | <1.1 | <13 | <1.0 | <1.1 |
| hexachlorocyclopentadiene | <10 | NA | <10 | <10 | <12 | <12 | <12 | <11 | <12 |
| hexachloroethane | <1.6 | NA | <1.6 | <1.6 | <10 | <1.9 | <10 | <1.8 | <1.9 |
| indeno (1,2,3-c,d) pyrene | <4.8 | NA | <4.7 | <4.7 | <7 | <5.6 | <7 | <5.2 | <5.6 |
| isophorone | <2.3 | NA | <2.2 | <2.2 | <2 | <2.6 | <2 | <2.4 | <2.6 |
| naphthalene | <1.6 | NA | <1.6 | <1.6 | <2 | 3.8 | <2 | <1.8 | <1.9 |
| nitrobenzene | <1.9 | NA | <1.9 | <1.9 | <5 | <2.3 | <5 | <2.1 | <2.3 |
| n-nitrosodimethylamine | <10 | NA | <10 | <10 | <10 | <12 | <10 | <11 | <12 |
| n-nitrosodi-n-propylamine | <10 | NA | <10 | <10 | <6 | <12 | <6 | <11 | <12 |
| n-nitrosodiphenylamine | <1.9 | NA | <1.9 | <1.9 | <82 | <2.3 | <82 | <2.1 | <2.3 |
| phenanthrene | <5.5 | NA | <5.4 | <5.5 | <4 | <6.4 | <4 | <6.0 | <6.4 |
| pyrene | <1.9 | NA | <1.9 | <1.9 | <5 | <2.3 | <5 | <2.1 | <2.3 |
| 1,2,4-trichlorobenzene | 29.6 | NA | 16.2 | 20.3 | <7 | <2.3 | <7 | <2.1 | <2.3 |
| Sub Total 1 | 1986 | NA | 64.2 | 3408 | 20 | 8.8 | 3 | 182.7 | 127.7 |

Table E-3. Summary of Base/Neutral Extractable Compounds in Ground Water, Monsanto Company, W.G. Krummrich Plant, Sauget, Il

| Well Number: | GM-28B | GM-28C | GM-28C | GM-28C | GM-29 | GM-29 | GM-30 | GM-30 | GM-30 |
|---|---|---|---|---|---|---|---|---|---|
| Date: | 2/86 | 9/84** | 11/85 | 2/86 | 9/84** | 11/85 | 9/84** | 11/85 | 2/86 |
| Miscellaneous Base/Neutral Extractable Organic Compounds concentrations are in ug/L | | | | | | | | | |
| 2-nitroaniline | <10 | NA | <10 | <10 | <25-30 | <12 | <25-30 | <11 | <12 |
| 4-nitroaniline | <10 | NA | <10 | <10 | <25-30 | <12 | <25-30 | <11 | <12 |
| 2-nitrochlorobenzene | 180 | NA | <10 | 494 | <10 | <12 | <10 | <11.1 | <12 |
| 4-nitrochlorobenzene | 36.6 | NA | <10 | 1,460 | <10 | <12 | <10 | <11.1 | <12 |
| 2,4-and 3,4-dinitrochlorobenzene | <10 | NA | <10 | <10 | <10 | <12 | <10 | <11.1 | <12 |
| 4-nitrodiphenylamine | <10 | NA | <10 | <10 | <10 | <12 | <10 | <11.1 | <12 |
| triphenyl phosphate | <10 | NA | <10 | <10 | <10 | <12 | <10 | <11.1 | <12 |
| 2,3,7,8-tetrachloro-dibenzo-p-dioxin | NA | NA | NA | NA | NA | NA | NA | NA | NA |
| 2-nitrobiphenyl | NA | NA | NA | NA | <10 | NA | <10 | NA | NA |
| 4-nitrobiphenyl | NA | NA | NA | NA | <10 | NA | <10 | NA | NA |
| Sub Total 2 | 216.6 | NA | 0 | 1954 | 0 | 0 | 0 | 0 | 0 |
| Total Base/Neutral Compounds Analyzed | 2202.6 | NA | 64.2 | 5362 | 20 | 8.8 | 3 | 182.7 | 127.7 |

Table E-3. Summary of Base/Neutral Extractable Compounds in Ground Water, Monsanto Company, W.G. Krummrich Plant, Sauget, Il

| Well Number: | GM-31A | GM-31A | GM-31A | GM-31A | GM-31Aa) | GM-31Ab) | GM-31B | GM-31B | GM-31B |
|---|---|---|---|---|---|---|---|---|---|
| Date: | 2/85 | 5/85 | 11/85 | 11/85* | 2/86 | 2/86 | 2/85 | 5/85 | 11/85 |
| USEPA Priority Pollutant Base/Neutral Extractable Organic Compounds concentrations are in ug/L | | | | | | | | | |
| acenaphthene | <1.9 | <1.9 | <2.0 | <2.0 | <2.1 | <2.0 | <1.9 | <1.9 | <1.9 |
| acenapthylene | <3.5 | <3.5 | <3.7 | <3.7 | <3.9 | <3.7 | <3.5 | <3.5 | <3.5 |
| anthracene | <1.9 | <1.9 | <2.0 | <2.0 | <2.1 | <2.0 | <1.9 | <1.9 | <1.9 |
| benzidine | <44 | <44 | <47 | <46 | <49 | <46 | <44 | <44 | <44 |
| benzo (a) anthracene | <7.8 | <7.8 | <8.3 | <8.2 | <8.7 | <8.2 | <7.8 | <7.8 | <7.8 |
| benzo (a) pyrene | <2.5 | <2.5 | <2.7 | <2.6 | <2.8 | <2.6 | <2.5 | <2.5 | <2.5 |
| benzo (b) fluoroanthene | <4.8 | <4.8 | <5.1 | <5.1 | <11 | <10 | <4.8 | <4.8 | <4.8 |
| benzo (ghi) perylene | <4.1 | <4.1 | <4.4 | <4.3 | <4.6 | <4.3 | <4.1 | <4.1 | <4.1 |
| benzo (k) fluoranthene | <2.5 | <2.5 | <3.7 | <3.7 | <3.9 | <3.7 | <2.5 | <2.5 | <3.5 |
| bis (2-chloroethoxy) methane | <5.3 | <5.3 | <5.6 | <5.6 | <5.9 | <5.6 | <5.3 | <5.3 | <5.3 |
| bis (2-chloroethyl) ether | <5.7 | <5.7 | <6.1 | <6.0 | <6.3 | <6.0 | <5.7 | <5.7 | <5.7 |
| bis (2-chloroisopropyl) ether | <5.7 | <6.0 | <6.1 | <6.0 | <6.3 | <6.0 | <5.7 | <6.0 | <5.7 |
| bis (2-ethylhexyl) phthalate | <10 | <10 | <11 | <11 | <11 | <11 | <10 | <10 | 33.9 |
| 4-bromophenyl phenyl ether | <1.9 | <1.9 | <2 | <2 | <2.1 | <2 | <1.9 | <1.9 | <1.9 |
| butyl benzyl phthalate | <10 | <10 | <11 | <11 | <11 | <11 | <10 | <10 | <10 |
| 2-chloronaphthalene | <1.9 | <1.9 | <2 | <2 | <2.1 | <2 | <1.9 | <1.9 | <1.9 |
| 4-chlorophenyl phenyl ether | <4.2 | <4.2 | <4.5 | <4.4 | <4.7 | <4.4 | <3.5 | <4.2 | <4.2 |
| chrysene | <2.5 | <2.5 | <2.7 | <2.6 | <2.8 | <2.6 | <1.9 | <2.5 | <2.5 |
| dibenzo (a,h) anthracene | <2.5 | <2.5 | <11 | <11 | <11 | <11 | <44 | <2.5 | <10 |
| 1,2-dichlorobenzene | 3.9 | 3 | 17.6 | 16.8 | 25.5 | 10.4 | <7.8 | <1.9 | <1.9 |
| 1,3-dichlorobenzene | <1.9 | <1.9 | <2 | <2 | <2.1 | <2 | <2.5 | <1.9 | <1.9 |
| 1,4-dichlorobenzene | <4.4 | <4.4 | 8.0 | 7.9 | 11.7 | <4.6 | <4.8 | <4.4 | <4.4 |
| 3,3-dichlorobenzidine | <16.5 | <16.5 | <18 | <17 | <18 | <17 | <4.1 | <16.5 | <17 |
| diethyl phthalate | <10 | <10 | <11 | <11 | <11 | <11 | <2.5 | <10 | <10 |
| dimethyl phthalate | <10 | <10 | <11 | <11 | <11 | <11 | <5.3 | <10 | <10 |
| di-n-butyl phthalate | <10 | <10 | <11 | <11 | <11 | <11 | <5.7 | <10 | <10 |
| 2,4-dinitrotoluene | <5.7 | <5.7 | <6.1 | <6.0 | <6.3 | <6.0 | <5.7 | <5.7 | <5.7 |
| 2,6-dinitrotoluene | <1.9 | <1.9 | <2.0 | <2.0 | <2.1 | <2.0 | <10 | <1.9 | <1.9 |
| di-n-octyl phthalate | <10 | <10 | <11 | <11 | <11 | <11 | <1.9 | <10 | <10 |
| 1,2-diphenylhydrazine | <10 | <10 | <11 | <11 | <11 | <11 | <10 | <10 | <10 |
| fluoranthene | <2.2 | <2.2 | <2.3 | <2.3 | <2.4 | <2.3 | <2.2 | <2.2 | <2.2 |
| fluorene | <1.9 | <1.9 | <2.0 | <2.0 | <2.1 | <2.0 | <1.9 | <1.9 | <1.9 |
| hexachlorobenzene | <1.9 | <1.9 | <2.0 | <2.0 | <2.1 | <2.0 | <1.9 | <1.9 | <1.9 |
| hexachlorobutadiene | <0.9 | <0.9 | <1.0 | <1.0 | <1.0 | <1.0 | <0.9 | <0.9 | <0.9 |
| hexachlorocyclopentadiene | <10 | <10 | <11 | <11 | <11 | <11 | <10 | <10 | <10 |
| hexachloroethane | <1.6 | <1.6 | <1.7 | <1.7 | <1.8 | <1.7 | <1.6 | <1.6 | <1.6 |
| indeno (1,2,3-c,d) pyrene | <3.7 | <3.7 | <5.0 | <4.9 | <5.2 | <4.9 | <3.7 | <3.7 | <4.7 |
| isophorone | <2.2 | <2.2 | <2.3 | <2.3 | <2.4 | <2.3 | <2.2 | <2.2 | <2.2 |
| naphthalene | <1.6 | <1.6 | <1.7 | <1.7 | <1.8 | <1.7 | <1.6 | <1.6 | <1.6 |
| nitrobenzene | 21.7 | 15 | 87.8 | 93.5 | 168 | 130 | <1.9 | <1.9 | <1.9 |
| n-nitrosodimethylamine | <10 | <10 | <11 | <11 | <11 | <11 | <10 | <10 | <10 |
| n-nitrosodi-n-propylamine | <10 | <10 | <11 | <11 | <11 | <11 | <10 | <10 | <10 |
| n-nitrosodiphenylamine | 2.8 | <1.9 | <2.0 | <2.0 | <2.1 | <2.0 | <1.9 | <1.9 | <1.9 |
| phenanthrene | <5.4 | <5.4 | <5.7 | <5.7 | <6.0 | <5.7 | <5.4 | <5.4 | <5.4 |
| pyrene | <1.9 | <1.9 | <2.0 | <2.0 | <2.1 | <2.0 | <1.9 | <1.9 | <1.9 |
| 1,2,4-trichlorobenzene | <1.9 | <1.9 | <2.0 | <2.0 | <2.1 | <2.0 | <1.9 | <1.9 | <1.9 |
| Sub Total 1 | 28.4 | 18 | 113.4 | 118.2 | 205.2 | 140.4 | 0 | 0 | 33.9 |

Table E-3. Summary of Base/Neutral Extractable Compounds in Ground Water, Monsanto Company, W.G. Krummrich Plant, Sauget, I

| Well Number: | GM-31A | GM-31A | GM-31A | GM-31A | GM-31Aa) | GM-31Ab) | GM-31B | GM-31B | GM-31 |
|---|---|---|---|---|---|---|---|---|---|
| Date: | 2/85 | 5/85 | 11/85 | 11/85* | 2/86 | 2/86 | 2/85 | 5/85 | 11/85 |
| Miscellaneous Base/Neutral Extractable Organic Compounds concentrations are in ug/L | | | | | | | | | |
| 2-nitroaniline | <10 | <10 | <11 | <11 | NA | NA | <10 | <10 | <10 |
| 4-nitroaniline | <10 | <10 | <11 | <11 | NA | NA | <10 | <10 | <10 |
| 2-nitrochlorobenzene | <10 | <10 | 579 | 542 | NA | NA | <10 | <10 | <10 |
| 4-nitrochlorobenzene | 122 | <10 | <11 | <11 | NA | NA | <10 | <10 | <10 |
| 2,4-and 3,4-dinitrochlorobenzene | <10 | 222 | <11 | <11 | NA | NA | <10 | <10 | <10 |
| 4-nitrodiphenylamine | <10 | <10 | <11 | <11 | NA | NA | <10 | <10 | <10 |
| triphenyl phosphate | <10 | <10 | <11 | <11 | NA | NA | <10 | <10 | <10 |
| 2,3,7,8-tetrachloro-dibenzo-p-dioxin | NA | NA | NA | NA | NA | NA | NA | NA | NA |
| 2-nitrobiphenyl | <25 | <25 | 41.8 | 42.9 | <11 | <11 | <25 | <25 | <10 |
| 4-nitrobiphenyl | <25 | <25 | <11 | <11 | <11 | <11 | <25 | <25 | <10 |
| Sub Total 2 | 122 | 222 | 620.8 | 584.9 | 0 | 0 | 0 | 0 | 0 |
| Total Base/Neutral Compounds Analyzed | 150.4 | 240 | 734.2 | 703.1 | 205.2 | 140.4 | 0 | 0 | 33.9 |

Table E-3. Summary of Base/Neutral Extractable Compounds in Ground Water, Monsanto Company, W.G. Krummrich Plant, Sauget, Il

| Well Number: | GM-31B | GM-31C | GM-31C | GM-31C | GM-31C | B-24A | B-25A | B-25A | B-25B |
|---|---|---|---|---|---|---|---|---|---|
| Date: | 11/85* | 2/85 | 5/85 | 11/85 | 11/85* | 2/86 | 6/84 | 11/85 | 6/84 |
| USEPA Priority Pollutant Base/Neutral Extractable Organic Compounds concentrations are in ug/L | | | | | | | | | |
| acenaphthene | <1.9 | <1.9 | <1.9 | <1.9 | <1.9 | <2.0 | <80 | <3.7 | <80 |
| acenapthylene | <3.5 | <3.5 | <3.5 | <3.5 | <3.5 | <3.6 | <60 | <6.9 | <60 |
| anthracene | <1.9 | <1.9 | <1.9 | <1.9 | <1.9 | <2.0 | <80 | <3.7 | <80 |
| benzidine | <44 | <44 | <44 | <44 | <44 | <45 | <1,200 | <86 | <1,200 |
| benzo (a) anthracene | <7.8 | <7.8 | <7.8 | <7.8 | <7.8 | <8 | <180 | <15 | <180 |
| benzo (a) pyrene | <2.5 | <2.5 | <2.5 | <2.5 | <2.5 | <2.6 | <240 | <4.9 | <240 |
| benzo (b) fluoroanthene | <4.8 | <4.8 | <4.8 | <4.8 | <4.8 | <10 | <220 | <9.4 | <220 |
| benzo (ghi) perylene | <4.1 | <4.1 | <4.1 | <4.1 | <4.1 | <4.2 | <280 | <8.0 | <280 |
| benzo (k) fluoranthene | <3.5 | <2.5 | <2.5 | <3.5 | <3.5 | <3.6 | <220 | <6.9 | <220 |
| bis (2-chloroethoxy) methane | <5.3 | <5.3 | <5.3 | <5.3 | <5.3 | <5.5 | <80 | <10 | <80 |
| bis (2-chloroethyl) ether | <5.7 | <5.7 | <5.7 | <5.7 | <5.7 | <5.9 | <80 | <11 | <80 |
| bis (2-chloroisopropyl) ether | <5.7 | <5.7 | <6.0 | <5.7 | <5.7 | <5.9 | <60 | <11 | <60 |
| bis (2-ethylhexyl) phthalate | 55.6 | 55.2 | <10 | 84 | <10 | <10 | <200 | 61.8 | <200 |
| 4-bromophenyl phenyl ether | <1.9 | <1.9 | <1.9 | <1.9 | <1.9 | <2 | <320 | <3.7 | <320 |
| butyl benzyl phthalate | <10 | <10 | <10 | <10 | <10 | <10 | <260 | <20 | <260 |
| 2-chloronaphthalene | <1.9 | <1.9 | <1.9 | <1.9 | <1.9 | <2 | <80 | <3.7 | <80 |
| 4-chlorophenyl phenyl ether | <4.2 | <4.2 | <4.2 | <4.2 | <4.2 | <4.3 | <180 | <8.2 | <180 |
| chrysene | <2.5 | <2.5 | <2.5 | <2.5 | <2.5 | <2.6 | <180 | <4.9 | <180 |
| dibenzo (a,h) anthracene | <10 | <2.5 | <2.5 | <10 | <10 | <10 | <320 | <20 | <320 |
| 1,2-dichlorobenzene | <1.9 | <1.9 | <1.9 | <1.9 | <1.9 | 180 | <100 | 3,790 | <100 |
| 1,3-dichlorobenzene | <1.9 | <1.9 | <1.9 | <1.9 | <1.9 | 2.5 | <120 | 12.6 | <120 |
| 1,4-dichlorobenzene | <4.4 | <4.4 | <4.4 | <4.4 | <4.4 | 114 | 35 | 190 | <100 |
| 3,3-dichlorobenzidine | <17 | <16.5 | <16.5 | <17 | <17 | <17 | <3,220 | <32 | <3,220 |
| diethyl phthalate | <10 | <10 | <10 | <10 | <10 | <10 | <80 | <20 | <80 |
| dimethyl phthalate | <10 | <10 | <10 | <10 | <10 | <10 | <80 | <20 | <80 |
| di-n-butyl phthalate | <10 | <10 | <10 | <10 | <10 | <10 | <60 | <20 | 91 |
| 2,4-dinitrotoluene | <5.7 | <5.7 | <5.7 | <5.7 | <5.7 | <5.9 | <280 | <11 | <280 |
| 2,6-dinitrotoluene | <1.9 | <1.9 | <1.9 | <1.9 | <1.9 | <2.0 | <320 | <3.7 | <320 |
| di-n-octyl phthalate | <10 | <10 | <10 | <10 | <10 | <10 | <120 | <20 | <120 |
| 1,2-diphenylhydrazine | <10 | <10 | <10 | <10 | <10 | <10 | <200 | <20 | <200 |
| fluoranthene | <2.2 | <2.2 | <2.2 | <2.2 | <2.2 | <2.3 | <100 | <4.3 | <100 |
| fluorene | <1.9 | <1.9 | <1.9 | <1.9 | <1.9 | <2.0 | <80 | <3.7 | <80 |
| hexachlorobenzene | <1.9 | <1.9 | <1.9 | <1.9 | <1.9 | <2.0 | <300 | <3.7 | <300 |
| hexachlorobutadiene | <0.9 | <0.9 | <0.9 | <0.9 | <0.9 | <0.9 | <260 | <1.8 | <260 |
| hexachlorocyclopentadiene | <10 | <10 | <10 | <10 | <10 | <10 | <240 | <20 | <240 |
| hexachloroethane | <1.6 | <1.6 | <1.6 | <1.6 | <1.6 | <1.6 | <200 | <3.1 | <200 |
| indeno (1,2,3-c,d) pyrene | <4.7 | <3.7 | <3.7 | <4.7 | <4.7 | <4.8 | <140 | <9.2 | <140 |
| isophorone | <2.2 | <2.2 | <2.2 | <2.2 | <2.2 | <2.3 | <40 | <4.3 | <40 |
| naphthalene | <1.6 | <1.6 | <1.6 | <1.6 | <1.6 | 15.7 | 2,350 | 193 | <40 |
| nitrobenzene | <1.9 | <1.9 | <1.9 | <1.9 | <1.9 | 2,850 | <100 | 8,080 | <100 |
| n-nitrosodimethylamine | <10 | <10 | <10 | <10 | <10 | <10 | <200 | <20 | <200 |
| n-nitrosodi-n-propylamine | <10 | <10 | <10 | <10 | <10 | <10 | <120 | <20 | <120 |
| n-nitrosodiphenylamine | <1.9 | <1.9 | <1.9 | <1.9 | <1.9 | <2.0 | <1,640 | <3.7 | <1,640 |
| phenanthrene | <5.4 | <5.4 | <5.4 | <5.4 | <5.4 | <5.6 | <80 | <11 | <80 |
| pyrene | <1.9 | <1.9 | <1.9 | <1.9 | <1.9 | <2.0 | <100 | <3.7 | <100 |
| 1,2,4-trichlorobenzene | <1.9 | <1.9 | <1.9 | <1.9 | <1.9 | 17.2 | <140 | 929 | <140 |
| Sub Total 1 | 55.6 | 55.2 | 0 | 84 | 0 | 3179.4 | 2385 | 13256.4 | 91 |

Table E-3. Summary of Base/Neutral Extractable Compounds in Ground Water, Monsanto Company, W.G. Krummrich Plant, Sauget, Il

| Well Number: | GM-31B | GM-31C | GM-31C | GM-31C | GM-31C | B-24A | B-25A | B-25A | B-25B |
|---|---|---|---|---|---|---|---|---|---|
| Date: | 11/85* | 2/85 | 5/85 | 11/85 | 11/85* | 2/86 | 6/84 | 11/85 | 6/84 |
| Miscellaneous Base/Neutral Extractable Organic Compounds concentrations are in ug/L | | | | | | | | | |
| 2-nitroaniline | <10 | <10 | <10 | <10 | <10 | <10 | NA | 570 | NA |
| 4-nitroaniline | <10 | <10 | <10 | <10 | <10 | <10 | NA | 79.2 | NA |
| 2-nitrochlorobenzene | <10 | <10 | <10 | <10 | <10 | 368,000 | NA | 226,000 | NA |
| 4-nitrochlorobenzene | <10 | <10 | <10 | <10 | <10 | 108,000 | NA | 102,000 | NA |
| 2,4-and 3,4-dinitrochlorobenzene | <10 | <10 | <10 | <10 | <10 | <10 | NA | <20 | NA |
| 4-nitrodiphenylamine | <10 | <10 | <10 | <10 | <10 | 161 | NA | 255 | NA |
| triphenyl phosphate | <10 | <10 | <10 | <10 | <10 | <10 | NA | 412 | NA |
| 2,3,7,8-tetrachloro-dibenzo-p-dioxin | NA | NA | NA | NA | NA | NA | NA | NA | NA |
| 2-nitrobiphenyl | <10 | <25 | <25 | <10 | <10 | NA | NA | NA | NA |
| 4-nitrobiphenyl | <10 | <25 | <25 | <10 | <10 | NA | NA | NA | NA |
| Sub Total 2 | 0 | 0 | 0 | 0 | 0 | 476161 | NA | 329316.2 | NA |
| Total Base/Neutral Compounds Analyzed | 55.6 | 55.2 | 0 | 84 | 0 | 479340.4 | 2385 | 342572.6 | 91 |

Table E-3. Summary of Base/Neutral Extractable Compounds in Ground Water, Monsanto Company, W.G. Krummrich Plant, Sauget, Il

| Well Number: | B-25B | B-27B | B-27B | B-28A | B-29A | B-29A | B-29B | B-29B | B-29B |
|---|---|---|---|---|---|---|---|---|---|
| Date: | 11/85 | 9/84** | 9/84* | 2/86 | 6/84 | 11/85 | 6/84 | 6/84* | 6/84# |
| USEPA Priority Pollutant Base/Neutral Extractable Organic Compounds concentrations are in ug/L | | | | | | | | | |
| acenaphthene | <2.0 | NA | NA | <2.0 | <80 | <3.7 | <800 | <80 | <100 |
| acenapthylene | <3.7 | NA | NA | <3.7 | <60 | <6.9 | <600 | <60 | <100 |
| anthracene | <2.0 | NA | NA | <2.0 | <80 | <3.7 | <800 | <80 | <100 |
| benzidine | <47 | NA | NA | <47 | <1,200 | <86 | <12,000 | <1,200 | <100 |
| benzo (a) anthracene | <8.3 | NA | NA | <8.3 | <180 | <15 | <1,800 | <180 | <100 |
| benzo (a) pyrene | <2.7 | NA | NA | <2.7 | <240 | <4.9 | <2,400 | <240 | <100 |
| benzo (b) fluoroanthene | <5.1 | NA | NA | <5.1 | <220 | <9.4 | <2,200 | <220 | <100 |
| benzo (ghi) perylene | <4.4 | NA | NA | <4.4 | <280 | <8.0 | <2,800 | <280 | <100 |
| benzo (k) fluoranthene | <3.7 | NA | NA | <3.7 | <220 | <6.9 | <2,200 | <220 | <100 |
| bis (2-chloroethoxy) methane | <5.6 | NA | NA | <5.6 | <80 | <10 | <800 | <80 | <100 |
| bis (2-chloroethyl) ether | <6.1 | NA | NA | <6.1 | <80 | <11 | <800 | <80 | <100 |
| bis (2-chloroisopropyl) ether | <6.1 | NA | NA | <6.1 | <60 | <11 | <600 | <60 | <100 |
| bis (2-ethylhexyl) phthalate | <11 | NA | NA | <11 | <200 | <20 | 591 | <200 | <100 |
| 4-bromophenyl phenyl ether | <2 | NA | NA | <2 | <320 | <3.7 | <3,200 | <320 | <100 |
| butyl benzyl phthalate | <11 | NA | NA | <11 | <260 | <20 | <2,600 | <260 | <100 |
| 2-chloronaphthalene | <2 | NA | NA | <2 | <80 | <3.7 | <800 | <80 | <100 |
| 4-chlorophenyl phenyl ether | <4.5 | NA | NA | <4.5 | <180 | <8.2 | <1,800 | <180 | <100 |
| chrysene | <2.7 | NA | NA | <2.7 | <180 | <4.9 | <1,800 | <180 | <100 |
| dibenzo (a,h) anthracene | <11 | NA | NA | <11 | <320 | <20 | <3,200 | <320 | <100 |
| 1,2-dichlorobenzene | 124 | NA | NA | <2 | <100 | 221 | 1,070 | <100 | 13,500 |
| 1,3-dichlorobenzene | 2.7 | NA | NA | <2 | <120 | 24 | <1,200 | <120 | <100 |
| 1,4-dichlorobenzene | 31 | NA | NA | <4.7 | <100 | 73.1 | <1,000 | 240 | <100 |
| 3,3-dichlorobenzidine | <18 | NA | NA | <18 | <3,220 | <33.3 | <32,200 | <3,220 | <100 |
| diethyl phthalate | <11 | NA | NA | <11 | <80 | <20 | <800 | <80 | <100 |
| dimethyl phthalate | <11 | NA | NA | <11 | <80 | <20 | <800 | <80 | <100 |
| di-n-butyl phthalate | <11 | NA | NA | <11 | 127 | <20 | 304 | <60 | <100 |
| 2,4-dinitrotoluene | <6.1 | NA | NA | <6.1 | <280 | <11 | <2,800 | <280 | <100 |
| 2,6-dinitrotoluene | <2.0 | NA | NA | <2.0 | <320 | <3.7 | <3,200 | <320 | <100 |
| di-n-octyl phthalate | <11 | NA | NA | <11 | <120 | <20 | <1,200 | <120 | <100 |
| 1,2-diphenylhydrazine | <11 | NA | NA | <11 | <200 | <20 | <2,000 | <200 | <100 |
| fluoranthene | <2.3 | NA | NA | <2.3 | <100 | <4.3 | <1,000 | <100 | <100 |
| fluorene | <2.0 | NA | NA | <2.0 | <80 | <3.7 | <800 | <80 | <100 |
| hexachlorobenzene | <2.0 | NA | NA | <2.0 | <300 | <3.7 | <3,000 | <300 | <100 |
| hexachlorobutadiene | <1 | NA | NA | <1 | <260 | <1.8 | <2,600 | <260 | <100 |
| hexachlorocyclopentadiene | <11 | NA | NA | <11 | <240 | <20 | <2,400 | <240 | <100 |
| hexachloroethane | <1.7 | NA | NA | <1.7 | <200 | <3.1 | <2,000 | <200 | <100 |
| indeno (1,2,3-c,d) pyrene | <5.0 | NA | NA | <5.0 | <140 | <9.2 | <1,400 | <140 | <100 |
| isophorone | <2.3 | NA | NA | <2.3 | <40 | 27.5 | <400 | <40 | <100 |
| naphthalene | 31.7 | NA | NA | <1.7 | <40 | <3.1 | <400 | 11,600 | <100 |
| nitrobenzene | 4,030 | NA | NA | <2.0 | <100 | 1,650 | <1,000 | <100 | <100 |
| n-nitrosodimethylamine | <11 | NA | NA | <11 | <200 | <20 | <2,000 | <200 | <100 |
| n-nitrosodi-n-propylamine | <11 | NA | NA | <11 | <120 | <20 | <1,200 | <120 | <100 |
| n-nitrosodiphenylamine | <2.0 | NA | NA | <2.0 | <1,640 | <3.7 | <16,400 | <1,640 | <100 |
| phenanthrene | <5.7 | NA | NA | <5.7 | <80 | <11 | <800 | <80 | <100 |
| pyrene | <2.0 | NA | NA | <2.0 | <100 | <3.7 | <1,000 | <100 | <100 |
| 1,2,4-trichlorobenzene | 37.8 | NA | NA | <2.0 | <140 | 25.5 | <1,400 | <140 | <100 |
| Sub Total 1 | 4257.2 | NA | NA | 0 | 127 | 2021.1 | 1965 | 11840 | 13500 |

Table E-3. Summary of Base/Neutral Extractable Compounds in Ground Water, Monsanto Company, W.G. Krummrich Plant, Sauget, Il

| Well Number: | B-25B | B-27B | B-27B | B-28A | B-29A | B-29A | B-29B | B-29B | B-29B |
|---|---|---|---|---|---|---|---|---|---|
| Date: | 11/85 | 9/84** | 9/84* | 2/86 | 6/84 | 11/85 | 6/84 | 6/84* | 6/84# |
| Miscellaneous Base/Neutral Extractable Organic Compounds concentrations are in ug/L | | | | | | | | | |
| 2-nitroaniline | 3,280 | NA | NA | <11 | NA | <20 | NA | NA | NA |
| 4-nitroaniline | 1,780 | NA | NA | <11 | NA | 189 | NA | NA | NA |
| 2-nitrochlorobenzene | 25,600 | NA | NA | <11 | NA | <20 | NA | NA | NA |
| 4-nitrochlorobenzene | 15,500 | NA | NA | <11 | NA | <20 | NA | NA | NA |
| 2,4-and 3,4-dinitrochlorobenzene | <11 | NA | NA | <11 | NA | <20 | NA | NA | NA |
| 4-nitrodiphenylamine | 34.5 | NA | NA | <11 | NA | 628 | NA | NA | NA |
| triphenyl phosphate | <11 | NA | NA | <11 | NA | 132 | NA | NA | NA |
| 2,3,7,8-tetrachloro-dibenzo-p-dioxin | NA | NA | NA | NA | NA | NA | NA | NA | NA |
| 2-nitrobiphenyl | NA | NA | NA | NA | NA | NA | NA | NA | NA |
| 4-nitrobiphenyl | NA | NA | NA | NA | NA | NA | NA | NA | NA |
| Sub Total 2 | 46194.5 | NA | NA | 0 | NA | 949 | NA | NA | NA |
| Total Base/Neutral Compounds Analyzed | 50451.7 | NA | NA | 0 | 127 | 2970.1 | 1965 | 11840 | 13500 |

Table E-3. Summary of Base/Neutral Extractable Compounds in Ground Water, Monsanto Company, W.G. Krummrich Plant, Sauget, Il

| Well Number: | B-29B | B-29B | B-30B | B-31B | B-31B | B-31C | B-31C | B-31C | B-31C |
|---|---|---|---|---|---|---|---|---|---|
| Date: | 11/84 | 11/85 | 9/84** | 11/85 | 2/86 | 9/84** | 9/84* | 11/85 | 2/86 |
| USEPA Priority Pollutant Base/Neutral Extractable Organic Compounds concentrations are in ug/L | | | | | | | | | |
| acenaphthene | <50 | <3.8 | NA | <1.9 | <1.9 | <4 | <4 | <1.9 | <2.0 |
| acenapthylene | <50 | <7.0 | NA | <3.5 | <3.5 | <3 | <3 | <3.5 | <3.7 |
| anthracene | <50 | <3.8 | NA | <1.9 | <1.9 | <4 | <4 | <1.9 | <2.0 |
| benzidine | <50 | <88 | NA | <44 | <44 | <60 | <60 | <45 | <46 |
| benzo (a) anthracene | <50 | <16 | NA | <7.8 | <7.9 | <9 | <9 | <8.0 | <8.2 |
| benzo (a) pyrene | <50 | <5.0 | NA | <2.5 | <2.5 | <12 | <12 | <2.6 | <2.6 |
| benzo (b) fluoroanthene | <50 | <9.6 | NA | <4.8 | <4.8 | <11 | <11 | <4.9 | <5.1 |
| benzo (ghi) perylene | <50 | <8.2 | NA | <4.1 | <4.1 | <14 | <14 | <4.2 | <4.3 |
| benzo (k) fluoranthene | <50 | <7.0 | NA | <3.5 | <3.5 | <11 | <11 | <3.6 | <3.7 |
| bis (2-chloroethoxy) methane | <50 | <11 | NA | <5.3 | <5.4 | <4 | <4 | <5.4 | <5.6 |
| bis (2-chloroethyl) ether | <50 | <11 | NA | <5.7 | <5.8 | <4 | <4 | <5.8 | <6.0 |
| bis (2-chloroisopropyl) ether | <50 | <11 | NA | <5.7 | <5.8 | <3 | <3 | <5.8 | <6.0 |
| bis (2-ethylhexyl) phthalate | <50 | <20 | NA | 101 | <10 | <10 | <10 | <10 | <11 |
| 4-bromophenyl phenyl ether | <50 | <3.8 | NA | <1.9 | <1.9 | <16 | <16 | <1.9 | <2 |
| butyl benzyl phthalate | <50 | <20 | NA | <10 | <10 | <13 | <13 | <10 | <11 |
| 2-chloronaphthalene | <50 | <3.8 | NA | <1.9 | <1.9 | <4 | <4 | <1.9 | <2 |
| 4-chlorophenyl phenyl ether | <50 | <8.4 | NA | <4.2 | <4.2 | <9 | <9 | <4.3 | <4.4 |
| chrysene | <50 | <5.0 | NA | <2.5 | <2.5 | <9 | <9 | <2.6 | <2.6 |
| dibenzo (a,h) anthracene | <50 | <20 | NA | <10 | <10 | <16 | <16 | <10 | <11 |
| 1,2-dichlorobenzene | 4,200 | 779 | NA | <1.9 | <1.9 | 4 | 6 | 31.9 | 40.3 |
| 1,3-dichlorobenzene | <50 | <3.8 | NA | <1.9 | <1.9 | <6 | <6 | <1.9 | <2 |
| 1,4-dichlorobenzene | <50 | <8.8 | NA | <4.4 | <4.4 | 4 | 5 | 19.4 | 22.2 |
| 3,3-dichlorobenzidine | <50 | <34 | NA | <17 | <17 | <161 | <161 | <17 | <17 |
| diethyl phthalate | <50 | <20 | NA | <10 | <10 | <4 | <4 | <10 | <11 |
| dimethyl phthalate | <50 | <20 | NA | <10 | <10 | <4 | <4 | <10 | <11 |
| di-n-butyl phthalate | <50 | <20 | NA | 4.5 | <10 | <3 | <3 | <10 | <11 |
| 2,4-dinitrotoluene | <50 | <11 | NA | <5.7 | <5.8 | <14 | <14 | <5.8 | <6.0 |
| 2,6-dinitrotoluene | <50 | <3.8 | NA | <1.9 | <1.9 | <16 | <16 | <1.9 | <2.0 |
| di-n-octyl phthalate | <50 | <20 | NA | <10 | <10 | <6 | <6 | <10 | <11 |
| 1,2-diphenylhydrazine | <50 | <20 | NA | <10 | <10 | <10 | <10 | <10 | <11 |
| fluoranthene | <50 | <4.4 | NA | <2.2 | <2.2 | <5 | <5 | <2.2 | <2.3 |
| fluorene | <50 | <3.8 | NA | <1.9 | <1.9 | <4 | <4 | <1.9 | <2.0 |
| hexachlorobenzene | <50 | <3.8 | NA | <1.9 | <1.9 | <15 | <15 | <1.9 | <2.0 |
| hexachlorobutadiene | <50 | <1.8 | NA | <0.9 | <0.9 | <13 | <13 | <0.9 | <1 |
| hexachlorocyclopentadiene | <50 | <20 | NA | <10 | <10 | <12 | <12 | <10 | <11 |
| hexachloroethane | <50 | <3.2 | NA | <1.6 | <1.6 | <10 | <10 | <1.6 | <1.7 |
| indeno (1,2,3-c,d) pyrene | <50 | <9.4 | NA | <4.7 | <4.7 | <7 | <7 | <4.8 | <4.9 |
| isophorone | 55 | 76.6 | NA | <2.2 | <2.2 | <2 | <2 | <2.2 | <2.3 |
| naphthalene | 125 | 58.6 | NA | <1.6 | <1.6 | <2 | <2 | <1.6 | <1.7 |
| nitrobenzene | 2,170 | 1,060 | NA | <1.9 | <1.9 | <5 | <5 | <1.9 | <2.0 |
| n-nitrosodimethylamine | <50 | <20 | NA | <10 | <10 | <10 | <10 | <10 | <11 |
| n-nitrosodi-n-propylamine | <50 | <20 | NA | <10 | <10 | <6 | <6 | <10 | <11 |
| n-nitrosodiphenylamine | <50 | <3.8 | NA | <1.9 | <1.9 | <82 | <82 | <1.9 | <2.0 |
| phenanthrene | <50 | <11 | NA | <5.4 | <5.5 | <4 | <4 | <5.5 | <5.7 |
| pyrene | <50 | <3.8 | NA | <1.9 | <1.9 | <5 | <5 | <1.9 | <2.0 |
| 1,2,4-trichlorobenzene | 520 | 65.5 | NA | <1.9 | <1.9 | <7 | <7 | <1.9 | <2.0 |
| Sub Total 1 | 7070 | 2039.7 | NA | 105.5 | 0 | 8 | 11 | 51.3 | 62.5 |

Table E-3. Summary of Base/Neutral Extractable Compounds in Ground Water, Monsanto Company, W.G. Krummrich Plant, Sauget, Il

| Well Number: | B-29B | B-29B | B-30B | B-31B | B-31B | B-31C | B-31C | B-31C | B-31C |
|---|---|---|---|---|---|---|---|---|---|
| Date: | 11/84 | 11/85 | 9/84** | 11/85 | 2/86 | 9/84** | 9/84* | 11/85 | 2/86 |
| Miscellaneous Base/Neutral Extractable Organic Compounds concentrations are in ug/L | | | | | | | | | |
| 2-nitroaniline | <50 | <20 | NA | <10 | <10 | <25-30 | <25-30 | <10 | <11 |
| 4-nitroaniline | 375 | 601 | NA | <10 | <10 | <25-30 | <25-30 | <10 | <11 |
| 2-nitrochlorobenzene | a) | 282 | NA | <10 | <10 | <10 | <10 | <10 | <11 |
| 4-nitrochlorobenzene | a) | <20 | NA | <10 | <10 | <10 | <10 | <10 | <11 |
| 2,4-and 3,4-dinitrochlorobenzene | <50 | <20 | NA | <10 | <10 | <10 | <10 | <10 | <11 |
| 4-nitrodiphenylamine | 601 | 949 | NA | <10 | <10 | <10 | <10 | <10 | <11 |
| triphenyl phosphate | 607 | 548 | NA | <10 | <10 | <10 | <10 | <10 | <11 |
| 2,3,7,8-tetrachloro-dibenzo-p-dioxin | NA | NA | NA | NA | NA | NA | NA | NA | NA |
| 2-nitrobiphenyl | NA | NA | NA | NA | NA | <10 | <10 | NA | NA |
| 4-nitrobiphenyl | NA | NA | NA | NA | NA | <10 | <10 | NA | NA |
| Sub Total 2 | 1583 | 2380 | NA | 0 | 0 | 0 | 0 | 0 | 0 |
| Total Base/Neutral Compounds Analyzed | 8653 | 4419.7 | NA | 105.5 | 0 | 8 | 11 | 51.3 | 62.5 |

Table E-3. Summary of Base/Neutral Extractable Compounds in Ground Water, Monsanto Company, W.G. Krummrich Plant, Sauget, Il

| Well Number: | B-101 | B-102 | GM-106 | GM-106 | GM-106 | P-1 | P-2 | P-2 | P-6 |
|---|---|---|---|---|---|---|---|---|---|
| Date: | 9/84** | 9/84** | 11/85 | 2/86 | 2/86* | 9/84** | 6/84 | 11/85 | 6/84 |
| USEPA Priority Pollutant Base/Neutral Extractable Organic Compounds concentrations are in ug/L | | | | | | | | | |
| acenaphthene | <4 | <4 | <1.9 | <2.0 | <1.9 | <4 | <1 | <1.9 | <1 |
| acenapthylene | <3 | <3 | <3.5 | <3.6 | <3.6 | <3 | <1 | <3.5 | <1 |
| anthracene | <4 | <4 | <1.9 | <2.0 | <1.9 | <4 | <1 | <1.9 | <1 |
| benzidine | <60 | <60 | <44 | <45 | <45 | <60 | <1 | <44 | <1 |
| benzo (a) anthracene | <9 | <9 | <7.9 | <8 | <8 | <9 | <1 | <7.8 | <1 |
| benzo (a) pyrene | <12 | <12 | <2.5 | <2.6 | <2.6 | <12 | <1 | <2.5 | <1 |
| benzo (b) fluoroanthene | <11 | <11 | <4.8 | <4.9 | <4.9 | <11 | <1 | <4.8 | <1 |
| benzo (ghi) perylene | <14 | <14 | <4.1 | <4.2 | <4.2 | <14 | <1 | <4.1 | <1 |
| benzo (k) fluoranthene | <11 | <11 | <3.5 | <3.6 | <3.6 | <11 | <1 | <3.5 | <1 |
| bis (2-chloroethoxy) methane | <4 | <4 | <5.4 | <5.5 | <5.4 | <4 | <1 | <5.3 | <1 |
| bis (2-chloroethyl) ether | <4 | <4 | <5.8 | <5.9 | <5.8 | <4 | <1 | <5.7 | <1 |
| bis (2-chloroisopropyl) ether | <3 | <3 | <5.8 | <5.9 | <5.8 | <3 | <1 | <5.7 | <1 |
| bis (2-ethylhexyl) phthalate | 109 | 3 | <10 | <10 | <10 | 4 | 1 | <10 | <1 |
| 4-bromophenyl phenyl ether | <16 | <16 | <1.9 | <2 | <1.9 | <16 | <1 | <1.9 | <1 |
| butyl benzyl phthalate | <13 | <13 | <10 | <10 | <10 | <13 | <1 | <10 | <1 |
| 2-chloronaphthalene | <4 | <4 | <1.9 | <2 | <1.9 | <4 | <1 | <1.9 | <1 |
| 4-chlorophenyl phenyl ether | <9 | <9 | <4.2 | <4.3 | <4.3 | <9 | <1 | <4.2 | <1 |
| chrysene | <9 | <9 | <2.5 | <2.6 | <2.6 | <9 | <1 | <2.5 | <1 |
| dibenzo (a,h) anthracene | <16 | <16 | <10 | <10 | <10 | <16 | <1 | <10 | <1 |
| 1,2-dichlorobenzene | <5 | <5 | <1.9 | 4.9 | 4.8 | 9 | 1 | <1.9 | <1 |
| 1,3-dichlorobenzene | 28,500 | <6 | <1.9 | <2 | <1.9 | <6 | <1 | <1.9 | <1 |
| 1,4-dichlorobenzene | <5 | <5 | <4.4 | <4.5 | <4.5 | 1 | 7 | 21.4 | <1 |
| 3,3-dichlorobenzidine | <161 | <161 | <17 | <17 | <17 | <161 | <1 | <17 | <1 |
| diethyl phthalate | <4 | <4 | <10 | <10 | <10 | <4 | <1 | <10 | <1 |
| dimethyl phthalate | <4 | <4 | <10 | <10 | <10 | <4 | <1 | <10 | <1 |
| di-n-butyl phthalate | <3 | 1 | <10 | <10 | <10 | 2 | 1 | <10 | <1 |
| 2,4-dinitrotoluene | 65,700 | <14 | <5.8 | <5.9 | <5.8 | <14 | <1 | <5.7 | <1 |
| 2,6-dinitrotoluene | <16 | <16 | <1.9 | <2.0 | <1.9 | <16 | <1 | <1.9 | <1 |
| di-n-octyl phthalate | <6 | <6 | <10 | <10 | <10 | <6 | <1 | <10 | <1 |
| 1,2-diphenylhydrazine | <10 | <10 | <10 | <10 | <10 | <10 | <1 | <10 | <1 |
| fluoranthene | <5 | <5 | <2.2 | <2.3 | <2.2 | <5 | <1 | <2.2 | <1 |
| fluorene | <4 | <4 | <1.9 | <2.0 | <1.9 | <4 | <1 | <1.9 | <1 |
| hexachlorobenzene | <15 | <15 | <1.9 | <2.0 | <1.9 | <15 | <1 | <1.9 | <1 |
| hexachlorobutadiene | <13 | <13 | <0.9 | <0.9 | <0.9 | <13 | <1 | <0.9 | <1 |
| hexachlorocyclopentadiene | <12 | <12 | <10 | <10 | <10 | <12 | <1 | <10 | <1 |
| hexachloroethane | <10 | <10 | <1.6 | <1.6 | <1.6 | <10 | <1 | <1.6 | <1 |
| indeno (1,2,3-c,d) pyrene | <7 | <7 | <4.7 | <4.8 | <4.8 | <7 | <1 | <4.7 | <1 |
| isophorone | <2 | <2 | <2.2 | <2.3 | <2.2 | <2 | <1 | <2.2 | <1 |
| naphthalene | <2 | <2 | <1.6 | <1.6 | <1.6 | <2 | <1 | <1.6 | <1 |
| nitrobenzene | <5 | <5 | 3.3 | 7.9 | 8.2 | <5 | <1 | <1.9 | <1 |
| n-nitrosodimethylamine | <10 | <10 | <10 | <10 | <10 | <10 | <1 | <10 | <1 |
| n-nitrosodi-n-propylamine | <6 | <6 | <10 | <10 | <10 | <6 | <1 | <10 | <1 |
| n-nitrosodiphenylamine | <82 | <82 | <1.9 | <2.0 | <1.9 | <82 | <1 | <1.9 | <1 |
| phenanthrene | <4 | <4 | <5.5 | <5.6 | <5.5 | <4 | <1 | <5.4 | <1 |
| pyrene | <5 | <5 | <1.9 | <2.0 | <1.9 | <5 | <1 | <1.9 | <1 |
| 1,2,4-trichlorobenzene | <7 | <7 | <1.9 | <2.0 | <1.9 | 1 | <1 | <1.9 | <1 |
| Sub Total 1 | 94309 | 4 | 3.3 | 12.8 | 13 | 17 | 10 | 21.4 | 0 |

Table E-3. Summary of Base/Neutral Extractable Compounds in Ground Water, Monsanto Company, W.G. Krummrich Plant, Sauget, Il

| Well Number: | B-101 | B-102 | GM-106 | GM-106 | GM-106 | P-1 | P-2 | P-2 | P-6 |
|---|---|---|---|---|---|---|---|---|---|
| Date: | 9/84** | 9/84** | 11/85 | 2/86 | 2/86* | 9/84** | 6/84 | 11/85 | 6/84 |
| Miscellaneous Base/Neutral Extractable Organic Compounds concentrations are in ug/L | | | | | | | | | |
| 2-nitroaniline | <25-30 | <25-30 | <10 | <10 | <10 | <25-30 | NA | <10 | NA |
| 4-nitroaniline | <25-30 | <25-30 | <10 | <10 | <10 | <25-30 | NA | <10 | NA |
| 2-nitrochlorobenzene | <10 | <10 | 598 | 115 | 99.9 | c) | NA | <10 | NA |
| 4-nitrochlorobenzene | <10 | <10 | 108 | 353 | 398 | c) | NA | <10 | NA |
| 2,4-and 3,4-dinitrochlorobenzene | <10 | <10 | <10 | <10 | <10 | <10 | NA | <10 | NA |
| 4-nitrodiphenylamine | <10 | <10 | <10 | <10 | <10 | <10 | NA | <10 | NA |
| triphenyl phosphate | <10 | <10 | <10 | <10 | <10 | <10 | NA | <10 | NA |
| 2,3,7,8-tetrachloro-dibenzo-p-dioxin | NA | NA | NA | NA | NA | NA | NA | NA | NA |
| 2-nitrobiphenyl | <10 | <10 | NA | NA | NA | <10 | NA | NA | NA |
| 4-nitrobiphenyl | <10 | <10 | NA | NA | NA | <10 | NA | NA | NA |
| Sub Total 2 | 0 | 0 | 706 | 468 | 497.9 | 0 | NA | 0 | NA |
| Total Base/Neutral Compounds Analyzed | 94309 | 4 | 709.3 | 480.8 | 510.9 | 17 | 10 | 21.4 | 0 |

Table E-3. Summary of Base/Neutral Extractable Compounds in Ground Water, Monsanto Company, W.G. Krummrich Plant, Sauget, Il

| Well Number: | P-6 | P-7 | P-7 | P-8 | P-8 | P-10 | P-11 | P-12 | P-13 |
|---|---|---|---|---|---|---|---|---|---|
| Date: | 11/85 | 6/84 | 11/85 | 6/84 | 11/85 | 9/84** | 9/84** | 9/84** | 6/84 |
| USEPA Priority Pollutant Base/Neutral Extractable Organic Compounds concentrations are in ug/L | | | | | | | | | |
| acenaphthene | <2.0 | <80 | <380 | <1 | <1.9 | <4 | <4 | <4 | <1 |
| acenapthylene | <3.7 | <60 | <710 | <1 | <3.5 | <3 | <3 | <3 | <1 |
| anthracene | <2.0 | <80 | <380 | <1 | <1.9 | <4 | <4 | <4 | <1 |
| benzidine | <47 | 1,940 | <8900 | 1 | <44 | <60 | <60 | <60 | <1 |
| benzo (a) anthracene | <8.3 | <180 | <1600 | <1 | <7.8 | <9 | <9 | <9 | <1 |
| benzo (a) pyrene | <2.7 | <240 | <510 | <1 | <2.5 | <12 | <12 | <12 | <1 |
| benzo (b) fluoroanthene | <5.1 | <220 | <970 | <1 | <4.8 | <11 | <11 | <11 | <1 |
| benzo (ghi) perylene | <4.4 | <280 | <830 | <1 | <4.1 | <14 | <14 | <14 | <1 |
| benzo (k) fluoranthene | <3.7 | <220 | <710 | <1 | <3.5 | <11 | <11 | <11 | <1 |
| bis (2-chloroethoxy) methane | <5.6 | <80 | <1100 | <1 | <5.3 | <4 | <4 | <4 | <1 |
| bis (2-chloroethyl) ether | <6.1 | <80 | <1200 | <1 | <5.7 | <4 | <4 | <4 | <1 |
| bis (2-chloroisopropyl) ether | <6.1 | <60 | <1200 | <1 | <5.7 | <3 | <3 | <3 | <1 |
| bis (2-ethylhexyl) phthalate | <11 | 21 | <2000 | 19 | 12.7 | 3 | 15 | <10 | <1 |
| 4-bromophenyl phenyl ether | <2 | <320 | <380 | <1 | <1.9 | <16 | <16 | <16 | <1 |
| butyl benzyl phthalate | <11 | <260 | <2000 | <1 | <10 | <13 | <13 | <13 | <1 |
| 2-chloronaphthalene | <2 | <80 | <380 | <1 | <1.9 | <4 | <4 | <4 | <1 |
| 4-chlorophenyl phenyl ether | <4.5 | <180 | <850 | <1 | <4.2 | <9 | <9 | <9 | <1 |
| chrysene | <2.7 | <180 | <510 | <1 | <2.5 | <9 | <9 | <9 | <1 |
| dibenzo (a,h) anthracene | <11 | <320 | <2000 | <1 | <10 | <16 | <16 | <16 | <1 |
| 1,2-dichlorobenzene | <2 | 73 | 531 | 1 | 45.4 | <5 | <5 | 61 | <1 |
| 1,3-dichlorobenzene | <2 | <120 | <380 | <1 | <1.9 | <6 | <6 | <6 | <1 |
| 1,4-dichlorobenzene | <4.7 | 64 | <890 | 12 | 121 | <5 | 74 | 77 | 1 |
| 3,3-dichlorobenzidine | <18 | <3,220 | <3300 | <1 | <17 | <161 | <161 | <161 | <1 |
| diethyl phthalate | <11 | <80 | <2000 | <1 | <10 | <4 | <4 | <4 | <1 |
| dimethyl phthalate | <11 | <80 | <2000 | <1 | <10 | <4 | <4 | <4 | <1 |
| di-n-butyl phthalate | <11 | 72 | <2000 | 1 | <10 | 5 | 6 | 6 | <1 |
| 2,4-dinitrotoluene | <6.1 | <280 | <1200 | <1 | <5.7 | <14 | <14 | <14 | <1 |
| 2,6-dinitrotoluene | <2.0 | <320 | <380 | <1 | <1.9 | <16 | <16 | <16 | <1 |
| di-n-octyl phthalate | <11 | <120 | <2000 | <1 | <10 | <6 | <6 | <6 | <1 |
| 1,2-diphenylhydrazine | <11 | <200 | <2000 | <1 | <10 | <10 | <10 | <10 | <1 |
| fluoranthene | <2.3 | <100 | <440 | <1 | <2.2 | <5 | <5 | <5 | <1 |
| fluorene | <2.0 | <80 | <380 | <1 | <1.9 | <4 | <4 | <4 | <1 |
| hexachlorobenzene | <2.0 | <300 | <380 | <1 | <1.9 | <15 | <15 | <15 | <1 |
| hexachlorobutadiene | <1.0 | <260 | <180 | <1 | <0.9 | <13 | <13 | <13 | <1 |
| hexachlorocyclopentadiene | <11 | <240 | <2000 | <1 | <10 | <12 | <12 | <12 | <1 |
| hexachloroethane | <1.7 | <200 | <320 | <1 | <1.6 | <10 | <10 | <10 | <1 |
| indeno (1,2,3-c,d) pyrene | <5.0 | <140 | <950 | <1 | <4.7 | <7 | <7 | <7 | <1 |
| isophorone | <2.3 | <40 | <440 | <1 | <2.2 | <2 | <2 | <2 | <1 |
| naphthalene | <1.7 | <40 | <320 | <1 | <1.6 | <2 | <2 | <2 | <1 |
| nitrobenzene | <2.0 | <100 | 714 | <1 | <1.9 | <5 | <5 | <5 | <1 |
| n-nitrosodimethylamine | <11 | <200 | <2000 | <1 | <10 | <10 | <10 | <10 | <1 |
| n-nitrosodi-n-propylamine | <11 | <120 | <2000 | <1 | <10 | <6 | <6 | <6 | <1 |
| n-nitrosodiphenylamine | <2.0 | <1,640 | <380 | <1 | <1.9 | <82 | 11 | <82 | <1 |
| phenanthrene | <5.7 | <80 | <1100 | <1 | <5.4 | <4 | <4 | <4 | <1 |
| pyrene | <2.0 | <100 | <380 | <1 | <1.9 | <5 | <5 | <5 | <1 |
| 1,2,4-trichlorobenzene | <2.0 | <140 | <380 | <1 | <1.9 | <7 | <7 | <7 | <1 |
| Sub Total 1 | 0 | 2170 | 1245 | 34 | 179.1 | 8 | 106 | 144 | 1 |

Table E-3. Summary of Base/Neutral Extractable Compounds in Ground Water, Monsanto Company, W.G. Krummrich Plant, Sauget, Il

| Well Number: | P-6 | P-7 | P-7 | P-8 | P-8 | P-10 | P-11 | P-12 | P-13 |
|---|---|---|---|---|---|---|---|---|---|
| Date: | 11/85 | 6/84 | 11/85 | 6/84 | 11/85 | 9/84** | 9/84** | 9/84** | 6/84 |
| Miscellaneous Base/Neutral Extractable Organic Compounds concentrations are in ug/L | | | | | | | | | |
| 2-nitroaniline | <11 | NA | <2000 | NA | <10 | <25-30 | <25-30 | <25-30 | NA |
| 4-nitroaniline | <11 | NA | <2000 | NA | <10 | <25-30 | <25-30 | <25-30 | NA |
| 2-nitrochlorobenzene | <11 | NA | 303,000 | NA | <10 | <10 | <10 | <10 | NA |
| 4-nitrochlorobenzene | <11 | NA | 75,000 | NA | <10 | <10 | <10 | <10 | NA |
| 2,4-and 3,4-dinitrochlorobenzene | <11 | NA | <2000 | NA | <10 | <10 | <10 | <10 | NA |
| 4-nitrodiphenylamine | <11 | NA | <2000 | NA | <10 | <10 | <10 | <10 | NA |
| triphenyl phosphate | <11 | NA | <2000 | NA | <10 | <10 | <10 | <10 | NA |
| 2,3,7,8-tetrachloro-dibenzo-p-dioxin | NA | NA | NA | NA | NA | NA | NA | NA | NA |
| 2-nitrobiphenyl | NA | NA | NA | NA | NA | <10 | <10 | <10 | NA |
| 4-nitrobiphenyl | NA | NA | NA | NA | NA | <10 | <10 | <10 | NA |
| Sub Total 2 | 0 | NA | 378000 | NA | 0 | 0 | 0 | 0 | NA |
| Total Base/Neutral Compounds Analyzed | 0 | 2170 | 379245 | 34 | 179.1 | 8 | 106 | 144 | 1 |

Table E-3. Summary of Base/Neutral Extractable Compounds in Ground Water, Monsanto Company, W.G. Krummrich Plant, Sauget, Il

| Well Number: | P-13 | P-13 | P-13 | P-14 | P-14 | DW-1 | DW-1 | DW-4 | DW-7 |
|---|---|---|---|---|---|---|---|---|---|
| Date: | 6/84* | 6/84* | 11/85 | 6/84 | 11/85 | 9/84** | 11/85 | 9/84** | 11/85 |
| USEPA Priority Pollutant Base/Neutral Extractable Organic Compounds concentrations are in ug/L | | | | | | | | | |
| acenaphthene | <1 | <10 | <1.9 | <1 | <2.0 | <4 | <1.9 | <4 | <1.9 |
| acenapthylene | <1 | <10 | <3.5 | <1 | <3.6 | <3 | <3.5 | <3 | <3.5 |
| anthracene | <1 | <10 | <1.9 | <1 | <2.0 | <4 | <1.9 | <4 | <1.9 |
| benzidine | <1 | <10 | <44 | <1 | <45 | <60 | <44 | <60 | <44 |
| benzo (a) anthracene | <1 | <10 | <7.8 | <1 | <8.0 | <9 | <7.8 | <9 | <7.8 |
| benzo (a) pyrene | <1 | <10 | <2.5 | <1 | <2.6 | <12 | <2.5 | <12 | <2.5 |
| benzo (b) fluoroanthene | <1 | <10 | <4.8 | <1 | <4.9 | <11 | <4.8 | <11 | <4.8 |
| benzo (ghi) perylene | <1 | <10 | <4.1 | <1 | <4.2 | <14 | <4.1 | <14 | <4.1 |
| benzo (k) fluoranthene | <1 | <10 | <3.5 | <1 | <3.6 | <11 | <3.5 | <11 | <3.5 |
| bis (2-chloroethoxy) methane | <1 | <10 | <5.3 | <1 | <5.5 | <4 | <5.3 | <4 | <5.3 |
| bis (2-chloroethyl) ether | <1 | <10 | <5.7 | <1 | <5.9 | <4 | <5.7 | <4 | <5.7 |
| bis (2-chloroisopropyl) ether | <1 | <10 | <5.7 | <1 | <5.9 | <3 | <5.7 | <3 | <5.7 |
| bis (2-ethylhexyl) phthalate | 779 | <10 | <10 | <1 | <10 | <10 | <10 | <10 | <10 |
| 4-bromophenyl phenyl ether | <1 | <10 | <1.9 | <1 | <2 | <16 | <1.9 | <16 | <1.9 |
| butyl benzyl phthalate | <1 | <10 | <10 | <1 | <10 | <13 | <10 | <13 | <10 |
| 2-chloronaphthalene | <1 | <10 | <1.9 | <1 | <2 | <4 | <1.9 | <4 | <1.9 |
| 4-chlorophenyl phenyl ether | <1 | <10 | <4.2 | <1 | <4.3 | <9 | <4.2 | <9 | <4.2 |
| chrysene | <1 | <10 | <2.5 | <1 | <2.6 | <9 | <2.5 | <9 | <2.5 |
| dibenzo (a,h) anthracene | <1 | <10 | <2.5 | <1 | <10 | <16 | <10 | <16 | <10 |
| 1,2-dichlorobenzene | <1 | <10 | <1.9 | 2 | 18.7 | <5 | 195 | 64 | 123 |
| 1,3-dichlorobenzene | <1 | <10 | <1.9 | <1 | <2 | <6 | 35.7 | 14 | 16.5 |
| 1,4-dichlorobenzene | 4 | <10 | 15.9 | 6 | 34 | 124 | 704 | 324 | 370 |
| 3,3-dichlorobenzidine | <1 | <10 | <17 | <1 | <17 | <161 | <17 | <161 | <17 |
| diethyl phthalate | <1 | <10 | <10 | <1 | <10 | <4 | <10 | <4 | <10 |
| dimethyl phthalate | <1 | <10 | <10 | <1 | <10 | <4 | <10 | <4 | 76.6 |
| di-n-butyl phthalate | 16 | <10 | <10 | 2 | <10 | 3 | <10 | 3 | <10 |
| 2,4-dinitrotoluene | <1 | <10 | <5.7 | <1 | <5.9 | <14 | <5.7 | <14 | <5.7 |
| 2,6-dinitrotoluene | <1 | <10 | <1.9 | <1 | <2.0 | <16 | <1.9 | <16 | <1.9 |
| di-n-octyl phthalate | <1 | <10 | <10 | <1 | <10 | <6 | <10 | <6 | <10 |
| 1,2-diphenylhydrazine | <1 | <10 | <10 | <1 | <10 | <10 | <10 | <10 | <10 |
| fluoranthene | <1 | <10 | <2.2 | <1 | <2.3 | <5 | <2.2 | <5 | <2.2 |
| fluorene | <1 | <10 | <1.9 | <1 | <2.0 | <4 | <1.9 | <4 | <1.9 |
| hexachlorobenzene | <1 | <10 | <1.9 | <1 | <2.0 | <15 | <1.9 | <15 | <1.9 |
| hexachlorobutadiene | <1 | <10 | <0.9 | <1 | <0.9 | <13 | <0.9 | <13 | <0.9 |
| hexachlorocyclopentadiene | <1 | <10 | <10 | <1 | <10 | <12 | <10 | <12 | <10 |
| hexachloroethane | <1 | <10 | <1.6 | <1 | <1.6 | <10 | <1.6 | <10 | <1.6 |
| indeno (1,2,3-c,d) pyrene | <1 | <10 | <4.7 | <1 | <4.8 | <7 | <4.7 | <7 | <4.7 |
| isophorone | <1 | <10 | <2.2 | <1 | <2.3 | <2 | <2.2 | <2 | <2.2 |
| naphthalene | <1 | <10 | <1.6 | <1 | 2.9 | <2 | <1.6 | <2 | <1.6 |
| nitrobenzene | <1 | <10 | <1.9 | <1 | <2.0 | <5 | <1.9 | <5 | <1.9 |
| n-nitrosodimethylamine | <1 | <10 | <10 | <1 | <10 | <10 | <10 | <10 | <10 |
| n-nitrosodi-n-propylamine | <1 | <10 | <10 | <1 | <10 | <6 | <10 | <6 | <10 |
| n-nitrosodiphenylamine | <1 | <10 | 4.9 | <1 | <2.0 | <82 | <1.9 | 6 | <1.9 |
| phenanthrene | 1 | <10 | <5.4 | <1 | <5.6 | <4 | <5.4 | <4 | <5.4 |
| pyrene | <1 | <10 | <1.9 | <1 | <2.0 | <5 | <1.9 | <5 | <1.9 |
| 1,2,4-trichlorobenzene | <1 | <10 | <1.9 | <1 | <2.0 | <7 | <1.9 | <7 | 3.4 |
| Sub Total 1 | 800 | 0 | 20.8 | 10 | 55.6 | 127 | 934.7 | 411 | 589.5 |

Table E-3. Summary of Base/Neutral Extractable Compounds in Ground Water, Monsanto Company, W.G. Krummrich Plant, Sauget, Il

| Well Number: | P-13 | P-13 | P-13 | P-14 | P-14 | DW-1 | DW-1 | DW-4 | DW-7 |
|---|---|---|---|---|---|---|---|---|---|
| Date: | 6/84* | 6/84* | 11/85 | 6/84 | 11/85 | 9/84** | 11/85 | 9/84** | 11/85 |
| Miscellaneous Base/Neutral Extractable Organic Compounds concentrations are in ug/L | | | | | | | | | |
| 2-nitroaniline | NA | NA | <10 | NA | <10 | <25-30 | <10 | <25-30 | <10 |
| 4-nitroaniline | NA | NA | <10 | NA | <10 | <25-30 | <10 | <25-30 | 1,090 |
| 2-nitrochlorobenzene | NA | NA | <10 | NA | <10 | <10 | <10 | <10 | 357 |
| 4-nitrochlorobenzene | NA | NA | <10 | NA | <10 | <10 | <10 | <10 | <10 |
| 2,4-and 3,4-dinitrochlorobenzene | NA | NA | <10 | NA | <10 | <10 | <10 | <10 | <10 |
| 4-nitrodiphenylamine | NA | NA | <10 | NA | <10 | <10 | <10 | <10 | <10 |
| triphenyl phosphate | NA | NA | <10 | NA | <10 | <10 | <10 | <10 | <10 |
| 2,3,7,8-tetrachloro-dibenzo-p-dioxin | NA | NA | NA | NA | NA | NA | NA | NA | NA |
| 2-nitrobiphenyl | NA | NA | NA | NA | NA | <10 | NA | <10 | NA |
| 4-nitrobiphenyl | NA | NA | NA | NA | NA | <10 | NA | <10 | NA |
| Sub Total 2 | NA | NA | 0 | 0 | 0 | 0 | 0 | 0 | 1447 |
| Total Base/Neutral Compounds Analyzed | 800 | 0 | 20.8 | 10 | 55.6 | 127 | 934.7 | 411 | 2036.5 |

Table E-3. Summary of Base/Neutral Extractable Compounds in Ground Water, Monsanto Company, W.G. Krummrich Plant, Sauget, Il

| Well Number: | DW-7 | DW-10 | DW-18 | DW-18 | DW-18 | DW-23 | DW-24 | DW-24 | DW-29 |
|---|---|---|---|---|---|---|---|---|---|
| Date: | 2/86 | 9/84** | 9/84** | 9/84* | 11/85 | 9/84** | 9/84** | 9/84* | 9/84** |
| USEPA Priority Pollutant Base/Neutral Extractable Organic Compounds concentrations are in ug/L | | | | | | | | | |
| acenaphthene | <1.9 | <4 | <4 | NA | <2.0 | <4 | <4 | <4 | <4 |
| acenapthylene | <3.6 | <3 | <3 | NA | <3.7 | <3 | <3 | <3 | <3 |
| anthracene | <1.9 | <4 | <4 | NA | <2.0 | <4 | <4 | <4 | <4 |
| benzidine | <45 | <60 | <60 | NA | <46 | <60 | <60 | <60 | <60 |
| benzo (a) anthracene | <8 | <9 | <9 | NA | <8.2 | <9 | <9 | <9 | <9 |
| benzo (a) pyrene | <2.6 | <12 | <12 | NA | <2.6 | <12 | <12 | <12 | <12 |
| benzo (b) fluoroanthene | <4.9 | <11 | <11 | NA | <5.1 | <11 | <11 | <11 | <11 |
| benzo (ghi) perylene | <4.2 | <14 | <14 | NA | <4.3 | <14 | <14 | <14 | <14 |
| benzo (k) fluoranthene | <3.6 | <11 | <11 | NA | <3.7 | <11 | <11 | <11 | <11 |
| bis (2-chloroethoxy) methane | <5.4 | <4 | <4 | NA | <5.6 | <4 | <4 | <4 | <4 |
| bis (2-chloroethyl) ether | <5.8 | <4 | <4 | NA | <6.0 | <4 | <4 | <4 | <4 |
| bis (2-chloroisopropyl) ether | <5.8 | <3 | <3 | NA | <6.0 | <3 | <3 | <3 | <3 |
| bis (2-ethylhexyl) phthalate | <10 | <10 | <10 | NA | <11 | 188 | <10 | <10 | <10 |
| 4-bromophenyl phenyl ether | <1.9 | <16 | <16 | NA | <2 | <16 | <16 | <16 | <16 |
| butyl benzyl phthalate | <10 | <13 | <13 | NA | <11 | <13 | <13 | <13 | <13 |
| 2-chloronaphthalene | <1.9 | <4 | <4 | NA | <2 | <4 | <4 | <4 | <4 |
| 4-chlorophenyl phenyl ether | <4.3 | <9 | <9 | NA | <4.4 | <9 | <9 | <9 | <9 |
| chrysene | <2.6 | <9 | <9 | NA | <2.6 | <9 | <9 | <9 | <9 |
| dibenzo (a,h) anthracene | <10 | <16 | <16 | NA | <11 | <16 | <16 | <16 | <16 |
| 1,2-dichlorobenzene | 20.7 | 965 | 1 | NA | 23.8 | <5 | <5 | <5 | <5 |
| 1,3-dichlorobenzene | <1.9 | <6 | <6 | NA | <2 | <6 | <6 | <6 | <6 |
| 1,4-dichlorobenzene | 37.9 | <5 | 3 | NA | 71.9 | <5 | <5 | <5 | <5 |
| 3,3-dichlorobenzidine | <17 | <161 | <161 | NA | <17 | <161 | <161 | <161 | <161 |
| diethyl phthalate | <10 | <4 | <4 | NA | <11 | <4 | <4 | <4 | <4 |
| dimethyl phthalate | 15.7 | <4 | <4 | NA | <11 | <4 | <4 | <4 | <4 |
| di-n-butyl phthalate | <10 | <3 | 1 | NA | <11 | 1 | 2 | <3 | 3 |
| 2,4-dinitrotoluene | <5.8 | <14 | <14 | NA | <6.0 | <14 | <14 | <14 | <14 |
| 2,6-dinitrotoluene | <1.9 | <16 | <16 | NA | <2.0 | <16 | <16 | <16 | <16 |
| di-n-octyl phthalate | <10 | <6 | <6 | NA | <11 | <6 | <6 | <6 | <6 |
| 1,2-diphenylhydrazine | <10 | <10 | <10 | NA | <11 | <10 | <10 | <10 | <10 |
| fluoranthene | <2.2 | <5 | <5 | NA | <2.3 | <5 | <5 | <5 | <5 |
| fluorene | <1.9 | <4 | <4 | NA | <2.0 | <4 | <4 | <4 | <4 |
| hexachlorobenzene | <1.9 | <15 | <15 | NA | <2.0 | <15 | <15 | <15 | <15 |
| hexachlorobutadiene | <0.9 | <13 | <13 | NA | <1.0 | <13 | <13 | <13 | <13 |
| hexachlorocyclopentadiene | <10 | <12 | <12 | NA | <11 | <12 | <12 | <12 | <12 |
| hexachloroethane | <1.6 | <10 | <10 | NA | <1.7 | <10 | <10 | <10 | <10 |
| indeno (1,2,3-c,d) pyrene | <4.8 | <7 | <7 | NA | <4.9 | <7 | <7 | <7 | <7 |
| isophorone | <2.2 | <2 | <2 | NA | <2.3 | <2 | <2 | <2 | <2 |
| naphthalene | <1.6 | <2 | <2 | NA | 7.0 | <2 | <2 | <2 | <2 |
| nitrobenzene | <1.9 | <5 | <5 | NA | <2.0 | <5 | <5 | <5 | <5 |
| n-nitrosodimethylamine | <10 | <10 | <10 | NA | <11 | <10 | <10 | <10 | <10 |
| n-nitrosodi-n-propylamine | <10 | <6 | <6 | NA | <11 | <6 | <6 | <6 | <6 |
| n-nitrosodiphenylamine | <1.9 | 42 | <82 | NA | 3.7 | <82 | <82 | <82 | <82 |
| phenanthrene | <5.5 | <4 | <4 | NA | <5.7 | <4 | <4 | <4 | <4 |
| pyrene | <1.9 | <5 | <5 | NA | <2.0 | <5 | <5 | <5 | <5 |
| 1,2,4-trichlorobenzene | <1.9 | <7 | <7 | NA | <2.0 | <7 | <7 | <7 | <7 |
| Sub Total 1 | 74.3 | 1007 | 5 | NA | 106.4 | 189 | 2 | 0 | 3 |

Table E-3. Summary of Base/Neutral Extractable Compounds in Ground Water, Monsanto Company, W.G. Krummrich Plant, Sauget, Il

| Well Number: | DW-7 | DW-10 | DW-18 | DW-18 | DW-18 | DW-23 | DW-24 | DW-24 | DW-29 |
|---|---|---|---|---|---|---|---|---|---|
| Date: | 2/86 | 9/84** | 9/84** | 9/84* | 11/85 | 9/84** | 9/84** | 9/84* | 9/84** |
| Miscellaneous Base/Neutral Extractable Organic Compounds concentrations are in ug/L | | | | | | | | | |
| 2-nitroaniline | <10 | <25-30 | <25-30 | NA | <11 | <25-30 | <25-30 | <25-30 | <25-30 |
| 4-nitroaniline | 138 | <25-30 | <25-30 | NA | <11 | <25-30 | <25-30 | <25-30 | <25-30 |
| 2-nitrochlorobenzene | <10 | d) | <10 | NA | <11 | <10 | <10 | <10 | <10 |
| 4-nitrochlorobenzene | <10 | d) | <10 | NA | <11 | <10 | <10 | <10 | <10 |
| 2,4-and 3,4-dinitrochlorobenzene | <10 | <10 | <10 | NA | <11 | <10 | <10 | <10 | <10 |
| 4-nitrodiphenylamine | <10 | <10 | <10 | NA | <11 | <10 | <10 | <10 | <10 |
| triphenyl phosphate | <10 | <10 | <10 | NA | <11 | <10 | <10 | <10 | <10 |
| 2,3,7,8-tetrachloro-dibenzo-p-dioxin | NA | NA | NA | NA | NA | NA | NA | NA | NA |
| 2-nitrobiphenyl | NA | <10 | <10 | NA | NA | <10 | <10 | <10 | <10 |
| 4-nitrobiphenyl | NA | <10 | <10 | NA | NA | <10 | <10 | <10 | <10 |
| Sub Total 2 | 138 | 0 | 0 | NA | 0 | 0 | 0 | 0 | 0 |
| Total Base/Neutral Compounds Analyzed | 212.3 | 1007 | 5 | NA | 106.4 | 189 | 2 | 0 | 3 |

Table E-3. Summary of Base/Neutral Extractable Compounds in Ground Water, Monsanto Company, W.G. Krummrich Plant, Sauget, Il

| Well Number: | DW-29 | DW-30 | DW-33 | DW-34 | DW-34 | DW-34 | DW-1-85 | DW-1-85 | BK-3 |
|---|---|---|---|---|---|---|---|---|---|
| Date: | 9/84* | 11/85 | 9/84** | 9/84** | 11/85 | 2/86 | 11/85 | 2/86 | 9/84** |
| USEPA Priority Pollutant Base/Neutral Extractable Organic Compounds concentrations are in ug/L | | | | | | | | | |
| acenaphthene | NA | <2.0 | <4 | <4 | <3.8 | <1.9 | <3.8 | <2.0 | <4 |
| acenapthylene | NA | <3.6 | <3 | <3 | <7.0 | <3.5 | <7.0 | <3.7 | <3 |
| anthracene | NA | <2.0 | <4 | <4 | <3.8 | <1.9 | <3.8 | <2.0 | <4 |
| benzidine | NA | <45 | <60 | <60 | <88 | <44 | <88 | <47 | <60 |
| benzo (a) anthracene | NA | <8.0 | <9 | <9 | <16 | <7.9 | <16 | <8.3 | <9 |
| benzo (a) pyrene | NA | <2.6 | <12 | <12 | <5.0 | <2.5 | <5.0 | <2.7 | <12 |
| benzo (b) fluoroanthene | NA | <4.9 | <11 | <11 | <9.6 | <4.8 | <9.6 | <5.1 | <11 |
| benzo (ghi) perylene | NA | <4.2 | <14 | <14 | <8.2 | <4.1 | <8.2 | <4.4 | <14 |
| benzo (k) fluoranthene | NA | <3.6 | <11 | <11 | <7.0 | <3.5 | <7.0 | <3.7 | <11 |
| bis (2-chloroethoxy) methane | NA | <5.5 | <4 | <4 | <11 | <5.4 | <11 | <5.6 | <4 |
| bis (2-chloroethyl) ether | NA | <5.9 | <4 | <4 | <11 | <5.8 | <11 | <6.1 | <4 |
| bis (2-chloroisopropyl) ether | NA | <5.9 | <3 | <3 | <11 | <5.8 | <11 | <6.1 | <3 |
| bis (2-ethylhexyl) phthalate | NA | <10 | 1 | 1 | <20 | <10 | <20 | <11 | <10 |
| 4-bromophenyl phenyl ether | NA | <2 | <16 | <16 | <3.8 | <1.9 | <3.8 | <2 | <16 |
| butyl benzyl phthalate | NA | <10 | <13 | <13 | <20 | <10 | <20 | <11 | <13 |
| 2-chloronaphthalene | NA | <2 | <4 | <4 | <3.8 | <1.9 | <3.8 | <2 | <4 |
| 4-chlorophenyl phenyl ether | NA | <4.3 | <9 | <9 | <8.4 | <4.2 | <8.4 | <4.5 | <9 |
| chrysene | NA | <2.6 | <9 | <9 | <5.0 | <2.5 | <5.0 | <2.7 | <9 |
| dibenzo (a,h) anthracene | NA | <10 | <16 | <16 | <20 | <10 | <20 | <11 | <16 |
| 1,2-dichlorobenzene | NA | 8.4 | <5 | 2 | <3.8 | <1.9 | 47.5 | 12.6 | 27 |
| 1,3-dichlorobenzene | NA | <2 | <6 | 3 | <3.8 | <1.9 | 22.3 | 6.2 | 17 |
| 1,4-dichlorobenzene | NA | <4.5 | <5 | <5 | <3.8 | <4.4 | 515 | 255 | 128 |
| 3,3-dichlorobenzidine | NA | <17 | <161 | <161 | <33 | <17 | <33 | <18 | <161 |
| diethyl phthalate | NA | <10 | <4 | 3 | <20 | <10 | <20 | <11 | <4 |
| dimethyl phthalate | NA | <10 | <4 | <4 | <20 | <10 | <20 | <11 | <4 |
| di-n-butyl phthalate | NA | <10 | 3 | 2 | <20 | <10 | <20 | <11 | 3 |
| 2,4-dinitrotoluene | NA | <5.9 | <14 | <14 | <11 | <5.8 | <11 | <6.1 | <14 |
| 2,6-dinitrotoluene | NA | <2.0 | <16 | <16 | <3.8 | <1.9 | <3.8 | <2.0 | <16 |
| di-n-octyl phthalate | NA | <10 | <6 | <6 | <20 | <10 | <20 | <11 | <6 |
| 1,2-diphenylhydrazine | NA | <10 | <10 | <10 | <20 | <10 | <20 | <11 | <10 |
| fluoranthene | NA | <2.3 | <5 | <5 | <4.4 | <2.2 | <4.4 | <2.3 | <5 |
| fluorene | NA | <2.0 | <4 | <4 | <3.8 | <1.9 | <3.8 | <2.0 | <4 |
| hexachlorobenzene | NA | <2.0 | <15 | <15 | <3.8 | <1.9 | <3.8 | <2.0 | <15 |
| hexachlorobutadiene | NA | <0.9 | <13 | <13 | <1.8 | <0.9 | <1.8 | <1.0 | <13 |
| hexachlorocyclopentadiene | NA | <10 | <12 | <12 | <20 | <10 | <20 | <11 | <12 |
| hexachloroethane | NA | <1.6 | <10 | <10 | <3.2 | <1.6 | <3.2 | <1.7 | <10 |
| indeno (1,2,3-c,d) pyrene | NA | <4.8 | <7 | <7 | <9.4 | <4.7 | <9.4 | <5 | <7 |
| isophorone | NA | <2.3 | <2 | <2 | <4.4 | <2.2 | <4.4 | <2.3 | <2 |
| naphthalene | NA | <1.6 | <2 | <2 | <3.2 | <1.6 | <3.2 | <1.7 | <2 |
| nitrobenzene | NA | <2.0 | <5 | <5 | <3.8 | <1.9 | <3.8 | <2.0 | <5 |
| n-nitrosodimethylamine | NA | <10 | <10 | <10 | <20 | <10 | <20 | <11 | <10 |
| n-nitrosodi-n-propylamine | NA | <10 | <6 | <6 | <20 | <10 | <20 | <11 | <6 |
| n-nitrosodiphenylamine | NA | <2.0 | <82 | <82 | <3.8 | <1.9 | <3.8 | <2.0 | 2 |
| phenanthrene | NA | <5.6 | <4 | <4 | <11 | <5.5 | <11 | <5.7 | <4 |
| pyrene | NA | <2.0 | <5 | <5 | <3.8 | <1.9 | <3.8 | <2.0 | <5 |
| 1,2,4-trichlorobenzene | NA | <2.0 | <7 | <7 | <3.8 | <1.9 | <3.8 | <2.0 | <7 |
| Sub Total 1 | NA | 8.4 | 4 | 11 | 0 | 0 | 584.8 | 273.8 | 177 |

Table E-3. Summary of Base/Neutral Extractable Compounds in Ground Water, Monsanto Company, W.G. Krummrich Plant, Sauget, Il

| Well Number: | DW-29 | DW-30 | DW-33 | DW-34 | DW-34 | DW-34 | DW-1-85 | DW-1-85 | BK-3 |
|---|---|---|---|---|---|---|---|---|---|
| Date: | 9/84* | 11/85 | 9/84** | 9/84** | 11/85 | 2/86 | 11/85 | 2/86 | 9/84** |
| Miscellaneous Base/Neutral Extractable Organic Compounds concentrations are in ug/L | | | | | | | | | |
| 2-nitroaniline | NA | <10 | <25-30 | <25-30 | <20 | <10 | <20 | <11 | <25-30 |
| 4-nitroaniline | NA | <10 | <25-30 | <25-30 | <20 | <10 | <20 | <11 | <25-30 |
| 2-nitrochlorobenzene | NA | <10 | <10 | <10 | <20 | <10 | <20 | <11 | <10 |
| 4-nitrochlorobenzene | NA | 38.8 | <10 | <10 | <20 | <10 | <20 | <11 | <10 |
| 2,4-and 3,4-dinitrochlorobenzene | NA | <10 | <10 | <10 | <20 | <10 | <20 | <11 | <10 |
| 4-nitrodiphenylamine | NA | <10 | <10 | <10 | <20 | <10 | <20 | <11 | <10 |
| triphenyl phosphate | NA | <10 | <10 | <10 | <20 | <10 | <20 | <11 | <10 |
| 2,3,7,8-tetrachloro-dibenzo-p-dioxin | NA | NA | NA | NA | NA | NA | NA | NA | NA |
| 2-nitrobiphenyl | NA | NA | <10 | <10 | NA | NA | NA | NA | <10 |
| 4-nitrobiphenyl | NA | NA | <10 | <10 | NA | NA | NA | NA | <10 |
| Sub Total 2 | NA | 38.8 | 0 | 0 | 0 | 0 | 0 | 0 | 0 |
| Total Base/Neutral Compounds Analyzed | NA | 47.2 | 4 | 11 | 0 | 0 | 584.8 | 273.8 | 177 |

Table E-3. Summary of Base/Neutral Extractable Compounds in Ground Water, Monsanto Company, W.G. Krummrich Plant, Sauget, Il

| Well Number: | BK-3 | BK-3 | WB-6 | WB-6 | WB-6 | WB-7 | WB-7 | Field Blank | Field Blank |
|---|---|---|---|---|---|---|---|---|---|
| Date: | 11/85 | 2/86 | 9/84** | 11/85 | 2/86 | 9/84 | 11/85 | 6/84 | 6/84 |
| USEPA Priority Pollutant Base/Neutral Extractable Organic Compounds concentrations are in ug/L | | | | | | | | | |
| acenaphthene | <1.9 | <1.9 | <4 | 27.3 | 6.4 | <4 | 5.1 | <4 | <1 |
| acenapthylene | <3.5 | <3.6 | <3 | <3.5 | <3.6 | <3 | <3.6 | <3 | <1 |
| anthracene | <1.9 | <1.9 | <4 | <1.9 | <2.0 | <4 | <2.0 | <4 | <1 |
| benzidine | <44 | <45 | <60 | <44 | <46 | <60 | <45 | <60 | <1 |
| benzo (a) anthracene | <7.9 | <8.0 | <9 | <7.9 | <8 | <9 | <8.0 | <9 | <1 |
| benzo (a) pyrene | <2.5 | <2.6 | <12 | <2.5 | <2.6 | <12 | <2.6 | <12 | <1 |
| benzo (b) fluoroanthene | <4.8 | <4.9 | <11 | <4.8 | <5 | <11 | <4.9 | <11 | <1 |
| benzo (ghi) perylene | <4.1 | <4.2 | <14 | <4.1 | <4.3 | <14 | <4.2 | <14 | <1 |
| benzo (k) fluoranthene | <3.5 | <3.6 | <11 | <3.5 | <3.6 | <11 | <3.6 | <11 | <1 |
| bis (2-chloroethoxy) methane | <5.4 | <5.4 | <4 | <5.4 | <5.5 | <4 | <5.4 | <4 | <1 |
| bis (2-chloroethyl) ether | <5.8 | <5.8 | <4 | <5.8 | <5.9 | <4 | <5.8 | <4 | <1 |
| bis (2-chloroisopropyl) ether | <5.8 | <5.8 | <3 | <5.8 | <5.9 | <3 | <5.8 | <3 | <1 |
| bis (2-ethylhexyl) phthalate | <10 | <10 | <10 | <10 | <10 | <10 | <10 | <10 | <1 |
| 4-bromophenyl phenyl ether | <1.9 | <1.9 | <16 | <1.9 | <2 | <16 | <1.9 | <16 | <1 |
| butyl benzyl phthalate | <10 | <10 | <13 | <10 | <10 | <13 | <10 | <13 | <1 |
| 2-chloronaphthalene | <1.9 | <1.9 | <4 | <1.9 | <2 | <4 | <1.9 | <4 | <1 |
| 4-chlorophenyl phenyl ether | <4.2 | <4.3 | <9 | <4.2 | <4.4 | <9 | <4.3 | <9 | <1 |
| chrysene | <2.5 | <2.6 | <9 | <2.5 | <2.6 | <9 | <2.6 | <9 | <1 |
| dibenzo (a,h) anthracene | <10 | <10 | <16 | <10 | <10 | <16 | <10 | <16 | <1 |
| 1,2-dichlorobenzene | 46.3 | 3.6 | <5 | <1.9 | <2 | <5 | <1.9 | <5 | <1 |
| 1,3-dichlorobenzene | 26.1 | 3.4 | <6 | <1.9 | <2 | <6 | <1.9 | <6 | <1 |
| 1,4-dichlorobenzene | 211 | 100 | <5 | <4.4 | <4.6 | <5 | <4.5 | <5 | <1 |
| 3,3-dichlorobenzidine | <17 | <17 | <161 | <17 | <17 | <161 | <17 | <161 | <1 |
| diethyl phthalate | <10 | <10 | <4 | <10 | <10 | <4 | <10 | <4 | <1 |
| dimethyl phthalate | <10 | <10 | <4 | <10 | <10 | <4 | <10 | <4 | <1 |
| di-n-butyl phthalate | <10 | <10 | 2 | <10 | <10 | 3 | <10 | <3 | <1 |
| 2,4-dinitrotoluene | <5.8 | <5.8 | <14 | <5.8 | <5.9 | <14 | <5.8 | <14 | <1 |
| 2,6-dinitrotoluene | <1.9 | <1.9 | <16 | <1.9 | <2.0 | <16 | <1.9 | <16 | <1 |
| di-n-octyl phthalate | <10 | <10 | <6 | <10 | <10 | <6 | <10 | <6 | <1 |
| 1,2-diphenylhydrazine | <10 | <10 | <10 | <10 | <10 | <10 | <10 | <10 | <1 |
| fluoranthene | <2.2 | <2.2 | <5 | <2.2 | <2.3 | <5 | <2.2 | <5 | <1 |
| fluorene | <1.9 | <1.9 | <4 | <1.9 | <2.0 | <4 | <1.9 | <4 | <1 |
| hexachlorobenzene | <1.9 | <1.9 | <15 | <1.9 | <2.0 | <15 | <1.9 | <15 | <1 |
| hexachlorobutadiene | <0.9 | <0.92 | <13 | <0.9 | <0.9 | <13 | <0.9 | <13 | <1 |
| hexachlorocyclopentadiene | <10 | <10 | <12 | <10 | <10 | <12 | <10 | <12 | <1 |
| hexachloroethane | <1.6 | <1.6 | <10 | <1.6 | <1.7 | <10 | <1.6 | <10 | <1 |
| indeno (1,2,3-c,d) pyrene | <4.7 | <4.8 | <7 | <4.7 | <4.9 | <7 | <4.8 | <7 | <1 |
| isophorone | <2.2 | <2.2 | <2 | <2.2 | <2.3 | <2 | <2.2 | <2 | <1 |
| naphthalene | 17.5 | 14.4 | <2 | 1,080 | 1,140 | <2 | <1.6 | <2 | <1 |
| nitrobenzene | <1.9 | <1.9 | <5 | <1.9 | <2.0 | <5 | <1.9 | <5 | <1 |
| n-nitrosodimethylamine | <10 | <10 | <10 | <10 | <10 | <10 | <10 | <10 | <1 |
| n-nitrosodi-n-propylamine | <10 | <10 | <6 | <10 | <10 | <6 | <10 | <6 | <1 |
| n-nitrosodiphenylamine | 3.8 | <1.9 | <82 | <1.9 | <2.0 | <82 | <1.9 | <82 | <1 |
| phenanthrene | <5.5 | <5.5 | <4 | <5.5 | <5.6 | <4 | <5.5 | <4 | <1 |
| pyrene | <1.9 | <1.9 | <5 | <1.9 | <2.0 | <5 | <1.9 | <5 | <1 |
| 1,2,4-trichlorobenzene | <1.9 | <1.9 | <7 | <1.9 | <2.0 | <7 | <1.9 | <7 | <1 |
| Sub Total 1 | 304.7 | 273.8 | 2 | 1107.3 | 1146.4 | 3 | 5.1 | 0 | 0 |

Table E-3. Summary of Base/Neutral Extractable Compounds in Ground Water, Monsanto Company, W.G. Krummrich Plant, Sauget, Il

| Well Number: | BK-3 | BK-3 | WB-6 | WB-6 | WB-6 | WB-7 | WB-7 | Field Blank | Field Blank |
|---|---|---|---|---|---|---|---|---|---|
| Date: | 11/85 | 2/86 | 9/84** | 11/85 | 2/86 | 9/84 | 11/85 | 6/84 | 6/84 |
| Miscellaneous Base/Neutral Extractable Organic Compounds concentrations are in ug/L | | | | | | | | | |
| 2-nitroaniline | <10 | <10 | <25-30 | <10 | <10 | <25-30 | <10 | NA | NA |
| 4-nitroaniline | <10 | <10 | <25-30 | <10 | <10 | <25-30 | <10 | NA | NA |
| 2-nitrochlorobenzene | <10 | <10 | <10 | <10 | <10 | <10 | <10 | NA | NA |
| 4-nitrochlorobenzene | <10 | <10 | <10 | <10 | <10 | <10 | <10 | NA | NA |
| 2,4-and 3,4-dinitrochlorobenzene | <10 | <10 | <10 | <10 | <10 | <10 | <10 | NA | NA |
| 4-nitrodiphenylamine | <10 | <10 | <10 | <10 | <10 | <10 | <10 | NA | NA |
| triphenyl phosphate | <10 | <10 | <10 | <10 | <10 | <10 | <10 | NA | NA |
| 2,3,7,8-tetrachloro-dibenzo-p-dioxin | NA | NA | <10 | NA | NA | NA | NA | NA | NA |
| 2-nitrobiphenyl | NA | NA | <10 | NA | NA | <10 | NA | NA | NA |
| 4-nitrobiphenyl | NA | NA | <10 | NA | NA | <10 | NA | NA | NA |
| Sub Total 2 | 0 | 0 | 0 | 0 | 0 | 0 | 0 | NA | NA |
| Total Base/Neutral Compounds Analyzed | 304.7 | 273.8 | 2 | 1107.3 | 1146.4 | 3 | 5.1 | 0 | 0 |

Table E-3. Summary of Base/Neutral Extractable Compounds in Ground Water, Monsanto Company, W.G. Krummrich Plant, Sauget, Il

| Well Number: | Trip Blank | Trip Blank | Trip Blank | Lab Blank | Lab Blank | Lab Blank | Lab Blank | Lab Blank | Lab Blank |
|---|---|---|---|---|---|---|---|---|---|
| Date: | 5/84 | 6/84 | 9/84 | 11/83 | 11/83 | 5/84 | 5/84 | 9/84 | 9/84 |
| USEPA Priority Pollutant Base/Neutral Extractable Organic Compounds concentrations are in ug/L | | | | | | | | | |
| acenaphthene | <1 | <4 | <4 | <1 | <1 | <1 | <1 | <4 | <4 |
| acenapthylene | <1 | <3 | <3 | <1 | <1 | <1 | <1 | <3 | <3 |
| anthracene | <1 | <4 | <4 | <1 | <1 | <1 | <1 | <4 | <4 |
| benzidine | <1 | <60 | <60 | <1 | <1 | <1 | <1 | <60 | <60 |
| benzo (a) anthracene | <1 | <9 | <9 | <1 | <1 | <1 | <1 | <9 | <9 |
| benzo (a) pyrene | <1 | <12 | <12 | <1 | <1 | <1 | <1 | <12 | <12 |
| benzo (b) fluoroanthene | <1 | <11 | <11 | <1 | <1 | <1 | <1 | <11 | <11 |
| benzo (ghi) perylene | <1 | <14 | <14 | <1 | <1 | <1 | <1 | <14 | <14 |
| benzo (k) fluoranthene | <1 | <11 | <11 | <1 | <1 | <1 | <1 | <11 | <11 |
| bis (2-chloroethoxy) methane | <1 | <4 | <4 | <1 | <1 | <1 | <1 | <4 | <4 |
| bis (2-chloroethyl) ether | <1 | <4 | <4 | <1 | <1 | <1 | <1 | <4 | <4 |
| bis (2-chloroisopropyl) ether | <1 | <3 | <3 | <1 | <1 | <1 | <1 | <3 | <3 |
| bis (2-ethylhexyl) phthalate | <1 | <10 | <10 | <1 | <1 | 3 | 1 | 1 | 4 |
| 4-bromophenyl phenyl ether | <1 | <16 | <16 | <1 | <1 | <1 | <1 | <16 | <16 |
| butyl benzyl phthalate | <1 | <13 | <13 | <1 | <1 | <1 | <1 | <13 | <13 |
| 2-chloronaphthalene | <1 | <4 | <4 | <1 | <1 | <1 | <1 | <4 | <4 |
| 4-chlorophenyl phenyl ether | <1 | <9 | <9 | <1 | <1 | <1 | <1 | <9 | <9 |
| chrysene | <1 | <9 | <9 | <1 | <1 | <1 | <1 | <9 | <9 |
| dibenzo (a,h) anthracene | <1 | <16 | <16 | <1 | <1 | <1 | <1 | <16 | <16 |
| 1,2-dichlorobenzene | <1 | <5 | <5 | <1 | <1 | <1 | <1 | <5 | <5 |
| 1,3-dichlorobenzene | <1 | <6 | <6 | <1 | <1 | <1 | <1 | <6 | <6 |
| 1,4-dichlorobenzene | <1 | <5 | <5 | <1 | <1 | <1 | <1 | <5 | <5 |
| 3,3-dichlorobenzidine | <1 | <161 | <161 | <1 | <1 | <1 | <1 | <161 | <161 |
| diethyl phthalate | <1 | <4 | <4 | <1 | <1 | 1 | 1 | <4 | <4 |
| dimethyl phthalate | <1 | <4 | <4 | <1 | <1 | <1 | <1 | <4 | <4 |
| di-n-butyl phthalate | <1 | <3 | 4 | 1 | <1 | <1 | 2 | 6 | 4 |
| 2,4-dinitrotoluene | <1 | <14 | <14 | <1 | <1 | <1 | <1 | <14 | <14 |
| 2,6-dinitrotoluene | <1 | <16 | <16 | <1 | <1 | <1 | <1 | <16 | <16 |
| di-n-octyl phthalate | <1 | <6 | <6 | <1 | <1 | <1 | <1 | <6 | <6 |
| 1,2-diphenylhydrazine | <1 | <10 | <10 | <1 | <1 | <1 | <1 | <10 | <10 |
| fluoranthene | <1 | <5 | <5 | <1 | <1 | <1 | <1 | <5 | <5 |
| fluorene | <1 | <4 | <4 | <1 | <1 | <1 | <1 | <4 | <4 |
| hexachlorobenzene | <1 | <15 | <15 | <1 | <1 | <1 | <1 | <15 | <15 |
| hexachlorobutadiene | <1 | <13 | <13 | <1 | <1 | <1 | <1 | <13 | <13 |
| hexachlorocyclopentadiene | <1 | <12 | <12 | <1 | <1 | <1 | <1 | <12 | <12 |
| hexachloroethane | <1 | <10 | <10 | <1 | <1 | <1 | <1 | <10 | <10 |
| indeno (1,2,3-c,d) pyrene | <1 | <7 | <7 | <1 | <1 | <1 | <1 | <7 | <7 |
| isophorone | <1 | <2 | <2 | <1 | <1 | <1 | <1 | <2 | <2 |
| naphthalene | <1 | <2 | <2 | <1 | <1 | <1 | <1 | <2 | <2 |
| nitrobenzene | <1 | <5 | <5 | <1 | <1 | <1 | <1 | <5 | <5 |
| n-nitrosodimethylamine | <1 | <10 | <10 | <1 | <1 | <1 | <1 | <10 | <10 |
| n-nitrosodi-n-propylamine | <1 | <6 | <6 | <1 | <1 | <1 | <1 | <6 | <6 |
| n-nitrosodiphenylamine | <1 | <82 | <82 | <1 | <1 | <1 | <1 | <82 | <82 |
| phenanthrene | <1 | <4 | <4 | <1 | <1 | <1 | <1 | <4 | <4 |
| pyrene | <1 | <5 | <5 | <1 | <1 | <1 | <1 | <5 | <5 |
| 1,2,4-trichlorobenzene | <1 | <7 | <7 | <1 | <1 | <1 | <1 | <7 | <7 |
| Sub Total 1 | 0 | 0 | 4 | 1 | 0 | 4 | 4 | 7 | 8 |

Table E-3. Summary of Base/Neutral Extractable Compounds in Ground Water, Monsanto Company, W.G. Krummrich Plant, Sauget, Il

| Well Number: | Trip Blank | Trip Blank | Trip Blank | Lab Blank | Lab Blank | Lab Blank | Lab Blank | Lab Blank | Lab Blank |
|---|---|---|---|---|---|---|---|---|---|
| Date: | 5/84 | 6/84 | 9/84 | 11/83 | 11/83 | 5/84 | 5/84 | 9/84 | 9/84 |
| Miscellaneous Base/Neutral Extractable Organic Compounds concentrations are in ug/L | | | | | | | | | |
| 2-nitroaniline | NA | NA | NA | NA | NA | NA | NA | <25-30 | <25-30 |
| 4-nitroaniline | NA | NA | NA | NA | NA | NA | NA | <25-30 | <25-30 |
| 2-nitrochlorobenzene | NA | NA | NA | NA | NA | NA | NA | <10 | <10 |
| 4-nitrochlorobenzene | NA | NA | NA | NA | NA | NA | NA | <10 | <10 |
| 2,4-and 3,4-dinitrochlorobenzene | NA | NA | NA | NA | NA | NA | NA | <10 | <10 |
| 4-nitrodiphenylamine | NA | NA | NA | NA | NA | NA | NA | <10 | <10 |
| triphenyl phosphate | NA | NA | NA | NA | NA | NA | NA | <10 | <10 |
| 2,3,7,8-tetrachloro-dibenzo-p-dioxin | NA | NA | NA | NA | NA | NA | NA | NA | NA |
| 2-nitrobiphenyl | NA | NA | NA | NA | NA | NA | NA | NA | NA |
| 4-nitrobiphenyl | NA | NA | NA | NA | NA | NA | NA | NA | NA |
| Sub Total 2 | NA | NA | NA | NA | NA | NA | NA | 0 | 0 |
| Total Base/Neutral Compounds Analyzed | 0 | 0 | 4 | 1 | 0 | 4 | 4 | 7 | 8 |

Table E-3. Summary of Base/Neutral Extractable Compounds in Ground Water, Monsanto Company, W.G. Krummrich Plant, Sauget, Il

| Well Number: | Lab Blank | Lab Blank |
|---|---|---|
| Date: | 9/84 | 9/84 |
| USEPA Priority Pollutant Base/Neutral Extractable Organic Compounds concentrations are in ug/L | | |
| acenaphthene | <4 | <4 |
| acenapthylene | <3 | <3 |
| anthracene | <4 | <4 |
| benzidine | <60 | <60 |
| benzo (a) anthracene | <9 | <9 |
| benzo (a) pyrene | <12 | <12 |
| benzo (b) fluoroanthene | <11 | <11 |
| benzo (ghi) perylene | <14 | <14 |
| benzo (k) fluoranthene | <11 | <11 |
| bis (2-chloroethoxy) methane | <4 | <4 |
| bis (2-chloroethyl) ether | <4 | <4 |
| bis (2-chloroisopropyl) ether | <3 | <3 |
| bis (2-ethylhexyl) phthalate | <10 | <10 |
| 4-bromophenyl phenyl ether | <16 | <16 |
| butyl benzyl phthalate | <13 | <13 |
| 2-chloronaphthalene | <4 | <4 |
| 4-chlorophenyl phenyl ether | <9 | <9 |
| chrysene | <9 | <9 |
| dibenzo (a,h) anthracene | <16 | <16 |
| 1,2-dichlorobenzene | <5 | <5 |
| 1,3-dichlorobenzene | <6 | <6 |
| 1,4-dichlorobenzene | <5 | <5 |
| 3,3-dichlorobenzidine | <161 | <161 |
| diethyl phthalate | <4 | <4 |
| dimethyl phthalate | <4 | <4 |
| di-n-butyl phthalate | 23 | <3 |
| 2,4-dinitrotoluene | <14 | <14 |
| 2,6-dinitrotoluene | <16 | <16 |
| di-n-octyl phthalate | <6 | <6 |
| 1,2-diphenylhydrazine | <10 | <10 |
| fluoranthene | <5 | <5 |
| fluorene | <4 | <4 |
| hexachlorobenzene | <15 | <15 |
| hexachlorobutadiene | <13 | <13 |
| hexachlorocyclopentadiene | <12 | <12 |
| hexachloroethane | <10 | <10 |
| indeno (1,2,3-c,d) pyrene | <7 | <7 |
| isophorone | <2 | <2 |
| naphthalene | <2 | <2 |
| nitrobenzene | <5 | <5 |
| n-nitrosodimethylamine | <10 | <10 |
| n-nitrosodi-n-propylamine | <6 | <6 |
| n-nitrosodiphenylamine | <82 | <82 |
| phenanthrene | <4 | <4 |
| pyrene | <5 | <5 |
| 1,2,4-trichlorobenzene | <7 | <7 |
| Sub Total 1 | 23 | 0 |

Table E-3. Summary of Base/Neutral Extractable Compounds in Ground Water, Monsanto Company, W.G. Krummrich Plant, Sauget, Il

| Well Number: | Lab Blank | Lab Blank |
|---|---|---|
| Date: | 9/84 | 9/84 |
| Miscellaneous Base/Neutral Extractable Organic Compounds concentrations are in ug/L | | |
| 2-nitroaniline | <25-30 | <25-30 |
| 4-nitroaniline | <25-30 | <25-30 |
| 2-nitrochlorobenzene | <10 | <10 |
| 4-nitrochlorobenzene | <10 | <10 |
| 2,4-and 3,4-dinitrochlorobenzene | <10 | <10 |
| 4-nitrodiphenylamine | <10 | <10 |
| triphenyl phosphate | <10 | <10 |
| 2,3,7,8-tetrachloro-dibenzo-p-dioxin | NA | NA |
| 2-nitrobiphenyl | NA | NA |
| 4-nitrobiphenyl | NA | NA |
| Sub Total 2 | 0 | 0 |
| Total Base/Neutral Compounds Analyzed | 23 | 0 |

NA - Not analyzed.
* - Replicate Analyses
** - Prior to analysis, this sample was held by Envirodyne Engineers, Inc. longer than the maximum allowable USEPA holding time.
\# - Replicate analysis was performed by ETC.
a) - This sample was collected (unfiltered) for nitrobiphenyl analysis.
b) - This sample was collected (filtered) for nitrobiphenyl analysis.
c) - Envirodyne Engineers, Inc. reported 16 ug/L; however the result did not differentiate between the nitrochlorobenzene compounds.
d) - Envirodyne Engineers, Inc. reported 228 ug/L; however the result did not differentiate between the nitrochlorobenzene compounds.
e) - ETC reported 124,000 ug/L for 2-NCB, 3-NCB, and 4-NCB. The laboratory could not distinguish between these compounds, however they occur in roughly equal proportions.
< - Indicates that the compound was not detected at the detection limit which is the value shown next to the symbol.

Table E-4. Summary of Pesticide/PCB Compounds in Ground Water, Monsanto Company, W.G. Krummrich Plant, Sauget, Illinois. ***

| Well Number: | GM-1 | GM-1 | GM-2 | GM-2 | GM-3 | GM-3 | GM-3 | GM-4A | GM-4A | GM-4B |
|---|---|---|---|---|---|---|---|---|---|---|
| Date: | 11/83 | 5/84 | 11/83 | 5/84 | 11/83 | 5/84 | 5/84* | 11/83 | 5/84 | 9/84 |
| USEPA Priority Pollutant Pesticide/PCB Compounds concentrations are in ug/L | | | | | | | | | | |
| aldrin | <1 | <1 | <1 | <1 | <1 | <1 | <1 | <1 | <1 | <0.04 |
| alpha-BHC | <1 | <1 | <1 | <1 | <1 | <1 | <1 | <1 | <1 | <0.02 |
| beta-BHC | <1 | <1 | <1 | <1 | <1 | <1 | <1 | <1 | <1 | <0.05 |
| gamma-BHC | <1 | <1 | <1 | <1 | <1 | <1 | <1 | <1 | <1 | <0.03 |
| delta-BHC | <1 | <1 | <1 | <1 | <1 | <1 | <1 | <1 | <1 | <0.04 |
| chlordane | <1 | <1 | <1 | <1 | <1 | <1 | <1 | <1 | <1 | <0.61 |
| 4,4'-DDT | <1 | <1 | <1 | <1 | <1 | <1 | <1 | <1 | <1 | <0.96 |
| 4,4'-DDE | <1 | <1 | <1 | <1 | <1 | <1 | <1 | <1 | <1 | <0.07 |
| 4,4'-DDD | <1 | <1 | <1 | <1 | <1 | <1 | <1 | <1 | <1 | <0.07 |
| dieldrin | <1 | <1 | <1 | <1 | <1 | <1 | <1 | <1 | <1 | <0.007 |
| endosulfan I | <1 | <1 | <1 | <1 | <1 | <1 | <1 | <1 | <1 | <0.006 |
| endosulfan II | <1 | <1 | <1 | <1 | <1 | <1 | <1 | <1 | <1 | <0.1 |
| endosulfan sulfate | <1 | <1 | <1 | <1 | <1 | <1 | <1 | <1 | <1 | <0.15 |
| endrin | <1 | <1 | <1 | <1 | <1 | <1 | <1 | <1 | <1 | <0.20 |
| endrin aldehyde | <1 | <1 | <1 | <1 | <1 | <1 | <1 | <1 | <1 | <0.022 |
| heptachlor | <1 | <1 | <1 | <1 | <1 | <1 | <1 | <1 | <1 | <0.04 |
| heptachlor epoxide | <1 | <1 | <1 | <1 | <1 | <1 | <1 | <1 | <1 | <0.05 |
| PCB-1016 | <1 | <1 | <1 | <1 | <1 | <1 | <1 | <1 | <1 | <0.34 |
| PCB-1221 | <1 | <1 | <1 | <1 | <1 | <1 | <1 | <1 | <1 | <1.33 |
| PCB-1232 | <1 | <1 | <1 | <1 | <1 | <1 | <1 | <1 | <1 | <0.62 |
| PCB-1242 | <1 | <1 | <1 | <1 | <1 | <1 | <1 | <1 | <1 | <0.82 |
| PCB-1248 | <1 | <1 | <1 | <1 | <1 | <1 | <1 | <1 | <1 | <0.86 |
| PCB-1254 | <1 | <1 | <1 | <1 | <1 | <1 | <1 | <1 | <1 | <1.23 |
| PCB-1260 | <1 | <1 | <1 | <1 | <1 | <1 | <1 | <1 | <1 | <1.74 |
| toxaphene | <1 | <1 | <1 | <1 | <1 | <1 | <1 | <1 | <1 | <6.94 |
| Total Pesticide/PCB Compounds | 0 | 0 | 0 | 0 | 0 | 0 | 0 | 0 | 0 | 0 |

Table E-4. Summary of Pesticide/PCB Compounds in Ground Water, Monsanto Company, W.G. Krummrich Plant, Sauget, Illinois. ***

| Well Number: | GM-4B | GM-4B | GM-4B | GM-4C | GM-4C | GM-5 | GM-5 | GM-6A | GM-6A | GM-6A |
|---|---|---|---|---|---|---|---|---|---|---|
| Date: | 11/84 | 11/84* | 2/85 | 2/85 | 5/85 | 11/83 | 5/84 | 11/83 | 5/84 | 11/84 |
| USEPA Priority Pollutant Pesticide/PCB Compounds concentrations are in ug/L | | | | | | | | | | |
| aldrin | <10 | <10 | <1.9 | <2 | <1.9 | <1 | <1 | <10 | <1 | <10 |
| alpha-BHC | <10 | <10 | <10 | <10 | <10 | <1 | <1 | <10 | <1 | <10 |
| beta-BHC | <10 | <10 | <4.2 | <4 | <4.2 | <1 | <1 | <10 | <1 | <10 |
| gamma-BHC | <10 | <10 | <10 | <10 | <10 | <1 | <1 | <10 | <1 | <10 |
| delta-BHC | <10 | <10 | <3.1 | <3 | <3.1 | <1 | <1 | <10 | <1 | <10 |
| chlordane | <10 | <10 | <10 | <10 | <10 | <1 | <1 | <10 | <1 | <10 |
| 4,4'-DDT | <10 | <10 | <4.7 | <5 | <4.7 | <1 | <1 | <10 | <1 | <10 |
| 4,4'-DDE | <10 | <10 | <5.6 | <6 | <5.6 | <1 | <1 | <10 | <1 | <10 |
| 4,4'-DDD | <10 | <10 | <2.8 | <3 | <2.8 | <1 | <1 | <10 | <1 | <10 |
| dieldrin | <10 | <10 | <2.5 | <3 | <2.5 | <1 | <1 | <10 | <1 | <10 |
| endosulfan I | <10 | <10 | <10 | <10 | <10 | <1 | <1 | <10 | <1 | <10 |
| endosulfan II | <10 | <10 | <10 | <10 | <10 | <1 | <1 | <10 | <1 | <10 |
| endosulfan sulfate | <10 | <10 | <5.6 | <6 | <5.6 | <1 | <1 | <10 | <1 | <10 |
| endrin | <10 | <10 | <10 | <10 | <10 | <1 | <1 | <10 | <1 | <10 |
| endrin aldehyde | <10 | <10 | <10 | <10 | <10 | <1 | <1 | <10 | <1 | <10 |
| heptachlor | <10 | <10 | <1.9 | <2 | <1.9 | <1 | <1 | <10 | <1 | <10 |
| heptachlor epoxide | <10 | <10 | <2.2 | <2 | <2.2 | <1 | <1 | <10 | <1 | <10 |
| PCB-1016 | <10 | <10 | <36 | <36 | <36 | <1 | <1 | <10 | <1 | <10 |
| PCB-1221 | <10 | <10 | <30 | <30 | <30 | <1 | <1 | <10 | <1 | <10 |
| PCB-1232 | <10 | <10 | <36 | <36 | <36 | <1 | <1 | <10 | <1 | <10 |
| PCB-1242 | <10 | <10 | <36 | <36 | <36 | <1 | <1 | <10 | <1 | <10 |
| PCB-1248 | <10 | <10 | <36 | <36 | <36 | <1 | <1 | <10 | <1 | <10 |
| PCB-1254 | <10 | <10 | <36 | <36 | <36 | <1 | <1 | <10 | <1 | <10 |
| PCB-1260 | <10 | <10 | <36 | <36 | <36 | <1 | <1 | <10 | <1 | <10 |
| toxaphene | <10 | <10 | <10 | <10 | <10 | <1 | <1 | <10 | <1 | <10 |
| Total Pesticide/PCB Compounds | 0 | 0 | 0 | 0 | 0 | 0 | 0 | 0 | 0 | 0 |

Table E-4. Summary of Pesticide/PCB Compounds in Ground Water, Monsanto Company, W.G. Krummrich Plant, Sauget, Illinois. ***

| Well Number: | GM-6B | GM-6B | GM-6B | GM-7 | GM-7 | GM-8 | GM-8 | GM-8 | GM-8 | GM-9A |
|---|---|---|---|---|---|---|---|---|---|---|
| Date: | 9/84** | 11/84 | 11/85 | 11/83 | 5/84 | 11/83 | 5/84 | 11/84 | 2/85 | 11/83 |
| USEPA Priority Pollutant Pesticide/PCB Compounds concentrations are in ug/L | | | | | | | | | | |
| aldrin | <0.004 | <10 | <1.9 | <1 | <1 | <1 | <1 | <10 | <2 | <1 |
| alpha-BHC | <0.002 | <10 | <10 | <1 | <1 | <1 | <1 | <10 | <10 | <1 |
| beta-BHC | <0.005 | <10 | <4.4 | <1 | <1 | <1 | <1 | <10 | <4 | <1 |
| gamma-BHC | <0.003 | <10 | <10 | <1 | <1 | <1 | <1 | <10 | <10 | <1 |
| delta-BHC | <0.004 | <10 | <3.1 | <1 | <1 | <1 | <1 | <10 | <3 | <1 |
| chlordane | <0.061 | <10 | <10 | <1 | <1 | <1 | <1 | <10 | <10 | <1 |
| 4,4'-DDT | <0.096 | <10 | <2.8 | <1 | <1 | <1 | <1 | <10 | <5 | <1 |
| 4,4'-DDE | <0.007 | <10 | <5.6 | <1 | <1 | <1 | <1 | <10 | <6 | <1 |
| 4,4'-DDD | <0.007 | <10 | <4.7 | <1 | <1 | <1 | <1 | <10 | <3 | <1 |
| dieldrin | <0.007 | <10 | <2.5 | <1 | <1 | <1 | <1 | <10 | <3 | <1 |
| endosulfan I | <0.006 | <10 | <10 | <1 | <1 | <1 | <1 | <10 | <10 | <1 |
| endosulfan II | <0.011 | <10 | <10 | <1 | <1 | <1 | <1 | <10 | <10 | <1 |
| endosulfan sulfate | <0.042 | <10 | <5.6 | <1 | <1 | <1 | <1 | <10 | <6 | <1 |
| endrin | <0.02 | <10 | <10 | <1 | <1 | <1 | <1 | <10 | <10 | <1 |
| endrin aldehyde | <0.022 | <10 | <10 | <1 | <1 | <1 | <1 | <10 | <10 | <1 |
| heptachlor | <0.004 | <10 | <1.9 | <1 | <1 | <1 | <1 | <10 | <2 | <1 |
| heptachlor epoxide | <0.005 | <10 | <2.2 | <1 | <1 | <1 | <1 | <10 | <2 | <1 |
| PCB-1016 | <0.034 | <10 | <36 | <1 | <1 | <1 | <1 | <10 | <36 | <1 |
| PCB-1221 | <0.133 | <10 | <30 | <1 | <1 | <1 | <1 | <10 | <30 | <1 |
| PCB-1232 | <0.062 | <10 | <36 | <1 | <1 | <1 | <1 | <10 | <36 | <1 |
| PCB-1242 | <0.082 | <10 | <36 | <1 | <1 | <1 | <1 | <10 | <36 | <1 |
| PCB-1248 | <0.086 | <10 | <36 | <1 | <1 | <1 | <1 | <10 | <36 | <1 |
| PCB-1254 | <0.123 | <10 | <36 | <1 | <1 | <1 | <1 | <10 | <36 | <1 |
| PCB-1260 | <0.174 | <10 | <36 | <1 | <1 | <1 | <1 | <10 | <36 | <1 |
| toxaphene | <0.694 | <10 | <10 | <1 | <1 | <1 | <1 | <10 | <10 | <1 |
| Total Pesticide/PCB Compounds | 0 | 0 | 0 | 0 | 0 | 0 | 0 | 0 | 0 | 0 |

Table E-4. Summary of Pesticide/PCB Compounds in Ground Water, Monsanto Company, W.G. Krummrich Plant, Sauget, Illinois. ***

| Well Number: | GM-9A | GM-9B | GM-9B | GM-9C | GM-9C | GM-10A | GM-10A | GM-10B | GM-10B | GM-10C |
|---|---|---|---|---|---|---|---|---|---|---|
| Date: | 5/84 | 9/84 | 5/85 | 9/84 | 5/85 | 11/83 | 5/84 | 2/85 | 5/85 | 2/85 |
| USEPA Priority Pollutant Pesticide/PCB Compounds concentrations are in ug/L | | | | | | | | | | |
| aldrin | <1 | <0.004 | <1.9 | <0.004 | <1.9 | <1 | <1 | <2.1 | <1.9 | <2 |
| alpha-BHC | <1 | 0.012 | <10 | <0.002 | <10 | <1 | <1 | <11 | <10 | <10 |
| beta-BHC | <1 | <0.005 | <4.2 | <0.005 | <4.2 | <1 | <1 | <4.6 | <4.2 | <4 |
| gamma-BHC | <1 | <0.006 | <10 | 0.003 | <10 | <1 | <1 | <11 | <10 | <10 |
| delta-BHC | <1 | <0.004 | <3.1 | <0.004 | <3.1 | <1 | <1 | <3.4 | <3.1 | <3 |
| chlordane | <1 | <0.061 | <10 | <0.061 | <10 | <1 | <1 | <11 | <10 | <10 |
| 4,4'-DDT | <1 | <0.096 | <4.7 | <0.096 | <4.7 | <1 | <1 | <5.2 | <4.7 | <5 |
| 4,4'-DDE | <1 | <0.007 | <5.6 | <0.007 | <5.6 | <1 | <1 | <6.2 | <5.6 | <6 |
| 4,4'-DDD | <1 | <0.007 | <2.8 | <0.007 | <2.8 | <1 | <1 | <3.1 | <2.8 | <3 |
| dieldrin | <1 | <0.07 | <2.5 | <0.007 | <2.5 | <1 | <1 | <2.8 | <2.5 | <3 |
| endosulfan I | <1 | <0.06 | <10 | <0.006 | <10 | <1 | <1 | <11 | <10 | <10 |
| endosulfan II | <1 | <0.11 | <10 | <0.011 | <10 | <1 | <1 | <11 | <10 | <10 |
| endosulfan sulfate | <1 | <0.42 | <5.6 | <0.042 | <5.6 | <1 | <1 | <6.2 | <5.6 | <6 |
| endrin | <1 | <0.20 | <10 | <0.02 | <10 | <1 | <1 | <11 | <10 | <10 |
| endrin aldehyde | <1 | <0.22 | <10 | <0.022 | <10 | <1 | <1 | <11 | <10 | <10 |
| heptachlor | <1 | <0.004 | <1.9 | <0.004 | <1.9 | <1 | <1 | <2.1 | <1.9 | <2 |
| heptachlor epoxide | <1 | <0.005 | <2.2 | <0.004 | <2.2 | <1 | <1 | <2.4 | <2.2 | <2 |
| PCB-1016 | <1 | <0.034 | <36 | <0.034 | <36 | <1 | <1 | <39.6 | <36 | <36 |
| PCB-1221 | <1 | <0.133 | <30 | <0.133 | <30 | <1 | <1 | <33 | <30 | <30 |
| PCB-1232 | <1 | <0.062 | <36 | <0.062 | <36 | <1 | <1 | <39.6 | <36 | <36 |
| PCB-1242 | <1 | <0.082 | <36 | <0.082 | <36 | <1 | <1 | <39.6 | <36 | <36 |
| PCB-1248 | <1 | <0.086 | <36 | <0.086 | <36 | <1 | <1 | <39.6 | <36 | <36 |
| PCB-1254 | <1 | <0.123 | <36 | <0.123 | <36 | <1 | <1 | <39.6 | <36 | <36 |
| PCB-1260 | <1 | <0.174 | <36 | <0.174 | <36 | <1 | <1 | <39.6 | <36 | <36 |
| toxaphene | <1 | <0.694 | <10 | <0.694 | <10 | <1 | <1 | <10 | <10 | <10 |
| Total Pesticide/PCB Compounds | 0 | 0.012 | 0 | 0.003 | 0 | 0 | 0 | 0 | 0 | 0 |

Table E-4. Summary of Pesticide/PCB Compounds in Ground Water, Monsanto Company, W.G. Krummrich Plant, Sauget, Illinois. ***

| Well Number: | GM-10C | GM-11 | GM-11 | GM-12A | GM-12A | GM-12A | GM-12A | GM-12A | GM-12A | GM-12A |
|---|---|---|---|---|---|---|---|---|---|---|
| Date: | 5/85 | 11/83 | 5/84 | 11/83 | 11/83* | 5/84 | 5/84* | 11/84 | 11/84* | 2/85 |
| USEPA Priority Pollutant Pesticide/PCB Compounds concentrations are in ug/L | | | | | | | | | | |
| aldrin | <1.9 | <1 | <1 | <1 | <1 | <1 | <1 | <10 | <10 | <1.9 |
| alpha-BHC | <10 | <1 | <1 | <1 | <1 | <1 | <1 | <10 | <10 | <10 |
| beta-BHC | <4.2 | <1 | <1 | <1 | <1 | <1 | <1 | <10 | <10 | <4.2 |
| gamma-BHC | <10 | <1 | <1 | <1 | <1 | <1 | <1 | <10 | <10 | <10 |
| delta-BHC | <3.1 | <1 | <1 | <1 | <1 | <1 | <1 | <10 | <10 | <3.1 |
| chlordane | <10 | <1 | <1 | <1 | <1 | <1 | <1 | <10 | <10 | <10 |
| 4,4'-DDT | <4.7 | <1 | <1 | <1 | <1 | <1 | <1 | <10 | <10 | <4.7 |
| 4,4'-DDE | <5.6 | <1 | <1 | <1 | <1 | <1 | <1 | <10 | <10 | <5.6 |
| 4,4'-DDD | <2.8 | <1 | <1 | <1 | <1 | <1 | <1 | <10 | <10 | <2.8 |
| dieldrin | <2.5 | <1 | <1 | <1 | <1 | <1 | <1 | <10 | <10 | <2.5 |
| endosulfan I | <10 | <1 | <1 | <1 | <1 | <1 | <1 | <10 | <10 | <10 |
| endosulfan II | <10 | <1 | <1 | <1 | <1 | <1 | <1 | <10 | <10 | <10 |
| endosulfan sulfate | <5.6 | <1 | <1 | <1 | <1 | <1 | <1 | <10 | <10 | <5.6 |
| endrin | <10 | <1 | <1 | <1 | <1 | <1 | <1 | <10 | <10 | <10 |
| endrin aldehyde | <10 | <1 | <1 | <1 | <1 | <1 | <1 | <10 | <10 | <10 |
| heptachlor | <1.9 | <1 | <1 | <1 | <1 | <1 | <1 | <10 | <10 | <1.9 |
| heptachlor epoxide | <2.2 | <1 | <1 | <1 | <1 | <1 | <1 | <10 | <10 | <2.2 |
| PCB-1016 | <36 | <1 | <1 | <1 | <1 | <1 | <1 | <10 | <10 | <36 |
| PCB-1221 | <30 | <1 | <1 | <1 | <1 | <1 | <1 | <10 | <10 | <30 |
| PCB-1232 | <36 | <1 | <1 | <1 | <1 | <1 | <1 | <10 | <10 | <36 |
| PCB-1242 | <36 | <1 | <1 | <1 | <1 | <1 | <1 | <10 | <10 | <36 |
| PCB-1248 | <36 | <1 | <1 | <1 | <1 | <1 | <1 | <10 | <10 | <36 |
| PCB-1254 | <36 | <1 | <1 | <1 | <1 | <1 | <1 | <10 | <10 | <36 |
| PCB-1260 | <36 | <1 | <1 | <1 | <1 | <1 | <1 | <10 | <10 | <36 |
| toxaphene | <10 | <1 | <1 | <1 | <1 | <1 | <1 | <10 | <10 | <10 |
| Total Pesticide/PCB Compounds | 0 | 0 | 0 | 0 | 0 | 0 | 0 | 0 | 0 | 0 |

Table E-4. Summary of Pesticide/PCB Compounds in Ground Water, Monsanto Company, W.G. Krummrich Plant, Sauget, Illinois. ***

| Well Number: | GM-12A | GM-12A | GM-12A | GM-12A | GM-12A | GM-12B | GM-12B | GM-12C | GM-12C | GM-12C |
|---|---|---|---|---|---|---|---|---|---|---|
| Date: | 2/85* | 5/85 | 5/85* | 2/86 | 2/86* | 9/84 | 11/84 | 2/85 | 2/85* | 5/85 |
| USEPA Priority Pollutant Pesticide/PCB Compounds concentrations are in ug/L | | | | | | | | | | |
| aldrin | <1.9 | <1.9 | <1.9 | <2 | <1.9 | <0.02 | <10 | <1.9 | <1.9 | <1.9 |
| alpha-BHC | <10 | <10 | <10 | <11 | <10 | <0.01 | <10 | <10 | <10 | <10 |
| beta-BHC | <4.2 | <4.2 | <4.2 | <4.7 | <4.4 | <0.025 | <10 | <4.2 | <4.2 | <4.2 |
| gamma-BHC | <10 | <10 | <10 | <11 | <10 | <0.015 | <10 | <10 | <10 | <10 |
| delta-BHC | <3.1 | <3.1 | <3.1 | <3.3 | <3.1 | <0.02 | <10 | <3.1 | <3.1 | <3.1 |
| chlordane | <10 | <10 | <10 | <11 | <10 | <0.305 | <10 | <10 | <10 | <10 |
| 4,4'-DDT | <4.7 | <4.7 | <4.7 | <3 | <2.8 | <0.48 | <10 | <4.7 | <4.7 | <4.7 |
| 4,4'-DDE | <5.6 | <5.6 | <5.6 | <6 | <5.7 | <0.035 | <10 | <5.6 | <5.6 | <5.6 |
| 4,4'-DDD | <2.8 | <2.8 | <2.8 | <5 | <4.7 | <0.035 | <10 | <2.8 | <2.8 | <2.8 |
| dieldrin | <2.5 | <2.5 | <2.5 | <2.7 | <2.5 | <0.007 | <10 | <2.5 | <2.5 | <2.5 |
| endosulfan I | <10 | <10 | <10 | <11 | <10 | <0.006 | <10 | <10 | <10 | <10 |
| endosulfan II | <10 | <10 | <10 | <11 | <10 | <0.011 | <10 | <10 | <10 | <10 |
| endosulfan sulfate | <5.6 | <5.6 | <5.6 | <6 | <5.7 | <0.042 | <10 | <5.6 | <5.6 | <5.6 |
| endrin | <10 | <10 | <10 | <11 | <10 | <0.02 | <10 | <10 | <10 | <10 |
| endrin aldehyde | <10 | <10 | <10 | <11 | <10 | <0.022 | <10 | <10 | <10 | <10 |
| heptachlor | <1.9 | <1.9 | <1.9 | <2 | <1.9 | <0.02 | <10 | <1.9 | <1.9 | <1.9 |
| heptachlor epoxide | <2.2 | <2.2 | <2.2 | <2.3 | <2.2 | <0.025 | <10 | <2.2 | <2.2 | <2.2 |
| PCB-1016 | <36 | <36 | <36 | <38 | <36 | <0.17 | <10 | <36 | <36 | <36 |
| PCB-1221 | <30 | <30 | <30 | <32 | <30 | <0.665 | <10 | <30 | <30 | <30 |
| PCB-1232 | <36 | <36 | <36 | <38 | <36 | <0.31 | <10 | <36 | <36 | <36 |
| PCB-1242 | <36 | <36 | <36 | <38 | <36 | 10.69 | <10 | <36 | <36 | <36 |
| PCB-1248 | <36 | <36 | <36 | <38 | <36 | <0.43 | <10 | <36 | <36 | <36 |
| PCB-1254 | <36 | <36 | <36 | <38 | <36 | <0.615 | <10 | <36 | <36 | <36 |
| PCB-1260 | <36 | <36 | <36 | <38 | <36 | <0.87 | <10 | <36 | <36 | <36 |
| toxaphene | <10 | <10 | <10 | <11 | <10 | <3.47 | <10 | <10 | <10 | <10 |
| Total Pesticide/PCB Compounds | 0 | 0 | 0 | 0 | 0 | 10.69 | 0 | 0 | 0 | 0 |

Table E-4. Summary of Pesticide/PCB Compounds in Ground Water, Monsanto Company, W.G. Krummrich Plant, Sauget, Illinois. ***

| Well Number: | GM-12C | GM-13 | GM-13 | GM-14 | GM-15 | GM-16A | GM-16A | GM-16A | GM-16B | GM-16B |
|---|---|---|---|---|---|---|---|---|---|---|
| Date: | 5/85* | 9/84 | 2/86 | 9/84 | 9/84 | 9/84** | 5/85 | 11/85 | 9/84** | 5/85 |
| USEPA Priority Pollutant Pesticide/PCB Compounds concentrations are in ug/L | | | | | | | | | | |
| aldrin | <1.9 | 0.58 | <100 | <4 | 0.055 | <0.004 | <1.9 | <1.9 | <0.004 | <1.9 |
| alpha-BHC | <10 | 35.4 | <530 | <2 | 0.005 | <0.002 | <10 | <10 | <0.002 | <10 |
| beta-BHC | <4.2 | <0.05 | <230 | <5 | 0.108 | <0.005 | <4.2 | <4.5 | <0.005 | <4.2 |
| gamma-BHC | <10 | 0.73 | <530 | <3 | 0.008 | <0.003 | <10 | <10 | <0.003 | <10 |
| delta-BHC | <3.1 | 0.243 | <160 | <4 | 0.012 | <0.004 | <3.1 | <3.2 | <0.004 | <3.1 |
| chlordane | <10 | <0.61 | <530 | <61 | <0.061 | <0.061 | <10 | <10 | <0.061 | <10 |
| 4,4'-DDT | <4.7 | <0.96 | <150 | <96 | <0.096 | <0.096 | <4.7 | <2.9 | <0.096 | <4.7 |
| 4,4'-DDE | <5.6 | <0.07 | <290 | <7 | 0.004 | <0.007 | <5.6 | <5.7 | <0.007 | <5.6 |
| 4,4'-DDD | <2.8 | <0.07 | <250 | <7 | 0.063 | <0.007 | <2.8 | <4.8 | <0.007 | <2.8 |
| dieldrin | <2.5 | <0.07 | <130 | <14 | <0.007 | <0.007 | <2.5 | <2.6 | <0.007 | <2.5 |
| endosulfan I | <10 | <0.06 | <530 | <12 | <0.006 | <0.006 | <10 | <10 | <0.006 | <10 |
| endosulfan II | <10 | <0.011 | <530 | <0.011 | <0.11 | <0.011 | <10 | <10 | <0.011 | <10 |
| endosulfan sulfate | <5.6 | <0.042 | <290 | <0.042 | <0.42 | <0.042 | <5.6 | <5.7 | <0.042 | <5.6 |
| endrin | <10 | <0.02 | <530 | <14 | <0.02 | <0.02 | <10 | <10 | <0.02 | <10 |
| endrin aldehyde | <10 | <0.22 | <530 | <12 | <0.022 | <0.022 | <10 | <10 | <0.022 | <10 |
| heptachlor | <1.9 | 68.2 | <100 | <4 | 0.027 | <0.004 | <1.9 | <1.9 | <0.004 | <1.9 |
| heptachlor epoxide | <2.2 | 1.01 | <120 | <5 | <0.005 | <0.005 | <2.2 | <2.2 | <0.005 | <2.2 |
| PCB-1016 | <36 | <0.34 | <1900 | <34 | <0.034 | <0.034 | <36 | <37 | <0.034 | <36 |
| PCB-1221 | <30 | <1.33 | <1600 | <133 | <0.133 | <0.133 | <30 | <31 | <0.133 | <30 |
| PCB-1232 | <36 | <0.62 | <1900 | <62 | <0.062 | <0.062 | <36 | <37 | <0.062 | <36 |
| PCB-1242 | <36 | <0.82 | <1900 | <82 | <0.082 | <0.082 | <36 | <37 | <0.082 | <36 |
| PCB-1248 | <36 | <0.86 | <1900 | <86 | <0.086 | <0.086 | <36 | <37 | <0.086 | <36 |
| PCB-1254 | <36 | <1.23 | <1900 | <123 | 4.99 | <0.123 | <36 | <37 | <0.123 | <36 |
| PCB-1260 | <36 | <1.74 | <1900 | <174 | <0.174 | <0.174 | <36 | <37 | <0.174 | <36 |
| toxaphene | <10 | <6.94 | <530 | <694 | <0.694 | <0.694 | <10 | <10 | <0.694 | <10 |
| Total Pesticide/PCB Compounds | 0 | 106.163 | 0 | 0 | 5.272 | 0 | 0 | 0 | 0 | 0 |

Table E-4. Summary of Pesticide/PCB Compounds in Ground Water, Monsanto Company, W.G. Krummrich Plant, Sauget, Illinois. ***

| Well Number: | GM-16B | GM-16B | GM-17A | GM-17A | GM-17B | GM-17B | GM-17C | GM-17C | GM-18A | GM-18A |
|---|---|---|---|---|---|---|---|---|---|---|
| Date: | 11/85 | 2/86 | 9/84 | 11/84 | 9/84 | 11/84 | 9/84 | 11/84 | 9/84 | 5/85 |
| USEPA Priority Pollutant Pesticide/PCB Compounds concentrations are in ug/L | | | | | | | | | | |
| aldrin | <2 | NA | 0.048 | <10 | 0.017 | <10 | 0.006 | <10 | 0.0358 | <1.9 |
| alpha-BHC | <11 | NA | 0.10 | <10 | 0.012 | <10 | 0.046 | <10 | 0.0276 | <10 |
| beta-BHC | <4.7 | NA | <0.005 | <10 | 0.101 | <10 | <0.005 | <10 | <0.005 | <4.2 |
| gamma-BHC | <11 | NA | 0.075 | <10 | 0.014 | <10 | <0.003 | <10 | 0.0144 | <10 |
| delta-BHC | <3.3 | NA | <0.004 | <10 | 0.023 | <10 | <0.004 | <10 | <0.004 | <3.1 |
| chlordane | <11 | NA | <0.061 | <10 | <0.061 | <10 | <0.061 | <10 | <0.061 | <10 |
| 4,4'-DDT | <3 | NA | <0.096 | <10 | <0.096 | <10 | <0.096 | <10 | <0.096 | <4.7 |
| 4,4'-DDE | <6 | NA | <0.007 | <10 | <0.007 | <10 | <0.007 | <10 | <0.007 | <5.6 |
| 4,4'-DDD | <5.1 | NA | <0.005 | <10 | <0.007 | <10 | <0.007 | <10 | <0.007 | <2.8 |
| dieldrin | <2.7 | NA | <0.007 | <10 | <0.007 | <10 | <0.007 | <10 | <0.007 | <2.5 |
| endosulfan I | <11 | NA | <0.006 | <10 | <0.006 | <10 | <0.006 | <10 | <0.006 | <10 |
| endosulfan II | <11 | NA | <0.011 | <10 | <0.011 | <10 | <0.011 | <10 | <0.011 | <10 |
| endosulfan sulfate | <6 | NA | <0.042 | <10 | 0.826 | <10 | 0.139 | <10 | 0.167 | <5.6 |
| endrin | <11 | NA | <0.02 | <10 | <0.02 | <10 | <0.02 | <10 | <0.02 | <10 |
| endrin aldehyde | <11 | NA | <0.022 | <10 | <0.022 | <10 | <0.022 | <10 | <0.022 | <10 |
| heptachlor | <2 | NA | <0.04 | <10 | 0.022 | <10 | <0.004 | <10 | <0.004 | <1.9 |
| heptachlor epoxide | <2.4 | NA | <0.005 | <10 | <0.005 | <10 | <0.005 | <10 | <0.005 | <2.2 |
| PCB-1016 | <39 | <37 | <0.034 | <10 | <0.034 | <10 | <0.034 | <10 | <0.034 | <36 |
| PCB-1221 | <32 | <31 | <0.133 | <10 | <0.133 | <10 | <0.133 | <10 | <0.133 | <30 |
| PCB-1232 | <39 | <37 | <0.062 | <10 | <0.062 | <10 | <0.062 | <10 | <0.062 | <36 |
| PCB-1242 | <39 | <37 | <0.082 | <10 | <0.082 | <10 | <0.082 | <10 | <0.082 | <36 |
| PCB-1248 | <39 | <37 | <0.086 | <10 | <0.086 | <10 | <0.086 | <10 | <0.086 | <36 |
| PCB-1254 | <39 | <37 | <0.123 | <10 | <0.123 | <10 | <0.123 | <10 | <0.123 | <36 |
| PCB-1260 | 74.8 | <37 | <0.174 | <10 | <0.174 | <10 | <0.174 | <10 | <0.174 | <36 |
| toxaphene | <11 | NA | <0.694 | <10 | <0.694 | <10 | <0.694 | <10 | <0.694 | <10 |
| Total Pesticide/PCB Compounds | 74.8 | 0 | 0.223 | 0 | 1.015 | 0 | 0.191 | 0 | 0.2448 | 0 |

Table E-4. Summary of Pesticide/PCB Compounds in Ground Water, Monsanto Company, W.G. Krummrich Plant, Sauget, Illinois. ***

| Well Number: | GM-18B | GM-18B | GM-25A | GM-25A | GM-25B | GM-25B | GM-27B | GM-27B | GM-27C | GM-27C |
|---|---|---|---|---|---|---|---|---|---|---|
| Date: | 9/84 | 5/85 | 9/84 | 11/84 | 9/84 | 11/84 | 9/84 | 2/86 | 9/84 | 2/86 |
| USEPA Priority Pollutant Pesticide/PCB Compounds concentrations are in ug/L | | | | | | | | | | |
| aldrin | 0.068 | <2 | 0.003 | <10 | 0.099 | <10 | 0.016 | <2 | 0.034 | <1.9 |
| alpha-BHC | 0.009 | <10 | <0.002 | <10 | <0.002 | <10 | <0.002 | <10 | <0.002 | <10 |
| beta-BHC | 0.004 | <4 | <0.005 | <10 | 0.162 | <10 | <0.005 | <4.5 | <0.005 | <4.5 |
| gamma-BHC | 0.072 | <10 | 0.002 | <10 | 0.219 | <10 | <0.003 | <10 | 19.3 | <10 |
| delta-BHC | <0.004 | <3 | <0.004 | <10 | <0.004 | <10 | <0.004 | <3.2 | 0.014 | <3.2 |
| chlordane | <0.061 | <10 | <0.061 | <10 | <0.061 | <10 | <0.061 | <10 | <0.061 | <10 |
| 4,4'-DDT | <0.096 | <5 | <0.096 | <10 | <0.096 | <10 | <0.096 | <2.9 | <0.096 | <2.9 |
| 4,4'-DDE | <0.007 | <6 | <0.007 | <10 | <0.007 | <10 | <0.007 | <5.8 | <0.007 | <5.7 |
| 4,4'-DDD | 0.014 | <3 | <0.007 | <10 | <0.007 | <10 | <0.007 | <4.8 | <0.007 | <4.8 |
| dieldrin | <0.007 | <3 | 0.002 | <10 | 0.052 | <10 | <0.007 | <2.6 | <0.07 | <2.6 |
| endosulfan I | <0.006 | <10 | <0.006 | <10 | <0.006 | <10 | <0.006 | <10 | <0.06 | <10 |
| endosulfan II | <0.011 | <10 | <0.011 | <10 | <0.011 | <10 | <1.1 | <10 | <0.11 | <10 |
| endosulfan sulfate | 0.124 | <6 | <0.042 | <10 | 0.161 | <10 | <4.2 | <5.8 | 0.316 | <5.7 |
| endrin | <0.020 | <10 | <0.02 | <10 | <0.07 | <10 | 35.8 | <10 | 15.2 | <10 |
| endrin aldehyde | <0.022 | <10 | <0.022 | <10 | <0.022 | <10 | <0.22 | <10 | <0.22 | <10 |
| heptachlor | <0.004 | <2 | <0.004 | <10 | 0.165 | <10 | 0.01 | <2 | 0.082 | <1.9 |
| heptachlor epoxide | 0.006 | <2 | <0.005 | <10 | 0.092 | <10 | <0.005 | <2.3 | <0.005 | <2.2 |
| PCB-1016 | <0.034 | <36 | <0.034 | <10 | <0.034 | <10 | <0.034 | <37 | <0.034 | <37 |
| PCB-1221 | <0.133 | <30 | <0.133 | <10 | <0.133 | <10 | <0.133 | <31 | <0.133 | <31 |
| PCB-1232 | <0.062 | <36 | <0.062 | <10 | <0.062 | <10 | <0.062 | <37 | <0.062 | <37 |
| PCB-1242 | <0.082 | <36 | <0.082 | <10 | <0.082 | <10 | <0.082 | <37 | <0.082 | <37 |
| PCB-1248 | <0.086 | <36 | <0.086 | <10 | <0.086 | <10 | <0.086 | <37 | <0.086 | <37 |
| PCB-1254 | <0.123 | <36 | <0.123 | <10 | <0.123 | <10 | <0.123 | <37 | <0.123 | <37 |
| PCB-1260 | <0.174 | <36 | <0.174 | <10 | <0.174 | <10 | 0.94 | <37 | <0.174 | <37 |
| toxaphene | <0.694 | <10 | <0.694 | <10 | <0.694 | <10 | <0.694 | <10 | <0.694 | <10 |
| Total Pesticide/PCB Compounds | 0.297 | 0 | 0.007 | 0 | 0.95 | 0 | 36.766 | 0 | 34.946 | 0 |

Table E-4. Summary of Pesticide/PCB Compounds in Ground Water, Monsanto Company, W.G. Krummrich Plant, Sauget, Illinois. ***

| Well Number: | GM-28B | GM-28B | GM-28C | GM-28C | GM-29 | GM-29 | GM-30 | GM-30 | GM-30 | GM-31A |
|---|---|---|---|---|---|---|---|---|---|---|
| Date: | 9/84 | 2/86 | 9/84 | 2/86 | 9/84** | 11/85 | 9/84** | 11/85 | 2/86 | 2/85 |
| USEPA Priority Pollutant Pesticide/PCB Compounds concentrations are in ug/L | | | | | | | | | | |
| aldrin | <0.004 | <1.9 | <0.04 | <1.9 | <0.004 | <2.3 | <0.004 | <2.1 | <2.3 | <2 |
| alpha-BHC | 17.5 | <10 | <0.002 | <10 | <0.002 | <12 | <0.002 | <11 | <12 | <10 |
| beta-BHC | 6.0 | <4.5 | <0.005 | <4.4 | <0.005 | <5.2 | <0.005 | <4.9 | <5.2 | <4 |
| gamma-BHC | 42 | <10 | 0.04 | <10 | <0.003 | <12 | <0.003 | <11 | <12 | <10 |
| delta-BHC | <0.004 | <3.2 | <0.04 | <3.1 | <0.004 | <3.7 | <0.004 | <3.4 | <3.7 | <3 |
| chlordane | <0.061 | <10 | <0.61 | <10 | <0.061 | <12 | <0.061 | <11 | <12 | <10 |
| 4,4'-DDT | <0.096 | <2.9 | <0.96 | <2.8 | <0.096 | <3.3 | <0.096 | <3.1 | <3.3 | <5 |
| 4,4'-DDE | <0.007 | <5.7 | <0.07 | <5.7 | <0.007 | <6.7 | <0.007 | <6.2 | <6.7 | <6 |
| 4,4'-DDD | <0.007 | <4.8 | <0.07 | <4.7 | <0.007 | <5.6 | <0.007 | <5.2 | <5.6 | <3 |
| dieldrin | <0.007 | <2.6 | <0.7 | <2.5 | <0.007 | <3 | <0.007 | <2.8 | <3 | <3 |
| endosulfan I | <0.006 | <10 | <0.6 | <10 | <0.006 | <12 | <0.006 | <11 | <12 | <10 |
| endosulfan II | <1.1 | <10 | <1.1 | <10 | <0.011 | <12 | <0.011 | <11 | <12 | <10 |
| endosulfan sulfate | <4.2 | <5.7 | <4.2 | <5.7 | <0.042 | <6.7 | <0.042 | <6.2 | <6.7 | <6 |
| endrin | 283 | <10 | <2.0 | <10 | <0.02 | <12 | <0.02 | <11 | <12 | <10 |
| endrin aldehyde | 0.014 | <10 | 0.014 | <10 | 0.258 | <12 | <0.022 | <11 | <12 | <10 |
| heptachlor | 2.09 | <1.9 | 0.47 | <1.9 | <0.004 | <2.3 | <0.004 | <2.1 | <2.3 | <2 |
| heptachlor epoxide | <0.005 | <2.3 | <0.05 | <2.2 | <0.005 | <2.6 | <0.005 | <2.4 | <2.6 | <2 |
| PCB-1016 | <0.034 | <37 | <0.34 | <36 | <0.034 | <43 | <0.034 | <40 | <43 | <36 |
| PCB-1221 | <0.133 | <31 | <1.33 | <30 | <0.133 | <36 | <0.133 | <33 | <36 | <30 |
| PCB-1232 | <0.062 | <37 | <0.62 | <36 | <0.062 | <43 | <0.062 | <40 | <43 | <36 |
| PCB-1242 | <0.082 | <37 | <0.82 | <36 | <0.082 | <43 | <0.082 | <40 | <43 | <36 |
| PCB-1248 | <0.086 | <37 | <0.86 | <36 | <0.086 | <43 | <0.086 | <40 | <43 | <36 |
| PCB-1254 | <0.123 | <37 | <1.23 | <36 | <0.123 | <43 | <0.123 | <40 | <43 | <36 |
| PCB-1260 | <0.174 | <37 | <1.74 | <36 | <0.174 | <43 | <0.174 | <40 | <43 | <36 |
| toxaphene | <0.694 | <10 | <6.94 | <10 | <0.694 | <12 | <0.694 | <11 | <12 | <10 |
| Total Pesticide/PCB Compounds | 350.604 | 0 | 0.524 | 0 | 0.258 | 0 | 0 | 0 | 0 | 0 |

Table E-4. Summary of Pesticide/PCB Compounds in Ground Water, Monsanto Company, W.G. Krummrich Plant, Sauget, Illinois. ***

| Well Number: | GM-31A | GM-31B | GM-31B | GM-31C | GM-31C | B-24A | B-25A | B-25B | B-27B | B-28A |
|---|---|---|---|---|---|---|---|---|---|---|
| Date: | 5/85 | 2/85 | 5/85 | 2/85 | 5/85 | 2/86 | 6/84 | 6/84 | 9/84 | 2/86 |
| USEPA Priority Pollutant Pesticide/PCB Compounds concentrations are in ug/L | | | | | | | | | | |
| aldrin | <1.9 | <2 | <1.9 | <2 | <1.9 | <2 | <10 | <10 | <4 | <2 |
| alpha-BHC | <10 | <10 | <10 | <10 | <10 | <10 | <10 | <10 | <11 | <11 |
| beta-BHC | <4.2 | <4 | <4.2 | <4 | <4.2 | <4.5 | <10 | <10 | <5 | <4.7 |
| gamma-BHC | <10 | <10 | <10 | <10 | <10 | <10 | <10 | <10 | <3 | <11 |
| delta-BHC | <3.1 | <3 | <3.1 | <3 | <3.1 | <3.2 | <10 | <10 | <4 | <3.3 |
| chlordane | <10 | <10 | <10 | <10 | <10 | <10 | <100 | <100 | <61 | <11 |
| 4,4'-DDT | <4.7 | <5 | <4.7 | <5 | <4.7 | <2.9 | <10 | <10 | <96 | <3 |
| 4,4'-DDE | <5.6 | <6 | <5.6 | <6 | <5.6 | <5.8 | <10 | <10 | <7 | <6 |
| 4,4'-DDD | <2.8 | <3 | <2.8 | <3 | <2.8 | <4.8 | <10 | <10 | <7 | <5 |
| dieldrin | <2.5 | <3 | <2.5 | <3 | <2.5 | <2.6 | <10 | <10 | <7 | <2.7 |
| endosulfan I | <10 | <10 | <10 | <10 | <10 | <10 | <10 | <10 | <6 | <11 |
| endosulfan II | <10 | <10 | <10 | <10 | <10 | <10 | <10 | <10 | <5.5 | <11 |
| endosulfan sulfate | <5.6 | <6 | <5.6 | <6 | <5.6 | <5.8 | <10 | <10 | <21 | <6 |
| endrin | <10 | <10 | <10 | <10 | <10 | <10 | <10 | <10 | <20 | <11 |
| endrin aldehyde | <10 | <10 | <10 | <10 | <10 | <10 | <10 | <10 | <22 | <11 |
| heptachlor | <1.9 | <2 | <1.9 | <2 | <1.9 | <2 | <10 | <10 | <4 | <2 |
| heptachlor epoxide | <2.2 | <2 | <2.2 | <2 | <2.2 | <2.3 | <10 | <10 | <5 | <2.3 |
| PCB-1016 | <36 | <36 | <36 | <36 | <36 | <37 | <50 | <50 | <34 | <38 |
| PCB-1221 | <30 | <30 | <30 | <30 | <30 | <31 | <50 | <50 | <133 | <32 |
| PCB-1232 | <36 | <36 | <36 | <36 | <36 | <37 | <50 | <50 | <62 | <38 |
| PCB-1242 | <36 | <36 | <36 | <36 | <36 | <37 | <50 | <50 | <82 | <38 |
| PCB-1248 | <36 | <36 | <36 | <36 | <36 | <37 | <50 | <50 | <86 | <38 |
| PCB-1254 | <36 | <36 | <36 | <36 | <36 | <37 | <50 | <50 | <123 | <38 |
| PCB-1260 | <36 | <36 | <36 | <36 | <36 | <37 | <50 | <50 | <174 | <38 |
| toxaphene | <10 | <10 | <10 | <10 | <10 | <10 | <250 | <250 | <694 | <11 |
| Total Pesticide/PCB Compounds | 0 | 0 | 0 | 0 | 0 | 0 | 0 | 0 | 0 | 0 |

Table E-4. Summary of Pesticide/PCB Compounds in Ground Water, Monsanto Company, W.G. Krummrich Plant, Sauget, Illinois. ***

| Well Number: | B-29A | B-29B | B-29B | B-29B | B-29B | B-30B | B-31B | B-31B | B-31C | B-31C |
|---|---|---|---|---|---|---|---|---|---|---|
| Date: | 6/84 | 6/84 | 6/84* | 6/84# | 11/84 | 9/84 | 11/85 | 2/86 | 9/84 | 9/84* |
| USEPA Priority Pollutant Pesticide/PCB Compounds concentrations are in ug/L | | | | | | | | | | |
| aldrin | <10 | <10 | <10 | <100 | <50 | <4 | <1.9 | <1.9 | <0.04 | 0.03 |
| alpha-BHC | <10 | <10 | <10 | <100 | <50 | <11 | <10 | <10 | <0.02 | <0.002 |
| beta-BHC | <10 | <10 | <10 | <100 | <50 | <5 | <4.4 | <4.4 | <0.05 | <0.005 |
| gamma-BHC | <10 | <10 | <10 | <100 | <50 | <3 | <10 | <10 | <0.03 | <0.003 |
| delta-BHC | <10 | <10 | <10 | <100 | <50 | <4 | <3.1 | <3.1 | <0.04 | <0.004 |
| chlordane | <100 | <100 | <100 | <100 | <50 | <61 | <10 | <10 | <0.61 | <0.061 |
| 4,4'-DDT | <10 | <10 | <10 | <100 | <50 | <96 | <2.8 | <2.8 | <0.96 | <0.096 |
| 4,4'-DDE | <10 | <10 | <10 | <100 | <50 | <7 | <5.6 | <5.7 | <0.07 | <0.007 |
| 4,4'-DDD | <10 | <10 | <10 | <100 | <50 | <7 | <4.7 | <4.7 | <0.07 | <0.007 |
| dieldrin | <10 | <10 | <10 | <100 | <50 | <7 | <2.5 | <2.5 | <0.007 | <0.007 |
| endosulfan I | <10 | <10 | <10 | <100 | <50 | <6 | <10 | <10 | <0.006 | <0.006 |
| endosulfan II | <10 | <10 | <10 | <100 | <50 | <11 | <10 | <10 | <0.011 | <0.011 |
| endosulfan sulfate | <10 | <10 | <10 | <100 | <50 | <42 | <5.6 | <5.7 | <0.042 | <0.042 |
| endrin | <10 | <10 | <10 | <100 | <50 | <20 | <10 | <10 | <0.02 | <0.02 |
| endrin aldehyde | <10 | <10 | <10 | <100 | <50 | <22 | <10 | <10 | <0.022 | <0.022 |
| heptachlor | <10 | <10 | <10 | <100 | <50 | <4 | <1.9 | <1.9 | <0.04 | <0.004 |
| heptachlor epoxide | <10 | <10 | <10 | <100 | <50 | <5 | <2.2 | <2.2 | <0.05 | <0.005 |
| PCB-1016 | <50 | <50 | <50 | <100 | <50 | <34 | <36 | <36 | <0.34 | <0.034 |
| PCB-1221 | <50 | <50 | <50 | <100 | <50 | <133 | <30 | <30 | <1.33 | <0.133 |
| PCB-1232 | <50 | <50 | <50 | <100 | <50 | <62 | <36 | <36 | <0.62 | <0.062 |
| PCB-1242 | <50 | <50 | <50 | <100 | <50 | <82 | <36 | <36 | <0.82 | <0.082 |
| PCB-1248 | <50 | <50 | <50 | <100 | <50 | <86 | <36 | <36 | <0.86 | <0.086 |
| PCB-1254 | <50 | <50 | <50 | <100 | <50 | <123 | <36 | <36 | <1.23 | <0.123 |
| PCB-1260 | <50 | <50 | <50 | <100 | <50 | <174 | <36 | <36 | <1.74 | <0.174 |
| toxaphene | <250 | <250 | <250 | <100 | <50 | <694 | <10 | <10 | <6.94 | <0.694 |
| Total Pesticide/PCB Compounds | 0 | 0 | 0 | 0 | 0 | 0 | 0 | 0 | 0 | 0.03 |

Table E-4. Summary of Pesticide/PCB Compounds in Ground Water, Monsanto Company, W.G. Krummrich Plant, Sauget, Illinois. ***

| Well Number: | B-31C | B-31C | B-101 | B-102 | GM-106 | GM-106 | GM-106 | P-1 | P-2 | P-6 |
|---|---|---|---|---|---|---|---|---|---|---|
| Date: | 11/85 | 2/86 | 9/84 | 9/84 | 11/85 | 2/86 | 2/86* | 9/84 | 6/84 | 6/84 |
| USEPA Priority Pollutant Pesticide/PCB Compounds concentrations are in ug/L | | | | | | | | | | |
| aldrin | <1.9 | <2 | NA | <4 | <1.9 | <2 | <1.9 | <0.08 | <10 | <10 |
| alpha-BHC | <10 | <11 | NA | <2 | <10 | <10 | <10 | <0.04 | <10 | <10 |
| beta-BHC | <4.5 | <4.6 | NA | <5 | <4.5 | <4.5 | <4.5 | <0.1 | <10 | <10 |
| gamma-BHC | <10 | <11 | NA | <3 | <10 | <10 | <10 | <0.06 | <10 | <10 |
| delta-BHC | <3.2 | <3.3 | NA | <4 | <3.2 | <3.2 | <3.2 | <0.08 | <10 | <10 |
| chlordane | <10 | <11 | NA | <61 | <10 | <10 | <10 | <1.22 | <100 | <100 |
| 4,4'-DDT | <2.9 | <2.9 | NA | <96 | <2.9 | <2.9 | <2.9 | <1.92 | <10 | <10 |
| 4,4'-DDE | <5.7 | <5.9 | NA | <7 | <5.7 | <5.8 | <5.7 | <0.14 | <10 | <10 |
| 4,4'-DDD | <4.8 | <4.9 | NA | <7 | <4.8 | <4.8 | <4.8 | <0.14 | <10 | <10 |
| dieldrin | <2.6 | <2.6 | <70 | <0.007 | <2.6 | <2.6 | <2.6 | <0.007 | <10 | <10 |
| endosulfan I | <10 | <11 | <60 | <0.006 | <10 | <10 | <10 | <0.006 | <10 | <10 |
| endosulfan II | <10 | <11 | <1.1 | <0.011 | <10 | <10 | <10 | <0.011 | <10 | <10 |
| endosulfan sulfate | <5.7 | <5.9 | <4.2 | <0.042 | <5.7 | <5.8 | <5.7 | <0.042 | <10 | <10 |
| endrin | <10 | <11 | <200 | <0.02 | <10 | <10 | <10 | <0.02 | <10 | <10 |
| endrin aldehyde | <10 | <11 | <220 | <0.022 | <10 | <10 | <10 | <0.022 | <10 | <10 |
| heptachlor | <1.9 | <2 | NA | <4 | <1.9 | <2 | <1.9 | <0.08 | <10 | <10 |
| heptachlor epoxide | <2.2 | <2.3 | NA | <5 | <2.2 | <2.3 | <2.2 | <0.1 | <10 | <10 |
| PCB-1016 | <37 | <38 | NA | <34 | <37 | <37 | <37 | <0.68 | <50 | <50 |
| PCB-1221 | <31 | <32 | NA | <133 | <31 | <31 | <31 | <2.66 | <50 | <50 |
| PCB-1232 | <37 | <38 | NA | <62 | <37 | <37 | <37 | <1.24 | <50 | <50 |
| PCB-1242 | <37 | <38 | NA | <82 | <37 | <37 | <37 | <1.64 | <50 | <50 |
| PCB-1248 | <37 | <38 | NA | <86 | <37 | <37 | <37 | <1.72 | <50 | <50 |
| PCB-1254 | <37 | <38 | NA | <123 | <37 | <37 | <37 | <2.46 | <50 | <50 |
| PCB-1260 | <37 | <38 | NA | <174 | <37 | <37 | <37 | <3.48 | <50 | <50 |
| toxaphene | <10 | <11 | NA | <694 | <10 | <10 | <10 | <13.88 | <250 | <250 |
| Total Pesticide/PCB Compounds | 0 | 0 | 0 | 0 | 0 | 0 | 0 | 0 | 0 | 0 |

Table E-4. Summary of Pesticide/PCB Compounds in Ground Water, Monsanto Company, W.G. Krummrich Plant, Sauget, Illinois. ***

| Well Number: | P-7 | P-8 | P-10 | P-11 | P-12 | P-13 | P-13 | P-13 | P-14 | DW-1 |
|---|---|---|---|---|---|---|---|---|---|---|
| Date: | 6/84 | 6/84 | 9/84 | 9/84 | 9/84 | 6/84 | 6/84* | 6/84# | 6/84 | 9/84** |
| USEPA Priority Pollutant Pesticide/PCB Compounds concentrations are in ug/L | | | | | | | | | | |
| aldrin | <10 | <10 | <0.04 | 0.139 | <0.004 | <10 | <10 | <10 | <10 | <0.004 |
| alpha-BHC | <10 | <10 | 0.562 | 0.012 | <0.002 | <10 | <10 | <10 | <10 | <0.002 |
| beta-BHC | <10 | <10 | <0.05 | <0.005 | <0.005 | <10 | <10 | <10 | <10 | <0.005 |
| gamma-BHC | <10 | <10 | <0.03 | 0.021 | <0.003 | <10 | <10 | <10 | <10 | <0.003 |
| delta-BHC | <10 | <10 | <0.04 | 0.068 | <0.004 | <10 | <10 | <10 | <10 | <0.004 |
| chlordane | <100 | <100 | <0.61 | 0.469 | <0.061 | <100 | <100 | <10 | <100 | <0.061 |
| 4,4'-DDT | <10 | <10 | <0.96 | <0.096 | <0.096 | <10 | <10 | <10 | <10 | <0.096 |
| 4,4'-DDE | <10 | <10 | <0.07 | <0.07 | <0.007 | <10 | <10 | <10 | <10 | <0.007 |
| 4,4'-DDD | <10 | <10 | <0.07 | 0.148 | <0.007 | <10 | <10 | <10 | <10 | <0.007 |
| dieldrin | <10 | <10 | <0.07 | 0.018 | <0.07 | <10 | <10 | <10 | <10 | <0.007 |
| endosulfan I | <10 | <10 | <0.06 | <0.006 | <0.06 | <10 | <10 | <10 | <10 | <0.006 |
| endosulfan II | <10 | <10 | <0.11 | <0.011 | <0.1 | <10 | <10 | <10 | <10 | <0.011 |
| endosulfan sulfate | <10 | <10 | <0.42 | <0.042 | <0.15 | <10 | <10 | <10 | <10 | <0.042 |
| endrin | <10 | <10 | <0.2 | 0.135 | 33.43 | <10 | <10 | <10 | <10 | <0.02 |
| endrin aldehyde | <10 | <10 | <0.22 | <0.022 | <0.22 | <10 | <10 | <10 | <10 | <0.022 |
| heptachlor | <10 | <10 | <0.04 | 0.301 | 0.110 | <10 | <10 | <10 | <10 | <0.004 |
| heptachlor epoxide | <10 | <10 | <0.05 | <0.005 | <0.005 | <10 | <10 | <10 | <10 | <0.005 |
| PCB-1016 | <50 | <50 | <0.34 | <0.034 | <0.034 | <50 | <50 | <10 | <50 | <0.034 |
| PCB-1221 | <50 | <50 | <0.133 | <0.133 | <0.133 | <50 | <50 | <10 | <50 | <0.133 |
| PCB-1232 | <50 | <50 | <0.62 | <0.062 | <0.062 | <50 | <50 | <10 | <50 | <0.062 |
| PCB-1242 | <50 | <50 | <0.82 | <0.082 | <0.082 | <50 | <50 | <10 | <50 | <0.082 |
| PCB-1248 | <50 | <50 | <0.86 | <0.086 | <0.086 | <50 | <50 | <10 | <50 | <0.086 |
| PCB-1254 | <50 | <50 | <1.23 | <0.123 | <0.123 | <50 | <50 | <10 | <50 | <0.123 |
| PCB-1260 | <50 | <50 | <0.174 | <0.174 | <0.174 | <50 | <50 | <10 | <50 | <0.174 |
| toxaphene | <250 | <250 | <6.94 | <0.694 | <0.694 | <250 | <250 | <10 | <250 | <0.694 |
| Total Pesticide/PCB Compounds | 0 | 0 | 0.562 | 1.311 | 33.54 | 0 | 0 | 0 | 0 | 0 |

Table E-4. Summary of Pesticide/PCB Compounds in Ground Water, Monsanto Company, W.G. Krummrich Plant, Sauget, Illinois. ***

| Well Number: | DW-1 | DW-4 | DW-7 | DW-7 | DW-10 | DW-18 | DW-23 | DW-24 | DW-24 | DW-29 |
|---|---|---|---|---|---|---|---|---|---|---|
| Date: | 11/85 | 9/84** | 11/85 | 2/86 | 9/84** | 9/84 | 9/84 | 9/84 | 9/84* | 9/84 |
| USEPA Priority Pollutant Pesticide/PCB Compounds concentrations are in ug/L | | | | | | | | | | |
| aldrin | <1.9 | <0.04 | <1.9 | <1.9 | <0.04 | 0.005 | <0.004 | <0.004 | <0.004 | <0.004 |
| alpha-BHC | <10 | 0.19 | <10 | <10 | <0.02 | <0.002 | <0.002 | <0.002 | <0.002 | <0.002 |
| beta-BHC | <4.4 | <0.05 | <4.4 | <4.5 | <0.05 | <0.005 | <0.005 | <0.005 | <0.005 | <0.005 |
| gamma-BHC | <10 | <0.03 | <10 | <10 | <0.03 | <0.003 | <0.003 | <0.003 | <0.003 | <0.003 |
| delta-BHC | <3.1 | <0.04 | <3.1 | <3.2 | <0.04 | <0.004 | <0.004 | <0.004 | <0.004 | <0.004 |
| chlordane | <10 | <0.61 | <10 | <10 | <0.61 | <0.61 | <0.061 | <0.061 | <0.061 | <0.061 |
| 4,4'-DDT | <2.8 | <0.96 | <2.8 | <2.9 | <0.96 | <0.096 | <0.096 | <0.096 | <0.096 | <0.096 |
| 4,4'-DDE | <5.6 | <0.07 | <5.6 | <5.7 | <0.07 | <0.007 | <0.007 | <0.007 | <0.007 | <0.007 |
| 4,4'-DDD | <4.7 | <0.07 | <4.7 | <4.8 | <0.07 | <0.007 | <0.007 | <0.007 | <0.007 | <0.007 |
| dieldrin | <2.5 | <0.007 | <2.5 | <2.6 | <0.007 | <0.007 | 0.066 | <0.007 | <0.007 | <0.007 |
| endosulfan I | <10 | 0.27 | <10 | <10 | 0.136 | <0.006 | <0.006 | <0.006 | <0.006 | 0.025 |
| endosulfan II | <10 | <0.1 | <10 | <10 | <0.011 | <0.011 | <0.011 | <0.011 | <0.011 | <0.011 |
| endosulfan sulfate | <5.6 | <0.15 | <5.6 | <5.7 | <0.042 | <0.042 | <0.042 | <0.042 | <0.042 | <0.042 |
| endrin | <10 | <0.02 | <10 | <10 | <0.020 | <0.02 | <0.02 | <0.02 | <0.02 | <0.02 |
| endrin aldehyde | <10 | <0.022 | <10 | <10 | <0.022 | <0.022 | <0.022 | <0.022 | <0.022 | <0.022 |
| heptachlor | <1.9 | <0.04 | <1.9 | <1.9 | <0.04 | <0.004 | <0.004 | <0.004 | <0.004 | <0.004 |
| heptachlor epoxide | <2.2 | 0.074 | <2.2 | <2.2 | <0.05 | <0.005 | <0.005 | <0.005 | <0.005 | <0.005 |
| PCB-1016 | <36 | <0.34 | <36 | <37 | <0.34 | <0.034 | <0.034 | <0.034 | <0.034 | <0.034 |
| PCB-1221 | <30 | <1.33 | <30 | <31 | <1.33 | <0.133 | <0.133 | <0.133 | <0.133 | <0.133 |
| PCB-1232 | <36 | <0.62 | <36 | <37 | <0.62 | <0.062 | <0.062 | <0.062 | <0.062 | <0.062 |
| PCB-1242 | <36 | <0.82 | <36 | <37 | <0.82 | <0.082 | <0.082 | <0.082 | <0.082 | <0.082 |
| PCB-1248 | <36 | <0.86 | <36 | <37 | <0.86 | <0.086 | <0.086 | <0.086 | <0.086 | <0.086 |
| PCB-1254 | <36 | <1.23 | <36 | <37 | <1.23 | <0.123 | <0.123 | <0.123 | <0.123 | <0.123 |
| PCB-1260 | <36 | <1.74 | <36 | <37 | <1.74 | <0.174 | <0.174 | <0.174 | <0.174 | <0.174 |
| toxaphene | <10 | <6.94 | <10 | <10 | <6.94 | <0.694 | <0.694 | <0.694 | <0.694 | <0.694 |
| Total Pesticide/PCB Compounds | 0 | 0.534 | 0 | 0 | 0.136 | 0.005 | 0.066 | 0 | 0 | 0.025 |

Table E-4. Summary of Pesticide/PCB Compounds in Ground Water, Monsanto Company, W.G. Krummrich Plant, Sauget, Illinois. ***

| Well Number: | DW-29 | DW-30 | DW-33 | DW-34 | DW-34 | DW-34 | DW-1-85 | DW-1-85 | BK-3 | BK-3 |
|---|---|---|---|---|---|---|---|---|---|---|
| Date: | 9/84* | 11/85 | 9/84** | 9/84** | 11/85 | 2/86 | 11/85 | 2/86 | 9/84 | 2/86 |
| USEPA Priority Pollutant Pesticide/PCB Compounds concentrations are in ug/L | | | | | | | | | | |
| aldrin | NA | <2.0 | <0.004 | <0.004 | <3.8 | <1.9 | <3.8 | <2 | <0.004 | <1.9 |
| alpha-BHC | NA | <10 | <0.002 | <0.002 | <20 | <10 | <20 | <11 | <0.002 | <10 |
| beta-BHC | NA | <4.5 | <0.005 | <0.005 | <8.8 | <4.4 | <8.8 | <4.7 | 0.013 | <4.5 |
| gamma-BHC | NA | <10 | <0.003 | <0.003 | <20 | <10 | <20 | <11 | <0.003 | <10 |
| delta-BHC | NA | <3.2 | <0.004 | <0.004 | <6.2 | <3.1 | <6.2 | <3.3 | <0.004 | <3.2 |
| chlordane | NA | <10 | <0.061 | <0.061 | <20 | <10 | <20 | <11 | <0.061 | <10 |
| 4,4'-DDT | NA | <2.9 | <0.096 | <0.096 | <5.6 | <2.8 | <5.6 | <3 | <0.096 | <2.9 |
| 4,4'-DDE | NA | <5.8 | <0.007 | <0.007 | <11 | <5.7 | <11 | <6 | <0.007 | <5.7 |
| 4,4'-DDD | NA | <4.8 | <0.007 | <0.007 | <9.4 | <4.7 | <9.4 | <5 | <0.007 | <4.8 |
| dieldrin | NA | <2.6 | 0.02 | <0.007 | <5 | <2.5 | <5 | <2.7 | <0.007 | <2.6 |
| endosulfan I | NA | <10 | <0.006 | <0.006 | <20 | <10 | <20 | <11 | <0.006 | <10 |
| endosulfan II | NA | <10 | <0.011 | <0.011 | <20 | <10 | <20 | <11 | <0.011 | <10 |
| endosulfan sulfate | NA | <5.8 | <0.042 | <0.042 | <11 | <5.7 | <11 | <6 | <0.042 | <5.7 |
| endrin | NA | <10 | <0.02 | <0.02 | <20 | <10 | <20 | <11 | <0.02 | <10 |
| endrin aldehyde | NA | <10 | <0.022 | <0.022 | <20 | <10 | <20 | <11 | <0.022 | <10 |
| heptachlor | NA | <2.0 | <0.004 | <0.004 | <3.8 | <1.9 | <3.8 | <2 | 0.019 | <1.9 |
| heptachlor epoxide | NA | <2.3 | <0.005 | <0.005 | <4.4 | <2.2 | <4.4 | <2.3 | <0.005 | <2.2 |
| PCB-1016 | NA | <37 | <0.034 | <0.034 | <72 | <36 | <72 | <38 | <0.034 | <37 |
| PCB-1221 | NA | <31 | <0.133 | <0.133 | <60 | <30 | <60 | <32 | <0.133 | <31 |
| PCB-1232 | NA | <37 | <0.062 | <0.062 | <72 | <36 | <72 | <38 | <0.062 | <37 |
| PCB-1242 | NA | <37 | <0.082 | <0.082 | <72 | <36 | <72 | <38 | <0.082 | <37 |
| PCB-1248 | NA | <37 | <0.086 | <0.086 | <72 | <36 | <72 | <38 | <0.086 | <37 |
| PCB-1254 | NA | <37 | <0.123 | <0.123 | <72 | <36 | <72 | <38 | <0.123 | <37 |
| PCB-1260 | NA | <37 | <0.174 | <0.174 | <72 | <36 | <72 | <38 | <0.174 | <37 |
| toxaphene | NA | <10 | <0.694 | <0.694 | <20 | <10 | <20 | <11 | <0.694 | <10 |
| Total Pesticide/PCB Compounds | NA | 0 | 0.02 | 0 | 0 | 0 | 0 | 0 | 0.032 | 0 |

Table E-4. Summary of Pesticide/PCB Compounds in Ground Water, Monsanto Company, W.G. Krummrich Plant, Sauget, Illinois. ***

| Well Number: | WB-6 | WB-6 | WB-6 | WB-7 | Field Blank | Trip Blank | Lab Blank |
|---|---|---|---|---|---|---|---|
| Date: | 9/84** | 11/85 | 2/86 | 9/84 | 6/84 | 6/84 | 9/84 |
| USEPA Priority Pollutant Pesticide/PCB Compounds concentrations are in ug/L | | | | | | | |
| aldrin | <0.004 | <1.9 | <2 | <0.004 | <10 | <10 | <0.004 |
| alpha-BHC | <0.002 | <10 | <10 | 0.0675 | <10 | <10 | <0.002 |
| beta-BHC | <0.005 | <4.5 | <4.6 | <0.005 | <10 | <10 | <0.005 |
| gamma-BHC | <0.003 | <10 | <10 | <0.003 | <10 | <10 | <0.003 |
| delta-BHC | <0.004 | <3.2 | <3.2 | 0.061 | <10 | <10 | <0.004 |
| chlordane | <0.061 | <10 | <10 | <0.061 | <100 | <100 | <0.061 |
| 4,4'-DDT | <0.096 | <2.9 | <2.9 | <0.096 | <10 | <10 | <0.096 |
| 4,4'-DDE | <0.007 | <5.7 | <5.9 | <0.007 | <10 | <10 | <0.007 |
| 4,4'-DDD | <0.007 | <4.8 | <4.9 | <0.007 | <10 | <10 | <0.007 |
| dieldrin | <0.007 | <2.6 | <2.6 | <0.007 | <10 | <10 | <0.007 |
| endosulfan I | <0.006 | <10 | <10 | <0.006 | <10 | <10 | <0.006 |
| endosulfan II | <0.011 | <10 | <10 | <0.011 | <10 | <10 | <0.011 |
| endosulfan sulfate | <0.042 | <5.7 | <5.8 | <0.042 | <10 | <10 | <0.042 |
| endrin | <0.02 | <10 | <10 | <0.02 | <10 | <10 | <0.02 |
| endrin aldehyde | <0.022 | <10 | <10 | <0.022 | <10 | <10 | <0.022 |
| heptachlor | <0.004 | <1.9 | <2 | <0.004 | <10 | <10 | <0.004 |
| heptachlor epoxide | <0.005 | <2.2 | <2.3 | <0.005 | <10 | <10 | <0.005 |
| PCB-1016 | <0.034 | <37 | <38 | <0.034 | <50 | <50 | <0.034 |
| PCB-1221 | <0.133 | <31 | <31 | <0.133 | <50 | <50 | <0.133 |
| PCB-1232 | <0.062 | <37 | <38 | <0.062 | <50 | <50 | <0.062 |
| PCB-1242 | <0.082 | <37 | <38 | <0.082 | <50 | <50 | <0.082 |
| PCB-1248 | <0.086 | <37 | <38 | <0.086 | <50 | <50 | <0.086 |
| PCB-1254 | <0.123 | <37 | <38 | <0.123 | <50 | <50 | <0.123 |
| PCB-1260 | <0.174 | <37 | <38 | <0.174 | <50 | <50 | <0.174 |
| toxaphene | <0.694 | <10 | <10 | <0.694 | <250 | <250 | <0.694 |
| Total Pesticide/PCB Compounds | 0 | 0 | 0 | 0.1285 | 0 | 0 | 0 |

Table E-4. Summary of Pesticide/PCB Compounds in Ground Water, Monsanto Company, W.G. Krummrich Plant, Sauget, Illinois. ***

NA - Not analyzed.
0 - Replicate analysis was provided by ETC (Edison, New Jersey).
* - Replicate Analyses
** - Prior to analysis, this sample was held by Envirodyne Engineers, Inc. longer than the maximum allowable USEPA holding time.
*** - Envirodyne Engineers, Inc. (St. Louis, MO.) provided the laboratory services for the September 1984 sampling round. ETC (Edison, New Jersey) performed the analyses for the November 1984 through February 1986 sampling programs.
< - Indicates that the compound was not detected at the detection limit which is the value shown next to the symbol.

Table E-5. Summary of Metals and Miscellaneous Parameters in Ground Water, Monsanto Company, WG Krummrich Plant, Sauget, Il.

| Well Number: | GM-1 | GM-1 | GM-1 | GM-1 | GM-2 | GM-2 | GM-2 | GM-2 | GM-3 | GM-3 |
|---|---|---|---|---|---|---|---|---|---|---|
| Date: | 11/83 | 11/83* | 2/84 | 5/84 | 11/83 | 11/83* | 2/84 | 5/84 | 11/83 | 2/84 |
| USEPA Priority Pollutant Metals (concentrations are in mg/L, except where noted) | | | | | | | | | | |
| antimony | 0.011 | NA | NA | <0.05 | 0.165 | NA | NA | <0.5 | 0.097 | NA |
| arsenic | 0.017 | NA | NA | <0.01 | <0.002 | NA | NA | <0.01 | 0.007 | NA |
| beryllium | 0.023 | NA | NA | <0.01 | 0.019 | NA | NA | <0.01 | 0.027 | NA |
| cadmium | <0.01 | NA | NA | <0.02 | 0.030 | NA | NA | <0.02 | 0.020 | NA |
| chromium | 0.411 | NA | NA | <0.05 | 0.048 | NA | NA | <0.05 | 0.051 | NA |
| copper | NA | NA | NA | NA | NA | NA | NA | NA | NA | NA |
| lead | <0.001 | NA | NA | <0.01 | 0.057 | NA | NA | <0.01 | 0.035 | NA |
| mercury | <0.0002 | NA | NA | <0.0005 | 0.00047 | NA | NA | <0.0005 | 0.00035 | NA |
| nickel | 0.08 | NA | NA | <0.05 | 0.18 | NA | NA | <0.05 | 0.09 | NA |
| selenium | <0.002 | NA | NA | <0.01 | 0.006 | NA | NA | <0.01 | <0.002 | NA |
| silver | <0.001 | NA | NA | <0.05 | 0.006 | NA | NA | <0.05 | 0.002 | NA |
| thallium | 0.002 | NA | NA | <0.2 | 0.062 | NA | NA | <0.2 | 0.047 | NA |
| zinc | 0.334 | NA | NA | 0.07 | 3.26 | NA | NA | 0.52 | 6.41 | NA |
| Miscellaneous Parameters | | | | | | | | | | |
| pH (units) | NA | NA | 8.1 | 7.6 | NA | NA | 7.5 | 7.3 | 8.5 | 8.2 |
| spec. conductance (umhos/cm) | 1,200 | 1,200 | 950 | 1,000 | 3,000 | 3,000 | 2,900 | 2,600 | 2,500 | 800 |
| temperature (deg./centigrade) | 12 | 12 | 14 | 14 | 11 | 11 | 14 | 15 | 12 | 13 |
| TOC | 60* | 24* | 24 | 18 | 83* | 44* | 7 | 3 | 72 | 9 |
| total phenols | 0.020 | 0.019 | 0.004 | 0.014 | 0.007 | 0.003 | <0.002 | <0.002 | 0.006 | 0.002 |
| TOX | 0.016 | 0.02 | 0.021 | 0.014 | 0.160 | 0.51 | 0.033 | 0.027 | 0.54 | 0.012 |
| total dissolved solids (TDS) | NA | NA | NA | NA | NA | NA | NA | NA | NA | NA |
| bicarbonate, as CACO3 | NA | NA | NA | NA | NA | NA | NA | NA | NA | NA |
| calcium | NA | NA | NA | NA | NA | NA | NA | NA | NA | NA |
| chloride | NA | NA | 50 | 48.5 | NA | NA | 275.0 | 169.0 | NA | 15 |
| cyanide | <0.005 | NA | NA | <0.005 | 0.005 | NA | NA | <0.005 | <0.005 | NA |
| iron | NA | NA | NA | NA | NA | NA | NA | NA | NA | NA |
| magnesium | NA | NA | NA | NA | NA | NA | NA | NA | NA | NA |
| potassium | NA | NA | NA | NA | NA | NA | NA | NA | NA | NA |
| sodium | NA | NA | NA | NA | NA | NA | NA | NA | NA | NA |
| sulfate, as SO4 | NA | NA | NA | NA | NA | NA | NA | NA | NA | NA |

Table E-5. Summary of Metals and Miscellaneous Parameters in Ground Water, Monsanto Company, WG Krummrich Plant, Sauget, Il.

| Well Number: | GM-3 | GM-3 | GM-4A | GM-4A | GM-4A | GM-4B | GM-4B | GM-4B | GM-4B | GM-4B |
|---|---|---|---|---|---|---|---|---|---|---|
| Date: | 5/84 | 5/84* | 11/83 | 2/84 | 5/84 | 9/84 | 11/84 | 11/84* | 2/85 | 11/85 |
| USEPA Priority Pollutant Metals (concentrations are in mg/L, except where noted) | | | | | | | | | | |
| antimony | <0.5 | <0.5 | 0.014 | NA | <0.5 | 0.049 | <0.07 | <0.07 | <0.1 | NA |
| arsenic | <0.01 | <0.01 | <0.002 | NA | <0.01 | <0.001 | <0.005 | <0.005 | <0.01 | NA |
| beryllium | <0.01 | <0.01 | 0.017 | NA | <0.01 | <0.002 | <0.005 | <0.005 | <0.001 | NA |
| cadmium | <0.02 | <0.02 | <0.01 | NA | <0.02 | <0.002 | <0.005 | <0.005 | <0.004 | NA |
| chromium | <0.05 | <0.05 | <0.04 | NA | <0.05 | <0.004 | <0.008 | <0.008 | <0.02 | NA |
| copper | NA | NA | NA | NA | NA | <0.004 | <0.008 | <0.008 | <0.01 | NA |
| lead | <0.01 | <0.01 | <0.001 | NA | <0.01 | <0.004 | <0.06 | <0.06 | <0.07 | NA |
| mercury | <0.0005 | <0.0005 | <0.0002 | NA | <0.0005 | <0.0002 | <0.0003 | <0.0003 | <0.0003 | NA |
| nickel | <0.05 | <0.05 | <0.04 | NA | <0.05 | 0.007 | <0.01 | <0.01 | <0.01 | NA |
| selenium | <0.01 | <0.01 | <0.002 | NA | <0.01 | <0.001 | <0.01 | <0.005 | <0.006 | NA |
| silver | <0.05 | <0.05 | <0.001 | NA | <0.05 | <0.01 | <0.008 | <0.008 | <0.008 | NA |
| thallium | <0.2 | <0.02 | 0.003 | NA | <0.2 | 0.212 | <0.005 | <0.005 | <0.005 | NA |
| zinc | 1.09 | 1.11 | 0.014 | NA | 0.03 | 0.128 | <0.008 | <0.008 | <0.006 | NA |
| Miscellaneous Parameters | | | | | | | | | | |
| pH (units) | 7.9 | 7.9 | 7.8 | 7.6 | 7.1 | 6.6 | 7.0 | 7.0 | 7.8 | 6.7 |
| spec. conductance (umhos/cm) | 900 | 900 | 1,050 | 850 | 1,050 | 3,500 | 4,100 | 4,100 | 4,000 | 3,300 |
| temperature (deg./centigrade) | 14 | 14 | 12 | 14 | 14 | 18 | 14 | 14 | 10 | 18 |
| TOC | 6 | <5 | 42 | 12 | 6 | 34 | NA | NA | NA | NA |
| total phenols | 0.002 | 0.002 | 0.004 | <0.002 | 0.003 | NA | 0.096 | 0.076 | 0.110 | <0.05 |
| TOX | 0.005 | 0.01 | 0.017 | 0.019 | 0.007 | NA | NA | NA | NA | NA |
| total dissolved solids (TDS) | NA | NA | NA | NA | NA | 2,534 | NA | NA | NA | NA |
| bicarbonate, as CACO3 | NA | NA | NA | NA | NA | NA | NA | NA | NA | 760 |
| calcium | NA | NA | NA | NA | NA | NA | NA | NA | NA | 270 |
| chloride | 11 | 12 | NA | 45 | 76 | 510 | NA | NA | NA | 448 |
| cyanide | <0.005 | <0.005 | <0.005 | NA | <0.005 | NA | <0.025 | <0.025 | <0.025 | <0.025 |
| iron | NA | NA | NA | NA | NA | NA | NA | NA | NA | 7.3 |
| magnesium | NA | NA | NA | NA | NA | NA | NA | NA | NA | 67.8 |
| potassium | NA | NA | NA | NA | NA | NA | NA | NA | NA | 156 |
| sodium | NA | NA | NA | NA | NA | NA | NA | NA | NA | 357 |
| sulfate, as SO4 | NA | NA | NA | NA | NA | NA | NA | NA | NA | 770 |

Table E-5. Summary of Metals and Miscellaneous Parameters in Ground Water, Monsanto Company, WG Krummrich Plant, Sauget, Il.

| Well Number: | GM-4B | GM-4C | GM-4C | GM-5 | GM-5 | GM-5 | GM-6A | GM-6A | GM-6A | GM-6A |
|---|---|---|---|---|---|---|---|---|---|---|
| Date: | 11/85* | 2/85 | 5/85 | 11/83 | 2/84 | 5/84 | 11/83 | 2/84 | 5/84 | 11/84 |
| USEPA Priority Pollutant Metals (concentrations are in mg/L, except where noted) | | | | | | | | | | |
| antimony | NA | <0.07 | <0.07 | 0.009 | NA | <0.5 | 0.012 | NA | <0.5 | <0.08 |
| arsenic | NA | <0.01 | <0.01 | <0.002 | NA | <0.01 | 0.007 | NA | <0.01 | <0.005 |
| beryllium | NA | <0.001 | <0.001 | 0.013 | NA | <0.01 | 0.012 | NA | <0.01 | <0.005 |
| cadmium | NA | <0.003 | <0.004 | <0.01 | NA | <0.02 | 0.01 | NA | <0.02 | <0.005 |
| chromium | NA | <0.01 | <0.01 | <0.04 | NA | <0.05 | <0.04 | NA | <0.05 | <0.02 |
| copper | NA | <0.02 | <0.01 | NA | NA | NA | NA | NA | NA | <0.01 |
| lead | NA | <0.06 | <0.07 | 0.001 | NA | <0.01 | 0.004 | NA | <0.01 | <0.06 |
| mercury | NA | <0.0003 | <0.0002 | <0.0002 | NA | <0.0005 | <0.0002 | NA | <0.0005 | <0.0003 |
| nickel | NA | <0.04 | <0.02 | <0.04 | NA | <0.05 | 0.05 | NA | <0.05 | 0.014 |
| selenium | NA | <0.006 | <0.005 | <0.002 | NA | <0.01 | 0.002 | NA | <0.01 | 0.015 |
| silver | NA | <0.008 | <0.009 | <0.001 | NA | <0.05 | <0.001 | NA | <0.05 | <0.007 |
| thallium | NA | 0.006 | <0.005 | 0.004 | NA | <0.2 | 0.004 | NA | <0.2 | <0.005 |
| zinc | NA | <0.05 | 0.04 | 0.011 | NA | 0.03 | 0.018 | NA | 0.05 | 0.012 |
| Miscellaneous Parameters | | | | | | | | | | |
| pH (units) | 6.7 | 7.1 | 6.5 | 7.8 | 7.9 | 7.2 | 7.5 | 7.4 | 7.3 | 6.7 |
| spec. conductance (umhos/cm) | 3,300 | 2,600 | 1,200 | 625 | 650 | 700 | 2,000 | 1,900 | 2,600 | 1,470 |
| temperature (deg./centigrade) | 18 | 11 | 16 | 11 | 14 | 14 | 12 | 15 | 14 | 16.5 |
| TOC | NA | NA | NA | 36 | 16 | <5 | 36 | 11 | 11 | NA |
| total phenols | <0.05 | <0.05 | <0.05 | 0.003 | 0.004 | 0.004 | 0.020 | 0.003 | 0.009 | <0.05 |
| TOX | NA | NA | NA | 0.011 | 0.013 | 0.022 | 0.110 | 0.031 | 0.190 | NA |
| total dissolved solids (TDS) | NA | NA | NA | NA | NA | NA | NA | NA | NA | NA |
| bicarbonate, as CACO3 | 810 | NA | NA | NA | NA | NA | NA | NA | NA | NA |
| calcium | 272 | NA | NA | NA | NA | NA | NA | NA | NA | NA |
| chloride | 451 | NA | NA | NA | 10 | 12 | NA | 55 | 117 | NA |
| cyanide | <0.025 | <0.025 | <0.025 | <0.005 | NA | <0.005 | <0.005 | NA | <0.005 | <0.025 |
| iron | 7.7 | NA | NA | NA | NA | NA | NA | NA | NA | NA |
| magnesium | 70.3 | NA | NA | NA | NA | NA | NA | NA | NA | NA |
| potassium | 150 | NA | NA | NA | NA | NA | NA | NA | NA | NA |
| sodium | 371 | NA | NA | NA | NA | NA | NA | NA | NA | NA |
| sulfate, as SO4 | 770 | NA | NA | NA | NA | NA | NA | NA | NA | NA |

Table E-5. Summary of Metals and Miscellaneous Parameters in Ground Water, Monsanto Company, WG Krummrich Plant, Sauget, Il.

| Well Number: | GM-6B | GM-6B | GM-6B | GM-7 | GM-7 | GM-7 | GM-8 | GM-8 | GM-8 | GM-8 |
|---|---|---|---|---|---|---|---|---|---|---|
| Date: | 9/84 | 11/84 | 11/85 | 11/83 | 2/84 | 5/84 | 11/83 | 2/84 | 5/84 | 11/84 |
| USEPA Priority Pollutant Metals (concentrations are in mg/L, except where noted) | | | | | | | | | | |
| antimony | 0.053 | <0.08 | NA | 0.01 | NA | <0.5 | 0.012 | NA | <0.5 | <0.08 |
| arsenic | <0.001 | <0.005 | NA | 0.002 | NA | 0.03 | <0.002 | NA | <0.01 | <0.005 |
| beryllium | <0.002 | <0.005 | NA | 0.01 | NA | <0.01 | 0.012 | NA | <0.01 | <0.005 |
| cadmium | <0.002 | <0.005 | NA | 0.01 | NA | <0.02 | <0.01 | NA | <0.02 | <0.005 |
| chromium | <0.004 | <0.02 | NA | <0.04 | NA | <0.05 | <0.04 | NA | <0.05 | <0.02 |
| copper | 0.006 | <0.01 | NA | NA | NA | NA | NA | NA | NA | <0.01 |
| lead | <0.004 | <0.06 | NA | 0.001 | NA | <0.01 | 0.005 | NA | <0.01 | <0.06 |
| mercury | <0.0004 | <0.0003 | NA | <0.0002 | NA | <0.005 | <0.0002 | NA | <0.0005 | <0.0003 |
| nickel | 0.005 | <0.01 | NA | <0.04 | NA | <0.05 | <0.04 | NA | <0.05 | <0.01 |
| selenium | <0.001 | <0.005 | NA | 0.005 | NA | <0.01 | <0.002 | NA | <0.01 | 0.005 |
| silver | 0.005 | <0.007 | NA | <0.001 | NA | <0.05 | 0.002 | NA | <0.05 | <0.007 |
| thallium | 0.014 | <0.005 | NA | 0.002 | NA | <0.2 | 0.003 | NA | <0.2 | <0.005 |
| zinc | 0.078 | <0.01 | NA | 0.015 | NA | <0.03 | 0.010 | NA | <0.03 | 0.016 |
| Miscellaneous Parameters | | | | | | | | | | |
| pH (units) | 7.0 | 6.9 | 7.0 | 7.3 | 7.3 | 7.1 | 6.8 | 6.7 | 6.8 | 7.2 |
| spec. conductance (umhos/cm) | 1,660 | 2,500 | 1,500 | 1,150 | 1,400 | 1,300 | 1,200 | 1,150 | 1,500 | 825 |
| temperature (deg./centigrade) | 20 | 16 | 14 | 12 | 14 | 14 | 12 | 14 | 14 | 14 |
| TOC | 14 | NA | NA | 28 | 10 | 5 | 84 | 16 | 16 | NA |
| total phenols | NA | 0.057 | <0.05 | 0.003 | 0.003 | 0.003 | 0.013 | 0.003 | 0.003 | <0.05 |
| TOX | NA | NA | NA | 0.009 | 0.030 | 0.018 | 0.150 | 0.057 | 0.082 | NA |
| total dissolved solids (TDS) | 1,330 | NA | NA | NA | NA | NA | NA | NA | NA | NA |
| bicarbonate, as CACO3 | NA | NA | 320 | NA | NA | NA | NA | NA | NA | NA |
| calcium | NA | NA | 232 | NA | NA | NA | NA | NA | NA | NA |
| chloride | 175 | NA | 111 | NA | 35 | 15 | NA | 10 | 150 | NA |
| cyanide | NA | <0.025 | <0.025 | <0.005 | NA | <0.005 | 0.021 | NA | 0.099 | <0.025 |
| iron | NA | NA | 18.2 | NA | NA | NA | NA | NA | NA | NA |
| magnesium | NA | NA | 63.9 | NA | NA | NA | NA | NA | NA | NA |
| potassium | NA | NA | 11.1 | NA | NA | NA | NA | NA | NA | NA |
| sodium | NA | NA | 212 | NA | NA | NA | NA | NA | NA | NA |
| sulfate, as SO4 | NA | NA | 69 | NA | NA | NA | NA | NA | NA | NA |

Table E-5. Summary of Metals and Miscellaneous Parameters in Ground Water, Monsanto Company, W6 Krumarich Plant, Sauget, Il.

| Well Number: | GM-8 | GM-8 | GM-9A | GM-9A | GM-9A | GM-9A | GM-9A | GM-9B | GM-9B | GM-9B |
|---|---|---|---|---|---|---|---|---|---|---|
| Date: | 2/85 | 11/85 | 11/83 | 11/83* | 2/84 | 2/84* | 5/84 | 9/84 | 5/85 | 11/85 |
| USEPA Priority Pollutant Metals (concentrations are in mg/L, except where noted) | | | | | | | | | | |
| antimony | <0.07 | NA | 0.017 | 0.017 | NA | NA | <0.5 | 0.049 | <0.07 | NA |
| arsenic | <0.01 | NA | 0.003 | 0.005 | NA | NA | <0.01 | <0.001 | <0.01 | NA |
| beryllium | <0.001 | NA | 0.013 | <0.01 | NA | NA | <0.01 | <0.01 | <0.001 | NA |
| cadmium | <0.003 | NA | 0.010 | <0.01 | NA | NA | <0.02 | 7.46 | <0.004 | NA |
| chromium | <0.01 | NA | <0.04 | <0.04 | NA | NA | <0.05 | <0.04 | <0.01 | NA |
| copper | <0.02 | NA | NA | NA | NA | NA | NA | 0.05 | <0.01 | NA |
| lead | <0.06 | NA | 0.005 | 0.005 | NA | NA | 0.01 | 0.018 | <0.07 | NA |
| mercury | <0.0003 | NA | <0.0002 | <0.0002 | NA | NA | <0.0005 | <0.0002 | <0.0002 | NA |
| nickel | <0.04 | NA | <0.04 | <0.04 | NA | NA | <0.05 | 0.026 | <0.02 | NA |
| selenium | <0.006 | NA | 0.004 | 0.003 | NA | NA | <0.01 | <0.001 | <0.005 | NA |
| silver | <0.008 | NA | <0.001 | <0.001 | NA | NA | <0.05 | <0.002 | <0.009 | NA |
| thallium | <0.005 | NA | 0.007 | 0.006 | NA | NA | <0.2 | 0.015 | <0.005 | NA |
| zinc | 0.06 | NA | 0.030 | 0.037 | NA | NA | 0.11 | 0.060 | <0.01 | NA |
| Miscellaneous Parameters | | | | | | | | | | |
| pH (units) | 7.3 | 7.2 | 7.0 | NA | 7.1 | 7.1 | 7.3 | 6.9 | 7.0 | 6.9 |
| spec. conductance (umhos/cm) | 950 | 1,250 | 8,500 | 8,500 | 4,000 | 4,000 | 3,500 | 1,450 | 960 | 900 |
| temperature (deg./centigrade) | 11 | 12 | 11 | NA | 14 | 14 | 16 | 18 | 16 | 16 |
| TOC | NA | NA | 112 | 130 | 25 | 24 | 27 | 50 | NA | NA |
| total phenols | 0.058 | <0.05 | 0.190 | NA | 0.003 | 0.054 | 0.003 | NA | <0.050 | <0.050 |
| TOX | NA | NA | 0.750 | NA | 0.059 | 0.055 | 0.360 | NA | NA | NA |
| total dissolved solids (TDS) | NA | NA | NA | NA | NA | NA | NA | 956 | NA | NA |
| bicarbonate, as CACO3 | NA | NA | NA | NA | NA | NA | NA | NA | NA | NA |
| calcium | NA | NA | NA | NA | NA | NA | NA | NA | NA | NA |
| chloride | NA | NA | NA | NA | 495 | 480 | 350 | 115 | NA | NA |
| cyanide | <0.025 | <0.025 | 0.016 | NA | NA | NA | <0.005 | NA | <0.025 | <0.025 |
| iron | NA | NA | NA | NA | NA | NA | NA | NA | NA | NA |
| magnesium | NA | NA | NA | NA | NA | NA | NA | NA | NA | NA |
| potassium | NA | NA | NA | NA | NA | NA | NA | NA | NA | NA |
| sodium | NA | NA | NA | NA | NA | NA | NA | NA | NA | NA |
| sulfate, as SO4 | NA | NA | NA | NA | NA | NA | NA | NA | NA | NA |

Table E-5. Summary of Metals and Miscellaneous Parameters in Ground Water, Monsanto Company, WG Krummrich Plant, Sauget, Il.

| Well Number: | GM-9C | GM-9C | GM-9C | GM-10A | GM-10A | GM-10A | GM-10B | GM-10B | GM-10C | GM-10C |
|---|---|---|---|---|---|---|---|---|---|---|
| Date: | 9/84 | 5/85 | 11/85 | 11/83 | 2/84 | 5/84 | 2/85 | 5/85 | 2/85 | 5/85 |
| USEPA Priority Pollutant Metals (concentrations are in mg/L, except where noted) | | | | | | | | | | |
| antimony | 0.34 | <0.07 | NA | 0.011 | NA | <0.5 | <0.07 | <0.07 | <0.08 | <0.07 |
| arsenic | <0.001 | <0.01 | NA | <0.002 | NA | <0.01 | 0.016 | 0.036 | <0.01 | <0.01 |
| beryllium | <0.01 | <0.001 | NA | <0.01 | NA | <0.01 | <0.001 | <0.001 | <0.001 | <0.001 |
| cadmium | 4.82 | <0.004 | NA | <0.01 | NA | <0.02 | <0.003 | <0.004 | <0.005 | <0.004 |
| chromium | 0.046 | <0.01 | NA | <0.04 | NA | <0.05 | <0.01 | <0.01 | <0.02 | <0.01 |
| copper | 0.01 | <0.01 | NA | NA | NA | NA | <0.02 | <0.01 | <0.02 | <0.01 |
| lead | 0.016 | <0.07 | NA | 0.004 | NA | <0.01 | <0.06 | <0.07 | <0.1 | <0.07 |
| mercury | 0.0004 | <0.0002 | NA | <0.0002 | NA | <0.0005 | <0.0003 | <0.0002 | <0.0003 | <0.0002 |
| nickel | 0.068 | <0.02 | NA | <0.04 | NA | <0.05 | <0.04 | <0.02 | <0.03 | <0.02 |
| selenium | <0.001 | <0.005 | NA | 0.003 | NA | <0.01 | <0.006 | <0.005 | <0.006 | <0.005 |
| silver | 0.002 | <0.009 | NA | 0.006 | NA | <0.05 | <0.008 | <0.009 | <0.01 | <0.009 |
| thallium | 0.012 | <0.005 | NA | 0.004 | NA | <0.2 | <0.005 | <0.005 | <0.005 | <0.005 |
| zinc | 0.065 | <0.01 | NA | 0.049 | NA | 0.09 | <0.05 | <0.01 | <0.03 | <0.01 |
| Miscellaneous Parameters | | | | | | | | | | |
| pH (units) | 7.0 | 7.2 | 7.7 | 7.0 | 7.1 | 7.3 | 7.8 | 7.4 | 7.4 | 7.0 |
| spec. conductance (umhos/cm) | 1,800 | 900 | 2,300 | 2100 | 2,000 | 1,700 | 2,000 | 1,600 | 1,000 | 980 |
| temperature (deg./centigrade) | 18 | 16 | 17 | 11 | 15 | 15 | 10 | 16 | 11 | 16 |
| TOC | 8.8 | NA | NA | 72 | 9 | 10 | NA | NA | NA | NA |
| total phenols | NA | <0.050 | <0.050 | <0.002 | <0.002 | <0.002 | 0.083 | <0.05 | <0.050 | <0.05 |
| TOX | NA | NA | NA | 0.013 | 0.028 | 0.014 | NA | NA | NA | NA |
| total dissolved solids (TDS) | 1,080 | NA | NA | NA | NA | NA | NA | NA | NA | NA |
| bicarbonate, as CACO3 | NA | NA | NA | NA | NA | NA | NA | NA | NA | NA |
| calcium | NA | NA | NA | NA | NA | NA | NA | NA | NA | NA |
| chloride | 236 | NA | NA | NA | 15 | 36 | NA | NA | NA | NA |
| cyanide | NA | <0.025 | <0.025 | <0.005 | NA | <0.005 | <0.025 | <0.025 | <0.025 | <0.025 |
| iron | NA | NA | NA | NA | NA | NA | NA | NA | NA | NA |
| magnesium | NA | NA | NA | NA | NA | NA | NA | NA | NA | NA |
| potassium | NA | NA | NA | NA | NA | NA | NA | NA | NA | NA |
| sodium | NA | NA | NA | NA | NA | NA | NA | NA | NA | NA |
| sulfate, as SO4 | NA | NA | NA | NA | NA | NA | NA | NA | NA | NA |

Table E-5. Summary of Metals and Miscellaneous Parameters in Ground Water, Monsanto Company, W6 Krummrich Plant, Sauget, Il.

| Well Number: | GM-11 | GM-11 | GM-11 | GM-12A | GM-12A | GM-12A | GM-12A | GM-12A | GM-12A | GM-12A |
|---|---|---|---|---|---|---|---|---|---|---|
| Date: | 11/83 | 2/84 | 5/84 | 11/83 | 2/84 | 2/84* | 5/84 | 5/84* | 11/84 | 11/84* |
| USEPA Priority Pollutant Metals (concentrations are in mg/L, except where noted) | | | | | | | | | | |
| antimony | 0.012 | NA | <0.5 | 0.131 | NA | NA | <0.5 | <0.5 | <0.07 | <0.07 |
| arsenic | <0.002 | NA | <0.01 | 0.024 | NA | NA | <0.01 | <0.01 | 0.022 | 0.017 |
| beryllium | <0.01 | NA | <0.01 | <0.01 | NA | NA | <0.01 | <0.01 | <0.005 | <0.005 |
| cadmium | <0.01 | NA | <0.02 | 0.03 | NA | NA | <0.02 | 0.02 | <0.005 | <0.005 |
| chromium | <0.04 | NA | <0.05 | <0.04 | NA | NA | <0.05 | <0.05 | <0.008 | <0.008 |
| copper | NA | NA | NA | NA | NA | NA | NA | NA | <0.008 | <0.008 |
| lead | 0.002 | NA | <0.01 | 0.015 | NA | NA | <0.01 | <0.01 | <0.06 | <0.06 |
| mercury | <0.0002 | NA | <0.0005 | <0.0002 | NA | NA | <0.0005 | <0.0005 | <0.0003 | <0.0003 |
| nickel | <0.04 | NA | <0.05 | 0.13 | NA | NA | <0.05 | <0.05 | <0.01 | <0.01 |
| selenium | 0.003 | NA | <0.01 | 0.034 | NA | NA | <0.01 | <0.01 | <0.01 | <0.005 |
| silver | <0.001 | NA | <0.05 | <0.001 | NA | NA | <0.05 | <0.05 | <0.008 | <0.008 |
| thallium | 0.003 | NA | <0.2 | 0.023 | NA | NA | <0.2 | <0.2 | <0.01 | <0.005 |
| zinc | 0.019 | NA | 0.09 | 0.037 | NA | NA | 0.03 | 0.03 | <0.008 | <0.008 |
| Miscellaneous Parameters | | | | | | | | | | |
| pH (units) | 7.3 | 7.2 | 7.3 | 7.9 | 7.8 | 7.8 | 7.8 | 7.8 | 6.9 | 6.9 |
| spec. conductance (umhos/cm) | 1,100 | 1,100 | 1,150 | 30,000 | 7,000 | 7,000 | 5,500 | 5,500 | 4,500 | 4,500 |
| temperature (deg./centigrade) | 12 | 13 | 14 | 12 | 16 | 16 | 16 | 16 | 14 | 14 |
| TOC | 36 | 18 | 10 | 118 | 29 | 30 | 25 | 22 | NA | NA |
| total phenols | 0.002 | <0.002 | <0.002 | 0.68 | 0.86 | 0.11 | 0.86 | 0.054 | <0.05 | 0.079 |
| TOX | 0.022 | 0.033 | 0.015 | 4.7 | 5.2 | 5.1 | 4.7 | 5.5 | NA | NA |
| total dissolved solids (TDS) | NA | NA | NA | NA | NA | NA | NA | NA | NA | NA |
| bicarbonate, as CACO3 | NA | NA | NA | NA | NA | NA | NA | NA | NA | NA |
| calcium | NA | NA | NA | NA | NA | NA | NA | NA | NA | NA |
| chloride | NA | 40 | 22 | 5,198 | 1,055 | 1,050 | 935 | 902 | NA | NA |
| cyanide | <0.005 | NA | <0.005 | 0.013 | NA | NA | <0.005 | <0.005 | <0.025 | <0.025 |
| iron | NA | NA | NA | NA | NA | NA | NA | NA | NA | NA |
| magnesium | NA | NA | NA | NA | NA | NA | NA | NA | NA | NA |
| potassium | NA | NA | NA | NA | NA | NA | NA | NA | NA | NA |
| sodium | NA | NA | NA | NA | NA | NA | NA | NA | NA | NA |
| sulfate, as SO4 | NA | NA | NA | NA | NA | NA | NA | NA | NA | NA |

Table E-5. Summary of Metals and Miscellaneous Parameters in Ground Water, Monsanto Company, WG Krumrich Plant, Sauget, Il.

| Well Number: | GM-12A | GM-12A | GM-12A | GM-12A | GM-12A | GM-12A | GM-12A | GM-12A | GM-12B | GM-12B |
|---|---|---|---|---|---|---|---|---|---|---|
| Date: | 2/85 | 2/85* | 5/85 | 5/85* | 11/85 | 11/85* | 2/86 | 2/86* | 9/84 | 11/84 |
| USEPA Priority Pollutant Metals (concentrations are in mg/L, except where noted) | | | | | | | | | | |
| antimony | <0.1 | <0.1 | <0.07 | <0.07 | NA | NA | <0.050 | <0.050 | 0.024 | <0.07 |
| arsenic | 0.032 | 0.041 | 0.035 | 0.033 | NA | NA | 0.04 | 0.02 | <0.001 | <0.005 |
| beryllium | <0.001 | <0.001 | <0.001 | <0.001 | NA | NA | <0.001 | <0.001 | <0.01 | <0.005 |
| cadmium | <0.004 | <0.004 | <0.004 | <0.004 | NA | NA | <0.003 | <0.003 | 4.46 | <0.005 |
| chromium | <0.02 | <0.02 | <0.01 | <0.01 | NA | NA | <0.010 | <0.010 | 0.089 | <0.008 |
| copper | <0.01 | <0.01 | <0.01 | <0.01 | NA | NA | <0.009 | <0.009 | 0.05 | <0.008 |
| lead | <0.07 | <0.07 | <0.07 | <0.07 | NA | NA | <0.06 | <0.06 | 0.012 | <0.06 |
| mercury | <0.0003 | <0.0003 | <0.0002 | <0.0002 | NA | NA | <0.0002 | <0.0002 | <0.0004 | <0.0003 |
| nickel | <0.01 | <0.01 | <0.02 | <0.02 | NA | NA | <0.01 | <0.01 | 0.084 | <0.01 |
| selenium | <0.006 | <0.006 | <0.005 | <0.005 | NA | NA | <0.01 | <0.01 | <0.001 | <0.005 |
| silver | <0.008 | <0.008 | <0.009 | <0.009 | NA | NA | <0.01 | <0.01 | 0.001 | <0.008 |
| thallium | <0.005 | <0.005 | <0.01 | <0.01 | NA | NA | <0.005 | <0.30 | 0.013 | <0.005 |
| zinc | 0.02 | 0.02 | <0.01 | <0.01 | NA | NA | 0.03 | 0.04 | 0.036 | <0.008 |
| Miscellaneous Parameters | | | | | | | | | | |
| pH (units) | 6.8 | 6.8 | 7.8 | 7.8 | 6.9 | 6.9 | 7.0 | 7.0 | 7.2 | 7.0 |
| spec. conductance (umhos/cm) | 3,000 | 3,000 | 1,050 | 1,050 | 9,800 | 9,800 | 3,125 | 3,125 | 1,400 | 1,400 |
| temperature (deg./centigrade) | 12 | 12 | 16 | 16 | 16 | 16 | 12 | 12 | 19 | 13 |
| TOC | NA | NA | NA | NA | NA | NA | NA | NA | 14 | NA |
| total phenols | <0.05 | 0.062 | 0.069 | 0.055 | 0.251 | 0.189 | 0.0561 | 0.0637 | NA | <0.05 |
| TOX | NA | NA | NA | NA | NA | NA | NA | NA | NA | NA |
| total dissolved solids (TDS) | NA | NA | NA | NA | NA | NA | NA | NA | 816 | NA |
| bicarbonate, as CACO3 | NA | NA | NA | NA | 1090 | 850 | NA | NA | NA | NA |
| calcium | NA | NA | NA | NA | 524 | 514 | NA | NA | NA | NA |
| chloride | NA | NA | NA | NA | 1,610 | 1,070 | NA | NA | 109 | NA |
| cyanide | <0.025 | <0.025 | <0.025 | <0.025 | <0.025 | <0.025 | <0.025 | <0.025 | NA | <0.025 |
| iron | NA | NA | NA | NA | 39.6 | 44.8 | NA | NA | NA | NA |
| magnesium | NA | NA | NA | NA | 129 | 127 | NA | NA | NA | NA |
| potassium | NA | NA | NA | NA | 11.4 | 11.2 | NA | NA | NA | NA |
| sodium | NA | NA | NA | NA | 1,250 | 1,230 | NA | NA | NA | NA |
| sulfate, as SO4 | NA | NA | NA | NA | 930 | 910 | NA | NA | NA | NA |

Table E-5. Summary of Metals and Miscellaneous Parameters in Ground Water, Monsanto Company, W6 Krummrich Plant, Sauget, Il.

| Well Number: | GM-12B | GM-12C | GM-12C | GM-12C | GM-12C | GM-13 | GM-13 | GM-13 | GM-14 | GM-15 |
|---|---|---|---|---|---|---|---|---|---|---|
| Date: | 11/85 | 2/85 | 2/85* | 5/85 | 5/85* | 9/84 | 11/85 | 2/86 | 9/84 | 9/84 |
| USEPA Priority Pollutant Metals (concentrations are in mg/L, except where noted) | | | | | | | | | | |
| antimony | NA | <0.1 | <0.1 | <0.07 | <0.07 | 0.042 | NA | <0.05 | 0.187 | 0.021 |
| arsenic | NA | <0.01 | <0.01 | <0.01 | <0.01 | 0.003 | NA | 0.04 | <0.001 | <0.001 |
| beryllium | NA | <0.001 | <0.001 | <0.001 | <0.001 | <0.01 | NA | <0.001 | <0.010 | <0.01 |
| cadmium | NA | <0.004 | <0.004 | <0.004 | <0.004 | 16.1 | NA | <0.003 | 25.8 | 9.16 |
| chromium | NA | <0.02 | <0.02 | <0.01 | <0.01 | <0.04 | NA | <0.01 | <0.04 | <0.04 |
| copper | NA | <0.01 | <0.01 | <0.01 | <0.01 | 0.02 | NA | <0.009 | 0.03 | 0.02 |
| lead | NA | <0.01 | <0.07 | <0.07 | <0.07 | 0.021 | NA | <0.06 | 0.10 | 0.018 |
| mercury | NA | <0.0003 | <0.0003 | <0.0002 | <0.0002 | <0.0002 | NA | <0.0002 | <0.0004 | <0.0002 |
| nickel | NA | <0.01 | <0.01 | <0.02 | <0.02 | 0.038 | NA | 0.03 | 0.111 | 0.038 |
| selenium | NA | <0.006 | <0.006 | 0.005 | <0.005 | <0.001 | NA | <0.005 | <0.001 | <0.001 |
| silver | NA | <0.008 | <0.008 | <0.009 | <0.009 | <0.002 | NA | <0.01 | <0.007 | 0.002 |
| thallium | NA | <0.005 | <0.005 | <0.02 | <0.010 | 0.014 | NA | <0.005 | 0.04 | 0.011 |
| zinc | NA | <0.006 | <0.006 | 0.02 | 0.020 | 0.073 | NA | 0.04 | 0.221 | 0.018 |
| Miscellaneous Parameters | | | | | | | | | | |
| pH (units) | 6.6 | 8.8 | 9.0 | 7.2 | 7.2 | 6.5 | 7.0 | 7.2 | 6.9 | 7.8 |
| spec. conductance (umhos/cm) | 2,800 | 2,500 | 2,500 | 780 | 780 | 2,500 | 1,100 | 1,170 | 3,400 | 2,400 |
| temperature (deg./centigrade) | 14 | 15 | 15 | 16 | 16 | 22 | 15 | 18 | 20 | 20 |
| TOC | NA | NA | NA | NA | NA | 101 | NA | NA | 338 | 16 |
| total phenols | 0.0744 | 0.18 | 0.23 | <0.05 | <0.05 | NA | 16.1 | 1.330 | NA | NA |
| TOX | NA | NA | NA | NA | NA | NA | NA | NA | NA | NA |
| total dissolved solids (TDS) | NA | NA | NA | NA | NA | 1,648 | NA | NA | 4,838 | 1,024 |
| bicarbonate, as CACO3 | NA | NA | NA | NA | NA | NA | 710 | NA | NA | NA |
| calcium | NA | NA | NA | NA | NA | NA | 69 | NA | NA | NA |
| chloride | NA | NA | NA | NA | NA | 470 | 46.3 | NA | 54 | 395 |
| cyanide | <0.025 | <0.025 | 0.034 | <0.025 | <0.025 | NA | <0.025 | <0.025 | NA | NA |
| iron | NA | NA | NA | NA | NA | NA | 6.8 | NA | NA | NA |
| magnesium | NA | NA | NA | NA | NA | NA | 10 | NA | NA | NA |
| potassium | NA | NA | NA | NA | NA | NA | 174 | NA | NA | NA |
| sodium | NA | NA | NA | NA | NA | NA | 71.5 | NA | NA | NA |
| sulfate, as SO4 | NA | NA | NA | NA | NA | NA | 16 | NA | NA | NA |

Table E-5. Summary of Metals and Miscellaneous Parameters in Ground Water, Monsanto Company, WG Krummrich Plant, Sauget, Il.

| Well Number: | GM-16A | GM-16A | GM-16A | GM-16B | GM-16B | GM-16B | GM-16B | GM-17A | GM-17A | GM-17A |
|---|---|---|---|---|---|---|---|---|---|---|
| Date: | 9/84 | 5/85 | 11/85 | 9/84 | 5/85 | 11/85 | 2/86 | 9/84 | 11/84 | 11/85 |
| USEPA Priority Pollutant Metals (concentrations are in mg/L, except where noted) | | | | | | | | | | |
| antimony | 0.056 | <0.09 | NA | 0.018 | <0.09 | NA | NA | 0.015 | <0.08 | NA |
| arsenic | <0.001 | <0.01 | NA | <0.001 | <0.01 | NA | NA | 0.002 | <0.01 | NA |
| beryllium | <0.002 | <0.002 | NA | <0.002 | <0.002 | NA | NA | <0.002 | <0.005 | NA |
| cadmium | <0.002 | <0.004 | NA | <0.002 | <0.004 | NA | NA | <0.002 | <0.005 | NA |
| chromium | <0.004 | <0.02 | NA | <0.004 | <0.02 | NA | NA | <0.004 | <0.02 | NA |
| copper | 0.008 | <0.01 | NA | <0.004 | <0.01 | NA | NA | <0.004 | <0.01 | NA |
| lead | <0.004 | <0.1 | NA | <0.004 | <0.1 | NA | NA | <0.004 | <0.06 | NA |
| mercury | 0.00023 | <0.0003 | NA | <0.0004 | <0.0003 | NA | NA | <0.0002 | <0.0003 | NA |
| nickel | 0.013 | <0.03 | NA | 0.004 | <0.03 | NA | NA | 0.023 | <0.01 | NA |
| selenium | <0.001 | <0.005 | NA | <0.001 | <0.005 | NA | NA | <0.001 | <0.005 | NA |
| silver | 0.004 | <0.01 | NA | 0.002 | <0.01 | NA | NA | <0.01 | <0.007 | NA |
| thallium | 0.019 | <0.005 | NA | 0.008 | <0.005 | NA | NA | 0.17 | <0.005 | NA |
| zinc | 0.04 | 0.02 | NA | 0.057 | 0.06 | NA | NA | 0.091 | <0.01 | NA |
| Miscellaneous Parameters | | | | | | | | | | |
| pH (units) | 6.9 | 6.9 | 6.9 | 7.8 | 7.2 | 7.0 | 7.1 | 6.4 | 6.6 | 6.7 |
| spec. conductance (umhos/cm) | 1,430 | 580 | 2,200 | 800 | 750 | 2,500 | 830 | 1,150 | 1,650 | 1,500 |
| temperature (deg./centigrade) | 20 | 16 | 13 | 20 | 16 | 13 | 13.5 | 20 | 16 | 16 |
| TOC | 5 | NA | NA | 10 | NA | NA | NA | 15 | NA | NA |
| total phenols | NA | <0.050 | <0.050 | NA | 0.057 | 0.0534 | NA | NA | 0.2 | 0.197 |
| TOX | NA | NA | NA | NA | NA | NA | NA | NA | NA | NA |
| total dissolved solids (TDS) | 914 | NA | NA | 354 | NA | NA | NA | 880 | NA | NA |
| bicarbonate, as CACO3 | NA | NA | NA | NA | NA | NA | NA | NA | NA | NA |
| calcium | NA | NA | NA | NA | NA | NA | NA | NA | NA | NA |
| chloride | 145 | NA | NA | 40 | NA | NA | NA | 120 | NA | NA |
| cyanide | NA | <0.025 | <0.025 | NA | <0.025 | <0.025 | NA | NA | <0.025 | <0.025 |
| iron | NA | NA | NA | NA | NA | NA | NA | NA | NA | NA |
| magnesium | NA | NA | NA | NA | NA | NA | NA | NA | NA | NA |
| potassium | NA | NA | NA | NA | NA | NA | NA | NA | NA | NA |
| sodium | NA | NA | NA | NA | NA | NA | NA | NA | NA | NA |
| sulfate, as SO4 | NA | NA | NA | NA | NA | NA | NA | NA | NA | NA |

Table E-5. Summary of Metals and Miscellaneous Parameters in Ground Water, Monsanto Company, WG Krummrich Plant, Sauget, Il.

| Well Number: | GM-17B | GM-17B | GM-17B | GM-17C | GM-17C | GM-17C | GM-18A | GM-18A | GM-18A | GM-18B |
|---|---|---|---|---|---|---|---|---|---|---|
| Date: | 9/84 | 11/84 | 11/85 | 9/84 | 11/84 | 11/85 | 9/84 | 5/85 | 11/85 | 9/84 |
| USEPA Priority Pollutant Metals (concentrations are in mg/L, except where noted) | | | | | | | | | | |
| antimony | 0.044 | <0.08 | NA | 0.060 | <0.08 | NA | 0.017 | <0.09 | NA | 0.035 |
| arsenic | 0.001 | <0.01 | NA | <0.001 | <0.005 | NA | <0.001 | <0.01 | NA | 0.001 |
| beryllium | <0.002 | <0.005 | NA | <0.002 | <0.005 | NA | <0.002 | <0.002 | NA | <0.002 |
| cadmium | <0.002 | <0.005 | NA | <0.002 | <0.005 | NA | <0.002 | <0.004 | NA | 0.003 |
| chromium | <0.004 | <0.02 | NA | <0.004 | <0.02 | NA | <0.004 | <0.02 | NA | <0.004 |
| copper | <0.004 | <0.01 | NA | <0.004 | <0.01 | NA | <0.004 | <0.01 | NA | <0.004 |
| lead | <0.004 | <0.06 | NA | <0.004 | <0.06 | NA | <0.004 | <0.1 | NA | <0.004 |
| mercury | <0.0002 | <0.0006 | NA | <0.0002 | <0.0003 | NA | <0.0004 | <0.0003 | NA | <0.0002 |
| nickel | 0.008 | <0.01 | NA | 0.009 | <0.01 | NA | <0.004 | <0.03 | NA | 0.004 |
| selenium | <0.001 | <0.005 | NA | <0.001 | <0.005 | NA | 0.002 | <0.005 | NA | <0.001 |
| silver | <0.01 | <0.007 | NA | <0.01 | <0.007 | NA | <0.010 | <0.01 | NA | <0.010 |
| thallium | 0.327 | <0.005 | NA | 0.533 | <0.005 | NA | 0.195 | <0.005 | NA | 0.321 |
| zinc | 0.053 | <0.01 | NA | 0.047 | <0.01 | NA | 0.067 | <0.01 | NA | 0.075 |
| Miscellaneous Parameters | | | | | | | | | | |
| pH (units) | 6.6 | 6.9 | 7.4 | 6.3 | 6.8 | 7.3 | 6.5 | 6.6 | 7.0 | 6.4 |
| spec. conductance (umhos/cm) | 3,000 | 4,300 | 4,000 | 4,500 | 6,300 | 5,500 | 800 | 600 | 1,150 | 2,000 |
| temperature (deg./centigrade) | 20 | 18 | 16 | 20 | 18 | 16 | 18 | 16 | 12 | 18 |
| TOC | 56 | NA | NA | 17 | NA | NA | 4 | NA | NA | 4 |
| total phenols | NA | 0.82 | 1.69 | NA | 0.05 | <0.05 | NA | 0.16 | <0.05 | NA |
| TOX | NA | NA | NA | NA | NA | NA | NA | NA | NA | NA |
| total dissolved solids (TDS) | 2,516 | NA | NA | 3,384 | NA | NA | 663 | NA | NA | 1,644 |
| bicarbonate, as CACO3 | NA | NA | 1,400 | NA | NA | 930 | NA | NA | NA | NA |
| calcium | NA | NA | 136 | NA | NA | 198 | NA | NA | NA | NA |
| chloride | 425 | NA | 633 | 1,265 | NA | 856 | 15 | NA | NA | 70 |
| cyanide | NA | <0.025 | <0.025 | NA | <0.025 | <0.025 | NA | <0.025 | <0.025 | NA |
| iron | NA | NA | 1 | NA | NA | 3.6 | NA | NA | NA | NA |
| magnesium | NA | NA | 28.5 | NA | NA | 64 | NA | NA | NA | NA |
| potassium | NA | NA | 16.4 | NA | NA | 406 | NA | NA | NA | NA |
| sodium | NA | NA | 825 | NA | NA | 785 | NA | NA | NA | NA |
| sulfate, as SO4 | NA | NA | 21 | NA | NA | 700 | NA | NA | NA | NA |

Table E-5. Summary of Metals and Miscellaneous Parameters in Ground Water, Monsanto Company, WG Krummrich Plant, Sauget, Il.

| Well Number: | GM-18B | GM-18B | GM-25A | GM-25A | GM-25B | GM-25B | GM-25B | GM-27B | GM-27B | GM-27B |
|---|---|---|---|---|---|---|---|---|---|---|
| Date: | 5/85 | 11/85 | 9/84 | 11/84 | 9/84 | 11/84 | 11/85 | 9/84 | 11/85 | 2/86 |
| USEPA Priority Pollutant Metals (concentrations are in mg/L, except where noted) | | | | | | | | | | |
| antimony | <0.09 | NA | 0.011 | <0.08 | 0.011 | <0.07 | NA | 0.012 | NA | <0.06 |
| arsenic | <0.01 | NA | <0.001 | <0.005 | <0.001 | <0.005 | NA | <0.001 | NA | <0.01 |
| beryllium | <0.002 | NA | <0.002 | <0.005 | <0.002 | <0.005 | NA | <0.002 | NA | <0.0009 |
| cadmium | <0.004 | NA | <0.002 | <0.005 | <0.002 | <0.005 | NA | <0.002 | NA | <0.003 |
| chromium | <0.02 | NA | 0.004 | <0.02 | <0.004 | <0.008 | NA | <0.004 | NA | <0.008 |
| copper | <0.01 | NA | 0.006 | <0.01 | <0.004 | <0.008 | NA | <0.004 | NA | <0.006 |
| lead | <0.1 | NA | <0.004 | <0.06 | <0.004 | <0.06 | NA | <0.004 | NA | <0.06 |
| mercury | <0.0003 | NA | <0.0002 | <0.0003 | <0.0002 | <0.0003 | NA | <0.0002 | NA | <0.0002 |
| nickel | <0.03 | NA | <0.004 | <0.01 | <0.004 | <0.01 | NA | <0.004 | NA | <0.009 |
| selenium | <0.005 | NA | 0.002 | <0.005 | <0.001 | <0.005 | NA | <0.001 | NA | <0.005 |
| silver | <0.01 | NA | <0.01 | <0.007 | <0.010 | <0.008 | NA | <0.01 | NA | <0.010 |
| thallium | <0.005 | NA | 0.127 | <0.005 | 0.172 | <0.01 | NA | 0.051 | NA | <0.005 |
| zinc | 0.02 | NA | 0.07 | <0.01 | 0.059 | <0.008 | NA | 0.032 | NA | 0.02 |
| Miscellaneous Parameters | | | | | | | | | | |
| pH (units) | 6.8 | 6.9 | 7.0 | 6.8 | 7.4 | 7.0 | 7.0 | 7.1 | 8.4 | NA |
| spec. conductance (umhos/cm) | 1,075 | 2,500 | 550 | 1,600 | 800 | 1,120 | 1,450 | 420 | 550 | 410 |
| temperature (deg./centigrade) | 16 | 15 | 18 | 14 | 18 | 13 | 12 | 18 | 12 | 12 |
| TOC | NA | NA | 3 | NA | 7 | NA | NA | 10 | 10.4 | NA |
| total phenols | 0.056 | 0.0506 | NA | <0.05 | NA | <0.05 | <0.05 | NA | <0.05 | 0.0536 |
| TOX | NA | NA | NA | NA | NA | NA | NA | NA | NA | NA |
| total dissolved solids (TDS) | NA | NA | 332 | NA | 628 | NA | NA | 294 | NA | NA |
| bicarbonate, as CACO3 | NA | NA | NA | NA | NA | NA | NA | NA | NA | NA |
| calcium | NA | NA | NA | NA | NA | NA | NA | NA | NA | NA |
| chloride | NA | NA | 10 | NA | 35 | NA | NA | 35 | NA | NA |
| cyanide | <0.025 | <0.025 | NA | <0.025 | NA | <0.025 | <0.025 | NA | <0.025 | <0.025 |
| iron | NA | NA | NA | NA | NA | NA | NA | NA | NA | NA |
| magnesium | NA | NA | NA | NA | NA | NA | NA | NA | NA | NA |
| potassium | NA | NA | NA | NA | NA | NA | NA | NA | NA | NA |
| sodium | NA | NA | NA | NA | NA | NA | NA | NA | NA | NA |
| sulfate, as SO4 | NA | NA | NA | NA | NA | NA | NA | NA | NA | NA |

Table E-5. Summary of Metals and Miscellaneous Parameters in Ground Water, Monsanto Company, WG Krummrich Plant, Sauget, Il.

| Well Number: | GM-27C | GM-27C | GM-27C | GM-28B | GM-28B | GM-28B | GM-28C | GM-28C | GM-28C | GM-29 |
|---|---|---|---|---|---|---|---|---|---|---|
| Date: | 9/84 | 11/85 | 2/86 | 9/84 | 11/85 | 2/86 | 9/84 | 11/85 | 2/86 | 9/84 |
| USEPA Priority Pollutant Metals (concentrations are in mg/L, except where noted) | | | | | | | | | | |
| antimony | 0.011 | NA | <0.06 | 0.015 | NA | <0.06 | 0.039 | NA | <0.06 | 0.183 |
| arsenic | <0.001 | NA | <0.01 | <0.001 | NA | <0.01 | 0.002 | NA | <0.01 | 0.002 |
| beryllium | <0.002 | NA | <0.0009 | <0.002 | NA | <0.0009 | <0.002 | NA | <0.0009 | <0.002 |
| cadmium | <0.002 | NA | <0.003 | <0.002 | NA | <0.003 | 0.003 | NA | <0.003 | 0.014 |
| chromium | <0.004 | NA | <0.008 | <0.004 | NA | <0.008 | <0.004 | NA | <0.008 | <0.004 |
| copper | <0.004 | NA | <0.006 | <0.004 | NA | <0.006 | <0.004 | NA | <0.006 | 0.016 |
| lead | <0.004 | NA | <0.06 | <0.004 | NA | <0.06 | <0.004 | NA | <0.06 | 0.007 |
| mercury | <0.0002 | NA | <0.0002 | <0.0002 | NA | <0.0002 | <0.0002 | NA | <0.0002 | <0.0004 |
| nickel | <0.004 | NA | 0.01 | <0.004 | NA | 0.01 | 0.007 | NA | <0.009 | 0.006 |
| selenium | <0.001 | NA | <0.005 | <0.001 | NA | <0.005 | <0.001 | NA | <0.005 | <0.001 |
| silver | <0.01 | NA | <0.01 | <0.01 | NA | <0.01 | <0.01 | NA | <0.01 | 0.011 |
| thallium | 0.102 | NA | <0.005 | 0.106 | NA | <0.005 | 0.279 | NA | <0.005 | 0.027 |
| zinc | 0.07 | NA | 0.058 | 0.038 | NA | 0.04 | 0.043 | NA | 0.16 | 0.079 |
| Miscellaneous Parameters | | | | | | | | | | |
| pH (units) | 7.1 | 6.8 | 7.0 | 7.2 | 6.7 | NA | 6.9 | 7.3 | NA | 6.8 |
| spec. conductance (umhos/cm) | 700 | 1,600 | 1,000 | 1,100 | 2,500 | 1,230 | 2,500 | 2,500 | 1,290 | 2,300 |
| temperature (deg./centigrade) | 20 | 12 | 12 | 19 | NA | 13 | 19 | NA | 10 | 20 |
| TOC | 18 | 113.4# | NA | 114 | 182# | NA | 252 | 188# | NA | 16 |
| total phenols | NA | 0.346 | 0.152 | NA | 5.5 | 3.76 | NA | 1.036 | 1.780 | NA |
| TOX | NA | NA | NA | NA | NA | NA | NA | NA | NA | NA |
| total dissolved solids (TDS) | 482 | NA | NA | 832 | NA | NA | 2,250 | NA | NA | 4,236 |
| bicarbonate, as CACO3 | NA | NA | NA | NA | NA | NA | NA | 820 | NA | NA |
| calcium | NA | NA | NA | NA | NA | NA | NA | 228 | NA | NA |
| chloride | 55 | NA | NA | 175 | NA | NA | 705 | 384 | NA | 1,105 |
| cyanide | NA | NA | <0.025 | NA | <0.025 | <0.025 | NA | <0.025 | <0.025 | NA |
| iron | NA | NA | NA | NA | NA | NA | NA | 85.2 | NA | NA |
| magnesium | NA | NA | NA | NA | NA | NA | NA | 66.6 | NA | NA |
| potassium | NA | NA | NA | NA | NA | NA | NA | 11.9 | NA | NA |
| sodium | NA | NA | NA | NA | NA | NA | NA | 232 | NA | NA |
| sulfate, as SO4 | NA | NA | NA | NA | NA | NA | NA | 16 | NA | NA |

Table E-5. Summary of Metals and Miscellaneous Parameters in Ground Water, Monsanto Company, W6 Krumerich Plant, Sauget, Il.

| Well Number: | GM-29 | GM-30 | GM-30 | GM-30 | GM-31A | GM-31A | GM-31A | GM-31A | GM-31A | GM-31A |
|---|---|---|---|---|---|---|---|---|---|---|
| Date: | 11/85 | 9/84 | 11/85 | 2/86 | 2/85 | 5/85 | 11/85 | 11/85* | 2/86 | 2/86* |
| USEPA Priority Pollutant Metals (concentrations are in mg/L, except where noted) | | | | | | | | | | |
| antimony | NA | 0.211 | NA | <0.06 | <0.08 | <0.09 | NA | NA | NA | NA |
| arsenic | NA | 0.001 | NA | <0.01 | <0.01 | <0.01 | NA | NA | NA | NA |
| beryllium | NA | <0.01 | NA | <0.0009 | <0.001 | <0.002 | NA | NA | NA | NA |
| cadmium | NA | <0.01 | NA | 0.005 | <0.005 | <0.004 | NA | NA | NA | NA |
| chromium | NA | <0.04 | NA | <0.008 | <0.02 | <0.02 | NA | NA | NA | NA |
| copper | NA | 0.04 | NA | <0.006 | <0.02 | <0.01 | NA | NA | NA | NA |
| lead | NA | 0.17 | NA | <0.06 | <0.1 | <0.1 | NA | NA | NA | NA |
| mercury | NA | <0.00095 | NA | 0.0002 | <0.0003 | <0.0003 | NA | NA | NA | NA |
| nickel | NA | 0.584 | NA | 1.4 | <0.03 | <0.03 | NA | NA | NA | NA |
| selenium | NA | <0.001 | NA | 0.06 | <0.006 | <0.005 | NA | NA | NA | NA |
| silver | NA | 0.004 | NA | <0.01 | <0.01 | <0.01 | NA | NA | NA | NA |
| thallium | NA | 0.354 | NA | <0.05 | <0.005 | <0.005 | NA | NA | NA | NA |
| zinc | NA | 0.558 | NA | 0.420 | <0.03 | 0.1 | NA | NA | NA | NA |
| Miscellaneous Parameters | | | | | | | | | | |
| pH (units) | 6.9 | 6.5 | 6.6 | NA | 7.4 | 6.4 | 7.0 | 7.0 | 7.3 | 7.3 |
| spec. conductance (umhos/cm) | 1,400 | 5,000 | 10,500 | 4,000 | 1,100 | 1,420 | 1,600 | 1,600 | 925 | 925 |
| temperature (deg./centigrade) | 15 | 24 | 14 | 11 | 11 | 16 | 16 | 16 | 11 | 11 |
| TOC | NA | 14 | NA | NA | NA | NA | NA | NA | NA | NA |
| total phenols | 0.0629 | NA | 0.0945 | <0.05 | 89 | 19 | 10.6 | 10.5 | NA | NA |
| TOX | NA | NA | NA | NA | NA | NA | NA | NA | NA | NA |
| total dissolved solids (TDS) | NA | 10,422 | NA | NA | NA | NA | NA | NA | NA | NA |
| bicarbonate, as CACO3 | NA | NA | NA | NA | NA | NA | NA | NA | NA | NA |
| calcium | NA | NA | NA | NA | NA | NA | NA | NA | NA | NA |
| chloride | NA | 4,200 | NA | NA | NA | NA | NA | NA | NA | NA |
| cyanide | <0.025 | NA | <0.025 | <0.025 | <0.025 | <0.025 | <0.025 | <0.025 | NA | NA |
| iron | NA | NA | NA | NA | NA | NA | NA | NA | NA | NA |
| magnesium | NA | NA | NA | NA | NA | NA | NA | NA | NA | NA |
| potassium | NA | NA | NA | NA | NA | NA | NA | NA | NA | NA |
| sodium | NA | NA | NA | NA | NA | NA | NA | NA | NA | NA |
| sulfate, as SO4 | NA | NA | NA | NA | NA | NA | NA | NA | NA | NA |

Table E-5. Summary of Metals and Miscellaneous Parameters in Ground Water, Monsanto Company, WG Krummrich Plant, Sauget, Il.

| Well Number: | GM-31B | GM-31B | GM-31B | GM-31B | GM-31C | GM-31C | GM-31C | GM-31C | B-21B | B-21B |
|---|---|---|---|---|---|---|---|---|---|---|
| Date: | 2/85 | 5/85 | 11/85 | 11/85* | 2/85 | 5/85 | 11/85 | 11/85* | 1/84 | 2/84 |
| USEPA Priority Pollutant Metals (concentrations are in mg/L, except where noted) | | | | | | | | | | |
| antimony | <0.07 | <0.09 | NA | NA | <0.07 | <0.09 | NA | NA | NA | NA |
| arsenic | <0.01 | <0.01 | NA | NA | <0.01 | <0.01 | NA | NA | NA | NA |
| beryllium | <0.001 | <0.002 | NA | NA | <0.001 | <0.002 | NA | NA | NA | NA |
| cadmium | <0.003 | <0.004 | NA | NA | <0.003 | <0.004 | NA | NA | NA | NA |
| chromium | <0.01 | <0.02 | NA | NA | <0.01 | <0.02 | NA | NA | NA | NA |
| copper | <0.02 | <0.01 | NA | NA | <0.02 | <0.01 | NA | NA | NA | NA |
| lead | <0.06 | <0.1 | NA | NA | <0.06 | <0.1 | NA | NA | NA | NA |
| mercury | <0.0003 | <0.0003 | NA | NA | <0.0003 | <0.0003 | NA | NA | NA | NA |
| nickel | <0.04 | <0.03 | NA | NA | <0.04 | <0.03 | NA | NA | NA | NA |
| selenium | <0.006 | <0.005 | NA | NA | <0.006 | <0.005 | NA | NA | NA | NA |
| silver | <0.008 | <0.01 | NA | NA | <0.008 | <0.01 | NA | NA | NA | NA |
| thallium | <0.005 | <0.005 | NA | NA | <0.005 | <0.005 | NA | NA | NA | NA |
| zinc | 0.06 | 0.04 | NA | NA | <0.05 | 0.02 | NA | NA | NA | NA |
| Miscellaneous Parameters | | | | | | | | | | |
| pH (units) | 6.4 | 7.3 | 7.0 | 7.0 | 7.2 | 7.1 | 6.8 | 6.8 | 6.0 | 6.6 |
| spec. conductance (umhos/cm) | 1,450 | 2,000 | 3,000 | 3,000 | 1,400 | 1,850 | 3,750 | 3,750 | 4,100 | 1,650 |
| temperature (deg./centigrade) | 11 | 16 | 12 | 12 | 11 | 16 | 12 | 12 | 14.5 | 16.5 |
| TOC | NA | NA | NA | NA | NA | NA | NA | NA | 630 | 750 |
| total phenols | <0.05 | <0.05 | <0.05 | 0.0591 | 0.069 | <0.05 | <0.05 | 0.077 | 530* | 630 |
| TOX | NA | NA | NA | NA | NA | NA | NA | NA | 260 | 490 |
| total dissolved solids (TDS) | NA | NA | NA | NA | NA | NA | NA | NA | NA | NA |
| bicarbonate, as CACO3 | NA | NA | NA | NA | NA | NA | NA | NA | NA | NA |
| calcium | NA | NA | NA | NA | NA | NA | NA | NA | NA | NA |
| chloride | NA | NA | NA | NA | NA | NA | NA | NA | NA | NA |
| cyanide | <0.025 | <0.025 | <0.025 | <0.025 | <0.025 | <0.025 | <0.025 | <0.025 | NA | NA |
| iron | NA | NA | NA | NA | NA | NA | NA | NA | NA | NA |
| magnesium | NA | NA | NA | NA | NA | NA | NA | NA | NA | NA |
| potassium | NA | NA | NA | NA | NA | NA | NA | NA | NA | NA |
| sodium | NA | NA | NA | NA | NA | NA | NA | NA | NA | NA |
| sulfate, as SO4 | NA | NA | NA | NA | NA | NA | NA | NA | NA | NA |

Table E-5. Summary of Metals and Miscellaneous Parameters in Ground Water, Monsanto Company, WG Krummrich Plant, Sauget, Il.

| Well Number: | B-21B | B-21B | B-22A | B-22A | B-22A | B-22A | B-22B | B-22B | B-22B | B-22B |
|---|---|---|---|---|---|---|---|---|---|---|
| Date: | 3/84 | 5/84 | 1/84 | 2/84 | 3/84 | 5/84 | 1/84 | 2/84 | 3/84 | 5/84 |
| USEPA Priority Pollutant Metals (concentrations are in mg/L, except where noted) | | | | | | | | | | |
| antimony | NA | NA | NA | NA | NA | NA | NA | NA | NA | NA |
| arsenic | NA | NA | NA | NA | NA | NA | NA | NA | NA | NA |
| beryllium | NA | NA | NA | NA | NA | NA | NA | NA | NA | NA |
| cadmium | NA | NA | NA | NA | NA | NA | NA | NA | NA | NA |
| chromium | NA | NA | NA | NA | NA | NA | NA | NA | NA | NA |
| copper | NA | NA | NA | NA | NA | NA | NA | NA | NA | NA |
| lead | NA | NA | NA | NA | NA | NA | NA | NA | NA | NA |
| mercury | NA | NA | NA | NA | NA | NA | NA | NA | NA | NA |
| nickel | NA | NA | NA | NA | NA | NA | NA | NA | NA | NA |
| selenium | NA | NA | NA | NA | NA | NA | NA | NA | NA | NA |
| silver | NA | NA | NA | NA | NA | NA | NA | NA | NA | NA |
| thallium | NA | NA | NA | NA | NA | NA | NA | NA | NA | NA |
| zinc | NA | NA | NA | NA | NA | NA | NA | NA | NA | NA |
| Miscellaneous Parameters | | | | | | | | | | |
| pH (units) | 6.6 | 7.0 | 6.5 | 6.7 | 6.5 | 6.5 | 6.0 | 6.6 | 6.4 | 6.5 |
| spec. conductance (umhos/cm) | 3,150 | 3,350 | 2,750 | 1,300 | 3,200 | 4,200 | 2,050 | 1,000 | 1,950 | 1,850 |
| temperature (deg./centigrade) | 15.5 | 16 | 13.0 | 14 | 15 | 14.0 | 16.0 | 17 | 15 | 16.5 |
| TOC | 1,600 | 1,600 | NA | 130 | 390 | 300 | 230 | 180 | 1,000 | 420 |
| total phenols | 380 | 380 | 21 | 35 | 28.5# | 59 | 150 | 100 | 210 | 47# |
| TOX | 440 | 540 | 330 | 92# | 70 | 130 | 120 | 5.3 | 38 | 80 |
| total dissolved solids (TDS) | NA | NA | NA | NA | NA | NA | NA | NA | NA | NA |
| bicarbonate, as CACO3 | NA | NA | NA | NA | NA | NA | NA | NA | NA | NA |
| calcium | NA | NA | NA | NA | NA | NA | NA | NA | NA | NA |
| chloride | NA | NA | NA | NA | NA | NA | NA | NA | NA | NA |
| cyanide | NA | NA | NA | NA | NA | NA | NA | NA | NA | NA |
| iron | NA | NA | NA | NA | NA | NA | NA | NA | NA | NA |
| magnesium | NA | NA | NA | NA | NA | NA | NA | NA | NA | NA |
| potassium | NA | NA | NA | NA | NA | NA | NA | NA | NA | NA |
| sodium | NA | NA | NA | NA | NA | NA | NA | NA | NA | NA |
| sulfate, as SO4 | NA | NA | NA | NA | NA | NA | NA | NA | NA | NA |

Table E-5. Summary of Metals and Miscellaneous Parameters in Ground Water, Monsanto Company, W6 Krummrich Plant, Sauget, Il.

| Well Number: | B-23B | B-23B | B-23B | B-23B | B-24A | B-24A | B-24A | B-24A | B-24A | B-24B |
|---|---|---|---|---|---|---|---|---|---|---|
| Date: | 1/84 | 2/84 | 3/84 | 5/84 | 1/84 | 2/84 | 3/84 | 5/84 | 2/86 | 1/84 |
| USEPA Priority Pollutant Metals (concentrations are in mg/L, except where noted) | | | | | | | | | | |
| antimony | NA | NA | NA | NA | NA | NA | NA | NA | <0.06 | NA |
| arsenic | NA | NA | NA | NA | NA | NA | NA | NA | 0.01 | NA |
| beryllium | NA | NA | NA | NA | NA | NA | NA | NA | 0.002 | NA |
| cadmium | NA | NA | NA | NA | NA | NA | NA | NA | <0.003 | NA |
| chromium | NA | NA | NA | NA | NA | NA | NA | NA | 0.11 | NA |
| copper | NA | NA | NA | NA | NA | NA | NA | NA | <0.006 | NA |
| lead | NA | NA | NA | NA | NA | NA | NA | NA | <0.06 | NA |
| mercury | NA | NA | NA | NA | NA | NA | NA | NA | <0.0002 | NA |
| nickel | NA | NA | NA | NA | NA | NA | NA | NA | 0.05 | NA |
| selenium | NA | NA | NA | NA | NA | NA | NA | NA | 0.01 | NA |
| silver | NA | NA | NA | NA | NA | NA | NA | NA | <0.01 | NA |
| thallium | NA | NA | NA | NA | NA | NA | NA | NA | <0.1 | NA |
| zinc | NA | NA | NA | NA | NA | NA | NA | NA | 0.14 | NA |
| Miscellaneous Parameters | | | | | | | | | | |
| pH (units) | 7.4 | 6.4 | 6.5 | 6.5 | 6.0 | 7.2 | 6.4 | 7.0 | NA | 6.0 |
| spec. conductance (umhos/cm) | 2,250 | 1,550 | 3,950 | 3,950 | 9,750 | 1,700 | 5,500 | 11,500 | 2,750 | 3,050 |
| temperature (deg./centigrade) | NA | 15.0 | 15 | 14.0 | 7 | 16.5 | 10 | 16 | 11 | 12.0 |
| TOC | 840 | 1,300 | 1,100 | 2,200 | 920 | 1,300 | 3,700 | 3,600 | NA | 330 |
| total phenols | 850 | 1,100# | 1,000 | 900# | 1,200 | 1,360 | 1,500 | 1,400 | 520 | 230 |
| TOX | 260 | 460 | 500 | 410 | 1,500 | 800 | 840 | 980 | NA | 310 |
| total dissolved solids (TDS) | NA | NA | NA | NA | NA | NA | NA | NA | NA | NA |
| bicarbonate, as CACO3 | NA | NA | NA | NA | NA | NA | NA | NA | NA | NA |
| calcium | NA | NA | NA | NA | NA | NA | NA | NA | NA | NA |
| chloride | NA | NA | NA | NA | NA | NA | NA | NA | NA | NA |
| cyanide | NA | NA | NA | NA | NA | NA | NA | NA | 0.0638 | NA |
| iron | NA | NA | NA | NA | NA | NA | NA | NA | NA | NA |
| magnesium | NA | NA | NA | NA | NA | NA | NA | NA | NA | NA |
| potassium | NA | NA | NA | NA | NA | NA | NA | NA | NA | NA |
| sodium | NA | NA | NA | NA | NA | NA | NA | NA | NA | NA |
| sulfate, as SO4 | NA | NA | NA | NA | NA | NA | NA | NA | NA | NA |

Table E-5. Summary of Metals and Miscellaneous Parameters in Ground Water, Monsanto Company, WG Krummrich Plant, Sauget, Il.

| Well Number: | B-24B | B-24B | B-24B | B-24C | B-24C | B-24C | B-24C | B-25A | B-25A | B-25A |
|---|---|---|---|---|---|---|---|---|---|---|
| Date: | 2/84 | 3/84 | 5/84 | 1/84 | 2/84 | 3/84 | 5/84 | 1/84 | 2/84 | 3/84 |
| USEPA Priority Pollutant Metals (concentrations are in mg/L, except where noted) | | | | | | | | | | |
| antimony | NA | NA | NA | NA | NA | NA | NA | NA | NA | NA |
| arsenic | NA | NA | NA | NA | NA | NA | NA | NA | NA | NA |
| beryllium | NA | NA | NA | NA | NA | NA | NA | NA | NA | NA |
| cadmium | NA | NA | NA | NA | NA | NA | NA | NA | NA | NA |
| chromium | NA | NA | NA | NA | NA | NA | NA | NA | NA | NA |
| copper | NA | NA | NA | NA | NA | NA | NA | NA | NA | NA |
| lead | NA | NA | NA | NA | NA | NA | NA | NA | NA | NA |
| mercury | NA | NA | NA | NA | NA | NA | NA | NA | NA | NA |
| nickel | NA | NA | NA | NA | NA | NA | NA | NA | NA | NA |
| selenium | NA | NA | NA | NA | NA | NA | NA | NA | NA | NA |
| silver | NA | NA | NA | NA | NA | NA | NA | NA | NA | NA |
| thallium | NA | NA | NA | NA | NA | NA | NA | NA | NA | NA |
| zinc | NA | NA | NA | NA | NA | NA | NA | NA | NA | NA |
| Miscellaneous Parameters | | | | | | | | | | |
| pH (units) | 6.6 | 6.4 | 6.0 | 7.0 | 6.4 | 6.4 | 6.5 | 6.2 | 6.3 | 5.9 |
| spec. conductance (umhos/cm) | 330 | 1,500 | 1,600 | 3,630 | 570 | 2,700 | 1,900 | 9,000 | 1,250 | 11,500 |
| temperature (deg./centigrade) | 14 | 12.5 | 14.5 | 12.5 | 14.5 | 14 | 15.0 | NA | 14 | 13.5 |
| TOC | 360 | 380 | 600 | 520 | 360 | 1,000 | 670 | 1,000 | 540 | 4,900 |
| total phenols | 300 | 90 | 39# | 390 | 360 | 800 | 68.5# | 1,500 | 460 | 1,400 |
| TOX | 430 | 98 | 190 | 1,300 | 480 | 340 | 640 | 1,500 | 540 | 990 |
| total dissolved solids (TDS) | NA | NA | NA | NA | NA | NA | NA | NA | NA | NA |
| bicarbonate, as CACO3 | NA | NA | NA | NA | NA | NA | NA | NA | NA | NA |
| calcium | NA | NA | NA | NA | NA | NA | NA | NA | NA | NA |
| chloride | NA | NA | NA | NA | NA | NA | NA | NA | NA | NA |
| cyanide | NA | NA | NA | NA | NA | NA | NA | NA | NA | NA |
| iron | NA | NA | NA | NA | NA | NA | NA | NA | NA | NA |
| magnesium | NA | NA | NA | NA | NA | NA | NA | NA | NA | NA |
| potassium | NA | NA | NA | NA | NA | NA | NA | NA | NA | NA |
| sodium | NA | NA | NA | NA | NA | NA | NA | NA | NA | NA |
| sulfate, as SO4 | NA | NA | NA | NA | NA | NA | NA | NA | NA | NA |

Table E-5. Summary of Metals and Miscellaneous Parameters in Ground Water, Monsanto Company, W6 Krummrich Plant, Sauget, Il.

| Well Number: | B-25A | B-25A | B-25A | B-25B | B-25B | B-25B | B-25B | B-25B | B-25B | B-26A |
|---|---|---|---|---|---|---|---|---|---|---|
| Date: | 5/84 | 6/84 | 11/85 | 1/84 | 2/84 | 3/84 | 5/84 | 6/84 | 11/85 | 1/84 |
| USEPA Priority Pollutant Metals (concentrations are in ug/L, except where noted) | | | | | | | | | | |
| antimony | NA | 0.68 | NA | NA | NA | NA | NA | <0.06 | NA | NA |
| arsenic | NA | <0.001 | NA | NA | NA | NA | NA | <0.001 | NA | NA |
| beryllium | NA | <0.01 | NA | NA | NA | NA | NA | 0.002 | NA | NA |
| cadmium | NA | 0.074 | NA | NA | NA | NA | NA | 0.008 | NA | NA |
| chromium | NA | 0.06 | NA | NA | NA | NA | NA | 0.150 | NA | NA |
| copper | NA | 0.03 | NA | NA | NA | NA | NA | 0.009 | NA | NA |
| lead | NA | 0.027 | NA | NA | NA | NA | NA | 0.041 | NA | NA |
| mercury | NA | 0.0052 | NA | NA | NA | NA | NA | 0.0006 | NA | NA |
| nickel | NA | 2.21 | NA | NA | NA | NA | NA | 0.091 | NA | NA |
| selenium | NA | <0.001 | NA | NA | NA | NA | NA | <0.001 | NA | NA |
| silver | NA | 0.018 | NA | NA | NA | NA | NA | 0.004 | NA | NA |
| thallium | NA | 0.108 | NA | NA | NA | NA | NA | <0.002 | NA | NA |
| zinc | NA | 3.21 | NA | NA | NA | NA | NA | 0.054 | NA | NA |
| Miscellaneous Parameters | | | | | | | | | | |
| pH (units) | 6.5 | 6.4 | 6.0 | 6.3 | 6.3 | 6.3 | 6.5 | 7.0 | 6.7 | 6.0 |
| spec. conductance (umhos/cm) | 1,250 | 16,000 | 5,500 | 3,150 | 1,500 | 1,250 | 2,900 | 2,600 | 4,500 | 1,370 |
| temperature (deg./centigrade) | 14.0 | 14 | 13 | 10.0 | 14 | 13.5 | 14.5 | 14 | 13 | NA |
| TOC | 3,400 | NA | NA | 370 | 590 | 980 | 820 | NA | NA | 4 |
| total phenols | 1,400 | 720 | 1,500 | 380 | 425# | 280 | 160 | 95 | 410 | 0.46 |
| TOX | 780 | NA | NA | 380 | 430 | 310 | 180 | NA | NA | 14 |
| total dissolved solids (TDS) | NA | NA | NA | NA | NA | NA | NA | NA | NA | NA |
| bicarbonate, as CACO3 | NA | NA | NA | NA | NA | NA | NA | NA | NA | NA |
| calcium | NA | NA | NA | NA | NA | NA | NA | NA | NA | NA |
| chloride | NA | NA | NA | NA | NA | NA | NA | NA | NA | NA |
| cyanide | NA | <0.005 | <0.025 | NA | NA | NA | NA | <0.005 | <0.025 | NA |
| iron | NA | NA | NA | NA | NA | NA | NA | NA | NA | NA |
| magnesium | NA | NA | NA | NA | NA | NA | NA | NA | NA | NA |
| potassium | NA | NA | NA | NA | NA | NA | NA | NA | NA | NA |
| sodium | NA | NA | NA | NA | NA | NA | NA | NA | NA | NA |
| sulfate, as SO4 | NA | NA | NA | NA | NA | NA | NA | NA | NA | NA |

Table E-5. Summary of Metals and Miscellaneous Parameters in Ground Water, Monsanto Company, WG Krummrich Plant, Sauget, Il.

| Well Number: | B-26A | B-26A | B-26A | B-26B | B-26B | B-26B | B-26B | B-27B | B-27B | B-27B |
|---|---|---|---|---|---|---|---|---|---|---|
| Date: | 2/84 | 3/84 | 5/84 | 1/84 | 2/84 | 3/84 | 5/84 | 1/84 | 2/84 | 3/84 |
| USEPA Priority Pollutant Metals (concentrations are in mg/L, except where noted) | | | | | | | | | | |
| antimony | NA | NA | NA | NA | NA | NA | NA | NA | NA | NA |
| arsenic | NA | NA | NA | NA | NA | NA | NA | NA | NA | NA |
| beryllium | NA | NA | NA | NA | NA | NA | NA | NA | NA | NA |
| cadmium | NA | NA | NA | NA | NA | NA | NA | NA | NA | NA |
| chromium | NA | NA | NA | NA | NA | NA | NA | NA | NA | NA |
| copper | NA | NA | NA | NA | NA | NA | NA | NA | NA | NA |
| lead | NA | NA | NA | NA | NA | NA | NA | NA | NA | NA |
| mercury | NA | NA | NA | NA | NA | NA | NA | NA | NA | NA |
| nickel | NA | NA | NA | NA | NA | NA | NA | NA | NA | NA |
| selenium | NA | NA | NA | NA | NA | NA | NA | NA | NA | NA |
| silver | NA | NA | NA | NA | NA | NA | NA | NA | NA | NA |
| thallium | NA | NA | NA | NA | NA | NA | NA | NA | NA | NA |
| zinc | NA | NA | NA | NA | NA | NA | NA | NA | NA | NA |
| Miscellaneous Parameters | | | | | | | | | | |
| pH (units) | 6.9 | 6.8 | 6.5 | 6.0 | 6.8 | 6.6 | 6.5 | 6.6 | 6.2 | 6.5 |
| spec. conductance (umhos/cm) | 440 | 1,000 | 1,600 | 2,030 | 490 | 1,100 | 1,050 | 3,000 | 1,200 | 2,000 |
| temperature (deg./centigrade) | 13 | 15 | 15.0 | 13.0 | 13.5 | 14.0 | 13.0 | NA | 13 | 14.5 |
| TOC | 19 | 76 | 13 | 2 | 41 | 310 | 220 | 270 | 330 | 430 |
| total phenols | 0.36# | 0.34 | 0.155# | 2.65# | 2.85# | 1.7 | 1.55# | 190 | 200 | 130 |
| TOX | 1.8 | 0.35 | 1.8 | 20 | 8.4 | 0.85 | 2.0 | 190 | 140 | 74 |
| total dissolved solids (TDS) | NA | NA | NA | NA | NA | NA | NA | NA | NA | NA |
| bicarbonate, as CACO3 | NA | NA | NA | NA | NA | NA | NA | NA | NA | NA |
| calcium | NA | NA | NA | NA | NA | NA | NA | NA | NA | NA |
| chloride | NA | NA | NA | NA | NA | NA | NA | NA | NA | NA |
| cyanide | NA | NA | NA | NA | NA | NA | NA | NA | NA | NA |
| iron | NA | NA | NA | NA | NA | NA | NA | NA | NA | NA |
| magnesium | NA | NA | NA | NA | NA | NA | NA | NA | NA | NA |
| potassium | NA | NA | NA | NA | NA | NA | NA | NA | NA | NA |
| sodium | NA | NA | NA | NA | NA | NA | NA | NA | NA | NA |
| sulfate, as SO4 | NA | NA | NA | NA | NA | NA | NA | NA | NA | NA |

Table E-5. Summary of Metals and Miscellaneous Parameters in Ground Water, Monsanto Company, WG Krummrich Plant, Sauget, Il.

| Well Number: | B-27B | B-27B | B-27B | B-28A | B-28A | B-28A | B-28A | B-28A | B-28B | B-28B |
|---|---|---|---|---|---|---|---|---|---|---|
| Date: | 5/84 | 9/84 | 9/84* | 1/84 | 2/84 | 3/84 | 5/84 | 2/86 | 1/84 | 2/84 |
| USEPA Priority Pollutant Metals (concentrations are in mg/L, except where noted) | | | | | | | | | | |
| antimony | NA | 0.056 | NA | NA | NA | NA | NA | <0.06 | NA | NA |
| arsenic | NA | <0.001 | NA | NA | NA | NA | NA | 0.11 | NA | NA |
| beryllium | NA | <0.002 | NA | NA | NA | NA | NA | <0.0009 | NA | NA |
| cadmium | NA | 0.003 | NA | NA | NA | NA | NA | <0.003 | NA | NA |
| chromium | NA | 0.008 | NA | NA | NA | NA | NA | <0.008 | NA | NA |
| copper | NA | <0.004 | NA | NA | NA | NA | NA | <0.006 | NA | NA |
| lead | NA | <0.004 | NA | NA | NA | NA | NA | <0.06 | NA | NA |
| mercury | NA | <0.0002 | NA | NA | NA | NA | NA | <0.0002 | NA | NA |
| nickel | NA | 0.054 | NA | NA | NA | NA | NA | 0.01 | NA | NA |
| selenium | NA | <0.001 | NA | NA | NA | NA | NA | 0.01 | NA | NA |
| silver | NA | <0.01 | NA | NA | NA | NA | NA | <0.01 | NA | NA |
| thallium | NA | 0.125 | NA | NA | NA | NA | NA | 0.005 | NA | NA |
| zinc | NA | 0.185 | NA | NA | NA | NA | NA | 0.04 | NA | NA |
| Miscellaneous Parameters | | | | | | | | | | |
| pH (units) | 6.5 | 6.3 | 6.3 | 7.0 | 7.1 | 6.9 | 6.5 | NA | 6.9 | 6.6 |
| spec. conductance (umhos/cm) | 3,100 | 2,200 | 2,200 | 1,950 | 380 | 1,750 | 2,500 | 1,300 | 1,450 | 390 |
| temperature (deg./centigrade) | 14 | 20 | 20 | 12.0 | 13 | 17.0 | 15.0 | 13 | 12.5 | 13 |
| TOC | 520 | 575 | NA | NA | 12 | 20 | 24 | NA | 80 | 30 |
| total phenols | 150 | NA | NA | 0.48 | 0.3 | 0.5 | 0.70# | <0.05 | 0.705# | 0.41# |
| TOX | 78 | NA | NA | 530 | 1.1 | 1.8 | 1.6 | NA | 6.7 | 1.1 |
| total dissolved solids (TDS) | NA | 3,658 | 485 | NA | NA | NA | NA | NA | NA | NA |
| bicarbonate, as CACO3 | NA | NA | NA | NA | NA | NA | NA | NA | NA | NA |
| calcium | NA | NA | NA | NA | NA | NA | NA | NA | NA | NA |
| chloride | NA | 450 | NA | NA | NA | NA | NA | NA | NA | NA |
| cyanide | NA | NA | NA | NA | NA | NA | NA | <0.025 | NA | NA |
| iron | NA | NA | NA | NA | NA | NA | NA | NA | NA | NA |
| magnesium | NA | NA | NA | NA | NA | NA | NA | NA | NA | NA |
| potassium | NA | NA | NA | NA | NA | NA | NA | NA | NA | NA |
| sodium | NA | NA | NA | NA | NA | NA | NA | NA | NA | NA |
| sulfate, as SO4 | NA | NA | NA | NA | NA | NA | NA | NA | NA | NA |

Table E-5. Summary of Metals and Miscellaneous Parameters in Ground Water, Monsanto Company, WG Krummrich Plant, Sauget, Il.

| Well Number: | B-28B | B-28B | B-29A | B-29A | B-29A | B-29A | B-29A | B-29A | B-29B | B-29B |
|---|---|---|---|---|---|---|---|---|---|---|
| Date: | 3/84 | 5/84 | 1/84 | 2/84 | 3/84 | 5/84 | 6/84 | 11/85 | 1/84 | 2/84 |
| USEPA Priority Pollutant Metals (concentrations are in mg/L, except where noted) | | | | | | | | | | |
| antimony | NA | NA | NA | NA | NA | NA | 2.6 | NA | NA | NA |
| arsenic | NA | NA | NA | NA | NA | NA | 0.001 | NA | NA | NA |
| beryllium | NA | NA | NA | NA | NA | NA | <0.01 | NA | NA | NA |
| cadmium | NA | NA | NA | NA | NA | NA | 0.012 | NA | NA | NA |
| chromium | NA | NA | NA | NA | NA | NA | <0.04 | NA | NA | NA |
| copper | NA | NA | NA | NA | NA | NA | 0.02 | NA | NA | NA |
| lead | NA | NA | NA | NA | NA | NA | <0.1 | NA | NA | NA |
| mercury | NA | NA | NA | NA | NA | NA | 0.0069 | NA | NA | NA |
| nickel | NA | NA | NA | NA | NA | NA | 0.185 | NA | NA | NA |
| selenium | NA | NA | NA | NA | NA | NA | <0.001 | NA | NA | NA |
| silver | NA | NA | NA | NA | NA | NA | <0.02 | NA | NA | NA |
| thallium | NA | NA | NA | NA | NA | NA | 0.042 | NA | NA | NA |
| zinc | NA | NA | NA | NA | NA | NA | 0.069 | NA | NA | NA |
| Miscellaneous Parameters | | | | | | | | | | |
| pH (units) | 6.6 | 6.5 | 6.8 | 6.5 | 6.7 | 6.5 | 6.8 | 6.9 | 6.9 | 6.9 |
| spec. conductance (umhos/cm) | 1,100 | 1,250 | 8,000 | 2,900 | 8,500 | 9,000 | 7,000 | 11,500 | 4,550 | 1,500 |
| temperature (deg./centigrade) | 15 | 14.0 | 12.0 | 9.0 | 15.0 | 13.0 | 14 | 13 | 12.5 | 14 |
| TOC | 30 | 30 | 5,400 | 7,000 | 380 | 7,900 | NA | NA | 4,400 | 3,100 |
| total phenols | 0.44# | 0.375# | 7,200 | 7,600 | 8,800 | 6,800 | 2.0 | 10000 | 5,100 | 3,400 |
| TOX | 0.85 | 1.5 | 390 | 645# | 630# | 580 | NA | NA | 1,200 | 410 |
| total dissolved solids (TDS) | NA | NA | NA | NA | NA | NA | NA | NA | NA | NA |
| bicarbonate, as CACO3 | NA | NA | NA | NA | NA | NA | NA | NA | NA | NA |
| calcium | NA | NA | NA | NA | NA | NA | NA | NA | NA | NA |
| chloride | NA | NA | NA | NA | NA | NA | NA | NA | NA | NA |
| cyanide | NA | NA | NA | NA | NA | NA | <0.005 | <0.025 | NA | NA |
| iron | NA | NA | NA | NA | NA | NA | NA | NA | NA | NA |
| magnesium | NA | NA | NA | NA | NA | NA | NA | NA | NA | NA |
| potassium | NA | NA | NA | NA | NA | NA | NA | NA | NA | NA |
| sodium | NA | NA | NA | NA | NA | NA | NA | NA | NA | NA |
| sulfate, as SO4 | NA | NA | NA | NA | NA | NA | NA | NA | NA | NA |

Table E-5. Summary of Metals and Miscellaneous Parameters in Ground Water, Monsanto Company, WG Krummrich Plant, Sauget, Il.

| Well Number: | B-29B | B-29B | B-29B | B-29B | B-29B | B-29B | B-29B | B-30B | B-30B | B-30B |
|---|---|---|---|---|---|---|---|---|---|---|
| Date: | 3/84 | 5/84 | 6/84 | 6/84* | 6/84** | 11/84 | 11/85 | 1/84 | 2/84 | 3/84 |
| USEPA Priority Pollutant Metals (concentrations are in mg/L, except where noted) | | | | | | | | | | |
| antimony | NA | NA | 0.15 | <0.14 | <0.1 | <0.07 | NA | NA | NA | NA |
| arsenic | NA | NA | 0.003 | <0.001 | <0.005 | 0.019 | NA | NA | NA | NA |
| beryllium | NA | NA | <0.01 | <0.010 | <0.005 | <0.005 | NA | NA | NA | NA |
| cadmium | NA | NA | <0.01 | <0.010 | <0.007 | <0.005 | NA | NA | NA | NA |
| chromium | NA | NA | <0.04 | <0.050 | <0.020 | <0.008 | NA | NA | NA | NA |
| copper | NA | NA | <0.04 | <0.040 | <0.010 | <0.008 | NA | NA | NA | NA |
| lead | NA | NA | <0.01 | <0.1 | <0.1 | <0.06 | NA | NA | NA | NA |
| mercury | NA | NA | 0.0064 | <0.0051 | <0.003 | <0.002 | NA | NA | NA | NA |
| nickel | NA | NA | 0.076 | 0.079 | 0.04 | 0.031 | NA | NA | NA | NA |
| selenium | NA | NA | <0.001 | <0.001 | 0.009 | <0.01 | NA | NA | NA | NA |
| silver | NA | NA | <0.02 | 0.020 | <0.01 | <0.008 | NA | NA | NA | NA |
| thallium | NA | NA | 0.025 | 0.021 | <0.005 | <0.01 | NA | NA | NA | NA |
| zinc | NA | NA | 0.049 | 0.071 | 0.02 | 0.013 | NA | NA | NA | NA |
| Miscellaneous Parameters | | | | | | | | | | |
| pH (units) | 6.7 | 6.5 | 6.8 | 6.8 | 6.8 | 7.2 | 6.9 | 6.8 | 6.7 | 6.6 |
| spec. conductance (umhos/cm) | 4,000 | 4,300 | 4,100 | 4,100 | 4100 | 5,000 | 5,400 | 8,000 | 1,850 | 2,200 |
| temperature (deg./centigrade) | 13.5 | 14.0 | 13.5 | 13.5 | 13.5 | 14 | 14 | 12.0 | 14.0 | 13.5 |
| TOC | 2,200# | 4,500 | NA | NA | NA | NA | NA | 1,400 | 680 | 720 |
| total phenols | 5,000 | 4,400 | 5,100 | 2,000 | 3040 | 3,300 | 10,000 | 1,800 | 630 | 430 |
| TOX | 300 | 400 | NA | NA | NA | NA | NA | 310 | 420 | 270 |
| total dissolved solids (TDS) | NA | NA | NA | NA | NA | NA | NA | NA | NA | NA |
| bicarbonate, as CACO3 | NA | NA | NA | NA | NA | NA | 1,300 | NA | NA | NA |
| calcium | NA | NA | NA | NA | NA | NA | 53.5 | NA | NA | NA |
| chloride | NA | NA | NA | NA | NA | NA | 351 | NA | NA | NA |
| cyanide | NA | NA | <0.005 | <0.005 | <0.025 | <0.025 | <0.025 | NA | NA | NA |
| iron | NA | NA | NA | NA | NA | NA | 0.6 | NA | NA | NA |
| magnesium | NA | NA | NA | NA | NA | NA | 20.5 | NA | NA | NA |
| potassium | NA | NA | NA | NA | NA | NA | 11.5 | NA | NA | NA |
| sodium | NA | NA | NA | NA | NA | NA | 1,150 | NA | NA | NA |
| sulfate, as SO4 | NA | NA | NA | NA | NA | NA | 730 | NA | NA | NA |

Table E-5. Summary of Metals and Miscellaneous Parameters in Ground Water, Monsanto Company, W6 Krumarich Plant, Sauget, Il.

| Well Number: | B-30B | B-30B | B-31B | B-31B | B-31B | B-31B | B-31C | B-31C | B-31C | B-31C |
|---|---|---|---|---|---|---|---|---|---|---|
| Date: | 5/84 | 9/84 | 3/84 | 5/84 | 11/85 | 2/86 | 1/84 | 2/84 | 3/84 | 5/84 |
| USEPA Priority Pollutant Metals (concentrations are in mg/L, except where noted) | | | | | | | | | | |
| antimony | NA | 0.072 | NA | NA | <0.08 | <0.06 | NA | NA | NA | NA |
| arsenic | NA | 0.006 | NA | NA | <0.01 | <0.01 | NA | NA | NA | NA |
| beryllium | NA | <0.002 | NA | NA | <0.0009 | <0.0006 | NA | NA | NA | NA |
| cadmium | NA | 0.003 | NA | NA | <0.002 | <0.004 | NA | NA | NA | NA |
| chromium | NA | <0.004 | NA | NA | <0.02 | 0.040 | NA | NA | NA | NA |
| copper | NA | 0.004 | NA | NA | <0.008 | <0.020 | NA | NA | NA | NA |
| lead | NA | 0.005 | NA | NA | <0.07 | <0.060 | NA | NA | NA | NA |
| mercury | NA | 0.00091 | NA | NA | <0.0003 | <0.0003 | NA | NA | NA | NA |
| nickel | NA | 0.033 | NA | NA | 0.02 | 0.010 | NA | NA | NA | NA |
| selenium | NA | <0.001 | NA | NA | <0.005 | <0.005 | NA | NA | NA | NA |
| silver | NA | <0.01 | NA | NA | <0.01 | <0.030 | NA | NA | NA | NA |
| thallium | NA | 0.41 | NA | NA | <0.005 | <0.005 | NA | NA | NA | NA |
| zinc | NA | 0.12 | NA | NA | 0.04 | 0.05 | NA | NA | NA | NA |
| Miscellaneous Parameters | | | | | | | | | | |
| pH (units) | 7.0 | 6.9 | 6.6 | 7.0 | 7.1 | 6.7 | 6.9 | 6.9 | 7.0 | 7.0 |
| spec. conductance (umhos/cm) | 4,950 | 3,500 | 950 | 1,050 | 2,500 | 1,375 | 1,050 | 350 | 900 | 975 |
| temperature (deg./centigrade) | 15.0 | 19 | 15.0 | 13.0 | 15 | 14 | 13 | 15 | 15 | 13.5 |
| TOC | 1,100 | 127 | 48 | 65 | NA | NA | 8 | 14 | 21 | 18 |
| total phenols | 410# | NA | 0.31 | 0.08# | <0.05 | <0.05 | 0.2 | 0.23 | 0.76 | 0.285# |
| TOX | 240 | NA | 1.4 | 0.14 | NA | NA | 1.2 | 0.4 | 0.28 | 0.48 |
| total dissolved solids (TDS) | NA | 4,704 | NA | NA | NA | NA | NA | NA | NA | NA |
| bicarbonate, as CACO3 | NA | NA | NA | NA | NA | NA | NA | NA | NA | NA |
| calcium | NA | NA | NA | NA | NA | NA | NA | NA | NA | NA |
| chloride | NA | 990 | NA | NA | NA | NA | NA | NA | NA | NA |
| cyanide | NA | NA | NA | NA | <0.025 | <0.025 | NA | NA | NA | NA |
| iron | NA | NA | NA | NA | NA | NA | NA | NA | NA | NA |
| magnesium | NA | NA | NA | NA | NA | NA | NA | NA | NA | NA |
| potassium | NA | NA | NA | NA | NA | NA | NA | NA | NA | NA |
| sodium | NA | NA | NA | NA | NA | NA | NA | NA | NA | NA |
| sulfate, as SO4 | NA | NA | NA | NA | NA | NA | NA | NA | NA | NA |

Table E-5. Summary of Metals and Miscellaneous Parameters in Ground Water, Monsanto Company, WG Krummrich Plant, Sauget, Il.

| Well Number: | B-31C | B-31C | B-31C | B-31C | B-101 | B-102 | GM-106 | GM-106 | GM-106 | P-1 |
|---|---|---|---|---|---|---|---|---|---|---|
| Date: | 9/84 | 9/84* | 11/85 | 2/86 | 9/84 | 9/84 | 11/85 | 2/86 | 2/86* | 1/84 |
| USEPA Priority Pollutant Metals (concentrations are in mg/L, except where noted) | | | | | | | | | | |
| antimony | 0.074 | NA | <0.08 | <0.06 | 0.019 | 0.078 | <0.06 | <0.050 | <0.050 | NA |
| arsenic | <0.001 | NA | <0.01 | <0.01 | <0.001 | <0.001 | <0.01 | <0.010 | <0.010 | NA |
| beryllium | <0.002 | NA | <0.0009 | <0.0009 | <0.002 | <0.002 | <0.001 | <0.001 | <0.001 | NA |
| cadmium | <0.002 | NA | <0.002 | <0.003 | <0.002 | <0.002 | <0.004 | <0.003 | <0.003 | NA |
| chromium | <0.004 | NA | <0.02 | <0.008 | <0.004 | <0.004 | <0.02 | <0.010 | <0.010 | NA |
| copper | <0.004 | NA | <0.008 | <0.006 | <0.004 | <0.004 | <0.01 | <0.009 | <0.009 | NA |
| lead | <0.004 | NA | <0.07 | <0.06 | 0.013 | 0.009 | <0.05 | <0.06 | <0.060 | NA |
| mercury | <0.0004 | NA | <0.0003 | <0.0002 | <0.0004 | <0.0004 | <0.0002 | <0.0002 | <0.0002 | NA |
| nickel | 0.014 | NA | <0.01 | <0.009 | <0.004 | 0.007 | <0.02 | <0.01 | <0.010 | NA |
| selenium | <0.001 | NA | <0.005 | <0.005 | <0.001 | <0.001 | <0.005 | <0.005 | <0.005 | NA |
| silver | 0.003 | NA | <0.01 | <0.010 | <0.002 | 0.003 | <0.008 | <0.010 | <0.010 | NA |
| thallium | 0.011 | NA | <0.005 | <0.005 | 0.018 | 0.02 | <0.005 | <0.010 | <0.005 | NA |
| zinc | 0.039 | NA | 0.05 | 0.064 | 0.26 | 0.561 | <0.02 | 0.030 | 0.050 | NA |
| Miscellaneous Parameters | | | | | | | | | | |
| pH (units) | 7.0 | 7.0 | 7.4 | 7.0 | 6.9 | 6.6 | 7.5 | 7.6 | 7.6 | 7.0 |
| spec. conductance (umhos/cm) | 400 | 400 | 2,750 | 950 | 1,050 | 1,620 | 1,300 | 1,060 | 1,060 | 850 |
| temperature (deg./centigrade) | 20 | 20 | 15 | 11 | 21 | 19 | 12 | 14 | 14 | NA |
| TOC | 8.1 | NA | NA | NA | 257 | 8 | 100* | NA | NA | 9 |
| total phenols | NA | NA | <0.05 | <0.05 | NA | NA | 0.19 | 0.4 | 0.4 | 0.179 |
| TOX | NA | NA | NA | NA | NA | NA | NA | NA | NA | 1.9 |
| total dissolved solids (TDS) | 774 | NA | NA | NA | 876 | 1,276 | NA | NA | NA | NA |
| bicarbonate, as CACO3 | NA | NA | NA | NA | NA | NA | NA | NA | NA | NA |
| calcium | NA | NA | NA | NA | NA | NA | NA | NA | NA | NA |
| chloride | 29 | NA | NA | NA | 200 | 350 | NA | NA | NA | NA |
| cyanide | NA | NA | <0.025 | <0.025 | NA | NA | 0.24 | 0.172 | 0.179 | NA |
| iron | NA | NA | NA | NA | NA | NA | NA | NA | NA | NA |
| magnesium | NA | NA | NA | NA | NA | NA | NA | NA | NA | NA |
| potassium | NA | NA | NA | NA | NA | NA | NA | NA | NA | NA |
| sodium | NA | NA | NA | NA | NA | NA | NA | NA | NA | NA |
| sulfate, as SO4 | NA | NA | NA | NA | NA | NA | NA | NA | NA | NA |

Table E-5. Summary of Metals and Miscellaneous Parameters in Ground Water, Monsanto Company, WG Krummrich Plant, Sauget, Il.

| Well Number: | P-1 | P-1 | P-1 |
|---|---|---|---|
| Date: | 2/84 | 3/84 | 5/84 |
| USEPA Priority Pollutant Metals (concentrations are in mg/L, except where noted) | | | |
| antimony | NA | NA | NA |
| arsenic | NA | NA | NA |
| beryllium | NA | NA | NA |
| cadmium | NA | NA | NA |
| chromium | NA | NA | NA |
| copper | NA | NA | NA |
| lead | NA | NA | NA |
| mercury | NA | NA | NA |
| nickel | NA | NA | NA |
| selenium | NA | NA | NA |
| silver | NA | NA | NA |
| thallium | NA | NA | NA |
| zinc | NA | NA | NA |
| Miscellaneous Parameters | | | |
| pH (units) | 7.3 | 7.0 | 6.0 |
| spec. conductance (umhos/cm) | NA | 650 | 750 |
| temperature (deg./centigrade) | 12.0 | 14.0 | 13.5 |
| TOC | 26 | 15 | 32 |
| total phenols | 0.11 | 0.16* | 0.22 |
| TOX | 2.0 | 0.35 | 1.1 |
| total dissolved solids (TDS) | NA | NA | NA |
| bicarbonate, as CACO3 | NA | NA | NA |
| calcium | NA | NA | NA |
| chloride | NA | NA | NA |
| cyanide | NA | NA | NA |
| iron | NA | NA | NA |
| magnesium | NA | NA | NA |
| potassium | NA | NA | NA |
| sodium | NA | NA | NA |
| sulfate, as SO4 | NA | NA | NA |

Table E-5. Summary of Metals and Miscellaneous Parameters in Ground Water, Monsanto Company, WG Krumsrich Plant, Sauget, Il.

| Well Number: | P-1 | P-2 | P-2 | P-2 | P-2 | P-2 | P-2 | P-3 | P-3 | P-3 |
|---|---|---|---|---|---|---|---|---|---|---|
| Date: | 9/84 | 1/84 | 2/84 | 3/84 | 5/84 | 6/84 | 11/85 | 1/84 | 2/84 | 3/84 |
| USEPA Priority Pollutant Metals (concentrations are in mg/L, except where noted) | | | | | | | | | | |
| antimony | 0.065 | NA | NA | NA | NA | 0.004 | NA | NA | NA | NA |
| arsenic | 0.007 | NA | NA | NA | NA | 0.041 | NA | NA | NA | NA |
| beryllium | <0.002 | NA | NA | NA | NA | 0.098 | NA | NA | NA | NA |
| cadmium | <0.002 | NA | NA | NA | NA | 0.002 | NA | NA | NA | NA |
| chromium | <0.004 | NA | NA | NA | NA | 0.005 | NA | NA | NA | NA |
| copper | <0.004 | NA | NA | NA | NA | 0.007 | NA | NA | NA | NA |
| lead | <0.004 | NA | NA | NA | NA | <0.004 | NA | NA | NA | NA |
| mercury | <0.0004 | NA | NA | NA | NA | <0.0002 | NA | NA | NA | NA |
| nickel | 0.006 | NA | NA | NA | NA | 0.007 | NA | NA | NA | NA |
| selenium | <0.001 | NA | NA | NA | NA | <0.001 | NA | NA | NA | NA |
| silver | <0.002 | NA | NA | NA | NA | <0.01 | NA | NA | NA | NA |
| thallium | 0.013 | NA | NA | NA | NA | <0.02 | NA | NA | NA | NA |
| zinc | 0.124 | NA | NA | NA | NA | 0.034 | NA | NA | NA | NA |
| Miscellaneous Parameters | | | | | | | | | | |
| pH (units) | 7.3 | 7.1 | 7.2 | 7.0 | 6.0 | 6.9 | 7.0 | 6.5 | 6.7 | 6.6 |
| spec. conductance (umhos/cm) | 650 | 600 | 340 | 550 | 675 | 600 | 2,300 | 950 | 340 | 950 |
| temperature (deg./centigrade) | 20 | NA | 12 | 15.0 | 13.0 | 15 | 14 | 12.5 | 12 | 15.0 |
| TOC | 13 | 22 | 25 | 9 | 110 | NA | NA | 50 | 72 | 76 |
| total phenols | NA | 0.29 | 0.16* | 0.34 | 0.17 | 0.036 | 0.0959 | 0.43 | 0.565* | 0.40 |
| TOX | NA | 0.88 | 1.5 | 0.39 | 1.6 | NA | NA | 2.6 | 8.9 | 0.25 |
| total dissolved solids (TDS) | 510 | NA | NA | NA | NA | NA | NA | NA | NA | NA |
| bicarbonate, as CACO3 | NA | NA | NA | NA | NA | NA | NA | NA | NA | NA |
| calcium | NA | NA | NA | NA | NA | NA | NA | NA | NA | NA |
| chloride | 29 | NA | NA | NA | NA | NA | NA | NA | NA | NA |
| cyanide | NA | NA | NA | NA | NA | <0.005 | <0.025 | NA | NA | NA |
| iron | NA | NA | NA | NA | NA | NA | NA | NA | NA | NA |
| magnesium | NA | NA | NA | NA | NA | NA | NA | NA | NA | NA |
| potassium | NA | NA | NA | NA | NA | NA | NA | NA | NA | NA |
| sodium | NA | NA | NA | NA | NA | NA | NA | NA | NA | NA |
| sulfate, as SO4 | NA | NA | NA | NA | NA | NA | NA | NA | NA | NA |

Table E-5. Summary of Metals and Miscellaneous Parameters in Ground Water, Monsanto Company, W6 Krummrich Plant, Sauget, Il.

| Well Number: | P-3 | P-4 | P-4 | P-4 | P-4 | P-5 | P-5 | P-5 | P-5 | P-6 |
|---|---|---|---|---|---|---|---|---|---|---|
| Date: | 5/84 | 1/84 | 2/84 | 3/84 | 5/84 | 1/84 | 2/84 | 3/84 | 5/84 | 1/84 |
| USEPA Priority Pollutant Metals (concentrations are in mg/L, except where noted) | | | | | | | | | | |
| antimony | NA | NA | NA | NA | NA | NA | NA | NA | NA | NA |
| arsenic | NA | NA | NA | NA | NA | NA | NA | NA | NA | NA |
| beryllium | NA | NA | NA | NA | NA | NA | NA | NA | NA | NA |
| cadmium | NA | NA | NA | NA | NA | NA | NA | NA | NA | NA |
| chromium | NA | NA | NA | NA | NA | NA | NA | NA | NA | NA |
| copper | NA | NA | NA | NA | NA | NA | NA | NA | NA | NA |
| lead | NA | NA | NA | NA | NA | NA | NA | NA | NA | NA |
| mercury | NA | NA | NA | NA | NA | NA | NA | NA | NA | NA |
| nickel | NA | NA | NA | NA | NA | NA | NA | NA | NA | NA |
| selenium | NA | NA | NA | NA | NA | NA | NA | NA | NA | NA |
| silver | NA | NA | NA | NA | NA | NA | NA | NA | NA | NA |
| thallium | NA | NA | NA | NA | NA | NA | NA | NA | NA | NA |
| zinc | NA | NA | NA | NA | NA | NA | NA | NA | NA | NA |
| Miscellaneous Parameters | | | | | | | | | | |
| pH (units) | 7.0 | 6.0 | 7.0 | 6.9 | 6.5 | 6.0 | 7.0 | 6.9 | 6.5 | 6.0 |
| spec. conductance (umhos/cm) | 1,300 | 1,250 | 390 | 600 | 900 | 875 | 350 | 350 | 380 | 850 |
| temperature (deg./centigrade) | 13.5 | NA | 13.5 | 13.0 | 13 | 11.5 | 13 | 14.0 | 13.0 | NA |
| TOC | 280 | 3 | 86 | 70 | 55 | 7 | 90 | 34 | 24 | 16 |
| total phenols | 0.48 | 1.08 | 0.855# | 0.73 | 0.46 | 1.72# | 1.44 | 0.56# | 0.52# | 0.225# |
| TOX | 0.29 | 10 | 7.2 | 0.68 | 0.42 | 3.5 | 4.5 | 0.29 | 1.7 | 1.5 |
| total dissolved solids (TDS) | NA | NA | NA | NA | NA | NA | NA | NA | NA | NA |
| bicarbonate, as CACO3 | NA | NA | NA | NA | NA | NA | NA | NA | NA | NA |
| calcium | NA | NA | NA | NA | NA | NA | NA | NA | NA | NA |
| chloride | NA | NA | NA | NA | NA | NA | NA | NA | NA | NA |
| cyanide | NA | NA | NA | NA | NA | NA | NA | NA | NA | NA |
| iron | NA | NA | NA | NA | NA | NA | NA | NA | NA | NA |
| magnesium | NA | NA | NA | NA | NA | NA | NA | NA | NA | NA |
| potassium | NA | NA | NA | NA | NA | NA | NA | NA | NA | NA |
| sodium | NA | NA | NA | NA | NA | NA | NA | NA | NA | NA |
| sulfate, as SO4 | NA | NA | NA | NA | NA | NA | NA | NA | NA | NA |

Table E-5. Summary of Metals and Miscellaneous Parameters in Ground Water, Monsanto Company, WG Krummrich Plant, Sauget, Il.

| Well Number: | P-6 | P-6 | P-6 | P-6 | P-6 | P-7 | P-7 | P-7 | P-7 | P-7 |
|---|---|---|---|---|---|---|---|---|---|---|
| Date: | 2/84 | 3/84 | 5/84 | 6/84 | 11/85 | 1/84 | 2/84 | 3/84 | 5/84 | 6/84 |
| USEPA Priority Pollutant Metals (concentrations are in mg/L, except where noted) | | | | | | | | | | |
| antimony | NA | NA | NA | <0.003 | NA | NA | NA | NA | NA | 0.004 |
| arsenic | NA | NA | NA | 0.074 | NA | NA | NA | NA | NA | 0.004 |
| beryllium | NA | NA | NA | 0.020 | NA | NA | NA | NA | NA | 0.005 |
| cadmium | NA | NA | NA | 0.003 | NA | NA | NA | NA | NA | 0.007 |
| chromium | NA | NA | NA | 0.008 | NA | NA | NA | NA | NA | 0.023 |
| copper | NA | NA | NA | 0.028 | NA | NA | NA | NA | NA | <0.004 |
| lead | NA | NA | NA | 0.006 | NA | NA | NA | NA | NA | 0.014 |
| mercury | NA | NA | NA | <0.0002 | NA | NA | NA | NA | NA | 0.0047 |
| nickel | NA | NA | NA | 0.009 | NA | NA | NA | NA | NA | 0.177 |
| selenium | NA | NA | NA | <0.001 | NA | NA | NA | NA | NA | <0.001 |
| silver | NA | NA | NA | <0.01 | NA | NA | NA | NA | NA | <0.01 |
| thallium | NA | NA | NA | <0.02 | NA | NA | NA | NA | NA | <0.02 |
| zinc | NA | NA | NA | 0.043 | NA | NA | NA | NA | NA | 0.120 |
| Miscellaneous Parameters | | | | | | | | | | |
| pH (units) | 7.3 | 6.9 | 6.5 | 6.9 | 7.1 | 6.0 | 6.3 | 7.4 | 7.0 | 6.6 |
| spec. conductance (umhos/cm) | 550 | 1,250 | 1,700 | 1,500 | 3,000 | 4,300 | 800 | 4,200 | 4,700 | 4,650 |
| temperature (deg./centigrade) | 14 | 13.0 | 15.0 | 14 | 15 | 11 | 14 | 13.0 | 15.0 | 14 |
| TOC | 20 | 38 | 24 | NA | NA | 330 | 360 | 260 | 890 | NA |
| total phenols | 0.555# | 1.6 | 0.44 | 0.045 | 0.0791 | 260 | 260 | 360 | 270 | 130 |
| TOX | 2.6 | 1.35# | 0.62 | NA | NA | 670 | 370 | 500 | 280 | NA |
| total dissolved solids (TDS) | NA | NA | NA | NA | NA | NA | NA | NA | NA | NA |
| bicarbonate, as CACO3 | NA | NA | NA | NA | NA | NA | NA | NA | NA | NA |
| calcium | NA | NA | NA | NA | NA | NA | NA | NA | NA | NA |
| chloride | NA | NA | NA | NA | NA | NA | NA | NA | NA | NA |
| cyanide | NA | NA | NA | <0.005 | <0.025 | NA | NA | NA | NA | <0.005 |
| iron | NA | NA | NA | NA | NA | NA | NA | NA | NA | NA |
| magnesium | NA | NA | NA | NA | NA | NA | NA | NA | NA | NA |
| potassium | NA | NA | NA | NA | NA | NA | NA | NA | NA | NA |
| sodium | NA | NA | NA | NA | NA | NA | NA | NA | NA | NA |
| sulfate, as SO4 | NA | NA | NA | NA | NA | NA | NA | NA | NA | NA |

Table E-5. Summary of Metals and Miscellaneous Parameters in Ground Water, Monsanto Company, W6 Krummrich Plant, Sauget, Il.

| Well Number: | P-7 | P-8 | P-8 | P-8 | P-8 | P-8 | P-8 | P-9 | P-9 | P-9 |
|---|---|---|---|---|---|---|---|---|---|---|
| Date: | 11/85 | 1/84 | 2/84 | 3/84 | 5/84 | 6/84 | 11/85 | 1/84 | 2/84 | 3/84 |
| USEPA Priority Pollutant Metals (concentrations are in mg/L, except where noted) | | | | | | | | | | |
| antimony | NA | NA | NA | NA | NA | <0.03 | NA | NA | NA | NA |
| arsenic | NA | NA | NA | NA | NA | 0.015 | NA | NA | NA | NA |
| beryllium | NA | NA | NA | NA | NA | 0.001 | NA | NA | NA | NA |
| cadmium | NA | NA | NA | NA | NA | 0.002 | NA | NA | NA | NA |
| chromium | NA | NA | NA | NA | NA | <0.2 | NA | NA | NA | NA |
| copper | NA | NA | NA | NA | NA | 0.009 | NA | NA | NA | NA |
| lead | NA | NA | NA | NA | NA | 0.011 | NA | NA | NA | NA |
| mercury | NA | NA | NA | NA | NA | <0.0002 | NA | NA | NA | NA |
| nickel | NA | NA | NA | NA | NA | 0.01 | NA | NA | NA | NA |
| selenium | NA | NA | NA | NA | NA | <0.001 | NA | NA | NA | NA |
| silver | NA | NA | NA | NA | NA | 0.002 | NA | NA | NA | NA |
| thallium | NA | NA | NA | NA | NA | <0.002 | NA | NA | NA | NA |
| zinc | NA | NA | NA | NA | NA | 0.05 | NA | NA | NA | NA |
| Miscellaneous Parameters | | | | | | | | | | |
| pH (units) | 6.4 | 6.0 | 6.6 | 6.7 | 6.5 | 6.8 | 6.9 | 6.0 | 6.7 | 7.0 |
| spec. conductance (umhos/cm) | 4,500 | 3,250 | 490 | 1,500 | 900 | 800 | 2,300 | 2,340 | NA | 775 |
| temperature (deg./centigrade) | 14 | 11.0 | 13 | 12.0 | 14.5 | 13.5 | 14 | 11.5 | 13 | 12.5 |
| TOC | NA | 885 | 140 | 140 | 120 | NA | NA | NA | 150 | 91 |
| total phenols | 134.5 | 10.8 | 10.8 | 3.6 | 1.2 | <0.005 | 0.34 | 1.46 | 1.04 | 0.88 |
| TOX | NA | 74 | 77 | 22 | 0.46 | NA | NA | 330 | 9.2 | 0.45 |
| total dissolved solids (TDS) | NA | NA | NA | NA | NA | NA | NA | NA | NA | NA |
| bicarbonate, as CACO3 | NA | NA | NA | NA | NA | NA | NA | NA | NA | NA |
| calcium | NA | NA | NA | NA | NA | NA | NA | NA | NA | NA |
| chloride | NA | NA | NA | NA | NA | NA | NA | NA | NA | NA |
| cyanide | 0.035 | NA | NA | NA | NA | <0.005 | 0.033 | NA | NA | NA |
| iron | NA | NA | NA | NA | NA | NA | NA | NA | NA | NA |
| magnesium | NA | NA | NA | NA | NA | NA | NA | NA | NA | NA |
| potassium | NA | NA | NA | NA | NA | NA | NA | NA | NA | NA |
| sodium | NA | NA | NA | NA | NA | NA | NA | NA | NA | NA |
| sulfate, as SO4 | NA | NA | NA | NA | NA | NA | NA | NA | NA | NA |

Table E-5. Summary of Metals and Miscellaneous Parameters in Ground Water, Monsanto Company, WG Krummrich Plant, Sauget, Il.

| Well Number: | P-9 | P-10 | P-10 | P-10 | P-10 | P-10 | P-11 | P-11 | P-11 | P-11 |
|---|---|---|---|---|---|---|---|---|---|---|
| Date: | 5/84 | 1/84 | 2/84 | 3/84 | 5/84 | 9/84 | 1/84 | 2/84 | 3/84 | 5/84 |
| USEPA Priority Pollutant Metals (concentrations are in mg/L, except where noted) | | | | | | | | | | |
| antimony | NA | NA | NA | NA | NA | 0.018 | NA | NA | NA | NA |
| arsenic | NA | NA | NA | NA | NA | 0.004 | NA | NA | NA | NA |
| beryllium | NA | NA | NA | NA | NA | <0.002 | NA | NA | NA | NA |
| cadmium | NA | NA | NA | NA | NA | <0.002 | NA | NA | NA | NA |
| chromium | NA | NA | NA | NA | NA | <0.004 | NA | NA | NA | NA |
| copper | NA | NA | NA | NA | NA | <0.004 | NA | NA | NA | NA |
| lead | NA | NA | NA | NA | NA | <0.004 | NA | NA | NA | NA |
| mercury | NA | NA | NA | NA | NA | <0.0002 | NA | NA | NA | NA |
| nickel | NA | NA | NA | NA | NA | <0.004 | NA | NA | NA | NA |
| selenium | NA | NA | NA | NA | NA | <0.001 | NA | NA | NA | NA |
| silver | NA | NA | NA | NA | NA | <0.01 | NA | NA | NA | NA |
| thallium | NA | NA | NA | NA | NA | 0.067 | NA | NA | NA | NA |
| zinc | NA | NA | NA | NA | NA | 0.066 | NA | NA | NA | NA |
| Miscellaneous Parameters | | | | | | | | | | |
| pH (units) | 6.5 | 6.0 | 6.3 | 6.9 | 6.5 | 7.1 | 6.0 | 5.6 | 6.9 | 6.0 |
| spec. conductance (umhos/cm) | 900 | 1,450 | 440 | 700 | 750 | 850 | 1,550 | 550 | 800 | 650 |
| temperature (deg./centigrade) | 14.0 | 9.5 | 14 | 13.0 | 13.0 | 19.5 | 12.5 | 13.5 | 12.5 | 13.0 |
| TOC | 42 | 330 | 160 | 35 | 39 | 52 | 230 | 81 | 91 | 55 |
| total phenols | 0.46 | 5.8 | 2.0# | 1.15# | 0.61 | NA | 0.74# | 1.00 | 0.50 | 0.31 |
| TOX | 0.33 | 7.4 | 9.5 | 6.1 | 0.39 | NA | 17 | 13 | 0.59 | 0.46 |
| total dissolved solids (TDS) | NA | NA | NA | NA | NA | 570 | NA | NA | NA | NA |
| bicarbonate, as CACO3 | NA | NA | NA | NA | NA | NA | NA | NA | NA | NA |
| calcium | NA | NA | NA | NA | NA | NA | NA | NA | NA | NA |
| chloride | NA | NA | NA | NA | NA | 110 | NA | NA | NA | NA |
| cyanide | NA | NA | NA | NA | NA | NA | NA | NA | NA | NA |
| iron | NA | NA | NA | NA | NA | NA | NA | NA | NA | NA |
| magnesium | NA | NA | NA | NA | NA | NA | NA | NA | NA | NA |
| potassium | NA | NA | NA | NA | NA | NA | NA | NA | NA | NA |
| sodium | NA | NA | NA | NA | NA | NA | NA | NA | NA | NA |
| sulfate, as SO4 | NA | NA | NA | NA | NA | NA | NA | NA | NA | NA |

Table E-5. Summary of Metals and Miscellaneous Parameters in Ground Water, Monsanto Company, WG Krummrich Plant, Sauget, Il.

| Well Number: | P-11 | P-12 | P-12 | P-12 | P-12 | P-12 | P-13 | P-13 | P-13 | P-13 |
|---|---|---|---|---|---|---|---|---|---|---|
| Date: | 9/84 | 1/84 | 2/84 | 3/84 | 5/84 | 9/84 | 1/84 | 2/84 | 3/84 | 5/84 |
| USEPA Priority Pollutant Metals (concentrations are in mg/L, except where noted) | | | | | | | | | | |
| antimony | 0.022 | NA | NA | NA | NA | 0.017 | NA | NA | NA | NA |
| arsenic | 0.008 | NA | NA | NA | NA | 0.009 | NA | NA | NA | NA |
| beryllium | <0.002 | NA | NA | NA | NA | <0.002 | NA | NA | NA | NA |
| cadmium | <0.002 | NA | NA | NA | NA | <0.002 | NA | NA | NA | NA |
| chromium | <0.004 | NA | NA | NA | NA | <0.004 | NA | NA | NA | NA |
| copper | <0.004 | NA | NA | NA | NA | <0.004 | NA | NA | NA | NA |
| lead | <0.004 | NA | NA | NA | NA | <0.004 | NA | NA | NA | NA |
| mercury | <0.0002 | NA | NA | NA | NA | <0.0002 | NA | NA | NA | NA |
| nickel | 0.012 | NA | NA | NA | NA | <0.004 | NA | NA | NA | NA |
| selenium | <0.001 | NA | NA | NA | NA | <0.001 | NA | NA | NA | NA |
| silver | <0.01 | NA | NA | NA | NA | <0.01 | NA | NA | NA | NA |
| thallium | 0.07 | NA | NA | NA | NA | 0.043 | NA | NA | NA | NA |
| zinc | 0.049 | NA | NA | NA | NA | 0.056 | NA | NA | NA | NA |
| Miscellaneous Parameters | | | | | | | | | | |
| pH (units) | 7.3 | 6.7 | 5.3 | 6.6 | 6.5 | 7.2 | 6.9 | 6.9 | 6.8 | 6.5 |
| spec. conductance (umhos/cm) | 800 | 1,000 | 440 | 500 | 580 | 600 | 1,500 | 1,100 | 950 | 950 |
| temperature (deg./centigrade) | 18 | 11.0 | 14 | 12.5 | 11.0 | 18 | 5.0 | 14.0 | 13.0 | 12.5 |
| TOC | 48 | 76 | 120 | 12 | 22 | 27 | 69 | 46 | 57 | 30 |
| total phenols | NA | 19 | 5.0 | 1.4 | 1.3 | NA | 0.94 | 0.15 | 0.19 | 0.22 |
| TOX | NA | 320 | 0.8 | 2.3 | 0.47 | NA | 300 | 2.5 | 0.36 | 0.30 |
| total dissolved solids (TDS) | 576 | NA | NA | NA | NA | 482 | NA | NA | NA | NA |
| bicarbonate, as CACO3 | NA | NA | NA | NA | NA | NA | NA | NA | NA | NA |
| calcium | NA | NA | NA | NA | NA | NA | NA | NA | NA | NA |
| chloride | 90 | NA | NA | NA | NA | 70 | NA | NA | NA | NA |
| cyanide | NA | NA | NA | NA | NA | NA | NA | NA | NA | NA |
| iron | NA | NA | NA | NA | NA | NA | NA | NA | NA | NA |
| magnesium | NA | NA | NA | NA | NA | NA | NA | NA | NA | NA |
| potassium | NA | NA | NA | NA | NA | NA | NA | NA | NA | NA |
| sodium | NA | NA | NA | NA | NA | NA | NA | NA | NA | NA |
| sulfate, as SO4 | NA | NA | NA | NA | NA | NA | NA | NA | NA | NA |

Table E-5. Summary of Metals and Miscellaneous Parameters in Ground Water, Monsanto Company, W6 Krummrich Plant, Sauget, Il.

| Well Number: | P-13 | P-13 | P-13 | P-13 | P-14 | P-14 | P-14 | P-14 | P-14 | P-14 |
|---|---|---|---|---|---|---|---|---|---|---|
| Date: | 6/84 | 6/84* | 6/84** | 11/85 | 1/84 | 2/84 | 3/84 | 5/84 | 6/84 | 11/85 |
| USEPA Priority Pollutant Metals (concentrations are in mg/L, except where noted) | | | | | | | | | | |
| antimony | 0.004 | 0.004 | <0.1 | NA | NA | NA | NA | NA | 0.018 | NA |
| arsenic | 0.093 | 0.013 | 0.14 | NA | NA | NA | NA | NA | 0.101 | NA |
| beryllium | 0.134 | 0.192 | <0.005 | NA | NA | NA | NA | NA | 0.057 | NA |
| cadmium | 0.002 | 0.002 | <0.007 | NA | NA | NA | NA | NA | 0.006 | NA |
| chromium | 0.005 | 0.006 | <0.02 | NA | NA | NA | NA | NA | 0.01 | NA |
| copper | 0.006 | <0.004 | <0.01 | NA | NA | NA | NA | NA | 0.008 | NA |
| lead | 0.005 | 0.004 | <0.1 | NA | NA | NA | NA | NA | <0.004 | NA |
| mercury | <0.0002 | <0.0002 | <0.003 | NA | NA | NA | NA | NA | <0.0002 | NA |
| nickel | 0.004 | 0.005 | <0.01 | NA | NA | NA | NA | NA | <0.01 | NA |
| selenium | 0.001 | <0.001 | <0.005 | NA | NA | NA | NA | NA | <0.001 | NA |
| silver | <0.01 | <0.01 | <0.01 | NA | NA | NA | NA | NA | <0.01 | NA |
| thallium | <0.02 | <0.02 | <0.005 | NA | NA | NA | NA | NA | <0.02 | NA |
| zinc | 0.020 | 0.06 | <0.01 | NA | NA | NA | NA | NA | 0.04 | NA |
| Miscellaneous Parameters * | | | | | | | | | | |
| pH (units) | 7.0 | 7.0 | 7.0 | 6.9 | 6.7 | 6.8 | 6.7 | 6.5 | 6.8 | NA |
| spec. conductance (umhos/cm) | 1,000 | 1,000 | 1,100 | 2,000 | 2,850 | 1,200 | 2,700 | 3,100 | 2,800 | NA |
| temperature (deg./centigrade) | 14 | 14 | 14 | 14 | 12 | 15.5 | 14.0 | 13 | 14 | NA |
| TOC | NA | NA | NA | NA | 160 | 44 | 87 | 42 | NA | NA |
| total phenols | 0.06 | 0.06 | <0.05 | 0.099 | 1.41* | 0.64 | 0.48 | 0.38 | 0.06 | 0.143 |
| TOX | NA | NA | NA | NA | 300 | 14 | 0.65 | 1.8 | NA | NA |
| total dissolved solids (TDS) | NA | NA | NA | NA | NA | NA | NA | NA | NA | NA |
| bicarbonate, as CACO3 | NA | NA | NA | NA | NA | NA | NA | NA | NA | NA |
| calcium | NA | NA | NA | NA | NA | NA | NA | NA | NA | NA |
| chloride | NA | NA | NA | NA | NA | NA | NA | NA | NA | NA |
| cyanide | <0.005 | <0.025 | <0.005 | <0.025 | NA | NA | NA | NA | <0.005 | <0.025 |
| iron | NA | NA | NA | NA | NA | NA | NA | NA | NA | NA |
| magnesium | NA | NA | NA | NA | NA | NA | NA | NA | NA | NA |
| potassium | NA | NA | NA | NA | NA | NA | NA | NA | NA | NA |
| sodium | NA | NA | NA | NA | NA | NA | NA | NA | NA | NA |
| sulfate, as SO4 | NA | NA | NA | NA | NA | NA | NA | NA | NA | NA |

Table E-5. Summary of Metals and Miscellaneous Parameters in Ground Water, Monsanto Company, W6 Krumrich Plant, Sauget, Il.

| Well Number: | DW-1 | DW-1 | DW-4 | DW-7 | DW-7 | DW-10 | DW-18 | DW-18 | DW-19 | DW-23 |
|---|---|---|---|---|---|---|---|---|---|---|
| Date: | 9/84 | 11/85 | 9/84 | 11/85 | 2/86 | 9/84 | 9/84 | 9/84* | 11/85 | 9/84 |
| USEPA Priority Pollutant Metals (concentrations are in mg/L, except where noted) | | | | | | | | | | |
| antimony | 0.018 | NA | 0.13 | <0.09 | <0.05 | 0.038 | 0.18 | NA | NA | 0.065 |
| arsenic | <0.001 | NA | 0.002 | 0.01 | <0.01 | 0.004 | <0.001 | NA | NA | 0.002 |
| beryllium | <0.01 | NA | 0.018 | <0.002 | <0.001 | <0.01 | <0.002 | NA | NA | <0.002 |
| cadmium | 1.97 | NA | 62.5 | <0.002 | <0.003 | 15.8 | <0.002 | NA | NA | <0.002 |
| chromium | <0.04 | NA | 0.105 | <0.01 | <0.01 | <0.04 | <0.004 | NA | NA | <0.004 |
| copper | <0.001 | NA | 0.033 | <0.006 | <0.009 | 0.003 | <0.004 | NA | NA | <0.004 |
| lead | 0.018 | NA | 0.024 | <0.04 | <0.06 | 0.026 | <0.004 | NA | NA | <0.004 |
| mercury | <0.0002 | NA | <0.0002 | <0.0002 | <0.0002 | <0.0002 | <0.0004 | NA | NA | <0.0004 |
| nickel | 0.024 | NA | 0.294 | 0.03 | 0.02 | 0.067 | 0.005 | NA | NA | 0.02 |
| selenium | <0.001 | NA | <0.001 | <0.01 | <0.005 | <0.001 | <0.001 | NA | NA | <0.001 |
| silver | 0.003 | NA | 0.008 | <0.007 | <0.01 | 0.006 | <0.002 | NA | NA | 0.004 |
| thallium | 0.019 | NA | 0.127 | <0.01 | <0.005 | 0.024 | 0.009 | NA | NA | 0.013 |
| zinc | 0.037 | NA | 0.206 | 0.091 | 0.054 | 0.106 | 0.02 | NA | NA | 0.028 |
| Miscellaneous Parameters | | | | | | | | | | |
| pH (units) | 6.9 | 6.9 | 6.5 | 7.2 | 6.8 | 6.2 | 6.5 | 6.5 | 7.5 | 6.3 |
| spec. conductance (umhos/cm) | 1,060 | 3,000 | 2,600 | 2,000 | 950 | 1,300 | 450 | 450 | 700 | 850 |
| temperature (deg./centigrade) | 21 | 15 | 22 | NA | 17.5 | 21 | 19 | 18 | 15 | 20 |
| TOC | 12 | NA | 8 | NA | NA | 75 | 8.6 | 14 | NA | 12 |
| total phenols | NA | 1.220 | NA | 0.179 | 0.478 | NA | NA | NA | 0.098 | NA |
| TOX | NA | NA | NA | NA | NA | NA | NA | NA | NA | NA |
| total dissolved solids (TDS) | 1,226 | NA | 3,274 | NA | NA | 1,930 | 400 | NA | NA | 914 |
| bicarbonate, as CACO3 | NA | NA | NA | NA | NA | NA | NA | NA | NA | NA |
| calcium | NA | NA | NA | NA | NA | NA | NA | NA | NA | NA |
| chloride | 386 | NA | 403 | NA | NA | 1,063 | 33 | 33 | NA | 43 |
| cyanide | NA | <0.025 | NA | <0.025 | <0.025 | NA | NA | NA | <0.025 | NA |
| iron | NA | NA | NA | NA | NA | NA | NA | NA | NA | NA |
| magnesium | NA | NA | NA | NA | NA | NA | NA | NA | NA | NA |
| potassium | NA | NA | NA | NA | NA | NA | NA | NA | NA | NA |
| sodium | NA | NA | NA | NA | NA | NA | NA | NA | NA | NA |
| sulfate, as SO4 | NA | NA | NA | NA | NA | NA | NA | NA | NA | NA |

Table E-5. Summary of Metals and Miscellaneous Parameters in Ground Water, Monsanto Company, W6 Krummrich Plant, Sauget, Il.

| Well Number: | DW-1-85 | BK-3 | BK-3 | BK-3 | WB-6 | WB-6 | WB-6 | WB-7 | WB-7 | Field Blank |
|---|---|---|---|---|---|---|---|---|---|---|
| Date: | 2/86 | 9/84 | 11/85 | 2/86 | 9/84 | 11/85 | 2/86 | 9/84 | 11/85 | 11/83 |
| USEPA Priority Pollutant Metals (concentrations are in mg/L, except where noted) | | | | | | | | | | |
| antimony | <0.060 | 0.062 | NA | <0.050 | 0.033 | NA | <0.05 | 0.022 | NA | NA |
| arsenic | <0.010 | <0.001 | NA | <0.010 | 0.018 | NA | 0.07 | <0.001 | NA | NA |
| beryllium | <0.0009 | <0.002 | NA | <0.001 | <0.002 | NA | <0.001 | <0.002 | NA | NA |
| cadmium | <0.003 | 0.008 | NA | <0.003 | <0.002 | NA | <0.003 | <0.002 | NA | NA |
| chromium | <0.008 | <0.004 | NA | <0.010 | <0.004 | NA | <0.01 | <0.004 | NA | NA |
| copper | <0.006 | <0.004 | NA | <0.009 | <0.004 | NA | <0.009 | <0.004 | NA | NA |
| lead | <0.060 | 0.006 | NA | <0.06 | 0.004 | NA | <0.06 | <0.004 | NA | NA |
| mercury | <0.0002 | <0.0004 | NA | <0.0002 | <0.0002 | NA | <0.0002 | <0.0002 | NA | NA |
| nickel | <0.009 | 0.010 | NA | <0.01 | <0.004 | NA | <0.01 | <0.004 | NA | NA |
| selenium | <0.005 | <0.001 | NA | <0.005 | <0.001 | NA | <0.005 | <0.001 | NA | NA |
| silver | <0.01 | 0.004 | NA | <0.01 | 0.002 | NA | <0.01 | <0.01 | NA | NA |
| thallium | <0.005 | 0.016 | NA | <0.005 | 0.025 | NA | <0.005 | 0.148 | NA | NA |
| zinc | 0.04 | 0.035 | NA | 0.030 | 0.024 | NA | 0.054 | 0.097 | NA | NA |
| Miscellaneous Parameters | | | | | | | | | | |
| pH (units) | NA | 7.7 | 7.5 | 7.7 | 6.9 | 6.7 | 7.1 | 6.6 | 7.0 | NA |
| spec. conductance (umhos/cm) | 1,350 | 2,500 | 3,100 | 1,625 | 850 | 1,000 | 630 | 850 | 925 | <50 |
| temperature (deg./centigrade) | 13 | 19 | 15 | 16 | 18 | 16 | 14 | 15 | 17 | 16 |
| TOC | NA | 36 | NA | NA | 16 | NA | NA | 3 | NA | 2 |
| total phenols | <0.05 | NA | 0.101 | <0.050 | NA | 0.13 | 0.138 | NA | <0.05 | 0.002 |
| TOX | NA | NA | NA | NA | NA | NA | NA | NA | NA | <0.005 |
| total dissolved solids (TDS) | NA | 1,814 | NA | NA | 524 | NA | NA | 602 | NA | NA |
| bicarbonate, as CACO3 | NA | NA | 870 | NA | NA | NA | NA | NA | NA | NA |
| calcium | NA | NA | 70.4 | NA | NA | NA | NA | NA | NA | NA |
| chloride | NA | 930 | 714 | NA | 124 | NA | NA | 40 | NA | NA |
| cyanide | <0.025 | NA | <0.025 | <0.025 | NA | <0.025 | <0.025 | NA | <0.025 | NA |
| iron | NA | NA | 0.2 | NA | NA | NA | NA | NA | NA | NA |
| magnesium | NA | NA | 104 | NA | NA | NA | NA | NA | NA | NA |
| potassium | NA | NA | 343 | NA | NA | NA | NA | NA | NA | NA |
| sodium | NA | NA | 328 | NA | NA | NA | NA | NA | NA | NA |
| sulfate, as SO4 | NA | NA | 35 | NA | NA | NA | NA | NA | NA | NA |

Table E-5. Summary of Metals and Miscellaneous Parameters in Ground Water, Monsanto Company, WG Krummrich Plant, Sauget, Il.

| Well Number: | DW-24 | DW-24 | DW-29 | DW-29 | DW-30 | DW-33 | DW-34 | DW-34 | DW-34 | DW-1-85 |
|---|---|---|---|---|---|---|---|---|---|---|
| Date: | 9/84 | 9/84* | 9/84 | 9/84* | 11/85 | 9/84 | 9/84 | 11/85 | 2/86 | 11/85 |
| USEPA Priority Pollutant Metals (concentrations are in mg/L, except where noted) | | | | | | | | | | |
| antimony | 0.876 | NA | 0.086 | NA | <0.09 | 0.02 | 0.026 | NA | <0.050 | <0.08 |
| arsenic | 0.004 | NA | 0.019 | NA | <0.01 | 0.003 | 0.077 | NA | 0.170 | <0.01 |
| beryllium | <0.002 | NA | <0.002 | NA | <0.002 | 0.02 | <0.010 | NA | <0.001 | <0.0009 |
| cadmium | <0.002 | NA | <0.002 | NA | <0.002 | 2.84 | 0.93 | NA | 0.003 | <0.002 |
| chromium | <0.004 | NA | <0.004 | NA | <0.01 | <0.04 | 0.031 | NA | <0.010 | <0.02 |
| copper | <0.004 | NA | <0.004 | NA | <0.006 | 0.012 | 0.008 | NA | <0.009 | <0.008 |
| lead | <0.004 | NA | <0.004 | NA | <0.04 | 0.021 | 0.016 | NA | <0.060 | <0.07 |
| mercury | <0.0004 | NA | 0.0004 | NA | <0.0002 | <0.0002 | <0.0002 | NA | <0.0002 | <0.0003 |
| nickel | 0.004 | NA | 0.01 | NA | <0.01 | 0.22 | 0.087 | NA | <0.010 | <0.01 |
| selenium | <0.001 | NA | <0.001 | NA | <0.005 | <0.001 | <0.001 | NA | <0.005 | <0.005 |
| silver | 0.002 | NA | 0.004 | NA | <0.007 | 0.002 | 0.002 | NA | <0.010 | <0.01 |
| thallium | 0.021 | NA | 0.018 | NA | <0.005 | 0.021 | 0.021 | NA | <0.005 | <0.005 |
| zinc | 0.024 | NA | 0.035 | NA | <0.006 | 0.077 | 0.071 | NA | 0.056 | 0.01 |
| Miscellaneous Parameters | | | | | | | | | | |
| pH (units) | 6.3 | 6.3 | 6.5 | 6.5 | 6.8 | 6.9 | 6.4 | 6.8 | 7.0 | 7.2 |
| spec. conductance (umhos/cm) | 700 | 700 | 1,100 | 1,100 | 1,250 | 900 | 1,000 | 1,500 | 760 | 3,250 |
| temperature (deg./centigrade) | 21 | 21 | 20 | 20 | 16 | 20 | 21 | 18 | 12 | 18 |
| TOC | 7.9 | NA | 49 | 46 | NA | 8.2 | 23 | NA | NA | NA |
| total phenols | NA | NA | NA | NA | <0.05 | NA | NA | 0.0722 | <0.050 | 0.155 |
| TOX | NA | NA | NA | NA | NA | NA | NA | NA | NA | NA |
| total dissolved solids (TDS) | 634 | NA | 1,170 | 1,184 | NA | 1,064 | 3,294 | NA | NA | NA |
| bicarbonate, as CACO3 | NA | NA | NA | NA | NA | NA | NA | NA | NA | NA |
| calcium | NA | NA | NA | NA | NA | NA | NA | NA | NA | NA |
| chloride | 38 | NA | 95 | 96 | NA | 247 | 186 | NA | NA | NA |
| cyanide | NA | NA | NA | NA | <0.025 | NA | NA | <0.025 | <0.025 | <0.025 |
| iron | NA | NA | NA | NA | NA | NA | NA | NA | NA | NA |
| magnesium | NA | NA | NA | NA | NA | NA | NA | NA | NA | NA |
| potassium | NA | NA | NA | NA | NA | NA | NA | NA | NA | NA |
| sodium | NA | NA | NA | NA | NA | NA | NA | NA | NA | NA |
| sulfate, as SO4 | NA | NA | NA | NA | NA | NA | NA | NA | NA | NA |

Table E-5. Summary of Metals and Miscellaneous Parameters in Ground Water, Monsanto Company, WG Krumsrich Plant, Sauget, Il.

| Well Number: | Field Blank | Field Blank | Field Blank | Trip Blank | Trip Blank | Trip Blank | Trip Blank | Lab Blank |
|---|---|---|---|---|---|---|---|---|
| Date: | 2/84 | 5/84 | 6/84 | 11/83 | 2/84 | 5/84 | 6/84 | 2/84 |
| USEPA Priority Pollutant Metals (concentrations are in mg/L, except where noted) | | | | | | | | |
| antimony | NA | NA | <0.03 | NA | NA | NA | <0.004 | NA |
| arsenic | NA | NA | <0.001 | NA | NA | NA | <0.001 | NA |
| beryllium | NA | NA | <0.001 | NA | NA | NA | <0.001 | NA |
| cadmium | NA | NA | 0.001 | NA | NA | NA | <0.001 | NA |
| chromium | NA | NA | <0.004 | NA | NA | NA | <0.004 | NA |
| copper | NA | NA | 0.008 | NA | NA | NA | <0.004 | NA |
| lead | NA | NA | <0.01 | NA | NA | NA | <0.004 | NA |
| mercury | NA | NA | <0.0002 | NA | NA | NA | <0.0002 | NA |
| nickel | NA | NA | 0.005 | NA | NA | NA | <0.004 | NA |
| selenium | NA | NA | <0.001 | NA | NA | NA | <0.001 | NA |
| silver | NA | NA | <0.002 | NA | NA | NA | <0.01 | NA |
| thallium | NA | NA | <0.002 | NA | NA | NA | <0.02 | NA |
| zinc | NA | NA | 0.013 | NA | NA | NA | <0.002 | NA |
| Miscellaneous Parameters | | | | | | | | |
| pH (units) | 7.0 | 7.0 | 7 | NA | NA | NA | NA | NA |
| spec. conductance (umhos/cm) | 110 | 60 | 30 | NA | NA | NA | NA | NA |
| temperature (deg./centigrade) | 10 | 17 | 30 | NA | NA | NA | NA | NA |
| TOC | <5 | 6 | NA | 2 | <5 | <5 | NA | <5 |
| total phenols | <0.002 | <0.002 | <0.005 | <0.002 | <0.002 | 0.006 | <0.005 | <0.002 |
| TOX | 0.019 | NA | NA | 0.013 | 0.009 | 0.025 | NA | 0.009 |
| total dissolved solids (TDS) | NA | NA | NA | NA | NA | NA | NA | NA |
| bicarbonate, as CACO3 | NA | NA | NA | NA | NA | NA | NA | NA |
| calcium | NA | NA | NA | NA | NA | NA | NA | NA |
| chloride | 35 | NA | NA | NA | NA | NA | NA | NA |
| cyanide | NA | <0.005 | <0.005 | NA | NA | NA | <0.005 | NA |
| iron | NA | NA | NA | NA | NA | NA | NA | NA |
| magnesium | NA | NA | NA | NA | NA | NA | NA | NA |
| potassium | NA | NA | NA | NA | NA | NA | NA | NA |
| sodium | NA | NA | NA | NA | NA | NA | NA | NA |
| sulfate, as SO4 | NA | NA | NA | NA | NA | NA | NA | NA |

* - Replicate Analyses
** - Replicate analysis performed by ETC.
NA - Not analyzed.
‡ - Average of two analyses.
< - Indicates that the compound was not detected at the detection limit which is the value shown next to the symbol.