K.03
153534 9/1/86

PLANT-WIDE ASSESSMENT OF GROUND-WATER CONDITIONS AT THE W.G. KRUMMRICH PLANT MONSANTO COMPANY SAUGET, ILLINOIS VOLUME III - APPENDICES

September 1986

Prepared by:

Geraghty & Miller, Inc.
Ground-Water Consultants
125 East Bethpage Road
Plainveiw, New York 11803

CONTENTS

VOLUME III - APPENDICES

APPENDIX

A. Geraghty & Miller, Inc. Drilling and Sampling Protocols
B. Geologic Logs
C. Well Construction Data
D. Summary of John Mathes & Associates, Inc. Laboratory Permeability Test Results

E. Water Quality Data

Table E-1. Summary of Volatile Organic Compounds in Ground Water
Table E-2. Summary of Acid Extractable Organic Compounds in Ground Water
Table E-3. Summary of Base/Neutral Extractable Organic Compounds in Ground Water
Table E-4. Summary of Pesticide/PCB Compounds in Ground Water
Table E-5. Summary of Metals and Miscellaneous Parameters in Ground Water

APPENDIX A

GERAGHTY & MILLER, INC.
DRILLING AND SAMPLING PROTOCOLS

Monitoring Well Installation

The monitoring wells were installed by John Mathes and Associates, Inc., Columbia, Illinois under the direction of Geraghty & Miller, Inc. during several phases of study between October 1983 and January 1985. Single monitoring wells were installed at some locations but, at other locations, clusters of two or three wells were drilled in order to obtain water-level and water-quality information from specific depth intervals in the aquifer. Wells in the clusters were installed in separate boreholes, rather than in a single large diameter borehole. The suffixes "A", "B" and "C" indicate shallow, intermediate, and deep wells, respectively. A number without a suffix indicates a shallow well.

At all shallow well locations, an 8-inch or 12-inch diameter hole was drilled with a hollow stem auger to 15 to 20 feet below the water table. Split-spoon samples were collected at 5-foot intervals, described and stored in jars. At several locations water was added to the borehole during drilling to prevent very fine sand from heaving up inside the augers. A 2-inch diameter, 6- or 10-slot, stainless steel well screen coupled to new 2-inch black steel casing was installed through the hollow-stem auger to approximately 15 feet below the water table. Gravel was added to the an-

nular space adjacent to the well screen prior to removing the augers to ensure that the entire annular space (to 3 feet above the top of the well screen) was properly gravel packed. The remainder of the annular space was filled with a bentonite/cement slurry which was pumped down a tremie pipe to within two feet of land surface. Pre-mixed cement was poured into the remaining annulus and a steel protective pipe with a locking cap was set over the well into the cement. Finally, three 4-inch steel protective posts were installed in a triangular array to protect the wells from being damaged.

Each well was developed with a bladder pump and/or compressed air to ensure that the well screen was open to the aquifer, that the well water was reasonably clear, and that all water added to each borehole during drilling had been removed. All drilling equipment and tools were steam cleaned prior to their arrival onsite, between drilling sites and prior to leaving the site to prevent cross-contamination of wells. The well screen and casing were steam cleaned prior to delivery to the site and again immediately before installation. In addition, at each drilling site all drill cuttings and development water were drummed and removed from the site for disposal in accordance with federal, state, and local laws and regulations.

At all intermediate and deep well locations, an 8-inch diameter hole was drilled with the conventional rotary method and sampled (split spoon) to depths of 80 to 90 feet (intermediate wells) and to about 105 to 115 feet (deep wells). After the screen zone was selected, a 4-inch diameter, 20-slot, threaded stainless steel well screen was coupled to black steel casing and installed in the hole. Clean gravel was poured into the annulus next to the screen as the drilling fluid was being removed. The gravel pack extends approximately 5 feet above the screen. Bentonite slurry was pumped down a tremie pipe into the annular space to form a 15 foot thick seal above the screened zone. The remainder of the annulus was filled with a bentonite/cement slurry which was also pumped down a tremie pipe to fill the remaining annulus and ensure that the well was properly sealed. A locking cap was added to the top of the well and three 4-inch steel protective posts were installed around each well in the same manner as those around the 2-inch monitoring wells.

All well development and decontamination procedures followed for the shallow monitoring wells were also used for the deeper monitoring wells. However, it was necessary to add sodium hexametaphosphate (a dispersing agent) to Well GM-28C in order to remove all of the drilling fluid.

solids (TDS), and dioxin (TCDD). Replicate samples were collected at several sampling locations, and analyzed for the same suiteof constituents. Field blanks and trip blanks were usually analyzed for volatile organic priority pollutants; however, the remainder of the USEPA priority pollutant compounds were occasionally determined. Specific conductance, pH, and temperature were measured in the field at each location at the time of sample collection.

During sample collection, each of the 2-inch wells was evacuated with a centrifugal pump or a stainless steel or teflon bailer. All 4-inch wells were evacuated with a submersible pump. Three to five equivalent casing volumes of water were removed from each monitoring well prior to sampling. All sampling was carried out according to a protocol that minimizes the possibility of cross-contamination of samples. Tubing attached to the pumps was dedicated to each well; no tubing was reused. Pumps were cleaned with Micro™ detergent solution and rinsed with distilled/deionized water. Each well was sampled with either a stainless steel or teflon bailer which was cleaned with Micro™ detergent solution, hexane and distilled water rinses after the sampling of each well.

Blind replicate samples (except the sample for volatile organic compounds) were collected in a common container before splitting the sample. Well water collected for prior-

solution, hexane and distilled water rinses after the sampling of each well.

Blind replicate samples (except the sample for volatile organic compounds) were collected in a common container before splitting the sample. Well water collected for priority pollutant metal analysis was filtered in the field according to the USEPA protocol. All other samples were stored and preserved in accordance with USEPA protocols and instructions provided by the analyzing laboratory. Samples were delivered to the laboratory within 24 hours of collection, following Geraghty & Miller, Inc.'s daily sampling activities.

APPENDIX B

GEOLOGIC LOGS FOR MONITORING WELLS

INSTALLED UNDER THE DIRECTION OF GERAGHTY & MILLER, INC.

MONSANTO COMPANY, W.G. KRUMMRICH PLANT, SAUGET, ILLINOIS

Description	Depth (feet)
Well GM-1	
Silt, clayey, brown	0 - 3.5
Sand, very fine, silty, tan	3.5- 6
Silt, clayey, gray and brown	6 - 12
Sand, very fine, very silty, gray	12 - 22
Sand, fine, silty, gray	22 - 32
Sand, fine to medium, gray; trace of coarse sand	32 - 36
Well GM-2	
Gravel (fill)	0 - 2
Sand, very fine to fine, silty, gray and yellowish-brown	2 - 7
Clay, silty, gray	7 - 12
Sand, very fine to fine, tan	12 - 18
Silt, sandy, gray	18 - 20
Sand, very fine to fine, silty, gray	20 - 21
Sand, very fine to fine, brown; some silt	21 - 35
Sand, fine to medium, gray	35 - 44
Well GM-3	
Sand, very fine to fine, brown; some silt	0 - 2
Sand, very fine to fine, tan	2 - 10
Silt, sandy, brown	10 - 12
Sand, very fine to fine, very silty, brown	12 - 15
Sand, very fine to fine, tan; trace silt	15 - 22
Sand, fine to medium, brown and gray	22 - 32
Sand, fine to medium, brown; some coarse sand and fine gravel	32 - 36
Wells GM-4ABC	
Clay, dark brown	0 - 3
Sand, very fine, very silty, tan	3 - 7
Sand, fine, tan	7 - 17
Sand, fine, brown; some silt	17 - 22
Sand, fine to medium, brown; trace coarse sand	22 - 70
Sand, fine to coarse, gray; with gravel	70 - 88
Well GM-5	
Sand, very fine to fine, brown; some silt	0 - 2
Sand, very fine to fine, tan	2 - 27
Sand, very fine to fine, tan; some medium sand	27 - 36

Description	Depth (feet)
Well GM-6AB	
Sand, very fine, silty, dark gray	0 - 3
Sand, very fine, silty, tan	3 - 8
Clay, gray; some silt	8 - 13
Sand, very fine, tan	13 - 21
Sand, very fine, tan; some silt	21 - 27
Sand, fine, silty; trace of medium and coarse sand	27 - 32
Sand, fine to medium, gray; trace of coarse sand	32 - 70
Sand, fine to coarse, gray; with fine to medium gravel	70 - 88
Well GM-7	
Silt, sandy, brown	0 - 1
Sand, very fine, brown; some silt	1 - 4
Silt, gray	4 - 5
Sand, very fine, gray; some silt	5 - 12
Sand, very fine, tan	12 - 22
Sand, very fine, brown; some silt	22 - 27
Sand, very fine to fine, brown; some medium sand	27 - 36
Well GM-8	
Sand, very fine, silty, brown	0 - 2
Sand, very fine, tan	2 - 14
Silt, gray and brown	14 - 14.5
Sand, very fine, tan	14.5- 22
Sand, very fine, brownish-gray; some silt	22 - 27
Sand, very fine to fine, gray; some silt and medium sand	27 - 36
Wells GM-9ABC	
Gravel (fill)	0 - 2
Cinders, black (fill)	2 - 3
Sand, very fine to fine, silty, brown	3 - 12
Clay, silty, gray	12 - 14
Sand, very fine to fine, silty, brown	14 - 22
Sand, very fine to fine, silty, gray	22 - 50
Sand, fine to medium, gray; trace of gravel	50 - 80
Sand, fine to coarse, gray; with fine to medium gravel	80 -108

Description	Depth (feet)
Wells GM-10ABC	
Topsoil	0 - 1
Silt, sandy, brown	1 - 6
Sand, very fine to fine, very silty, brown	6 - 40
Sand, fine to medium, gray; little gravel	40 - 72
Gravel, fine to medium; with fine to coarse sand	72 - 80
Sand, fine to coarse, brown; little gravel	80 - 84
Gravel, fine to medium; with fine to coarse sand	84 -104
Gravel, fine to medium with fine to coarse sand; some cobbles	104 -111
Well GM-11	
Silt, sandy, brown	0 - 2
Gravel, coarse (fill)	2 - 3
Silt, clayey, gray; trace gravel	3 - 9.5
Sand, silty, fine, tan	9.5- 17
Sand, very silt, very fine, gray	17 - 26
Wells GM-12ABC	
Cinders and gravel, black (fill)	0 - 8.5
Clay, gray	8.5- 17
Silt, clayey, gray	17 - 18.5
Sand, very fine to fine, very silty, gray	18.5- 22
Sand, very fine to fine, gray; some silt	22 - 35.5
Sand, fine, gray; some silt	35.5- 50
Sand, fine to medium; brownish-gray	50 - 70
Sand, fine to coarse, brownish-gray; with fine to medium gravel	70 - 114.5
Well GM-13	
Gravel (fill)	0 - 2
Sand, very fine to fine, silty, brown	2 - 11
Silt, clayey, gray	11 - 13
Sand, very fine to fine, silty, brown	13 - 21
Sand, fine, silty, gray	21 - 38
Well GM-14	
Gravel (fill)	0 - 2
Silt, clayey, brown; some sand	2 - 5
Sand, very fine to fine, silty, brown	5 - 29
Sand, fine, silty, gray	29 - 38
Well GM-15	
Gravel (fill)	0 - 2
Silt, clayey, gray and brown; some sand	2 - 9
Sand, very fine to fine, silty, gray	9 - 38

Description	Depth (feet)
Wells GM-16AB	
Silt, sandy, brown	1 - 6
Sand, very fine to fine, very silty, brown	6 - 29
Sand, fine, gray; some silt	29 - 40
Sand, fine, gray	40 - 50
Sand, fine to medium, gray; some gravel	50 - 70
Sand, fine to coarse, gray; with gravel	70 - 90
Wells GM-17ABC	
Sand, very fine, silty, brown	0 - 4
Clay, gray; some silt and fine sand	4 - 11
Sand, very fine, tan; some silt	11 - 23
Sand, very fine, brown; trace of medium sand and silt	23 - 50
Sand, fine to medium, gray; some fine gravel	50 - 70
Sand, fine to coarse, gray; with fine to medium gravel	70 -107
Wells GM-18AB	
Silt, clayey, brown; trace of fine sand and gravel	0 - 6
Sand, fine, grayish-brown; some silt	6 - 38
Sand, fine, grayish-brown	38 - 50
Sand, fine to medium, grayish-brown; some fine gravel and coal fragments	50 - 80
Sand, fine to coarse, gray; with fine to medium gravel	80 - 92
Wells GM-25AB	
Sand, very fine, silty, brown	0 - 14
Sand, fine, brown; some silt	14 - 33
Sand, fine, gray	33 - 50
Sand, fine to medium, gray; some silt and coarse sand	50 - 70
Sand, fine to coarse, gray; some fine to medium gravel	70 - 88
Wells GM-27BC	
Sand, fine, silty, brown and black	0 - 13
Silt, sandy, gray; some fine sand	13 - 22
Sand, fine, gray; some silt	22 - 33
Clay, silty, gray; some fine sand	33 - 36
Sand, fine, silty, gray	36 - 48
Sand, fine to medium, gray; little silt	48 - 75
Sand, fine to coarse, gray; some fine to medium gravel	75 -105

Description	Depth (feet)
Wells GM-28BC	
Sand, fine, gray; some silt	0 - 18
Clay, silty, gray	18 - 20
Sand, fine, gray; some silt	20 - 29
Clay, silty, gray	29 - 32
Silt, gray; trace of fine gravel, with intermittent sand seams	32 - 58
Sand, fine to coarse, gray; some fine gravel	58 - 95
Well GM-29	
Gravel (fill)	0 - 2
Sand, fine, silty, gray	2 - 3
Silt, clayey, gray; with green stains	3 - 4
Clay, silty, gray	4 - 5.5
Sand, fine, silty, gray; some clay	5.5- 8
Silt, sandy, black	8 - 10
Silt, sandy, gray	10 - 21
Sand, fine, gray; some silt	21 - 25
Well GM-30	
Gravel, with cinders, some red brick (fill)	0 - 6
Clay, silty, grayish-green	6 - 10
Silt, clayey, gray; trace of fine sand	10 - 15
Sand, very fine to fine, gray; some silt	15 - 20
Wells GM-31ABC	
Sand, very fine, silty, brown	0 - 10.5
Sand, fine, brown	10.5- 12
Sand, very fine, silty, brown	12 - 17
Sand, fine to medium brown	17 - 23
Sand, medium, brown	23 - 40
Sand, coarse, little gravel, brown	40 - 41.5
Sand, fine to medium, brown	41.5- 70
Sand, fine to coarse, brown	70 - 80
Sand, fine to coarse, brown; some fine gravel	80 -126.5
Well GM-32	
Gravel, cinders, brown and gray (fill)	0 - 2
Sand, fine, silty, brown	2 - 7
Sand, fine to medium, brown	7 - 25

Description	Depth (feet)
Well GM-33	
Clay, dark gray, wood, cinders (fill)	0 - 6.5
Clay, dark gray, silt	6.5- 9
Sand, fine, gray	9 - 11
Sand, very fine, silty, gray	11 - 13
Sand, fine, gray	13 - 16.5
Sand, fine to medium, gray	16.5- 25
Well GM-34	
Clay, dark gray, cinders (fill)	0 - 6.5
Clay, dark gray, silty	6.5- 9
Sand, fine, dark gray (oil sheen on augers and spoons)	9 - 25
Well GM-35	
Sand, fine, gray, some gravel, cinders (fill)	0 - 4
Sand, fine, silty, dark gray	4 - 10.8
Clay, gray	10.8- 12
Sand, very fine, silty, little clay, gray	12 - 16
Sand, fine to medium, gray to brown	16 - 19.5
Silt, some clay, gray	19.5- 20
Sand, fine, silty, gray	20 - 21.5
Clay, silty, gray	21.5- 25
Well GM-36	
Gravel, sand, brown (fill)	0 - 2.5
Clay, silty, brown	2.5- 8
Sand, fine to medium, brown	8 - 25
Well GM-37	
Gravel, sand, some clay, dark brown (fill)	0 - 2
Clay, silty, brown	2 - 10.5
Sand, fine, trace of silt, gray	10.5- 14.5
Sand, fine to medium, gray	14.5- 25
Well GM-38	
Topsoil	0 - 1
Sand, very fine, silty, brown	1 - 18
Sand, very fine, silty, gray	18 - 19
Sand, fine to medium, gray	19 - 26.5

Description	Depth (feet)
Well GM-39	
Cinders, gravel, black (fill)	0 - 1.5
Cinders, black (fill)	1.5- 8
Clay, silty, gray	8 - 9
Well GM-40	
Cinders, gravel, black (fill)	0 - 1
Cinders, black (fill)	1 - 7.5
Clay, silty, gray	7.5- 8
Well GM-41	
Cinders, gravel, medium sand (fill)	0 - 2
Cinders, medium sand (fill)	2 - 7.9
Clay, silty, brown-gray	7.9- 8
Well GM-42	
Gravel, cinders, white and black (fill)	0 - 2
Cinders, black (fill)	2 - 7
Clay, silty, gray	7 - 8
Well GM-43	
Cinders, black (fill)	0 - 5
Clay, silty, gray	5 - 6
Well GM-44	
Cinders, gravel, black (fill)	0 - 1
Cinders, black (fill)	1 - 5
Clay, gray	5 - 6
Well GM-45	
Cinders, black	0 - 5.5
Gravel, brown	5.5- 7
Gravel, wood chips, brown	5.5- 7.5
Gravel, brown to black	7.5- 9
Cinders, gravel, black	9 - 12
Clay, silty, gray	12 - 12.5
Silt, clayey, trace of sand	17 - 17.5
Clay, gray	17 - 17.8
Silt, clayey, gray	17.8- 18

Description	Depth (feet)
Well GM-46	
Gravel, sandy, gray	0 - 3.5
Silt, some very fine sand, little clay, brown	3.5- 10
Sand, very fine, silty, gray	10 - 18
Sand, fine to medium, gray	18 - 27
Well GM-47	
Pavement, gravel, gray to dark brown	0 - 1
Sand, fine, silty, gray	1 - 7
Cinders, coarse sand, black	7 - 7.5
Clay, gray, silty	7.5- 11
Well GM-48	
Sand, fine, silty, gray	0 - 2
Gravel, brick, medium sand, cinders, brown	2 - 3.5
Cinders, black	3.5- 7
Sand, medium, cinders, black	7 - 10
Silt, some fine sand, trace of clay, gray	10 - 12.5
Well GM-49	
Gravel, medium sand, white and brown	0 - 2
Sand, fine, silty, brown	2 - 7.5
Sand, very fine to fine, silty, brown	7.5- 13
Silt, clayey, brown	13 - 13.5
Well GM-106	
Sand, fine to medium, brownish-gray; some fine gravel	0 - 15
Sand, fine to coarse, brown; some fine to coarse gravel, little silt and clay	15 - 20
Sand, very fine to fine, brown; some silt, trace of fine gravel	20 - 25
Silt and clay, brown; little fine sand	25 - 40
Sand, very fine to fine, gray; some silt	40 - 50
Sand, fine to medium, brownish-gray and medium to coarse gravel	50 - 55
Sand, fine to medium, gray; some medium to coarse gravel, trace of silt	55 - 67
Clay, gray; some silt	67 - 68
Sand, fine to coarse, gray some fine to coarse gravel and cobbles	68 -113
Gravel, fine to coarse and medium to coarse sand, gray; few cobbles and boulders	113 -116
Sand, fine to coarse, gray and fine to coarse gravel; some cobbles and thin layers (6") of silty clay	116 -126
Limestone, gray	126 -165.7

GEOLOGIC LOGS FOR SOIL BORINGS

INSTALLED UNDER THE DIRECTION OF GERAGHTY & MILLER, INC.

MONSANTO COMPANY, W.G. KRUMMRICH PLANT, SAUGET, ILLINOIS

Description	Depth (feet)
Site BG-13	
Gravel (fill for parking lot)	0 - 1
Sand, fine, silty, brown; with black stains from 7 to 8.5 feet	1 - 8.5
Sand, fine, silty, black	8.5- 10
Sand, fine, silty, gray	10 - 11.5
Site BG-14	
Gravel (fill for parking lot)	0 - 2
Sand, fine, silty, gray	2 - 4
Clay, silty, brown, trace sand	4 - 7
Silt, clayey, sandy, brown	7 - 8.5
Silt, sandy, dark gray	8.5- 11
Sand, fine, silty, gray	11 - 11.5
Site BG-15	
Gravel (fill in lot)	0 - 1
Clay, silty, gray; trace gravel (fill)	1 - 2.5
Sand, fine to medium, black, with gravel (fill)	2.5- 4
Silt, gravel, rock fragments, bricks, gray, brown and black; some black stains (fill)	4 - 5.5
Silt, gray and black; trace fine sand	5.5- 7
Clay, silty, gray	7 - 8.5
Sand, fine, brown; some silt (organic liquid present on drilling tools)	8.5- 11.5
Site BG-16	
Gravel (fill in lot)	0 - 1
Sand, fine, clayey, silty, brown and gray	1 - 4
Sand, fine, silty, gray with black stains	4 - 7
Silt, sandy, gray	7 - 8.5
Sand, silty, fine, gray	8.5- 10

Description	Depth (feet)
Site BG-17	
Gravel (fill in lot)	0 - 1
Silt, black; with gravel	1 - 4
Sand, silty, black; with gravel	4 - 10
Site BG-18	
Gravel (fill in lot)	0 - 1
Gravel and sand (fill)	1 - 2.5
Sand, fine, black	2.5- 4
Silt, clayey, greenish-gray; some fine snand	4 - 6
Sand, fine, gray; some silt	6 - 10
Site BG-19	
Gravel (fill in lot)	0 - 2
Silt, clayey, black	2 - 4
Sand, fine, silty, grayish-green and gray	4 - 11
Site BG-21	
Silt, clayey, brown (fill)	0 - 1.5
Silt, clayey, gray; some sand	1.5- 5
Sand, fine, silty, gray	5 - 10.5
Site BG-23	
Asphalt, gravel and red brick (fill)	0 - 1.5
Sand, fine, brown	1.5- 2
Clay, silty, gray and brown	2 - 5
Sand, fine, brown, some silt	5 - 9.5
Site BG-24	
Sand, medium, some gravel and cinders, gray (fill)	0 - 5.0
Sand, very fine, silty, brown	5.0- 7.0
Sand, fine, brown	7.0- 16.0
Clay, gray	16.0- 17.0
Sand, fine, silty, brown	17.0- 17.5
Sand, medium to fine, dark gray	17.5- 18.5
Sand, medium, brown	18.5- 25.0

Description	Depth (feet)
Site BG-31	
Gravel, cinders, brown and gray (fill)	0 - 2.0
Sand, fine, silty, gray	2.0 - 21.0
Site BG-35	
Cinders, gravel, black (fill)	0 - 2.0
Sand, fine to medium, black (from 4.0 to 11.0)	2.0 - 11.0
Clay, silty, black	11.0 - 12.0
Site BG-37	
Cinders, gravel, white and black (fill)	0 - 2.0
Cinders, black (fill)	2.0 - 3.0
Clay, silty, cinders, black (fill)	3.0 - 7.5
Clay, dark gray	7.5 - 8.0
Site BG-38 (Well 42)	
Gravel, cinders, white and black (fill)	0 - 2.0
Cinders, black (fill)	2.0 - 7.0
Clay, silty, gray	7.0 - 8.0
Site BG-39	
Cinders, black (fill)	0 - 6.0
Clay, gray, silt	6.0 - 6.1

APPENDIX C

GERAGHTY & MILLER, INC.
Ground-Water Consultants

WELL CONSTRUCTION LOG

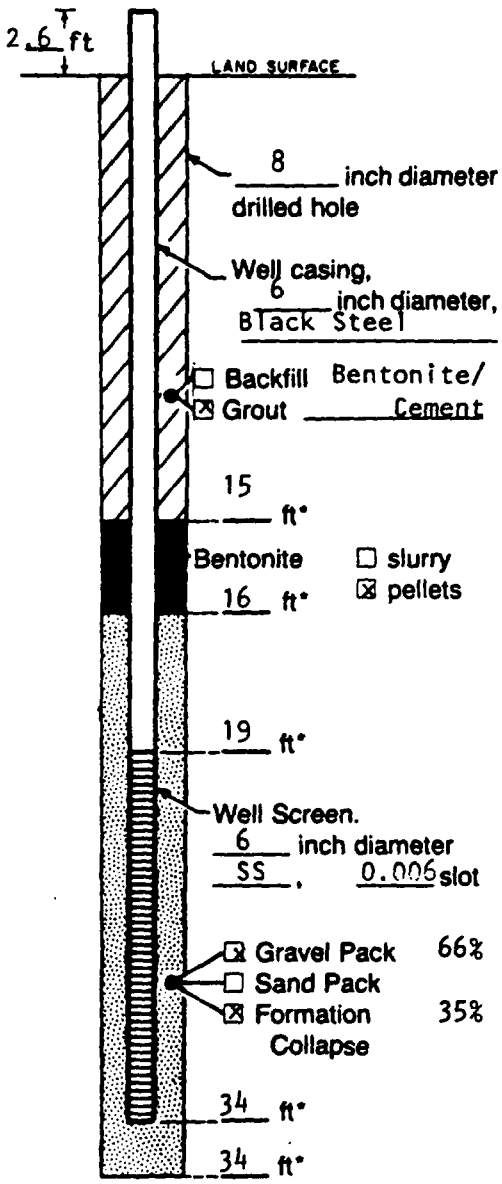

Measuring Point is Top of Well Casing Unless Otherwise Noted.

*Depth Below Land Surface

Project: Monsanto Company Well: GM-1
Town/City: Sauget
County: St. Clair State: IL
Permit No.:
Land-Surface Elevation and Datum: _____ feet ☒ surveyed ☐ estimated
Measuring Point 413.65 Ft (MSL)
Installation Dates(s): 11/1/83
Drilling Method: Mud Rotary
Drilling Contractor: John Mathes & Assoc.
Drilling Fluid:

Development Techniques(s) and Date(s)
Pumped with bladder pump; surged with compressed air.

Fluid Loss During Drilling: _____ gallons
Water Removed During Development: 480 gallons
Static Depth to Water: _____ feet below M.P.
Pumping Depth to Water: _____ feet below M.P.
Pumping Duration: 4 hours
Yield: 2 gpm Date:
Specific Capacity: _____ gpm/ft
Well Purpose: Ground-water monitoring well

Remarks:

Prepared by: D. Colton

GERAGHTY & MILLER, INC.
Ground-Water Consultants

WELL CONSTRUCTION LOG

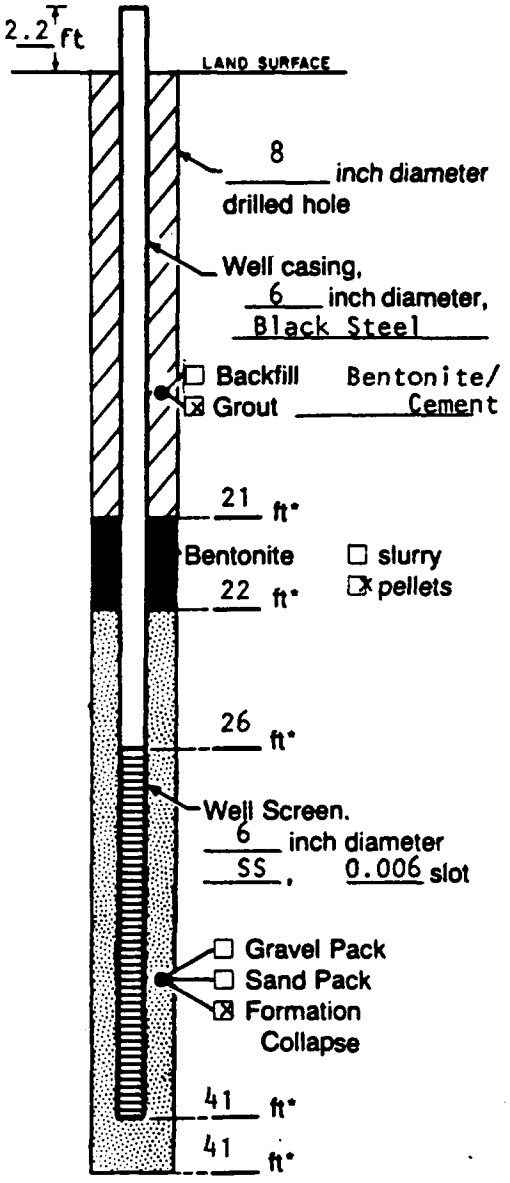

Measuring Point is Top of Well Casing Unless Otherwise Noted.

*Depth Below Land Surface

Project: Monsanto Company Well: GM-2
Town/City: Sauget
County: St. Clair State: IL
Permit No.:
Land-Surface Elevation and Datum: _____ feet ☒ surveyed ☐ estimated
Measuring Point 417.37 Ft (MSL)
Installation Dates(s): 11/8/83
Drilling Method: Mud Rotary
Drilling Contractor: John Mathes & Assoc.
Drilling Fluid: Bentonite

Development Techniques(s) and Date(s)
Surged with compressed air.

Fluid Loss During Drilling: _____ gallons
Water Removed During Development: 480 gallons
Static Depth to Water: _____ feet below M.P.
Pumping Depth to Water: _____ feet below M.P.
Pumping Duration: 4 hours
Yield: 2 gpm Date: _____
Specific Capacity: _____ gpm/ft
Well Purpose: Ground-water monitoring well

Remarks:

Prepared by: D. Colton

GERAGHTY & MILLER, INC.
Ground-Water Consultants

WELL CONSTRUCTION LOG

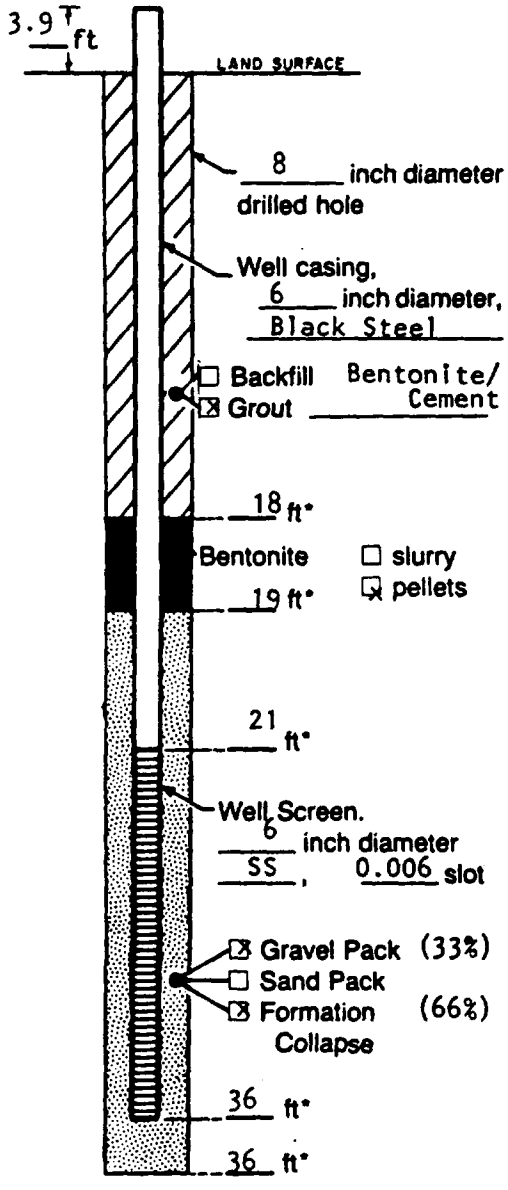

Measuring Point is Top of Well Casing Unless Otherwise Noted.

*Depth Below Land Surface

Project: Monsanto Company Well: GM-3
Town/City: Sauget
County: St. Clair State: IL
Permit No.:
Land-Surface Elevation and Datum: _____ feet ☒ surveyed
Monitoring Point 416.31 Ft (MSL) ☐ estimated
Installation Dates(s): 11/7/83
Drilling Method: Mud Rotary
Drilling Contractor: John Mathes & Assoc.
Drilling Fluid: Bentonite

Development Techniques(s) and Date(s)
Surged with compressed air.

Fluid Loss During Drilling _____ gallons
Water Removed During Development 480 gallons
Static Depth to Water _____ feet below M.P.
Pumping Depth to Water _____ feet below M.P.
Pumping Duration 4 hours
Yield 2 gpm Date _____
Specific Capacity _____ gpm/ft
Well Purpose: Ground-water monitoring well

Remarks:

Prepared by: D. Colton

GERAGHTY & MILLER, INC.
Ground-Water Consultants

WELL CONSTRUCTION LOG

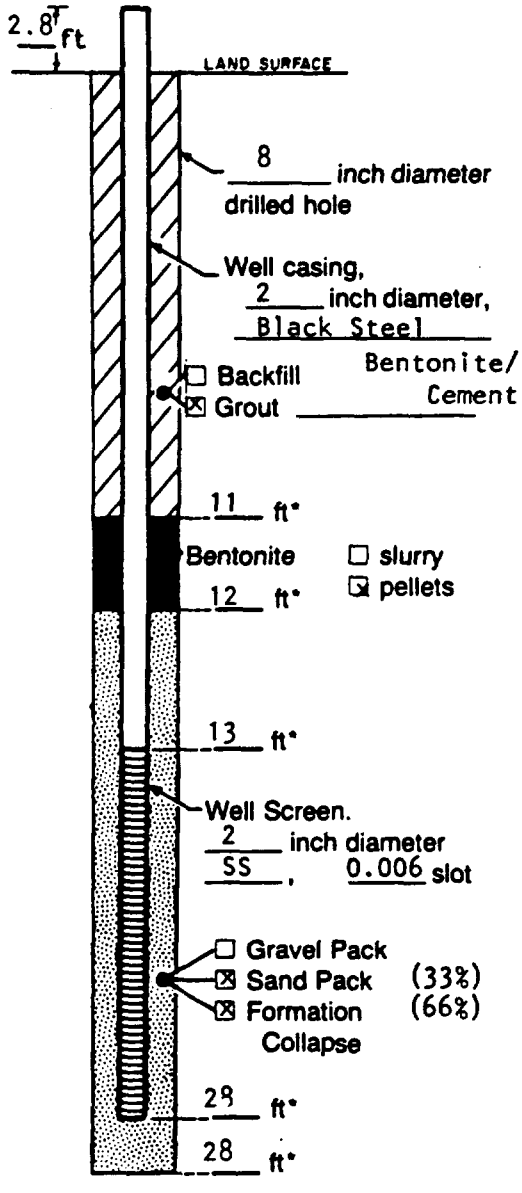

Measuring Point is Top of Well Casing Unless Otherwise Noted.

*Depth Below Land Surface

Project: Monsanto Company Well: GM-4A
Town/City: Sauget
County: St. Clair State: Illinois
Permit No.:
Land-Surface Elevation and Datum: _____ feet ☒ surveyed ☐ estimated
Measuring Point 406.43 Ft (MSL)
Installation Dates(s): 11/2/83
Drilling Method: Hollow Stem Auger
Drilling Contractor: John Mathes & Assoc.
Drilling Fluid: Water

Development Techniques(s) and Date(s)
Surged with compressed air; pumped with bladder pump.

Fluid Loss During Drilling: 150 gallons
Water Removed During Development: 240 gallons
Static Depth to Water: _____ feet below M.P.
Pumping Depth to Water: _____ feet below M.P.
Pumping Duration: 4 hours
Yield: 1 gpm Date: _____
Specific Capacity: _____ gpm/ft
Well Purpose: Ground-water monitoring well

Remarks:

Prepared by: D. Colton

GERAGHTY & MILLER, INC.
Ground-Water Consultants

WELL CONSTRUCTION LOG

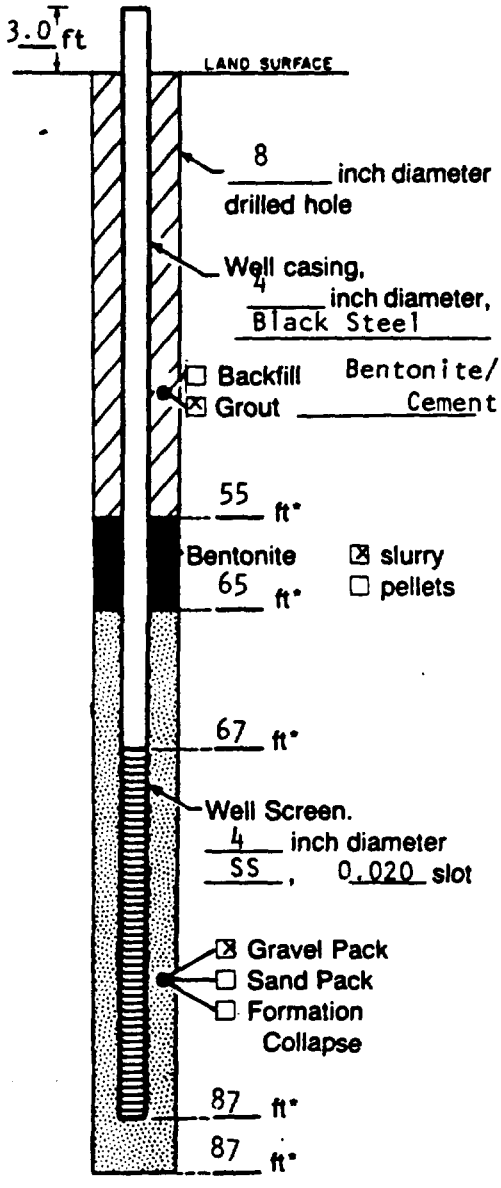

Measuring Point is Top of Well Casing Unless Otherwise Noted.

*Depth Below Land Surface

Project: Monsanto Company Well: GM-4B
Town/City: Sauget
County: St. Clair State: IL
Permit No.:
Land-Surface Elevation and Datum: _____ feet ☒ surveyed
Measuring Point 406.70 Ft (MSL) ☐ estimated
Installation Dates(s): 7/17/84
Drilling Method: Mud Rotary
Drilling Contractor: John Mathes & Assoc.
Drilling Fluid: Bentonite

Development Techniques(s) and Date(s)
Surged with compressed air.

Fluid Loss During Drilling: _____ gallons
Water Removed During Development: 1200 gallons
Static Depth to Water: _____ feet below M.P.
Pumping Depth to Water: _____ feet below M.P.
Pumping Duration: 2 hours
Yield: 10 gpm Date: _____
Specific Capacity: _____ gpm/ft
Well Purpose: Ground-water monitoring well

Remarks:

Prepared by: D. Colton

GERAGHTY & MILLER, INC.
Ground-Water Consultants

WELL CONSTRUCTION LOG

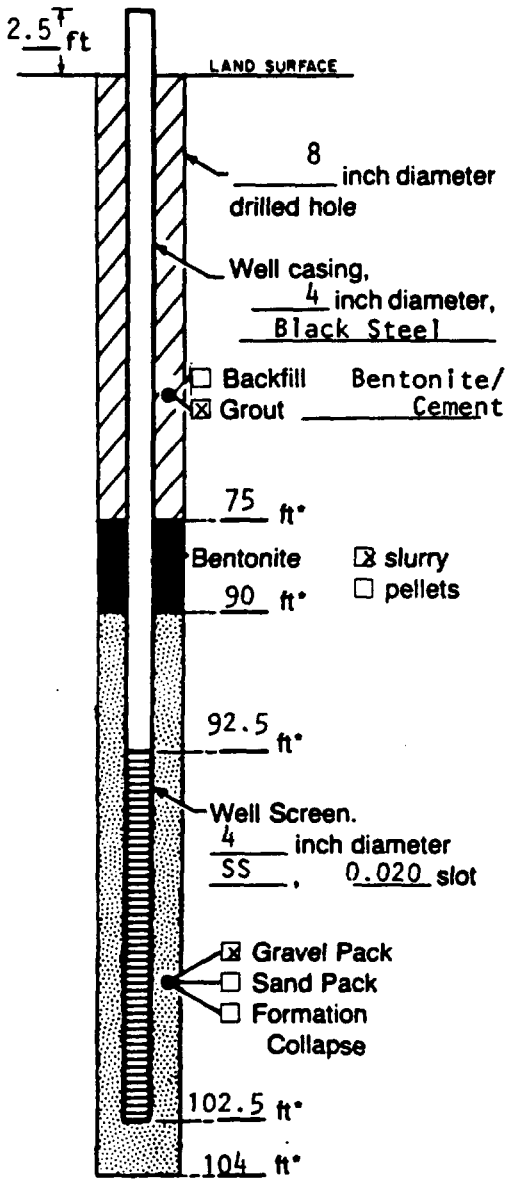

Measuring Point is Top of Well Casing Unless Otherwise Noted.

*Depth Below Land Surface

Project: Monsanto Company Well: GM-4C
Town/City: Sauget
County: St. Clair State: Il
Permit No.:
Land-Surface Elevation and Datum: _____ feet ☒ surveyed ☐ estimated
Measuring Point 406.51 Ft (MSL)
Installation Dates(s): 1/11/84
Drilling Method: Mud Rotary
Drilling Contractor: John Mathes & Assoc.
Drilling Fluid: Bentonite

Development Techniques(s) and Date(s)
Surged with compressed air.

Fluid Loss During Drilling: _____ gallons
Water Removed During Development: 1200 gallons
Static Depth to Water: _____ feet below M.P.
Pumping Depth to Water: _____ feet below M.P.
Pumping Duration: 2 hours
Yield: 10 gpm Date: _____
Specific Capacity: _____ gpm/ft
Well Purpose: Ground-water monitoring well

Remarks:

Prepared by: D. Colton

GERAGHTY & MILLER, INC.
Ground-Water Consultants

WELL CONSTRUCTION LOG

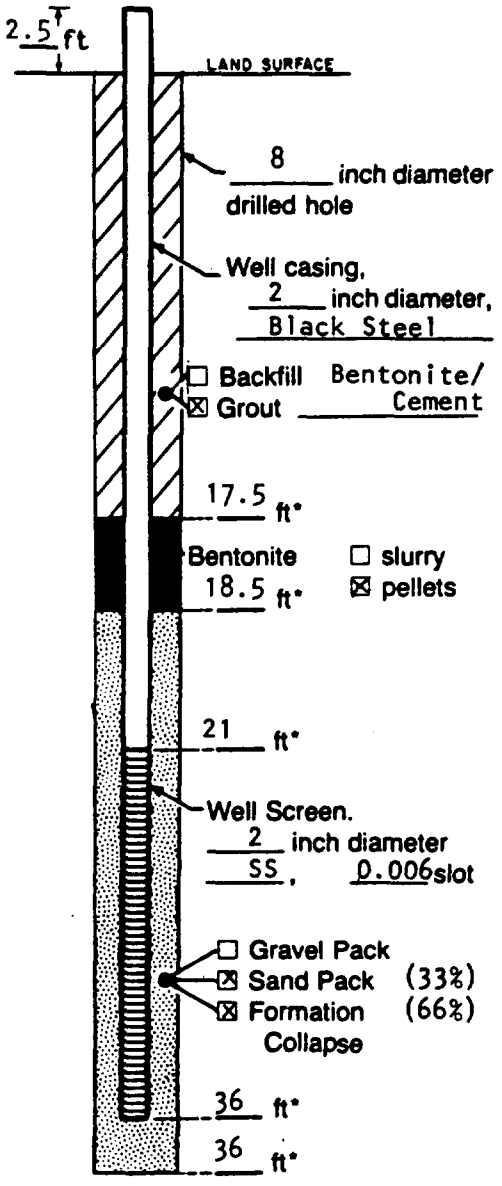

Measuring Point is Top of Well Casing Unless Otherwise Noted.

*Depth Below Land Surface

Project Monsanto Company Well GM-5
Town/City Sauget
County St. Clair State IL
Permit No.
Land-Surface Elevation
and Datum _____ feet ☒ surveyed
Measuring Point 414.94 Ft (MSL) ☐ estimated
Installation Dates(s) 11/3/83
Drilling Method Hollow Stem Auger
Drilling Contractor John Mathes & Assoc.
Drilling Fluid Water

Development Techniques(s) and Date(s)*
Pumped with bladder pump; surged with compressed air.

Fluid Loss During Drilling 200 gallons
Water Removed During Development 240 gallons
Static Depth to Water _____ feet below M.P.
Pumping Depth to Water _____ feet below M.P.
Pumping Duration 4 hours
Yield 1 gpm Date _____
Specific Capacity _____ gpm/ft
Well Purpose Ground-Water Monitoring well

Remarks

Prepared by D. Colton

GERAGHTY & MILLER, INC.
Ground-Water Consultants

WELL CONSTRUCTION LOG

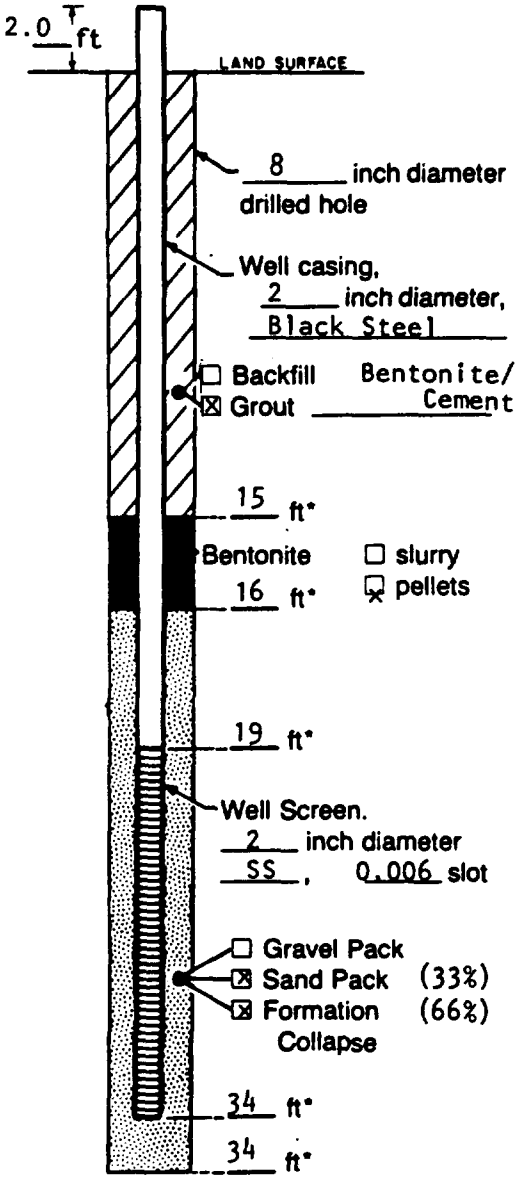

Measuring Point is Top of Well Casing Unless Otherwise Noted.

*Depth Below Land Surface

Project: Monsanto Company Well: GM-6A
Town/City: Sauget
County: St. Clair State: IL
Permit No.:
Land-Surface Elevation and Datum: _____ feet ☒ surveyed
Measuring Point 414.59 Ft (MSL) ☐ estimated
Installation Dates(s): 11/2/83
Drilling Method: Hollow Stem Auger
Drilling Contractor: John Mathes & Assoc.
Drilling Fluid: Water

Development Techniques(s) and Date(s)
Pumped with bladder pump; surged with compressed air.

Fluid Loss During Drilling: 200 gallons
Water Removed During Development: 240 gallons
Static Depth to Water: _____ feet below M.P.
Pumping Depth to Water: _____ feet below M.P.
Pumping Duration: 4 hours
Yield: 1 gpm Date: _____
Specific Capacity: _____ gpm/ft
Well Purpose: Ground-water monitoring well

Remarks:

Prepared by: D. Colton

GERAGHTY & MILLER, INC.
Ground-Water Consultants

WELL CONSTRUCTION LOG

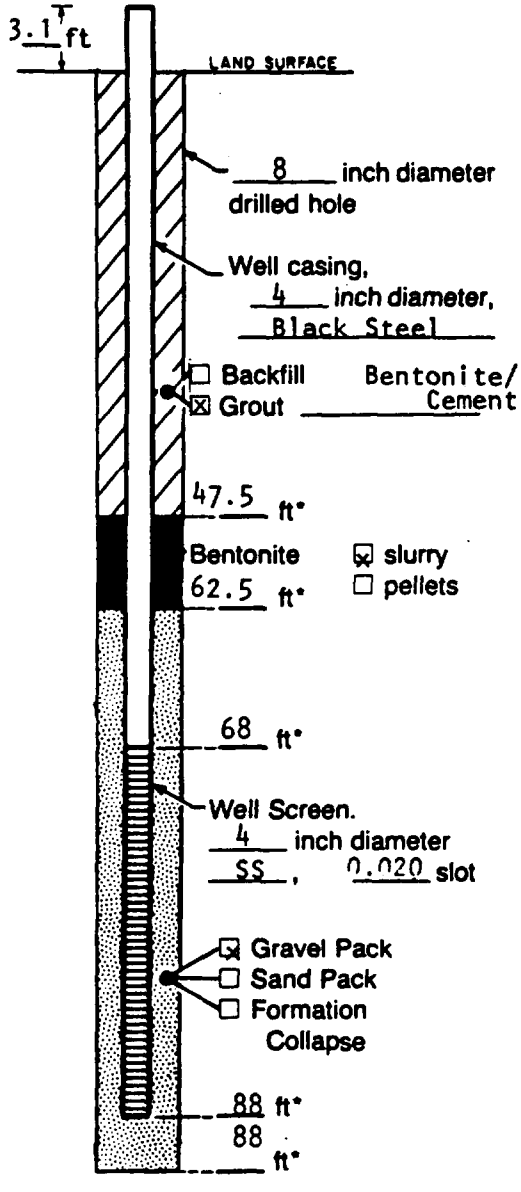

Measuring Point is Top of Well Casing Unless Otherwise Noted.

*Depth Below Land Surface

Project: Monsanto Company Well: GM-6B
Town/City: Sauget
County: St. Clair State: IL
Permit No.:
Land-Surface Elevation and Datum: _____ feet ☒ surveyed
Measuring Point 416.04 Ft (MSL) ☐ estimated
Installation Dates(s): 7/26/84
Drilling Method: Mud Rotary
Drilling Contractor: John Mathes & Assoc.
Drilling Fluid: Bentonite

Development Techniques(s) and Date(s)
Surged with compressed air.

Fluid Loss During Drilling: _____ gallons
Water Removed During Development: 1200 gallons
Static Depth to Water: _____ feet below M.P.
Pumping Depth to Water: _____ feet below M.P.
Pumping Duration: 2 hours
Yield: 10 gpm Date: _____
Specific Capacity: _____ gpm/ft
Well Purpose: Ground-water monitoring well

Remarks:

Prepared by: D. Colton

GERAGHTY & MILLER, INC.
Ground-Water Consultants

WELL CONSTRUCTION LOG

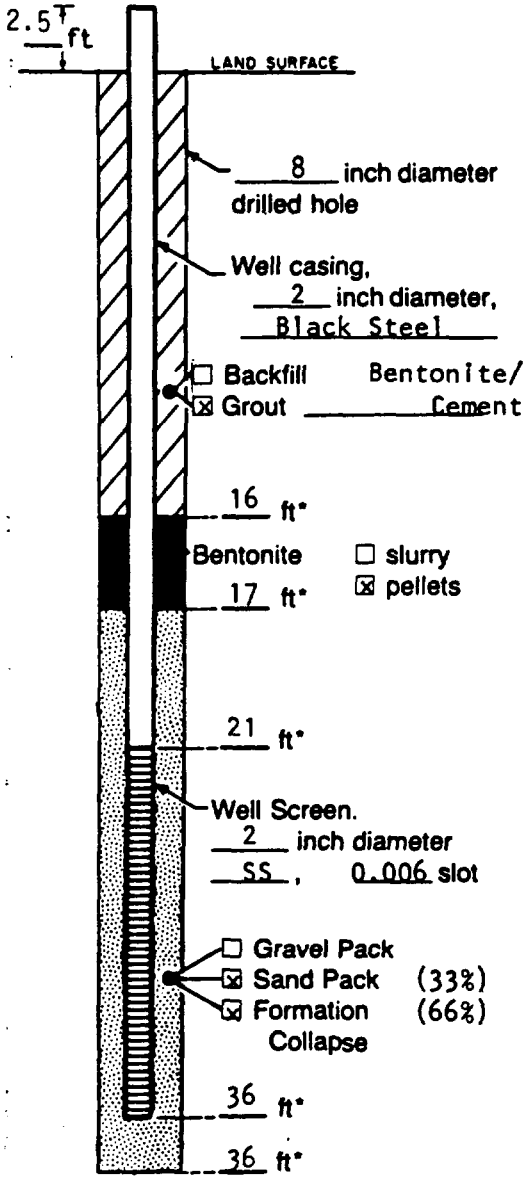

Measuring Point is Top of Well Casing Unless Otherwise Noted.

*Depth Below Land Surface

Project: Monsanto Company Well: GM-7
Town/City: Sauget
County: St. Clair State: IL
Permit No.:
Land-Surface Elevation and Datum: _____ feet ☒ surveyed
Measuring Point 414.95 Ft (MSL) ☐ estimated
Installation Dates(s): 11/3/83
Drilling Method: Hollow Stem Auger
Drilling Contractor: John Mathes & Assoc.
Drilling Fluid: Water

Development Techniques(s) and Date(s)
Pumped with bladder pump; surged with compressed air.

Fluid Loss During Drilling: _____ gallons
Water Removed During Development: 200 gallons
Static Depth to Water: 240 feet below M.P.
Pumping Depth to Water: _____ feet below M.P.
Pumping Duration: 4 hours
Yield: 1 gpm Date: _____
Specific Capacity: _____ gpm/ft
Well Purpose: Ground-water monitoring well

Remarks:

Prepared by: D. Colton

GERAGHTY & MILLER, INC.
Ground-Water Consultants

WELL CONSTRUCTION LOG

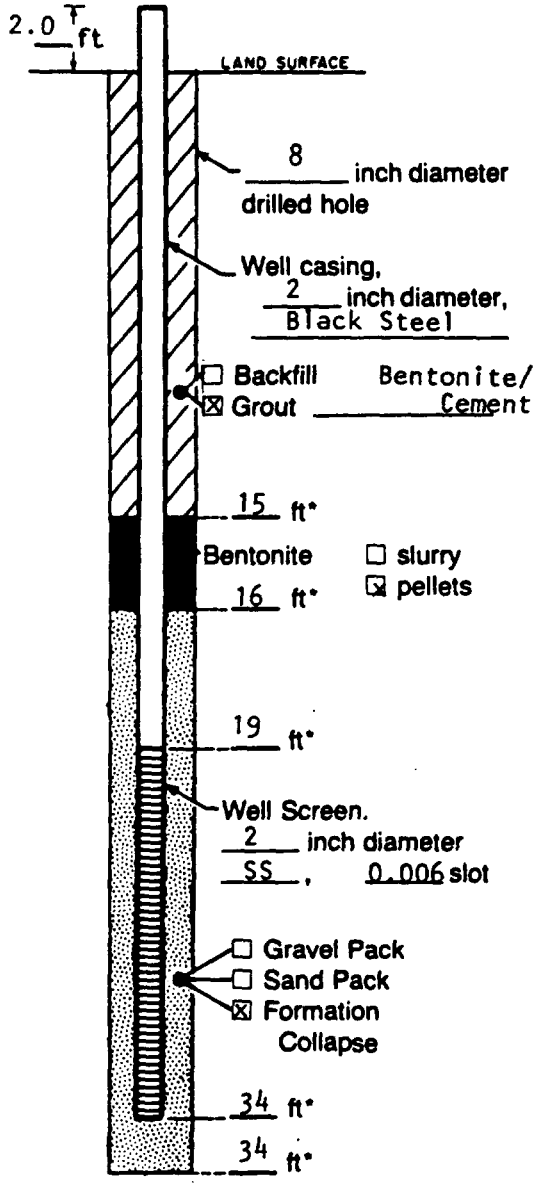

Measuring Point is Top of Well Casing Unless Otherwise Noted.

*Depth Below Land Surface

Project: Monsanto Company Well: GM-8
Town/City: Sauget
County: St. Clair State: IL
Permit No.:
Land-Surface Elevation and Datum: _____ feet ☒ surveyed
Measuring Point 418.49 Ft (MSL) ☐ estimated
Installation Dates(s): 11/2/83
Drilling Method: Hollow Stem Auger
Drilling Contractor: John Mathes & Assoc.
Drilling Fluid: Water

Development Techniques(s) and Date(s)
Pumped with bladder pump; surged with compressed air.

Fluid Loss During Drilling: 250 gallons
Water Removed During Development: 270 gallons
Static Depth to Water: _____ feet below M.P.
Pumping Depth to Water: _____ feet below M.P.
Pumping Duration: 4.5 hours
Yield: 1 gpm Date: _____
Specific Capacity: _____ gpm/ft
Well Purpose: Ground-water monitoring well

Remarks:

Prepared by: D. Colton

GERAGHTY & MILLER, INC.
Ground-Water Consultants

WELL CONSTRUCTION LOG

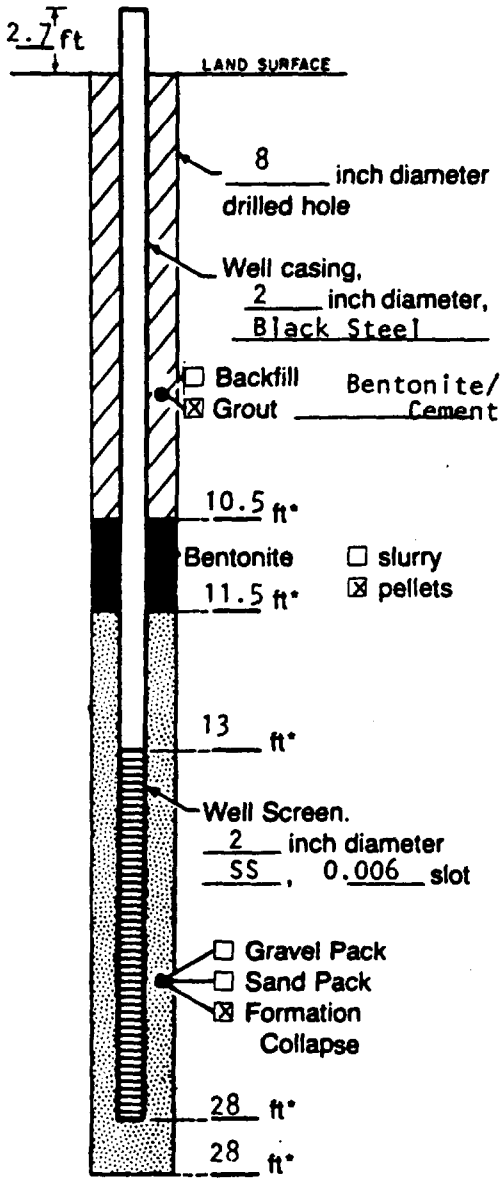

Measuring Point is Top of Well Casing Unless Otherwise Noted.

*Depth Below Land Surface

Project: Monsanto Company Well: GM-9A
Town/City: Sauget
County: St. Clair State: IL
Permit No.:
Land-Surface Elevation and Datum: _____ feet ☒ surveyed ☐ estimated
Measuring Point 414.47 Ft (MSL)
Installation Dates(s): 11/10/83
Drilling Method: Hollow Stem Auger
Drilling Contractor: John Mathes & Assoc.
Drilling Fluid: Water

Development Techniques(s) and Date(s)
Pumped with bladder pump; surged with compressed air.

Fluid Loss During Drilling: 200 gallons
Water Removed During Development: 240 gallons
Static Depth to Water: _____ feet below M.P.
Pumping Depth to Water: _____ feet below M.P.
Pumping Duration: 4 hours
Yield: 1 gpm Date: _____
Specific Capacity: _____ gpm/ft
Well Purpose: Ground-water monitoring well

Remarks:

Prepared by: D. Colton

GERAGHTY & MILLER, INC.
Ground-Water Consultants

WELL CONSTRUCTION LOG

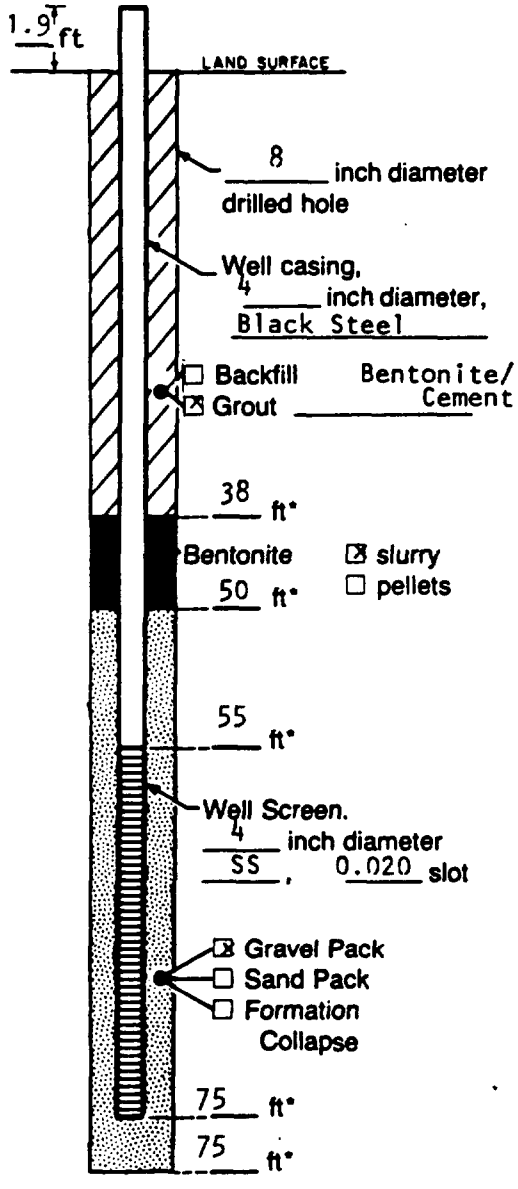

Measuring Point is Top of Well Casing Unless Otherwise Noted.

*Depth Below Land Surface

Project: Monsanto Company Well: GM-9B
Town/City: Sauget
County: St. Clair State: Il
Permit No.:
Land-Surface Elevation and Datum: _____ feet ☒ surveyed
Measuring Point 412.36 Ft (MSL) ☐ estimated
Installation Dates(s): 8/17/84
Drilling Method: Mud Rotary
Drilling Contractor: John Mathes & Assoc.
Drilling Fluid: Bentonite

Development Techniques(s) and Date(s)
Surged with compressed air.

Fluid Loss During Drilling: _____ gallons
Water Removed During Development: 1200 gallons
Static Depth to Water: _____ feet below M.P.
Pumping Depth to Water: _____ feet below M.P.
Pumping Duration: 2 hours
Yield: 10 gpm Date: _____
Specific Capacity: _____ gpm/ft
Well Purpose: Ground-water monitoring well

Remarks:

Prepared by: D. Colton

GERAGHTY & MILLER, INC.
Ground-Water Consultants

WELL CONSTRUCTION LOG

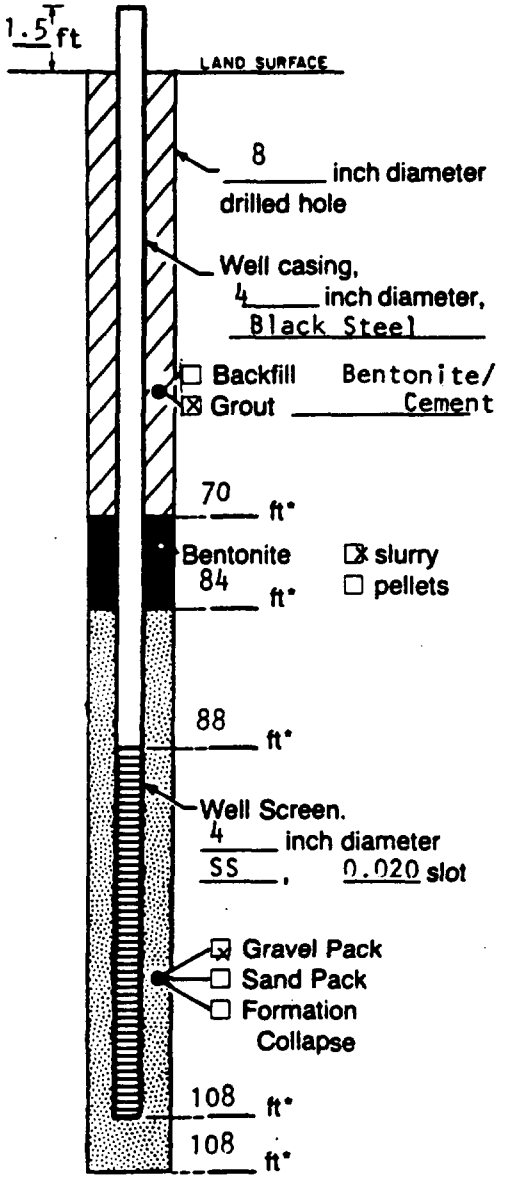

Measuring Point is Top of Well Casing Unless Otherwise Noted.

*Depth Below Land Surface

Project: Monsanto Company Well: GM-9C
Town/City: Sauget
County: St. Clair State: IL
Permit No.:
Land-Surface Elevation and Datum: _____ feet ☒ surveyed
Measuring Point 416.97 Ft (MSL) ☐ estimated
Installation Dates(s): 8/15/84
Drilling Method: Mud Rotary
Drilling Contractor: John Mathes & Assoc.
Drilling Fluid: Bentonite

Development Techniques(s) and Date(s)
Surged with compressed air.

Fluid Loss During Drilling: _____ gallons
Water Removed During Development: 1200 gallons
Static Depth to Water: _____ feet below M.P.
Pumping Depth to Water: _____ feet below M.P.
Pumping Duration: 2 hours
Yield: 10 gpm Date: _____
Specific Capacity: _____ gpm/ft
Well Purpose: Ground-water monitoring well

Remarks:

Prepared by: D. Colton

GERAGHTY & MILLER, INC.
Ground-Water Consultants

WELL CONSTRUCTION LOG

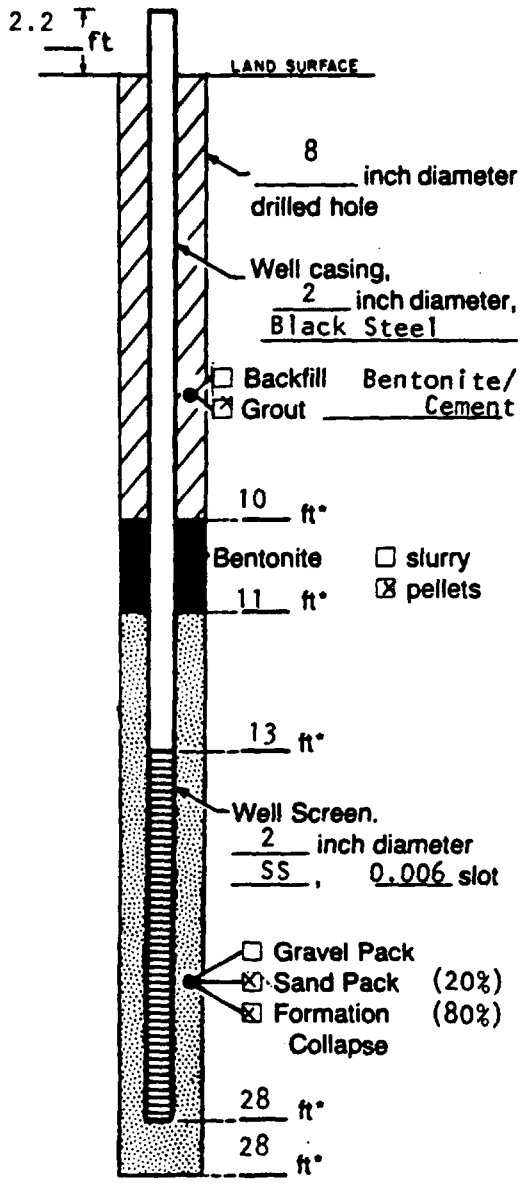

Measuring Point is Top of Well Casing Unless Otherwise Noted.

*Depth Below Land Surface

Project: Monsanto Company Well: GM-10A
Town/City: Sauget
County: St. Clair State: IL
Permit No.:
Land-Surface Elevation and Datum: _____ feet ☒ surveyed
Measuring Point 412.97 Ft (MSL) ☐ estimated
Installation Dates(s): 11/9/83
Drilling Method: Hollow Stem Auger
Drilling Contractor: John Mathes & Assoc.
Drilling Fluid: Water

Development Techniques(s) and Date(s)
Pumped with bladder pump; surged with compressed air.

Fluid Loss During Drilling: 200 gallons
Water Removed During Development: 240 gallons
Static Depth to Water: _____ feet below M.P.
Pumping Depth to Water: _____ feet below M.P.
Pumping Duration: 4 hours
Yield: 1 gpm Date: _____
Specific Capacity: _____ gpm/ft
Well Purpose: Ground-water monitoring well

Remarks:

Prepared by: D. Colton

GERAGHTY & MILLER, INC.
Ground-Water Consultants

WELL CONSTRUCTION LOG

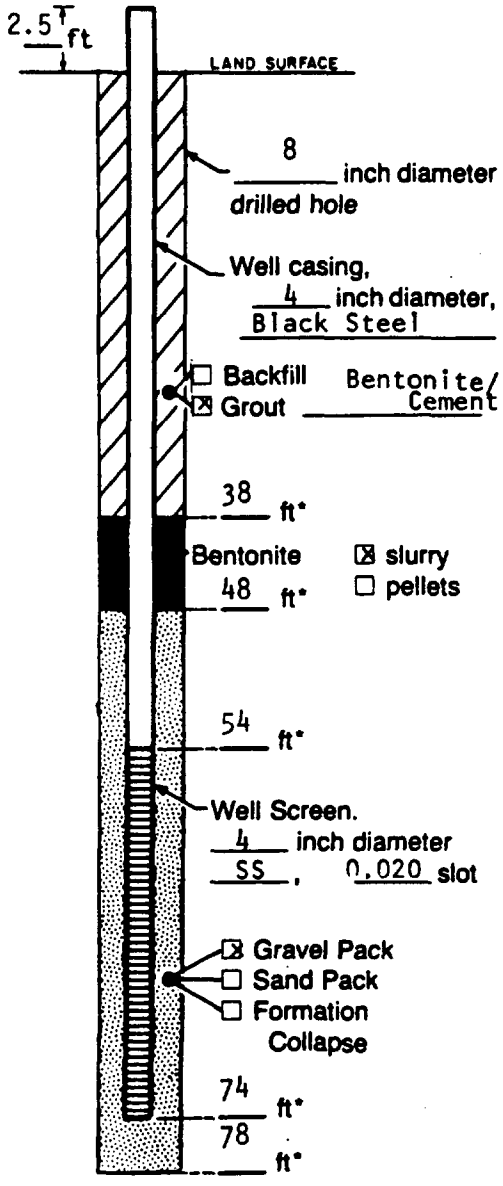

Measuring Point is Top of Well Casing Unless Otherwise Noted.

*Depth Below Land Surface

Project: Monsanto Company Well: GM-10B
Town/City: Sauget
County: St. Clair State: IL
Permit No.:
Land-Surface Elevation and Datum: _____ feet ☒ surveyed ☐ estimated
Measuring Point 413.90 Ft (MSL)
Installation Dates(s): 1/22/85
Drilling Method: Mud Rotary
Drilling Contractor: John Mathes & Assoc.
Drilling Fluid: Bentonite

Development Techniques(s) and Date(s)
Surged with compressed air.

Fluid Loss During Drilling: _____ gallons
Water Removed During Development: 1200 gallons
Static Depth to Water: _____ feet below M.P.
Pumping Depth to Water: _____ feet below M.P.
Pumping Duration: 2 hours
Yield: 10 gpm Date: _____
Specific Capacity: _____ gpm/ft
Well Purpose: Ground-water monitoring well

Remarks:

Prepared by: D. Colton

GERAGHTY & MILLER, INC.
Ground-Water Consultants

WELL CONSTRUCTION LOG

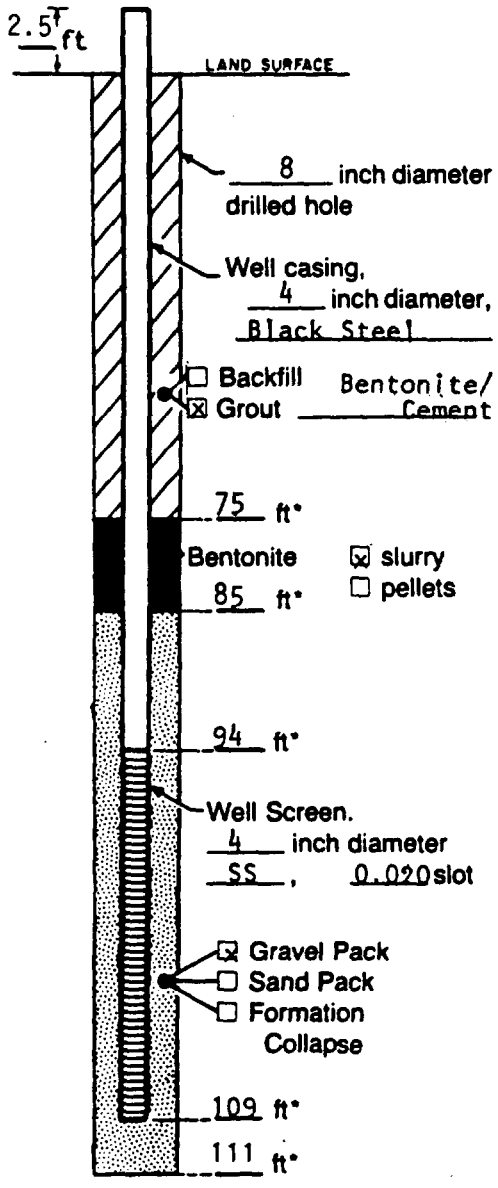

Measuring Point is Top of Well Casing Unless Otherwise Noted.

*Depth Below Land Surface

Project: Monsanto Company Well: GM-10C
Town/City: Sauget
County: St. Clair State: IL
Permit No.:
Land-Surface Elevation and Datum: _____ feet ☒ surveyed
Measuring Point 413.78 Ft (MSL) ☐ estimated
Installation Dates(s): 1/18/85
Drilling Method: Mud Rotary
Drilling Contractor: John Mathes & Assoc.
Drilling Fluid: Bentonite

Development Techniques(s) and Date(s)
Surged with compressed air.

Fluid Loss During Drilling _____ gallons
Water Removed During Development 1200 gallons
Static Depth to Water _____ feet below M.P.
Pumping Depth to Water _____ feet below M.P.
Pumping Duration 2 hours
Yield 10 gpm Date _____
Specific Capacity _____ gpm/ft
Well Purpose: Ground-water monitoring well

Remarks:

Prepared by: D. Colton

GERAGHTY & MILLER, INC.
Ground-Water Consultants

WELL CONSTRUCTION LOG

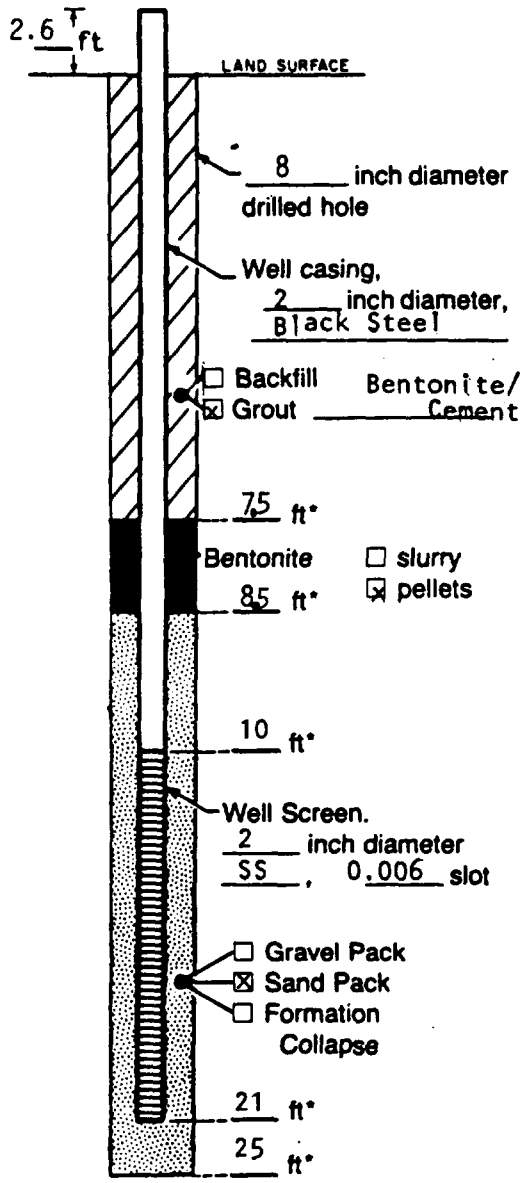

Measuring Point is Top of Well Casing Unless Otherwise Noted.

*Depth Below Land Surface

Project: Monsanto Company Well: GM-11
Town/City: Sauget
County: St. Clair State: IL
Permit No.:
Land-Surface Elevation and Datum: _____ feet ☒ surveyed
Measuring Point 412.95 Ft (MSL) ☐ estimated
Installation Dates(s): 10/31/83
Drilling Method: Hollow Stem Auger
Drilling Contractor: John Mathes & Assoc.
Drilling Fluid: Water

Development Techniques(s) and Date(s)
Pumped with bladder pump; surged with compressed air.

Fluid Loss During Drilling: 200 gallons
Water Removed During Development: 240 gallons
Static Depth to Water: _____ feet below M.P.
Pumping Depth to Water: _____ feet below M.P.
Pumping Duration: 4 hours
Yield: 1 gpm Date: _____
Specific Capacity: _____ gpm/ft
Well Purpose: Ground-water monitoring well

Remarks:

Prepared by: D. Colton

GERAGHTY & MILLER, INC.
Ground-Water Consultants

WELL CONSTRUCTION LOG

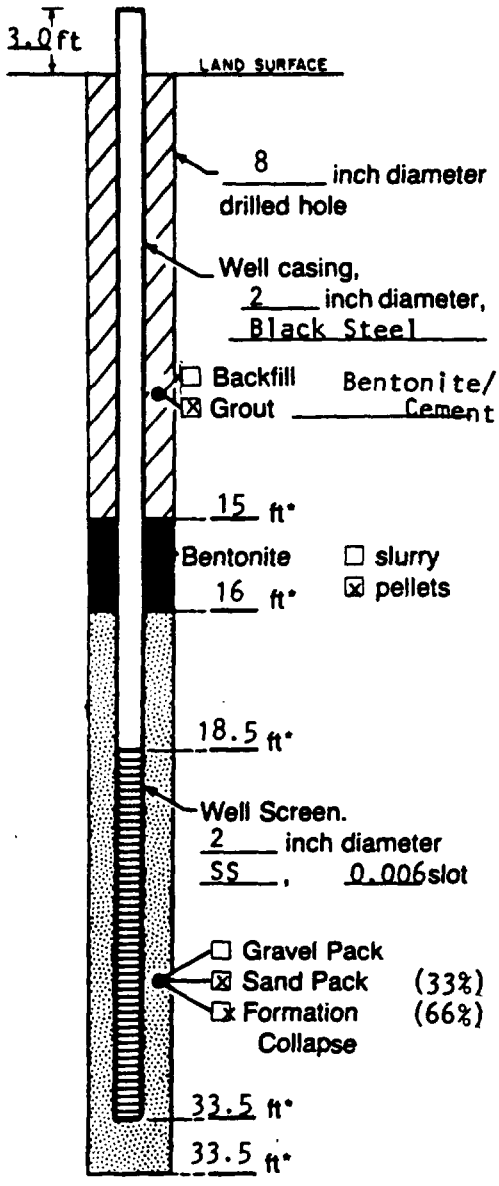

Measuring Point is Top of Well Casing Unless Otherwise Noted.

*Depth Below Land Surface

Project: Monsanto Company Well: GM-12A
Town/City: Sauget
County: St. Clair State: IL
Permit No.:
Land-Surface Elevation and Datum: _____ feet ☒ surveyed
Measuring Point 416.47 Ft (MSL) ☐ estimated
Installation Dates(s): 11/9/83
Drilling Method: Hollow Stem Auger
Drilling Contractor: John Mathes & Assoc.
Drilling Fluid: Water

Development Techniques(s) and Date(s)
Pumped with bladder pump; surged with compressed air.

Fluid Loss During Drilling: 200 gallons
Water Removed During Development: 240 gallons
Static Depth to Water: _____ feet below M.P.
Pumping Depth to Water: _____ feet below M.P.
Pumping Duration: 4 hours
Yield: 1 gpm Date: _____
Specific Capacity: _____ gpm/ft
Well Purpose: Ground-water monitoring well

Remarks:

Prepared by: D. Colton

GERAGHTY & MILLER, INC.
Ground-Water Consultants

WELL CONSTRUCTION LOG

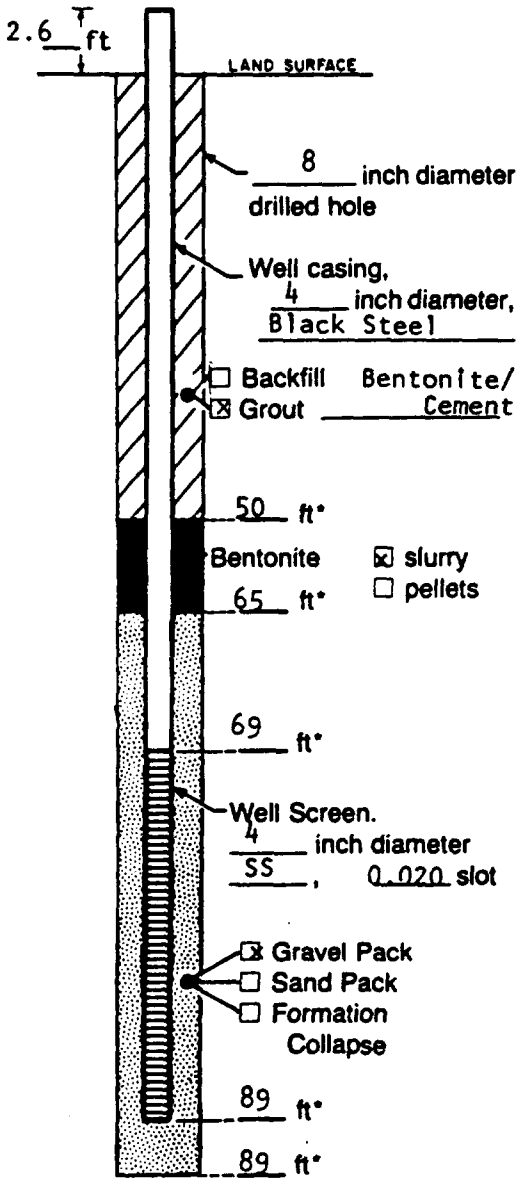

Measuring Point is Top of Well Casing Unless Otherwise Noted.

*Depth Below Land Surface

Project: Monsanto Company Well: GM-12B
Town/City: Sauget
County: St. Clair State: IL
Permit No.:
Land-Surface Elevation and Datum: _____ feet ☒ surveyed ☐ estimated
Measuring Point 416.80 Ft (MSL)
Installation Dates(s): 8/13/84
Drilling Method: Mud Rotary
Drilling Contractor: John Mathes & Assoc.
Drilling Fluid: Bentonite

Development Techniques(s) and Date(s)
Surged with compressed air.

Fluid Loss During Drilling: _____ gallons
Water Removed During Development: 1200 gallons
Static Depth to Water: _____ feet below M.P.
Pumping Depth to Water: _____ feet below M.P.
Pumping Duration: 2 hours
Yield: 10 gpm Date: _____
Specific Capacity: _____ gpm/ft
Well Purpose: Ground-water monitoring well

Remarks:

Prepared by: D. Colton

GERAGHTY & MILLER, INC.
Ground-Water Consultants

WELL CONSTRUCTION LOG

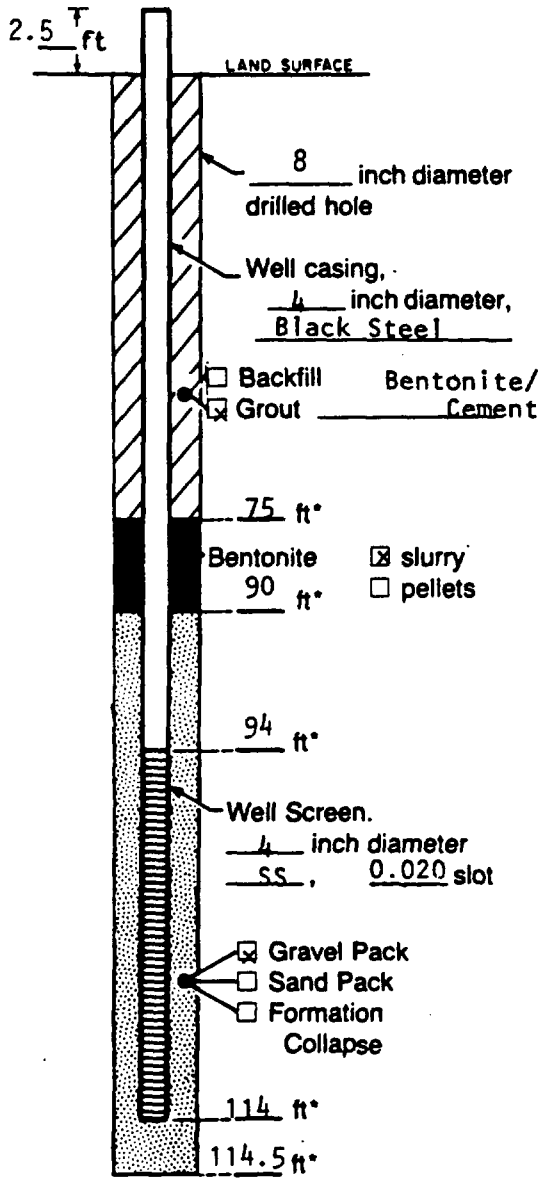

Measuring Point is Top of Well Casing Unless Otherwise Noted.

*Depth Below Land Surface

Project: Monsanto Company Sauget — Well: GM-12C
Town/City:
County: St. Clair — State: IL
Permit No.:
Land-Surface Elevation and Datum: _____ feet ☒ surveyed ☐ estimated
Measuring Point 416.79 Ft (MSL)
Installation Dates(s): 1/17/85
Drilling Method: Mud Rotary
Drilling Contractor: John Mathes & Assoc.
Drilling Fluid: Bentonite

Development Techniques(s) and Date(s)
Surged with compressed air.

Fluid Loss During Drilling: _____ gallons
Water Removed During Development: 1200 gallons
Static Depth to Water: _____ feet below M.P.
Pumping Depth to Water: _____ feet below M.P.
Pumping Duration: 2 hours
Yield: 10 gpm — Date: _____
Specific Capacity: _____ gpm/ft
Well Purpose: Ground-water monitoring well

Remarks:

Prepared by: D. Colton

GERAGHTY & MILLER, INC.
Ground-Water Consultants

WELL CONSTRUCTION LOG

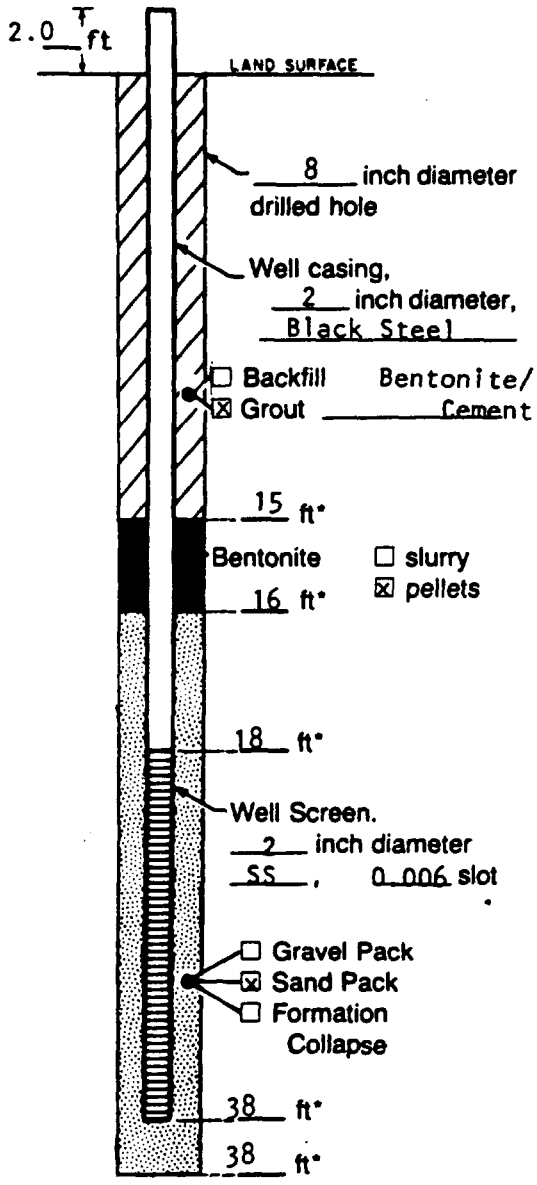

Measuring Point is Top of Well Casing Unless Otherwise Noted.

*Depth Below Land Surface

Project: Monsanto Company Well: GM-13
Town/City: Sauget
County: St. Clair State: IL
Permit No.:
Land-Surface Elevation and Datum: _____ feet ☒ surveyed
Measuring Point 415.47 Ft (MSL) ☐ estimated
Installation Dates(s): 8/15/84
Drilling Method: Hollow Stem Auger
Drilling Contractor: John Mathes & Assoc.
Drilling Fluid: Water

Development Techniques(s) and Date(s)
Surged with compressed air.

Fluid Loss During Drilling: 200 gallons
Water Removed During Development: 210 gallons
Static Depth to Water: _____ feet below M.P.
Pumping Depth to Water: _____ feet below M.P.
Pumping Duration: 3 hours
Yield: 1.5 gpm Date: _____
Specific Capacity: _____ gpm/ft
Well Purpose: Ground-water monitoring well

Remarks:

Prepared by: D. Colton

GERAGHTY & MILLER, INC.
Ground-Water Consultants

WELL CONSTRUCTION LOG

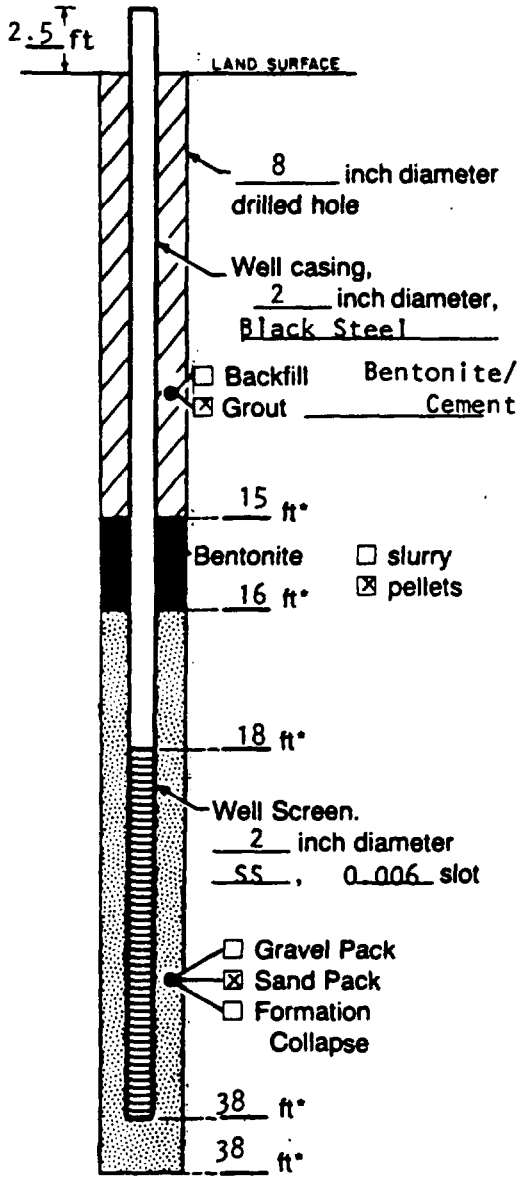

Measuring Point is Top of Well Casing Unless Otherwise Noted.

*Depth Below Land Surface

Project: Monsanto Company Well: GM-14
Town/City: Sauget
County: St. Clair State: Il
Permit No.:
Land-Surface Elevation and Datum: _____ feet ☒ surveyed
Measuring Point 411.26 Ft (MSL) ☐ estimated
Installation Dates(s): 8/16/84
Drilling Method: Hollow Stem Auger
Drilling Contractor: John Mathes & Assoc.
Drilling Fluid: Water

Development Techniques(s) and Date(s)
Surged with compressed air.

Fluid Loss During Drilling: 200 gallons
Water Removed During Development: 210 gallons
Static Depth to Water: _____ feet below M.P.
Pumping Depth to Water: _____ feet below M.P.
Pumping Duration: 3 hours
Yield: 1.5 gpm Date: _____
Specific Capacity: _____ gpm/ft
Well Purpose: Ground-water monitoring well

Remarks:

Prepared by: D. Colton

GERAGHTY & MILLER, INC.
Ground-Water Consultants

WELL CONSTRUCTION LOG

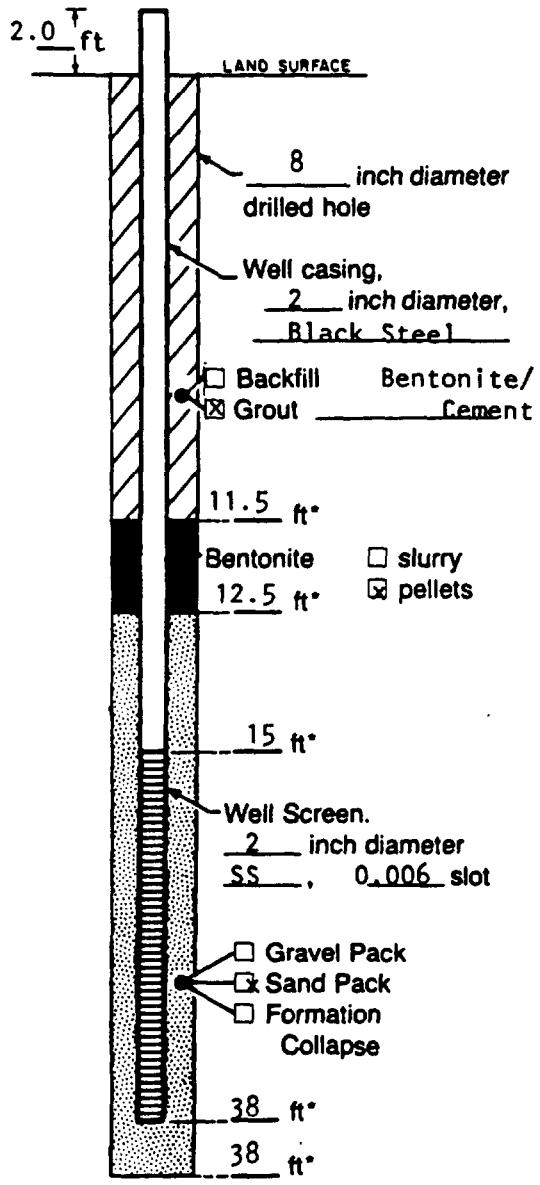

Measuring Point is Top of Well Casing Unless Otherwise Noted.

*Depth Below Land Surface

Project Monsanto Company Well GM-15
Town/City Sauget
County St. Clair State IL
Permit No.
Land-Surface Elevation
and Datum _____ feet ☒ surveyed
measuring point 413.71 ft (msl) ☐ estimated
Installation Dates(s) 8/17/84
Drilling Method hollow stem auger
Drilling Contractor John Mathes & Associates, Inc.
Drilling Fluid water

Development Techniques(s) and Date(s)
surged with compressed air

Fluid Loss During Drilling 200 gallons
Water Removed During Development 210 gallons
Static Depth to Water _____ feet below M.P.
Pumping Depth to Water _____ feet below M.P.
Pumping Duration 3 hours
Yield 1.5 gpm Date _____
Specific Capacity _____ gpm/ft
Well Purpose ground-water monitoring well

Remarks

Prepared by D. Colton

GERAGHTY & MILLER, INC.
Ground-Water Consultants

WELL CONSTRUCTION LOG

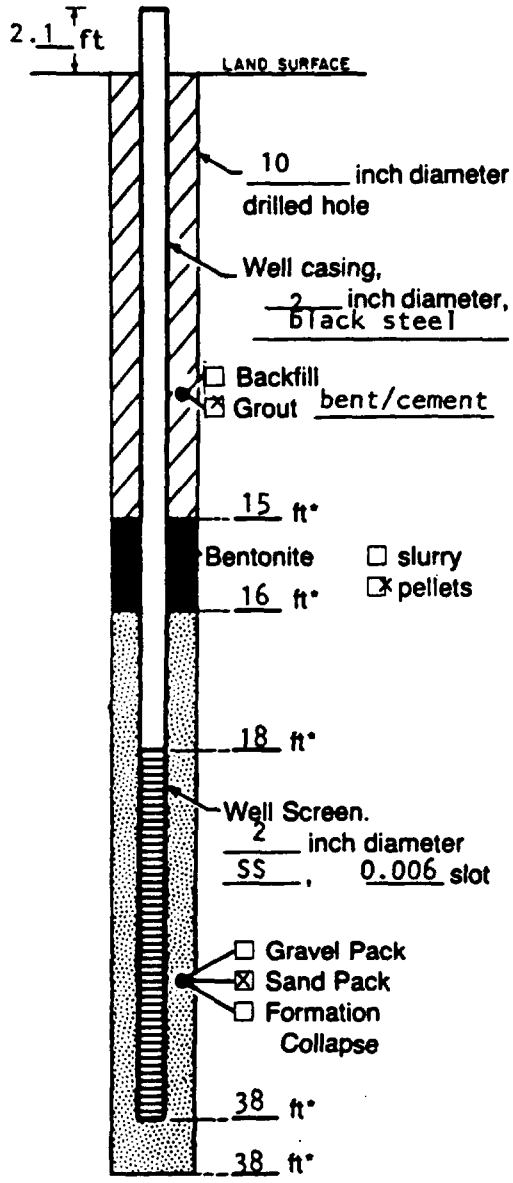

Measuring Point is Top of Well Casing Unless Otherwise Noted.

*Depth Below Land Surface

Project Monsanto Company Well GM-16A
Town/City Sauget
County St. Clair State IL
Permit No. _____
Land-Surface Elevation
and Datum _____ feet ☒ surveyed
Measuring point 412.03 ft (msl) ☐ estimated
Installation Dates(s) 8/14/86
Drilling Method hollow stem augers
Drilling Contractor John Mathes & Associates, Inc.
Drilling Fluid water

Development Techniques(s) and Date(s)
surged with compressed air

Fluid Loss During Drilling 300 gallons
Water Removed During Development 360 gallons
Static Depth to Water _____ feet below M.P.
Pumping Depth to Water _____ feet below M.P.
Pumping Duration 3 hours
Yield 2 gpm Date _____
Specific Capacity _____ gpm/ft
Well Purpose ground-water monitoring well

Remarks

Prepared by D. Colton

GERAGHTY & MILLER, INC.
Ground-Water Consultants

WELL CONSTRUCTION LOG

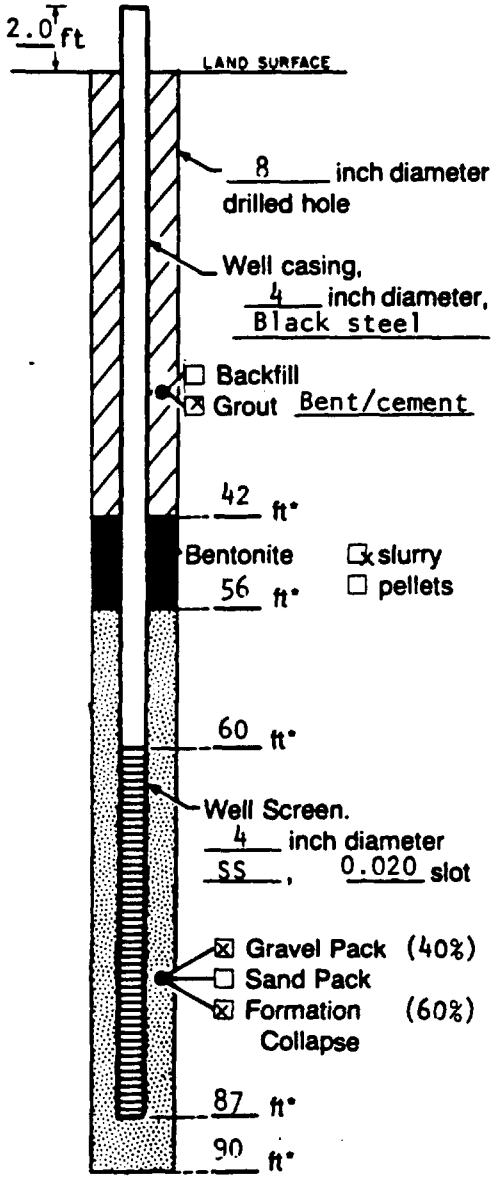

Measuring Point is Top of Well Casing Unless Otherwise Noted.

*Depth Below Land Surface

Project Monsanto Company Well GM-16B
Town/City Sauget
County St. Clair State IL
Permit No.
Land-Surface Elevation
and Datum _____ feet ☒ surveyed
measuring point 412.40 ft (msl) ☐ estimated
Installation Dates(s) 8/9/84
Drilling Method mud rotary
Drilling Contractor John Mathes & Associates, Inc.
Drilling Fluid bentonite

Development Techniques(s) and Date(s)
surged with compressed air

Fluid Loss During Drilling 1200 gallons
Water Removed During Development _____ gallons
Static Depth to Water _____ feet below M.P.
Pumping Depth to Water _____ feet below M.P.
Pumping Duration 2 hours
Yield 10 gpm Date _____
Specific Capacity _____ gpm/ft
Well Purpose ground-water monitoring well

Remarks

Prepared by D. Colton

GERAGHTY & MILLER, INC.
Ground-Water Consultants

WELL CONSTRUCTION LOG

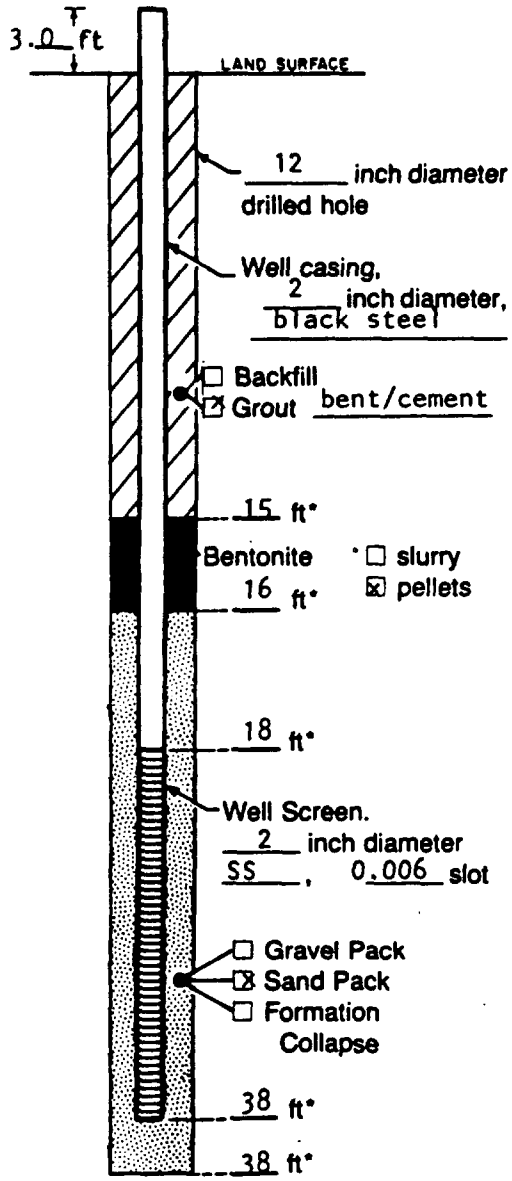

Measuring Point is Top of Well Casing Unless Otherwise Noted.

*Depth Below Land Surface

Project Monsanto Company Well GM-17A
Town/City Sauget
County St. Clair State IL
Permit No.
Land-Surface Elevation
and Datum _____ feet ☒ surveyed
measuring point 412.57 ft (msl) ☐ estimated
Installation Dates(s) 7-6-84
Drilling Method hollow stem auger
Drilling Contractor John Mathes & Associates, Inc.
Drilling Fluid water

Development Techniques(s) and Date(s)
surged with compressed air

Fluid Loss During Drilling 300 gallons
Water Removed During Development 360 gallons
Static Depth to Water _____ feet below M.P.
Pumping Depth to Water _____ feet below M.P.
Pumping Duration 3 hours
Yield 2 gpm Date _____
Specific Capacity _____ gpm/ft
Well Purpose ground-water monitoring wells

Remarks

Prepared by D. Colton

GERAGHTY & MILLER, INC.
Ground-Water Consultants

WELL CONSTRUCTION LOG

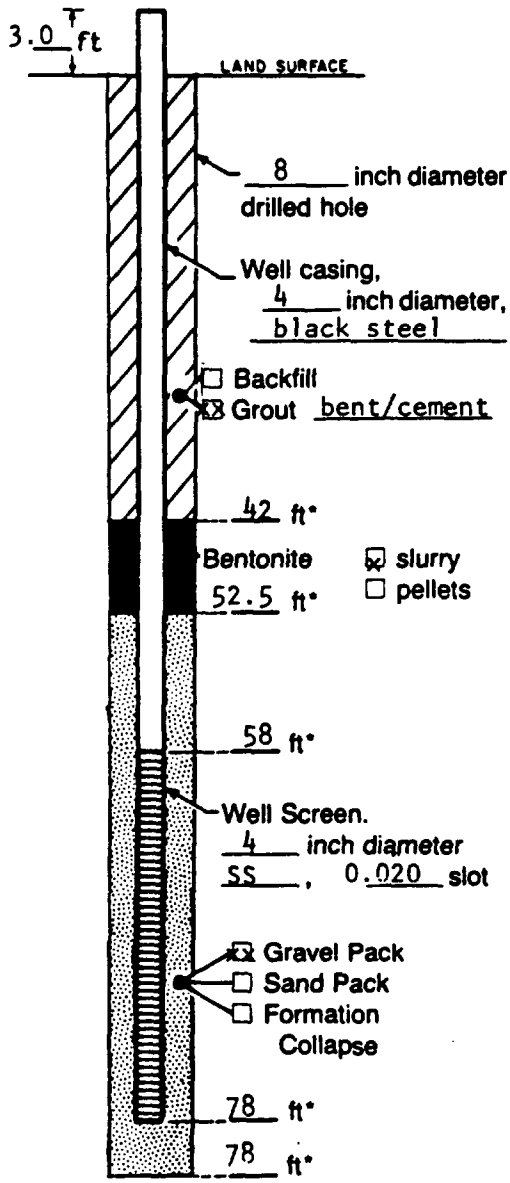

Measuring Point is Top of Well Casing Unless Otherwise Noted.

*Depth Below Land Surface

Project Monsanto Company Well GM-17B
Town/City Sauget
County St. Clair State IL
Permit No.
Land-Surface Elevation and Datum _____ feet ☒ surveyed
measuring point 412.93 ft (msl) ☐ estimated
Installation Dates(s) 7/25/84
Drilling Method mud rotary
Drilling Contractor John Mathes & Associates, Inc.
Drilling Fluid bentonite

Development Techniques(s) and Date(s)
surged with compressed air

Fluid Loss During Drilling _____ gallons
Water Removed During Development 1200 gallons
Static Depth to Water _____ feet below M.P.
Pumping Depth to Water _____ feet below M.P.
Pumping Duration 2 hours
Yield 10 gpm Date _____
Specific Capacity _____ gpm/ft
Well Purpose ground-water monitoring well

Remarks

Prepared by D. Colton

GERAGHTY & MILLER, INC.
Ground-Water Consultants

WELL CONSTRUCTION LOG

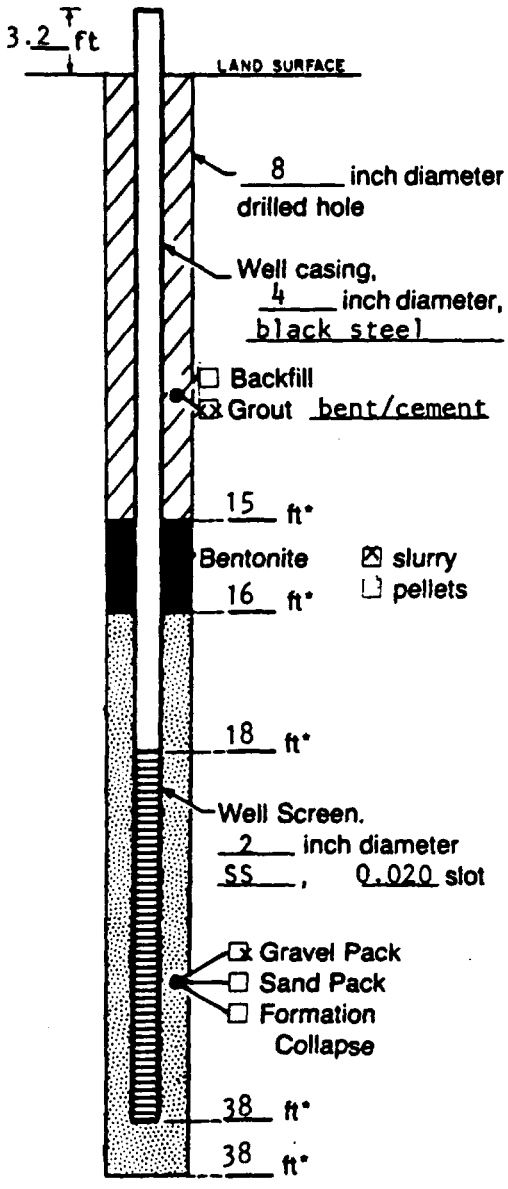

Measuring Point is Top of Well Casing Unless Otherwise Noted.

*Depth Below Land Surface

Project Monsanto Company Well GM-17C
Town/City Sauget
County St. Clair State Illinois
Permit No.
Land-Surface Elevation and Datum _____ feet ☒ surveyed ☐ estimated
measuring point 412.42 ft (msl)
Installation Dates(s) 7/24/84
Drilling Method mud rotary
Drilling Contractor John Mathes & Associates, Inc.
Drilling Fluid Bentonite

Development Techniques(s) and Date(s)
surged with compressed air

Fluid Loss During Drilling _____ gallons
Water Removed During Development 1200 gallons
Static Depth to Water _____ feet below M.P.
Pumping Depth to Water _____ feet below M.P.
Pumping Duration 2 hours
Yield 10 gpm Date _____
Specific Capacity _____ gpm/ft
Well Purpose ground-water monitoring well

Remarks

Prepared by D. Colton

GERAGHTY & MILLER, INC.
Ground-Water Consultants

WELL CONSTRUCTION LOG

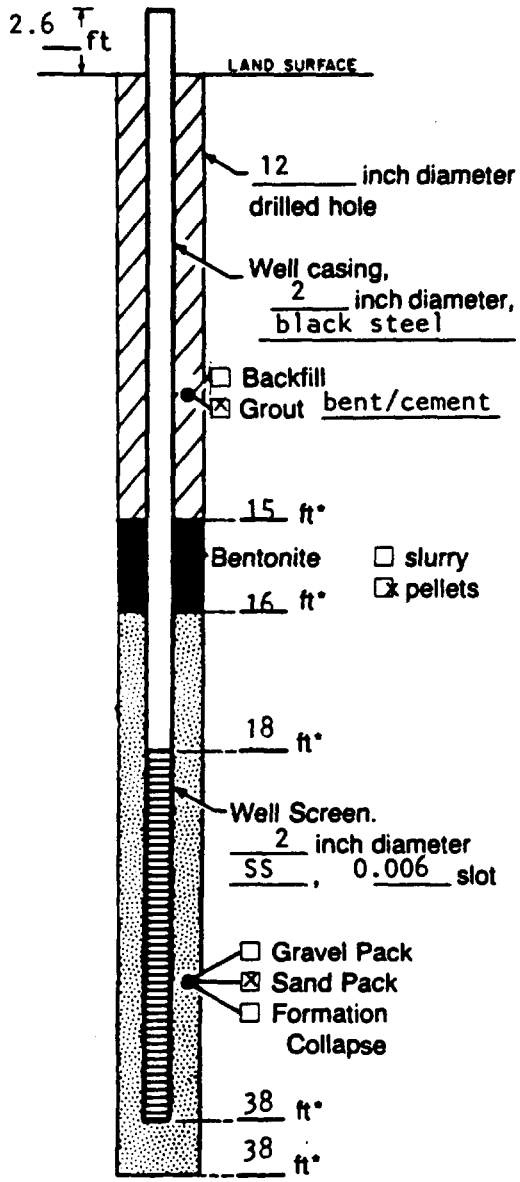

Measuring Point is Top of Well Casing Unless Otherwise Noted.

*Depth Below Land Surface

Project Monsanto Company Well GM-18A
Town/City Saguet
County St. Clair State IL
Permit No.
Land-Surface Elevation
and Datum _____ feet ☒ surveyed
measuring point 414.23 ft (msl) ☐ estimated
Installation Dates(s) 7/5/84
Drilling Method hollow stem auger
Drilling Contractor John Mathes & Associates Inc.
Drilling Fluid water

Development Techniques(s) and Date(s)
surged with compressed air

Fluid Loss During Drilling 300 gallons
Water Removed During Development 360 gallons
Static Depth to Water _____ feet below M.P.
Pumping Depth to Water _____ feet below M.P.
Pumping Duration 3 hours
Yield 2 gpm Date _____
Specific Capacity _____ gpm/ft
Well Purpose ground-water monitoring wells

Remarks

Prepared by D. Colton

GERAGHTY & MILLER, INC.
Ground-Water Consultants

WELL CONSTRUCTION LOG

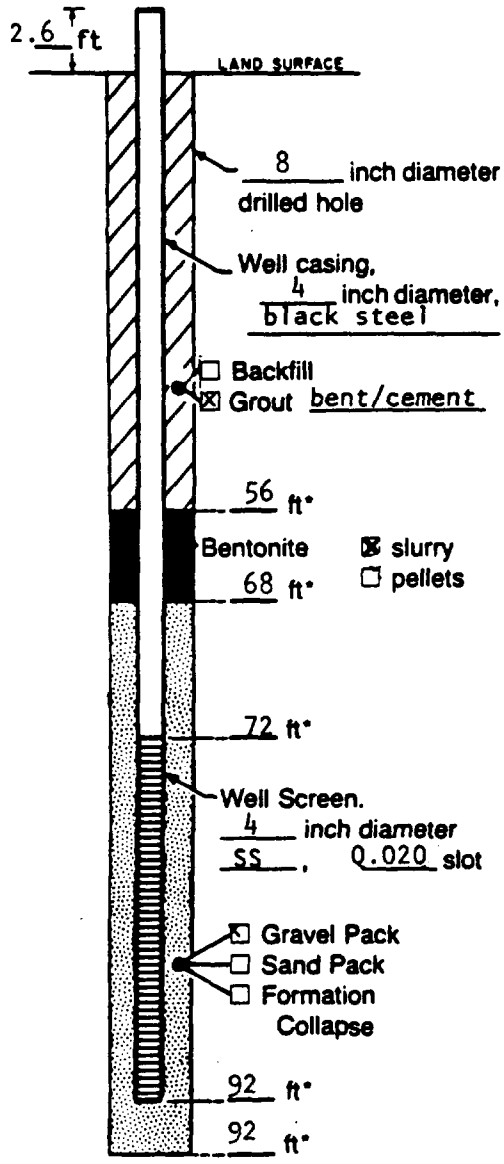

Measuring Point is Top of Well Casing Unless Otherwise Noted.

*Depth Below Land Surface

Project Monsanto Company Well GM-18B
Town/City Sauget
County St. Clair State IL
Permit No.
Land-Surface Elevation
and Datum _____ feet ☒ surveyed
measuring point 414.02 ft (msl) ☐ estimated
Installation Dates(s) 7/12/84
Drilling Method mud rotary
Drilling Contractor John Mathes & Associates, Inc.
Drilling Fluid bentonite

Development Techniques(s) and Date(s)
surged with compressed air

Fluid Loss During Drilling _____ gallons
Water Removed During Development 1200 gallons
Static Depth to Water _____ feet below M.P.
Pumping Depth to Water _____ feet below M.P.
Pumping Duration 2 hours
Yield 10 gpm Date _____
Specific Capacity _____ gpm/ft
Well Purpose ground-water monitoring well

Remarks

Prepared by D. Colton

GERAGHTY & MILLER, INC.
Ground-Water Consultants

WELL CONSTRUCTION LOG

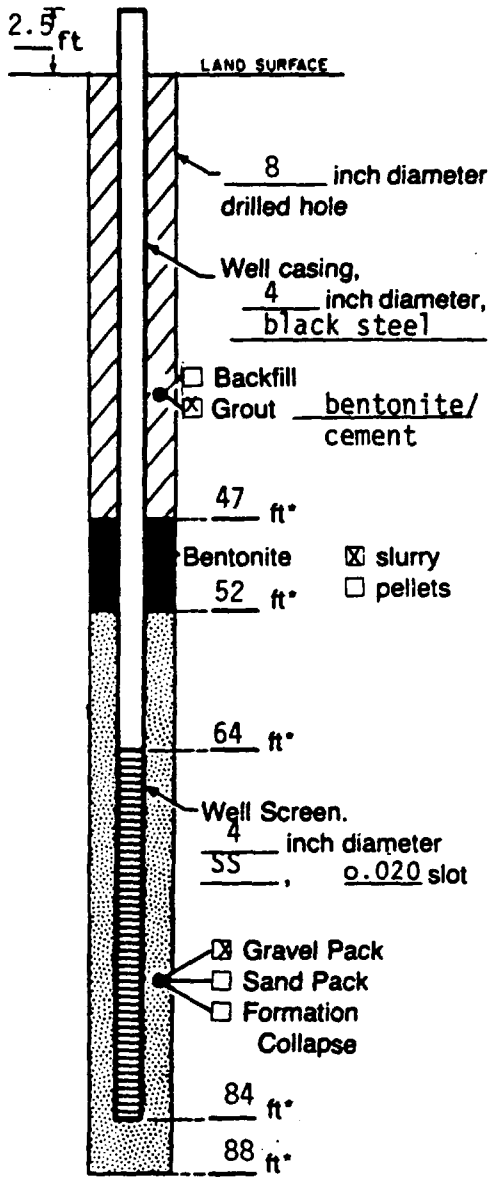

Measuring Point is Top of Well Casing Unless Otherwise Noted.

*Depth Below Land Surface

Project: Sauget Sanitary Dev. & Res. Assoc. Well: GM-21B
Town/City: Sauget
County: St. Clair State: Illinois
Permit No.:
Land-Surface Elevation and Datum: _____ feet ☒ surveyed ☐ estimated
Measuring point 414.74 ft (MSL)
Installation Dates(s): 1-15-85
Drilling Method: Mud rotary
Drilling Contractor: John Mathes & Associates, Inc.
Drilling Fluid: bentonite

Development Techniques(s) and Date(s)
Surged compressed air

Fluid Loss During Drilling: _____ gallons
Water Removed During Development: 1200 gallons
Static Depth to Water: _____ feet below M.P.
Pumping Depth to Water: _____ feet below M.P.
Pumping Duration: 2 hours
Yield: 10 gpm Date: _____
Specific Capacity: _____ gpm/ft
Well Purpose: Ground-water monitoring well

Remarks:

Prepared by: D. Colton

GERAGHTY & MILLER, INC.
Ground-Water Consultants

WELL CONSTRUCTION LOG

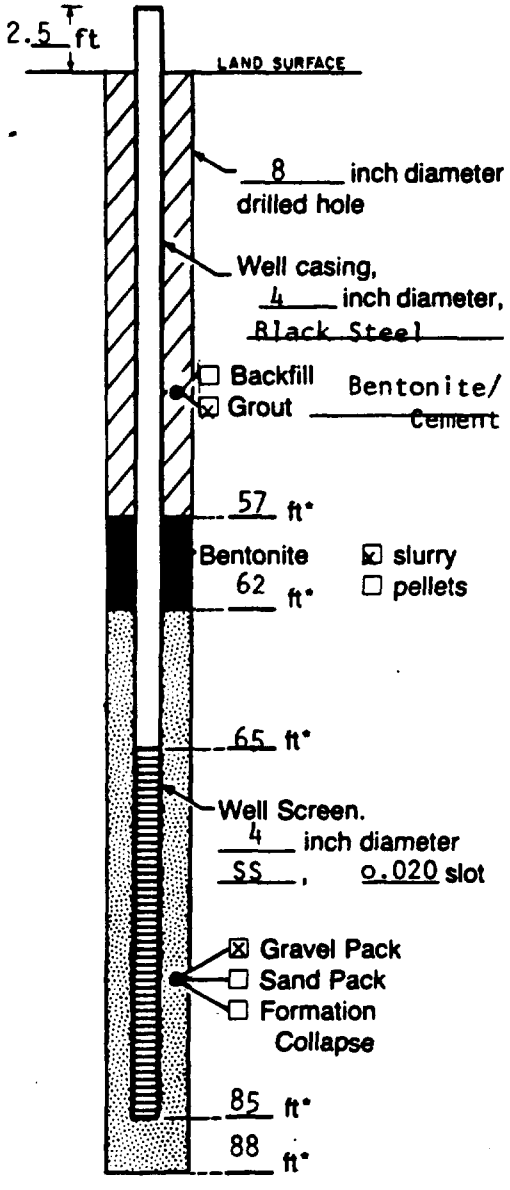

Measuring Point is Top of Well Casing Unless Otherwise Noted.

*Depth Below Land Surface

Project: Sauget Sanitary Dev. & Res. Assoc. Well: GM-22B
Town/City: Sauget
County: St. Clair State: IL
Permit No.:
Land-Surface Elevation and Datum: _____ feet ☒ surveyed
Measuring Point 416.33 Ft (MSL) ☐ estimated
Installation Dates(s): 1-14-85
Drilling Method: Mud Rotary
Drilling Contractor: John Mathes & Assoc., Inc.
Drilling Fluid: Bentonite

Development Techniques(s) and Date(s)
Surged with compressed air.

Fluid Loss During Drilling: _____ gallons
Water Removed During Development: 1200 gallons
Static Depth to Water: _____ feet below M.P.
Pumping Depth to Water: _____ feet below M.P.
Pumping Duration: 2 hours
Yield: 10 gpm Date: _____
Specific Capacity: _____ gpm/ft
Well Purpose: Ground-water monitoring well

Remarks:

Prepared by: D. Colton

GERAGHTY & MILLER, INC.
Ground-Water Consultants

WELL CONSTRUCTION LOG

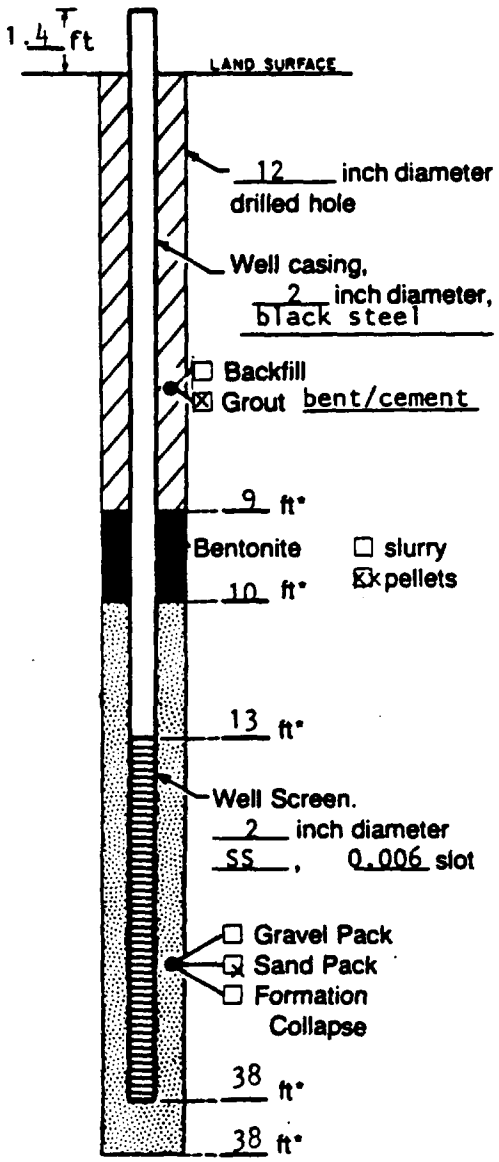

Measuring Point is Top of Well Casing Unless Otherwise Noted.

*Depth Below Land Surface

Project Monsanto Company Well GM-25A
Town/City Sauget
County St. Clair State IL
Permit No.
Land-Surface Elevation
and Datum _____ feet ☒ surveyed
measuring point 414.20 ft (msl) ☐ estimated
Installation Dates(s) 8/14/84
Drilling Method hollow stem auger
Drilling Contractor John Mathes & Associates, Inc.
Drilling Fluid water

Development Techniques(s) and Date(s)
surged with compressed air

Fluid Loss During Drilling 300 gallons
Water Removed During Development 360 gallons
Static Depth to Water _____ feet below M.P.
Pumping Depth to Water _____ feet below M.P.
Pumping Duration 3 hours
Yield 2 gpm Date _____
Specific Capacity _____ gpm/ft
Well Purpose ground-water monitoring well

Remarks

Prepared by D. Colton

GERAGHTY & MILLER, INC.
Ground-Water Consultants

WELL CONSTRUCTION LOG

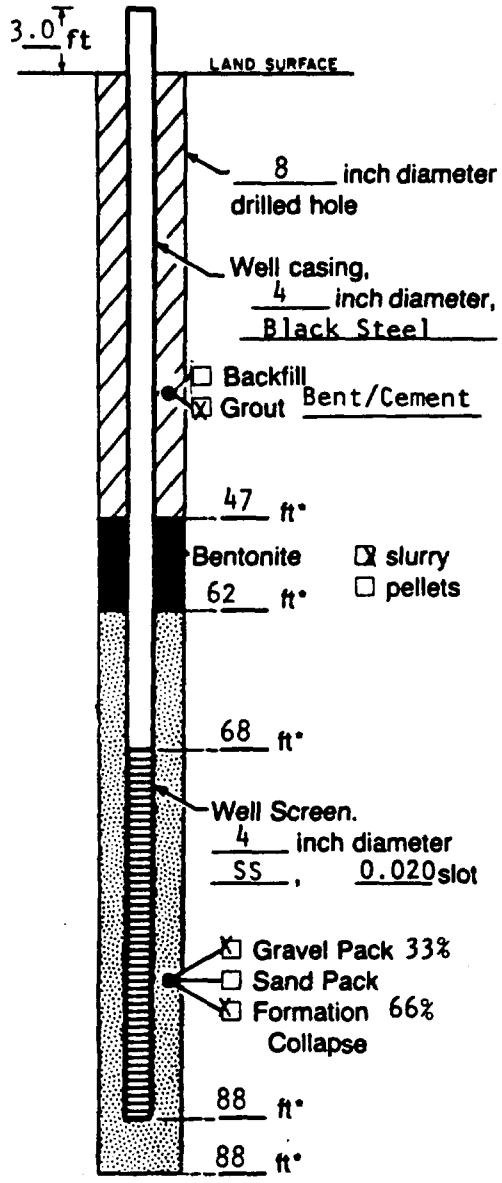

Measuring Point is Top of Well Casing Unless Otherwise Noted.

*Depth Below Land Surface

Project Monsanto Company Well GM-25B
Town/City Sauget
County St. Clair State Ill
Permit No.
Land-Surface Elevation
and Datum _____ feet ☒ surveyed
Measuring Point 415.46 ft (MSL) ☐ estimated
Installation Dates(s) 7/27/84
Drilling Method Mud Rotary
Drilling Contractor John Mathes & Assoc., Inc.
Drilling Fluid Bentonite

Development Techniques(s) and Date(s)
Surged with Compressed Air

Fluid Loss During Drilling _____ gallons
Water Removed During Development 1200 gallons
Static Depth to Water _____ feet below M.P.
Pumping Depth to Water _____ feet below M.P.
Pumping Duration 2 hours
Yield 10 gpm Date _____
Specific Capacity _____ gpm/ft
Well Purpose Ground-water Monitoring Well

Remarks

Prepared by D. Colton

GERAGHTY & MILLER, INC.
Ground-Water Consultants

WELL CONSTRUCTION LOG

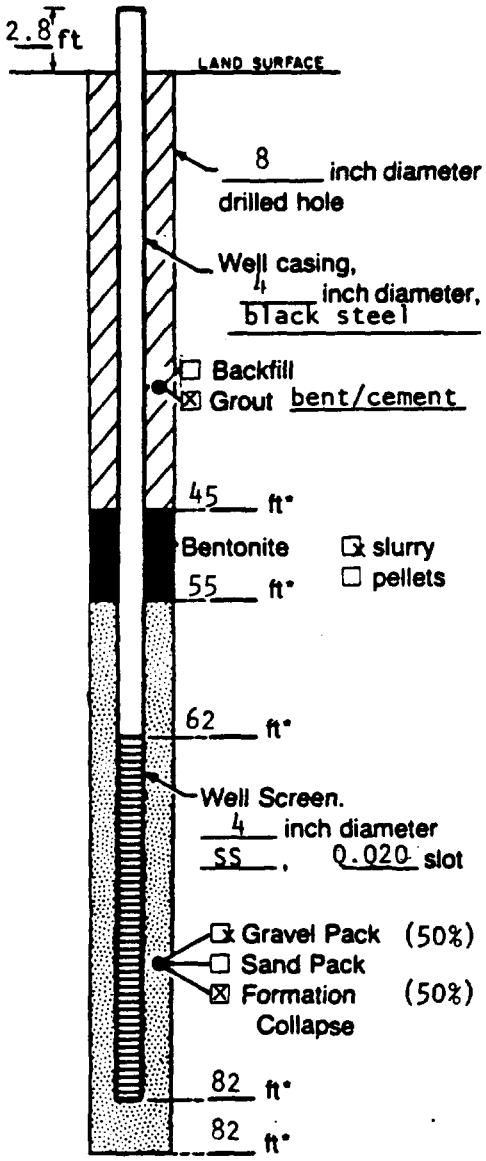

Measuring Point is Top of Well Casing Unless Otherwise Noted.

*Depth Below Land Surface

Project Monsanto Company Well GM-27B
Town/City Sauget
County St. Clair State IL
Permit No.
Land-Surface Elevation
and Datum _____ feet ☒ surveyed
Measuring Point 426.04 Ft (MSL) ☐ estimated
Installation Dates(s) 8/6/84
Drilling Method Mud Rotary
Drilling Contractor John Mathes & Associates, Inc.
Drilling Fluid Bentonite

Development Techniques(s) and Date(s)
surged with compressed air

Fluid Loss During Drilling _____ gallons
Water Removed During Development 1200 gallons
Static Depth to Water _____ feet below M.P.
Pumping Depth to Water _____ feet below M.P.
Pumping Duration 2 hours
Yield 10 gpm Date _____
Specific Capacity _____ gpm/ft
Well Purpose ground-water monitoring well

Remarks

Prepared by D. Colton

GERAGHTY & MILLER, INC.
Ground-Water Consultants

WELL CONSTRUCTION LOG

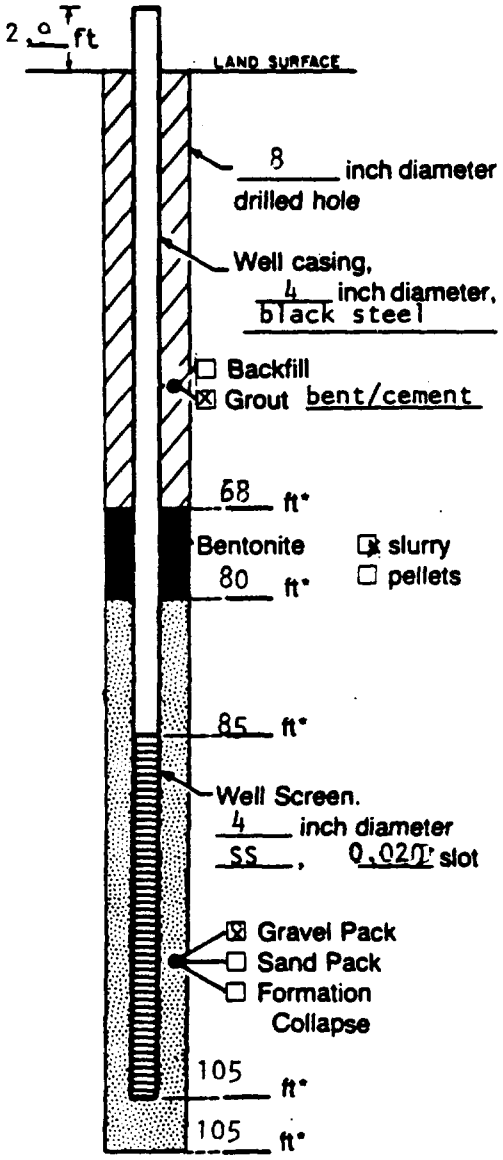

Measuring Point is Top of Well Casing Unless Otherwise Noted.

*Depth Below Land Surface

Project Monsanto Company Well GM-27C
Town/City Sauget
County St. Clair State IL
Permit No.
Land-Surface Elevation
and Datum _____ feet ☒ surveyed
Measuring Point 426.76 Ft (MSL) ☐ estimated
Installation Dates(s) 8/3/84
Drilling Method Mud Rotary
Drilling Contractor John Mathes & Associates, Inc.
Drilling Fluid Bentonite

Development Techniques(s) and Date(s)
surged with compressed air

Fluid Loss During Drilling _____ gallons
Water Removed During Development 1200 gallons
Static Depth to Water _____ feet below M.P.
Pumping Depth to Water _____ feet below M.P.
Pumping Duration 2 hours
Yield 10 gpm Date _____
Specific Capacity _____ gpm/ft
Well Purpose ground-water monitoring well

Remarks

Prepared by D. Colton

GERAGHTY & MILLER, INC.
Ground-Water Consultants

WELL CONSTRUCTION LOG

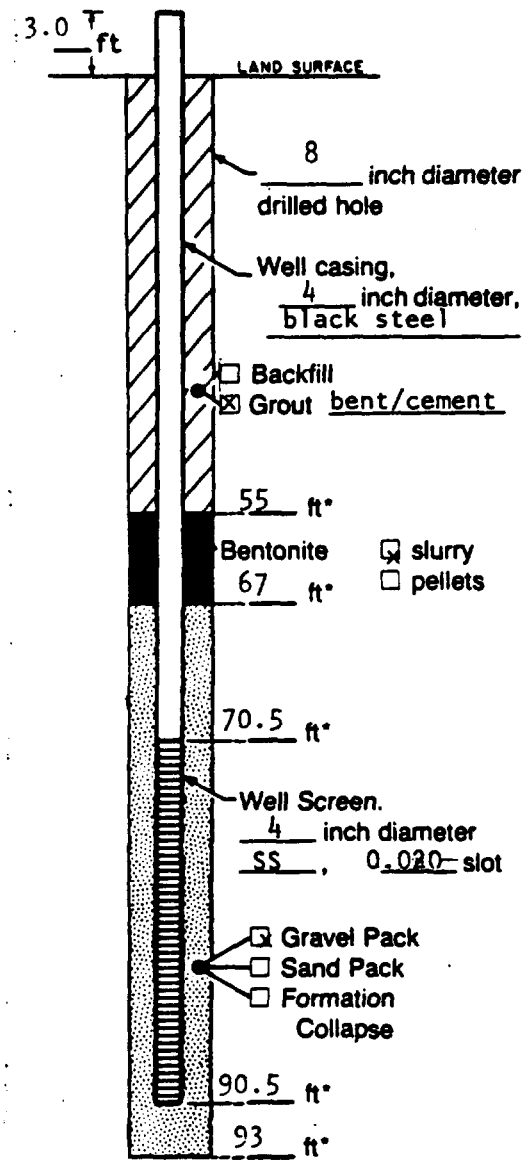

Measuring Point is Top of Well Casing Unless Otherwise Noted.

*Depth Below Land Surface

Project Monsanto Company Well GM-28B

Town/City Sauget

County St. Clair State IL

Permit No.

Land-Surface Elevation and Datum _____ feet ☒ surveyed ☐ estimated

Measuring Point 423.88 Ft (MSL)

Installation Dates(s) 7/3/84

Drilling Method Mud Rotary

Drilling Contractor John Mathes & Associates, Inc.

Drilling Fluid Bentonite

Development Techniques(s) and Date(s)
surged with compressed air

Fluid Loss During Drilling _____ gallons

Water Removed During Development 1200 gallons

Static Depth to Water _____ feet below M.P.

Pumping Depth to Water _____ feet below M.P.

Pumping Duration 2 hours

Yield 10 gpm Date _____

Specific Capacity _____ gpm/ft

Well Purpose ground-water monitoring well

Remarks

Prepared by D. Colton

GERAGHTY & MILLER, INC.
Ground-Water Consultants

WELL CONSTRUCTION LOG

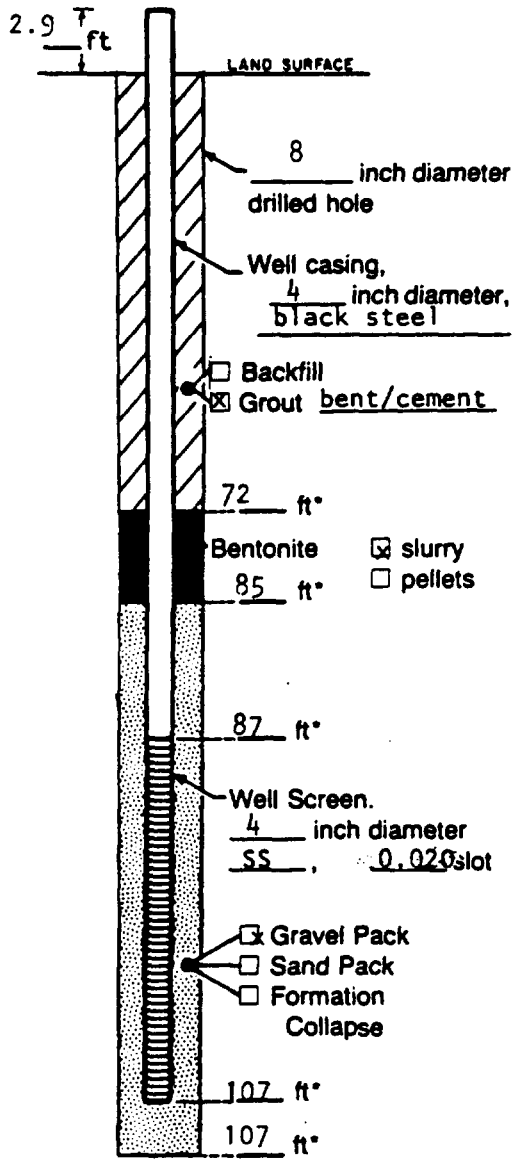

Measuring Point is Top of Well Casing Unless Otherwise Noted.

*Depth Below Land Surface

Project Monsanto Company Well GM-28C
Town/City Sauget
County St. Clair State IL
Permit No.
Land-Surface Elevation
and Datum _____ feet ☒ surveyed
Measuring Point 412.78 Ft (MSL) ☐ estimated
Installation Dates(s) 7/5/84
Drilling Method Mud Rotary
Drilling Contractor John Mathes & Associates, Inc.
Drilling Fluid Bentonite

Development Techniques(s) and Date(s)
surged with compressed air

Fluid Loss During Drilling _____ gallons
Water Removed During Development 1200 gallons
Static Depth to Water _____ feet below M.P.
Pumping Depth to Water _____ feet below M.P.
Pumping Duration 2 hours
Yield 10 gpm Date _____
Specific Capacity _____ gpm/ft
Well Purpose ground-water monitoring well

Remarks

Prepared by D. Colton

GERAGHTY & MILLER, INC.
Ground-Water Consultants

WELL CONSTRUCTION LOG

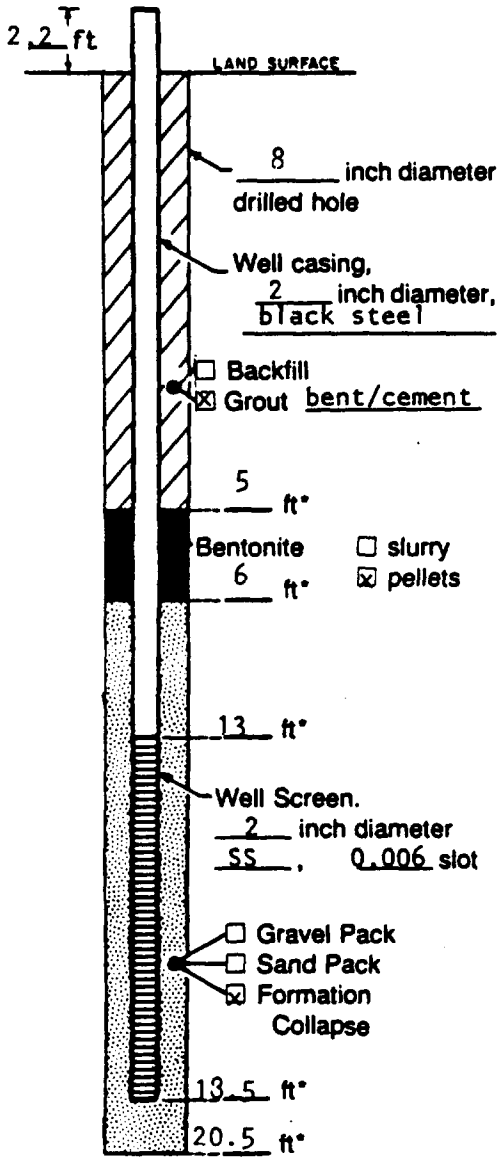

Measuring Point is Top of Well Casing Unless Otherwise Noted.

*Depth Below Land Surface

Project Monsanto Company Well GM-29
Town/City Sauget
County St. Clair State IL
Permit No.
Land-Surface Elevation
and Datum _____ feet ☒ surveyed
Measuring Point 411.06 Ft (MSL) ☐ estimated
Installation Dates(s) 8/24/84
Drilling Method Hollow Stem Auger
Drilling Contractor John Mathes & Associates, Inc.
Drilling Fluid Water

Development Techniques(s) and Date(s)
surged with compressed air

Fluid Loss During Drilling 150 gallons
Water Removed During Development 150 gallons
Static Depth to Water _____ feet below M.P.
Pumping Depth to Water _____ feet below M.P.
Pumping Duration 2.5 hours
Yield 1 gpm Date _____
Specific Capacity _____ gpm/ft
Well Purpose ground-water monitoring well

Remarks

Prepared by D. Colton

GERAGHTY & MILLER, INC.
Ground-Water Consultants

WELL CONSTRUCTION LOG

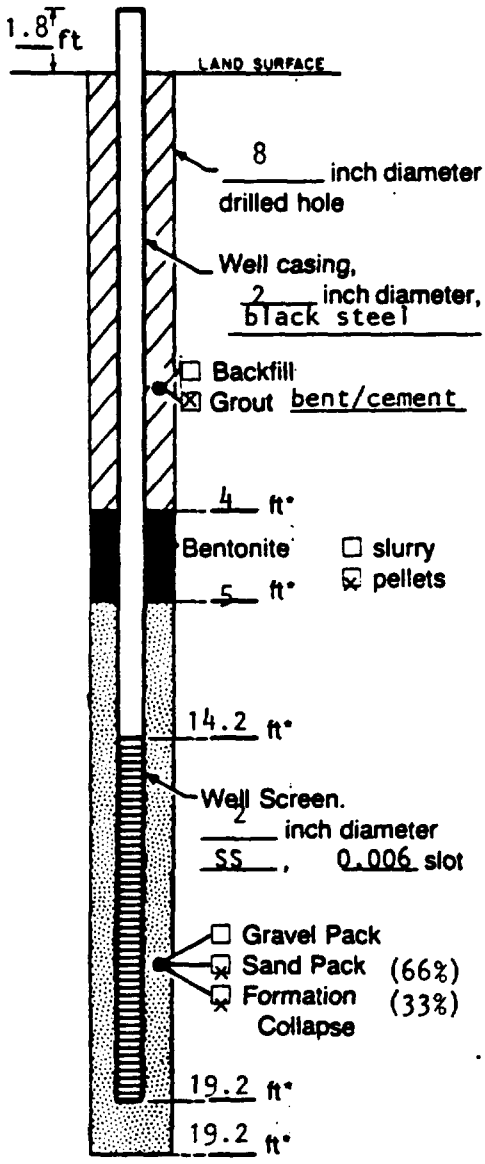

Measuring Point is Top of Well Casing Unless Otherwise Noted.

*Depth Below Land Surface

Project Monsanto Company Well GM-30
Town/City Sauget
County St. Clair State IL
Permit No.
Land-Surface Elevation
and Datum _____ feet ☒ surveyed
Measuring Point 416.09 Ft (MSL) ☐ estimated
Installation Dates(s) 8/30/84
Drilling Method Hollow Stem Auger
Drilling Contractor John Mathes & Associates, Inc.
Drilling Fluid Water

Development Techniques(s) and Date(s)
surged with compressed air

Fluid Loss During Drilling 150 gallons
Water Removed During Development 150 gallons
Static Depth to Water _____ feet below M.P.
Pumping Depth to Water _____ feet below M.P.
Pumping Duration 2.5 hours
Yield 1 gpm Date _____
Specific Capacity _____ gpm/ft
Well Purpose ground-water monitoring well

Remarks

Prepared by D. Colton

GERAGHTY & MILLER, INC.
Ground-Water Consultants

WELL CONSTRUCTION LOG

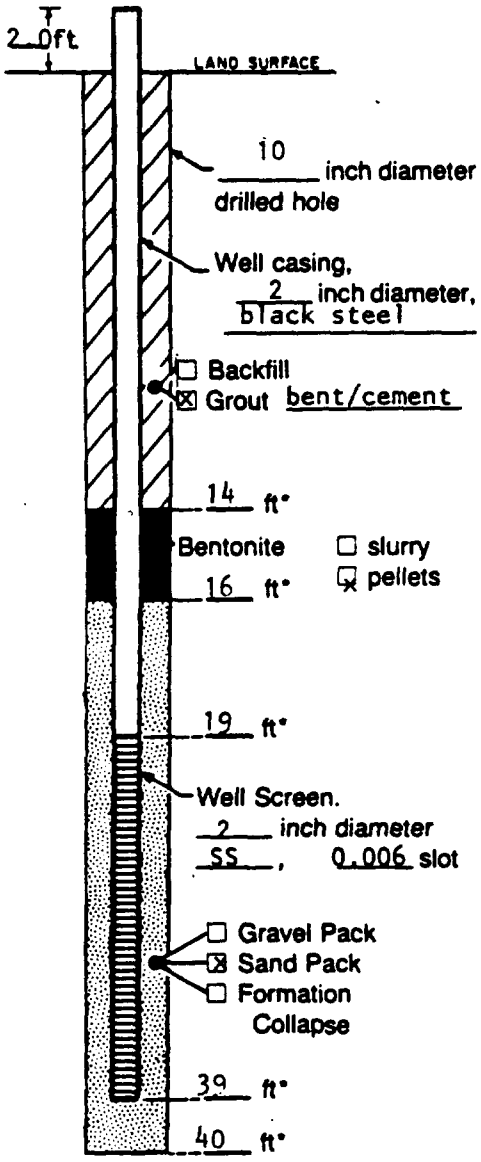

Measuring Point is Top of Well Casing Unless Otherwise Noted.

*Depth Below Land Surface

Project Monsanto Company Well GM-31A
Town/City Sauget
County St. Clair State IL
Permit No.
Land-Surface Elevation and Datum _____ feet ☒ surveyed
Measuring Point 418.63 ☐ estimated
Installation Dates(s) 11/26/84
Drilling Method Hollow stem augers
Drilling Contractor John Mathes & Associates, Inc.
Drilling Fluid Water

Development Techniques(s) and Date(s)
surged with compressed air

Fluid Loss During Drilling 120 gallons
Water Removed During Development 120 gallons
Static Depth to Water _____ feet below M.P.
Pumping Depth to Water _____ feet below M.P.
Pumping Duration 2 hours
Yield 1 gpm Date _____
Specific Capacity _____ gpm/ft
Well Purpose ground-water monitoring well

Remarks

Prepared by D. Colton

GERAGHTY & MILLER, INC.
Ground-Water Consultants

WELL CONSTRUCTION LOG

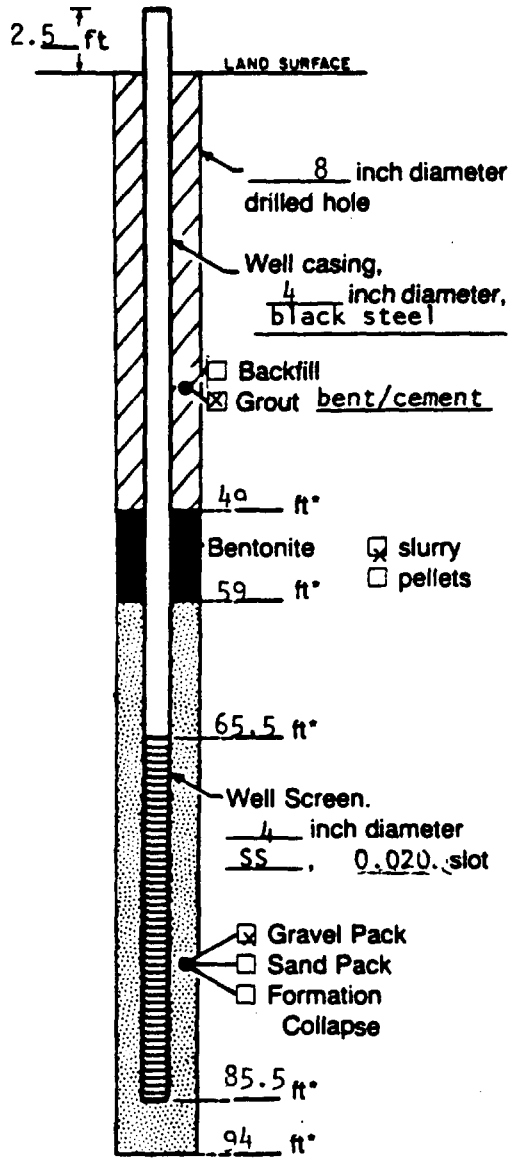

Measuring Point is Top of Well Casing Unless Otherwise Noted.

*Depth Below Land Surface

Project Monsanto Company Well GM-31B
Town/City Sauget
County St. Clair State IL
Permit No.
Land-Surface Elevation
and Datum _____ feet ☒ surveyed
Measuring Point 418.92 Ft (MSL) ☐ estimated
Installation Dates(s) 1/9/85
Drilling Method Mud Rotary
Drilling Contractor John Mathes & Associates, Inc.
Drilling Fluid Bentonite

Development Techniques(s) and Date(s)
surged with compressed air

Fluid Loss During Drilling _____ gallons
Water Removed During Development 1200 gallons
Static Depth to Water _____ feet below M.P.
Pumping Depth to Water _____ feet below M.P.
Pumping Duration 2 hours
Yield 10 gpm Date _____
Specific Capacity _____ gpm/ft
Well Purpose ground-water monitoring well

Remarks

Prepared by D. Colton

GERAGHTY & MILLER, INC.
Ground-Water Consultants

WELL CONSTRUCTION LOG

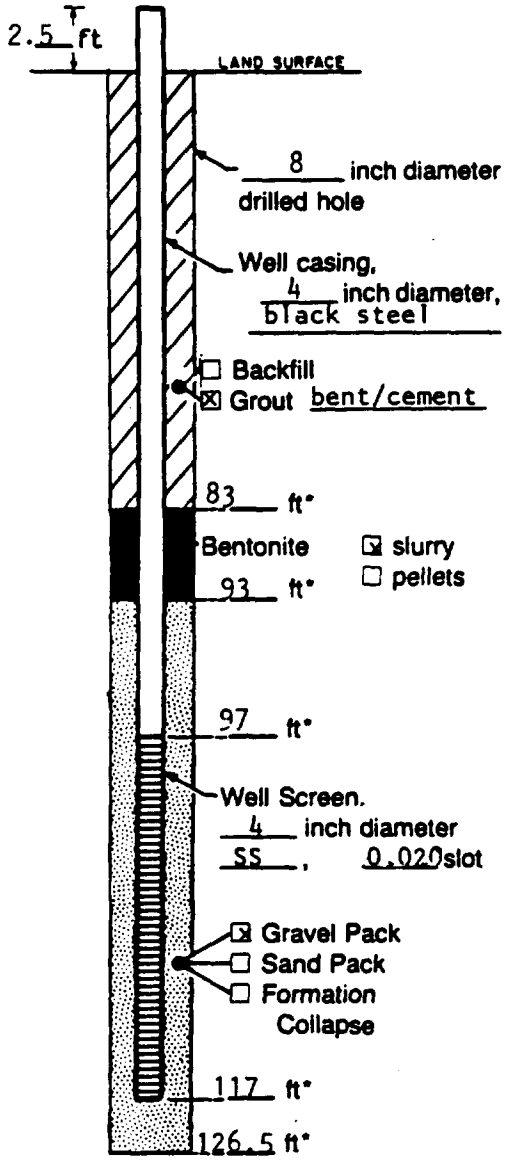

Measuring Point is Top of Well Casing Unless Otherwise Noted.

*Depth Below Land Surface

Project Monsanto Company Well GM-31C
Town/City Sauget
County St. Clair State IL
Permit No.
Land-Surface Elevation
and Datum _____ feet ☒ surveyed
Measuring Point 419.29 Ft (MSL) ☐ estimated
Installation Dates(s) 1/8/85
Drilling Method Mud Rotary
Drilling Contractor John Mathes & Associates, Inc.
Drilling Fluid Bentonite

Development Techniques(s) and Date(s)
surged with compressed air

Fluid Loss During Drilling _____ gallons
Water Removed During Development 1200 gallons
Static Depth to Water _____ feet below M.P.
Pumping Depth to Water _____ feet below M.P.
Pumping Duration 2 hours
Yield 10 gpm Date _____
Specific Capacity _____ gpm/ft
Well Purpose ground-water monitoring well

Remarks

Prepared by D. Colton

GERAGHTY & MILLER, INC.
Ground-Water Consultants

WELL CONSTRUCTION LOG

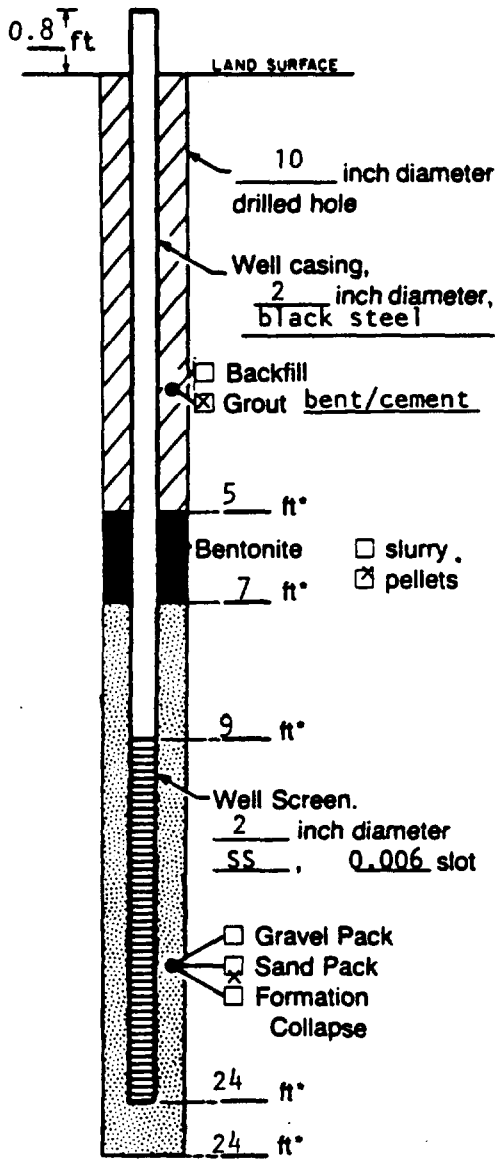

Measuring Point is Top of Well Casing Unless Otherwise Noted.

*Depth Below Land Surface

Project Monsanto Company Well GM-32
Town/City Sauget
County St. Clair State IL
Permit No.
Land-Surface Elevation
and Datum _____ feet ☒ surveyed
~~Measuring Point~~ 409.49 Ft (MSL) ☐ estimated
Installation Dates(s) 11/27/84
Drilling Method Hollow Stem Auger
Drilling Contractor John Mathes & Associates, Inc.
Drilling Fluid None

Development Techniques(s) and Date(s)
surged with compressed air

Fluid Loss During Drilling NONE gallons
Water Removed During Development 60 gallons
Static Depth to Water _____ feet below M.P.
Pumping Depth to Water _____ feet below M.P.
Pumping Duration 1 hours
Yield 1 gpm Date _____
Specific Capacity _____ gpm/ft
Well Purpose ground-water monitoring well

Remarks

Prepared by D. Colton

GERAGHTY & MILLER, INC.
Ground-Water Consultants

WELL CONSTRUCTION LOG

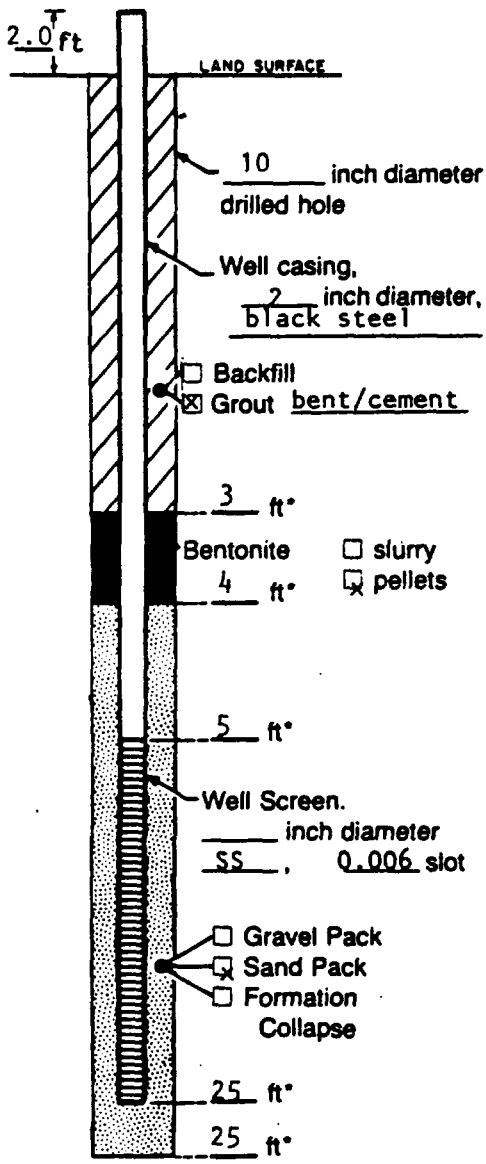

Measuring Point is Top of Well Casing Unless Otherwise Noted.

*Depth Below Land Surface

Project Monsanto Company Well GM-33
Town/City Sauget
County St. Clair State IL
Permit No. _____
Land-Surface Elevation
and Datum _____ feet ☒ surveyed
Measuring Point 410.88 Ft (MSL) ☐ estimated
Installation Dates(s) 11/28/84
Drilling Method Hollow Stem Auger
Drilling Contractor John Mathes & Associates, Inc.
Drilling Fluid None

Development Techniques(s) and Date(s)
surged with compressed air

Fluid Loss During Drilling None gallons
Water Removed During Development 60 gallons
Static Depth to Water _____ feet below M.P.
Pumping Depth to Water _____ feet below M.P.
Pumping Duration 1 hours
Yield 1 gpm Date _____
Specific Capacity _____ gpm/ft
Well Purpose ground-water monitoring well

Remarks _____

Prepared by D. Colton

GERAGHTY & MILLER, INC.
Ground-Water Consultants

WELL CONSTRUCTION LOG

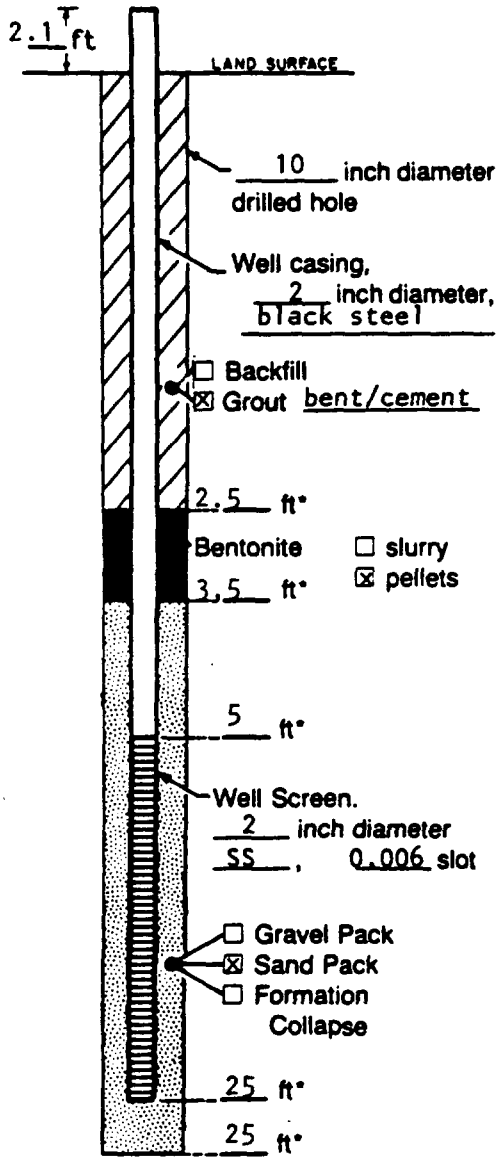

Measuring Point is Top of Well Casing Unless Otherwise Noted.

*Depth Below Land Surface

Project Monsanto Company Well GM-34
Town/City Sauget
County St. Clair State IL
Permit No.
Land-Surface Elevation
and Datum _____ feet ☒ surveyed
Measuring Point 410.82 Ft (MSL) ☐ estimated
Installation Dates(s) 11/29/84
Drilling Method Hollow Stem Auger
Drilling Contractor John Mathes & Associates, Inc.
Drilling Fluid None

Development Techniques(s) and Date(s)
surged with compressed air

Fluid Loss During Drilling None gallons
Water Removed During Development 60 gallons
Static Depth to Water _____ feet below M.P.
Pumping Depth to Water _____ feet below M.P.
Pumping Duration 1 hours
Yield 1 gpm Date _____
Specific Capacity _____ gpm/ft
Well Purpose ground-water monitoring well

Remarks

Prepared by D. Colton

GERAGHTY & MILLER, INC.
Ground-Water Consultants

WELL CONSTRUCTION LOG

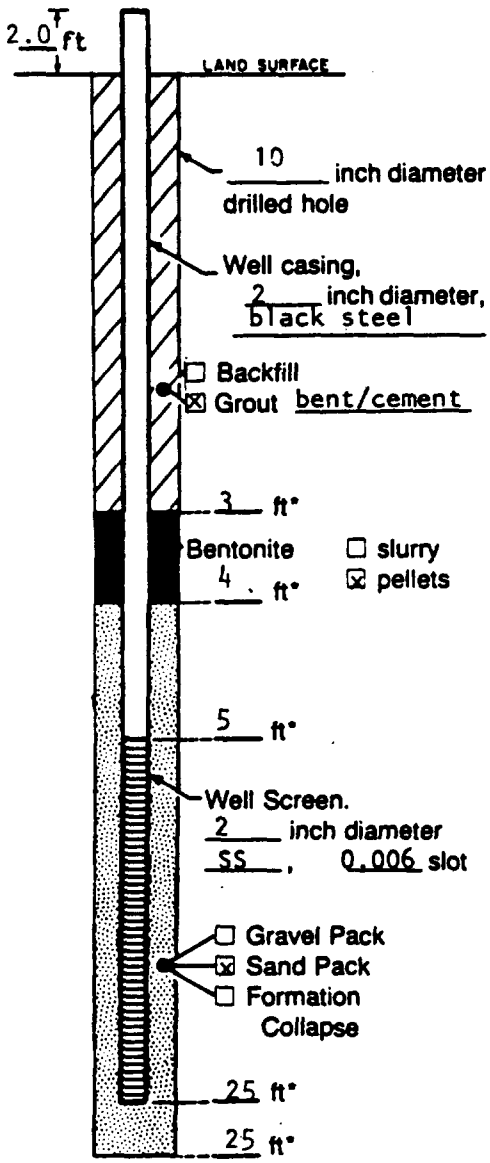

Measuring Point is Top of Well Casing Unless Otherwise Noted.

*Depth Below Land Surface.

Project Monsanto Company Well GM-35
Town/City Sauget
County St. Clair State IL
Permit No.
Land-Surface Elevation
and Datum _____ feet ☒ surveyed
Measuring Point 410.88 Ft (MSL) ☐ estimated
Installation Dates(s) 11/29/84
Drilling Method Hollow Stem Auger
Drilling Contractor John Mathes & Associates, Inc.
Drilling Fluid None

Development Techniques(s) and Date(s)
surged with compressed air

Fluid Loss During Drilling None gallons
Water Removed During Development 60 gallons
Static Depth to Water _____ feet below M.P.
Pumping Depth to Water _____ feet below M.P.
Pumping Duration 1 hours
Yield 1 gpm Date _____
Specific Capacity _____ gpm/ft
Well Purpose ground-water monitoring well

Remarks

Prepared by D. Colton

GERAGHTY & MILLER, INC.
Ground-Water Consultants

WELL CONSTRUCTION LOG

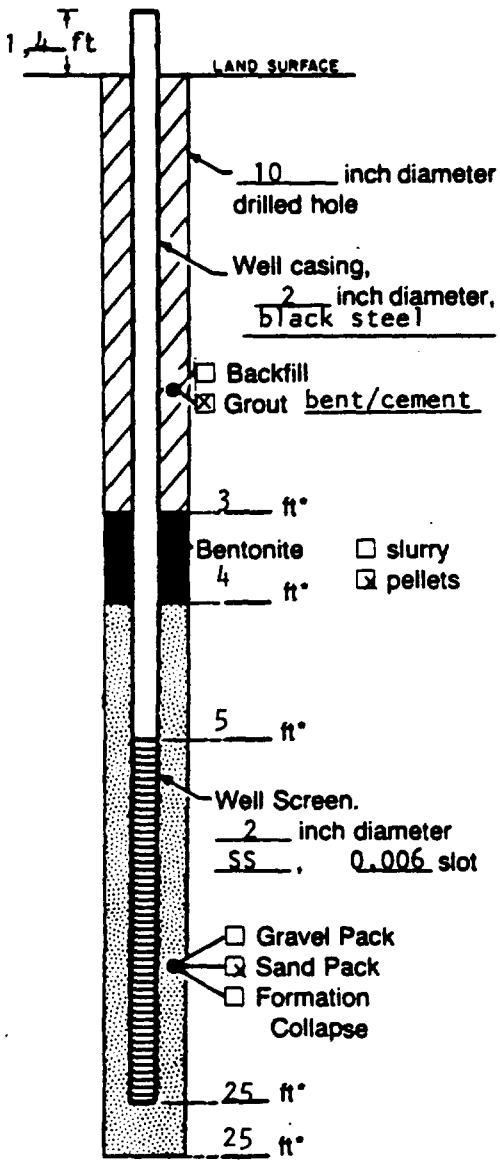

Measuring Point is Top of Well Casing Unless Otherwise Noted.

*Depth Below Land Surface

Project Monsanto Company Well GM-36
Town/City Sauget
County St. Clair State IL
Permit No.
Land-Surface Elevation
and Datum _____ feet ☒ surveyed
Measuring Point 409.53 Ft (MSL) ☐ estimated
Installation Dates(s) 11/30/84
Drilling Method Hollow Stem Auger
Drilling Contractor John Mathes & Associates, Inc.
Drilling Fluid None

Development Techniques(s) and Date(s)
surged with compressed air

Fluid Loss During Drilling None gallons
Water Removed During Development 60 gallons
Static Depth to Water _____ feet below M.P.
Pumping Depth to Water _____ feet below M.P.
Pumping Duration 1 hours
Yield 1 gpm Date _____
Specific Capacity _____ gpm/ft
Well Purpose ground-water monitoring well

Remarks

Prepared by D. Colton

GERAGHTY & MILLER, INC.
Ground-Water Consultants

WELL CONSTRUCTION LOG

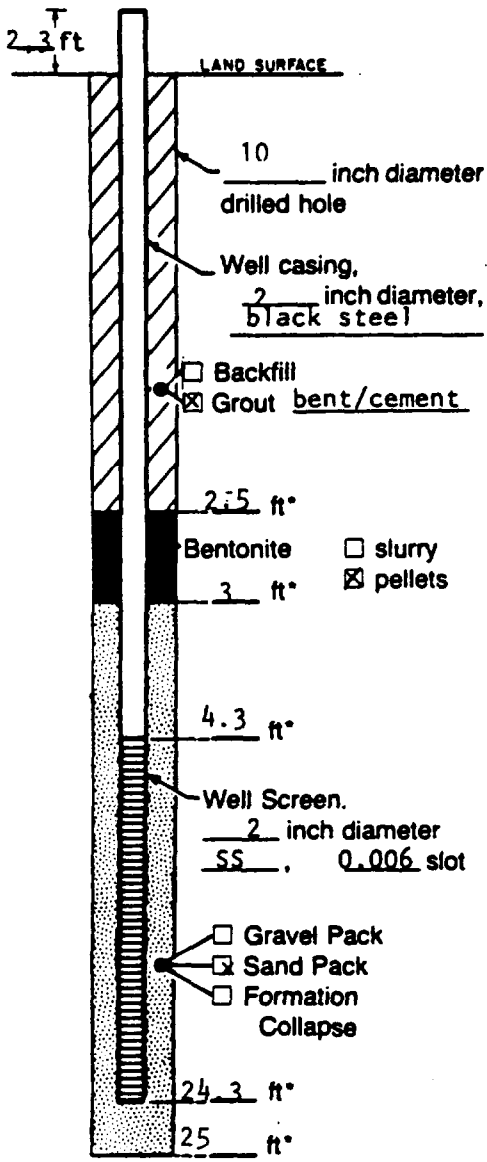

Measuring Point is Top of Well Casing Unless Otherwise Noted.

*Depth Below Land Surface

Project: Monsanto Company Well: GM-37
Town/City: Sauget
County: St. Clair State: IL
Permit No.:
Land-Surface Elevation and Datum: _____ feet ☒ surveyed
Measuring Point 409.67 Ft (MSL) ☐ estimated
Installation Dates(s): 11/30/84
Drilling Method: Hollow Stem Auger
Drilling Contractor: John Mathes & Associates, Inc.
Drilling Fluid: None

Development Techniques(s) and Date(s)
surged with compressed air

Fluid Loss During Drilling: None gallons
Water Removed During Development: 60 gallons
Static Depth to Water: _____ feet below M.P.
Pumping Depth to Water: _____ feet below M.P.
Pumping Duration: 1 hours
Yield: 1 gpm Date: _____
Specific Capacity: _____ gpm/ft
Well Purpose: ground-water monitoring well

Remarks:

Prepared by: D. Colton

GERAGHTY & MILLER, INC.
Ground-Water Consultants

WELL CONSTRUCTION LOG

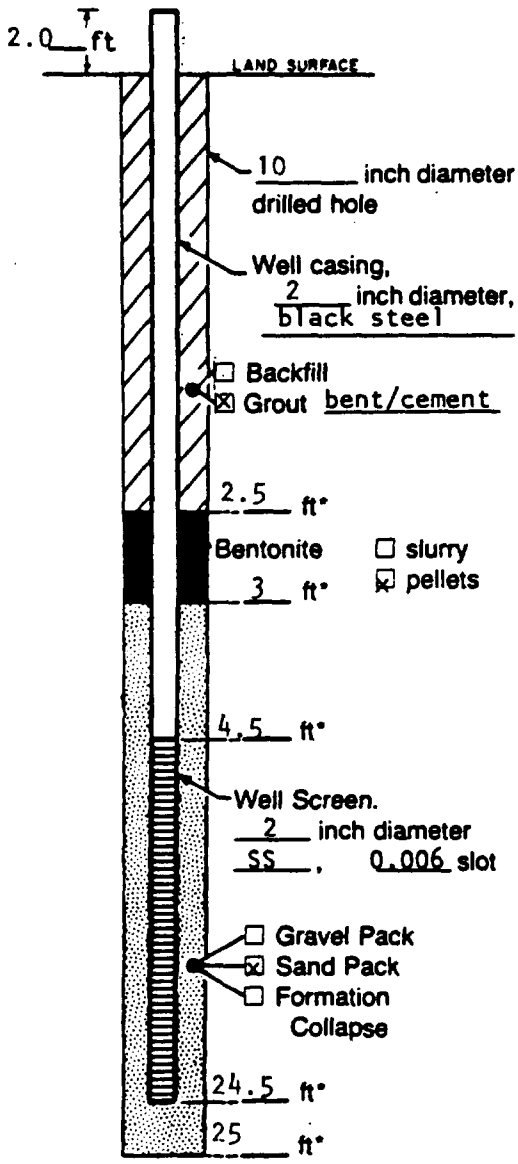

Measuring Point is Top of Well Casing Unless Otherwise Noted.

*Depth Below Land Surface

Project Monsanto Company Well GM-38
Town/City Sauget
County St. Clair State IL
Permit No.
Land-Surface Elevation
and Datum _____ feet ☒ surveyed
Measuring Point 412.51 Ft (MSL) ☐ estimated
Installation Dates(s) 12/3/84
Drilling Method Hollow Stem Auger
Drilling Contractor John Mathes & Associates, Inc.
Drilling Fluid Bentonite

Development Techniques(s) and Date(s)
surged with compressed air

Fluid Loss During Drilling None gallons
Water Removed During Development 120 gallons
Static Depth to Water _____ feet below M.P.
Pumping Depth to Water _____ feet below M.P.
Pumping Duration 2 hours
Yield 1 gpm Date _____
Specific Capacity _____ gpm/ft
Well Purpose ground-water monitoring well

Remarks

Prepared by D. Colton

GERAGHTY & MILLER, INC.
Ground-Water Consultants

WELL CONSTRUCTION LOG

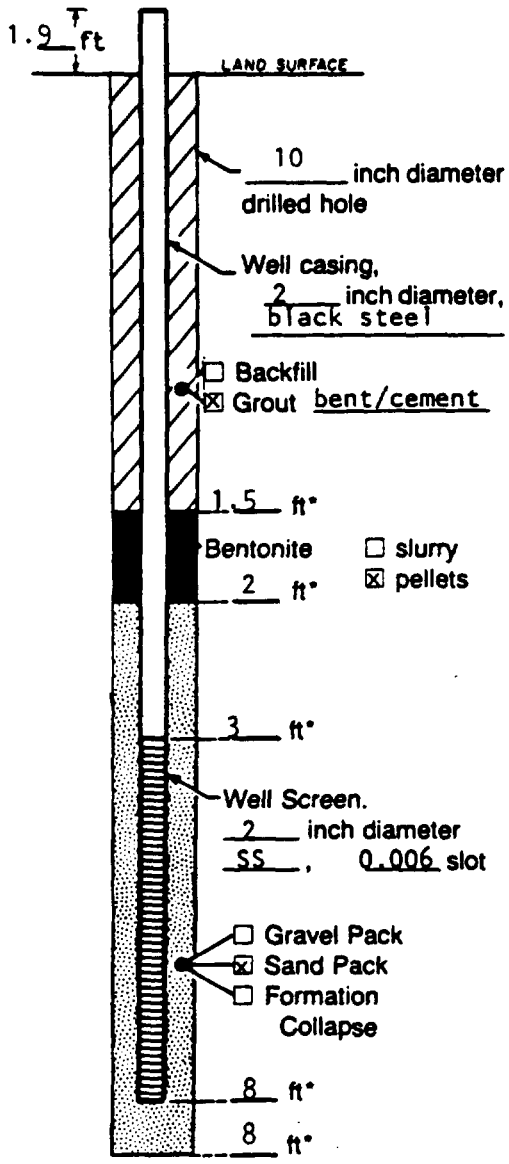

Measuring Point is Top of Well Casing Unless Otherwise Noted.

*Depth Below Land Surface

Project Monsanto Company Well GM-39
Town/City Sauget
County St. Clair State IL
Permit No.
Land-Surface Elevation
and Datum _____ feet ☒ surveyed
Measuring Point 415.59 Ft (MSL) ☐ estimated
Installation Dates(s) 12/4/84
Drilling Method Hollow Stem Auger
Drilling Contractor John Mathes & Associates, Inc.
Drilling Fluid None

Development Techniques(s) and Date(s)
surged with compressed air

Fluid Loss During Drilling None gallons
Water Removed During Development 60 gallons
Static Depth to Water _____ feet below M.P.
Pumping Depth to Water _____ feet below M.P.
Pumping Duration 1 hours
Yield 1 gpm Date _____
Specific Capacity _____ gpm/ft
Well Purpose ground-water monitoring well

Remarks

Prepared by D. Colton

GERAGHTY & MILLER, INC.
Ground-Water Consultants

WELL CONSTRUCTION LOG

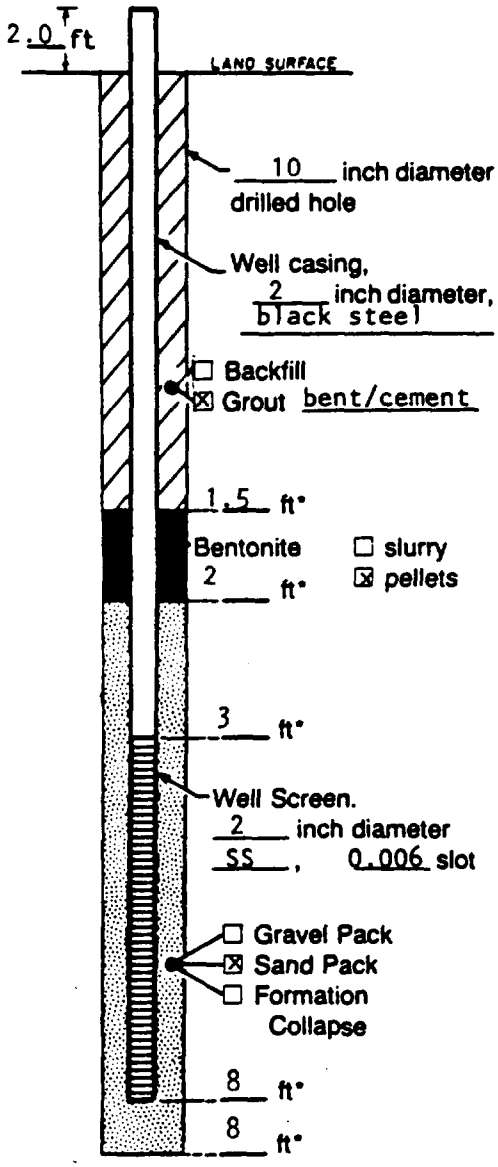

Measuring Point is Top of Well Casing Unless Otherwise Noted.

*Depth Below Land Surface

Project Monsanto Company Well GM-40
Town/City Sauget
County St. Clair State IL
Permit No.
Land-Surface Elevation
and Datum _____ feet ☒ surveyed
Measuring Point 415.75 Ft (MSL) ☐ estimated
Installation Dates(s) 12/4/84
Drilling Method Hollow Stem Auger
Drilling Contractor John Mathes & Associates, Inc.
Drilling Fluid None

Development Techniques(s) and Date(s)
surged with compressed air

Fluid Loss During Drilling None gallons
Water Removed During Development 60 gallons
Static Depth to Water _____ feet below M.P.
Pumping Depth to Water _____ feet below M.P.
Pumping Duration 1 hours
Yield 1 gpm Date _____
Specific Capacity _____ gpm/ft
Well Purpose ground-water monitoring well

Remarks

Prepared by D. Colton

GERAGHTY & MILLER, INC.
Ground-Water Consultants

WELL CONSTRUCTION LOG

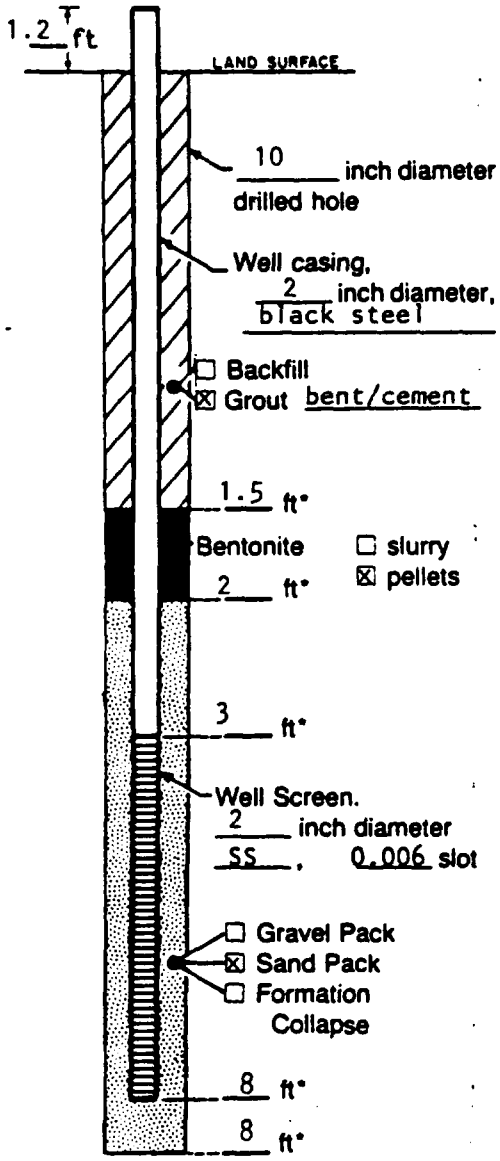

Measuring Point is Top of Well Casing Unless Otherwise Noted.

*Depth Below Land Surface

Project Monsanto Company Well GM-41
Town/City Sauget
County St. Clair State IL
Permit No.
Land-Surface Elevation
and Datum _____ feet ☒ surveyed
Measuring Point 414.75 Ft (MSL) ☐ estimated
Installation Dates(s) 12/4/84
Drilling Method Hollow Stem Auger
Drilling Contractor John Mathes & Associates, Inc.
Drilling Fluid None

Development Techniques(s) and Date(s)
surged with compressed air

Fluid Loss During Drilling None gallons
Water Removed During Development 60 gallons
Static Depth to Water _____ feet below M.P.
Pumping Depth to Water _____ feet below M.P.
Pumping Duration 1 hours
Yield 1 gpm Date _____
Specific Capacity _____ gpm/ft
Well Purpose ground-water monitoring well

Remarks

Prepared by D. Colton

GERAGHTY & MILLER, INC.
Ground-Water Consultants

WELL CONSTRUCTION LOG

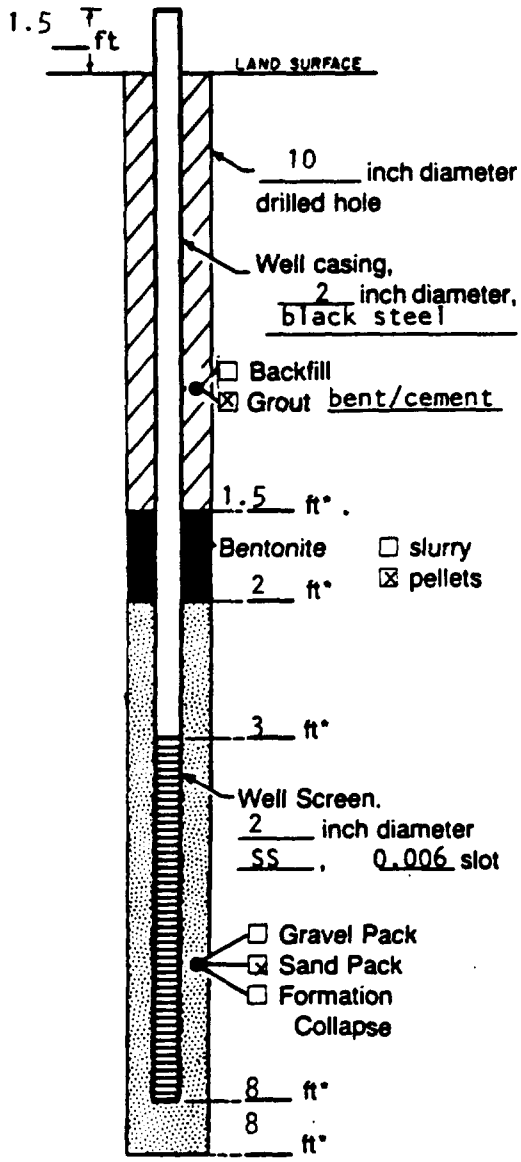

Measuring Point is Top of Well Casing Unless Otherwise Noted.

*Depth Below Land Surface

Project Monsanto Company Well GM-42
Town/City Sauget
County St. Clair State IL
Permit No.
Land-Surface Elevation
and Datum _____ feet ☒ surveyed
~~Measuring Point 414.48~~ Ft (MSL) ☐ estimated
Installation Dates(s) 12/5/84
Drilling Method Hollow Stem Auger
Drilling Contractor John Mathes & Associates, Inc.
Drilling Fluid None

Development Techniques(s) and Date(s)
surged with compressed air

Fluid Loss During Drilling None gallons
Water Removed During Development 60 gallons
Static Depth to Water _____ feet below M.P.
Pumping Depth to Water _____ feet below M.P.
Pumping Duration 1 hours
Yield 1 gpm Date _____
Specific Capacity _____ gpm/ft
Well Purpose ground-water monitoring well

Remarks

Prepared by D. Colton

GERAGHTY & MILLER, INC.
Ground-Water Consultants

WELL CONSTRUCTION LOG

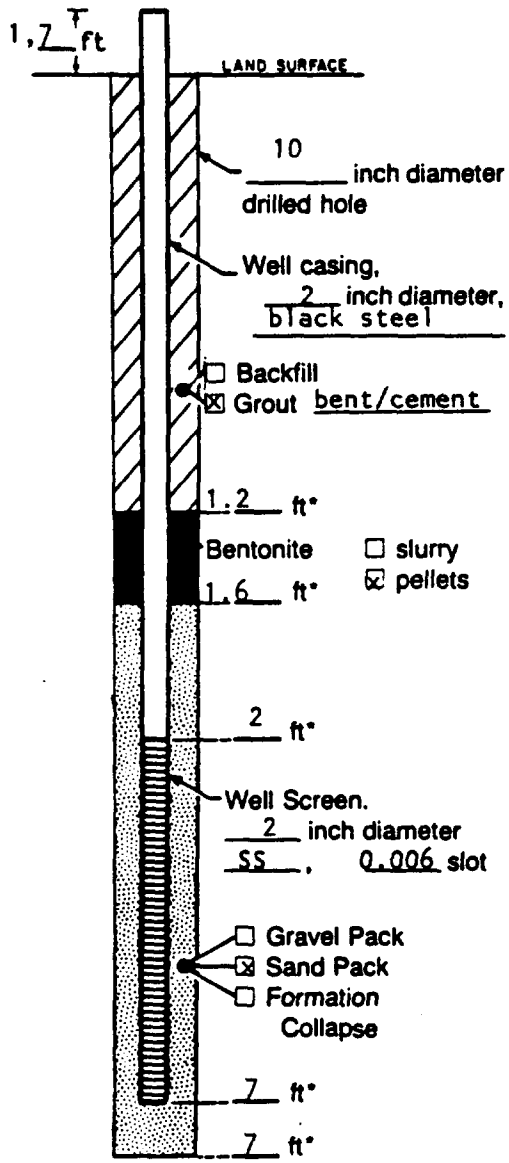

Measuring Point is Top of Well Casing Unless Otherwise Noted.

*Depth Below Land Surface

Project: Monsanto Company Well: GM-43
Town/City: Sauget
County: St. Clair State: IL
Permit No.:
Land-Surface Elevation and Datum: _____ feet ☒ surveyed
Measuring Point 414.38 Ft (MSL) ☐ estimated
Installation Dates(s): 12/5/84
Drilling Method: Hollow Stem Auger
Drilling Contractor: John Mathes & Associates, Inc.
Drilling Fluid: None

Development Techniques(s) and Date(s)
surged with compressed air

Fluid Loss During Drilling: None gallons
Water Removed During Development: 60 gallons
Static Depth to Water: _____ feet below M.P.
Pumping Depth to Water: _____ feet below M.P.
Pumping Duration: 1 hours
Yield: 1 gpm Date: _____
Specific Capacity: _____ gpm/ft
Well Purpose: ground-water monitoring well

Remarks:

Prepared by: D. Colton

GERAGHTY & MILLER, INC.
Ground-Water Consultants

WELL CONSTRUCTION LOG

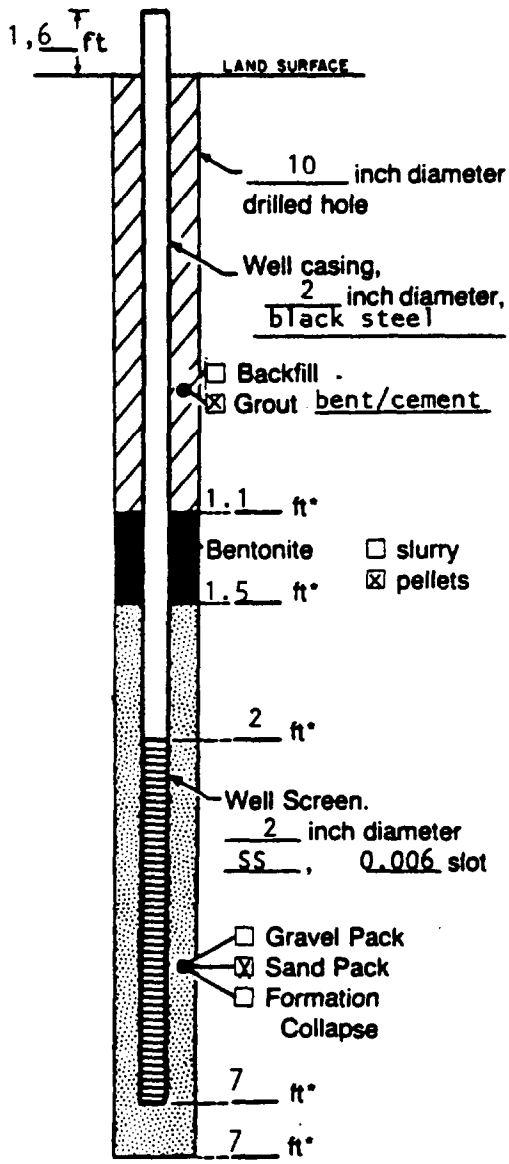

Measuring Point is Top of Well Casing Unless Otherwise Noted.

*Depth Below Land Surface

Project Monsanto Company Well GM-44
Town/City Sauget
County St. Clair State IL
Permit No.
Land-Surface Elevation
and Datum _____ feet ☒ surveyed
~~Measuring Point 414.44~~ Ft (MSL) ☐ estimated
Installation Dates(s) 12/5/86
Drilling Method Hollow Stem Auger
Drilling Contractor John Mathes & Associates, Inc.
Drilling Fluid None

Development Techniques(s) and Date(s)
surged with compressed air

Fluid Loss During Drilling None gallons
Water Removed During Development 60 gallons
Static Depth to Water _____ feet below M.P.
Pumping Depth to Water _____ feet below M.P.
Pumping Duration 1 hours
Yield 1 gpm Date _____
Specific Capacity _____ gpm/ft
Well Purpose ground-water monitoring well

Remarks

Prepared by D. Colton

GERAGHTY & MILLER, INC.
Ground-Water Consultants

WELL CONSTRUCTION LOG

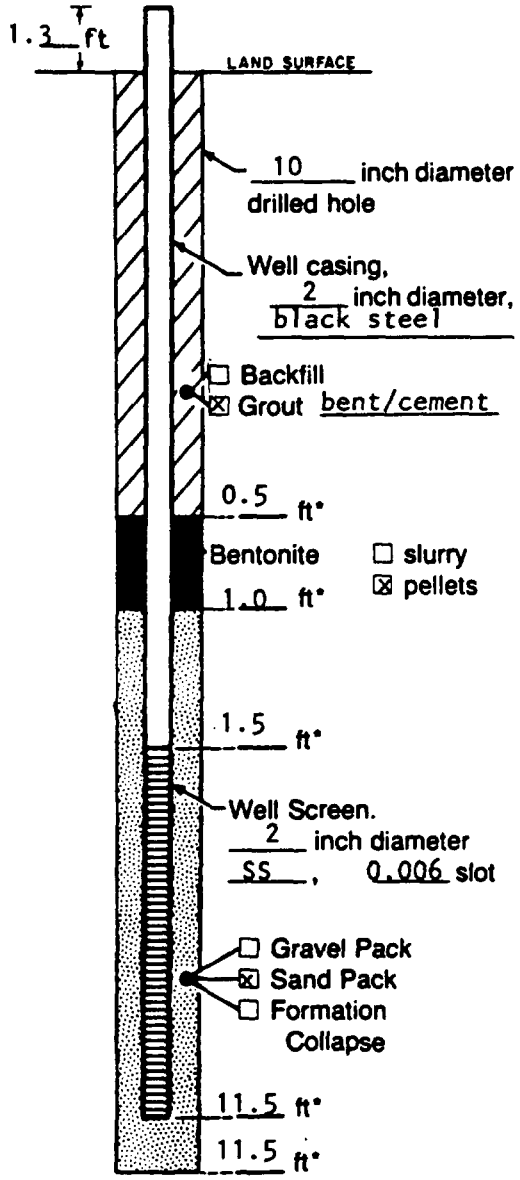

Measuring Point is Top of Well Casing Unless Otherwise Noted.

*Depth Below Land Surface

Project Monsanto Company Well GM-45

Town/City Sauget

County St. Clair State IL

Permit No.

Land-Surface Elevation and Datum _____ feet ☒ surveyed
Measuring Point 410.10 Ft (MSL) ☐ estimated

Installation Dates(s) 12/6/84

Drilling Method Hollow Stem Auger

Drilling Contractor John Mathes & Associates, Inc.

Drilling Fluid None

Development Techniques(s) and Date(s)
surged with compressed air

Fluid Loss During Drilling None gallons

Water Removed During Development 60 gallons

Static Depth to Water _____ feet below M.P.

Pumping Depth to Water _____ feet below M.P.

Pumping Duration 1 hours

Yield 1 gpm Date _____

Specific Capacity _____ gpm/ft

Well Purpose ground-water monitoring well

Remarks

Prepared by D. Colton

GERAGHTY & MILLER, INC.
Ground-Water Consultants

WELL CONSTRUCTION LOG

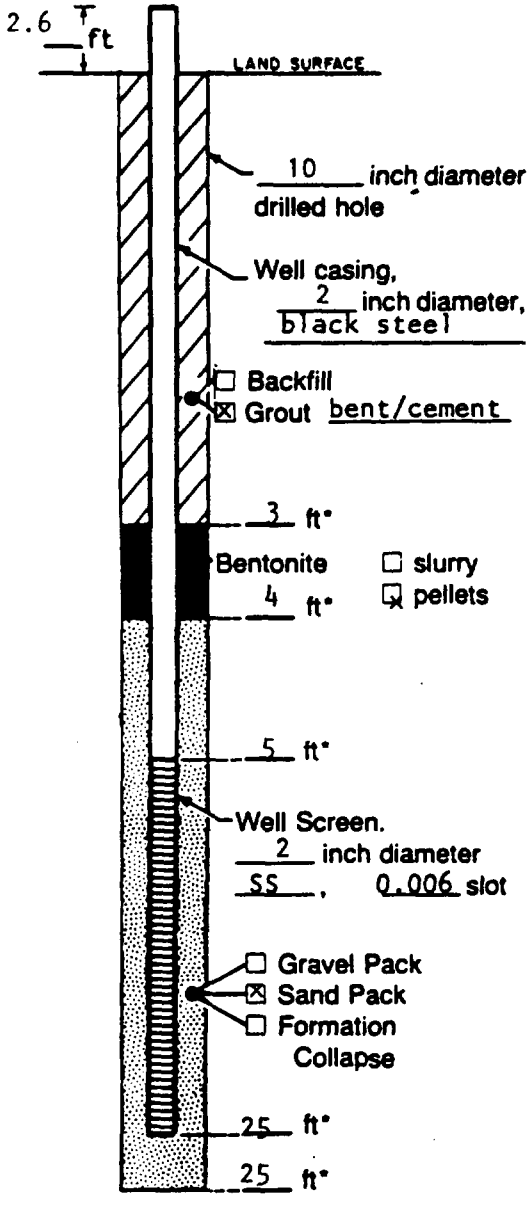

Measuring Point is Top of Well Casing Unless Otherwise Noted.

*Depth Below Land Surface

Project: Monsanto Company Well: GM-46
Town/City: Sauget
County: St. Clair State: IL
Permit No.:
Land-Surface Elevation and Datum: _____ feet ☒ surveyed
Measuring Point 411.60 Ft (MSL) ☐ estimated
Installation Dates(s): 12/7/84
Drilling Method: Hollow Stem Auger
Drilling Contractor: John Mathes & Associates, Inc.
Drilling Fluid: None

Development Techniques(s) and Date(s)
surged with compressed air

Fluid Loss During Drilling: None gallons
Water Removed During Development: 60 gallons
Static Depth to Water: _____ feet below M.P.
Pumping Depth to Water: _____ feet below M.P.
Pumping Duration: 1 hours
Yield: 1 gpm Date: _____
Specific Capacity: _____ gpm/ft
Well Purpose: ground-water monitoring well

Remarks:

Prepared by: D. Colton

GERAGHTY & MILLER, INC.
Ground-Water Consultants

WELL CONSTRUCTION LOG

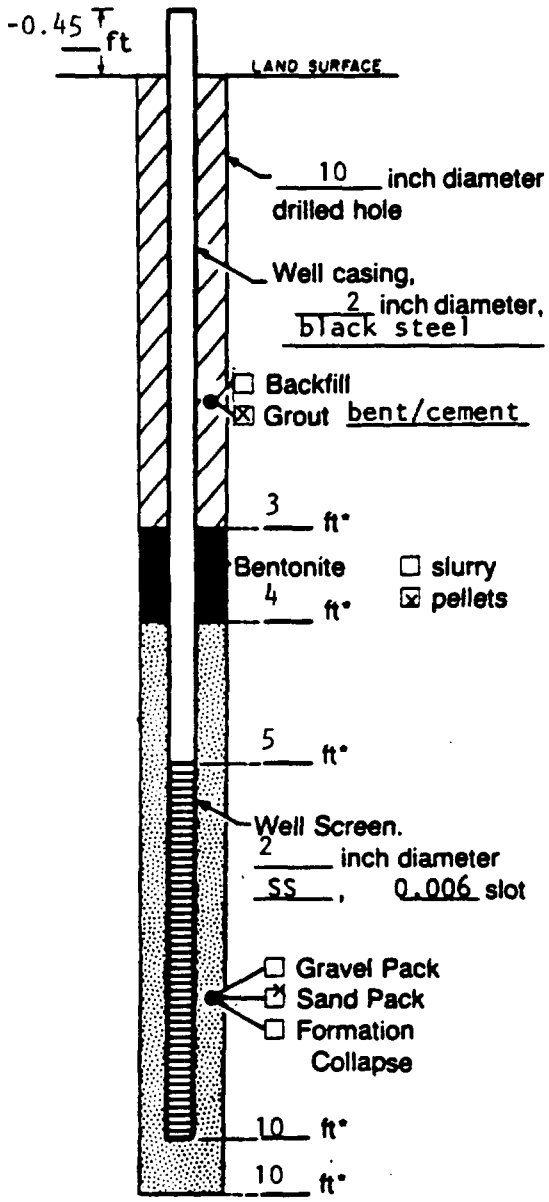

Measuring Point is Top of Well Casing Unless Otherwise Noted.

*Depth Below Land Surface

Project Monsanto Company Well GM-47
Town/City Sauget
County St. Clair State IL
Permit No.
Land-Surface Elevation
and Datum _____ feet ☒ surveyed
Measuring Point 412.34 Ft (MSL) ☐ estimated
Installation Dates(s) 12/10/84
Drilling Method Hollow Stem Auger
Drilling Contractor John Mathes & Associates, Inc.
Drilling Fluid None

Development Techniques(s) and Date(s)
surged with compressed air

Fluid Loss During Drilling None gallons
Water Removed During Development 60 gallons
Static Depth to Water _____ feet below M.P.
Pumping Depth to Water _____ feet below M.P.
Pumping Duration 1 hours
Yield 1 gpm Date _____
Specific Capacity _____ gpm/ft
Well Purpose ground-water monitoring well

Remarks

Prepared by D. Colton

GERAGHTY & MILLER, INC.
Ground-Water Consultants

WELL CONSTRUCTION LOG

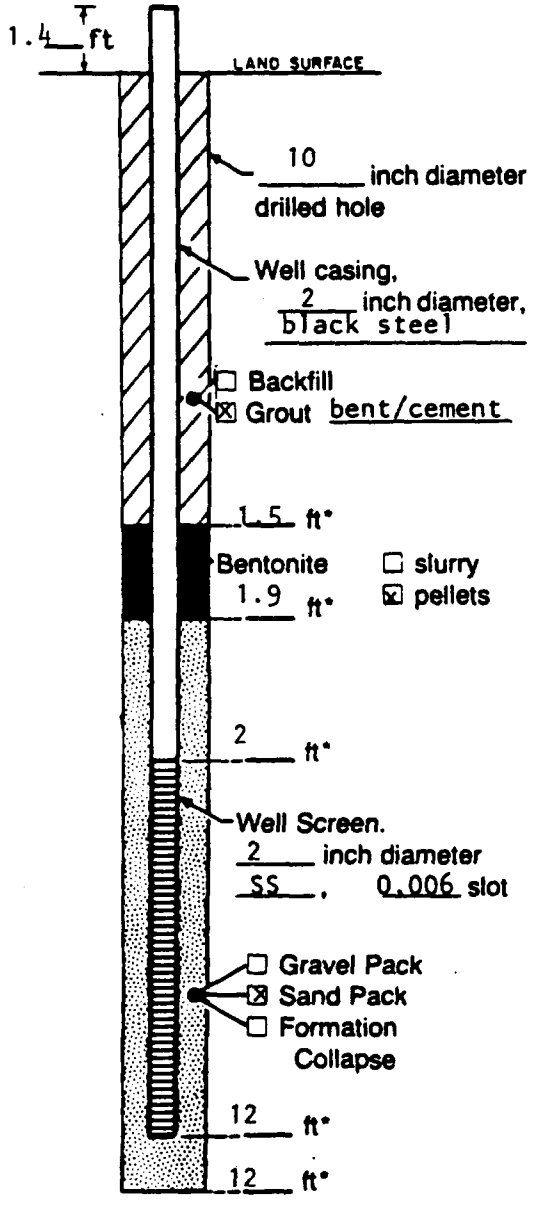

Measuring Point is Top of Well Casing Unless Otherwise Noted.

*Depth Below Land Surface

Project Monsanto Company Well GM-48
Town/City Sauget
County St. Clair State IL
Permit No.
Land-Surface Elevation
and Datum _____ feet ☒ surveyed
Measuring Point 411.00 Ft (MSL) ☐ estimated
Installation Dates(s) 12/10/84
Drilling Method Hollow Stem Auger
Drilling Contractor John Mathes & Associates, Inc.
Drilling Fluid None

Development Techniques(s) and Date(s)
surged with compressed air

Fluid Loss During Drilling None gallons
Water Removed During Development 60 gallons
Static Depth to Water _____ feet below M.P.
Pumping Depth to Water _____ feet below M.P.
Pumping Duration 1 hours
Yield 1 gpm Date _____
Specific Capacity _____ gpm/ft
Well Purpose ground-water monitoring well

Remarks

Prepared by D. Colton

GERAGHTY & MILLER, INC.
Ground-Water Consultants

WELL CONSTRUCTION LOG

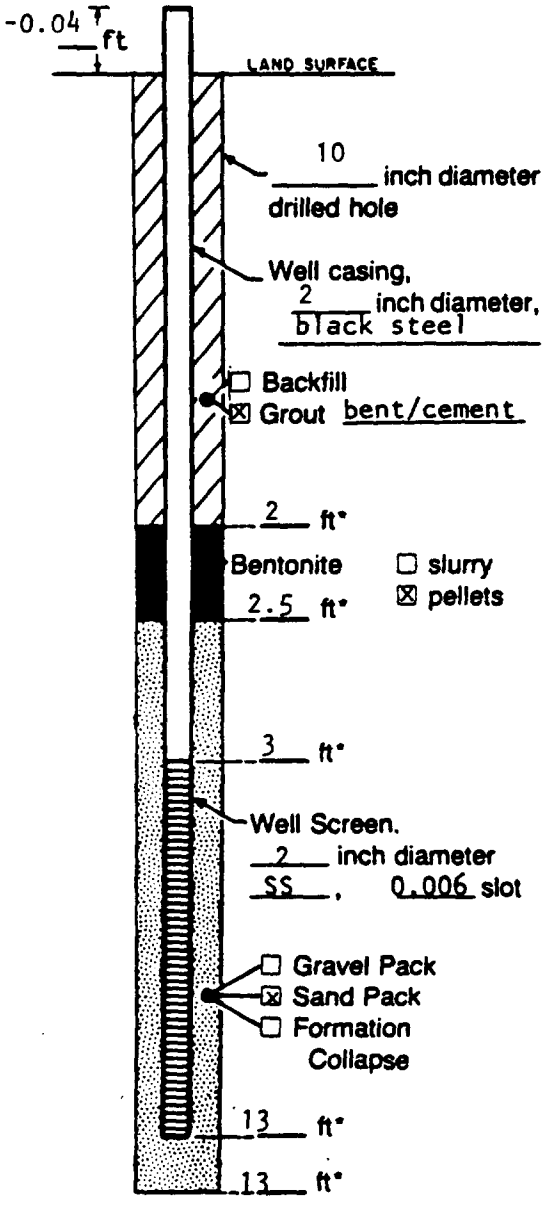

Measuring Point is Top of Well Casing Unless Otherwise Noted.

*Depth Below Land Surface

Project Monsanto Company Well GM-49
Town/City Sauget
County St. Clair State IL
Permit No.
Land-Surface Elevation
and Datum feet ☒ surveyed
Measuring Point 408.43 Ft (MSL) ☐ estimated
Installation Dates(s) 12/10/84
Drilling Method Hollow Stem Auger
Drilling Contractor John Mathes & Associates, Inc.
Drilling Fluid None

Development Techniques(s) and Date(s)
surged with compressed air

Fluid Loss During Drilling None gallons
Water Removed During Development 60 gallons
Static Depth to Water feet below M.P.
Pumping Depth to Water feet below M.P.
Pumping Duration 1 hours
Yield 1 gpm Date
Specific Capacity gpm/ft
Well Purpose ground-water monitoring well

Remarks

Prepared by D. Colton

GERAGHTY & MILLER, INC.
Ground-Water Consultants

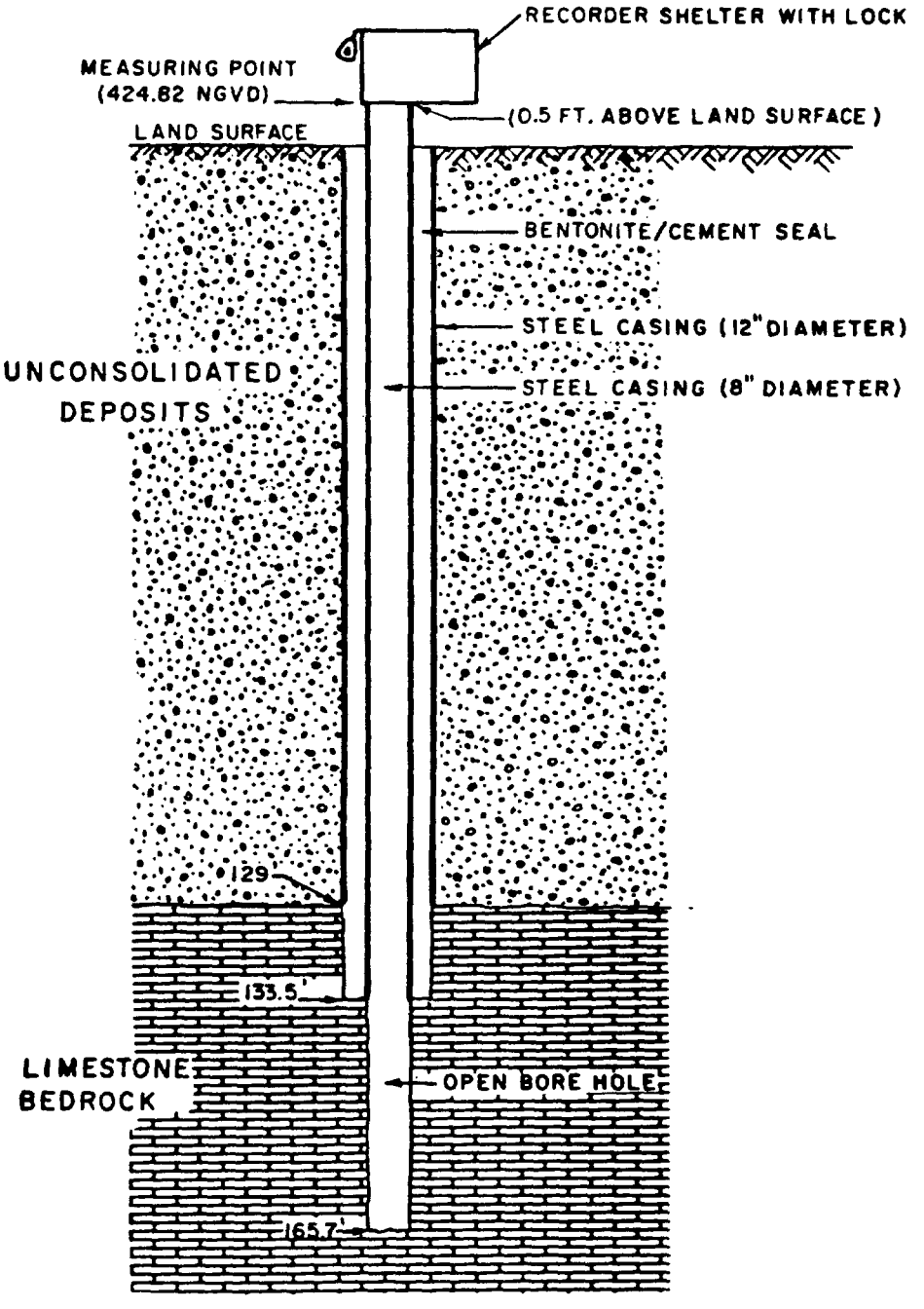

CONSTRUCTION DETAILS FOR WELL GM-106

MONSANTO COMPANY
Sauget, Illinois

APPENDIX D

SUMMARY OF LABORATORY
TEST RESULTS

GERAGHTY & MILLER
PERMEABILITY TESTING
SAUGET, ILLINOIS

BACK PRESSURE SATURATION FALLING HEAD "K" RESULTS

Boring Number	Sample Number	Sample Depth (ft.)	Natural Moisture Content (%)	Dry Unit Weight (lbs/ft^3)	k (cm/sec)	Description
BS-A	1-3	1.0-1.5	15	111	3.9×10^{-7}	Brown Silty CLAY, CL
BS-B	1-3	1.0-1.5	17	111	4.9×10^{-7}	Brown Silty CLAY, CL

NORMAL FALLING HEAD (k-620) "K" RESULTS

Boring Number	Sample Number	Sample Depth (ft.)	Natural Moisture Content (%)	Dry Unit Weight (lbs/ft^3)	k (cm/sec)	Description
BS-A	1-2	0.5-1.0	20	102	2.4×10^{-6}	Brown Silty CLAY, CL
BS-B	1-2	0.5-1.0	18	103	9.8×10^{-7}	Brown Silty CLAY, CL

APPENDIX E

Table E-1. Summary of Volatile Organic Compounds in Ground Water, W.G. Krummrich Plant, Monsanto Company, Sauget, Il. ***

Well Number:	GM-1	GM-1	GM-2	GM-2	GM-3	GM-3	GM-3	GM-4A	GM-4A	GM-4B
Date:	11/83	5/84	11/83	5/84	11/83	5/84	5/84*	11/83	5/84	9/84
USEPA Priority Pollutant Volatile Organic Compounds concentrations are in ug/L										
acrolein	<1	<1	<1	<1	<1	<1	<1	<1	<1	NA
acrylonitrile	<1	<1	<1	<1	<1	<1	<1	<1	<1	NA
benzene	<1	<1	<1	<1	<1	<1	<1	<1	<1	176
bis (chloromethyl) ether	<1	<1	<1	<1	<1	<1	<1	<1	<1	<1.5
bromoform	<1	<1	<1	<1	<1	<1	<1	<1	<1	<3.2
carbon tetrachloride	<1	<1	<1	<1	<1	<1	<1	<1	<1	<1.5
chlorobenzene	<1	<1	<1	<1	<1	<1	<1	<1	<1	2,340
chlorodibromomethane	<1	<1	<1	<1	<1	<1	<1	<1	<1	<2.0
chloroethane	<1	<1	<1	<1	<1	<1	<1	<1	<1	<2.4
2-chloroethylvinyl ether	<1	<1	<1	<1	<1	<1	<1	<1	<1	<5.9
chloroform	2	<1	28	<1	11	<1	<1	<1	<1	23
dichlorobromomethane	<1	<1	<1	<1	<1	<1	<1	<1	<1	<1.1
dichlorodifluoromethane	<1	<1	<1	<1	<1	<1	<1	<1	<1	NA
1,1-dichloroethane	<1	<1	<1	<1	<1	<1	<1	<1	<1	<0.8
1,2-dichloroethane	<1	<1	<1	<1	<1	<1	<1	<1	<1	<1.5
1,1-dichloroethylene	<1	<1	<1	<1	<1	<1	<1	<1	<1	<1.9
1,2-dichloropropane	<1	<1	<1	<1	<1	<1	<1	<1	<1	<1.5
cis-1,3-dichloropropylene	<1	<1	<1	<1	<1	<1	<1	<1	<1	<1.5
trans-1,3-dichloropropylene	<1	<1	<1	<1	<1	<1	<1	<1	<1	<1.5
ethylbenzene	<1	<1	<1	<1	<1	<1	<1	<1	<1	8
methyl bromide	<1	<1	<1	<1	<1	<1	<1	<1	<1	<1.5
methyl chloride	<1	<1	<1	<1	<1	<1	<1	<1	<1	<1.6
methylene chloride	18	32	12	74	12	51	53	9	38	<1.1
1,1,2,2-tetrachloroethane	<1	<1	<1	<1	<1	<1	<1	<1	<1	4
tetrachloroethylene	<1	<1	<1	<1	<1	<1	<1	<1	<1	<1.5
toluene	<1	1	<1	1	<1	1	2	<1	2	2
1,2-trans-dichloroethylene	<1	<1	<1	4	<1	<1	<1	<1	<1	2
1,1,1-trichloroethane	5	<1	<1	<1	<1	3	<1	<1	<1	<1.2
1,1,2-trichloroethane	<1	<1	<1	<1	<1	<1	<1	<1	<1	<1.6
trichloroethylene	6	<1	6	3	<1	<1	<1	<1	<1	<1.3
trichlorofluoromethane	<1	<1	<1	<1	<1	<1	<1	<1	<1	<1.2
vinyl chloride	<1	<1	<1	<1	<1	<1	<1	<1	<1	<1.2
Sub Total 1	31	33	46	82	23	55	55	9	40	2555
Miscellaneous Volatile Organic Compounds										
methyl-iso-butyl ketone	NA	NA	NA	NA	NA	NA	NA	NA	NA	<5
methyl isoamyl ketone	NA	NA	NA	NA	NA	NA	NA	NA	NA	<5
m-xylene	NA	NA	NA	NA	NA	NA	NA	NA	NA	<5
o-xylene/p-xylene	NA	NA	NA	NA	NA	NA	NA	NA	NA	<5
Sub Total 2	NA	NA	NA	NA	NA	NA	NA	NA	NA	0
Total VOC's Analyzed	31	33	46	82	23	55	55	9	40	2555

Table E-1. Summary of Volatile Organic Compounds in Ground Water, W.G. Krummrich Plant, Monsanto Company, Sauget, Il. ***

Well Number:	GM-4B	GM-4B	GM-4B	GM-4B	GM-4B	GM-4C	GM-4C	GM-5	GM-5	GM-6A
Date:	11/84	11/84*	2/85	11/85	11/85*	2/85	5/85	11/83	5/84	11/83
USEPA Priority Pollutant Volatile Organic Compounds concentrations are in ug/L										
acrolein	<5,000	<5,000	<100	<1,000	<100	<100	<1,000	<1	<1	<1
acrylonitrile	<5,000	<5,000	<100	<1,000	<100	<100	<1,000	<1	<1	<1
benzene	500	<500	142	<44	28.3	97.7	<44	<1	2	<1
bis (chloromethyl) ether	<500	<500	<10	<100	<10	<10	<100	<1	<1	<1
bromoform	<500	<500	<4.7	<47	<4.7	<4.7	<47	<1	<1	<1
carbon tetrachloride	<500	<500	<2.8	<28	<2.8	<2.8	<28	<1	<1	<1
chlorobenzene	15,900	15,900	13,600	4,360	5,400	9,210	4,515.3	<1	<1	<1
chlorodibromomethane	<500	<500	<3.1	<31	<3.1	<3.1	<31	<1	<1	<1
chloroethane	<500	<500	<10	<100	<10	<10	<100	<1	<1	<1
2-chloroethylvinyl ether	<500	<500	<10	<100	<10	<10	<100	<1	<1	<1
chloroform	<500	<500	<1.6	<16	<1.6	<1.6	<16	1	<1	3
dichlorobromomethane	<500	<500	<2.2	<22	<2.2	<2.2	<22	<1	<1	<1
dichlorodifluoromethane	<500	<500	<10	<100	<10	<10	<100	<1	<1	<1
1,1-dichloroethane	<500	<500	<4.7	<47	<4.7	<4.7	<47	<1	<1	29
1,2-dichloroethane	<500	<500	<2.8	<28	<2.8	<2.8	<28	<1	<1	<1
1,1-dichloroethylene	<500	<500	<2.8	<28	<2.8	<2.8	<28	<1	<1	<1
1,2-dichloropropane	<500	<500	<6	<60	<6	<6	<60	<1	<1	<1
cis-1,3-dichloropropylene	<500	<500	<5	<50	<5	<5	<50	<1	<1	<1
trans-1,3-dichloropropylene	<500	<500	<10	<100	<10	<10	<100	<1	<1	<1
ethylbenzene	<500	<500	<7.2	<72	<7.2	<7.2	<72	<1	<1	<1
methyl bromide	<500	<500	<10	<100	<10	<10	<100	<1	<1	<1
methyl chloride	<500	<500	<10	<100	<10	<10	<100	<1	<1	<1
methylene chloride	<500	<500	<2.8	<28	<2.8	<2.8	<28	10	102	18
1,1,2,2-tetrachloroethane	<500	<500	<6.9	<69	<6.9	<6.9	<69	<1	<1	<1
tetrachloroethylene	<500	<500	<4.1	<41	<4.1	<4.1	<41	<1	<1	<1
toluene	<500	<500	<6	<60	<6	<6	<60	2	2	1
1,2-trans-dichloroethylene	<500	<500	<3.1	<16	<1.6	<1.6	<16	<1	<1	<1
1,1,1-trichloroethane	<500	<500	<3.8	<38	<3.8	<3.8	66	<1	<1	2
1,1,2-trichloroethane	<500	<500	<5	<50	<5	<5	<50	<1	<1	<1
trichloroethylene	<500	<500	<1.9	<19	<1.9	<1.9	<19	<1	<1	2
trichlorofluoromethane	<500	<500	<10	<100	<10	<10	<100	<1	<1	<1
vinyl chloride	<500	<500	<10	<100	<10	<10	<100	<1	<1	<1
Sub Total 1	16400	15900	13742	4360	5428.3	9307.7	4581.3	13	106	55
Miscellaneous Volatile Organic Compounds										
methyl-iso-butyl ketone	<500	<500	<10	<100	<10	<10	<100	NA	NA	NA
methyl isoamyl ketone	<500	<500	<10	<100	<10	<10	<100	NA	NA	NA
m-xylene	<500	<500	<10	<100	<10	<10	<100	NA	NA	NA
o-xylene/p-xylene	<500	<500	<10	<100	<10	<10	<100	NA	NA	NA
Sub Total 2	0	0	0	0	0	0	0	NA	NA	NA
Total VOC's Analyzed	16400	15900	13742	4360	5428.3	9307.7	4581.3	13	106	55

Table E-1. Summary of Volatile Organic Compounds in Ground Water, W.G. Krummrich Plant, Monsanto Company, Sauget, Il. ***

Well Number:	GM-6A	GM-6A	GM-6B	GM-6B	GM-6B	GM-7	GM-7	GM-8	GM-8	GM-8
Date:	5/84	11/84	9/84**	11/84	11/85	11/83	5/84	11/83	5/84	11/84
USEPA Priority Pollutant Volatile Organic Compounds concentrations are in ug/L										
acrolein	<1	<100	NA	<100	<1,000	<1	<1	<1	<1	<100
acrylonitrile	<1	<100	NA	<100	<1,000	<1	<1	<1	<1	<100
benzene	1	<10	28	71	71.8	1	<1	3	2	<10
bis (chloromethyl) ether	<1	<10	<1.5	<10	<100	<1	<1	<1	<1	<10
bromoform	<1	<10	<3.2	<10	<47	<1	<1	<1	<1	<10
carbon tetrachloride	<1	<10	<1.5	<10	<28	<1	<1	<1	<1	<10
chlorobenzene	<1	<10	2,620	326	379.0	<1	<1	<1	<1	<10
chlorodibromomethane	<1	<10	<2.0	<10	<31	<1	<1	<1	<1	<10
chloroethane	<1	<10	437	<10	<100	<1	<1	<1	<1	<10
2-chloroethylvinyl ether	<1	<10	<5.9	<10	<100	<1	<1	<1	<1	<10
chloroform	<1	<10	<0.8	<10	<16	<1	<1	8	<1	<10
dichlorobromomethane	<1	<10	<1.1	<10	<22	<1	<1	<1	<1	<10
dichlorodifluoromethane	<1	<10	NA	<10	<100	<1	<1	<1	<1	<10
1,1-dichloroethane	<1	13	224	184	75.7	<1	<1	<1	<1	<10
1,2-dichloroethane	<1	<10	<1.5	<10	<28	<1	<1	<1	<1	<10
1,1-dichloroethylene	<1	<10	24	15	<28	<1	<1	<1	<1	<10
1,2-dichloropropane	<1	<10	<1.5	<10	<60	<1	<1	<1	<1	<10
cis-1,3-dichloropropylene	<1	<10	<1.5	<10	<50	<1	<1	<1	<1	<10
trans-1,3-dichloropropylene	<1	<10	<1.5	<10	<100	<1	<1	<1	<1	<10
ethylbenzene	<1	<10	5	<10	<72	<1	<1	<1	<1	<10
methyl bromide	<1	<10	<1.5	<10	<100	<1	<1	<1	<1	<10
methyl chloride	<1	<10	<1.6	<10	<100	<1	<1	<1	<1	<10
methylene chloride	451	<10	326	<10	<28	11	53	16	161	<10
1,1,2,2-tetrachloroethane	<1	<10	<1.4	<10	<69	<1	<1	<1	<1	<10
tetrachloroethylene	<1	<10	<1.5	<10	<41	<1	<1	<1	<1	<10
toluene	2	<10	15	<10	<60	<1	2	<1	2	<10
1,2-trans-dichloroethylene	<1	<10	750	537	201	<1	<1	<1	<1	<10
1,1,1-trichloroethane	7	<10	<1.2	<10	<38	<1	6	6	4	19
1,1,2-trichloroethane	<1	<10	<1.6	<10	<50	<1	<1	<1	<1	<10
trichloroethylene	1	<10	3	<10	<19	<1	<1	<1	<1	<10
trichlorofluoromethane	<1	<10	<1.2	<10	<100	<1	<1	<1	<1	<10
vinyl chloride	<1	<10	<1.2	258	116	<1	<1	<1	<1	<10
Sub Total 1	462	13	4432	1391	843.5	12	61	33	169	19
Miscellaneous Volatile Organic Compounds										
methyl-iso-butyl ketone	NA	<10	<5	<10	<100	NA	NA	NA	NA	<100
methyl isoamyl ketone	NA	<10	<5	<10	<100	NA	NA	NA	NA	<100
m-xylene	NA	<10	<5	<10	<100	NA	NA	NA	NA	<10
o-xylene/p-xylene	NA	<10	<5	<10	<100	NA	NA	NA	NA	<10
Sub Total 2	NA	0	0	0	0	NA	NA	NA	NA	0
Total VOC's Analyzed	462	13	4432	1391	843.5	12	61	33	169	19

Table E-1. Summary of Volatile Organic Compounds in Ground Water, W.G. Krummrich Plant, Monsanto Company, Sauget, Il. ***

Well Number:	GM-8	GM-8	GM-9A	GM-9A	GM-9B	GM-9B	GM-9B	GM-9C	GM-9C	GM-9C
Date:	2/85	11/85	11/83	5/84	9/84**	5/85	11/85	9/84**	5/85	11/85
USEPA Priority Pollutant Volatile Organic Compounds concentrations are in ug/L										
acrolein	<100	<100	<1	<1	NA	<100	<1,000	NA	<100	<100
acrylonitrile	<100	<100	<1	<1	NA	<100	<1,000	NA	<100	<100
benzene	<4.4	<4.4	331	449	276	378.4	<44	35	<4.4	<4.4
bis (chloromethyl) ether	<10	<10	<1	<1	<1.5	<10	<100	<1.5	<10	<10
bromoform	<4.7	<4.7	<1	<1	<3.2	<4.7	<47	<3.2	<4.7	<4.7
carbon tetrachloride	<2.8	<2.8	<1	<1	<1.5	<2.8	<28	<1.5	<2.8	<2.8
chlorobenzene	<6	<6	1,270	701	272	1,780.5	229	216	34.7	99.6
chlorodibromomethane	<3.1	<3.1	<1	<1	<2.0	<3.1	<31	<2.0	<3.1	<3.1
chloroethane	<10	<10	<1	<1	<2.4	<10	<100	<2.4	<10	<10
2-chloroethylvinyl ether	<10	<10	<1	<1	<5.9	<10	<100	<5.9	<10	<10
chloroform	<1.6	<1.6	3	2	<0.8	<1.6	<16	1	<1.6	<1.6
dichlorobromomethane	<2.2	<2.2	<1	<1	<1.1	<2.2	<22	<1.1	<2.2	<2.2
dichlorodifluoromethane	<10	<10	<1	<1	NA	<10	<100	NA	<10	<10
1,1-dichloroethane	<4.7	<4.7	<1	<1	<0.8	<4.7	<47	<0.8	<4.7	<4.7
1,2-dichloroethane	<2.8	<2.8	<1	<1	<1.5	<2.8	<28	<1.5	<2.8	<2.8
1,1-dichloroethylene	<2.8	<2.8	<1	<1	7	<2.8	<28	1	<2.8	<2.8
1,2-dichloropropane	<6	<6	<1	<1	<1.5	<6	<60	<1.5	<6	<6
cis-1,3-dichloropropylene	<5	<5	<1	<1	<1.5	<5	<50	<1.5	<5	<5
trans-1,3-dichloropropylene	<10	<10	<1	<1	<1.5	<10	<100	<1.5	<10	<10
ethylbenzene	<7.2	<7.2	<1	3	<0.4	<7.2	<72	1	<7.2	<7.2
methyl bromide	<10	<10	<1	<1	<1.5	<10	<100	<1.5	<10	<10
methyl chloride	<10	<10	<1	<1	<1.6	<10	<100	<1.6	<10	<10
methylene chloride	<2.8	<2.8	10	22	211	<2.8	584	35	<2.8	53.8
1,1,2,2-tetrachloroethane	<6.9	<6.9	<1	<1	<1.4	<6.9	<69	<1.4	<6.9	<6.9
tetrachloroethylene	<4.1	<4.1	3	2	<1.5	<4.1	<41	<1.5	<4.1	<4.1
toluene	<6	<6	2	2	6	<6	<60	1.5	<6	<6
1,2-trans-dichloroethylene	<1.6	<1.6	<1	<1	<1.5	<1.6	<16	<1.5	<1.6	<1.6
1,1,1-trichloroethane	<3.8	<3.8	3	4	<1.2	<3.8	<38	<1.2	<3.8	<3.8
1,1,2-trichloroethane	<5	<5	<1	<1	<1.6	<5	<50	<1.6	<5	<5
trichloroethylene	<1.9	<1.9	<1	<1	<1.3	<1.9	<19	<1.3	<1.9	<1.9
trichlorofluoromethane	<10	<10	<1	<1	<1.2	<10	<100	<1.2	<10	<10
vinyl chloride	<10	<10	<1	<1	<1.2	<10	<100	<1.2	<10	<10
Sub Total 1	0	0	1622	1185	772	2158.9	813	290.5	34.7	153.4
Miscellaneous Volatile Organic Compounds										
methyl-iso-butyl ketone	<10	<10	NA	NA	<5	<10	<100	<5	<10	<10
methyl isoamyl ketone	<10	<10	NA	NA	<5	<10	<100	<5	<10	<10
m-xylene	<10	<10	NA	NA	<5	<10	<100	<5	<10	<10
o-xylene/p-xylene	<10	<10	NA	NA	<5	<10	<100	<5	<10	<10
Sub Total 2	0	0	NA	NA	0	0	0	0	0	0
Total VOC's Analyzed	0	0	1622	1185	772	2158.9	813	290.5	34.7	153.4

Table E-1. Summary of Volatile Organic Compounds in Ground Water, W.G. Krummrich Plant, Monsanto Company, Sauget, Il. ***

Well Number:	GM-10A	GM-10A	GM-10B	GM-10B	GM-10C	GM-10C	GM-11	GM-11	GM-12A	GM-12A
Date:	11/83	5/84	2/85	5/85	2/85	5/85	11/83	5/84	11/83	11/83*
USEPA Priority Pollutant Volatile Organic Compounds concentrations are in ug/L										
acrolein	<1	<1	<100	<100	<100	<100	<1	<1	<1	<1
acrylonitrile	<1	<1	<100	<100	<100	<100	<1	<1	<1	<1
benzene	2	<1	317	143.9	<4.4	<4.4	<1	<1	425	433
bis (chloromethyl) ether	<1	<1	<10	<10	<10	<10	<1	<1	<1	<1
bromoform	<1	<1	<4.7	<4.7	<4.7	<4.7	<1	<1	<1	<1
carbon tetrachloride	<1	<1	<2.8	<2.8	<2.8	<2.8	<1	<1	<1	<1
chlorobenzene	<1	<1	1,540	119	107	29.6	<1	<1	350	296
chlorodibromomethane	<1	<1	<3.1	<3.1	<3.1	<3.1	<1	<1	<1	<1
chloroethane	<1	<1	<10	<10	<10	<10	<1	<1	<1	<1
2-chloroethylvinyl ether	<1	<1	<10	<10	<10	<10	<1	<1	<1	<1
chloroform	<1	<1	<1.6	<1.6	<1.6	<1.6	5	<1	18	21
dichlorobromomethane	<1	<1	<2.2	<2.2	<2.2	<2.2	<1	<1	<1	<1
dichlorodifluoromethane	<1	<1	<10	<10	<10	<10	<1	<1	<1	<1
1,1-dichloroethane	<1	<1	<4.7	<4.7	<4.7	<4.7	<1	<1	<1	<1
1,2-dichloroethane	<1	<1	<2.8	<2.8	<2.8	<2.8	<1	<1	<1	<1
1,1-dichloroethylene	<1	<1	<2.8	<2.8	<2.8	<2.8	<1	<1	<1	<1
1,2-dichloropropane	<1	<1	<6	<6	<6	<6	<1	<1	<1	<1
cis-1,3-dichloropropylene	<1	<1	<5	<5	<5	<5	<1	<1	<1	<1
trans-1,3-dichloropropylene	<1	<1	<10	<10	<10	<10	<1	<1	<1	<1
ethylbenzene	<1	<1	<7.2	<7.2	<7.2	<7.2	<1	<1	4	4
methyl bromide	<1	<1	<10	<10	<10	<10	<1	<1	<1	<1
methyl chloride	<1	<1	<10	<10	<10	<10	<1	<1	<1	<1
methylene chloride	21	53	<2.8	<2.8	<2.8	<2.8	16	53	49	64
1,1,2,2-tetrachloroethane	<1	<1	<6.9	<6.9	<6.9	<6.9	<1	<1	<1	<1
tetrachloroethylene	<1	<1	<4.1	<4.1	<4.1	<4.1	<1	<1	<1	<1
toluene	<1	2	<6	<6	<6	<6	<1	2	4	4
1,2-trans-dichloroethylene	<1	<1	<1.6	1.9	<1.6	<1.6	<1	<1	<1	<1
1,1,1-trichloroethane	1	<1	<3.8	<3.8	<3.8	<3.8	<1	<1	8	7
1,1,2-trichloroethane	<1	<1	<5	<5	<5	<5	<1	<1	<1	<1
trichloroethylene	<1	<1	<1.9	<1.9	<1.9	<1.9	<1	<1	<1	<1
trichlorofluoromethane	<1	<1	<10	<10	<10	<10	<1	<1	<1	<1
vinyl chloride	<1	<1	<10	<10	<10	<10	<1	<1	<1	<1
Sub Total 1	24	55	1857	264.7	107	29.6	21	55	858	829
Miscellaneous Volatile Organic Compounds										
methyl-iso-butyl ketone	NA	NA	<10	<10	<10	<10	NA	NA	NA	NA
methyl isoamyl ketone	NA	NA	<10	<10	<10	<10	NA	NA	NA	NA
m-xylene	NA	NA	<10	<10	<10	<10	NA	NA	NA	NA
o-xylene/p-xylene	NA	NA	<10	<10	<10	<10	NA	NA	NA	NA
Sub Total 2	NA	NA	0	0	0	0	NA	NA	NA	NA
Total VOC's Analyzed	24	55	1857	264.7	107	29.6	21	55	858	829

Table E-1. Summary of Volatile Organic Compounds in Ground Water, W.G. Krummrich Plant, Monsanto Company, Sauget, Il. ***

Well Number:	GM-12A	GM-12A	GM-12A	GM-12A	GM-12A	GM-12A	GM-12A	GM-12A	GM-12A	GM-12A
Date:	5/84	5/84*	11/84	11/84*	2/85	2/85*	5/85	5/85*	11/85	11/85*
USEPA Priority Pollutant Volatile Organic Compounds concentrations are in ug/L										
acrolein	<1	<1	<100	<1000	<100	<100	<100	<100	<1,000	<1,000
acrylonitrile	<1	<1	<100	<1000	<100	<100	<100	<100	<1,000	<1,000
benzene	3,263	4,819	1,790	3,590	1,030	1,160	2,270.3	1,819.1	1,730	1,540
bis (chloromethyl) ether	<1	<1	<10	<100	<10	<10	<10	<10	<100	<100
bromoform	<1	<1	<10	<100	<4.7	<4.7	<4.7	<4.7	<47	<47
carbon tetrachloride	<1	<1	<10	<100	<2.8	<2.8	<2.8	<2.8	<28	<28
chlorobenzene	304	399	286	565	349.3	399.3	453.4	471.9	428	403
chlorodibromomethane	<1	<1	<10	<100	<3.1	<3.1	<3.1	<3.1	<31	<31
chloroethane	<1	<1	<10	<100	<10	<10	<10	<10	<100	<100
2-chloroethylvinyl ether	<1	<1	<10	<100	<10	<10	<10	<10	<100	<100
chloroform	<1	<1	<10	<100	<1.6	<1.6	<1.6	<1.6	<16	<16
dichlorobromomethane	<1	<1	<10	<100	<2.2	<2.2	<2.2	<2.2	<22	<22
dichlorodifluoromethane	<1	<1	<10	<100	<10	<10	<10	<10	<100	<100
1,1-dichloroethane	<1	<1	<10	<100	<4.7	<4.7	<4.7	<4.7	<47	<47
1,2-dichloroethane	<1	<1	<10	<100	<2.8	<2.8	<2.8	<2.8	<28	<28
1,1-dichloroethylene	<1	<1	<10	<100	<2.8	<2.8	<2.8	<2.8	<28	<28
1,2-dichloropropane	<1	<1	<10	<100	<6	<6	<6	<6	<60	<60
cis-1,3-dichloropropylene	<1	<1	<10	<100	<5	<5	<5	<5	<50	<50
trans-1,3-dichloropropylene	<1	<1	<10	<100	<10	<10	<10	<10	<100	<100
ethylbenzene	17	17	17	<100	20.2	22	13.9	14.6	<72	<72
methyl bromide	<1	<1	<10	<100	<10	<10	<10	<10	<100	<100
methyl chloride	<1	<1	<10	<100	<10	<10	<10	<10	<100	<100
methylene chloride	23	31	<10	<100	<2.8	<2.8	<2.8	<2.8	599	443
1,1,2,2-tetrachloroethane	<1	<1	<10	<100	<6.9	<6.9	<6.9	<6.9	<69	<69
tetrachloroethylene	<1	<1	<10	<100	<4.1	<4.1	<4.1	<4.1	<41	<41
toluene	17	22	26	<100	31.2	29	12.2	12.3	<60	<60
1,2-trans-dichloroethylene	<1	<1	<10	<100	<1.6	<1.6	<1.6	<1.6	<16	<16
1,1,1-trichloroethane	<1	<1	<10	<100	<3.8	<3.8	<3.8	<3.8	<38	<38
1,1,2-trichloroethane	<1	<1	<10	<100	<5	<5	<5	<5	<50	<50
trichloroethylene	<1	<1	<10	<100	<1.9	<1.9	<1.9	<1.9	<19	<19
trichlorofluoromethane	<1	<1	<10	<100	<10	<10	<10	<10	<100	<100
vinyl chloride	<1	<1	<10	<100	<10	<10	<10	<10	<100	<100
Sub Total 1	3624	5288	2119	4155	1430.7	1610.3	2749.8	2317.9	2757	2386
Miscellaneous Volatile Organic Compounds										
methyl-iso-butyl ketone	NA	NA	<10	<100	<10	<10	<10	<10	<100	<100
methyl isoamyl ketone	NA	NA	<10	<100	<10	<10	<10	<10	<100	<100
m-xylene	NA	NA	17	<100	17.1	18.5	11	12.6	<100	<100
o-xylene/p-xylene	NA	NA	49	<100	55.3	59.5	43	49.7	<100	<100
Sub Total 2	NA	NA	66	0	72.4	78	54	62.3	0	0
Total VOC's Analyzed	3624	5288	2185	4155	1503.1	1688.3	2803.8	2380.2	2757	2386

Table E-1. Summary of Volatile Organic Compounds in Ground Water, W.G. Krummrich Plant, Monsanto Company, Sauget, Il. ***

Well Number:	GM-12A	GM-12A	GM-12B	GM-12B	GM-12B	GM-12C	GM-12C	GM-12C	GM-12C	GM-13
Date:	2/86	2/86*	9/84**	11/84	11/85	2/85	2/85*	5/85	5/85*	9/84**
USEPA Priority Pollutant Volatile Organic Compounds concentrations are in ug/L										
acrolein	<100	<100	NA	<1,000	<1,000	<100	<100	<100	<100	NA
acrylonitrile	<100	<100	NA	<1,000	<1,000	<100	<100	<100	<100	NA
benzene	1,170	1,160	700	2,090	2,100	66.7	54.7	27.4	26	1,400
bis (chloromethyl) ether	<10	<10	<150	<100	<100	<10	<10	<10	<10	<300
bromoform	<4.7	<4.7	<320	<100	<47	<4.7	<4.7	<4.7	<4.7	<640
carbon tetrachloride	<2.8	<2.8	<150	<100	<28	<2.8	<2.8	<2.8	<2.8	<300
chlorobenzene	499	394	<60	<100	<60	<6	10.4	<6	<6	850
chlorodibromomethane	<3.1	<3.1	<200	<100	<31	<3.1	<3.1	<3.1	<3.1	<400
chloroethane	<10	<10	<240	<100	<100	<10	<10	<10	<10	<480
2-chloroethylvinyl ether	<10	<10	<590	<100	<100	<10	<10	<10	<10	<1,180
chloroform	<1.6	<1.6	<80	<100	<16	<1.6	<1.6	<1.6	<1.6	<160
dichlorobromomethane	<2.2	<2.2	<110	<100	<22	<2.2	<2.2	<2.2	<2.2	<220
dichlorodifluoromethane	<10	<10	NA	<100	<100	<10	<10	<10	<10	NA
1,1-dichloroethane	<4.7	<4.7	<80	<100	<47	<4.7	<4.7	<4.7	<4.7	<160
1,2-dichloroethane	<2.8	<2.8	<150	<100	<28	<2.8	<2.8	<2.8	<2.8	<300
1,1-dichloroethylene	<2.8	<2.8	<190	<100	<28	<2.8	<2.8	<2.8	<2.8	<380
1,2-dichloropropane	<6	<6	<150	<100	<60	<6	<6	<6	<6	<300
cis-1,3-dichloropropylene	<5	<5	<150	<100	<50	<5	<5	<5	<5	<300
trans-1,3-dichloropropylene	<10	<10	<150	<100	<100	<10	<10	<10	<10	<300
ethylbenzene	11.3	7.9	230	<100	<72	40	37.4	<7.2	<7.2	25,000
methyl bromide	<10	<10	<150	<100	<100	<10	<10	<10	<10	<300
methyl chloride	<10	<10	<160	<100	<100	<10	<10	<10	<10	<320
methylene chloride	<2.8	6.5	200	<100	410	<2.8	<2.8	<2.8	<2.8	360
1,1,2,2-tetrachloroethane	<6.9	<6.9	<140	<100	<69	<6.9	<6.9	<6.9	<6.9	<280
tetrachloroethylene	<4.1	<4.1	<150	<100	<41	<4.1	<4.1	<4.1	<4.1	<300
toluene	<6	<6	100	112	63.3	125	113	16.2	14.4	1,200
1,2-trans-dichloroethylene	<1.6	<1.6	<150	<100	<16	<1.6	<1.6	<1.6	<1.6	<300
1,1,1-trichloroethane	<3.8	<3.8	<120	<100	<38	<3.8	<3.8	<3.8	<3.8	<240
1,1,2-trichloroethane	<5	<5	<160	<100	<50	<5	<5	<5	<5	<320
trichloroethylene	<1.9	<1.9	<130	<100	<19	<1.9	<1.9	<1.9	<1.9	<260
trichlorofluoromethane	<10	<10	<120	<100	<100	<10	<10	<10	<10	<240
vinyl chloride	<10	<10	<120	<100	<100	<10	<10	<10	<10	<240
Sub Total 1	1680.3	1568.4	1230	2202	2573.3	231.7	215.5	43.6	40.4	28810
Miscellaneous Volatile Organic Compounds										
methyl-iso-butyl ketone	<10	<10	<500	<100	<100	<10	<10	<10	<10	<1,000
methyl isoamyl ketone	<10	<10	<500	<100	<100	<10	<10	<10	<10	<1,000
m-xylene	<10	<10	<500	<100	<100	75.8	70.9	19	<10	<1,000
o-xylene/p-xylene	20	16.9	<500	<100	<100	74	68.2	21.9	17.3	<1,000
Sub Total 2	20	16.9	0	0	0	149.8	139.1	40.9	17.3	0
Total VOC's Analyzed	1700.3	1585.3	1230	2202	2573.3	381.5	354.6	84.5	57.7	28810

Table E-1. Summary of Volatile Organic Compounds in Ground Water, W.G. Krummrich Plant, Monsanto Company, Sauget, Il. ***

Well Number:	GM-13	GM-13	GM-14	GM-15	GM-16A	GM-16A	GM-16A	GM-16B	GM-16B	GM-16B
Date:	11/85	2/86	9/84**	9/84**	9/84**	5/85	11/85	9/84**	5/85	11/85
USEPA Priority Pollutant Volatile Organic Compounds concentrations are in ug/L										
acrolein	<2,000	<5,000	NA	NA	NA	<100	<100	NA	<100	<100
acrylonitrile	<2,000	<5,000	NA	NA	NA	<100	<100	NA	<100	<100
benzene	1,180	925	1,400	8	<0.5	<4.4	<4.4	<0.5	<4.4	<4.4
bis (chloromethyl) ether	<200	<500	<300	<1.5	<1.5	<10	<10	<1.5	<10	<10
bromoform	<94	<240	<640	<3.2	<3.2	<4.7	<4.7	<3.2	<4.7	<4.7
carbon tetrachloride	<56	<140	<300	<1.5	<1.5	<2.8	<2.8	<1.5	4.5	<2.8
chlorobenzene	3,900	18,600	152,000	103	<0.6	<6	<6	2	<6	<6
chlorodibromomethane	<62	<160	<400	<2.0	<2.0	<3.1	<3.1	<2.0	<3.1	<3.1
chloroethane	<200	<500	<480	<2.4	<2.4	<10	<10	<2.4	<10	<10
2-chloroethylvinyl ether	<200	<500	<1,180	<5.9	<5.9	<10	<10	<5.9	<10	<10
chloroform	<32	<80	<160	<0.8	2	<1.6	<1.6	58	<1.6	<1.6
dichlorobromomethane	<44	<110	<220	<1.1	<1.1	<2.2	<2.2	<1.1	<2.2	<2.2
dichlorodifluoromethane	<200	<500	NA	NA	NA	<10	<10	NA	<10	<10
1,1-dichloroethane	<94	<240	<160	<0.8	<0.8	<4.7	<4.7	<0.8	<4.7	<4.7
1,2-dichloroethane	<56	<140	<300	<1.5	<1.5	<2.8	<2.8	<1.5	<2.8	<2.8
1,1-dichloroethylene	<56	<140	<380	<1.9	<1.9	<2.8	<2.8	<1.9	<2.8	<2.8
1,2-dichloropropane	<120	<300	<300	<1.5	<1.5	<6	<6	<1.5	<6	<6
cis-1,3-dichloropropylene	<100	<250	<300	<1.5	<1.5	<5	<5	<1.5	<5	<5
trans-1,3-dichloropropylene	<200	<500	<300	<1.5	<1.5	<10	<10	<1.5	<10	<10
ethylbenzene	20,000	18,900	480	9	<0.4	<7.2	<7.2	<0.4	<7.2	<7.2
methyl bromide	<200	<500	<300	<1.5	<1.5	<10	<10	<1.5	<10	<10
methyl chloride	<200	<500	<320	<1.6	<1.6	<10	<10	<1.6	<10	<10
methylene chloride	1,310	<140	800	24	10	5.4	<2.8	5	<2.8	<2.8
1,1,2,2-tetrachloroethane	<140	<350	<280	<1.4	<1.4	<6.9	<6.9	<1.4	<6.9	<6.9
tetrachloroethylene	<82	<210	<300	<1.5	<1.5	<4.1	<4.1	<1.5	<4.1	<4.1
toluene	1,120	845	204	9	2	<6	<6	<0.4	<6	<6
1,2-trans-dichloroethylene	<32	<80	<300	<1.5	<1.5	<1.6	<1.6	<1.5	<1.6	<1.6
1,1,1-trichloroethane	<76	<190	<240	<1.2	<1.2	<3.8	<3.8	<1.2	<3.8	<3.8
1,1,2-trichloroethane	<100	<250	<320	<1.6	<1.6	<5	<5	<1.6	<5	<5
trichloroethylene	<38	<95	<260	<1.3	<1.3	<1.9	<1.9	<1.3	<1.9	<1.9
trichlorofluoromethane	<200	<500	<240	<1.2	<1.2	<10	<10	<1.2	<10	<10
vinyl chloride	<200	<500	<240	<1.2	<1.2	<10	<10	<1.2	<10	<10
Sub Total 1	27510	39270	154884	153	14	5.4	0	65	4.5	0
Miscellaneous Volatile Organic Compounds										
methyl-iso-butyl ketone	<200	7,470	<1,000	<5	<5	<10	<10	<5	<10	<10
methyl isoamyl ketone	<200	5,130	<1,000	<5	<5	<10	<10	<5	<10	<10
m-xylene	50,900	39,100	<1,000	<5	a)	<10	<10	a)	<10	<10
o-xylene/p-xylene	35,800	30,400	<1,000	<5	a)	<10	<10	a)	<10	<10
Sub Total 2	86700	82100	0	0	0	0	0	0	0	0
Total VOC's Analyzed	114210	121370	154884	153	14	5.4	0	65	4.5	0

Table E-1. Summary of Volatile Organic Compounds in Ground Water, W.G. Krummrich Plant, Monsanto Company, Sauget, Il. ***

Well Number:	GM-17A	GM-17A	GM-17A	GM-17B	GM-17B	GM-17B	GM-17C	GM-17C	GM-17C	GM-18A
Date:	9/84**	11/84	11/85	9/84**	11/84	11/85	9/84**	11/84	11/85	9/84**
EPA Priority Pollutant Volatile Organic Compounds Concentrations are in ug/L										
acrolein	NA	<10,000	<10,000	NA	<10,000	<100	NA	<100	<1,000	NA
acrylonitrile	NA	<10,000	<10,000	NA	<10,000	<100	NA	<100	<1,000	NA
benzene	NA	41,900	51,900	26,000	69,200	47,400	4,940	1,880	552	34
bis (chloromethyl) ether	<1.5	<1,000	<1,000	<300	<1,000	<10	<300	<10	<100	<1.5
bromoform	<3.2	<1,000	<470	<640	<1,000	<4.7	<640	<10	<47	<3.2
carbon tetrachloride	<1.5	<1,000	<280	<300	<1,000	<2.8	<300	<10	<28	<1.5
chlorobenzene	NA	57,500	56,500	5,300	17,600	376	13,900	9,510	3,500	<0.6
chlorodibromomethane	<2.0	<1,000	<310	<400	<1,000	<3.1	<400	<10	<31	<2.0
chloroethane	<2.4	<1,000	<1,000	<480	<1,000	<10	<480	<10	<100	<2.5
2-chloroethylvinyl ether	<5.9	<1,000	<1,000	<1,180	<1,000	<10	<1,180	<10	<100	<5.9
chloroform	<0.8	<1,000	<160	<160	<1,000	<1.6	<160	<10	<16	2
dichlorobromomethane	<1.1	<1,000	<220	<220	<1,000	<2.2	<220	<10	<22	<1.1
dichlorodifluoromethane	NA	<1,000	<1,000	NA	<1,000	<10	NA	<10	<100	NA
1,1-dichloroethane	<0.8	<1,000	<470	170	<1,000	<4.7	<160	<10	<47	<0.8
1,2-dichloroethane	<1.5	<1,000	<280	<300	<1,000	<2.8	<300	<10	<28	<1.5
1,1-dichloroethylene	<1.9	<1,000	<280	<380	<1,000	<2.8	205	<10	<28	1
1,2-dichloropropane	<1.5	<1,000	<600	<300	<1,000	<6	<300	<10	<60	<1.5
cis-1,3-dichloropropylene	<1.5	<1,000	<500	<300	<1,000	<5	<300	<10	<50	<1.5
trans-1,3-dichloropropylene	<1.5	<1,000	<1,000	<300	<1,000	<10	<300	<10	<100	<1.5
ethylbenzene	<0.4	<1,000	<720	250	<1,000	11	<80	<10	<72	<0.4
methyl bromide	<1.5	<1,000	<1,000	120	<1,000	<10	<300	<10	<100	<1.5
methyl chloride	<1.6	<1,000	<1,000	120	<1,000	<10	<320	<10	<100	<1.6
methylene chloride	3	3,060	<280	540	3,740	<2.8	7,140	<10	<28	39
1,1,2,2-tetrachloroethane	<1.4	<1,000	<690	<280	<1,000	<6.9	<280	<10	<69	<1.4
tetrachloroethylene	<1.5	<1,000	<410	<300	<1,000	<4.1	<300	<10	<41	<1.5
toluene	6	<1,000	<600	220	<1,000	9.1	194	<10	<60	<0.4
1,2-trans-dichloroethylene	<1.5	<1,000	<160	<300	<1,000	<1.6	<300	<10	<16	<1.5
1,1,1-trichloroethane	<1.2	<1,000	<380	<240	<1,000	<3.8	<240	<10	<38	<1.2
1,1,2-trichloroethane	<1.6	<1,000	<500	<320	<1,000	<5	<320	<10	<50	<1.6
trichloroethylene	<1.3	<1,000	<190	<260	<1,000	<1.9	<260	<10	<19	<1.3
trichlorofluoromethane	<1.2	<1,000	<1,000	<240	<1,000	<10	<240	<10	<100	<1.2
vinyl chloride	<1.2	<1,000	<1,000	130	<1,000	<10	<240	<10	<100	<1.2
Sub Total 1	9	102460	108400	32850	90540	47796.1	26379	11390	4052	76
Miscellaneous Volatile Organic Compounds										
methyl-iso-butyl ketone	<5	<10,000	<1,000	<1,000	<10,000	<10	<1,000	<100	<100	<5
methyl isoamyl ketone	<5	<10,000	<1,000	<1,000	<10,000	<10	<1,000	<100	<100	<5
m-xylene	<5	<1,000	<1,000	<1,000	<1,000	<10	<1,000	<10	<100	<5
o-xylene/p-xylene	<5	<1,000	<1,000	<1,000	<1,000	<10	<1,000	<10	<100	<5
Sub Total 2	0	0	0	0	0	0	0	0	0	0
Total VOC's Analyzed	9	102460	108400	32850	90540	47796.1	26379	11390	4052	76

Table E-1. Summary of Volatile Organic Compounds in Ground Water, W.G. Krummrich Plant, Monsanto Company, Sauget, Il. ***

Well Number:	GM-18A	GM-18A	GM-18B	GM-18B	GM-18B	GM-25A	GM-25A	GM-25B**	GM-25B	GM-25B
Date:	5/85	11/85	9/84**	5/85	11/85	9/84	11/84	9/84	11/84	11/85
USEPA Priority Pollutant Volatile Organic Compounds concentrations are in ug/L										
acrolein	<100	<100	NA	<100	<100	NA	<100	NA	<100	<100
acrylonitrile	<100	<100	NA	<100	<100	NA	<100	NA	<100	<100
benzene	<4.4	<4.4	35	63.3	24.1	1	<10	<0.5	<10	<4.4
bis (chloromethyl) ether	<10	<10	<1.5	<10	<10	<1.5	<10	<1.5	<10	<10
bromoform	<4.7	<4.7	<3.2	<4.7	<4.7	<3.2	<10	<3.2	<10	<4.7
carbon tetrachloride	<2.8	<2.8	<1.5	<2.8	<2.8	<1.5	<10	<1.5	<10	<2.8
chlorobenzene	<6	<6	100	285.1	174	14	<10	<0.6	<10	<6
chlorodibromomethane	<3.1	<3.1	<2.0	<3.1	<3.1	<2.0	<10	<2.0	<10	<3.1
chloroethane	<10	<10	22	<10	<10	<2.4	<10	<2.4	<10	<10
2-chloroethylvinyl ether	<10	<10	<5.9	<10	<10	<5.9	<10	<5.9	<10	<10
chloroform	<1.6	<1.6	<0.8	<1.6	<1.6	3	<10	3	<10	<1.6
dichlorobromomethane	<2.2	<2.2	<1.1	<2.2	<2.2	<1.1	<10	<1.1	<10	<2.2
dichlorodifluoromethane	<10	<10	NA	<10	<10	NA	<10	NA	<10	<10
1,1-dichloroethane	<4.7	<4.7	<0.8	<4.7	<4.7	<0.8	<10	<0.8	<10	<4.7
1,2-dichloroethane	<2.8	<2.8	<1.5	<2.8	<2.8	<1.5	<10	<1.5	<10	<2.8
1,1-dichloroethylene	<2.8	<2.8	1	<2.8	<2.8	<1.9	<10	<1.9	<10	<2.8
1,2-dichloropropane	<6	<6	<1.5	<6	<6	<1.5	<10	<1.5	<10	<6
cis-1,3-dichloropropylene	<5	<5	<1.5	<5	<5	<1.5	<10	<1.5	<10	<5
trans-1,3-dichloropropylene	<10	<10	<1.5	<10	<10	<1.5	<10	<1.5	<10	<10
ethylbenzene	<7.2	<7.2	<0.4	<7.2	<7.2	<0.4	<10	<0.4	<10	<7.2
methyl bromide	<10	<10	<1.5	<10	<10	<1.5	<10	<1.5	<10	<10
methyl chloride	<10	<10	<1.6	<10	<10	<1.6	<10	<1.6	<10	<10
methylene chloride	<2.8	<2.8	37	<2.8	<2.8	5	<10	2	<10	<2.8
1,1,2,2-tetrachloroethane	<6.9	<6.9	<1.4	<6.9	<6.9	<1.4	<10	<1.4	<10	<6.9
tetrachloroethylene	<4.1	<4.1	<1.5	<4.1	<4.1	<1.5	<10	<1.5	<10	<4.1
toluene	<6	<6	1	<6	<6	1	<10	<0.4	<10	<6
1,2-trans-dichloroethylene	<1.6	<1.6	1	1.7	<1.6	<1.5	<10	<1.5	<10	<1.6
1,1,1-trichloroethane	<3.8	<3.8	<1.2	<3.8	<3.8	<1.2	<10	<1.2	<10	<3.8
1,1,2-trichloroethane	<5	<5	<1.6	<5	<5	<1.6	<10	<1.6	<10	<5
trichloroethylene	<1.9	<1.9	<1.3	<1.9	<1.9	<1.3	<10	<1.3	<10	<1.9
trichlorofluoromethane	<10	<10	<1.2	<10	<10	<1.2	<10	<1.2	<10	<10
vinyl chloride	<10	<10	<1.2	34.3	31.4	<1.2	<10	<1.2	<10	<10
Sub Total 1	0	0	197	384.4	229.5	24	0	5	0	0
Miscellaneous Volatile Organic Compounds										
methyl-iso-butyl ketone	<10	<10	<5	<10	<10	<5	<100	<5	<10	<10
methyl isoamyl ketone	<10	<10	<5	<10	<10	<5	<100	<5	<10	<10
m-xylene	<10	<10	<5	<10	<10	<5	<10	b)	<10	<10
o-xylene/p-xylene	<10	<10	<5	<10	<10	<5	<10	b)	<10	<10
Sub Total 2	0	0	0	0	0	0	0	0	0	0
Total VOC's Analyzed	0	0	197	384.4	229.5	24	0	5	0	0

Table E-1. Summary of Volatile Organic Compounds in Ground Water, W.G. Krummrich Plant, Monsanto Company, Sauget, Il. ***

Well Number:	GM-27B	GM-27B	GM-27B	GM-27C	GM-27C	GM-27C	GM-28B	GM-28B	GM-28B	GM-28C
Date:	9/84**	11/85	2/86	9/84**	11/85	2/86	9/84**	11/85	2/86	9/84**
USEPA Priority Pollutant Volatile Organic Compounds concentrations are in ug/L										
acrolein	NA	<100	<100	NA	<1,000	<1,000	NA	<5,000	<1,000	NA
acrylonitrile	NA	<100	<100	NA	<1,000	<1,000	NA	<5,000	<1,000	NA
benzene	36	35.6	619	160	554	765	410	934	644	1,000
bis (chloromethyl) ether	<1.5	<10	<10	<1.5	<100	<100	<1.5	<500	<100	<1.5
bromoform	<3.2	<4.7	<4.7	<3.2	<47	<47	<3.2	<240	<47	<3.2
carbon tetrachloride	<1.5	<2.8	<2.8	<1.5	<28	<28	<1.5	<140	<28	<1.5
chlorobenzene	80	143	459	275	1,220	1,950	2,804	6,120	6,130	3,800
chlorodibromomethane	<2.0	<3.1	<3.1	<2.0	<31	<31	<2.0	<160	<31	<2.0
chloroethane	<2.4	<10	<10	<2.4	<100	<100	<2.4	<500	<100	<2.4
2-chloroethylvinyl ether	<5.9	<10	<10	<5.9	<100	<100	<5.9	<500	<100	<5.9
chloroform	<0.8	<1.6	<1.6	<0.8	<16	<16	<0.8	<80	<16	<0.8
dichlorobromomethane	<1.1	<2.2	<2.2	<1.1	<22	<22	<1.1	<110	<22	<1.1
dichlorodifluoromethane	NA	<10	<10	NA	<100	<100	NA	<500	<100	NA
1,1-dichloroethane	<0.8	<4.7	<4.7	<0.8	<47	<47	<0.8	<240	<47	<0.8
1,2-dichloroethane	<1.5	<2.8	<2.8	<1.5	<28	<28	<1.5	<140	<28	<1.5
1,1-dichloroethylene	<1.9	<2.8	<2.8	1	<28	<28	1	<140	<28	2
1,2-dichloropropane	<1.5	<6	<6	<1.5	<60	<60	<1.5	<300	<60	<1.5
cis-1,3-dichloropropylene	<1.5	<5	<5	<1.5	<50	<50	<1.5	<250	<50	<1.5
trans-1,3-dichloropropylene	<1.5	<10	<10	<1.5	<100	<100	<1.5	<500	<100	<1.5
ethylbenzene	6	<7.2	<7.2	1	<72	<72	12	<360	<72	19
methyl bromide	<1.5	<10	<10	<1.5	<100	<100	<1.5	<500	<100	<1.5
methyl chloride	<1.6	<10	<10	<1.6	<100	<100	<1.6	<500	<100	<1.6
methylene chloride	40	<2.8	13	38	<28	<28	71	<140	<28	45
1,1,2,2-tetrachloroethane	<1.4	<6.9	<6.9	<1.4	<69	<69	<1.4	<350	<69	<1.4
tetrachloroethylene	<1.5	<4.1	<4.1	<1.5	<41	<41	<1.5	<210	<41	<1.5
toluene	4	<6	6	2	<60	<60	18	<300	<60	35
1,2-trans-dichloroethylene	<1.5	<1.6	<1.6	<1.5	<16	<16	<1.5	<80	<16	2
1,1,1-trichloroethane	<1.2	<3.8	<3.8	<1.2	<38	<38	<1.2	<190	<38	<1.2
1,1,2-trichloroethane	<1.6	<5	<5	<1.6	<50	<50	<1.6	<250	<50	<1.6
trichloroethylene	<1.3	<1.9	<1.9	<1.3	<19	<19	<1.3	<95	<19	<1.3
trichlorofluoromethane	<1.2	<10	<10	<1.2	<100	<100	<1.2	<500	<100	<1.2
vinyl chloride	<1.2	<10	<10	<1.2	<100	<100	<1.2	<500	<100	<1.2
Sub Total 1	166	178.6	1097	477	1774	2715	3316	7054	6774	4902
Miscellaneous Volatile Organic Compounds										
methyl-iso-butyl ketone	<5	<10	<10	<5	<100	<100	2	<500	<100	<5
methyl isoamyl ketone	<5	<10	<10	<5	<100	<100	<5	<500	<100	<5
m-xylene	b)	<10	<10	b)	<100	<100	c)	<500	<100	c)
o-xylene/p-xylene	b)	<10	<10	b)	<100	<100	c)	<500	<100	c)
Sub Total 2	0	0	0	0	0	0	2	0	0	0
Total VOC's Analyzed	166	178.6	1097	477	1774	2715	3318	7054	6774	4902

Table E-1. Summary of Volatile Organic Compounds in Ground Water, W.G. Krummrich Plant, Monsanto Company, Sauget, Il. ***

Well Number:	GM-28C	GM-28C	GM-29	GM-29	GM-30	GM-30	GM-30	GM-31A	GM-31A	GM-31A
Date:	11/85	2/86	9/84**	11/85	9/84**	11/85	2/86	2/85	5/85	11/85
USEPA Priority Pollutant Volatile Organic Compounds concentrations are in ug/L										
acrolein	<5,000	<1,000	NA	<100	NA	<100	<100	<100	<100	<100
acrylonitrile	<5,000	<1,000	NA	<100	NA	<100	<100	<100	<100	<100
benzene	516	470	<0.5	<4.4	735	<4.4	<4.4	20.9	461.8	36
bis (chloromethyl) ether	<500	<100	<1.5	<10	<1.5	<10	<10	<10	<10	<10
bromoform	<240	<47	<3.2	<4.7	<3.2	<4.7	<4.7	<4.7	<4.7	<4.7
carbon tetrachloride	<140	<28	<1.5	<2.8	<1.5	<2.8	<2.8	<2.8	<2.8	<2.8
chlorobenzene	5,130	4,890	<0.6	<6	<0.6	<6	7.14	8.4	6.4	15.1
chlorodibromomethane	<160	<31	<2.0	<3.1	<2.0	<3.1	<3.1	<3.1	<3.1	<3.1
chloroethane	<500	<100	<2.4	<10	<2.4	<10	<10	<10	<10	<10
2-chloroethylvinyl ether	<500	<100	<5.9	<10	<5.9	<10	<10	<10	<10	<10
chloroform	<80	<16	2	<1.6	12	11.2	9.24	<1.6	<1.6	<1.6
dichlorobromomethane	<110	<22	<1.1	<2.2	<1.1	<2.2	<2.2	<2.2	<2.2	<2.2
dichlorodifluoromethane	<500	<100	NA	<10	NA	<10	<10	<10	<10	<10
1,1-dichloroethane	<240	<47	<0.8	<4.7	<0.8	<4.7	<4.7	<4.7	<4.7	<4.7
1,2-dichloroethane	<140	<28	<1.5	<2.8	<1.5	<2.8	<2.8	<2.8	<2.8	<2.8
1,1-dichloroethylene	<140	<28	<1.9	<2.8	<1.9	<2.8	<2.8	<2.8	<2.8	<2.8
1,2-dichloropropane	<300	<60	<1.5	<6	<1.5	<6	<6	<6	<6	<6
cis-1,3-dichloropropylene	<250	<50	<1.5	<5	<1.5	<5	<5	<5	<5	<5
trans-1,3-dichloropropylene	<500	<100	<1.5	<10	<1.5	<10	<10	<10	<10	<10
ethylbenzene	<360	<72	<0.4	<7.2	<0.4	<7.2	<7.2	<7.2	<7.2	<7.2
methyl bromide	<500	<100	<1.5	<10	<1.5	<10	<10	<10	<10	<10
methyl chloride	<500	<100	8	<10	<1.6	<10	<10	<10	<10	<10
methylene chloride	178	<28	<1.1	<2.8	185	<2.8	<2.8	<2.8	<2.8	5.3
1,1,2,2-tetrachloroethane	<350	<69	<1.4	<6.9	<1.4	<6.9	<6.9	<6.9	<6.9	<6.9
tetrachloroethylene	<210	<41	<1.5	<4.1	<1.5	4.31	<4.1	<4.1	<4.1	<4.1
toluene	<300	<60	<0.4	<6	<0.4	<6	<6	<6	<6	<6
1,2-trans-dichloroethylene	<80	<16	<1.5	<1.6	<1.5	<1.6	<1.6	<1.6	<1.6	<1.6
1,1,1-trichloroethane	<190	<38	<1.2	<3.8	<1.2	<3.8	<3.8	<3.8	<3.8	<3.8
1,1,2-trichloroethane	<250	<50	<1.6	<5	<1.6	<5	<5	<5	<5	<5
trichloroethylene	<95	<19	2	<1.9	<1.3	3.99	<1.9	<1.9	<1.9	<1.9
trichlorofluoromethane	<500	<100	<1.2	<10	<1.2	<10	<10	<10	<10	<10
vinyl chloride	<500	<100	<1.2	<10	<1.2	<10	<10	<10	<10	<10
Sub Total 1	5824	5360	12	0	932	19.5	16.38	29.3	468.2	56.4
Miscellaneous Volatile Organic Compounds										
meth 1-iso-butyl ketone	<500	<100	<5	<10	<5	18	<10	<10	<10	<10
methyl isoamyl ketone	<500	<100	<5	<10	<5	14.6	<10	<10	<10	<10
m-xylene	<500	<100	<5	<10	c)	<10	<10	<10	<10	<10
o-xylene/p-xylene	<500	<100	<5	<10	c)	<10	<10	<10	<10	<10
Sub Total 2	0	0	0	0	0	32.6	0	0	0	0
Total VOC's Analyzed	5824	5360	12	0	932	52.1	16.38	29.3	468.2	56.4

Table E-1. Summary of Volatile Organic Compounds in Ground Water, W.G. Krummrich Plant, Monsanto Company, Sauget, Il. ***

Well Number:	GM-31A	GM-31B	GM-31B	GM-31B	GM-31B	GM-31C	GM-31C	GM-31C	GM-31C	B-24A
Date:	11/85*	2/85	5/85	11/85	11/85*	2/85	5/85	11/85	11/85*	2/86
USEPA Priority Pollutant Volatile Organic Compounds concentrations are in ug/L										
acrolein	<100	<100	<100	<100	<100	<100	<100	<100	<100	<10,000
acrylonitrile	<100	<100	<100	<100	<100	<100	<100	<100	<100	<10,000
benzene	36.5	<4.4	15	<4.4	<4.4	79.4	75.2	25.9	27.1	2,360
bis(chloromethyl) ether	<10	<10	<10	<10	<10	<10	<10	<10	<10	<1,000
bromoform	<4.7	<4.7	<4.7	<4.7	<4.7	<4.7	<4.7	<4.7	<4.7	<470
carbon tetrachloride	<2.8	<2.8	<2.8	<2.8	<2.8	<2.8	<2.8	<2.8	<2.8	<280
chlorobenzene	12.5	8.2	132.6	<6	<6	437	487.6	495	511	6,180
chlorodibromomethane	<3.1	<3.1	<3.1	<3.1	<3.1	<3.1	<3.1	<3.1	<3.1	<310
chloroethane	<10	<10	<10	<10	<10	20.6	<10	<10	<10	<1,000
2-chloroethylvinyl ether	<10	<10	<10	<10	<10	<10	<10	<10	<10	<1,000
chloroform	<1.6	<1.6	<1.6	<1.6	<1.6	12.9	<1.6	<1.6	<1.6	<160
dichlorobromomethane	<2.2	<2.2	<2.2	<2.2	<2.2	<2.2	<2.2	<2.2	<2.2	<220
dichlorodifluoromethane	<10	<10	<10	<10	<10	<10	<10	<10	<10	<1,000
1,1-dichloroethane	<4.7	<4.7	<4.7	<4.7	<4.7	<4.7	<4.7	<4.7	<4.7	<470
1,2-dichloroethane	<2.8	<2.8	<2.8	<2.8	<2.8	<2.8	<2.8	<2.8	<2.8	2,100
1,1-dichloroethylene	<2.8	<2.8	<2.8	<2.8	<2.8	<2.8	<2.8	<2.8	<2.8	<280
1,2-dichloropropane	<6	<6	<6	<6	<6	<6	<6	<6	<6	<600
cis-1,3-dichloropropylene	<5	<5	<5	<5	<5	<5	<5	<5	<5	<500
trans-1,3-dichloropropylene	<10	<10	<10	<10	<10	<10	<10	<10	<10	<1,000
ethylbenzene	<7.2	<7.2	<7.2	<7.2	<7.2	<7.2	<7.2	<7.2	<7.2	<720
methyl bromide	<10	<10	<10	<10	<10	<10	<10	<10	<10	<1,000
methyl chloride	<10	<10	<10	<10	<10	<10	<10	<10	<10	<1,000
methylene chloride	<2.8	<2.8	<2.8	<2.8	<2.8	<2.8	<2.8	<2.8	<2.8	1,160
1,1,2,2-tetrachloroethane	<6.9	<6.9	<6.9	<6.9	<6.9	<6.9	<6.9	<6.9	<6.9	<690
tetrachloroethylene	<4.1	<4.1	<4.1	<4.1	<4.1	<4.1	4.2	<4.1	<4.1	<410
toluene	<6	<6	<6	<6	<6	<6	<6	<6	<6	1,140
1,2-trans-dichloroethylene	<1.6	<1.6	<1.6	<1.6	<1.6	<1.6	2.7	<1.6	<1.6	<160
1,1,1-trichloroethane	<3.8	<3.8	<3.8	<3.8	<3.8	<3.8	<3.8	<3.8	<3.8	<380
1,1,2-trichloroethane	<5	<5	<5	<5	<5	<5	<5	<5	<5	<500
trichloroethylene	<1.9	<1.9	<1.9	<1.9	<1.9	<1.9	<1.9	<1.9	<1.9	<190
trichlorofluoromethane	<10	<10	<10	<10	<10	<10	<10	<10	<10	<1,000
vinyl chloride	<10	<10	<10	<10	<10	32.2	47.2	42.6	45.2	<1,000
Sub Total 1	49	8.2	147.6	0	0	582.1	616.9	563.5	583.3	12940
Miscellaneous Volatile Organic Compounds										
methyl-iso-butyl ketone	<10	<10	<10	<10	<10	<10	<10	<10	<10	3,170
methyl isoamyl ketone	<10	<10	<10	<10	<10	<10	<10	<10	<10	<1,000
m-xylene	<10	<10	<10	<10	<10	<10	<10	<10	<10	<1,000
o-xylene/p-xylene	<10	<10	<10	<10	<10	<10	<10	<10	<10	<1,000
Sub Total 2	0	0	0	0	0	0	0	0	0	3170
Total VOC's Analyzed	49	8.2	147.6	0	0	582.1	616.9	563.5	583.3	16110

Table E-1. Summary of Volatile Organic Compounds in Ground Water, W.G. Krummrich Plant, Monsanto Company, Sauget, Il. ***

Well Number:	B-25A	B-25A	B-25B	B-25B	B-27B	B-27B	B-28A	B-29A	B-29A	B-29B
Date:	6/84	11/85	6/84	11/85	9/84**	9/84*	2/86	6/84	11/85	6/84
USEPA Priority Pollutant Volatile Organic Compounds concentrations are in ug/L										
acrolein	<1	<10,000	<1	<10,000	NA	NA	<1,000	<1	<1,000	<1
acrylonitrile	<1	<10,000	<1	<10,000	NA	NA	<1,000	<1	<1,000	<1
benzene	<1	<440	51	<440	3,420	7,058	<44	18	<44	20
bis (chloromethyl) ether	<1	<1,000	<1	<1,000	<1.5	<300	<100	<1	<100	<1
bromoform	<1	<470	<1	<470	<3.2	<640	<47	<1	<47	<1
carbon tetrachloride	<1	<280	<1	<280	<1.5	<300	<28	<1	<28	<1
chlorobenzene	8,520	18,900	9,930	13,100	4,160	5,320	1,510	1,970	1,280	769
chlorodibromomethane	<1	<310	<1	<310	<2.0	<400	<31	<1	<31	<1
chloroethane	309	<1,000	42	<1,000	<2.4	<480	<100	<1	<100	<1
2-chloroethylvinyl ether	<1	<1,000	<1	<1,000	<5.9	<1,180	<100	<1	<100	<1
chloroform	77	<160	9	<160	<0.8	<160	<16	18	28.9	39
dichlorobromomethane	<1	<220	<1	<220	<1.1	<220	<22	<1	<22	<1
dichlorodifluoromethane	<1	<1,000	<1	<1,000	NA	NA	<100	<1	<100	<1
1,1-dichloroethane	<1	<470	<1	<470	<0.8	<160	<47	<1	<47	<1
1,2-dichloroethane	10,000	18,500	1,430	3,510	<1.5	<300	<28	<1	<28	<1
1,1-dichloroethylene	<1	<280	<1	<280	<1.9	<260	<28	<1	<28	<1
1,2-dichloropropane	<1	<600	<1	<600	<1.5	<300	<60	<1	<60	<1
cis-1,3-dichloropropylene	<1	<500	<1	<500	<1.5	<300	<50	<1	<50	<1
trans-1,3-dichloropropylene	<1	<1,000	<1	<1,000	<1.5	<300	<100	<1	<100	<1
ethylbenzene	11	<720	4	<720	<0.4	<80	<72	14	<72	33
methyl bromide	<1	<1,000	<1	<1,000	<1.5	<300	<100	<1	<100	<1
methyl chloride	30	<1,000	29	<1,000	<1.6	<320	<100	<1	<100	<1
methylene chloride	204	<280	<1	<280	1,740	8,100	<28	50	<28	19
1,1,2,2-tetrachloroethane	<1	<690	<1	<690	<1.4	<280	<69	<1	<69	<1
tetrachloroethylene	19	<410	15	<410	<1.5	<300	<41	<1	<41	<1
toluene	316	736	269	<600	16,200	18,500	<60	195	532	225
1,2-trans-dichloroethylene	<1	<160	2	<160	<1.5	<300	<16	<1	<16	<1
1,1,1-trichloroethane	<1	<380	<1	<380	<1.2	<240	<38	<1	<38	<1
1,1,2-trichloroethane	<1	<500	<1	<500	<1.6	<320	<50	<1	<50	<1
trichloroethylene	7	<190	4	<190	<1.3	<260	<19	2	40.2	<1
trichlorofluoromethane	<1	<1,000	<1	<1,000	<1.2	<240	<100	<1	<100	<1
vinyl chloride	4	<1,000	7	<1,000	<1.2	<240	<100	<1	<100	<1
Sub Total 1	19497	38136	11792	16610	25520	39238	1510	2267	1881.1	1105
Miscellaneous Volatile Organic Compounds										
methyl-iso-butyl ketone	NA	<1,000	NA	<1,000	<5	40,400	<100	NA	248	NA
methyl isoamyl ketone	NA	<1,000	NA	<1,000	<5	<1,000	<100	NA	<100	NA
m-xylene	NA	<1,000	NA	<1,000	<5	<1,000	<100	NA	<100	NA
o-xylene/p-xylene	NA	<1,000	NA	<1,000	<5	<1,000	<100	NA	<100	NA
Sub Total 2	NA	0	NA	0	0	40400	0	NA	248	NA
Total VOC's Analyzed	19497	38136	11792	16610	25520	79638	1510	2267	2129.1	1105

Table E-1. Summary of Volatile Organic Compounds in Ground Water, W.G. Krummrich Plant, Monsanto Company, Sauget, Il. ***

Well Number:	B-29B	B-29B	B-29B	B-29B	B-30B	B-31B	B-31B	B-31C	B-31C	B-31C
Date:	6/84*	6/84*	11/84	11/85	9/84**	11/85	2/86	9/84**	11/85	2/86
USEPA Priority Pollutant Volatile Organic Compounds concentrations are in ug/L										
acrolein	<1	<50,000	<10,000	<1,000	NA	<100	<100	NA	<100	<100
acrylonitrile	<1	<50,000	<10,000	<1,000	NA	<100	<100	NA	<100	<100
benzene	16	<5,000	<1,000	<44	176	<4.4	<4.4	<0.5	10.7	62.9
bis (chloromethyl) ether	<1	<5,000	<1,000	<100	<1.5	<10	<10	<1.5	<10	<10
bromoform	<1	<5,000	<1,000	<47	<3.2	<4.7	<4.7	<3.2	<4.7	<4.7
carbon tetrachloride	<1	<5,000	<1,000	<28	<1.5	<2.8	<2.8	<1.5	<2.8	<2.8
chlorobenzene	828	<5,000	1,500	1,710	2,350	<6	<6	<0.6	104	483
chlorodibromomethane	<1	<5,000	<1,000	<31	<2.0	<3.1	<3.1	<2.0	<3.1	<3.1
chloroethane	<1	<5,000	<1,000	<100	<2.4	<10	<10	<2.4	<10	<10
2-chloroethylvinyl ether	<1	<5,000	<1,000	<100	<5.9	<10	<10	<5.9	<10	<10
chloroform	38	<5,000	<1,000	48.7	64	<1.6	<1.6	3	<1.6	<1.6
dichlorobromomethane	<1	<5,000	<1,000	<22	<1.1	<2.2	<2.2	<1.1	<2.2	<2.2
dichlorodifluoromethane	<1	<5,000	<1,000	<100	NA	<10	<10	NA	<10	<10
1,1-dichloroethane	<1	<5,000	<1,000	<47	3	<4.7	<4.7	<0.8	<4.7	<4.7
1,2-dichloroethane	<1	<5,000	<1,000	<28	142	<2.8	<2.8	<1.5	<2.8	<2.8
1,1-dichloroethylene	<1	<5,000	<1,000	<28	<1.9	<2.8	<2.8	<1.9	<2.8	<2.8
1,2-dichloropropane	<1	<5,000	<1,000	<60	<1.5	<6	<6	<1.5	<6	<6
cis-1,3-dichloropropylene	<1	<5,000	<1,000	<50	<1.5	<5	<5	<1.5	<5	<5
trans-1,3-dichloropropylene	<1	<5,000	<1,000	<100	<1.5	<10	<10	<1.5	<10	<10
ethylbenzene	30	<5,000	<1,000	<72	359	<7.2	<7.2	<0.4	<7.2	<7.2
methyl bromide	<1	<5,000	<1,000	<100	<1.5	<10	<10	<1.5	<10	<10
methyl chloride	<1	57,000	<1,000	<100	<1.6	<10	<10	<1.6	<10	<10
methylene chloride	17	127,000	<1,000	<28	48	<2.8	<2.8	6	<2.8	<2.8
1,1,2,2-tetrachloroethane	<1	<5,000	<1,000	<69	<1.4	<6.9	<6.9	<1.4	<6.9	<6.9
tetrachloroethylene	<1	<5,000	<1,000	<41	940	<4.1	<4.1	<1.5	<4.1	<4.1
toluene	227	<5,000	<1,000	491	228	<6	<6	1	<6	<6
1,2-trans-dichloroethylene	<1	<5,000	<1,000	<16	163	<1.6	<1.6	<1.5	<1.6	<1.6
1,1,1-trichloroethane	<1	<5,000	<1,000	<38	<1.2	<3.8	<3.8	<1.2	<3.8	<3.8
1,1,2-trichloroethane	<1	<5,000	<1,000	<50	<1.6	<5	<5	<1.6	<5	<5
trichloroethylene	<1	<5,000	<1,000	<19	36	<1.9	<1.9	<1.3	<1.9	<1.9
trichlorofluoromethane	<1	<5,000	<1,000	<100	<1.2	<10	<10	<1.2	<10	<10
vinyl chloride	<1	<5,000	<1,000	<100	<1.2	<10	<10	<1.2	<10	<10
Sub Total 1	1156	184000	1500	2249.7	4509	0	0	10	114.7	545.9
Miscellaneous Volatile Organic Compounds										
methyl-iso-butyl ketone	NA	NA	<1,000	177	2,640	<10	<10	<5	<10	<10
methyl isoamyl ketone	NA	NA	<1,000	<100	<5	<10	<10	<5	<10	<10
m-xylene	NA	NA	<1,000	218	d)	<10	<10	d)	<10	<10
o-xylene/p-xylene	NA	NA	<1,000	146	d)	<10	<10	d)	<10	<10
Sub Total 2	NA	NA	0	541	2640	0	0	0	0	0
Total VOC's Analyzed	1156	184000	1500	2790.7	7149	0	0	10	114.7	545.9

Table E-1. Summary of Volatile Organic Compounds in Ground Water, W.G. Krummrich Plant, Monsanto Company, Sauget, Il. ***

Well Number:	B-101	B-102	GM-106	GM-106	GM-106	P-1	P-2	P-2	P-6	P-6
Date:	9/84**	9/84**	11/85	2/86	2/86*	9/84**	6/84	11/85	6/84	11/85
USEPA Priority Pollutant Volatile Organic Compounds concentrations are in ug/L										
acrolein	NA	NA	<100	<1,000	<1,000	NA	<1	<1,000	<1	<100
acrylonitrile	NA	NA	<100	<1,000	<1,000	NA	<1	<1,000	<1	<100
benzene	<50	23	<4.4	<44	<44	<0.5	54	106	31	24.3
bis (chloromethyl) ether	<150	<1.5	<10	<100	<100	<1.5	<1	<100	<1	<10
bromoform	<320	<3.2	<4.7	<47	<47	<3.2	<1	<47	<1	<4.7
carbon tetrachloride	<150	<1.5	<2.8	<28	<28	<1.5	<1	<28	<1	<2.8
chlorobenzene	14,400	<0.6	21.4	201	<60	<0.6	687	764	130	98.1
chlorodibromomethane	<200	<2.0	<3.1	<31	<31	<2.0	<1	<31	<1	<3.1
chloroethane	<240	<2.4	<10	<100	<100	<2.4	<1	<100	<1	<10
2-chloroethylvinyl ether	<590	<5.9	<10	<100	<100	<5.9	<1	<100	<1	<10
chloroform	<80	0.8	<1.6	<16	<16	<0.8	<1	<16	<1	<1.6
dichlorobromomethane	<110	<1.1	<2.2	<22	<22	<1.1	<1	<22	<1	<2.2
dichlorodifluoromethane	NA	NA	<10	<100	<100	NA	<1	<100	<1	<10
1,1-dichloroethane	<80	<0.8	<4.7	<47	<47	<0.8	<1	<47	<1	<4.7
1,2-dichloroethane	<150	<1.5	<2.8	<28	<28	<1.5	<1	<28	<1	<2.8
1,1-dichloroethylene	<190	<1.9	<2.8	<28	<28	<1.9	<1	<28	<1	<2.8
1,2-dichloropropane	<150	<1.5	<6	<60	<60	<1.5	<1	<60	<1	<6
cis-1,3-dichloropropylene	<150	<1.5	<5	<50	<50	<1.5	<1	<50	<1	<5
trans-1,3-dichloropropylene	<150	<1.5	<10	<100	<100	<1.5	<1	<100	<1	<10
ethylbenzene	<40	<0.4	<7.2	<72	<72	<0.4	1	<72	1	<7.2
methyl bromide	<150	<1.5	<10	<100	<100	<1.5	<1	<100	<1	<10
methyl chloride	<160	<1.6	<10	<100	<100	<1.6	<1	<100	<1	<10
methylene chloride	400	2	<2.8	<28	<28	4	81	<28	99	<2.8
1,1,2,2-tetrachloroethane	<140	<1.4	<6.9	<69	<69	<1.4	<1	<69	<1	<6.9
tetrachloroethylene	<150	<1.5	<4.1	<41	<41	<1.5	<1	<41	<1	<4.1
toluene	1,180	1	15	104	<60	<0.4	4	<60	5	<6
1,2-trans-dichloroethylene	<150	<1.5	<1.6	<16	<16	<1.5	<1	<16	<1	<1.6
1,1,1-trichloroethane	<120	<1.2	<3.8	<38	<38	<1.2	<1	<38	<1	<3.8
1,1,2-trichloroethane	<160	<1.6	<5	<50	<50	<1.6	<1	<50	<1	<5
trichloroethylene	<130	<1.3	<1.9	<19	<19	<1.3	<1	<19	<1	<1.9
trichlorofluoromethane	<120	<1.2	<10	<100	<100	<1.2	<1	<100	<1	<10
vinyl chloride	<120	<1.2	<10	<100	<100	<1.2	<1	<100	<1	<10
Sub Total 1	15980	26.8	36.4	305	0	4	827	870	266	122.4
Miscellaneous Volatile Organic Compounds										
methyl-iso-butyl ketone	<500	<5	<10	<100	<100	<5	NA	<100	NA	<10
methyl isoamyl ketone	<500	<5	<10	<100	<100	<5	NA	<100	NA	<10
m-xylene	<500	<5	<10	100	<100	<5	NA	<100	NA	<10
o-xylene/p-xylene	<500	<5	<10	<100	<100	<5	NA	<100	NA	<10
Sub Total 2	0	0	0	100	0	0	NA	0	NA	0
Total VOC's Analyzed	15980	26.8	36.4	405	0	4	827	870	266	122.4

Table E-1. Summary of Volatile Organic Compounds in Ground Water, W.G. Krummrich Plant, Monsanto Company, Sauget, Il. ***

Well Number:	P-7	P-7	P-8	P-8	P-10	P-11	P-12	P-13	P-13	P-13
Date:	6/84	11/85	6/84	11/85	9/84**	9/84**	9/84**	6/84	6/84*	6/84*
USEPA Priority Pollutant Volatile Organic Compounds concentrations are in ug/L										
acrolein	<1	<25,000	<1	<1,000	NA	NA	NA	<1	<1	<50,000
acrylonitrile	<1	<25,000	<1	<1,000	NA	NA	NA	<1	<1	<50,000
benzene	2,080	1,810	162	531	132	113	560	61	60	<5,000
bis (chloromethyl) ether	<1	<2,500	<1	<100	<1.5	<1.5	<1.5	<1	<1	<5,000
bromoform	<1	<1,200	<1	<47	<3.2	<3.2	<3.2	<1	<1	<5,000
carbon tetrachloride	<1	<700	<1	<28	<1.5	<1.5	<1.5	<1	<1	<5,000
chlorobenzene	4,040	5,110	585	2,490	2,000	842	690	81	75	<5,000
chlorodibromomethane	<1	<780	<1	<31	<2.0	<2.0	<2.0	<1	<1	<5,000
chloroethane	<1	<2,500	<1	<100	<2.4	<2.4	<2.4	<1	<1	<5,000
2-chloroethylvinyl ether	<1	<2,500	<1	<100	<5.9	<5.9	<5.9	<1	<1	<5,000
chloroform	7	<400	<1	<16	<0.8	<0.8	<0.8	<1	<1	<5,000
dichlorobromomethane	<1	<550	<1	<22	<1.1	<1.1	<1.1	<1	<1	<5,000
dichlorodifluoromethane	<1	<2,500	<1	<100	NA	NA	NA	<1	<1	<5,000
1,1-dichloroethane	<1	<1,200	<1	<47	<0.8	<0.8	<0.8	<1	<1	<5,000
1,2-dichloroethane	<1	700	<1	<28	<1.5	<1.5	<1.5	<1	<1	<5,000
1,1-dichloroethylene	<1	<700	<1	<28	2	<1.9	<1.9	<1	<1	<5,000
1,2-dichloropropane	<1	<1,500	<1	<60	<1.5	<1.5	<1.5	<1	<1	<5,000
cis-1,3-dichloropropylene	<1	<1,300	<1	<50	<1.5	<1.5	<1.5	<1	<1	<5,000
trans-1,3-dichloropropylene	<1	<2,500	<1	<100	<1.5	<1.5	<1.5	<1	<1	<5,000
ethylbenzene	12	<1,800	13	74.6	<0.4	5	32	16	<1	<5,000
methyl bromide	<1	<2,500	<1	<100	<1.5	<1.5	<1.5	<1	<1	<5,000
methyl chloride	<1	<2,500	<1	<100	<1.6	<1.6	<1.6	<1	<1	138,000
methylene chloride	68	<700	19	<28	41	21	42	33	26	37,100
1,1,2,2-tetrachloroethane	<1	<1,700	<1	<69	<1.4	<1.4	<1.4	<1	<1	<5,000
tetrachloroethylene	<1	<1,000	<1	<41	<1.5	<1.5	<1.5	<1	<1	<5,000
toluene	322	<1,500	56	<60	24	10	19	5	4	19,200
1,2-trans-dichloroethylene	<1	<400	<1	<16	<1.5	<1.5	<1.5	<1	<1	<5,000
1,1,1-trichloroethane	<1	<950	<1	<38	<1.2	<1.2	<1.2	<1	<1	<5,000
1,1,2-trichloroethane	<1	<1,300	<1	<50	<1.6	<1.6	<1.6	<1	<1	<5,000
trichloroethylene	<1	<480	<1	<19	<1.3	<1.3	<1.3	<1	<1	<5,000
trichlorofluoromethane	<1	<2,500	<1	<100	<1.2	<1.2	<1.2	<1	<1	<5,000
vinyl chloride	<1	<2,500	<1	<100	<1.2	<1.2	<1.2	<1	<1	<5,000
Sub Total 1	6529	7620	835	3095.6	2199	991	1343	196	165	194300
Miscellaneous Volatile Organic Compounds										
methyl-iso-butyl ketone	NA	<2,500	NA	<100	<5	<5	<5	NA	NA	NA
methyl isoamyl ketone	NA	<2,500	NA	<100	<5	<5	<5	NA	NA	NA
m-xylene	NA	<2,500	NA	<100	<5	<5	<5	NA	NA	NA
o-xylene/p-xylene	NA	<2,500	NA	<100	<5	<5	<5	NA	NA	NA
Sub Total 2	NA	0	NA	0	0	0	0	NA	NA	NA
Total VOC's Analyzed	6529	7620	835	3095.6	2199	991	1343	196	165	194300

Table E-1. Summary of Volatile Organic Compounds in Ground Water, W.G. Krummrich Plant, Monsanto Company, Sauget, Il. ***

Well Number:	P-13	P-14	P-14	DW-1	DW-1	DW-4	DW-7	DW-7	DW-10	DW-18
Date:	11/85	6/84	11/85	9/84**	11/85	9/84**	11/85	2/86	9/84**	9/84**
USEPA Priority Pollutant Volatile Organic Compounds concentrations are in ug/L										
acrolein	<1,000	<1	<10,000	NA	<10,000	NA	<100	<5,000	NA	NA
acrylonitrile	<1,000	<1	<10,000	NA	<10,000	NA	<100	<5,000	NA	NA
benzene	89.4	269	<440	23,400	157,000	940	6.9	<220	6,240	<0.5
bis (chloromethyl) ether	<100	<1	<1,000	<300	<1,000	<300	<10	<500	<300	<1.5
bromoform	<47	<1	<470	<640	<470	<640	<4.7	<240	<640	<3.2
carbon tetrachloride	<28	<1	<280	<300	<280	<300	<2.8	<140	<300	<1.5
chlorobenzene	265	23,480	16,000	6,600	35,700	11,040	183	1,080	9,960	<0.6
chlorodibromomethane	<31	<1	<310	<400	<310	<400	<3.1	<160	<400	<2.0
chloroethane	<100	<1	<1,000	<480	<1,000	<480	<10	<500	<480	<2.4
2-chloroethylvinyl ether	<100	<1	<1,000	<1,180	<1,000	<1,180	<10	<500	<1,180	<5.9
chloroform	<16	<1	<160	<160	<160	<160	2.3	<80	<160	<0.8
dichlorobromomethane	<22	<1	<220	<220	<220	<220	<2.2	<110	<220	<1.1
dichlorodifluoromethane	<100	<1	<1,000	NA	<1,000	NA	<10	<500	NA	NA
1,1-dichloroethane	<47	<1	<470	<160	<470	<160	<4.7	<240	<160	<0.8
1,2-dichloroethane	<28	<1	<280	<300	<280	<300	<2.8	<140	<300	<1.5
1,1-dichloroethylene	<28	<1	<280	<380	<280	<380	<2.8	<140	<380	<1.9
1,2-dichloropropane	<60	<1	<600	<300	<600	<300	<6	<300	<300	<1.5
cis-1,3-dichloropropylene	<50	<1	<500	<300	<500	<300	<5	<250	<300	<1.5
trans-1,3-dichloropropylene	<100	<1	<1,000	<300	<1,000	<300	<10	<500	<300	<1.5
ethylbenzene	<72	4	<720	<80	<720	<80	<7.2	<360	200	<0.4
methyl bromide	<100	<1	<1,000	<300	<1,000	<300	<10	<500	<300	<1.5
methyl chloride	<100	<1	<1,000	<320	<1,000	<320	<10	<500	<320	<1.6
methylene chloride	<28	53	<280	2,020	<280	2,140	5	<140	2,380	5
1,1,2,2-tetrachloroethane	<69	<1	<690	<280	<690	<280	<6.9	<350	<280	<1.4
tetrachloroethylene	<41	<1	<410	<300	<410	<300	<4.1	<210	<300	<1.5
toluene	<60	6	<600	<80	<600	<80	8.5	<300	<80	<0.4
1,2-trans-dichloroethylene	<16	<1	<160	<300	<160	<300	7.4	<80	<300	<1.5
1,1,1-trichloroethane	<38	<1	<380	<240	<380	<240	<3.8	<190	<240	<1.2
1,1,2-trichloroethane	<50	<1	<500	<320	<500	<320	<5	<250	<320	<1.6
trichloroethylene	<19	<1	<190	<260	<190	<260	<1.9	<95	<260	<1.3
trichlorofluoromethane	<100	<1	<1,000	<240	<1,000	<240	<10	<500	<240	<1.2
vinyl chloride	<100	<1	<1,000	<240	<1,000	<240	<10	<500	<240	<1.2
Sub Total 1	354.4	23812	16000	32020	192700	14120	213.1	1080	18780	5
Miscellaneous Volatile Organic Compounds										
methyl-iso-butyl ketone	<100	NA	<1,000	<1,000	<1,000	<1,000	<10	<500	<1,000	<5
methyl isoamyl ketone	<100	NA	<1,000	<1,000	<1,000	<1,000	42.4	<500	<1,000	<5
m-xylene	<100	NA	<1,000	<1,000	<1,000	<1,000	<10	<500	<1,000	<5
o-xylene/p-xylene	<100	NA	<1,000	<1,000	<1,000	<1,000	<10	<500	<1,000	<5
Sub Total 2	0	NA	0	0	0	0	42.4	0	0	0
Total VOC's Analyzed	354.4	23812	16000	32020	192700	14120	255.5	1080	18780	5

Table E-1. Summary of Volatile Organic Compounds in Ground Water, W.G. Krummrich Plant, Monsanto Company, Sauget, Il. ***

Well Number:	DW-18	DW-18	DW-23	DW-24	DW-29	DW-29	DW-30	DW-33	DW-34	DW-34
Date:	9/84*	11/85	9/84**	9/84**	9/84**	9/84*	11/85	9/84**	9/84**	11/85
USEPA Priority Pollutant Volatile Organic Compounds concentrations are in ug/L										
acrolein	NA	<100	NA	NA	NA	NA	<100	NA	NA	<100
acrylonitrile	NA	<100	NA	NA	NA	NA	<100	NA	NA	<100
benzene	<0.5	184	<0.5	<0.5	<0.5	<25	22.7	<0.5	596,000	867
bis (chloromethyl) ether	<1.5	<10	<1.5	<1.5	<1.5	<75	<10	<1.5	<1,500	<10
bromoform	<3.2	<4.7	<3.2	<3.2	<3.2	<160	<4.7	<3.2	<3,200	<4.7
carbon tetrachloride	<1.5	<2.8	<1.5	<1.5	<1.5	<75	<2.8	<1.5	<1,500	<2.8
chlorobenzene	<0.6	980	<0.6	<0.6	32	760	149	<0.6	366	18
chlorodibromomethane	<2.0	<3.1	<2.0	<2.0	<2.0	<100	<3.1	<2.0	<2,000	<3.1
chloroethane	<2.4	<10	<2.4	<2.4	<2.4	<120	<10	<2.4	<2,400	<10
2-chloroethylvinyl ether	<5.9	<10	<5.9	<5.9	<5.9	<295	<10	<5.9	<5,900	<10
chloroform	<0.8	<1.6	<0.8	<0.8	<0.8	<40	<1.6	<0.8	<800	<1.6
dichlorobromomethane	<1.1	<2.2	<1.1	<1.1	<1.1	<55	<2.2	<1.1	<1,100	<2.2
dichlorodifluoromethane	NA	<10	NA	NA	NA	NA	<10	NA	NA	<10
1,1-dichloroethane	<0.8	<4.7	<0.8	<0.8	<0.8	<40	<4.7	<0.8	<800	<4.7
1,2-dichloroethane	<1.5	<2.8	2	<1.5	3	<75	<2.8	<1.5	<1,500	<2.8
1,1-dichloroethylene	<1.9	<2.8	<1.9	<1.9	<1.9	<95	<2.8	<1.9	<1,900	<2.8
1,2-dichloropropane	<1.5	<6	<1.5	<1.5	<1.5	<75	<6	<1.5	<1,500	<6
cis-1,3-dichloropropylene	<1.5	<5	<1.5	<1.5	<1.5	<75	<5	<1.5	<1,500	<5
trans-1,3-dichloropropylene	<1.5	<10	<1.5	<1.5	<1.5	<75	<10	<1.5	<1,500	<10
ethylbenzene	<0.4	15.5	<0.4	<0.4	<0.4	<20	<7.2	<0.4	<400	<7.2
methyl bromide	<1.5	<10	<1.5	<1.5	<1.5	<75	<10	<1.5	<1,500	<10
methyl chloride	<1.6	<10	<1.6	<1.6	<1.6	<80	<10	<1.6	4,060	<10
methylene chloride	4	<2.8	3	6	3	525	<2.8	9	<1,100	<2.8
1,1,2,2-tetrachloroethane	<1.4	<6.9	<1.4	<1.4	<1.4	<70	<6.9	<1.4	<1,400	<6.9
tetrachloroethylene	<1.5	<4.1	<1.5	<1.5	<1.5	<75	<4.1	<1.5	<1,500	<4.1
toluene	2	16.4	1	<0.4	<0.4	<20	<6	<0.4	1,280	<6
1,2-trans-dichloroethylene	<1.5	4	<1.5	<1.5	<1.5	<75	<1.6	<1.5	129	<1.6
1,1,1-trichloroethane	<1.2	<3.8	<1.2	<1.2	<1.2	<60	<3.8	<1.2	<1,200	<3.8
1,1,2-trichloroethane	<1.6	<5	<1.6	<1.6	<1.6	<80	<5	<1.6	<1,600	<5
trichloroethylene	<1.3	<1.9	<1.3	<1.3	<1.3	<65	<1.9	<1.3	<1,300	<1.9
trichlorofluoromethane	<1.2	<10	<1.2	<1.2	<1.2	<60	<10	<1.2	<1,200	<10
vinyl chloride	<1.2	<10	<1.2	<1.2	<1.2	<60	<10	<1.2	<1,200	<10
Sub Total 1	6	1199.9	6	6	38	1285	171.7	9	601835	885
Miscellaneous Volatile Organic Compounds										
methyl-iso-butyl ketone	NA	<10	<5	<5	<5	NA	<10	<5	<5,000	<10
methyl isoamyl ketone	NA	<10	<5	<5	<5	NA	<10	<5	<5,000	<10
m-xylene	NA	<10	e)	<5	<5	NA	<10	<5	<5,000	<10
o-xylene/p-xylene	NA	<10	e)	<5	<5	NA	<10	<5	<5,000	<10
Sub Total 2	NA	0	0	0	0	NA	0	0	0	0
Total VOC's Analyzed	6	1199.9	6	6	38	1285	171.7	9	601835	885

Table E-1. Summary of Volatile Organic Compounds in Ground Water, W.G. Krummrich Plant, Monsanto Company, Sauget, Il. ***

Well Number:	DW-34	DW-1-85	DW-1-85	BK-3	BK-3	BK-3	WB-6	WB-6	WB-6	WB-7
Date:	2/86	11/85	2/86	9/84**	11/85	2/86	9/84**	11/85	2/86	9/84
USEPA Priority Pollutant Volatile Organic Compounds concentrations are in ug/L										
acrolein	<100	<100	<500	NA	<1,000	<10,000	NA	<100	<1,000	NA
acrylonitrile	<100	<100	<500	NA	<1,000	<10,000	NA	<100	<1,000	NA
benzene	623	1,700	472	208	3,980	<440	<0.5	31.1	<44	0.5
bis (chloromethyl) ether	<10	<10	<50	<1.5	<100	<1,000	<1.5	<10	<100	<1.5
bromoform	<4.7	<4.7	<24	<3.2	<47	<470	<3.2	<4.7	<47	<3.2
carbon tetrachloride	<2.8	<2.8	<14	<1.5	<28	<280	<1.5	<2.8	<28	<1.5
chlorobenzene	6.6	6,680	3,650	1,172	4,610	972	<0.6	<6	210	150
chlorodibromomethane	<3.1	<3.1	<16	<2.0	<31	<310	<2.0	<3.1	<31	<2.0
chloroethane	<10	<10	<50	<2.4	<100	<1,000	<2.4	<10	<100	<2.4
2-chloroethylvinyl ether	<10	<10	<50	<5.9	<100	<1,000	<5.9	<10	<100	<5.9
chloroform	<1.6	<1.6	<8	<0.8	<16	<160	<0.8	<1.6	<16	<0.8
dichlorobromomethane	<2.2	<2.2	<11	<1.1	<22	<220	<1.1	<2.2	<22	<1.1
dichlorodifluoromethane	<10	<10	<50	NA	<100	<1,000	NA	<10	<100	NA
1,1-dichloroethane	<4.7	<4.7	50.6	<0.8	<47	<470	<0.8	<4.7	<47	<0.8
1,2-dichloroethane	<2.8	<2.8	<14	<1.5	<28	<280	<1.5	<2.8	<28	<1.5
1,1-dichloroethylene	<2.8	<2.8	192	<1.9	<28	<280	<1.9	<2.8	<28	<1.9
1,2-dichloropropane	<6	<6	<30	<1.5	<60	<600	<1.5	<6	<60	<1.5
cis-1,3-dichloropropylene	<5	<5	<25	<1.5	<50	<500	<1.5	<5	<50	<1.5
trans-1,3-dichloropropylene	<10	<10	<50	<1.5	<100	<1,000	<1.5	<10	<100	<1.5
ethylbenzene	<7.2	<7.2	<36	7	<72	<720	<0.4	15	<72	<0.4
methyl bromide	<10	<10	<50	8	<100	<1,000	<1.5	<10	<100	<1.5
methyl chloride	<10	<10	<50	<1.6	<100	<1,000	<1.6	<10	<100	<1.6
methylene chloride	<2.8	8.3	<14	<1.1	55	<280	5	<2.8	29	<1.1
1,1,2,2-tetrachloroethane	<6.9	<6.9	<35	<1.4	<69	<690	<1.4	<6.9	<69	<1.4
tetrachloroethylene	<4.1	<4.1	<21	<1.5	<41	<410	<1.5	<4.1	<41	<1.5
toluene	<6	<6	<30	2	<60	<600	<0.4	<6	107	<0.4
1,2-trans-dichloroethylene	<1.6	<1.6	202	<1.5	<16	<160	<1.5	<1.6	<16	<1.5
1,1,1-trichloroethane	<3.8	<3.8	<19	<1.2	<38	<380	<1.2	<3.8	<38	<1.2
1,1,2-trichloroethane	<5	<5	<25	<1.6	<50	<500	<1.6	<5	<50	<1.6
trichloroethylene	<1.9	<1.9	<9.5	<1.3	<19	<190	<1.3	<1.9	<19	<1.3
trichlorofluoromethane	<10	<10	<50	<1.2	<100	<1,000	<1.2	<10	<100	<1.2
vinyl chloride	<10	<10	96.2	<1.2	<100	<1,000	<1.2	<10	<100	<1.2
Sub Total 1	629.6	8388.3	4662.8	1397	8645	972	5	46.1	346	150.5
Miscellaneous Volatile Organic Compounds										
methyl-iso-butyl ketone	<10	<10	<50	<5	<100	<1,000	<5	<10	<100	<5
methyl isoamyl ketone	<10	<10	<50	<5	<100	<1,000	<5	<10	<100	<5
m-xylene	<10	<10	<50	<5	<100	<1,000	<5	12.3	105	<5
o-xylene/p-xylene	<10	<10	<50	<5	<100	<1,000	<5	19.5	<100	<5
Sub Total 2	0	0	0	0	0	0	0	31.8	105	0
Total VOC's Analyzed	629.6	8388.3	4662.8	1397	8645	972	5	77.9	451	150.5

Table E-1. Summary of Volatile Organic Compounds in Ground Water, W.G. Krummrich Plant, Monsanto Company, Sauget, Il. ***

Well Number:	WB-7	Field Blank	Field Blank	Field Blank	Field Blank	Field Blank	Field Blank	Field Blank	Field Blank	Trip Blank
Date:	11/85	6/84	9/84	9/84	11/84	2/85	5/85	11/85	2/86	5/84
USEPA Priority Pollutant Volatile Organic Compounds concentrations are in ug/L										
acrolein	<100	NA	NA	NA	<100	<100	<100	<100	<100	<1
acrylonitrile	<100	NA	NA	NA	<100	<100	<100	<100	<100	<1
benzene	<4.4	<0.5	<0.5	<0.5	28	<4.4	<4.4	<4.4	<4.4	<1
bis (chloromethyl) ether	<10	<1.5	<1.5	<1.5	<10	<10	<10	<10	<10	<1
bromoform	<4.7	<3.2	<3.2	<3.2	<10	<4.7	<4.7	<4.7	<4.7	<1
carbon tetrachloride	<2.8	<1.5	<1.5	<1.5	<10	<2.8	<2.8	<2.8	<2.8	<1
chlorobenzene	<6	<0.6	53	1	24	<6	<6	<6	<6	<1
chlorodibromomethane	<3.1	<2.0	<2.0	<2.0	<10	<3.1	<3.1	<3.1	<3.1	<1
chloroethane	<10	<2.4	<2.4	<2.4	<10	<10	<10	<10	<10	<1
2-chloroethylvinyl ether	<10	<5.9	<5.9	<5.9	<10	<10	<10	<10	<10	<1
chloroform	<1.6	<0.8	<0.8	<0.8	<10	<1.6	<1.6	<1.6	<1.6	<1
dichlorobromomethane	<2.2	<1.1	<1.1	<1.1	<10	<2.2	<2.2	<2.2	<2.2	<1
dichlorodifluoromethane	<10	NA	NA	NA	<10	<10	<10	<10	<10	<1
1,1-dichloroethane	<4.7	<0.8	<0.8	<0.8	<10	<4.7	<4.7	<4.7	<4.7	<1
1,2-dichloroethane	<2.8	<1.5	<1.5	<1.5	<10	<2.8	<2.8	<2.8	<2.8	<1
1,1-dichloroethylene	<2.8	<1.9	<1.9	<1.9	<10	<2.8	<2.8	<2.8	<2.8	<1
1,2-dichloropropane	<6	<1.5	<1.5	<1.5	<10	<6	<6	<6	<6	<1
cis-1,3-dichloropropylene	<5	<1.5	<1.5	<1.5	<10	<5	<5	<5	<5	<1
trans-1,3-dichloropropylene	<10	<1.5	<1.5	<1.5	<10	<10	<10	<10	<10	<1
ethylbenzene	<7.2	<0.4	1	<0.4	<10	<7.2	<7.2	<7.2	<7.2	<1
methyl bromide	<10	<1.5	<1.5	<1.5	<10	<10	<10	<10	<10	<1
methyl chloride	<10	<1.6	<1.6	<1.6	<10	<10	<10	<10	<10	<1
methylene chloride	<2.8	20	39	15	<10	<2.8	3.8	<2.8	6.5	53
1,1,2,2-tetrachloroethane	<6.9	<1.4	<1.4	<1.4	<10	<6.9	<6.9	<6.9	<6.9	<1
tetrachloroethylene	<4.1	<1.5	<1.5	<1.5	<10	<4.1	<4.1	<4.1	<4.1	<1
toluene	<6	3	1	<0.4	<10	<6	<6	<6	<6	2
1,2-trans-dichloroethylene	<1.6	<1.5	<1.5	<1.5	<10	<1.6	<1.6	<1.6	<1.6	<1
1,1,1-trichloroethane	<3.8	<1.2	<1.2	<1.2	<10	<3.8	<3.8	<3.8	<3.8	<1
1,1,2-trichloroethane	<5	<1.6	<1.6	<1.6	<10	<5	<5	<5	<5	<1
trichloroethylene	<1.9	<1.3	<1.3	<1.3	<10	<1.9	<1.9	<1.9	<1.9	<1
trichlorofluoromethane	<10	<1.2	<1.2	<1.2	<10	<10	<10	<10	<10	<1
vinyl chloride	<10	<1.2	<1.2	<1.2	<10	<10	<10	<10	<10	<1
Sub Total 1	0	23	94	16	52	0	3.8	0	6.5	55
Miscellaneous Volatile Organic Compounds										
methyl-iso-butyl ketone	<10	NA	NA	NA	NA	NA	NA	NA	NA	NA
methyl isoamyl ketone	<10	NA	NA	NA	NA	NA	NA	NA	NA	NA
m-xylene	<10	NA	NA	NA	NA	NA	NA	NA	NA	NA
o-xylene/p-xylene	<10	NA	NA	NA	NA	NA	NA	NA	NA	NA
Sub Total 2	0	NA	NA	NA	NA	NA	NA	NA	NA	NA
Total VOC's Analyzed	0	23	94	16	52	0	3.8	0	6.5	55

Table E-1. Summary of Volatile Organic Compounds in Ground Water, W.G. Krummrich Plant, Monsanto Company, Sauget, Il. ***

Well Number:	Trip Blank	Trip Blank	Trip Blank	Trip Blank	Trip Blank	Trip Blank	Trip Blank	Trip Blank	Trip Blank	Lab Blank
Date:	6/84	9/84	9/84	9/84	11/84	2/85	5/85	11/85	2/86	11/83
USEPA Priority Pollutant Volatile Organic Compounds concentrations are in ug/L										
acrolein	NA	NA	NA	NA	<100	<100	<100	<100	NA	<1
acrylonitrile	NA	NA	NA	NA	<100	<100	<100	<100	NA	<1
benzene	<0.5	1	31	30	<10	<4.4	<4.4	<4.4	NA	<1
bis (chloromethyl) ether	<1.5	<1.5	<1.5	<1.5	<10	<10	<10	<10	NA	<1
bromoform	<3.2	<3.2	<3.2	<3.2	<10	<4.7	<4.7	<4.7	NA	<1
carbon tetrachloride	<1.5	<1.5	<1.5	<1.5	<10	<2.8	<2.8	<2.8	NA	<1
chlorobenzene	2	<0.6	<0.6	<0.6	<10	<6	<6	<6	NA	<1
chlorodibromomethane	<2.0	<2.0	<2.0	<2.0	<10	<3.1	<3.1	<3.1	NA	<1
chloroethane	<2.4	4	<2.4	<2.4	<10	<10	<10	<10	NA	<1
2-chloroethylvinyl ether	<5.9	<5.9	<5.9	<5.9	<10	<10	<10	<10	NA	<1
chloroform	<0.8	2	<0.8	<0.8	<10	<1.6	<1.6	<1.6	NA	<1
dichlorobromomethane	<1.1	<1.1	<1.1	<1.1	<10	<2.2	<2.2	<2.2	NA	<1
dichlorodifluoromethane	NA	NA	NA	NA	<10	<10	<10	<10	NA	<1
1,1-dichloroethane	<0.8	<0.8	<0.8	<0.8	<10	<4.7	<4.7	<4.7	NA	<1
1,2-dichloroethane	<1.5	<1.5	<1.5	<1.5	<10	<2.8	<2.8	<2.8	NA	<1
1,1-dichloroethylene	<1.9	4	2	2	<10	<2.8	<2.8	<2.8	NA	<1
1,2-dichloropropane	<1.5	<1.5	<1.5	<1.5	<10	<6	<6	<6	NA	<1
cis-1,3-dichloropropylene	<1.5	<1.5	<1.5	<1.5	<10	<5	<5	<5	NA	<1
trans-1,3-dichloropropylene	<1.5	<1.5	<1.5	<1.5	<10	<10	<10	<10	NA	<1
ethylbenzene	<0.4	<0.4	<0.4	<0.4	<10	<7.2	<7.2	<7.2	NA	<1
methyl bromide	<1.5	3	<1.5	<1.5	<10	<10	<10	<10	NA	<1
methyl chloride	<1.6	5	<1.6	<1.6	<10	<10	<10	<10	NA	<1
methylene chloride	18	130	44	32	<10	4	3.4	<2.8	NA	34
1,1,2,2-tetrachloroethane	<1.4	<1.4	<1.4	<1.4	<10	<6.9	<6.9	<6.9	NA	<1
tetrachloroethylene	<1.5	<1.5	<1.5	<1.5	<10	<4.1	<4.1	<4.1	NA	<1
toluene	3	1	1	1	<10	<6	<6	<6	NA	<1
1,2-trans-dichloroethylene	<1.5	2	<1.5	<1.5	<10	<1.6	<1.6	<1.6	NA	<1
1,1,1-trichloroethane	<1.2	<1.2	<1.2	<1.2	<10	<3.8	<3.8	<3.8	NA	<1
1,1,2-trichloroethane	<1.6	<1.6	<1.6	<1.6	<10	<5	<5	<5	NA	<1
trichloroethylene	<1.3	<1.3	<1.3	<1.3	<10	<1.9	<1.9	<1.9	NA	<1
trichlorofluoromethane	<1.2	<1.2	<1.2	<1.2	<10	<10	<10	<10	NA	<1
vinyl chloride	<1.2	6	<1.2	<1.2	<10	<10	<10	<10	NA	<1
Sub Total 1	23	158	78	65	0	4	3.4	0	NA	34
Miscellaneous Volatile Organic Compounds										
methyl-iso-butyl ketone	NA	NA	NA	NA	NA	NA	NA	NA	NA	NA
methyl isoamyl ketone	NA	NA	NA	NA	NA	NA	NA	NA	NA	NA
m-xylene	NA	NA	NA	NA	NA	NA	NA	NA	NA	NA
o-xylene/p-xylene	NA	NA	NA	NA	NA	NA	NA	NA	NA	NA
Sub Total 2	NA	NA	NA	NA	NA	NA	NA	NA	NA	NA
Total VOC's Analyzed	23	158	78	65	0	4	3.4	0	0	34

Table E-1. Summary of Volatile Organic Compounds in Ground Water, W.G. Krummrich Plant, Monsanto Company, Sauget, Il. ***

Well Number:	Lab Blank	Lab Blank	Lab Blank	Lab Blank	Lab Blank	Lab Blank	Lab Blank	Lab Blank	Lab Blank	Lab Blank
Date:	11/83	5/84	5/84	9/84	9/84	9/84	9/84	9/84	9/84	9/84
USEPA Priority Pollutant Volatile Organic Compounds concentrations are in ug/L										
acrolein	<1	<1	<1	NA	NA	NA	NA	NA	NA	NA
acrylonitrile	<1	<1	<1	NA	NA	NA	NA	NA	NA	NA
benzene	<1	2	<1	<0.5	29	21	19	<0.5	<0.5	<0.5
bis (chloromethyl) ether	<1	<1	<1	<1.5	<1.5	<1.5	<1.5	<1.5	<1.5	<1.5
bromoform	<1	<1	<1	<3.2	<3.2	<3.2	<3.2	<3.2	<3.2	<3.2
carbon tetrachloride	<1	<1	<1	<1.5	<1.5	<1.5	<1.5	<1.5	<1.5	<1.5
chlorobenzene	<1	<1	<1	<0.6	<0.6	1	1	<0.6	<0.6	1
chlorodibromomethane	<1	<1	<1	<2.0	<2.0	<2.0	<2.0	<2.0	<2.0	<2.0
chloroethane	<1	<1	<1	<2.4	<2.4	<2.4	<2.4	<2.4	<2.4	<2.4
2-chloroethylvinyl ether	<1	<1	<1	<5.9	<5.9	<5.9	<5.9	<5.9	<5.9	<5.9
chloroform	1	<1	<1	<0.8	<0.8	<0.8	<0.8	<0.8	<0.8	<0.8
dichlorobromomethane	<1	<1	<1	<1.1	<1.1	<1.1	<1.1	<1.1	<1.1	<1.1
dichlorodifluoromethane	<1	<1	<1	NA	NA	NA	NA	NA	NA	NA
1,1-dichloroethane	<1	<1	<1	<0.8	<0.8	<0.8	<0.8	<0.8	<0.8	<0.8
1,2-dichloroethane	<1	<1	<1	<1.5	<1.5	<1.5	<1.5	<1.5	<1.5	<1.5
1,1-dichloroethylene	<1	<1	<1	<1.9	1	1	1	<1.9	<1.9	<1.9
1,2-dichloropropane	<1	<1	<1	<1.5	<1.5	<1.5	<1.5	<1.5	<1.5	<1.5
cis-1,3-dichloropropylene	<1	<1	<1	<1.5	<1.5	<1.5	<1.5	<1.5	<1.5	<1.5
trans-1,3-dichloropropylene	<1	<1	<1	<1.5	<1.5	<1.5	<1.5	<1.5	<1.5	<1.5
ethylbenzene	<1	<1	<1	<0.4	<0.4	<0.4	<0.4	<0.4	<0.4	<0.4
methyl bromide	<1	<1	<1	<1.5	<1.5	<1.5	<1.5	<1.5	<1.5	<1.5
methyl chloride	<1	<1	<1	<1.6	<1.6	<1.6	<1.6	<1.6	<1.6	<1.6
methylene chloride	26	27	14	<1.1	33	42	35	2	3	15
1,1,2,2-tetrachloroethane	<1	<1	<1	<1.4	<1.4	<1.4	<1.4	<1.4	<1.4	<1.4
tetrachloroethylene	<1	<1	<1	<1.5	<1.5	<1.5	<1.5	<1.5	<1.5	<1.5
toluene	<1	2	2	<0.4	1	1	1	<0.4	<0.4	<0.4
1,2-trans-dichloroethylene	<1	<1	<1	<1.5	<1.5	<1.5	<1.5	<1.5	<1.5	<1.5
1,1,1-trichloroethane	<1	5	<1	<1.2	<1.2	<1.2	<1.2	<1.2	<1.2	<1.2
1,1,2-trichloroethane	<1	<1	<1	<1.6	<1.6	<1.6	<1.6	<1.6	<1.6	<1.6
trichloroethylene	<1	2	1	<1.3	<1.3	<1.3	<1.3	<1.3	<1.3	<1.3
trichlorofluoromethane	<1	<1	<1	<1.2	<1.2	<1.2	<1.2	<1.2	<1.2	<1.2
vinyl chloride	<1	<1	<1	<1.2	<1.2	<1.2	<1.2	<1.2	<1.2	<1.2
Sub Total 1	27	38	17	0	64	66	57	2	3	16
Miscellaneous Volatile Organic Compounds										
methyl-iso-butyl ketone	NA	NA	NA	NA	NA	NA	NA	NA	NA	NA
methyl isoamyl ketone	NA	NA	NA	NA	NA	NA	NA	NA	NA	NA
m-xylene	NA	NA	NA	NA	NA	NA	NA	NA	NA	NA
o-xylene/p-xylene	NA	NA	NA	NA	NA	NA	NA	NA	NA	NA
Sub Total 2	NA	NA	NA	NA	NA	NA	NA	NA	NA	NA
Total VOC's Analyzed	27	38	17	0	64	66	57	2	3	16

Table E-1. Summary of Volatile Organic Compounds in Ground Water, W.G. Krummrich Plant, Monsanto Company, Sauget, Il. ***

Well Number:	Lab Blank	Lab Blank	Lab Blank	Lab Blank	Lab Blank	Lab Blank
Date:	9/84	9/84	9/84	9/84	9/84	9/84
USEPA Priority Pollutant Volatile Organic Compounds concentrations are in ug/L						
acrolein	NA	NA	NA	NA	NA	NA
acrylonitrile	NA	NA	NA	NA	NA	NA
benzene	4	3	8	<0.5	<0.5	34
bis (chloromethyl) ether	<1.5	<1.5	<1.5	<1.5	<1.5	<1.5
bromoform	<3.2	<3.2	<3.2	<3.2	<3.2	<3.2
carbon tetrachloride	<1.5	<1.5	<1.5	<1.5	<1.5	<1.5
chlorobenzene	<0.6	<0.6	<0.6	53	<0.6	<0.6
chlorodibromomethane	<2.0	<2.0	<2.0	<2.0	<2.0	<2.0
chloroethane	<2.4	<2.4	<2.4	<2.4	<2.4	<2.4
2-chloroethylvinyl ether	<5.9	<5.9	<5.9	<5.9	<5.9	<5.9
chloroform	<0.8	<0.8	<0.8	<0.8	<0.8	<0.8
dichlorobromomethane	<1.1	<1.1	<1.1	<1.1	<1.1	<1.1
dichlorodifluoromethane	NA	NA	NA	NA	NA	NA
1,1-dichloroethane	<0.8	<0.8	<0.8	<0.8	<0.8	<0.8
1,2-dichloroethane	<1.5	<1.5	<1.5	<1.5	<1.5	<1.5
1,1-dichloroethylene	<1.9	<1.9	<1.9	<1.9	<1.9	2
1,2-dichloropropane	15	<1.5	<1.5	<1.5	<1.5	<1.5
cis-1,3-dichloropropylene	<1.5	<1.5	<1.5	<1.5	<1.5	<1.5
trans-1,3-dichloropropylene	<1.5	<1.5	<1.5	<1.5	<1.5	<1.5
ethylbenzene	<0.4	<0.4	<0.4	<0.4	<0.4	<0.4
methyl bromide	<1.5	<1.5	<1.5	<1.5	<1.5	<1.5
methyl chloride	<1.6	<1.6	<1.6	<1.6	<1.6	<1.6
methylene chloride	15	<1.1	24	39	6	50
1,1,2,2-tetrachloroethane	<1.4	<1.4	<1.4	<1.4	<1.4	<1.4
tetrachloroethylene	<1.5	<1.5	<1.5	<1.5	<1.5	<1.5
toluene	1	1	1	1	<0.4	1
1,2-trans-dichloroethylene	<1.5	<1.5	<1.5	<1.5	<1.5	<1.5
1,1,1-trichloroethane	<1.2	<1.2	<1.2	<1.2	<1.2	<1.2
1,1,2-trichloroethane	<1.6	<1.6	<1.6	<1.6	<1.6	<1.6
trichloroethylene	<1.3	<1.3	1	<1.3	<1.3	<1.3
trichlorofluoromethane	<1.2	<1.2	<1.2	<1.2	<1.2	<1.2
vinyl chloride	<1.2	<1.2	<1.2	<1.2	<1.2	<1.2
Sub Total 1	35	4	34	93	6	87
Miscellaneous Volatile Organic Compounds						
methyl-iso-butyl ketone	NA	NA	NA	NA	NA	NA
methyl isoamyl ketone	NA	NA	NA	NA	NA	NA
m-xylene	NA	NA	NA	NA	NA	NA
o-xylene/p-xylene	NA	NA	NA	NA	NA	NA
Sub Total 2	NA	NA	NA	NA	NA	NA
Total VOC's Analyzed	35	4	34	93	6	87

Table E-1. Summary of Volatile Organic Compounds in Ground Water, W.G. Krummrich Plant, Monsanto Company, Sauget, Il. ***

NA - Not analyzed.
* - Replicate Analyses
** - Prior to analysis, this sample was held by Envirodyne Engineers, Inc. longer than the maximum allowable USEPA holding time.
*** - Envirodyne Engineers, Inc. (St. Louis, MO.) provided the laboratory services for the sampling rounds conducted between November, 1983 and September, 1984, with the exception of the January through May, 1984 sampling rounds conducted in the W.G. Krummrich Landfill. These wells are designated as the "B" series (i.e. B-22A) and the "P" series (i.e. P-7) and D'Appolonia (currently IT Corporation), Pittsburgh, Pa., provided the chemical results. ETC (Edison, NJ) performed the analyses for the November 1984 through February 1986 sampling programs.
\# - Replicate analysis was performed by ETC.
a) - Envirodyne Engineers, Inc. reported 10 ug/L and 2 ug/L for wells GM-16A and GM-16B, respectively. Their results did not differentiate between the xylene compounds.
b) - Envirodyne Engineers, Inc. reported 4 ug/L, 18 ug/L and 10 ug/L for wells GM-25B, GM-27B and GM-27C, respectively. Their results did not differentiate between the xylene compounds.
c) - Envirodyne Engineers, Inc. reported 66 ug/L, greater than 119 ug/L and 1 ug/L for wells GM-28B, GM-28C and GM-30, respectively. Their results did not differentiate between the xylene compounds.
d) - Envirodyne Engineers, Inc. reported 1,630 ug/L and 12 ug/L for wells B-30B and B-31C, respectively. Their results did not differentiate between the xylene compounds.
e) - Envirodyne Engineers, Inc. reported 9 ug/L for well GM-2C. The result did not differentiate between the xylene compounds.
< - Indicates that the compound was not detected at the detection limit which is the value shown next to the symbol.

Table E-2. Summary of Acid Extractable Compounds in Ground Water, Monsanto Company, W.G. Krummrich Plant, Sauget, Il. ***

Well Number:	GM-1	GM-1	GM-2	GM-2	GM-3	GM-3	GM-3	GM-4A	GM-4A	GM-4B
Date:	11/83	5/84	11/83	5/84	11/83	5/84	5/84*	11/83	5/84	9/84
USEPA Priority Pollutant Acid Extractable Organic Compounds concentrations are in ug/L										
2-chlorophenol	<1	<1	<1	<1	<1	<1	<1	<1	<1	31
2,4-dichlorophenol	<1	<1	<1	<1	<1	<1	<1	<1	<1	<8
2,4-dimethylphenol	<1	<1	<1	<1	<1	<1	<1	<1	<1	<10
4,6-dinitro-o-cresol	<1	<1	<1	<1	<1	<1	<1	<1	<1	<38
2,4-dinitrophenol	<1	<1	<1	<1	<1	<1	<1	<1	<1	<52
2-nitrophenol	<1	<1	<1	<1	<1	<1	<1	<1	<1	<11
4-nitrophenol	<1	<1	<1	<1	<1	<1	<1	<1	<1	<35
p-chloro-m-cresol	<1	<1	<1	<1	<1	<1	<1	<1	<1	<8
pentachlorophenol	<1	<1	<1	<1	<1	<1	<1	<1	<1	7
phenol	<1	<1	<1	<1	<1	<1	<1	<1	<1	9
2,4,6-trichlorophenol	<1	<1	<1	<1	<1	<1	<1	<1	<1	<12
Sub Total 1	0	0	0	0	0	0	0	0	0	47
Miscellaneous Acid Extractable Organic Compounds										
4-chlorophenol	NA	NA	NA	NA	NA	NA	NA	NA	NA	<10
Sub Total 2	NA	NA	NA	NA	NA	NA	NA	NA	NA	0
Total Acid Compounds Analyzed	0	0	0	0	0	0	0	0	0	47

Table E-2. Summary of Acid Extractable Compounds in Ground Water, Monsanto Company, W.G. Krummrich Plant, Sauget, Il. ***

Well Number:	GM-4B	GM-4B	GM-4B	GM-4B	GM-4B	GM-4C	GM-4C	GM-5	GM-5	GM-6A
Date:	11/84	11/84*	2/85	11/85	11/85*	2/85	5/85	11/83	5/84	11/83
USEPA Priority Pollutant Acid Extractable Organic Compounds concentrations are in ug/L										
2-chlorophenol	60	51	14.8	19.6	24	<3.3	67	<1	<1	<1
2,4-dichlorophenol	<25	<25	<2.7	<2.7	<2.7	4.7	16.7	<1	<1	<1
2,4-dimethylphenol	<25	<25	<2.7	<2.7	<2.7	<2.7	<2.7	<1	<1	<1
4,6-dinitro-o-cresol	<250	<250	<24	<24	<24	<24	<24	<1	<1	<1
2,4-dinitrophenol	<250	<250	<42	<42	<42	<42	<42	<1	<1	<1
2-nitrophenol	<25	<25	<3.6	<3.6	<3.6	<3.6	<3.6	<1	<1	<1
4-nitrophenol	<25	<25	<2.4	<2.4	<2.4	<2.4	<2.4	<1	<1	<1
p-chloro-m-cresol	<25	<25	<3	<3	<3	<3	<3	<1	<1	<1
pentachlorophenol	<25	<25	<3.6	<3.6	<3.6	<3.6	<3.6	<1	<1	<1
phenol	<25	<25	6	<1.5	<1.5	<1.5	<1.5	<1	<1	<1
2,4,6-trichlorophenol	<25	<25	<2.7	<2.7	<2.7	<2.7	<2.7	<1	<1	<1
Sub Total 1	60	51	20.8	19.6	24	4.7	83.7	0	0	0
Miscellaneous Acid Extractable Organic Compounds										
4-chlorophenol	77	40	22	<10	44.6	<3.3	115	NA	NA	NA
Sub Total 2	77	40	22	0	44.6	0	115	NA	NA	NA
Total Acid Compounds Analyzed	137	91	42.8	19.6	68.6	4.7	198.7	0	0	0

Table E-2. Summary of Acid Extractable Compounds in Ground Water, Monsanto Company, W.G. Krummrich Plant, Sauget, Il. ***

Well Number:	GM-6A	GM-6A	GM-6B	GM-6B	GM-6B	GM-7	GM-7	GM-8	GM-8	GM-9
Date:	5/84	11/84	9/84**	11/84	11/85	11/83	5/84	11/83	5/84	11/84
USEPA Priority Pollutant Acid Extractable Organic Compounds concentrations are in ug/L										
2-chlorophenol	<1	<25	<6	<25	<3.3	<1	<1	<1	<1	<25
2,4-dichlorophenol	<1	<25	<8	<25	4.6	<1	<1	<1	<1	<25
2,4-dimethylphenol	<1	<25	<10	<25	<2.7	<1	<1	<1	<1	<25
4,6-dinitro-o-cresol	<1	<250	<38	<250	<24	<1	<1	<1	<1	<250
2,4-dinitrophenol	<1	<250	<52	<250	<42	<1	<1	<1	<1	<250
2-nitrophenol	<1	<25	<11	<25	<3.6	<1	<1	<1	<1	<25
4-nitrophenol	<1	<25	<35	<25	<2.4	<1	<1	<1	<1	<25
p-chloro-m-cresol	<1	<25	<8	<25	<3	<1	<1	<1	<1	<25
pentachlorophenol	<1	<25	<34	<25	<3.6	<1	<1	<1	<1	<25
phenol	<1	<25	<4	<25	<1.5	<1	<1	<1	<1	<25
2,4,6-trichlorophenol	<1	<25	<12	<25	<2.7	<1	<1	<1	<1	<25
Sub Total 1	0	0	0	0	4.6	0	0	0	0	0
Miscellaneous Acid Extractable Organic Compounds										
4-chlorophenol	NA	<25	<10	<25	<10	NA	NA	NA	NA	<25
Sub Total 2	NA	0	0	0	0	NA	NA	NA	NA	0
Total Acid Compounds Analyzed	0	0	0	0	4.6	0	0	0	0	0

Table E-2. Summary of Acid Extractable Compounds in Ground Water, Monsanto Company, W.G. Krummrich Plant, Sauget, IL. ***

Well Number:	GM-8	GM-8	GM-9A	GM-9A	GM-9B	GM-9B	GM-9B	GM-9C	GM-9C	GM-9C
Date:	2/85	11/85	11/83	5/84	9/84**	5/85	11/85	9/84**	5/85	11/85
USEPA Priority Pollutant Acid Extractable Organic Compounds concentrations are in ug/L										
2-chlorophenol	<3.7	<3.4	55	58	<6	<3.3	3.7	1	<3.3	<3.6
2,4-dichlorophenol	<3	<2.8	21	7	<8	<2.7	<2.7	<8	<2.7	<2.9
2,4-dimethylphenol	<3	<2.8	<1	<1	<10	<2.7	<2.7	<10	<2.7	<2.9
4,6-dinitro-o-cresol	<27	<25	<1	<1	<38	<24	<24	<38	<24	<26
2,4-dinitrophenol	<47.2	<43	<1	<1	<52	<42	<42	<52	<42	<45
2-nitrophenol	<4	<3.7	<1	<1	<11	<3.6	<3.6	<11	<3.6	<3.9
4-nitrophenol	<2.2	<2.5	<1	<1	<35	<2.4	<2.4	<35	<2.4	<2.6
p-chloro-m-cresol	<3.4	<3.1	<1	<1	<8	<3	<3	<8	<3	<3.2
pentachlorophenol	<4	<3.7	58	12	2	<3.6	<3.6	4	<3.6	<3.9
phenol	<1.7	<1.5	<1	<1	<4	<1.5	<1.5	<4	<1.5	<1.6
2,4,6-trichlorophenol	<3	<2.8	<1	<1	<12	<2.7	<2.7	<12	<2.7	<2.9
Sub Total 1	0	0	134	77	2	0	3.7	5	0	0
Miscellaneous Acid Extractable Organic Compounds										
4-chlorophenol	<3.7	<10	NA	NA	<10	<25	<25	<10	<10	11
Sub Total 2	0	0	NA	NA	0	0	0	0	0	11
Total Acid Compounds Analyzed	0	0	134	77	2	0	3.7	5	0	11

Table E-2. Summary of Acid Extractable Compounds in Ground Water, Monsanto Company, W.G. Krummrich Plant, Sauget, Il. ***

Well Number:	GM-10A	GM-10A	GM-10B	GM-10B	GM-10C	GM-10C	GM-11	GM-11	GM-12A	GM-12A
Date:	11/83	5/84	2/85	5/85	2/85	5/85	11/83	5/84	11/83	11/83*
USEPA Priority Pollutant Acid Extractable Organic Compounds concentrations are in ug/L										
2-chlorophenol	<1	<1	<3.6	29.5	<3.7	<3.3	<1	<1	182	160
2,4-dichlorophenol	<1	<1	8.9	154.2	<3	<2.7	<1	<1	<1	<1
2,4-dimethylphenol	<1	<1	<2.9	<2.7	<3	<2.7	<1	<1	<1	<1
4,6-dinitro-o-cresol	<1	<1	<26	<24	<26.7	<24	<1	<1	<1	<1
2,4-dinitrophenol	<1	<1	<45.7	<42	<46.7	<42	<1	<1	<1	<1
2-nitrophenol	<1	<1	<3.9	<3.6	<4	<3.6	<1	<1	<1	<1
4-nitrophenol	<1	<1	<2.6	<2.4	<2.7	<2.4	<1	<1	<1	<1
p-chloro-m-cresol	<1	<1	<3.3	<3	<3.3	<3	<1	<1	<1	<1
pentachlorophenol	<1	<1	<3.9	<3.6	<4	<3.6	<1	<1	147	115
phenol	<1	<1	<1.6	18.9	<1.7	<1.5	<1	<1	40	38
2,4,6-trichlorophenol	<1	<1	<2.9	<2.7	<3	<2.7	<1	<1	<1	<1
Sub Total 1	0	0	8.9	202.6	0	0	0	0	369	313
Miscellaneous Acid Extractable Organic Compounds										
4-chlorophenol	NA	NA	18.7	26	<3.7	<25	NA	NA	NA	NA
Sub Total 2	NA	NA	18.7	26	0	0	NA	NA	NA	NA
Total Acid Compounds Analyzed	0	0	27.6	228.6	0	0	0	0	369	313

Table E-2. Summary of Acid Extractable Compounds in Ground Water, Monsanto Company, W.G. Krummrich Plant, Sauget, Il. ***

Well Number:	GM-12A	GM-12A	GM-12A	GM-12A	GM-12A	GM-12A	GM-12A	GM-12A	GM-12A	GM-12A
Date:	5/84	5/84*	11/84	11/84*	2/85	2/85*	5/85	5/85*	11/85	11/85*
USEPA Priority Pollutant Acid Extractable Organic Compounds concentrations are in ug/L										
2-chlorophenol	29	31	34	<25	30.8	30.3	19	17.3	17	20.9
2,4-dichlorophenol	<1	<1	<25	<25	<2.7	<2.7	<2.7	<2.7	<2.8	<2.8
2,4-dimethylphenol	<1	<1	<25	<25	<2.7	<2.7	<2.7	<2.7	<2.8	<2.8
4,6-dinitro-o-cresol	<1	<1	<250	<250	<24	<24	<24	<24	<25	<25
2,4-dinitrophenol	<1	<1	<250	<250	<42	<42	<42	<42	<44	<44
2-nitrophenol	<1	<1	<25	<25	<3.6	<3.6	<3.6	<3.6	<3.8	<3.8
4-nitrophenol	<1	<1	<25	<25	<2.4	<2.4	<2.4	<2.4	<2.5	<2.5
p-chloro-m-cresol	<1	<1	<25	<25	<3	<3	<3	<3	<3.2	<3.2
pentachlorophenol	<1	<1	<25	<25	<3.6	<3.6	<3.6	<3.6	<3.8	<3.8
phenol	18	15	43	27	90.4	93.6	54	46	15.9	19.9
2,4,6-trichlorophenol	<1	<1	<25	<25	<2.7	<2.7	<2.7	<2.7	<2.8	<2.8
Sub Total 1	47	46	77	27	121.2	123.9	73	63.3	32.9	40.8
Miscellaneous Acid Extractable Organic Compounds										
4-chlorophenol	NA	NA	<25	<25	6	7	<10	<10	<11	<11
Sub Total 2	NA	NA	0	0	6	7	0	0	0	0
Total Acid Compounds Analyzed	47	46	77	27	127.2	130.9	73	63.3	32.9	40.8

Table E-2. Summary of Acid Extractable Compounds in Ground Water, Monsanto Company, W.G. Krummrich Plant, Sauget, Il. ***

Well Number:	GM-12A	GM-12A	GM-12B	GM-12B	GM-12B	GM-12C	GM-12C	GM-12C	GM-12C	GM-13
Date:	2/86	2/86*	9/84**	11/84	11/85	2/85	2/85*	5/85	5/85*	9/84**
USEPA Priority Pollutant Acid Extractable Organic Compounds concentrations are in ug/L										
2-chlorophenol	42	24	2	<25	<3.5	108	114	<3.3	<3.3	<6
2,4-dichlorophenol	<2.9	<2.7	1	<25	<2.8	<2.7	<2.7	<2.7	<2.7	<8
2,4-dimethylphenol	<2.9	<2.7	<10	<25	<2.8	<2.7	<2.7	<2.7	<2.7	<10
4,6-dinitro-o-cresol	<26	<24	<38	<250	<25	<24	<24	<24	<24	<38
2,4-dinitrophenol	<45	<42	<52	<250	<44	<42	<42	<42	<42	<52
2-nitrophenol	<3.8	<3.6	<11	<25	<3.8	33.4	55	<3.6	<3.6	<11
4-nitrophenol	<2.6	<2.4	<35	<25	<2.5	33.3	372	<2.4	<2.4	<35
p-chloro-m-cresol	<3.2	<3	<8	<25	<3.2	<3	<3	<3	<3	<8
pentachlorophenol	<3.8	<3.6	4	<25	<3.8	<3.6	<3.6	<3.6	<3.6	25
phenol	28.6	16.3	7	33	17.3	<1.5	2.9	<1.5	<1.5	230
2,4,6-trichlorophenol	<2.9	<2.7	<12	<25	<2.8	<2.7	<2.7	<2.7	<2.7	<12
Sub Total 1	70.6	40.3	14	33	17.3	174.7	543.9	0	0	255
Miscellaneous Acid Extractable Organic Compounds										
4-chlorophenol	<11	<10	<10	<25	<11	<3.3	<3.3	<10	<10	<10
Sub Total 2	0	0	0	0	0	0	0	0	0	0
Total Acid Compounds Analyzed	70.6	40.3	14	33	17.3	174.7	543.9	0	0	255

Table E-2. Summary of Acid Extractable Compounds in Ground Water, Monsanto Company, W.G. Krummrich Plant, Sauget, Il. ***

Well Number:	GM-13	GM-13	GM-14	GM-15	GM-16A	GM-16A	GM-16A	GM-16B	GM-16B	GM-16B
Date:	11/85	2/86	9/84**	9/84**	9/84**	5/85	11/85	9/84**	5/85	11/85
USEPA Priority Pollutant Acid Extractable Organic Compounds concentrations are in ug/L										
2-chlorophenol	134	75.3	NA	<6	<6	<3.3	<3.5	<6	<3.3	<6.6
2,4-dichlorophenol	141	18	NA	<8	<8	<2.7	<2.8	<8	<2.7	<5.4
2,4-dimethylphenol	210	210	NA	<10	<10	<3	<2.8	<10	<2.7	<5.4
4,6-dinitro-o-cresol	<26	<25	NA	<38	<38	<24	<25	<38	<24	<48
2,4-dinitrophenol	<46	<44	NA	<52	<52	<42	<44	<52	<42	<84
2-nitrophenol	<4	<3.8	NA	<11	<11	<3.6	<3.8	<11	<3.6	<7.2
4-nitrophenol	53	<2.5	NA	<35	<35	<2.4	<2.5	<35	<2.4	<4.8
p-chloro-m-cresol	<3.3	7.1	NA	<8	<8	<3	<3.2	<8	<3	<6
pentachlorophenol	31	3.9	NA	1	<1	<3.6	<3.8	6	<3.6	<7.2
phenol	1,950	319	NA	<4	<4	<1.5	<1.6	<4	<1.5	<3
2,4,6-trichlorophenol	32.3	3.7	NA	<12	<12	<2.7	<2.8	<12	<2.7	<5.4
Sub Total 1	2551.3	637	NA	1	0	0	0	6	0	0
Miscellaneous Acid Extractable Organic Compounds										
4-chlorophenol	619	150	NA	<10	<10	<10	<11	<10	<10	<20
Sub Total 2	619	150	NA	0	0	0	0	0	0	0
Total Acid Compounds Analyzed	3170.3	787	NA	1	0	0	0	6	0	0

Table E-2. Summary of Acid Extractable Compounds in Ground Water, Monsanto Company, W.G. Krummrich Plant, Sauget, Il. ***

Well Number:	GM-17A	GM-17A	GM-17A	GM-17B	GM-17B	GM-17B	GM-17C	GM-17C	GM-17C	GM-18A
Date:	9/84	11/84	11/85	9/84**	11/84	11/85	9/84**	11/84	11/85	9/84**
USEPA Priority Pollutant Acid Extractable Organic Compounds concentrations are in ug/L										
2-chlorophenol	38	27	<3.3	<6	<25	31.6	37	86	15	<6
2,4-dichlorophenol	<8	<25	<2.7	<8	<25	<5.4	<8	<25	<2.7	<8
2,4-dimethylphenol	<10	<25	<2.7	<10	<25	<5.4	<10	<25	<2.7	<10
4,6-dinitro-o-cresol	<38	<250	<24	<38	<250	<48	<38	<250	<24	<38
2,4-dinitrophenol	<52	<250	<42	<52	<250	<84	<52	<250	<42	<52
2-nitrophenol	<11	<25	<3.6	<11	<25	<7.2	<11	<25	<3.6	<11
4-nitrophenol	184	<25	<2.4	<35	<25	<4.8	<35	<25	<2.4	<35
p-chloro-m-cresol	<8	<25	<3	<8	<25	<6	<8	<25	<3	<8
pentachlorophenol	<34	<25	<3.6	2	<25	<7.2	2	<25	<3.6	<34
phenol	472	43	3.3	131	208	234	7	38	<1.5	<4
2,4,6-trichlorophenol	<12	<25	<2.7	<12	<25	<5.4	<12	<25	<2.7	<12
Sub Total 1	694	70	3.3	133	208	265.6	46	124	15	0
Miscellaneous Acid Extractable Organic Compounds										
4-chlorophenol	<10	<25	<10	<10	53	<20	<10	78	<10	<10
Sub Total 2	0	0	0	0	53	0	0	78	0	0
Total Acid Compounds Analyzed	694	70	3.3	133	261	265.6	46	202	15	0

Table E-2. Summary of Acid Extractable Compounds in Ground Water, Monsanto Company, W.G. Krummrich Plant, Sauget, Il. ***

Well Number:	GM-18A	GM-18A	GM-18B	GM-18B	GM-18B	GM-25A	GM-25A	GM-25B	GM-25B	GM-25B
Date:	5/85	11/85	9/84**	5/85	11/85	9/84	11/84	9/84	11/84	11/85
USEPA Priority Pollutant Acid Extractable Organic Compounds concentrations are in ug/L										
2-chlorophenol	<3.3	<3.4	<6	<3.3	7.44	<6	<25	<6	<25	<6.5
2,4-dichlorophenol	<2.7	<2.8	<8	<2.7	<5.4	<8	<25	<8	<25	<5.3
2,4-dimethylphenol	<2.7	<2.8	<10	<3.0	<5.4	<10	<25	<10	<25	<5.3
4,6-dinitro-o-cresol	<24	<25	<38	<24	<48	<38	<250	<38	<250	<47
2,4-dinitrophenol	<42	<44	<52	<42	<84	<52	<250	<52	<250	<82
2-nitrophenol	<3.6	<3.8	<11	<3.6	<7.2	<11	<25	<11	<25	<7.1
4-nitrophenol	<2.4	<2.5	<35	<2.4	<4.8	<35	<25	<35	<25	<4.7
p-chloro-m-cresol	<3	<3.1	<8	<3	<6	<8	<25	<8	<25	<5.9
pentachlorophenol	<3.6	<3.8	<34	<3.6	<7.2	<34	<25	<34	<25	<7.1
phenol	<1.5	<1.6	<4	<1.5	<3	<4	<25	2	<25	<2.9
2,4,6-trichlorophenol	<2.7	<2.8	<12	<2.7	<5.4	<12	<25	<12	<25	<5.3
Sub Total 1	0	0	0	0	7.44	0	0	2	0	0
Miscellaneous Acid Extractable Organic Compounds										
4-chlorophenol	<10	<10	<10	<10	<20	<10	<25	<10	<25	<20
Sub Total 2	0	0	0	0	0	0	0	0	0	0
Total Acid Compounds Analyzed	0	0	0	0	7.44	0	0	2	0	0

Table E-2. Summary of Acid Extractable Compounds in Ground Water, Monsanto Company, W.G. Krummrich Plant, Sauget, Il. ***

Well Number:	GM-27B	GM-27B	GM-27B	GM-27C	GM-27C	GM-27C	GM-28B	GM-28B	GM-28B	GM-28C
Date:	9/84**	11/85	2/86	9/84**	11/85	2/86	9/84**	11/85	2/86	9/84**
USEPA Priority Pollutant Acid Extractable Organic Compounds concentrations are in ug/L										
2-chlorophenol	12	<3.3	<3.4	<6	9.8	6.9	24	256	481	NA
2,4-dichlorophenol	115	3.3	<2.8	<8	<2.7	<2.8	<8	13.3	767	NA
2,4-dimethylphenol	<10	<2.7	<2.8	<10	<2.7	<2.8	<10	134	224	NA
4,6-dinitro-o-cresol	<38	<24	<25	<38	<24	<24	<38	<26	<25	NA
2,4-dinitrophenol	<52	<42	<43	<52	<42	<43	<52	<45	<43	NA
2-nitrophenol	<11	<3.6	<3.7	<11	<3.6	<3.7	<11	<3.9	<3.7	NA
4-nitrophenol	<35	<2.4	<2.5	<35	<2.4	<2.4	<35	<2.6	<2.5	NA
p-chloro-m-cresol	<8	<3	<3.1	<8	<3	<3.1	<8	<3.2	<3.1	NA
pentachlorophenol	170	<3.6	<3.7	<34	<3.6	<3.7	9	<3.9	33.1	NA
phenol	6	<1.5	2.2	<4	158	<1.5	<4	264	224	NA
2,4,6-trichlorophenol	77	<2.7	<2.8	<12	<2.7	<2.8	8	<2.9	310	NA
Sub Total 1	380	3.3	2.2	0	167.8	6.9	41	667.3	2039.1	NA
Miscellaneous Acid Extractable Organic Compounds										
4-chlorophenol	<10	<10	<10	<10	164	111	<10	2,490	3,440	NA
Sub Total 2	0	0	0	0	164	111	0	2,490	3,440	NA
Total Acid Compounds Analyzed	380	3.3	2.2	0	331.8	117.9	41	3157.3	5479.1	NA

Table E-2. Summary of Acid Extractable Compounds in Ground Water, Monsanto Company, W.G. Krummrich Plant, Sauget, Il. ***

Well Number:	GM-28C	GM-28C	GM-29	GM-29	GM-30	GM-30	GM-30	GM-31A	GM-31A	GM-31A
Date:	11/85	2/86	9/84**	11/85	9/84**	11/85	2/86	2/85	5/85	11/85
USEPA Priority Pollutant Acid Extractable Organic Compounds concentrations are in ug/L										
2-chlorophenol	107	237	<6	10.2	<6	<3.3	<3.6	<3.3	<3.3	<3.5
2,4-dichlorophenol	153	818	<8	<3.1	<8	<2.7	<2.9	<2.7	4.5	12.9
2,4-dimethylphenol	150	186	<10	<3.1	<10	<2.7	<2.9	<2.7	<2.7	<2.9
4,6-dinitro-o-cresol	<24	<24	<38	<28	<38	<24	<26	<24	<24	<26
2,4-dinitrophenol	<42	<42	<52	<49	<52	<42	<46	44.6	1,299.9	158
2-nitrophenol	<3.6	<3.6	<11	<4.2	<11	<3.6	<3.9	134	269.7	686
4-nitrophenol	<2.4	<2.4	<35	<2.8	<35	<2.4	<2.6	<2.4	201.3	175
p-chloro-m-cresol	<3	<3	<8	<3.5	<8	<3	<3.3	<3	<3	<3.2
pentachlorophenol	<3.6	26.4	<34	<4.2	<34	<3.6	<3.9	<3.6	<3.6	<3.8
phenol	16.6	67.9	<4	<1.7	<4	<1.5	<1.6	43,600	3,530	2,980
2,4,6-trichlorophenol	14.6	149	<12	<3.1	<12	<2.7	<2.9	23.7	51.9	136
Sub Total 1	441.2	1484.3	0	10.2	0	0	0	43802.3	5357.3	4147.9
Miscellaneous Acid Extractable Organic Compounds										
4-chlorophenol	1,240	1,920	<10	12.8	<10	<10	<11	80.2	<25	10.6
Sub Total 2	1,240	1,920	0	12.8	0	0	0	80.2	0	10.6
Total Acid Compounds Analyzed	1681.2	3404.3	0	23	0	0	0	43882.5	5357.3	4158.5

Table E-2. Summary of Acid Extractable Compounds in Ground Water, Monsanto Company, W.G. Krummrich Plant, Sauget, Il. ***

Well Number:	GM-31A	GM-31B	GM-31B	GM-31B	GM-31B	GM-31C	GM-31C	GM-31C	GM-31C	B-24A
Date:	11/85*	2/85	5/85	11/85	11/85*	2/85	5/85	11/85	11/85*	2/86
USEPA Priority Pollutant Acid Extractable Organic Compounds concentrations are in ug/L										
2-chlorophenol	<3.5	<3.3	<3.3	<3.3	<3.3	<3.7	<3.3	6.8	5.6	202,000
2,4-dichlorophenol	13.2	<2.7	<2.7	<2.7	<2.7	<3	<2.7	<2.7	<2.7	62,400
2,4-dimethylphenol	<2.8	<2.7	<2.7	<2.7	<2.7	<3	<2.7	<2.7	<2.7	<1,100
4,6-dinitro-o-cresol	<25	<24	<24	<24	<24	<26.7	<24	<24	<24	<10,000
2,4-dinitrophenol	396	<42	<42	<42	<42	<46.7	<42	<42	<42	<18,000
2-nitrophenol	729	<3.6	<3.6	<3.6	<3.6	<4	<3.6	<3.6	<3.6	<1,500
4-nitrophenol	186	<2.4	<2.4	<2.4	<2.4	<2.7	<2.4	<2.4	<2.4	<1,000
p-chloro-m-cresol	<3.2	<3	<3	<3	<3	<3.3	<3	<3	<3	<1,300
pentachlorophenol	<3.8	<3.6	<3.6	<3.6	<3.6	<4	<3.6	<3.6	<3.6	<1,500
phenol	8,410	<1.5	<1.5	<1.5	<1.5	<1.7	153.4	<1.5	<1.5	280,000
2,4,6-trichlorophenol	184	<2.7	<2.7	<2.7	<2.7	<3	<2.7	<2.7	<2.7	21,900
Sub Total 1	9918.2	0	0	0	0	0	153.4	6.8	5.6	566300
Miscellaneous Acid Extractable Organic Compounds										
4-chlorophenol	<10.5	<3.3	<25	<10	<10	<3.7	19	<10	<10	37,200
Sub Total 2	0	0	0	0	0	0	19	0	0	37,200
Total Acid Compounds Analyzed	9918.2	0	0	0	0	0	172.4	6.8	5.6	603500

Table E-2. Summary of Acid Extractable Compounds in Ground Water, Monsanto Company, W.G. Krummrich Plant, Sauget, Il. ***

Well Number:	B-25A	B-25A	B-25B	B-25B	B-27B	B-27B	B-28A	B-29A	B-29A	B-29B
Date:	6/84	11/85	6/84	11/85	9/84**	9/84*	2/86	6/84	11/85	6/84
USEPA Priority Pollutant Acid Extractable Organic Compounds concentrations are in ug/L										
2-chlorophenol	14,900	89,200	10,200	23,300	NA	NA	<3.5	176,000	718,000	103,000
2,4-dichlorophenol	13,300	1,520,000	34,800	52,100	NA	NA	<2.9	12,900	44,700	33,800
2,4-dimethylphenol	<200	<26	<200	48.6	NA	NA	<2.9	7,740	44,500	38,300
4,6-dinitro-o-cresol	<760	<240	<760	<240	NA	NA	<26	<760	<2,400	<7,600
2,4-dinitrophenol	<1,040	<410	<1,040	<420	NA	NA	<45	<1,040	<4,200	<10,400
2-nitrophenol	<220	<35	<220	<36	NA	NA	<3.8	<220	<360	<2,200
4-nitrophenol	<700	167	497	2,320	NA	NA	<2.6	<700	<240	7,590
p-chloro-m-cresol	<160	<29	<160	<30	NA	NA	<3.2	<160	<300	<1,600
pentachlorophenol	<680	546	<680	<36	NA	NA	<3.8	9,280	10,600	1,700
phenol	34,900	965,000	39,400	32,700	NA	NA	<1.6	657,000	771,000	609,000
2,4,6-trichlorophenol	5,160	13,900	<240	6,870	NA	NA	<2.9	11,300	15,300	31,200
Sub Total 1	68260	2588813	84897	117338.6	NA	NA	0	874220	1604100	824590
Miscellaneous Acid Extractable Organic Compounds										
4-chlorophenol	NA	42,500	NA	22,600	NA	NA	<11	NA	299,000	NA
Sub Total 2	NA	42,500	NA	22,600	NA	NA	0	NA	299,000	NA
Total Acid Compounds Analyzed	68260	2631313	84897	139938.6	NA	NA	0	874220	1903100	824590

Table E-2. Summary of Acid Extractable Compounds in Ground Water, Monsanto Company, W.G. Krummrich Plant, Sauget, Il. ***

Well Number:	B-29B	B-29B	B-29B	B-29B	B-30B	B-31B	B-31B	B-31C	B-31C	B-31C
Date:	6/84*	6/84#	11/84	11/85	9/84**	11/85	2/86	9/84**	9/84*	11/85
USEPA Priority Pollutant Acid Extractable Organic Compounds concentrations are in ug/L										
2-chlorophenol	116,000	27,400	953	70,900	NA	<3.3	<3.3	<6	<6	<3.4
2,4-dichlorophenol	97,400	68,100	<250	37,500	NA	<2.7	<2.7	<8	<8	<2.8
2,4-dimethylphenol	13,500	18,700	<250	21,200	NA	<2.7	<2.7	<10	<10	<2.8
4,6-dinitro-o-cresol	<760	<25,000	<2500	<480	NA	<24	<24	<38	<38	<24
2,4-dinitrophenol	<1,040	<25,000	<2500	<840	NA	<42	<42	<52	<52	<43
2-nitrophenol	<220	<2,500	<250	<72	NA	<3.6	<3.6	<11	<11	<3.7
4-nitrophenol	<700	3,690	<250	1,860	NA	<2.4	<2.4	<35	<35	<2.4
p-chloro-m-cresol	<160	<2,500	<250	<60	NA	<3	<3	<8	<8	<3.1
pentachlorophenol	<680	3,690	<250	3,090	NA	<3.6	<3.6	<34	<34	<3.7
phenol	1,070,000	19,800	5,010	133,000	NA	<1.5	<1.5	<4	<4	<1.5
2,4,6-trichlorophenol	16,000	16,000	<250	11,800	NA	<2.7	<2.7	<12	<12	<2.8
Sub Total 1	1312900	157380	5963	279350	NA	0	0	0	0	0
Miscellaneous Acid Extractable Organic Compounds										
4-chlorophenol	NA	NA	<250	49,900	NA	<10	<10	<10	<10	<10
Sub Total 2	NA	NA	0	49,900	NA	0	0	0	0	0
Total Acid Compounds Analyzed	1312900	157380	5963	329250	NA	0	0	0	0	0

Table E-2. Summary of Acid Extractable Compounds in Ground Water, Monsanto Company, W.G. Krummrich Plant, Sauget, Il. ***

Well Number:	B-31C	B-101	B-102	GM-106	GM-106	GM-106	P-1	P-2	P-2	P-6
Date:	2/86	9/84**	9/84**	11/85	2/86	2/86*	9/84**	6/84	11/85	6/84
USEPA Priority Pollutant Acid Extractable Organic Compounds concentrations are in ug/L										
2-chlorophenol	6.2	5,630	<6	15.7	52.1	40.9	<6	16	8.5	<1
2,4-dichlorophenol	<2.8	31,200	<8	22	133	128	2	40	<2.7	<1
2,4-dimethylphenol	<2.8	<10	<10	<2.7	4.8	4.5	<10	<1	<2.7	<1
4,6-dinitro-o-cresol	<25	<38	<38	<24	<25	<24	<38	<1	<24	<1
2,4-dinitrophenol	<44	<52	<52	<42	<43	<43	<52	<1	<42	<1
2-nitrophenol	<3.8	<11	<11	<3.6	<3.7	<3.7	<11	<1	<3.6	<1
4-nitrophenol	<2.5	<35	<35	<2.4	<2.5	3	<35	<1	<2.4	<1
p-chloro-m-cresol	<3.2	<8	<8	<3	<3.1	<3.1	<8	<1	<3	<1
pentachlorophenol	<3.8	1,360	<34	<3.6	<3.7	<3.7	1	1	<3.6	<1
phenol	<1.6	<4	<4	35.9	65.2	53.5	<4	291	<1.5	6
2,4,6-trichlorophenol	<2.8	14,600	<12	52.9	207	181	1	7	<2.7	<1
Sub Total 1	6.2	52790	0	126.5	462.1	410.9	4	355	8.5	6
Miscellaneous Acid Extractable Organic Compounds										
4-chlorophenol	<11	<10	<10	<10	37.1	36.3	<10	NA	<10	NA
Sub Total 2	0	0	0	0	37.1	36.3	0	NA	0	NA
Total Acid Compounds Analyzed	6.2	52790	0	126.5	499.2	447.2	4	355	8.5	6

Table E-2. Summary of Acid Extractable Compounds in Ground Water, Monsanto Company, W.G. Krummrich Plant, Sauget, Il. ***

Well Number:	P-6	P-7	P-7	P-8	P-8	P-10	P-11	P-12	P-13	P-13
Date:	11/85	6/84	11/85	6/84	11/85	9/84**	9/84**	9/84**	6/84	6/84*
USEPA Priority Pollutant Acid Extractable Organic Compounds concentrations are in ug/L										
2-chlorophenol	<3.7	10,200	2,660	1	27.2	<6	<6	<6	<1	<1
2,4-dichlorophenol	<3.1	8,180	7,790	<1	<2.7	<8	<8	<8	<1	<1
2,4-dimethylphenol	<3.1	1,930	<5.5	1	32.1	<10	<10	<10	<1	<1
4,6-dinitro-o-cresol	<27	<760	<48	<1	<24	<38	<38	<38	<1	<1
2,4-dinitrophenol	<47	<1,040	<85	<1	<42	<52	<52	<52	<1	<1
2-nitrophenol	<4.1	<220	<7.3	<1	<3.6	<11	<11	<11	<1	<1
4-nitrophenol	<2.7	<700	133	<1	<2.4	<35	<35	<35	<1	<1
p-chloro-m-cresol	<3.4	<160	<6.1	<1	<3	<8	<8	<8	<1	<1
pentachlorophenol	<4.1	<680	<7.3	<1	<3.6	<34	<34	<34	<1	<1
phenol	<1.7	123,000	22,300	9	<1.5	<4	<4	<4	<1	4
2,4,6-trichlorophenol	<3.1	1,920	3,430	<1	<2.7	<12	<12	<12	<1	<1
Sub Total 1	0	145230	36313	11	59.3	0	0	0	0	4
Miscellaneous Acid Extractable Organic Compounds										
4-chlorophenol	<11	NA	13,100	NA	182	<10	<10	<10	NA	NA
Sub Total 2	0	NA	13,100	NA	182	0	0	0	NA	NA
Total Acid Compounds Analyzed	0	145230	49413	11	241.3	0	0	0	0	4

Table E-2. Summary of Acid Extractable Compounds in Ground Water, Monsanto Company, W.G. Krummrich Plant, Sauget, Il. ***

Well Number:	P-13	P-13	P-14	P-14	DW-1	DW-1	DW-4	DW-7	DW-7	DW-10
Date:	6/84#	11/85	6/84	11/85	9/84**	11/85	9/84**	11/85	2/86	9/84**
USEPA Priority Pollutant Acid Extractable Organic Compounds concentrations are in ug/L										
2-chlorophenol	<25	<3.3	<1	74.5	<6	22.1	42	19.3	36.4	<6
2,4-dichlorophenol	<25	<2.7	<1	<2.8	<8	<5.2	24	23.6	12.6	<8
2,4-dimethylphenol	<25	<2.7	<1	<2.8	<10	<5.2	<10	<5.4	<2.8	<10
4,6-dinitro-o-cresol	<250	<24	<1	<25	<38	<46	<38	<48	<24	<38
2,4-dinitrophenol	<250	<42	<1	<43	<52	<81	<52	<84	<43	<52
2-nitrophenol	<25	<3.6	<1	<3.7	<11	<6.9	<11	<7.2	<3.7	<11
4-nitrophenol	<25	<2.4	<1	<2.5	<35	<4.6	<35	<4.8	<2.4	<35
p-chloro-m-cresol	<25	<3	<1	<3.1	<8	<5.8	<8	<6.0	<3.1	<8
pentachlorophenol	<25	<3.6	<1	<3.7	<34	<6.9	1,340	80.5	<3.7	39
phenol	<25	4.3	1	<1.5	29	210	<4	<3	25.9	<4
2,4,6-trichlorophenol	<25	<2.7	<1	<2.8	<12	<5.2	529	44.8	117	3
Sub Total 1	0	4.3	1	74.5	29	232.1	1935	168.2	191.9	42
Miscellaneous Acid Extractable Organic Compounds										
4-chlorophenol	NA	<10	NA	29.4	<10	189	<10	58.6	200	<10
Sub Total 2	NA	0	NA	29.4	0	189	0	58.6	200	0
Total Acid Compounds Analyzed	0	4.3	1	103.9	29	421.1	1935	226.8	391.9	42

Table E-2. Summary of Acid Extractable Compounds in Ground Water, Monsanto Company, W.G. Krummrich Plant, Sauget, Il. ***

Well Number:	DW-18	DW-18	DW-18	DW-23	DW-24	DW-24	DW-29	DW-29	DW-30	DW-33
Date:	9/84**	9/84*	11/85	9/84**	9/84**	9/84*	9/84**	9/84*	11/85	9/84**
USEPA Priority Pollutant Acid Extractable Organic Compounds concentrations are in ug/L										
2-chlorophenol	<6	NA	<3.5	<6	<6	<6	<6	NA	4.2	<6
2,4-dichlorophenol	<8	NA	<2.8	<8	<8	<8	52	NA	<2.8	<8
2,4-dimethylphenol	<10	NA	<2.8	<10	<10	<10	<10	NA	<2.8	<10
4,6-dinitro-o-cresol	<38	NA	<25	<38	<38	<38	<38	NA	<25	<38
2,4-dinitrophenol	<52	NA	<44	<52	<52	<52	<52	NA	<43	<52
2-nitrophenol	<11	NA	<3.8	<11	<11	<11	<11	NA	<3.7	<11
4-nitrophenol	<35	NA	<2.5	<35	<35	<35	<35	NA	<2.5	<35
p-chloro-m-cresol	<8	NA	<3.2	<8	<8	<8	<8	NA	<3.1	<8
pentachlorophenol	<34	NA	<3.8	<34	<34	<34	<34	NA	<3.7	4
phenol	1	NA	<1.6	<4	<4	<4	<4	NA	<1.5	<4
2,4,6-trichlorophenol	<12	NA	<2.8	<12	<12	<12	<12	NA	<2.8	<12
Sub Total 1	1	NA	0	0	0	0	52	NA	4.2	4
Miscellaneous Acid Extractable Organic Compounds										
4-chlorophenol	<10	NA	<11	<10	<10	<10	<10	NA	<10	<10
Sub Total 2	0	NA	0	0	0	0	0	NA	0	0
Total Acid Compounds Analyzed	1	NA	0	0	0	0	52	NA	4.2	4

Table E-2. Summary of Acid Extractable Compounds in Ground Water, Monsanto Company, W.G. Krummrich Plant, Sauget, Il. ***

Well Number:	DW-34	DW-34	DW-34	DW-1-85	DW-1-85	BK-3	BK-3	BK-3	WB-6	WB-6
Date:	9/84**	11/85	2/86	11/85	2/86	9/84**	11/85	2/86	9/84**	11/85
USEPA Priority Pollutant Acid Extractable Organic Compounds concentrations are in ug/L										
2-chlorophenol	<6	<6.6	<3.5	36.2	15.2	<6	<3.3	13.2	<6	<3.3
2,4-dichlorophenol	<8	<5.4	<2.9	<5.4	<2.9	6	<2.7	<2.8	<8	<2.7
2,4-dimethylphenol	<10	<5.4	<2.9	<5.4	<2.9	<10	<2.7	<2.8	<10	3.7
4,6-dinitro-o-cresol	<38	<48	<26	<48	<26	<38	<24	<24	<38	<24
2,4-dinitrophenol	<52	<84	<45	<84	<45	<52	<42	<43	<52	<42
2-nitrophenol	<11	<7.2	<3.9	<7.2	<3.8	<11	<3.6	<3.7	<11	<3.6
4-nitrophenol	<35	<4.8	<2.6	<4.8	<2.6	<35	<2.4	<2.4	<35	<2.4
p-chloro-m-cresol	<8	<6.0	<3.2	<6.0	<3.2	<8	<3	<3.1	<8	<3
pentachlorophenol	<34	<7.2	<3.9	<7.9	<3.8	<34	<3.6	<3.7	<34	<3.6
phenol	158	15.6	70.2	16.9	<1.6	<4	<1.5	6	<4	<1.5
2,4,6-trichlorophenol	<12	<5.4	<2.9	<5.4	<2.9	<12	<2.7	<2.8	<12	<2.7
Sub Total 1	158	15.6	70.2	53.1	15.2	6	0	19.2	0	3.7
Miscellaneous Acid Extractable Organic Compounds										
4-chlorophenol	<10	<20	<11	<20	<11	<10	<10	13.4	<10	<10
Sub Total 2	0	0	0	0	0	0	0	13.4	0	0
Total Acid Compounds Analyzed	158	15.6	70.2	53.1	15.2	6	0	32.6	0	3.7

Table E-2. Summary of Acid Extractable Compounds in Ground Water, Monsanto Company, W.G. Krummrich Plant, Sauget, Il. ***

Well Number:	WB-6	WB-7	WB-7	Field Blank	Trip Blank	Trip Blank	Trip Blank	Lab Blank	Lab Blank	Lab Blank
Date:	2/86	9/84	11/85	6/84	5/84	6/84	9/84	11/83	11/83	9/84
USEPA Priority Pollutant Acid Extractable Organic Compounds concentrations are in ug/L										
2-chlorophenol	<3.4	<6	<3.8	<6	<1	<6	<6	<1	<1	<6
2,4-dichlorophenol	<2.8	<8	<2.8	<8	<1	<8	<8	<1	<1	<8
2,4-dimethylphenol	59.5	<10	<2.8	<10	<1	<10	<10	<1	<1	<10
4,6-dinitro-o-cresol	<25	<38	<24	<38	<1	<38	<38	<1	<1	<38
2,4-dinitrophenol	<43	<52	<43	<52	<1	<52	<52	<1	<1	<52
2-nitrophenol	<3.7	<11	<3.7	<11	<1	<11	<11	<1	<1	<11
4-nitrophenol	<2.5	<35	<2.4	<35	<1	<35	<35	<1	<1	<35
p-chloro-m-cresol	<3.1	<8	<3.1	<8	<1	<8	<8	<1	<1	<8
pentachlorophenol	<3.7	<34	<3.7	<34	<1	<34	<34	<1	<1	9
phenol	<1.5	<4	<1.5	<4	<1	<4	<4	<1	<1	<4
2,4,6-trichlorophenol	<2.8	<12	<2.8	<12	<1	<12	<12	<1	<1	<12
Sub Total 1	59.5	0	0	0	0	0	0	0	0	9
Miscellaneous Acid Extractable Organic Compounds										
4-chlorophenol	<10	<10	<10	NA	NA	NA	NA	NA	NA	NA
Sub Total 2	0	0	0	NA	NA	NA	NA	NA	NA	NA
Total Acid Compounds Analyzed	59.5	0	0	0	0	0	0	0	0	9

Table E-2. Summary of Acid Extractable Compounds in Ground Water, Monsanto Company, W.G. Krummrich Plant, Sauget, Il. ***

Well Number:	Lab Blank	Lab Blank	Lab Blank
Date:	9/84	9/84	9/84
USEPA Priority Pollutant Acid Extractable Organic Compounds concentrations are in ug/L			
2-chlorophenol	<6	<6	<6
2,4-dichlorophenol	<8	<8	<8
2,4-dimethylphenol	<10	<10	<10
4,6-dinitro-o-cresol	<38	<38	<38
2,4-dinitrophenol	<52	<52	<52
2-nitrophenol	<11	<11	<11
4-nitrophenol	<35	<35	<35
p-chloro-m-cresol	<8	<8	<8
pentachlorophenol	<34	<34	19
phenol	<4	<4	<4
2,4,6-trichlorophenol	<12	<12	<12
Sub Total 1	0	0	19
Miscellaneous Acid Extractable Organic Compounds			
4-chlorophenol	NA	NA	NA
Sub Total 2	NA	NA	NA
Total Acid Compounds Analyzed	0	0	19

NA - Not Analyzed.
* - Replicate Analyses
** - Prior to analysis, this sample was held by Envirodyne Engineers, Inc. longer than the maximum allowable USEPA holding time.
*** - Envirodyne Engineers, Inc. (St. Louis, MO.) provided the laboratory services for the September 1984 sampling round. ETC (Edison, New Jersey) performed the analyses for the November 1984 through February 1986 sampling programs.
< - Indicates that the compound was not detected at the detection limit which is the value shown next to the symbol.

Table E-3. Summary of Base/Neutral Extractable Compounds in Ground Water, Monsanto Company, W.G. Krummrich Plant, Sauget, Il

Well Number:	GM-1	GM-1	GM-2	GM-2	GM-3	GM-3	GM-3	GM-4A	GM-4A
Date:	11/83	5/84	11/83	5/84	11/83	5/84	5/84*	11/83	5/84
USEPA Priority Pollutant Base/Neutral Extractable Organic Compounds concentrations are in ug/L									
acenaphthene	<1	<1	<1	<1	<1	<1	<1	<1	<1
acenapthylene	<1	<1	<1	<1	<1	<1	<1	<1	<1
anthracene	<1	<1	<1	<1	<1	<1	<1	<1	<1
benzidine	<1	<1	<1	<1	<1	<1	<1	<1	<1
benzo (a) anthracene	<1	<1	<1	<1	<1	<1	<1	<1	<1
benzo (a) pyrene	<1	<1	<1	<1	<1	<1	<1	<1	<1
benzo (b) fluoroanthene	<1	<1	<1	<1	<1	<1	<1	<1	<1
benzo (ghi) perylene	<1	<1	<1	<1	<1	<1	<1	<1	<1
benzo (k) fluoranthene	<1	<1	<1	<1	<1	<1	<1	<1	<1
bis (2-chloroethoxy) methane	<1	<1	<1	<1	<1	<1	<1	<1	<1
bis (2-chloroethyl) ether	<1	<1	<1	<1	<1	<1	<1	<1	<1
bis (2-chloroisopropyl) ether	<1	<1	<1	<1	<1	<1	<1	<1	<1
bis (2-ethylhexyl) phthalate	<1	<1	13	<1	1	<1	<1	<1	2
4-bromophenyl phenyl ether	<1	<1	<1	<1	<1	<1	<1	<1	<1
butyl benzyl phthalate	<1	<1	<1	<1	<1	<1	<1	<1	<1
2-chloronaphthalene	<1	<1	<1	<1	<1	<1	<1	<1	<1
4-chlorophenyl phenyl ether	<1	<1	<1	<1	<1	<1	<1	<1	<1
chrysene	<1	<1	<1	<1	<1	<1	<1	<1	<1
dibenzo (a,h) anthracene	<1	<1	<1	<1	<1	<1	<1	<1	<1
1,2-dichlorobenzene	<1	<1	<1	<1	<1	<1	<1	<1	<1
1,3-dichlorobenzene	<1	<1	<1	<1	<1	<1	<1	<1	<1
1,4-dichlorobenzene	<1	<1	<1	<1	<1	<1	<1	<1	<1
3,3-dichlorobenzidine	<1	<1	<1	<1	<1	<1	<1	<1	<1
diethyl phthalate	<1	3	<1	2	<1	1	1	<1	1
dimethyl phthalate	<1	<1	<1	<1	<1	<1	<1	<1	<1
di-n-butyl phthalate	1	2	2	3	2	3	2	2	<1
2,4-dinitrotoluene	<1	<1	<1	<1	<1	<1	<1	<1	<1
2,6-dinitrotoluene	<1	<1	<1	<1	<1	<1	<1	<1	<1
di-n-octyl phthalate	<1	<1	<1	<1	<1	<1	<1	<1	<1
1,2-diphenylhydrazine	<1	<1	<1	<1	<1	<1	<1	<1	<1
fluoranthene	<1	<1	<1	<1	<1	<1	<1	<1	<1
fluorene	<1	<1	<1	<1	<1	<1	<1	<1	<1
hexachlorobenzene	<1	<1	<1	<1	<1	<1	<1	<1	<1
hexachlorobutadiene	<1	<1	<1	<1	<1	<1	<1	<1	<1
hexachlorocyclopentadiene	<1	<1	<1	<1	<1	<1	<1	<1	<1
hexachloroethane	<1	<1	<1	<1	<1	<1	<1	<1	<1
indeno (1,2,3-c,d) pyrene	<1	<1	<1	<1	<1	<1	<1	<1	<1
isophorone	<1	<1	<1	<1	<1	<1	<1	<1	<1
naphthalene	<1	<1	<1	<1	<1	<1	<1	<1	<1
nitrobenzene	<1	<1	<1	<1	<1	<1	<1	<1	<1
n-nitrosodimethylamine	<1	<1	<1	<1	<1	<1	<1	<1	<1
n-nitrosodi-n-propylamine	<1	<1	<1	<1	<1	<1	<1	<1	<1
n-nitrosodiphenylamine	<1	<1	<1	<1	<1	<1	<1	<1	<1
phenanthrene	<1	<1	<1	<1	<1	<1	<1	<1	<1
pyrene	<1	<1	<1	<1	<1	<1	<1	<1	<1
1,2,4-trichlorobenzene	<1	<1	<1	<1	<1	<1	<1	<1	<1
Sub Total 1	1	5	15	5	3	4	3	2	3

Table E-3. Summary of Base/Neutral Extractable Compounds in Ground Water, Monsanto Company, W.G. Krummrich Plant, Sauget, Il

Well Number:	GM-1	GM-1	GM-2	GM-2	GM-3	GM-3	GM-3	GM-4A	GM-4A
Date:	11/83	5/84	11/83	5/84	11/83	5/84	5/84*	11/83	5/84
Miscellaneous Base/Neutral Extractable Organic Compounds concentrations are in ug/L									
2-nitroaniline	NA	NA	NA	NA	NA	NA	NA	NA	NA
4-nitroaniline	NA	NA	NA	NA	NA	NA	NA	NA	NA
2-nitrochlorobenzene	NA	NA	NA	NA	NA	NA	NA	NA	NA
4-nitrochlorobenzene	NA	NA	NA	NA	NA	NA	NA	NA	NA
2,4-and 3,4-dinitrochlorobenzene	NA	NA	NA	NA	NA	NA	NA	NA	NA
4-nitrodiphenylamine	NA	NA	NA	NA	NA	NA	NA	NA	NA
triphenyl phosphate	NA	NA	NA	NA	NA	NA	NA	NA	NA
2,3,7,8-tetrachloro-dibenzo-p-dioxin	NA	NA	NA	NA	NA	NA	NA	NA	NA
2-nitrobiphenyl	NA	NA	NA	NA	NA	NA	NA	NA	NA
4-nitrobiphenyl	NA	NA	NA	NA	NA	NA	NA	NA	NA
Sub Total 2	NA	NA	NA	NA	NA	NA	NA	NA	NA
Total Base/Neutral Compounds Analyzed	1	5	15	5	3	4	3	2	3

Table E-3. Summary of Base/Neutral Extractable Compounds in Ground Water, Monsanto Company, W.G. Krummrich Plant, Sauget, Il

Well Number:	GM-4B	GM-4B	GM-4B	GM-4B	GM-4B	GM-4B	GM-4C	GM-4C	GM-5
Date:	9/84	11/84	11/84*	2/85	11/85	11/85*	2/85	5/85	11/83
USEPA Priority Pollutant Base/Neutral Extractable Organic Compounds concentrations are in ug/L									
acenaphthene	<4	<10	<10	<1.9	<1.9	<1.9	<1.9	<1.9	<1
acenapthylene	<3	<10	<10	<3.5	<3.5	<3.5	<3.5	<3.5	<1
anthracene	<4	<10	<10	<1.9	<1.9	10.6	<1.9	<1.9	<1
benzidine	<60	<10	<10	<44	<44	<44	<44	<44	<1
benzo (a) anthracene	<9	<10	<10	<7.8	<7.9	<7.8	<7.8	<7.8	<1
benzo (a) pyrene	<12	<10	<10	<2.5	<2.5	<2.5	<2.5	<2.5	<1
benzo (b) fluoroanthene	<11	<10	<10	<4.8	<4.8	<4.8	<4.8	<4.8	<1
benzo (ghi) perylene	<14	<10	<10	<4.1	<4.1	<4.1	<4.1	<4.1	<1
benzo (k) fluoranthene	<11	<10	<10	<2.5	<3.5	<3.5	<2.5	<2.5	<1
bis (2-chloroethoxy) methane	<4	<10	<10	<5.3	<5.4	<5.3	<5.3	<5.3	<1
bis (2-chloroethyl) ether	<4	<10	<10	<5.7	<5.8	<5.7	<5.7	<5.7	<1
bis (2-chloroisopropyl) ether	<3	<10	<10	<5.7	<5.8	<5.7	<10	<6	<1
bis (2-ethylhexyl) phthalate	24	<10	<10	<10	<10	10.9	<1.9	<10	<1
4-bromophenyl phenyl ether	<16	<10	<10	<1.9	<1.9	<1.9	<10	<1.9	<1
butyl benzyl phthalate	8	<10	<10	<10	<10	<10	<1.9	<10	<1
2-chloronaphthalene	<4	<10	<10	<1.9	<1.9	<1.9	<1.9	<1.9	<1
4-chlorophenyl phenyl ether	<9	<10	<10	<4.2	<4.2	<4.2	<4.2	<4.2	<1
chrysene	<9	<10	<10	<2.5	<2.5	<2.5	<2.5	<2.5	<1
dibenzo (a,h) anthracene	<16	<10	<10	<2.5	<10	<10	<2.5	<2.5	<1
1,2-dichlorobenzene	159	258	123	105	85.6	99.2	91.7	40	<1
1,3-dichlorobenzene	12	56	37	31.6	82.8	42.4	73.3	24	<1
1,4-dichlorobenzene	681	1220	333	963	336	463	1,030	295	<1
3,3-dichlorobenzidine	<161	<10	<10	<16.5	<17	<17	<16.5	<16.5	<1
diethyl phthalate	<4	<10	<10	<10	<10	<10	<10	<10	<1
dimethyl phthalate	<4	<10	<10	<10	<10	<10	<10	<10	<1
di-n-butyl phthalate	14	<10	<10	<10	<10	<10	<10	<10	1
2,4-dinitrotoluene	<14	<10	<10	<5.7	<5.8	<5.7	<5.7	<5.7	<1
2,6-dinitrotoluene	<16	<10	<10	<1.9	<1.9	<1.9	<1.9	<1.9	<1
di-n-octyl phthalate	<6	<10	<10	<10	<10	<10	<10	<10	<1
1,2-diphenylhydrazine	<10	<10	<10	<10	<10	<10	<10	<10	<1
fluoranthene	<5	<10	<10	<2.2	<2.2	<2.2	<2.2	<2.2	<1
fluorene	<4	<10	<10	<1.9	<1.9	<1.9	<1.9	<1.9	<1
hexachlorobenzene	<15	<10	<10	<1.9	<1.9	<1.9	<1.9	<1.9	<1
hexachlorobutadiene	<13	<10	<10	<0.9	<0.9	<0.9	<0.9	<0.9	<1
hexachlorocyclopentadiene	<12	<10	<10	<10	<10	<10	<10	<10	<1
hexachloroethane	<10	<10	<10	<1.6	<1.6	<1.6	<1.6	<1.6	<1
indeno (1,2,3-c,d) pyrene	<7	<10	<10	<3.7	<4.7	<4.7	<3.7	<3.7	<1
isophorone	<2	<10	<10	<2.2	<2.2	<2.2	<2.2	<2.2	<1
naphthalene	<2	<10	<10	<1.6	<1.6	<1.6	<1.6	<1.6	<1
nitrobenzene	<5	<10	<10	<1.9	<1.9	<1.9	<1.9	<1.9	<1
n-nitrosodimethylamine	<10	<10	<10	<10	<10	<10	<10	<10	<1
n-nitrosodi-n-propylamine	<6	<10	<10	<10	<10	<10	<10	<10	<1
n-nitrosodiphenylamine	25	<10	<10	<1.9	<1.9	<1.9	72.4	<1.9	<1
phenanthrene	<4	<10	<10	<5.4	<5.5	<5.4	<5.4	<5.4	<1
pyrene	<5	<10	<10	<1.9	<1.9	<1.9	<1.9	<1.9	<1
1,2,4-trichlorobenzene	<7	<10	<10	<1.9	<1.9	<1.9	<1.9	<1.9	<1
Sub Total 1	923	1534	493	1099.6	504.4	626.1	1267.4	359	1

Table E-3. Summary of Base/Neutral Extractable Compounds in Ground Water, Monsanto Company, W.G. Krummrich Plant, Sauget, Il

Well Number:	GM-4B	GM-4B	GM-4B	GM-4B	GM-4B	GM-4B	GM-4C	GM-4C	GM-5
Date:	9/84	11/84	11/84*	2/85	11/85	11/85*	2/85	5/85	11/83
Miscellaneous Base/Neutral Extractable Organic Compounds concentrations are in ug/L									
2-nitroaniline	<25-30	<10	<10	<10	<10	<10	<10	<10	NA
4-nitroaniline	<25-30	<10	<10	<10	<10	<10	<10	<10	NA
2-nitrochlorobenzene	<10	<10	<10	<10	<10	19.9	<10	<10	NA
4-nitrochlorobenzene	<10	<10	<10	<10	<10	23.6	<10	<10	NA
2,4-and 3,4-dinitrochlorobenzene	<10	<10	<10	<10	<10	<10	<10	<10	NA
4-nitrodiphenylamine	<10	<10	<10	<10	<10	<10	<10	<10	NA
triphenyl phosphate	<10	<10	<30	<10	<10	<10	<10	<10	NA
2,3,7,8-tetrachloro-dibenzo-p-dioxin	NA	NA	NA	NA	NA	NA	NA	NA	NA
2-nitrobiphenyl	NA	NA	NA	NA	NA	NA	NA	NA	NA
4-nitrobiphenyl	NA	NA	NA	NA	NA	NA	NA	NA	NA
Sub Total 2	0	0	0	0	0	43.5	0	0	NA
Total Base/Neutral Compounds Analyzed	923	1534	493	1099.6	504.4	669.6	1267.4	359	1

Table E-3. Summary of Base/Neutral Extractable Compounds in Ground Water, Monsanto Company, W.G. Krummrich Plant, Sauget, Il

Well Number:	GM-5	GM-6A	GM-6A	GM-6A	GM-6B	GM-6B	GM-6B	GM-7	GM-7
Date:	5/84	11/83	5/84	11/84	9/84**	11/84	11/85	11/83	5/84
USEPA Priority Pollutant Base/Neutral Extractable Organic Compounds concentrations are in ug/L									
acenaphthene	<1	<1	<1	<10	<4	<10	<1.9	<1	<1
acenapthylene	<1	<1	<1	<10	<3	<10	<3.5	<1	<1
anthracene	<1	<1	<1	<10	<4	<10	<1.9	<1	<1
benzidine	<1	<1	<1	<10	<60	<10	<44	<1	<1
benzo (a) anthracene	<1	<1	<1	<10	<9	<10	<7.8	<1	<1
benzo (a) pyrene	<1	<1	<1	<10	<12	<10	<2.5	<1	<1
benzo (b) fluoroanthene	<1	<1	<1	<10	<11	<10	<4.8	<1	<1
benzo (ghi) perylene	<1	<1	<1	<10	<14	<10	<4.1	<1	<1
benzo (k) fluoranthene	<1	<1	<1	<10	<11	<10	<3.5	<1	<1
bis (2-chloroethoxy) methane	<1	<1	<1	<10	<4	<10	<5.3	<1	<1
bis (2-chloroethyl) ether	<1	<1	<1	<10	<4	<10	<5.7	<1	<1
bis (2-chloroisopropyl) ether	<1	<1	<1	<10	<3	<10	<5.7	<1	<1
bis (2-ethylhexyl) phthalate	<1	<1	5	<10	12	<10	<10	1	2
4-bromophenyl phenyl ether	<1	<1	<1	<10	<16	<10	<1.9	<1	<1
butyl benzyl phthalate	<1	<1	<1	<10	<13	<10	<10	<1	<1
2-chloronaphthalene	<1	<1	<1	<10	<4	<10	<1.9	<1	<1
4-chlorophenyl phenyl ether	<1	<1	<1	<10	<9	<10	<4.2	<1	<1
chrysene	<1	<1	<1	<10	<9	<10	<2.5	<1	<1
dibenzo (a,h) anthracene	<1	<1	<1	<10	<16	<10	<10	<1	<1
1,2-dichlorobenzene	<1	<1	<1	<10	37	25	31.5	<1	<1
1,3-dichlorobenzene	<1	<1	<1	<10	<6	<10	10	<1	<1
1,4-dichlorobenzene	<1	<1	<1	<10	55	24	161	<1	<1
3,3-dichlorobenzidine	<1	<1	<1	<10	<161	<10	<17	<1	<1
diethyl phthalate	1	<1	1	<10	<4	<10	<10	<1	2
dimethyl phthalate	<1	<1	<1	<10	<4	<10	<10	<1	<1
di-n-butyl phthalate	1	2	2	<10	2	<10	<10	2	3
2,4-dinitrotoluene	<1	<1	<1	<10	<14	<10	<5.7	<1	<1
2,6-dinitrotoluene	<1	<1	<1	<10	<16	<10	<1.9	<1	<1
di-n-octyl phthalate	<1	<1	<1	<10	<6	<10	<10	<1	<1
1,2-diphenylhydrazine	<1	<1	<1	<10	<10	<10	<10	<1	<1
fluoranthene	<1	<1	<1	<10	<5	<10	<2.2	<1	<1
fluorene	<1	<1	<1	<10	<4	<10	<1.9	<1	<1
hexachlorobenzene	<1	<1	<1	<10	<15	<10	<1.9	<1	<1
hexachlorobutadiene	<1	<1	<1	<10	<13	<10	<0.9	<1	<1
hexachlorocyclopentadiene	<1	<1	<1	<10	<12	<10	<10	<1	<1
hexachloroethane	<1	<1	<1	<10	<10	<10	<1.6	<1	<1
indeno (1,2,3-c,d) pyrene	<1	<1	<1	<10	<7	<10	<4.7	<1	<1
isophorone	<1	<1	<1	<10	<2	<10	<2.2	<1	<1
naphthalene	<1	<1	<1	<10	<2	<10	<1.6	<1	<1
nitrobenzene	<1	<1	<1	<10	<5	<10	<1.9	<1	<1
n-nitrosodimethylamine	<1	<1	<1	<10	<10	<10	<10	<1	<1
n-nitrosodi-n-propylamine	<1	<1	<1	<10	<6	<10	<10	<1	<1
n-nitrosodiphenylamine	<1	<1	<1	<10	15	<10	<1.9	<1	<1
phenanthrene	1	<1	<1	<10	<4	<10	<5.4	<1	<1
pyrene	<1	<1	<1	<10	<5	<10	<1.9	<1	<1
1,2,4-trichlorobenzene	<1	<1	<1	<10	<7	<10	<1.9	<1	<1
Sub Total 1	3	2	8	0	121	49	202.5	3	7

Table E-3. Summary of Base/Neutral Extractable Compounds in Ground Water, Monsanto Company, W.G. Krummrich Plant, Sauget, Il

Well Number:	GM-5	GM-6A	GM-6A	GM-6A	GM-6B	GM-6B	GM-6B	GM-7	GM-7
Date:	5/84	11/83	5/84	11/84	9/84**	11/84	11/85	11/83	5/84
Miscellaneous Base/Neutral Extractable Organic Compounds concentrations are in ug/L									
2-nitroaniline	NA	NA	NA	<10	<25-30	<10	<10	NA	NA
4-nitroaniline	NA	NA	NA	<10	<25-30	<10	<10	NA	NA
2-nitrochlorobenzene	NA	NA	NA	<10	<10	<10	<10	NA	NA
4-nitrochlorobenzene	NA	NA	NA	<10	<10	<10	<10	NA	NA
2,4-and 3,4-dinitrochlorobenzene	NA	NA	NA	<10	<10	<10	<10	NA	NA
4-nitrodiphenylamine	NA	NA	NA	<10	<10	<10	<10	NA	NA
triphenyl phosphate	NA	NA	NA	<10	<10	<10	<10	NA	NA
2,3,7,8-tetrachloro-dibenzo-p-dioxin	NA	NA	NA	NA	NA	NA	NA	NA	NA
2-nitrobiphenyl	NA	NA	NA	NA	<10	NA	NA	NA	NA
4-nitrobiphenyl	NA	NA	NA	NA	<10	NA	NA	NA	NA
Sub Total 2	NA	NA	NA	0	0	0	0	NA	NA
Total Base/Neutral Compounds Analyzed	3	2	8	0	121	49	202.5	3	7

Table E-3. Summary of Base/Neutral Extractable Compounds in Ground Water, Monsanto Company, W.G. Krummrich Plant, Sauget, Il

Well Number:	GM-8	GM-8	GM-8	GM-8	GM-8	GM-9A	GM-9A	GM-9B	GM-9B
Date:	11/83	5/84	11/84	2/85	11/85	11/83	5/84	9/84**	5/85
USEPA Priority Pollutant Base/Neutral Extractable Organic Compounds concentrations are in ug/L									
acenaphthene	<1	<1	<10	<1.9	<2.0	<1	<1	<4	<1.9
acenapthylene	<1	<1	<10	<3.5	<3.7	<1	<1	<3	<3.5
anthracene	<1	<1	<10	<1.9	<2.0	<1	<1	<4	<1.9
benzidine	<1	<1	<10	<44	<46	<1	<1	<60	<44
benzo (a) anthracene	<1	<1	<10	<7.8	<8.2	<1	<1	<9	<7.8
benzo (a) pyrene	<1	<1	<10	<2.5	<2.6	<1	<1	<12	<2.5
benzo (b) fluoroanthene	<1	<1	<10	<4.8	<5.1	<1	<1	<11	<4.8
benzo (ghi) perylene	<1	<1	<10	<4.1	<4.3	<1	<1	<14	<4.1
benzo (k) fluoranthene	<1	<1	<10	<2.5	<3.7	<1	<1	<11	<2.5
bis (2-chloroethoxy) methane	<1	<1	<10	<5.3	<5.6	<1	<1	<4	<5.3
bis (2-chloroethyl) ether	<1	<1	<10	<5.7	<6.0	<1	<1	<4	<5.7
bis (2-chloroisopropyl) ether	<1	<1	<10	<5.7	<6.0	<1	<1	<3	<6
bis (2-ethylhexyl) phthalate	1	3	<10	<10	<11	<1	3	89	<10
4-bromophenyl phenyl ether	<1	<1	<10	<1.9	<2	<1	<1	<16	<1.9
butyl benzyl phthalate	<1	<1	<10	<10	<11	<1	14	<13	<10
2-chloronaphthalene	<1	<1	<10	<1.9	<2	<1	<1	<4	<1.9
4-chlorophenyl phenyl ether	<1	<1	<10	<4.2	<4.4	<1	<1	<9	<4.2
chrysene	<1	<1	<10	<2.5	<2.6	<1	<1	<9	<2.5
dibenzo (a,h) anthracene	<1	<1	<10	<2.5	<11	<1	<1	<16	<2.5
1,2-dichlorobenzene	<1	<1	<10	<1.9	<2	33	30	30	<1.9
1,3-dichlorobenzene	<1	<1	<10	<1.9	<2	<1	2	<6	<1.9
1,4-dichlorobenzene	<1	<1	<10	<4.4	<4.6	38	40	<5	0.5
3,3-dichlorobenzidine	<1	<1	<10	<16.5	<17	<1	<1	<161	<16.5
diethyl phthalate	<1	1	<10	<10	<11	<1	<1	<4	<10
dimethyl phthalate	<1	<1	<10	<10	<11	<1	<1	<4	<10
di-n-butyl phthalate	1	3	<10	<10	<11	1	2	4	<10
2,4-dinitrotoluene	<1	<1	<10	<5.7	<6.0	<1	<1	<14	<5.7
2,6-dinitrotoluene	<1	<1	<10	<1.9	<2.0	<1	<1	<16	<1.9
di-n-octyl phthalate	<1	<1	<10	<10	<11	<1	<1	<6	<10
1,2-diphenylhydrazine	<1	<1	<10	<10	<11	<1	<1	<10	<10
fluoranthene	<1	<1	<10	<2.2	<2.3	<1	<1	<5	<2.2
fluorene	<1	<1	<10	<1.9	<2	<1	<1	<4	<1.9
hexachlorobenzene	<1	<1	<10	<1.9	<2	<1	<1	<15	<1.9
hexachlorobutadiene	<1	<1	<10	<0.9	<1	<1	<1	<13	<0.9
hexachlorocyclopentadiene	<1	<1	<10	<10	<11	<1	<1	<12	<10
hexachloroethane	<1	<1	<10	<1.6	<1.7	<1	<1	<10	<1.6
indeno (1,2,3-c,d) pyrene	<1	<1	<10	<3.7	<4.9	<1	<1	<7	<3.7
isophorone	<1	<1	<10	<2.2	<2.3	<1	<1	<2	<2.2
naphthalene	<1	<1	<10	<1.6	<1.7	<1	<1	<2	<1.6
nitrobenzene	8	1	<10	2.2	<2	<1	<1	<5	<1.9
n-nitrosodimethylamine	<1	<1	<10	<10	<11	<1	<1	<10	<10
n-nitrosodi-n-propylamine	<1	<1	<10	<10	<11	<1	<1	<6	<10
n-nitrosodiphenylamine	<1	<1	<10	<1.9	<2	<1	<1	<82	<1.9
phenanthrene	<1	<1	<10	<5.4	<5.7	<1	<1	<4	<5.4
pyrene	<1	<1	<10	<1.9	<2	<1	<1	<5	<1.9
1,2,4-trichlorobenzene	<1	<1	<10	<1.9	<2	<1	<1	<7	<1.9
Sub Total 1	10	8	0	2.2	0	72	91	123	0.5

Table E-3. Summary of Base/Neutral Extractable Compounds in Ground Water, Monsanto Company, W.G. Krummrich Plant, Sauget, Il

Well Number:	GM-8	GM-8	GM-8	GM-8	GM-8	GM-9A	GM-9A	GM-9B	GM-9B
Date:	11/83	5/84	11/84	2/85	11/85	11/83	5/84	9/84**	5/85
Miscellaneous Base/Neutral Extractable Organic Compounds concentrations are in ug/L									
2-nitroaniline	NA	NA	<10	<10	<11	NA	NA	<25-30	<10
4-nitroaniline	NA	NA	<10	<10	<11	NA	NA	<25-30	<10
2-nitrochlorobenzene	NA	NA	<10	<10	<10.5	NA	NA	<10	<10
4-nitrochlorobenzene	NA	NA	<10	<10	<10.5	NA	NA	<10	<10
2,4-and 3,4-dinitrochlorobenzene	NA	NA	<10	<10	<10.5	NA	NA	<10	<10
4-nitrodiphenylamine	NA	NA	<10	<10	<10.5	NA	NA	<10	<10
triphenyl phosphate	NA	NA	<10	<10	<10.5	NA	NA	<10	<10
2,3,7,8-tetrachloro-dibenzo-p-dioxin	NA	NA	NA	NA	NA	NA	NA	NA	NA
2-nitrobiphenyl	NA	NA	<25	<25	<10.5	NA	NA	<10	NA
4-nitrobiphenyl	NA	NA	<25	<25	<10.5	NA	NA	<10	NA
Sub Total 2	NA	NA	0	0	0	NA	NA	0	0
Total Base/Neutral Compounds Analyzed	10	8	0	2.2	0	72	91	123	0.5

Table E-3. Summary of Base/Neutral Extractable Compounds in Ground Water, Monsanto Company, W.G. Krummrich Plant, Sauget, Il

Well Number:	GM-9B	GM-9C	GM-9C	GM-9C	GM-10A	GM-10A	GM-10B	GM-10B	GM-10C
Date:	11/85	9/84**	5/85	11/85	11/83	5/84	2/85	5/85	2/85
USEPA Priority Pollutant Base/Neutral Extractable Organic Compounds concentrations are in ug/L									
acenaphthene	<2.0	<4	2.2	<2.1	<1	<1	<2.1	<1.9	<1.9
acenapthylene	<3.7	<3	<3.5	<3.8	<1	<1	<3.8	<3.5	<3.5
anthracene	<2.0	<4	<1.9	<2.1	<1	<1	<2.1	<1.9	<1.9
benzidine	<46	<60	<44	<48	<1	<1	<48.4	<44	<44
benzo (a) anthracene	<8.2	<9	<7.8	<8.4	<1	<1	<8.6	<7.8	<7.8
benzo (a) pyrene	<2.6	<12	<2.5	<2.7	<1	<1	<2.8	<2.5	<2.5
benzo (b) fluoroanthene	<5.1	<11	<4.8	<5.2	<1	<1	<5.3	<4.8	<4.8
benzo (ghi) perylene	<4.3	<14	<4.1	<4.4	<1	<1	<4.5	<4.1	<4.1
benzo (k) fluoranthene	<3.7	<11	<2.5	<3.8	<1	<1	<2.8	<2.5	<2.5
bis (2-chloroethoxy) methane	<5.6	<4	<5.3	<5.7	<1	<1	<5.8	<5.3	<5.3
bis (2-chloroethyl) ether	<6.0	<4	<5.7	<6.2	<1	<1	<6.3	<5.7	<5.7
bis (2-chloroisopropyl) ether	<6.0	<3	<6.0	<6.2	<1	<1	<6.3	<6.0	<5.7
bis (2-ethylhexyl) phthalate	<11	8	<10	<11	<1	4	<11	<10	<10
4-bromophenyl phenyl ether	<2	<16	<1.9	<2.1	<1	<1	<2.1	<1.9	<1.9
butyl benzyl phthalate	<11	<13	<10	<11	1	<1	<11	<10	<10
2-chloronaphthalene	<2	<4	<1.9	<2.1	<1	<1	<2.1	<1.9	<1.9
4-chlorophenyl phenyl ether	<4.4	<9	<4.2	<4.5	<1	<1	<4.6	<4.2	<4.2
chrysene	<2.6	<9	<2.5	<2.7	<1	<1	<2.8	<2.5	<2.5
dibenzo (a,h) anthracene	<11	<16	<2.5	<11	<1	<1	<2.8	<2.5	<2.5
1,2-dichlorobenzene	<2	<5	5.0	4.4	<1	<1	55.7	13.5	4.9
1,3-dichlorobenzene	<2	64	2.4	<2.1	<1	<1	156	34	4
1,4-dichlorobenzene	<4.6	<5	49.9	50	<1	<1	1,080	188	22.1
3,3-dichlorobenzidine	<17	<161	<16.5	<18	<1	<1	<18.2	<16.5	<16.5
diethyl phthalate	<11	<4	<10	<11	<1	1	<11	<10	<10
dimethyl phthalate	<11	<4	<10	<11	<1	<1	<11	<10	<10
di-n-butyl phthalate	<11	3	<10	<11	1	3	<11	<10	<10
2,4-dinitrotoluene	<6.0	<14	<5.7	<6.2	<1	<1	<6.3	<5.7	<5.7
2,6-dinitrotoluene	<2.0	<16	<1.9	<2.1	<1	<1	<2.1	<1.9	<1.9
di-n-octyl phthalate	<11	<6	<10	<11	<1	<1	<11	<10	<10
1,2-diphenylhydrazine	<11	<10	<10	<11	<1	<1	<11	<10	<10
fluoranthene	<2.3	<5	<2.2	<2.4	<1	<1	<2.4	<2.2	<2.2
fluorene	<2	<4	<1.9	<2.1	<1	<1	<2.1	<1.9	<1.9
hexachlorobenzene	<2	<15	<1.9	<2.1	<1	<1	<2.1	<1.9	<1.9
hexachlorobutadiene	<0.95	<13	<0.9	<0.9	<1	<1	<1	<0.9	<0.9
hexachlorocyclopentadiene	<11	<12	<10	<11	<1	<1	<10	<10	<10
hexachloroethane	<1.7	<10	<1.6	<1.7	<1	<1	<1.8	<1.6	<1.6
indeno (1,2,3-c,d) pyrene	<4.9	<7	<3.7	<5.1	<1	<1	<4.1	<3.7	<3.7
isophorone	<2.3	<2	<2.2	<2.4	<1	<1	<2.4	<2.2	<2.2
naphthalene	<1.7	<2	<1.6	<1.7	<1	<1	<1.8	<1.6	<1.6
nitrobenzene	<2	<5	<1.9	<2	<1	<1	<2.1	<1.9	<1.9
n-nitrosodimethylamine	<11	<10	<10	<11	<1	<1	<11	<10	<10
n-nitrosodi-n-propylamine	<11	<6	<10	<11	<1	<1	<11	<10	<10
n-nitrosodiphenylamine	<2	<82	<2.0	<2.1	<1	<1	3.9	<1.9	<1.9
phenanthrene	<5.7	<4	<5.4	<5.8	<1	<1	<5.9	<5.4	<5.4
pyrene	<2	<5	<1.9	<2.1	<1	<1	<2.1	<1.9	<1.9
1,2,4-trichlorobenzene	<2	<7	<1.9	<2.1	<1	<1	<2.1	<1.9	<1.9
Sub Total 1	0	75	59.5	54.5	2	8	1295.6	235.5	31

Table E-3. Summary of Base/Neutral Extractable Compounds in Ground Water, Monsanto Company, W.G. Krummrich Plant, Sauget, Il

Well Number:	GM-9B	GM-9C	GM-9C	GM-9C	GM-10A	GM-10A	GM-10B	GM-10B	GM-10C
Date:	11/85	9/84**	5/85	11/85	11/83	5/84	2/85	5/85	2/85
Miscellaneous Base/Neutral Extractable Organic Compounds concentrations are in ug/L									
2-nitroaniline	<11	<25-30	<10	<11	NA	NA	<10	<10	<10
4-nitroaniline	<11	<25-30	<10	<11	NA	NA	<10	<10	<10
2-nitrochlorobenzene	<10.5	<10	<10	<10.8	NA	NA	<10	<10	<10
4-nitrochlorobenzene	<10.5	<10	<10	<10.8	NA	NA	<10	<10	<10
2,4-and 3,4-dinitrochlorobenzene	<10.5	<10	<10	<10.8	NA	NA	<10	<10	<10
4-nitrodiphenylamine	<10.5	<10	<10	<10.8	NA	NA	<10	<10	<10
triphenyl phosphate	<10.5	<10	<10	<10.8	NA	NA	<10	<10	<10
2,3,7,8-tetrachloro-dibenzo-p-dioxin	NA	NA	NA	NA	NA	NA	NA	NA	NA
2-nitrobiphenyl	NA	<10	NA	NA	NA	NA	NA	NA	NA
4-nitrobiphenyl	NA	<10	NA	NA	NA	NA	NA	NA	NA
Sub Total 2	0	0	0	0	NA	NA	0	0	0
Total Base/Neutral Compounds Analyzed	0	75	59.5	54.5	2	8	1295.6	235.5	31

Table E-3. Summary of Base/Neutral Extractable Compounds in Ground Water, Monsanto Company, W.G. Krummrich Plant, Sauget, Il

Well Number:	GM-10C	GM-11	GM-11	GM-12A	GM-12A	GM-12A	GM-12A	GM-12A	GM-12A
Date:	5/85	11/83	5/84	11/83	11/83*	5/84	5/84*	11/84	11/84*
USEPA Priority Pollutant Base/Neutral Extractable Organic Compounds concentrations are in ug/L									
acenaphthene	<1.9	<1	<1	<1	<1	<1	<1	<10	<10
acenapthylene	<3.5	<1	<1	<1	<1	<1	<1	<10	<10
anthracene	<1.9	<1	<1	<1	<1	<1	<1	<10	<10
benzidine	<44	<1	<1	<1	<1	<1	<1	<10	<10
benzo (a) anthracene	<7.8	<1	<1	<1	<1	<1	<1	<10	<10
benzo (a) pyrene	<2.5	<1	<1	<1	<1	<1	<1	<10	<10
benzo (b) fluoroanthene	<4.8	<1	<1	<1	<1	<1	<1	<10	<10
benzo (ghi) perylene	<4.1	<1	<1	<1	<1	<1	<1	<10	<10
benzo (k) fluoranthene	<2.5	<1	<1	<1	<1	<1	<1	<10	<10
bis (2-chloroethoxy) methane	<5.3	<1	<1	<1	<1	<1	<1	<10	<10
bis (2-chloroethyl) ether	<5.7	<1	<1	<1	<1	<1	<1	<10	<10
bis (2-chloroisopropyl) ether	<6.0	<1	<1	<1	<1	<1	<1	<10	<10
bis (2-ethylhexyl) phthalate	<10	<1	<1	<1	<1	211	2	<10	<10
4-bromophenyl phenyl ether	<1.9	<1	<1	<1	<1	<1	<1	<10	<10
butyl benzyl phthalate	<10	<1	3	<1	<1	<1	<1	<10	<10
2-chloronaphthalene	<1.9	<1	<1	<1	<1	<1	<1	<10	<10
4-chlorophenyl phenyl ether	<4.2	<1	<1	<1	<1	<1	<1	<10	<10
chrysene	<2.5	<1	<1	<1	<1	<1	<1	<10	<10
dibenzo (a,h) anthracene	<2.5	<1	<1	<1	<1	<1	<1	<10	<10
1,2-dichlorobenzene	4.3	<1	<1	366	357	344	364	539	473
1,3-dichlorobenzene	3	<1	<1	<1	<1	<1	<1	<10	<10
1,4-dichlorobenzene	15.3	<1	<1	<1	<1	<1	1	<10	<10
3,3-dichlorobenzidine	<16.5	<1	<1	<1	<1	<1	<1	<10	<10
diethyl phthalate	<10	<1	1	<1	<1	2	2	<10	<10
dimethyl phthalate	<10	<1	<1	<1	<1	<1	<1	<10	<10
di-n-butyl phthalate	<10	1	2	2	1	3	3	<10	<10
2,4-dinitrotoluene	<5.7	<1	<1	<1	<1	<1	<1	<10	<10
2,6-dinitrotoluene	<1.9	<1	<1	<1	<1	<1	<1	<10	<10
di-n-octyl phthalate	<10	<1	<1	<1	<1	<1	<1	<10	<10
1,2-diphenylhydrazine	<10	<1	<1	<1	<1	<1	<1	<10	<10
fluoranthene	<2.2	<1	<1	<1	<1	<1	<1	<10	<10
fluorene	<1.9	<1	<1	<1	<1	<1	<1	<10	<10
hexachlorobenzene	<1.9	<1	<1	<1	<1	<1	<1	<10	<10
hexachlorobutadiene	<0.9	<1	<1	<1	<1	<1	<1	<10	<10
hexachlorocyclopentadiene	<10	<1	<1	<1	<1	<1	<1	<10	<10
hexachloroethane	<1.6	<1	<1	<1	<1	<1	<1	<10	<10
indeno (1,2,3-c,d) pyrene	<3.7	<1	<1	<1	<1	<1	<1	<10	<10
isophorone	<2.2	<1	<1	<1	<1	<1	<1	<10	<10
naphthalene	<1.6	<1	<1	<1	<1	4	4	<10	<10
nitrobenzene	<1.9	<1	<1	<1	<1	<1	<1	<10	<10
n-nitrosodimethylamine	<10	<1	<1	<1	<1	<1	<1	<10	<10
n-nitrosodi-n-propylamine	<10	<1	<1	<1	<1	<1	<1	<10	<10
n-nitrosodiphenylamine	<1.9	<1	<1	<1	<1	<1	<1	<10	<10
phenanthrene	<5.4	<1	<1	<1	<1	<1	<1	<10	<10
pyrene	<1.9	<1	<1	<1	<1	<1	<1	<10	<10
1,2,4-trichlorobenzene	<1.9	<1	<1	<1	<1	<1	<1	<10	<10
Sub Total 1	22.6	1	6	368	358	564	376	539	473

Table E-3. Summary of Base/Neutral Extractable Compounds in Ground Water, Monsanto Company, W.G. Krummrich Plant, Sauget, Il

Well Number:	GM-10C	GM-11	GM-11	GM-12A	GM-12A	GM-12A	GM-12A	GM-12A	GM-12A
Date:	5/85	11/83	5/84	11/83	11/83*	5/84	5/84*	11/84	11/84*
Miscellaneous Base/Neutral Extractable Organic Compounds concentrations are in ug/L									
2-nitroaniline	<10	NA	NA	NA	NA	NA	NA	<10	<10
4-nitroaniline	<10	NA	NA	NA	NA	NA	NA	<10	<10
2-nitrochlorobenzene	<10	NA	NA	NA	NA	NA	NA	<10	<10
4-nitrochlorobenzene	<10	NA	NA	NA	NA	NA	NA	<10	<10
2,4-and 3,4-dinitrochlorobenzene	<10	NA	NA	NA	NA	NA	NA	<10	<10
4-nitrodiphenylamine	<10	NA	NA	NA	NA	NA	NA	<10	<10
triphenyl phosphate	<10	NA	NA	NA	NA	NA	NA	<10	<10
2,3,7,8-tetrachloro-dibenzo-p-dioxin	NA	NA	NA	NA	NA	NA	NA	NA	NA
2-nitrobiphenyl	NA	NA	NA	NA	NA	NA	NA	NA	NA
4-nitrobiphenyl	NA	NA	NA	NA	NA	NA	NA	NA	NA
Sub Total 2	0	NA	NA	NA	NA	NA	NA	0	0
Total Base/Neutral Compounds Analyzed	22.6	1	6	368	358	564	376	539	473

Table E-3. Summary of Base/Neutral Extractable Compounds in Ground Water, Monsanto Company, W.G. Krummrich Plant, Sauget, Il

Well Number:	GM-12A	GM-12A	GM-12A	GM-12A	GM-12A	GM-12A	GM-12A	GM-12A	GM-12B
Date:	2/85	2/85*	5/85	5/85*	11/85	11/85*	2/86	2/86*	9/84**
USEPA Priority Pollutant Base/Neutral Extractable Organic Compounds concentrations are in ug/L									
acenaphthene	<1.9	<1.9	<1.9	<1.9	<2.0	<2.0	<2.0	<1.9	<4
acenapthylene	<3.5	<3.5	<3.5	<3.5	<3.7	<3.7	<3.7	<3.5	<3
anthracene	<1.9	<1.9	<1.9	<1.9	<2.0	<2.0	<2.0	<1.9	<4
benzidine	<44	<44	<44	<44	<46	<46	<47	<44	<60
benzo (a) anthracene	<7.8	<7.8	<7.8	<7.8	<8.2	<8.2	<8.3	<7.9	<9
benzo (a) pyrene	<2.5	<2.5	<2.5	<2.5	<2.6	<2.6	<2.7	<2.5	<12
benzo (b) fluoroanthene	<4.8	<4.8	<4.8	<4.8	<5.1	<5.1	<5.1	<4.8	<11
benzo (ghi) perylene	<4.1	<4.1	<4.1	<4.1	<4.3	<4.3	<4.4	<4.1	<14
benzo (k) fluoranthene	<2.5	<2.5	<2.5	<2.5	<3.7	<3.7	<3.7	<3.5	<11
bis (2-chloroethoxy) methane	<5.3	<5.3	<5.3	<5.3	<5.6	<5.6	<5.6	<5.4	<4
bis (2-chloroethyl) ether	<5.7	<5.7	<5.7	<5.7	<6.0	<6.0	<6.1	<5.8	<4
bis (2-chloroisopropyl) ether	<5.7	<5.7	<5.7	<5.7	<6.0	<6.0	<6.1	<5.8	<3
bis (2-ethylhexyl) phthalate	<10	434	<10	13.8	<11	<11	<11	<10	<10
4-bromophenyl phenyl ether	<1.9	<1.9	<1.9	<1.9	<2	<2	<2	<1.9	<16
butyl benzyl phthalate	<10	<10	<10	<10	<11	<11	<11	<10	<13
2-chloronaphthalene	<1.9	<1.9	<1.9	<1.9	<2	<2	<2	<1.9	<4
4-chlorophenyl phenyl ether	<4.2	<4.2	<4.2	<4.2	<4.4	<4.4	<4.5	<4.2	<9
chrysene	<2.5	<2.5	<2.5	<2.5	<2.6	<2.6	<2.7	<2.5	<9
dibenzo (a,h) anthracene	<2.5	<2.5	<2.5	<2.5	<11	<11	<11	<10	<16
1,2-dichlorobenzene	295	213	164.4	201	235	250	248	255	3
1,3-dichlorobenzene	<1.9	<1.9	<1.9	<1.9	<2	<2	<2	<1.9	<6
1,4-dichlorobenzene	<4.4	<4.4	<4.4	<4.4	<4.6	<4.6	<4.7	<4.4	<5
3,3-dichlorobenzidine	<16.5	<16.5	<16.5	<16.5	<17	<17	<18	<17	<161
diethyl phthalate	<10	<10	<10	<10	<11	<11	<11	<10	2
dimethyl phthalate	<10	<10	<10	<10	<11	<11	<11	<10	<4
di-n-butyl phthalate	<10	<10	<10	<10	<11	<11	<11	<10	<3
2,4-dinitrotoluene	<5.7	<5.7	<5.7	<5.7	<6.0	<6.0	<6.1	<5.8	<14
2,6-dinitrotoluene	<1.9	<1.9	<1.9	<1.9	<2.0	<2.0	<2.0	<1.9	<16
di-n-octyl phthalate	<10	<10	<10	<10	<11	<11	<11	<10	<6
1,2-diphenylhydrazine	<10	<10	<10	<10	<11	<11	<11	<10	<10
fluoranthene	<2.2	<2.2	<2.2	<2.2	<2.3	<2.3	<2.3	<2.2	<5
fluorene	<1.9	<1.9	<1.9	<1.9	<2.0	<2.0	<2.0	<1.9	<4
hexachlorobenzene	<1.9	<1.9	<1.9	<1.9	<2.0	<2.0	<2.0	<1.9	<15
hexachlorobutadiene	<0.9	<0.9	<0.9	<0.9	<0.95	<0.95	<1	<0.9	<13
hexachlorocyclopentadiene	<10	<10	<10	<10	<11	<11	<11	<10	<12
hexachloroethane	<1.6	<1.6	<1.6	<1.6	<1.7	<1.7	<1.7	<1.6	<10
indeno (1,2,3-c,d) pyrene	<3.7	<3.7	<3.7	<3.7	<4.9	<4.9	<5	<4.7	<7
isophorone	<2.2	<2.2	<2.2	<2.2	<2.3	<2.3	<2.3	<2.2	<2
naphthalene	1.8	1.9	1.8	2.3	<1.7	<1.7	<1.7	<1.6	<2
nitrobenzene	<1.9	<1.9	<1.9	<1.9	<2.0	<2.0	<2.0	<1.9	<5
n-nitrosodimethylamine	<10	<10	<10	<10	<11	<11	<11	<10	<10
n-nitrosodi-n-propylamine	<10	<10	<10	<10	<11	<11	<11	<10	<6
n-nitrosodiphenylamine	<1.9	<1.9	<1.9	<1.9	<2.0	<2.0	<2.0	<1.9	<82
phenanthrene	<5.4	<5.4	<5.4	<5.4	<5.7	<5.7	<5.7	<5.5	<4
pyrene	<1.9	<1.9	<1.9	<1.9	<2.0	<2.0	<2.0	<1.9	<5
1,2,4-trichlorobenzene	<1.9	<1.9	<1.9	<1.9	<2.0	<2.0	<2.0	<1.9	2
Sub Total 1	296.8	648.9	166.2	217.1	235	250	248	255	7

Table E-3. Summary of Base/Neutral Extractable Compounds in Ground Water, Monsanto Company, W.G. Krummrich Plant, Sauget, Il

Well Number:	GM-12A	GM-12A	GM-12A	GM-12A	GM-12A	GM-12A	GM-12A	GM-12A	GM-12B
Date:	2/85	2/85*	5/85	5/85*	11/85	11/85*	2/86	2/86*	9/84**
Miscellaneous Base/Neutral Extractable Organic Compounds concentrations are in ug/L									
2-nitroaniline	<10	<10	<10	<10	<11	<11	<11	<10	<25-30
4-nitroaniline	<10	<10	<10	<10	<11	<11	<11	<10	<25-30
2-nitrochlorobenzene	<10	<10	<10	<10	<10.5	<10.5	<11	<10	<10
4-nitrochlorobenzene	<10	<10	<10	<10	<10.5	<10.5	<11	<10	<10
2,4-and 3,4-dinitrochlorobenzene	<10	<10	<10	<10	<10.5	<10.5	<11	<10	<10
4-nitrodiphenylamine	<10	<10	<10	<10	<10.5	<10.5	<11	<10	<10
triphenyl phosphate	<10	<10	<10	<10	<10.5	<10.5	<11	<10	<10
2,3,7,8-tetrachloro-dibenzo-p-dioxin	NA	NA	NA	NA	NA	NA	NA	NA	NA
2-nitrobiphenyl	NA	NA	NA	NA	NA	NA	NA	NA	<10
4-nitrobiphenyl	NA	NA	NA	NA	NA	NA	NA	NA	<10
Sub Total 2	0	0	0	0	0	0	0	0	0
Total Base/Neutral Compounds Analyzed	296.8	648.9	166.2	217.1	235	250	248	255	7

Table E-3. Summary of Base/Neutral Extractable Compounds in Ground Water, Monsanto Company, W.G. Krummrich Plant, Sauget, Il

Well Number:	GM-12B	GM-12B	GM-12C	GM-12C	GM-12C	GM-12C	GM-13	GM-13	GM-13
Date:	11/84	11/85	2/85	2/85*	5/85	5/85*	9/84**	11/85	2/86
USEPA Priority Pollutant Base/Neutral Extractable Organic Compounds concentrations are in ug/L									
acenaphthene	<10	<2.0	<1.9	<1.9	<1.9	<1.9	<4	<42	<100
acenapthylene	<10	<3.7	<3.5	<3.5	<3.5	<3.5	<3	<77	<180
anthracene	<10	<2.0	<1.9	<1.9	<1.9	<1.9	<4	<42	<100
benzidine	<10	<46	<44	<44	<44	<44	<60	<970	<2300
benzo (a) anthracene	<10	<8.2	<7.8	<7.8	<7.8	<7.8	<9	<170	<410
benzo (a) pyrene	<10	<2.6	<2.5	<2.5	<2.5	<2.5	<12	<55	<130
benzo (b) fluoroanthene	<10	<5.1	<4.8	<4.8	<4.8	<4.8	<11	<110	<250
benzo (ghi) perylene	<10	<4.3	<4.1	<4.1	<4.1	<4.1	<14	<90	<220
benzo (k) fluoranthene	<10	<3.7	<2.5	<2.5	<2.5	<2.5	<11	<77	<180
bis (2-chloroethoxy) methane	<10	<5.6	<5.3	<5.3	<5.3	<5.3	<4	<120	<280
bis (2-chloroethyl) ether	<10	<6.0	<5.7	<5.7	<5.7	<5.7	<4	<130	<300
bis (2-chloroisopropyl) ether	<10	<6.0	<5.7	<5.7	<5.7	<5.7	<3	<130	<300
bis (2-ethylhexyl) phthalate	10	<11	<10	<10	<10	<10	<10	<220	<530
4-bromophenyl phenyl ether	<10	<2	<1.9	<1.9	<1.9	<1.9	<16	<42	<100
butyl benzyl phthalate	<10	<11	<10	<10	<10	<10	<13	<220	<530
2-chloronaphthalene	<10	<2	<1.9	<1.9	<1.9	<1.9	<4	<42	<100
4-chlorophenyl phenyl ether	<10	<4.4	<4.2	<4.2	<4.2	<4.2	<9	<92	<220
chrysene	<10	<2.6	<2.5	<2.5	<2.5	<2.5	<9	<55	<130
dibenzo (a,h) anthracene	<10	<11	<2.5	<2.5	<2.5	<2.5	<16	<220	<530
1,2-dichlorobenzene	<10	74.2	124	97.4	54	49.7	347	3,630	4,020
1,3-dichlorobenzene	<10	27.8	<2	<1.9	<1.9	<1.9	<6	97.3	126
1,4-dichlorobenzene	<10	27.1	<4	<4.4	<4.4	<4.4	31	1,310	2,260
3,3-dichlorobenzidine	<10	<17	<16.5	<16.5	<16.5	<16.5	<161	<360	<870
diethyl phthalate	<10	<11	<10	<10	<10	<10	<4	<220	<530
dimethyl phthalate	<10	<11	<10	<10	<10	<10	<4	<220	<530
di-n-butyl phthalate	<10	<11	<10	<10	<10	<10	<3	<220	<530
2,4-dinitrotoluene	<10	<6.0	<5.7	<5.7	<5.7	<5.7	<14	<130	<300
2,6-dinitrotoluene	<10	<2.0	<1.9	<1.9	<1.9	<1.9	<16	<42	<100
di-n-octyl phthalate	<10	<11	<10	<10	<10	<10	<6	<220	<530
1,2-diphenylhydrazine	<10	<11	<10	<10	<10	<10	<10	<220	<530
fluoranthene	<10	<2.3	<2.2	<2.2	<2.2	<2.2	<5	<48	<120
fluorene	<10	<2.0	<1.9	<1.9	<1.9	<1.9	<4	<42	<100
hexachlorobenzene	<10	<2.0	<1.9	<1.9	<1.9	<1.9	<15	<42	<100
hexachlorobutadiene	<10	<1	<0.9	<0.9	<0.9	<0.9	<13	<20	<47
hexachlorocyclopentadiene	<10	<11	<10	<10	<10	<10	<12	<220	<530
hexachloroethane	<10	<1.7	<1.6	<1.6	<1.6	<1.6	<10	<35	<84
indeno (1,2,3-c,d) pyrene	<10	<4.9	<3.7	<3.7	<3.7	<3.7	11	<100	<250
isophorone	<10	<2.3	<2.2	<2.2	<2.2	<2.2	<2	<48	<120
naphthalene	<10	<1.7	4.1	3.1	<1.6	1.8	<2	<35	<84
nitrobenzene	<10	<2.0	<1.9	<1.9	<1.9	<1.9	<5	<42	<100
n-nitrosodimethylamine	<10	<11	<10	<10	<10	<10	<10	<220	<530
n-nitrosodi-n-propylamine	<10	<11	<10	<10	<10	<10	<6	<220	<530
n-nitrosodiphenylamine	<10	<2.0	<1.9	<1.9	<1.9	<1.9	18	<42	<100
phenanthrene	<10	<5.7	<5.4	<5.4	<5.4	<5.4	<4	<120	<280
pyrene	<10	<2.0	<1.9	<1.9	<1.9	<1.9	<5	<42	<100
1,2,4-trichlorobenzene	<10	<2.0	<1.9	<1.9	<1.9	<1.9	18	<42	<100
Sub Total 1	10	129.1	128.1	100.5	54	51.5	425	5037.3	6406

Table E-3. Summary of Base/Neutral Extractable Compounds in Ground Water, Monsanto Company, W.G. Krummrich Plant, Sauget, Il

Well Number:	GM-12B	GM-12B	GM-12C	GM-12C	GM-12C	GM-12C	GM-13	GM-13	GM-13
Date:	11/84	11/85	2/85	2/85*	5/85	5/85*	9/84**	11/85	2/86
Miscellaneous Base/Neutral Extractable Organic Compounds concentrations are in ug/L									
2-nitroaniline	<10	21.5	<10	<10	<10	<10	<25-30	771	<530
4-nitroaniline	<10	<11	<10	<10	<10	<10	<25-30	346	<530
2-nitrochlorobenzene	<10	<10.5	<10	<10	<10	<10	<10	<220	<530
4-nitrochlorobenzene	<10	23.7	<10	<10	<10	<10	<10	1,290	<530
2,4-and 3,4-dinitrochlorobenzene	<10	<10.5	<10	<10	<10	<10	<10	<220	<530
4-nitrodiphenylamine	<10	<10.5	<10	<10	<10	<10	<10	<220	<530
triphenyl phosphate	<10	<10.5	<10	<10	<10	<10	<10	<220	<530
2,3,7,8-tetrachloro-dibenzo-p-dioxin	NA	NA	NA	NA	NA	NA	NA	NA	NA
2-nitrobiphenyl	NA	NA	NA	NA	NA	NA	<10	NA	NA
4-nitrobiphenyl	NA	NA	NA	NA	NA	NA	<10	NA	NA
Sub Total 2	0	45.2	0	0	0	0	0	2407	0
Total Base/Neutral Compounds Analyzed	10	174.3	128.1	100.5	54	51.5	425	7444.3	6406

Table E-3. Summary of Base/Neutral Extractable Compounds in Ground Water, Monsanto Company, W.G. Krummrich Plant, Sauget, Il

Well Number:	GM-14	GM-15	GM-16A	GM-16A	GM-16A	GM-16B	GM-16B	GM-16B	GM-17A
Date:	9/84**	9/84**	9/84**	5/85	11/85	9/84**	5/85	11/85	9/84
USEPA Priority Pollutant Base/Neutral Extractable Organic Compounds concentrations are in ug/L									
acenaphthene	NA	<4	<4	<1.9	<1.9	<4	1.9	<2.0	<4
acenapthylene	NA	<3	<3	<3.5	<3.6	<3	<3.5	<3.8	<3
anthracene	NA	<4	<4	<1.9	<1.9	<4	<1.9	<2.0	<4
benzidine	NA	<60	<60	<44	<45	<60	<44	<47	<60
benzo (a) anthracene	NA	<9	<9	<7.8	<8.0	<9	<7.8	<8.4	<9
benzo (a) pyrene	NA	<12	<12	<2.5	<2.6	<12	<2.5	<2.7	<12
benzo (b) fluoroanthene	NA	<11	<11	<4.8	<4.9	<11	<4.8	<5.2	<11
benzo (ghi) perylene	NA	<14	<14	<4.1	<4.2	<14	<4.1	<4.4	<14
benzo (k) fluoranthene	NA	<11	<11	<2.5	<3.6	<11	<2.5	<3.8	<11
bis (2-chloroethoxy) methane	NA	<4	<4	<5.3	<5.4	<4	<5.3	<5.7	<4
bis (2-chloroethyl) ether	NA	<4	<4	<5.7	<5.8	<4	<5.7	<6.1	<4
bis (2-chloroisopropyl) ether	NA	<3	<3	<6.0	<5.8	<3	<5.7	<6.1	<3
bis (2-ethylhexyl) phthalate	NA	<10	6	<10	<10	8	<10	24.7	2
4-bromophenyl phenyl ether	NA	<16	<16	<1.9	<1.9	<16	<1.9	<2	<16
butyl benzyl phthalate	NA	<13	<13	<10	<10	<13	<10	<11	<13
2-chloronaphthalene	NA	<4	<4	<1.9	<1.9	<4	<1.9	<2	<4
4-chlorophenyl phenyl ether	NA	<9	<9	<4.2	<4.3	<9	<4.2	<4.5	<9
chrysene	NA	<9	<9	<2.5	<2.6	<9	<2.5	<2.7	<9
dibenzo (a,h) anthracene	NA	<16	<16	<2.5	<10	<16	<2.5	<11	<16
1,2-dichlorobenzene	NA	185	<5	<1.9	<1.9	<5	<1.9	<2	<5
1,3-dichlorobenzene	NA	35	<6	<1.9	<1.9	<6	<1.9	<2	<6
1,4-dichlorobenzene	NA	<5	<5	<4.4	<4.5	<5	<4.4	<4.7	6
3,3-dichlorobenzidine	NA	<161	<161	<16.5	<17	<161	<16.5	<18	<161
diethyl phthalate	NA	1	<4	<10	<10	<4	<10	<11	<4
dimethyl phthalate	NA	<4	<4	<10	<10	<4	<10	<11	<4
di-n-butyl phthalate	NA	3	3	<10	<10	2	<10	<11	5
2,4-dinitrotoluene	NA	<14	<14	<5.7	<5.8	<14	<5.7	<6.1	<14
2,6-dinitrotoluene	NA	<16	<16	<1.9	<1.9	<16	<1.9	<2.0	<16
di-n-octyl phthalate	NA	<6	<6	<10	<10	<6	<10	<11	<6
1,2-diphenylhydrazine	NA	<10	<10	<10	<10	<10	<10	<11	<10
fluoranthene	NA	<5	<5	<2.2	<2.2	<5	<2.2	<2.4	<5
fluorene	NA	<4	<4	<1.9	<1.9	<4	<1.9	<2.0	<4
hexachlorobenzene	NA	<15	<15	<1.9	<1.9	<15	<1.9	<2.0	<15
hexachlorobutadiene	NA	<13	<13	<0.9	<0.9	<13	<0.9	<0.97	<13
hexachlorocyclopentadiene	NA	<12	<12	<10	<10	<12	<10	<11	<12
hexachloroethane	NA	<10	<10	<1.6	<1.6	<10	<1.6	<1.7	<10
indeno (1,2,3-c,d) pyrene	NA	<7	<7	<3.7	<4.8	<7	<3.7	<5.1	<7
isophorone	NA	<2	<2	<2.2	<2.2	<2	<2.2	<2.4	<2
naphthalene	NA	<2	<2	<1.6	<1.6	<2	<1.6	<1.7	<2
nitrobenzene	NA	8	<5	<1.9	<1.9	<5	<1.9	<2.0	<5
n-nitrosodimethylamine	NA	<10	<10	<10	<10	<10	<10	<11	<10
n-nitrosodi-n-propylamine	NA	<6	<6	<10	<10	<6	<10	<11	<6
n-nitrosodiphenylamine	NA	<82	<82	<1.9	<1.9	<82	<1.9	<2.0	<82
phenanthrene	NA	<4	<4	<5.4	<5.5	<4	<5.4	<5.8	<4
pyrene	NA	<5	<5	<1.9	<1.9	<5	<1.9	<2.0	<5
1,2,4-trichlorobenzene	NA	12	<7	<1.9	<1.9	<7	<1.9	<2.0	<7
Sub Total 1	NA	244	9	0	0	10	1.9	24.7	13

Table E-3. Summary of Base/Neutral Extractable Compounds in Ground Water, Monsanto Company, W.G. Krummrich Plant, Sauget, Il

Well Number:	GM-14	GM-15	GM-16A	GM-16A	GM-16A	GM-16B	GM-16B	GM-16B	GM-17A
Date:	9/84**	9/84**	9/84**	5/85	11/85	9/84**	5/85	11/85	9/84
Miscellaneous Base/Neutral Extractable Organic Compounds concentrations are in ug/L									
2-nitroaniline	NA	<25-30	<25-30	<10	<10	<25-30	<10	<11	<25-30
4-nitroaniline	NA	<25-30	<25-30	<10	<10	<25-30	<10	<11	<25-30
2-nitrochlorobenzene	NA	<10	<10	<10	<10.2	<10	<10	<10.8	<10
4-nitrochlorobenzene	NA	<10	<10	<10	<10.2	<10	<10	<10.8	<10
2,4-and 3,4-dinitrochlorobenzene	NA	<10	<10	<10	<10.2	<10	<10	<10.8	<10
4-nitrodiphenylamine	NA	<10	<10	<10	<10.2	<10	<10	<10.8	<10
triphenyl phosphate	NA	<10	<10	<10	<10.2	<10	<10	<10.8	<10
2,3,7,8-tetrachloro-dibenzo-p-dioxin	NA	NA	<0.00034	NA	NA	NA	NA	NA	NA
2-nitrobiphenyl	NA	<10	<10	NA	NA	<10	NA	NA	<10
4-nitrobiphenyl	NA	<10	<10	NA	NA	<10	NA	NA	<10
Sub Total 2	NA	0	0	0	0	0	0	0	0
Total Base/Neutral Compounds Analyzed	NA	244	9	0	0	10	1.9	24.7	13

Table E-3. Summary of Base/Neutral Extractable Compounds in Ground Water, Monsanto Company, W.G. Krummrich Plant, Sauget, Il

Well Number:	GM-17A	GM-17A	GM-17B	GM-17B	GM-17B	GM-17C	GM-17C	GM-17C	GM-18A
Date:	11/84	11/85	9/84**	11/84	11/85	9/84**	11/84	11/85	9/84**
USEPA Priority Pollutant Base/Neutral Extractable Organic Compounds concentrations are in ug/L									
acenaphthene	<10	<1.9	<4	<10	<3.8	1	<10	<1.9	<4
acenapthylene	<10	<3.5	<3	<10	<7.0	<3	<10	<3.5	<3
anthracene	<10	<1.9	<4	<10	<3.8	<4	<10	<1.9	<4
benzidine	<10	<44	<60	<10	<88	<60	<10	<44	<60
benzo (a) anthracene	<10	<7.8	<9	<10	<16	<9	<10	<7.9	<9
benzo (a) pyrene	<10	<2.5	<12	<10	<5	<12	<10	<2.5	<12
benzo (b) fluoroanthene	<10	<4.8	<11	<10	<9.6	<11	<10	<4.8	<11
benzo (ghi) perylene	<10	<4.1	<14	<10	<8.2	<14	<10	<4.1	<14
benzo (k) fluoranthene	<10	<3.5	<11	<10	<7	<11	<10	<3.5	<11
bis (2-chloroethoxy) methane	<10	<5.3	<4	<10	<11	<4	<10	<5.4	<4
bis (2-chloroethyl) ether	<10	<5.7	<4	<10	<11	<4	<10	<5.8	<4
bis (2-chloroisopropyl) ether	<10	<5.7	<3	<10	<11	<3	<10	<5.8	<3
bis (2-ethylhexyl) phthalate	<10	<10	<10	<10	<20	10	<10	<10	4
4-bromophenyl phenyl ether	<10	<1.9	<16	<10	<3.8	<16	<10	<1.9	<16
butyl benzyl phthalate	<10	<10	<13	<10	<20	<13	<10	<10	<13
2-chloronaphthalene	<10	<1.9	<4	<10	<3.8	<4	<10	<1.9	<4
4-chlorophenyl phenyl ether	<10	<4.2	<9	<10	<8.4	<9	<10	<4.2	<9
chrysene	<10	<2.5	<9	<10	<5.0	<9	<10	<2.5	<9
dibenzo (a,h) anthracene	<10	<10	<16	<10	<20	<16	<10	<10	<16
1,2-dichlorobenzene	<10	<1.9	<5	<10	4.57	113	147	286	<5
1,3-dichlorobenzene	<10	<1.9	5	<10	<3.8	776	57	126	<6
1,4-dichlorobenzene	<10	<4.4	47	70	64	<5	1,560	945	<5
3,3-dichlorobenzidine	<10	<17	<161	<10	<33	<161	<10	<17	<161
diethyl phthalate	<10	<10	<4	<10	<20	<4	<10	<10	<4
dimethyl phthalate	<10	<10	<4	<10	<20	<4	<10	<10	<4
di-n-butyl phthalate	<10	<10	<3	<10	<20	5	<10	<10	5
2,4-dinitrotoluene	<10	<5.7	<14	<10	<11	<14	<10	<5.8	<14
2,6-dinitrotoluene	<10	<1.9	<16	<10	<3.8	<16	<10	<1.9	<16
di-n-octyl phthalate	<10	<10	<6	<10	<20	<6	<10	<10	<6
1,2-diphenylhydrazine	<10	<10	<10	<10	<20	<10	<10	<10	<10
fluoranthene	<10	<2.2	<5	<10	<4.4	<5	<10	<2.2	<5
fluorene	<10	<1.9	<4	<10	<3.8	<4	<10	<1.9	<4
hexachlorobenzene	<10	<1.9	<15	<10	<3.8	<15	<10	<1.9	<15
hexachlorobutadiene	<10	<0.9	<13	<10	<1.8	<13	<10	<0.9	<13
hexachlorocyclopentadiene	<10	<10	<12	<10	<20	<12	<10	<10	<12
hexachloroethane	<10	<1.6	<10	<10	<3.2	<10	<10	<1.6	<10
indeno (1,2,3-c,d) pyrene	<10	<4.7	<7	<10	<9.4	<7	<10	<4.7	<7
isophorone	<10	<2.2	<2	<10	<4.4	<2	<10	<2.2	<2
naphthalene	<10	<1.6	<2	<10	<3.2	<2	<10	<1.6	<2
nitrobenzene	<10	<1.9	<5	<10	<3.8	<5	<10	<1.9	<5
n-nitrosodimethylamine	<10	<10	<10	<10	<20	<10	<10	<10	<10
n-nitrosodi-n-propylamine	<10	<10	<6	<10	<20	<6	<10	<10	<6
n-nitrosodiphenylamine	<10	<1.9	<82	<10	<3.8	<82	<10	<1.9	<82
phenanthrene	<10	<5.4	<4	<10	<11	<4	<10	<5.5	<4
pyrene	<10	<1.9	<5	<10	<3.8	<5	<10	<1.9	<5
1,2,4-trichlorobenzene	<10	<1.9	<7	<10	<3.8	10	<10	<1.9	<7
Sub Total 1	0	0	52	70	68.57	915	1764	1357	9

Table E-3. Summary of Base/Neutral Extractable Compounds in Ground Water, Monsanto Company, W.G. Krummrich Plant, Sauget, Il

Well Number:	GM-17A	GM-17A	GM-17B	GM-17B	GM-17B	GM-17C	GM-17C	GM-17C	GM-18A
Date:	11/84	11/85	9/84**	11/84	11/85	9/84**	11/84	11/85	9/84**
Miscellaneous Base/Neutral Extractable Organic Compounds concentrations are in ug/L									
2-nitroaniline	<10	<10	<25-30	<10	<20	<25-30	<10	<10	<25-30
4-nitroaniline	<10	<10	<25-30	<10	<20	<25-30	<10	<10	<25-30
2-nitrochlorobenzene	<10	<10	<10	<10	<20	<10	<10	<10	<10
4-nitrochlorobenzene	<10	<10	<10	<10	<20	<10	<10	<10	<10
2,4-and 3,4-dinitrochlorobenzene	<10	<10	<10	<10	<20	<10	<10	<10	<10
4-nitrodiphenylamine	<10	<10	<10	<10	<20	<10	<10	<10	<10
triphenyl phosphate	<10	<10	<10	<10	<20	<10	<10	<10	<10
2,3,7,8-tetrachloro-dibenzo-p-dioxin	NA	NA	NA	NA	NA	NA	NA	NA	NA
2-nitrobiphenyl	NA	NA	<10	NA	NA	<10	NA	NA	<10
4-nitrobiphenyl	NA	NA	<10	NA	NA	<10	NA	NA	<10
Sub Total 2	0	0	0	0	0	0	0	0	0
Total Base/Neutral Compounds Analyzed	0	0	52	70	68.57	915	1764	1357	9

Table E-3. Summary of Base/Neutral Extractable Compounds in Ground Water, Monsanto Company, W.G. Krummrich Plant, Sauget, Il

Well Number:	GM-18A	GM-18A	GM-18B	GM-18B	GM-18B	GM-25A	GM-25A	GM-25B	GM-25B
Date:	5/85	11/85	9/84**	5/85	11/85	9/84	11/84	9/84	11/84
USEPA Priority Pollutant Base/Neutral Extractable Organic Compounds concentrations are in ug/L									
acenaphthene	<1.9	<2.0	<4	<1.9	<2.1	<4	<10	<4	<10
acenapthylene	<3.5	<3.7	<3	<3.5	<3.8	<3	<10	<3	<10
anthracene	<1.9	<2.0	<4	<1.9	<2.1	<4	<10	<4	<10
benzidine	<44	<46	<60	<44	<48	<60	<10	<60	<10
benzo (a) anthracene	<7.8	<8.2	<9	<7.8	<8.5	<9	<10	<9	<10
benzo (a) pyrene	<2.5	<2.6	<12	<2.5	<2.7	<12	<10	<12	<10
benzo (b) fluoroanthene	<4.8	<5.1	<11	<4.8	<5.2	<11	<10	<11	<10
benzo (ghi) perylene	<4.1	<4.3	<14	<4.1	<4.5	<14	<10	<14	<10
benzo (k) fluoranthene	<2.5	<3.7	<11	<2.5	<3.8	<11	<10	<11	<10
bis (2-chloroethoxy) methane	<5.3	<5.6	<4	<5.3	<5.8	<4	<10	<4	<10
bis (2-chloroethyl) ether	<5.7	<6.0	<4	<5.7	<6.2	<4	<10	<4	<10
bis (2-chloroisopropyl) ether	<6.0	<6.0	<3	<5.7	<6.2	<3	<10	<3	<10
bis (2-ethylhexyl) phthalate	<10	<11	3	<10	<11	19	22	14	<10
4-bromophenyl phenyl ether	<1.9	<2.0	<16	<1.9	<2.1	<16	<10	<16	<10
butyl benzyl phthalate	<10	<11	<13	<10	<11	<13	<10	<13	<10
2-chloronaphthalene	<1.9	<2.0	<4	<1.9	<2.1	<4	<10	<4	<10
4-chlorophenyl phenyl ether	<4.2	<4.4	<9	<4.2	<4.6	<9	<10	<9	<10
chrysene	<2.5	<2.6	<9	<2.5	<2.7	<9	<10	<9	<10
dibenzo (a,h) anthracene	<2.5	<11	<16	<2.5	<11	<16	<10	<16	<10
1,2-dichlorobenzene	<1.9	<2.0	<5	<1.9	<2.1	<5	<10	<5	<10
1,3-dichlorobenzene	<1.9	<2.0	<6	<1.9	<2.1	<6	<10	<6	<10
1,4-dichlorobenzene	<4.4	<4.6	<5	<4.4	<4.8	<5	<10	<5	<10
3,3-dichlorobenzidine	<16.5	<17	<161	<16.5	<18	<161	<10	<161	<10
diethyl phthalate	<10	<11	1	<10	<11	<4	<10	2	<10
dimethyl phthalate	<10	<11	<4	<10	<11	<4	<10	<4	<10
di-n-butyl phthalate	<10	<11	7	<10	<11	5	<10	10	<10
2,4-dinitrotoluene	<5.7	<6.0	<14	<5.7	<6.2	<14	<10	<14	<10
2,6-dinitrotoluene	<1.9	<2.0	<16	<1.9	<2.1	<16	<10	<16	<10
di-n-octyl phthalate	<10	<11	<6	<10	<11	<6	<10	<6	<10
1,2-diphenylhydrazine	<10	<11	<10	<10	<11	<10	<10	<10	<10
fluoranthene	<2.2	<2.3	<5	<2.2	<2.4	<5	<10	<5	<10
fluorene	<1.9	<2.0	<4	<1.9	<2.1	<4	<10	<4	<10
hexachlorobenzene	<1.9	<2	<15	<1.9	<2.1	<15	<10	<15	<10
hexachlorobutadiene	<0.9	<0.95	<13	<0.9	<1	<13	<10	<13	<10
hexachlorocyclopentadiene	<10	<11	<12	<10	<11	<12	<10	<12	<10
hexachloroethane	<1.6	<1.7	<10	<1.6	<1.7	<10	<10	<10	<10
indeno (1,2,3-c,d) pyrene	<3.7	<4.9	<7	<3.7	<5.1	<7	<10	<7	<10
isophorone	<2.2	<2.3	<2	<2.2	<2.4	<2	<10	<2	<10
naphthalene	<1.6	<1.7	<2	<1.6	<1.7	<2	<10	<2	<10
nitrobenzene	<1.9	<2.0	<5	<1.9	<2.1	<5	<10	<5	<10
n-nitrosodimethylamine	<10	<11	<10	<10	<11	<10	<10	<10	<10
n-nitrosodi-n-propylamine	<10	<11	<6	<10	<11	<6	<10	<6	<10
n-nitrosodiphenylamine	<1.9	<2.0	<82	<1.9	<2.1	<82	<10	<82	<10
phenanthrene	<5.4	<5.7	<4	<5.4	<5.9	<4	<10	<4	<10
pyrene	<1.9	<2.0	<5	<1.9	<2.1	<5	<10	<5	<10
1,2,4-trichlorobenzene	<1.9	<2.0	<7	<1.9	<2.1	<7	<10	<7	<10
Sub Total 1	0	0	11	0	0	24	22	26	0

Table E-3. Summary of Base/Neutral Extractable Compounds in Ground Water, Monsanto Company, W.G. Krummrich Plant, Sauget, Il

Well Number:	GM-18A	GM-18A	GM-18B	GM-18B	GM-18B	GM-25A	GM-25A	GM-25B	GM-25B
Date:	5/85	11/85	9/84**	5/85	11/85	9/84	11/84	9/84	11/84
Miscellaneous Base/Neutral Extractable Organic Compounds concentrations are in ug/L									
2-nitroaniline	<10	<11	<25-30	<10	<11	<25-30	<10	<25-30	<10
4-nitroaniline	<10	<11	<25-30	<10	<11	<25-30	<10	<25-30	<10
2-nitrochlorobenzene	<10	<10.5	<10	<10	<10.9	<10	<10	<10	<10
4-nitrochlorobenzene	<10	<10.5	<10	<10	<10.9	<10	<10	<10	<10
2,4-and 3,4-dinitrochlorobenzene	<10	<10.5	<10	<10	<10.9	<10	<10	<10	<10
4-nitrodiphenylamine	<10	<10.5	<10	<10	<10.9	<10	<10	<10	<10
triphenyl phosphate	<10	<10.5	<10	<10	<10.9	<10	<10	<10	<10
2,3,7,8-tetrachloro-dibenzo-p-dioxin	NA	NA	NA	NA	NA	NA	NA	NA	NA
2-nitrobiphenyl	NA	NA	<10	NA	NA	<10	NA	<10	NA
4-nitrobiphenyl	NA	NA	<10	NA	NA	<10	NA	<10	NA
Sub Total 2	0	0	0	0	0	0	0	0	0
Total Base/Neutral Compounds Analyzed	0	0	11	0	0	24	22	26	0

Table E-3. Summary of Base/Neutral Extractable Compounds in Ground Water, Monsanto Company, W.G. Krummrich Plant, Sauget, Il

Well Number:	GM-25B	GM-27B	GM-27B	GM-27B	GM-27C	GM-27C	GM-27C	GM-28B	GM-28B
Date:	11/85	9/84**	11/85	2/86	9/84**	11/85	2/86	9/84**	11/85
USEPA Priority Pollutant Base/Neutral Extractable Organic Compounds concentrations are in ug/L									
acenaphthene	<3.7	<4	<1.9	<2.0	<4	<1.9	<1.9	<4	<2.0
acenapthylene	<6.9	<3	<3.5	<3.6	<3	<3.5	<3.6	<3	<3.8
anthracene	<3.7	<4	<1.9	<2.0	<4	<1.9	<1.9	<4	<2.0
benzidine	<86	<60	<44	<45	<60	<44	<45	<60	<47
benzo (a) anthracene	<15	<9	<7.8	<8	<9	<7.8	<8	<9	<8.4
benzo (a) pyrene	<4.9	<12	<2.5	<2.6	<12	<2.5	<2.6	<12	<2.7
benzo (b) fluoroanthene	<9.4	<11	<4.8	<4.9	<11	<4.8	<4.9	<11	<5.2
benzo (ghi) perylene	<8.0	<14	<4.1	<4.2	<14	<4.1	<4.2	<14	<4.4
benzo (k) fluoranthene	<6.9	<11	<3.5	<3.6	<11	<3.5	<3.6	<11	<3.8
bis (2-chloroethoxy) methane	<10	<4	<5.3	<5.5	<4	<5.3	<5.4	<4	<5.7
bis (2-chloroethyl) ether	<11	<4	<5.7	<5.9	<4	<5.7	<5.8	<4	<6.1
bis (2-chloroisopropyl) ether	<11	<3	<5.7	<5.9	<3	<5.7	<5.8	<3	<6.1
bis (2-ethylhexyl) phthalate	36.3	9	<10	11.7	4	54	<10	11	<11
4-bromophenyl phenyl ether	<3.7	<16	<1.9	<2	<16	<1.9	<1.9	<16	<2.0
butyl benzyl phthalate	<20	<13	<10	<10	<13	<10	<10	<13	<11
2-chloronaphthalene	<3.7	<4	<1.9	<2	<4	<1.9	<1.9	<4	<2.0
4-chlorophenyl phenyl ether	<8.2	<9	<4.2	<4.3	<9	<4.2	<4.3	<9	<4.5
chrysene	<4.9	<9	<2.5	<2.6	<9	<2.5	<2.6	<9	<2.7
dibenzo (a,h) anthracene	<20	<16	<10	<10	<16	<10	<10	<16	<11
1,2-dichlorobenzene	<3.7	3	2.6	<2	3	72.8	103	<5	102
1,3-dichlorobenzene	<3.7	<6	<1.9	<2	<6	5.5	3.1	<6	<2.0
1,4-dichlorobenzene	<8.6	11	13.3	27.6	2	52	76.5	127	18.8
3,3-dichlorobenzidine	<32	<161	<17	<17	<161	<17	<17	<161	<18
diethyl phthalate	<20	<4	<10	<10	<4	<10	<10	<4	<11
dimethyl phthalate	<20	<4	<10	<10	<4	<10	<10	<4	<11
di-n-butyl phthalate	<20	6	<10	<10	8	<10	<10	7	<11
2,4-dinitrotoluene	<11	<14	<5.7	<5.9	<14	<5.7	<5.8	<14	<6.1
2,6-dinitrotoluene	<3.7	<16	<1.9	<2.0	<16	<1.9	<1.9	<16	<2.0
di-n-octyl phthalate	<20	<6	<10	<10	<6	<10	<10	<6	<11
1,2-diphenylhydrazine	<20	<10	<10	<10	<10	<10	<10	<10	<11
fluoranthene	<4.3	<5	<2.2	<2.3	<5	<2.2	<2.2	<5	<2.4
fluorene	<3.7	<4	<1.9	<2.0	<4	<1.9	<1.9	<4	<2.0
hexachlorobenzene	<3.7	<15	<1.9	<2.0	<15	<1.9	<1.9	<15	<2.0
hexachlorobutadiene	<1.8	<13	<0.9	<0.9	<13	<0.9	<0.9	<13	<1
hexachlorocyclopentadiene	<20	<12	<10	<10	<12	<10	<10	<12	<11
hexachloroethane	<3.1	<10	<1.6	<1.6	<10	<1.6	<1.6	<10	<1.7
indeno (1,2,3-c,d) pyrene	<9.2	<7	<4.7	<4.8	<7	<4.7	<4.8	<7	<5.1
isophorone	<4.3	<2	<2.2	<2.3	<2	<2.2	<2.2	<2	<2.4
naphthalene	<3.1	<2	<1.6	<1.6	<2	5.2	<1.6	<2	2.3
nitrobenzene	<3.7	<5	<1.9	<2.0	<5	<1.9	<1.9	<5	<2.0
n-nitrosodimethylamine	<20	<10	<10	<10	<10	<10	<10	<10	<11
n-nitrosodi-n-propylamine	<20	<6	<10	<10	<6	<10	<10	<6	<11
n-nitrosodiphenylamine	<3.7	<82	<1.9	<2.0	<82	<1.9	<1.9	<82	<2.0
phenanthrene	<11	<4	<5.4	<5.6	<4	<5.4	<5.5	<4	<5.8
pyrene	<3.7	<5	<1.9	<2.0	<5	<1.9	<1.9	<5	<2.0
1,2,4-trichlorobenzene	<3.7	<7	<1.9	<2.0	<7	<1.9	<1.9	<7	<10.5
Sub Total 1	36.3	29	15.9	39.3	17	189.5	182.6	145	123.1

Table E-3. Summary of Base/Neutral Extractable Compounds in Ground Water, Monsanto Company, W.G. Krummrich Plant, Sauget, Il

Well Number:	GM-25B	GM-27B	GM-27B	GM-27B	GM-27C	GM-27C	GM-27C	GM-28B	GM-28B
Date:	11/85	9/84**	11/85	2/86	9/84**	11/85	2/86	9/84**	11/85
Miscellaneous Base/Neutral Extractable Organic Compounds concentrations are in ug/L									
2-nitroaniline	<20	<25-30	<10	<10	<25-30	<10	<10	<25-30	<11
4-nitroaniline	<20	<25-30	<10	<10	<25-30	<10	<10	<25-30	<11
2-nitrochlorobenzene	<20	<10	<10	<10	<10	<10	<10	<10	<11
4-nitrochlorobenzene	<20	<10	<10	<10	<10	<10	<10	<10	<11
2,4-and 3,4-dinitrochlorobenzene	<20	<10	<10	<10	<10	<10	<10	<10	<11
4-nitrodiphenylamine	<20	<10	<10	<10	<10	<10	<10	<10	<11
triphenyl phosphate	<20	<10	<10	<10	<10	<10	<10	<10	<11
2,3,7,8-tetrachloro-dibenzo-p-dioxin	NA	<0.001	NA	NA	NA	NA	NA	<0.0016	NA
2-nitrobiphenyl	NA	<10	NA	NA	<10	NA	NA	<10	NA
4-nitrobiphenyl	NA	<10	NA	NA	<10	NA	NA	<10	NA
Sub Total 2	0	0	0	0	0	0	0	0	0
Total Base/Neutral Compounds Analyzed	36.3	29	15.9	39.3	17	189.5	182.6	145	123.1

Table E-3. Summary of Base/Neutral Extractable Compounds in Ground Water, Monsanto Company, W.G. Krummrich Plant, Sauget, Il

Well Number:	GM-28B	GM-28C	GM-28C	GM-28C	GM-29	GM-29	GM-30	GM-30	GM-30
Date:	2/86	9/84**	11/85	2/86	9/84**	11/85	9/84**	11/85	2/86
USEPA Priority Pollutant Base/Neutral Extractable Organic Compounds concentrations are in ug/L									
acenaphthene	<1.9	NA	<1.9	<1.9	<4	<2.3	<4	<2.1	<2.3
acenapthylene	<3.6	NA	<3.5	<3.5	<3	<4.2	<3	<3.9	<4.2
anthracene	<1.9	NA	<1.9	<1.9	<4	<2.3	<4	<2.1	<2.3
benzidine	<45	NA	<44	<44	<60	<52	<60	<49	<52
benzo (a) anthracene	<8	NA	<7.8	<7.9	<9	<9.3	<9	<8.7	<9.3
benzo (a) pyrene	<2.6	NA	<2.5	<2.5	<12	<3.0	<12	<2.8	<3.0
benzo (b) fluoroanthene	<4.9	NA	<4.8	<4.8	<11	<5.7	<11	<5.3	<5.7
benzo (ghi) perylene	<4.2	NA	<4.1	<4.1	<14	<4.9	<14	<4.6	<4.9
benzo (k) fluoranthene	<3.6	NA	<3.5	<3.5	<11	<4.2	<11	<3.9	<4.2
bis (2-chloroethoxy) methane	<5.4	NA	<5.3	<5.4	<4	<6.3	<4	<5.9	<6.3
bis (2-chloroethyl) ether	<5.8	NA	<5.7	<5.8	<4	<6.8	<4	<6.3	<6.8
bis (2-chloroisopropyl) ether	<5.8	NA	<5.7	<5.8	<3	<6.8	<3	<6.3	<6.8
bis (2-ethylhexyl) phthalate	<10	NA	<10	<10	17	<12	<10	<11	<12
4-bromophenyl phenyl ether	<1.9	NA	<1.9	<1.9	<16	<2.3	<16	<2.1	<2.3
butyl benzyl phthalate	<10	NA	<10	<10	<13	<12	<13	<11	<12
2-chloronaphthalene	<1.9	NA	<1.9	<1.9	<4	<2.3	<4	<2.1	<2.3
4-chlorophenyl phenyl ether	<4.3	NA	<4.2	<4.2	<9	<5.0	<9	<4.7	<5.0
chrysene	<2.6	NA	<2.5	<2.5	<9	<3.0	<9	<2.8	<3.0
dibenzo (a,h) anthracene	<10	NA	<10	<10	<16	<12	<16	<11	<12
1,2-dichlorobenzene	1,720	NA	38	3,270	<5	5	<5	3.7	4.7
1,3-dichlorobenzene	5.4	NA	<1.9	14.7	<6	<2.3	<6	<2.1	<2.3
1,4-dichlorobenzene	231	NA	10	103	<5	<5.2	<5	179	123
3,3-dichlorobenzidine	<17	NA	<17	<17	<161	<20	<161	<18	<20
diethyl phthalate	<10	NA	<10	<10	<4	<12	<4	<11	<12
dimethyl phthalate	<10	NA	<10	<10	<4	<12	<4	<11	<12
di-n-butyl phthalate	<10	NA	<10	<10	3	<12	3	<11	<12
2,4-dinitrotoluene	<5.8	NA	<5.7	<5.8	<14	<6.8	<14	<6.3	<6.8
2,6-dinitrotoluene	<1.9	NA	<1.9	<1.9	<16	<2.3	<16	<2.1	<2.3
di-n-octyl phthalate	<10	NA	<10	<10	<6	<12	<6	<11	<12
1,2-diphenylhydrazine	<10	NA	<10	<10	<10	<12	<10	<11	<12
fluoranthene	<2.3	NA	<2.2	<2.2	<5	<2.6	<5	<2.4	<2.6
fluorene	<1.9	NA	<1.9	<1.9	<4	<2.3	<4	<2.1	<2.3
hexachlorobenzene	<1.9	NA	<1.9	<1.9	<15	<2.3	<15	<2.1	<2.3
hexachlorobutadiene	<0.9	NA	<0.9	<0.9	<13	<1.1	<13	<1.0	<1.1
hexachlorocyclopentadiene	<10	NA	<10	<10	<12	<12	<12	<11	<12
hexachloroethane	<1.6	NA	<1.6	<1.6	<10	<1.9	<10	<1.8	<1.9
indeno (1,2,3-c,d) pyrene	<4.8	NA	<4.7	<4.7	<7	<5.6	<7	<5.2	<5.6
isophorone	<2.[illegible]	NA	<2.2	<2.2	<2	<2.6	<2	<2.4	<2.6
naphthalene	<1.6	NA	<1.6	<1.6	<2	3.8	<2	<1.8	<1.9
nitrobenzene	<1.9	NA	<1.9	<1.9	<5	<2.3	<5	<2.1	<2.3
n-nitrosodimethylamine	<10	NA	<10	<10	<10	<12	<10	<11	<12
n-nitrosodi-n-propylamine	<10	NA	<10	<10	<6	<12	<6	<11	<12
n-nitrosodiphenylamine	<1.9	NA	<1.9	<1.9	<82	<2.3	<82	<2.1	<2.3
phenanthrene	<5.5	NA	<5.4	<5.5	<4	<6.4	<4	<6.0	<6.4
pyrene	<1.9	NA	<1.9	<1.9	<5	<2.3	<5	<2.1	<2.3
1,2,4-trichlorobenzene	29.6	NA	16.2	20.3	<7	<2.3	<7	<2.1	<2.3
Sub Total 1	1986	NA	64.2	3408	20	8.8	3	182.7	127.7

Table E-3. Summary of Base/Neutral Extractable Compounds in Ground Water, Monsanto Company, W.G. Krummrich Plant, Sauget, Il

Well Number:	GM-28B	GM-28C	GM-28C	GM-28C	GM-29	GM-29	GM-30	GM-30	GM-30
Date:	2/86	9/84**	11/85	2/86	9/84**	11/85	9/84**	11/85	2/86
Miscellaneous Base/Neutral Extractable Organic Compounds concentrations are in ug/L									
2-nitroaniline	<10	NA	<10	<10	<25-30	<12	<25-30	<11	<12
4-nitroaniline	<10	NA	<10	<10	<25-30	<12	<25-30	<11	<12
2-nitrochlorobenzene	180	NA	<10	494	<10	<12	<10	<11.1	<12
4-nitrochlorobenzene	36.6	NA	<10	1,460	<10	<12	<10	<11.1	<12
2,4-and 3,4-dinitrochlorobenzene	<10	NA	<10	<10	<10	<12	<10	<11.1	<12
4-nitrodiphenylamine	<10	NA	<10	<10	<10	<12	<10	<11.1	<12
triphenyl phosphate	<10	NA	<10	<10	<10	<12	<10	<11.1	<12
2,3,7,8-tetrachloro-dibenzo-p-dioxin	NA	NA	NA	NA	NA	NA	NA	NA	NA
2-nitrobiphenyl	NA	NA	NA	NA	<10	NA	<10	NA	NA
4-nitrobiphenyl	NA	NA	NA	NA	<10	NA	<10	NA	NA
Sub Total 2	216.6	NA	0	1954	0	0	0	0	0
Total Base/Neutral Compounds Analyzed	2202.6	NA	64.2	5362	20	8.8	3	182.7	127.7

Table E-3. Summary of Base/Neutral Extractable Compounds in Ground Water, Monsanto Company, W.G. Krummrich Plant, Sauget, Il

Well Number:	GM-31A	GM-31A	GM-31A	GM-31A	GM-31Aa)	GM-31Ab)	GM-31B	GM-31B	GM-31B
Date:	2/85	5/85	11/85	11/85*	2/86	2/86	2/85	5/85	11/85
USEPA Priority Pollutant Base/Neutral Extractable Organic Compounds concentrations are in ug/L									
acenaphthene	<1.9	<1.9	<2.0	<2.0	<2.1	<2.0	<1.9	<1.9	<1.9
acenapthylene	<3.5	<3.5	<3.7	<3.7	<3.9	<3.7	<3.5	<3.5	<3.5
anthracene	<1.9	<1.9	<2.0	<2.0	<2.1	<2.0	<1.9	<1.9	<1.9
benzidine	<44	<44	<47	<46	<49	<46	<44	<44	<44
benzo (a) anthracene	<7.8	<7.8	<8.3	<8.2	<8.7	<8.2	<7.8	<7.8	<7.8
benzo (a) pyrene	<2.5	<2.5	<2.7	<2.6	<2.8	<2.6	<2.5	<2.5	<2.5
benzo (b) fluoroanthene	<4.8	<4.8	<5.1	<5.1	<11	<10	<4.8	<4.8	<4.8
benzo (ghi) perylene	<4.1	<4.1	<4.4	<4.3	<4.6	<4.3	<4.1	<4.1	<4.1
benzo (k) fluoranthene	<2.5	<2.5	<3.7	<3.7	<3.9	<3.7	<2.5	<2.5	<3.5
bis (2-chloroethoxy) methane	<5.3	<5.3	<5.6	<5.6	<5.9	<5.6	<5.3	<5.3	<5.3
bis (2-chloroethyl) ether	<5.7	<5.7	<6.1	<6.0	<6.3	<6.0	<5.7	<5.7	<5.7
bis (2-chloroisopropyl) ether	<5.7	<6.0	<6.1	<6.0	<6.3	<6.0	<5.7	<6.0	<5.7
bis (2-ethylhexyl) phthalate	<10	<10	<11	<11	<11	<11	<10	<10	33.9
4-bromophenyl phenyl ether	<1.9	<1.9	<2	<2	<2.1	<2	<1.9	<1.9	<1.9
butyl benzyl phthalate	<10	<10	<11	<11	<11	<11	<10	<10	<10
2-chloronaphthalene	<1.9	<1.9	<2	<2	<2.1	<2	<1.9	<1.9	<1.9
4-chlorophenyl phenyl ether	<4.2	<4.2	<4.5	<4.4	<4.7	<4.4	<3.5	<4.2	<4.2
chrysene	<2.5	<2.5	<2.7	<2.6	<2.8	<2.6	<1.9	<2.5	<2.5
dibenzo (a,h) anthracene	<2.5	<2.5	<11	<11	<11	<11	<44	<2.5	<10
1,2-dichlorobenzene	3.9	3	17.6	16.8	25.5	10.4	<7.8	<1.9	<1.9
1,3-dichlorobenzene	<1.9	<1.9	<2	<2	<2.1	<2	<2.5	<1.9	<1.9
1,4-dichlorobenzene	<4.4	<4.4	8.0	7.9	11.7	<4.6	<4.8	<4.4	<4.4
3,3-dichlorobenzidine	<16.5	<16.5	<18	<17	<18	<17	<4.1	<16.5	<17
diethyl phthalate	<10	<10	<11	<11	<11	<11	<2.5	<10	<10
dimethyl phthalate	<10	<10	<11	<11	<11	<11	<5.3	<10	<10
di-n-butyl phthalate	<10	<10	<11	<11	<11	<11	<5.7	<10	<10
2,4-dinitrotoluene	<5.7	<5.7	<6.1	<6.0	<6.3	<6.0	<5.7	<5.7	<5.7
2,6-dinitrotoluene	<1.9	<1.9	<2.0	<2.0	<2.1	<2.0	<10	<1.9	<1.9
di-n-octyl phthalate	<10	<10	<11	<11	<11	<11	<1.9	<10	<10
1,2-diphenylhydrazine	<10	<10	<11	<11	<11	<11	<10	<10	<10
fluoranthene	<2.2	<2.2	<2.3	<2.3	<2.4	<2.3	<2.2	<2.2	<2.2
fluorene	<1.9	<1.9	<2.0	<2.0	<2.1	<2.0	<1.9	<1.9	<1.9
hexachlorobenzene	<1.9	<1.9	<2.0	<2.0	<2.1	<2.0	<1.9	<1.9	<1.9
hexachlorobutadiene	<0.9	<0.9	<1.0	<1.0	<1.0	<1.0	<0.9	<0.9	<0.9
hexachlorocyclopentadiene	<10	<10	<11	<11	<11	<11	<10	<10	<10
hexachloroethane	<1.6	<1.6	<1.7	<1.7	<1.8	<1.7	<1.6	<1.6	<1.6
indeno (1,2,3-c,d) pyrene	<3.7	<3.7	<5.0	<4.9	<5.2	<4.9	<3.7	<3.7	<4.7
isophorone	<2.2	<2.2	<2.3	<2.3	<2.4	<2.3	<2.2	<2.2	<2.2
naphthalene	<1.6	<1.6	<1.7	<1.7	<1.8	<1.7	<1.6	<1.6	<1.6
nitrobenzene	21.7	15	87.8	93.5	168	130	<1.9	<1.9	<1.9
n-nitrosodimethylamine	<10	<10	<11	<11	<11	<11	<10	<10	<10
n-nitrosodi-n-propylamine	<10	<10	<11	<11	<11	<11	<10	<10	<10
n-nitrosodiphenylamine	2.8	<1.9	<2.0	<2.0	<2.1	<2.0	<1.9	<1.9	<1.9
phenanthrene	<5.4	<5.4	<5.7	<5.7	<6.0	<5.7	<5.4	<5.4	<5.4
pyrene	<1.9	<1.9	<2.0	<2.0	<2.1	<2.0	<1.9	<1.9	<1.9
1,2,4-trichlorobenzene	<1.9	<1.9	<2.0	<2.0	<2.1	<2.0	<1.9	<1.9	<1.9
Sub Total 1	28.4	18	113.4	118.2	205.2	140.4	0	0	33.9

Table E-3. Summary of Base/Neutral Extractable Compounds in Ground Water, Monsanto Company, W.G. Krummrich Plant, Sauget, Il

Well Number:	GM-31A	GM-31A	GM-31A	GM-31A	GM-31Aa)	GM-31Ab)	GM-31B	GM-31B	GM-31B
Date:	2/85	5/85	11/85	11/85*	2/86	2/86	2/85	5/85	11/85
Miscellaneous Base/Neutral Extractable Organic Compounds concentrations are in ug/L									
2-nitroaniline	<10	<10	<11	<11	NA	NA	<10	<10	<10
4-nitroaniline	<10	<10	<11	<11	NA	NA	<10	<10	<10
2-nitrochlorobenzene	<10	<10	579	542	NA	NA	<10	<10	<10
4-nitrochlorobenzene	122	<10	<11	<11	NA	NA	<10	<10	<10
2,4-and 3,4-dinitrochlorobenzene	<10	222	<11	<11	NA	NA	<10	<10	<10
4-nitrodiphenylamine	<10	<10	<11	<11	NA	NA	<10	<10	<10
triphenyl phosphate	<10	<10	<11	<11	NA	NA	<10	<10	<10
2,3,7,8-tetrachloro-dibenzo-p-dioxin	NA	NA	NA	NA	NA	NA	NA	NA	NA
2-nitrobiphenyl	<25	<25	41.8	42.9	<11	<11	<25	<25	<10
4-nitrobiphenyl	<25	<25	<11	<11	<11	<11	<25	<25	<10
Sub Total 2	122	222	620.8	584.9	0	0	0	0	0
Total Base/Neutral Compounds Analyzed	150.4	240	734.2	703.1	205.2	140.4	0	0	33.9

Table E-3. Summary of Base/Neutral Extractable Compounds in Ground Water, Monsanto Company, W.G. Krummrich Plant, Sauget, Il

Well Number:	GM-31B	GM-31C	GM-31C	GM-31C	GM-31C	B-24A	B-25A	B-25A	B-25B
Date:	11/85*	2/85	5/85	11/85	11/85*	2/86	6/84	11/85	6/84
USEPA Priority Pollutant Base/Neutral Extractable Organic Compounds concentrations are in ug/L									
acenaphthene	<1.9	<1.9	<1.9	<1.9	<1.9	<2.0	<80	<3.7	<80
acenapthylene	<3.5	<3.5	<3.5	<3.5	<3.5	<3.6	<60	<6.9	<60
anthracene	<1.9	<1.9	<1.9	<1.9	<1.9	<2.0	<80	<3.7	<80
benzidine	<44	<44	<44	<44	<44	<45	<1,200	<86	<1,200
benzo (a) anthracene	<7.8	<7.8	<7.8	<7.8	<7.8	<8	<180	<15	<180
benzo (a) pyrene	<2.5	<2.5	<2.5	<2.5	<2.5	<2.6	<240	<4.9	<240
benzo (b) fluoroanthene	<4.8	<4.8	<4.8	<4.8	<4.8	<10	<220	<9.4	<220
benzo (ghi) perylene	<4.1	<4.1	<4.1	<4.1	<4.1	<4.2	<280	<8.0	<280
benzo (k) fluoranthene	<3.5	<2.5	<2.5	<3.5	<3.5	<3.6	<220	<6.9	<220
bis (2-chloroethoxy) methane	<5.3	<5.3	<5.3	<5.3	<5.3	<5.5	<80	<10	<80
bis (2-chloroethyl) ether	<5.7	<5.7	<5.7	<5.7	<5.7	<5.9	<80	<11	<80
bis (2-chloroisopropyl) ether	<5.7	<5.7	<6.0	<5.7	<5.7	<5.9	<60	<11	<60
bis (2-ethylhexyl) phthalate	55.6	55.2	<10	84	<10	<10	<200	61.8	<200
4-bromophenyl phenyl ether	<1.9	<1.9	<1.9	<1.9	<1.9	<2	<320	<3.7	<320
butyl benzyl phthalate	<10	<10	<10	<10	<10	<10	<260	<20	<260
2-chloronaphthalene	<1.9	<1.9	<1.9	<1.9	<1.9	<2	<80	<3.7	<80
4-chlorophenyl phenyl ether	<4.2	<4.2	<4.2	<4.2	<4.2	<4.3	<180	<8.2	<180
chrysene	<2.5	<2.5	<2.5	<2.5	<2.5	<2.6	<180	<4.9	<180
dibenzo (a,h) anthracene	<10	<2.5	<2.5	<10	<10	<10	<320	<20	<320
1,2-dichlorobenzene	<1.9	<1.9	<1.9	<1.9	<1.9	180	<100	3,790	<100
1,3-dichlorobenzene	<1.9	<1.9	<1.9	<1.9	<1.9	2.5	<120	12.6	<120
1,4-dichlorobenzene	<4.4	<4.4	<4.4	<4.4	<4.4	114	35	190	<100
3,3-dichlorobenzidine	<17	<16.5	<16.5	<17	<17	<17	<3,220	<32	<3,220
diethyl phthalate	<10	<10	<10	<10	<10	<10	<80	<20	<80
dimethyl phthalate	<10	<10	<10	<10	<10	<10	<80	<20	<80
di-n-butyl phthalate	<10	<10	<10	<10	<10	<10	<60	<20	91
2,4-dinitrotoluene	<5.7	<5.7	<5.7	<5.7	<5.7	<5.9	<280	<11	<280
2,6-dinitrotoluene	<1.9	<1.9	<1.9	<1.9	<1.9	<2.0	<320	<3.7	<320
di-n-octyl phthalate	<10	<10	<10	<10	<10	<10	<120	<20	<120
1,2-diphenylhydrazine	<10	<10	<10	<10	<10	<10	<200	<20	<200
fluoranthene	<2.2	<2.2	<2.2	<2.2	<2.2	<2.3	<100	<4.3	<100
fluorene	<1.9	<1.9	<1.9	<1.9	<1.9	<2.0	<80	<3.7	<80
hexachlorobenzene	<1.9	<1.9	<1.9	<1.9	<1.9	<2.0	<300	<3.7	<300
hexachlorobutadiene	<0.9	<0.9	<0.9	<0.9	<0.9	<0.9	<260	<1.8	<260
hexachlorocyclopentadiene	<10	<10	<10	<10	<10	<10	<240	<20	<240
hexachloroethane	<1.6	<1.6	<1.6	<1.6	<1.6	<1.6	<200	<3.1	<200
indeno (1,2,3-c,d) pyrene	<4.7	<3.7	<3.7	<4.7	<4.7	<4.8	<140	<9.2	<140
isophorone	<2.2	<2.2	<2.2	<2.2	<2.2	<2.3	<40	<4.3	<40
naphthalene	<1.6	<1.6	<1.6	<1.6	<1.6	15.7	2,350	193	<40
nitrobenzene	<1.9	<1.9	<1.9	<1.9	<1.9	2,850	<100	8,080	<100
n-nitrosodimethylamine	<10	<10	<10	<10	<10	<10	<200	<20	<200
n-nitrosodi-n-propylamine	<10	<10	<10	<10	<10	<10	<120	<20	<120
n-nitrosodiphenylamine	<1.9	<1.9	<1.9	<1.9	<1.9	<2.0	<1,640	<3.7	<1,640
phenanthrene	<5.4	<5.4	<5.4	<5.4	<5.4	<5.6	<80	<11	<80
pyrene	<1.9	<1.9	<1.9	<1.9	<1.9	<2.0	<100	<3.7	<100
1,2,4-trichlorobenzene	<1.9	<1.9	<1.9	<1.9	<1.9	17.2	<140	929	<140
Sub Total 1	55.6	55.2	0	84	0	3179.4	2385	13256.4	91

Table E-3. Summary of Base/Neutral Extractable Compounds in Ground Water, Monsanto Company, W.G. Krummrich Plant, Sauget, Il

Well Number:	GM-31B	GM-31C	GM-31C	GM-31C	GM-31C	B-24A	B-25A	B-25A	B-25B
Date:	11/85*	2/85	5/85	11/85	11/85*	2/86	6/84	11/85	6/84
Miscellaneous Base/Neutral Extractable Organic Compounds concentrations are in ug/L									
2-nitroaniline	<10	<10	<10	<10	<10	<10	NA	570	NA
4-nitroaniline	<10	<10	<10	<10	<10	<10	NA	79.2	NA
2-nitrochlorobenzene	<10	<10	<10	<10	<10	368,000	NA	226,000	NA
4-nitrochlorobenzene	<10	<10	<10	<10	<10	108,000	NA	102,000	NA
2,4-and 3,4-dinitrochlorobenzene	<10	<10	<10	<10	<10	<10	NA	<20	NA
4-nitrodiphenylamine	<10	<10	<10	<10	<10	161	NA	255	NA
triphenyl phosphate	<10	<10	<10	<10	<10	<10	NA	412	NA
2,3,7,8-tetrachloro-dibenzo-p-dioxin	NA	NA	NA	NA	NA	NA	NA	NA	NA
2-nitrobiphenyl	<10	<25	<25	<10	<10	NA	NA	NA	NA
4-nitrobiphenyl	<10	<25	<25	<10	<10	NA	NA	NA	NA
Sub Total 2	0	0	0	0	0	476161	NA	329316.2	NA
Total Base/Neutral Compounds Analyzed	55.6	55.2	0	84	0	479340.4	2385	342572.6	91

Table E-3. Summary of Base/Neutral Extractable Compounds in Ground Water, Monsanto Company, W.G. Krummrich Plant, Sauget, Il

Well Number:	B-25B	B-27B	B-27B	B-28A	B-29A	B-29A	B-29B	B-29B	B-29B
Date:	11/85	9/84**	9/84*	2/86	6/84	11/85	6/84	6/84*	6/84#
USEPA Priority Pollutant Base/Neutral Extractable Organic Compounds concentrations are in ug/L									
acenaphthene	<2.0	NA	NA	<2.0	<80	<3.7	<800	<80	<100
acenapthylene	<3.7	NA	NA	<3.7	<60	<6.9	<600	<60	<100
anthracene	<2.0	NA	NA	<2.0	<80	<3.7	<800	<80	<100
benzidine	<47	NA	NA	<47	<1,200	<86	<12,000	<1,200	<100
benzo (a) anthracene	<8.3	NA	NA	<8.3	<180	<15	<1,800	<180	<100
benzo (a) pyrene	<2.7	NA	NA	<2.7	<240	<4.9	<2,400	<240	<100
benzo (b) fluoroanthene	<5.1	NA	NA	<5.1	<220	<9.4	<2,200	<220	<100
benzo (ghi) perylene	<4.4	NA	NA	<4.4	<280	<8.0	<2,800	<280	<100
benzo (k) fluoranthene	<3.7	NA	NA	<3.7	<220	<6.9	<2,200	<220	<100
bis (2-chloroethoxy) methane	<5.6	NA	NA	<5.6	<80	<10	<800	<80	<100
bis (2-chloroethyl) ether	<6.1	NA	NA	<6.1	<80	<11	<800	<80	<100
bis (2-chloroisopropyl) ether	<6.1	NA	NA	<6.1	<60	<11	<600	<60	<100
bis (2-ethylhexyl) phthalate	<11	NA	NA	<11	<200	<20	591	<200	<100
4-bromophenyl phenyl ether	<2	NA	NA	<2	<320	<3.7	<3,200	<320	<100
butyl benzyl phthalate	<11	NA	NA	<11	<260	<20	<2,600	<260	<100
2-chloronaphthalene	<2	NA	NA	<2	<80	<3.7	<800	<80	<100
4-chlorophenyl phenyl ether	<4.5	NA	NA	<4.5	<180	<8.2	<1,800	<180	<100
chrysene	<2.7	NA	NA	<2.7	<180	<4.9	<1,800	<180	<100
dibenzo (a,h) anthracene	<11	NA	NA	<11	<320	<20	<3,200	<320	<100
1,2-dichlorobenzene	124	NA	NA	<2	<100	221	1,070	<100	13,500
1,3-dichlorobenzene	2.7	NA	NA	<2	<120	24	<1,200	<120	<100
1,4-dichlorobenzene	31	NA	NA	<4.7	<100	73.1	<1,000	240	<100
3,3-dichlorobenzidine	<18	NA	NA	<18	<3,220	<33.3	<32,200	<3,220	<100
diethyl phthalate	<11	NA	NA	<11	<80	<20	<800	<80	<100
dimethyl phthalate	<11	NA	NA	<11	<80	<20	<800	<80	<100
di-n-butyl phthalate	<11	NA	NA	<11	127	<20	304	<60	<100
2,4-dinitrotoluene	<6.1	NA	NA	<6.1	<280	<11	<2,800	<280	<100
2,6-dinitrotoluene	<2.0	NA	NA	<2.0	<320	<3.7	<3,200	<320	<100
di-n-octyl phthalate	<11	NA	NA	<11	<120	<20	<1,200	<120	<100
1,2-diphenylhydrazine	<11	NA	NA	<11	<200	<20	<2,000	<200	<100
fluoranthene	<2.3	NA	NA	<2.3	<100	<4.3	<1,000	<100	<100
fluorene	<2.0	NA	NA	<2.0	<80	<3.7	<800	<80	<100
hexachlorobenzene	<2.0	NA	NA	<2.0	<300	<3.7	<3,000	<300	<100
hexachlorobutadiene	<1	NA	NA	<1	<260	<1.8	<2,600	<260	<100
hexachlorocyclopentadiene	<11	NA	NA	<11	<240	<20	<2,400	<240	<100
hexachloroethane	<1.7	NA	NA	<1.7	<200	<3.1	<2,000	<200	<100
indeno (1,2,3-c,d) pyrene	<5.0	NA	NA	<5.0	<140	<9.2	<1,400	<140	<100
isophorone	<2.3	NA	NA	<2.3	<40	27.5	<400	<40	<100
naphthalene	31.7	NA	NA	<1.7	<40	<3.1	<400	11,600	<100
nitrobenzene	4,030	NA	NA	<2.0	<100	1,650	<1,000	<100	<100
n-nitrosodimethylamine	<11	NA	NA	<11	<200	<20	<2,000	<200	<100
n-nitrosodi-n-propylamine	<11	NA	NA	<11	<120	<20	<1,200	<120	<100
n-nitrosodiphenylamine	<2.0	NA	NA	<2.0	<1,640	<3.7	<16,400	<1,640	<100
phenanthrene	<5.7	NA	NA	<5.7	<80	<11	<800	<80	<100
pyrene	<2.0	NA	NA	<2.0	<100	<3.7	<1,000	<100	<100
1,2,4-trichlorobenzene	37.8	NA	NA	<2.0	<140	25.5	<1,400	<140	<100
Sub Total 1	4257.2	NA	NA	0	127	2021.1	1965	11840	13500

Table E-3. Summary of Base/Neutral Extractable Compounds in Ground Water, Monsanto Company, W.G. Krummrich Plant, Sauget, Il

Well Number:	B-25B	B-27B	B-27B	B-28A	B-29A	B-29A	B-29B	B-29B	B-29B
Date:	11/85	9/84**	9/84*	2/86	6/84	11/85	6/84	6/84*	6/84#
Miscellaneous Base/Neutral Extractable Organic Compounds concentrations are in ug/L									
2-nitroaniline	3,280	NA	NA	<11	NA	<20	NA	NA	NA
4-nitroaniline	1,780	NA	NA	<11	NA	189	NA	NA	NA
2-nitrochlorobenzene	25,600	NA	NA	<11	NA	<20	NA	NA	NA
4-nitrochlorobenzene	15,500	NA	NA	<11	NA	<20	NA	NA	NA
2,4-and 3,4-dinitrochlorobenzene	<11	NA	NA	<11	NA	<20	NA	NA	NA
4-nitrodiphenylamine	34.5	NA	NA	<11	NA	628	NA	NA	NA
triphenyl phosphate	<11	NA	NA	<11	NA	132	NA	NA	NA
2,3,7,8-tetrachloro-dibenzo-p-dioxin	NA	NA	NA	NA	NA	NA	NA	NA	NA
2-nitrobiphenyl	NA	NA	NA	NA	NA	NA	NA	NA	NA
4-nitrobiphenyl	NA	NA	NA	NA	NA	NA	NA	NA	NA
Sub Total 2	46194.5	NA	NA	0	NA	949	NA	NA	NA
Total Base/Neutral Compounds Analyzed	50451.7	NA	NA	0	127	2970.1	1965	11840	13500

Table E-3. Summary of Base/Neutral Extractable Compounds in Ground Water, Monsanto Company, W.G. Krummrich Plant, Sauget, Il

Well Number:	B-29B	B-29B	B-30B	B-31B	B-31B	B-31C	B-31C	B-31C	B-31C
Date:	11/84	11/85	9/84**	11/85	2/86	9/84**	9/84*	11/85	2/86
USEPA Priority Pollutant Base/Neutral Extractable Organic Compounds concentrations are in ug/L									
acenaphthene	<50	<3.8	NA	<1.9	<1.9	<4	<4	<1.9	<2.0
acenapthylene	<50	<7.0	NA	<3.5	<3.5	<3	<3	<3.5	<3.7
anthracene	<50	<3.8	NA	<1.9	<1.9	<4	<4	<1.9	<2.0
benzidine	<50	<88	NA	<44	<44	<60	<60	<45	<46
benzo (a) anthracene	<50	<16	NA	<7.8	<7.9	<9	<9	<8.0	<8.2
benzo (a) pyrene	<50	<5.0	NA	<2.5	<2.5	<12	<12	<2.6	<2.6
benzo (b) fluoroanthene	<50	<9.6	NA	<4.8	<4.8	<11	<11	<4.9	<5.1
benzo (ghi) perylene	<50	<8.2	NA	<4.1	<4.1	<14	<14	<4.2	<4.3
benzo (k) fluoranthene	<50	<7.0	NA	<3.5	<3.5	<11	<11	<3.6	<3.7
bis (2-chloroethoxy) methane	<50	<11	NA	<5.3	<5.4	<4	<4	<5.4	<5.6
bis (2-chloroethyl) ether	<50	<11	NA	<5.7	<5.8	<4	<4	<5.8	<6.0
bis (2-chloroisopropyl) ether	<50	<11	NA	<5.7	<5.8	<3	<3	<5.8	<6.0
bis (2-ethylhexyl) phthalate	<50	<20	NA	101	<10	<10	<10	<10	<11
4-bromophenyl phenyl ether	<50	<3.8	NA	<1.9	<1.9	<16	<16	<1.9	<2
butyl benzyl phthalate	<50	<20	NA	<10	<10	<13	<13	<10	<11
2-chloronaphthalene	<50	<3.8	NA	<1.9	<1.9	<4	<4	<1.9	<2
4-chlorophenyl phenyl ether	<50	<8.4	NA	<4.2	<4.2	<9	<9	<4.3	<4.4
chrysene	<50	<5.0	NA	<2.5	<2.5	<9	<9	<2.6	<2.6
dibenzo (a,h) anthracene	<50	<20	NA	<10	<10	<16	<16	<10	<11
1,2-dichlorobenzene	4,200	779	NA	<1.9	<1.9	4	6	31.9	40.3
1,3-dichlorobenzene	<50	<3.8	NA	<1.9	<1.9	<6	<6	<1.9	<2
1,4-dichlorobenzene	<50	<8.8	NA	<4.4	<4.4	4	5	19.4	22.2
3,3-dichlorobenzidine	<50	<34	NA	<17	<17	<161	<161	<17	<17
diethyl phthalate	<50	<20	NA	<10	<10	<4	<4	<10	<11
dimethyl phthalate	<50	<20	NA	<10	<10	<4	<4	<10	<11
di-n-butyl phthalate	<50	<20	NA	4.5	<10	<3	<3	<10	<11
2,4-dinitrotoluene	<50	<11	NA	<5.7	<5.8	<14	<14	<5.8	<6.0
2,6-dinitrotoluene	<50	<3.8	NA	<1.9	<1.9	<16	<16	<1.9	<2.0
di-n-octyl phthalate	<50	<20	NA	<10	<10	<6	<6	<10	<11
1,2-diphenylhydrazine	<50	<20	NA	<10	<10	<10	<10	<10	<11
fluoranthene	<50	<4.4	NA	<2.2	<2.2	<5	<5	<2.2	<2.3
fluorene	<50	<3.8	NA	<1.9	<1.9	<4	<4	<1.9	<2.0
hexachlorobenzene	<50	<3.8	NA	<1.9	<1.9	<15	<15	<1.9	<2.0
hexachlorobutadiene	<50	<1.8	NA	<0.9	<0.9	<13	<13	<0.9	<1
hexachlorocyclopentadiene	<50	<20	NA	<10	<10	<12	<12	<10	<11
hexachloroethane	<50	<3.2	NA	<1.6	<1.6	<10	<10	<1.6	<1.7
indeno (1,2,3-c,d) pyrene	<50	<9.4	NA	<4.7	<4.7	<7	<7	<4.8	<4.9
isophorone	55	76.6	NA	<2.2	<2.2	<2	<2	<2.2	<2.3
naphthalene	125	58.6	NA	<1.6	<1.6	<2	<2	<1.6	<1.7
nitrobenzene	2,170	1,060	NA	<1.9	<1.9	<5	<5	<1.9	<2.0
n-nitrosodimethylamine	<50	<20	NA	<10	<10	<10	<10	<10	<11
n-nitrosodi-n-propylamine	<50	<20	NA	<10	<10	<6	<6	<10	<11
n-nitrosodiphenylamine	<50	<3.8	NA	<1.9	<1.9	<82	<82	<1.9	<2.0
phenanthrene	<50	<11	NA	<5.4	<5.5	<4	<4	<5.5	<5.7
pyrene	<50	<3.8	NA	<1.9	<1.9	<5	<5	<1.9	<2.0
1,2,4-trichlorobenzene	520	65.5	NA	<1.9	<1.9	<7	<7	<1.9	<2.0
Sub Total 1	7070	2039.7	NA	105.5	0	8	11	51.3	62.5

Table E-3. Summary of Base/Neutral Extractable Compounds in Ground Water, Monsanto Company, W.G. Krummrich Plant, Sauget, Il

Well Number:	B-29B	B-29B	B-30B	B-31B	B-31B	B-31C	B-31C	B-31C	B-31C
Date:	11/84	11/85	9/84**	11/85	2/86	9/84**	9/84*	11/85	2/86
Miscellaneous Base/Neutral Extractable Organic Compounds concentrations are in ug/L									
2-nitroaniline	<50	<20	NA	<10	<10	<25-30	<25-30	<10	<11
4-nitroaniline	375	601	NA	<10	<10	<25-30	<25-30	<10	<11
2-nitrochlorobenzene	e)	282	NA	<10	<10	<10	<10	<10	<11
4-nitrochlorobenzene	e)	<20	NA	<10	<10	<10	<10	<10	<11
2,4-and 3,4-dinitrochlorobenzene	<50	<20	NA	<10	<10	<10	<10	<10	<11
4-nitrodiphenylamine	601	949	NA	<10	<10	<10	<10	<10	<11
triphenyl phosphate	607	548	NA	<10	<10	<10	<10	<10	<11
2,3,7,8-tetrachloro-dibenzo-p-dioxin	NA	NA	NA	NA	NA	NA	NA	NA	NA
2-nitrobiphenyl	NA	NA	NA	NA	NA	<10	<10	NA	NA
4-nitrobiphenyl	NA	NA	NA	NA	NA	<10	<10	NA	NA
Sub Total 2	1583	2380	NA	0	0	0	0	0	0
Total Base/Neutral Compounds Analyzed	8653	4419.7	NA	105.5	0	8	11	51.3	62.5

Table E-3. Summary of Base/Neutral Extractable Compounds in Ground Water, Monsanto Company, W.G. Krummrich Plant, Sauget, Il

Well Number:	B-101	B-102	GM-106	GM-106	GM-106	P-1	P-2	P-2	P-6
Date:	9/84**	9/84**	11/85	2/86	2/86*	9/84**	6/84	11/85	6/84
USEPA Priority Pollutant Base/Neutral Extractable Organic Compounds concentrations are in ug/L									
acenaphthene	<4	<4	<1.9	<2.0	<1.9	<4	<1	<1.9	<1
acenapthylene	<3	<3	<3.5	<3.6	<3.6	<3	<1	<3.5	<1
anthracene	<4	<4	<1.9	<2.0	<1.9	<4	<1	<1.9	<1
benzidine	<60	<60	<44	<45	<45	<60	<1	<44	<1
benzo (a) anthracene	<9	<9	<7.9	<8	<8	<9	<1	<7.8	<1
benzo (a) pyrene	<12	<12	<2.5	<2.6	<2.6	<12	<1	<2.5	<1
benzo (b) fluoroanthene	<11	<11	<4.8	<4.9	<4.9	<11	<1	<4.8	<1
benzo (ghi) perylene	<14	<14	<4.1	<4.2	<4.2	<14	<1	<4.1	<1
benzo (k) fluoranthene	<11	<11	<3.5	<3.6	<3.6	<11	<1	<3.5	<1
bis (2-chloroethoxy) methane	<4	<4	<5.4	<5.5	<5.4	<4	<1	<5.3	<1
bis (2-chloroethyl) ether	<4	<4	<5.8	<5.9	<5.8	<4	<1	<5.7	<1
bis (2-chloroisopropyl) ether	<3	<3	<5.8	<5.9	<5.8	<3	<1	<5.7	<1
bis (2-ethylhexyl) phthalate	109	3	<10	<10	<10	4	1	<10	<1
4-bromophenyl phenyl ether	<16	<16	<1.9	<2	<1.9	<16	<1	<1.9	<1
butyl benzyl phthalate	<13	<13	<10	<10	<10	<13	<1	<10	<1
2-chloronaphthalene	<4	<4	<1.9	<2	<1.9	<4	<1	<1.9	<1
4-chlorophenyl phenyl ether	<9	<9	<4.2	<4.3	<4.3	<9	<1	<4.2	<1
chrysene	<9	<9	<2.5	<2.6	<2.6	<9	<1	<2.5	<1
dibenzo (a,h) anthracene	<16	<16	<10	<10	<10	<16	<1	<10	<1
1,2-dichlorobenzene	<5	<5	<1.9	4.9	4.8	9	1	<1.9	<1
1,3-dichlorobenzene	28,500	<6	<1.9	<2	<1.9	<6	<1	<1.9	<1
1,4-dichlorobenzene	<5	<5	<4.4	<4.5	<4.5	1	7	21.4	<1
3,3-dichlorobenzidine	<161	<161	<17	<17	<17	<161	<1	<17	<1
diethyl phthalate	<4	<4	<10	<10	<10	<4	<1	<10	<1
dimethyl phthalate	<4	<4	<10	<10	<10	<4	<1	<10	<1
di-n-butyl phthalate	<3	1	<10	<10	<10	2	1	<10	<1
2,4-dinitrotoluene	65,700	<14	<5.8	<5.9	<5.8	<14	<1	<5.7	<1
2,6-dinitrotoluene	<16	<16	<1.9	<2.0	<1.9	<16	<1	<1.9	<1
di-n-octyl phthalate	<6	<6	<10	<10	<10	<6	<1	<10	<1
1,2-diphenylhydrazine	<10	<10	<10	<10	<10	<10	<1	<10	<1
fluoranthene	<5	<5	<2.2	<2.3	<2.2	<5	<1	<2.2	<1
fluorene	<4	<4	<1.9	<2.0	<1.9	<4	<1	<1.9	<1
hexachlorobenzene	<15	<15	<1.9	<2.0	<1.9	<15	<1	<1.9	<1
hexachlorobutadiene	<13	<13	<0.9	<0.9	<0.9	<13	<1	<0.9	<1
hexachlorocyclopentadiene	<12	<12	<10	<10	<10	<12	<1	<10	<1
hexachloroethane	<10	<10	<1.6	<1.6	<1.6	<10	<1	<1.6	<1
indeno (1,2,3-c,d) pyrene	<7	<7	<4.7	<4.8	<4.8	<7	<1	<4.7	<1
isophorone	<2	<2	<2.2	<2.3	<2.2	<2	<1	<2.2	<1
naphthalene	<2	<2	<1.6	<1.6	<1.6	<2	<1	<1.6	<1
nitrobenzene	<5	<5	3.3	7.9	8.2	<5	<1	<1.9	<1
n-nitrosodimethylamine	<10	<10	<10	<10	<10	<10	<1	<10	<1
n-nitrosodi-n-propylamine	<6	<6	<10	<10	<10	<6	<1	<10	<1
n-nitrosodiphenylamine	<82	<82	<1.9	<2.0	<1.9	<82	<1	<1.9	<1
phenanthrene	<4	<4	<5.5	<5.6	<5.5	<4	<1	<5.4	<1
pyrene	<5	<5	<1.9	<2.0	<1.9	<5	<1	<1.9	<1
1,2,4-trichlorobenzene	<7	<7	<1.9	<2.0	<1.9	1	<1	<1.9	<1
Sub Total 1	94309	4	3.3	12.8	13	17	10	21.4	0

Table E-3. Summary of Base/Neutral Extractable Compounds in Ground Water, Monsanto Company, W.G. Krummrich Plant, Sauget, Il

Well Number:	B-101	B-102	GM-106	GM-106	GM-106	P-1	P-2	P-2	P-6
Date:	9/84**	9/84**	11/85	2/86	2/86*	9/84**	6/84	11/85	6/84
Miscellaneous Base/Neutral Extractable Organic Compounds concentrations are in ug/L									
2-nitroaniline	<25-30	<25-30	<10	<10	<10	<25-30	NA	<10	NA
4-nitroaniline	<25-30	<25-30	<10	<10	<10	<25-30	NA	<10	NA
2-nitrochlorobenzene	<10	<10	598	115	99.9	c)	NA	<10	NA
4-nitrochlorobenzene	<10	<10	108	353	398	c)	NA	<10	NA
2,4-and 3,4-dinitrochlorobenzene	<10	<10	<10	<10	<10	<10	NA	<10	NA
4-nitrodiphenylamine	<10	<10	<10	<10	<10	<10	NA	<10	NA
triphenyl phosphate	<10	<10	<10	<10	<10	<10	NA	<10	NA
2,3,7,8-tetrachloro-dibenzo-p-dioxin	NA	NA	NA	NA	NA	NA	NA	NA	NA
2-nitrobiphenyl	<10	<10	NA	NA	NA	<10	NA	NA	NA
4-nitrobiphenyl	<10	<10	NA	NA	NA	<10	NA	NA	NA
Sub Total 2	0	0	706	468	497.9	0	NA	0	NA
Total Base/Neutral Compounds Analyzed	94309	4	709.3	480.8	510.9	17	10	21.4	0

Table E-3. Summary of Base/Neutral Extractable Compounds in Ground Water, Monsanto Company, W.G. Krummrich Plant, Sauget, Il

Well Number:	P-6	P-7	P-7	P-8	P-8	P-10	P-11	P-12	P-13
Date:	11/85	6/84	11/85	6/84	11/85	9/84**	9/84**	9/84**	6/84
USEPA Priority Pollutant Base/Neutral Extractable Organic Compounds concentrations are in ug/L									
acenaphthene	<2.0	<80	<380	<1	<1.9	<4	<4	<4	<1
acenapthylene	<3.7	<60	<710	<1	<3.5	<3	<3	<3	<1
anthracene	<2.0	<80	<380	<1	<1.9	<4	<4	<4	<1
benzidine	<47	1,940	<8900	1	<44	<60	<60	<60	<1
benzo (a) anthracene	<8.3	<180	<1600	<1	<7.8	<9	<9	<9	<1
benzo (a) pyrene	<2.7	<240	<510	<1	<2.5	<12	<12	<12	<1
benzo (b) fluoranthene	<5.1	<220	<970	<1	<4.8	<11	<11	<11	<1
benzo (ghi) perylene	<4.4	<280	<830	<1	<4.1	<14	<14	<14	<1
benzo (k) fluoranthene	<3.7	<220	<710	<1	<3.5	<11	<11	<11	<1
bis (2-chloroethoxy) methane	<5.6	<80	<1100	<1	<5.3	<4	<4	<4	<1
bis (2-chloroethyl) ether	<6.1	<80	<1200	<1	<5.7	<4	<4	<4	<1
bis (2-chloroisopropyl) ether	<6.1	<60	<1200	<1	<5.7	<3	<3	<3	<1
bis (2-ethylhexyl) phthalate	<11	21	<2000	19	12.7	3	15	<10	<1
4-bromophenyl phenyl ether	<2	<320	<380	<1	<1.9	<16	<16	<16	<1
butyl benzyl phthalate	<11	<260	<2000	<1	<10	<13	<13	<13	<1
2-chloronaphthalene	<2	<80	<380	<1	<1.9	<4	<4	<4	<1
4-chlorophenyl phenyl ether	<4.5	<180	<850	<1	<4.2	<9	<9	<9	<1
chrysene	<2.7	<180	<510	<1	<2.5	<9	<9	<9	<1
dibenzo (a,h) anthracene	<11	<320	<2000	<1	<10	<16	<16	<16	<1
1,2-dichlorobenzene	<2	73	531	1	45.4	<5	<5	61	<1
1,3-dichlorobenzene	<2	<120	<380	<1	<1.9	<6	<6	<6	<1
1,4-dichlorobenzene	<4.7	64	<890	12	121	<5	74	77	1
3,3-dichlorobenzidine	<18	<3,220	<3300	<1	<17	<161	<161	<161	<1
diethyl phthalate	<11	<80	<2000	<1	<10	<4	<4	<4	<1
dimethyl phthalate	<11	<80	<2000	<1	<10	<4	<4	<4	<1
di-n-butyl phthalate	<11	72	<2000	1	<10	5	6	6	<1
2,4-dinitrotoluene	<6.1	<280	<1200	<1	<5.7	<14	<14	<14	<1
2,6-dinitrotoluene	<2.0	<320	<380	<1	<1.9	<16	<16	<16	<1
di-n-octyl phthalate	<11	<120	<2000	<1	<10	<6	<6	<6	<1
1,2-diphenylhydrazine	<11	<200	<2000	<1	<10	<10	<10	<10	<1
fluoranthene	<2.3	<100	<440	<1	<2.2	<5	<5	<5	<1
fluorene	<2.0	<80	<380	<1	<1.9	<4	<4	<4	<1
hexachlorobenzene	<2.0	<300	<380	<1	<1.9	<15	<15	<15	<1
hexachlorobutadiene	<1.0	<260	<180	<1	<0.9	<13	<13	<13	<1
hexachlorocyclopentadiene	<11	<240	<2000	<1	<10	<12	<12	<12	<1
hexachloroethane	<1.7	<200	<320	<1	<1.6	<10	<10	<10	<1
indeno (1,2,3-c,d) pyrene	<5.0	<140	<950	<1	<4.7	<7	<7	<7	<1
isophorone	<2.3	<40	<440	<1	<2.2	<2	<2	<2	<1
naphthalene	<1.7	<40	<320	<1	<1.6	<2	<2	<2	<1
nitrobenzene	<2.0	<100	714	<1	<1.9	<5	<5	<5	<1
n-nitrosodimethylamine	<11	<200	<2000	<1	<10	<10	<10	<10	<1
n-nitrosodi-n-propylamine	<11	<120	<2000	<1	<10	<6	<6	<6	<1
n-nitrosodiphenylamine	<2.0	<1,640	<380	<1	<1.9	<82	11	<82	<1
phenanthrene	<5.7	<80	<1100	<1	<5.4	<4	<4	<4	<1
pyrene	<2.0	<100	<380	<1	<1.9	<5	<5	<5	<1
1,2,4-trichlorobenzene	<2.0	<140	<380	<1	<1.9	<7	<7	<7	<1
Sub Total 1	0	2170	1245	34	179.1	8	106	144	1

Table E-3. Summary of Base/Neutral Extractable Compounds in Ground Water, Monsanto Company, W.G. Krummrich Plant, Sauget, Il

Well Number:	P-6	P-7	P-7	P-8	P-8	P-10	P-11	P-12	P-13
Date:	11/85	6/84	11/85	6/84	11/85	9/84**	9/84**	9/84**	6/84
Miscellaneous Base/Neutral Extractable Organic Compounds concentrations are in ug/L									
2-nitroaniline	<11	NA	<2000	NA	<10	<25-30	<25-30	<25-30	NA
4-nitroaniline	<11	NA	<2000	NA	<10	<25-30	<25-30	<25-30	NA
2-nitrochlorobenzene	<11	NA	303,000	NA	<10	<10	<10	<10	NA
4-nitrochlorobenzene	<11	NA	75,000	NA	<10	<10	<10	<10	NA
2,4-and 3,4-dinitrochlorobenzene	<11	NA	<2000	NA	<10	<10	<10	<10	NA
4-nitrodiphenylamine	<11	NA	<2000	NA	<10	<10	<10	<10	NA
triphenyl phosphate	<11	NA	<2000	NA	<10	<10	<10	<10	NA
2,3,7,8-tetrachloro-dibenzo-p-dioxin	NA	NA	NA	NA	NA	NA	NA	NA	NA
2-nitrobiphenyl	NA	NA	NA	NA	NA	<10	<10	<10	NA
4-nitrobiphenyl	NA	NA	NA	NA	NA	<10	<10	<10	NA
Sub Total 2	0	NA	378000	NA	0	0	0	0	NA
Total Base/Neutral Compounds Analyzed	0	2170	379245	34	179.1	8	106	144	1

Table E-3. Summary of Base/Neutral Extractable Compounds in Ground Water, Monsanto Company, W.G. Krummrich Plant, Sauget, Il

Well Number:	P-13	P-13	P-13	P-14	P-14	DW-1	DW-1	DW-4	DW-7
Date:	6/84*	6/84#	11/85	6/84	11/85	9/84**	11/85	9/84**	11/85
USEPA Priority Pollutant Base/Neutral Extractable Organic Compounds concentrations are in ug/L									
acenaphthene	<1	<10	<1.9	<1	<2.0	<4	<1.9	<4	<1.9
acenapthylene	<1	<10	<3.5	<1	<3.6	<3	<3.5	<3	<3.5
anthracene	<1	<10	<1.9	<1	<2.0	<4	<1.9	<4	<1.9
benzidine	<1	<10	<44	<1	<45	<60	<44	<60	<44
benzo (a) anthracene	<1	<10	<7.8	<1	<8.0	<9	<7.8	<9	<7.8
benzo (a) pyrene	<1	<10	<2.5	<1	<2.6	<12	<2.5	<12	<2.5
benzo (b) fluoroanthene	<1	<10	<4.8	<1	<4.9	<11	<4.8	<11	<4.8
benzo (ghi) perylene	<1	<10	<4.1	<1	<4.2	<14	<4.1	<14	<4.1
benzo (k) fluoranthene	<1	<10	<3.5	<1	<3.6	<11	<3.5	<11	<3.5
bis (2-chloroethoxy) methane	<1	<10	<5.3	<1	<5.5	<4	<5.3	<4	<5.3
bis (2-chloroethyl) ether	<1	<10	<5.7	<1	<5.9	<4	<5.7	<4	<5.7
bis (2-chloroisopropyl) ether	<1	<10	<5.7	<1	<5.9	<3	<5.7	<3	<5.7
bis (2-ethylhexyl) phthalate	779	<10	<10	<1	<10	<10	<10	<10	<10
4-bromophenyl phenyl ether	<1	<10	<1.9	<1	<2	<16	<1.9	<16	<1.9
butyl benzyl phthalate	<1	<10	<10	<1	<10	<13	<10	<13	<10
2-chloronaphthalene	<1	<10	<1.9	<1	<2	<4	<1.9	<4	<1.9
4-chlorophenyl phenyl ether	<1	<10	<4.2	<1	<4.3	<9	<4.2	<9	<4.2
chrysene	<1	<10	<2.5	<1	<2.6	<9	<2.5	<9	<2.5
dibenzo (a,h) anthracene	<1	<10	<2.5	<1	<10	<16	<10	<16	<10
1,2-dichlorobenzene	<1	<10	<1.9	2	18.7	<5	195	64	123
1,3-dichlorobenzene	<1	<10	<1.9	<1	<2	<6	35.7	14	16.5
1,4-dichlorobenzene	4	<10	15.9	6	34	124	704	324	370
3,3-dichlorobenzidine	<1	<10	<17	<1	<17	<161	<17	<161	<17
diethyl phthalate	<1	<10	<10	<1	<10	<4	<10	<4	<10
dimethyl phthalate	<1	<10	<10	<1	<10	<4	<10	<4	76.6
di-n-butyl phthalate	16	<10	<10	2	<10	3	<10	3	<10
2,4-dinitrotoluene	<1	<10	<5.7	<1	<5.9	<14	<5.7	<14	<5.7
2,6-dinitrotoluene	<1	<10	<1.9	<1	<2.0	<16	<1.9	<16	<1.9
di-n-octyl phthalate	<1	<10	<10	<1	<10	<6	<10	<6	<10
1,2-diphenylhydrazine	<1	<10	<10	<1	<10	<10	<10	<10	<10
fluoranthene	<1	<10	<2.2	<1	<2.3	<5	<2.2	<5	<2.2
fluorene	<1	<10	<1.9	<1	<2.0	<4	<1.9	<4	<1.9
hexachlorobenzene	<1	<10	<1.9	<1	<2.0	<15	<1.9	<15	<1.9
hexachlorobutadiene	<1	<10	<0.9	<1	<0.9	<13	<0.9	<13	<0.9
hexachlorocyclopentadiene	<1	<10	<10	<1	<10	<12	<10	<12	<10
hexachloroethane	<1	<10	<1.6	<1	<1.6	<10	<1.6	<10	<1.6
indeno (1,2,3-c,d) pyrene	<1	<10	<4.7	<1	<4.8	<7	<4.7	<7	<4.7
isophorone	<1	<10	<2.2	<1	<2 3	<2	<2.2	<2	<2.2
naphthalene	<1	<10	<1.6	<1	2.9	<2	<1.6	<2	<1.6
nitrobenzene	<1	<10	<1.9	<1	<2.0	<5	<1.9	<5	<1.9
n-nitrosodimethylamine	<1	<10	<10	<1	<10	<10	<10	<10	<10
n-nitrosodi-n-propylamine	<1	<10	<10	<1	<10	<6	<10	<6	<10
n-nitrosodiphenylamine	<1	<10	4.9	<1	<2.0	<82	<1.9	6	<1.9
phenanthrene	1	<10	<5.4	<1	<5.6	<4	<5.4	<4	<5.4
pyrene	<1	<10	<1.9	<1	<2.0	<5	<1.9	<5	<1.9
1,2,4-trichlorobenzene	<1	<10	<1.9	<1	<2.0	<7	<1.9	<7	3.4
Sub Total 1	800	0	20.8	10	55.6	127	934.7	411	589.5

Table E-3. Summary of Base/Neutral Extractable Compounds in Ground Water, Monsanto Company, W.G. Krummrich Plant, Sauget, Il

Well Number:	P-13	P-13	P-13	P-14	P-14	DW-1	DW-1	DW-4	DW-7
Date:	6/84*	6/84#	11/85	6/84	11/85	9/84**	11/85	9/84**	11/85
Miscellaneous Base/Neutral Extractable Organic Compounds concentrations are in ug/L									
2-nitroaniline	NA	NA	<10	NA	<10	<25-30	<10	<25-30	<10
4-nitroaniline	NA	NA	<10	NA	<10	<25-30	<10	<25-30	1,090
2-nitrochlorobenzene	NA	NA	<10	NA	<10	<10	<10	<10	357
4-nitrochlorobenzene	NA	NA	<10	NA	<10	<10	<10	<10	<10
2,4-and 3,4-dinitrochlorobenzene	NA	NA	<10	NA	<10	<10	<10	<10	<10
4-nitrodiphenylamine	NA	NA	<10	NA	<10	<10	<10	<10	<10
triphenyl phosphate	NA	NA	<10	NA	<10	<10	<10	<10	<10
2,3,7,8-tetrachloro-dibenzo-p-dioxin	NA	NA	NA	NA	NA	NA	NA	NA	NA
2-nitrobiphenyl	NA	NA	NA	NA	NA	<10	NA	<10	NA
4-nitrobiphenyl	NA	NA	NA	NA	NA	<10	NA	<10	NA
Sub Total 2	NA	NA	0	0	0	0	0	0	1447
Total Base/Neutral Compounds Analyzed	800	0	20.8	10	55.6	127	934.7	411	2036.5

Table E-3. Summary of Base/Neutral Extractable Compounds in Ground Water, Monsanto Company, W.G. Krummrich Plant, Sauget, Il

Well Number:	DW-7	DW-10	DW-18	DW-18	DW-18	DW-23	DW-24	DW-24	DW-29
Date:	2/86	9/84**	9/84**	9/84*	11/85	9/84**	9/84**	9/84*	9/84**
USEPA Priority Pollutant Base/Neutral Extractable Organic Compounds concentrations are in ug/L									
acenaphthene	<1.9	<4	<4	NA	<2.0	<4	<4	<4	<4
acenapthylene	<3.6	<3	<3	NA	<3.7	<3	<3	<3	<3
anthracene	<1.9	<4	<4	NA	<2.0	<4	<4	<4	<4
benzidine	<45	<60	<60	NA	<46	<60	<60	<60	<60
benzo (a) anthracene	<8	<9	<9	NA	<8.2	<9	<9	<9	<9
benzo (a) pyrene	<2.6	<12	<12	NA	<2.6	<12	<12	<12	<12
benzo (b) fluoroanthene	<4.9	<11	<11	NA	<5.1	<11	<11	<11	<11
benzo (ghi) perylene	<4.2	<14	<14	NA	<4.3	<14	<14	<14	<14
benzo (k) fluoranthene	<3.6	<11	<11	NA	<3.7	<11	<11	<11	<11
bis (2-chloroethoxy) methane	<5.4	<4	<4	NA	<5.6	<4	<4	<4	<4
bis (2-chloroethyl) ether	<5.8	<4	<4	NA	<6.0	<4	<4	<4	<4
bis (2-chloroisopropyl) ether	<5.8	<3	<3	NA	<6.0	<3	<3	<3	<3
bis (2-ethylhexyl) phthalate	<10	<10	<10	NA	<11	188	<10	<10	<10
4-bromophenyl phenyl ether	<1.9	<16	<16	NA	<2	<16	<16	<16	<16
butyl benzyl phthalate	<10	<13	<13	NA	<11	<13	<13	<13	<13
2-chloronaphthalene	<1.9	<4	<4	NA	<2	<4	<4	<4	<4
4-chlorophenyl phenyl ether	<4.3	<9	<9	NA	<4.4	<9	<9	<9	<9
chrysene	<2.6	<9	<9	NA	<2.6	<9	<9	<9	<9
dibenzo (a,h) anthracene	<10	<16	<16	NA	<11	<16	<16	<16	<16
1,2-dichlorobenzene	20.7	965	1	NA	23.8	<5	<5	<5	<5
1,3-dichlorobenzene	<1.9	<6	<6	NA	<2	<6	<6	<6	<6
1,4-dichlorobenzene	37.9	<5	3	NA	71.9	<5	<5	<5	<5
3,3-dichlorobenzidine	<17	<161	<161	NA	<17	<161	<161	<161	<161
diethyl phthalate	<10	<4	<4	NA	<11	<4	<4	<4	<4
dimethyl phthalate	15.7	<4	<4	NA	<11	<4	<4	<4	<4
di-n-butyl phthalate	<10	<3	1	NA	<11	1	2	<3	3
2,4-dinitrotoluene	<5.8	<14	<14	NA	<6.0	<14	<14	<14	<14
2,6-dinitrotoluene	<1.9	<16	<16	NA	<2.0	<16	<16	<16	<16
di-n-octyl phthalate	<10	<6	<6	NA	<11	<6	<6	<6	<6
1,2-diphenylhydrazine	<10	<10	<10	NA	<11	<10	<10	<10	<10
fluoranthene	<2.2	<5	<5	NA	<2.3	<5	<5	<5	<5
fluorene	<1.9	<4	<4	NA	<2.0	<4	<4	<4	<4
hexachlorobenzene	<1.9	<15	<15	NA	<2.0	<15	<15	<15	<15
hexachlorobutadiene	<0.9	<13	<13	NA	<1.0	<13	<13	<13	<13
hexachlorocyclopentadiene	<10	<12	<12	NA	<11	<12	<12	<12	<12
hexachloroethane	<1.6	<10	<10	NA	<1.7	<10	<10	<10	<10
indeno (1,2,3-c,d) pyrene	<4.8	<7	<7	NA	<4.9	<7	<7	<7	<7
isophorone	<2.2	<2	<2	NA	<2.3	<2	<2	<2	<2
naphthalene	<1.6	<2	<2	NA	7.0	<2	<2	<2	<2
nitrobenzene	<1.9	<5	<5	NA	<2.0	<5	<5	<5	<5
n-nitrosodimethylamine	<10	<10	<10	NA	<11	<10	<10	<10	<10
n-nitrosodi-n-propylamine	<10	<6	<6	NA	<11	<6	<6	<6	<6
n-nitrosodiphenylamine	<1.9	42	<82	NA	3.7	<82	<82	<82	<82
phenanthrene	<5.5	<4	<4	NA	<5.7	<4	<4	<4	<4
pyrene	<1.9	<5	<5	NA	<2.0	<5	<5	<5	<5
1,2,4-trichlorobenzene	<1.9	<7	<7	NA	<2.0	<7	<7	<7	<7
Sub Total 1	74.3	1007	5	NA	106.4	189	2	0	3

Table E-3. Summary of Base/Neutral Extractable Compounds in Ground Water, Monsanto Company, W.G. Krummrich Plant, Sauget, Il

Well Number:	DW-7	DW-10	DW-18	DW-18	DW-18	DW-23	DW-24	DW-24	DW-29
Date:	2/86	9/84**	9/84**	9/84*	11/85	9/84**	9/84**	9/84*	9/84**
Miscellaneous Base/Neutral Extractable Organic Compounds concentrations are in ug/L									
2-nitroaniline	<10	<25-30	<25-30	NA	<11	<25-30	<25-30	<25-30	<25-30
4-nitroaniline	138	<25-30	<25-30	NA	<11	<25-30	<25-30	<25-30	<25-30
2-nitrochlorobenzene	<10	d)	<10	NA	<11	<10	<10	<10	<10
4-nitrochlorobenzene	<10	d)	<10	NA	<11	<10	<10	<10	<10
2,4-and 3,4-dinitrochlorobenzene	<10	<10	<10	NA	<11	<10	<10	<10	<10
4-nitrodiphenylamine	<10	<10	<10	NA	<11	<10	<10	<10	<10
triphenyl phosphate	<10	<10	<10	NA	<11	<10	<10	<10	<10
2,3,7,8-tetrachloro-dibenzo-p-dioxin	NA	NA	NA	NA	NA	NA	NA	NA	NA
2-nitrobiphenyl	NA	<10	<10	NA	NA	<10	<10	<10	<10
4-nitrobiphenyl	NA	<10	<10	NA	NA	<10	<10	<10	<10
Sub Total 2	138	0	0	NA	0	0	0	0	0
Total Base/Neutral Compounds Analyzed	212.3	1007	5	NA	106.4	189	2	0	3

Table E-3. Summary of Base/Neutral Extractable Compounds in Ground Water, Monsanto Company, W.G. Krummrich Plant, Sauget, Il

Well Number:	DW-29	DW-30	DW-33	DW-34	DW-34	DW-34	DW-1-85	DW-1-85	BK-3
Date:	9/84*	11/85	9/84**	9/84**	11/85	2/86	11/85	2/86	9/84**
USEPA Priority Pollutant Base/Neutral Extractable Organic Compounds concentrations are in ug/L									
acenaphthene	NA	<2.0	<4	<4	<3.8	<1.9	<3.8	<2.0	<4
acenapthylene	NA	<3.6	<3	<3	<7.0	<3.5	<7.0	<3.7	<3
anthracene	NA	<2.0	<4	<4	<3.8	<1.9	<3.8	<2.0	<4
benzidine	NA	<45	<60	<60	<88	<44	<88	<47	<60
benzo (a) anthracene	NA	<8.0	<9	<9	<16	<7.9	<16	<8.3	<9
benzo (a) pyrene	NA	<2.6	<12	<12	<5.0	<2.5	<5.0	<2.7	<12
benzo (b) fluoroanthene	NA	<4.9	<11	<11	<9.6	<4.8	<9.6	<5.1	<11
benzo (ghi) perylene	NA	<4.2	<14	<14	<8.2	<4.1	<8.2	<4.4	<14
benzo (k) fluoranthene	NA	<3.6	<11	<11	<7.0	<3.5	<7.0	<3.7	<11
bis (2-chloroethoxy) methane	NA	<5.5	<4	<4	<11	<5.4	<11	<5.6	<4
bis (2-chloroethyl) ether	NA	<5.9	<4	<4	<11	<5.8	<11	<6.1	<4
bis (2-chloroisopropyl) ether	NA	<5.9	<3	<3	<11	<5.8	<11	<6.1	<3
bis (2-ethylhexyl) phthalate	NA	<10	1	1	<20	<10	<20	<11	<10
4-bromophenyl phenyl ether	NA	<2	<16	<16	<3.8	<1.9	<3.8	<2	<16
butyl benzyl phthalate	NA	<10	<13	<13	<20	<10	<20	<11	<13
2-chloronaphthalene	NA	<2	<4	<4	<3.8	<1.9	<3.8	<2	<4
4-chlorophenyl phenyl ether	NA	<4.3	<9	<9	<8.4	<4.2	<8.4	<4.5	<9
chrysene	NA	<2.6	<9	<9	<5.0	<2.5	<5.0	<2.7	<9
dibenzo (a,h) anthracene	NA	<10	<16	<16	<20	<10	<20	<11	<16
1,2-dichlorobenzene	NA	8.4	<5	2	<3.8	<1.9	47.5	12.6	27
1,3-dichlorobenzene	NA	<2	<6	3	<3.8	<1.9	22.3	6.2	17
1,4-dichlorobenzene	NA	<4.5	<5	<5	<3.8	<4.4	515	255	128
3,3-dichlorobenzidine	NA	<17	<161	<161	<33	<17	<33	<18	<161
diethyl phthalate	NA	<10	<4	3	<20	<10	<20	<11	<4
dimethyl phthalate	NA	<10	<4	<4	<20	<10	<20	<11	<4
di-n-butyl phthalate	NA	<10	3	2	<20	<10	<20	<11	3
2,4-dinitrotoluene	NA	<5.9	<14	<14	<11	<5.8	<11	<6.1	<14
2,6-dinitrotoluene	NA	<2.0	<16	<16	<3.8	<1.9	<3.8	<2.0	<16
di-n-octyl phthalate	NA	<10	<6	<6	<20	<10	<20	<11	<6
1,2-diphenylhydrazine	NA	<10	<10	<10	<20	<10	<20	<11	<10
fluoranthene	NA	<2.3	<5	<5	<4.4	<2.2	<4.4	<2.3	<5
fluorene	NA	<2.0	<4	<4	<3.8	<1.9	<3.8	<2.0	<4
hexachlorobenzene	NA	<2.0	<15	<15	<3.8	<1.9	<3.8	<2.0	<15
hexachlorobutadiene	NA	<0.9	<13	<13	<1.8	<0.9	<1.8	<1.0	<13
hexachlorocyclopentadiene	NA	<10	<12	<12	<20	<10	<20	<11	<12
hexachloroethane	NA	<1.6	<10	<10	<3.2	<1.6	<3.2	<1.7	<10
indeno (1,2,3-c,d) pyrene	NA	<4.8	<7	<7	<9.4	<4.7	<9.4	<5	<7
isophorone	NA	<2.3	<2	<2	<4.4	<2.2	<4.4	<2.3	<2
naphthalene	NA	<1.6	<2	<2	<3.2	<1.6	<3.2	<1.7	<2
nitrobenzene	NA	<2.0	<5	<5	<3.8	<1.9	<3.8	<2.0	<5
n-nitrosodimethylamine	NA	<10	<10	<10	<20	<10	<20	<11	<10
n-nitrosodi-n-propylamine	NA	<10	<6	<6	<20	<10	<20	<11	<6
n-nitrosodiphenylamine	NA	<2.0	<82	<82	<3.8	<1.9	<3.8	<2.0	2
phenanthrene	NA	<5.6	<4	<4	<11	<5.5	<11	<5.7	<4
pyrene	NA	<2.0	<5	<5	<3.8	<1.9	<3.8	<2.0	<5
1,2,4-trichlorobenzene	NA	<2.0	<7	<7	<3.8	<1.9	<3.8	<2.0	<7
Sub Total 1	NA	8.4	4	11	0	0	584.8	273.8	177

Table E-3. Summary of Base/Neutral Extractable Compounds in Ground Water, Monsanto Company, W.G. Krummrich Plant, Sauget, Il

Well Number:	DW-29	DW-30	DW-33	DW-34	DW-34	DW-34	DW-1-85	DW-1-85	BK-3
Date:	9/84*	11/85	9/84**	9/84**	11/85	2/86	11/85	2/86	9/84**
Miscellaneous Base/Neutral Extractable Organic Compounds concentrations are in ug/L									
2-nitroaniline	NA	<10	<25-30	<25-30	<20	<10	<20	<11	<25-30
4-nitroaniline	NA	<10	<25-30	<25-30	<20	<10	<20	<11	<25-30
2-nitrochlorobenzene	NA	<10	<10	<10	<20	<10	<20	<11	<10
4-nitrochlorobenzene	NA	38.8	<10	<10	<20	<10	<20	<11	<10
2,4-and 3,4-dinitrochlorobenzene	NA	<10	<10	<10	<20	<10	<20	<11	<10
4-nitrodiphenylamine	NA	<10	<10	<10	<20	<10	<20	<11	<10
triphenyl phosphate	NA	<10	<10	<10	<20	<10	<20	<11	<10
2,3,7,8-tetrachloro-dibenzo-p-dioxin	NA	NA	NA	NA	NA	NA	NA	NA	NA
2-nitrobiphenyl	NA	NA	<10	<10	NA	NA	NA	NA	<10
4-nitrobiphenyl	NA	NA	<10	<10	NA	NA	NA	NA	<10
Sub Total 2	NA	38.8	0	0	0	0	0	0	0
Total Base/Neutral Compounds Analyzed	NA	47.2	4	11	0	0	584.8	273.8	177

Table E-3. Summary of Base/Neutral Extractable Compounds in Ground Water, Monsanto Company, W.G. Krummrich Plant, Sauget, Il

Well Number:	BK-3	BK-3	WB-6	WB-6	WB-6	WB-7	WB-7	Field Blank	Field Blank
Date:	11/85	2/86	9/84**	11/85	2/86	9/84	11/85	6/84	6/84
USEPA Priority Pollutant Base/Neutral Extractable Organic Compounds concentrations are in ug/L									
acenaphthene	<1.9	<1.9	<4	27.3	6.4	<4	5.1	<4	<1
acenapthylene	<3.5	<3.6	<3	<3.5	<3.6	<3	<3.6	<3	<1
anthracene	<1.9	<1.9	<4	<1.9	<2.0	<4	<2.0	<4	<1
benzidine	<44	<45	<60	<44	<46	<60	<45	<60	<1
benzo (a) anthracene	<7.9	<8.0	<9	<7.9	<8	<9	<8.0	<9	<1
benzo (a) pyrene	<2.5	<2.6	<12	<2.5	<2.6	<12	<2.6	<12	<1
benzo (b) fluoroanthene	<4.8	<4.9	<11	<4.8	<5	<11	<4.9	<11	<1
benzo (ghi) perylene	<4.1	<4.2	<14	<4.1	<4.3	<14	<4.2	<14	<1
benzo (k) fluoranthene	<3.5	<3.6	<11	<3.5	<3.6	<11	<3.6	<11	<1
bis (2-chloroethoxy) methane	<5.4	<5.4	<4	<5.4	<5.5	<4	<5.4	<4	<1
bis (2-chloroethyl) ether	<5.8	<5.8	<4	<5.8	<5.9	<4	<5.8	<4	<1
bis (2-chloroisopropyl) ether	<5.8	<5.8	<3	<5.8	<5.9	<3	<5.8	<3	<1
bis (2-ethylhexyl) phthalate	<10	<10	<10	<10	<10	<10	<10	<10	<1
4-bromophenyl phenyl ether	<1.9	<1.9	<16	<1.9	<2	<16	<1.9	<16	<1
butyl benzyl phthalate	<10	<10	<13	<10	<10	<13	<10	<13	<1
2-chloronaphthalene	<1.9	<1.9	<4	<1.9	<2	<4	<1.9	<4	<1
4-chlorophenyl phenyl ether	<4.2	<4.3	<9	<4.2	<4.4	<9	<4.3	<9	<1
chrysene	<2.5	<2.6	<9	<2.5	<2.6	<9	<2.6	<9	<1
dibenzo (a,h) anthracene	<10	<10	<16	<10	<10	<16	<10	<16	<1
1,2-dichlorobenzene	46.3	3.6	<5	<1.9	<2	<5	<1.9	<5	<1
1,3-dichlorobenzene	26.1	3.4	<6	<1.9	<2	<6	<1.9	<6	<1
1,4-dichlorobenzene	211	100	<5	<4.4	<4.6	<5	<4.5	<5	<1
3,3-dichlorobenzidine	<17	<17	<161	<17	<17	<161	<17	<161	<1
diethyl phthalate	<10	<10	<4	<10	<10	<4	<10	<4	<1
dimethyl phthalate	<10	<10	<4	<10	<10	<4	<10	<4	<1
di-n-butyl phthalate	<10	<10	2	<10	<10	3	<10	<3	<1
2,4-dinitrotoluene	<5.8	<5.8	<14	<5.8	<5.9	<14	<5.8	<14	<1
2,6-dinitrotoluene	<1.9	<1.9	<16	<1.9	<2.0	<16	<1.9	<16	<1
di-n-octyl phthalate	<10	<10	<6	<10	<10	<6	<10	<6	<1
1,2-diphenylhydrazine	<10	<10	<10	<10	<10	<10	<10	<10	<1
fluoranthene	<2.2	<2.2	<5	<2.2	<2.3	<5	<2.2	<5	<1
fluorene	<1.9	<1.9	<4	<1.9	<2.0	<4	<1.9	<4	<1
hexachlorobenzene	<1.9	<1.9	<15	<1.9	<2.0	<15	<1.9	<15	<1
hexachlorobutadiene	<0.9	<0.92	<13	<0.9	<0.9	<13	<0.9	<13	<1
hexachlorocyclopentadiene	<10	<10	<12	<10	<10	<12	<10	<12	<1
hexachloroethane	<1.6	<1.6	<10	<1.6	<1.7	<10	<1.6	<10	<1
indeno (1,2,3-c,d) pyrene	<4.7	<4.8	<7	<4.7	<4.9	<7	<4.8	<7	<1
isophorone	<2.2	<2.2	<2	<2.2	<2.3	<2	<2.2	<2	<1
naphthalene	17.5	14.4	<2	1,080	1,140	<2	<1.6	<2	<1
nitrobenzene	<1.9	<1.9	<5	<1.9	<2.0	<5	<1.9	<5	<1
n-nitrosodimethylamine	<10	<10	<10	<10	<10	<10	<10	<10	<1
n-nitrosodi-n-propylamine	<10	<10	<6	<10	<10	<6	<10	<6	<1
n-nitrosodiphenylamine	3.8	<1.9	<82	<1.9	<2.0	<82	<1.9	<82	<1
phenanthrene	<5.5	<5.5	<4	<5.5	<5.6	<4	<5.5	<4	<1
pyrene	<1.9	<1.9	<5	<1.9	<2.0	<5	<1.9	<5	<1
1,2,4-trichlorobenzene	<1.9	<1.9	<7	<1.9	<2.0	<7	<1.9	<7	<1
Sub Total 1	304.7	273.8	2	1107.3	1146.4	3	5.1	0	0

Table E-3. Summary of Base/Neutral Extractable Compounds in Ground Water, Monsanto Company, W.G. Krumerich Plant, Sauget, Il

Well Number:	BK-3	BK-3	WB-6	WB-6	WB-6	WB-7	WB-7	Field Blank	Field Blank
Date:	11/85	2/86	9/84**	11/85	2/86	9/84	11/85	6/84	6/84
Miscellaneous Base/Neutral Extractable Organic Compounds concentrations are in ug/L									
2-nitroaniline	<10	<10	<25-30	<10	<10	<25-30	<10	NA	NA
4-nitroaniline	<10	<10	<25-30	<10	<10	<25-30	<10	NA	NA
2-nitrochlorobenzene	<10	<10	<10	<10	<10	<10	<10	NA	NA
4-nitrochlorobenzene	<10	<10	<10	<10	<10	<10	<10	NA	NA
2,4-and 3,4-dinitrochlorobenzene	<10	<10	<10	<10	<10	<10	<10	NA	NA
4-nitrodiphenylamine	<10	<10	<10	<10	<10	<10	<10	NA	NA
triphenyl phosphate	<10	<10	<10	<10	<10	<10	<10	NA	NA
2,3,7,8-tetrachloro-dibenzo-p-dioxin	NA	NA	<10	NA	NA	NA	NA	NA	NA
2-nitrobiphenyl	NA	NA	<10	NA	NA	<10	NA	NA	NA
4-nitrobiphenyl	NA	NA	<10	NA	NA	<10	NA	NA	NA
Sub Total 2	0	0	0	0	0	0	0	NA	NA
Total Base/Neutral Compounds Analyzed	304.7	273.8	2	1107.3	1146.4	3	5.1	0	0

Table E-3. Summary of Base/Neutral Extractable Compounds in Ground Water, Monsanto Company, W.G. Krummrich Plant, Sauget, Il

Well Number:	Trip Blank	Trip Blank	Trip Blank	Lab Blank	Lab Blank	Lab Blank	Lab Blank	Lab Blank	Lab Blank
Date:	5/84	6/84	9/84	11/83	11/83	5/84	5/84	9/84	9/84
USEPA Priority Pollutant Base/Neutral Extractable Organic Compounds concentrations are in ug/L									
acenaphthene	<1	<4	<4	<1	<1	<1	<1	<4	<4
acenapthylene	<1	<3	<3	<1	<1	<1	<1	<3	<3
anthracene	<1	<4	<4	<1	<1	<1	<1	<4	<4
benzidine	<1	<60	<60	<1	<1	<1	<1	<60	<60
benzo (a) anthracene	<1	<9	<9	<1	<1	<1	<1	<9	<9
benzo (a) pyrene	<1	<12	<12	<1	<1	<1	<1	<12	<12
benzo (b) fluoroanthene	<1	<11	<11	<1	<1	<1	<1	<11	<11
benzo (ghi) perylene	<1	<14	<14	<1	<1	<1	<1	<14	<14
benzo (k) fluoranthene	<1	<11	<11	<1	<1	<1	<1	<11	<11
bis (2-chloroethoxy) methane	<1	<4	<4	<1	<1	<1	<1	<4	<4
bis (2-chloroethyl) ether	<1	<4	<4	<1	<1	<1	<1	<4	<4
bis (2-chloroisopropyl) ether	<1	<3	<3	<1	<1	<1	<1	<3	<3
bis (2-ethylhexyl) phthalate	<1	<10	<10	<1	<1	3	1	1	4
4-bromophenyl phenyl ether	<1	<16	<16	<1	<1	<1	<1	<16	<16
butyl benzyl phthalate	<1	<13	<13	<1	<1	<1	<1	<13	<13
2-chloronaphthalene	<1	<4	<4	<1	<1	<1	<1	<4	<4
4-chlorophenyl phenyl ether	<1	<9	<9	<1	<1	<1	<1	<9	<9
chrysene	<1	<9	<9	<1	<1	<1	<1	<9	<9
dibenzo (a,h) anthracene	<1	<16	<16	<1	<1	<1	<1	<16	<16
1,2-dichlorobenzene	<1	<5	<5	<1	<1	<1	<1	<5	<5
1,3-dichlorobenzene	<1	<6	<6	<1	<1	<1	<1	<6	<6
1,4-dichlorobenzene	<1	<5	<5	<1	<1	<1	<1	<5	<5
3,3-dichlorobenzidine	<1	<161	<161	<1	<1	<1	<1	<161	<161
diethyl phthalate	<1	<4	<4	<1	<1	1	1	<4	<4
dimethyl phthalate	<1	<4	<4	<1	<1	<1	<1	<4	<4
di-n-butyl phthalate	<1	<3	4	1	<1	<1	2	6	4
2,4-dinitrotoluene	<1	<14	<14	<1	<1	<1	<1	<14	<14
2,6-dinitrotoluene	<1	<16	<16	<1	<1	<1	<1	<16	<16
di-n-octyl phthalate	<1	<6	<6	<1	<1	<1	<1	<6	<6
1,2-diphenylhydrazine	<1	<10	<10	<1	<1	<1	<1	<10	<10
fluoranthene	<1	<5	<5	<1	<1	<1	<1	<5	<5
fluorene	<1	<4	<4	<1	<1	<1	<1	<4	<4
hexachlorobenzene	<1	<15	<15	<1	<1	<1	<1	<15	<15
hexachlorobutadiene	<1	<13	<13	<1	<1	<1	<1	<13	<13
hexachlorocyclopentadiene	<1	<12	<12	<1	<1	<1	<1	<12	<12
hexachloroethane	<1	<10	<10	<1	<1	<1	<1	<10	<10
indeno (1,2,3-c,d) pyrene	<1	<7	<7	<1	<1	<1	<1	<7	<7
isophorone	<1	<2	<2	<1	<1	<1	<1	<2	<2
naphthalene	<1	<2	<2	<1	<1	<1	<1	<2	<2
nitrobenzene	<1	<5	<5	<1	<1	<1	<1	<5	<5
n-nitrosodimethylamine	<1	<10	<10	<1	<1	<1	<1	<10	<10
n-nitrosodi-n-propylamine	<1	<6	<6	<1	<1	<1	<1	<6	<6
n-nitrosodiphenylamine	<1	<82	<82	<1	<1	<1	<1	<82	<82
phenanthrene	<1	<4	<4	<1	<1	<1	<1	<4	<4
pyrene	<1	<5	<5	<1	<1	<1	<1	<5	<5
1,2,4-trichlorobenzene	<1	<7	<7	<1	<1	<1	<1	<7	<7
Sub Total 1	0	0	4	1	0	4	4	7	8

Table E-3. Summary of Base/Neutral Extractable Compounds in Ground Water, Monsanto Company, W.G. Krummrich Plant, Sauget, Il

Well Number:	Trip Blank	Trip Blank	Trip Blank	Lab Blank	Lab Blank	Lab Blank	Lab Blank	Lab Blank	Lab Blank
Date:	5/84	6/84	9/84	11/83	11/83	5/84	5/84	9/84	9/84
Miscellaneous Base/Neutral Extractable Organic Compounds concentrations are in ug/L									
2-nitroaniline	NA	NA	NA	NA	NA	NA	NA	<25-30	<25-30
4-nitroaniline	NA	NA	NA	NA	NA	NA	NA	<25-30	<25-30
2-nitrochlorobenzene	NA	NA	NA	NA	NA	NA	NA	<10	<10
4-nitrochlorobenzene	NA	NA	NA	NA	NA	NA	NA	<10	<10
2,4-and 3,4-dinitrochlorobenzene	NA	NA	NA	NA	NA	NA	NA	<10	<10
4-nitrodiphenylamine	NA	NA	NA	NA	NA	NA	NA	<10	<10
triphenyl phosphate	NA	NA	NA	NA	NA	NA	NA	<10	<10
2,3,7,8-tetrachloro-dibenzo-p-dioxin	NA	NA	NA	NA	NA	NA	NA	NA	NA
2-nitrobiphenyl	NA	NA	NA	NA	NA	NA	NA	NA	NA
4-nitrobiphenyl	NA	NA	NA	NA	NA	NA	NA	NA	NA
Sub Total 2	NA	NA	NA	NA	NA	NA	NA	0	0
Total Base/Neutral Compounds Analyzed	0	0	4	1	0	4	4	7	8

Table E-3. Summary of Base/Neutral Extractable Compounds in Ground Water, Monsanto Company, W.G. Krummrich Plant, Sauget, Il

Well Number:	Lab Blank	Lab Blank
Date:	9/84	9/84
USEPA Priority Pollutant Base/Neutral Extractable Organic Compounds concentrations are in ug/L		
acenaphthene	<4	<4
acenapthylene	<3	<3
anthracene	<4	<4
benzidine	<60	<60
benzo (a) anthracene	<9	<9
benzo (a) pyrene	<12	<12
benzo (b) fluoroanthene	<11	<11
benzo (ghi) perylene	<14	<14
benzo (k) fluoranthene	<11	<11
bis (2-chloroethoxy) methane	<4	<4
bis (2-chloroethyl) ether	<4	<4
bis (2-chloroisopropyl) ether	<3	<3
bis (2-ethylhexyl) phthalate	<10	<10
4-bromophenyl phenyl ether	<16	<16
butyl benzyl phthalate	<13	<13
2-chloronaphthalene	<4	<4
4-chlorophenyl phenyl ether	<9	<9
chrysene	<9	<9
dibenzo (a,h) anthracene	<16	<16
1,2-dichlorobenzene	<5	<5
1,3-dichlorobenzene	<6	<6
1,4-dichlorobenzene	<5	<5
3,3-dichlorobenzidine	<161	<161
diethyl phthalate	<4	<4
dimethyl phthalate	<4	<4
di-n-butyl phthalate	23	<3
2,4-dinitrotoluene	<14	<14
2,6-dinitrotoluene	<16	<16
di-n-octyl phthalate	<6	<6
1,2-diphenylhydrazine	<10	<10
fluoranthene	<5	<5
fluorene	<4	<4
hexachlorobenzene	<15	<15
hexachlorobutadiene	<13	<13
hexachlorocyclopentadiene	<12	<12
hexachloroethane	<10	<10
indeno (1,2,3-c,d) pyrene	<7	<7
isophorone	<2	<2
naphthalene	<2	<2
nitrobenzene	<5	<5
n-nitrosodimethylamine	<10	<10
n-nitrosodi-n-propylamine	<6	<6
n-nitrosodiphenylamine	<82	<82
phenanthrene	<4	<4
pyrene	<5	<5
1,2,4-trichlorobenzene	<7	<7
Sub Total 1	23	0

Table E-3. Summary of Base/Neutral Extractable Compounds in Ground Water, Monsanto Company, W.G. Krummrich Plant, Sauget, Il

Well Number:	Lab Blank	Lab Blank
Date:	9/84	9/84
Miscellaneous Base/Neutral Extractable Organic Compounds concentrations are in ug/L		
2-nitroaniline	<25-30	<25-30
4-nitroaniline	<25-30	<25-30
2-nitrochlorobenzene	<10	<10
4-nitrochlorobenzene	<10	<10
2,4-and 3,4-dinitrochlorobenzene	<10	<10
4-nitrodiphenylamine	<10	<10
triphenyl phosphate	<10	<10
2,3,7,8-tetrachloro-dibenzo-p-dioxin	NA	NA
2-nitrobiphenyl	NA	NA
4-nitrobiphenyl	NA	NA
Sub Total 2	0	0
Total Base/Neutral Compounds Analyzed	23	0

NA - Not analyzed.
* - Replicate Analyses
** - Prior to analysis, this sample was held by Envirodyne Engineers, Inc. longer than the maximum allowable USEPA holding time.
\# - Replicate analysis was performed by ETC.
a) - This sample was collected (unfiltered) for nitrobiphenyl analysis.
b) - This sample was collected (filtered) for nitrobiphenyl analysis.
c) - Envirodyne Engineers, Inc. reported 16 ug/L; however the result did not differentiate between the nitrochlorobenzene compounds.
d) - Envirodyne Engineers, Inc. reported 228 ug/L; however the result did not differentiate between the nitrochlorobenzene compounds.
e) - ETC reported 124,000 ug/L for 2-NCB, 3-NCB, and 4-NCB. The laboratory could not distinguish between these compounds, however they occur in roughly equal proportions.
< - Indicates that the compound was not detected at the detection limit which is the value shown next to the symbol.

Table E-4. Summary of Pesticide/PCB Compounds in Ground Water, Monsanto Company, W.B. Krummrich Plant, Sauget, Illinois. ***

Well Number:	GM-1	GM-1	GM-2	GM-2	GM-3	GM-3	GM-3	GM-4A	GM-4A	GM-4B
Date:	11/83	5/84	11/83	5/84	11/83	5/84	5/84*	11/83	5/84	9/84
USEPA Priority Pollutant Pesticide/PCB Compounds concentrations are in ug/L										
aldrin	<1	<1	<1	<1	<1	<1	<1	<1	<1	<0.04
alpha-BHC	<1	<1	<1	<1	<1	<1	<1	<1	<1	<0.02
beta-BHC	<1	<1	<1	<1	<1	<1	<1	<1	<1	<0.05
gamma-BHC	<1	<1	<1	<1	<1	<1	<1	<1	<1	<0.03
delta-BHC	<1	<1	<1	<1	<1	<1	<1	<1	<1	<0.04
chlordane	<1	<1	<1	<1	<1	<1	<1	<1	<1	<0.61
4,4'-DDT	<1	<1	<1	<1	<1	<1	<1	<1	<1	<0.96
4,4'-DDE	<1	<1	<1	<1	<1	<1	<1	<1	<1	<0.07
4,4'-DDD	<1	<1	<1	<1	<1	<1	<1	<1	<1	<0.07
dieldrin	<1	<1	<1	<1	<1	<1	<1	<1	<1	<0.007
endosulfan I	<1	<1	<1	<1	<1	<1	<1	<1	<1	<0.006
endosulfan II	<1	<1	<1	<1	<1	<1	<1	<1	<1	<0.1
endosulfan sulfate	<1	<1	<1	<1	<1	<1	<1	<1	<1	<0.15
endrin	<1	<1	<1	<1	<1	<1	<1	<1	<1	<0.20
endrin aldehyde	<1	<1	<1	<1	<1	<1	<1	<1	<1	<0.022
heptachlor	<1	<1	<1	<1	<1	<1	<1	<1	<1	<0.04
heptachlor epoxide	<1	<1	<1	<1	<1	<1	<1	<1	<1	<0.05
PCB-1016	<1	<1	<1	<1	<1	<1	<1	<1	<1	<0.34
PCB-1221	<1	<1	<1	<1	<1	<1	<1	<1	<1	<1.33
PCB-1232	<1	<1	<1	<1	<1	<1	<1	<1	<1	<0.62
PCB-1242	<1	<1	<1	<1	<1	<1	<1	<1	<1	<0.82
PCB-1248	<1	<1	<1	<1	<1	<1	<1	<1	<1	<0.86
PCB-1254	<1	<1	<1	<1	<1	<1	<1	<1	<1	<1.23
PCB-1260	<1	<1	<1	<1	<1	<1	<1	<1	<1	<1.74
toxaphene	<1	<1	<1	<1	<1	<1	<1	<1	<1	<6.94
Total Pesticide/PCB Compounds	0	0	0	0	0	0	0	0	0	0

Table E-4. Summary of Pesticide/PCB Compounds in Ground Water, Monsanto Company, W.G. Krummrich Plant, Sauget, Illinois. ***

Well Number:	GM-4B	GM-4B	GM-4B	GM-4C	GM-4C	GM-5	GM-5	GM-6A	GM-6A	GM-6A
Date:	11/84	11/84*	2/85	2/85	5/85	11/83	5/84	11/83	5/84	11/84
USEPA Priority Pollutant Pesticide/PCB Compounds concentrations are in ug/L										
aldrin	<10	<10	<1.9	<2	<1.9	<1	<1	<10	<1	<10
alpha-BHC	<10	<10	<10	<10	<10	<1	<1	<10	<1	<10
beta-BHC	<10	<10	<4.2	<4	<4.2	<1	<1	<10	<1	<10
gamma-BHC	<10	<10	<10	<10	<10	<1	<1	<10	<1	<10
delta-BHC	<10	<10	<3.1	<3	<3.1	<1	<1	<10	<1	<10
chlordane	<10	<10	<10	<10	<10	<1	<1	<10	<1	<10
4,4'-DDT	<10	<10	<4.7	<5	<4.7	<1	<1	<10	<1	<10
4,4'-DDE	<10	<10	<5.6	<6	<5.6	<1	<1	<10	<1	<10
4,4'-DDD	<10	<10	<2.8	<3	<2.8	<1	<1	<10	<1	<10
dieldrin	<10	<10	<2.5	<3	<2.5	<1	<1	<10	<1	<10
endosulfan I	<10	<10	<10	<10	<10	<1	<1	<10	<1	<10
endosulfan II	<10	<10	<10	<10	<10	<1	<1	<10	<1	<10
endosulfan sulfate	<10	<10	<5.6	<6	<5.6	<1	<1	<10	<1	<10
endrin	<10	<10	<10	<10	<10	<1	<1	<10	<1	<10
endrin aldehyde	<10	<10	<10	<10	<10	<1	<1	<10	<1	<10
heptachlor	<10	<10	<1.9	<2	<1.9	<1	<1	<10	<1	<10
heptachlor epoxide	<10	<10	<2.2	<2	<2.2	<1	<1	<10	<1	<10
PCB-1016	<10	<10	<36	<36	<36	<1	<1	<10	<1	<10
PCB-1221	<10	<10	<30	<30	<30	<1	<1	<10	<1	<10
PCB-1232	<10	<10	<36	<36	<36	<1	<1	<10	<1	<10
PCB-1242	<10	<10	<36	<36	<36	<1	<1	<10	<1	<10
PCB-1248	<10	<10	<36	<36	<36	<1	<1	<10	<1	<10
PCB-1254	<10	<10	<36	<36	<36	<1	<1	<10	<1	<10
PCB-1260	<10	<10	<36	<36	<36	<1	<1	<10	<1	<10
toxaphene	<10	<10	<10	<10	<10	<1	<1	<10	<1	<10
Total Pesticide/PCB Compounds	0	0	0	0	0	0	0	0	0	0

Table E-4. Summary of Pesticide/PCB Compounds in Ground Water, Monsanto Company, W.G. Krummrich Plant, Sauget, Illinois. ***

Well Number:	GM-6B	GM-6B	GM-6B	GM-7	GM-7	GM-8	GM-8	GM-8	GM-8	GM-9A
Date:	9/84**	11/84	11/85	11/83	5/84	11/83	5/84	11/84	2/85	11/83
USEPA Priority Pollutant Pesticide/PCB Compounds concentrations are in ug/L										
aldrin	<0.004	<10	<1.9	<1	<1	<1	<1	<10	<2	<1
alpha-BHC	<0.002	<10	<10	<1	<1	<1	<1	<10	<10	<1
beta-BHC	<0.005	<10	<4.4	<1	<1	<1	<1	<10	<4	<1
gamma-BHC	<0.003	<10	<10	<1	<1	<1	<1	<10	<10	<1
delta-BHC	<0.004	<10	<3.1	<1	<1	<1	<1	<10	<3	<1
chlordane	<0.061	<10	<10	<1	<1	<1	<1	<10	<10	<1
4,4'-DDT	<0.096	<10	<2.8	<1	<1	<1	<1	<10	<5	<1
4,4'-DDE	<0.007	<10	<5.6	<1	<1	<1	<1	<10	<6	<1
4,4'-DDD	<0.007	<10	<4.7	<1	<1	<1	<1	<10	<3	<1
dieldrin	<0.007	<10	<2.5	<1	<1	<1	<1	<10	<3	<1
endosulfan I	<0.006	<10	<10	<1	<1	<1	<1	<10	<10	<1
endosulfan II	<0.011	<10	<10	<1	<1	<1	<1	<10	<10	<1
endosulfan sulfate	<0.042	<10	<5.6	<1	<1	<1	<1	<10	<6	<1
endrin	<0.02	<10	<10	<1	<1	<1	<1	<10	<10	<1
endrin aldehyde	<0.022	<10	<10	<1	<1	<1	<1	<10	<10	<1
heptachlor	<0.004	<10	<1.9	<1	<1	<1	<1	<10	<2	<1
heptachlor epoxide	<0.005	<10	<2.2	<1	<1	<1	<1	<10	<2	<1
PCB-1016	<0.034	<10	<36	<1	<1	<1	<1	<10	<36	<1
PCB-1221	<0.133	<10	<30	<1	<1	<1	<1	<10	<30	<1
PCB-1232	<0.062	<10	<36	<1	<1	<1	<1	<10	<36	<1
PCB-1242	<0.082	<10	<36	<1	<1	<1	<1	<10	<36	<1
PCB-1248	<0.086	<10	<36	<1	<1	<1	<1	<10	<36	<1
PCB-1254	<0.123	<10	<36	<1	<1	<1	<1	<10	<36	<1
PCB-1260	<0.174	<10	<36	<1	<1	<1	<1	<10	<36	<1
toxaphene	<0.694	<10	<10	<1	<1	<1	<1	<10	<10	<1
Total Pesticide/PCB Compounds	0	0	0	0	0	0	0	0	0	0

Table E-4. Summary of Pesticide/PCB Compounds in Ground Water, Monsanto Company, W.G. Krummrich Plant, Sauget, Illinois. ***

Well Number:	GM-9A	GM-9B	GM-9B	GM-9C	GM-9C	GM-10A	GM-10A	GM-10B	GM-10B	GM-10C
Date:	5/84	9/84	5/85	9/84	5/85	11/83	5/84	2/85	5/85	2/85
USEPA Priority Pollutant Pesticide/PCB Compounds concentrations are in ug/L										
aldrin	<1	<0.004	<1.9	<0.004	<1.9	<1	<1	<2.1	<1.9	<2
alpha-BHC	<1	0.012	<10	<0.002	<10	<1	<1	<11	<10	<10
beta-BHC	<1	<0.005	<4.2	<0.005	<4.2	<1	<1	<4.6	<4.2	<4
gamma-BHC	<1	<0.006	<10	0.003	<10	<1	<1	<11	<10	<10
delta-BHC	<1	<0.004	<3.1	<0.004	<3.1	<1	<1	<3.4	<3.1	<3
chlordane	<1	<0.061	<10	<0.061	<10	<1	<1	<11	<10	<10
4,4'-DDT	<1	<0.096	<4.7	<0.096	<4.7	<1	<1	<5.2	<4.7	<5
4,4'-DDE	<1	<0.007	<5.6	<0.007	<5.6	<1	<1	<6.2	<5.6	<6
4,4'-DDD	<1	<0.007	<2.8	<0.007	<2.8	<1	<1	<3.1	<2.8	<3
dieldrin	<1	<0.07	<2.5	<0.007	<2.5	<1	<1	<2.8	<2.5	<3
endosulfan I	<1	<0.06	<10	<0.006	<10	<1	<1	<11	<10	<10
endosulfan II	<1	<0.11	<10	<0.011	<10	<1	<1	<11	<10	<10
endosulfan sulfate	<1	<0.42	<5.6	<0.042	<5.6	<1	<1	<6.2	<5.6	<6
endrin	<1	<0.20	<10	<0.02	<10	<1	<1	<11	<10	<10
endrin aldehyde	<1	<0.22	<10	<0.022	<10	<1	<1	<11	<10	<10
heptachlor	<1	<0.004	<1.9	<0.004	<1.9	<1	<1	<2.1	<1.9	<2
heptachlor epoxide	<1	<0.005	<2.2	<0.004	<2.2	<1	<1	<2.4	<2.2	<2
PCB-1016	<1	<0.034	<36	<0.034	<36	<1	<1	<39.6	<36	<36
PCB-1221	<1	<0.133	<30	<0.133	<30	<1	<1	<33	<30	<30
PCB-1232	<1	<0.062	<36	<0.062	<36	<1	<1	<39.6	<36	<36
PCB-1242	<1	<0.082	<36	<0.082	<36	<1	<1	<39.6	<36	<36
PCB-1248	<1	<0.086	<36	<0.086	<36	<1	<1	<39.6	<36	<36
PCB-1254	<1	<0.123	<36	<0.123	<36	<1	<1	<39.6	<36	<36
PCB-1260	<1	<0.174	<36	<0.174	<36	<1	<1	<39.6	<36	<36
toxaphene	<1	<0.694	<10	<0.694	<10	<1	<1	<10	<10	<10
Total Pesticide/PCB Compounds	0	0.012	0	0.003	0	0	0	0	0	0

Table E-4. Summary of Pesticide/PCB Compounds in Ground Water, Monsanto Company, W.G. Krummrich Plant, Sauget, Illinois. ***

Well Number:	GM-10C	GM-11	GM-11	GM-12A	GM-12A	GM-12A	GM-12A	GM-12A	GM-12A	GM-12A
Date:	5/85	11/83	5/84	11/83	11/83*	5/84	5/84*	11/84	11/84*	2/85
USEPA Priority Pollutant Pesticide/PCB Compounds concentrations are in ug/L										
aldrin	<1.9	<1	<1	<1	<1	<1	<1	<10	<10	<1.9
alpha-BHC	<10	<1	<1	<1	<1	<1	<1	<10	<10	<10
beta-BHC	<4.2	<1	<1	<1	<1	<1	<1	<10	<10	<4.2
gamma-BHC	<10	<1	<1	<1	<1	<1	<1	<10	<10	<10
delta-BHC	<3.1	<1	<1	<1	<1	<1	<1	<10	<10	<3.1
chlordane	<10	<1	<1	<1	<1	<1	<1	<10	<10	<10
4,4'-DDT	<4.7	<1	<1	<1	<1	<1	<1	<10	<10	<4.7
4,4'-DDE	<5.6	<1	<1	<1	<1	<1	<1	<10	<10	<5.6
4,4'-DDD	<2.8	<1	<1	<1	<1	<1	<1	<10	<10	<2.8
dieldrin	<2.5	<1	<1	<1	<1	<1	<1	<10	<10	<2.5
endosulfan I	<10	<1	<1	<1	<1	<1	<1	<10	<10	<10
endosulfan II	<10	<1	<1	<1	<1	<1	<1	<10	<10	<10
endosulfan sulfate	<5.6	<1	<1	<1	<1	<1	<1	<10	<10	<5.6
endrin	<10	<1	<1	<1	<1	<1	<1	<10	<10	<10
endrin aldehyde	<10	<1	<1	<1	<1	<1	<1	<10	<10	<10
heptachlor	<1.9	<1	<1	<1	<1	<1	<1	<10	<10	<1.9
heptachlor epoxide	<2.2	<1	<1	<1	<1	<1	<1	<10	<10	<2.2
PCB-1016	<36	<1	<1	<1	<1	<1	<1	<10	<10	<36
PCB-1221	<30	<1	<1	<1	<1	<1	<1	<10	<10	<30
PCB-1232	<36	<1	<1	<1	<1	<1	<1	<10	<10	<36
PCB-1242	<36	<1	<1	<1	<1	<1	<1	<10	<10	<36
PCB-1248	<36	<1	<1	<1	<1	<1	<1	<10	<10	<36
PCB-1254	<36	<1	<1	<1	<1	<1	<1	<10	<10	<36
PCB-1260	<36	<1	<1	<1	<1	<1	<1	<10	<10	<36
toxaphene	<10	<1	<1	<1	<1	<1	<1	<10	<10	<10
Total Pesticide/PCB Compounds	0	0	0	0	0	0	0	0	0	0

Table E-4. Summary of Pesticide/PCB Compounds in Ground Water, Monsanto Company, W.G. Krummrich Plant, Sauget, Illinois. ***

Well Number:	GM-12A	GM-12A	GM-12A	GM-12A	GM-12A	GM-12B	GM-12B	GM-12C	GM-12C	GM-12C
Date:	2/85*	5/85	5/85*	2/86	2/86*	9/84	11/84	2/85	2/85*	5/85
USEPA Priority Pollutant Pesticide/PCB Compounds concentrations are in ug/L										
aldrin	<1.9	<1.9	<1.9	<2	<1.9	<0.02	<10	<1.9	<1.9	<1.9
alpha-BHC	<10	<10	<10	<11	<10	<0.01	<10	<10	<10	<10
beta-BHC	<4.2	<4.2	<4.2	<4.7	<4.4	<0.025	<10	<4.2	<4.2	<4.2
gamma-BHC	<10	<10	<10	<11	<10	<0.015	<10	<10	<10	<10
delta-BHC	<3.1	<3.1	<3.1	<3.3	<3.1	<0.02	<10	<3.1	<3.1	<3.1
chlordane	<10	<10	<10	<11	<10	<0.305	<10	<10	<10	<10
4,4'-DDT	<4.7	<4.7	<4.7	<3	<2.8	<0.48	<10	<4.7	<4.7	<4.7
4,4'-DDE	<5.6	<5.6	<5.6	<6	<5.7	<0.035	<10	<5.6	<5.6	<5.6
4,4'-DDD	<2.8	<2.8	<2.8	<5	<4.7	<0.035	<10	<2.8	<2.8	<2.8
dieldrin	<2.5	<2.5	<2.5	<2.7	<2.5	<0.007	<10	<2.5	<2.5	<2.5
endosulfan I	<10	<10	<10	<11	<10	<0.006	<10	<10	<10	<10
endosulfan II	<10	<10	<10	<11	<10	<0.011	<10	<10	<10	<10
endosulfan sulfate	<5.6	<5.6	<5.6	<6	<5.7	<0.042	<10	<5.6	<5.6	<5.6
endrin	<10	<10	<10	<11	<10	<0.02	<10	<10	<10	<10
endrin aldehyde	<10	<10	<10	<11	<10	<0.022	<10	<10	<10	<10
heptachlor	<1.9	<1.9	<1.9	<2	<1.9	<0.02	<10	<1.9	<1.9	<1.9
heptachlor epoxide	<2.2	<2.2	<2.2	<2.3	<2.2	<0.025	<10	<2.2	<2.2	<2.2
PCB-1016	<36	<36	<36	<38	<36	<0.17	<10	<36	<36	<36
PCB-1221	<30	<30	<30	<32	<30	<0.665	<10	<30	<30	<30
PCB-1232	<36	<36	<36	<38	<36	<0.31	<10	<36	<36	<36
PCB-1242	<36	<36	<36	<38	<36	10.69	<10	<36	<36	<36
PCB-1248	<36	<36	<36	<38	<36	<0.43	<10	<36	<36	<36
PCB-1254	<36	<36	<36	<38	<36	<0.615	<10	<36	<36	<36
PCB-1260	<36	<36	<36	<38	<36	<0.87	<10	<36	<36	<36
toxaphene	<10	<10	<10	<11	<10	<3.47	<10	<10	<10	<10
Total Pesticide/PCB Compounds	0	0	0	0	0	10.69	0	0	0	0

Table E-4. Summary of Pesticide/PCB Compounds in Ground Water, Monsanto Company, W.G. Krummrich Plant, Sauget, Illinois. ***

Well Number:	GM-12C	GM-13	GM-13	GM-14	GM-15	GM-16A	GM-16A	GM-16A	GM-16B	GM-16B
Date:	5/85*	9/84	2/86	9/84	9/84	9/84**	5/85	11/85	9/84**	5/85
USEPA Priority Pollutant Pesticide/PCB Compounds concentrations are in ug/L										
aldrin	<1.9	0.58	<100	<4	0.055	<0.004	<1.9	<1.9	<0.004	<1.9
alpha-BHC	<10	35.4	<530	<2	0.005	<0.002	<10	<10	<0.002	<10
beta-BHC	<4.2	<0.05	<230	<5	0.108	<0.005	<4.2	<4.5	<0.005	<4.2
gamma-BHC	<10	0.73	<530	<3	0.008	<0.003	<10	<10	<0.003	<10
delta-BHC	<3.1	0.243	<160	<4	0.012	<0.004	<3.1	<3.2	<0.004	<3.1
chlordane	<10	<0.61	<530	<61	<0.061	<0.061	<10	<10	<0.061	<10
4,4'-DDT	<4.7	<0.96	<150	<96	<0.096	<0.096	<4.7	<2.9	<0.096	<4.7
4,4'-DDE	<5.6	<0.07	<290	<7	0.004	<0.007	<5.6	<5.7	<0.007	<5.6
4,4'-DDD	<2.8	<0.07	<250	<7	0.063	<0.007	<2.8	<4.8	<0.007	<2.8
dieldrin	<2.5	<0.07	<130	<14	<0.007	<0.007	<2.5	<2.6	<0.007	<2.5
endosulfan I	<10	<0.06	<530	<12	<0.006	<0.006	<10	<10	<0.006	<10
endosulfan II	<10	<0.011	<530	<0.011	<0.11	<0.011	<10	<10	<0.011	<10
endosulfan sulfate	<5.6	<0.042	<290	<0.042	<0.42	<0.042	<5.6	<5.7	<0.042	<5.6
endrin	<10	<0.02	<530	<14	<0.02	<0.02	<10	<10	<0.02	<10
endrin aldehyde	<10	<0.22	<530	<12	<0.022	<0.022	<10	<10	<0.022	<10
heptachlor	<1.9	68.2	<100	<4	0.027	<0.004	<1.9	<1.9	<0.004	<1.9
heptachlor epoxide	<2.2	1.01	<120	<5	<0.005	<0.005	<2.2	<2.2	<0.005	<2.2
PCB-1016	<36	<0.34	<1900	<34	<0.034	<0.034	<36	<37	<0.034	<36
PCB-1221	<30	<1.33	<1600	<133	<0.133	<0.133	<30	<31	<0.133	<30
PCB-1232	<36	<0.62	<1900	<62	<0.062	<0.062	<36	<37	<0.062	<36
PCB-1242	<36	<0.82	<1900	<82	<0.082	<0.082	<36	<37	<0.082	<36
PCB-1248	<36	<0.86	<1900	<86	<0.086	<0.086	<36	<37	<0.086	<36
PCB-1254	<36	<1.23	<1900	<123	4.99	<0.123	<36	<37	<0.123	<36
PCB-1260	<36	<1.74	<1900	<174	<0.174	<0.174	<36	<37	<0.174	<36
toxaphene	<10	<6.94	<530	<694	<0.694	<0.694	<10	<10	<0.694	<10
Total Pesticide/PCB Compounds	0	106.163	0	0	5.272	0	0	0	0	0

Table E-4. Summary of Pesticide/PCB Compounds in Ground Water, Monsanto Company, W.G. Krummrich Plant, Sauget, Illinois. ***

Well Number:	GM-16B	GM-16B	GM-17A	GM-17A	GM-17B	GM-17B	GM-17C	GM-17C	GM-18A	GM-18A
Date:	11/85	2/86	9/84	11/84	9/84	11/84	9/84	11/84	9/84	5/85
USEPA Priority Pollutant Pesticide/PCB Compounds concentrations are in ug/L										
aldrin	<2	NA	0.048	<10	0.017	<10	0.006	<10	0.0358	<1.9
alpha-BHC	<11	NA	0.10	<10	0.012	<10	0.046	<10	0.0276	<10
beta-BHC	<4.7	NA	<0.005	<10	0.101	<10	<0.005	<10	<0.005	<4.2
gamma-BHC	<11	NA	0.075	<10	0.014	<10	<0.003	<10	0.0144	<10
delta-BHC	<3.3	NA	<0.004	<10	0.023	<10	<0.004	<10	<0.004	<3.1
chlordane	<11	NA	<0.061	<10	<0.061	<10	<0.061	<10	<0.061	<10
4,4'-DDT	<3	NA	<0.096	<10	<0.096	<10	<0.096	<10	<0.096	<4.7
4,4'-DDE	<6	NA	<0.007	<10	<0.007	<10	<0.007	<10	<0.007	<5.6
4,4'-DDD	<5.1	NA	<0.005	<10	<0.007	<10	<0.007	<10	<0.007	<2.8
dieldrin	<2.7	NA	<0.007	<10	<0.007	<10	<0.007	<10	<0.007	<2.5
endosulfan I	<11	NA	<0.006	<10	<0.006	<10	<0.006	<10	<0.006	<10
endosulfan II	<11	NA	<0.011	<10	<0.011	<10	<0.011	<10	<0.011	<10
endosulfan sulfate	<6	NA	<0.042	<10	0.826	<10	0.139	<10	0.167	<5.6
endrin	<11	NA	<0.02	<10	<0.02	<10	<0.02	<10	<0.02	<10
endrin aldehyde	<11	NA	<0.022	<10	<0.022	<10	<0.022	<10	<0.022	<10
heptachlor	<2	NA	<0.04	<10	0.022	<10	<0.004	<10	<0.004	<1.9
heptachlor epoxide	<2.4	NA	<0.005	<10	<0.005	<10	<0.005	<10	<0.005	<2.2
PCB-1016	<39	<37	<0.034	<10	<0.034	<10	<0.034	<10	<0.034	<36
PCB-1221	<32	<31	<0.133	<10	<0.133	<10	<0.133	<10	<0.133	<30
PCB-1232	<39	<37	<0.062	<10	<0.062	<10	<0.062	<10	<0.062	<36
PCB-1242	<39	<37	<0.082	<10	<0.082	<10	<0.082	<10	<0.082	<36
PCB-1248	<39	<37	<0.086	<10	<0.086	<10	<0.086	<10	<0.086	<36
PCB-1254	<39	<37	<0.123	<10	<0.123	<10	<0.123	<10	<0.123	<36
PCB-1260	74.8	<37	<0.174	<10	<0.174	<10	<0.174	<10	<0.174	<36
toxaphene	<11	NA	<0.694	<10	<0.694	<10	<0.694	<10	<0.694	<10
Total Pesticide/PCB Compounds	74.8	0	0.223	0	1.015	0	0.191	0	0.2448	0

Table E-4. Summary of Pesticide/PCB Compounds in Ground Water, Monsanto Company, W.G. Krummrich Plant, Sauget, Illinois. ***

Well Number:	GM-18B	GM-18B	GM-25A	GM-25A	GM-25B	GM-25B	GM-27B	GM-27B	GM-27C	GM-27C
Date:	9/84	5/85	9/84	11/84	9/84	11/84	9/84	2/86	9/84	2/86
USEPA Priority Pollutant Pesticide/PCB Compounds concentrations are in ug/L										
aldrin	0.068	<2	0.003	<10	0.099	<10	0.016	<2	0.034	<1.9
alpha-BHC	0.009	<10	<0.002	<10	<0.002	<10	<0.002	<10	<0.002	<10
beta-BHC	0.004	<4	<0.005	<10	0.162	<10	<0.005	<4.5	<0.005	<4.5
gamma-BHC	0.072	<10	0.002	<10	0.219	<10	<0.003	<10	19.3	<10
delta-BHC	<0.004	<3	<0.004	<10	<0.004	<10	<0.004	<3.2	0.014	<3.2
chlordane	<0.061	<10	<0.061	<10	<0.061	<10	<0.061	<10	<0.061	<10
4,4'-DDT	<0.096	<5	<0.096	<10	<0.096	<10	<0.096	<2.9	<0.096	<2.9
4,4'-DDE	<0.007	<6	<0.007	<10	<0.007	<10	<0.007	<5.8	<0.007	<5.7
4,4'-DDD	0.014	<3	<0.007	<10	<0.007	<10	<0.007	<4.8	<0.007	<4.8
dieldrin	<0.007	<3	0.002	<10	0.052	<10	<0.007	<2.6	<0.07	<2.6
endosulfan I	<0.006	<10	<0.006	<10	<0.006	<10	<0.006	<10	<0.06	<10
endosulfan II	<0.011	<10	<0.011	<10	<0.011	<10	<1.1	<10	<0.11	<10
endosulfan sulfate	0.124	<6	<0.042	<10	0.161	<10	<4.2	<5.8	0.316	<5.7
endrin	<0.020	<10	<0.02	<10	<0.07	<10	35.8	<10	15.2	<10
endrin aldehyde	<0.022	<10	<0.022	<10	<0.022	<10	<0.22	<10	<0.22	<10
heptachlor	<0.004	<2	<0.004	<10	0.165	<10	0.01	<2	0.082	<1.9
heptachlor epoxide	0.006	<2	<0.005	<10	0.092	<10	<0.005	<2.3	<0.005	<2.2
PCB-1016	<0.034	<36	<0.034	<10	<0.034	<10	<0.034	<37	<0.034	<37
PCB-1221	<0.133	<30	<0.133	<10	<0.133	<10	<0.133	<31	<0.133	<31
PCB-1232	<0.062	<36	<0.062	<10	<0.062	<10	<0.062	<37	<0.062	<37
PCB-1242	<0.082	<36	<0.082	<10	<0.082	<10	<0.082	<37	<0.082	<37
PCB-1248	<0.086	<36	<0.086	<10	<0.086	<10	<0.086	<37	<0.086	<37
PCB-1254	<0.123	<36	<0.123	<10	<0.123	<10	<0.123	<37	<0.123	<37
PCB-1260	<0.174	<36	<0.174	<10	<0.174	<10	0.94	<37	<0.174	<37
toxaphene	<0.694	<10	<0.694	<10	<0.694	<10	<0.694	<10	<0.694	<10
Total Pesticide/PCB Compounds	0.297	0	0.007	0	0.95	0	36.766	0	34.946	0

Table E-4. Summary of Pesticide/PCB Compounds in Ground Water, Monsanto Company, W.G. Krummrich Plant, Sauget, Illinois. ***

Well Number:	GM-28B	GM-28B	GM-28C	GM-28C	GM-29	GM-29	GM-30	GM-30	GM-30	GM-31A
Date:	9/84	2/86	9/84	2/86	9/84**	11/85	9/84**	11/85	2/86	2/85
USEPA Priority Pollutant Pesticide/PCB Compounds concentrations are in ug/L										
aldrin	<0.004	<1.9	<0.04	<1.9	<0.004	<2.3	<0.004	<2.1	<2.3	<2
alpha-BHC	17.5	<10	<0.002	<10	<0.002	<12	<0.002	<11	<12	<10
beta-BHC	6.0	<4.5	<0.005	<4.4	<0.005	<5.2	<0.005	<4.9	<5.2	<4
gamma-BHC	42	<10	0.04	<10	<0.003	<12	<0.003	<11	<12	<10
delta-BHC	<0.004	<3.2	<0.04	<3.1	<0.004	<3.7	<0.004	<3.4	<3.7	<3
chlordane	<0.061	<10	<0.61	<10	<0.061	<12	<0.061	<11	<12	<10
4,4'-DDT	<0.096	<2.9	<0.96	<2.8	<0.096	<3.3	<0.096	<3.1	<3.3	<5
4,4'-DDE	<0.007	<5.7	<0.07	<5.7	<0.007	<6.7	<0.007	<6.2	<6.7	<6
4,4'-DDD	<0.007	<4.8	<0.07	<4.7	<0.007	<5.6	<0.007	<5.2	<5.6	<3
dieldrin	<0.007	<2.6	<0.7	<2.5	<0.007	<3	<0.007	<2.8	<3	<3
endosulfan I	<0.006	<10	<0.6	<10	<0.006	<12	<0.006	<11	<12	<10
endosulfan II	<1.1	<10	<1.1	<10	<0.011	<12	<0.011	<11	<12	<10
endosulfan sulfate	<4.2	<5.7	<4.2	<5.7	<0.042	<6.7	<0.042	<6.2	<6.7	<6
endrin	283	<10	<2.0	<10	<0.02	<12	<0.02	<11	<12	<10
endrin aldehyde	0.014	<10	0.014	<10	0.258	<12	<0.022	<11	<12	<10
heptachlor	2.09	<1.9	0.47	<1.9	<0.004	<2.3	<0.004	<2.1	<2.3	<2
heptachlor epoxide	<0.005	<2.3	<0.05	<2.2	<0.005	<2.6	<0.005	<2.4	<2.6	<2
PCB-1016	<0.034	<37	<0.34	<36	<0.034	<43	<0.034	<40	<43	<36
PCB-1221	<0.133	<31	<1.33	<30	<0.133	<36	<0.133	<33	<36	<30
PCB-1232	<0.062	<37	<0.62	<36	<0.062	<43	<0.062	<40	<43	<36
PCB-1242	<0.082	<37	<0.82	<36	<0.082	<43	<0.082	<40	<43	<36
PCB-1248	<0.086	<37	<0.86	<36	<0.086	<43	<0.086	<40	<43	<36
PCB-1254	<0.123	<37	<1.23	<36	<0.123	<43	<0.123	<40	<43	<36
PCB-1260	<0.174	<37	<1.74	<36	<0.174	<43	<0.174	<40	<43	<36
toxaphene	<0.694	<10	<6.94	<10	<0.694	<12	<0.694	<11	<12	<10
Total Pesticide/PCB Compounds	350.604	0	0.524	0	0.258	0	0	0	0	0

Table E-4. Summary of Pesticide/PCB Compounds in Ground Water, Monsanto Company, W.G. Krummrich Plant, Sauget, Illinois. ***

Well Number:	GM-31A	GM-31B	GM-31B	GM-31C	GM-31C	B-24A	B-25A	B-25B	B-27B	B-28A
Date:	5/85	2/85	5/85	2/85	5/85	2/86	6/84	6/84	9/84	2/86
USEPA Priority Pollutant Pesticide/PCB Compounds concentrations are in ug/L										
aldrin	<1.9	<2	<1.9	<2	<1.9	<2	<10	<10	<4	<2
alpha-BHC	<10	<10	<10	<10	<10	<10	<10	<10	<11	<11
beta-BHC	<4.2	<4	<4.2	<4	<4.2	<4.5	<10	<10	<5	<4.7
gamma-BHC	<10	<10	<10	<10	<10	<10	<10	<10	<3	<11
delta-BHC	<3.1	<3	<3.1	<3	<3.1	<3.2	<10	<10	<4	<3.3
chlordane	<10	<10	<10	<10	<10	<10	<100	<100	<61	<11
4,4'-DDT	<4.7	<5	<4.7	<5	<4.7	<2.9	<10	<10	<96	<3
4,4'-DDE	<5.6	<6	<5.6	<6	<5.6	<5.8	<10	<10	<7	<6
4,4'-DDD	<2.8	<3	<2.8	<3	<2.8	<4.8	<10	<10	<7	<5
dieldrin	<2.5	<3	<2.5	<3	<2.5	<2.6	<10	<10	<7	<2.7
endosulfan I	<10	<10	<10	<10	<10	<10	<10	<10	<6	<11
endosulfan II	<10	<10	<10	<10	<10	<10	<10	<10	<5.5	<11
endosulfan sulfate	<5.6	<6	<5.6	<6	<5.6	<5.8	<10	<10	<21	<6
endrin	<10	<10	<10	<10	<10	<10	<10	<10	<20	<11
endrin aldehyde	<10	<10	<10	<10	<10	<10	<10	<10	<22	<11
heptachlor	<1.9	<2	<1.9	<2	<1.9	<2	<10	<10	<4	<2
heptachlor epoxide	<2.2	<2	<2.2	<2	<2.2	<2.3	<10	<10	<5	<2.3
PCB-1016	<36	<36	<36	<36	<36	<37	<50	<50	<34	<38
PCB-1221	<30	<30	<30	<30	<30	<31	<50	<50	<133	<32
PCB-1232	<36	<36	<36	<36	<36	<37	<50	<50	<62	<38
PCB-1242	<36	<36	<36	<36	<36	<37	<50	<50	<82	<38
PCB-1248	<36	<36	<36	<36	<36	<37	<50	<50	<86	<38
PCB-1254	<36	<36	<36	<36	<36	<37	<50	<50	<123	<38
PCB-1260	<36	<36	<36	<36	<36	<37	<50	<50	<174	<38
toxaphene	<10	<10	<10	<10	<10	<10	<250	<250	<694	<11
Total Pesticide/PCB Compounds	0	0	0	0	0	0	0	0	0	0

Table E-4. Summary of Pesticide/PCB Compounds in Ground Water, Monsanto Company, W.G. Krummrich Plant, Sauget, Illinois. ***

Well Number:	B-29A	B-29B	B-29B	B-29B	B-29B	B-30B	B-31B	B-31B	B-31C	B-31C
Date:	6/84	6/84	6/84*	6/84*	11/84	9/84	11/85	2/86	9/84	9/84*
USEPA Priority Pollutant Pesticide/PCB Compounds concentrations are in ug/L										
aldrin	<10	<10	<10	<100	<50	<4	<1.9	<1.9	<0.04	0.03
alpha-BHC	<10	<10	<10	<100	<50	<11	<10	<10	<0.02	<0.002
beta-BHC	<10	<10	<10	<100	<50	<5	<4.4	<4.4	<0.05	<0.005
gamma-BHC	<10	<10	<10	<100	<50	<3	<10	<10	<0.03	<0.003
delta-BHC	<10	<10	<10	<100	<50	<4	<3.1	<3.1	<0.04	<0.004
chlordane	<100	<100	<100	<100	<50	<61	<10	<10	<0.61	<0.061
4,4'-DDT	<10	<10	<10	<100	<50	<96	<2.8	<2.8	<0.96	<0.096
4,4'-DDE	<10	<10	<10	<100	<50	<7	<5.6	<5.7	<0.07	<0.007
4,4'-DDD	<10	<10	<10	<100	<50	<7	<4.7	<4.7	<0.07	<0.007
dieldrin	<10	<10	<10	<100	<50	<7	<2.5	<2.5	<0.007	<0.007
endosulfan I	<10	<10	<10	<100	<50	<6	<10	<10	<0.006	<0.006
endosulfan II	<10	<10	<10	<100	<50	<11	<10	<10	<0.011	<0.011
endosulfan sulfate	<10	<10	<10	<100	<50	<42	<5.6	<5.7	<0.042	<0.042
endrin	<10	<10	<10	<100	<50	<20	<10	<10	<0.02	<0.02
endrin aldehyde	<10	<10	<10	<100	<50	<22	<10	<10	<0.022	<0.022
heptachlor	<10	<10	<10	<100	<50	<4	<1.9	<1.9	<0.04	<0.004
heptachlor epoxide	<10	<10	<10	<100	<50	<5	<2.2	<2.2	<0.05	<0.005
PCB-1016	<50	<50	<50	<100	<50	<34	<36	<36	<0.34	<0.034
PCB-1221	<50	<50	<50	<100	<50	<133	<30	<30	<1.33	<0.133
PCB-1232	<50	<50	<50	<100	<50	<62	<36	<36	<0.62	<0.062
PCB-1242	<50	<50	<50	<100	<50	<82	<36	<36	<0.82	<0.082
PCB-1248	<50	<50	<50	<100	<50	<86	<36	<36	<0.86	<0.086
PCB-1254	<50	<50	<50	<100	<50	<123	<36	<36	<1.23	<0.123
PCB-1260	<50	<50	<50	<100	<50	<174	<36	<36	<1.74	<0.174
toxaphene	<250	<250	<250	<100	<50	<694	<10	<10	<6.94	<0.694
Total Pesticide/PCB Compounds	0	0	0	0	0	0	0	0	0	0.03

Table E-4. Summary of Pesticide/PCB Compounds in Ground Water, Monsanto Company, N.G. Krummrich Plant, Sauget, Illinois. ***

Well Number:	B-31C	B-31C	B-101	B-102	GM-106	GM-106	GM-106	P-1	P-2	P-6
Date:	11/85	2/86	9/84	9/84	11/85	2/86	2/86*	9/84	6/84	6/84
USEPA Priority Pollutant Pesticide/PCB Compounds concentrations are in ug/L										
aldrin	<1.9	<2	NA	<4	<1.9	<2	<1.9	<0.08	<10	<10
alpha-BHC	<10	<11	NA	<2	<10	<10	<10	<0.04	<10	<10
beta-BHC	<4.5	<4.6	NA	<5	<4.5	<4.5	<4.5	<0.1	<10	<10
gamma-BHC	<10	<11	NA	<3	<10	<10	<10	<0.06	<10	<10
delta-BHC	<3.2	<3.3	NA	<4	<3.2	<3.2	<3.2	<0.08	<10	<10
chlordane	<10	<11	NA	<61	<10	<10	<10	<1.22	<100	<100
4,4'-DDT	<2.9	<2.9	NA	<96	<2.9	<2.9	<2.9	<1.92	<10	<10
4,4'-DDE	<5.7	<5.9	NA	<7	<5.7	<5.8	<5.7	<0.14	<10	<10
4,4'-DDD	<4.8	<4.9	NA	<7	<4.8	<4.8	<4.8	<0.14	<10	<10
dieldrin	<2.6	<2.6	<70	<0.007	<2.6	<2.6	<2.6	<0.007	<10	<10
endosulfan I	<10	<11	<60	<0.006	<10	<10	<10	<0.006	<10	<10
endosulfan II	<10	<11	<1.1	<0.011	<10	<10	<10	<0.011	<10	<10
endosulfan sulfate	<5.7	<5.9	<4.2	<0.042	<5.7	<5.8	<5.7	<0.042	<10	<10
endrin	<10	<11	<200	<0.02	<10	<10	<10	<0.02	<10	<10
endrin aldehyde	<10	<11	<220	<0.022	<10	<10	<10	<0.022	<10	<10
heptachlor	<1.9	<2	NA	<4	<1.9	<2	<1.9	<0.08	<10	<10
heptachlor epoxide	<2.2	<2.3	NA	<5	<2.2	<2.3	<2.2	<0.1	<10	<10
PCB-1016	<37	<38	NA	<34	<37	<37	<37	<0.68	<50	<50
PCB-1221	<31	<32	NA	<133	<31	<31	<31	<2.66	<50	<50
PCB-1232	<37	<38	NA	<62	<37	<37	<37	<1.24	<50	<50
PCB-1242	<37	<38	NA	<82	<37	<37	<37	<1.64	<50	<50
PCB-1248	<37	<38	NA	<86	<37	<37	<37	<1.72	<50	<50
PCB-1254	<37	<38	NA	<123	<37	<37	<37	<2.46	<50	<50
PCB-1260	<37	<38	NA	<174	<37	<37	<37	<3.48	<50	<50
toxaphene	<10	<11	NA	<694	<10	<10	<10	<13.88	<250	<250
Total Pesticide/PCB Compounds	0	0	0	0	0	0	0	0	0	0

Table E-4. Summary of Pesticide/PCB Compounds in Ground Water, Monsanto Company, W.G. Krummrich Plant, Sauget, Illinois. ***

Well Number:	P-7	P-8	P-10	P-11	P-12	P-13	P-13	P-13	P-14	DW-1
Date:	6/84	6/84	9/84	9/84	9/84	6/84	6/84*	6/84#	6/84	9/84**
USEPA Priority Pollutant Pesticide/PCB Compounds concentrations are in ug/L										
aldrin	<10	<10	<0.04	0.139	<0.004	<10	<10	<10	<10	<0.004
alpha-BHC	<10	<10	0.562	0.012	<0.002	<10	<10	<10	<10	<0.002
beta-BHC	<10	<10	<0.05	<0.005	<0.005	<10	<10	<10	<10	<0.005
gamma-BHC	<10	<10	<0.03	0.021	<0.003	<10	<10	<10	<10	<0.003
delta-BHC	<10	<10	<0.04	0.068	<0.004	<10	<10	<10	<10	<0.004
chlordane	<100	<100	<0.61	0.469	<0.061	<100	<100	<10	<100	<0.061
4,4'-DDT	<10	<10	<0.96	<0.096	<0.096	<10	<10	<10	<10	<0.096
4,4'-DDE	<10	<10	<0.07	<0.07	<0.007	<10	<10	<10	<10	<0.007
4,4'-DDD	<10	<10	<0.07	0.148	<0.007	<10	<10	<10	<10	<0.007
dieldrin	<10	<10	<0.07	0.018	<0.07	<10	<10	<10	<10	<0.007
endosulfan I	<10	<10	<0.06	<0.006	<0.06	<10	<10	<10	<10	<0.006
endosulfan II	<10	<10	<0.11	<0.011	<0.1	<10	<10	<10	<10	<0.011
endosulfan sulfate	<10	<10	<0.42	<0.042	<0.15	<10	<10	<10	<10	<0.042
endrin	<10	<10	<0.2	0.135	33.43	<10	<10	<10	<10	<0.02
endrin aldehyde	<10	<10	<0.22	<0.022	<0.22	<10	<10	<10	<10	<0.022
heptachlor	<10	<10	<0.04	0.301	0.110	<10	<10	<10	<10	<0.004
heptachlor epoxide	<10	<10	<0.05	<0.005	<0.005	<10	<10	<10	<10	<0.005
PCB-1016	<50	<50	<0.34	<0.034	<0.034	<50	<50	<10	<50	<0.034
PCB-1221	<50	<50	<0.133	<0.133	<0.133	<50	<50	<10	<50	<0.133
PCB-1232	<50	<50	<0.62	<0.062	<0.062	<50	<50	<10	<50	<0.062
PCB-1242	<50	<50	<0.82	<0.082	<0.082	<50	<50	<10	<50	<0.082
PCB-1248	<50	<50	<0.86	<0.086	<0.086	<50	<50	<10	<50	<0.086
PCB-1254	<50	<50	<1.23	<0.123	<0.123	<50	<50	<10	<50	<0.123
PCB-1260	<50	<50	<0.174	<0.174	<0.174	<50	<50	<10	<50	<0.174
toxaphene	<250	<250	<6.94	<0.694	<0.694	<250	<250	<10	<250	<0.694
Total Pesticide/PCB Compounds	0	0	0.562	1.311	33.54	0	0	0	0	0

Table E-4. Summary of Pesticide/PCB Compounds in Ground Water, Monsanto Company, W.G. Krummrich Plant, Sauget, Illinois. ***

Well Number:	DW-1	DW-4	DW-7	DW-7	DW-10	DW-18	DW-23	DW-24	DW-24	DW-29
Date:	11/85	9/84**	11/85	2/86	9/84**	9/84	9/84	9/84	9/84*	9/84
USEPA Priority Pollutant Pesticide/PCB Compounds concentrations are in ug/L										
aldrin	<1.9	<0.04	<1.9	<1.9	<0.04	0.005	<0.004	<0.004	<0.004	<0.004
alpha-BHC	<10	0.19	<10	<10	<0.02	<0.002	<0.002	<0.002	<0.002	<0.002
beta-BHC	<4.4	<0.05	<4.4	<4.5	<0.05	<0.005	<0.005	<0.005	<0.005	<0.005
gamma-BHC	<10	<0.03	<10	<10	<0.03	<0.003	<0.003	<0.003	<0.003	<0.003
delta-BHC	<3.1	<0.04	<3.1	<3.2	<0.04	<0.004	<0.004	<0.004	<0.004	<0.004
chlordane	<10	<0.61	<10	<10	<0.61	<0.61	<0.061	<0.061	<0.061	<0.061
4,4'-DDT	<2.8	<0.96	<2.8	<2.9	<0.96	<0.096	<0.096	<0.096	<0.096	<0.096
4,4'-DDE	<5.6	<0.07	<5.6	<5.7	<0.07	<0.007	<0.007	<0.007	<0.007	<0.007
4,4'-DDD	<4.7	<0.07	<4.7	<4.8	<0.07	<0.007	<0.007	<0.007	<0.007	<0.007
dieldrin	<2.5	<0.007	<2.5	<2.6	<0.007	<0.007	0.066	<0.007	<0.007	<0.007
endosulfan I	<10	0.27	<10	<10	0.136	<0.006	<0.006	<0.006	<0.006	0.025
endosulfan II	<10	<0.1	<10	<10	<0.011	<0.011	<0.011	<0.011	<0.011	<0.011
endosulfan sulfate	<5.6	<0.15	<5.6	<5.7	<0.042	<0.042	<0.042	<0.042	<0.042	<0.042
endrin	<10	<0.02	<10	<10	<0.020	<0.02	<0.02	<0.02	<0.02	<0.02
endrin aldehyde	<10	<0.022	<10	<10	<0.022	<0.022	<0.022	<0.022	<0.022	<0.022
heptachlor	<1.9	<0.04	<1.9	<1.9	<0.04	<0.004	<0.004	<0.004	<0.004	<0.004
heptachlor epoxide	<2.2	0.074	<2.2	<2.2	<0.05	<0.005	<0.005	<0.005	<0.005	<0.005
PCB-1016	<36	<0.34	<36	<37	<0.34	<0.034	<0.034	<0.034	<0.034	<0.034
PCB-1221	<30	<1.33	<30	<31	<1.33	<0.133	<0.133	<0.133	<0.133	<0.133
PCB-1232	<36	<0.62	<36	<37	<0.62	<0.062	<0.062	<0.062	<0.062	<0.062
PCB-1242	<36	<0.82	<36	<37	<0.82	<0.082	<0.082	<0.082	<0.082	<0.082
PCB-1248	<36	<0.86	<36	<37	<0.86	<0.086	<0.086	<0.086	<0.086	<0.086
PCB-1254	<36	<1.23	<36	<37	<1.23	<0.123	<0.123	<0.123	<0.123	<0.123
PCB-1260	<36	<1.74	<36	<37	<1.74	<0.174	<0.174	<0.174	<0.174	<0.174
toxaphene	<10	<6.94	<10	<10	<6.94	<0.694	<0.694	<0.694	<0.694	<0.694
Total Pesticide/PCB Compounds	0	0.534	0	0	0.136	0.005	0.066	0	0	0.025

Table E-4. Summary of Pesticide/PCB Compounds in Ground Water, Monsanto Company, W.G. Krummrich Plant, Sauget, Illinois. ***

Well Number:	DW-29	DW-30	DW-33	DW-34	DW-34	DW-34	DW-1-85	DW-1-85	BK-3	BK-3
Date:	9/84*	11/85	9/84**	9/84**	11/85	2/86	11/85	2/86	9/84	2/86
USEPA Priority Pollutant Pesticide/PCB Compounds concentrations are in ug/L										
aldrin	NA	<2.0	<0.004	<0.004	<3.8	<1.9	<3.8	<2	<0.004	<1.9
alpha-BHC	NA	<10	<0.002	<0.002	<20	<10	<20	<11	<0.002	<10
beta-BHC	NA	<4.5	<0.005	<0.005	<8.8	<4.4	<8.8	<4.7	0.013	<4.5
gamma-BHC	NA	<10	<0.003	<0.003	<20	<10	<20	<11	<0.003	<10
delta-BHC	NA	<3.2	<0.004	<0.004	<6.2	<3.1	<6.2	<3.3	<0.004	<3.2
chlordane	NA	<10	<0.061	<0.061	<20	<10	<20	<11	<0.061	<10
4,4'-DDT	NA	<2.9	<0.096	<0.096	<5.6	<2.8	<5.6	<3	<0.096	<2.9
4,4'-DDE	NA	<5.8	<0.007	<0.007	<11	<5.7	<11	<6	<0.007	<5.7
4,4'-DDD	NA	<4.8	<0.007	<0.007	<9.4	<4.7	<9.4	<5	<0.007	<4.8
dieldrin	NA	<2.6	0.02	<0.007	<5	<2.5	<5	<2.7	<0.007	<2.6
endosulfan I	NA	<10	<0.006	<0.006	<20	<10	<20	<11	<0.006	<10
endosulfan II	NA	<10	<0.011	<0.011	<20	<10	<20	<11	<0.011	<10
endosulfan sulfate	NA	<5.8	<0.042	<0.042	<11	<5.7	<11	<6	<0.042	<5.7
endrin	NA	<10	<0.02	<0.02	<20	<10	<20	<11	<0.02	<10
endrin aldehyde	NA	<10	<0.022	<0.022	<20	<10	<20	<11	<0.022	<10
heptachlor	NA	<2.0	<0.004	<0.004	<3.8	<1.9	<3.8	<2	0.019	<1.9
heptachlor epoxide	NA	<2.3	<0.005	<0.005	<4.4	<2.2	<4.4	<2.3	<0.005	<2.2
PCB-1016	NA	<37	<0.034	<0.034	<72	<36	<72	<38	<0.034	<37
PCB-1221	NA	<31	<0.133	<0.133	<60	<30	<60	<32	<0.133	<31
PCB-1232	NA	<37	<0.062	<0.062	<72	<36	<72	<38	<0.062	<37
PCB-1242	NA	<37	<0.082	<0.082	<72	<36	<72	<38	<0.082	<37
PCB-1248	NA	<37	<0.086	<0.086	<72	<36	<72	<38	<0.086	<37
PCB-1254	NA	<37	<0.123	<0.123	<72	<36	<72	<38	<0.123	<37
PCB-1260	NA	<37	<0.174	<0.174	<72	<36	<72	<38	<0.174	<37
toxaphene	NA	<10	<0.694	<0.694	<20	<10	<20	<11	<0.694	<10
Total Pesticide/PCB Compounds	NA	0	0.02	0	0	0	0	0	0.032	0

Table E-4. Summary of Pesticide/PCB Compounds in Ground Water, Monsanto Company, W.G. Krummrich Plant, Sauget, Illinois. ***

Well Number:	WB-6	WB-6	WB-6	WB-7	Field Blank	Trip Blank	Lab Blank
Date:	9/84**	11/85	2/86	9/84	6/84	6/84	9/84
USEPA Priority Pollutant Pesticide/PCB Compounds concentrations are in ug/L							
aldrin	<0.004	<1.9	<2	<0.004	<10	<10	<0.004
alpha-BHC	<0.002	<10	<10	0.0675	<10	<10	<0.002
beta-BHC	<0.005	<4.5	<4.6	<0.005	<10	<10	<0.005
gamma-BHC	<0.003	<10	<10	<0.003	<10	<10	<0.003
delta-BHC	<0.004	<3.2	<3.2	0.061	<10	<10	<0.004
chlordane	<0.061	<10	<10	<0.061	<100	<100	<0.061
4,4'-DDT	<0.096	<2.9	<2.9	<0.096	<10	<10	<0.096
4,4'-DDE	<0.007	<5.7	<5.9	<0.007	<10	<10	<0.007
4,4'-DDD	<0.007	<4.8	<4.9	<0.007	<10	<10	<0.007
dieldrin	<0.007	<2.6	<2.6	<0.007	<10	<10	<0.007
endosulfan I	<0.006	<10	<10	<0.006	<10	<10	<0.006
endosulfan II	<0.011	<10	<10	<0.011	<10	<10	<0.011
endosulfan sulfate	<0.042	<5.7	<5.8	<0.042	<10	<10	<0.042
endrin	<0.02	<10	<10	<0.02	<10	<10	<0.02
endrin aldehyde	<0.022	<10	<10	<0.022	<10	<10	<0.022
heptachlor	<0.004	<1.9	<2	<0.004	<10	<10	<0.004
heptachlor epoxide	<0.005	<2.2	<2.3	<0.005	<10	<10	<0.005
PCB-1016	<0.034	<37	<38	<0.034	<50	<50	<0.034
PCB-1221	<0.133	<31	<31	<0.133	<50	<50	<0.133
PCB-1232	<0.062	<37	<38	<0.062	<50	<50	<0.062
PCB-1242	<0.082	<37	<38	<0.082	<50	<50	<0.082
PCB-1248	<0.086	<37	<38	<0.086	<50	<50	<0.086
PCB-1254	<0.123	<37	<38	<0.123	<50	<50	<0.123
PCB-1260	<0.174	<37	<38	<0.174	<50	<50	<0.174
toxaphene	<0.694	<10	<10	<0.694	<250	<250	<0.694
Total Pesticide/PCB Compounds	0	0	0	0.1285	0	0	0

Table E-4. Summary of Pesticide/PCB Compounds in Ground Water, Monsanto Company, W.G. Krummrich Plant, Sauget, Illinois. ***

NA - Not analyzed.
\# - Replicate analysis was provided by ETC (Edison, New Jersey).
* - Replicate Analyses
** - Prior to analysis, this sample was held by Envirodyne Engineers, Inc. longer than the maximum allowable USEPA holding time.
*** - Envirodyne Engineers, Inc. (St. Louis, MO.) provided the laboratory services for the September 1984 sampling round. ETC (Edison, New Jersey) performed the analyses for the November 1984 through February 1986 sampling programs.
< - Indicates that the compound was not detected at the detection limit which is the value shown next to the symbol.

Table E-5. Summary of Metals and Miscellaneous Parameters in Ground Water, Monsanto Company, WG Krummrich Plant, Sauget, Il.

Well Number:	GM-1	GM-1	GM-1	GM-1	GM-2	GM-2	GM-2	GM-2	GM-3	GM-3
Date:	11/83	11/83*	2/84	5/84	11/83	11/83*	2/84	5/84	11/83	2/84
USEPA Priority Pollutant Metals (concentrations are in mg/L, except where noted)										
antimony	0.011	NA	NA	<0.05	0.165	NA	NA	<0.5	0.097	NA
arsenic	0.017	NA	NA	<0.01	<0.002	NA	NA	<0.01	0.007	NA
beryllium	0.023	NA	NA	<0.01	0.019	NA	NA	<0.01	0.027	NA
cadmium	<0.01	NA	NA	<0.02	0.030	NA	NA	<0.02	0.020	NA
chromium	0.411	NA	NA	<0.05	0.048	NA	NA	<0.05	0.051	NA
copper	NA	NA	NA	NA	NA	NA	NA	NA	NA	NA
lead	<0.001	NA	NA	<0.01	0.057	NA	NA	<0.01	0.035	NA
mercury	<0.0002	NA	NA	<0.0005	0.00047	NA	NA	<0.0005	0.00035	NA
nickel	0.08	NA	NA	<0.05	0.18	NA	NA	<0.05	0.09	NA
selenium	<0.002	NA	NA	<0.01	0.006	NA	NA	<0.01	<0.002	NA
silver	<0.001	NA	NA	<0.05	0.006	NA	NA	<0.05	0.002	NA
thallium	0.002	NA	NA	<0.2	0.062	NA	NA	<0.2	0.047	NA
zinc	0.334	NA	NA	0.07	3.26	NA	NA	0.52	6.41	NA
Miscellaneous Parameters										
pH (units)	NA	NA	8.1	7.6	NA	NA	7.5	7.3	8.5	8.2
spec. conductance (umhos/cm)	1,200	1,200	950	1,000	3,000	3,000	2,900	2,600	2,500	800
temperature (deg./centigrade)	12	12	14	14	11	11	14	15	12	13
TOC	60*	24*	24	18	83*	44*	7	3	72	9
total phenols	0.020	0.019	0.004	0.014	0.007	0.003	<0.002	<0.002	0.006	0.002
TOX	0.016	0.02	0.021	0.014	0.160	0.51	0.033	0.027	0.54	0.012
total dissolved solids (TDS)	NA	NA	NA	NA	NA	NA	NA	NA	NA	NA
bicarbonate, as CACO3	NA	NA	NA	NA	NA	NA	NA	NA	NA	NA
calcium	NA	NA	NA	NA	NA	NA	NA	NA	NA	NA
chloride	NA	NA	50	48.5	NA	NA	275.0	169.0	NA	15
cyanide	<0.005	NA	NA	<0.005	0.005	NA	NA	<0.005	<0.005	NA
iron	NA	NA	NA	NA	NA	NA	NA	NA	NA	NA
magnesium	NA	NA	NA	NA	NA	NA	NA	NA	NA	NA
potassium	NA	NA	NA	NA	NA	NA	NA	NA	NA	NA
sodium	NA	NA	NA	NA	NA	NA	NA	NA	NA	NA
sulfate, as SO4	NA	NA	NA	NA	NA	NA	NA	NA	NA	NA

Table E-5. Summary of Metals and Miscellaneous Parameters in Ground Water, Monsanto Company, W6 Krummrich Plant, Sauget, Il.

Well Number:	GM-3	GM-3	GM-4A	GM-4A	GM-4A	GM-4B	GM-4B	GM-4B	GM-4B	GM-4B
Date:	5/84	5/84*	11/83	2/84	5/84	9/84	11/84	11/84*	2/85	11/85
USEPA Priority Pollutant Metals (concentrations are in mg/L, except where noted)										
antimony	<0.5	<0.5	0.014	NA	<0.5	0.049	<0.07	<0.07	<0.1	NA
arsenic	<0.01	<0.01	<0.002	NA	<0.01	<0.001	<0.005	<0.005	<0.01	NA
beryllium	<0.01	<0.01	0.017	NA	<0.01	<0.002	<0.005	<0.005	<0.001	NA
cadmium	<0.02	<0.02	<0.01	NA	<0.02	<0.002	<0.005	<0.005	<0.004	NA
chromium	<0.05	<0.05	<0.04	NA	<0.05	<0.004	<0.008	<0.008	<0.02	NA
copper	NA	NA	NA	NA	NA	<0.004	<0.008	<0.008	<0.01	NA
lead	<0.01	<0.01	<0.001	NA	<0.01	<0.004	<0.06	<0.06	<0.07	NA
mercury	<0.0005	<0.0005	<0.0002	NA	<0.0005	<0.0002	<0.0003	<0.0003	<0.0003	NA
nickel	<0.05	<0.05	<0.04	NA	<0.05	0.007	<0.01	<0.01	<0.01	NA
selenium	<0.01	<0.01	<0.002	NA	<0.01	<0.001	<0.01	<0.005	<0.006	NA
silver	<0.05	<0.05	<0.001	NA	<0.05	<0.01	<0.008	<0.008	<0.008	NA
thallium	<0.2	<0.02	0.003	NA	<0.2	0.212	<0.005	<0.005	<0.005	NA
zinc	1.09	1.11	0.014	NA	0.03	0.128	<0.008	<0.008	<0.006	NA
Miscellaneous Parameters										
pH (units)	7.9	7.9	7.8	7.6	7.1	6.6	7.0	7.0	7.8	6.7
spec. conductance (umhos/cm)	900	900	1,050	850	1,050	3,500	4,100	4,100	4,000	3,300
temperature (deg./centigrade)	14	14	12	14	14	18	14	14	10	18
TOC	6	<5	42	12	6	34	NA	NA	NA	NA
total phenols	0.002	0.002	0.004	<0.002	0.003	NA	0.096	0.076	0.110	<0.05
TOX	0.005	0.01	0.017	0.019	0.007	NA	NA	NA	NA	NA
total dissolved solids (TDS)	NA	NA	NA	NA	NA	2,534	NA	NA	NA	NA
bicarbonate, as CACO3	NA	NA	NA	NA	NA	NA	NA	NA	NA	760
calcium	NA	NA	NA	NA	NA	NA	NA	NA	NA	270
chloride	11	12	NA	45	76	510	NA	NA	NA	448
cyanide	<0.005	<0.005	<0.005	NA	<0.005	NA	<0.025	<0.025	<0.025	<0.025
iron	NA	NA	NA	NA	NA	NA	NA	NA	NA	7.3
magnesium	NA	NA	NA	NA	NA	NA	NA	NA	NA	67.8
potassium	NA	NA	NA	NA	NA	NA	NA	NA	NA	156
sodium	NA	NA	NA	NA	NA	NA	NA	NA	NA	357
sulfate, as SO4	NA	NA	NA	NA	NA	NA	NA	NA	NA	770

Table E-5. Summary of Metals and Miscellaneous Parameters in Ground Water, Monsanto Company, WG Krummrich Plant, Sauget, Il.

Well Number:	GM-4B	GM-4C	GM-4C	GM-5	GM-5	GM-5	GM-6A	GM-6A	GM-6A	GM-6A
Date:	11/85*	2/85	5/85	11/83	2/84	5/84	11/83	2/84	5/84	11/84
USEPA Priority Pollutant Metals (concentrations are in mg/L, except where noted)										
antimony	NA	<0.07	<0.07	0.009	NA	<0.5	0.012	NA	<0.5	<0.08
arsenic	NA	<0.01	<0.01	<0.002	NA	<0.01	0.007	NA	<0.01	<0.005
beryllium	NA	<0.001	<0.001	0.013	NA	<0.01	0.012	NA	<0.01	<0.005
cadmium	NA	<0.003	<0.004	<0.01	NA	<0.02	0.01	NA	<0.02	<0.005
chromium	NA	<0.01	<0.01	<0.04	NA	<0.05	<0.04	NA	<0.05	<0.02
copper	NA	<0.02	<0.01	NA	NA	NA	NA	NA	NA	<0.01
lead	NA	<0.06	<0.07	0.001	NA	<0.01	0.004	NA	<0.01	<0.06
mercury	NA	<0.0003	<0.0002	<0.0002	NA	<0.0005	<0.0002	NA	<0.0005	<0.0003
nickel	NA	<0.04	<0.02	<0.04	NA	<0.05	0.05	NA	<0.05	0.014
selenium	NA	<0.006	<0.005	<0.002	NA	<0.01	0.002	NA	<0.01	0.015
silver	NA	<0.008	<0.009	<0.001	NA	<0.05	<0.001	NA	<0.05	<0.007
thallium	NA	0.006	<0.005	0.004	NA	<0.2	0.004	NA	<0.2	<0.005
zinc	NA	<0.05	0.04	0.011	NA	0.03	0.018	NA	0.05	0.012
Miscellaneous Parameters										
pH (units)	6.7	7.1	6.5	7.8	7.9	7.2	7.5	7.4	7.3	6.7
spec. conductance (umhos/cm)	3,300	2,600	1,200	625	650	700	2,000	1,900	2,600	1,470
temperature (deg./centigrade)	18	11	16	11	14	14	12	15	14	16.5
TOC	NA	NA	NA	36	16	<5	36	11	11	NA
total phenols	<0.05	<0.05	<0.05	0.003	0.004	0.004	0.020	0.003	0.009	<0.05
TOX	NA	NA	NA	0.011	0.013	0.022	0.110	0.031	0.190	NA
total dissolved solids (TDS)	NA	NA	NA	NA	NA	NA	NA	NA	NA	NA
bicarbonate, as CACO3	810	NA	NA	NA	NA	NA	NA	NA	NA	NA
calcium	272	NA	NA	NA	NA	NA	NA	NA	NA	NA
chloride	451	NA	NA	NA	10	12	NA	55	117	NA
cyanide	<0.025	<0.025	<0.025	<0.005	NA	<0.005	<0.005	NA	<0.005	<0.025
iron	7.7	NA	NA	NA	NA	NA	NA	NA	NA	NA
magnesium	70.3	NA	NA	NA	NA	NA	NA	NA	NA	NA
potassium	150	NA	NA	NA	NA	NA	NA	NA	NA	NA
sodium	371	NA	NA	NA	NA	NA	NA	NA	NA	NA
sulfate, as SO4	770	NA	NA	NA	NA	NA	NA	NA	NA	NA

Table E-5. Summary of Metals and Miscellaneous Parameters in Ground Water, Monsanto Company, WG Krummrich Plant, Sauget, Il.

Well Number:	GM-6B	GM-6B	GM-6B	GM-7	GM-7	GM-7	GM-8	GM-8	GM-8	GM-8
Date:	9/84	11/84	11/85	11/83	2/84	5/84	11/83	2/84	5/84	11/84
USEPA Priority Pollutant Metals (concentrations are in mg/L, except where noted)										
antimony	0.053	<0.08	NA	0.01	NA	<0.5	0.012	NA	<0.5	<0.08
arsenic	<0.001	<0.005	NA	0.002	NA	0.03	<0.002	NA	<0.01	<0.005
beryllium	<0.002	<0.005	NA	0.01	NA	<0.01	0.012	NA	<0.01	<0.005
cadmium	<0.002	<0.005	NA	0.01	NA	<0.02	<0.01	NA	<0.02	<0.005
chromium	<0.004	<0.02	NA	<0.04	NA	<0.05	<0.04	NA	<0.05	<0.02
copper	0.006	<0.01	NA	NA	NA	NA	NA	NA	NA	<0.01
lead	<0.004	<0.06	NA	0.001	NA	<0.01	0.005	NA	<0.01	<0.06
mercury	<0.0004	<0.0003	NA	<0.0002	NA	<0.005	<0.0002	NA	<0.0005	<0.0003
nickel	0.005	<0.01	NA	<0.04	NA	<0.05	<0.04	NA	<0.05	<0.01
selenium	<0.001	<0.005	NA	0.005	NA	<0.01	<0.002	NA	<0.01	0.005
silver	0.005	<0.007	NA	<0.001	NA	<0.05	0.002	NA	<0.05	<0.007
thallium	0.014	<0.005	NA	0.002	NA	<0.2	0.003	NA	<0.2	<0.005
zinc	0.078	<0.01	NA	0.015	NA	<0.03	0.010	NA	<0.03	0.016
Miscellaneous Parameters										
pH (units)	7.0	6.9	7.0	7.3	7.3	7.1	6.8	6.7	6.8	7.2
spec. conductance (umhos/cm)	1,660	2,500	1,500	1,150	1,400	1,300	1,200	1,150	1,500	825
temperature (deg./centigrade)	20	16	14	12	14	14	12	14	14	14
TOC	14	NA	NA	28	10	5	84	16	16	NA
total phenols	NA	0.057	<0.05	0.003	0.003	0.003	0.013	0.003	0.003	<0.05
TOX	NA	NA	NA	0.009	0.030	0.018	0.150	0.057	0.082	NA
total dissolved solids (TDS)	1,330	NA	NA	NA	NA	NA	NA	NA	NA	NA
bicarbonate, as CACO3	NA	NA	320	NA	NA	NA	NA	NA	NA	NA
calcium	NA	NA	232	NA	NA	NA	NA	NA	NA	NA
chloride	175	NA	111	NA	35	15	NA	10	150	NA
cyanide	NA	<0.025	<0.025	<0.005	NA	<0.005	0.021	NA	0.099	<0.025
iron	NA	NA	18.2	NA	NA	NA	NA	NA	NA	NA
magnesium	NA	NA	63.9	NA	NA	NA	NA	NA	NA	NA
potassium	NA	NA	11.1	NA	NA	NA	NA	NA	NA	NA
sodium	NA	NA	212	NA	NA	NA	NA	NA	NA	NA
sulfate, as SO4	NA	NA	69	NA	NA	NA	NA	NA	NA	NA

Table E-5. Summary of Metals and Miscellaneous Parameters in Ground Water, Monsanto Company, WG Krummrich Plant, Sauget, Il.

Well Number:	GM-8	GM-8	GM-9A	GM-9A	GM-9A	GM-9A	GM-9A	GM-9B	GM-9B	GM-9B
Date:	2/85	11/85	11/83	11/83*	2/84	2/84*	5/84	9/84	5/85	11/85
USEPA Priority Pollutant Metals (concentrations are in mg/L, except where noted)										
antimony	<0.07	NA	0.017	0.017	NA	NA	<0.5	0.049	<0.07	NA
arsenic	<0.01	NA	0.003	0.005	NA	NA	<0.01	<0.001	<0.01	NA
beryllium	<0.001	NA	0.013	<0.01	NA	NA	<0.01	<0.01	<0.001	NA
cadmium	<0.003	NA	0.010	<0.01	NA	NA	<0.02	7.46	<0.004	NA
chromium	<0.01	NA	<0.04	<0.04	NA	NA	<0.05	<0.04	<0.01	NA
copper	<0.02	NA	NA	NA	NA	NA	NA	0.05	<0.01	NA
lead	<0.06	NA	0.005	0.005	NA	NA	0.01	0.018	<0.07	NA
mercury	<0.0003	NA	<0.0002	<0.0002	NA	NA	<0.0005	<0.0002	<0.0002	NA
nickel	<0.04	NA	<0.04	<0.04	NA	NA	<0.05	0.026	<0.02	NA
selenium	<0.006	NA	0.004	0.003	NA	NA	<0.01	<0.001	<0.005	NA
silver	<0.008	NA	<0.001	<0.001	NA	NA	<0.05	<0.002	<0.009	NA
thallium	<0.005	NA	0.007	0.006	NA	NA	<0.2	0.015	<0.005	NA
zinc	0.06	NA	0.030	0.037	NA	NA	0.11	0.060	<0.01	NA
Miscellaneous Parameters										
pH (units)	7.3	7.2	7.0	NA	7.1	7.1	7.3	6.9	7.0	6.9
spec. conductance (umhos/cm)	950	1,250	8,500	8,500	4,000	4,000	3,500	1,450	980	900
temperature (deg./centigrade)	11	12	11	NA	14	14	16	18	16	16
TOC	NA	NA	112	130	25	24	27	50	NA	NA
total phenols	0.058	<0.05	0.190	NA	0.003	0.054	0.003	NA	<0.050	<0.050
TOX	NA	NA	0.750	NA	0.059	0.055	0.360	NA	NA	NA
total dissolved solids (TDS)	NA	NA	NA	NA	NA	NA	NA	956	NA	NA
bicarbonate, as CACO3	NA	NA	NA	NA	NA	NA	NA	NA	NA	NA
calcium	NA	NA	NA	NA	NA	NA	NA	NA	NA	NA
chloride	NA	NA	NA	NA	495	480	350	115	NA	NA
cyanide	<0.025	<0.025	0.016	NA	NA	NA	<0.005	NA	<0.025	<0.025
iron	NA	NA	NA	NA	NA	NA	NA	NA	NA	NA
magnesium	NA	NA	NA	NA	NA	NA	NA	NA	NA	NA
potassium	NA	NA	NA	NA	NA	NA	NA	NA	NA	NA
sodium	NA	NA	NA	NA	NA	NA	NA	NA	NA	NA
sulfate, as SO4	NA	NA	NA	NA	NA	NA	NA	NA	NA	NA

Table E-5. Summary of Metals and Miscellaneous Parameters in Ground Water, Monsanto Company, WG Krummrich Plant, Sauget, Il.

Well Number:	GM-9C	GM-9C	GM-9C	GM-10A	GM-10A	GM-10A	GM-10B	GM-10B	GM-10C	GM-10C
Date:	9/84	5/85	11/85	11/83	2/84	5/84	2/85	5/85	2/85	5/85
USEPA Priority Pollutant Metals (concentrations are in mg/L, except where noted)										
antimony	0.34	<0.07	NA	0.011	NA	<0.5	<0.07	<0.07	<0.08	<0.07
arsenic	<0.001	<0.01	NA	<0.002	NA	<0.01	0.016	0.036	<0.01	<0.01
beryllium	<0.01	<0.001	NA	<0.01	NA	<0.01	<0.001	<0.001	<0.001	<0.001
cadmium	4.82	<0.004	NA	<0.01	NA	<0.02	<0.003	<0.004	<0.005	<0.004
chromium	0.046	<0.01	NA	<0.04	NA	<0.05	<0.01	<0.01	<0.02	<0.01
copper	0.01	<0.01	NA	NA	NA	NA	<0.02	<0.01	<0.02	<0.01
lead	0.016	<0.07	NA	0.004	NA	<0.01	<0.06	<0.07	<0.1	<0.07
mercury	0.0004	<0.0002	NA	<0.0002	NA	<0.0005	<0.0003	<0.0002	<0.0003	<0.0002
nickel	0.068	<0.02	NA	<0.04	NA	<0.05	<0.04	<0.02	<0.03	<0.02
selenium	<0.001	<0.005	NA	0.003	NA	<0.01	<0.006	<0.005	<0.006	<0.005
silver	0.002	<0.009	NA	0.006	NA	<0.05	<0.008	<0.009	<0.01	<0.009
thallium	0.012	<0.005	NA	0.004	NA	<0.2	<0.005	<0.005	<0.005	<0.005
zinc	0.065	<0.01	NA	0.049	NA	0.09	<0.05	<0.01	<0.03	<0.01
Miscellaneous Parameters										
pH (units)	7.0	7.2	7.7	7.0	7.1	7.3	7.8	7.4	7.4	7.0
spec. conductance (umhos/cm)	1,800	900	2,300	2100	2,000	1,700	2,000	1,600	1,000	980
temperature (deg./centigrade)	18	16	17	11	15	15	10	16	11	16
TOC	8.8	NA	NA	72	9	10	NA	NA	NA	NA
total phenols	NA	<0.050	<0.050	<0.002	<0.002	<0.002	0.083	<0.05	<0.050	<0.05
TOX	NA	NA	NA	0.013	0.028	0.014	NA	NA	NA	NA
total dissolved solids (TDS)	1,080	NA	NA	NA	NA	NA	NA	NA	NA	NA
bicarbonate, as CACO3	NA	NA	NA	NA	NA	NA	NA	NA	NA	NA
calcium	NA	NA	NA	NA	NA	NA	NA	NA	NA	NA
chloride	236	NA	NA	NA	15	36	NA	NA	NA	NA
cyanide	NA	<0.025	<0.025	<0.005	NA	<0.005	<0.025	<0.025	<0.025	<0.025
iron	NA	NA	NA	NA	NA	NA	NA	NA	NA	NA
magnesium	NA	NA	NA	NA	NA	NA	NA	NA	NA	NA
potassium	NA	NA	NA	NA	NA	NA	NA	NA	NA	NA
sodium	NA	NA	NA	NA	NA	NA	NA	NA	NA	NA
sulfate, as SO4	NA	NA	NA	NA	NA	NA	NA	NA	NA	NA

Table E-5. Summary of Metals and Miscellaneous Parameters in Ground Water, Monsanto Company, WG Krummrich Plant, Sauget, Il.

Well Number:	GM-11	GM-11	GM-11	GM-12A	GM-12A	GM-12A	GM-12A	GM-12A	GM-12A	GM-12A
Date:	11/83	2/84	5/84	11/83	2/84	2/84*	5/84	5/84*	11/84	11/84*
USEPA Priority Pollutant Metals (concentrations are in mg/L, except where noted)										
antimony	0.012	NA	<0.5	0.131	NA	NA	<0.5	<0.5	<0.07	<0.07
arsenic	<0.002	NA	<0.01	0.024	NA	NA	<0.01	<0.01	0.022	0.017
beryllium	<0.01	NA	<0.01	<0.01	NA	NA	<0.01	<0.01	<0.005	<0.005
cadmium	<0.01	NA	<0.02	0.03	NA	NA	<0.02	0.02	<0.005	<0.005
chromium	<0.04	NA	<0.05	<0.04	NA	NA	<0.05	<0.05	<0.008	<0.008
copper	NA	NA	NA	NA	NA	NA	NA	NA	<0.008	<0.008
lead	0.002	NA	<0.01	0.015	NA	NA	<0.01	<0.01	<0.06	<0.06
mercury	<0.0002	NA	<0.0005	<0.0002	NA	NA	<0.0005	<0.0005	<0.0003	<0.0003
nickel	<0.04	NA	<0.05	0.13	NA	NA	<0.05	<0.05	<0.01	<0.01
selenium	0.003	NA	<0.01	0.034	NA	NA	<0.01	<0.01	<0.01	<0.005
silver	<0.001	NA	<0.05	<0.001	NA	NA	<0.05	<0.05	<0.008	<0.008
thallium	0.003	NA	<0.2	0.023	NA	NA	<0.2	<0.2	<0.01	<0.005
zinc	0.019	NA	0.09	0.037	NA	NA	0.03	0.03	<0.008	<0.008
Miscellaneous Parameters										
pH (units)	7.3	7.2	7.3	7.9	7.8	7.8	7.8	7.8	6.9	6.9
spec. conductance (umhos/cm)	1,100	1,100	1,150	30,000	7,000	7,000	5,500	5,500	4,500	4,500
temperature (deg./centigrade)	12	13	14	12	16	16	16	16	14	14
TOC	36	18	10	118	29	30	25	22	NA	NA
total phenols	0.002	<0.002	<0.002	0.68	0.86	0.11	0.86	0.054	<0.05	0.079
TOX	0.022	0.033	0.015	4.7	5.2	5.1	4.7	5.5	NA	NA
total dissolved solids (TDS)	NA	NA	NA	NA	NA	NA	NA	NA	NA	NA
bicarbonate, as CACO3	NA	NA	NA	NA	NA	NA	NA	NA	NA	NA
calcium	NA	NA	NA	NA	NA	NA	NA	NA	NA	NA
chloride	NA	40	22	5,198	1,055	1,050	835	902	NA	NA
cyanide	<0.005	NA	<0.005	0.013	NA	NA	<0.005	<0.005	<0.025	<0.025
iron	NA	NA	NA	NA	NA	NA	NA	NA	NA	NA
magnesium	NA	NA	NA	NA	NA	NA	NA	NA	NA	NA
potassium	NA	NA	NA	NA	NA	NA	NA	NA	NA	NA
sodium	NA	NA	NA	NA	NA	NA	NA	NA	NA	NA
sulfate, as SO4	NA	NA	NA	NA	NA	NA	NA	NA	NA	NA

Table E-5. Summary of Metals and Miscellaneous Parameters in Ground Water, Monsanto Company, WG Krummrich Plant, Sauget, Il.

Well Number:	GM-12A	GM-12A	GM-12A	GM-12A	GM-12A	GM-12A	GM-12A	GM-12A	GM-12B	GM-12B
Date:	2/85	2/85*	5/85	5/85*	11/85	11/85*	2/86	2/86*	9/84	11/84
USEPA Priority Pollutant Metals (concentrations are in mg/L, except where noted)										
antimony	<0.1	<0.1	<0.07	<0.07	NA	NA	<0.050	<0.050	0.024	<0.07
arsenic	0.032	0.041	0.035	0.033	NA	NA	0.04	0.02	<0.001	<0.005
beryllium	<0.001	<0.001	<0.001	<0.001	NA	NA	<0.001	<0.001	<0.01	<0.005
cadmium	<0.004	<0.004	<0.004	<0.004	NA	NA	<0.003	<0.003	4.46	<0.005
chromium	<0.02	<0.02	<0.01	<0.01	NA	NA	<0.010	<0.010	0.089	<0.008
copper	<0.01	<0.01	<0.01	<0.01	NA	NA	<0.009	<0.009	0.05	<0.008
lead	<0.07	<0.07	<0.07	<0.07	NA	NA	<0.06	<0.06	0.012	<0.06
mercury	<0.0003	<0.0003	<0.0002	<0.0002	NA	NA	<0.0002	<0.0002	<0.0004	<0.0003
nickel	<0.01	<0.01	<0.02	<0.02	NA	NA	<0.01	<0.01	0.084	<0.01
selenium	<0.006	<0.006	<0.005	<0.005	NA	NA	<0.01	<0.01	<0.001	<0.005
silver	<0.008	<0.008	<0.009	<0.009	NA	NA	<0.01	<0.01	0.001	<0.008
thallium	<0.005	<0.005	<0.01	<0.01	NA	NA	<0.005	<0.30	0.013	<0.005
zinc	0.02	0.02	<0.01	<0.01	NA	NA	0.03	0.04	0.036	<0.008
Miscellaneous Parameters										
pH (units)	6.8	6.8	7.8	7.8	6.9	6.9	7.0	7.0	7.2	7.0
spec. conductance (umhos/cm)	3,000	3,000	1,050	1,050	9,800	9,800	3,125	3,125	1,400	1,400
temperature (deg./centigrade)	12	12	16	16	16	16	12	12	18	13
TOC	NA	NA	NA	NA	NA	NA	NA	NA	14	NA
total phenols	<0.05	0.062	0.069	0.055	0.251	0.189	0.0561	0.0637	NA	<0.05
TOX	NA	NA	NA	NA	NA	NA	NA	NA	NA	NA
total dissolved solids (TDS)	NA	NA	NA	NA	NA	NA	NA	NA	816	NA
bicarbonate, as CACO3	NA	NA	NA	NA	1090	850	NA	NA	NA	NA
calcium	NA	NA	NA	NA	524	514	NA	NA	NA	NA
chloride	NA	NA	NA	NA	1,610	1,070	NA	NA	109	NA
cyanide	<0.025	<0.025	<0.025	<0.025	<0.025	<0.025	<0.025	<0.025	NA	<0.025
iron	NA	NA	NA	NA	39.6	44.8	NA	NA	NA	NA
magnesium	NA	NA	NA	NA	129	127	NA	NA	NA	NA
potassium	NA	NA	NA	NA	11.4	11.2	NA	NA	NA	NA
sodium	NA	NA	NA	NA	1,250	1,230	NA	NA	NA	NA
sulfate, as SO4	NA	NA	NA	NA	930	910	NA	NA	NA	NA

Table E-5. Summary of Metals and Miscellaneous Parameters in Ground Water, Monsanto Company, W6 Krummrich Plant, Sauget, Il.

Well Number:	GM-12B	GM-12C	GM-12C	GM-12C	GM-12C	GM-13	GM-13	GM-13	GM-14	GM-15
Date:	11/85	2/85	2/85*	5/85	5/85*	9/84	11/85	2/86	9/84	9/84
USEPA Priority Pollutant Metals (concentrations are in mg/L, except where noted)										
antimony	NA	<0.1	<0.1	<0.07	<0.07	0.042	NA	<0.05	0.187	0.021
arsenic	NA	<0.01	<0.01	<0.01	<0.01	0.003	NA	0.04	<0.001	<0.001
beryllium	NA	<0.001	<0.001	<0.001	<0.001	<0.01	NA	<0.001	<0.010	<0.01
cadmium	NA	<0.004	<0.004	<0.004	<0.004	16.1	NA	<0.003	25.8	9.16
chromium	NA	<0.02	<0.02	<0.01	<0.01	<0.04	NA	<0.01	<0.04	<0.04
copper	NA	<0.01	<0.01	<0.01	<0.01	0.02	NA	<0.009	0.03	0.02
lead	NA	<0.01	<0.07	<0.07	<0.07	0.021	NA	<0.06	0.10	0.018
mercury	NA	<0.0003	<0.0003	<0.0002	<0.0002	<0.0002	NA	<0.0002	<0.0004	<0.0002
nickel	NA	<0.01	<0.01	<0.02	<0.02	0.038	NA	0.03	0.111	0.038
selenium	NA	<0.006	<0.006	0.005	<0.005	<0.001	NA	<0.005	<0.001	<0.001
silver	NA	<0.008	<0.008	<0.009	<0.009	<0.002	NA	<0.01	<0.007	0.002
thallium	NA	<0.005	<0.005	<0.02	<0.010	0.014	NA	<0.005	0.04	0.011
zinc	NA	<0.006	<0.006	0.02	0.020	0.073	NA	0.04	0.221	0.018
Miscellaneous Parameters										
pH (units)	6.6	8.8	9.0	7.2	7.2	6.5	7.0	7.2	6.9	7.8
spec. conductance (umhos/cm)	2,800	2,500	2,500	780	780	2,500	1,100	1,170	3,400	2,400
temperature (deg./centigrade)	14	15	15	16	16	22	15	18	20	20
TOC	NA	NA	NA	NA	NA	101	NA	NA	328	16
total phenols	0.0744	0.18	0.23	<0.05	<0.05	NA	16.1	1.330	NA	NA
TOX	NA	NA	NA	NA	NA	NA	NA	NA	NA	NA
total dissolved solids (TDS)	NA	NA	NA	NA	NA	1,648	NA	NA	4,838	1,024
bicarbonate, as CACO3	NA	NA	NA	NA	NA	NA	710	NA	NA	NA
calcium	NA	NA	NA	NA	NA	NA	69	NA	NA	NA
chloride	NA	NA	NA	NA	NA	470	46.3	NA	54	395
cyanide	<0.025	<0.025	0.034	<0.025	<0.025	NA	<0.025	<0.025	NA	NA
iron	NA	NA	NA	NA	NA	NA	6.8	NA	NA	NA
magnesium	NA	NA	NA	NA	NA	NA	10	NA	NA	NA
potassium	NA	NA	NA	NA	NA	NA	174	NA	NA	NA
sodium	NA	NA	NA	NA	NA	NA	71.5	NA	NA	NA
sulfate, as SO4	NA	NA	NA	NA	NA	NA	16	NA	NA	NA

Table E-5. Summary of Metals and Miscellaneous Parameters in Ground Water, Monsanto Company, WG Krummrich Plant, Sauget, Il.

Well Number:	GM-16A	GM-16A	GM-16A	GM-16B	GM-16B	GM-16B	GM-16B	GM-17A	GM-17A	GM-17A
Date:	9/84	5/85	11/85	9/84	5/85	11/85	2/86	9/84	11/84	11/85
USEPA Priority Pollutant Metals (concentrations are in mg/L, except where noted)										
antimony	0.056	<0.09	NA	0.018	<0.09	NA	NA	0.015	<0.08	NA
arsenic	<0.001	<0.01	NA	<0.001	<0.01	NA	NA	0.002	<0.01	NA
beryllium	<0.002	<0.002	NA	<0.002	<0.002	NA	NA	<0.002	<0.005	NA
cadmium	<0.002	<0.004	NA	<0.002	<0.004	NA	NA	<0.002	<0.005	NA
chromium	<0.004	<0.02	NA	<0.004	<0.02	NA	NA	<0.004	<0.02	NA
copper	0.008	<0.01	NA	<0.004	<0.01	NA	NA	<0.004	<0.01	NA
lead	<0.004	<0.1	NA	<0.004	<0.1	NA	NA	<0.004	<0.06	NA
mercury	0.00023	<0.0003	NA	<0.0004	<0.0003	NA	NA	<0.0002	<0.0003	NA
nickel	0.013	<0.03	NA	0.004	<0.03	NA	NA	0.023	<0.01	NA
selenium	<0.001	<0.005	NA	<0.001	<0.005	NA	NA	<0.001	<0.005	NA
silver	0.004	<0.01	NA	0.002	<0.01	NA	NA	<0.01	<0.007	NA
thallium	0.019	<0.005	NA	0.008	<0.005	NA	NA	0.17	<0.005	NA
zinc	0.04	0.02	NA	0.057	0.06	NA	NA	0.091	<0.01	NA
Miscellaneous Parameters										
pH (units)	6.9	6.9	6.9	7.8	7.2	7.0	7.1	6.4	6.6	6.7
spec. conductance (umhos/cm)	1,430	580	2,200	800	750	2,500	830	1,150	1,650	1,500
temperature (deg./centigrade)	20	16	13	20	16	13	13.5	20	16	16
TOC	5	NA	NA	10	NA	NA	NA	15	NA	NA
total phenols	NA	<0.050	<0.050	NA	0.057	0.0534	NA	NA	0.2	0.197
TOX	NA	NA	NA	NA	NA	NA	NA	NA	NA	NA
total dissolved solids (TDS)	914	NA	NA	354	NA	NA	NA	880	NA	NA
bicarbonate, as CACO3	NA	NA	NA	NA	NA	NA	NA	NA	NA	NA
calcium	NA	NA	NA	NA	NA	NA	NA	NA	NA	NA
chloride	145	NA	NA	40	NA	NA	NA	120	NA	NA
cyanide	NA	<0.025	<0.025	NA	<0.025	<0.025	NA	NA	<0.025	<0.025
iron	NA	NA	NA	NA	NA	NA	NA	NA	NA	NA
magnesium	NA	NA	NA	NA	NA	NA	NA	NA	NA	NA
potassium	NA	NA	NA	NA	NA	NA	NA	NA	NA	NA
sodium	NA	NA	NA	NA	NA	NA	NA	NA	NA	NA
sulfate, as SO4	NA	NA	NA	NA	NA	NA	NA	NA	NA	NA

Table E-5. Summary of Metals and Miscellaneous Parameters in Ground Water, Monsanto Company, WG Krummrich Plant, Sauget, Il.

Well Number:	GM-17B	GM-17B	GM-17B	GM-17C	GM-17C	GM-17C	GM-18A	GM-18A	GM-18A	GM-18B
Date:	9/84	11/84	11/85	9/84	11/84	11/85	9/84	5/85	11/85	9/84
USEPA Priority Pollutant Metals (concentrations are in mg/L, except where noted)										
antimony	0.044	<0.08	NA	0.060	<0.08	NA	0.017	<0.09	NA	0.035
arsenic	0.001	<0.01	NA	<0.001	<0.005	NA	<0.001	<0.01	NA	0.001
beryllium	<0.002	<0.005	NA	<0.002	<0.005	NA	<0.002	<0.002	NA	<0.002
cadmium	<0.002	<0.005	NA	<0.002	<0.005	NA	<0.002	<0.004	NA	0.003
chromium	<0.004	<0.02	NA	<0.004	<0.02	NA	<0.004	<0.02	NA	<0.004
copper	<0.004	<0.01	NA	<0.004	<0.01	NA	<0.004	<0.01	NA	<0.004
lead	<0.004	<0.06	NA	<0.004	<0.06	NA	<0.004	<0.1	NA	<0.004
mercury	<0.0002	<0.0006	NA	<0.0002	<0.0003	NA	<0.0004	<0.0003	NA	<0.0002
nickel	0.008	<0.01	NA	0.009	<0.01	NA	<0.004	<0.03	NA	0.004
selenium	<0.001	<0.005	NA	<0.001	<0.005	NA	0.002	<0.005	NA	<0.001
silver	<0.01	<0.007	NA	<0.01	<0.007	NA	<0.010	<0.01	NA	<0.010
thallium	0.327	<0.005	NA	0.533	<0.005	NA	0.195	<0.005	NA	0.321
zinc	0.053	<0.01	NA	0.047	<0.01	NA	0.067	<0.01	NA	0.075
Miscellaneous Parameters										
pH (units)	6.6	6.9	7.4	6.3	6.8	7.3	6.5	6.6	7.0	6.4
spec. conductance (umhos/cm)	3,000	4,300	4,000	4,500	6,300	5,500	800	600	1,150	2,000
temperature (deg./centigrade)	20	18	16	20	18	16	18	16	12	18
TOC	56	NA	NA	17	NA	NA	4	NA	NA	4
total phenols	NA	0.82	1.69	NA	0.05	<0.05	NA	0.16	<0.05	NA
TOX	NA	NA	NA	NA	NA	NA	NA	NA	NA	NA
total dissolved solids (TDS)	2,516	NA	NA	3,384	NA	NA	663	NA	NA	1,644
bicarbonate, as CACO3	NA	NA	1,400	NA	NA	930	NA	NA	NA	NA
calcium	NA	NA	136	NA	NA	198	NA	NA	NA	NA
chloride	425	NA	633	1,265	NA	856	15	NA	NA	70
cyanide	NA	<0.025	<0.025	NA	<0.025	<0.025	NA	<0.025	<0.025	NA
iron	NA	NA	1	NA	NA	3.6	NA	NA	NA	NA
magnesium	NA	NA	28.5	NA	NA	64	NA	NA	NA	NA
potassium	NA	NA	16.4	NA	NA	406	NA	NA	NA	NA
sodium	NA	NA	825	NA	NA	785	NA	NA	NA	NA
sulfate, as SO4	NA	NA	21	NA	NA	700	NA	NA	NA	NA

Table E-5. Summary of Metals and Miscellaneous Parameters in Ground Water, Monsanto Company, WG Krummrich Plant, Sauget, Il.

Well Number:	GM-18B	GM-18B	GM-25A	GM-25A	GM-25B	GM-25B	GM-25B	GM-27B	GM-27B	GM-27B
Date:	5/85	11/85	9/84	11/84	9/84	11/84	11/85	9/84	11/85	2/86
USEPA Priority Pollutant Metals (concentrations are in mg/L, except where noted)										
antimony	<0.09	NA	0.011	<0.08	0.011	<0.07	NA	0.012	NA	<0.06
arsenic	<0.01	NA	<0.001	<0.005	<0.001	<0.005	NA	<0.001	NA	<0.01
beryllium	<0.002	NA	<0.002	<0.005	<0.002	<0.005	NA	<0.002	NA	<0.0009
cadmium	<0.004	NA	<0.002	<0.005	<0.002	<0.005	NA	<0.002	NA	<0.003
chromium	<0.02	NA	0.004	<0.02	<0.004	<0.008	NA	<0.004	NA	<0.008
copper	<0.01	NA	0.006	<0.01	<0.004	<0.008	NA	<0.004	NA	<0.006
lead	<0.1	NA	<0.004	<0.06	<0.004	<0.06	NA	<0.004	NA	<0.06
mercury	<0.0003	NA	<0.0002	<0.0003	<0.0002	<0.0003	NA	<0.0002	NA	<0.0002
nickel	<0.03	NA	<0.004	<0.01	<0.004	<0.01	NA	<0.004	NA	<0.009
selenium	<0.005	NA	0.002	<0.005	<0.001	<0.005	NA	<0.001	NA	<0.005
silver	<0.01	NA	<0.01	<0.007	<0.010	<0.008	NA	<0.01	NA	<0.010
thallium	<0.005	NA	0.127	<0.005	0.172	<0.01	NA	0.051	NA	<0.005
zinc	0.02	NA	0.07	<0.01	0.059	<0.008	NA	0.032	NA	0.02
Miscellaneous Parameters										
pH (units)	6.8	6.9	7.0	6.8	7.4	7.0	7.0	7.1	8.4	NA
spec. conductance (umhos/cm)	1,075	2,500	550	1,600	800	1,120	1,450	420	550	410
temperature (deg./centigrade)	16	15	18	14	18	13	12	18	12	12
TOC	NA	NA	3	NA	7	NA	NA	10	10.4	NA
total phenols	0.056	0.0506	NA	<0.05	NA	<0.05	<0.05	NA	<0.05	0.0636
TOX	NA	NA	NA	NA	NA	NA	NA	NA	NA	NA
total dissolved solids (TDS)	NA	NA	332	NA	628	NA	NA	294	NA	NA
bicarbonate, as CACO3	NA	NA	NA	NA	NA	NA	NA	NA	NA	NA
calcium	NA	NA	NA	NA	NA	NA	NA	NA	NA	NA
chloride	NA	NA	10	NA	35	NA	NA	35	NA	NA
cyanide	<0.025	<0.025	NA	<0.025	NA	<0.025	<0.025	NA	<0.025	<0.025
iron	NA	NA	NA	NA	NA	NA	NA	NA	NA	NA
magnesium	NA	NA	NA	NA	NA	NA	NA	NA	NA	NA
potassium	NA	NA	NA	NA	NA	NA	NA	NA	NA	NA
sodium	NA	NA	NA	NA	NA	NA	NA	NA	NA	NA
sulfate, as SO4	NA	NA	NA	NA	NA	NA	NA	NA	NA	NA

Table E-5. Summary of Metals and Miscellaneous Parameters in Ground Water, Monsanto Company, WG Krummrich Plant, Sauget, Il.

Well Number:	GM-27C	GM-27C	GM-27C	GM-28B	GM-28B	GM-28B	GM-28C	GM-28C	GM-28C	GM-29
Date:	9/84	11/85	2/86	9/84	11/85	2/86	9/84	11/85	2/86	9/84
USEPA Priority Pollutant Metals (concentrations are in mg/L, except where noted)										
antimony	0.011	NA	<0.06	0.015	NA	<0.06	0.039	NA	<0.06	0.183
arsenic	<0.001	NA	<0.01	<0.001	NA	<0.01	0.002	NA	<0.01	0.002
beryllium	<0.002	NA	<0.0009	<0.002	NA	<0.0009	<0.002	NA	<0.0009	<0.002
cadmium	<0.002	NA	<0.003	<0.002	NA	<0.003	0.003	NA	<0.003	0.014
chromium	<0.004	NA	<0.008	<0.004	NA	<0.008	<0.004	NA	<0.008	<0.004
copper	<0.004	NA	<0.006	<0.004	NA	<0.006	<0.004	NA	<0.006	0.016
lead	<0.004	NA	<0.06	<0.004	NA	<0.06	<0.004	NA	<0.06	0.007
mercury	<0.0002	NA	<0.0002	<0.0002	NA	<0.0002	<0.0002	NA	<0.0002	<0.0004
nickel	<0.004	NA	0.01	<0.004	NA	0.01	0.007	NA	<0.009	0.006
selenium	<0.001	NA	<0.005	<0.001	NA	<0.005	<0.001	NA	<0.005	<0.001
silver	<0.01	NA	<0.01	<0.01	NA	<0.01	<0.01	NA	<0.01	0.011
thallium	0.102	NA	<0.005	0.106	NA	<0.005	0.279	NA	<0.005	0.027
zinc	0.07	NA	0.058	0.038	NA	0.04	0.043	NA	0.16	0.079
Miscellaneous Parameters										
pH (units)	7.1	6.8	7.0	7.2	6.7	NA	6.9	7.3	NA	6.8
spec. conductance (umhos/cm)	700	1,600	1,000	1,100	2,500	1,230	2,500	2,500	1,290	2,300
temperature (deg./centigrade)	20	12	12	19	NA	13	19	NA	10	20
TOC	18	113.4#	NA	114	182#	NA	252	188#	NA	16
total phenols	NA	0.346	0.152	NA	5.5	3.76	NA	1.036	1.980	NA
TOX	NA	NA	NA	NA	NA	NA	NA	NA	NA	NA
total dissolved solids (TDS)	482	NA	NA	832	NA	NA	2,250	NA	NA	4,236
bicarbonate, as CACO3	NA	NA	NA	NA	NA	NA	NA	820	NA	NA
calcium	NA	NA	NA	NA	NA	NA	NA	228	NA	NA
chloride	55	NA	NA	175	NA	NA	705	384	NA	1,105
cyanide	NA	NA	<0.025	NA	<0.025	<0.025	NA	<0.025	<0.025	NA
iron	NA	NA	NA	NA	NA	NA	NA	85.2	NA	NA
magnesium	NA	NA	NA	NA	NA	NA	NA	66.6	NA	NA
potassium	NA	NA	NA	NA	NA	NA	NA	11.9	NA	NA
sodium	NA	NA	NA	NA	NA	NA	NA	232	NA	NA
sulfate, as SO4	NA	NA	NA	NA	NA	NA	NA	16	NA	NA

Table E-5. Summary of Metals and Miscellaneous Parameters in Ground Water, Monsanto Company, WG Krummrich Plant, Sauget, Il.

Well Number:	GM-29	GM-30	GM-30	GM-30	GM-31A	GM-31A	GM-31A	GM-31A	GM-31A	GM-31A
Date:	11/85	9/84	11/85	2/86	2/85	5/85	11/85	11/85*	2/86	2/86*
USEPA Priority Pollutant Metals (concentrations are in mg/L, except where noted)										
antimony	NA	0.211	NA	<0.06	<0.08	<0.09	NA	NA	NA	NA
arsenic	NA	0.001	NA	<0.01	<0.01	<0.01	NA	NA	NA	NA
beryllium	NA	<0.01	NA	<0.0009	<0.001	<0.002	NA	NA	NA	NA
cadmium	NA	<0.01	NA	0.005	<0.005	<0.004	NA	NA	NA	NA
chromium	NA	<0.04	NA	<0.008	<0.02	<0.02	NA	NA	NA	NA
copper	NA	0.04	NA	<0.006	<0.02	<0.01	NA	NA	NA	NA
lead	NA	0.17	NA	<0.06	<0.1	<0.1	NA	NA	NA	NA
mercury	NA	<0.00095	NA	0.0002	<0.0003	<0.0003	NA	NA	NA	NA
nickel	NA	0.584	NA	1.4	<0.03	<0.03	NA	NA	NA	NA
selenium	NA	<0.001	NA	0.06	<0.006	<0.005	NA	NA	NA	NA
silver	NA	0.004	NA	<0.01	<0.01	<0.01	NA	NA	NA	NA
thallium	NA	0.354	NA	<0.05	<0.005	<0.005	NA	NA	NA	NA
zinc	NA	0.558	NA	0.420	<0.03	0.1	NA	NA	NA	NA
Miscellaneous Parameters										
pH (units)	6.9	6.5	6.6	NA	7.4	6.4	7.0	7.0	7.3	7.3
spec. conductance (umhos/cm)	1,400	5,000	10,500	4,090	1,100	1,420	1,600	1,600	925	925
temperature (deg./centigrade)	15	24	14	11	11	16	16	16	11	11
TOC	NA	14	NA	NA	NA	NA	NA	NA	NA	NA
total phenols	0.0629	NA	0.0945	<0.05	89	19	10.6	10.5	NA	NA
TOX	NA	NA	NA	NA	NA	NA	NA	NA	NA	NA
total dissolved solids (TDS)	NA	10,422	NA	NA	NA	NA	NA	NA	NA	NA
bicarbonate, as CACO3	NA	NA	NA	NA	NA	NA	NA	NA	NA	NA
calcium	NA	NA	NA	NA	NA	NA	NA	NA	NA	NA
chloride	NA	4,200	NA	NA	NA	NA	NA	NA	NA	NA
cyanide	<0.025	NA	<0.025	<0.025	<0.025	<0.025	<0.025	<0.025	NA	NA
iron	NA	NA	NA	NA	NA	NA	NA	NA	NA	NA
magnesium	NA	NA	NA	NA	NA	NA	NA	NA	NA	NA
potassium	NA	NA	NA	NA	NA	NA	NA	NA	NA	NA
sodium	NA	NA	NA	NA	NA	NA	NA	NA	NA	NA
sulfate, as SO4	NA	NA	NA	NA	NA	NA	NA	NA	NA	NA

Table E-5. Summary of Metals and Miscellaneous Parameters in Ground Water, Monsanto Company, WG Krummrich Plant, Sauget, Il.

Well Number:	GM-31B	GM-31B	GM-31B	GM-31B	GM-31C	GM-31C	GM-31C	GM-31C	B-21B	B-21B
Date:	2/85	5/85	11/85	11/85*	2/85	5/85	11/85	11/85*	1/84	2/84
USEPA Priority Pollutant Metals (concentrations are in mg/L, except where noted)										
antimony	<0.07	<0.09	NA	NA	<0.07	<0.09	NA	NA	NA	NA
arsenic	<0.01	<0.01	NA	NA	<0.01	<0.01	NA	NA	NA	NA
beryllium	<0.001	<0.002	NA	NA	<0.001	<0.002	NA	NA	NA	NA
cadmium	<0.003	<0.004	NA	NA	<0.003	<0.004	NA	NA	NA	NA
chromium	<0.01	<0.02	NA	NA	<0.01	<0.02	NA	NA	NA	NA
copper	<0.02	<0.01	NA	NA	<0.02	<0.01	NA	NA	NA	NA
lead	<0.06	<0.1	NA	NA	<0.06	<0.1	NA	NA	NA	NA
mercury	<0.0003	<0.0003	NA	NA	<0.0003	<0.0003	NA	NA	NA	NA
nickel	<0.04	<0.03	NA	NA	<0.04	<0.03	NA	NA	NA	NA
selenium	<0.006	<0.005	NA	NA	<0.006	<0.005	NA	NA	NA	NA
silver	<0.008	<0.01	NA	NA	<0.008	<0.01	NA	NA	NA	NA
thallium	<0.005	<0.005	NA	NA	<0.005	<0.005	NA	NA	NA	NA
zinc	0.06	0.04	NA	NA	<0.05	0.02	NA	NA	NA	NA
Miscellaneous Parameters										
pH (units)	6.4	7.3	7.0	7.0	7.2	7.1	6.8	6.8	6.0	6.6
spec. conductance (umhos/cm)	1,450	2,000	3,000	3,000	1,400	1,850	3,750	3,750	4,100	1,650
temperature (deg./centigrade)	11	16	12	12	11	16	12	12	14.5	16.5
TOC	NA	NA	NA	NA	NA	NA	NA	NA	630	750
total phenols	<0.05	<0.05	<0.05	0.0591	0.069	<0.05	<0.05	0.077	530#	630
TOX	NA	NA	NA	NA	NA	NA	NA	NA	260	490
total dissolved solids (TDS)	NA	NA	NA	NA	NA	NA	NA	NA	NA	NA
bicarbonate, as CACO3	NA	NA	NA	NA	NA	NA	NA	NA	NA	NA
calcium	NA	NA	NA	NA	NA	NA	NA	NA	NA	NA
chloride	NA	NA	NA	NA	NA	NA	NA	NA	NA	NA
cyanide	<0.025	<0.025	<0.025	<0.025	<0.025	<0.025	<0.025	<0.025	NA	NA
iron	NA	NA	NA	NA	NA	NA	NA	NA	NA	NA
magnesium	NA	NA	NA	NA	NA	NA	NA	NA	NA	NA
potassium	NA	NA	NA	NA	NA	NA	NA	NA	NA	NA
sodium	NA	NA	NA	NA	NA	NA	NA	NA	NA	NA
sulfate, as SO4	NA	NA	NA	NA	NA	NA	NA	NA	NA	NA

Table E-5. Summary of Metals and Miscellaneous Parameters in Ground Water, Monsanto Company, WG Krummrich Plant, Sauget, Il.

Well Number:	B-21B	B-21B	B-22A	B-22A	B-22A	B-22A	B-22B	B-22B	B-22B	B-22B
Date:	3/84	5/84	1/84	2/84	3/84	5/84	1/84	2/84	3/84	5/84
USEPA Priority Pollutant Metals (concentrations are in mg/L, except where noted)										
antimony	NA	NA	NA	NA	NA	NA	NA	NA	NA	NA
arsenic	NA	NA	NA	NA	NA	NA	NA	NA	NA	NA
beryllium	NA	NA	NA	NA	NA	NA	NA	NA	NA	NA
cadmium	NA	NA	NA	NA	NA	NA	NA	NA	NA	NA
chromium	NA	NA	NA	NA	NA	NA	NA	NA	NA	NA
copper	NA	NA	NA	NA	NA	NA	NA	NA	NA	NA
lead	NA	NA	NA	NA	NA	NA	NA	NA	NA	NA
mercury	NA	NA	NA	NA	NA	NA	NA	NA	NA	NA
nickel	NA	NA	NA	NA	NA	NA	NA	NA	NA	NA
selenium	NA	NA	NA	NA	NA	NA	NA	NA	NA	NA
silver	NA	NA	NA	NA	NA	NA	NA	NA	NA	NA
thallium	NA	NA	NA	NA	NA	NA	NA	NA	NA	NA
zinc	NA	NA	NA	NA	NA	NA	NA	NA	NA	NA
Miscellaneous Parameters										
pH (units)	6.6	7.0	6.5	6.7	6.5	6.5	6.0	6.6	6.4	6.5
spec. conductance (umhos/cm)	3,150	3,350	2,750	1,300	3,200	4,200	2,050	1,000	1,950	1,850
temperature (deg./centigrade)	15.5	16	13.0	14	15	14.0	16.0	17	15	16.5
TOC	1,600	1,600	NA	130	390	300	230	180	1,000	420
total phenols	380	380	21	35	28.5#	59	150	100	210	47#
TOX	440	540	330	92#	70	130	120	5.3	38	80
total dissolved solids (TDS)	NA	NA	NA	NA	NA	NA	NA	NA	NA	NA
bicarbonate, as CACO3	NA	NA	NA	NA	NA	NA	NA	NA	NA	NA
calcium	NA	NA	NA	NA	NA	NA	NA	NA	NA	NA
chloride	NA	NA	NA	NA	NA	NA	NA	NA	NA	NA
cyanide	NA	NA	NA	NA	NA	NA	NA	NA	NA	NA
iron	NA	NA	NA	NA	NA	NA	NA	NA	NA	NA
magnesium	NA	NA	NA	NA	NA	NA	NA	NA	NA	NA
potassium	NA	NA	NA	NA	NA	NA	NA	NA	NA	NA
sodium	NA	NA	NA	NA	NA	NA	NA	NA	NA	NA
sulfate, as SO4	NA	NA	NA	NA	NA	NA	NA	NA	NA	NA

Table E-5. Summary of Metals and Miscellaneous Parameters in Ground Water, Monsanto Company, WG Krummrich Plant, Sauget, Il.

Well Number:	B-23B	B-23B	B-23B	B-23B	B-24A	B-24A	B-24A	B-24A	B-24A	B-24B
Date:	1/84	2/84	3/84	5/84	1/84	2/84	3/84	5/84	2/86	1/84
USEPA Priority Pollutant Metals (concentrations are in mg/L, except where noted)										
antimony	NA	NA	NA	NA	NA	NA	NA	NA	<0.06	NA
arsenic	NA	NA	NA	NA	NA	NA	NA	NA	0.01	NA
beryllium	NA	NA	NA	NA	NA	NA	NA	NA	0.002	NA
cadmium	NA	NA	NA	NA	NA	NA	NA	NA	<0.003	NA
chromium	NA	NA	NA	NA	NA	NA	NA	NA	0.11	NA
copper	NA	NA	NA	NA	NA	NA	NA	NA	<0.006	NA
lead	NA	NA	NA	NA	NA	NA	NA	NA	<0.06	NA
mercury	NA	NA	NA	NA	NA	NA	NA	NA	<0.0002	NA
nickel	NA	NA	NA	NA	NA	NA	NA	NA	0.05	NA
selenium	NA	NA	NA	NA	NA	NA	NA	NA	0.01	NA
silver	NA	NA	NA	NA	NA	NA	NA	NA	<0.01	NA
thallium	NA	NA	NA	NA	NA	NA	NA	NA	<0.1	NA
zinc	NA	NA	NA	NA	NA	NA	NA	NA	0.14	NA
Miscellaneous Parameters										
pH (units)	7.4	6.4	6.5	6.5	6.0	7.2	6.4	7.0	NA	6.0
spec. conductance (umhos/cm)	2,250	1,550	3,950	3,950	9,750	1,700	5,500	11,500	2,750	3,050
temperature (deg./centigrade)	NA	15.0	15	14.0	7	16.5	10	16	11	12.0
TOC	840	1,300	1,100	2,200	920	1,300	3,700	3,600	NA	380
total phenols	850	1,100#	1,000	900#	1,200	1,360	1,500	1,400	520	330
TOX	260	460	500	410	1,500	800	840	980	NA	310
total dissolved solids (TDS)	NA	NA	NA	NA	NA	NA	NA	NA	NA	NA
bicarbonate, as CACO3	NA	NA	NA	NA	NA	NA	NA	NA	NA	NA
calcium	NA	NA	NA	NA	NA	NA	NA	NA	NA	NA
chloride	NA	NA	NA	NA	NA	NA	NA	NA	NA	NA
cyanide	NA	NA	NA	NA	NA	NA	NA	NA	0.0638	NA
iron	NA	NA	NA	NA	NA	NA	NA	NA	NA	NA
magnesium	NA	NA	NA	NA	NA	NA	NA	NA	NA	NA
potassium	NA	NA	NA	NA	NA	NA	NA	NA	NA	NA
sodium	NA	NA	NA	NA	NA	NA	NA	NA	NA	NA
sulfate, as SO4	NA	NA	NA	NA	NA	NA	NA	NA	NA	NA

Table E-5. Summary of Metals and Miscellaneous Parameters in Ground Water, Monsanto Company, W6 Krummrich Plant, Sauget, Il.

Well Number:	B-24B	B-24B	B-24B	B-24C	B-24C	B-24C	B-24C	B-25A	B-25A	B-25A
Date:	2/84	3/84	5/84	1/84	2/84	3/84	5/84	1/84	2/84	3/84
USEPA Priority Pollutant Metals (concentrations are in mg/L, except where noted)										
antimony	NA	NA	NA	NA	NA	NA	NA	NA	NA	NA
arsenic	NA	NA	NA	NA	NA	NA	NA	NA	NA	NA
beryllium	NA	NA	NA	NA	NA	NA	NA	NA	NA	NA
cadmium	NA	NA	NA	NA	NA	NA	NA	NA	NA	NA
chromium	NA	NA	NA	NA	NA	NA	NA	NA	NA	NA
copper	NA	NA	NA	NA	NA	NA	NA	NA	NA	NA
lead	NA	NA	NA	NA	NA	NA	NA	NA	NA	NA
mercury	NA	NA	NA	NA	NA	NA	NA	NA	NA	NA
nickel	NA	NA	NA	NA	NA	NA	NA	NA	NA	NA
selenium	NA	NA	NA	NA	NA	NA	NA	NA	NA	NA
silver	NA	NA	NA	NA	NA	NA	NA	NA	NA	NA
thallium	NA	NA	NA	NA	NA	NA	NA	NA	NA	NA
zinc	NA	NA	NA	NA	NA	NA	NA	NA	NA	NA
Miscellaneous Parameters										
pH (units)	6.6	6.4	6.0	7.0	6.4	6.4	6.5	6.2	6.3	5.9
spec. conductance (umhos/cm)	330	1,500	1,600	3,630	570	2,700	1,900	9,000	1,250	11,500
temperature (deg./centigrade)	14	12.5	14.5	12.5	14.5	14	15.0	NA	14	13.5
TOC	360	380	600	520	360	1,000	670	1,000	540	4,900
total phenols	300	90	39#	390	360	800	68.5#	1,500	460	1,400
TOX	430	98	190	1,300	480	340	640	1,500	540	990
total dissolved solids (TDS)	NA	NA	NA	NA	NA	NA	NA	NA	NA	NA
bicarbonate, as CACO3	NA	NA	NA	NA	NA	NA	NA	NA	NA	NA
calcium	NA	NA	NA	NA	NA	NA	NA	NA	NA	NA
chloride	NA	NA	NA	NA	NA	NA	NA	NA	NA	NA
cyanide	NA	NA	NA	NA	NA	NA	NA	NA	NA	NA
iron	NA	NA	NA	NA	NA	NA	NA	NA	NA	NA
magnesium	NA	NA	NA	NA	NA	NA	NA	NA	NA	NA
potassium	NA	NA	NA	NA	NA	NA	NA	NA	NA	NA
sodium	NA	NA	NA	NA	NA	NA	NA	NA	NA	NA
sulfate, as SO4	NA	NA	NA	NA	NA	NA	NA	NA	NA	NA

Table E-5. Summary of Metals and Miscellaneous Parameters in Ground Water, Monsanto Company, WG Krummrich Plant, Sauget, Il.

Well Number:	B-25A	B-25A	B-25A	B-25B	B-25B	B-25B	B-25B	B-25B	B-25B	B-26A
Date:	5/84	6/84	11/85	1/84	2/84	3/84	5/84	6/84	11/85	1/84
USEPA Priority Pollutant Metals (concentrations are in mg/L, except where noted)										
antimony	NA	0.68	NA	NA	NA	NA	NA	<0.06	NA	NA
arsenic	NA	<0.001	NA	NA	NA	NA	NA	<0.001	NA	NA
beryllium	NA	<0.01	NA	NA	NA	NA	NA	0.002	NA	NA
cadmium	NA	0.074	NA	NA	NA	NA	NA	0.008	NA	NA
chromium	NA	0.06	NA	NA	NA	NA	NA	0.150	NA	NA
copper	NA	0.03	NA	NA	NA	NA	NA	0.009	NA	NA
lead	NA	0.027	NA	NA	NA	NA	NA	0.041	NA	NA
mercury	NA	0.0052	NA	NA	NA	NA	NA	0.0006	NA	NA
nickel	NA	2.21	NA	NA	NA	NA	NA	0.091	NA	NA
selenium	NA	<0.001	NA	NA	NA	NA	NA	<0.001	NA	NA
silver	NA	0.018	NA	NA	NA	NA	NA	0.004	NA	NA
thallium	NA	0.108	NA	NA	NA	NA	NA	<0.002	NA	NA
zinc	NA	3.21	NA	NA	NA	NA	NA	0.054	NA	NA
Miscellaneous Parameters										
pH (units)	6.5	6.4	6.0	6.3	6.3	6.3	6.5	7.0	6.7	6.0
spec. conductance (umhos/cm)	1,250	16,000	5,500	3,150	1,500	1,250	2,900	2,600	4,500	1,370
temperature (deg./centigrade)	14.0	14	13	10.0	14	13.5	14.5	14	13	NA
TOC	3,400	NA	NA	370	590	980	820	NA	NA	4
total phenols	1,400	720	1,500	380	425#	280	160	85	410	0.46
TOX	780	NA	NA	380	430	310	180	NA	NA	14
total dissolved solids (TDS)	NA	NA	NA	NA	NA	NA	NA	NA	NA	NA
bicarbonate, as CACO3	NA	NA	NA	NA	NA	NA	NA	NA	NA	NA
calcium	NA	NA	NA	NA	NA	NA	NA	NA	NA	NA
chloride	NA	NA	NA	NA	NA	NA	NA	NA	NA	NA
cyanide	NA	<0.005	<0.025	NA	NA	NA	NA	<0.005	<0.025	NA
iron	NA	NA	NA	NA	NA	NA	NA	NA	NA	NA
magnesium	NA	NA	NA	NA	NA	NA	NA	NA	NA	NA
potassium	NA	NA	NA	NA	NA	NA	NA	NA	NA	NA
sodium	NA	NA	NA	NA	NA	NA	NA	NA	NA	NA
sulfate, as SO4	NA	NA	NA	NA	NA	NA	NA	NA	NA	NA

Table E-5. Summary of Metals and Miscellaneous Parameters in Ground Water, Monsanto Company, WG Krummrich Plant, Sauget, Il.

Well Number:	B-26A	B-26A	B-26A	B-26B	B-26B	B-26B	B-26B	B-27B	B-27B	B-27B
Date:	2/84	3/84	5/84	1/84	2/84	3/84	5/84	1/84	2/84	3/84
USEPA Priority Pollutant Metals (concentrations are in mg/L, except where noted)										
antimony	NA	NA	NA	NA	NA	NA	NA	NA	NA	NA
arsenic	NA	NA	NA	NA	NA	NA	NA	NA	NA	NA
beryllium	NA	NA	NA	NA	NA	NA	NA	NA	NA	NA
cadmium	NA	NA	NA	NA	NA	NA	NA	NA	NA	NA
chromium	NA	NA	NA	NA	NA	NA	NA	NA	NA	NA
copper	NA	NA	NA	NA	NA	NA	NA	NA	NA	NA
lead	NA	NA	NA	NA	NA	NA	NA	NA	NA	NA
mercury	NA	NA	NA	NA	NA	NA	NA	NA	NA	NA
nickel	NA	NA	NA	NA	NA	NA	NA	NA	NA	NA
selenium	NA	NA	NA	NA	NA	NA	NA	NA	NA	NA
silver	NA	NA	NA	NA	NA	NA	NA	NA	NA	NA
thallium	NA	NA	NA	NA	NA	NA	NA	NA	NA	NA
zinc	NA	NA	NA	NA	NA	NA	NA	NA	NA	NA
Miscellaneous Parameters										
pH (units)	6.9	6.8	6.5	6.0	6.8	6.6	6.5	6.6	6.2	6.5
spec. conductance (umhos/cm)	440	1,000	1,600	2,030	490	1,100	1,050	3,000	1,200	2,000
temperature (deg./centigrade)	13	15	15.0	13.0	13.5	14.0	13.0	NA	13	14.5
TOC	19	76	13	2	41	310	220	270	330	430
total phenols	0.36#	0.34	0.155#	2.65#	2.85#	1.7	1.55#	190	200	130
TOX	1.8	0.35	1.8	20	8.4	0.85	2.0	190	140	74
total dissolved solids (TDS)	NA	NA	NA	NA	NA	NA	NA	NA	NA	NA
bicarbonate, as CACO3	NA	NA	NA	NA	NA	NA	NA	NA	NA	NA
calcium	NA	NA	NA	NA	NA	NA	NA	NA	NA	NA
chloride	NA	NA	NA	NA	NA	NA	NA	NA	NA	NA
cyanide	NA	NA	NA	NA	NA	NA	NA	NA	NA	NA
iron	NA	NA	NA	NA	NA	NA	NA	NA	NA	NA
magnesium	NA	NA	NA	NA	NA	NA	NA	NA	NA	NA
potassium	NA	NA	NA	NA	NA	NA	NA	NA	NA	NA
sodium	NA	NA	NA	NA	NA	NA	NA	NA	NA	NA
sulfate, as SO4	NA	NA	NA	NA	NA	NA	NA	NA	NA	NA

Table E-5. Summary of Metals and Miscellaneous Parameters in Ground Water, Monsanto Company, WG Krummrich Plant, Sauget, Il.

Well Number:	B-27B	B-27B	B-27B	B-28A	B-28A	B-28A	B-28A	B-28A	B-28B	B-28B
Date:	5/84	9/84	9/84*	1/84	2/84	3/84	5/84	2/86	1/84	2/84
USEPA Priority Pollutant Metals (concentrations are in mg/L, except where noted)										
antimony	NA	0.056	NA	NA	NA	NA	NA	<0.06	NA	NA
arsenic	NA	<0.001	NA	NA	NA	NA	NA	0.11	NA	NA
beryllium	NA	<0.002	NA	NA	NA	NA	NA	<0.0009	NA	NA
cadmium	NA	0.003	NA	NA	NA	NA	NA	<0.003	NA	NA
chromium	NA	0.008	NA	NA	NA	NA	NA	<0.008	NA	NA
copper	NA	<0.004	NA	NA	NA	NA	NA	<0.006	NA	NA
lead	NA	<0.004	NA	NA	NA	NA	NA	<0.06	NA	NA
mercury	NA	<0.0002	NA	NA	NA	NA	NA	<0.0002	NA	NA
nickel	NA	0.054	NA	NA	NA	NA	NA	0.01	NA	NA
selenium	NA	<0.001	NA	NA	NA	NA	NA	0.01	NA	NA
silver	NA	<0.01	NA	NA	NA	NA	NA	<0.01	NA	NA
thallium	NA	0.125	NA	NA	NA	NA	NA	0.005	NA	NA
zinc	NA	0.185	NA	NA	NA	NA	NA	0.04	NA	NA
Miscellaneous Parameters										
pH (units)	6.5	6.3	6.3	7.0	7.1	6.9	6.5	NA	6.9	6.6
spec. conductance (umhos/cm)	3,100	2,200	2,200	1,950	380	1,750	2,500	1,300	1,450	390
temperature (deg./centigrade)	14	20	20	12.0	13	17.0	15.0	13	12.5	13
TOC	520	575	NA	NA	12	20	24	NA	80	30
total phenols	150	NA	NA	0.48	0.3	0.5	0.70#	<0.05	0.705#	0.41#
TOX	78	NA	NA	530	1.1	1.8	1.6	NA	6.7	1.1
total dissolved solids (TDS)	NA	3,658	485	NA	NA	NA	NA	NA	NA	NA
bicarbonate, as CACO3	NA	NA	NA	NA	NA	NA	NA	NA	NA	NA
calcium	NA	NA	NA	NA	NA	NA	NA	NA	NA	NA
chloride	NA	450	NA	NA	NA	NA	NA	NA	NA	NA
cyanide	NA	NA	NA	NA	NA	NA	NA	<0.025	NA	NA
iron	NA	NA	NA	NA	NA	NA	NA	NA	NA	NA
magnesium	NA	NA	NA	NA	NA	NA	NA	NA	NA	NA
potassium	NA	NA	NA	NA	NA	NA	NA	NA	NA	NA
sodium	NA	NA	NA	NA	NA	NA	NA	NA	NA	NA
sulfate, as SO4	NA	NA	NA	NA	NA	NA	NA	NA	NA	NA

Table E-5. Summary of Metals and Miscellaneous Parameters in Ground Water, Monsanto Company, W6 Krummrich Plant, Sauget, Il.

Well Number:	B-28B	B-28B	B-29A	B-29A	B-29A	B-29A	B-29A	B-29A	B-29B	B-29B
Date:	3/84	5/84	1/84	2/84	3/84	5/84	6/84	11/85	1/84	2/84
USEPA Priority Pollutant Metals (concentrations are in mg/L, except where noted)										
antimony	NA	NA	NA	NA	NA	NA	2.6	NA	NA	NA
arsenic	NA	NA	NA	NA	NA	NA	0.001	NA	NA	NA
beryllium	NA	NA	NA	NA	NA	NA	<0.01	NA	NA	NA
cadmium	NA	NA	NA	NA	NA	NA	0.012	NA	NA	NA
chromium	NA	NA	NA	NA	NA	NA	<0.04	NA	NA	NA
copper	NA	NA	NA	NA	NA	NA	0.02	NA	NA	NA
lead	NA	NA	NA	NA	NA	NA	<0.1	NA	NA	NA
mercury	NA	NA	NA	NA	NA	NA	0.0069	NA	NA	NA
nickel	NA	NA	NA	NA	NA	NA	0.185	NA	NA	NA
selenium	NA	NA	NA	NA	NA	NA	<0.001	NA	NA	NA
silver	NA	NA	NA	NA	NA	NA	<0.02	NA	NA	NA
thallium	NA	NA	NA	NA	NA	NA	0.042	NA	NA	NA
zinc	NA	NA	NA	NA	NA	NA	0.069	NA	NA	NA
Miscellaneous Parameters										
pH (units)	6.6	6.5	6.8	6.5	6.7	6.5	6.8	6.9	6.8	6.9
spec. conductance (umhos/cm)	1,100	1,250	8,000	2,900	8,500	9,000	7,000	11,500	4,550	1,500
temperature (deg./centigrade)	15	14.0	12.0	9.0	15.0	13.0	14	13	12.5	14
TOC	30	30	5,400	7,000	380	7,900	NA	NA	4,400	3,100
total phenols	0.44#	0.375#	7,200	7,600	8,800	6,800	2.0	10000	5,100	3,400
TOX	0.85	1.5	390	645#	630#	580	NA	NA	1,200	410
total dissolved solids (TDS)	NA	NA	NA	NA	NA	NA	NA	NA	NA	NA
bicarbonate, as CACO3	NA	NA	NA	NA	NA	NA	NA	NA	NA	NA
calcium	NA	NA	NA	NA	NA	NA	NA	NA	NA	NA
chloride	NA	NA	NA	NA	NA	NA	NA	NA	NA	NA
cyanide	NA	NA	NA	NA	NA	NA	<0.005	<0.025	NA	NA
iron	NA	NA	NA	NA	NA	NA	NA	NA	NA	NA
magnesium	NA	NA	NA	NA	NA	NA	NA	NA	NA	NA
potassium	NA	NA	NA	NA	NA	NA	NA	NA	NA	NA
sodium	NA	NA	NA	NA	NA	NA	NA	NA	NA	NA
sulfate, as SO4	NA	NA	NA	NA	NA	NA	NA	NA	NA	NA

Table E-5. Summary of Metals and Miscellaneous Parameters in Ground Water, Monsanto Company, WG Krummrich Plant, Sauget, Il.

Well Number:	B-29B	B-29B	B-29B	B-29B	B-29B	B-29B	B-29B	B-30B	B-30B	B-30B
Date:	3/84	5/84	6/84	6/84*	6/84**	11/84	11/85	1/84	2/84	3/84
USEPA Priority Pollutant Metals (concentrations are in mg/L, except where noted)										
antimony	NA	NA	0.15	<0.14	<0.1	<0.07	NA	NA	NA	NA
arsenic	NA	NA	0.003	<0.001	<0.005	0.019	NA	NA	NA	NA
beryllium	NA	NA	<0.01	<0.010	<0.005	<0.005	NA	NA	NA	NA
cadmium	NA	NA	<0.01	<0.010	<0.007	<0.005	NA	NA	NA	NA
chromium	NA	NA	<0.04	<0.050	<0.020	<0.008	NA	NA	NA	NA
copper	NA	NA	<0.04	<0.040	<0.010	<0.008	NA	NA	NA	NA
lead	NA	NA	<0.01	<0.1	<0.1	<0.06	NA	NA	NA	NA
mercury	NA	NA	0.0064	<0.0051	<0.003	<0.002	NA	NA	NA	NA
nickel	NA	NA	0.076	0.079	0.04	0.031	NA	NA	NA	NA
selenium	NA	NA	<0.001	<0.001	0.009	<0.01	NA	NA	NA	NA
silver	NA	NA	<0.02	0.020	<0.01	<0.008	NA	NA	NA	NA
thallium	NA	NA	0.025	0.021	<0.005	<0.01	NA	NA	NA	NA
zinc	NA	NA	0.049	0.071	0.02	0.013	NA	NA	NA	NA
Miscellaneous Parameters										
pH (units)	6.7	6.5	6.8	6.8	6.8	7.2	6.9	6.8	6.7	6.6
spec. conductance (umhos/cm)	4,000	4,300	4,100	4,100	4100	5,000	5,400	8,000	1,850	2,200
temperature (deg./centigrade)	13.5	14.0	13.5	13.5	13.5	14	14	12.0	14.0	13.5
TOC	2,200#	4,500	NA	NA	NA	NA	NA	1,400	680	730
total phenols	5,000	4,400	5,100	2,000	3040	3,300	10,000	1,800	630	420
TOX	300	400	NA	NA	NA	NA	NA	310	420	270
total dissolved solids (TDS)	NA	NA	NA	NA	NA	NA	NA	NA	NA	NA
bicarbonate, as CACO3	NA	NA	NA	NA	NA	NA	1,300	NA	NA	NA
calcium	NA	NA	NA	NA	NA	NA	53.5	NA	NA	NA
chloride	NA	NA	NA	NA	NA	NA	351	NA	NA	NA
cyanide	NA	NA	<0.005	<0.005	<0.025	<0.025	<0.025	NA	NA	NA
iron	NA	NA	NA	NA	NA	NA	0.6	NA	NA	NA
magnesium	NA	NA	NA	NA	NA	NA	20.5	NA	NA	NA
potassium	NA	NA	NA	NA	NA	NA	11.5	NA	NA	NA
sodium	NA	NA	NA	NA	NA	NA	1,150	NA	NA	NA
sulfate, as SO4	NA	NA	NA	NA	NA	NA	730	NA	NA	NA

Table E-5. Summary of Metals and Miscellaneous Parameters in Ground Water, Monsanto Company, WG Krumarich Plant, Sauget, Il.

Well Number:	B-30B	B-30B	B-31B	B-31B	B-31B	B-31B	B-31C	B-31C	B-31C	B-31C
Date:	5/84	9/84	3/84	5/84	11/85	2/86	1/84	2/84	3/84	5/84
USEPA Priority Pollutant Metals (concentrations are in mg/L, except where noted)										
antimony	NA	0.072	NA	NA	<0.08	<0.06	NA	NA	NA	NA
arsenic	NA	0.006	NA	NA	<0.01	<0.01	NA	NA	NA	NA
beryllium	NA	<0.002	NA	NA	<0.0009	<0.0006	NA	NA	NA	NA
cadmium	NA	0.003	NA	NA	<0.002	<0.004	NA	NA	NA	NA
chromium	NA	<0.004	NA	NA	<0.02	0.040	NA	NA	NA	NA
copper	NA	0.004	NA	NA	<0.008	<0.020	NA	NA	NA	NA
lead	NA	0.005	NA	NA	<0.07	<0.060	NA	NA	NA	NA
mercury	NA	0.00091	NA	NA	<0.0003	<0.0003	NA	NA	NA	NA
nickel	NA	0.033	NA	NA	0.02	0.010	NA	NA	NA	NA
selenium	NA	<0.001	NA	NA	<0.005	<0.005	NA	NA	NA	NA
silver	NA	<0.01	NA	NA	<0.01	<0.030	NA	NA	NA	NA
thallium	NA	0.41	NA	NA	<0.005	<0.005	NA	NA	NA	NA
zinc	NA	0.12	NA	NA	0.04	0.05	NA	NA	NA	NA
Miscellaneous Parameters										
pH (units)	7.0	6.9	6.6	7.0	7.1	6.7	6.9	6.9	7.0	7.0
spec. conductance (umhos/cm)	4,950	3,500	950	1,050	2,500	1,375	1,050	350	900	975
temperature (deg./centigrade)	15.0	19	15.0	13.0	15	14	13	15	15	13.5
TOC	1,100	127	48	65	NA	NA	8	14	21	18
total phenols	410#	NA	0.31	0.08#	<0.05	<0.05	0.2	0.23	0.76	0.285#
TOX	240	NA	1.4	0.14	NA	NA	1.2	0.4	0.28	0.48
total dissolved solids (TDS)	NA	4,704	NA	NA	NA	NA	NA	NA	NA	NA
bicarbonate, as CACO3	NA	NA	NA	NA	NA	NA	NA	NA	NA	NA
calcium	NA	NA	NA	NA	NA	NA	NA	NA	NA	NA
chloride	NA	990	NA	NA	NA	NA	NA	NA	NA	NA
cyanide	NA	NA	NA	NA	<0.025	<0.025	NA	NA	NA	NA
iron	NA	NA	NA	NA	NA	NA	NA	NA	NA	NA
magnesium	NA	NA	NA	NA	NA	NA	NA	NA	NA	NA
potassium	NA	NA	NA	NA	NA	NA	NA	NA	NA	NA
sodium	NA	NA	NA	NA	NA	NA	NA	NA	NA	NA
sulfate, as SO4	NA	NA	NA	NA	NA	NA	NA	NA	NA	NA

Table E-5. Summary of Metals and Miscellaneous Parameters in Ground Water, Monsanto Company, WG Krummrich Plant, Sauget, Il.

Well Number:	B-31C	B-31C	B-31C	B-31C	B-101	B-102	GM-106	GM-106	GM-106	P-1
Date:	9/84	9/84*	11/85	2/86	9/84	9/84	11/85	2/86	2/86*	1/84
USEPA Priority Pollutant Metals (concentrations are in mg/L, except where noted)										
antimony	0.074	NA	<0.08	<0.06	0.019	0.078	<0.06	<0.050	<0.050	NA
arsenic	<0.001	NA	<0.01	<0.01	<0.001	<0.001	<0.01	<0.010	<0.010	NA
beryllium	<0.002	NA	<0.0009	<0.0009	<0.002	<0.002	<0.001	<0.001	<0.001	NA
cadmium	<0.002	NA	<0.002	<0.003	<0.002	<0.002	<0.004	<0.003	<0.003	NA
chromium	<0.004	NA	<0.02	<0.008	<0.004	<0.004	<0.02	<0.010	<0.010	NA
copper	<0.004	NA	<0.008	<0.006	<0.004	<0.004	<0.01	<0.009	<0.009	NA
lead	<0.004	NA	<0.07	<0.06	0.013	0.009	<0.05	<0.06	<0.060	NA
mercury	<0.0004	NA	<0.0003	<0.0002	<0.0004	<0.0004	<0.0002	<0.0002	<0.0002	NA
nickel	0.014	NA	<0.01	<0.009	<0.004	0.007	<0.02	<0.01	<0.010	NA
selenium	<0.001	NA	<0.005	<0.005	<0.001	<0.001	<0.005	<0.005	<0.005	NA
silver	0.003	NA	<0.01	<0.010	<0.002	0.003	<0.008	<0.010	<0.010	NA
thallium	0.011	NA	<0.005	<0.005	0.018	0.02	<0.005	<0.010	<0.005	NA
zinc	0.039	NA	0.05	0.064	0.26	0.561	<0.02	0.030	0.050	NA
Miscellaneous Parameters										
pH (units)	7.0	7.0	7.4	7.0	6.9	6.6	7.5	7.6	7.6	7.0
spec. conductance (umhos/cm)	400	400	2,750	950	1,050	1,620	1,300	1,060	1,060	850
temperature (deg./centigrade)	20	20	15	11	21	19	12	14	14	NA
TOC	8.1	NA	NA	NA	257	8	100*	NA	NA	9
total phenols	NA	NA	<0.05	<0.05	NA	NA	0.19	0.4	0.4	0.170
TOX	NA	NA	NA	NA	NA	NA	NA	NA	NA	1.9
total dissolved solids (TDS)	774	NA	NA	NA	876	1,276	NA	NA	NA	NA
bicarbonate, as CACO3	NA	NA	NA	NA	NA	NA	NA	NA	NA	NA
calcium	NA	NA	NA	NA	NA	NA	NA	NA	NA	NA
chloride	29	NA	NA	NA	200	350	NA	NA	NA	NA
cyanide	NA	NA	<0.025	<0.025	NA	NA	0.24	0.172	0.179	NA
iron	NA	NA	NA	NA	NA	NA	NA	NA	NA	NA
magnesium	NA	NA	NA	NA	NA	NA	NA	NA	NA	NA
potassium	NA	NA	NA	NA	NA	NA	NA	NA	NA	NA
sodium	NA	NA	NA	NA	NA	NA	NA	NA	NA	NA
sulfate, as SO4	NA	NA	NA	NA	NA	NA	NA	NA	NA	NA

Table E-5. Summary of Metals and Miscellaneous Parameters in Ground Water, Monsanto Company, WG Krummrich Plant, Sauget, Il.

Well Number:	P-1	P-1	P-1
Date:	2/84	3/84	5/84
USEPA Priority Pollutant Metals (concentrations are in mg/L, except where noted)			
antimony	NA	NA	NA
arsenic	NA	NA	NA
beryllium	NA	NA	NA
cadmium	NA	NA	NA
chromium	NA	NA	NA
copper	NA	NA	NA
lead	NA	NA	NA
mercury	NA	NA	NA
nickel	NA	NA	NA
selenium	NA	NA	NA
silver	NA	NA	NA
thallium	NA	NA	NA
zinc	NA	NA	NA
Miscellaneous Parameters			
pH (units)	7.3	7.0	6.0
spec. conductance (umhos/cm)	NA	650	750
temperature (deg./centigrade)	12.0	14.0	13.5
TOC	26	15	32
total phenols	0.11	0.16#	0.22
TOX	2.0	0.35	1.1
total dissolved solids (TDS)	NA	NA	NA
bicarbonate, as CACO3	NA	NA	NA
calcium	NA	NA	NA
chloride	NA	NA	NA
cyanide	NA	NA	NA
iron	NA	NA	NA
magnesium	NA	NA	NA
potassium	NA	NA	NA
sodium	NA	NA	NA
sulfate, as SO4	NA	NA	NA

Table E-5. Summary of Metals and Miscellaneous Parameters in Ground Water, Monsanto Company, WG Krumrich Plant, Sauget, Il.

Well Number:	P-1	P-2	P-2	P-2	P-2	P-2	P-2	P-3	P-3	P-3
Date:	9/84	1/84	2/84	3/84	5/84	6/84	11/85	1/84	2/84	3/84
USEPA Priority Pollutant Metals (concentrations are in mg/L, except where noted)										
antimony	0.065	NA	NA	NA	NA	0.004	NA	NA	NA	NA
arsenic	0.007	NA	NA	NA	NA	0.041	NA	NA	NA	NA
beryllium	<0.002	NA	NA	NA	NA	0.098	NA	NA	NA	NA
cadmium	<0.002	NA	NA	NA	NA	0.002	NA	NA	NA	NA
chromium	<0.004	NA	NA	NA	NA	0.005	NA	NA	NA	NA
copper	<0.004	NA	NA	NA	NA	0.007	NA	NA	NA	NA
lead	<0.004	NA	NA	NA	NA	<0.004	NA	NA	NA	NA
mercury	<0.0004	NA	NA	NA	NA	<0.0002	NA	NA	NA	NA
nickel	0.006	NA	NA	NA	NA	0.007	NA	NA	NA	NA
selenium	<0.001	NA	NA	NA	NA	<0.001	NA	NA	NA	NA
silver	<0.002	NA	NA	NA	NA	<0.01	NA	NA	NA	NA
thallium	0.013	NA	NA	NA	NA	<0.02	NA	NA	NA	NA
zinc	0.124	NA	NA	NA	NA	0.034	NA	NA	NA	NA
Miscellaneous Parameters										
pH (units)	7.3	7.1	7.2	7.0	6.0	6.9	7.0	6.5	6.7	6.6
spec. conductance (umhos/cm)	650	600	340	550	675	600	2,300	950	340	950
temperature (deg./centigrade)	20	NA	12	15.0	13.0	15	14	12.5	12	15.0
TOC	13	22	25	8	110	NA	NA	50	72	76
total phenols	NA	0.29	0.16#	0.34	0.17	0.036	0.0959	0.43	0.565#	0.40
TOX	NA	0.88	1.5	0.39	1.6	NA	NA	2.6	8.9	0.25
total dissolved solids (TDS)	510	NA	NA	NA	NA	NA	NA	NA	NA	NA
bicarbonate, as CACO3	NA	NA	NA	NA	NA	NA	NA	NA	NA	NA
calcium	NA	NA	NA	NA	NA	NA	NA	NA	NA	NA
chloride	29	NA	NA	NA	NA	NA	NA	NA	NA	NA
cyanide	NA	NA	NA	NA	NA	<0.005	<0.025	NA	NA	NA
iron	NA	NA	NA	NA	NA	NA	NA	NA	NA	NA
magnesium	NA	NA	NA	NA	NA	NA	NA	NA	NA	NA
potassium	NA	NA	NA	NA	NA	NA	NA	NA	NA	NA
sodium	NA	NA	NA	NA	NA	NA	NA	NA	NA	NA
sulfate, as SO4	NA	NA	NA	NA	NA	NA	NA	NA	NA	NA

Table E-5. Summary of Metals and Miscellaneous Parameters in Ground Water, Monsanto Company, WG Krummrich Plant, Sauget, Il.

Well Number:	P-3	P-4	P-4	P-4	P-4	P-5	P-5	P-5	P-5	P-6
Date:	5/84	1/84	2/84	3/84	5/84	1/84	2/84	3/84	5/84	1/84
USEPA Priority Pollutant Metals (concentrations are in mg/L, except where noted)										
antimony	NA	NA	NA	NA	NA	NA	NA	NA	NA	NA
arsenic	NA	NA	NA	NA	NA	NA	NA	NA	NA	NA
beryllium	NA	NA	NA	NA	NA	NA	NA	NA	NA	NA
cadmium	NA	NA	NA	NA	NA	NA	NA	NA	NA	NA
chromium	NA	NA	NA	NA	NA	NA	NA	NA	NA	NA
copper	NA	NA	NA	NA	NA	NA	NA	NA	NA	NA
lead	NA	NA	NA	NA	NA	NA	NA	NA	NA	NA
mercury	NA	NA	NA	NA	NA	NA	NA	NA	NA	NA
nickel	NA	NA	NA	NA	NA	NA	NA	NA	NA	NA
selenium	NA	NA	NA	NA	NA	NA	NA	NA	NA	NA
silver	NA	NA	NA	NA	NA	NA	NA	NA	NA	NA
thallium	NA	NA	NA	NA	NA	NA	NA	NA	NA	NA
zinc	NA	NA	NA	NA	NA	NA	NA	NA	NA	NA
Miscellaneous Parameters										
pH (units)	7.0	6.0	7.0	6.9	6.5	6.0	7.0	6.9	6.5	6.0
spec. conductance (umhos/cm)	1,300	1,250	390	600	900	875	350	350	380	850
temperature (deg./centigrade)	13.5	NA	13.5	13.0	13	11.5	13	14.0	13.0	NA
TOC	280	3	86	70	55	7	90	34	24	16
total phenols	0.48	1.08	0.855#	0.73	0.46	1.72#	1.44	0.56#	0.52#	0.225#
TOX	0.29	10	7.2	0.68	0.42	3.5	4.5	0.29	1.7	1.5
total dissolved solids (TDS)	NA	NA	NA	NA	NA	NA	NA	NA	NA	NA
bicarbonate, as CACO3	NA	NA	NA	NA	NA	NA	NA	NA	NA	NA
calcium	NA	NA	NA	NA	NA	NA	NA	NA	NA	NA
chloride	NA	NA	NA	NA	NA	NA	NA	NA	NA	NA
cyanide	NA	NA	NA	NA	NA	NA	NA	NA	NA	NA
iron	NA	NA	NA	NA	NA	NA	NA	NA	NA	NA
magnesium	NA	NA	NA	NA	NA	NA	NA	NA	NA	NA
potassium	NA	NA	NA	NA	NA	NA	NA	NA	NA	NA
sodium	NA	NA	NA	NA	NA	NA	NA	NA	NA	NA
sulfate, as SO4	NA	NA	NA	NA	NA	NA	NA	NA	NA	NA

Table E-5. Summary of Metals and Miscellaneous Parameters in Ground Water, Monsanto Company, WG Krummrich Plant, Sauget, Il.

Well Number:	P-6	P-6	P-6	P-6	P-6	P-7	P-7	P-7	P-7	P-7
Date:	2/84	3/84	5/84	6/84	11/85	1/84	2/84	3/84	5/84	6/84
USEPA Priority Pollutant Metals (concentrations are in mg/L, except where noted)										
antimony	NA	NA	NA	<0.003	NA	NA	NA	NA	NA	0.004
arsenic	NA	NA	NA	0.074	NA	NA	NA	NA	NA	0.004
beryllium	NA	NA	NA	0.020	NA	NA	NA	NA	NA	0.005
cadmium	NA	NA	NA	0.003	NA	NA	NA	NA	NA	0.007
chromium	NA	NA	NA	0.008	NA	NA	NA	NA	NA	0.023
copper	NA	NA	NA	0.028	NA	NA	NA	NA	NA	<0.004
lead	NA	NA	NA	0.006	NA	NA	NA	NA	NA	0.014
mercury	NA	NA	NA	<0.0002	NA	NA	NA	NA	NA	0.0047
nickel	NA	NA	NA	0.009	NA	NA	NA	NA	NA	0.177
selenium	NA	NA	NA	<0.001	NA	NA	NA	NA	NA	<0.001
silver	NA	NA	NA	<0.01	NA	NA	NA	NA	NA	<0.01
thallium	NA	NA	NA	<0.02	NA	NA	NA	NA	NA	<0.02
zinc	NA	NA	NA	0.043	NA	NA	NA	NA	NA	0.120
Miscellaneous Parameters										
pH (units)	7.3	6.9	6.5	6.9	7.1	6.0	6.3	7.4	7.0	6.6
spec. conductance (umhos/cm)	550	1,250	1,700	1,500	3,000	4,300	800	4,200	4,700	4,650
temperature (deg./centigrade)	14	13.0	15.0	14	15	11	14	13.0	15.0	14
TOC	20	38	24	NA	NA	330	360	260	890	NA
total phenols	0.555#	1.6	0.44	0.045	0.0791	260	260	360	270	130
TOX	2.6	1.35#	0.62	NA	NA	670	370	500	280	NA
total dissolved solids (TDS)	NA	NA	NA	NA	NA	NA	NA	NA	NA	NA
bicarbonate, as CACO3	NA	NA	NA	NA	NA	NA	NA	NA	NA	NA
calcium	NA	NA	NA	NA	NA	NA	NA	NA	NA	NA
chloride	NA	NA	NA	NA	NA	NA	NA	NA	NA	NA
cyanide	NA	NA	NA	<0.005	<0.025	NA	NA	NA	NA	<0.005
iron	NA	NA	NA	NA	NA	NA	NA	NA	NA	NA
magnesium	NA	NA	NA	NA	NA	NA	NA	NA	NA	NA
potassium	NA	NA	NA	NA	NA	NA	NA	NA	NA	NA
sodium	NA	NA	NA	NA	NA	NA	NA	NA	NA	NA
sulfate, as SO4	NA	NA	NA	NA	NA	NA	NA	NA	NA	NA

Table E-5. Summary of Metals and Miscellaneous Parameters in Ground Water, Monsanto Company, WG Krummrich Plant, Sauget, Il.

Well Number:	P-7	P-8	P-8	P-8	P-8	P-8	P-8	P-9	P-9	P-9
Date:	11/85	1/84	2/84	3/84	5/84	6/84	11/85	1/84	2/84	3/84
USEPA Priority Pollutant Metals (concentrations are in mg/L, except where noted)										
antimony	NA	NA	NA	NA	NA	<0.03	NA	NA	NA	NA
arsenic	NA	NA	NA	NA	NA	0.015	NA	NA	NA	NA
beryllium	NA	NA	NA	NA	NA	0.001	NA	NA	NA	NA
cadmium	NA	NA	NA	NA	NA	0.002	NA	NA	NA	NA
chromium	NA	NA	NA	NA	NA	<0.2	NA	NA	NA	NA
copper	NA	NA	NA	NA	NA	0.009	NA	NA	NA	NA
lead	NA	NA	NA	NA	NA	0.011	NA	NA	NA	NA
mercury	NA	NA	NA	NA	NA	<0.0002	NA	NA	NA	NA
nickel	NA	NA	NA	NA	NA	0.01	NA	NA	NA	NA
selenium	NA	NA	NA	NA	NA	<0.001	NA	NA	NA	NA
silver	NA	NA	NA	NA	NA	0.002	NA	NA	NA	NA
thallium	NA	NA	NA	NA	NA	<0.002	NA	NA	NA	NA
zinc	NA	NA	NA	NA	NA	0.05	NA	NA	NA	NA
Miscellaneous Parameters										
pH (units)	6.4	6.0	6.6	6.7	6.5	6.8	6.9	6.0	6.7	7.0
spec. conductance (umhos/cm)	4,500	3,250	490	1,500	900	800	2,300	2,340	NA	775
temperature (deg./centigrade)	14	11.0	13	12.0	14.5	13.5	14	11.5	13	12.5
TOC	NA	885	140	140	120	NA	NA	NA	150	91
total phenols	134.5	10.8	10.8	3.6	1.2	<0.005	0.34	1.46	1.04	0.88
TOX	NA	74	77	22	0.46	NA	NA	330	9.2	0.45
total dissolved solids (TDS)	NA	NA	NA	NA	NA	NA	NA	NA	NA	NA
bicarbonate, as CACO3	NA	NA	NA	NA	NA	NA	NA	NA	NA	NA
calcium	NA	NA	NA	NA	NA	NA	NA	NA	NA	NA
chloride	NA	NA	NA	NA	NA	NA	NA	NA	NA	NA
cyanide	0.035	NA	NA	NA	NA	<0.005	0.033	NA	NA	NA
iron	NA	NA	NA	NA	NA	NA	NA	NA	NA	NA
magnesium	NA	NA	NA	NA	NA	NA	NA	NA	NA	NA
potassium	NA	NA	NA	NA	NA	NA	NA	NA	NA	NA
sodium	NA	NA	NA	NA	NA	NA	NA	NA	NA	NA
sulfate, as SO4	NA	NA	NA	NA	NA	NA	NA	NA	NA	NA

Table E-5. Summary of Metals and Miscellaneous Parameters in Ground Water, Monsanto Company, WG Krummrich Plant, Sauget, Il.

Well Number:	P-9	P-10	P-10	P-10	P-10	P-10	P-11	P-11	P-11	P-11
Date:	5/84	1/84	2/84	3/84	5/84	9/84	1/84	2/84	3/84	5/84
USEPA Priority Pollutant Metals (concentrations are in mg/L, except where noted)										
antimony	NA	NA	NA	NA	NA	0.018	NA	NA	NA	NA
arsenic	NA	NA	NA	NA	NA	0.004	NA	NA	NA	NA
beryllium	NA	NA	NA	NA	NA	<0.002	NA	NA	NA	NA
cadmium	NA	NA	NA	NA	NA	<0.002	NA	NA	NA	NA
chromium	NA	NA	NA	NA	NA	<0.004	NA	NA	NA	NA
copper	NA	NA	NA	NA	NA	<0.004	NA	NA	NA	NA
lead	NA	NA	NA	NA	NA	<0.004	NA	NA	NA	NA
mercury	NA	NA	NA	NA	NA	<0.0002	NA	NA	NA	NA
nickel	NA	NA	NA	NA	NA	<0.004	NA	NA	NA	NA
selenium	NA	NA	NA	NA	NA	<0.001	NA	NA	NA	NA
silver	NA	NA	NA	NA	NA	<0.01	NA	NA	NA	NA
thallium	NA	NA	NA	NA	NA	0.067	NA	NA	NA	NA
zinc	NA	NA	NA	NA	NA	0.066	NA	NA	NA	NA
Miscellaneous Parameters										
pH (units)	6.5	6.0	6.3	6.9	6.5	7.1	6.0	5.6	6.9	6.0
spec. conductance (umhos/cm)	900	1,450	440	700	750	850	1,550	550	800	650
temperature (deg./centigrade)	14.0	9.5	14	13.0	13.0	19.5	12.5	13.5	12.5	13.0
TOC	42	330	160	35	39	52	230	81	91	55
total phenols	0.46	5.8	2.0#	1.15#	0.61	NA	0.74#	1.00	0.50	0.31
TOX	0.33	7.4	9.5	6.1	0.39	NA	17	13	0.59	0.46
total dissolved solids (TDS)	NA	NA	NA	NA	NA	570	NA	NA	NA	NA
bicarbonate, as CACO3	NA	NA	NA	NA	NA	NA	NA	NA	NA	NA
calcium	NA	NA	NA	NA	NA	NA	NA	NA	NA	NA
chloride	NA	NA	NA	NA	NA	110	NA	NA	NA	NA
cyanide	NA	NA	NA	NA	NA	NA	NA	NA	NA	NA
iron	NA	NA	NA	NA	NA	NA	NA	NA	NA	NA
magnesium	NA	NA	NA	NA	NA	NA	NA	NA	NA	NA
potassium	NA	NA	NA	NA	NA	NA	NA	NA	NA	NA
sodium	NA	NA	NA	NA	NA	NA	NA	NA	NA	NA
sulfate, as SO4	NA	NA	NA	NA	NA	NA	NA	NA	NA	NA

Table E-5. Summary of Metals and Miscellaneous Parameters in Ground Water, Monsanto Company, WG Krummrich Plant, Sauget, Il.

Well Number:	P-11	P-12	P-12	P-12	P-12	P-12	P-13	P-13	P-13	P-13
Date:	9/84	1/84	2/84	3/84	5/84	9/84	1/84	2/84	3/84	5/84
USEPA Priority Pollutant Metals (concentrations are in mg/L, except where noted)										
antimony	0.022	NA	NA	NA	NA	0.017	NA	NA	NA	NA
arsenic	0.008	NA	NA	NA	NA	0.009	NA	NA	NA	NA
beryllium	<0.002	NA	NA	NA	NA	<0.002	NA	NA	NA	NA
cadmium	<0.002	NA	NA	NA	NA	<0.002	NA	NA	NA	NA
chromium	<0.004	NA	NA	NA	NA	<0.004	NA	NA	NA	NA
copper	<0.004	NA	NA	NA	NA	<0.004	NA	NA	NA	NA
lead	<0.004	NA	NA	NA	NA	<0.004	NA	NA	NA	NA
mercury	<0.0002	NA	NA	NA	NA	<0.0002	NA	NA	NA	NA
nickel	0.012	NA	NA	NA	NA	<0.004	NA	NA	NA	NA
selenium	<0.001	NA	NA	NA	NA	<0.001	NA	NA	NA	NA
silver	<0.01	NA	NA	NA	NA	<0.01	NA	NA	NA	NA
thallium	0.07	NA	NA	NA	NA	0.043	NA	NA	NA	NA
zinc	0.049	NA	NA	NA	NA	0.056	NA	NA	NA	NA
Miscellaneous Parameters										
pH (units)	7.3	6.7	5.3	6.6	6.5	7.2	6.9	6.9	6.8	6.5
spec. conductance (umhos/cm)	800	1,000	440	500	580	600	1,500	1,100	950	950
temperature (deg./centigrade)	18	11.0	14	12.5	11.0	18	5.0	14.0	13.0	12.5
TOC	48	76	120	12	22	27	69	46	57	30
total phenols	NA	19	5.0	1.4	1.3	NA	0.94	0.15	0.19	0.22
TOX	NA	320	0.8	2.3	0.47	NA	300	2.5	0.36	0.30
total dissolved solids (TDS)	576	NA	NA	NA	NA	482	NA	NA	NA	NA
bicarbonate, as CACO3	NA	NA	NA	NA	NA	NA	NA	NA	NA	NA
calcium	NA	NA	NA	NA	NA	NA	NA	NA	NA	NA
chloride	90	NA	NA	NA	NA	70	NA	NA	NA	NA
cyanide	NA	NA	NA	NA	NA	NA	NA	NA	NA	NA
iron	NA	NA	NA	NA	NA	NA	NA	NA	NA	NA
magnesium	NA	NA	NA	NA	NA	NA	NA	NA	NA	NA
potassium	NA	NA	NA	NA	NA	NA	NA	NA	NA	NA
sodium	NA	NA	NA	NA	NA	NA	NA	NA	NA	NA
sulfate, as SO4	NA	NA	NA	NA	NA	NA	NA	NA	NA	NA

Table E-5. Summary of Metals and Miscellaneous Parameters in Ground Water, Monsanto Company, WG Krummrich Plant, Sauget, Il.

Well Number:	P-13	P-13	P-13	P-13	P-14	P-14	P-14	P-14	P-14	P-14
Date:	6/84	6/84*	6/84**	11/85	1/84	2/84	3/84	5/84	6/84	11/85
USEPA Priority Pollutant Metals (concentrations are in mg/L, except where noted)										
antimony	0.004	0.004	<0.1	NA	NA	NA	NA	NA	0.018	NA
arsenic	0.093	0.013	0.14	NA	NA	NA	NA	NA	0.101	NA
beryllium	0.134	0.192	<0.005	NA	NA	NA	NA	NA	0.057	NA
cadmium	0.002	0.002	<0.007	NA	NA	NA	NA	NA	0.006	NA
chromium	0.005	0.006	<0.02	NA	NA	NA	NA	NA	0.01	NA
copper	0.006	<0.004	<0.01	NA	NA	NA	NA	NA	0.008	NA
lead	0.005	0.004	<0.1	NA	NA	NA	NA	NA	<0.004	NA
mercury	<0.0002	<0.0002	<0.003	NA	NA	NA	NA	NA	<0.0002	NA
nickel	0.004	0.005	<0.01	NA	NA	NA	NA	NA	<0.01	NA
selenium	0.001	<0.001	<0.005	NA	NA	NA	NA	NA	<0.001	NA
silver	<0.01	<0.01	<0.01	NA	NA	NA	NA	NA	<0.01	NA
thallium	<0.02	<0.02	<0.005	NA	NA	NA	NA	NA	<0.02	NA
zinc	0.020	0.06	<0.01	NA	NA	NA	NA	NA	0.04	NA
Miscellaneous Parameters										
pH (units)	7.0	7.0	7.0	6.9	6.7	6.8	6.7	6.5	6.8	NA
spec. conductance (umhos/cm)	1,000	1,000	1,100	2,000	2,850	1,200	2,700	3,100	2,800	NA
temperature (deg./centigrade)	14	14	14	14	12	15.5	14.0	13	14	NA
TOC	NA	NA	NA	NA	160	44	87	42	NA	NA
total phenols	0.06	0.06	<0.05	0.099	1.41*	0.64	0.48	0.38	0.06	0.143
TOX	NA	NA	NA	NA	300	14	0.65	1.8	NA	NA
total dissolved solids (TDS)	NA	NA	NA	NA	NA	NA	NA	NA	NA	NA
bicarbonate, as CACO3	NA	NA	NA	NA	NA	NA	NA	NA	NA	NA
calcium	NA	NA	NA	NA	NA	NA	NA	NA	NA	NA
chloride	NA	NA	NA	NA	NA	NA	NA	NA	NA	NA
cyanide	<0.005	<0.025	<0.005	<0.025	NA	NA	NA	NA	<0.005	<0.025
iron	NA	NA	NA	NA	NA	NA	NA	NA	NA	NA
magnesium	NA	NA	NA	NA	NA	NA	NA	NA	NA	NA
potassium	NA	NA	NA	NA	NA	NA	NA	NA	NA	NA
sodium	NA	NA	NA	NA	NA	NA	NA	NA	NA	NA
sulfate, as SO4	NA	NA	NA	NA	NA	NA	NA	NA	NA	NA

Table E-5. Summary of Metals and Miscellaneous Parameters in Ground Water, Monsanto Company, WG Krummrich Plant, Sauget, Il.

Well Number:	DW-1	DW-1	DW-4	DW-7	DW-7	DW-10	DW-18	DW-18	DW-18	DW-23
Date:	9/84	11/85	9/84	11/85	2/86	9/84	9/84	9/84*	11/85	9/84
USEPA Priority Pollutant Metals (concentrations are in mg/L, except where noted)										
antimony	0.018	NA	0.13	<0.09	<0.05	0.038	0.18	NA	NA	0.065
arsenic	<0.001	NA	0.002	0.01	<0.01	0.004	<0.001	NA	NA	0.002
beryllium	<0.01	NA	0.018	<0.002	<0.001	<0.01	<0.002	NA	NA	<0.002
cadmium	1.97	NA	62.5	<0.002	<0.003	15.8	<0.002	NA	NA	<0.002
chromium	<0.04	NA	0.105	<0.01	<0.01	<0.04	<0.004	NA	NA	<0.004
copper	<0.001	NA	0.033	<0.006	<0.009	0.003	<0.004	NA	NA	<0.004
lead	0.018	NA	0.024	<0.04	<0.06	0.026	<0.004	NA	NA	<0.004
mercury	<0.0002	NA	<0.0002	<0.0002	<0.0002	<0.0002	<0.0004	NA	NA	<0.0004
nickel	0.024	NA	0.294	0.03	0.02	0.067	0.005	NA	NA	0.02
selenium	<0.001	NA	<0.001	<0.01	<0.005	<0.001	<0.001	NA	NA	<0.001
silver	0.003	NA	0.008	<0.007	<0.01	0.006	<0.002	NA	NA	0.004
thallium	0.019	NA	0.127	<0.01	<0.005	0.024	0.009	NA	NA	0.013
zinc	0.037	NA	0.206	0.091	0.054	0.106	0.02	NA	NA	0.028
Miscellaneous Parameters										
pH (units)	6.9	6.9	6.5	7.2	6.8	6.2	6.5	6.5	7.5	6.3
spec. conductance (umhos/cm)	1,060	3,000	2,600	2,000	950	1,300	450	450	700	850
temperature (deg./centigrade)	21	15	22	NA	17.5	21	18	18	15	20
TOC	12	NA	8	NA	NA	75	8.6	14	NA	12
total phenols	NA	1.220	NA	0.179	0.478	NA	NA	NA	0.098	NA
TOX	NA	NA	NA	NA	NA	NA	NA	NA	NA	NA
total dissolved solids (TDS)	1,226	NA	3,274	NA	NA	1,930	400	NA	NA	914
bicarbonate, as CACO3	NA	NA	NA	NA	NA	NA	NA	NA	NA	NA
calcium	NA	NA	NA	NA	NA	NA	NA	NA	NA	NA
chloride	386	NA	403	NA	NA	1,063	33	33	NA	43
cyanide	NA	<0.025	NA	<0.025	<0.025	NA	NA	NA	<0.025	NA
iron	NA	NA	NA	NA	NA	NA	NA	NA	NA	NA
magnesium	NA	NA	NA	NA	NA	NA	NA	NA	NA	NA
potassium	NA	NA	NA	NA	NA	NA	NA	NA	NA	NA
sodium	NA	NA	NA	NA	NA	NA	NA	NA	NA	NA
sulfate, as SO4	NA	NA	NA	NA	NA	NA	NA	NA	NA	NA

Table E-5. Summary of Metals and Miscellaneous Parameters in Ground Water, Monsanto Company, WG Krummrich Plant, Sauget, Il.

Well Number:	DW-24	DW-24	DW-29	DW-29	DW-30	DW-33	DW-34	DW-34	DW-34	DW-1-85
Date:	9/84	9/84*	9/84	9/84*	11/85	9/84	9/84	11/85	2/86	11/85
USEPA Priority Pollutant Metals (concentrations are in mg/L, except where noted)										
antimony	0.876	NA	0.086	NA	<0.09	0.02	0.026	NA	<0.050	<0.08
arsenic	0.004	NA	0.019	NA	<0.01	0.003	0.077	NA	0.170	<0.01
beryllium	<0.002	NA	<0.002	NA	<0.002	0.02	<0.010	NA	<0.001	<0.0009
cadmium	<0.002	NA	<0.002	NA	<0.002	2.84	0.93	NA	0.003	<0.002
chromium	<0.004	NA	<0.004	NA	<0.01	<0.04	0.031	NA	<0.010	<0.02
copper	<0.004	NA	<0.004	NA	<0.006	0.012	0.008	NA	<0.009	<0.008
lead	<0.004	NA	<0.004	NA	<0.04	0.021	0.016	NA	<0.060	<0.07
mercury	<0.0004	NA	0.0004	NA	<0.0002	<0.0002	<0.0002	NA	<0.0002	<0.0003
nickel	0.004	NA	0.01	NA	<0.01	0.22	0.087	NA	<0.010	<0.01
selenium	<0.001	NA	<0.001	NA	<0.005	<0.001	<0.001	NA	<0.005	<0.005
silver	0.002	NA	0.004	NA	<0.007	0.002	0.002	NA	<0.010	<0.01
thallium	0.021	NA	0.018	NA	<0.005	0.021	0.021	NA	<0.005	<0.005
zinc	0.024	NA	0.035	NA	<0.006	0.077	0.071	NA	0.056	0.01
Miscellaneous Parameters										
pH (units)	6.3	6.3	6.5	6.5	6.8	6.9	6.4	6.8	7.0	7.2
spec. conductance (umhos/cm)	700	700	1,100	1,100	1,250	900	1,000	1,500	760	3,250
temperature (deg./centigrade)	21	21	20	20	16	20	21	18	12	18
TOC	7.9	NA	49	46	NA	8.2	23	NA	NA	NA
total phenols	NA	NA	NA	NA	<0.05	NA	NA	0.0722	<0.050	0.155
TOX	NA	NA	NA	NA	NA	NA	NA	NA	NA	NA
total dissolved solids (TDS)	634	NA	1,170	1,184	NA	1,064	3,294	NA	NA	NA
bicarbonate, as CACO3	NA	NA	NA	NA	NA	NA	NA	NA	NA	NA
calcium	NA	NA	NA	NA	NA	NA	NA	NA	NA	NA
chloride	38	NA	95	96	NA	247	186	NA	NA	NA
cyanide	NA	NA	NA	NA	<0.025	NA	NA	<0.025	<0.025	<0.025
iron	NA	NA	NA	NA	NA	NA	NA	NA	NA	NA
magnesium	NA	NA	NA	NA	NA	NA	NA	NA	NA	NA
potassium	NA	NA	NA	NA	NA	NA	NA	NA	NA	NA
sodium	NA	NA	NA	NA	NA	NA	NA	NA	NA	NA
sulfate, as SO4	NA	NA	NA	NA	NA	NA	NA	NA	NA	NA

Table E-5. Summary of Metals and Miscellaneous Parameters in Ground Water, Monsanto Company, WG Krummrich Plant, Sauget, Il.

Well Number:	DW-1-85	BK-3	BK-3	BK-3	WB-6	WB-6	WB-6	WB-7	WB-7	Field Blank
Date:	2/86	9/84	11/85	2/86	9/84	11/85	2/86	9/84	11/85	11/83
USEPA Priority Pollutant Metals (concentrations are in mg/L, except where noted)										
antimony	<0.060	0.062	NA	<0.050	0.033	NA	<0.05	0.022	NA	NA
arsenic	<0.010	<0.001	NA	<0.010	0.018	NA	0.07	<0.001	NA	NA
beryllium	<0.0009	<0.002	NA	<0.001	<0.002	NA	<0.001	<0.002	NA	NA
cadmium	<0.003	0.008	NA	<0.003	<0.002	NA	<0.003	<0.002	NA	NA
chromium	<0.008	<0.004	NA	<0.010	<0.004	NA	<0.01	<0.004	NA	NA
copper	<0.006	<0.004	NA	<0.009	<0.004	NA	<0.009	<0.004	NA	NA
lead	<0.060	0.006	NA	<0.06	0.004	NA	<0.06	<0.004	NA	NA
mercury	<0.0002	<0.0004	NA	<0.0002	<0.0002	NA	<0.0002	<0.0002	NA	NA
nickel	<0.009	0.010	NA	<0.01	<0.004	NA	<0.01	<0.004	NA	NA
selenium	<0.005	<0.001	NA	<0.005	<0.001	NA	<0.005	<0.001	NA	NA
silver	<0.01	0.004	NA	<0.01	0.002	NA	<0.01	<0.01	NA	NA
thallium	<0.005	0.016	NA	<0.005	0.025	NA	<0.005	0.148	NA	NA
zinc	0.04	0.035	NA	0.030	0.024	NA	0.054	0.097	NA	NA
Miscellaneous Parameters										
pH (units)	NA	7.7	7.5	7.7	6.9	6.7	7.1	6.6	7.0	NA
spec. conductance (umhos/cm)	1,350	2,500	3,100	1,625	850	1,000	630	850	925	<50
temperature (deg./centigrade)	13	19	15	16	18	16	14	15	17	16
TOC	NA	36	NA	NA	16	NA	NA	3	NA	2
total phenols	<0.05	NA	0.101	<0.050	NA	0.13	0.138	NA	<0.05	0.002
TOX	NA	NA	NA	NA	NA	NA	NA	NA	NA	<0.005
total dissolved solids (TDS)	NA	1,814	NA	NA	524	NA	NA	602	NA	NA
bicarbonate, as CACO3	NA	NA	870	NA	NA	NA	NA	NA	NA	NA
calcium	NA	NA	70.4	NA	NA	NA	NA	NA	NA	NA
chloride	NA	930	714	NA	124	NA	NA	40	NA	NA
cyanide	<0.025	NA	<0.025	<0.025	NA	<0.025	<0.025	NA	<0.025	NA
iron	NA	NA	0.2	NA	NA	NA	NA	NA	NA	NA
magnesium	NA	NA	104	NA	NA	NA	NA	NA	NA	NA
potassium	NA	NA	343	NA	NA	NA	NA	NA	NA	NA
sodium	NA	NA	328	NA	NA	NA	NA	NA	NA	NA
sulfate, as SO4	NA	NA	35	NA	NA	NA	NA	NA	NA	NA

Table E-5. Summary of Metals and Miscellaneous Parameters in Ground Water, Monsanto Company, WG Krummrich Plant, Sauget, Il.

Well Number:	Field Blank	Field Blank	Field Blank	Trip Blank	Trip Blank	Trip Blank	Trip Blank	Lab Blank
Date:	2/84	5/84	6/84	11/83	2/84	5/84	6/84	2/84
USEPA Priority Pollutant Metals (concentrations are in mg/L, except where noted)								
antimony	NA	NA	<0.03	NA	NA	NA	<0.004	NA
arsenic	NA	NA	<0.001	NA	NA	NA	<0.001	NA
beryllium	NA	NA	<0.001	NA	NA	NA	<0.001	NA
cadmium	NA	NA	0.001	NA	NA	NA	<0.001	NA
chromium	NA	NA	<0.004	NA	NA	NA	<0.004	NA
copper	NA	NA	0.008	NA	NA	NA	<0.004	NA
lead	NA	NA	<0.01	NA	NA	NA	<0.004	NA
mercury	NA	NA	<0.0002	NA	NA	NA	<0.0002	NA
nickel	NA	NA	0.005	NA	NA	NA	<0.004	NA
selenium	NA	NA	<0.001	NA	NA	NA	<0.001	NA
silver	NA	NA	<0.002	NA	NA	NA	<0.01	NA
thallium	NA	NA	<0.002	NA	NA	NA	<0.02	NA
zinc	NA	NA	0.013	NA	NA	NA	<0.002	NA
Miscellaneous Parameters								
pH (units)	7.0	7.0	7	NA	NA	NA	NA	NA
spec. conductance (umhos/cm)	110	60	30	NA	NA	NA	NA	NA
temperature (deg./centigrade)	10	17	30	NA	NA	NA	NA	NA
TOC	<5	6	NA	2	<5	<5	NA	<5
total phenols	<0.002	<0.002	<0.005	<0.002	<0.002	0.006	<0.005	<0.002
TOX	0.019	NA	NA	0.013	0.009	0.025	NA	0.009
total dissolved solids (TDS)	NA	NA	NA	NA	NA	NA	NA	NA
bicarbonate, as CACO3	NA	NA	NA	NA	NA	NA	NA	NA
calcium	NA	NA	NA	NA	NA	NA	NA	NA
chloride	35	NA	NA	NA	NA	NA	NA	NA
cyanide	NA	<0.005	<0.005	NA	NA	NA	<0.005	NA
iron	NA	NA	NA	NA	NA	NA	NA	NA
magnesium	NA	NA	NA	NA	NA	NA	NA	NA
potassium	NA	NA	NA	NA	NA	NA	NA	NA
sodium	NA	NA	NA	NA	NA	NA	NA	NA
sulfate, as SO4	NA	NA	NA	NA	NA	NA	NA	NA

* - Replicate Analyses
** - Replicate analysis performed by ETC.
NA - Not analyzed.
\$ - Average of two analyses.
< - Indicates that the compound was not detected at the detection limit which is the value shown next to the symbol.